SUZUKI

AX-100

SERVICE MANUAL

99500-11121-01E
(英)

FOREWORD

This service manual has been specially prepared to provide all the necessary information for the proper maintenance and repair of the AX100. The AX100 is a new type of motorcycle that has many technical features such as:

* *Reed valve intake system*
* *PEI system*
* *CCI LUBRICATION system*

The AX100 fits the needs of a wide variety of motorcycle users. Those who will be servicing this motorcycle should carefully review this manual before performing any repairs or services.

This manual contains up-to-date information at the time of its issue. Latermade modification and changes will be explained to each SUZUKI distributor in respective markets, to whom you are kindly requested to make query about up dated information, if any.

The AX100 motorcycles distributed in your country might differ in minor respects from the standard-specification and, if they do, it is because some minor modifications (which are of no consequence in most cases as far as servicing is concerned) had to be made to comply with the statutory requirements of your country.

SUZUKI MOTOR CORPORATION

Motorcycle Service Department

Quoting, copying or otherwise using any part of this manual without explicit authorization from Suzuki Motor Corporation is not permitted as all rights to the publication are reserved under copyright law.

GROUP INDEX

GENERAL INFORMATION	1
PERIODIC MAINTENANCE AND TUNE-UP PROCEDURES	2
SERVICING ENGINE	3
FUEL AND OIL SYSTEM	4
ELECTRICAL SYSTEM	5
CHASSIS	6
SERVICING INFORMATION	7
AX100V ('97-MODEL For Barbados)	8

GENERAL INFORMATION

1

CONTENTS

VIEW OF SUZUKI AX100 AND SERIAL NUMBER LOCATION 1-1
FUEL AND OIL RECOMMENDATIONS 1-2
SPECIAL FEATURES 1-3
- REED VALVE INTAKE SYSTEM 1-3
- PEI SYSTEM 1-4
- CCI LUBLICATION SYSTEM 1-5

PRECAUTIONS AND GENERAL INSTRUCTIONS 1-6
SPECIAL MATERIALS 1-7
SPECIFICATIONS 1-8

VIEW OF SUZUKI AX100 AND SERIAL NUMBER LOCATIONS



Right side

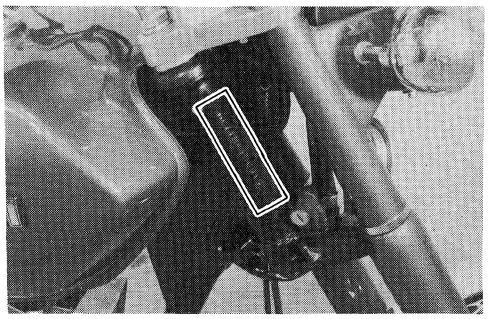

FRAME NUMBER

The frame serial number is stamped on the right side of the steering head pipe.



Left side

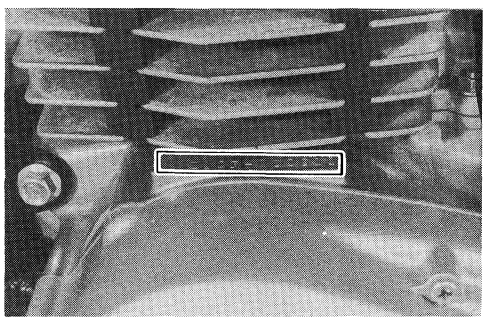

ENGINE NUMBER

The engine serial number is stamped on the left side of the crankcase.

FUEL AND OIL RECOMMENDATIONS

Be sure to use the specified fuel and oil. The following are the specifications:

FUEL

Unleaded or low-lead type gasoline is recommended. The gasoline should be at least 85 – 95 octane by the Research Method. If your engine pings, a regular grade of fuel, may be substituded.

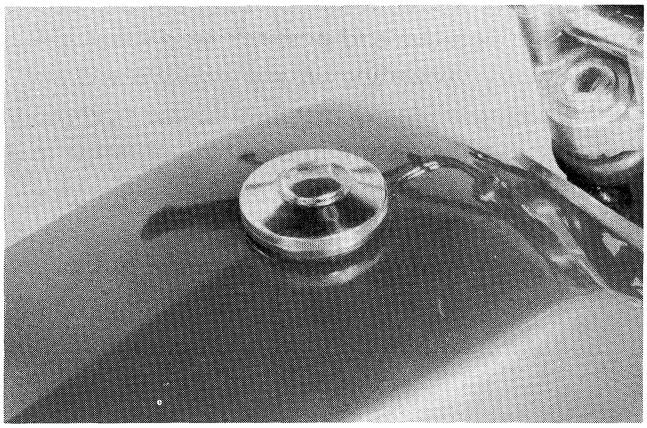

ENGINE OIL

Use SUZUKI "CCI" oil or SUZUKI CCI Super oil. If they are not available, a good quality TWO-STROKE OIL (non diluent type) should be used.

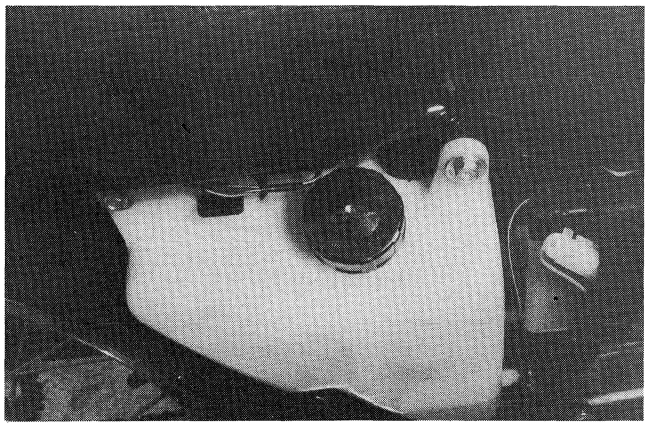

TRANSMISSION OIL

Use a good quality SAE 20W-40 multi-grade motor oil.

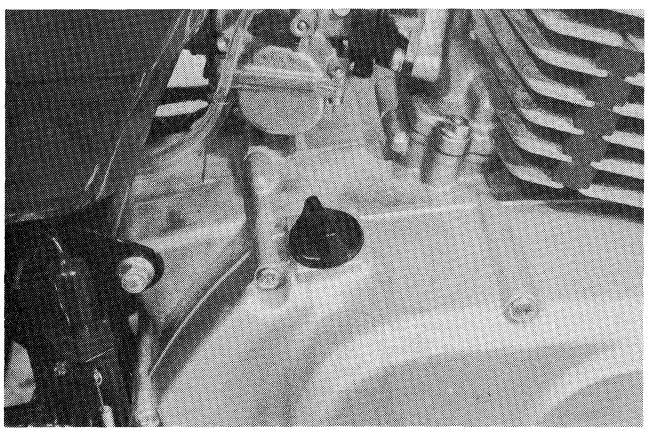

FORK OIL

Fork oil # 20.

SPECIAL FEATURES

REED VALVE INTAKE SYSTEM

A reed valve is used in the intake system. The reed valve has thin, flexible steel piece and are fitted into the top of the crankcase. As the piston moves up and down, the pressure in the crankcase alternately changes to negative and positive, thus causing the reed valve to open and close. The reed valve timing and opening vary depending on the engine speed and throttle opening. In other words, it can be said that the intake timing is ideally matched to the operating condition of the engine. The reed valve is operated by the vacuum and pressure in the crank chamber as shown in the illustration.

Reed valve system

In this system reed valve controls intake of fuel and piston controls exhaust of burnt gases.

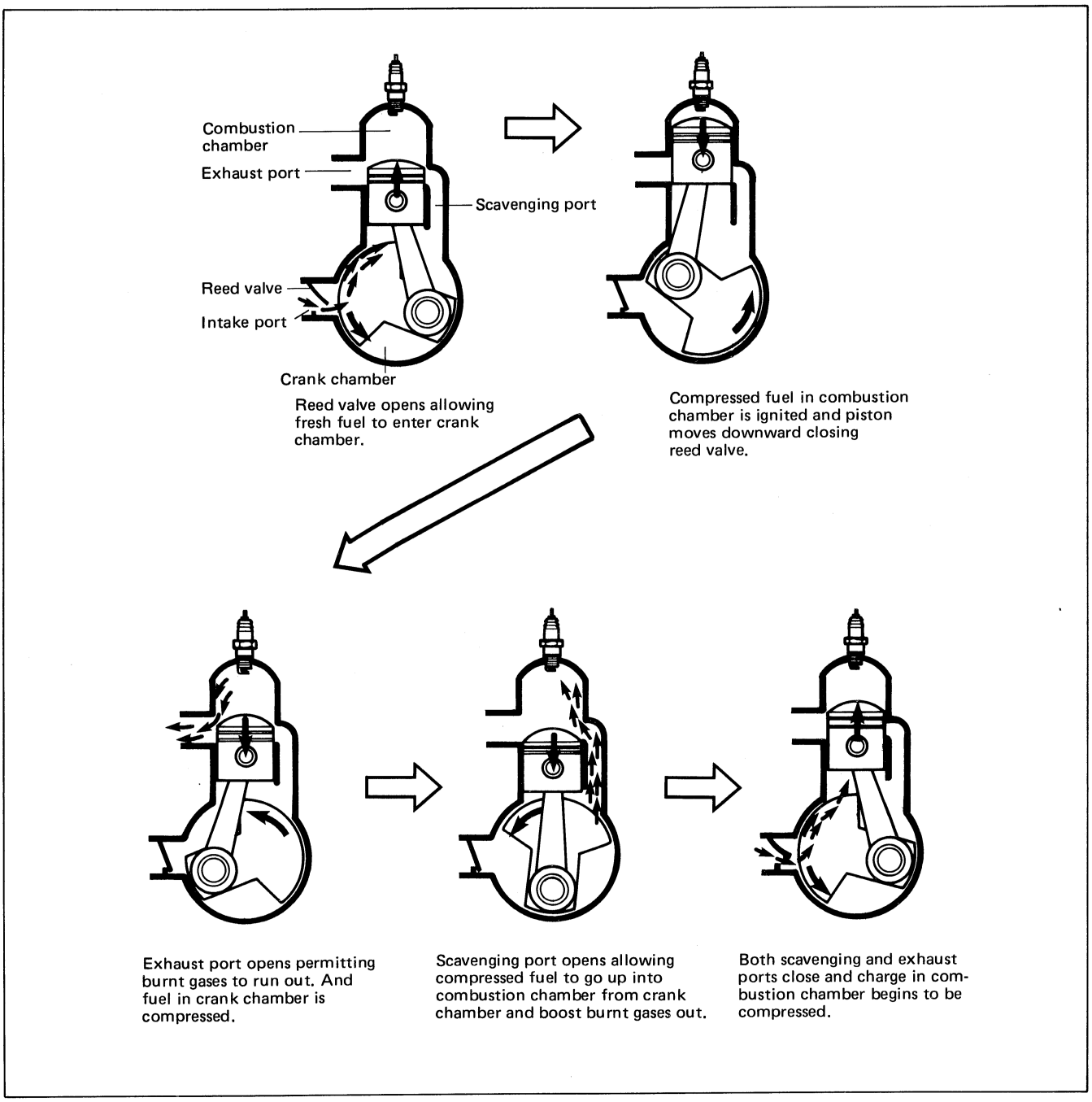

PEI SYSTEM

"PEI" system

In the AX100 ignition system, the "PEI" system is used. The "PEI" system uses a magneto as the power source, and the capacitor (condenser) momentarily stores a charge up to hundreds of volts. The charge is instantly discharged, at the specified ignition timing, to the ignition coil primary winding, thus inducing a high surge of voltage in the secondary winding. As a result, a spark occurs at the spark plug gap.
The "PEI" magneto has no breaker points and therefore it is free from mechanical troubles. This ensures a stabler secondary high voltage and better spark performance.

Features of "PEI" system

- Spark plug deposits are minimized as high voltage spark is produced.
- Disuse of contact points means no dust trouble. Contact points become worn by dust and such as a spark occurs between them.
- Original engine performance is kept as ignition timing is always correct.
- Running cost is reduced as "PEI" system has no mechanical parts and therefore required no adjustment or replacement.

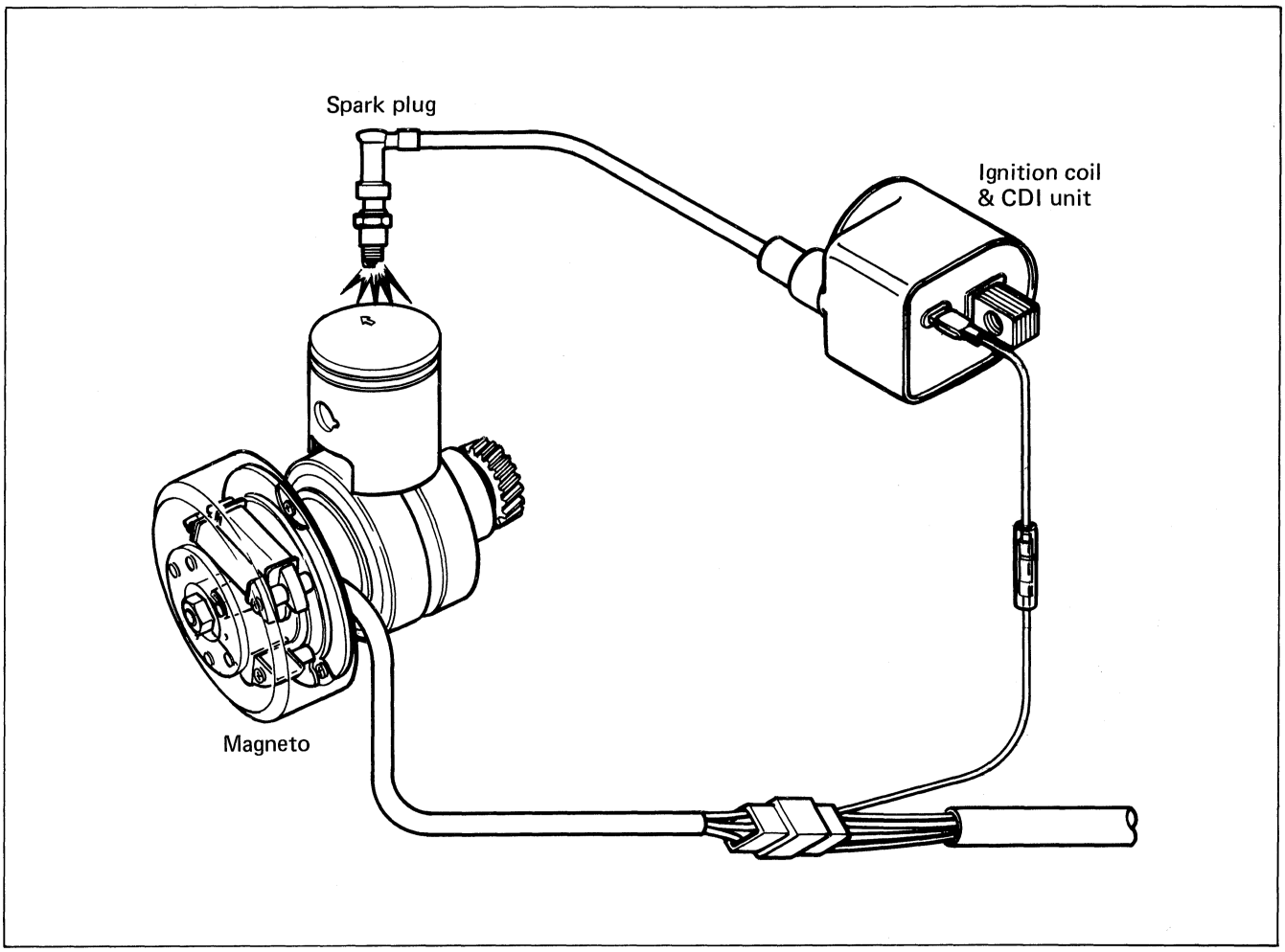

CCI LUBRICATION SYSTEM

The AX100 engine is lubricated according to the SUZUKI CCI SYSTEM; the oil pump has one outlet. Inside of intake manifold, oil is mixed with the air and fuel.

The mixture lubricates all its moving parts. The oil pump is driven by primary drive and driven gears, kick idle gear and kick drive gear (oil pump driven gear).

Since the oil discharge rate of oil pump is regulated by the throttle opening through throttle cable and control lever, necessary a mount of oil which engine requires is always metered and supplied.

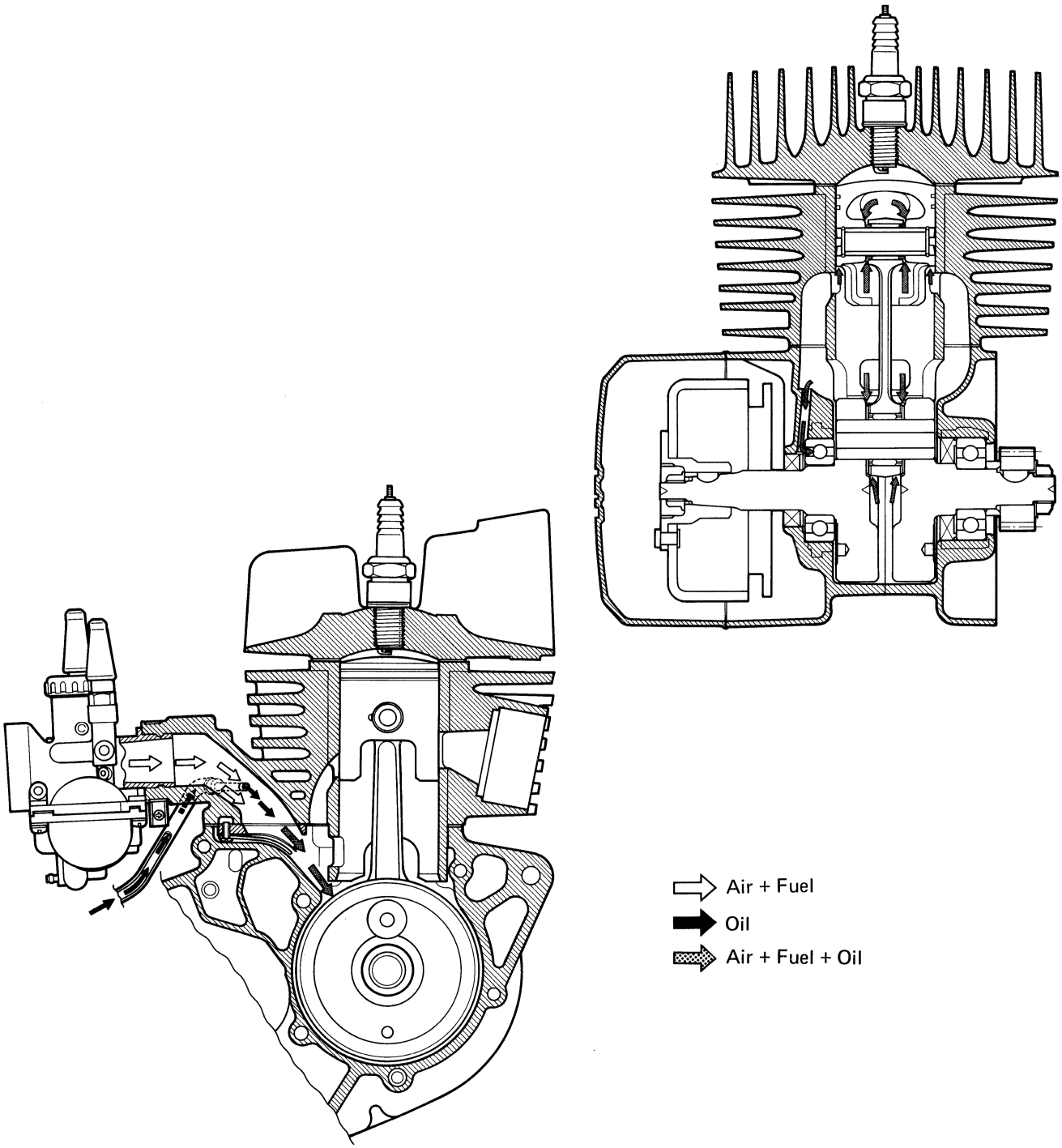

PRECAUTIONS AND GENERAL INSTRUCTIONS

Observe the following items without fail when disassembling and reassembling motorcycles.

- Be sure to replace packings, gaskets, circlips, O rings and cotter pins with new ones.

> **CAUTION:**
> **Never reuse a circlip after a circlip has been removed from a shaft, it should be discarded and a new circlip must be installed.**
> **When installing a new circlip, care must be taken not to expand the end gap larger than required to slip the circlip over the shaft.**
> **After installing a circlip, always insure that it is completely seated in its groove and securely fitted.**

- Tighten bolts and nuts from the ones of larger diameter to those of smaller diameter, and from inside to out-side diagonally, with specified tightening torque.
- Use special tools where specified.
- Use genuine parts and recommended oils.
- When more than 2 persons work together, pay attention to the safety of each other.
- After the reassembly, check parts for tightness and operation.
- Treat gasoline, which is extremely flammable and highly explosive, with greatest care. Never use gasoline as cleaning solvent.

Warning, caution and note are included in this manual occasionally, describing the following contents.

WARNING ..... When personal safety of the rider is involved, disregard of the information could result in his injury.

CAUTION..... For the protection of the motorcycle, the instruction or rule must be strictly adhered to.

NOTE ..... Advice calculated to facilitate the use of the motorcycle is given under this heading.

SPECIAL MATERIALS

MATERIALS REQUIRED FOR MAINTENANCE

The materials shown are required for maintenance works on the Model AX100, and should be kept on hand for ready use. In addition, such standard materials as cleaning fluids, lubricants, etc., should also be available. Methods of use are discussed in the text of this manual on later pages.

Material	Use
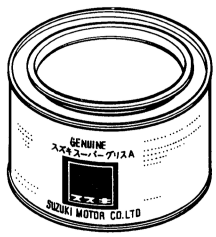 SUZUKI SUPER GREASE "A" 99000-25010	○ Oil seals ○ Throttle grip ○ Cables (speedometer) ○ Bearings ○ Steering stem
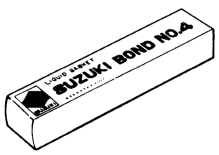 SUZUKI BOND NO. 4 99000-31030	○ Crankcase mating surface
 THREAD LOCK "1342" 99000-32050	○ Bearing retainer screws ○ Gear shift cam retainer bolt ○ Kick return spring retainer. ○ Oil seals
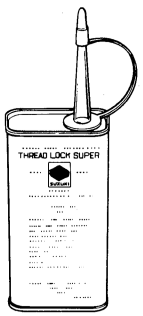 THREAD LOCK CEMENT 99000-32040	○ Reed valve securing screws
 THREAD LOCK SUPER "1322" 99000-32110	○ Magneto rotor nut

USE OF GENUINE SUZUKI PARTS

When replacing any part of the machine, the use of genuine SUZUKI replacement parts is highly recommended. The use of parts that are not genuine SUZUKI will lower the inherent capability of the machine and could induce costly mechanical trouble.

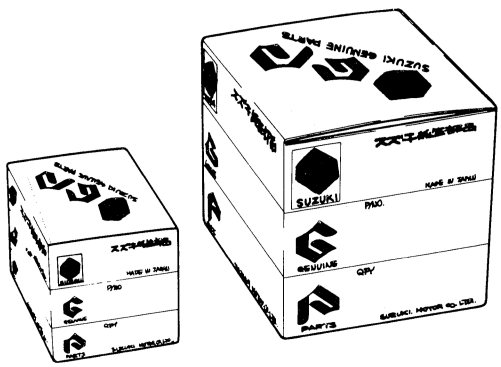

SPECIFICATIONS

DIMENSIONS AND WEIGHT

Overall length	1 865 mm
Overall width	725 mm
Overall height	1 050 mm
Wheelbase	1 215 mm
Ground clearance	140 mm
Dry mass (weight)	82 kg

ENGINES

Type	Two-stroke, air cooled
Intake system	Reed valve
Number of cylinders	1
Bore	50.0 mm
Stroke	50.0 mm
Piston displacement	98 cm^3
Carburetor	MIKUNI VM20SS
Air cleaner	Polyurethane foam element
Starter system	Primary kick
Lubrication system	SUZUKI "CCI"

TRANSMISSION

Clutch		Wet multi-plate type
Gearshift pattern		4 down
Primary reduction		3.125 (50/16)
Final reduction		3.142 (44/14) E-51
		3.000 (42/14) ..... The others
Gear ratios,	Low	2.909 (32/11)
	2nd	1.800 (27/15)
	3rd	1.277 (23/18)
	Top	0.954 (21/22)
Drive chain		DAIDO D.I.D. 428D
		TAKASAGO RK428MD
Links		114 links E-51
		112 links ..... The others

CHASSIS

Front suspension	Telescopic, oil dampened
Rear suspension	Swinging arm, oil dampened
Steering angle	42°
Caster	63° 00′
Trail	74 mm
Turning radius	1.8 m
Front brake	Internal expanding
Rear brake	Internal expanding
Front tire size	2.50-18 4PR
Rear tire size	2.75-18 4PR E-51
	2.50-18 4PR ..... The others
Front tire pressure	175 kPa (1.75 kg/cm^2) (Normal solo riding)
Rear tire pressure	200 kPa (2.00 kg/cm^2) (Normal solo riding)

ELECTRICAL

Ignition type	SUZUKI "PEI"
Ignition timing	22° B.T.D.C. 4 000 r/min
Spark plug	NGK BR8ES or NIPPON DENSO W24ESR ... E-06
	NGK B8ES or NIPPON DENSO W24ES ... The others
Battery	6V 14.4 kC (4 Ah)/10 HR
Generator	Flywheel magneto
Fuse	15A
Headlight	6V 25/25W
Tail/Brake light	6V 3/10W
Turn signal light	6V 8W
Speedometer light	6V 3W
Turn signal indicator light	6V 3W
Neutral indicator light	6V 3W
High beam indicator light	6V 1.7W
Oil level warning light	6V 3.4 W

CAPACITIES

Fuel tank including reserve	12.0 L
reserve	2.0 L
Engine oil tank	1.3 L
Front fork oil	167.5 ml
Transmission oil	900 ml

* These specifications are subject to change without notice.

PERIODIC MAINTENANCE AND TUNE-UP PROCEDURES

CONTENTS

PERIODIC MAINTENANCE SCHEDULE 2-1
MAINTENANCE AND TUNE-UP PROCEDURES 2-3

PERIODIC MAINTENANCE SCHEDULE

Vehicles should be inspected after a certain period of running for wear of parts, carbon deposits, elongated cables, etc. Inspections should be made periodically and defects should be repaired or adjusted beforehand to prevent trouble and prolong the motorcycle's service life.
Inspect and adjust the vehicle as indicated below.

NOTE:
More frequent maintenance may be performed on motorcycles that are used in an severe condition.

PERIODIC MAINTENANCE CHART

Interval / Item	Initial 1 000 km	Every 3 000 km	Every 6 000 km	Every 12 000 km
Air cleaner	–	Check and clean	–	–
Carburetor	Inspect	Inspect	–	–
Clutch	Adjust	Adjust	–	–
Spark plug	Adjust and clean	Adjust and clean	Replace	–
Fuel hose	Inspect	Inspect	–	–
	Replace every 4 years			
Fuel strainer	Clean	–	Clean	–
Cylinder head, cylinder and muffler	–	–	Remove carbon	–
Battery	Inspect	Inspect	–	–
Transmission oil	Change	–	Change	–
Ignition timing	Inspect	Inspect	–	–
Brakes	Inspect	Inspect	–	–
Drive chain	Inspect and clean every 1 000 km			
Steering	Inspect	Inspect	–	–
Tires	Inspect	Inspect	–	–
Front fork oil	Change	–	–	Change
Bolt and nut	Inspect	Inspect	–	–

LUBRICATION CHART

Rotating and rubbing parts must be lubricated periodically. Insufficient lubrication will cause rapid wear and severe damage may result.
Lubricate the following parts periodically.

Item \ Interval	Initial and every 6 000 km	Every 12 000 km
Throttle and oil pump control cable	Motor oil	–
Throttle grip	–	Grease
Clutch cable	Motor oil	–
Speedometer cable	–	Grease
Speedometer gear box	–	Grease
Drive chain	Motor oil every 1 000 km	
Brake pedal shaft	Grease or oil	–
Brake cam shaft	–	Grease
Steering stem bearings	Grease every 2 years or 20 000 km	
Front brake cable	Motor oil	–
Swing arm shaft	Grease every 2 years or 20 000 km	

WARNING:
Be careful not to apply too much grease to the brake cam shafts. If grease gets on the linings, brake slippage will result.

Lubricate exposed parts which are subject to rust, with either motor oil or SUZUKI super grease "A" (part No. 99000-25010) whenever the motorcycle has been operated under wet or rainy conditions.

Before lubricating each part, clean off any rusty spots and wipe off any grease, oil, dirt or grime.

MAINTENANCE AND TUNE-UP PROCEDURES

AIR CLEANER

Check and clean every 3 000 km

If the air cleaner is clogged with dust, intake resistance will be increased with a resultant decrease in output and an increase in fuel consumption.
Check and clean the element in the following manner.

- Remove the left frame cover.
- Unscrew the retainning screw and take off the air cleaner case.
- Fill a washing pan of a proper size with non-flammable cleaning solvent.
  Immerse the element in the solvent and wash it clean.
- Squeeze the solvent off the washed element by pressing it between the palms of both hands: Do not twist and wring the element or it will develop fissures.
- Immerse the element in a pool of motor oil, and squeeze the oil off the element to make it slightly wet with the oil.

CAUTION:
- **Before and during the cleaning operation, examine the element to see if it has a rupture or fissure. A ruptured or fissured element must be replaced.**
- **Be sure to position the element snugly and correctly, so that no incoming air will bypass it. Remember, rapid wear of piston rings and cylinder bore is often caused by a defective or poorly fitted element.**

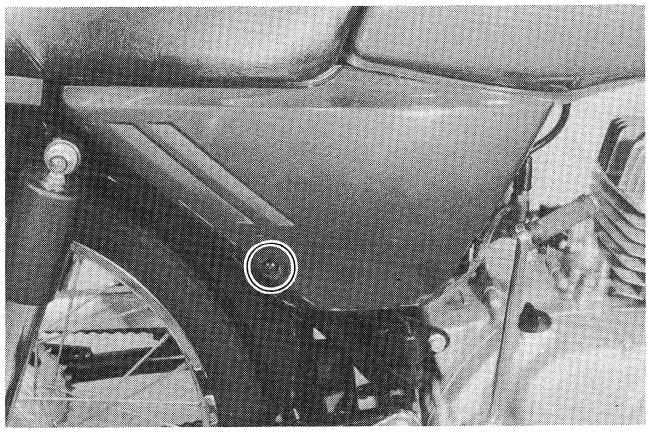

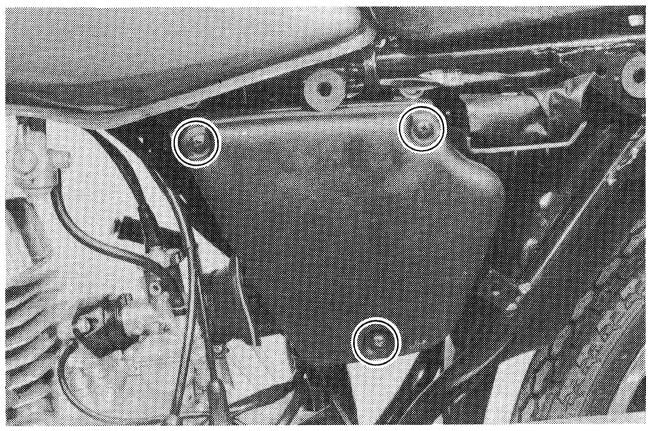

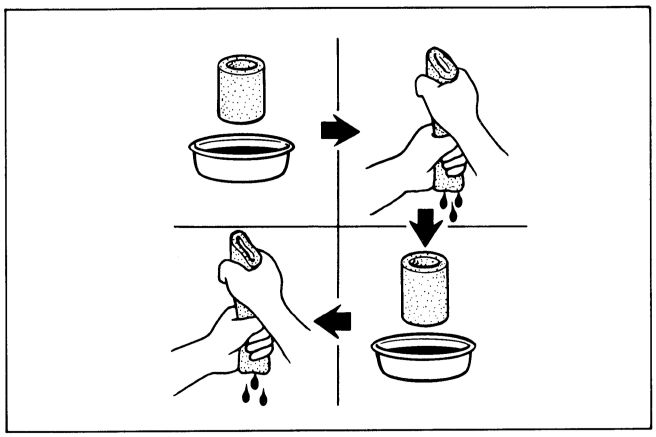

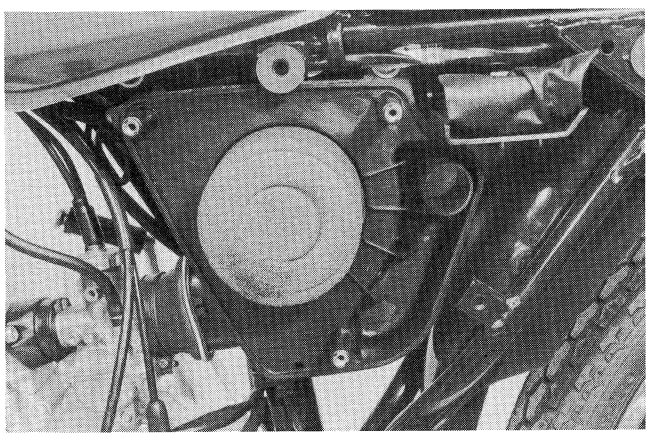

CARBURETOR

Inspect at initial 1 000 km and every 3 000 km

Adjust the engine idle speed as follows.

- Start the engine and allow it to warm up.

NOTE:
A warm engine means and engine which has been run averaging 50 km/h in top gear for 9 minutes.

- Turn the throttle valve stop screw ① so that engine idles at 1 500 r/min.
- Turn the pilot air screw ② in or out around ¼ turn from the original setting (refer to right table). The engine r/min will increase or decrease in accordance with the turning of the pilot air screw. Set this screw in a position that allows the engine to idle at the hightest r/min.
- Turn the throttle valve stop screw again and adjust the Idle r/min at 1 150 – 1 450 r/min.

Idle r/min	1 300 ± 150 r/min

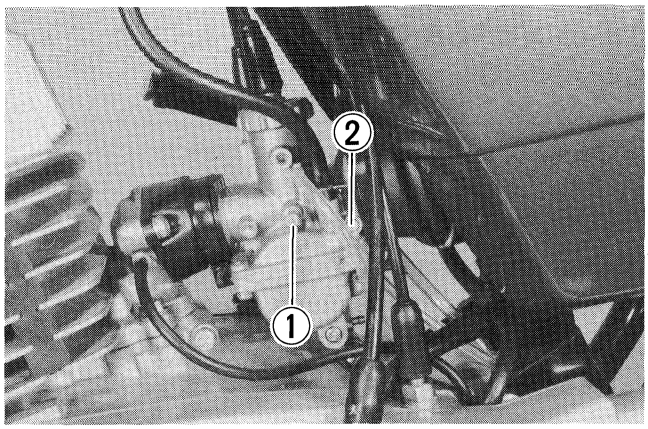

	Setting
E-01, 06, 10, 51, P-92	1 1/2 turns out
E-07, 09, 23, 72, 75, 94, 97	1 3/4 turns out
P-31, 36, 74	2 turns out

THROTTLE CABLE

There should be 0.5 – 1.0 mm play Ⓐ on the throttle cable. To adjust the throttle cable play:

- Tug on the throttle cable to check the amount of play.
- Loosen the lock nut ① and turn the adjuster ② in or out until the specified play is obtained.
- Secure the lock nut while holding the adjuster in place.

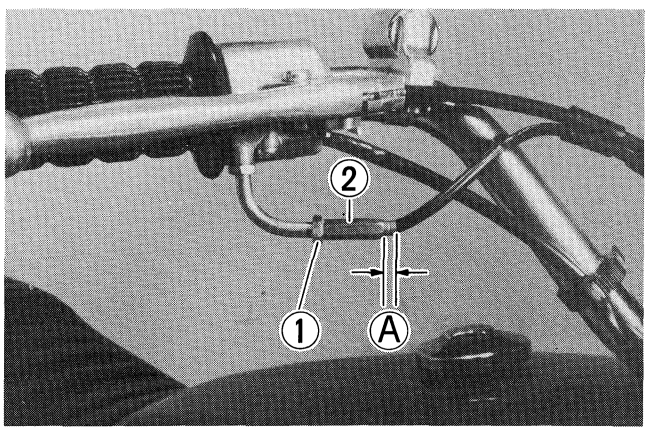

CARBURETOR OVERHAUL AND CLEANING

Overhaul and clean every 12 000 km

Wash the carburetor and component parts in cleaning solvent after disassembly.
Before reassembly, inspect the float level and needle valve.
Then blow compressed air through all jets to make sure they are not clogged. Do not use wire to clear the passage ways. (Refer to page 4-2.)

CLUTCH

Adjust a initial 1 000 km and every 3 000 km

- Loosen the lock nut ① and screw in the clutch cable adjuster ② to give sufficient play to the clutch cable.
- Temporarily loosen the lock nut ③ and tighten the release adjusting screw ④ until resistance is felt, then loosen it ¼ – ½ turn.
- Secure the lock nut ③ .
- Adjust the clutch cable adjuster ② again until approximately 4 mm of play remains at the bottom of the clutch lever.

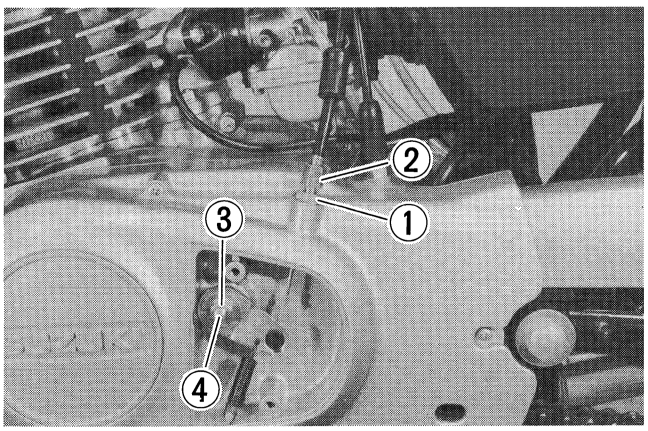

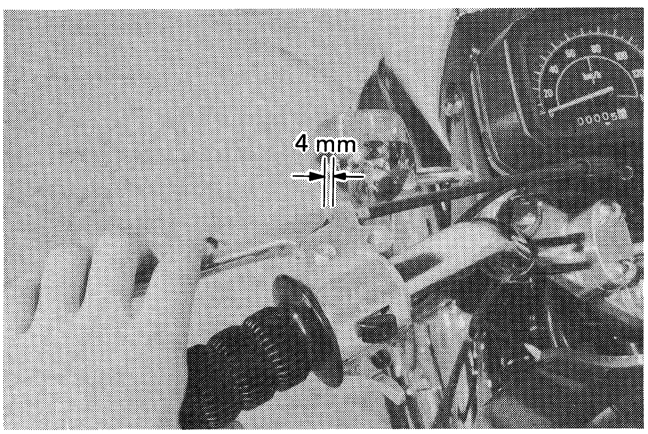

SPARK PLUG

Check and clean at initial 1 000 km and every 3 000 km

Neglecting the spark plug eventually leads to difficult starting and poor performance. If the spark plug is used for a long period, the electrode gradually burns away and carbon builds up along the inside part. In accordance with the Periodic Inspection Chart, the plug should be removed for inspection, cleaning and to reset the gap.

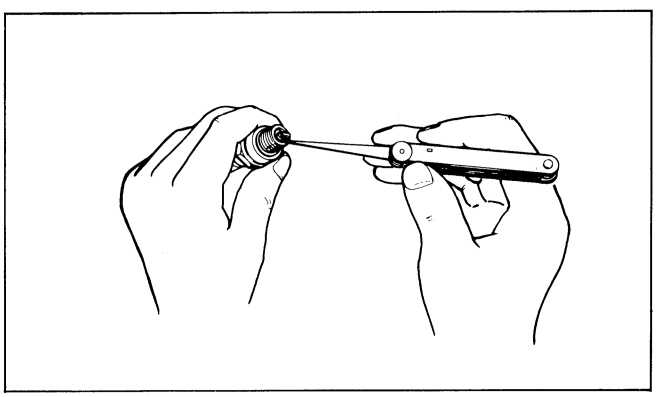

- Carbon deposits on the spark plug will prevent good sparking and cause misfiring. Clean the deposits off periodically.
- If the center electrode is fairly worn down, the plug should be replaced and the plug gap set to the specified gap using a thickness gauge.

09900 - 20804	Thickness gauge

Spark plug gap	0.6 – 0.8 mm

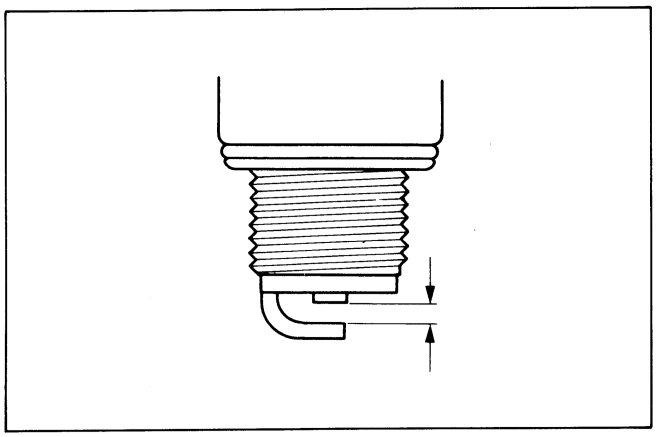

- Check spark plug for burnt condition. If abnormal, replace the plus as indicated right table.

	E-06		The others	
	NGK	NIPPON DENSO	NGK	NIPPON DENSO
COLD TYPE	BR7ES	W22ESR	B7ES	W22ES
STANDARD	BR8ES	W24ESR	B8ES	W24ES
HOT TYPE	BR9ES	W27ESR	B9ES	W27ES

FUEL HOSE

Inspect at initial 1 000 km and every 3 000 km
Replace every 4 years

FUEL STRAINER

Clean at initial 1 000 km and every 3 000 km

If the fuel strainer cup is dirty with sediment or water, gasoline will not flow smoothly and a loss in engine power may result. Clean the strainer and cup, leaving the fuel cock in OFF position.

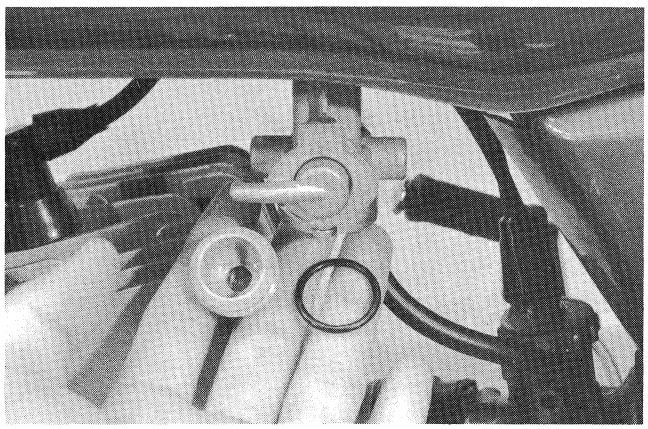

OIL PUMP

Adjust at initial 1 000 km and every 3 000 km

The engine oil is fed by the oil pump to the engine. The amount of oil fed to it is regulated by engine speed and the oil pump control lever which is controlled by the amount of throttle opening.
Check the oil pump in the following manner to confirm correct operation for all throttle valve opening positions.

- Turn the throttle grip full open.
- Check whether the mark on the oil pump control lever is aligned with the index mark when the throttle valve is positioned as above.
- If the marks are not aligned, adjust by means of the cable adjuster ① to align them.

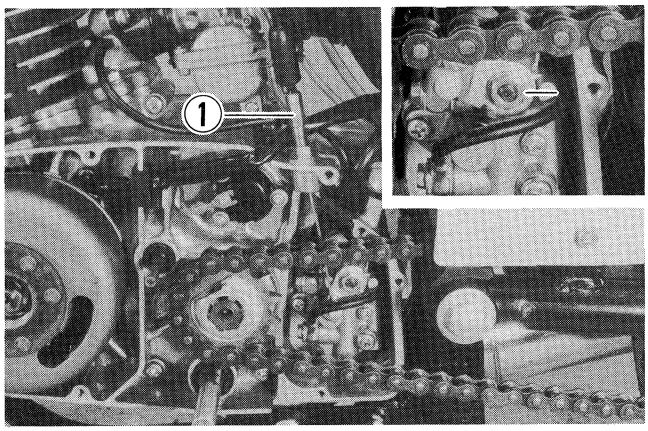

NOTE:
Oil pump cable adjustment must be done after throttle cable adjustment. (See page 2-4.) If the throttle stop screw is alterred, the cable free play should be re-checked.

CYLINDER HEAD, CYLINDER AND MUFFLER

Remove carbon every 6 000 km

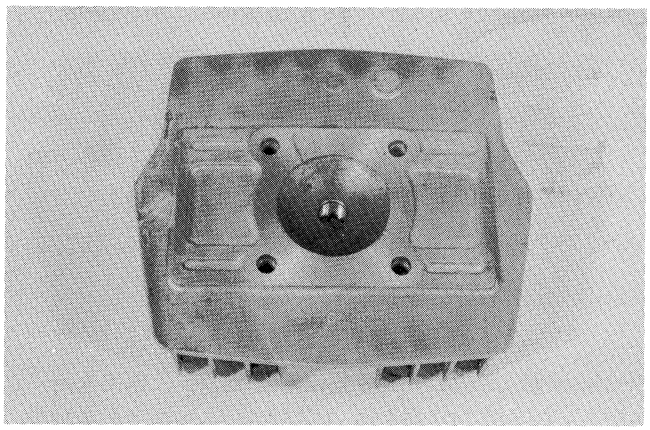

Carbon deposits in the combustion chamber of the cylinder head and at the piston crown will raise the compression ratio and may cause preignition or overheating. Carbon deposited at the exhaust port of the cylinder will prevent the flow of exhaust, reducing the output. Remove carbon deposits periodically.
Be careful not to damage the surface of the combustion chamber and exhaust port when removing carbon.

BATTERY

Inspect at initial 1 000 km and every 3 000 km

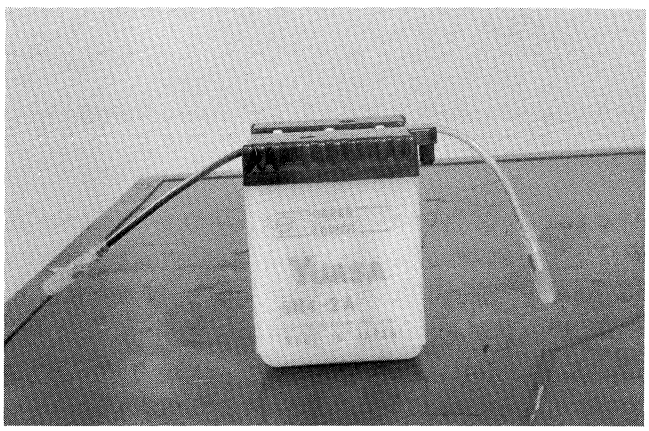

- Check to be sure that the vent pipe is secured properly and routing correctly.
- Add distilled water, as necessary, to keep the surface of the electrolyte above the LOWER level line but not above the UPPER level line.

- If the electrolyte surface falls rapidly and requires frequent addition of distilled water, check the charging system for proper charging rate.
- Periodically, check the electrolyte for specific gravity by using a hydrometer to tell the state of charge.
- An S.G. reading of 1.22 (at 20°C) or under means that the battery needs recharging off the machine: take it off and charge it from a re-charger can damage the rectifier. (Refer to page 5-9)

09900 - 28403	Hydrometer

Battery specifications	
Type	6N4-2A
Voltage	6V
Capacity	14.4 kC (4 Ah)/10 HR
Electrolyte for specific gravity	1.26 at 20°C (68°F)

CAUTION:
Do not use tap water for battery solution. Reconnect the battery vent hose after re-installing the battery.

TRANSMISSION OIL

Change at initial 1 000 km and every 6 000 km

After a long period of use, the transmission oil will deteriorate and quicken the wear of sliding and interlocking surfaces. Replace the transmission oil periodically following the procedure below.

- Start the engine to warm up the oil, this will facilitate draining of oil. Shut off the engine.
- Unscrew the oil filler cap ① and drain plug ② , and drain the oil completely.
- Tighten the drain plug.
- Supply a good quality SAE 20W/40 multi-grade motor oil.

Capacity	900 ml

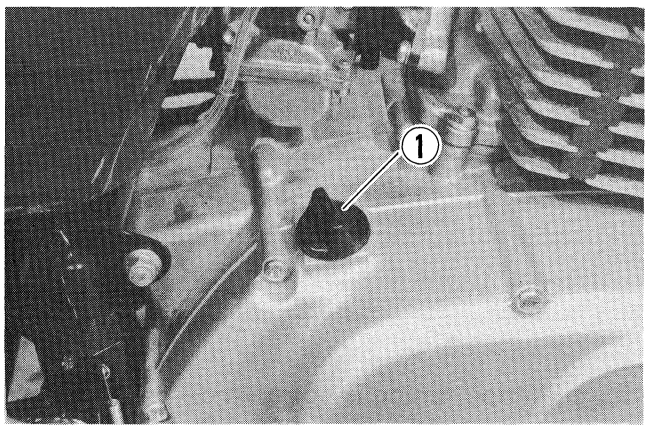

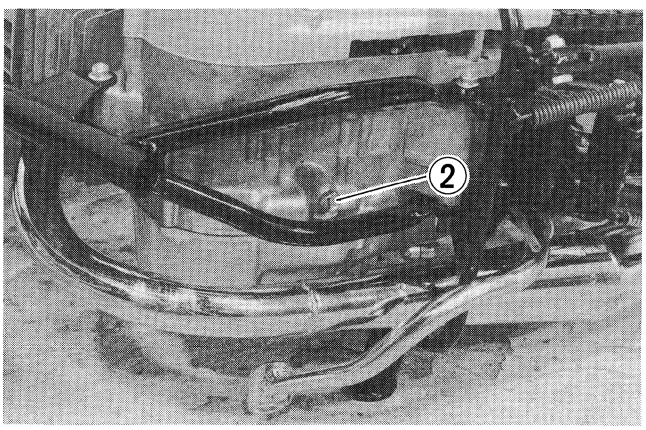

- Check the oil level with oil level screw ③ .

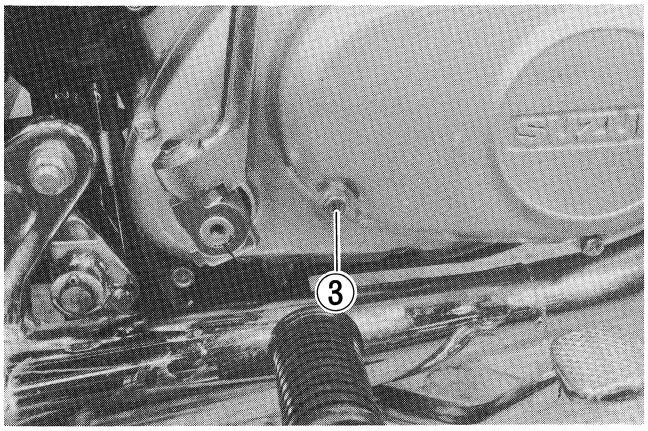

IGNITION TIMING

Inspect initial 1 000 km and every 3 000 km

Remove magneto cover and clip the timing light cord to the high-tension cord.
Start the engine aim the light from the timing light at the aligning mark ① on the crankcase.
Raise the engine speed to 4 000 r/min.
At this time, the ignition timing is proper if the aligning mark ① is aligned to the line ② on the magneto rotor when the timing light flashes.

09900 - 27311	Timing light
09900 - 26005	Tachometer

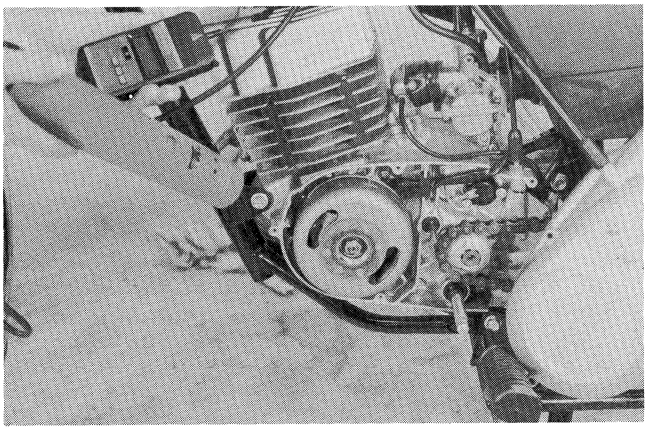

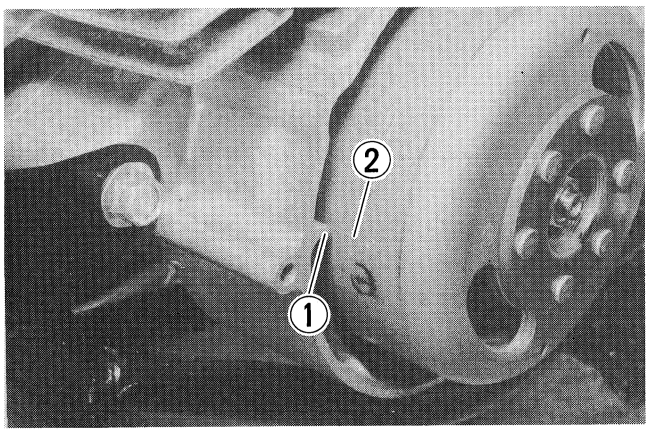

If the ignition timing is not correct, adjust following procedure below.

Remove rotor by using special tools.
Loosen the stator fitting screws.
Align the index line ③ on the stator to the alignment line ④ on crankcase.

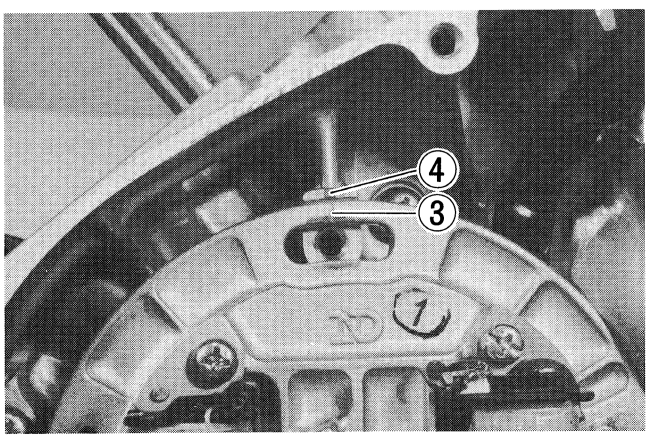

BRAKES

Adjust at initial 1 000 km and every 3 000 km

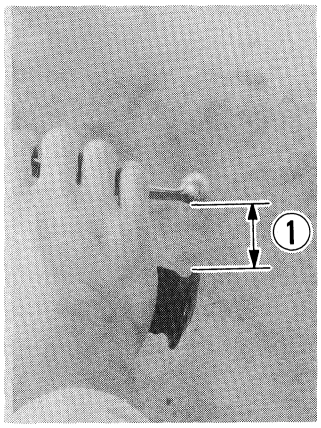

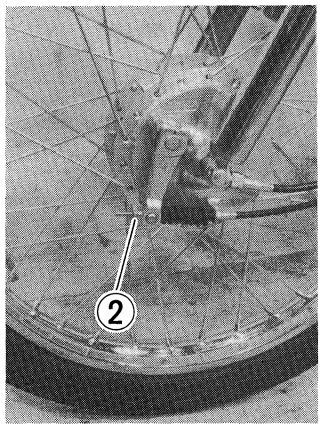

Front brake

- Measure the clearance between the brake lever end and throttle grip when brake is fully applied. Adjust the clearance ① to 20 – 30 mm by turning the adjusting nut ② .

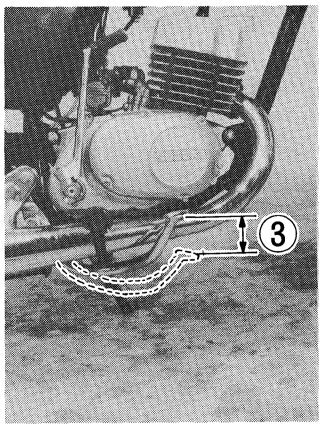

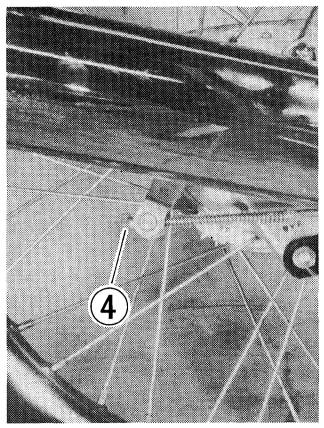

Rear brake

- Adjust the free travel ③ to 20 – 30 mm by turning the adjusting nut ④ .

BRAKE SHOE WEAR

This motorcycle is equipped with brake lining wear limit indicator on front and rear. As shown in Fig. At the condition of normal lining wear, the extension line of the index mark on the brake cam shaft should be within the range embossed on the brake panel with brake on.

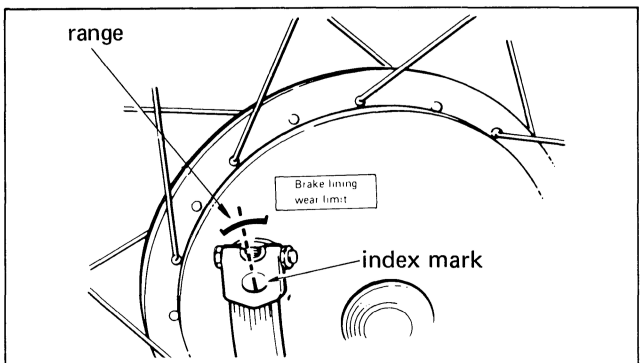

The extension line of the index mark is within the range.

To check wear of the brake lining perform the following steps.

- First check if the brake system is properly adjusted.
- While operating the brake, check to see that the extension line of the index mark is within the range on the brake panel.
- If the index mark is beyond the range as shown in the Fig., the brake shoe assembly should be replaced with a new one as a set.

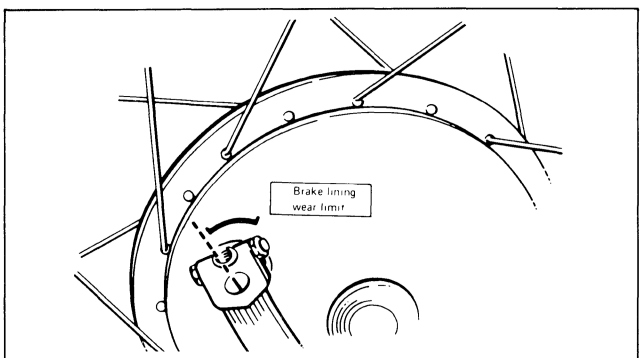

The extension line of the index mark is beyond the range.

DRIVE CHAIN

Inspect and clean every 1 000 km
Lubricate every 1 000 km

Drive chain

Visually inspect the drive chain for the below listed possible malconditions. (Lift the rear wheel by placing the center stand, and turn the rear wheel slowly by hand, with the transmission in NEUTRAL.)

Inspect for:

1. Loose pins
2. Damaged rollers
3. Rusted links
4. Twisted or seized links
5. Excessive wear

If any defects are found, the drive chain must be replaced.

- Wash the chain with kerosene. If the chain tends to rust faster, the interval must be shortened.
- After washing and drying the chain, lubricate it with chain lube or gear oil SAE # 90.

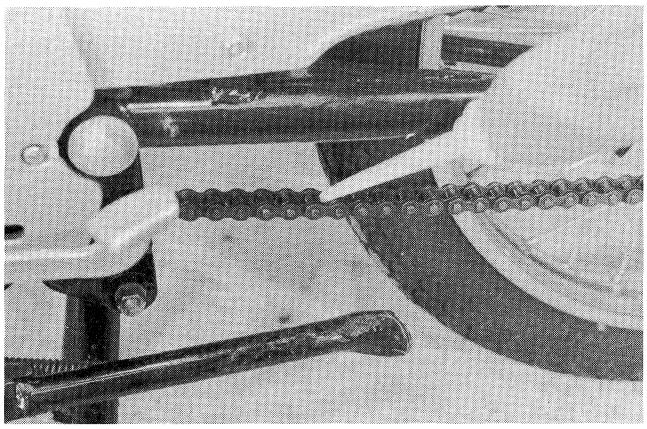

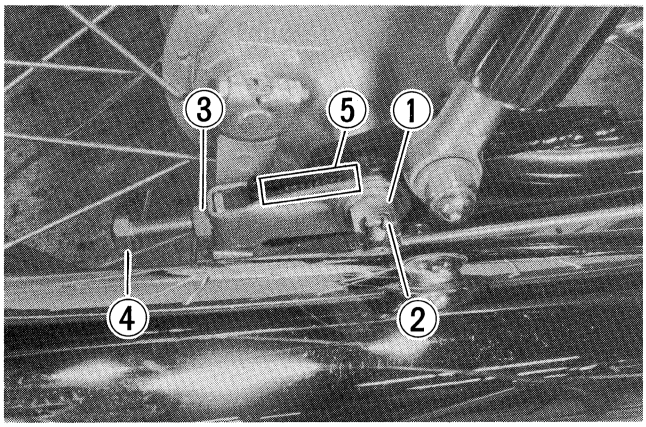

WARNING:
The drive chain joint clip should be attached in the way that the slit end will face opposite the direction of rotation.

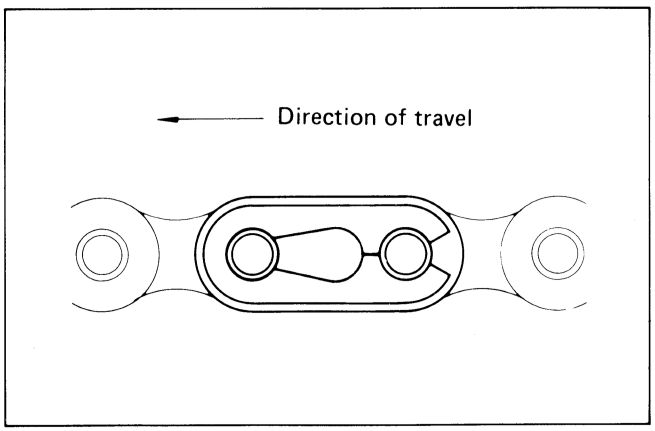

Check the drive chain for wear and adjust the chain tension as follows:

- Loosen axle nut ① after pulling out cotter pin ② and loosen the lock nut ③ .

Chain wear

- Tense the drive chain carefully by tightening the adjusters ④ .
- Count out 21 pins on the chain and measure the distance between. If the distance exceeds 259.0 mm, the chain must be replaced.

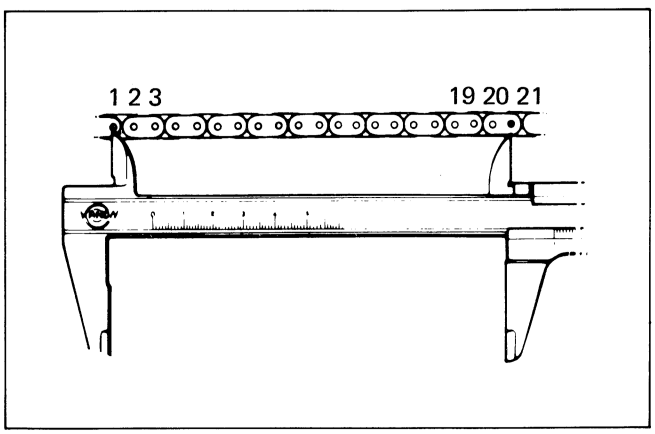

Chain Sag

- Loosen the adjuster ④ until the chain has 25 – 35 mm of sag at the middle between engine and rear sprockets.
  The mark ⑤ on both chain adjusters must be at the same position on the scale to ensure that the front and rear wheels are correctly aligned.
- After adjusting the drive chain, tighten the axle nut ① securely and lock with cotter pin ② . Always use a new cotter pin.

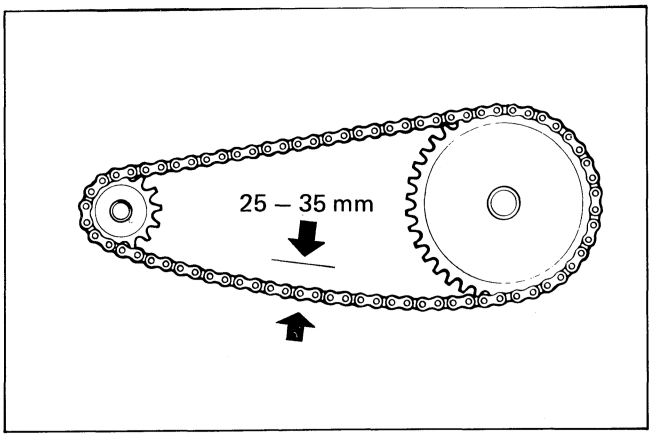

STEERING

Check at initial 1 000 km and every 3 000 km

Steering should be adjusted properly for smooth manipulation of handlebars and safe running. Too stiff steering prevents smooth manipulation of handlebars and too loose steering will cause poor stability.
Check to see that there is no play in the steering bearings.
If any play can be found, adjust the steering as follows:

- Support the motorcycle body and jack up the front wheel.
- Detach the fuel tank.
- Untighten the steering stem head bolt, the front fork cap bolts and lower clamp bolts.
- Tighten the steering stem head nut using the special tool ① so that the handlebars move smoothly.

09910 - 60611	Universal clamp wrench

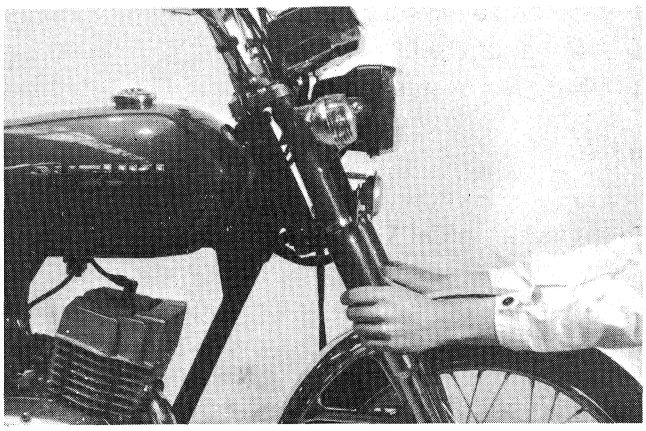

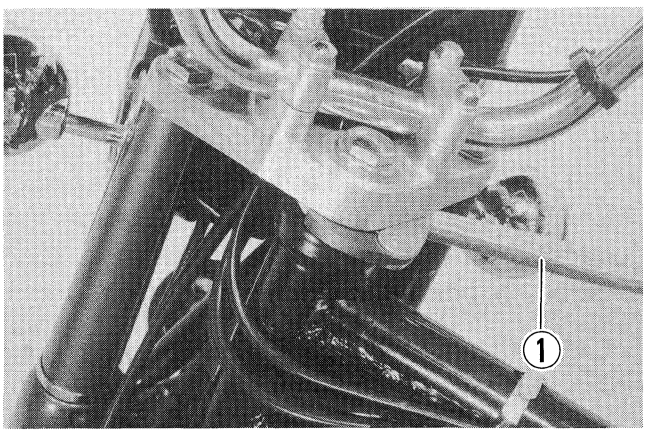

NOTE:
Tighten the steering so that the handlebar pivots freely by its own weight.

- Tighten the bolts to the following torque:

Steering stem head bolt	35 – 53 N·m (3.5 – 5.3 kg-m)
Front fork cap bolt	35 – 53 N·m (3.5 – 5.3 kg-m)
Lower clamp bolt	20 – 30 N·m (2.0 – 3.0 kg-m)

If any play is still found, inspect the following items and replace the affected parts, if necessary.

- Wear of the inner and outer races
- Wear or damage of steel balls
- Number of steel balls
- Distortion of steering stem

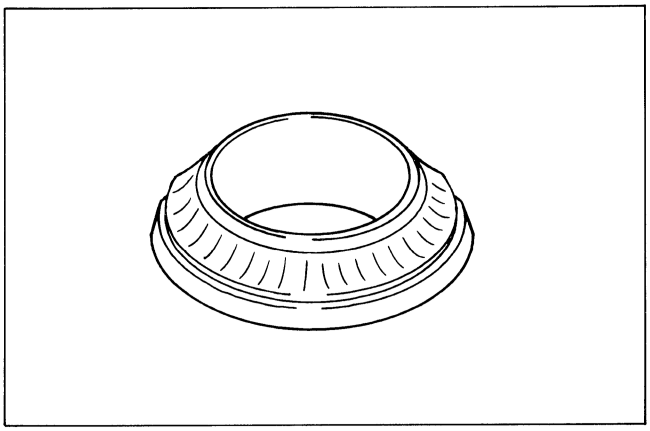

Number of steel balls	
Upper	22 pcs.
Lower	22 pcs.

TIRE

Inspect at initial 1 000 km and every 3 000 km

Tire tread condition

Operating the motorcycle with the excessively worn tires will decrease riding stability and consequently invite a dangerous situation. It is highly recommended to replace the tire when the remaining depth of tire tread reaches the following specifications.

If the tire pressure is too high or too low, steering will be adversely affected and tire wear increased. Therefore, maintain the correct tire pressure for good roadability or shorter tire life will result. Cold inflation tire pressure is as follows.

CAUTION:
The standard tire fitted on this motorcycle is 2.50-18 4PR for front and 2.50-18 4PR (2.75-18 4PR only for E-51) for rear.
The use of a tire other than the standard may cause instability. It is highly recommended to use a SUZUKI Genuine Tire.

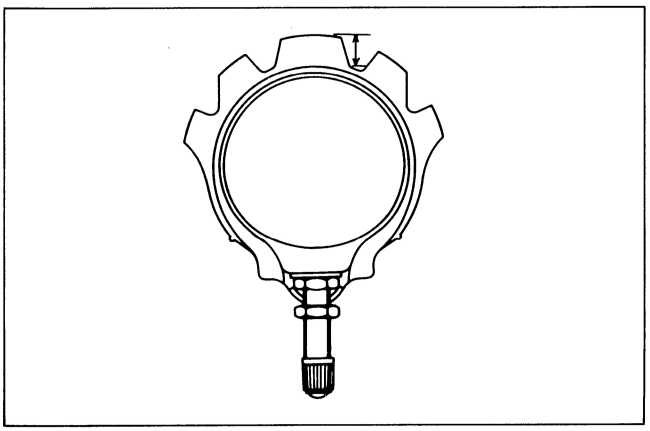

FRONT	REAR
1.6 mm	1.6 mm

FRONT FORK

Change at initial 1 000 km

Use the fork oil # 20 (See page 6-10).

CHASSIS

Bolts and Nuts

ENGINE

Mounting bolts

Inspect at initial 1 000 km and every 3 000 km

The nuts and bolts listed are important parts, and they must be in good condition for safety.
They must be retightened, as necessary, to the specified torque with a torque wrench.

Item	Part Name		N·m	kg-m
①	Front axle nut		27 – 43	2.7 – 4.3
②	Brake cam lever bolts		5 – 8	0.5 – 0.8
③	Swing arm pivot nut		45 – 70	4.5 – 7.0
④	Engine mounting bolt		37 – 45	3.7 – 4.5
⑤	Cylinder head nut		18 – 28	1.8 – 2.8
⑥	Cylinder nut		8 – 12	0.8 – 1.2
⑦	Rear torque link nut		10 – 15	1.0 – 1.5
⑧	Rear shock absorber nuts		20 – 30	2.0 – 3.0
⑨	Rear axle nut	10 mm	27 – 43	2.7 – 4.3
		12 mm	36 – 52	3.6 – 5.2
⑩	Handlebar clamp bolt		12 – 20	1.2 – 2.0
⑪	Front fork lower clamp bolt		20 – 30	2.0 – 3.0
⑫	Front fork cap bolt		35 – 53	3.5 – 5.3
⑬	Steering stem head bolt		35 – 53	3.5 – 5.3

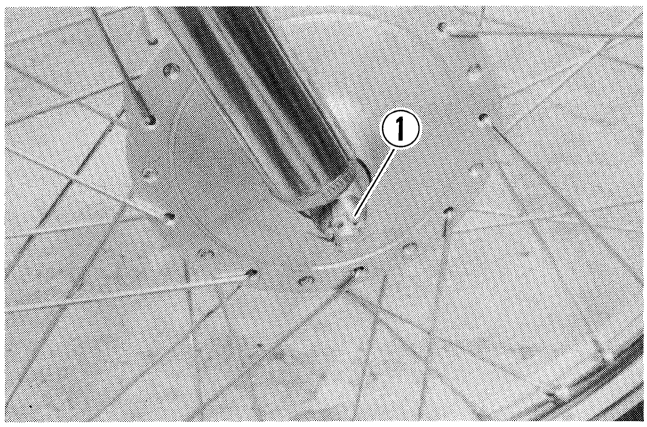

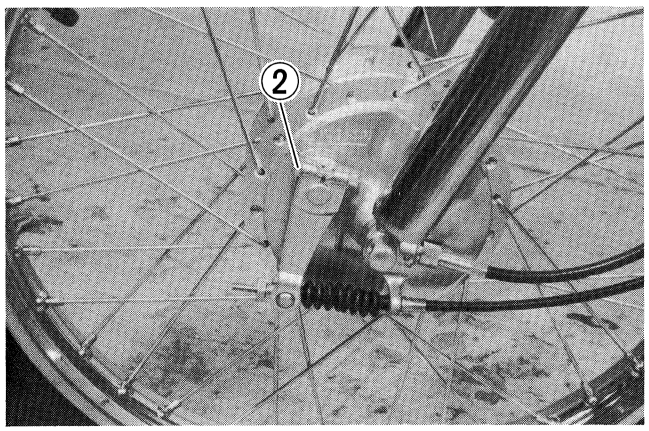

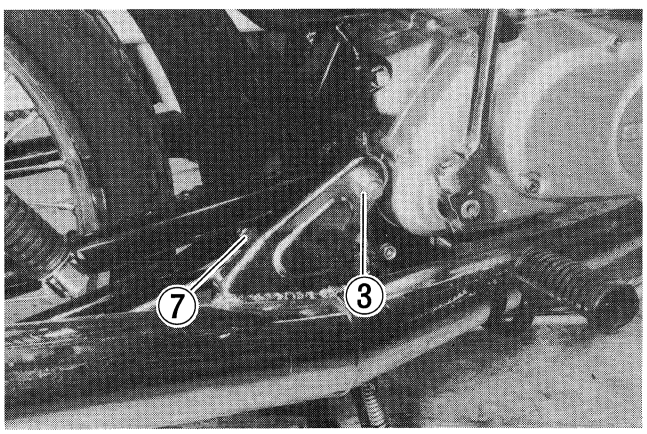

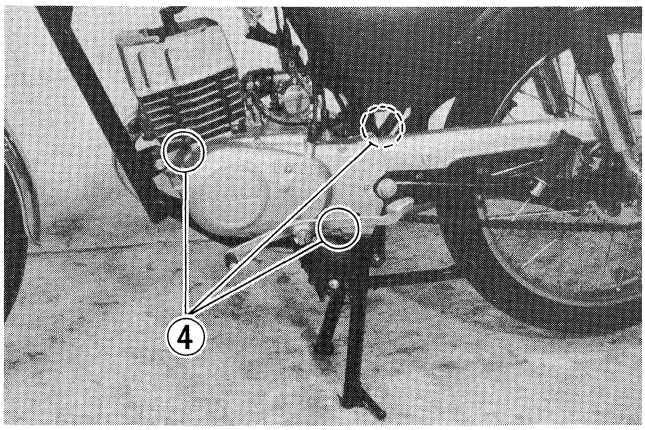
4

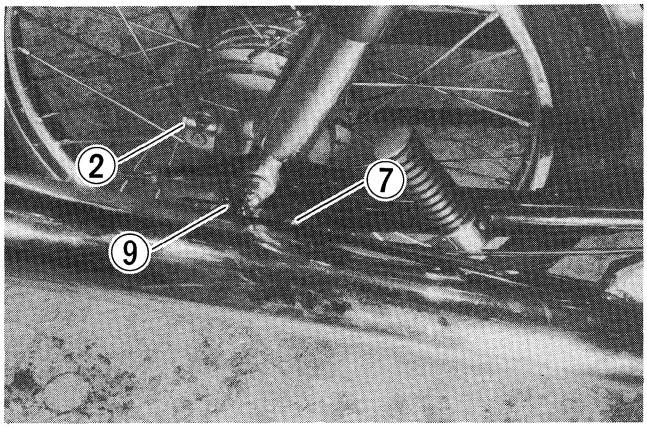
2
7
9

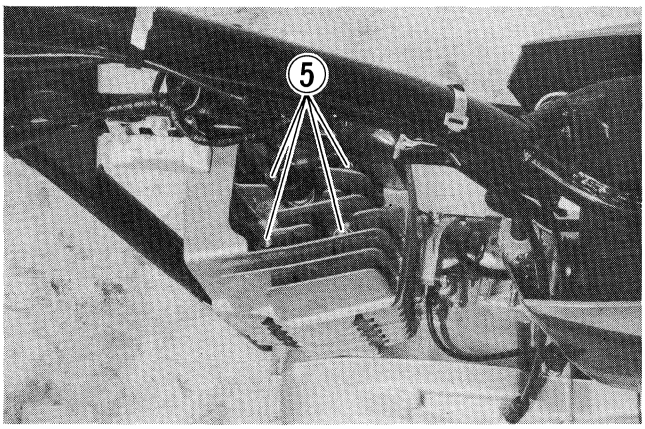
5

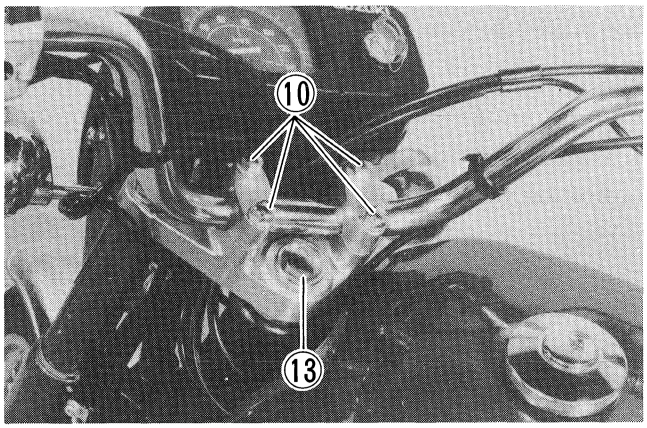
10
13

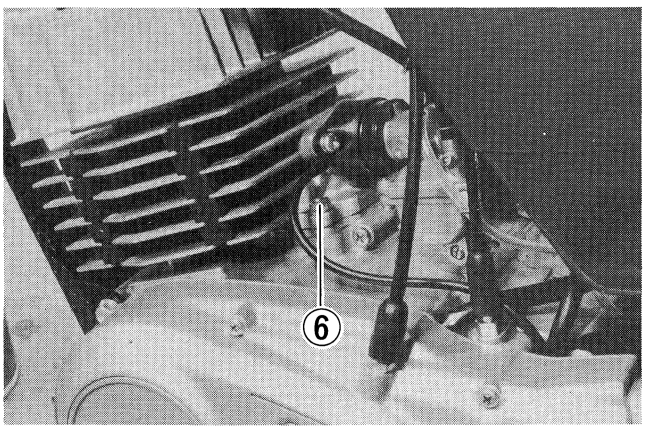
6

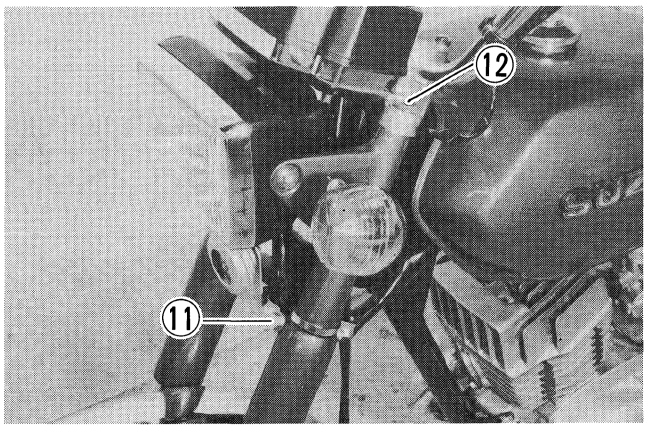
12
11

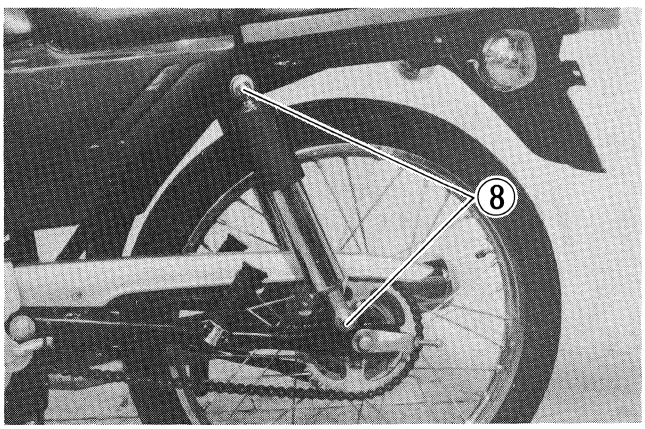
8

SERVICING ENGINE

CONTENTS

ENGINE COMPONENTS REMOVABLE WITH THE ENGINE IN PLACE 3-1

ENGINE REMOVAL 3-1

ENGINE DISASSEMBLY 3-5

ENGINE COMPONENTS INSPECTION AND SERVICING 3-13

ENGINE REASSEMBLY 3-19

ENGINE COMPONENTS REMOVABLE WITH THE ENGINE IN PLACE

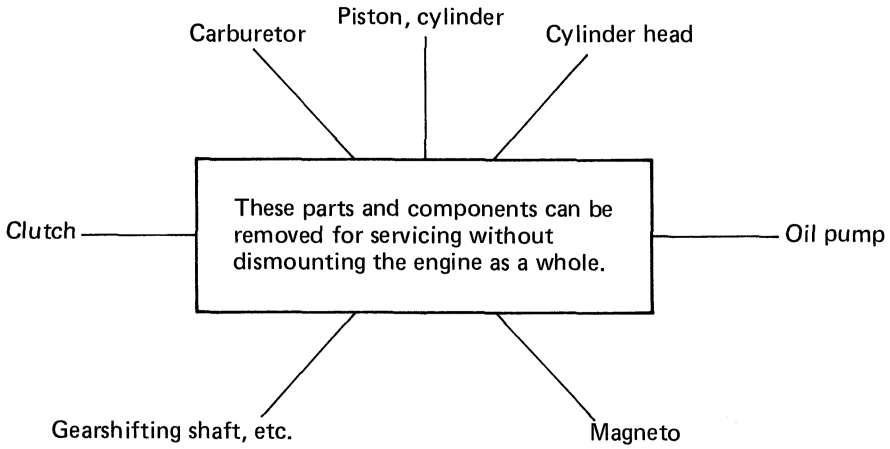

ENGINE REMOVAL

Before taking the engine out of the frame, wash the engine with a steam cleaner and drain transmission oil etc. The procedure of engine removal is sequentially explained in the following steps, and engine installation is effected by reversing the removal procedure.

- Turn the fuel cock OFF position and disconnect fuel hose.

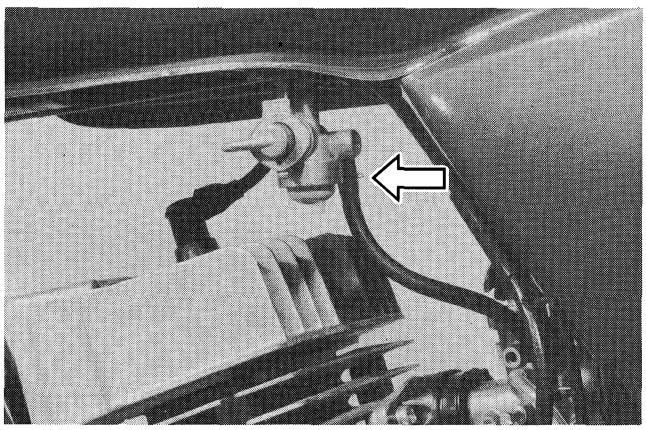

- Take off the left and right frame covers.

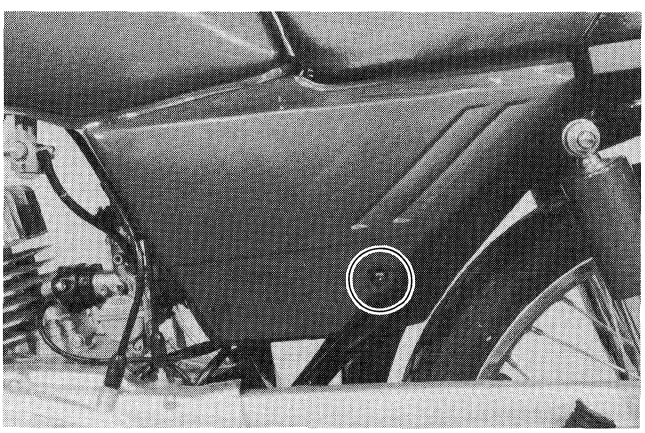

- Remove the seat by loosening the mounting bolts.

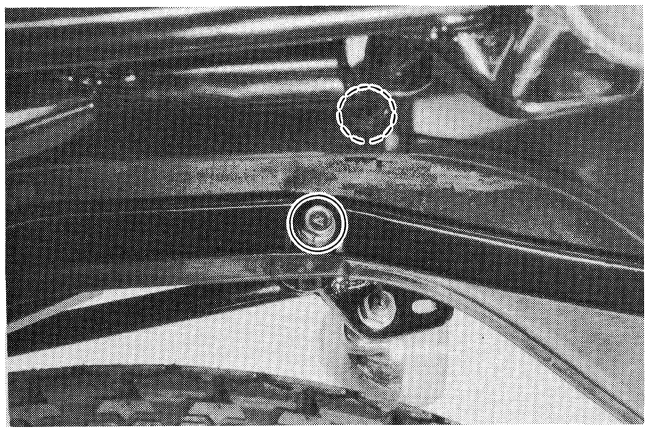

- Take off the tank by loosening the mounting bolts.

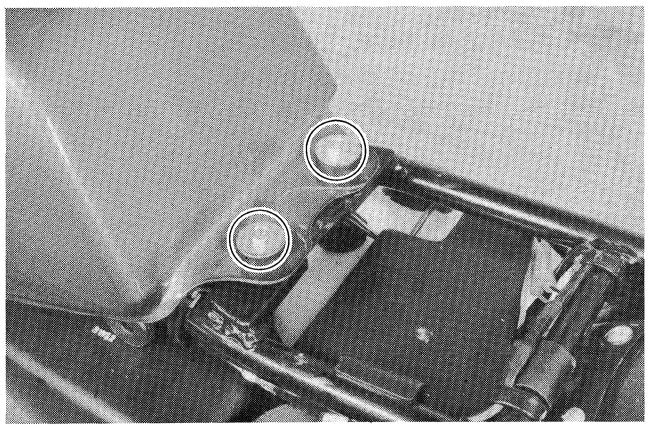

- Take off the clamp.
- Disconnect the magneto lead wire and detach the spark plug cap.

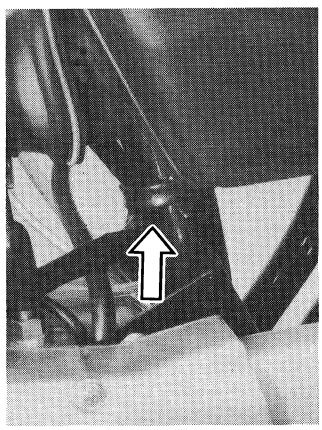

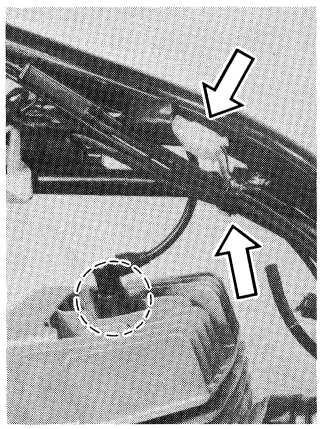

- Take off the gearshift lever and magneto cover.

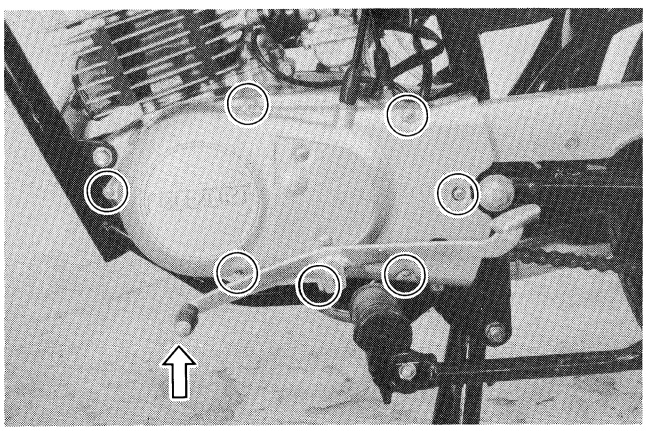

- Take off the chain.

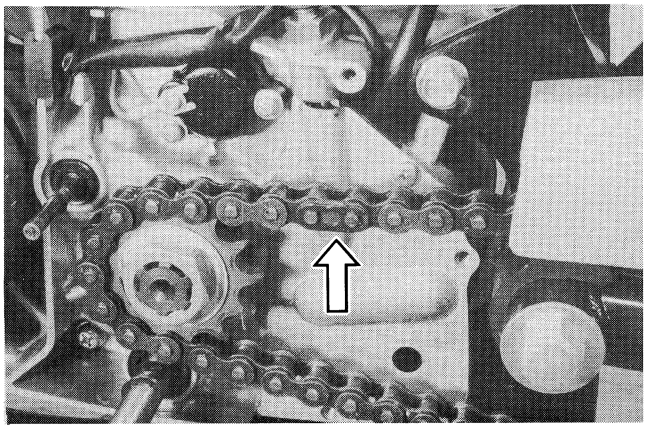

- Remove the oil pump cover.
- Disconnect the oil pump cable.

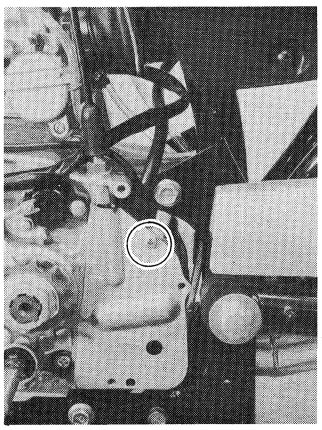

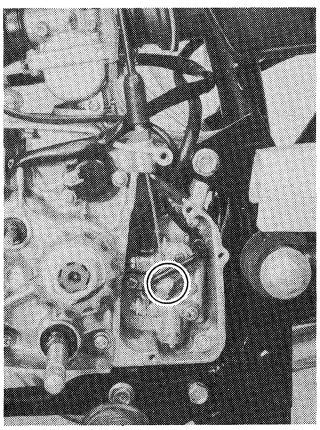

- Detach the oil hose and plug the oil outlet.

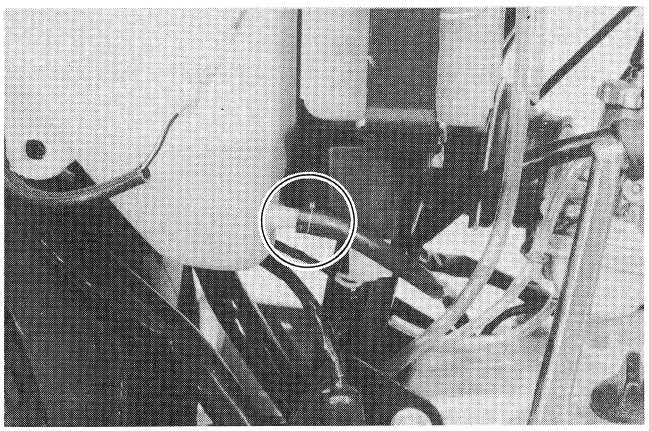

- Remove the muffler by loosening the bolts and nut.

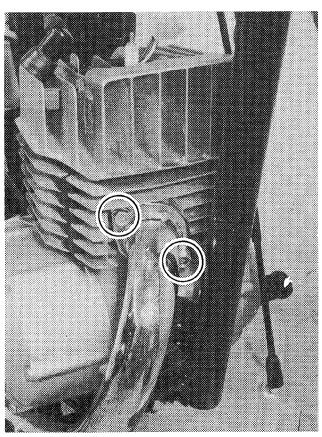

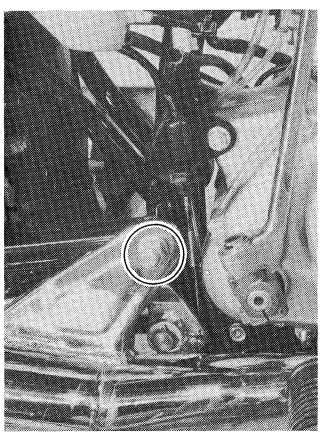

- Unscrewing the carburetor clamp screws.
- Take off the carburetor.

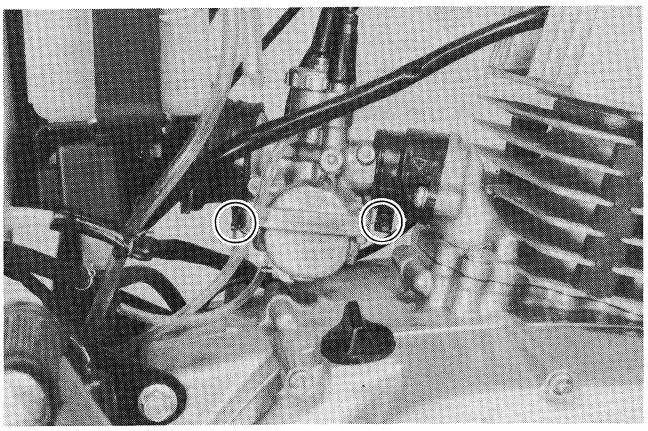

- Loosen three engine mounting bolts.

Tightening torque	37 – 45 N·m (3.7 – 4.5 kg-m)

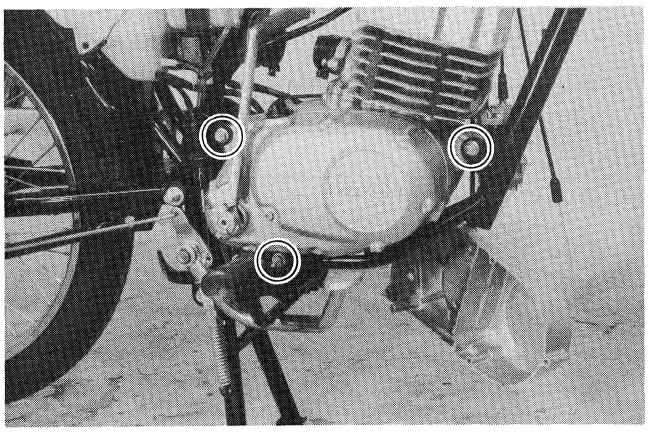

- Dismount the engine assembly from the right side of motorcycle.

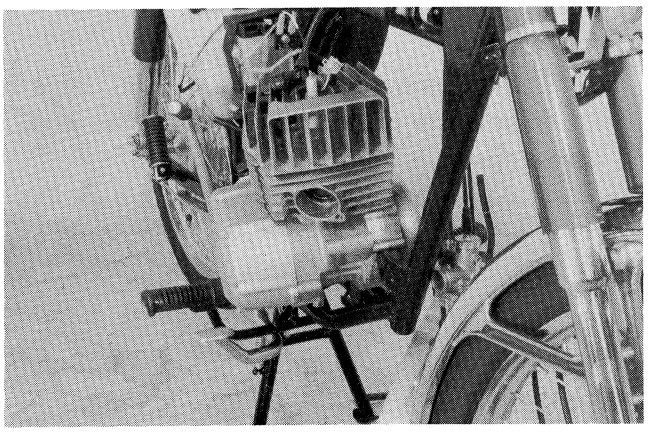

- Self-lock nut are used for engine mounting. Do not reuse them.

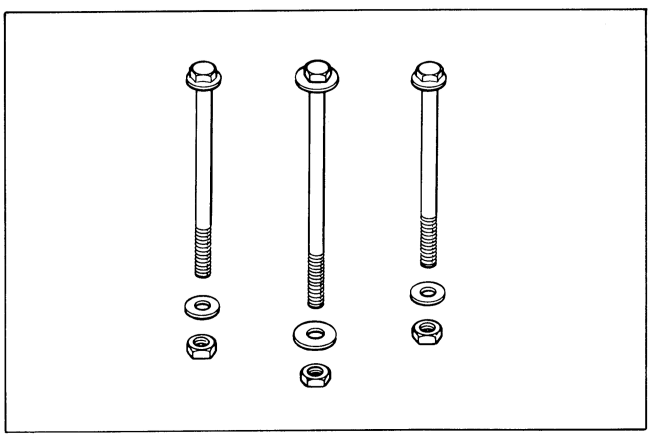

NOTE:
After engine installation, following adjustments are required.
- **Throttle cable play.**
- **Oil pump control cable.**
- **Clutch cable play.**
- **Drive chain sag.**

ENGINE DISASSEMBLY

The procedure for engine disassembly is sequencially explained in the following steps.

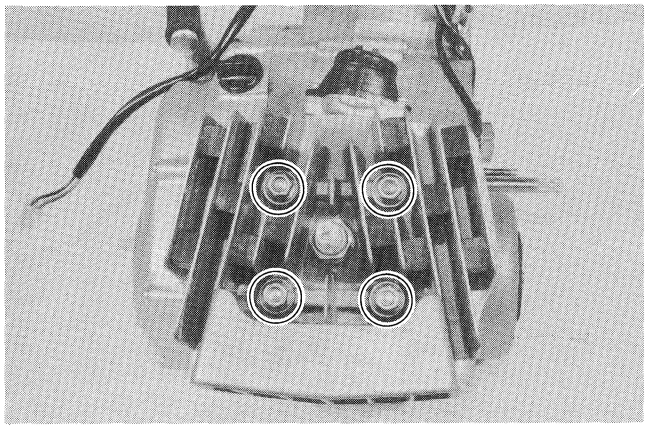

- Remove the cylinder head.

Tightening torque	18 – 28 N·m (1.8 – 2.8 kg-m)

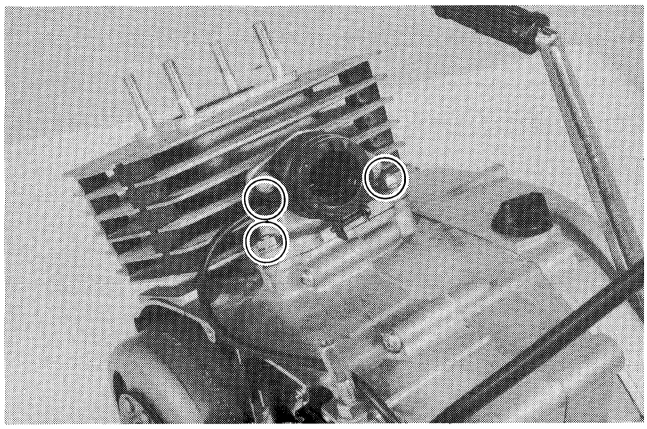

- Remove the cylinder by loosening the nuts.

Tightening torque	8 – 12 N·m (0.8 – 1.2 kg-m)

- Take off the oil inlet hose.

CAUTION:
Place the removed cylinder on the table upside down to prevent distortion of the reed valve stopper.

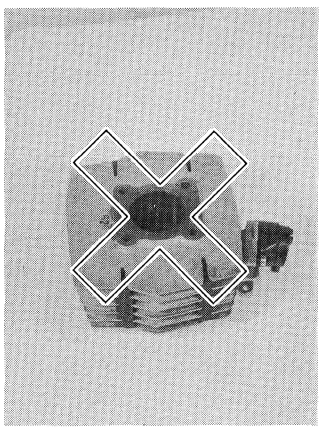

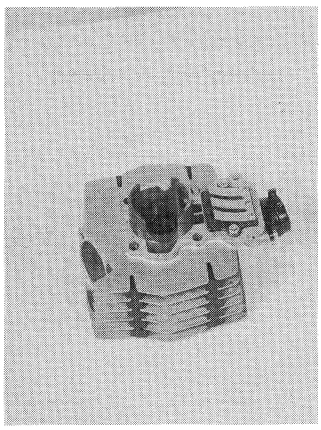

- Remove the piston pin circlip and draw out the piston pin.
- Take off the piston.

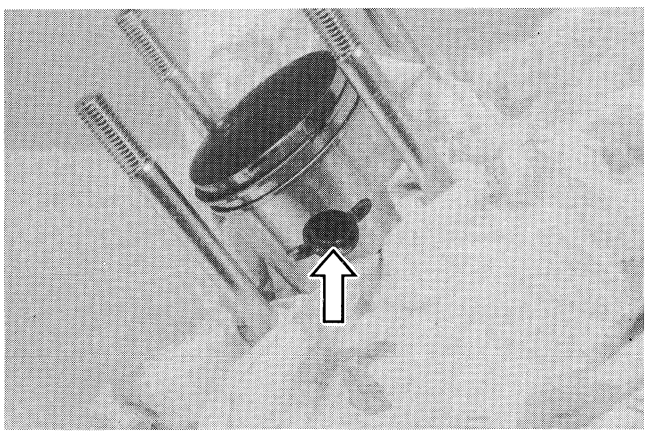

- Take off the kick starter lever.
- Remove the clutch cover by unscrewing the screws.

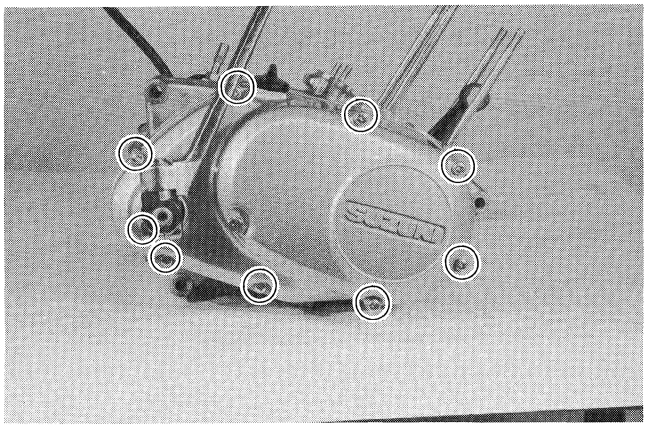

- While pulling the spring by using the special tool, take off the pressure plate pin.
- Take off the pressure plate, push piece, drive plates and driven plates.

09920 - 20310	Clutch spring hook

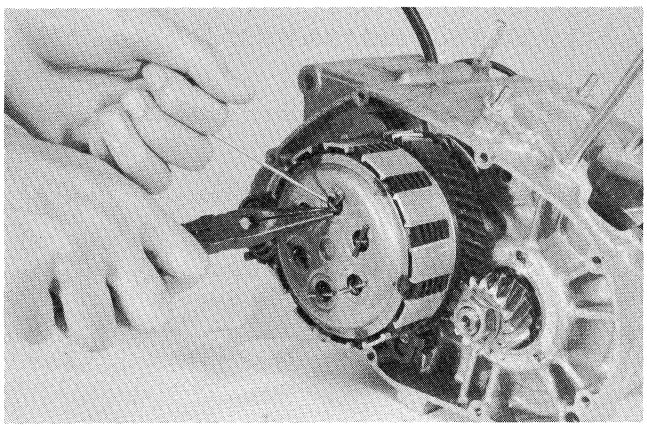

- Flatten the lock washer, and remove the hub nut by using the special tool.

09920 - 53710	Clutch sleeve hub holder

Tightening torque	30 – 45 N·m (3.0 – 4.5 kg-m)

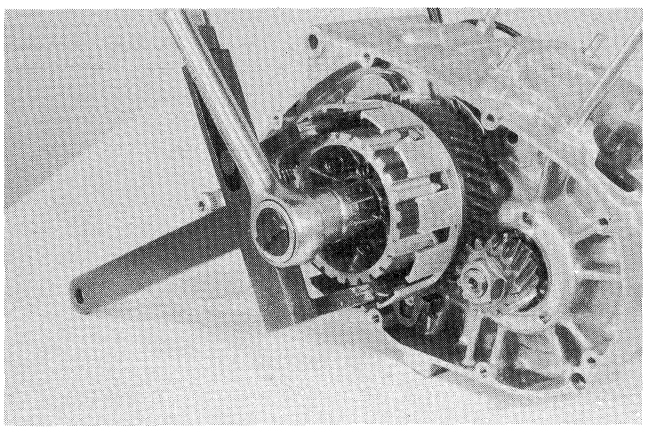

- Take off the sleeve hub and washer.
- Take off the circlip of primary driven gear by using the screw driver.

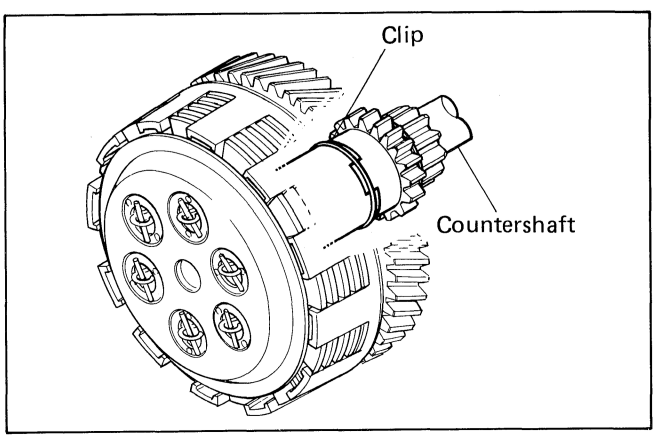

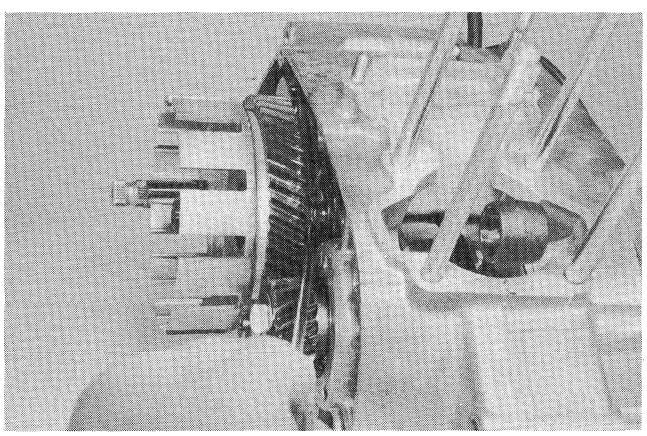

- Unscrew the retaining screw by using the impact driver.
- Remove the retainer and pins.

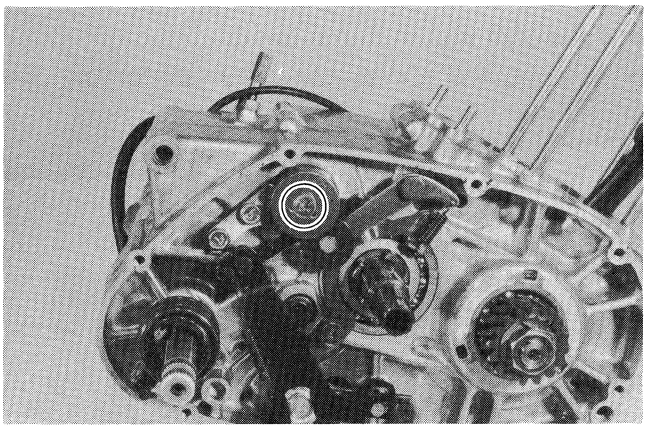

- Loosen the bolt and take off the neutral stopper, spring and washer.

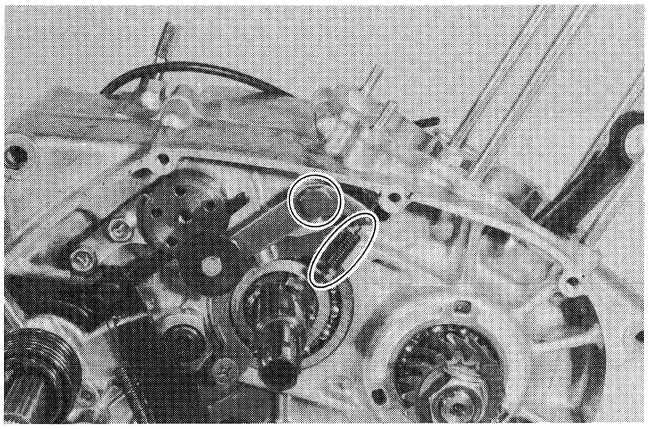

- Remove the two screws by using the impact driver.
- Take off the bearing retainer.

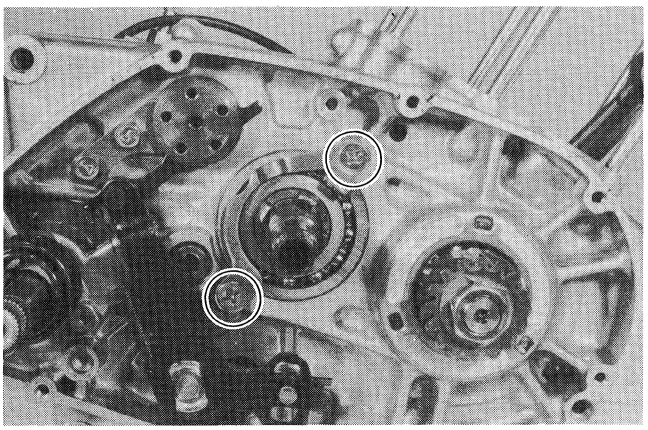

- Take off the gearshift cam lever.

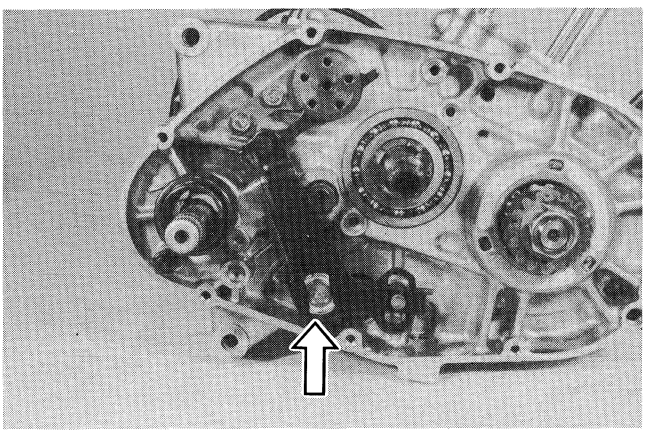

- Loosen the cam retainer bolts and remove the cam retainer.
- Take off the spring retainer and kick starter lever return spring.

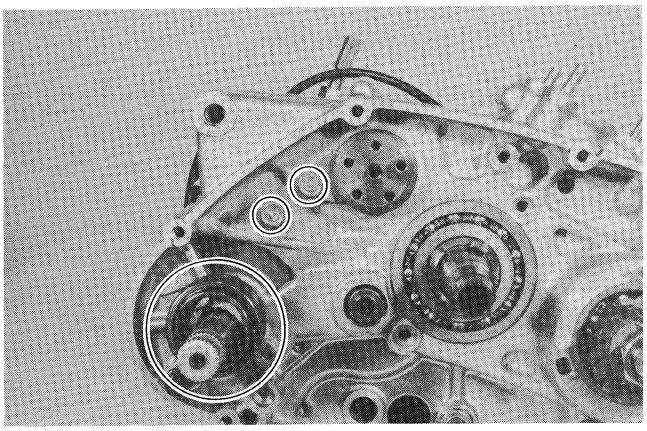

- Loosen the primary drive gear nut by using the special tool.

09910 - 20115	Conrod holder

Tightening torque	50 – 70 N·m (5.0 – 7.0 kg-m)

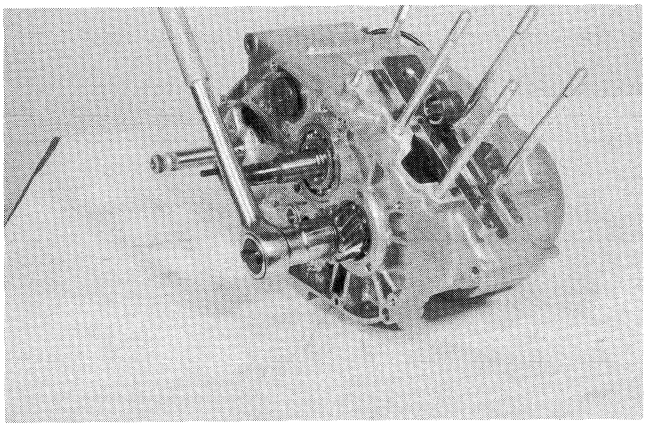

- Remove the primary gear, washer, key and spacer.
- Remove the oil pump and oil pump drive piece.

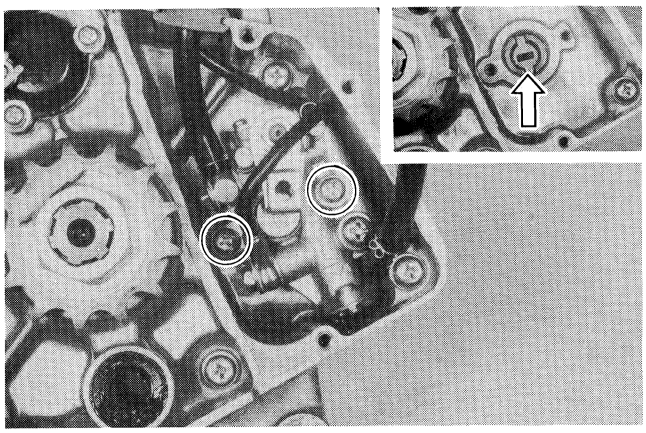

- Flatten the lock washer.
- Loosen the engine sprocket nut by using the special tool.

09930 - 40113	Rotor holder

Tightening torque	80 – 100 N·m (8.0 – 10.0 kg-m)

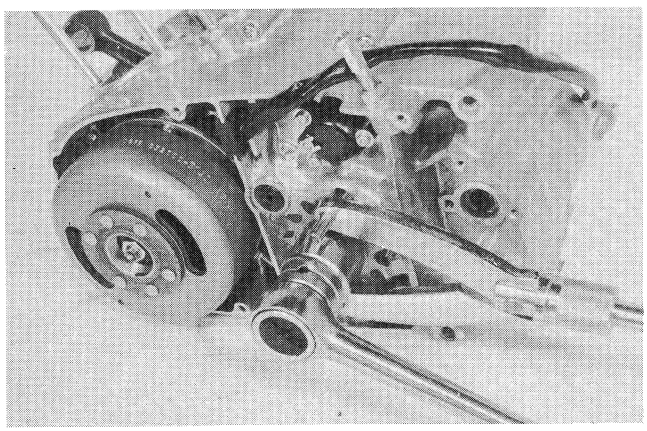

- Take off the engine sprocket.

- Loosen the rotor nut by using the special tool.

09930 - 40113	Rotor holder

Tightening torque	40 – 45 N·m (4.0 – 4.5 kg-m)

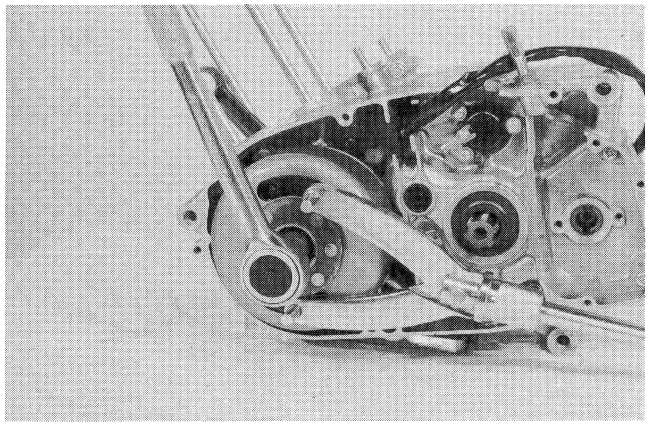

- Remove the rotor by using the special tool.

09930 - 30102	Sliding shaft
09930 - 30161	Attachment C

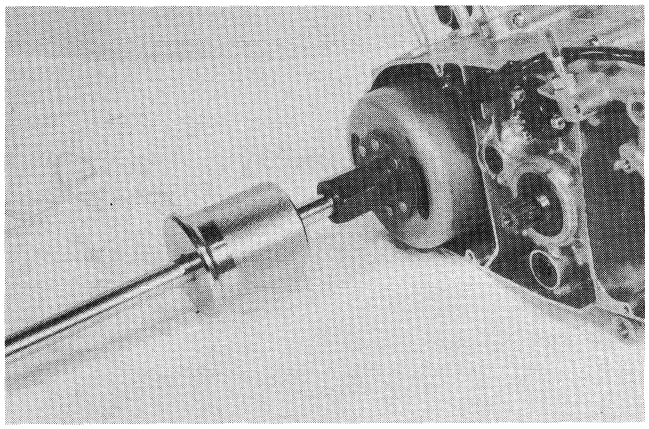

- Unscrew the stator retainning screws and neutral lead wire screw.
- Take off the stator.

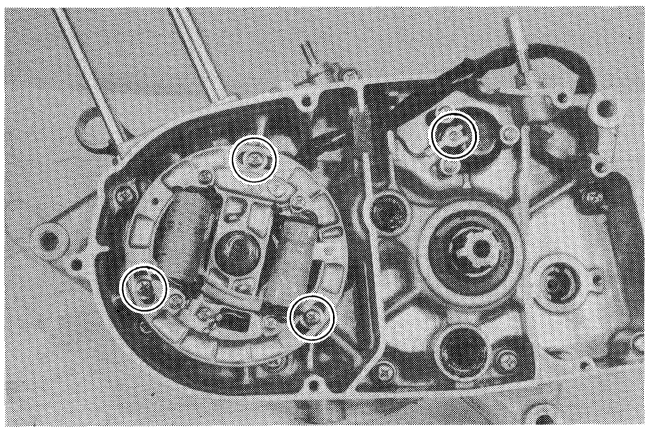

- Remove the neutral switch.

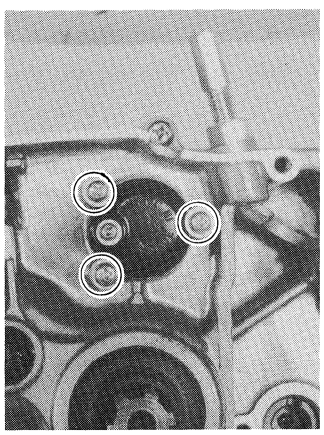

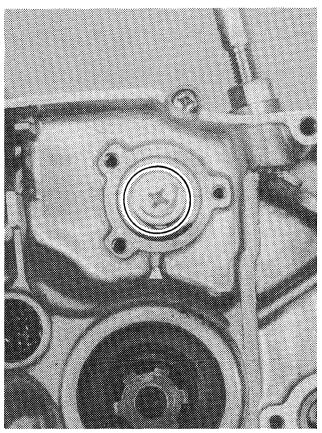

- Loosen the crankcase securing screws by using the impact driver.

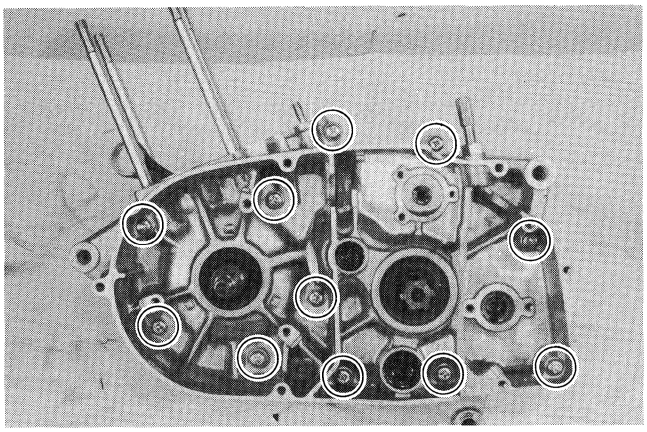

- Separate the crankcase by using the special tool and plastic hammer.

09920 - 13120	Crankcase separate tool
09920 - 13140	Attachment 5 mm

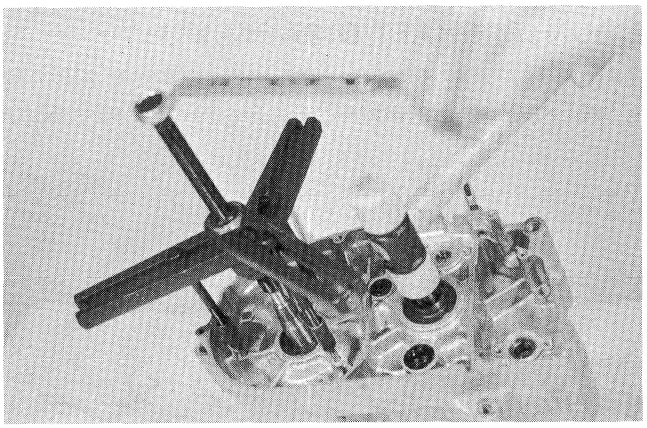

- Take off the counter and drive shaft and gear-shift cam at the same time.

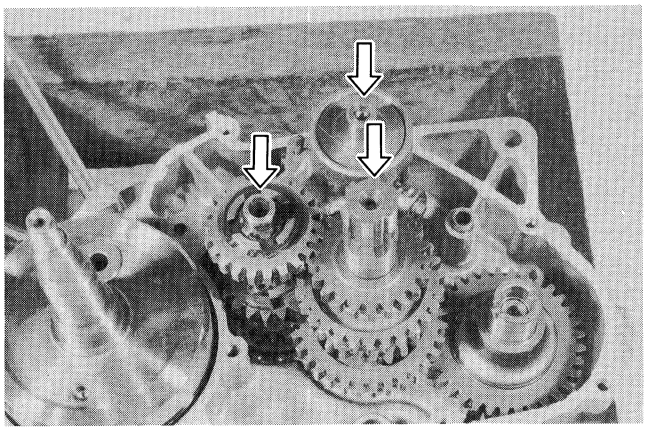

- Remove the kick starter drive gear and shaft assembly.

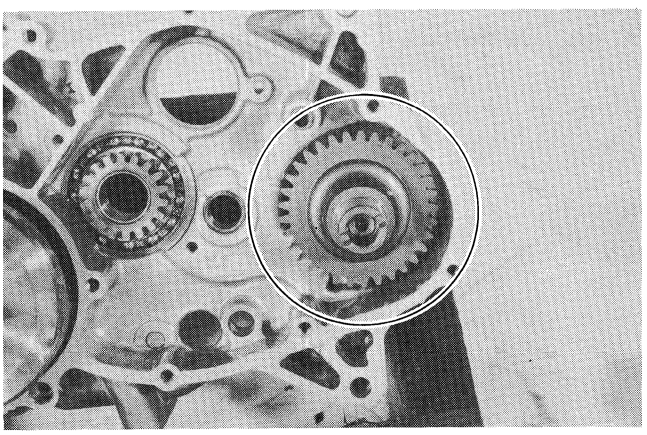

- Remove the crankshaft by using the plastic hammer.

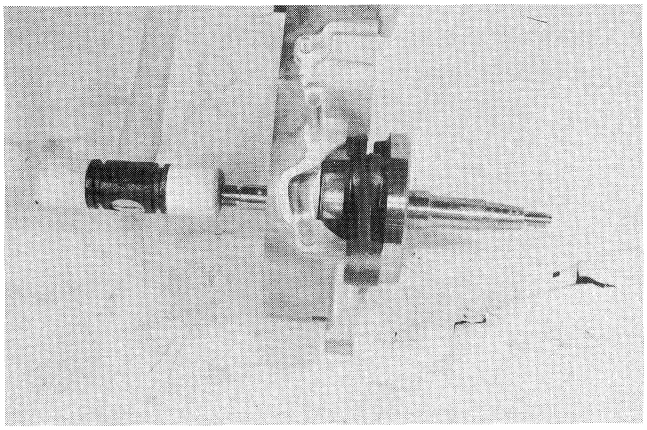

COUNTERSHAFT DISASSEMBLY

- Take off the circlip, and then remove the top and 2nd drive gears.

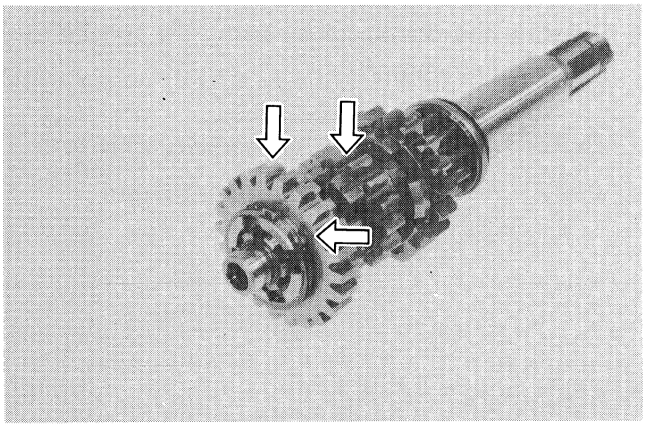

- Take off the circlip, and then remove the 3rd drive gear and washer.

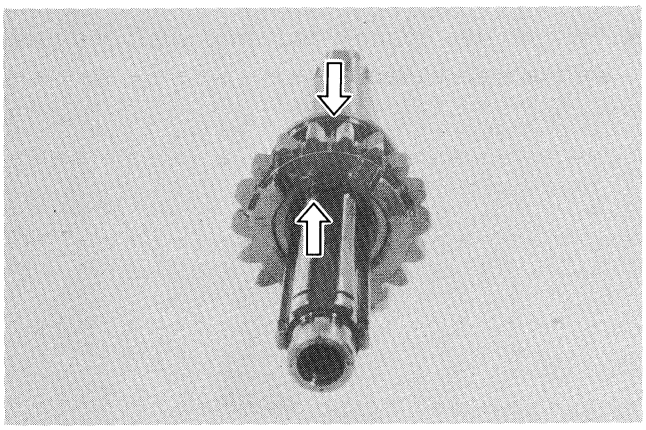

- Remove the thrust washers and thrust bearing.

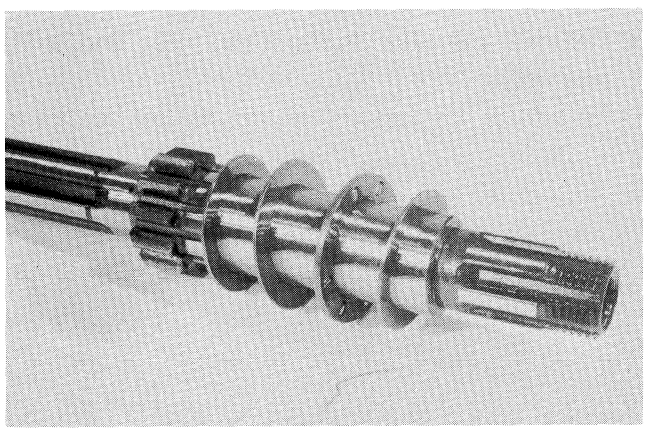

DRIVE SHAFT DISASSEMBLY

- Remove the washer, kick idle gear, low driven gear, 3rd driven gear.

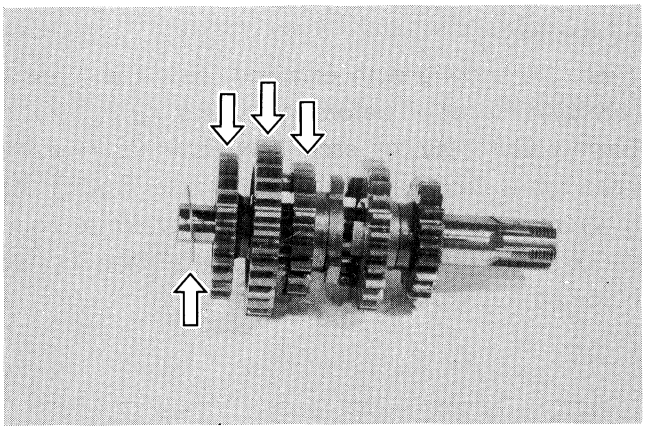

- Remove the circlip, and then, take off the 2nd and top driven gears.

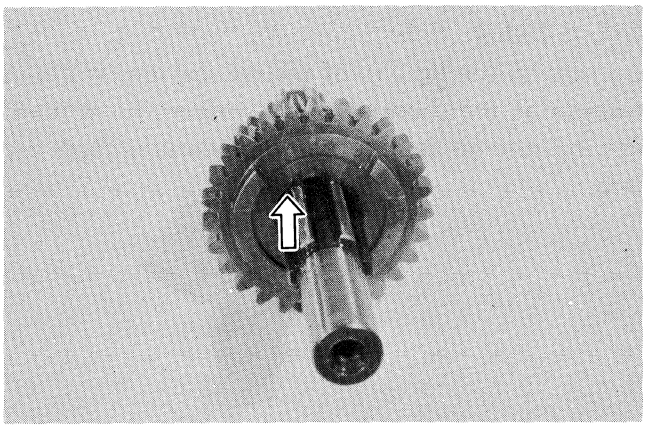

GEAR SHIFT CAM DISASSEMBLY

- Remove the circlip, separate the shift fork and cam.

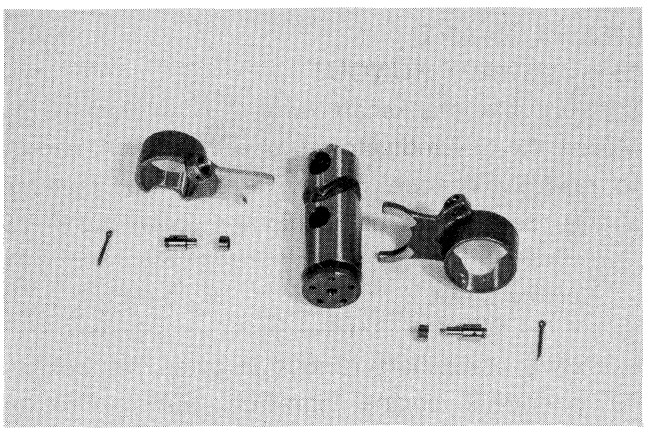

ENGINE COMPONENTS INSPECTION AND SERVICING

BEARING

Wash the bearing with cleaning solvent and lubricate with motor oil before inspecting.
Inspect the play of each bearing inner race by hand while fixing it in the crank case. Rotate the inner race by hand to inspect an abnormal noise and a smooth rotation. Replace the bearing if there is something unusual.

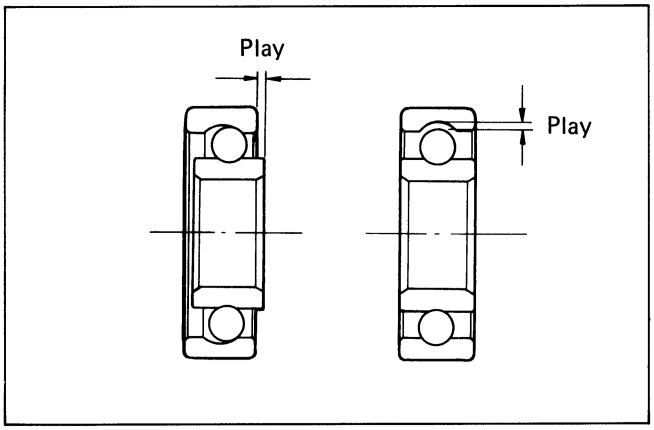

OIL SEALS

Damage to the lip ① of the oil seal may result in leakage of the mixture or oil. Inspect for damage and be sure to replace damaged parts if there are any.

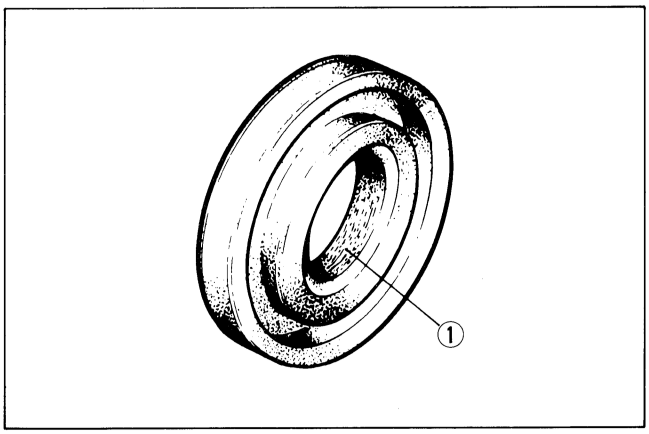

CRANKSHAFT

CRANKSHAFT RUNOUT

Support the crankshaft with "V" blocks ① . Mount the dial indicator ② at the positions shown to read the runout. Runout is total dial reading, and is specified to be within the following limit:

Service Limit	0.05 mm

Excessive crankshaft runout is often responsible for abnormal engine vibration. Such vibration shortens engine life.

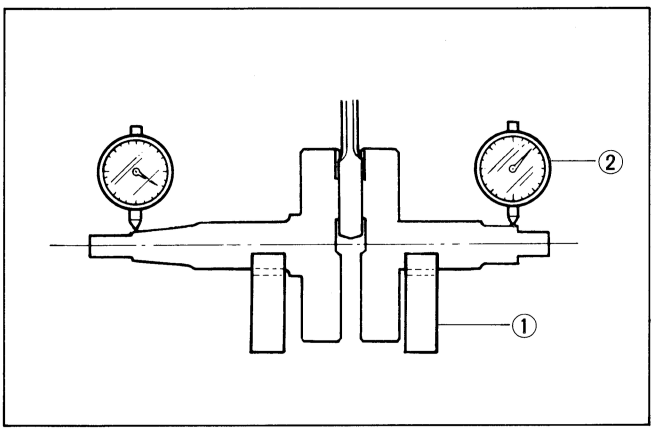

CONDITION OF BIG END BEARING

Turn the crankshaft with the connecting rod to feel the smoothness of rotary motion in the big end. Move the rod up and down while holding the crankshaft rigidly to be sure that there is no rattle in the big end.

09900 - 21304	V-block set
09900 - 20606	Dial gauge (1/100 mm)
09900 - 20701	Magnetic stand

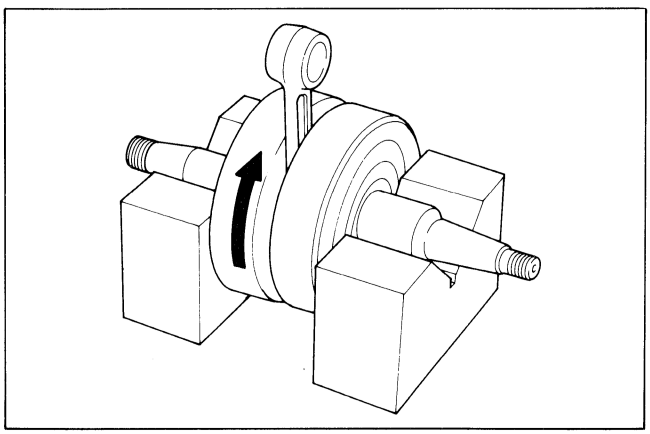

Wear on the big end of the connecting rod can be estimated by checking the movement of the small end of the rod. This method can also check the extent of wear on the parts of the connecting rod's big end. If wear exceeds the limit, connecting rod, crank pin and crank pin bearing should all be replaced.

Service Limit	3 mm

GEARS AND SHIFTING FORKS

Upon disassembling the engine, immediately inspect the transmission internals, visually examining the gears for damage and checking the meshed condition of gear teeth. Using a thickness gauge, check the shifting fork clearance in the groove of its gear.

09900 - 20804	Thickness gauge

This clearance for each of the two shifting forks plays an important role in the smoothness and positiveness of shifting action. Each fork has its prongs fitted into the annular groove provided in its gear. In operation, there is sliding contact between fork and gear and, when a shifting action is initiated, the fork pushes the gear axially. Too much a clearance is, therefore, liable to cause the meshed gears to slip apart. If the clearance checked is noted to exceed the limit specified, replace the fork or its gear, or both.

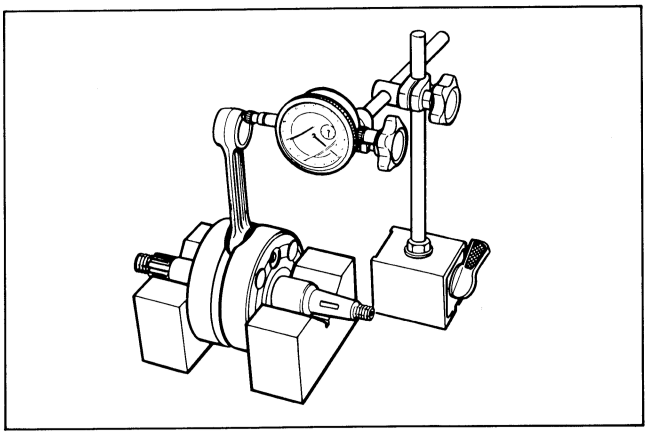

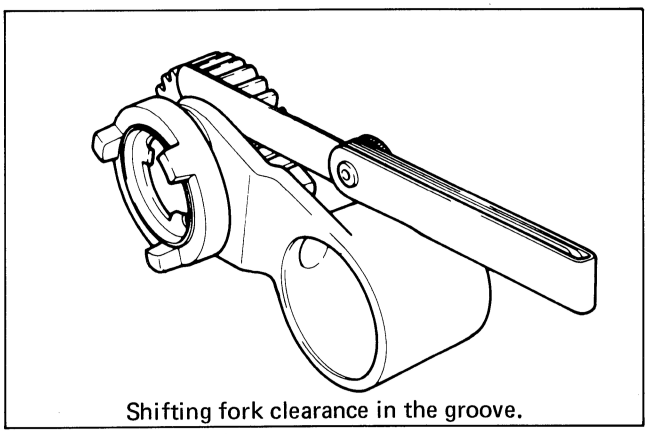

Shifting fork clearance in the groove.

Shift fork – groove clearance

		Service Limit
No. 1	for 2nd drive gear	0.50 mm
No. 2	for 3rd driven gear	

CLUTCH

DRIVE PLATES AND DRIVEN PLATES

Clutch plates in service remain in oily condition as if they were lubricated with oil. Because of this condition, both drive and driven plates are subject to little wearing action and therefore last much longer. Their life depends largely on the quality of oil used in the clutch and also on the way the clutch is operated.

These plates are expendable: they are meant to be replaced when found worn down or distorted to the respective limit: use a caliper to check thickness and a thickness gauge and surface plate to check distortion.

09900 - 20101	Vernier caliper
09900 - 20804	Thickness gauge

Unit: mm

Service Limit	Drive plate	Driven plate
Thickness	2.6	–
Distortion	–	0.10
Claw width	9.3	–

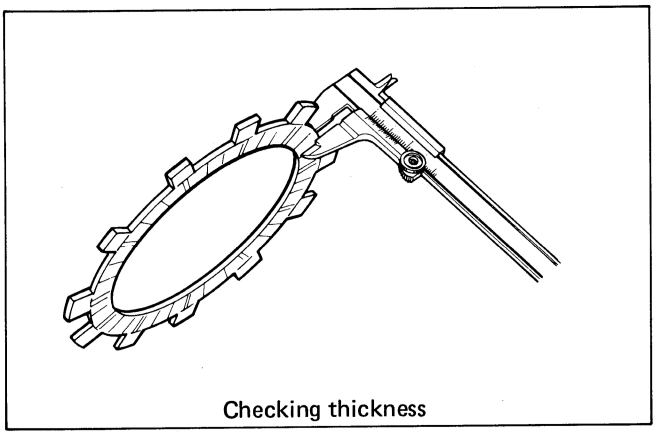

Checking thickness

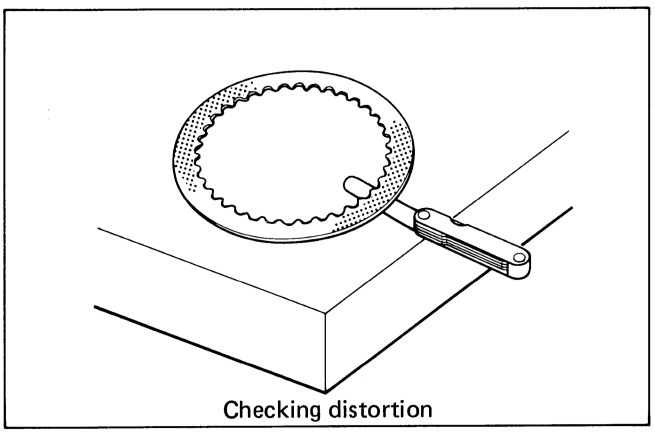

Checking distortion

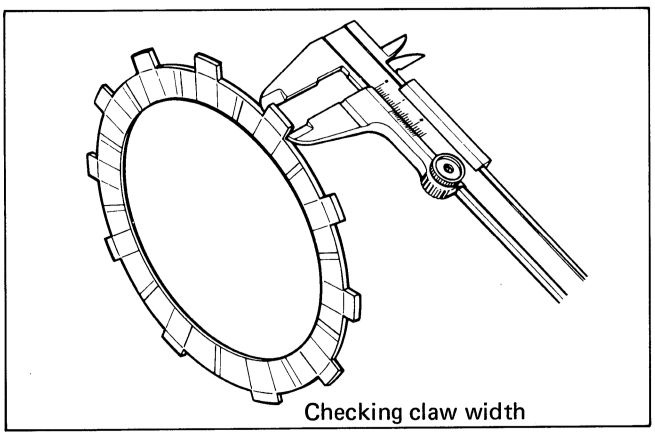

Checking claw width

CLUTCH SPRINGS

Clutch springs which have lost their tension also cause clutch slipping, resulting in loss of power and rapid wear of the clutch plates.

Remove the clutch springs and measure their free length with calipers.

Service Limit	33.6 mm

NOTE:
If one of them is shorter than service limit, renew all of them at a time.

09900 - 20101	Vernier caliper

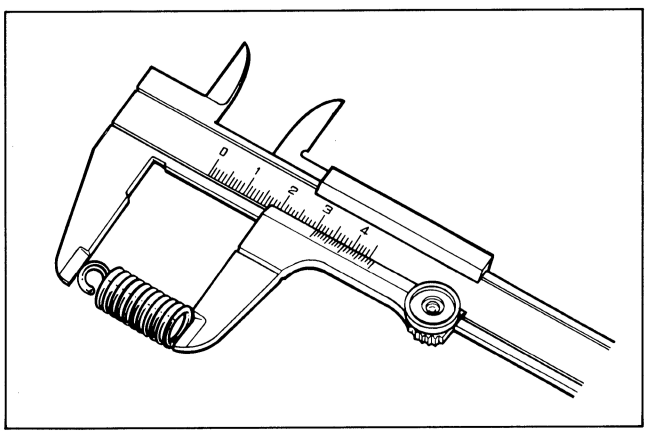

CYLINDER HEAD

Using a surface plate and red lead paste or mechanist blueing/making dye, check the gasketed surface of the cylinder head for flatness. If high and low spots are noted, remove them by rubbing the surface against emery paper (of about # 400) laid flat on the surface plate in a lapping manner. The gasketed surface must be smooth and perfectly flat in order to secure a tight joint: a leaky joint can be the cause of reduced power output and increased fuel consumption.

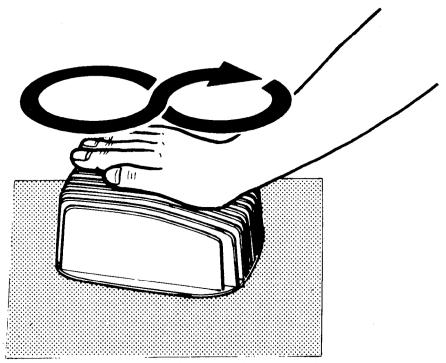

Repairing warped surface of cylinder head.

Cylinder head warpage

Service Limit	0.05 mm

CYLINDER

The wear of the cylinder wall is determined from diameter reading taken at 20 mm from the top of the cylinder with a cylinder gauge. If the wear thus determined exceeds the limit indicated below, rework the bore to the next oversize by using a boring machine or replace the cylinder with a new one. Oversize pistons are available in two sizes: 0.5 mm and 1.0 mm oversizes.

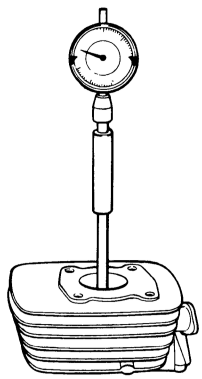

09900 - 20508	Cylinder gauge set

Service Limit	50.095 mm

After reworking the bore to an oversize, be sure to chamfer the edges of ports and smooth the chamfered edges with emery paper. To chamfer, use a scraper, taking care not to nick the wall surface.

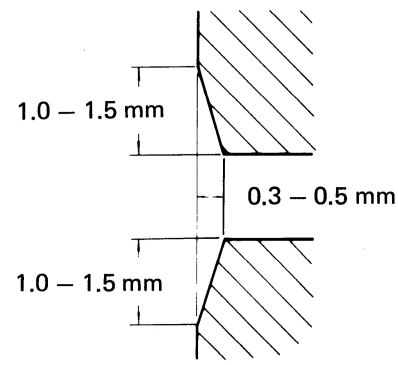

NOTE:
Minor surface flaws on the cylinder wall due to seizure or similar abnormalities can be corrected by grinding the flaws off with fine-grain sandpaper. If the flaws are deep grooves or otherwise persist, the cylinder must be reworked with a boring machine to the next oversize.

PISTON

Cylinder to piston clearance

Cylinder-to-piston clearance is the difference between piston diameter and bore diameter. Be sure to take the miked diameter at right angles to the piston pin. The value of elevation Ⓐ is prescribed to be 21 mm.

09900 - 20202	Micrometer

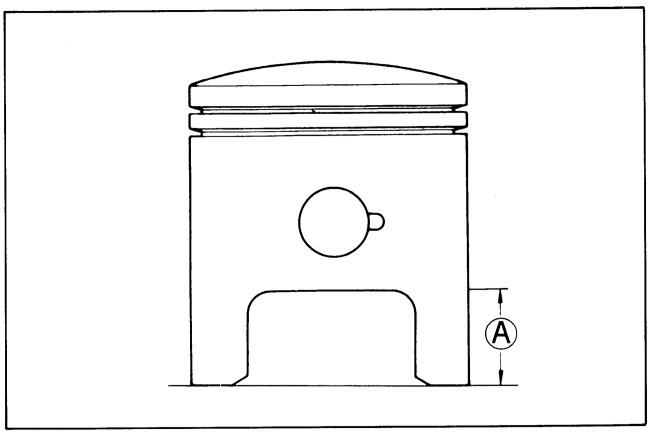

Piston diameter for cylinder-to-piston clearance determination.
The measurement for the bore diameter will be made at Ⓑ 20 mm from the cylinder top surface.

Unit: mm

	STD	Service Limit
Cylinder	50.000 – 50.015	50.095
Piston	49.960 – 49.975	49.880
Cylinder to piston	0.035 – 0.045	0.120

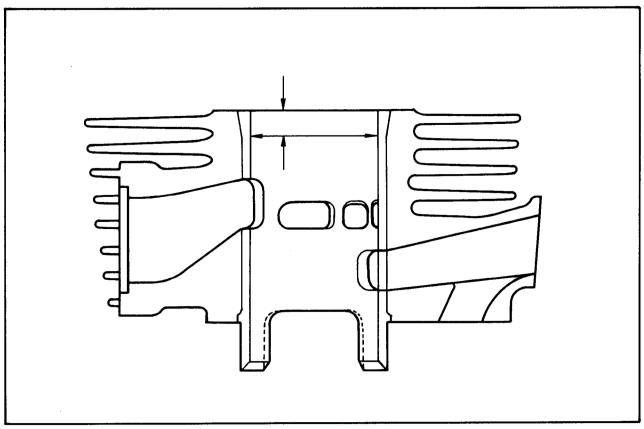

De-carbon the piston and piston ring grooves, as shown in Fig. After cleaning the grooves, fit the rings and rotate them in their respective grooves to be sure that they move smoothly.
Carbon in the groove is liable to cause the piston ring to get stuck in the groove, and this condition will lead to reduced engine power output.

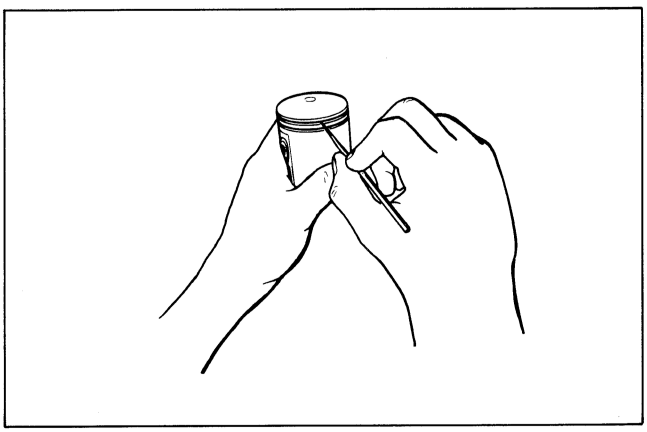

A piston whose sliding surface is badly grooved or scuffed due to the overheating must be replaced. Shallow grooves or minor scuff can be removed by grinding with emery paper of about # 400.

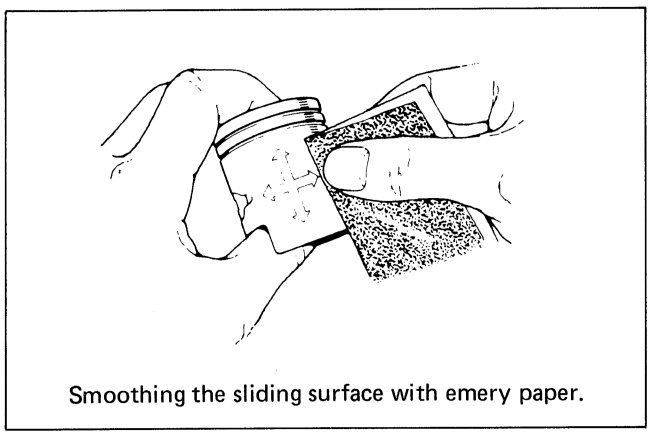

Smoothing the sliding surface with emery paper.

PISTON RING

Check each ring for end gap, reading the gap with a thickness gauge (Part No. 09900-20803), as shown in Fig. If the end gap is found to exceed the limit, indicated below, replace it with a new one.
The end gap of each ring is to be measured with the ring fitted squarely into the cylinder bore and held at the least worn part near the cylinder bottom, as shown in Fig.

Service Limit	0.80 mm

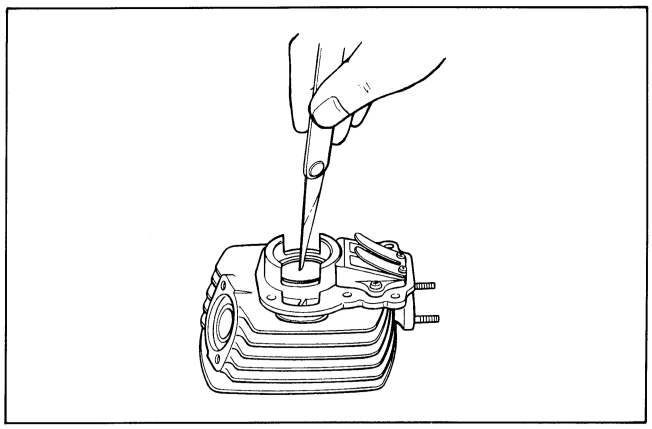

As the piston ring wears, its end gap increases reducing engine power output because of the resultant blowby through the enlarged gap. Here lies the importance of using piston rings with end gaps within the limit.
Measure the piston ring free end gap to check the spring tension.

Mark	Service Limit
"RN" marked	4.0 mm
"T" marked	3.6 mm

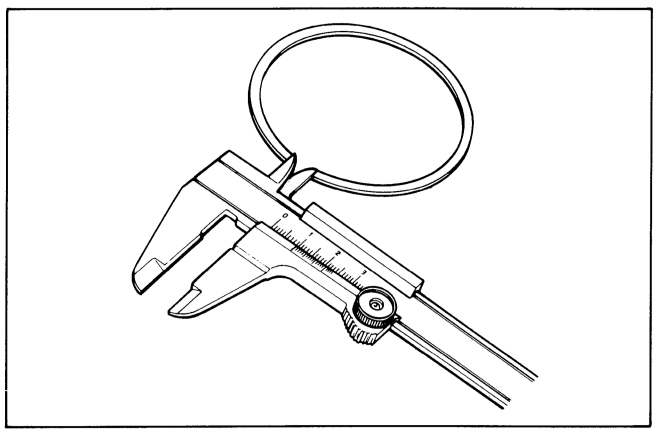

Fix the piston ring in the piston ring groove, measure the ring side clearance with the thickness gauge while matching the sliding surfaces of piston and ring.

STD Clearance	0.01 – 0.04 mm

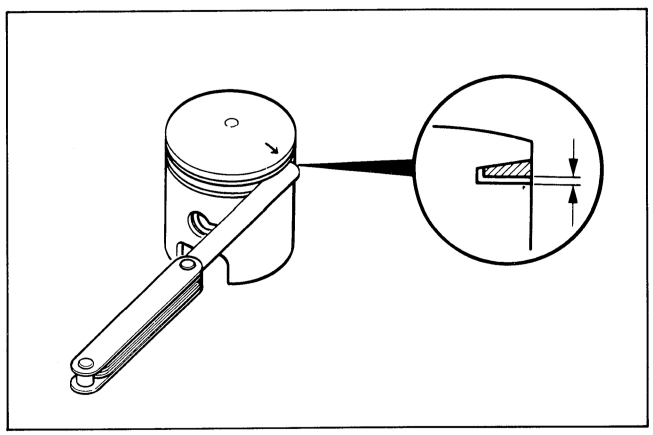

REED VALVE

Check the clearance Ⓐ between reed valve and its seat and the dimension Ⓑ . If the clearance Ⓐ is noted to exceed 0.2 mm, replace the reed valve flapping piece. The dimension Ⓑ is at least 1 mm.

NOTE:
When replacing the individual part, apply the thread lock cement to the screws and tighten it with the torque value 7 – 9 kg-cm.

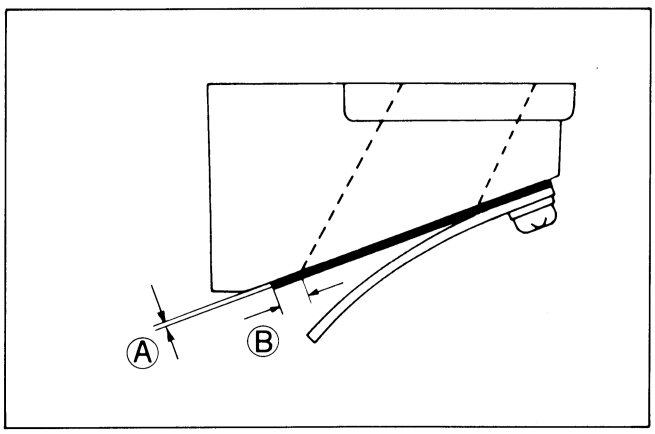

ENGINE REASSEMBLY

Reassembly is generally performed in the reverse order to disassembly but there are a number of reassembling steps that demand or deserve detailed explanation or emphasis. These steps will be taken up for respective parts and components.

BEARINGS

Insert the bearing into the crankcase using the special tool (bellow list). After the bearing is installed, be sure to lubricate to prevent initial wear.

09913-70122	Bearing installer
09913-76010	Bearing installer
09913-80112	Bearing remover
09913-85210	Bearing installer
09914-79610	Bearing remover
09911-94530 09916-57321	Installer handle and attachment
09916-44910 09916-44920	Installer handle and attachment

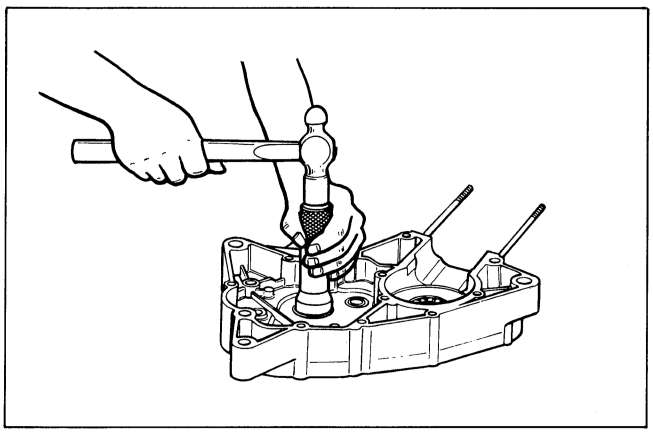

OIL SEALS

Fit the oil seals to the crankcase following the procedure below.

Replace removed oil seals with new ones.

- Apply SUZUKI Super Grease "A" (Part No. 99000-25010) to the lip of the oil seal.
- Be sure to apply "Thread Lock 1342" (Part No. 99000-32050) to outer surfaces of right and left crankshaft oil seals, to prevent them from moving.
- When fitting the oil seal in the crankcase, insert it slowly using the special tool (Part No. 09913-70122 or 09913-80112).

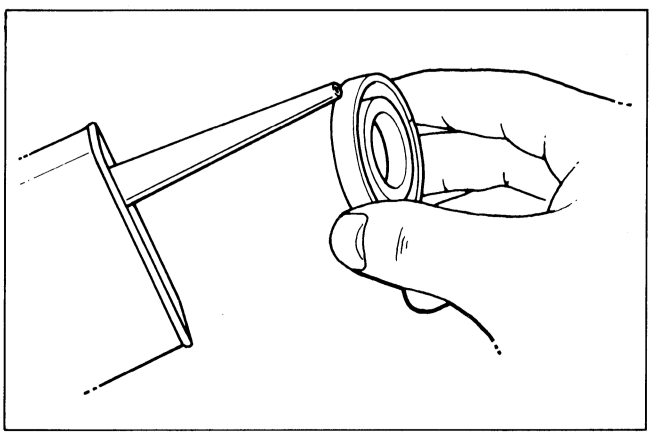

NOTE:
Apply engine oil to each running and sliding part before installing it in reassembling.

CRANKSHAFT

CRANKSHAFT REBUILDING

Decide the length between the webs referring to the figure when rebuilding the crankshaft.

STD width between webs	49.9 – 50.1 mm

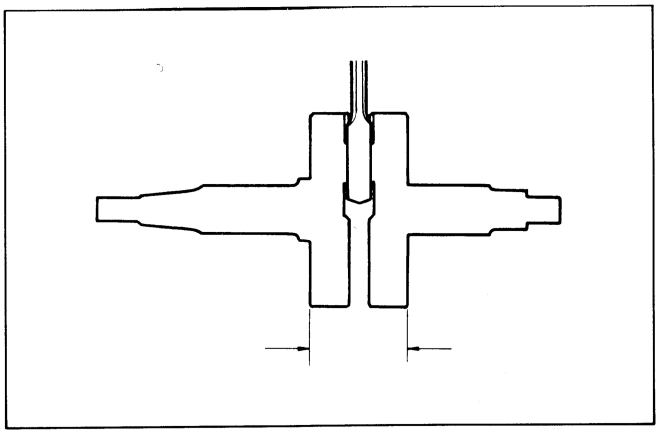

When mounting the crankshaft in the crankcase, it is necessary to drive its right end into the crankcase. Use a plastic or soft material hammer for the purpose.

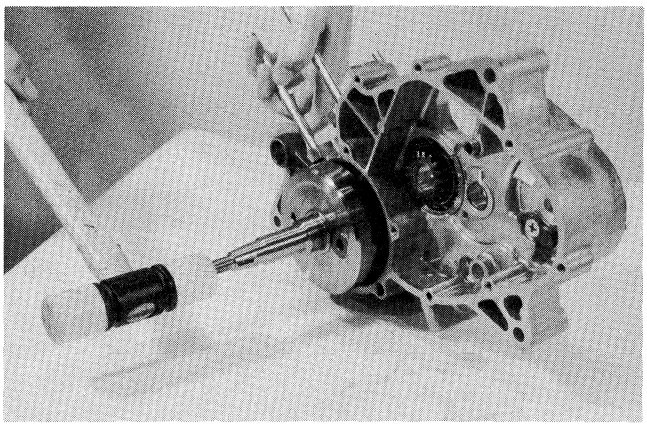

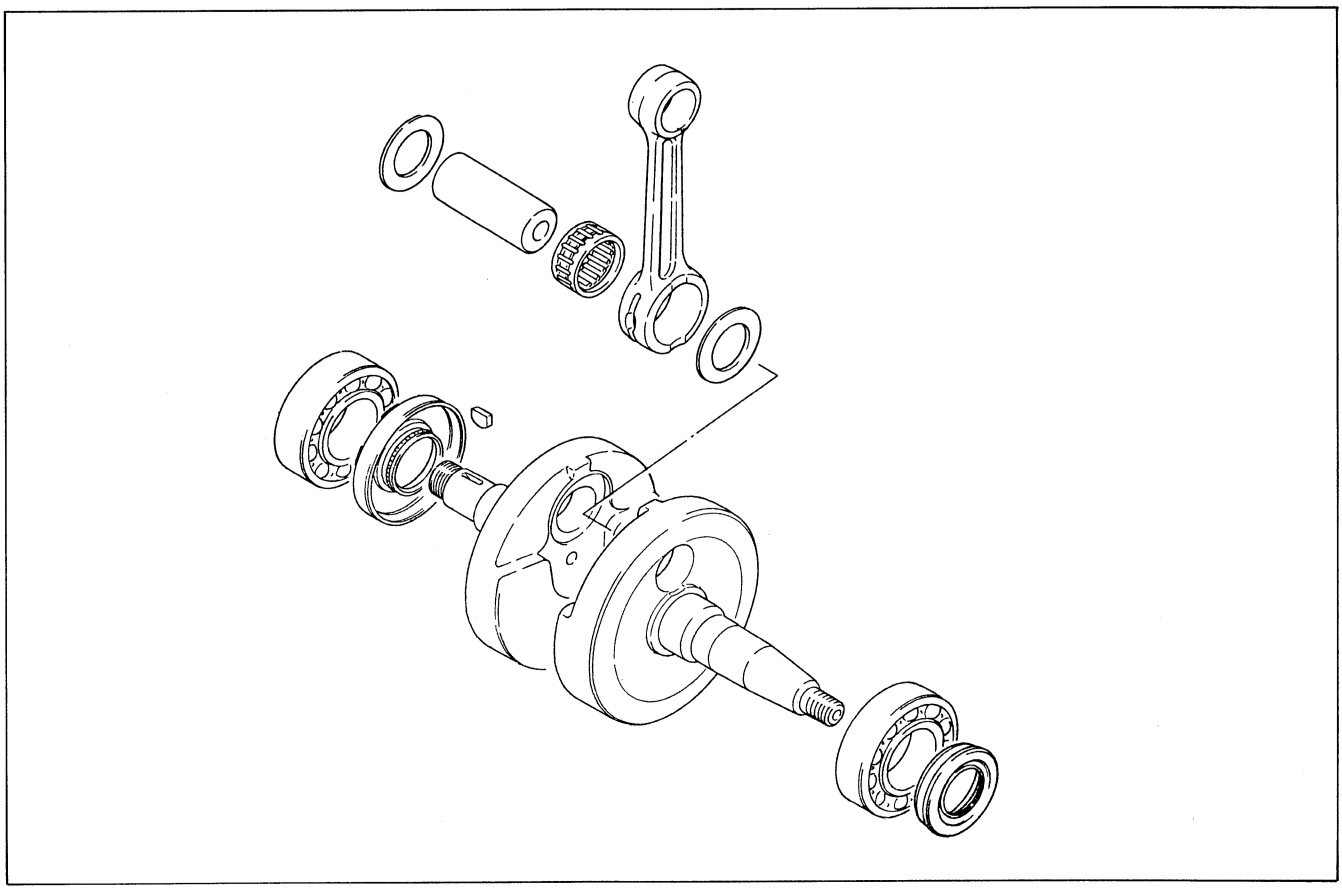

KICK STARTER

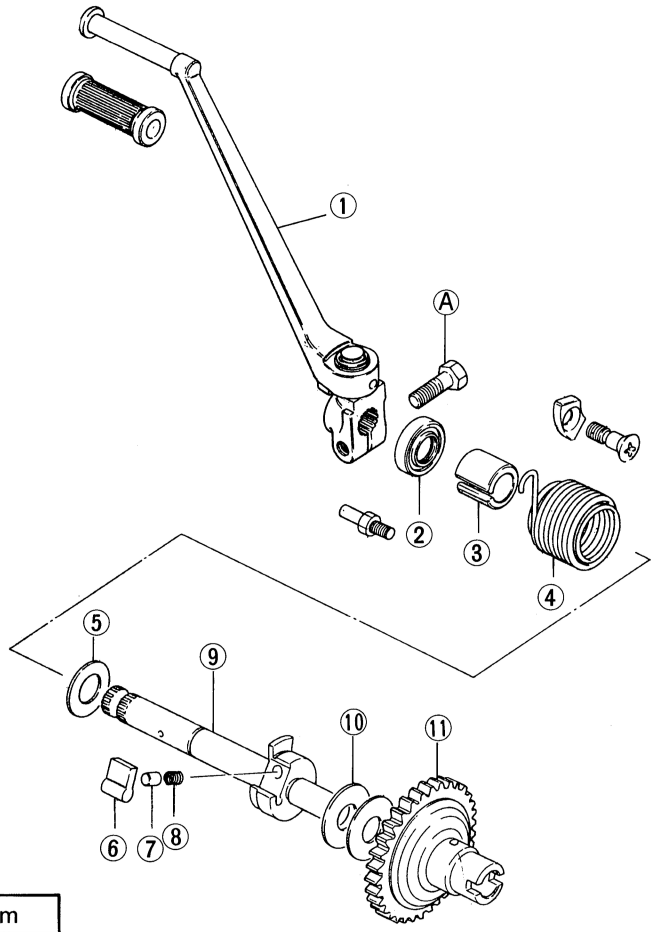

① Kick starter lever
② Oil seal
③ Spring guide
④ Spring
⑤ Thrust washer
⑥ Kick starter pawl
⑦ Roller
⑧ Spring
⑨ Kick starter shaft
⑩ Thrust washer
⑪ Kick starter drive gear

Tightening torque

	N·m	kg-m
Ⓐ	18 – 28	1.8 – 2.8

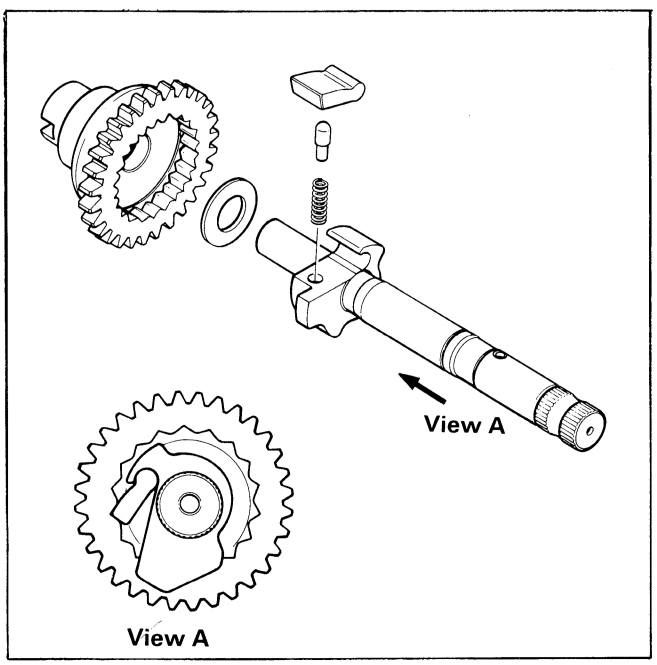

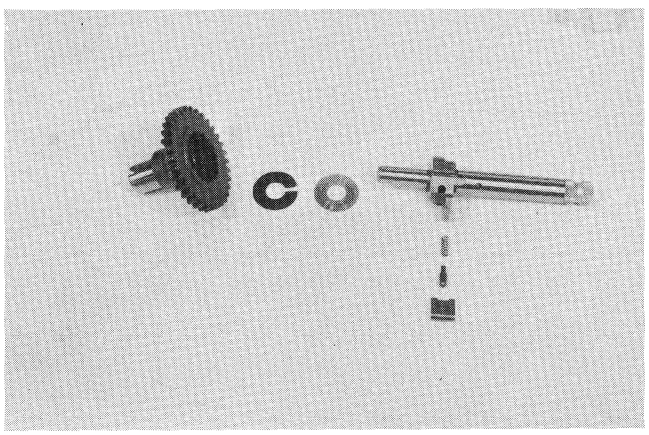

Install the kick starter shaft, pawl, roller and spring as shown in the photograph.

TRANSMISSION

In reassembling the transmission, attention must be given to the locations and positions of washers and circlips. The cross sectional view given here will serve as a reference for correctly mounting the gears, washers and circlips.

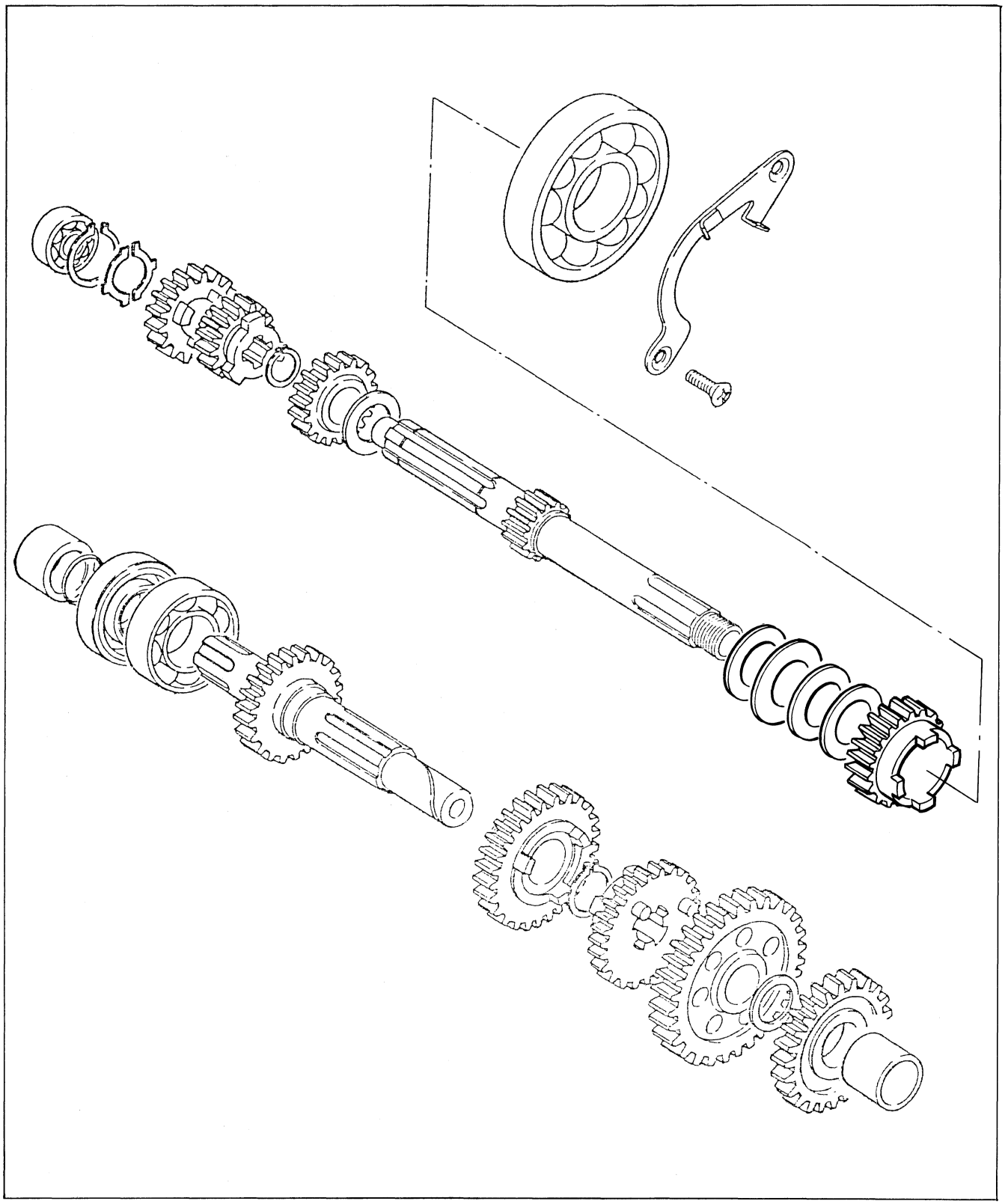

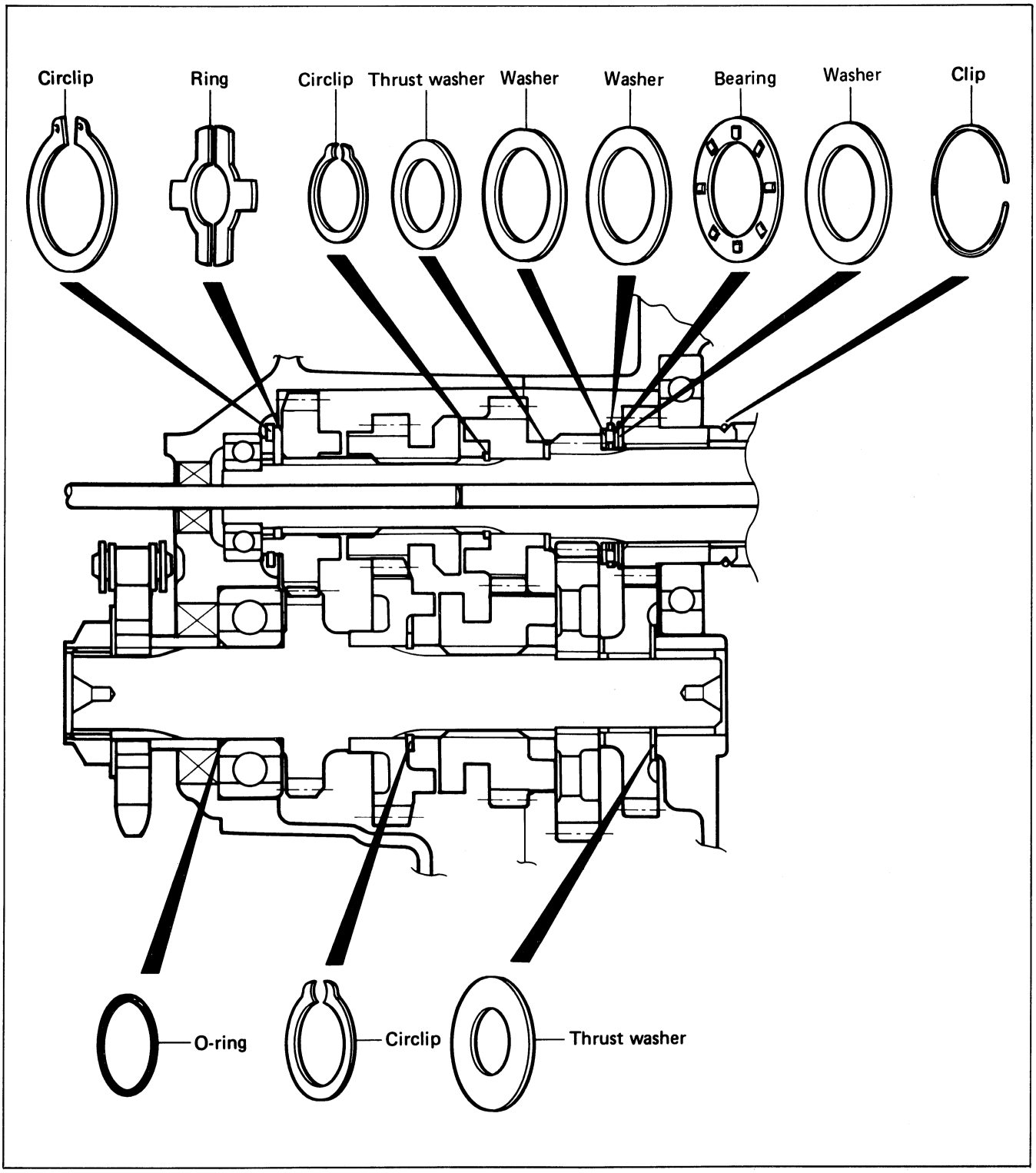

CAUTION:

***Never reuse a circlip, after a circlip has been removed from a shaft, it should be discarded and a new circlip must be installed.**

***When installing a new circlip, care must be taken not to expand the end gap larger than required to slip the circlip over the shaft.**

***After installing a circlip, always insure that it is completely seated in its groove and securely fitted.**

GEARSHIFT MECHANISM

The exploded view of the mechanism given in Fig. serves as reference for reassembly work.

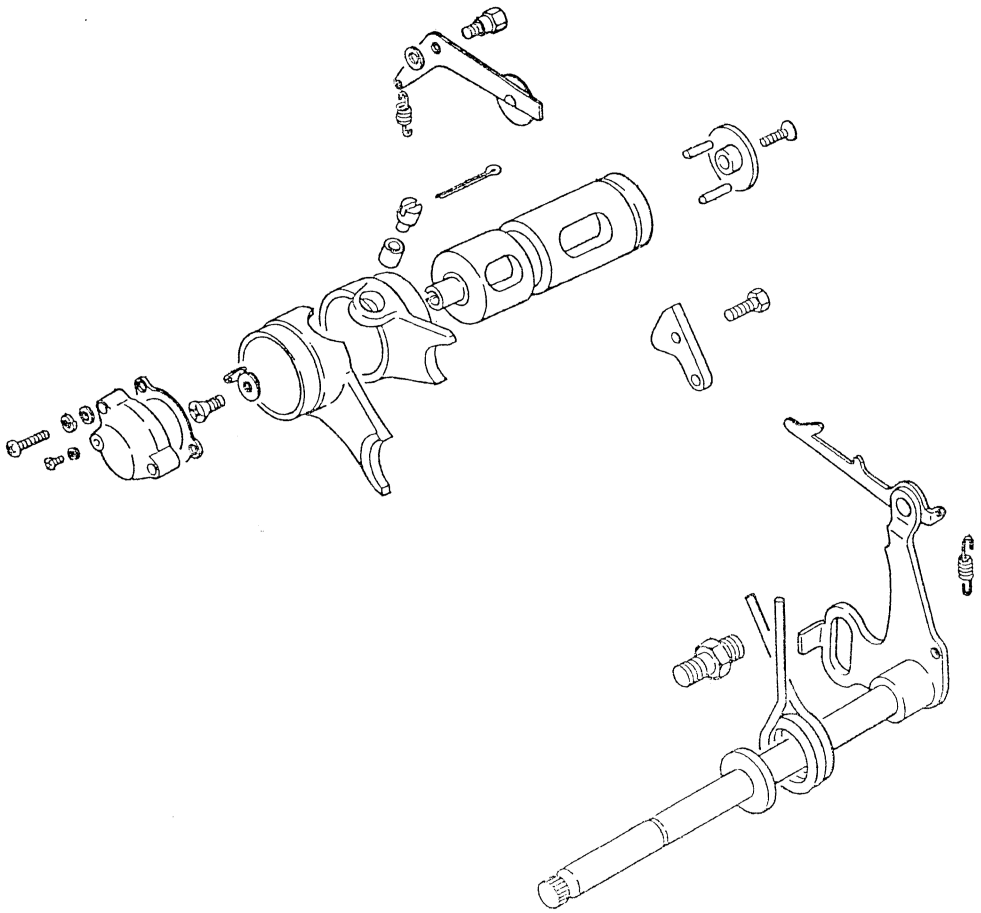

Two kinds of different forks are used, refer to Fig. when reinstalling gearshift forks; No. 1 and No. 2.

NOTE:
No. 2 fork require the long holder pin.

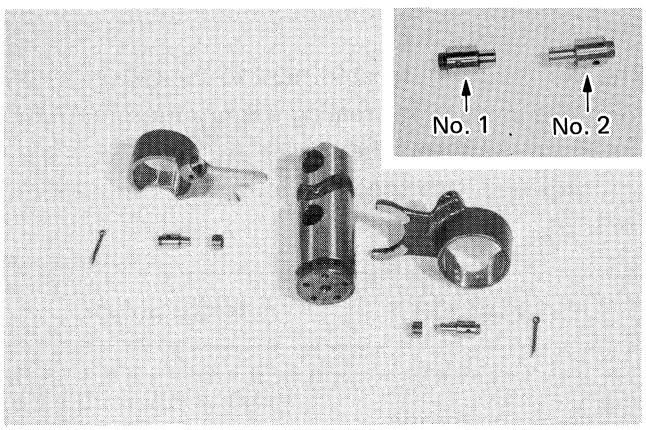

CRANKCASE

Wipe the crankcase mating surfaces (both surfaces) with cleaning solvent and coat one of a pair with SUZUKI Bond No. 4 (99000-31030) in the usual manner, just before assembling the crankcase.

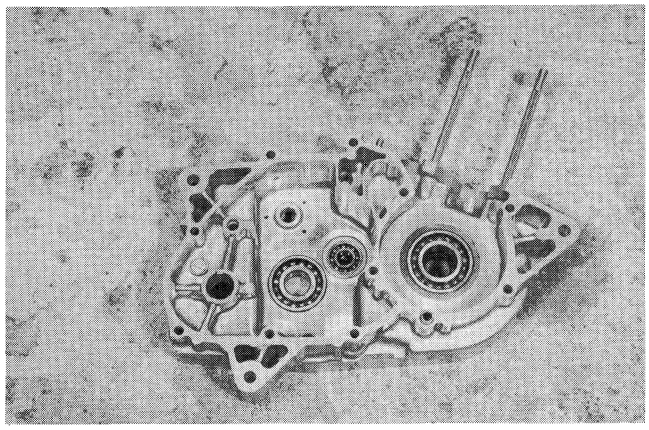

STATOR

When fitting the stator, align the index mark ① of crankcase with index line ② of the stator.

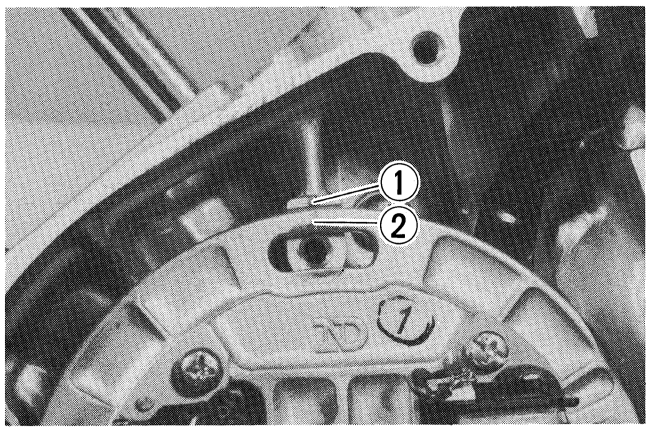

ROTOR

Clean throughly both mating surfaces of the rotor and crankshaft with cleaning solvent, fix the stator to the crankcase. Then fix the rotor with the key, apply thread lock "1322" to the rotor nut and tighten the nut by using special tool.

09930 - 40113	Rotor holder

Tightening torque	40 – 45 N·m (4.0 – 4.5 kg-m)

99000 - 32110	Thread lock "1322"

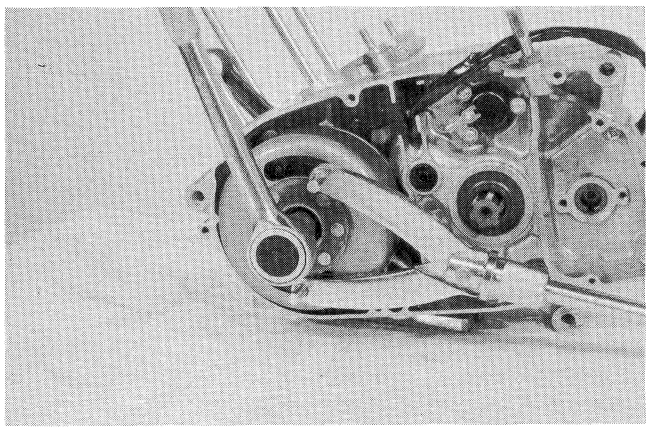

ENGINE SPROCKET

The "O" ring ① located next to the spacer ② on the drive shaft is for sealing the clearance between the drive shaft and the spacer. Tighten the engine sprocket nut with specified torque by using special tool.

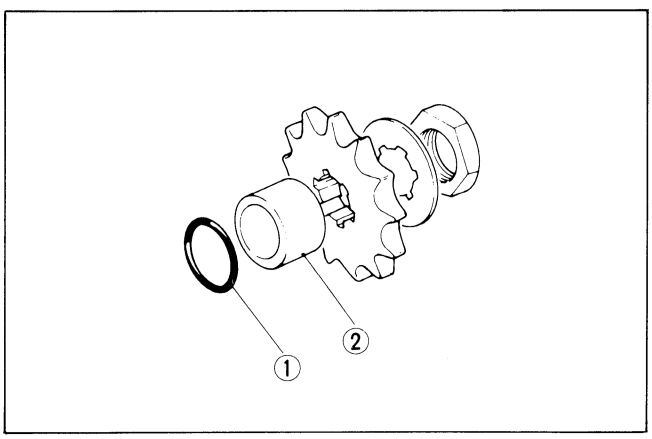

09930 - 40113	Rotor holder

Tightening torque	80 – 100 N·m (8.0 – 10.0 kg-m)

PRIMARY DRIVE GEAR NUT

Fit the spacer, the primary drive gear with key, washer and nut on the crankshaft.
Using special tool, tighten the nut with applying thread lock cement.

09910 - 20115	Conrod stopper

Tightening torque	50 – 70 N·m (5.0 – 7.0 kg-m)

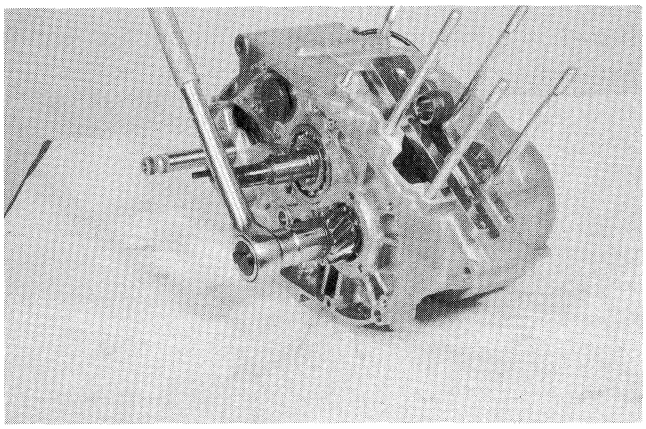

RETURN SPRING

Hitch one end of return spring to the hole provided in kick starter shaft: rotate the spring about 90 degree clockwise; and hitch the other end to crankcase stopper.
Install the spring guide.

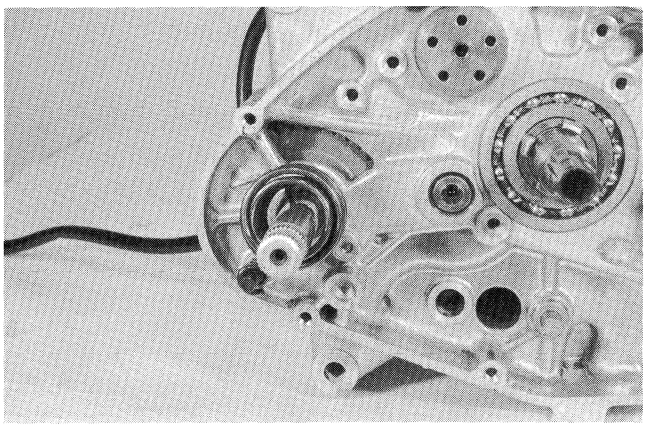

CAM STOPPER AND NEUTRAL STOPPER

Be sure to fit washer when installing gearshifting cam stopper ① and cam neutral stopper. Hitch the bigger spring ② to the cam neutral stopper.

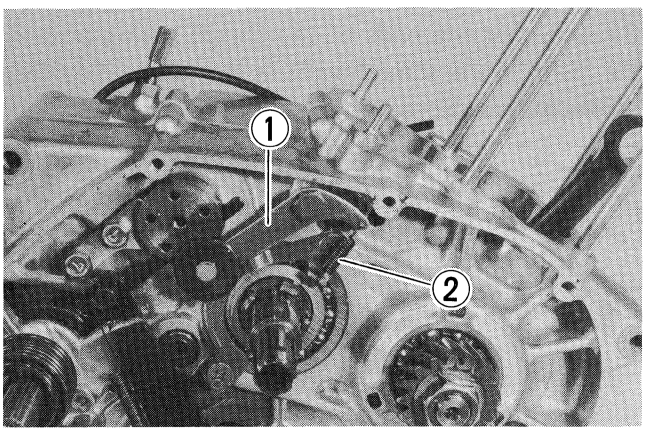

CLUTCH HOUSING

Match the boss Ⓐ of countershaft with groove Ⓑ of primary driven gear.

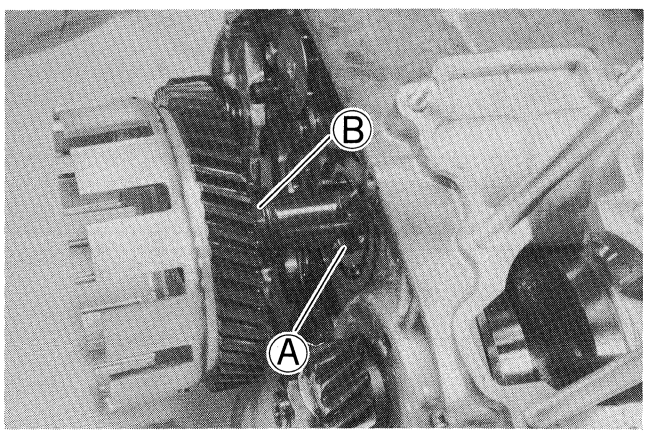

Install the clutch housing by using the plastic hammer.

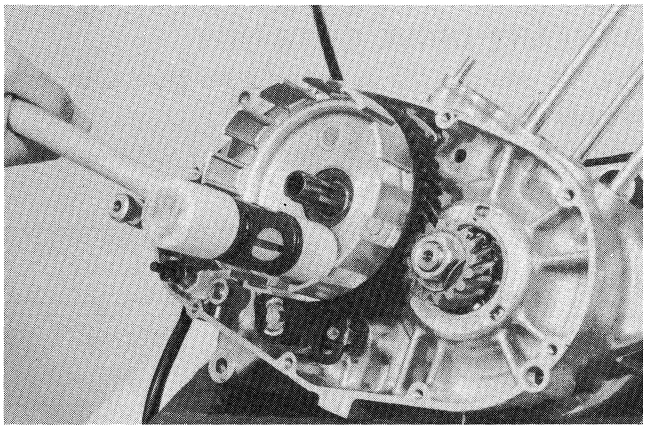

Check that circlip is installed securely.

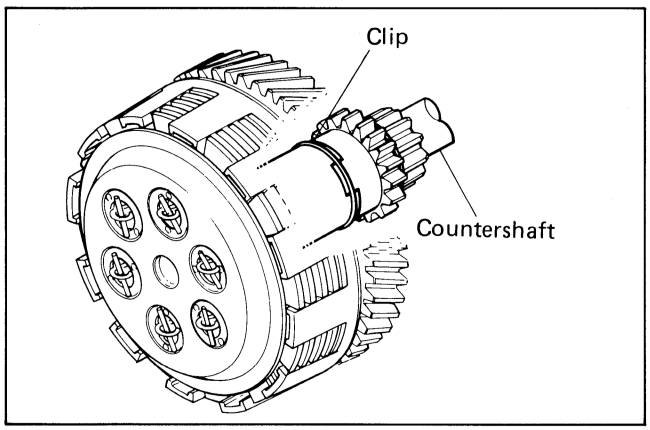

Be sure that the ends of the clutch spring bottom are kept at the same height as the bottom surface of the clutch sleeve hub.

NOTE:
Attach so that the spring does not pop out of hub bottom surface, as shown by Ⓐ in the Fig.

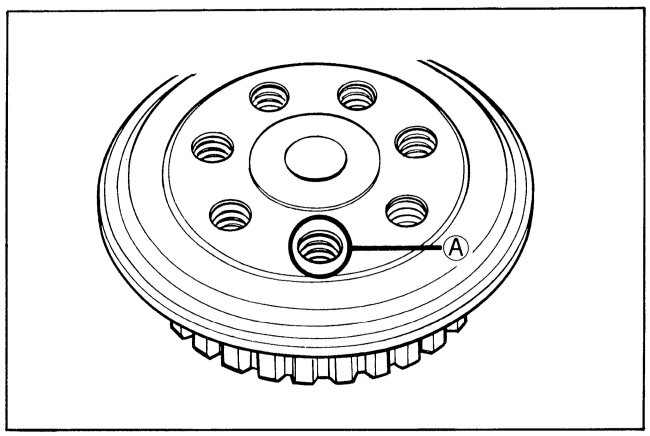

CLUTCH SLEEVE HUB

Using special tool, tighten the clutch sleeve hub nut with specified torque.

09920-53710	Clutch sleeve hub holder

Tightening torque	30 – 45 N·m (3.0 – 4.5 kg-m)

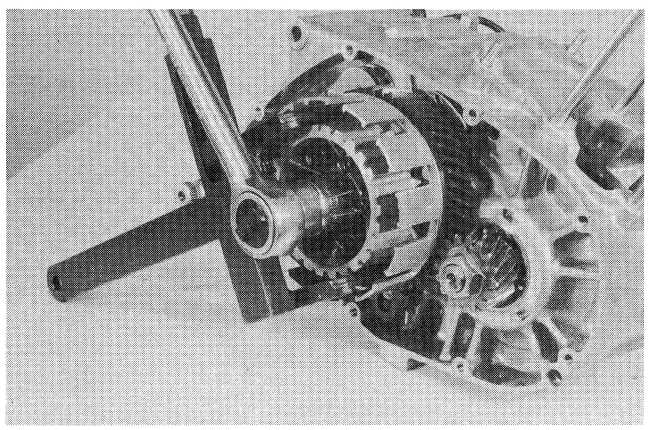

PUSH ROD

When install the push rod, round end should be installed the right side.

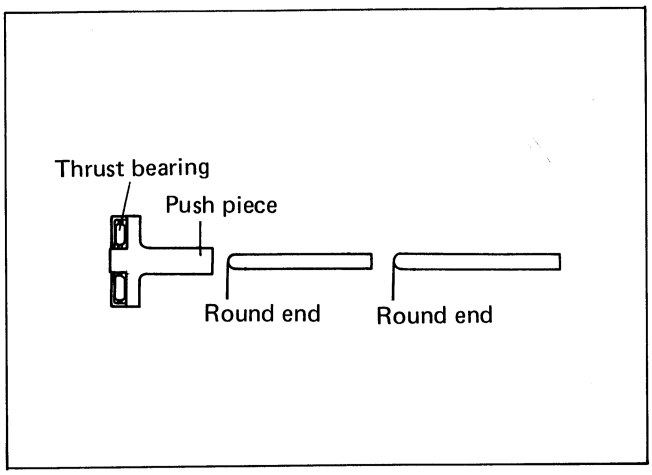

PRESSURE PLATE

Install the clutch pressure plate so that boss ① in the clutch sleeve hub is aligned with mark ② on the pressure plate.

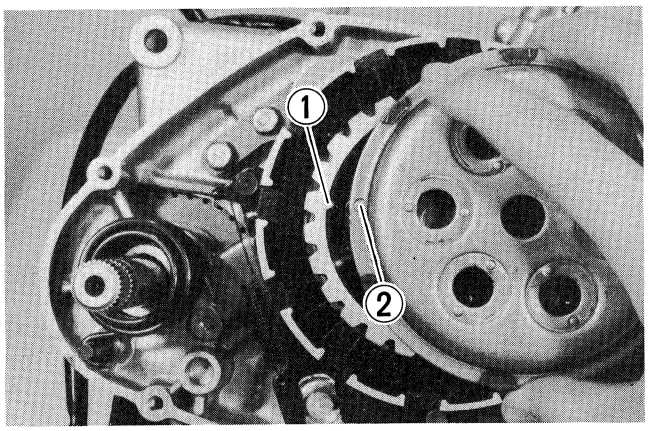

PISTON RING

Install expander ring into the 2nd ring groove.

The two piston rings, 1st and 2nd, are identical in shape and key-stone type with the stamped mark, "RN" or "T", on their upper sides. Each ring in place should be so positioned as to hug the locating pin.

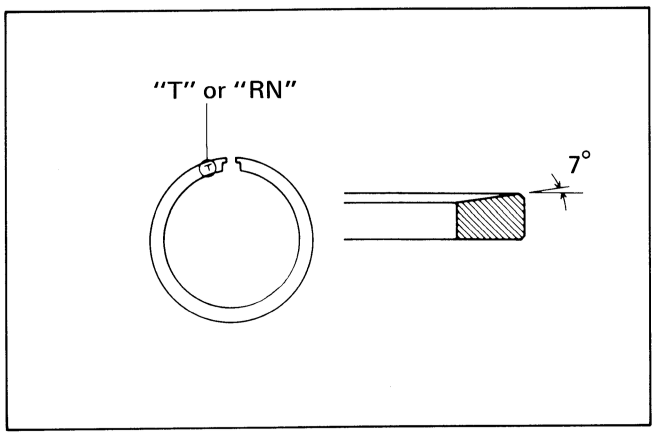

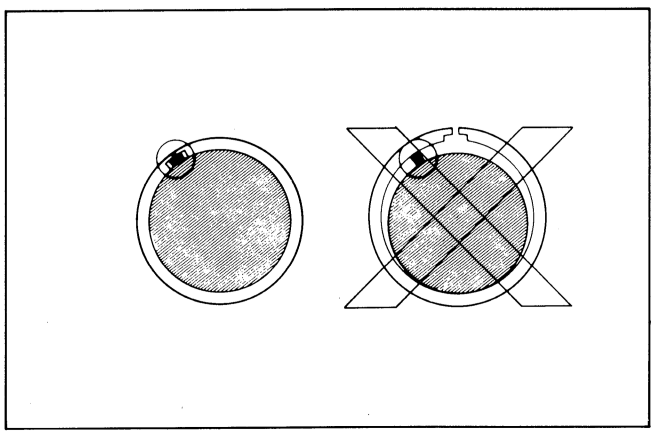

PISTON

Before connecting the piston to the connecting rod, be sure to apply SUZUKI CCI Oil or two-stroke oil to the connecting rod big end and small end bearings.

The arrow mark on the piston crown points to the exhaust port side.

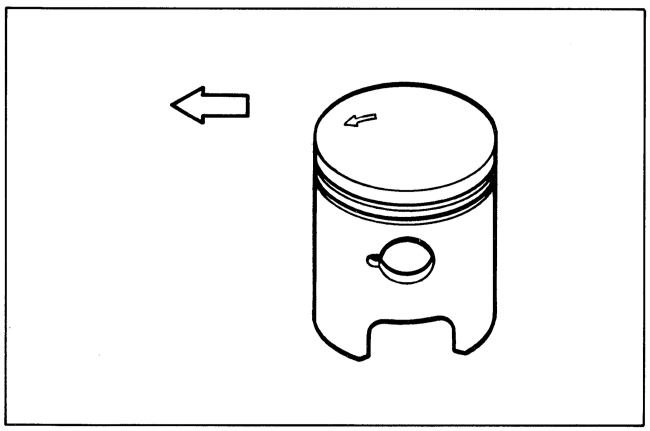

CYLINDER

The reed valve is located on the underside of the inlet port. Before securing the cylinder to the crankcase, examine the reed valve carefully, making sure that there is not foreign matter Ⓐ stuck between reed valve and valve stopper. Poor engine performance is often due to neglect of this attention.

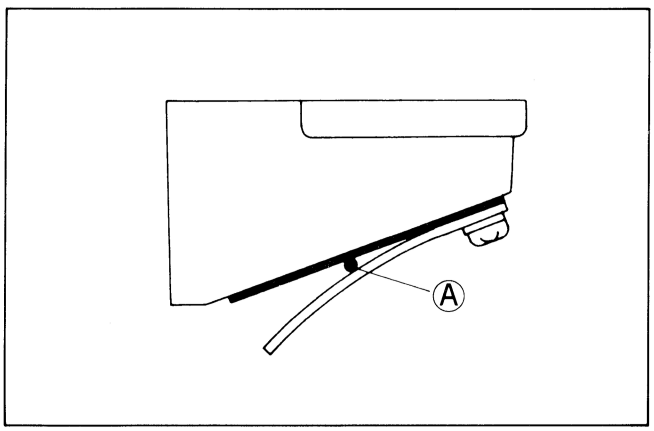

CYLINDER HEAD

Tighten the cylinder head nut with the following order and specified torque.

Tightening torque	18 – 28 N·m (1.8 – 2.8 kg-m)

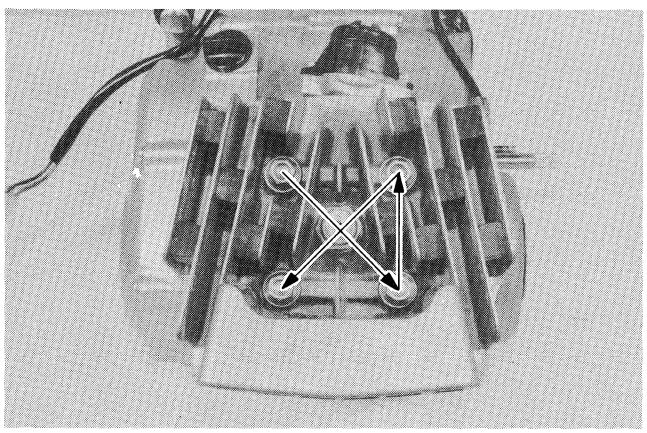

FUEL AND OIL SYSTEM

CONTENTS

FUEL TANK AND FUEL COCK 4-1
CARBURETOR 4-2
OIL PUMP 4-5

FUEL TANK AND FUEL COCK

The fuel tank is provided with a tank cap and fuelcock. An air vent is provided in the tank cap to supply gasoline smoothly to the carburetor. The fuelcock has the structure as shown in Fig. A valve is provided at the top of the fuelcock lever and can switch over to "OFF", "ON" and "RES". With the valve ON (normal), the main passage opens. With the valve OFF, both holes close.
Generally, water or other impurities are contained in gasoline. A filter is provided to remove them and filter cup to deposit them.

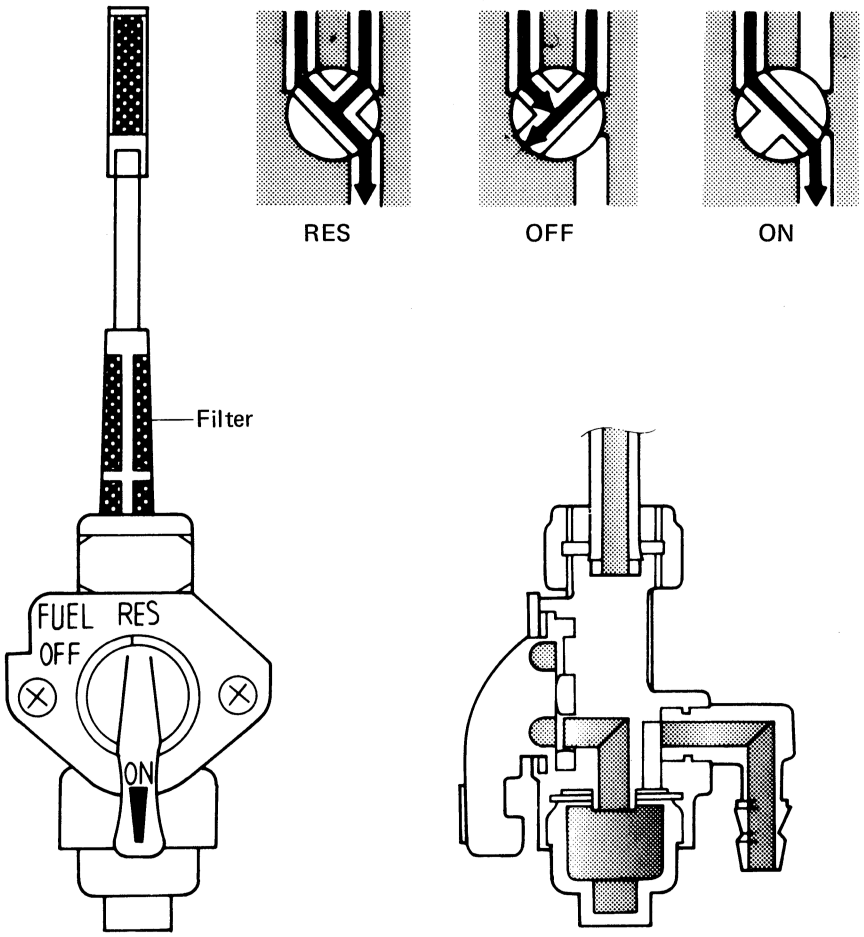

CLEAN

The fuelcock filter will collect inpurities, and therefore must be periodically checked cleaned.
The fuel tank should be cleaned at the same time, the fuelcock filter is being cleaned.

INSPECTION

If the fuel leaks from the cup or from around the fuelcock, the cup gasket or cock gasket may be damaged. Visually inspect these parts, and replace them if necessary. Examine the air vent in the cup to see if it is obstructed. Use compressed air to clean an obstructed vent.

CARBURETOR

CONSTRUCTION

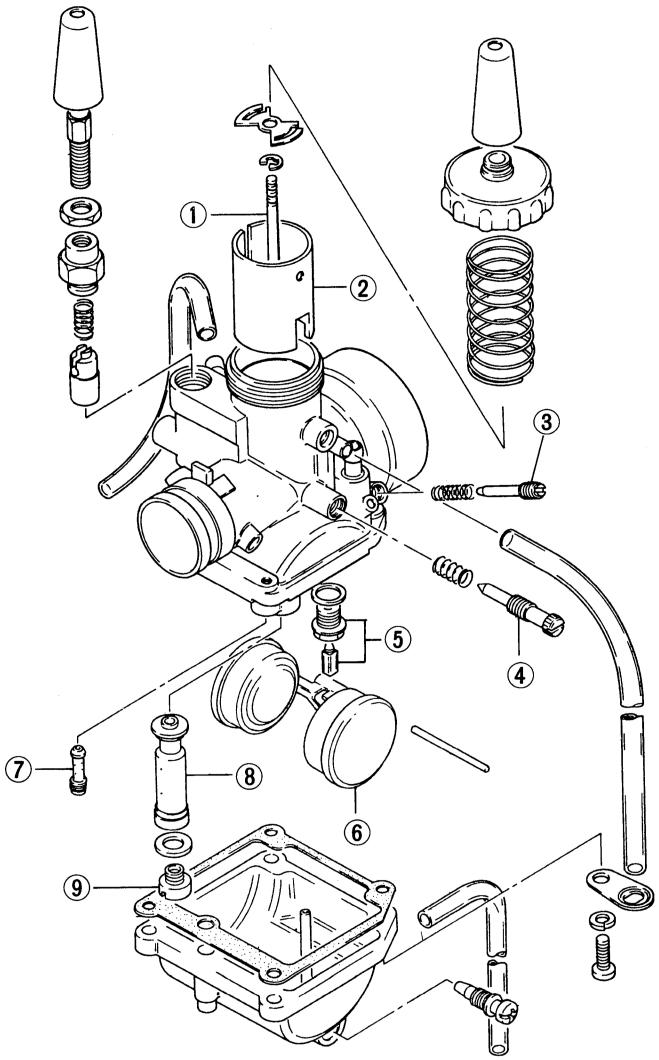

① Jet needle
② Piston valve
③ Air screw
④ Throttle valve stop screw
⑤ Needle valve
⑥ Float
⑦ Pilot jet
⑧ Needle jet
⑨ Main jet

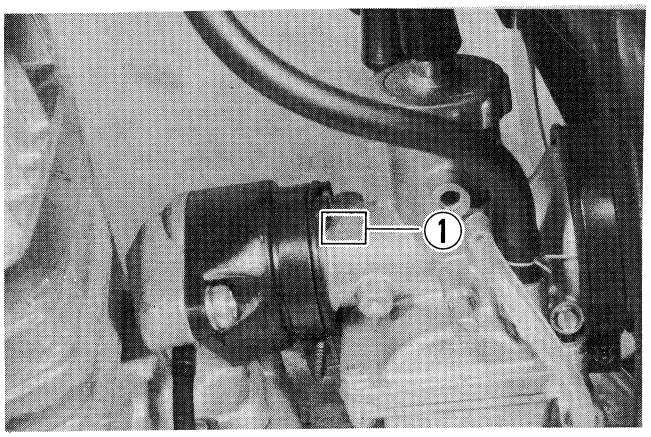

① I.D. number location

CARBURETOR SPECIFICATIONS

ITEM	SPECIFICATION				
	E-01, 06, 10, 51	E-07, 23, 94, 97	E-09, 72, 75	P92	P31, 36, 74
Carburetor type	MIKUNI VM20SS	←	←	←	←
Bore size	20 mm	←	←	←	←
I.D. No.	23400	23410	23420	23430	23440
Idle r/min.	1300 ± 150 r/min	←	←	←	←
Float height	21.4 ± 1.0 mm	←	←	←	←
Main jet (M.J.)	#92.5	#90	#95	#92.5	#90
Air jet (A.J.)	0.6	←	←	←	←
Jet needle (J.N.)	4D01-3rd	←	4D01-2nd	4D01-3rd	4JL43-4th

	E-01, 06, 10, 51	E-07, 23, 94, 97	E-09, 72, 75	P92	P31, 36, 74
Needle jet (N.J.)	O-8	←	←	←	O-0
Cut-away (C.A.)	1.5	←	←	←	2.0
Pilot jet (P.J.)	#20	←	←	←	#15
Pilot outlet (P.O.)	1.0	←	←	←	0.6
Air screw (A.S.)	1½ turns out	1¾ turns out	←	1½ turns out	2.0 turns out
Valve seat (V.S.)	1.5	←	←	←	←
Starter jet (G.S.)	#40	#30	←	#40	#30
Throttle cable play	0.5 – 1.0 mm	←	←	←	←

FLOAT HEIGHT ADJUSTMENT

To check the float height, invert the carburetor body, holding the float arm pin so that the pin will not slip off. With the float arm kept free, measure the height Ⓐ while float arm is just in contact with needle valve by using the caliper. Bend the tongue ① as necessary to bring the height Ⓐ to this valve.

Float height	21.4 ± 1.0 mm

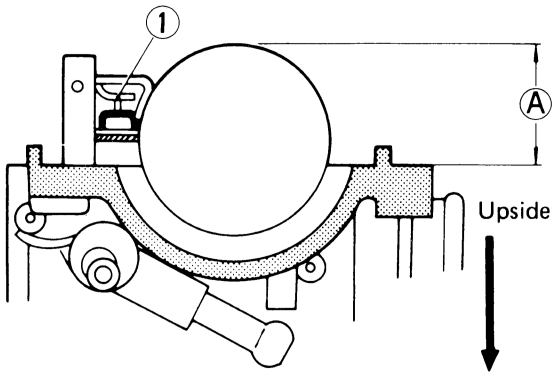

NEEDLE VALVE INSPECTION

If foreign matter is caught between the valve seat and the needle, the gasoline will continue flowing and cause it to overflow. If the seat and needle are worn out beyond the permissible limits, similar trouble will occur. Conversely, if the needle sticks, the gasoline will not flow into the float chamber.
Remove the carburetor, float chamber and floats, and clean the float chamber and float parts with gasoline. If the needle is worn as shown below, replace it together with a valve seat. Clean the fuel passage of the mixing chamber with compressed air.

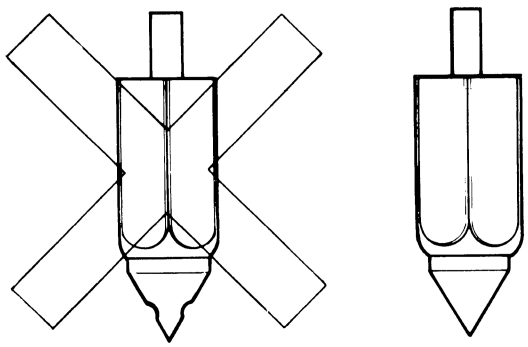

DIAGNOSIS OF CARBURETOR

Whether the carburetor is producing a proper mixture of fuel and air can be checked by making a road test (simulating the way the user operates the machine) with a standard spark plug (refer to service data) fitted to the engine. After the road test, remove the spark plug, and observe the appearance of the plug as well as the surfaces of the piston crown. The color observed tells whether the mixture is too rich or too lean.

MIXTURE ADJUSTMENT

- This adjustment is effected mainly by main jet and jet needle.
  Before doing so, check to be sure that the float level is correctly set and that the overflow pipe, inlet hose and air cleaner are in sound condition.
- Find out at which throttle position the engine lacks power or otherwise performs poorly. Drive the machine at that throttle position for a distance of about 10 km, after which the spark plug and piston crown should be inspected for color and appearance.
- The mixture can be made "richer" or "leaner" in three ways: namely, by alterring main jet, jet needle and air adjusting screw. Effectiveness of these ways depends on the throttle position, as shown in this chart.

Throttle opening	¼	½	¾	Full
Pilot air screw				
Jet needle				
Main jet				

NOTE:
If the machine is tested at 1/2 throttle resulting in a color and appearance indicating a mixture that is too rich or too lean, perform adjustment by means of jet needle and air adjusting screw.

CARBURETION

Adequate carburetion is determined according to the results of various tests, mainly concerning engine power, fuel consumption and cooling effect of fuel on engine, and jet settings are made so as to satisfy and balance all of these conditions. Therefore, the jet should not be replaced with a size other than the original, and the positions of adjustable parts should not be changed except when compensating for the mixture ratio due to altitude differences or other climatic conditions. When adjustment is necessary, refer to the following.

Fuel-air mixture ratio can be changed as follows:

Throttle Opening	Method of Changing Ratio	Standard setting
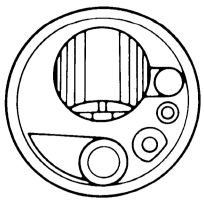 Slight	Air adjusting screw 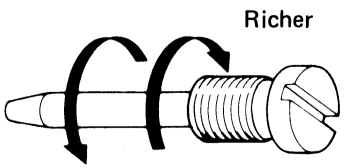	1 1/2 turns out (E-01, 06, 10, 51, P-92) 2 turns out (P-31, 36, 74) 1 3/4 turns out (The others)
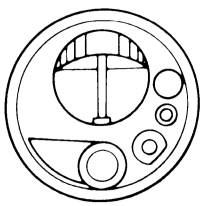 Medium	Jet needle 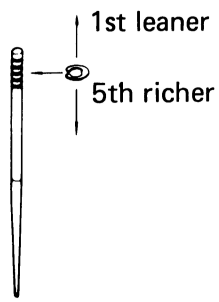	4DO1-2 (E-09, 72, 75) 4JL43-4th (P-31, 36, 74) 4DO1-3 (The others)
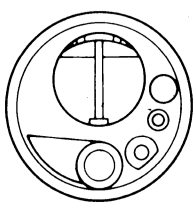 High	Main jet 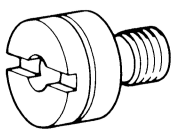 Larger number: richer mixture Smaller number: leaner mixture	# 95 (E-09, 72, 75) # 92.5 (E-01, 06, 10, 51, P-92) # 90 (The others)

OIL PUMP

AIR BLEEDING

Whenever evidence is noted of some air having leaked into the oil pipe from the oil tank in a machine brought in for servicing, or if the oil pump has to be removed for servicing, be sure to carry out an air bleeding operation with the oil pump in place before returning the machine to the user.

To bleed the air, hold the machine in standstill condition. Loosen the screw ① to let out the air and after making sure that the trapped air has all been bled, tighten the screw good and hard.

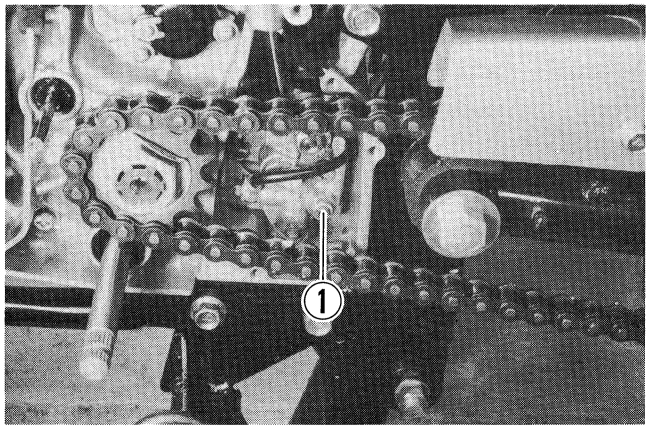

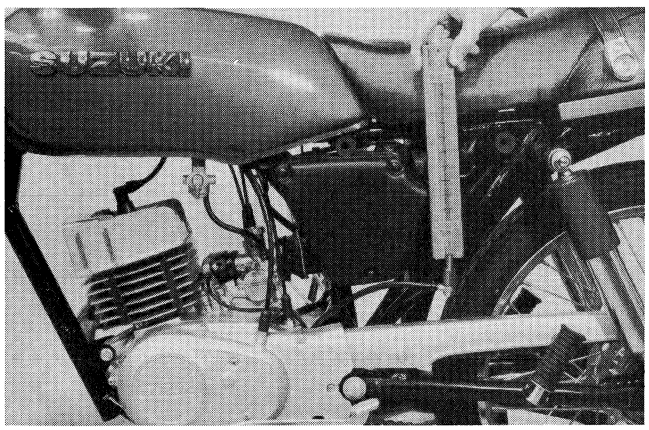

CHECKING OIL PUMP

Use the special tool, to check the pump for capacity by measuring the amount of oil the pump draws during the specified interval.

09900 - 21602	Engine oil discharge amount measuring tool

The checking procedure follows:

- Have the tool filled with CCI SUPER OIL and connect it to the suction side of the pump.
- Run the engine at 2 000 r/min.
- Holding engine speed at the same 2 000 r/min, move the lever up to the fully open position and let the pump draw for 2 minutes. For this operation, the reading taken on the device should be from 1.47 to 1.79 ml.

2 minutes at 2 000 r/min (full open position)

Oil discharge amount	1.47 – 1.79 ml

NOTE:
Adjust both throttle and oil pump control cable play after checking oil pump.

ELECTRICAL SYSTEM

CONTENTS

IGNITION SYSTEM 5-1
CHARGING AND LIGHTING SYSTEM 5-3
INSTRUMENT PANEL 5-5
SWITCHES 5-6
BATTERY 5-9
LAMPS 5-11

IGNITION SYSTEM

The ignition system consists of a flywheel magneto, a CDI & Ignition coil unit and a spark plug.

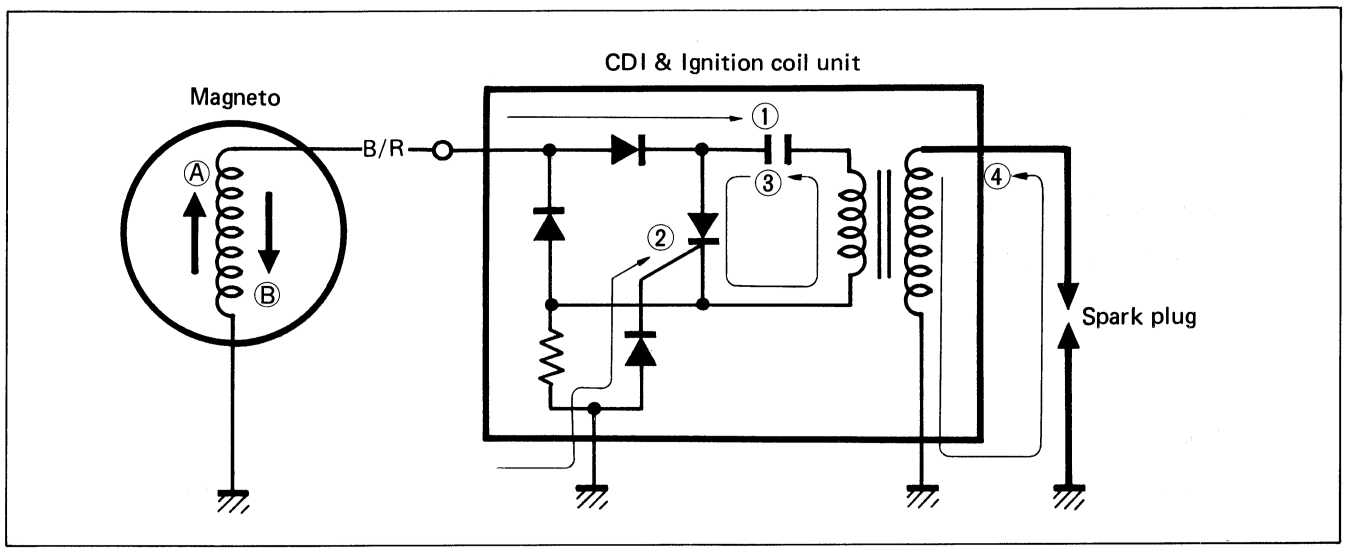

(1) As the rotor rotates, an AC current is induced in the coil. The current induced in the Ⓐ direction charges up the capacitor.
(2) As the rotor rotates further, the current is induced in the reverse direction (Ⓑ direction). This current causes a voltage applied through the ground to the gate of SCR.
(3) As the SCR conducts, the energy which has been charged in the capacitor is instantaneously discharged through the primary winding of the ignition coil.
(4) The current which flows in the primary winding of the ignition coil causes a high voltage induced in the secondary winding of the ignition coil. The induced voltage is much higher than the voltage of the primary winding because it is boosted up by high ratio of turns between primary and secondary windings.
The high voltage is fed to the spark plug, where it produces discharge sparks across the spark plug gap and sparks ignite the fuel/air mixture in the combustion chamber.

INSPECTION

CDI UNIT AND IGNITION COIL

Checking with the electro tester

Connect the CDI test leads with the Black/Red lead attached to the coil's primary tap and Black/White lead to mounting bracket (ground). Connect the high tension leads with the red ⊕ lead attached to the spark plug cord and the black ⊖ lead to the coil's mounting bracket (ground).

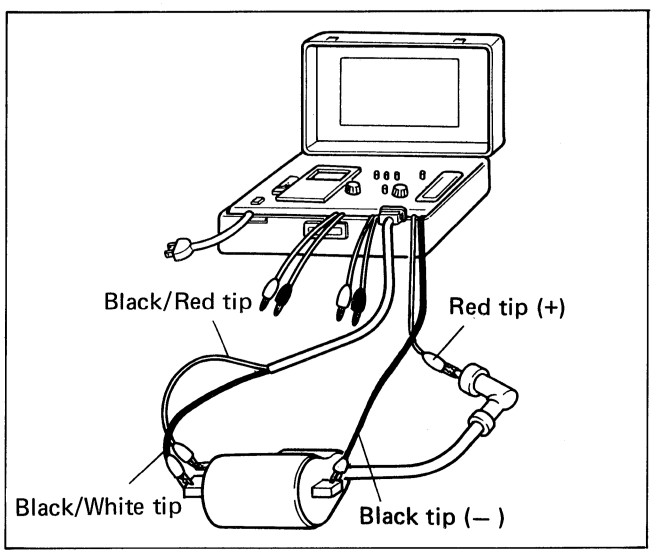

- Set the test selector knob to "PEI test".
- Switch the power ON.
- Note the spark in the spark gap window. It should be strong and continuous, not intermittent, across a preset 8 mm gap. Allow the spark to jump the test gap for at least five minutes continuously, to insure proper operation under the temperature conditions of actual riding.

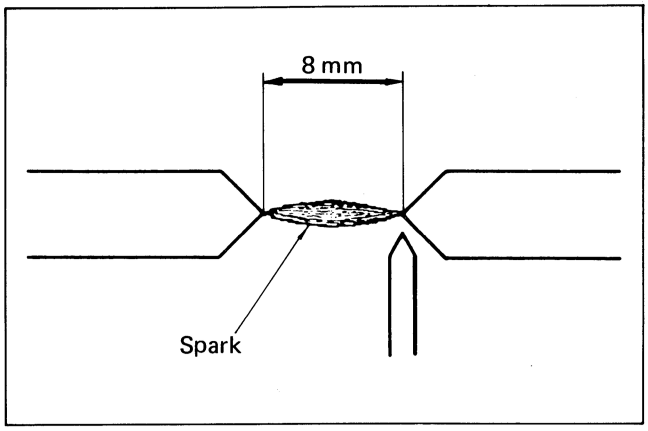

09900 - 28106	Electro tester
09900 - 28617	PEI test lead

CHECKING WITH SUZUKI POCKET TESTER

Use a SUZUKI POCKET TESTER, provided that it has a "x 1k" ohm range.
In either case, the two testing probes, ⊕ and ⊖, are to be placed on terminals of CDI & Ignition coil unit, referring to the chart.

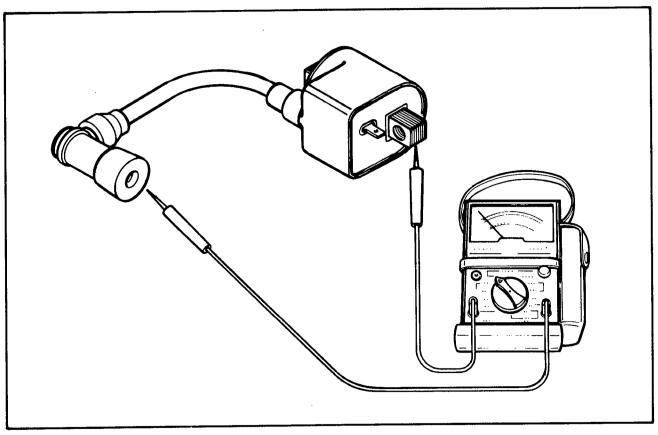

CAUTION:
If use the other tester, the valve reading may vary from the below table.

E-06	Primary	Terminal – Ground Continuity
	Secondary	Plug cap – Ground Approx. 14 – 18 kΩ
The others	Primary	Terminal – Ground Continuity
	Secondary	Plug cap – Ground Approx. 4 – 8 kΩ

E-74	Primary	B/Y – B 0 – 1 Ω
	Secondary	Plug cap – B 2.5 – 4.0 kΩ

STATOR COIL

Using the pocket tester, measure the resistance between the lead wires in the following table.
If the resistance checked is incorrect, replace the coil.

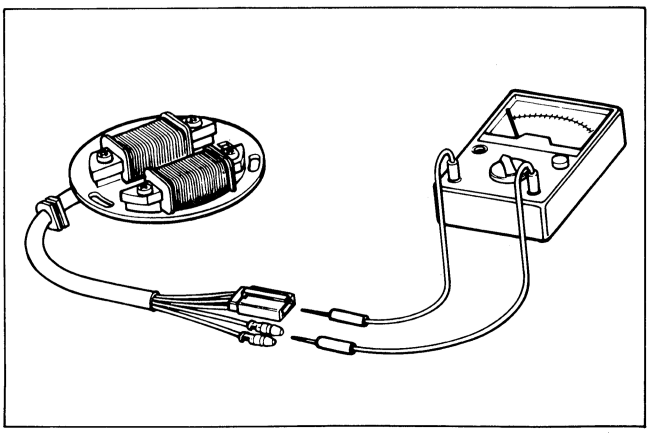

Standard resistance B/R – B/W (Ground)	Approx. 120 – 190 Ω

E-74

B/R – R/B	85 – 135 Ω

CHARGING AND LIGHTING SYSTEM

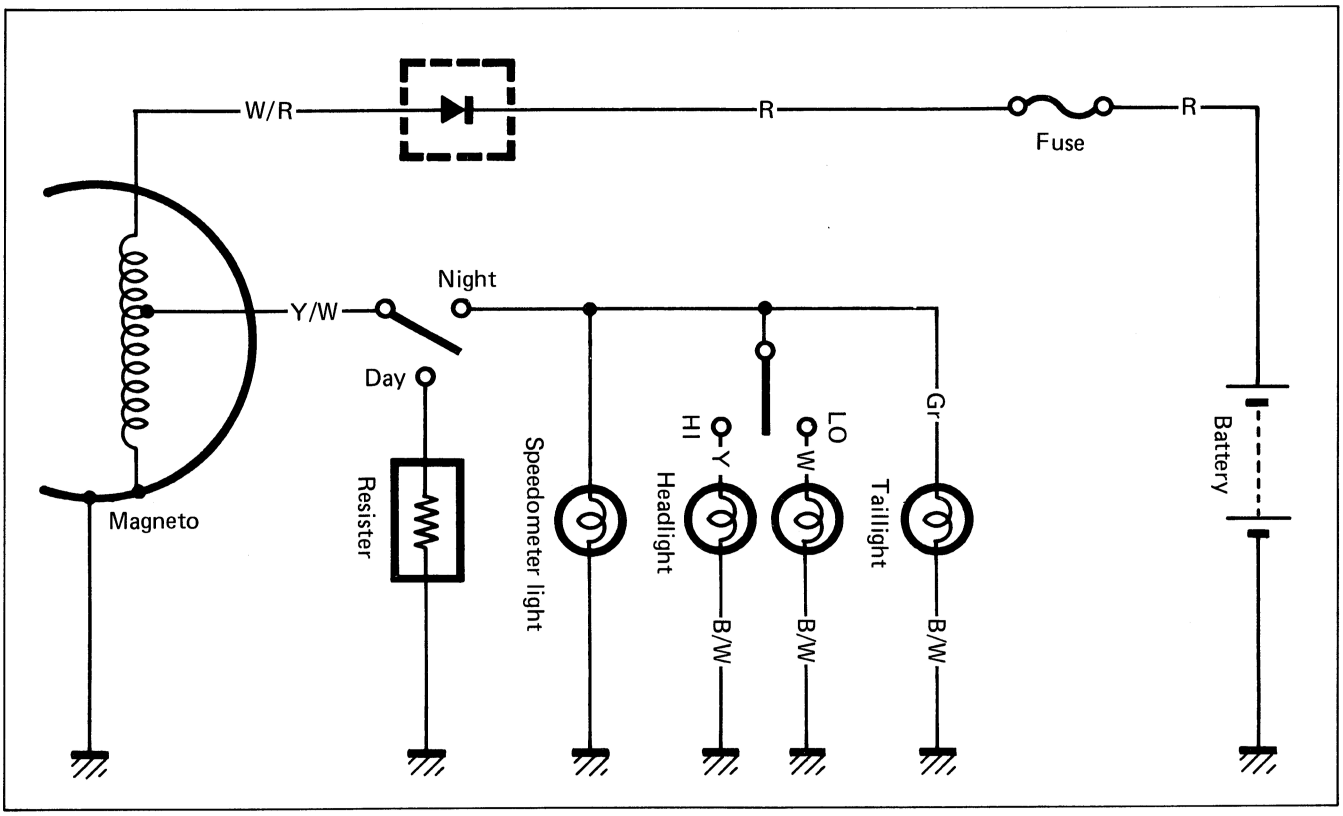

The charging and lighting system use the flywheel magneto as shown in figure. The charging and lighting coils are mounted on the stator and generate AC as the flywheel rotor turns. AC generated in the charging coil flows to the rectifier where it is changed to DC. This DC is served to the horn, neutral indicator light, turn signal light, brake light, turn signal indicator light and oil level indicator light, and also charge the battery. Lighting AC current from the lighting coil passes to the headlight, meter light, taillight and high beam indicator light when the ignition switch is "NIGHT" position and the engine is running.

INSPECTION

CHECKING CHARGING AND LIGHTING

Use a SUZUKI pocket tester or an ohm meter and check both charging and lighting coils for continuity.

Lighting coil	Y/W – B/W	0 – 1 Ω
Charging coil	W/R – B/W	0 – 1 Ω

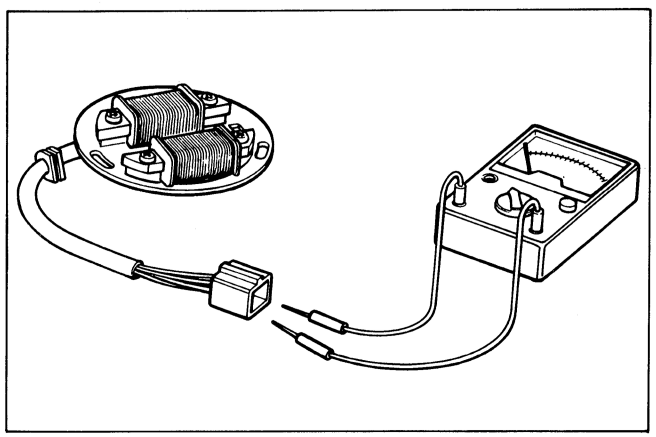

SILICON RECTIFIER

The silicon rectifier converts AC to DC by allowing current to pass in one direction only.
Check the silicon rectifier for continuity.

- Set the pocket tester to the "Ω x 1" scale.
- Connect the pocket tester plus terminal (+) to the rectifier AC terminal (~) and minus terminal (–) to plus terminal (+).
- Reverse the test connections.
- If first step shows no continuity and the reverse step shows continuity, the rectifier is in sound condition.

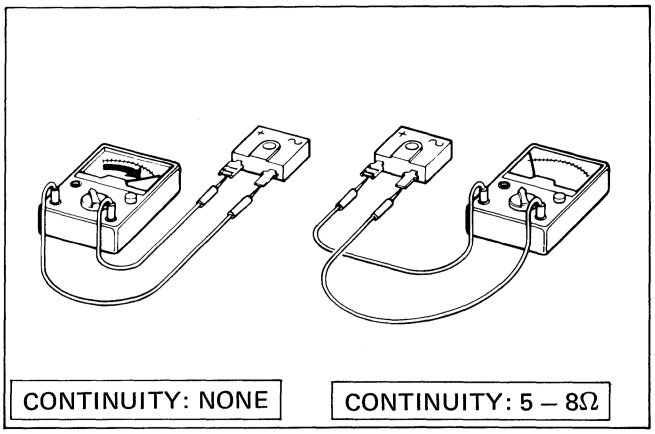

LIGHTING/CHARGING PERFORMANCE

Below are the steps for checking lighting/charging coil performance.

09900 - 25002	Pocket tester

NOTE:
Be sure to use a 6V 4Ah (14.4 kC) battery which is completely charged. When connecting the pocket tester terminals, be sure to differentiate the two terminals, plus (+) and minus (–).

LIGHTING PERFORMANCE CHECK

- Set the pocket tester knob to AC Volt range 10V.
- Connect the terminal as shown in Figure.
- Start engine.
- Check that the voltmeter reads as right table.

Lighting performance	Above 6V at 2 500 r/min Below 8.7V at 8 000 r/min

E-74

Lighting performance	Above 6V at 2 500 r/min Below 9V at 8 000 r/min

CHARGING PERFORMANCE CHECK

- Set the pocket tester knob to DC Ampere range 20A.
- Start the engine.
- Check that the proper charging occurs at the various engine speeds shown in the following table. (Values in the listed below are slightly different from actual values due to load conditions.)

Day time	Above 1.0A at 4 000 r/min Below 2.8A at 8 000 r/min
Night time	Above 0.7A at 4 000 r/min Below 2.8A at 8 000 r/min

E-74

Night time	Above 0.4A at 4 000 r/min Below 2.0A at 8 000 r/min

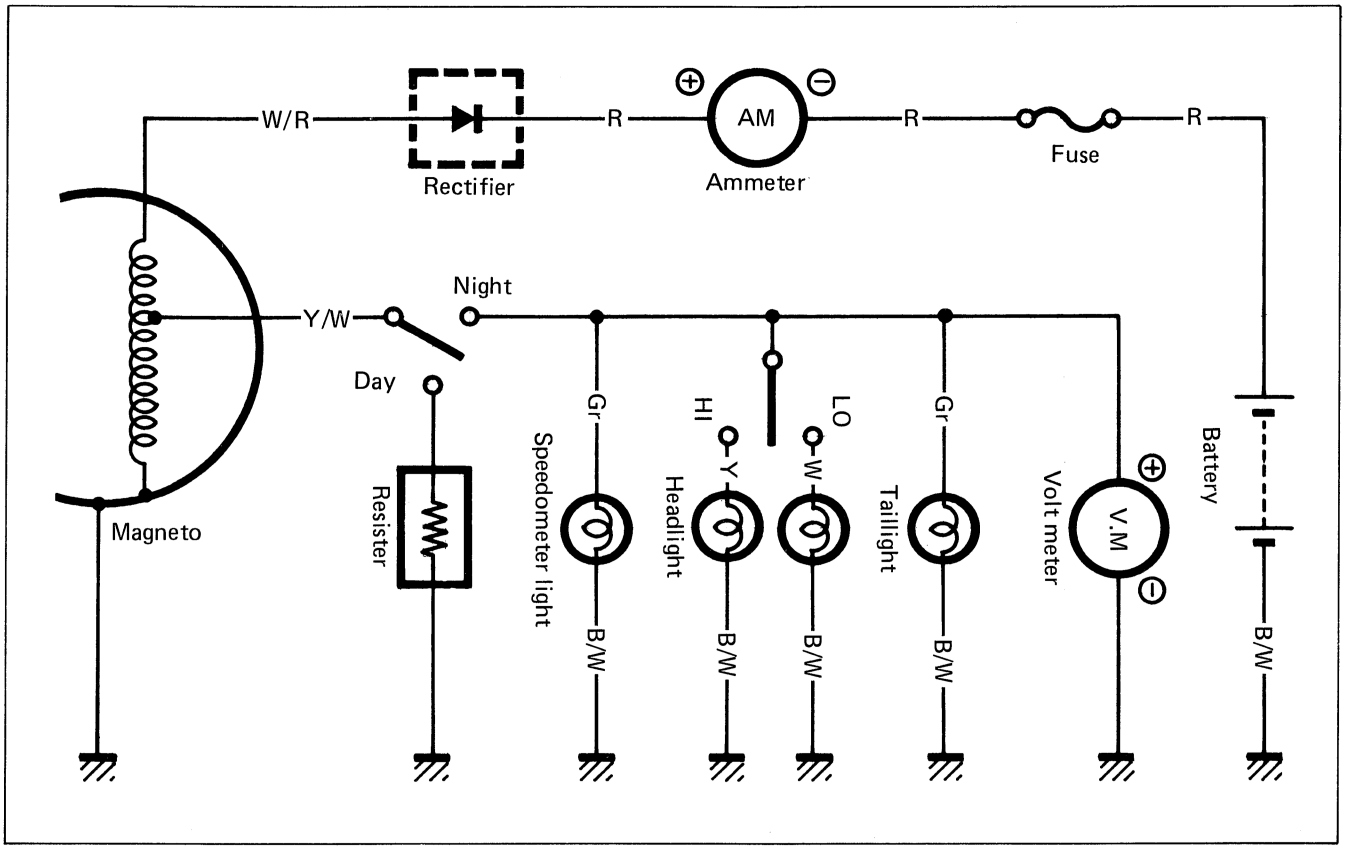

INSTRUMENT PANEL

Remove the instrument panel (See page 6-12).
Disassemble the instrument panel.

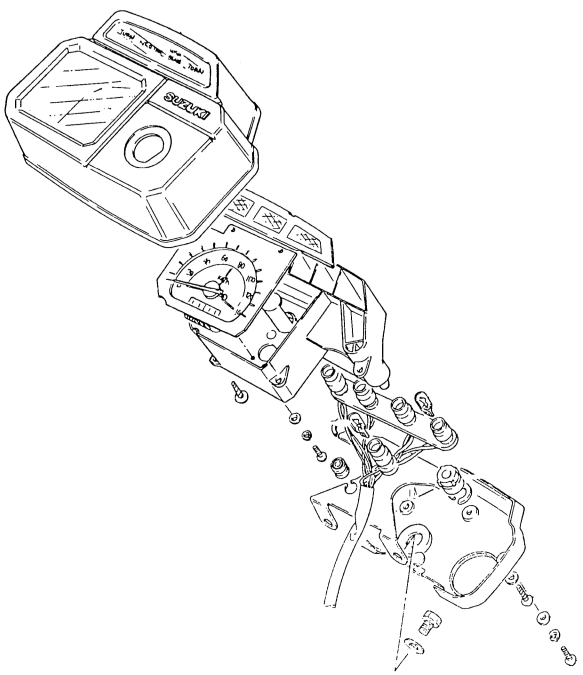

INSPECTION

Using the pocket tester, check the continuity between lead wires in following diagram. If the continuity measured is incorrect, replace the respective part.

09900 - 25002	Pocket tester

NOTE:
When making this test, it is not necessary to remove the instrument panel.

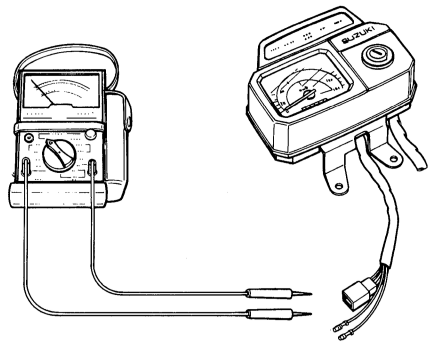

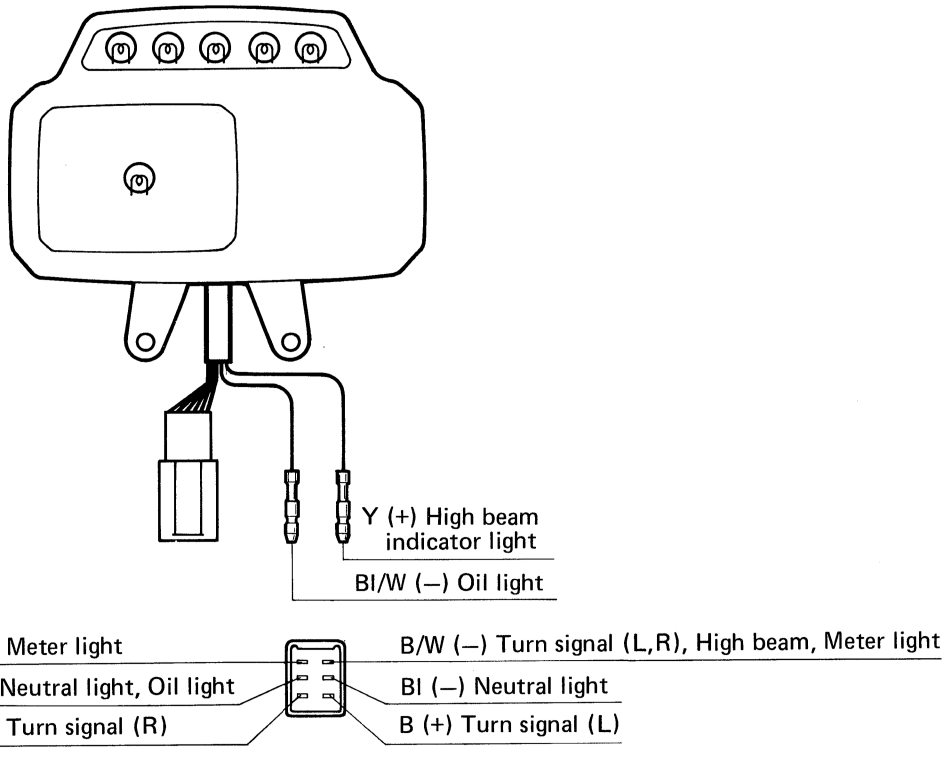

SWITCHES

Inspect each switch for continuity with the pocket tester referring to the chart.
If it is found any abnormality, replace the respective switch assembly with new one.

09900 - 25002	Pocket tester

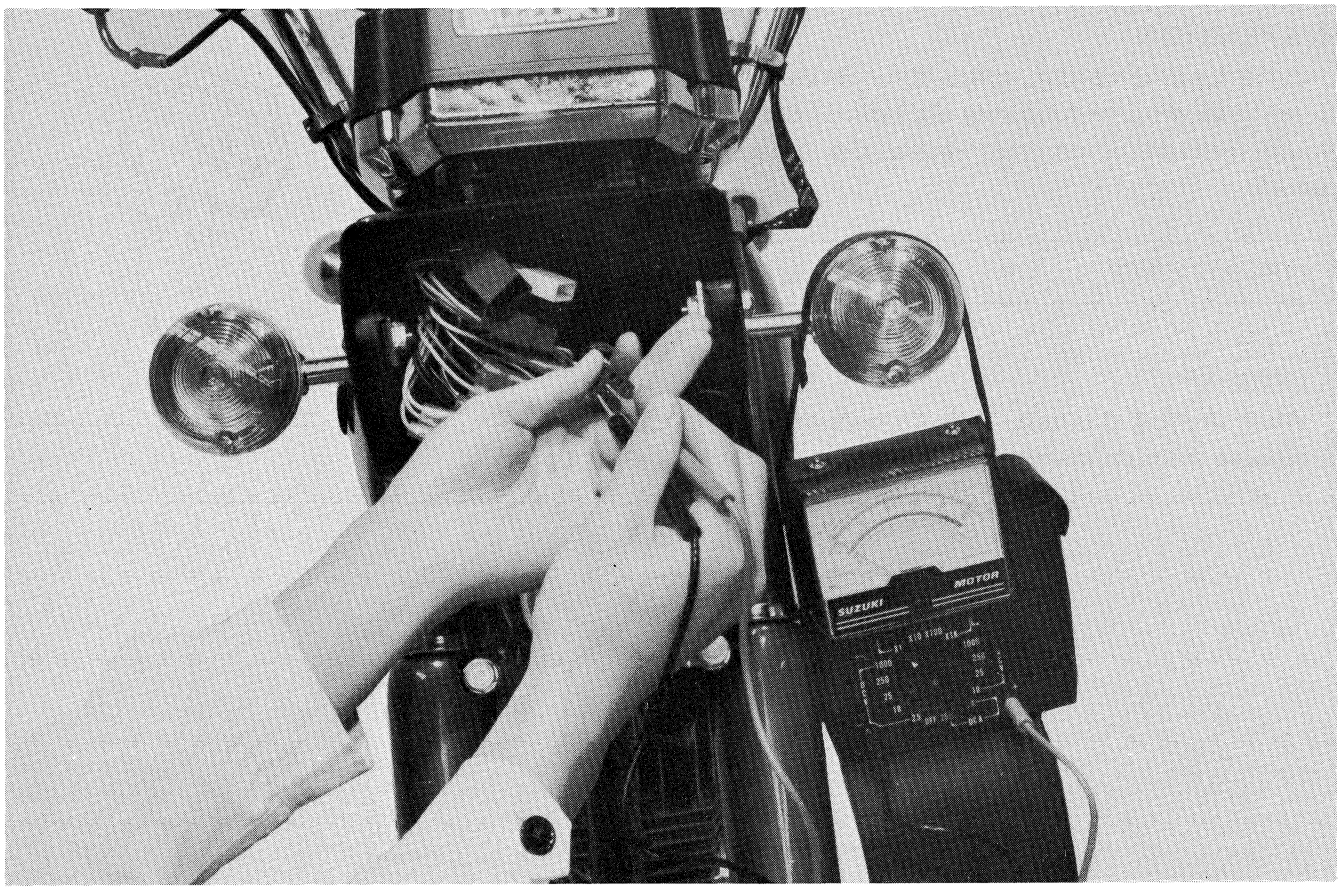

IGNITION SWITCH

	Bl/W	B/W	B/Y	R	O	Br	G/W	W/R	Y/W	Y/R	Gr
OFF		○—○									
C	○—○—○			○—○							
I				○—○			○—○				
II				○—○—○				○—○		○—○	

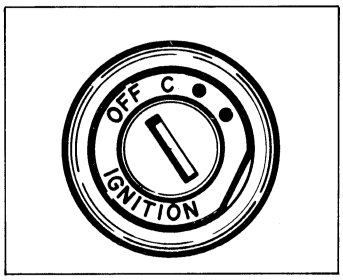

RIGHT AND LEFT SWITCH
TURN SIGNAL SWITCH

	B	Lbl	Lg
R		○—○	
•			
L	○—○		

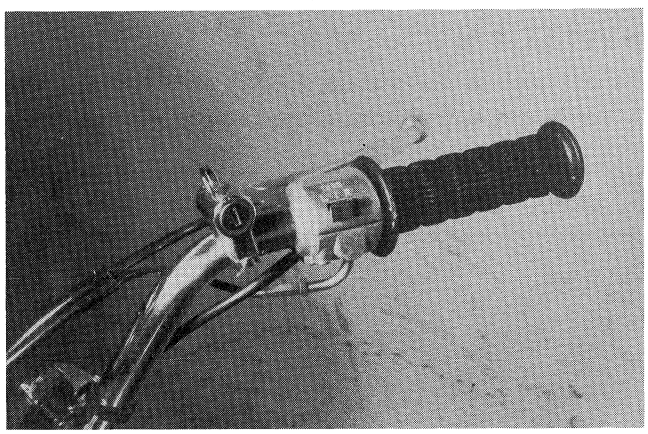

DIMMER SWITCH

	W	Y	Gr
HI		○—○	
LO	○		○

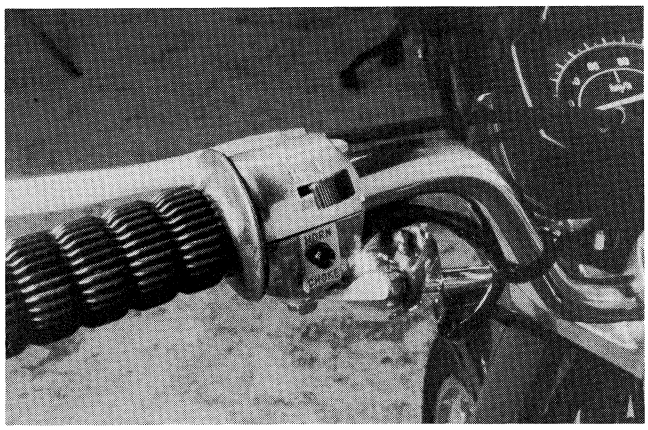

HORN SWITCH

	G	B/W
OFF		
ON	○—○	

FRONT BRAKE SWITCH (ONLY FOR E-06)

	O	W
OFF		
ON	○—○	

REAR BRAKE SWITCH

	O	W
OFF		
ON	○—○	

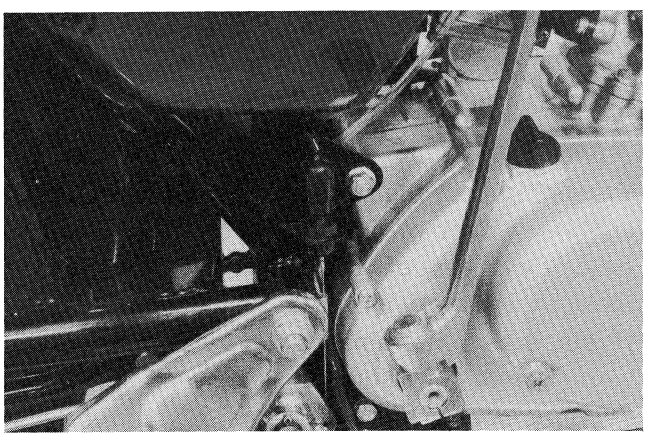

BATTERY

SPECIFICATIONS

Type designation	6N4-2A
Capacity	14.4kC (4Ah)/10HR
Standard electrolyte S.G.	1.26 at 20°C (68°F)

If fitting the battery to the motorcycle, connect the breather pipe to the battery vent.

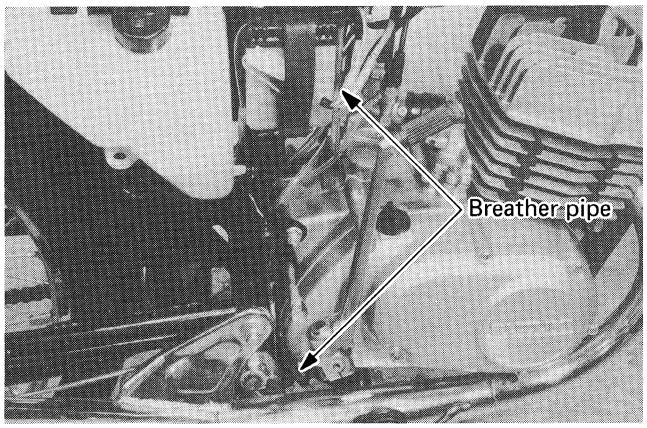

INITIAL CHARGING

Filling electrolyte

Remove short sealed tube before filling electrolyte. Fill battery with electrolyte (dilute sulfuric acid solution with acid concentration of 35.0% by weight, having a specific gravity of 1.26 at 20°C (68°F)) up to indicated UPPER LEVEL. Filling electrolyte should be always cooled below 30°C (86°F) before filling into battery. Leave battery standing for half an hour after filling. Add additional electrolyte if necessary.

Charge battery with current as described in the tables shown below.

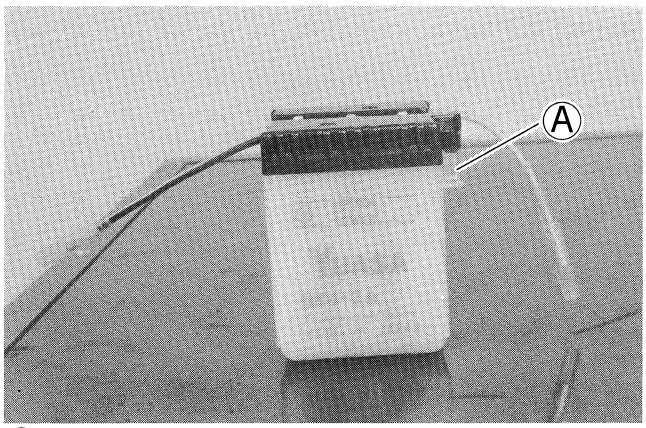

Ⓐ Sealed tube

Maximum charging current	0.4 A

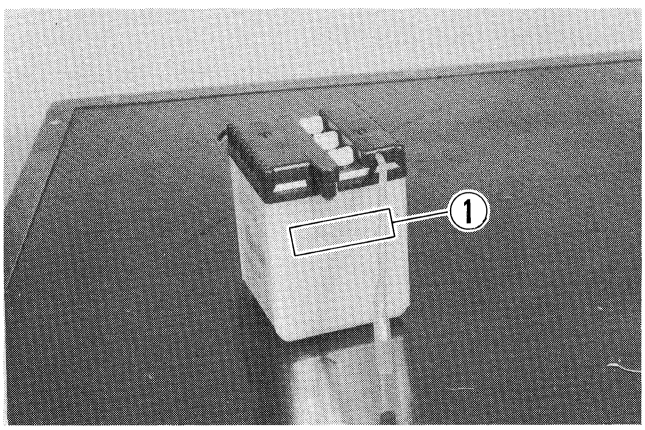

Charging time

The charging time for a new battery is determined by the number of months that have elapsed since the date of manufacture.

Confirmation for date of manufacture

Date of manufacture is indicated by a three-part number ① , as follows, each indicating month, date and year.

Near the end of charging period, adjust the specific gravity of electrolyte to value specified. After charging, adjust the electrolyte level to the UPPER LEVEL with DISTILLED WATER.

Months after manufacturing	Within 6	Within 9	Within 12	Over 12
Necessary charging hours	20	30	40	60

Servicing

Visually inspect the surface of the battery container. If any signs of cracking or electrolyte leakage from the sides of the battery have occurred, replace the battery with a new one.

If the battery terminals are found to be coated with rust or an acidic white powdery substance, then this can be cleaned away with sandpaper.

Check the electrolyte level and add distilled water, as necessary, to raise the electrolyte to each cell's upper level.
Check the battery for proper charge by taking an electrolyte S.G. reading. If the reading is 1.22 or less, as corrected to 20°C (68°F), it means that the battery is still in a run-down condition and needs recharging.

NOTE:
First, remove the ⊖ lead wire.

BASED ON S·G. READING RECHARGING OPERATION

To correct an S.G. reading 20°C (68°F), use following table.

To read the S.G. on the hydrometer, bring the electrolyte in the hydrometer to eye level and read the graduations on the float scale bordering on the meniscus (curved-up portion of electrolyte surface), as shown in figure.

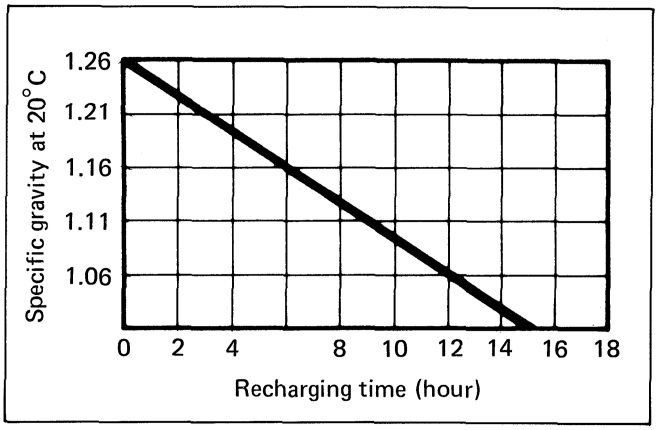

Check the reading (as corrected to 20°C) with chart to determine the recharging time in hours by constant-current charging at a charging rate of 0.4 amperes (which is a tenth of the capacity of the present battery).

Be careful not to permit the electrolyte temperature to exceed 45°C (113°F), at any time, during as necessary, to let the electrolyte cool down. Recharge the battery to the specification.

Electrolyte specific gravity	1.26 at 20°C (68°F)

CAUTION:
Constant-voltage charging, otherwise called "quick" charging, is not recommendable for it could shorten the life of the battery.

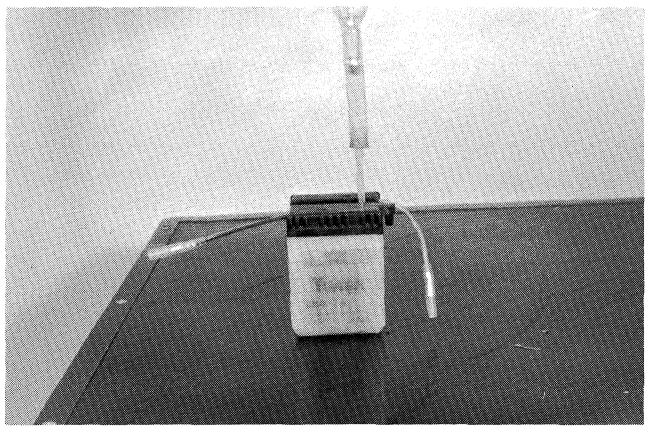

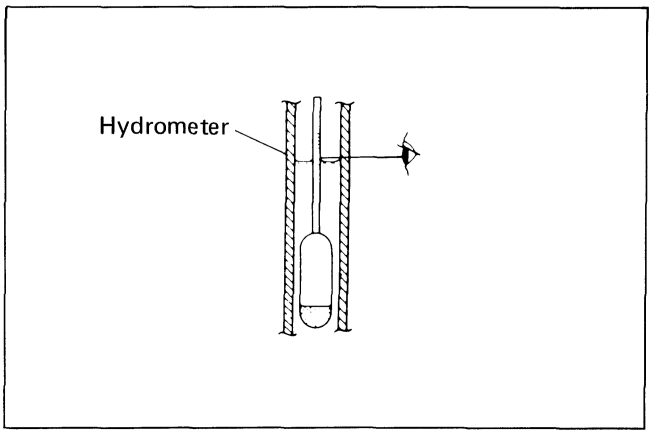

09900 - 28403	Hydrometer

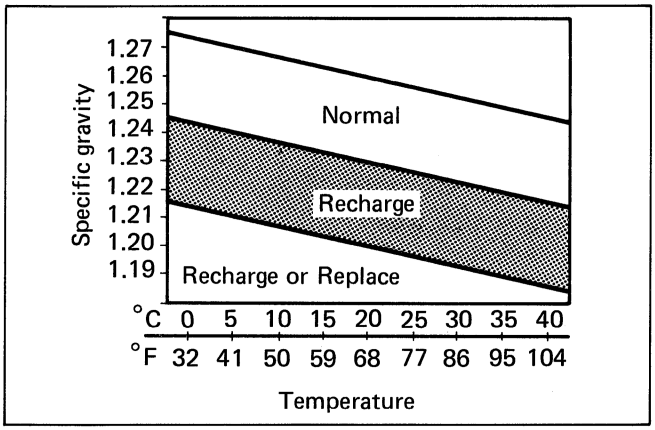

SERVICE LIFE

Lead oxide is applied to the pole plates of the battery which will come off gradually during the service. When the bottom of the battery case becomes full of the sediment, the battery cannot be used any more. If the battery is not charged for a long time, lead sulfate is generated on the surface of the pole plates and will deteriorate the performance (sulfation). Replace the battery with new one in such a case.

When a battery is left for a long term without using, it is apt to subject to sulfation. When the motorcycle is not used for more than 1 month (especially during the winter season), recharge the battery once a month at least.

WARNING:

- **Before charging a battery, remove the seal cap from each cell.**
- **Keep fire and sparks away from a battery being charged.**
- **When removing a battery from the motorcycle, be sure to remove the (–) terminal first.**

LAMPS

HEADLIGHT

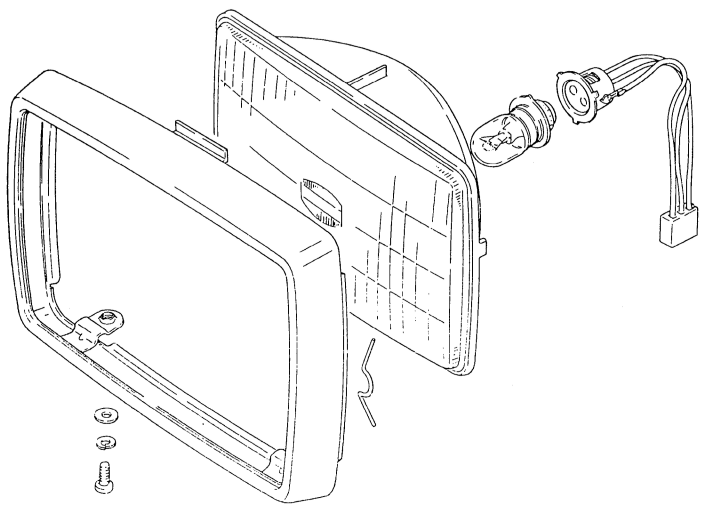

TURN SIGNAL LIGHT

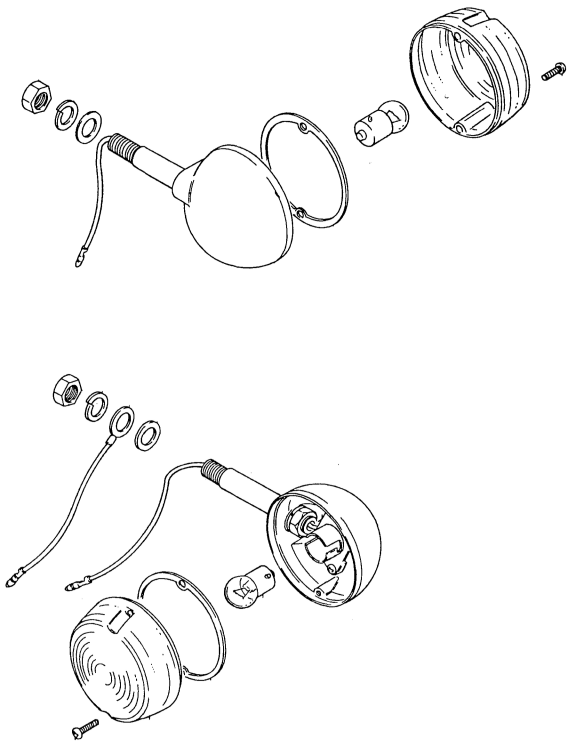

TAIL/BRAKE LIGHT

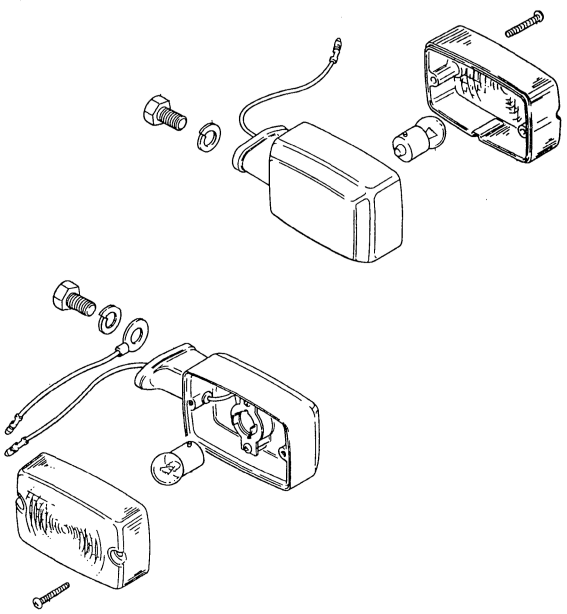

CHASSIS

CONTENTS

FRONT WHEEL AND FRONT BRAKE 6-1
FRONT FORK 6-8
STEERING 6-11
REAR WHEEL AND REAR BRAKE 6-16
REAR SUSPENSION 6-21

FRONT WHEEL AND FRONT BRAKE

FRONT WHEEL EXPLODED VIEW

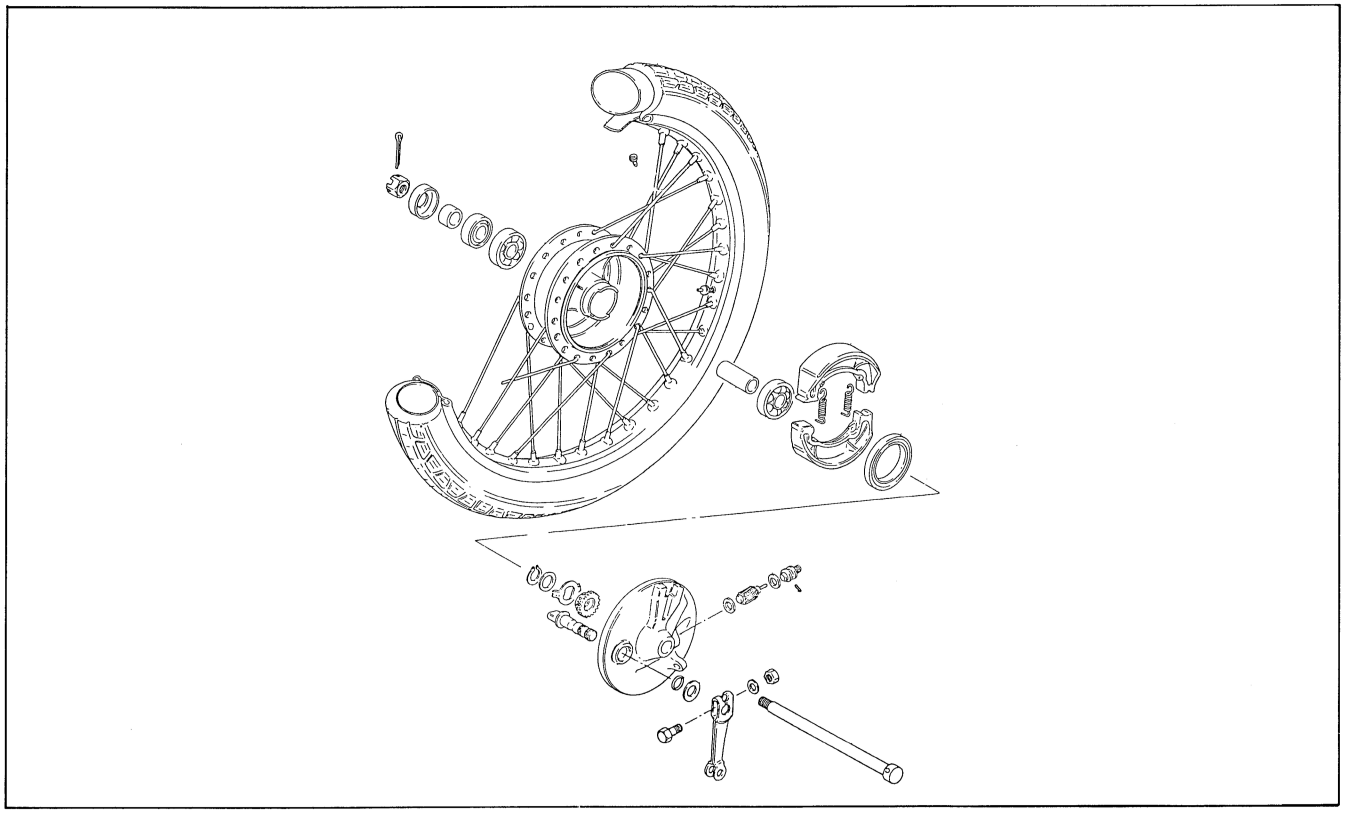

REMOVAL AND DISASSEMBLY

Front wheel

- Support the motorcycle by center stand and jack.
- Disconnect the speedometer and front brake cables.

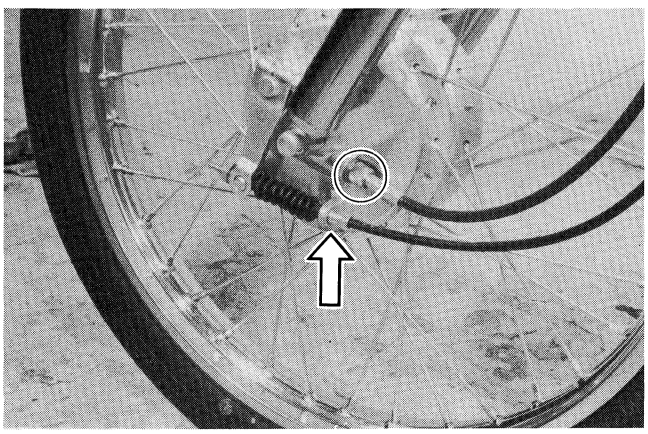

- Remove the cotter pin.
- Loosen and remove the front axle nut.

Tightening torque	27 – 43 N·m (2.7 – 4.3 kg-m)

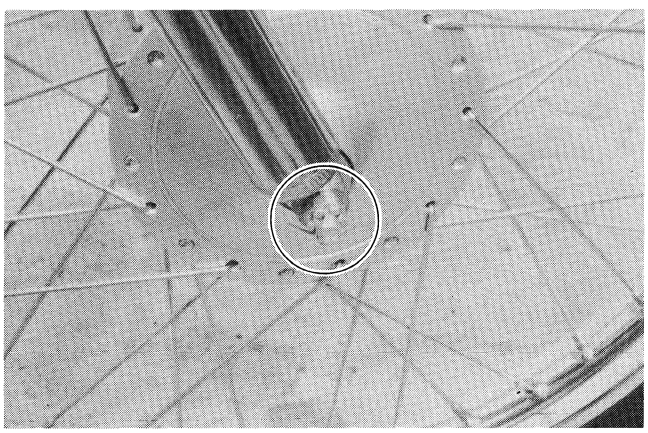

- Draw out the axle shaft.

- Remove the spacer and oil seal.

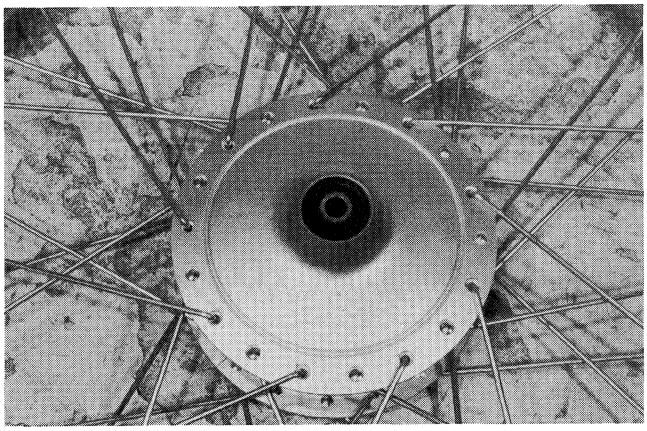

- Draw out the right and left wheel bearings.

CAUTION:
The removed bearing should be replaced.

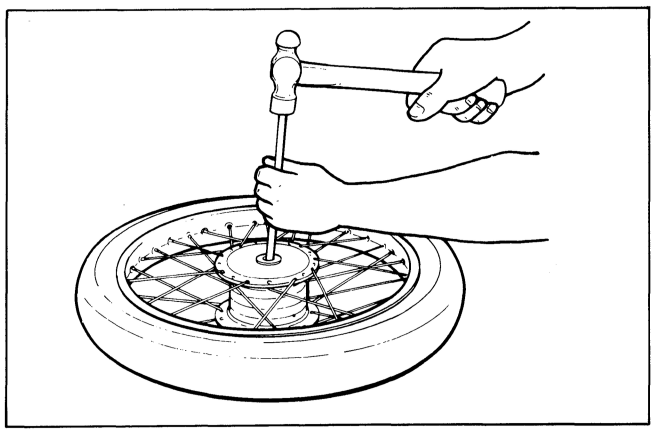

Front brake

- Remove the brake shoes.

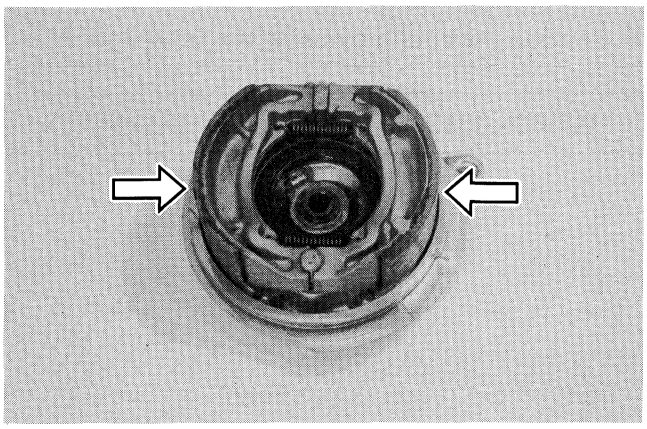

- Remove the brake cam lever.

Tightening torque	5 – 8 N·m (0.5 – 0.8 kg-m)

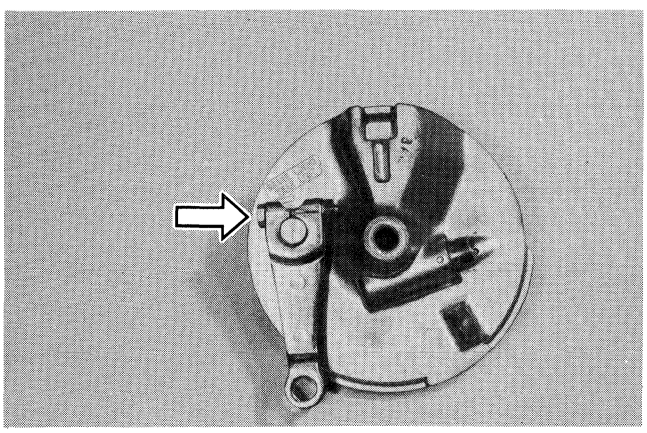

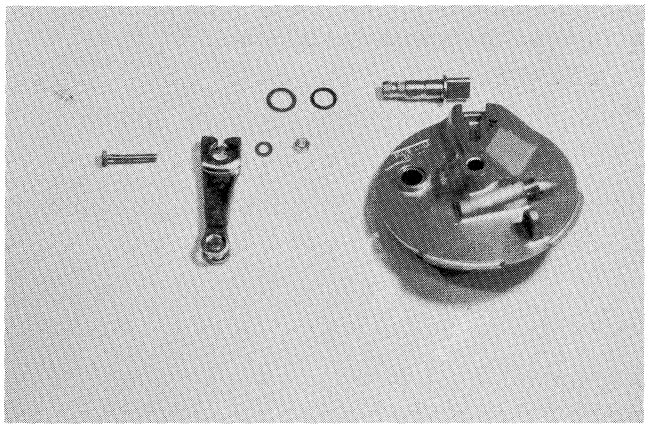

- Remove the oil seal by using the special tool.

09913 - 50121	Oil seal remover

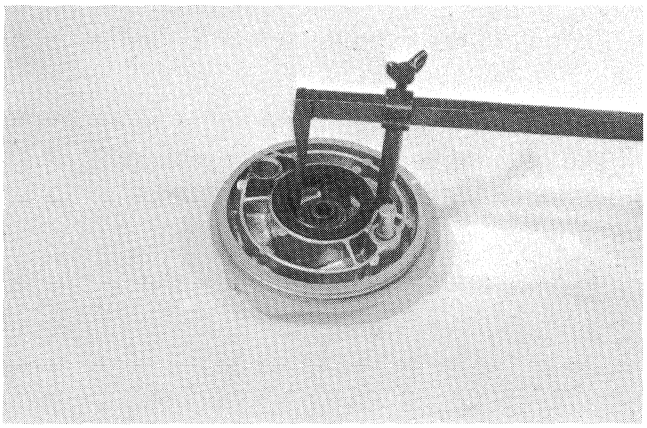

- Remove the circlip by using the special tool.

09900 - 06108	Snap ring pliers

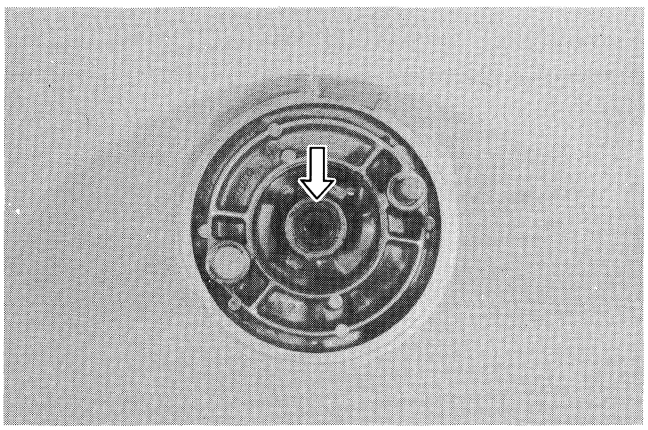

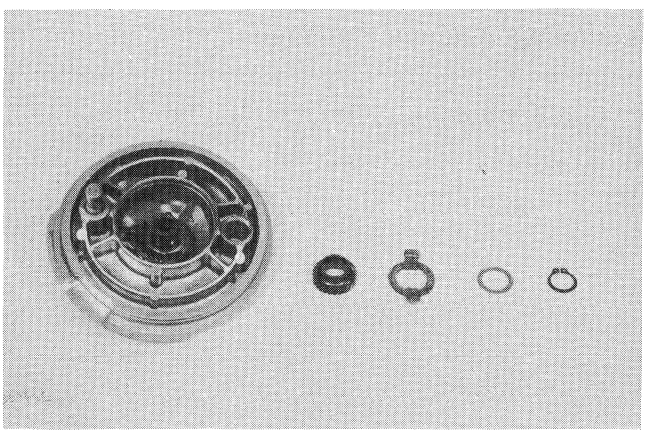

- Remove the speedometer drive gear by unscrewing the securing screw.

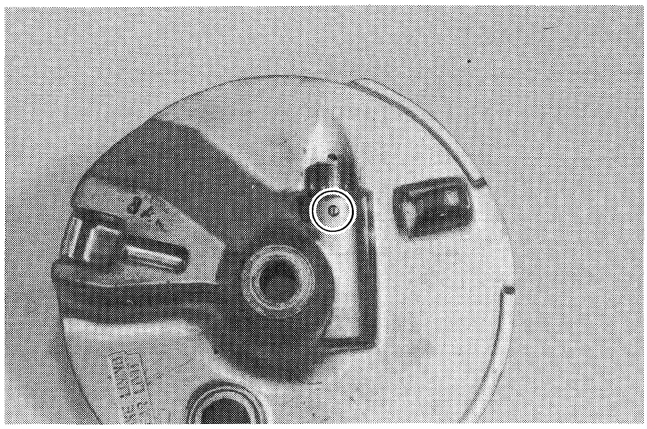

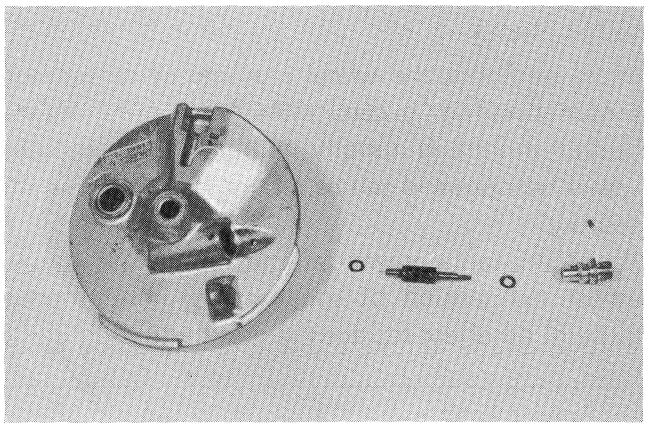

INSPECTION

WHEEL BEARING

Inspect the play of wheel bearings inner race by hands while fixing the wheel hub.

Rotate the inner race by hands to inspect whether abnormal noise occurs or rotating smoothly.

Replace the bearing if there is something unusual.

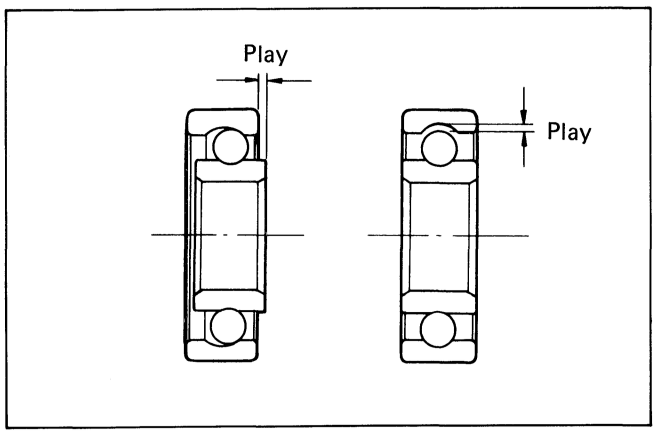

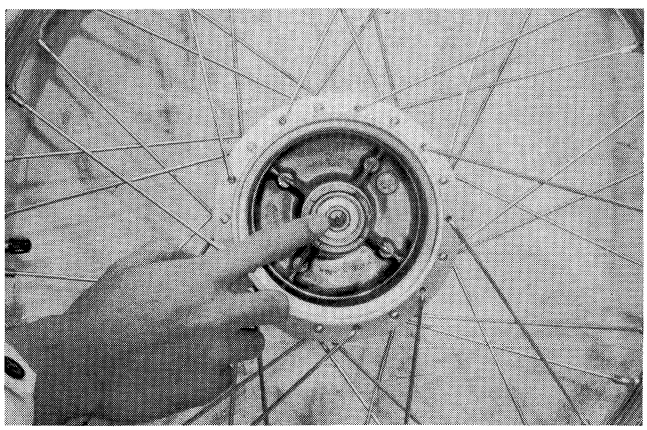

AXLE SHAFT

Using a dial gauge, check the axle shaft for runout and replace it if the runout exceeds the limit.

09900 - 20606	Dial gauge (1/100)

09900 - 21303	V-block
09900 - 20701	Magnetic stand

Service limit	0.25 mm

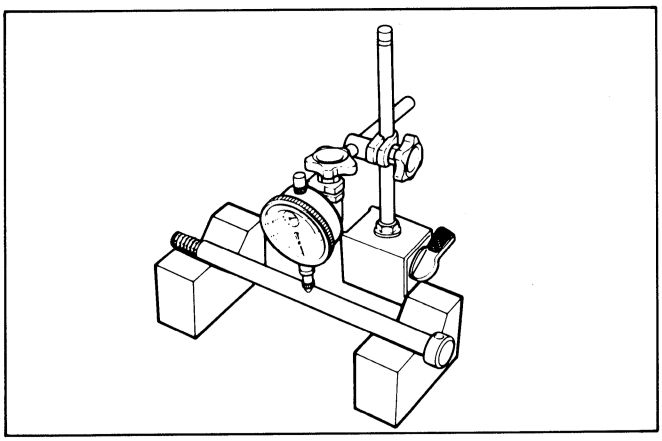

WHEEL RIM

Make sure that the wheel rim runout checked as shown does not exceed the service limit. An excessive runout is usually due to worn or loose wheel bearings and can be reduced by replacing the bearings.

If bearing replacement fails to reduce the runout adjust the tension of spokes, and, if this proves to be of no effect replace the wheel rim.

Service limit (Axial and Radial)	2.0 mm

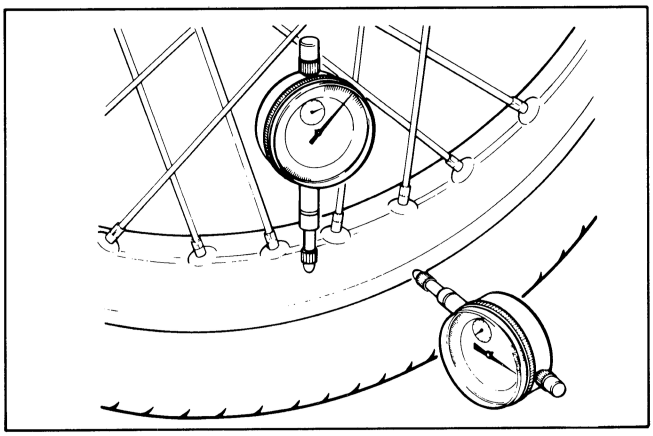

SPOKE NIPPLE

Check to be sure that all nipples are tight, and retighten them as necessary using special tool.

Tightening torque	4 – 5 N·m (0.4 – 0.5 kg-m)

09940 - 60113	Spoke nipple wrench

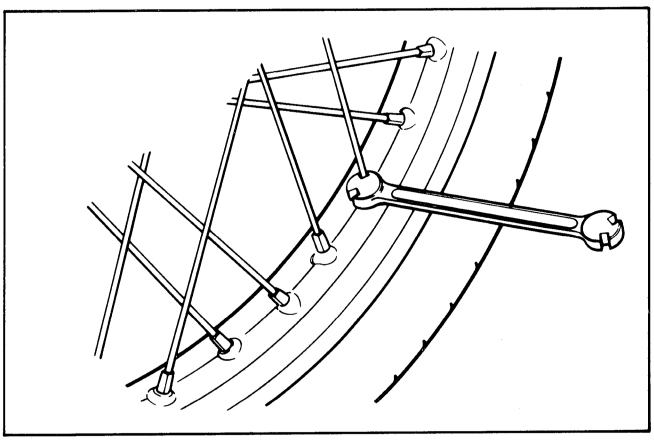

TIRE

For proper braking and riding stability, the tire should have sufficient groove depth from the tread surface. If the groove depth, measured as shown in the figure, reaches the wear limit, replace the tire.

	Service Limit
Front	1.6 mm

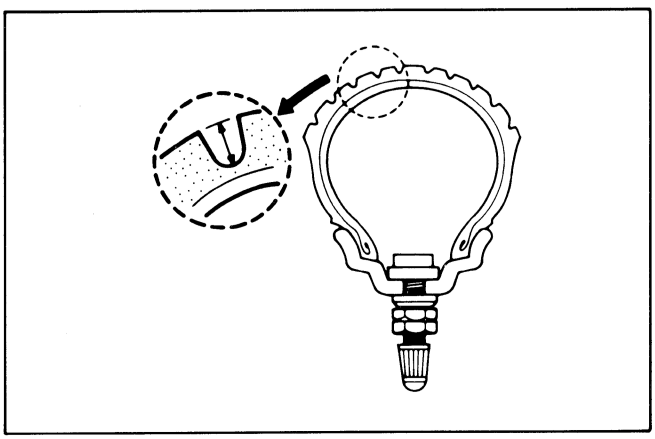

PRESSURE

Inflation pressure affects the durability, riding comfort and safety of a tire to a great extent, so it is necessary to maintain a proper inflation pressure.

	kPa	kg/cm^2
Solo riding	175	1.75
Dual riding	175	1.75

NOTE:
Tire pressure should be measured when tire is cold.

BRAKE SHOE

Brake panel incorporate a brake lining wear limit indicator. If the lining condition is normal, the brake camshaft index mark line Ⓐ , when extended, will fall within the range Ⓑ embossed on the brake panel (when brake is on).

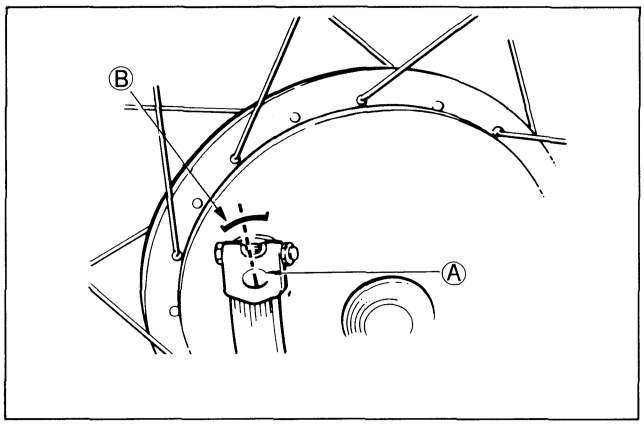

- First check that the brake system is properly adjusted.
- Then check the mark extension line; the brake should be on at this time.

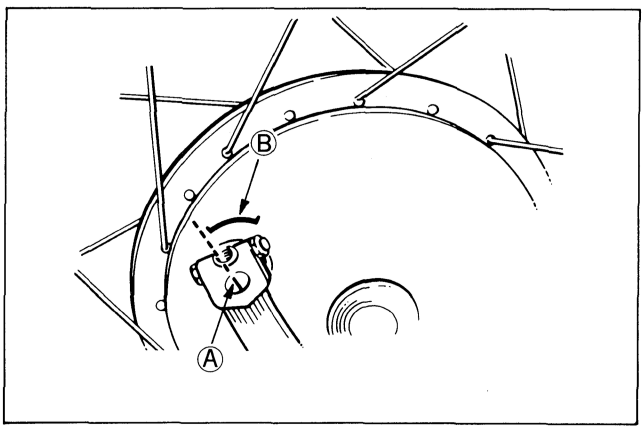

If the extended line falls outside the indicated range, replace the brake shoe assembly.

NOTE:
Replace the brake shoe with a set, otherwise braking performance will be adversely affected.

- Check the brake shoe and decide whether it should be replaced or not from the thickness of the brake shoe lining.

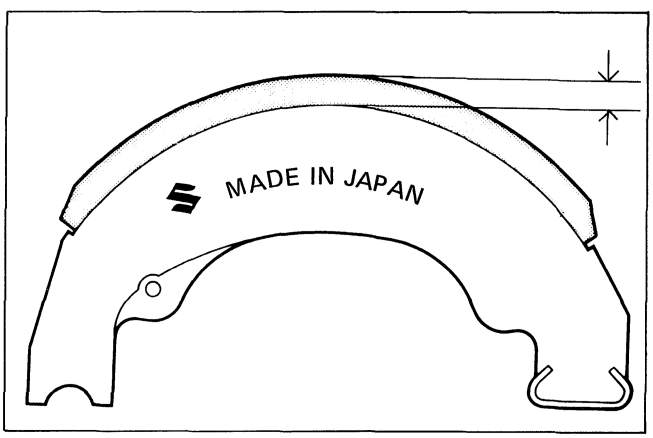

Service Limit	1.5 mm

BRAKE DRUM

Measure the brake drum I.D. to determine the extent of wear and, if the limit is exceeded by the wear noted, replace the drum. The value of this limit is indicated inside the drum.

Service Limit	110.7 mm

Inspect the drum I.D. for scratch marks. If the I.D. surface is scratched or otherwise roughened, smoothen it by grinding with sandpaper.

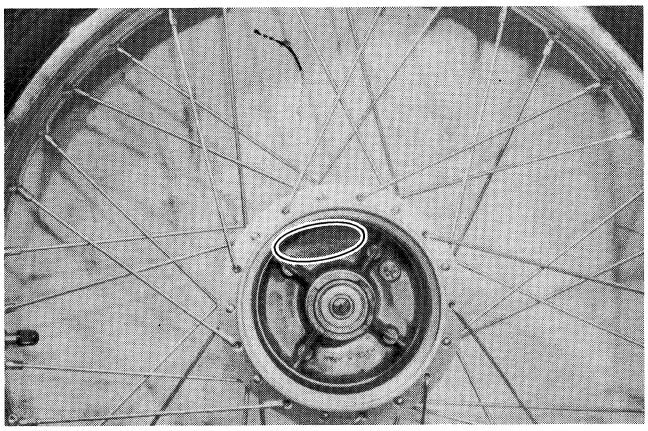

REASSEMBLY

Reassemble and remount the front wheel in the reverse order of disassembly and removal, and also carry out the following steps:

WHEEL BEARINGS

- Install the wheel bearings by using the special tool.

09924 - 84510	Bearing installer set

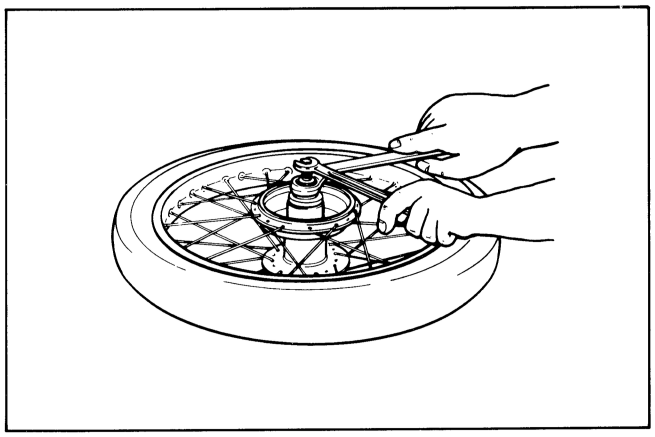

- Apply grease wheel bearings.

99000 - 25010	SUZUKI super grease "A"

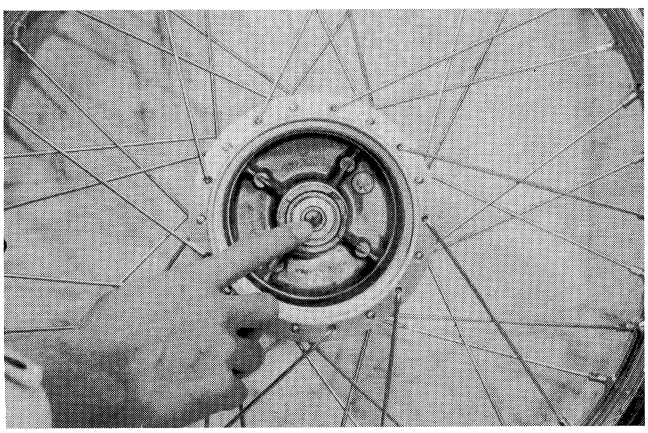

- Install the brake cam lever as shown in illustration.

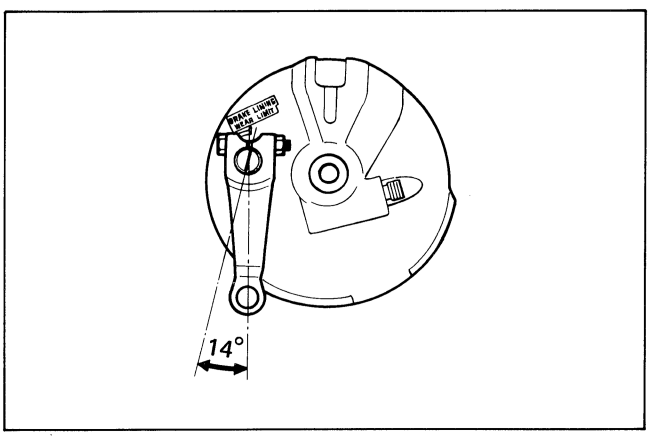

FRONT FORK

FRONT FORK EXPLODED VIEW

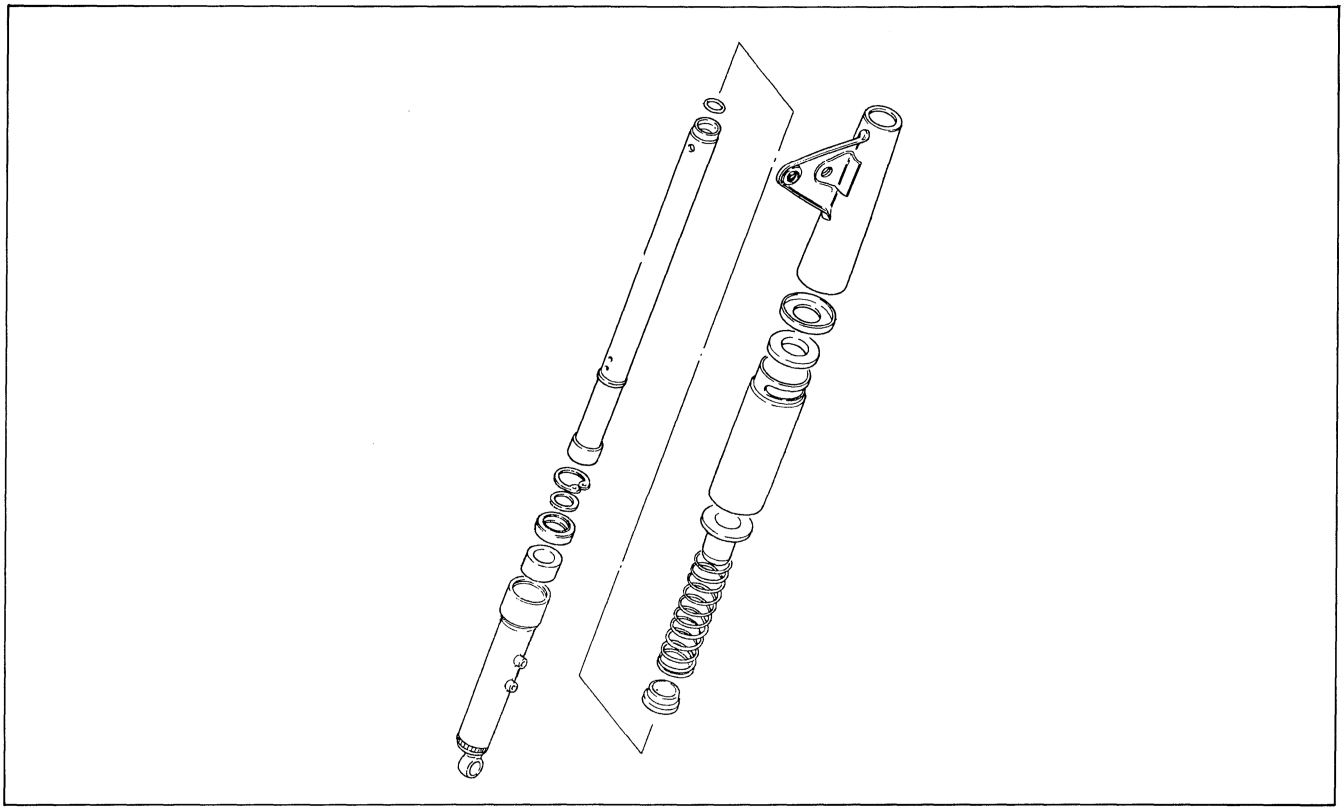

REMOVAL AND DISASSEMBLY

- Remove the front wheel (See page 6-1).
- Remove the front fender.

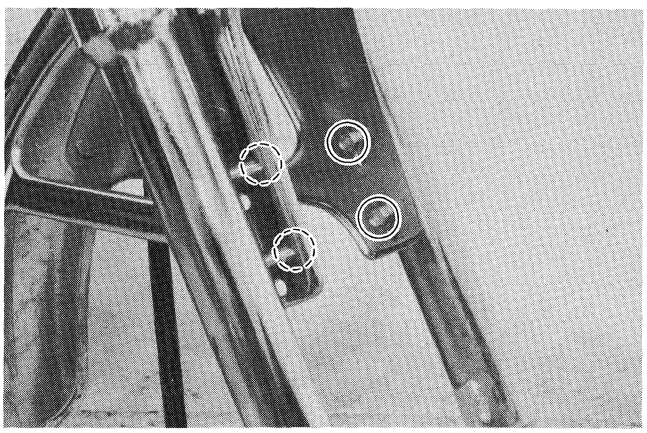

- Loosen and remove the front fork cap bolt.
- Loosen the front fork lower bracket bolt.

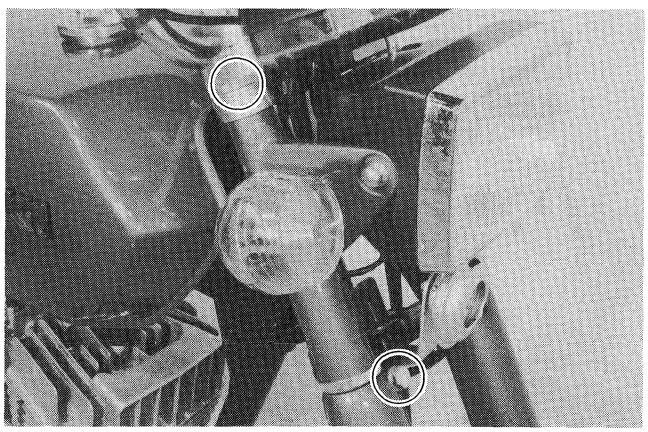

- Remove the O-ring.
- Drain the fork oil.

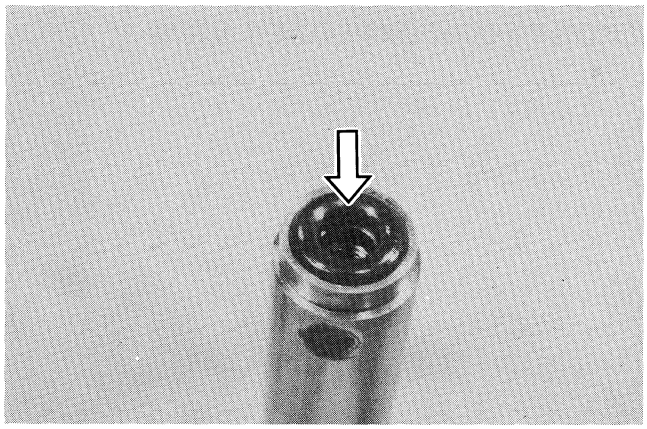

- Take off the spring holder, spring and inner tube holder.

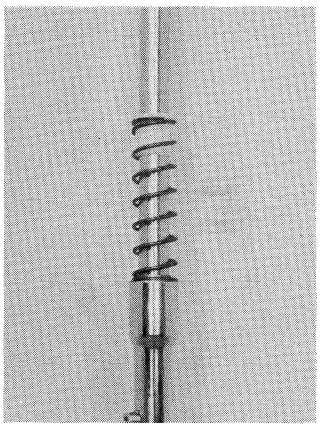

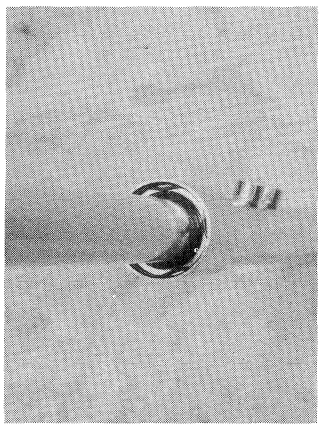

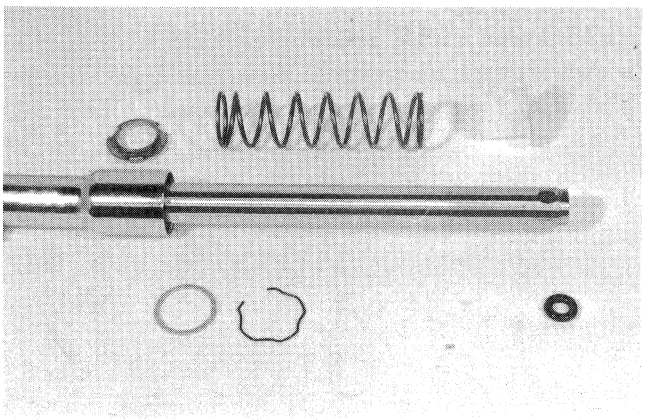

- While holding the outer tube by vise, separate the inner tube from the outer tube by sliding the inner tube.

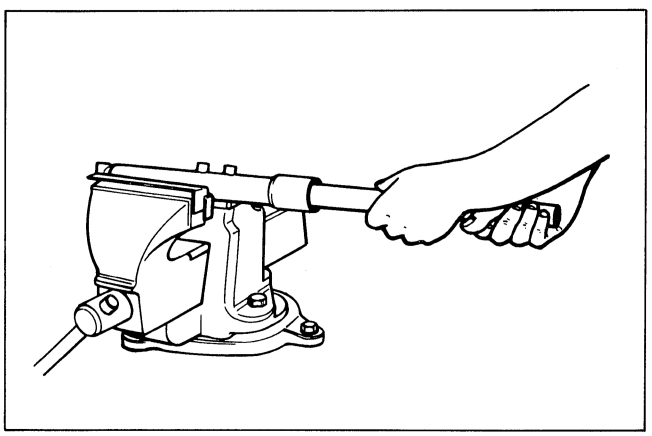

INSPECTION

FORK SPRING

Measure the fork spring free length. If it is shorter than the service limit, replace it.

Service Limit	136.8 mm

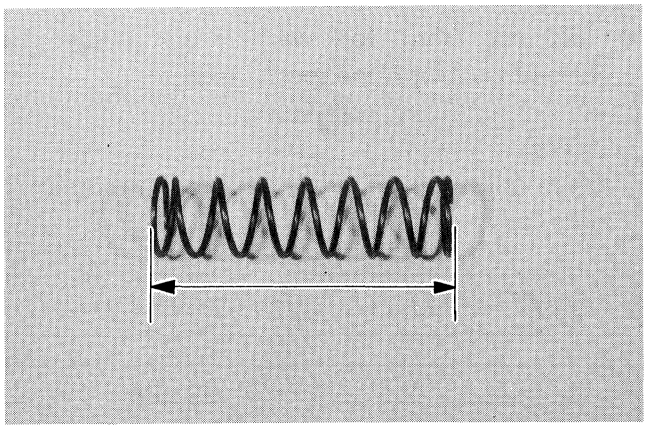

INNER TUBE AND OUTER TUBE

Inspect the inner tube outer surface and outer tube inner surface for any scuffing.

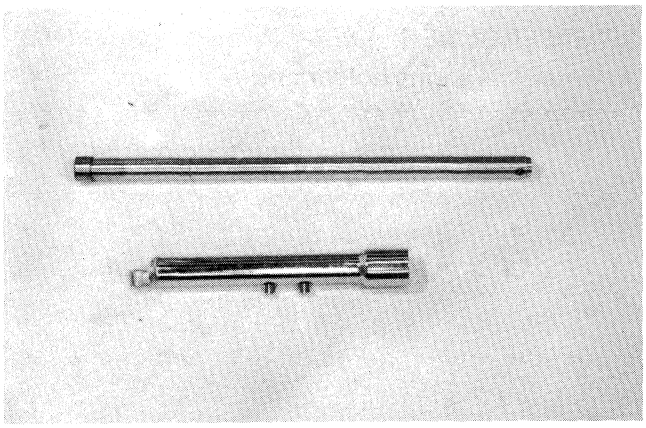

REASSEMBLY

Reassemble and remount the front fork in the reverse order of disassembly and removal, and also carry out the following steps.

- Install the outer metal and oil seal by using the special tool.

09940 - 50112	Front fork oil seal installer

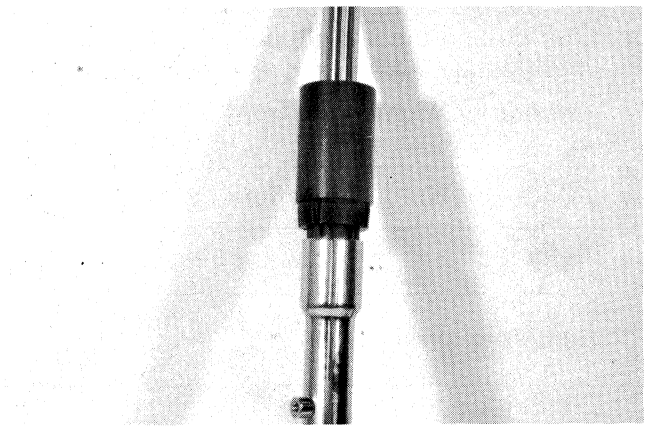

FORK OIL

For the fork oil, be sure to use a motor oil whose viscosity rating meets specifications below.

Fork oil	Fork oil # 20

Capacity	167.5 ml

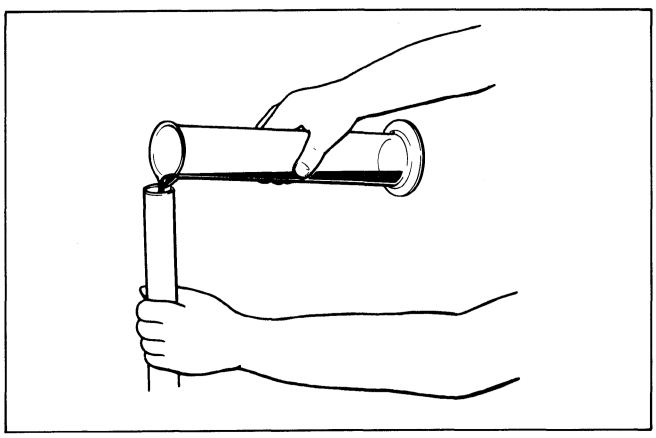

- Hold the front fork vertical and adjust the fork oil level with the special tool.

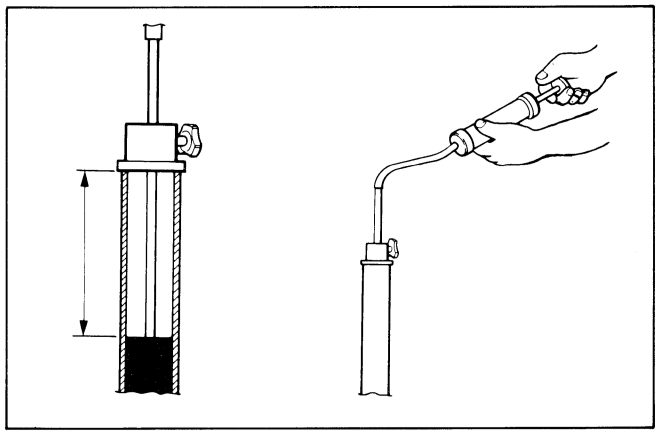

NOTE:
When adjusting oil level, compress the inner tube fully.

09943 - 74111	Fork oil level gauge

Oil level	90 mm

SPRING HOLDER

- Install the spring holder as shown in the figure.

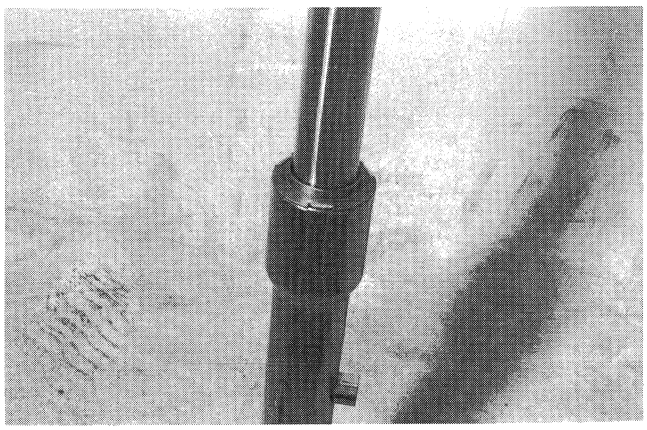

- After pulling the inner tube by using the special tool, tighten the front fork lower bracket bolt temporarily. Tighten the front fork cap bolt.

09940 - 30110	Front fork assembling tool

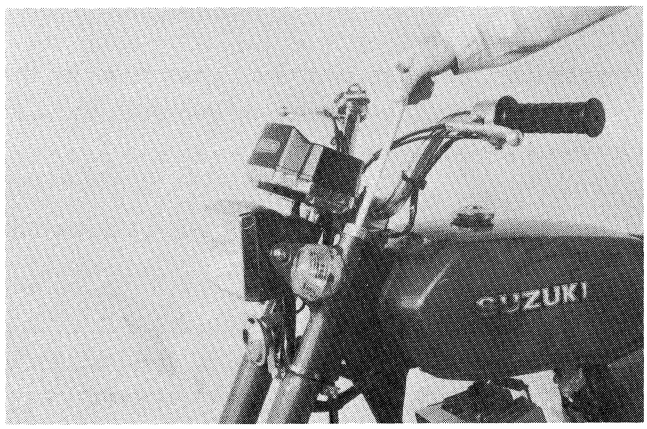

Tightening torque	35 – 53 N·m (3.5 – 5.3 kg-m)

- Retighten the front fork lower bracket bolt with specified torque.

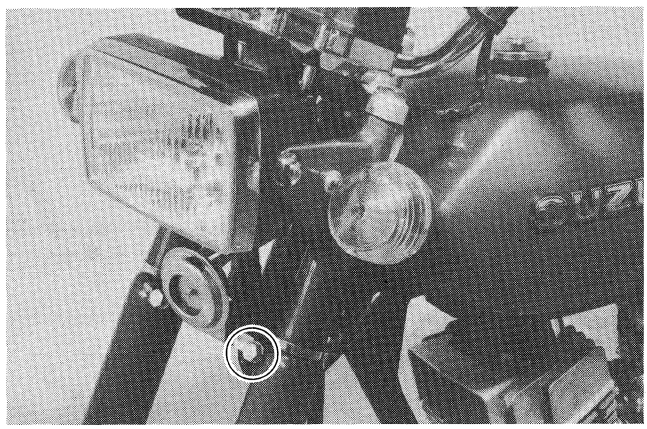

Tightening torque	20 – 30 N·m (2.0 – 3.0 kg-m)

STEERING STEM

STEERING STEM EXPLODED VIEW

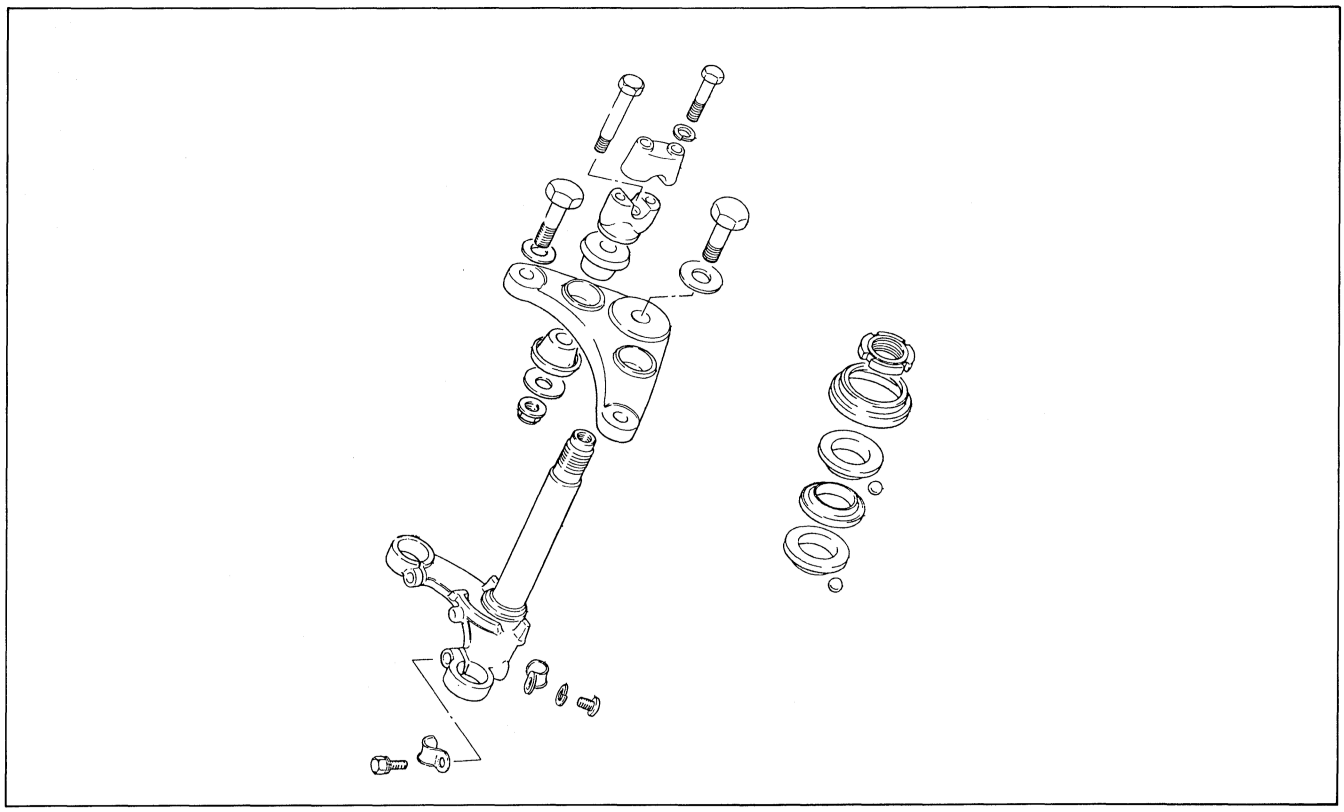

REMOVAL AND DISASSEMBLY

- Take off front wheel (See page 6-1).
- Take off front fork (See page 6-8).
- Remove the two screws and take off the headlight.
- Disconnect the lead wires.

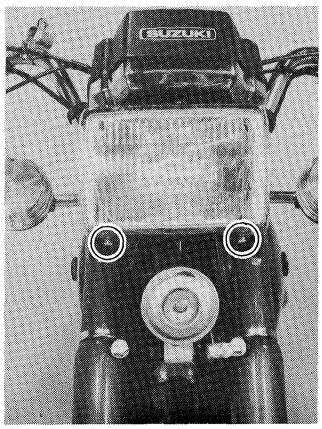

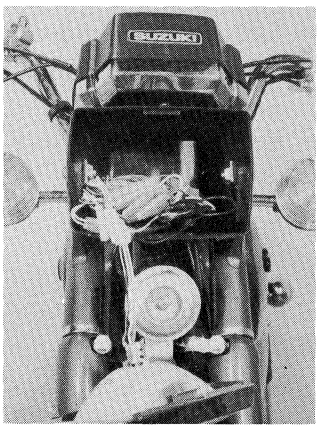

- Remove the headlight brackets.

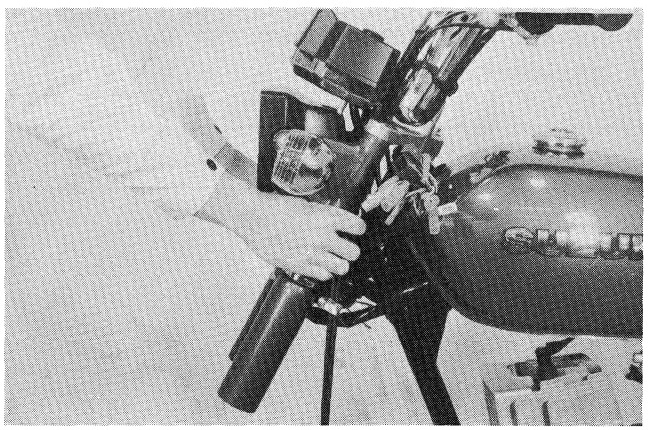

- Remove the horn and left lower bracket bolt.
- Remove the cable bracket.

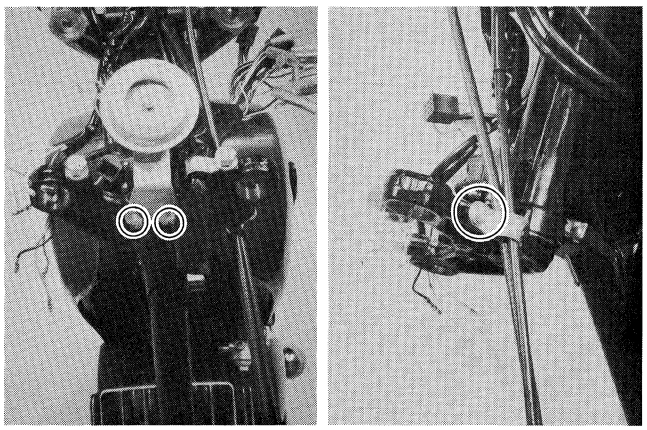

- Remove the instrument panel.

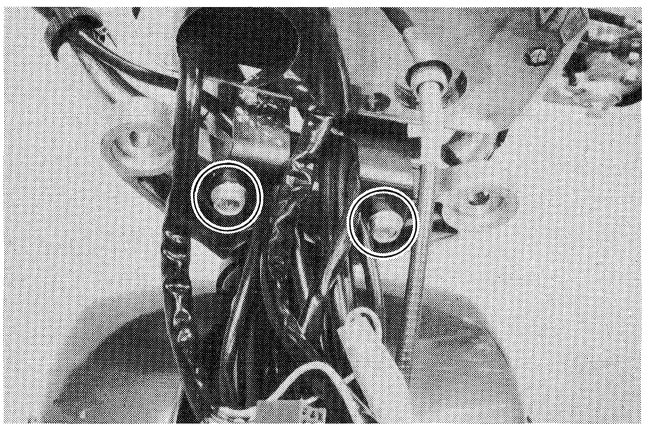

- Loosen and remove the steering stem head bolt.
- Take off the handlebars and steering stem upper bracket.

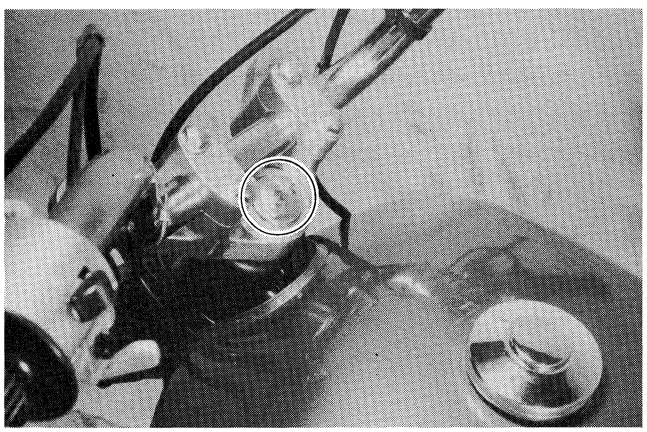

- Remove the steering stem nut by using the special tool.

09910 - 60611	Universal clamp wrench

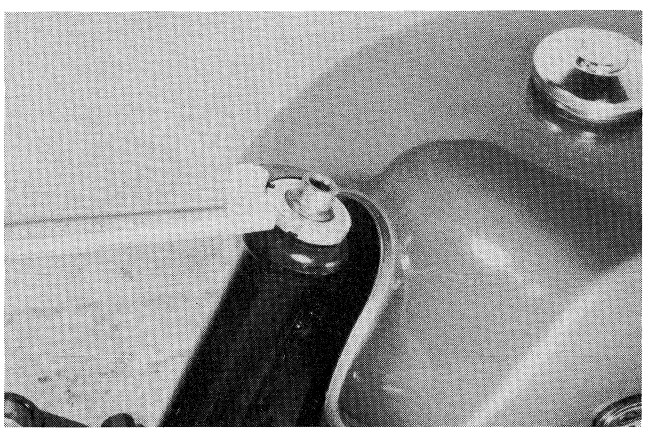

- Slide off the steering stem and be careful not to loose any of the steel balls.

Number of balls	
Top	22 pcs
Bottom	22 pcs

- Remove the outer race.

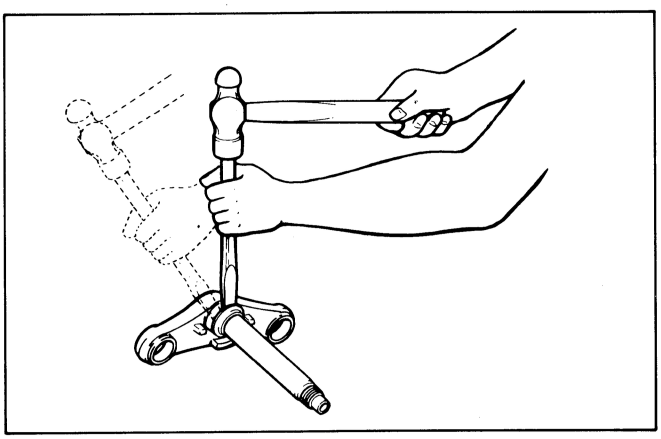

- Remove the inner race.

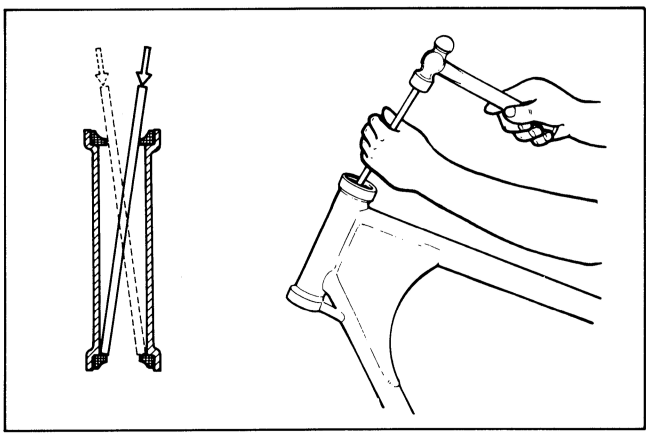

INSPECTION

Inspect and check the removed parts for the following abnormalities.

* Handlebar distortion
* Handlebar clamp wear
* Race wear and brinelling
* Worn or damaged steel balls
* Distortion of steering stem

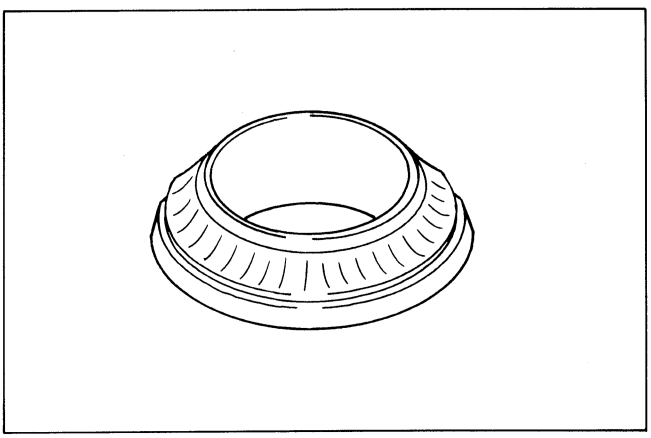

REASSEMBLY

Reassemble and remount the steering stem in the reverse order of disassembly and removal, and also carry out the following steps.

Install the steering inner race by using the special tools.

09941 - 34513	Steering race installer

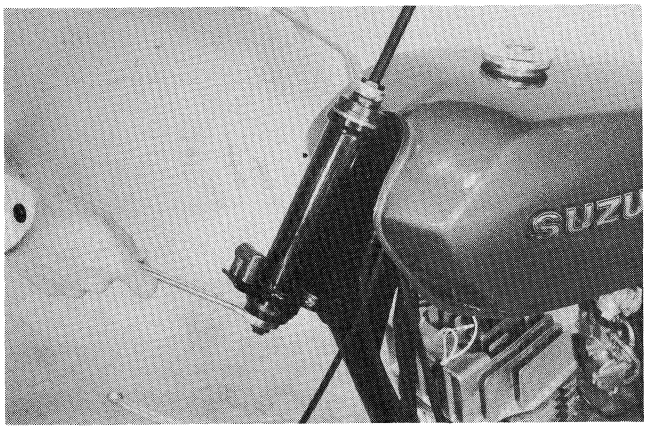

Apply grease upper and lower bearing before re-mount the steering stem.

09900 - 25010	SUZUKI SUPER GREASE "A"

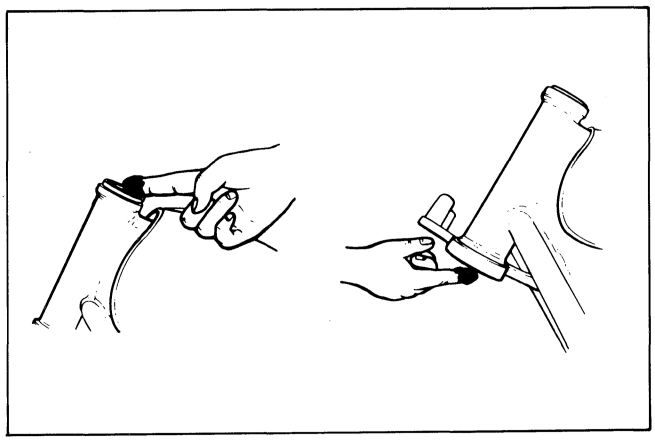

Tighten the steering stem nut by using the special tool until resistance is felt, then loosen it 1/8 – 1/4 turn.

09910 - 60611	Universal clamp wrench

NOTE:
This adjustment will vary from motorcycle to motorcycle.

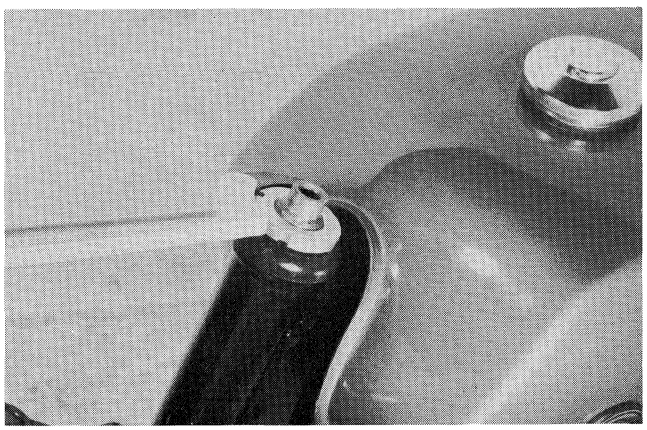

Make sure that the steering turns smoothly and easily left to right.

Tighten the following bolts with specified torque.

	N·m	kg-m
Handlebar clamp bolt	12 – 20	1.2 – 2.0
Steering stem head bolt	35 – 53	3.5 – 5.3
Front fork cap bolt	35 – 53	3.5 – 5.3
Front fork lower bracket bolt	20 – 30	2.0 – 3.0

REAR WHEEL

REAR WHEEL EXPLODED VIEW

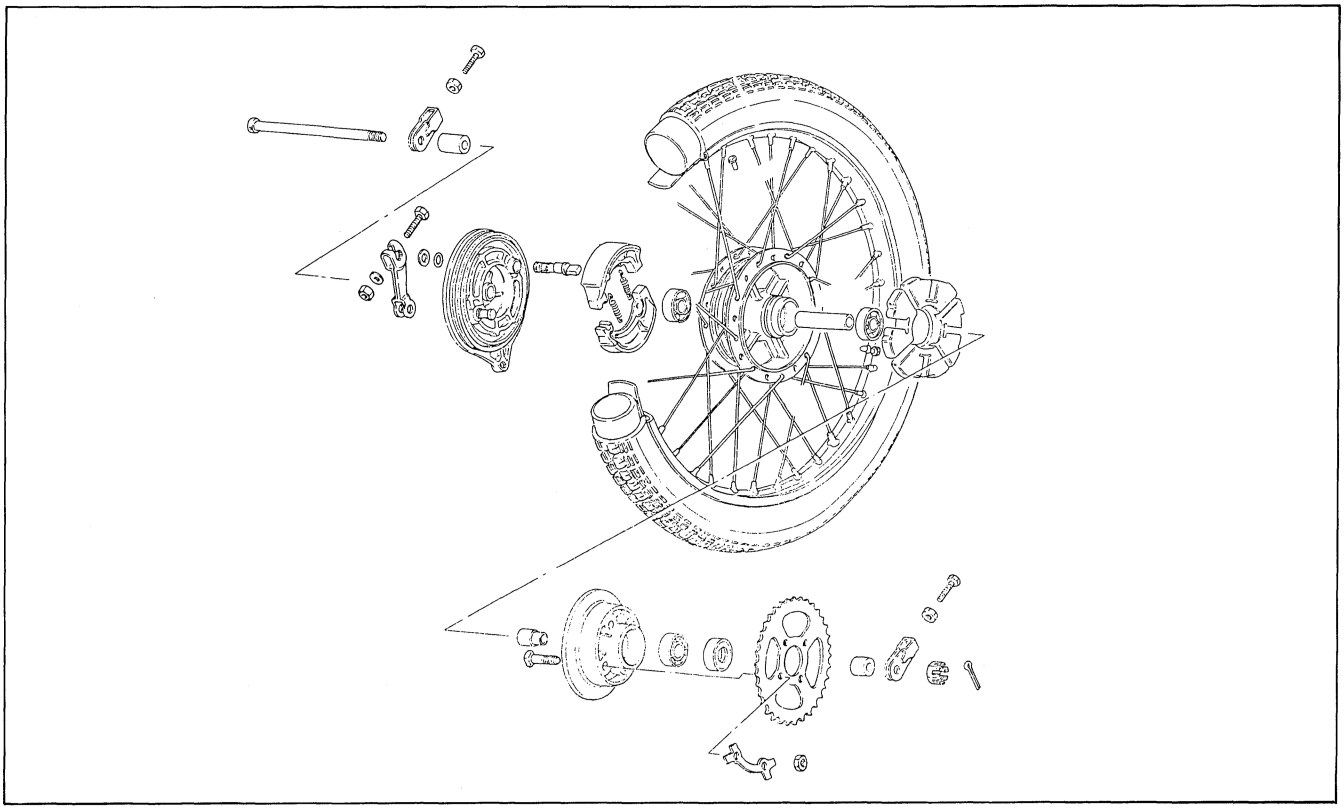

REMOVAL AND DISASSEMBLY

Rear wheel

- Remove the rear torque link and rear brake rod.

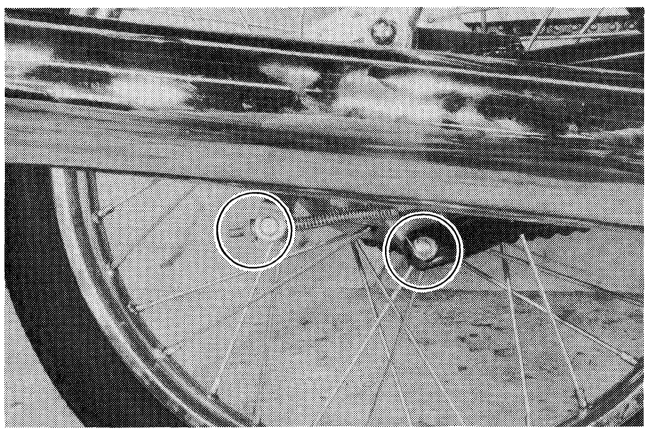

- Remove the drive chain.

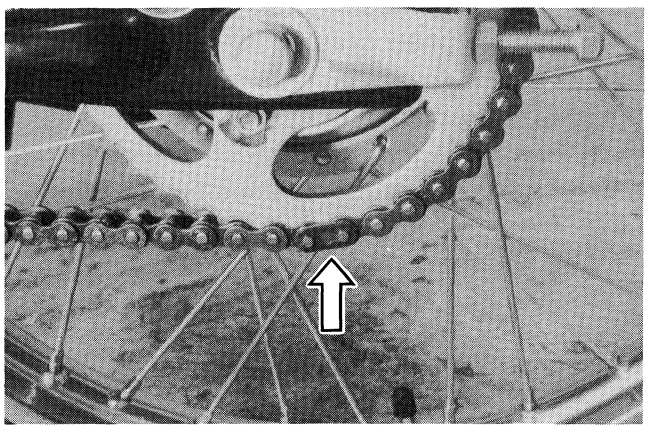

- Remove the rear axle nut and rear axle shaft.
- Take off the rear wheel.

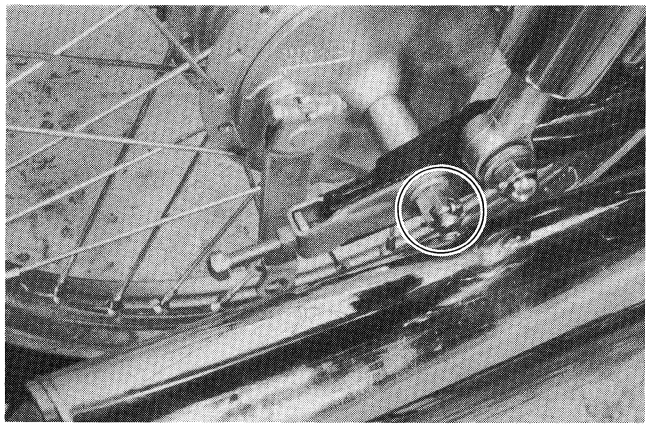

- Separate the rear wheel and drive sprocket.

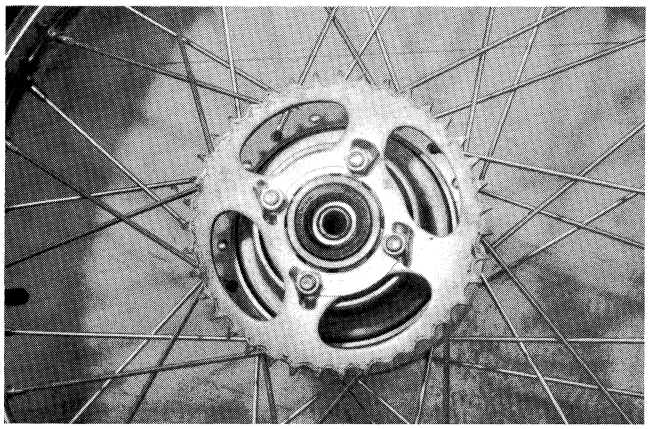

- Flatten the lock washer.
- Loosen and remove the rear sprocket mounting nuts.

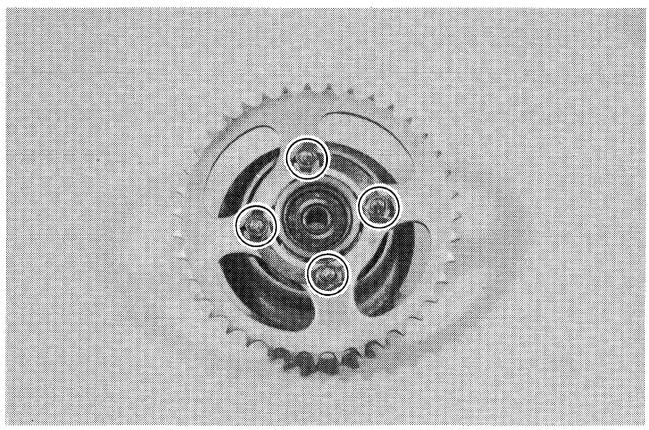

- Remove the wheel bearings by using the special tool in the following procedures.
- Insert the adapter ① in to the wheel bearing.
- After inserting the wedge bar ② from opposite side, lock the wedge bar in the slit of the adapter.
- Drive out the wheel bearing by knocking the wedge bar.

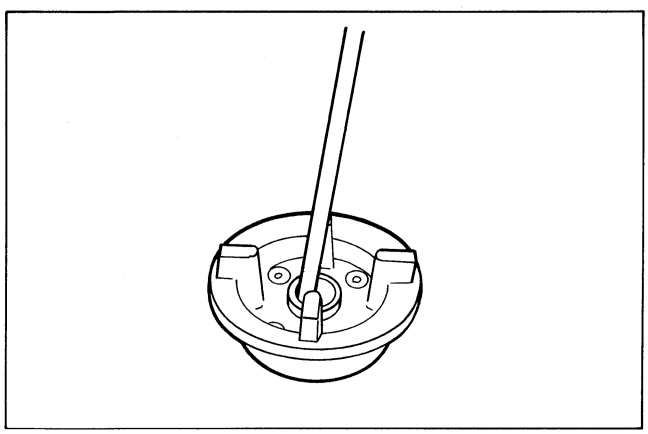

CAUTION:
The removed bearing should be replaced.

09941-50110	Bearing remover (Not available in U.S. Market)

Rear brake

- Remove the brake shoes.

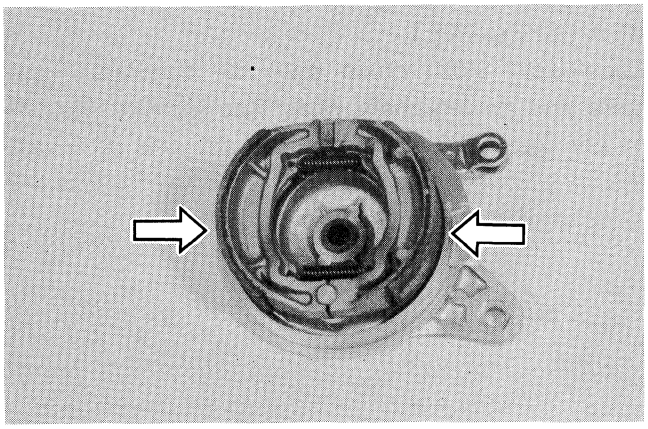

- Remove the brake cam lever.

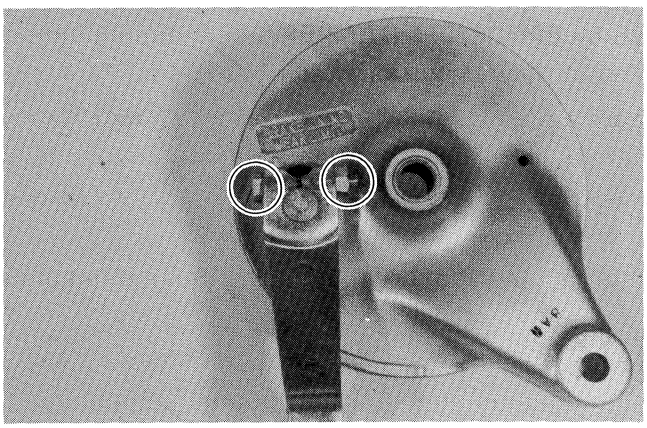

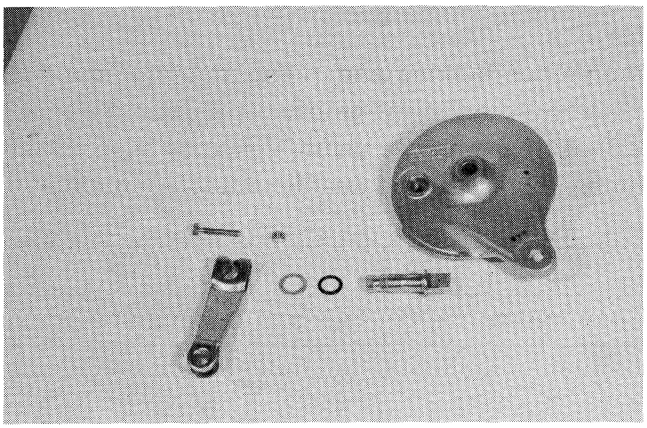

INSPECTION

* WHEEL BEARING (See page 6-4)
* AXLE SHAFT (See page 6-5)
* WHEEL RIM (See page 6-5)
* SPOKE NIPPLE (See page 6-5)
* BRAKE SHOE (See page 6-6)
* BRAKE DRUM (See page 6-7)

REAR SPROCKET

Excessively worn chain sprocket generate chain noise and hasten chain wear. The sprocket should be checked for wear when the chain is removed. Visually inspect the sprocket teeth and replace the sprocket if they are worn as illustrated.

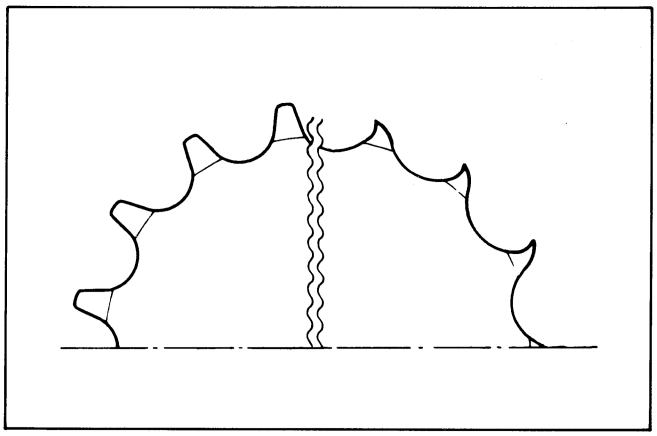

REAR SPROCKET DAMPER

Inspect the damper for wear.

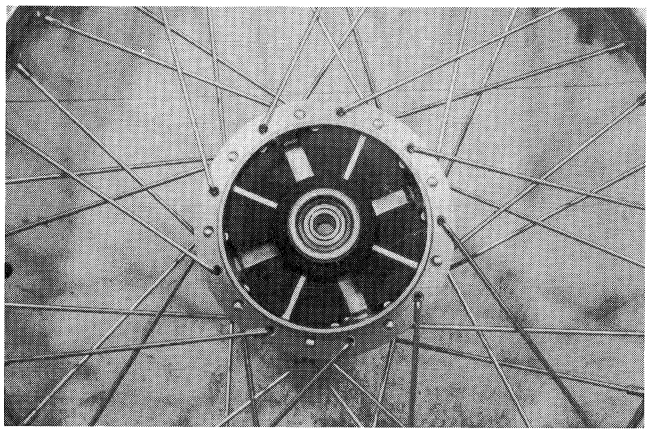

TIRE

For proper braking and riding stability, the tire should have sufficient groove depth from the tread surface. If the groove depth, measured as shown in the figure, reaches the wear limit, replace the tire.

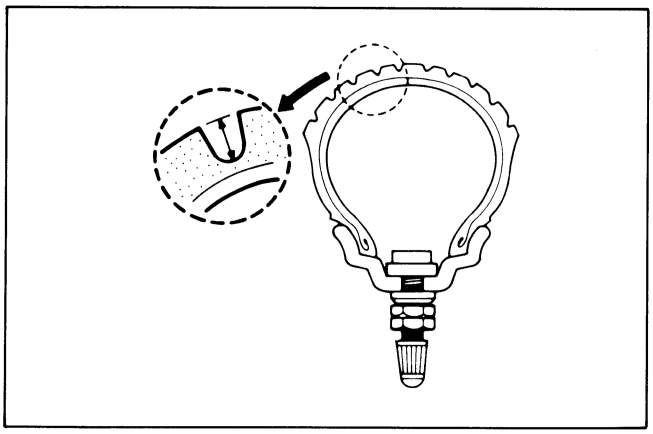

	Service Limit
Rear	1.6 mm

PRESSURE

Inflation pressure affects the durability, riding comfort and safety of a tire to a great extent, so it is necessary to maintain a proper inflation pressure.

	kPa	kg/cm^2
Solo riding	175	1.75
Dual riding	225	2.25

NOTE:
Tire pressure should be measured when tire is cold.

REASSEMBLY

Reassemble the rear wheel and rear brake, in the reverse order of disassembly and removal, and also carry out the following steps.

BRAKE

Install the brake cam lever as shown in illustration.

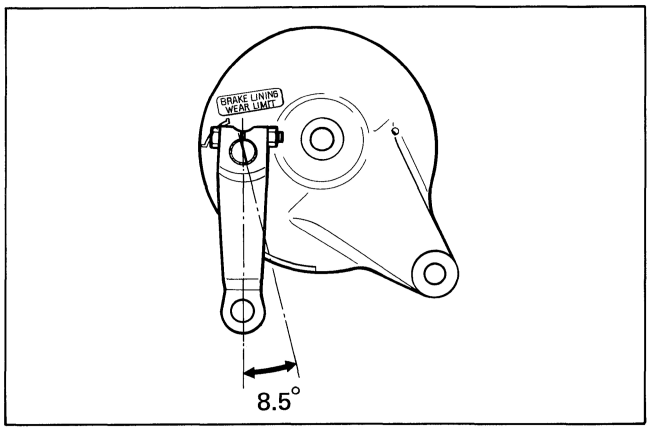

CAUTION:
When reassembling the brake shoe, be sure to grease the sliding face of brake cam. Make sure the shoe lining are absolutely free of greasy stains. Slipping brake is usually due to sloppy handling of these parts at the time of reassembling.

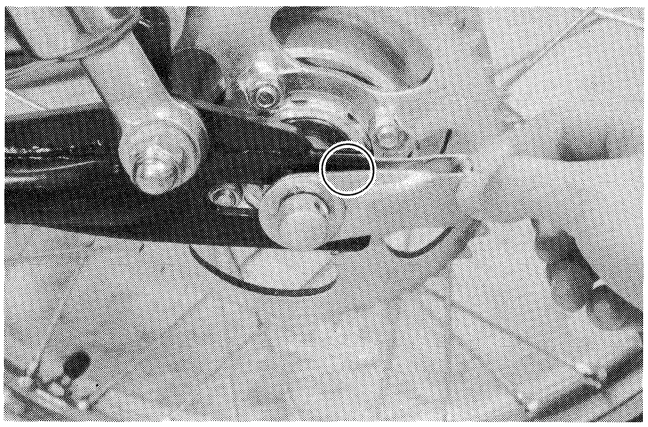

NOTE:
When install the chain adjuster, the adjust mark on adjuster is upper side.

Tighten the following bolts and nuts with specified torque.

Tightening torque

		N·m	kg-m
Rear torque link nut		10 – 15	1.0 – 1.5
Sprocket mounting nuts		18 – 28	1.8 – 2.8
Brake cam lever		5 – 8	0.5 – 0.8
Rear axle nut	10 mm	27 – 43	2.7 – 4.3
	12 mm	36 – 52	3.6 – 5.2

REAR SUSPENSION

REAR SUSPENSION EXPLODED VIEW

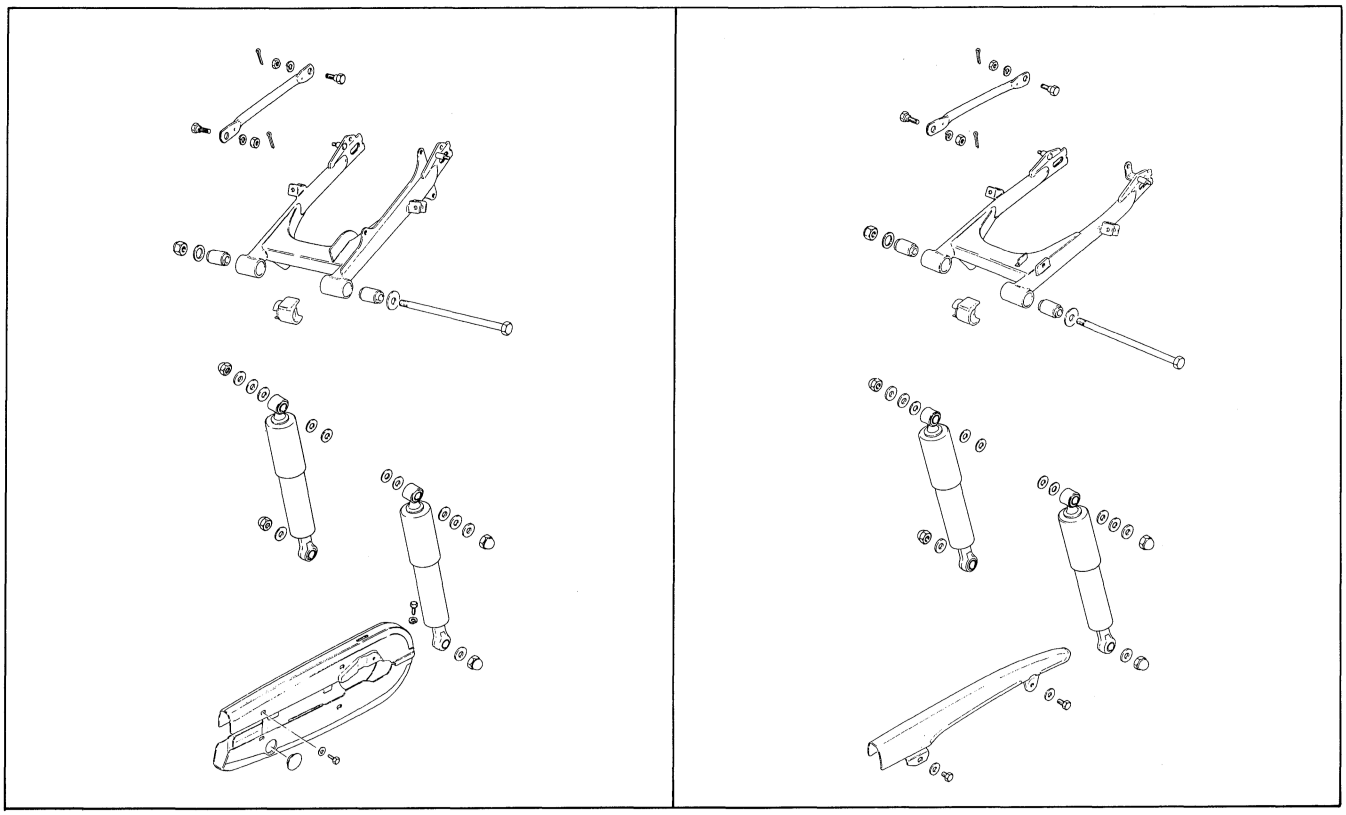

REMOVAL

- Remove the rear wheel (See page 6-16).
- Remove the rear shock absorber lower nuts and chain cover.

Tightening torque	20 – 30 N·m (2.0 – 3.0 kg-m)

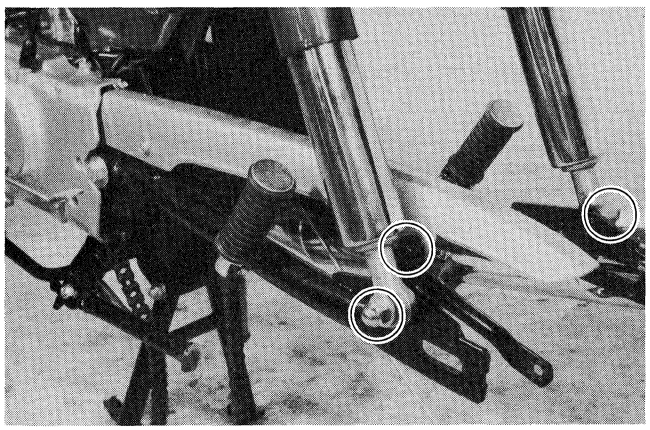

- Loosen and remove the pivot nut.
- Draw out the pivot shaft.

Tightening torque	45 – 70 N·m (4.5 – 7.0 kg-m)

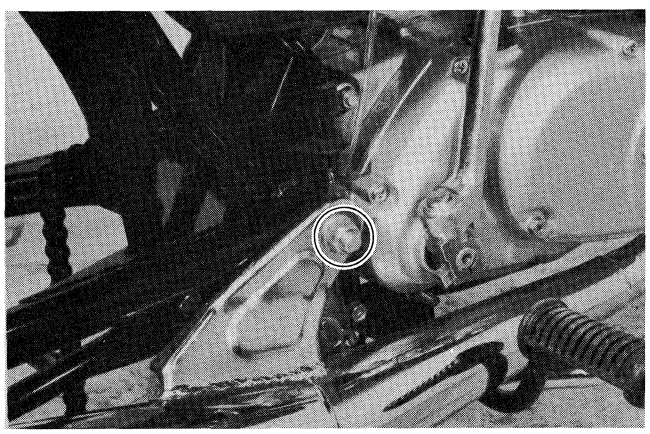

- Take off the swing arm.

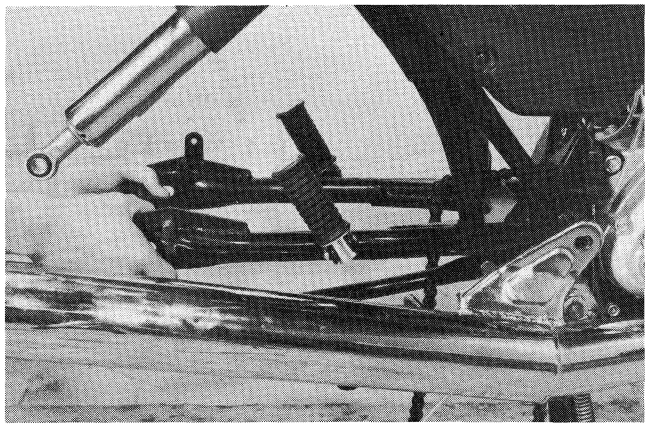

INSPECTION

- Inspect the wear of the bush.

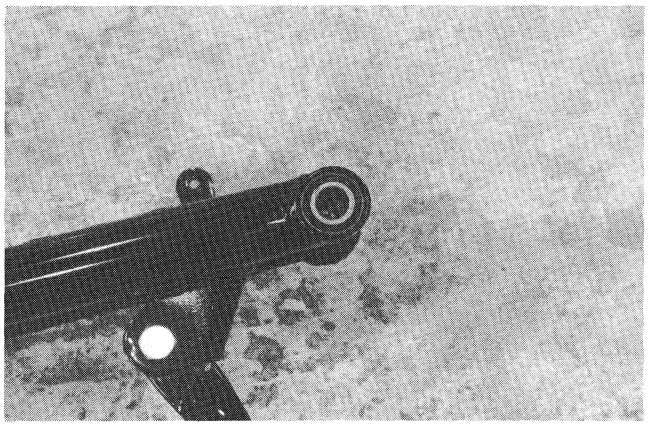

- Inspect the distortion of the swing arm.

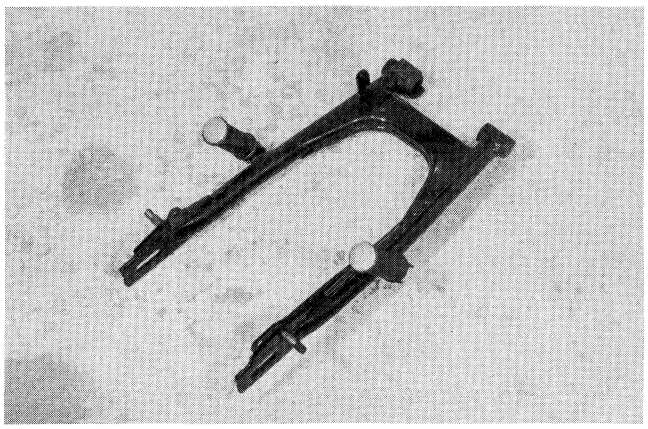

REASSEMBLY

Reassemble and remount the swing arm in the reverse order of removal.

SERVICING INFORMATION

CONTENTS

TROUBLE SHOOTING 7-1
SERVICE DATA 7-5
TIGHTENING TORQUE 7-12
SPECIAL TOOLS 7-14
WIRING DIAGRAM 7-18
WIRE ROUTING 7-19
CABLE ROUTING 7-20

TROUBLE SHOOTING

ENGINE DIFFICULT TO START

First check that there is fuel in the tank. If there is a sufficient amount of fuel, check the following.

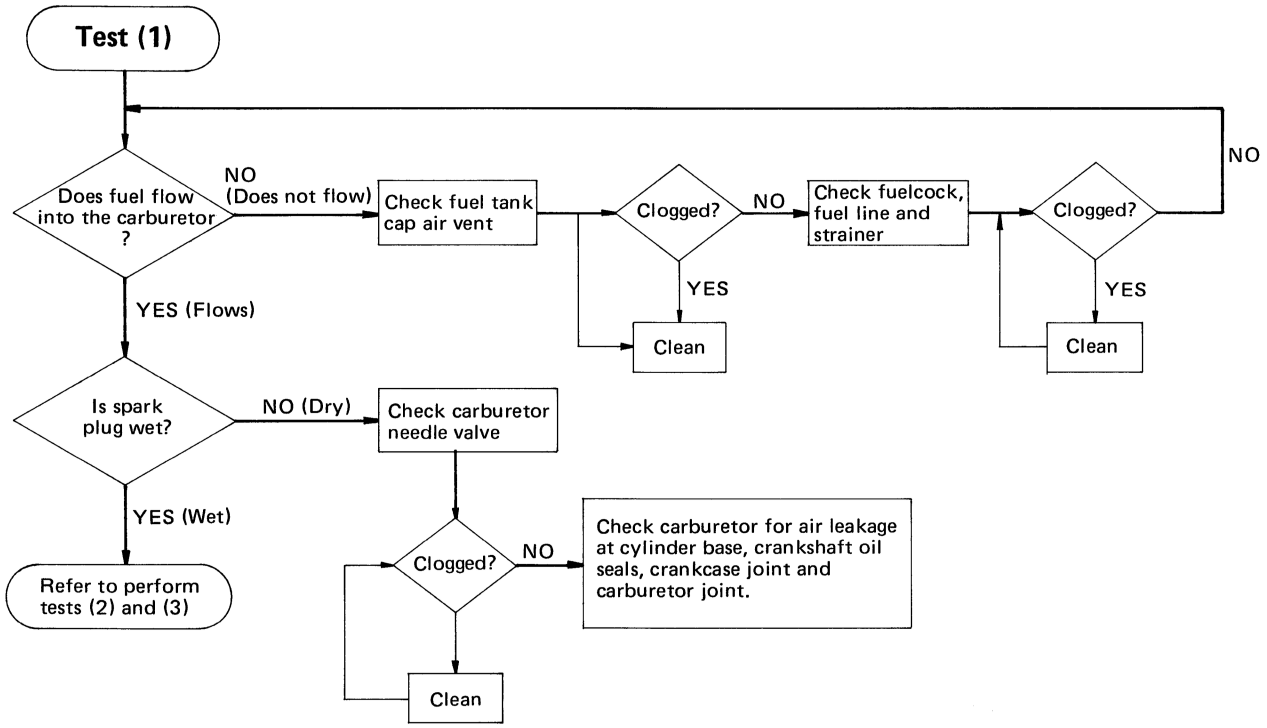

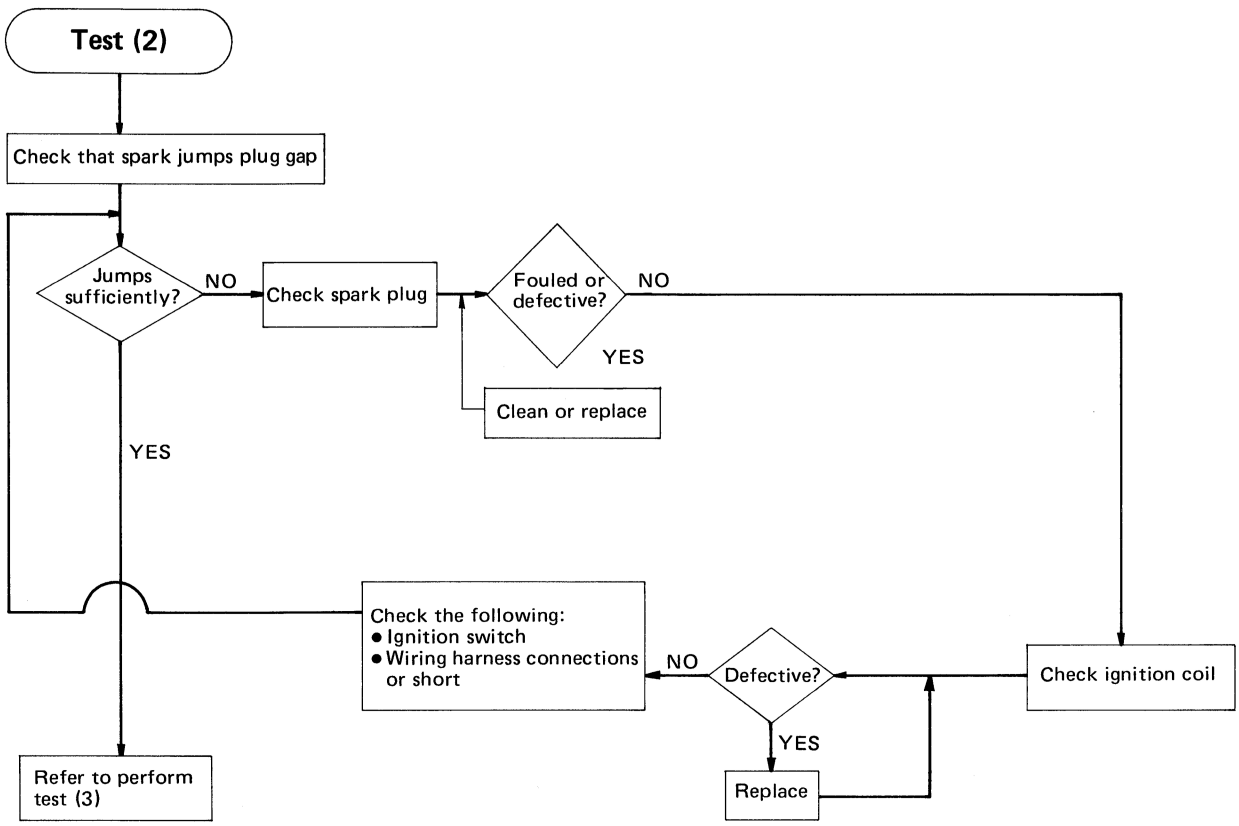

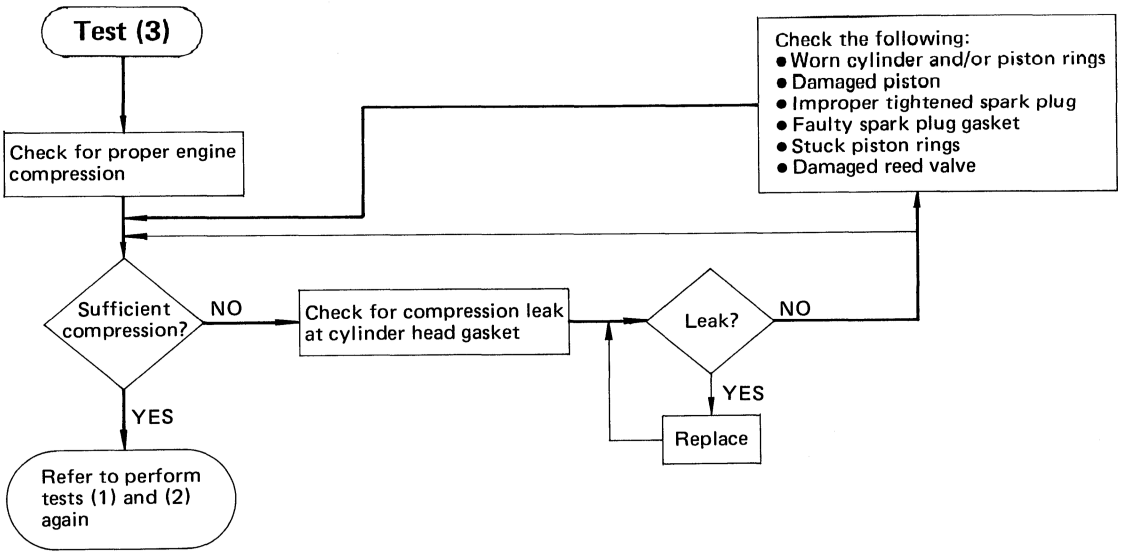

ENGINE OVERHEATS

If the engine tends to overheat during low-speed running, check the condition of the lubrication system, the brakes (for dragging) chain tension and cylinder fin cleanliness. If no abnormality is found, make the following checks:

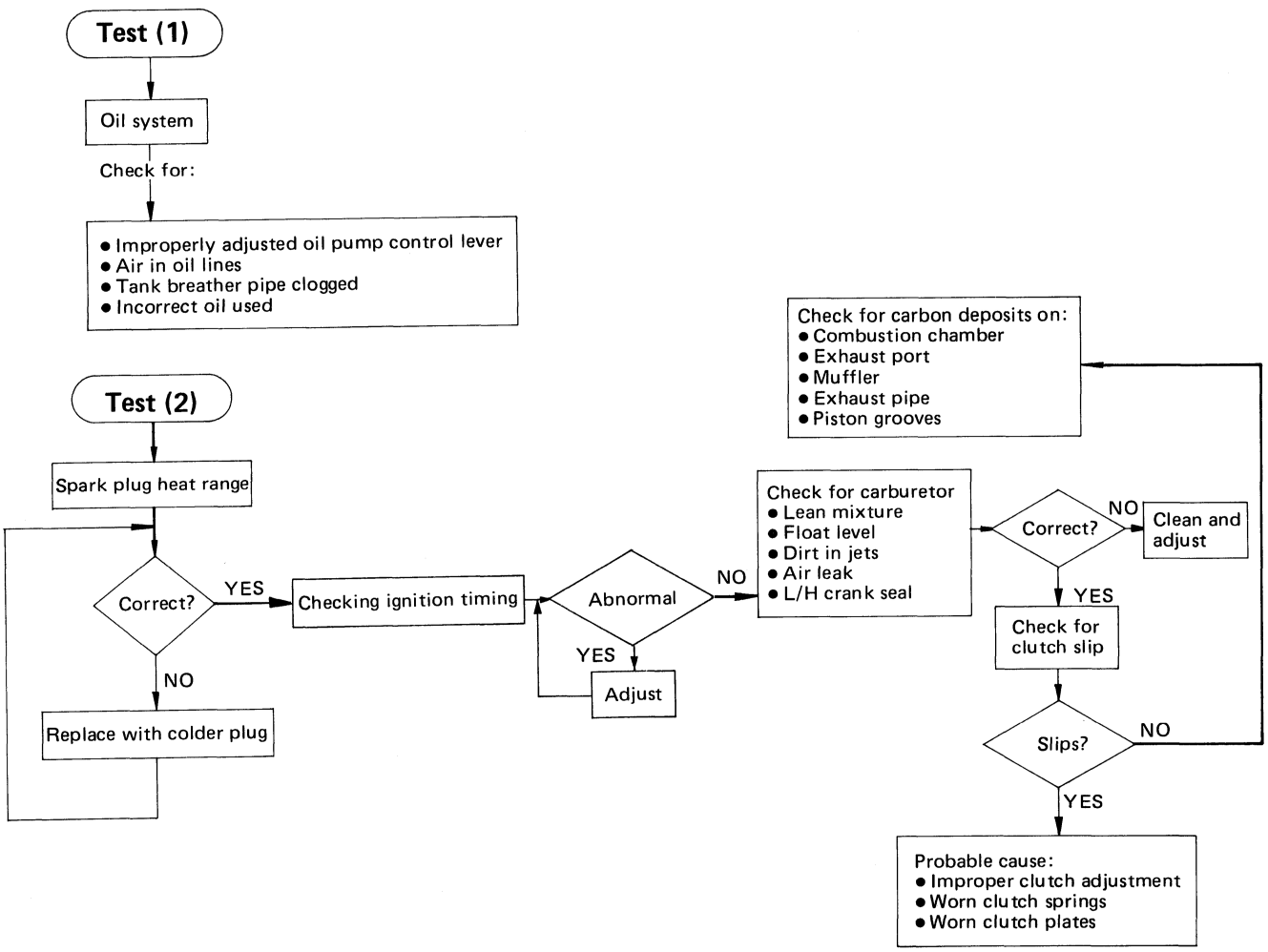

GEAR SHIFT PROBLEMS

Case 1 Gears do not engage

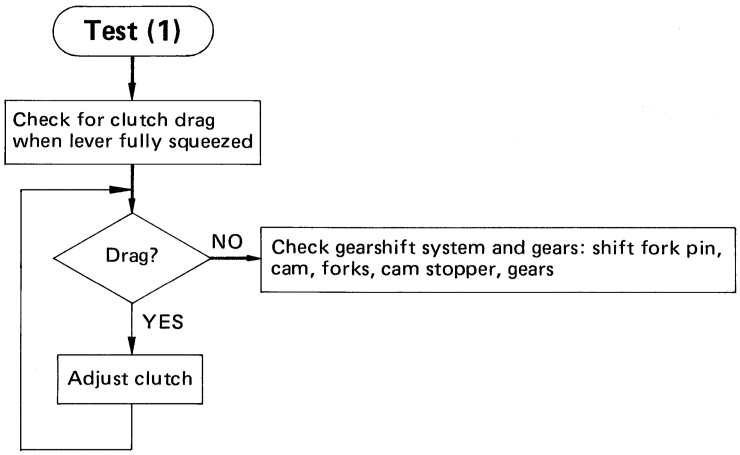

Case 2 Gearshift lever does not return to normal position

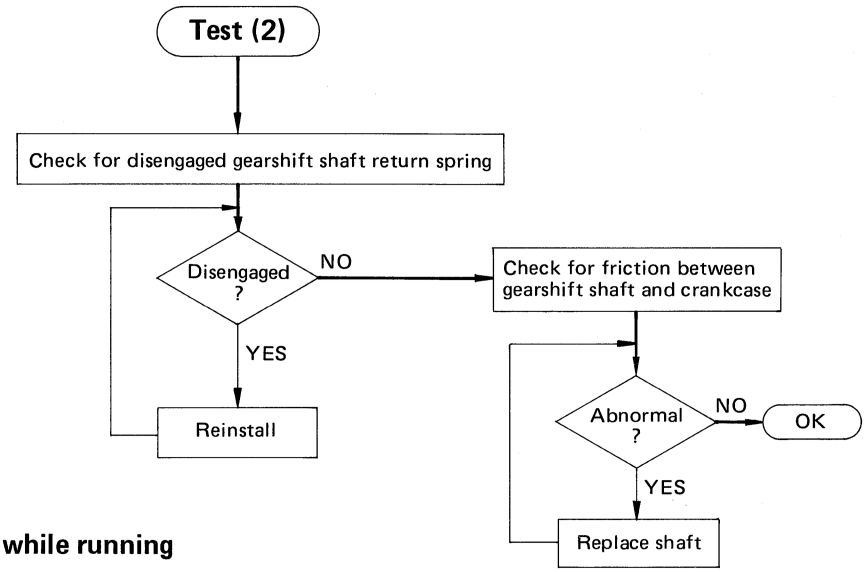

Case 3 Gears disengage while running

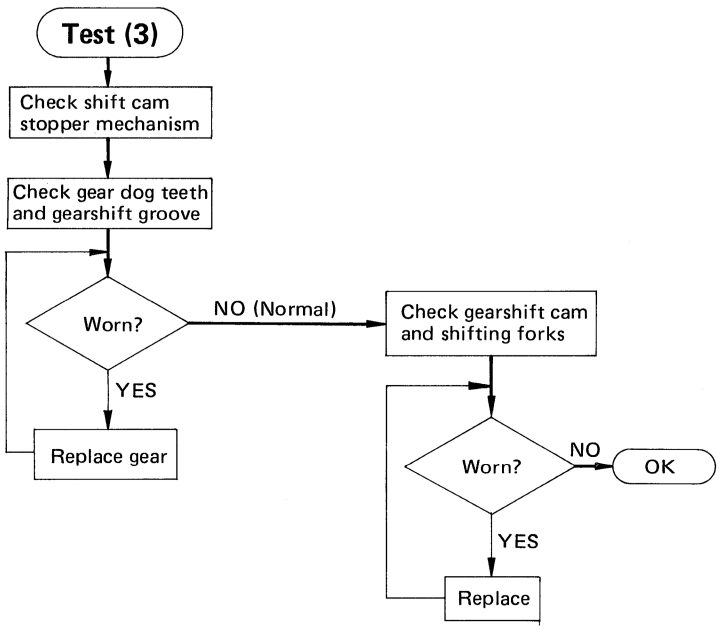

POUR STABILITY AND STEERING

Handlebar feels stiff to turn

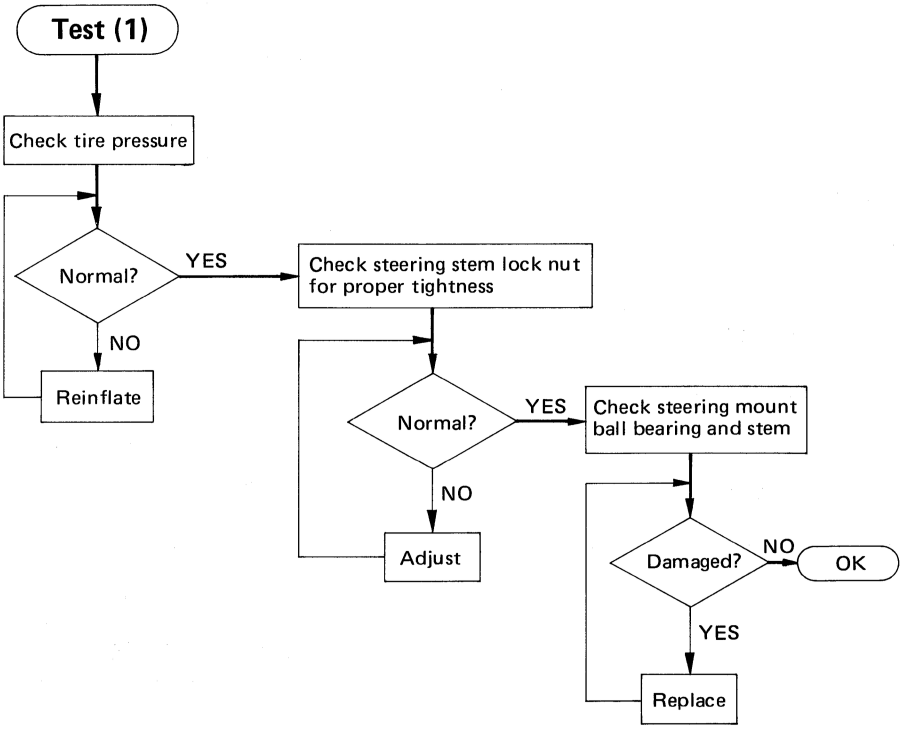

Handlebar operation unstable

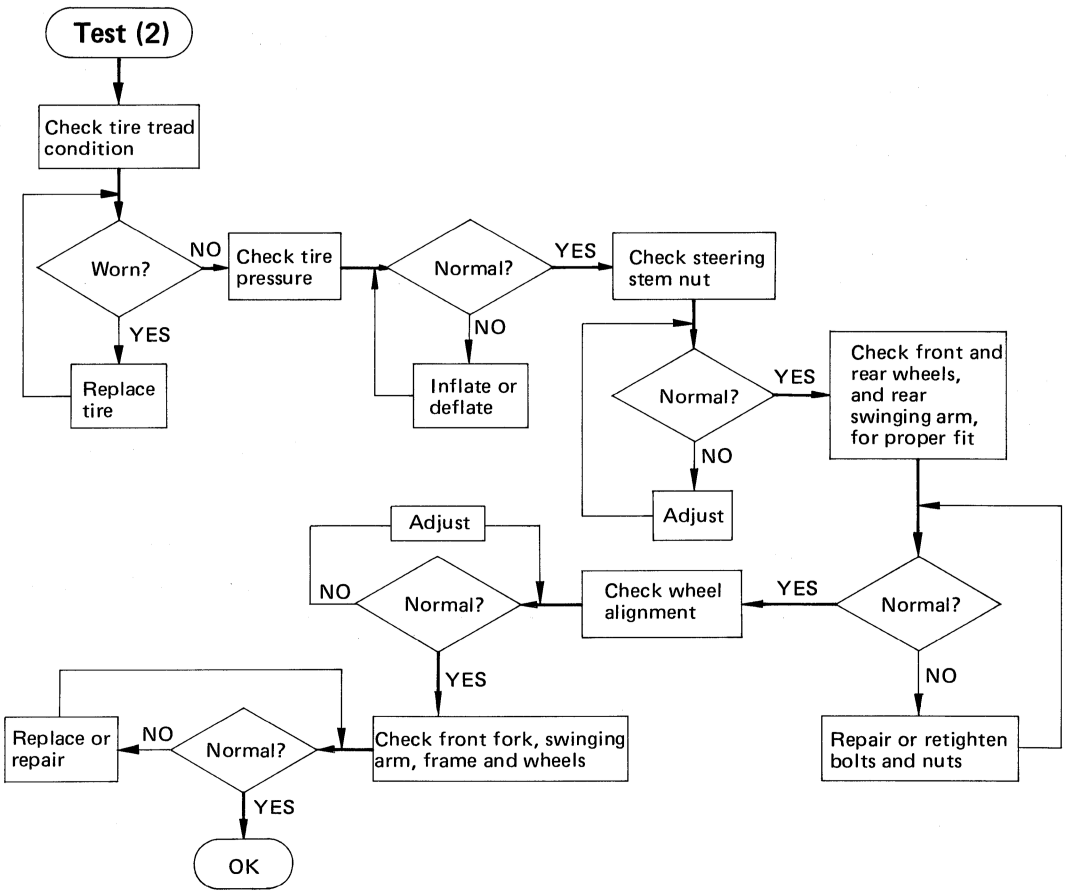

SERVICE DATA

CYLINDER + PISTON + PISTONRING

Unit: mm

ITEM	STANDARD			LIMIT
Piston to cylinder clearance	0.035 – 0.045			0.120
Cylinder bore	50.000 – 50.015 Measure at 20 from the top surface			50.095
Piston diam.	49.960 – 49.975 Measure at 21 from skirt end.			49.880
Cylinder distortion	———			0.05
Cylinder head distortion	———			0.05
Piston ring free end gap	1st and 2nd	RN	Approx. 5.0	4.0
		T	Approx. 4.5	3.6
Piston ring end gap	0.15 – 0.35			0.80
Piston ring to groove clearance	1st and 2nd		0.01 – 0.04	———
Piston pin bore	14.002 – 14.010			14.030
Piston pin O.D.	13.994 – 14.000			13.980

CONROD + CRANKSHAFT

Unit: mm

ITEM	STANDARD	LIMIT
Conrod small end I.D.	18.000 – 18.008	18.040
Conrod deflection	———	3.0
Crank web to web width	50 ± 0.1	———
Crankshaft runout	———	0.05

OIL PUMP

ITEM	SPECIFICATION
Oil pump reduction ratio	5.729 (50/16 x 26/18 x 33/26)
CCI pump discharge rate (Full open)	1.47 – 1.79 ml for 2 minutes at 2 000 r/min.

CLUTCH

Unit: mm

ITEM	STANDARD	LIMIT
Clutch cable play	2 – 3	———
Clutch release screw	1/4 – 1/2 turn back	———
Drive plate thickness	2.9 – 3.1	2.6
Drive plate claw width	9.8 – 10.0	9.3
Driven plate thickness	1.6 ± 0.1	———
Driven plate distortion	———	0.10
Clutch spring free length	———	33.6

TRANSMISSION

Unit: mm (in) Except ratio

ITEM		STANDARD		LIMIT
Primary reduction ratio		3.125 (50/16)		———
Final reduction ratio	E-51	3.142 (44/14)		———
	The others	3.000 (42/14)		———
Gear ratios		Low	2.909 (32/11)	———
		2nd	1.800 (27/15)	———
		3rd	1.277 (23/18)	———
		Top	0.954 (21/22)	———
Shift fork to groove clearance		No. 1 and No. 2	0.2 – 0.4	0.5
Shift fork groove width		No. 1 and No. 2	5.6 – 5.7	———
Shift fork thickenss		No. 1 and No. 2	5.3 – 5.4	———

DRIVE CHAIN

Unit: mm

ITEM		STANDARD		LIMIT
Drive chain		Type	DID.: 428 D TAKASAGO: RK428MD	———
	E-51	Links	114 links	———
	The others	Links	112 links	———
		20 pitch length	———	259.0
Drive chain slack		25 – 35		———

CARBURETOR

ITEM		SPECIFICATION				
		E-01, 06, 10, 51	E-07, 23, 94, 97	E-09, 72, 75	P-92	E-74
Carburetor type		MIKUNI VM20SS	←	←	←	←
Bore size		20 mm	←	←	←	←
I.D. No.		23400	23410	23420	23430	23440
Idle r/min.		1 300 ± 150 r/min	←	←	←	←
Float height		21.4 ± 1.0 mm	←	←	←	←
Main jet	(M.J.)	# 92.5	# 90	# 95	# 92.5	# 90
Air jet	(A.J.)	0.6	←	←	←	←
Jet needle	(J.N.)	4DO1-3rd	←	4DO1-2nd	4DO1-3rd	4JL43-4th
Needle jet	(N.J.)	O-8	←	←	←	O-0
Cut-away	(C.A.)	1.5	←	←	←	2.0
Pilot jet	(P.J.)	# 20	←	←	←	# 15
Pilot outlet	(P.O.)	1.0	←	←	←	0.6
Air screw	(A.S.)	1 1/2 turns out	1 3/4 turns out	←	1 1/2 turns out	2 turns out
Valve seat	(V.S.)	1.5	←	←	←	←
Starter jet	(G.S.)	# 40	# 30	←	# 40	# 30
Throttle cable play		0.5 – 1.0 mm	←	←	←	←

ELECTRICAL

Unit: mm

ITEM	SPECIFICATION		NOTE
Ignition timing	24° B.T.D.C. at 3 000 r/min		For India
	22° ± 2° B.T.D.C. at 4 000 r/min.		The others
Spark plug	Type	NGK BR8ES NIPPON DENSO W24ESR	E-06
	Gap	0.6 – 0.8	
	Type	NGK B8ES NIPPON DENSO W24ES	The others
	Gap	0.6 – 0.8	
Spark performance	Over 8 at 1 atm		
Ignition coil resistance	Secondary	Plug cap – Ground Approx. 14 – 18 kΩ	E-06
	Primary	B/Y – B Approx. 0 – 1 Ω	For India
	Secondary	Plug cap – B Approx. 2.5 – 4.0 kΩ	
	Secondary	Plug cap – Ground Approx. 4 – 8 kΩ	The others
Magneto coil resistance	Primary	B/R – B/W Approx. 85 – 135 Ω	For India
	Lighting	W/R – B/W Approx. 0 – 1 Ω	
	Charging	Y/W – B/W Approx. 0 – 1 Ω	
	Primary	B/R – B/W Approx. 120 – 190 Ω	The others
	Lighting	W/R – B/W Approx. 0 – 1 Ω	
	Charging	Y/W – B/W Approx. 0 – 1 Ω	
Charging rate	Night	Above 0.4A at 4 000 r/min. Below 2A at 8 000 r/min.	For India
	Day	Above 1.0A at 4 000 r/min. Below 2.8A at 8 000 r/min.	The others
	Night	Above 0.7A at 4 000 r/min. Below 2.8A at 8 000 r/min.	
Lighting coil output	Above 6V at 2 500 r/min. Below 9V at 8 000 r/min.		For India
	Above 6V at 2 500 r/min. Below 8.7V at 8 000 r/min.		The others
Resistor resistance	2 ± 0.2 Ω		
Battery	Type designation	6N4-2A	
	Capacity	6V 14.4 kC (4 Ah)/10 HR	
	Standard electrolyte S.G.	1.26 at 20°C (68°F)	
Fuse size	Main	15A	

BRAKE + WHEEL

Unit: mm

ITEM		STANDARD		LIMIT
Front brake lever distance		20 – 30		———
Rear brake pedal free travel		20 – 30		———
Brake drum I.D.		Front	———	110.7
		Rear	———	110.7
Brake lining thickness		———		1.5
Wheel rim runout		Axial	———	2.0
		Radial	———	2.0
Wheel axle runout		Front	———	0.25
		Rear	———	0.25
Tire size		Front	2.50-18 4PR	———
	E-51	Rear	2.75-18 4PR	———
	The others		2.50-18 4PR	———
Tire tread depth		Front	———	1.6
		Rear	———	1.6

SUSPENSION

Unit: mm

ITEM	STANDARD	LIMIT
Front fork stroke	100	———
Front fork spring free length	———	136.8
Front fork oil level	90	———
Rear wheel travel	86	———
Swing arm pivot shaft runout	———	0.6

FUEL + OIL

ITEM	SPECIFICATION		NOTE
Fuel type	Unleaded or low-lead type gasoline is recommended. The gasoline should be at least 85 – 95 octane by Research method.		
Fuel tank including reserve	12 L		
reserve	2 L		
Engine oil type	SUZUKI "CCI" oil or SUZUKI CCI Super oil		
Engine oil tank capacity	1.3 L		
Transmission oil capacity	Change	900 ml	
	Overhaul	950 ml	
Front fork oil type	Fork oil # 20		
Front fork oil capacity (each leg)	167.5 ml		

TIRE PRESSURE

COLD INFLATION TIRE PRESSURE	NORMAL RIDING			
	SOLO RIDING		DUAL RIDING	
	kPa	kg/cm^2	kPa	kg/cm^2
FRONT	175	1.75	175	1.75
REAR	200	2.00	225	2.25

WATTAGE

Unit: W

ITEM		SPECIFICATION
Headlight	HI	25
	LO	25
Tail/Brake light		3/10
Turn signal light		8
Speedometer light		3
Turn signal indicator light		3
High beam indicator light		1.7
Neutral indicator light		3
Oil level warning light		3.4

TIGHTENING TORQUE

ENGINE

Description	Q'ty	N·m	kg-m
Cylinder head nut	4	18 – 28	1.8 – 2.8
Cylinder nut	2	8 – 12	0.8 – 1.2
Magneto rotor	1	40 – 45	4.0 – 4.5
Engine sprocket nut	1	80 – 100	8.0 – 10.0
Clutch sleeve hub nut	1	30 – 45	3.0 – 4.5
Primary drive gear nut	1	50 – 70	5.0 – 7.0
Gearshifting arm stopper	1	16 – 23	1.6 – 2.3
Engine mounting bolt	3	37 – 45	3.7 – 4.5

CHASSIS

Description		Q'ty	N·m	kg-m
Front axle nut		1	27 – 43	2.7 – 4.3
Handlebar clamp bolt		4	12 – 20	1.2 – 2.0
Steering stem head bolt		1	35 – 53	3.5 – 5.3
Front fork cap bolt		2	35 – 53	3.5 – 5.3
Front fork lower clamp bolt		2	20 – 30	2.0 – 3.0
Exhaust pipe clamp bolt		2	15 – 20	1.5 – 2.0
Rear swinging arm pivot nut		1	45 – 70	4.5 – 7.0
Rear shock absorber nut		4	20 – 30	2.0 – 3.0
Rear torque link nut		2	10 – 15	1.0 – 1.5
Rear axle nut diam	10 mm	1	27 – 43	2.7 – 4.3
	12 mm	1	36 – 52	3.6 – 5.2
Brake cam lever nut		2	5 – 8	0.5 – 0.8
Front footrest bolt	Front bolt	1	37 – 45	3.7 – 4.5
	Rear bolt	1	10 – 15	1.0 – 1.5
Rear sprocket nut		4	18 – 28	1.8 – 2.8
Spoke nipple			2.5 – 3	0.25 – 0.3

TORQUE SPECIFICATIONS

The table below, relating tightening torque to thread diameter, lists the basic torque for the general bolts and nuts used on Suzuki Motorcycles. However, the actual torque that is necessary may vary among bolts and nuts with the same thread diameter. Refer to this table for only the bolts and nuts not included in the tables "Engine" and "Chassis". All of the values are for use with dry, solvent-cleaned threads.

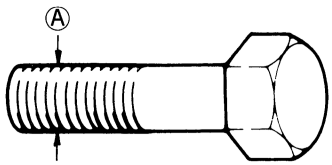

Conventional bolt

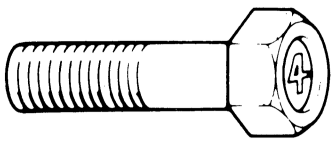

"4" marked bolt

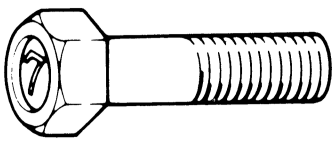

"7" marked bolt

Bolt Diameter (mm) Ⓐ	Conventional or "4" marked bolt		"7" marked bolt	
	N·m	kg-m	N·m	kg-m
4	1 – 2	0.1 – 0.2	1.5 – 3	0.15 – 0.3
5	2 – 4	0.2 – 0.4	3 – 6	0.3 – 0.6
6	4 – 7	0.4 – 0.7	8 – 12	0.8 – 1.2
8	10 – 16	1.0 – 1.6	18 – 28	1.8 – 2.8
10	22 – 35	2.2 – 3.5	40 – 60	4.0 – 6.0
12	35 – 55	3.5 – 5.5	70 – 100	7.0 – 10.0
14	50 – 80	5.0 – 8.0	110 – 160	11.0 – 16.0
16	80 – 130	8.0 – 13.0	170 – 250	17.0 – 25.0
18	130 – 190	13.0 – 19.0	200 – 280	20.0 – 28.0

SPECIAL TOOLS

Item	Part No.	Part Name
1.	09900-06107	Snap ring pliers (Open type)
2.	09900-06108	Snap ring pliers (Close type)
3.	09900-09003	Impact driver set
4.	09900-20101	Vernier caliper
5.	09900-20202	Micrometer (25 – 50 mm)
	09900-20205	Micrometer (0 – 25 mm)
6.	09900-20508	Cylinder gauge
7.	09900-20606	Dial gauge (1/100 mm)
8.	09900-20701	Magnetic stand
9.	09900-20804	Thickness gauge
10.	09900-21304	V-block set
11.	09900-21602	CCI oil gauge
12.	09900-25002	Pocket tester
13.	09900-26005	Tachometer
14.	09900-28106	Electro tester
15.	09900-28617	CDI test lead
16.	09900-28403	Hydrometer
17.	09910-10110	Stud bolt installer (6 mm)
	09910-10710	Stud bolt installer (8 mm)
18.	09910-20115	Conrod stopper
19.	09910-60611	Universal clamp wrench
20.	09911-94530	Bearing installer
21.	09913-50121	Oil seal remover
22.	09913-70122	Bearing installer
23.	09913-76010	Bearing remover
24.	09913-80112	Bearing installer/remover
25.	09913-85210	Bearing installer
26.	09914-79610	Bearing remover
27.	09916-57321	Handle
	09916-44910	Installer handle
	09910-44920	Attachment
28.	09920-13120	Crankcase separating tool
	09920-13140	Crankcase separating tool attachment (5 mm)
29.	09920-20310	Clutch spring hook
30.	09920-53710	Clutch sleeve hub holder
31.	09930-10111	Spark plug wrench
32.	09930-30102	Rotor remover shaft
33.	09930-30161	Attachment C
34.	09930-40113	Rotor holder
35.	09940-30110	Front fork assembling tool
36.	09940-50112	Oil seal installer
37.	09940-60113	Spoke nipple wrench
38.	09941-34511	Bearing race installer
39.	09943-74111	Front fork oil level gauge

① 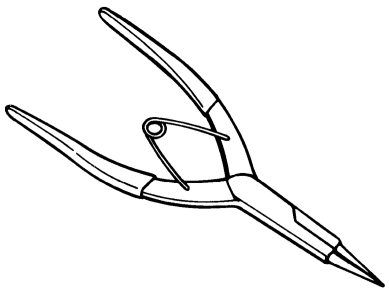	② 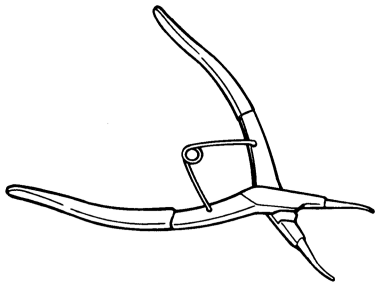	③ 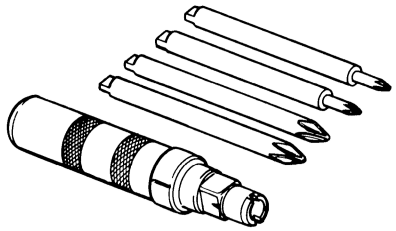
④ 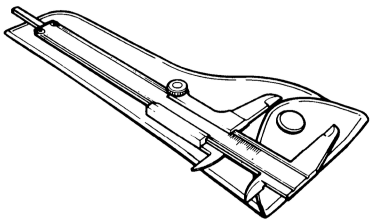	⑤ 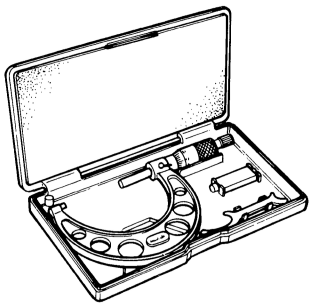	⑥ 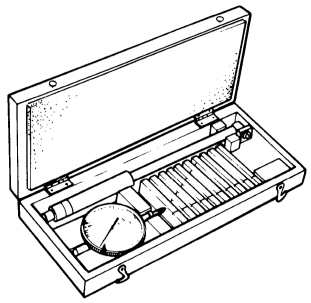
⑦ 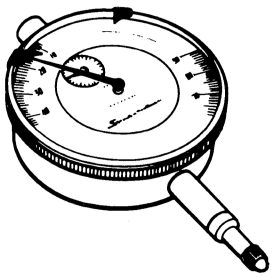	⑧ 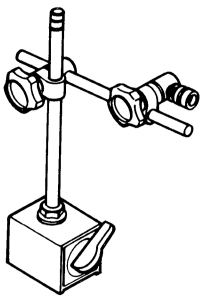	⑨ 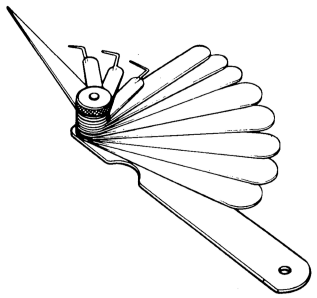
⑩ 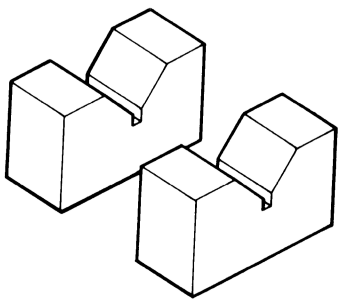	⑪ 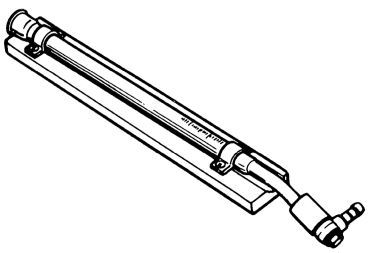	⑫ 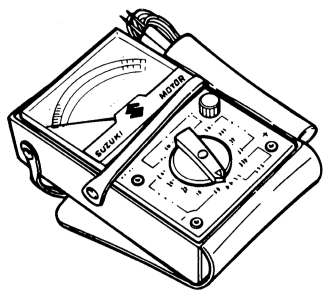
⑬ 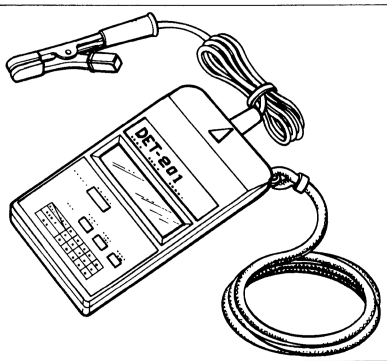	⑭ 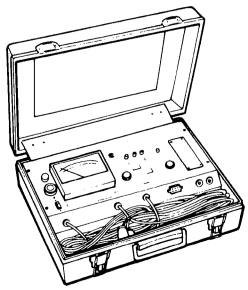	⑮ 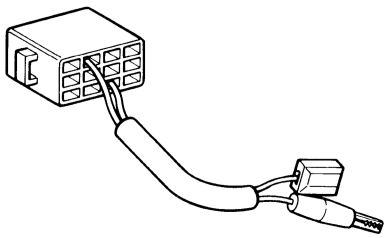

⑯

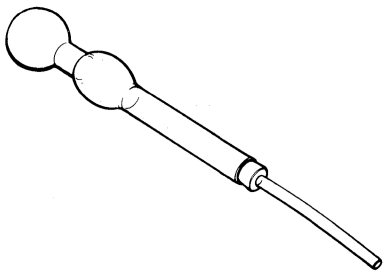

⑰

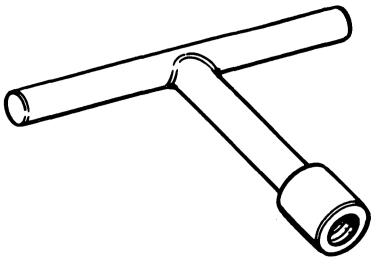

⑱

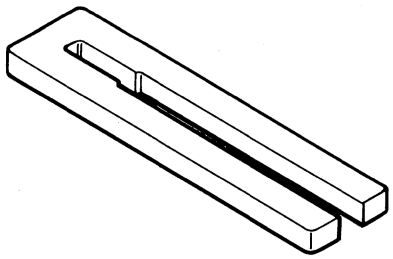

⑲

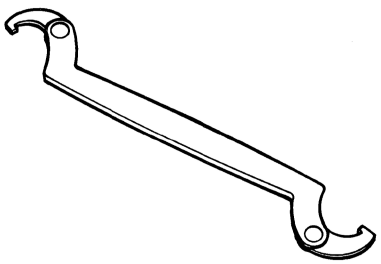

⑳

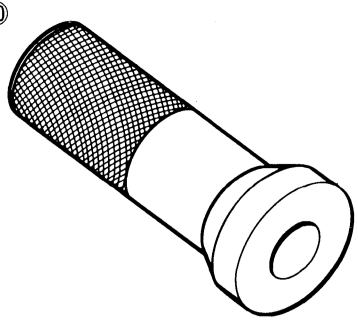

㉑

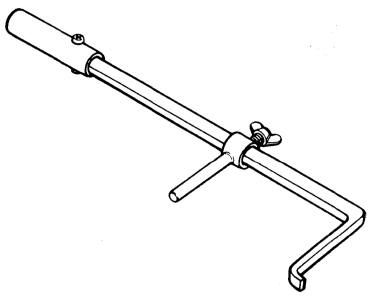

㉒

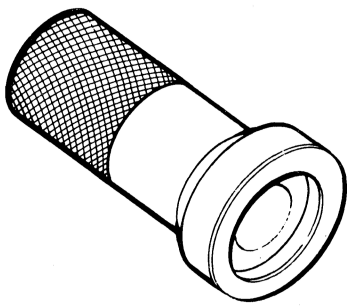

㉓

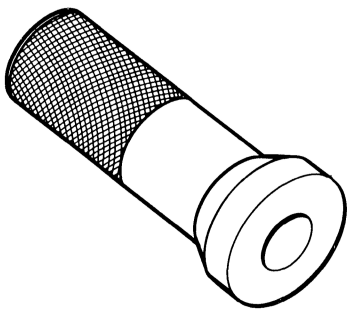

㉔

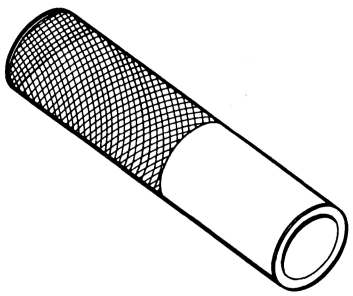

㉕

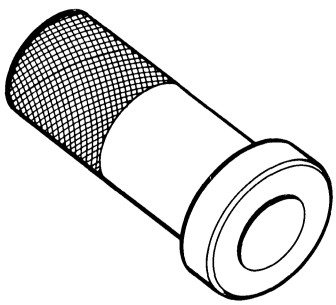

㉖

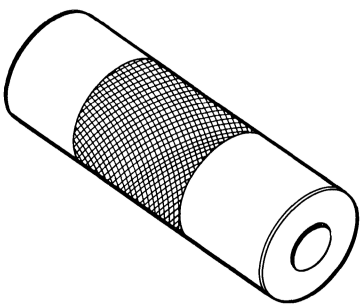

㉗

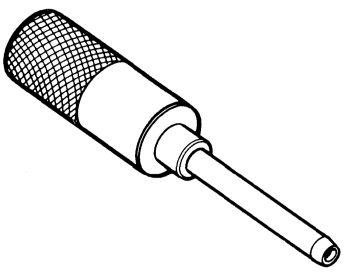

㉘

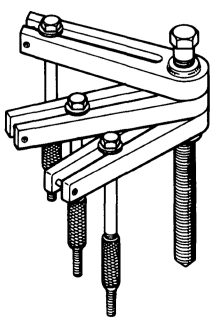

㉙

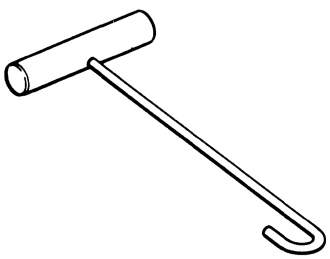

㉚

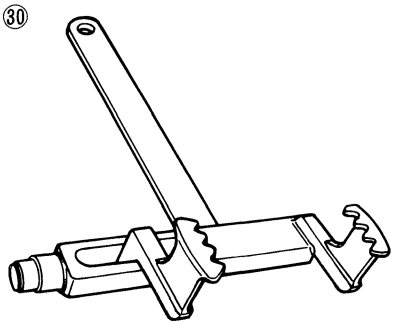

㉛ 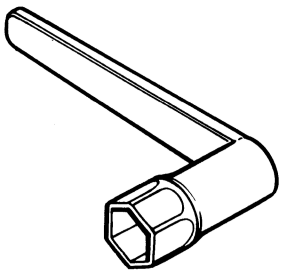	㉜ 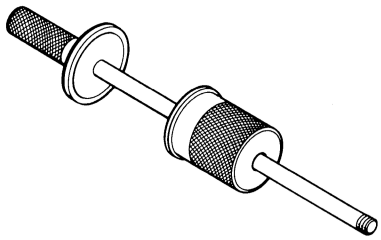	㉝ 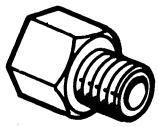
㉞ 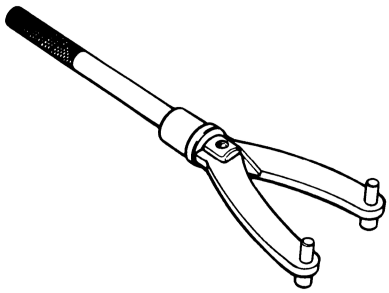	㉟ 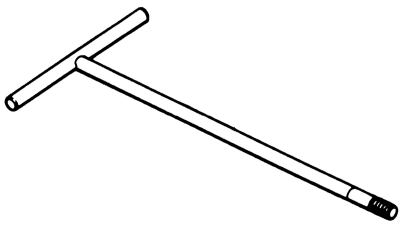	㊱ 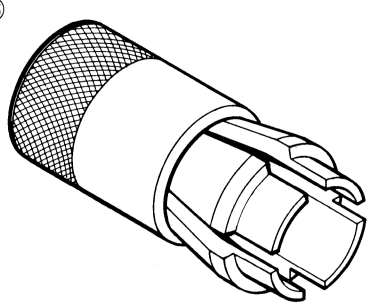
㊲ 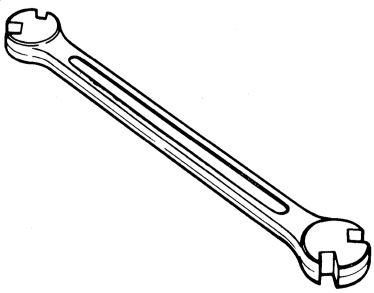	㊳ 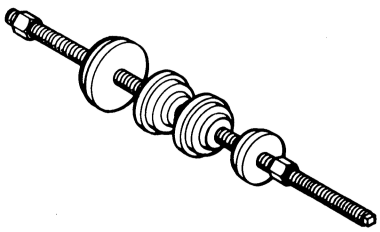	㊴ 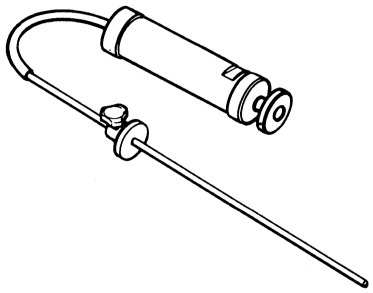

WIRING DIAGRAM

E-74

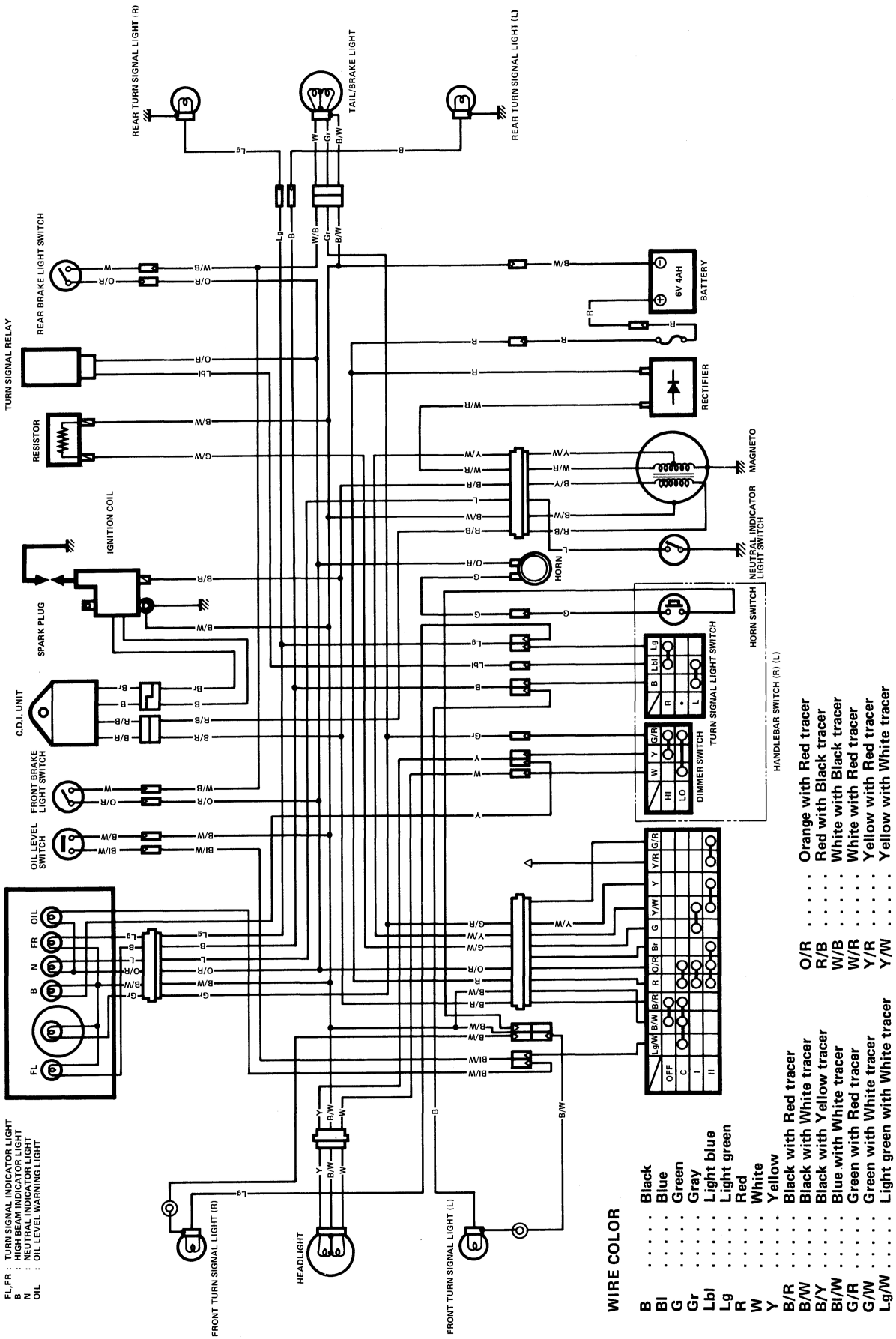

E - 06

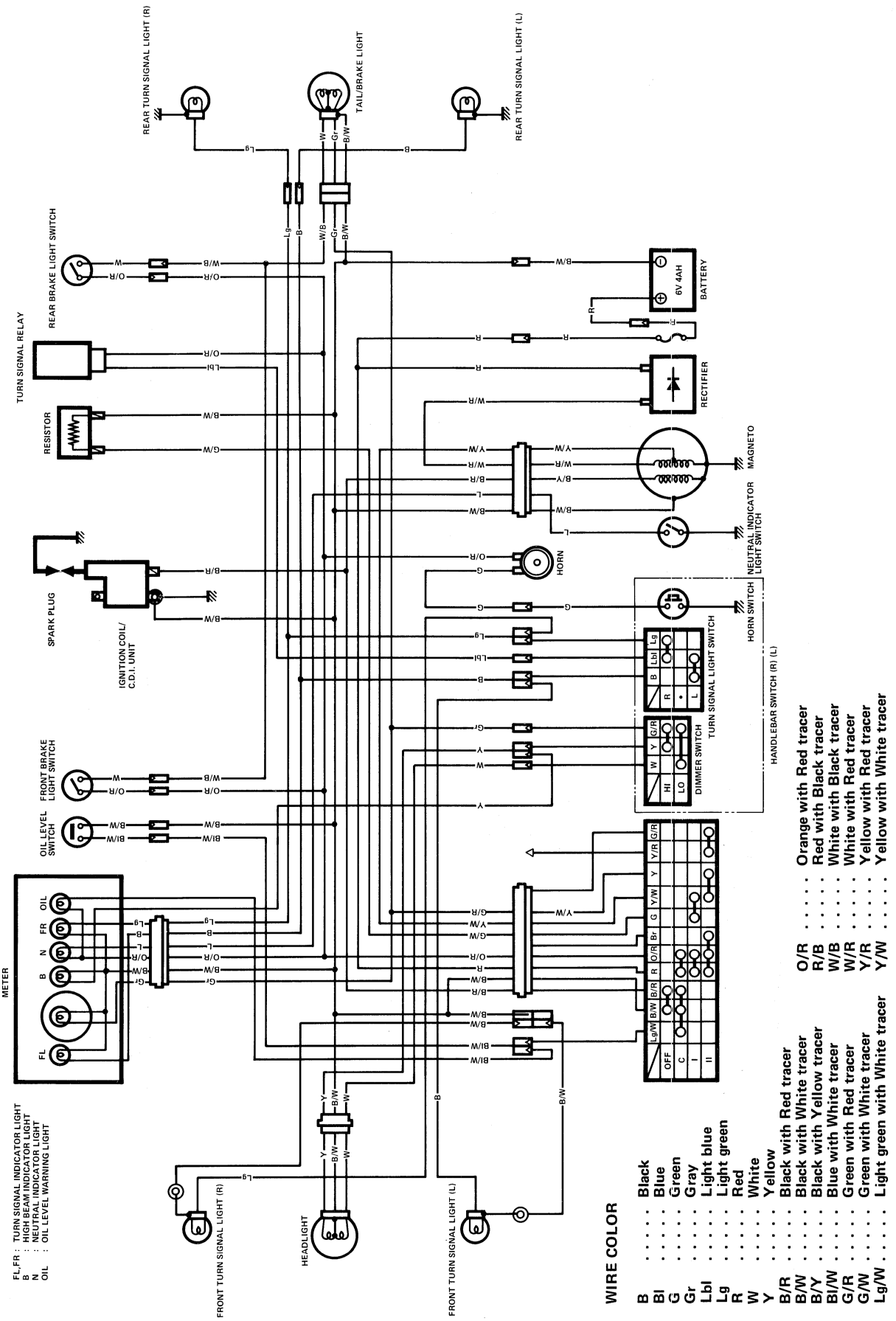
REAR TURN SIGNAL LIGHT (R)
TAIL/BRAKE LIGHT
REAR TURN SIGNAL LIGHT (L)
REAR BRAKE LIGHT SWITCH
TURN SIGNAL RELAY
RESISTOR
SPARK PLUG
IGNITION COIL/ C.D.I. UNIT
FRONT BRAKE LIGHT SWITCH
OIL LEVEL SWITCH
METER
OIL
FR
N
B
FL
6V 4AH
BATTERY
RECTIFIER
MAGNETO
NEUTRAL INDICATOR LIGHT SWITCH
HORN
HORN SWITCH
DIMMER SWITCH
TURN SIGNAL LIGHT SWITCH
HANDLEBAR SWITCH (R) (L)
FRONT TURN SIGNAL LIGHT (R)
HEADLIGHT
FRONT TURN SIGNAL LIGHT (L)
FL,FR : TURN SIGNAL INDICATOR LIGHT
B : HIGH BEAM INDICATOR LIGHT
N : NEUTRAL INDICATOR LIGHT
OIL : OIL LEVEL WARNING LIGHT
WIRE COLOR
B . . . . . Black
Bl . . . . . Blue
G . . . . . Green
Gr . . . . . Gray
Lbl . . . . . Light blue
Lg . . . . . Light green
R . . . . . Red
W . . . . . White
Y . . . . . Yellow
B/R . . . . . Black with Red tracer
B/W . . . . . Black with White tracer
B/Y . . . . . Black with Yellow tracer
Bl/W . . . . . Blue with White tracer
G/R . . . . . Green with Red tracer
G/W . . . . . Green with White tracer
Lg/W . . . . . Light green with White tracer
O/R . . . . . Orange with Red tracer
R/B . . . . . Red with Black tracer
W/B . . . . . White with Black tracer
W/R . . . . . White with Red tracer
Y/R . . . . . Yellow with Red tracer
Y/W . . . . . Yellow with White tracer

The others

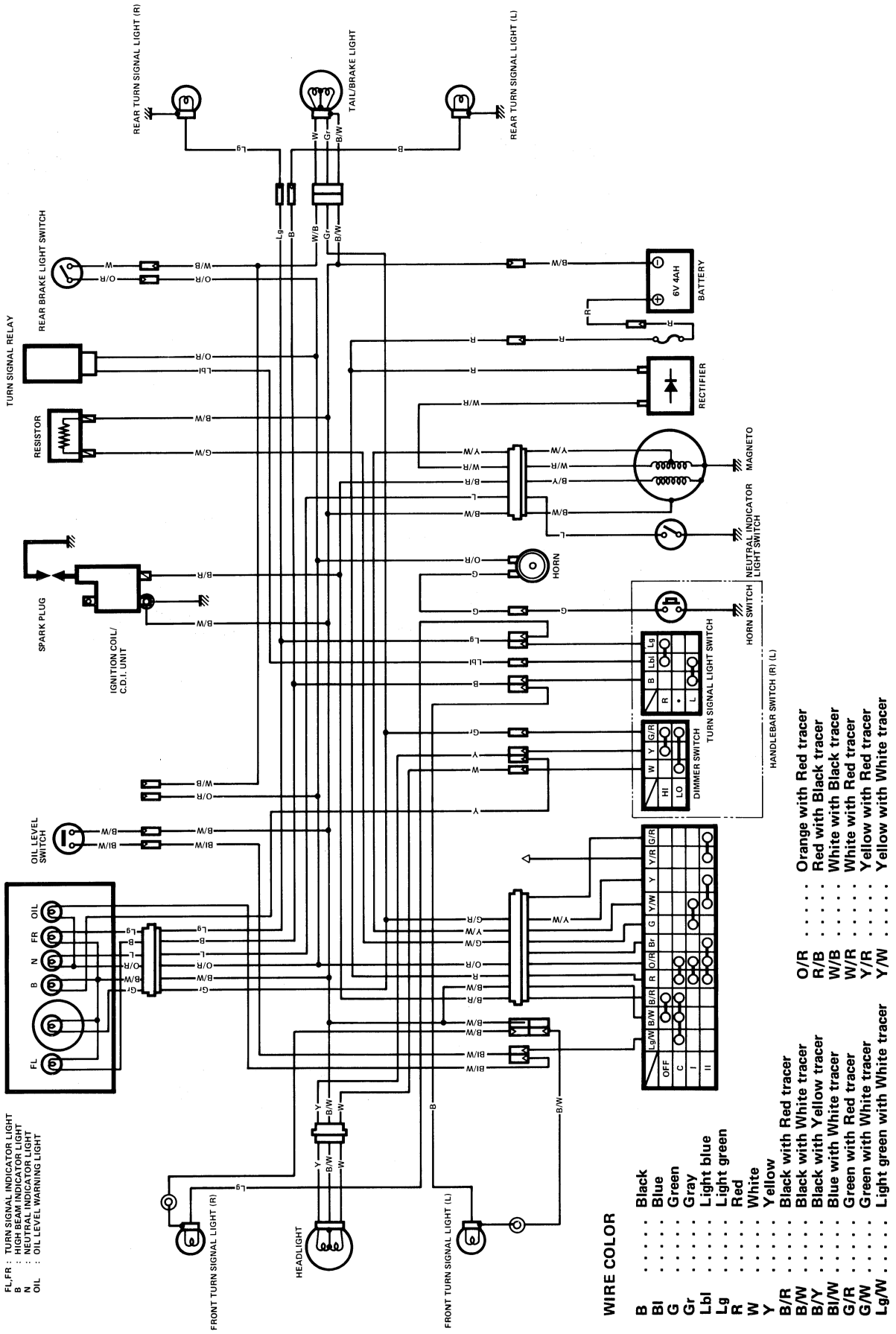
REAR TURN SIGNAL LIGHT (R)
TAIL/BRAKE LIGHT
REAR TURN SIGNAL LIGHT (L)
REAR BRAKE LIGHT SWITCH
TURN SIGNAL RELAY
RESISTOR
SPARK PLUG
IGNITION COIL/ C.D.I. UNIT
OIL LEVEL SWITCH
METER
FL FR OIL B N
BATTERY
6V 4AH
RECTIFIER
MAGNETO
HORN
NEUTRAL INDICATOR LIGHT SWITCH
HORN SWITCH
TURN SIGNAL LIGHT SWITCH
DIMMER SWITCH
HANDLEBAR SWITCH (R) (L)
FRONT TURN SIGNAL LIGHT (R)
HEADLIGHT
FRONT TURN SIGNAL LIGHT (L)
FL,FR : TURN SIGNAL INDICATOR LIGHT
B : HIGH BEAM INDICATOR LIGHT
N : NEUTRAL INDICATOR LIGHT
OIL : OIL LEVEL WARNING LIGHT
WIRE COLOR
B . . . . . Black
Bl . . . . . Blue
G . . . . . Green
Gr . . . . . Gray
Lbl . . . . . Light blue
Lg . . . . . Light green
R . . . . . Red
W . . . . . White
Y . . . . . Yellow
B/R . . . . . Black with Red tracer
B/W . . . . . Black with White tracer
B/Y . . . . . Black with Yellow tracer
Bl/W . . . . . Blue with White tracer
G/R . . . . . Green with Red tracer
G/W . . . . . Green with White tracer
Lg/W . . . . . Light green with White tracer
O/R . . . . . Orange with Red tracer
R/B . . . . . Red with Black tracer
W/B . . . . . White with Black tracer
W/R . . . . . White with Red tracer
Y/R . . . . . Yellow with Red tracer
Y/W . . . . . Yellow with White tracer

WIRE ROUTING

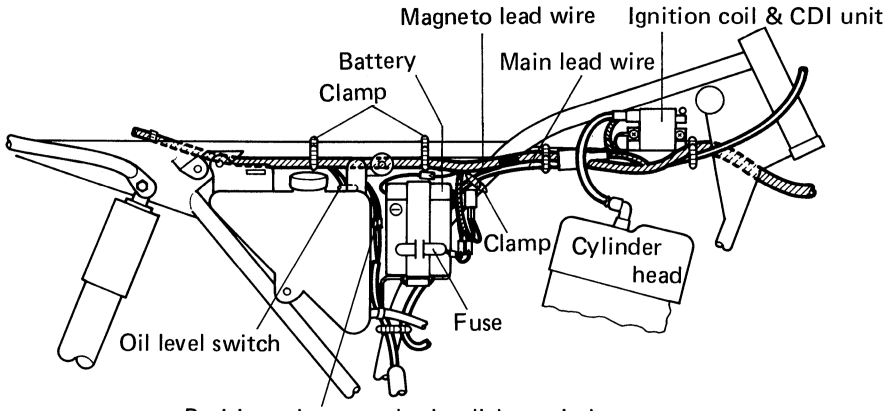

Position the rear brake light switch lead wire between the oil tank and battery.

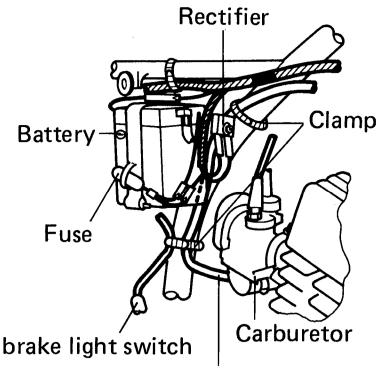

Pass the magneto lead wire under the air cleaner hose.

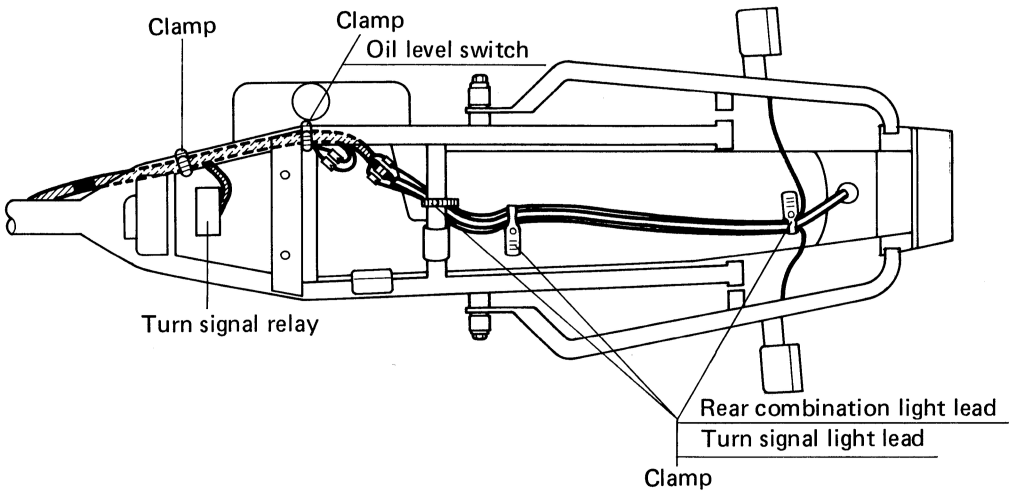

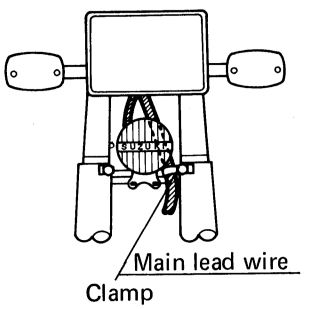

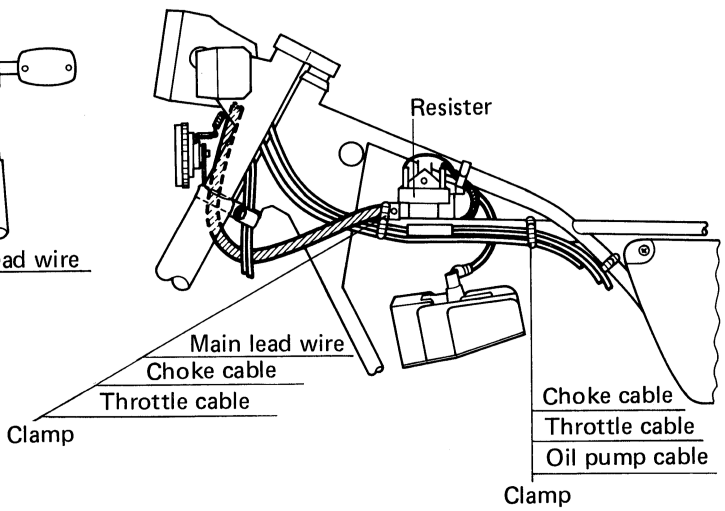

CABLE ROUTING

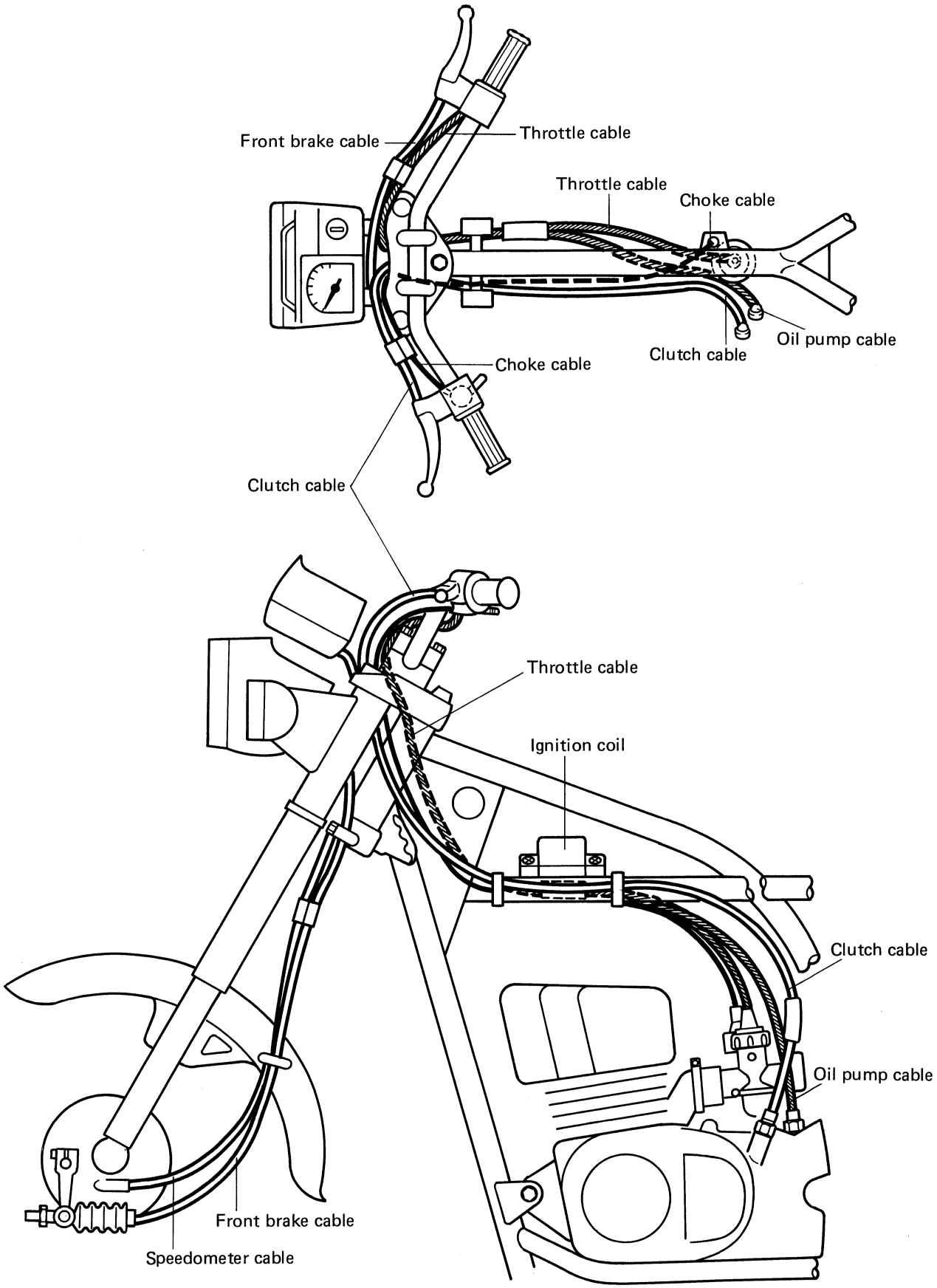

CONTENTS

SPECIFICATIONS 8-2
SERVICE DATA 8-4

SPECIFICATIONS

DIMENSIONS AND WEIGHT

Overall length	1 970 mm
Overall width	725 mm
Overall height	1 050 mm
Wheelbase	1 215 mm
Ground clearance	140 mm
Dry mass (weight)	82 kg

ENGINES

Type	Two-stroke, air cooled
Intake system	Reed valve
Number of cylinders	1
Bore	50.0 mm
Stroke	50.0 mm
Piston displacement	98 cm^3
Carburetor	MIKUNI VM20SS
Air cleaner	Polyurethane foam element
Starter system	Primary kick
Lubrication system	SUZUKI "CCI"

TRANSMISSION

Clutch		Wet multi-plate type
Gearshift pattern		All down
Primary reduction		3.125 (50/16)
Final reduction		3.000 (42/14)
Gear ratios,	Low	2.909 (32/11)
	2nd	1.800 (27/15)
	3rd	1.277 (23/18)
	Top	0.954 (21/22)
Drive chain		DAIDO D.I.D. 428D TAKASAGO RK428MD
Links		112 links

CHASSIS

Front suspension	Telescopic, oil dampened
Rear suspension	Swinging arm, oil dampened
Steering angle	42°
Caster	63° 00′
Trail	74 mm
Turning radius	1.8 m
Front brake	Internal expanding
Rear brake	Internal expanding
Front tire size	2.50-18 4PR
Rear tire size	2.50-18 4PR

ELECTRICAL

Ignition type	SUZUKI "PEI"
Ignition timing	22° B.T.D.C. 4 000 r/min
Spark plug	NGK B8ES or NIPPON DENSO W24ES
Battery	6V 14.4 kC (4 Ah)/10 HR
Generator	Flywheel magneto
Fuse	15A
Headlight	6V 25/25W
Tail/Brake light	6V 3/10W
Turn signal light	6V 8W
Speedometer light	6V 3W
Turn signal indicator light	6V 3W
Neutral indicator light	6V 3W
High beam indicator light	6V 1.7W
Oil level warning light	6V 3.4 W

CAPACITIES

Fuel tank including reserve	12.0 L
reserve	2.0 L
Engine oil tank	1.3 L
Front fork oil	155 ml
Transmission oil	900 ml

* These specifications are subject to change without notice.

SERVICE DATA

CYLINDER + PISTON + PISTON RING

Unit: mm

ITEM	STANDARD			LIMIT
Piston to cylinder clearance	0.035—0.045			0.120
Cylinder bore	49.995—50.025 Measure at 20 from the top surface			50.095
Piston diam.	49.960—49.975 Measure at 21 from skirt end.			49.875
Cylinder distortion	—			0.05
Cylinder head distortion	—			0.05
Piston ring free end gap	1st and 2nd	RN	Approx. 5.0	4.0
		T	Approx. 4.5	3.6
Piston ring end gap	0.15—0.35			0.80
Piston ring to groove clearance	1st and 2nd		0.01—0.04	—
Piston pin bore	14.002—14.010			14.030
Piston pin O.D.	13.994—14.000			13.980

CONROD + CRANKSHAFT

Unit: mm

ITEM	STANDARD	LIMIT
Conrod small end I.D.	18.000—18.008	18.040
Conrod deflection	—	3.0
Crank web to web width	50±0.1	—
Crankshaft runout	—	0.05

OIL PUMP

ITEM	SPECIFICATION
Oil pump reduction ratio	5.729 (50/16 x 26/18 x 33/26)
Oil pump discharge rate (Full open)	1.47—1.79 ml for 2 minutes at 2 000 r/min.

CLUTCH

Unit: mm

ITEM	STANDARD	LIMIT
Clutch cable play	10—15	—
Clutch release screw	¼—½ turn back	—
Drive plate thickness	2.9—3.1	2.6
Drive plate claw width	9.8—10.0	9.3
Driven plate distortion	—	0.10
Clutch spring free length	—	33.6

TRANSMISSION

Unit: mm (Except ratio)

ITEM	STANDARD		LIMIT
Primary reduction ratio	3.125 (50/16)		———
Final reduction ratio	3.000 (42/14)		———
Gear ratios	Low	2.909 (32/11)	———
	2nd	1.800 (27/15)	———
	3rd	1.277 (23/18)	———
	Top	0.954 (21/22)	———
Shift fork to groove clearance	No.1 and No.2	0.2—0.4	0.5
Shift fork groove width	No.1 and No.2	5.6—5.7	———
Shift fork thickness	No.1 and No.2	5.3—5.4	———

DRIVE CHAIN

Unit: mm

ITEM	STANDARD		LIMIT
Drive chain	Type	D.I.D.: 428D TAKASAGO: RK428MD	———
	Links	112 links	———
	20 pitch length	———	259.0
Drive chain slack	25—35		———

CARBURETOR

ITEM		SPECIFICATION
Carburetor type		MIKUNI VM20SS
Bore size		20 mm
I.D. No.		23411
Idle r/min.		1 300 ± 150 r/min
Float height		21.4 ± 1.0 mm
Main jet	(M.J.)	#90
Main air jet	(M.A.J.)	0.6 mm
Jet needle	(J.N.)	4D01-3rd
Needle jet	(N.J.)	O-8
Cut-away	(C.A.)	1.5
Pilot jet	(P.J.)	#20
Pilot outlet	(P.O.)	1.0 mm
Air screw	(A.S.)	1-¾ turns out
Valve seat	(V.S.)	1.5 mm
Starter jet	(G.S.)	#30
Throttle cable play		3—6 mm

ELECTRICAL

Unit: mm

ITEM	SPECIFICATION		NOTE
Ignition timing	22° B.T.D.C. at 4 000 r/min.		
Spark plug	Type	NGK B8ES NIPPONDENSO W24ES	
	Gap	0.6—0.8	
Spark performance	Over 8 at 1 atm		
Ignition coil resistance	Secondary	Plug cap—Ground Approx. 4—8 kΩ	
Magneto Max. output	Approx. 50W at 5 000 r/min.		
Magneto coil resistance	Primary	B/R—B/W Approx. 120—190 Ω	
	Lighting	W/R—B/W Approx. 0—1 Ω	
	Charging	Y/W—B/W Approx. 0—1 Ω	
Charging rate	Day	Above 1.0A at 4 000 r/min. Below 2.8A at 8 000 r/min.	
	Night	Above 0.7A at 4 000 r/min. Below 2.8A at 8 000 r/min.	
Lighting coil output	Above 6 V at 2 500 r/min. Below 8.7 V at 8 000 r/min.		
Resistor resistance	2±0.2 Ω		
Battery	Type designation	6N4-2A	
	Capacity	6V14.4kC(5Ah)/10HR	
	Standard electrolyte S.G.	1.26 at 20°C (68°F)	
Fuse size	15A		

WATTAGE

Unit: W

ITEM		SPECIFICATION
Headlight	HI	25
	LO	25
Tail/Brake light		3/10
Turn signal light		8
Speedometer light		3
Turn signal indicator light		3
High beam indicator light		1.7
Neutral indicator light		3
Oil level indicator light		3.4

BRAKE + WHEEL

Unit: mm

ITEM	STANDARD		LIMIT
Front brake lever play	20—30		———
Rear brake pedal free travel	20—30		———
Brake drum I.D.	Front	———	110.7
	Rear	———	110.7
Brake lining thickness	———		1.5
Wheel rim runout	Axial	———	2.0
	Radial	———	2.0
Wheel axle runout	Front	———	0.25
	Rear	———	0.25
Wheel rim size	Front	1.40 × 18	———
	Rear	1.40 × 18	———
Tire size	Front	2.50-18 4PR	———
	Rear	2.50-18 4PR	———
Tire tread depth	Front	———	1.6
	Rear	———	1.6

SUSPENSION

Unit: mm

ITEM	STANDARD	LIMIT	NOTE
Front fork stroke	100	———	
Front fork spring free length	———	136.8	
Front fork oil level	90	———	
Rear wheel travel	86	———	
Swingarm pivot shaft runout	———	0.6	

TIRE PRESSURE

COLD INFLATION TIRE PRESSURE	NORMAL RIDING			
	SOLO RIDING		DUAL RIDING	
	kPa	kg/cm²	kPa	kg/cm²
FRONT	175	1.75	200	2.00
REAR	175	1.75	225	2.25

FUEL + OIL

ITEM	SPECIFICATION		NOTE
Fuel type	Gasoline used should be graded 85-95 octane or higher. An unleaded gasoline is recommended.		
Fuel tank including reserve	12 L		
reserve	2 L		
Engine oil type	SUZUKI "CCI" oil or CCI Super oil		
Engine oil tank capacity	1.3 L		
Transmission oil type	SAE 10W/40		
Transmission oil capacity	Change	900 ml	
	Overhaul	950 ml	
Front fork oil type	Fork oil #20		
Front fork oil capacity (each leg)	155.0 ml		

Prepared by

SUZUKI MOTOR CORPORATION

Motorcycle Service Department
2nd Ed. December, 1997
1st Ed. January, 1983
Part No. 99500-11121-01E
Printed in Japan

SUZUKI MOTOR CORPORATION

Printed in Japan (TK)
D V