YAMAHA

SRX 600 S/SC

GENUINE YAMAHA

Service Manual

LIT-11616-05-49

YAMAHA

SRX600S
SRX600SC

Service Manual

LIT-11616-05-49

SRX600S/SC
SERVICE MANUAL
© 1986 by Yamaha Motor Corporation, U.S.A.
1st Edition, April 1986
All rights reserved. Any reprinting or
unauthorized use without the written
permission of Yamaha Motor Corporation, U.S.A.
is expressly prohibited.
Printed in U.S.A.
P/N LIT-11616-05-49

NOTICE

This manual was written by the Yamaha Motor Company primarily for use by Yamaha dealers and their qualified mechanics. It is not possible to put an entire mechanic's education into one manual, so it is assumed that persons using this book to perform maintenance and repairs on Yamaha motorcycles have a basic understanding of the mechanical concepts and procedures inherent in motorcycle repair technology. Without such knowledge, attempted repairs or service to this model may render it unfit to use and/or unsafe.

This model has been disgned and manufactured to perform within certain specifications in regard to performance and emissions. Proper service with the correct tools is necessary to ensure that the motorcycle will operate as designed. If there is any question about a service procedure, it is imperative that you contact a Yamaha dealer for any service information changes that apply to this model. This policy is intended to provide the customer with the most satisfaction from his motorcycle and to conform with federal environmental quality objectives.

Yamaha Motor Company, Ltd. is continually striving to improve all models manufactured by Yamaha. Modifications and significant changes in specifications or procedures will be forwarded to all Authorized Yamaha dealers and will, where applicable, appear in future editions of this manual.

NOTE:

This Service Manual contains information regarding periodic maintenance to the emission control system for the SRX600S/SC. Please read this material carefully.

TECHNICAL PUBLICATIONS
SERVICE DIVISION
MOTORCYCLES OPERATIONS
YAMAHA MOTOR CO., LTD.

HOW TO USE THIS MANUAL

PARTICULARLY IMPORTANT INFORMATION

This material is distinguished by the following notation.

NOTE: A **NOTE** provides key information to make procedures easier or clearer.

CAUTION: A **CAUTION** indicates special procedures that must be followed to avoid damage to the motorcycle.

WARNING: A **WARNING** indicates special procedures that must be followed to avoid injury to a motorcycle operator or person inspecting or repairing the motorcycle.

MANUAL FORMAT

All of the procedures in this manual are organized in a sequential, step-by-step format. The information has been compiled to provide the mechanic with an easy to read, handy reference that contains comprehensive explanations of all disassembly, repair, assembly, and inspection operations.

In this revised format, the condition of a faulty component will precede an arrow symbol and the course of action required will follow the symbol, e.g.,

- Bearings
  Pitting/Damage → Replace.

EXPLODED DIAGRAM

Each chapter provides exploded diagrams before each disassembly section for ease in identifying correct disassembly and assembly procedures.

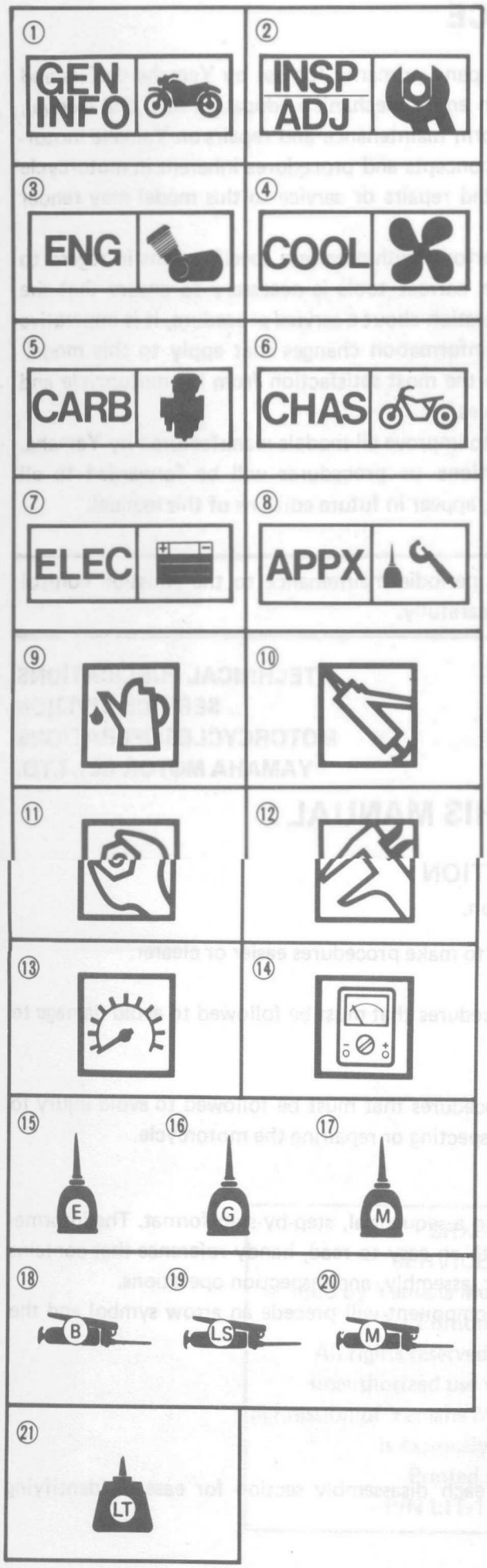

ILLUSTRATED SYMBOLS (Refer to the illustration)

Illustrated symbols ① to ⑧ are designed as thumb tabs to indicate the chapter's number and content.

① General information
② Periodic inspection and adjustment
③ Engine
④ Cooling system
⑤ Carburetion
⑥ Chassis
⑦ Electrical
⑧ Appendices

Illustrated symbols ⑨ to ⑭ are used to identify the specifications appearing.

⑨ Filling fluid
⑩ Lubricant
⑪ Tightening
⑫ Wear limit, clearance
⑬ Engine speed
⑭ Ω, V, A

Illustrated symbols ⑮ to ㉑ in the exploded diagram indicate grade of lubricant and location of lubrication point.

⑮ Apply engine oil
⑯ Apply gear oil
⑰ Apply molybdenum disulfide oil
⑱ Apply wheel bearing grease
⑲ Apply lightweight lithium-soap base grease
⑳ Apply molybdenum disulfide grease
㉑ Apply locking agent (LOCTITE®)

INDEX

GENERAL INFORMATION	GEN INFO 1
PERIODIC INSPECTIONS AND ADJUSTMENTS	INSP ADJ 2
ENGINE OVERHAUL	ENG 3
CARBURETION	CARB 4
CHASSIS	CHAS 5
ELECTRICAL	ELEC 6
APPENDICES	APPX 7

CHAPTER 1.
GENERAL INFORMATION

MOTORCYCLE IDENTIFICATION 1-1
VEHICLE IDENTIFICATION NUMBER 1-1
ENGINE SERIAL NUMBER 1-1

IMPORTANT INFORMATION 1-2
ALL REPLACEMENT PARTS 1-2
GASKET, OIL SEALS, AND O-RINGS 1-2
LOCK WASHERS/PLATES AND COTTER PINS 1-2
BEARINGS AND OIL SEALS 1-2
CIRCLIPS 1-3

SPECIAL TOOLS 1-3
FOR TUNE UP 1-3
FOR ENGINE SERVICE 1-4
FOR CHASSIS SERVICE 1-7
FOR ELECTRICAL COMPONENTS 1-8

GENERAL INFORMATION

MOTORCYCLE IDENTIFICATION

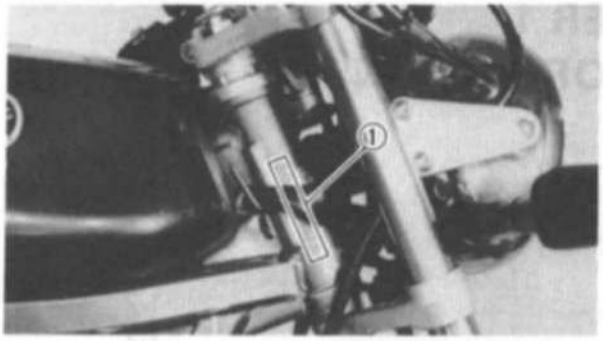

VEHICLE IDENTIFICATION NUMBER

The vehicle identification number ① is stamped into the right side of the steering head.

NOTE:

The vehicle identification number is used to identify your motorcycle and may be used to register your motorcycle with the licensing authority in your state.

Starting Serial Number:
SRX600S . . . . . .JYA2EF00 * GA000101
SRX600S (For California)
. . . . . .JYA2EG00 * GA000101

ENGINE SERIAL NUMBER

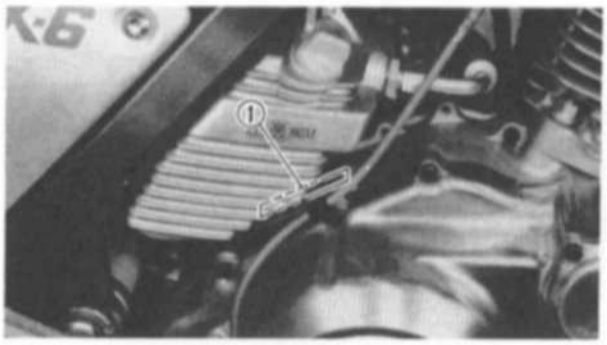

The engine serial number ① is stamped into the right side of the engine.

NOTE:

The first three digits of these numbers are for model identifications; the remaining digits are the unit production number.

Starting Serial Number:
SRX600S 2EF-000101
SRX600SC (For California)
. . . . . .2EG-000101

NOTE:

Designs and specifications are subject to change without notice.

IMPORTANT INFORMATION

ALL REPLACEMENT PARTS

1. We recommend to use Yamaha genuine parts for all replacements. Use oil and/or grease recommended by Yamaha for assenmbly and adjustment.

GASKETS, OIL SEALS, AND O-RINGS

1. All gaskets, seals, and O-rings should be replaced when an engine is overhauled. All gasket surfaces, oil seal lips, and O-rings must be cleaned.
2. Properly oil all mating parts and bearings during reassembly. Apply grease to the oil seal lips.

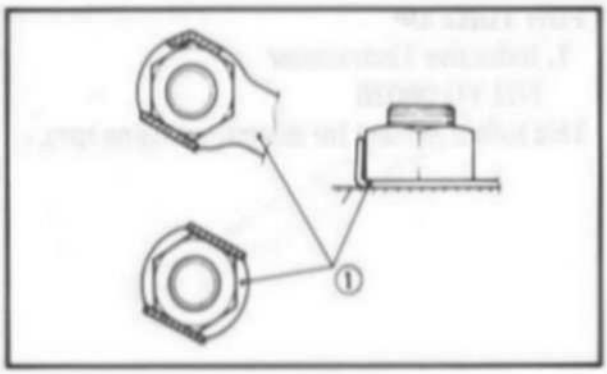

LOCK WASHERS/PLATES AND COTTER PINS

1. All lock washers/plates ① and cotter pins must be replaced when they are removed. Lock tab(s) should be bent along the bolt or nut flat(s) after the bolt or nut has been properly tightened.

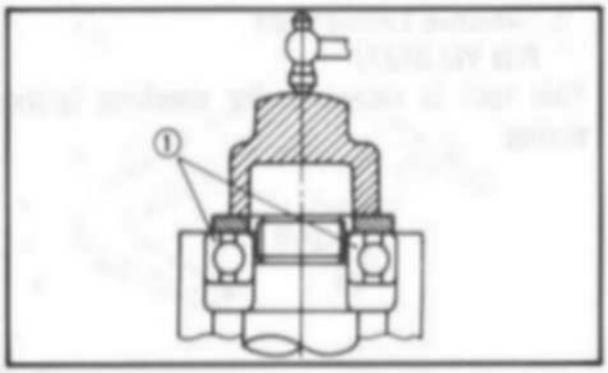

BEARINGS AND OIL SEALS

1. Install the bearing(s) ① and oil seal(s) ② with their manufacture's marks or numbers facing outward. (In other words, the stamped letters must be on the side exposed to view.) When installing oil seal(s), apply a light coating of light-weight lithium base grease to the seal lip(s). Oil the bearings liberally when installing.

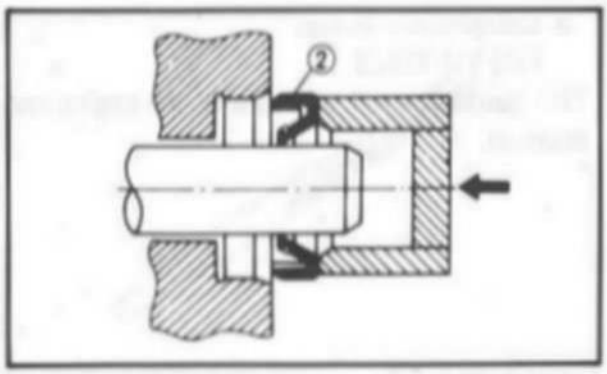

CAUTION:

Do not use compressed air to spin the bearings dry. This causes damage to the bearing surfaces.

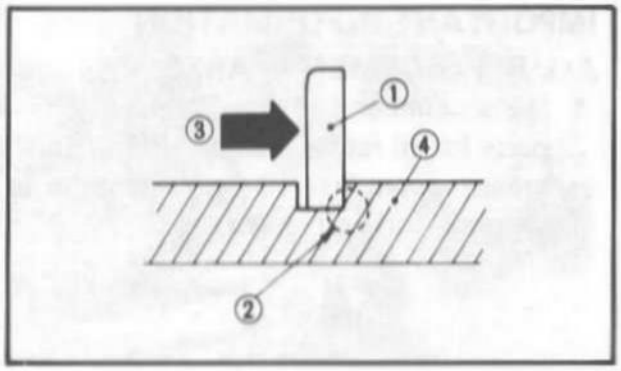

CIRCLIPS

1. All circlips should be inspected carefully before reassembly. Always replace piston pin clips after one use. Replace distorted circlips. When installing a circlip ①, make sure that the sharp-edged corner ② is positioned opposite to the thrust ③ it receives. See the sectional view.

④ Shaft

SPECIAL TOOLS

The proper special tools are necessary for complete and accurate tune-up and assembly. Using the correct special tool will help prevent damage caused by the use of improper tools or improvised techniques.

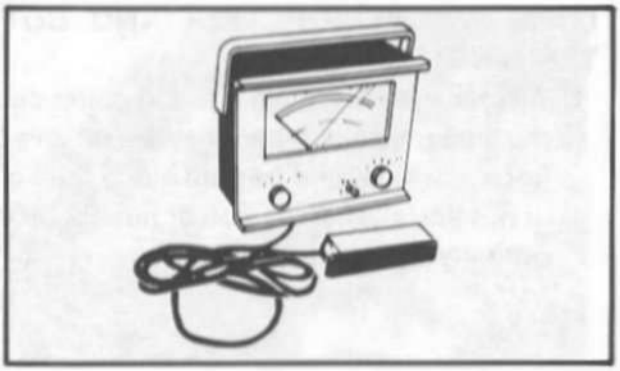

FOR TUNE UP

1. Inductive Tachometer
   P/N YU-08036

This tool is needed for detecting engine rpm.

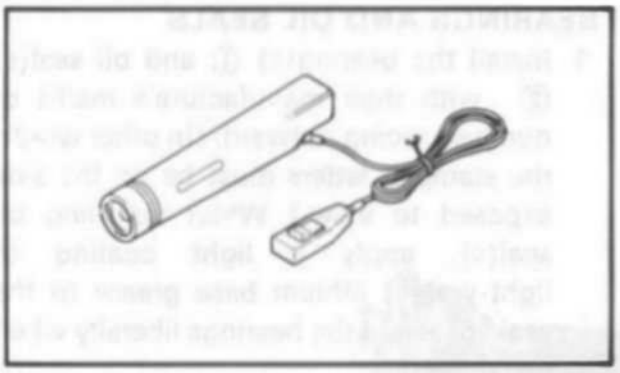

2. Inductive Timing Light
   P/N YM-33277

This tool is necessary for checking ignition timing.

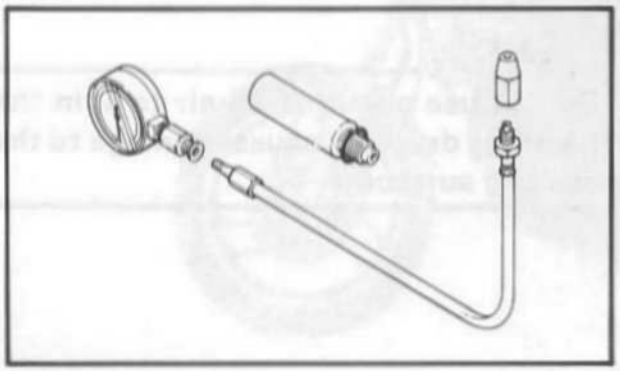

3. Compression Gauge
   P/N YU-33223

This gauge is used to measure the engine compression.

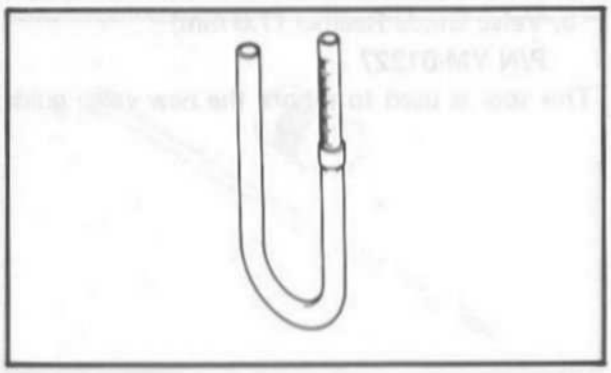

4. Fuel Level Gauge
   P/N YM-01312-A

This gauge is used to measure the fuel level in the float chamber.

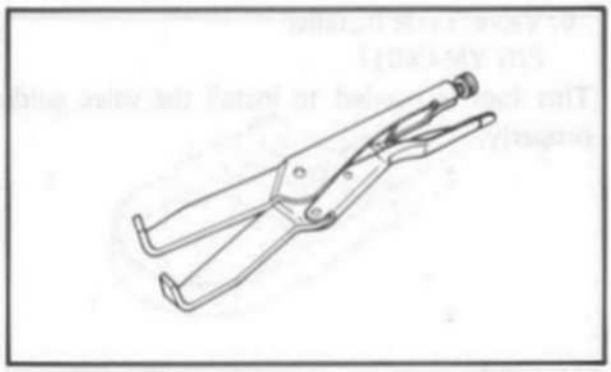

FOR ENGINE SERVICE

1. Universal Clutch Holder
   P/N YM-91042

This tool is used to hold the clutch when removing or installing the clutch boss locknut.

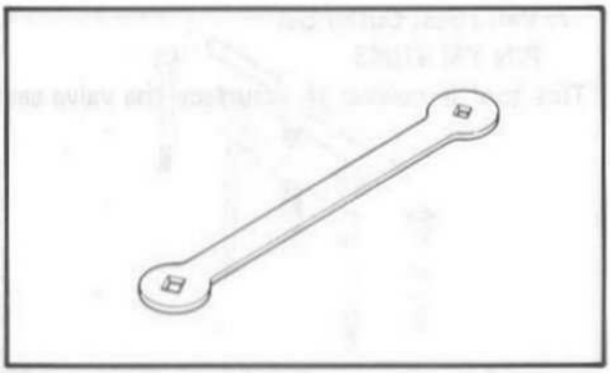

2. Valve Adjusting Tool
   P/N YM-08035

This tool is necessary for adjusting the valve clearance.

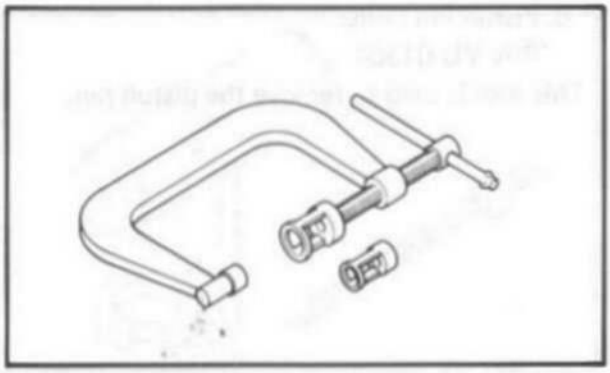

3. Valve Spring Compressor
   P/N YM-01253

This tool is needed to remove and install the valve assemblies.

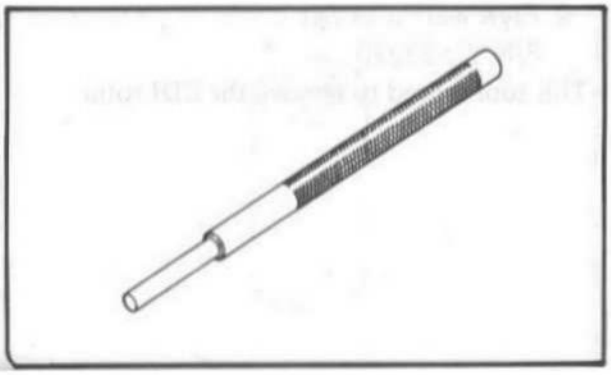

4. Valve Guide Remover (7.0 mm)
   P/N YM-01225

This tool is used to remove the valve guides.

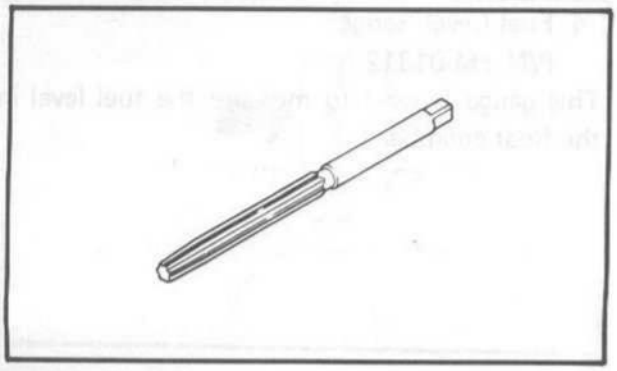

5. Valve Guide Reamer (7.0 mm)
P/N YM-01227
This tool is used to rebore the new valve guide.

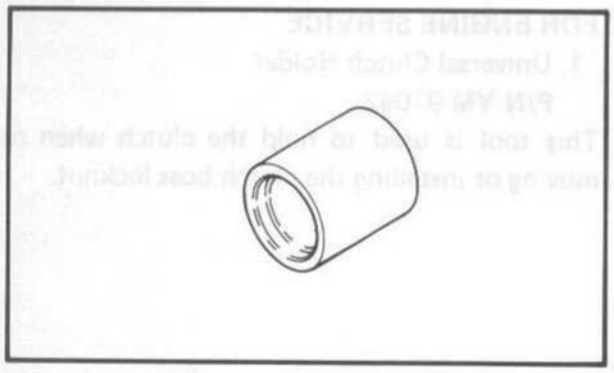

6. Valve Guide Installer
P/N YM-04017
This tool is needed to install the valve guides properly.

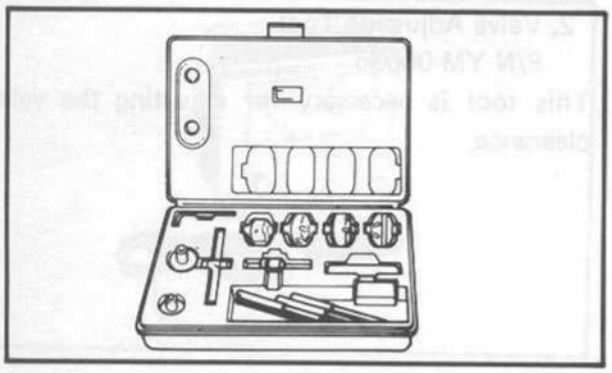

7. Valve Seat Cutter Set
P/N YM-91043
This tool is needed to resurface the valve seat.

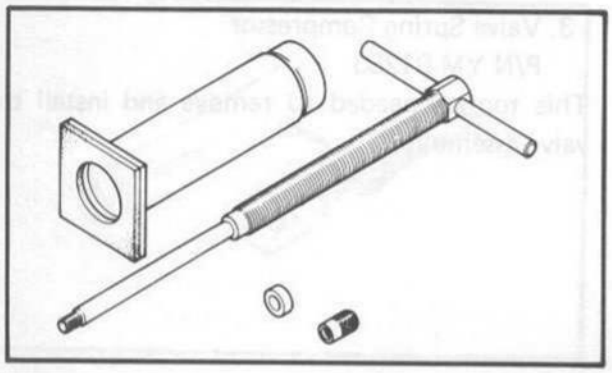

8. Piston Pin Puller
P/N YU-01304
This tool is used to remove the piston pin.

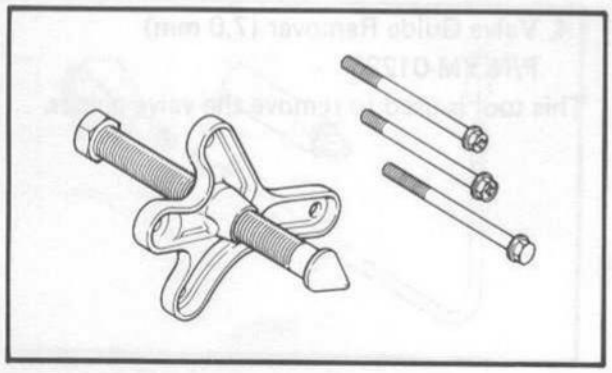

9. Flywheel Puller Set
P/N YU-33270
This tool is used to remove the CDI rotor.

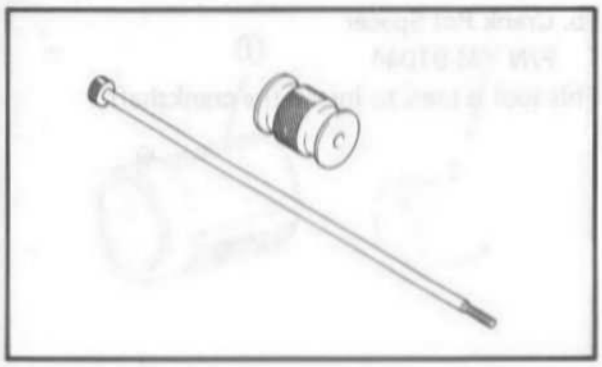

10. Slide Hammer Set
P/N YU-01083
These tools are used to remove the rocker arm and rocker arm shaft.

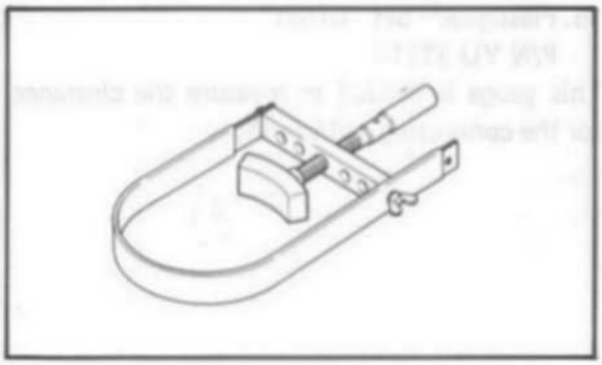

11. Sheave Holder
P/N YS-01880
This tool is removing to hold the rotor when removing or installing the rotor securing nut.

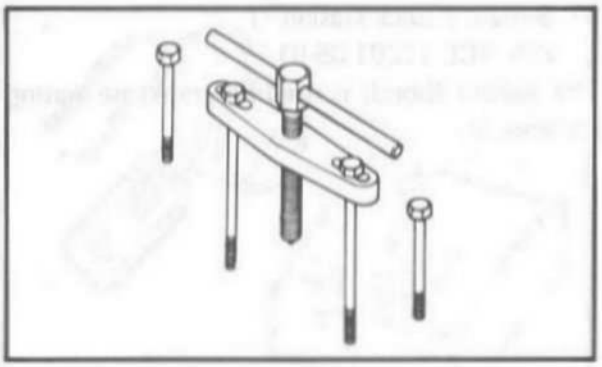

12. Crankcase Separating Tool
P/N YU-01135
This tool is necessary to separate the crankcase.

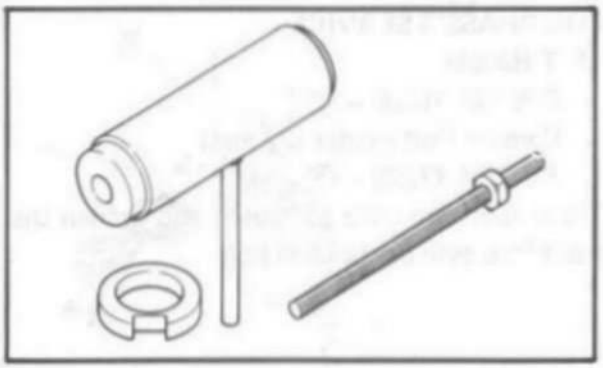

13. Crankshaft Installing Set
P/N YU-90050
These tools are used to install the crankshaft.

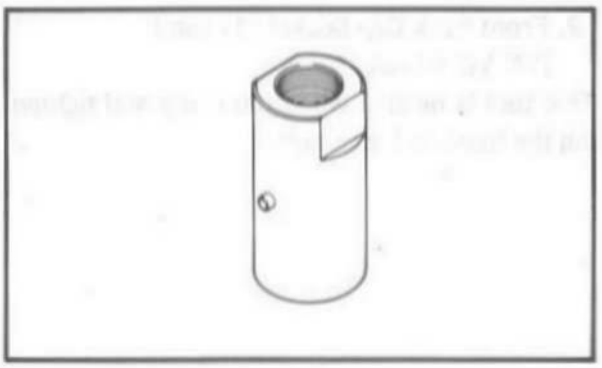

14. Adapter #10 (M14)
P/N YM-90069
This tool is used to install the crankshaft.

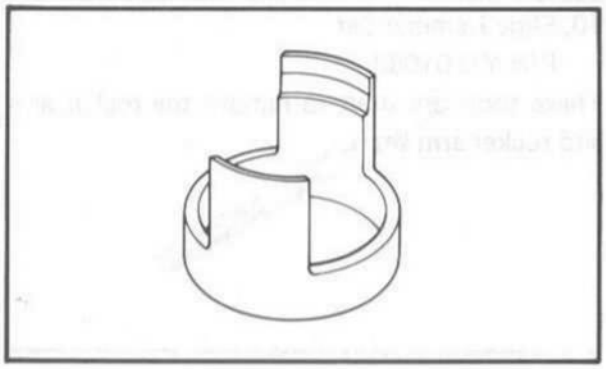

15. Crank Pot Spacer
P/N YM-91044
This tool is used to install the crankshaft.

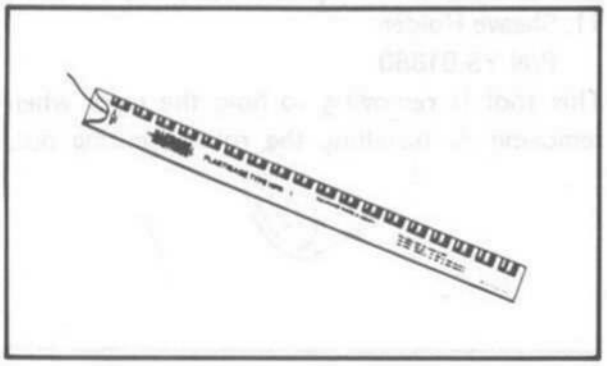

16. Plastigage® Set "Green"
P/N YU-33210
This gauge is needed to measure the clearance for the connecting rod bearing.

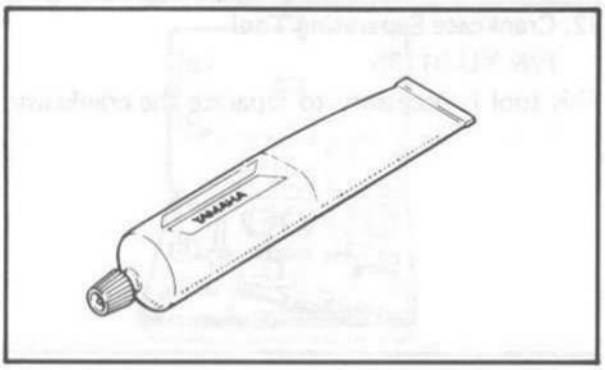

17. Sealant (Quick Gasket®)
P/N ACC-11001-05-01
This sealant (bond) is used for crankcase mating surfaces, etc.

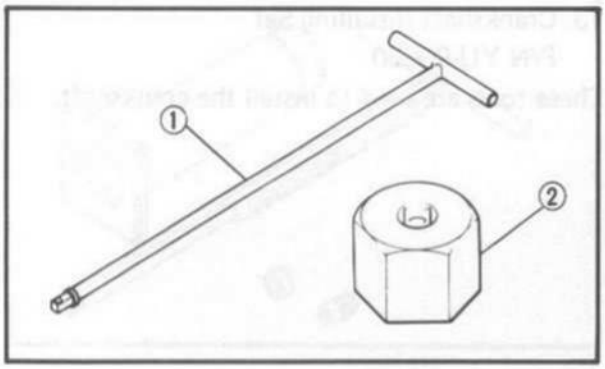

FOR CHASSIS SERVICE

1. T-Handle
P/N YM-01326 – ①
Damper Rod Holder (22 mm)
P/N YM-33298 – ②
These tools are used to loosen and tighten the front fork cylinder holding bolt.

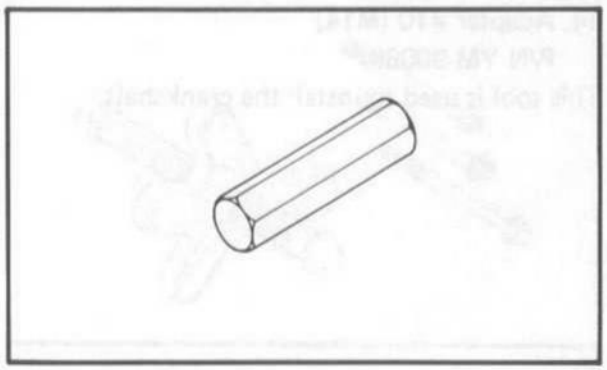

2. Front Fork Cap Socket (17 mm)
P/N YM-01104
This tool is needed when loosening and tightening the front fork cap bolt.

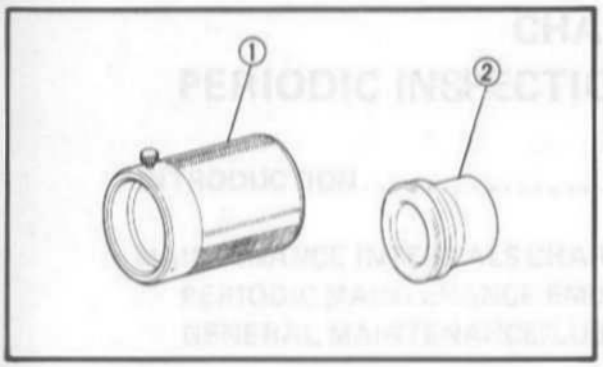

3. Front Fork Seal Driver (Weight)
   P/N YM-33963 – ①
   Adapter (36 mm)
   P/N YM-08010 – ②

These tools are used when installing the fork seal.

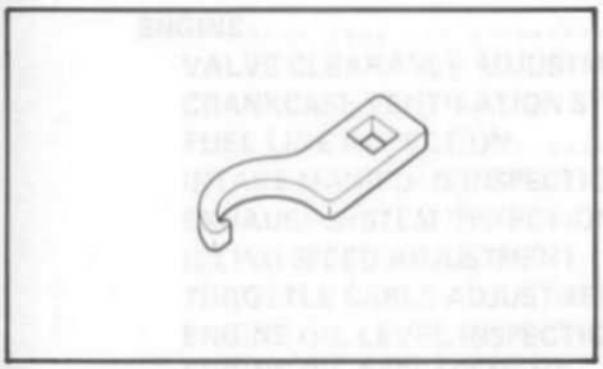

4. Ring Nut Wrench
   P/N YU-01268

This tool is used to loosen and tighten the steering ring nut.

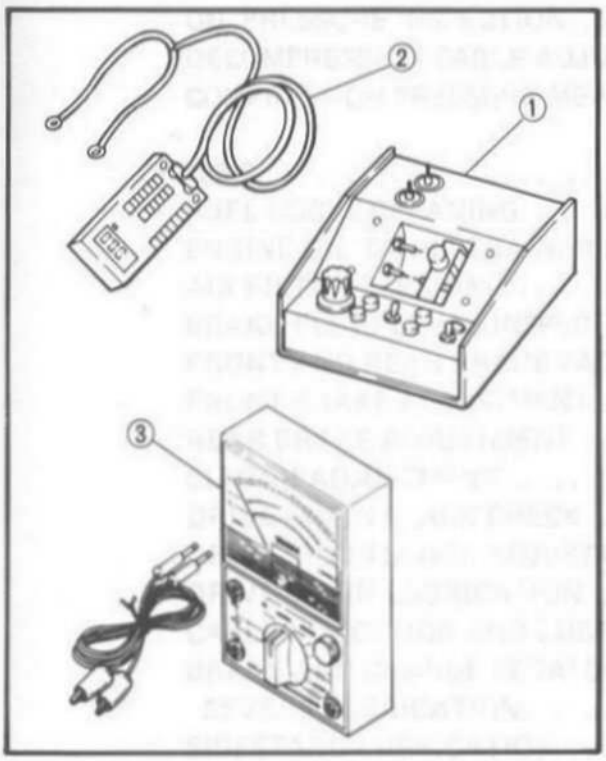

FOR ELECTRICAL COMPONENTS

1. Electro Tester
   P/N YU-33260 – ①

This instrument is necessary for checking the ignition system components.

2. Pocket Tester
   P/N YU-33263 – ② or YU-03112 – ③

This instrument is invaluable for checking the electrical system.

CHAPTER 2.
PERIODIC INSPECTIONS AND ADJUSTMENTS

INTRODUCTION 2-1

MAINTENANCE INTERVALS CHARTS 2-1
- PERIODIC MAINTENANCE EMISSION CONTROL SYSTEM 2-1
- GENERAL MAINTENANCE/LUBRICATION 2-2

ENGINE 2-4
- VALVE CLEARANCE ADJUSTMENT 2-4
- CRANKCASE VENTILATION SYSTEM INSPECTION 2-7
- FUEL LINE INSPECTION 2-7
- INTAKE MANIFOLD INSPECTION 2-8
- EXHAUST SYSTEM INSPECTION 2-8
- IDLING SPEED ADJUSTMENT 2-8
- THROTTLE CABLE ADJUSTMENT 2-8
- ENGINE OIL LEVEL INSPECTION 2-10
- ENGINE OIL REPLACEMENT 2-11
- OIL PRESSURE INSPECTION 2-13
- DECOMPRESSION CABLE ADJUSTMENT 2-14
- COMPRESSION PRESSURE MEASUREMENT 2-15

CHASSIS 2-17
- FUEL COCKS CLEANING 2-17
- ENGINE OIL TANK STRAINER CLEANING 2-17
- AIR FILTER CLEANING 2-18
- BRAKE FLUID LEVEL INSPECTION 2-19
- FRONT AND REAR BRAKE PAD INSPECTION 2-20
- FRONT BRAKE ADJUSTMENT 2-20
- REAR BRAKE ADJUSTMENT 2-21
- CLUTCH ADJUSTMENT 2-21
- DRIVE CHAIN SLACK CHECK 2-23
- DRIVE CHAIN SLACK ADJUSTMENT 2-24
- DRIVE CHAIN LUBRICATION 2-25
- CABLE INSPECTION AND LUBRICATION 2-25
- BRAKE AND CHANGE PEDALS/BRAKE AND CLUTCH LEVERS LUBRICATION 2-26
- SIDESTAND LUBRICATION 2-26
- SWINGARM LUBRICATION 2-26
- FRONT FORK OIL CHANGE 2-26
- REAR SHOCK ABSORBER ADJUSTMENT 2-28
- STEERING HEAD INSPECTION 2-29
- STEERING HEAD ADJUSTMENT 2-29
- WHEEL BEARINGS CHECK 2-30
- TIRES CHECK 2-31
- WHEELS CHECK 2-33
- FUEL TANK BREATHER HOSE INSPECTION 2-33
- CANISTER INSPECTION (FOR SRX600SC ONLY) 2-34

ELECTRICAL 2-35
IGNITION TIMING CHECK 2-35
BATTERY INSPECTION 2-35
BRAKE LIGHT SWITCH ADJUSTMENT 2-37
SPARK PLUG INSPECTION 2-37
HEADLIGHT BULB REPLACEMENT 2-38
HEADLIGHT BEAM ADJUSTMENT 2-39
CIRCUIT BREAKER INSPECTION 2-39

PERIODIC INSPECTIONS AND ADJUSTMENTS

INTRODUCTION

This chapter includes all information necessary to perform recommended inspections and adjustments. These preventive maintenance procedures, if followed, will ensure more reliable vehicle operation and a longer service life. The need for costly overhaul work will be greatly reduced. This information applies to vehicles already in service as well as new vehicles that are being prepared for sale. All service technicians should be familiar with this entire chapter.

MAINTENANCE INTERVALS CHARTS

Proper periodic maintenance is important. Especially important are the maintenance services related to emissions control. These controls not only function to ensure cleaner air but are also vital to proper engine operation and maximum performance. In the following maintenance tables, the services related to emissions control are grouped separately.

PERIODIC MAINTENANCE EMISSION CONTROL SYSTEM

No.	Item	Remarks	Initial	Odometer readings				
			1,000 km or 1 month (600 mi)	**1 7,000 km or 7 months (4,400 mi)	**2 13,000 km or 13 months (8,200 mi)	19,000 km or 19 months (12,000 mi)	25,000 km or 25 months (15,800 mi)	**3 31,000 km or 31 months (19,600 mi)
1*	Valve clearance	Check and adjust valve clearance when engine is cold.	○	○	○	○	○	○
2	Spark plug	Check condition. Adjust gap and clean. Replace at 13,000 km (or 13 months) and thereafter every 12,000 km (or 12 months).		○	Replace	○	Replace	○
3*	Crankcase ventilation system	Check ventilation hose for cracks or damage. Replace if necessary.		○		○		○
4*	Fuel line	Check fuel hose and vacuum pipe for cracks or damage. Replace if necessary.		○	○	○	○	○
5*	Exhaust system	Check for leakage. Retighten if necessary. Replace gasket(s) if necessary.		○	○	○	○	○
6*	Idle speed	Check and adjust engine idle speed. Adjust cable free play.		○	○	○	○	○
7*	Decom-pression	Check and adjust decom-pression cable free play after valve clearance maintenance.		○	○	○	○	○

* It is recommended that these items be serviced by a Yamaha dealer or other qualified mechanic.

NOTE:

For farther odometer reading, repeat the above maintenance at the period established; **1: Every 6,000 km (3,800 mi), **2: Every 12,000 km (7,600 mi) and **3: Every 30,000 km (19,000 mi) intervals.

GENERAL MAINTENANCE/LUBRICATION

No.	Item	Remarks	Type	Initial	Odometer reading				
				1,000 km or 1 month (600 mi)	**1 7,000 km or 7 months (4,400 mi)	**2 13,000 km or 13 months (8,200 mi)	19,000 km or 19 months (12,000 mi)	**3 25,000 km or 25 months (15,800 mi)	31,000 km or 31 months (19,600 mi)
1	Engine oil	Warm-up engine before draining.	See NOTE.	○	○	○	○	○	○
2*	Oil filter/ strainer	Replace filter element and clean oil strainer. Replace oil strainer if damage.	–	○		○		○	
3*	Air filter	Clean with compression air. Replace if necessary.	–		○	○	○	○	○
4*	Brake system	Adjust free play Replace pads if necessary.	–	○	○	○	○	○	○
5	Clutch	Adjust free play.	–	○	○	○	○	○	○
6	Drive chain	Check chain condition. Adjust and lubricate chain thoroughly.	SAE 30W～50W motor oil	Every 500 (300)					
7	Control and meter cable	Apply chain lube thoroughtly.	Yamaha chain and cable lube or SAE 10W30 motor oil.	○	○	○	○	○	○
8*	Rear arm pivot bearing	Apply grease lightly.	Lithium soap base grease.					○	
9	Brake/ Clutch lever pivot shaft	Apply chain lube lightly.	Yamaha chain and cable lube or SAE 10W30 motor oil		○	○	○	○	○
10	Brake pedal and change pedal shaft	Lubricate. Apply chain lube lightly.	Yamaha chain and cable lube or SAE 10W30 motor oil		○	○	○	○	○
11*	Sidestand pivot and kick crank boss	Check operation and lubricate. Apply chain lube lightly.	Yamaha chain and cable lube or SAE 10W30 motor oil		○	○	○	○	○
12*	Front fork oil	Check operation and leakage.	–		○	○	○	○	○

MAINTENANCE INTERVALS CHARTS

No.	Item	Remarks	Type	Initial	Odometer reading				
				1,000 km or 1 month (600 mi)	**1 7,000 km or 7 months (4,400 mi)	**2 13,000 km or 13 months (8,200 mi)	19,000 km or 19 months (12,000 mi)	**3 25,000 km or 25 months (15,800 mi)	31,000 km or 31 months (19,600 mi)
13*	Steering bearings	Check bearings assembly for looseness. Moderately repack every 24,000 km (15,200 mi).	Medium weight wheel bearing grease		○	○	○	Repack	○
14*	Wheel bearings	Check bearings for smooth rotation.	–		○	○	○	○	○
15*	Battery	Check specific gravity and breather pipe for proper operation.	–		○	○	○	○	○
16*	Sidestand switch	Check and clean or replace if necessary.	–	○	○	○	○	○	○

* It is recommended that these items be serviced by a Yamaha dealer or other qualified mechanic.

NOTE:

- For farther odometer reading, repeat the above maintenance at the period established; **1: Every 6,000 km (3,800 mi), **2: Every 12,000 km (7,600 mi), and **3: Every 24,000 km (15,200 mi) intervals.
- Brake fluid replacement:
  1) When disassembling the master cylinder or caliper cylinder, replace the brake fluid. Normally check the brake fluid level and add the fluid as required.
  2) On the inner parts of the master cylinder and caliper cylinder, replace the oil seals every two years.
  3) Replace the brake hoses every four years, or it cracked or damaged.
- Engine oil: Yamalube 4-cycle oil or SAE 20W40 type SE motor oil

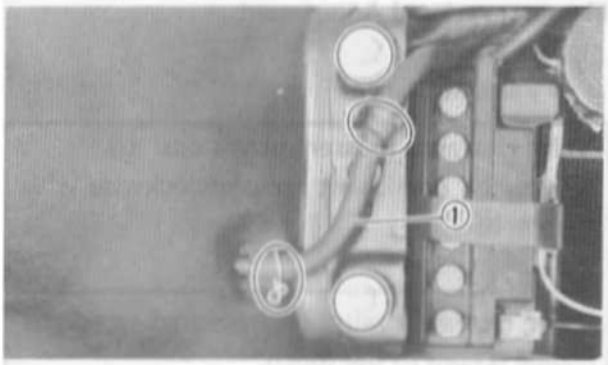

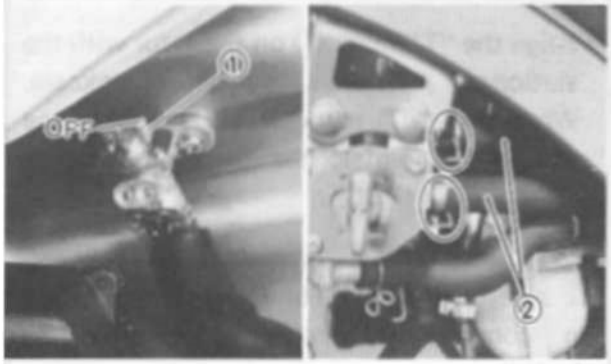

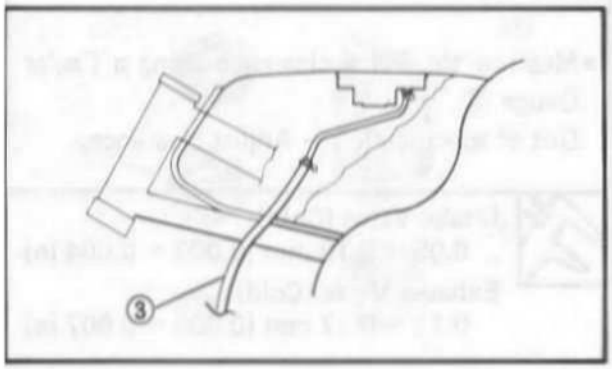

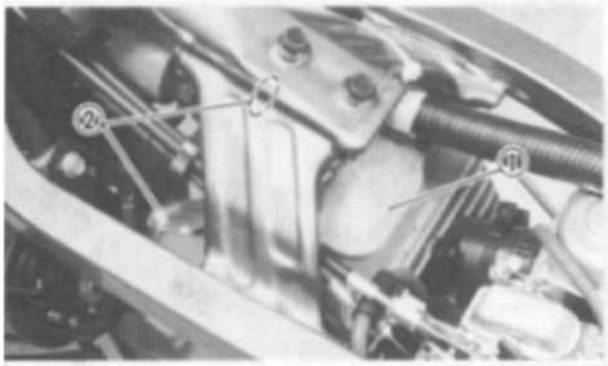

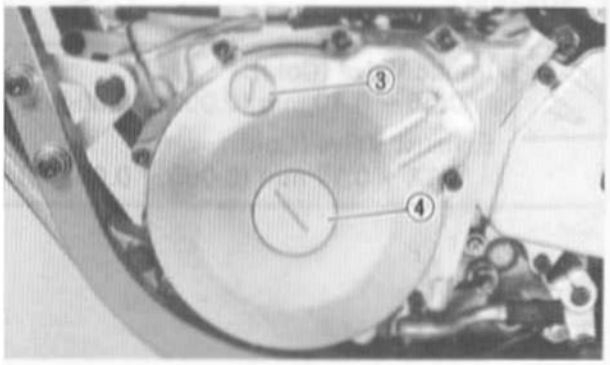

ENGINE

VALVE CLEARANCE ADJUSTMENT

Removal

1. Remove:
   - Seat
   - Bolts (Fuel tank)
2. Disconnect:
   - Breather hose (Fuel tank – Rear) ①

   Slowly lift up the fuel tank.
3. Turn the sub fuel cock lever ① to "OFF".
4. Disconnect:
   - Fuel hoses (Main fuel cock) ②
   - Breather hose (Fuel tank – Front) ③ (For California)
5. Remove:
   - Fuel tank
6. Remove:
   - Spark plug
   - Tappet cover (Intake) ①
   - Tappet covers (Exhaust) ②
   - Timing plug ③
   - Crankcase cover plate ④

VALVE CLEARANCE ADJUSTMENT

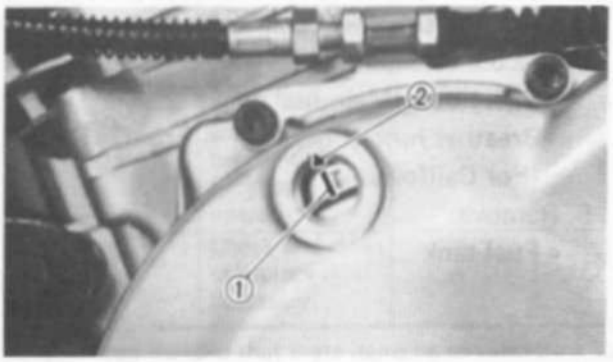

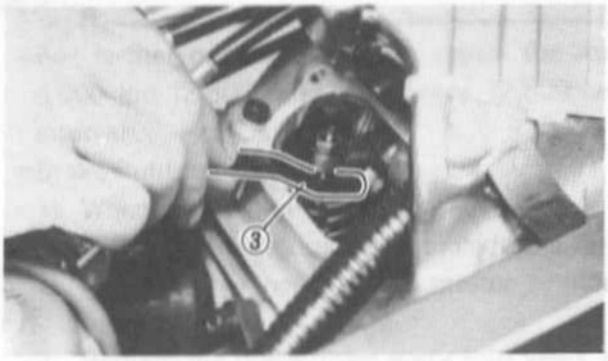

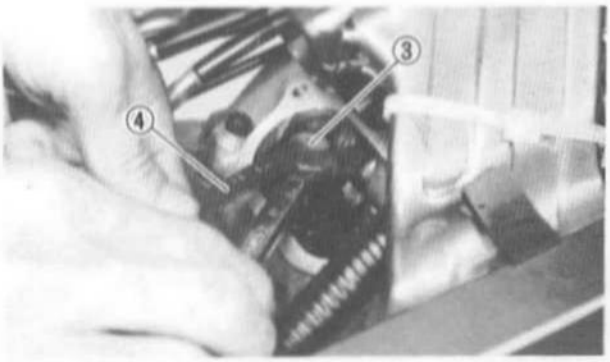

Measurement and Adjustment

1. Measure:
   - Valve clearance

Valve clearance measurement steps:

- Turn the crankshaft counterclockwise with wrench.

NOTE:

Valve clearance must be measured when the engine is cool to the touch.

- Align the "T" mark ① on the rotor with the stationary pointer ② on the crankcase. When the "T" mark is aligned with the stationary pointer, the piston is at Top Dead Center (TDC).

NOTE:

Be sure piston is at Top Dead Center (TDC) on compression stroke when measuring clearance.

- Measure the valve clearance using a Feeler Gauge ③.
  Out of specification → Adjust clearance.

Intake Valve (Cold):
0.05 ~ 0.10 mm (0.002 ~ 0.004 in)
Exhaust Valve (Cold):
0.12 ~ 0.17 mm (0.005 ~ 0.007 in)

2. Adjust:
   - Valve clearance

Valve clearance adjustment steps:

- Loosen the locknut ①.
- Insert a Feeler Gauge ② between the adjuster end and the valve end.
- Turn the adjuster ③ clockwise or counter-clockwise with the Valve Adjusting Tool ④ (YM-08035) until proper clearance is attained.

Intake Valve (Cold):
0.05 ~ 0.10 mm (0.002 ~ 0.004 in)
Exhaust Valve (Cold):
0.12 ~ 0.17 mm (0.005 ~ 0.007 in)

- Hold the adjuster to prevent it from moving and thoroughly tighten the locknut.

Valve Clearance Adjusting Locknut:
14 Nm (1.4 m·kg, 10 ft·lb)

- Measure the valve clearance.
- If the clearance is incorrect, repeat above steps until the proper clearance is obtained.

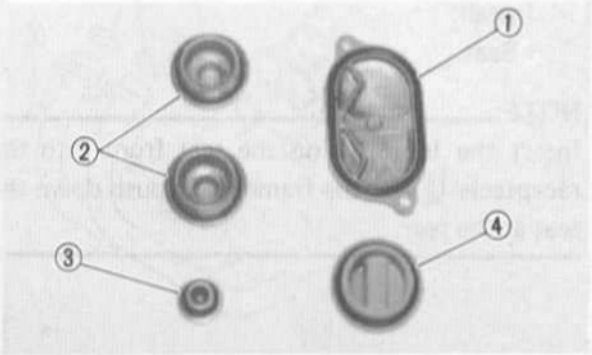

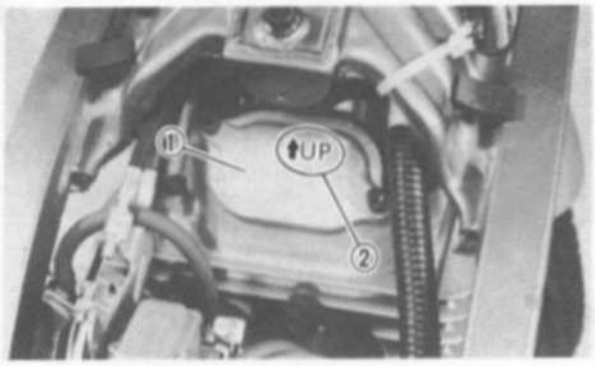

Assembly

When installing the seat, reverse the removal procedure. Note the following points.

1. Inspect:
   - O-ring (Intake tappet cover) ①
   - O-ring (Exhaust tappet covers) ②
   - O-ring (Timing plug) ③
   - O-ring (Crankcase cover plate) ④
     Damage → Replace.
2. Install:
   - Tappet cover (Intake) ①
   - Tappet covers (Exhaust)

NOTE:

Arrow mark ② on the cover should face toward the upper side.

Tappet Cover (Intake):
10 Nm (1.0 m·kg, 7.2 ft·lb)
Tappet Cover (Exhaust):
10 Nm (1.0 m·kg, 7.2 ft·lb)
Spark Plug:
17.5 Nm (1.75 m·kg, 12.5 ft·lb)

CRANKCASE VENTILATION SYSTEM INSPECTION/ FUEL LINE INSPECTION

3. Connect:
   - Breather hose (Fuel tank – Rear)
   - Breather hose (Fuel tank – Front) (For California)

NOTE:

- When installing the fuel tank, be sure the breather hose is routed correctly.
  Refer to "FUEL TANK BREATHER HOSE INSPECTION" section.
- Turn the sub fuel cock lever ① to "ON".

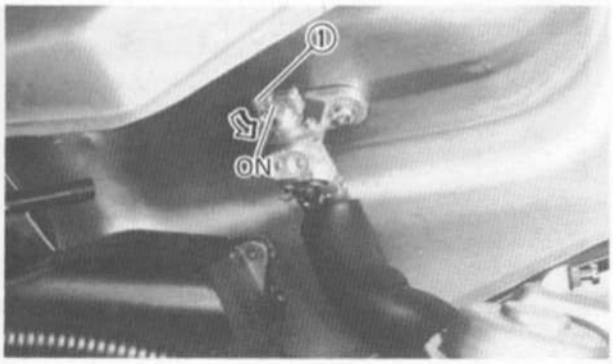

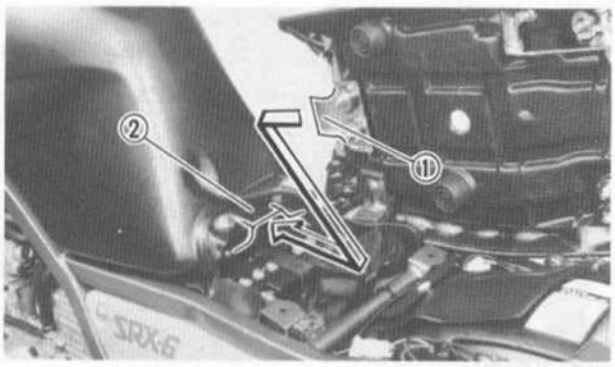

4. Install:
   - Seat

NOTE:

Insert the lobe ① on the seat front into the receptacle ② on the frame, then push down the seat at the rear.

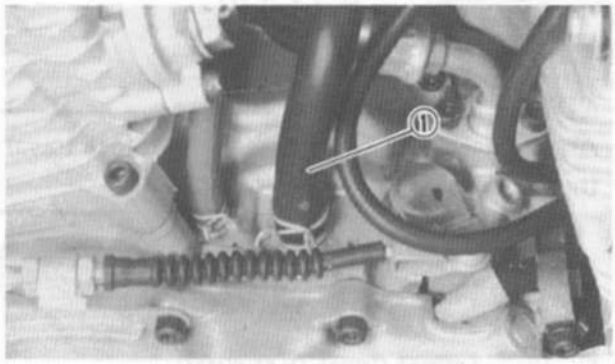

CRANKCASE VENTILATION SYSTEM INSPECTION

1. Inspect:
   - Crankcase ventilation hose ①
     Cracks/Damage → Replace.

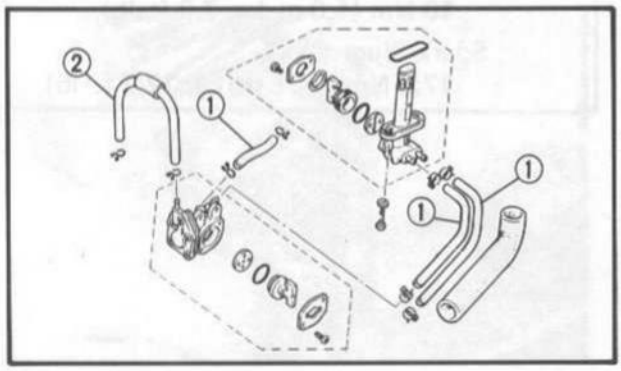

FUEL LINE INSPECTION

1. Inspect:
   - Fuel hoses ①
   - Vacuum hose ②
     Cracks/Damage → Replace.

INTAKE MANIFOLD INSPECTION

1. Tighten:
   - Clamps (Carburetor)
   - Bolts (Carburetor joint)
2. Inspect:
   - Carburetor joints
   - O-rings (Carburetor joints)
     Cracks/Damage → Replace.

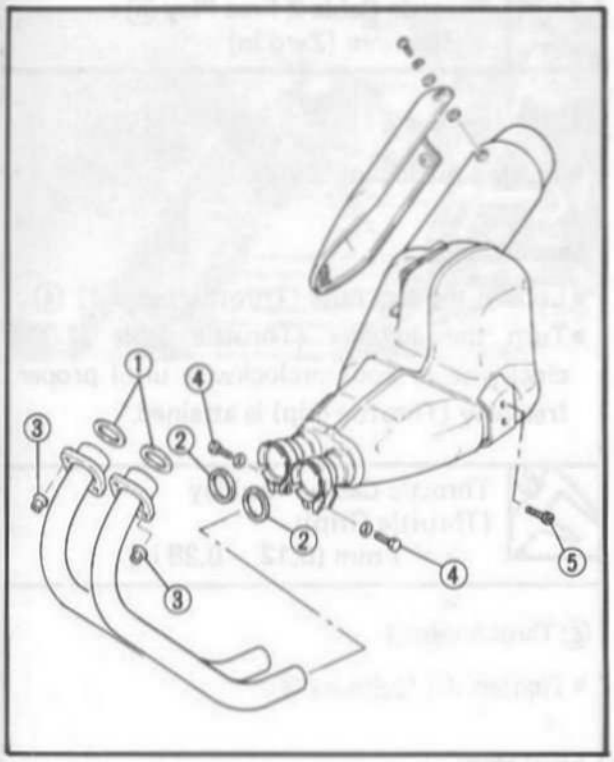

EXHAUST SYSTEM INSPECTION

1. Inspect:
   - Gaskets (Exhaust pipes) ①
   - Gaskets (Muffler clamp) ②
     Damage → Replace.
     Exhaust gas leakage → Repair.
2. Tighten:
   - Bolts (Exhaust pipes)
   - Bolts (Muffler)

Exhaust Pipe Flange ③ :
10 Nm (1.0 m·kg, 7.2 ft·lb)
Muffler Clamp ④ :
20 Nm (2.0 m·kg, 14 ft·lb)
Muffler Bracket ⑤ :
27 Nm (2.7 m·kg, 19 ft·lb)

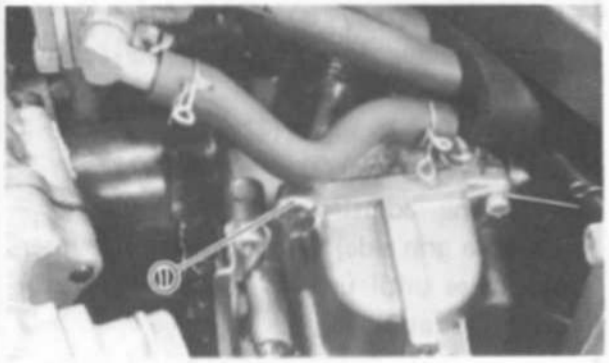

IDLING SPEED ADJUSTMENT

1. Adjust:
   - Idle speed
     Warm up the engine and turn the throttle stop screw ① to adjust.

Idle Speed:
1,250 ~ 1,350 r/min

THROTTLE CABLE ADJUSTMENT

NOTE:
Before adjusting the throttle cable free play, the engine idling speed should be adjusted.

1. Check:
   - Throttle cable free play ⓐ
     Out of specification → Adjust.

Throttle Cable Free Play ⓐ :
3 ~ 7 mm (0.12 ~ 0.28 in)

THROTTLE CABLE ADJUSTMENT

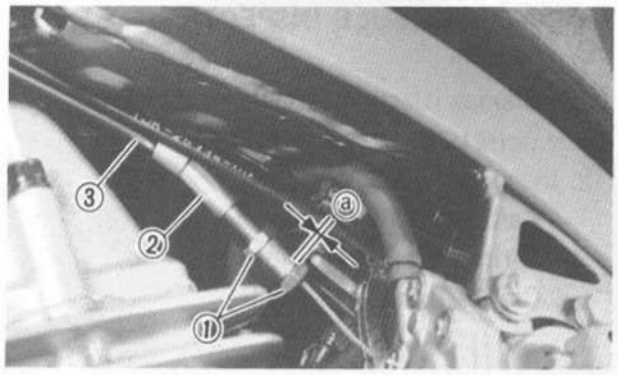

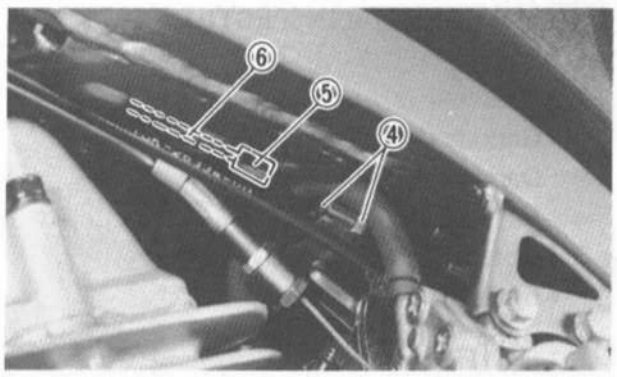

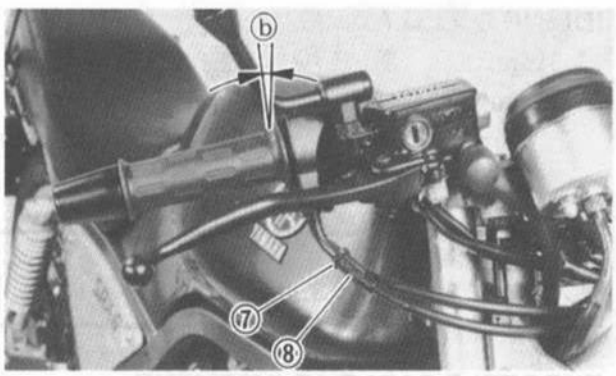

2. Adjust:
   - Throttle cable free play

Throttle cable adjustment steps:

First step:

- Loosen the locknuts (Throttle cable 2) ①.
- Turn the adjuster (Throttle cable 2) ② clockwise or counterclockwise until the specified free play ⓐ.

Throttle Cable 2 Free Play ⓐ:
Zero mm (Zero in)

③ Throttle cable 2

- Tighten the locknuts ①.

Second step:

- Loosen the locknuts (Throttle cable 1) ④.
- Turn the adjuster (Throttle cable 1) ⑤ clockwise or counterclockwise until proper free play (Throttle grip) is attained.

Throttle Cable Free Play (Throttle Grip):
3 ~ 7 mm (0.12 ~ 0.28 in)

⑥ Throttle cable 1

- Tighten the locknuts ④.

Final step:

- If the free play is incorrect, adjust the throttle cable free play with the adjuster (Throttle grip side).
- Loosen the locknut (Throttle cable 1 – Throttle grip side) ⑦.
- Turn the adjuster (Throttle cable 1 – Throttle grip side) ⑧ clockwise or counterclockwise until proper free play (Throttle grip) ⓑ is attained.

Throttle Cable Free Play (Throttle Grip) ⓑ:
3 ~ 7 mm (0.12 ~ 0.28 in)

- Tighten the locknut ⑦.

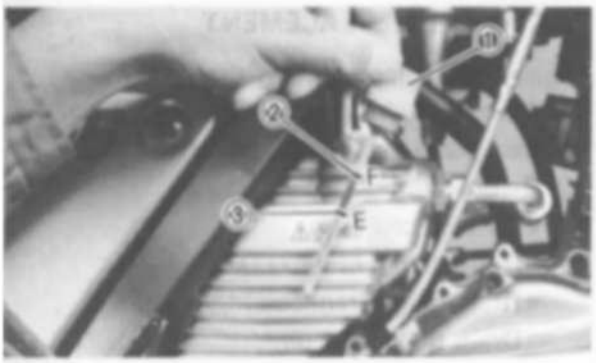

ENGINE OIL LEVEL INSPECTION

1. Inspect:
   - Engine oil level
     Oil level low → Add sufficient oil.

Engine oil level inspection steps:

- Place the motorcycle on a level place.

NOTE:
Be sure the motorcycle is positioned straight up and on both wheels.

- Remove the oil tank cap ① completely out, and then just rest the cap in the hole.

NOTE:
When checking, do not screw the oil level gauge into the oil tank. Insert the gauge lightly.

- Pull up the cap, and inspect the oil level whether or not it is between maximum ② and minimum level ③.
  Sufficient oil → Start the engine.
  Insufficient oil → And the oil up to the minimum level and start the engine.

Recommended Oil:
Yamalube 4-cycle oil or
SAE 20W40 type SE motor oil

Oil Tank Capacity:
1.8 L (1.6 Imp qt, 1.9 US qt)

NOTE:
Recommended engine oil classification; API Service "SE", "SF" type or equivalent (e.g. "SF-SE", "SF-SE-CC", "SF-SE-SD" etc).

CAUTION:

When the oil tank is empty, never start the engine.

- Warm up until the oil temperature rises to approximately 60°C (140°F).
- Idle the engine more than 10 seconds while keeping the motorcycle upright, and stop the engine.
- Inspect the oil level with the oil tank cap, and apply the engine oil to the maximum level.

WARNING:

Never attempt to remove the oil tank cap just after high speed operation. The heated oil could spout out, causing danger. Wait until the oil cools down to approximately 60°C (140°F).

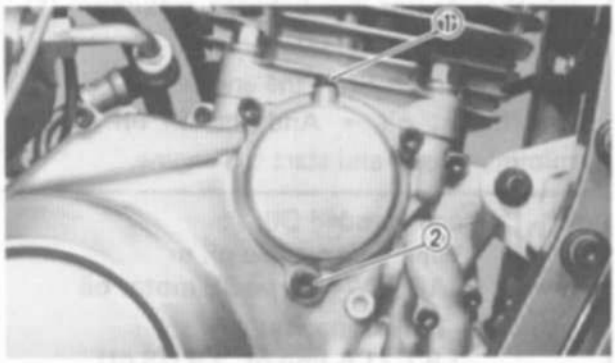

ENGINE OIL REPLACEMENT

Engine Oil Replacement (Without Oil Filter)

1. Warm up the engine for several minutes, then place a receptacle under the engine.
2. Remove:
   - Oil tank cap
   - Drain plug (Oil tank) ①
   - Drain plug (Crankcase) ②

   Drain the engine oil.
3. Remove:
   - Air bleed screw ①
   - Filter cover screw (Lower) ②

   Drain the engine oil.

NOTE:

The oil filter cover is secured by three screws. The lower one should be removed so that the filter cavity will drain.

4. Inspect:
   - Gasket (Oil tank – Drain plug)
   - Gasket (Crankcase – Drain plug)
   - Gasket (Air bleed screw)

   Damage → Replace.
5. Tighten:
   - Components in above list (Steps "2 & 3)

Drain Plug (Crankcase):
30 Nm (3.0 m·kg, 22 ft·lb)
Drain Plug (Oil tank):
30 Nm (3.0 m·kg, 22 ft·lb)
Filter Cover Screw:
10 Nm (1.0 m·kg, 7.2 ft·lb)
Air Bleed Screw:
5 Nm (0.5 m·kg, 3.6 ft·lb)

6. Fill:
   - Oil tank

Recommended Oil:
Yamalube 4-cycle oil or
SAE 20W40 type SE motor oil
Periodic Oil Change:
2.0 L (1.8 Imp qt, 2.1 US qt)

CAUTION:

Do not allow foreign material to enter the oil tank.

7. Install:
   - Oil tank cap
8. Inspect:
   - Oil leaks
   - Oil level
   - Oil pressure
     Refer to "OIL PRESSURE INSPECTION" section.

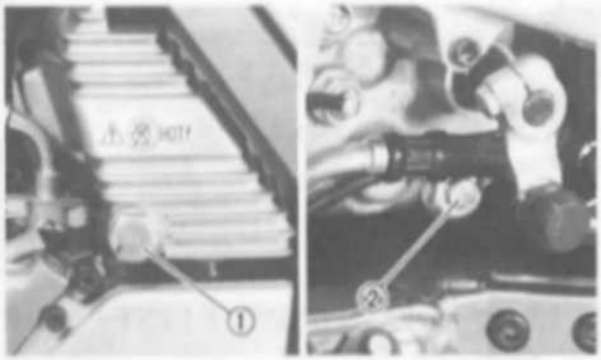

Engine Oil Replacement (With Oil Filter)

1. Warm up the engine for several minutes, then place a receptacle under the engine.
2. Remove:
   - Oil tank cap
   - Drain plug (Oil tank) ①
   - Drain plug (Crankcase) ②
     Drain the engine oil.
   - Oil filter cover ③
   - Oil filter ④

3. Inspect:
   - Gasket (Oil tank – Drain plug)
   - Gasket (Crankcase – Drain plug)
   - O-rings ⑤
     Damage → Replace.

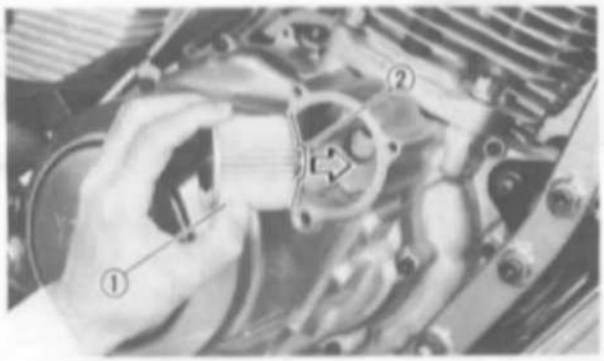

4. Install:
   - Oil filter (New)
   - Oil filter cover

NOTE:

Install the oil filter ① with its projection ② facing towards the engine.

5. Tighten:
   - Components in above list (Step "2")

Drain Plug (Crankcase):
30 Nm (3.0 m·kg, 22 ft·lb)
Drain Plug (Oil Tank):
30 Nm (3.0 m·kg, 22 ft·lb)
Filter Cover Screw:
10 Nm (1.0 m·kg, 7.2 ft·lb)

6. Fill:
   - Oil tank

Recommended Oil:
Yamalube 4-cycle oil or
SAE 20W40 type SE motor oil
With Oil Filter Replacement:
2.1 L (1.9 Imp qt, 2.2 US qt)

CAUTION:

Do not allow foreign material to enter the oil tank.

7. Install:
   - Oil tank cap
8. Inspect:
   - Oil leaks
   - Oil level
   - Oil pressure
     Refer to "OIL PRESSURE INSPECTION" section.

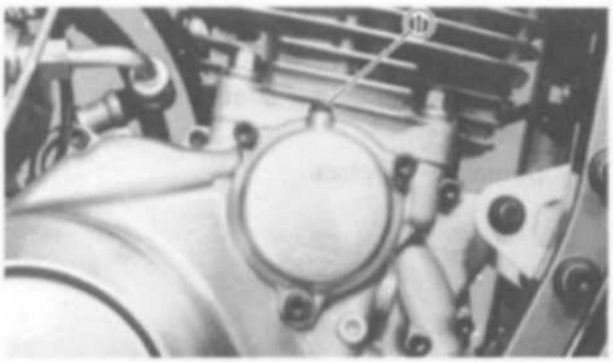

OIL PRESSURE INSPECTION

1. Remove:
   - Air bleed screw ①
2. Start the engine and keep it idling for several minutes.
3. Inspect:
   - Oil condition of the bleed hole
     Oil flows out → Oil pressure is good.
     No oil comes out → Oil pressure is bad.

CAUTION:

If no oil comes out after a lapse of one minute, turn off the engine immediately so it will not seize.

4. Tighten:
   - Air bleed screw

Air Bleed Screw:
5 Nm (0.5 m·kg, 3.6 ft·lb)

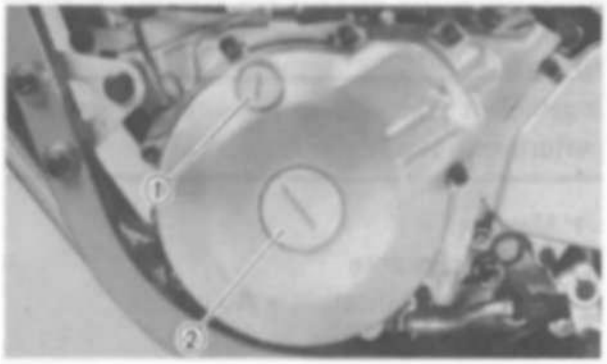

DECOMPRESSION CABLE ADJUSTMENT

NOTE:

Decompression cable adjustment must follow the valve clearance adjustment.

1. Remove:
   - Timing plug ①
   - Crankcase cover plate ②

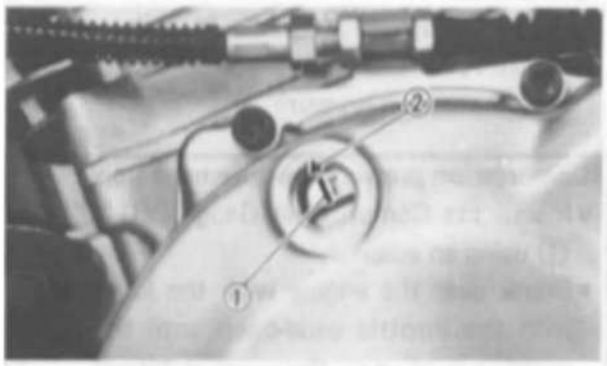

2. Align the "T" mark ① on the rotor with the stationary pointer ② on the crankcase. When the "T" mark is aligned with the stationary pointer, the piston at Top Dead Center (TDC).

NOTE:

Be sure piston is at Top Dead Center (TDC) on compression stroke when checking and adjusting free play.

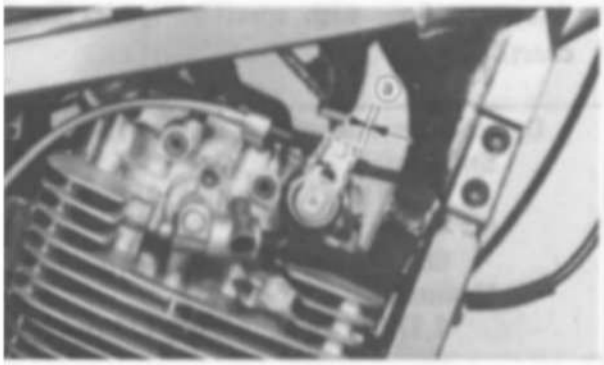

3. Check:
   - Decompression cable free play ⓐ
     Out of specification → Adjust.

Decompression Cable Free Play ⓐ :
3 ~ 5 mm (0.12 ~ 0.20 in)

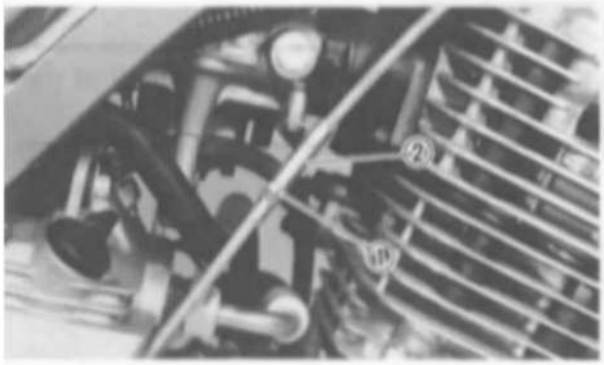

4. Adjust:
   - Decompression cable free play

Decompression cable free play adjustment:
- Loosen the locknut ① .
- Turn the adjuster ② clockwise or counter-clockwise until proper free play is attained.
- Tighten the locknut.

5. Install:
   - Timing plug
   - Crankcase cover plate

COMPRESSION PRESSURE MEASUREMENT

NOTE:

Insufficient compression pressure will result in performance loss.

1. Measure:
   - Valve clearance
     Out of specification → Adjust.
2. Warm up the engine.
3. Remove:
   - Spark plug
4. Measure:
   - Compression pressure

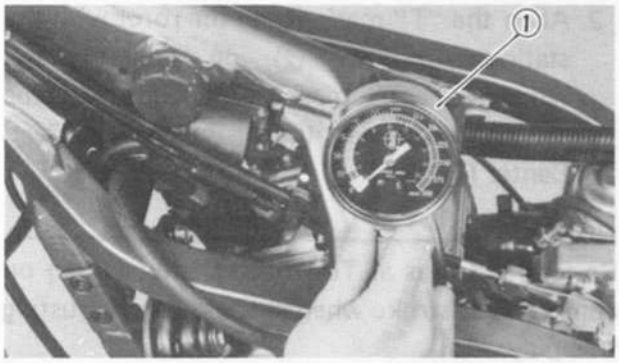

Compression pressure measurement steps:

- Install the Compression Gauge (YU-33223) ① using an adapter.
- Crank over the engine with the kick crank with the throttle wide-open until the compression reading on the gauge stabilizes.
- Check readings with specified levels (See chart).

Compression Pressure (at sea level):

Standard:
1,079 kPa (11 kg/cm², 156 psi)
Minimum:
883 kPa (9 kg/cm², 128 psi)
Maximum:
1,177 kPa (12 kg/cm², 171 psi)

WARNING:

When cranking the engine, ground all of the spark plug lead to prevent sparking.

- If pressure falls below the minimum level:
  1. Squirt a few drops of oil into the affected cylinder.
  2. Measure the compression again.

Compression Pressure (with oil introduced into cylinder)	
Reading	**Diagnosis**
Higher than without oil	Worn or damage pistons
Same as without oil	Defective ring(s), valves, cylinder head gasket or piston is possible.
Above maximum level	Inspect cylinder head, valve surfaces, or piston crown for carbon deposits.

5. Install:
   - Spark plug

Spark Plug:
17.5 Nm (1.75 m·kg, 12.5 ft·lb)

FUEL COCKS CLEANING/ ENGINE OIL TANK STRAINER CLEANING

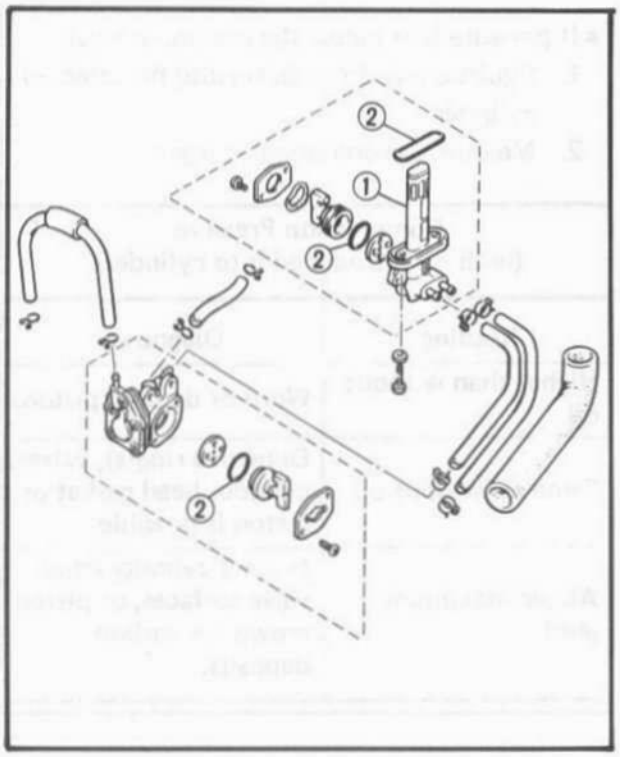

CHASSIS

FUEL COCKS CLEANING

1. Turn the sub fuel cock lever to the "OFF".
2. Disconnect:
   - Fuel hoses
   - Breather hose(s)
3. Remove:
   - Seat
   - Fuel tank
   - Fuel cocks (Main and sub cocks)
4. Clean:
   - Filter screen ①
     Clean it with solvent.
5. Inspect:
   - Filter screen ①
   - O-rings ②
     Damage → Replace.
6. Install:
   - Components in above list (Steps "3 and 2")

NOTE:

Be careful not to clamp the fuel cock too tightly as this may unseat the O-ring and lead to a fuel leak.

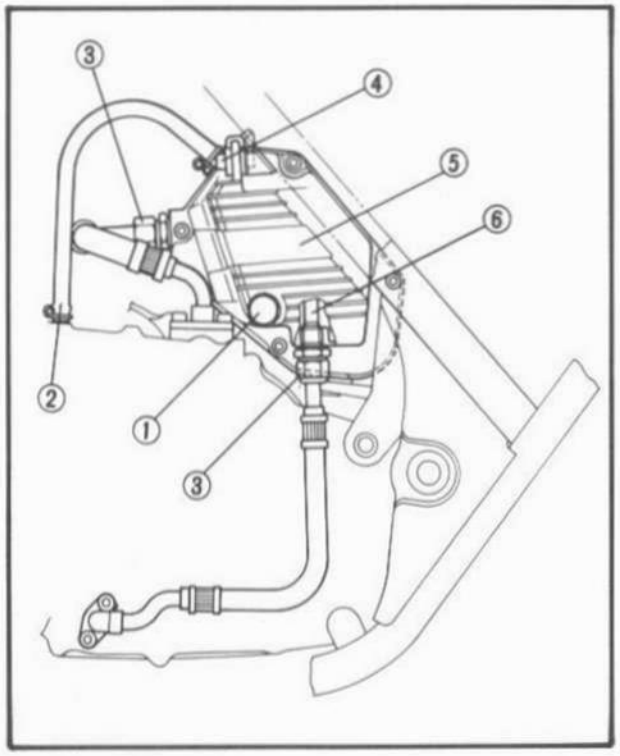

ENGINE OIL TANK STRAINER CLEANING

1. Place an oil receiver under the oil tank.
2. Remove:
   - Oil tank cap
   - Drain plug ①
     Drain the engine oil.
   - Breather hose ②
   - Nuts (Oil hose) ③
   - Bolts (Oil tank) ④
   - Carburetor
   - Oil tank ⑤
   - Oil strainer ⑥

NOTE:

Do not disconnect the oil hose (Crankcase side) at this stage. If the oil hose is disconnected, air bubbles must be bled.

3. Clean:
   - Oil strainer
     Blow out the oil strainer with compressed air.
   - Oil tank
     Clean it with solvent.

NOTE:
After cleaning the inside of the oil tank, remove the solvent thoroughly.

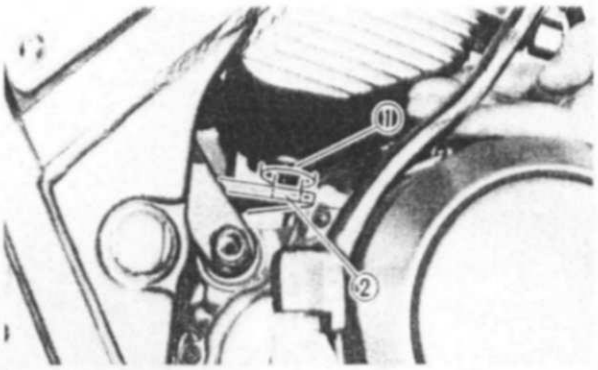

4. Inspect:
   - Gaskets (Oil hose)
   - Gasket (Drain plug)
     Damage → Replace.
5. Install:
   - Components in above list (Step "1")

NOTE:
Insert the lobe ① on the oil tank into the hole ② on the frame.

Nut (Oil Strainer):
40 Nm (4.0 m·kg, 29 ft·lb)
Nut (Joint):
40 Nm (4.0 m·kg, 29 ft·lb)
Nuts (Oil Hose):
50 Nm (5.0 m·kg, 36 ft·lb)
Drain Plug:
30 Nm (3.0 m·kg, 22 ft·lb)

6. Apply:
   - Engine oil
     Refer to "ENGINE OIL REPLACEMENT" section.
7. Check:
   - Oil pressure
     Refer to "OIL PRESSURE INSPECTION" section.

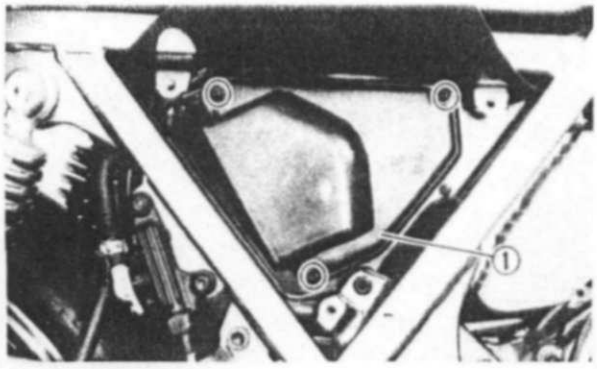

AIR FILTER CLEANING

1. Remove:
   - Side cover (Right)
   - Cover (Air filter) ①

BRAKE FLUID LEVEL INSPECTION

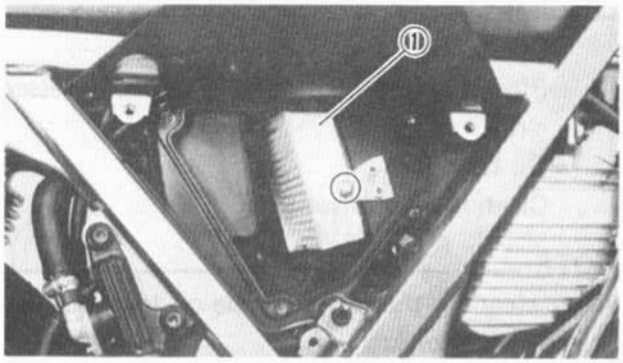

2. Remove:
   - Screw (Air filter element)
   - Element ①

CAUTION:

The engine should never be run without the air filter element installed; excessive piston and/or cylinder wear may result.

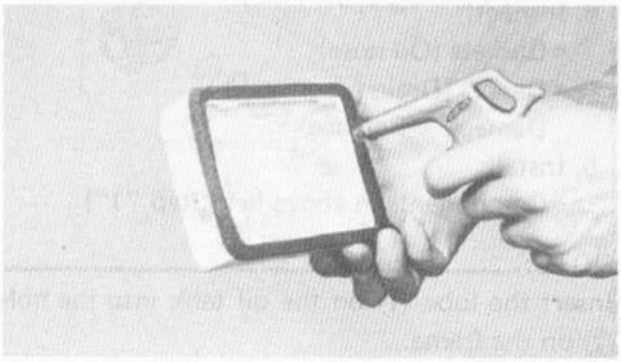

3. Eliminate:
   - Dust
     Use compressed air. Blow out dust in the element from the inner surface.
4. Inspect:
   - Element
     Damage → Replace.

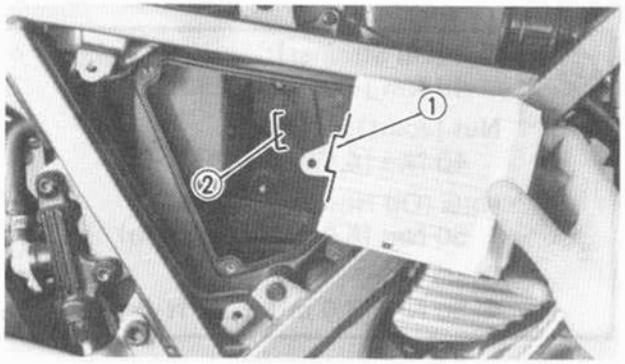

5. Install:
   - Element

CAUTION:

Make sure the element edge ① fits into the corresponding filter case groove ② .

6. Install:
   - Components in above list (Steps "1")

BRAKE FLUID LEVEL INSPECTION

1. Inspect:
   - Brake fluid level (Master cylinder)
     Level low → Replenish fluid.

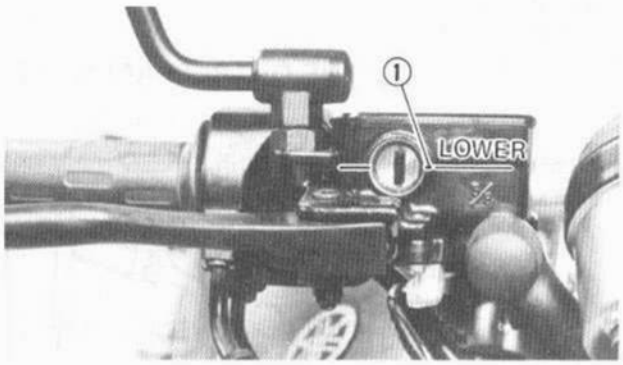

	Brake Fluid: **DOT #3**

① Lower level

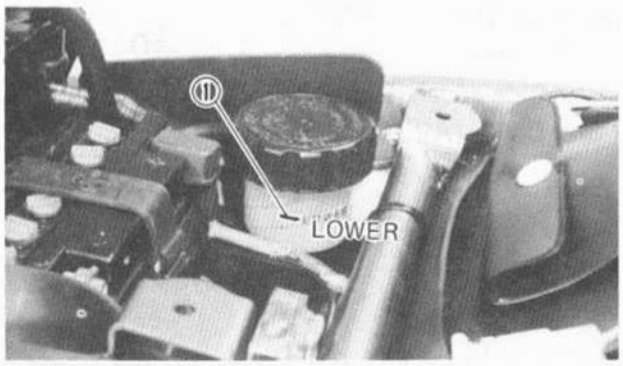

NOTE:

Spilled fluid is cleaned up immediately to prevent painted surfaces or plastic parts from eroding.

WARNING:

- **Use only the dsignated quality brake fluid, otherwise poor brake performance will result.**

- Water does not enter the master cylinder when refilling, otherwise poor brake performance.

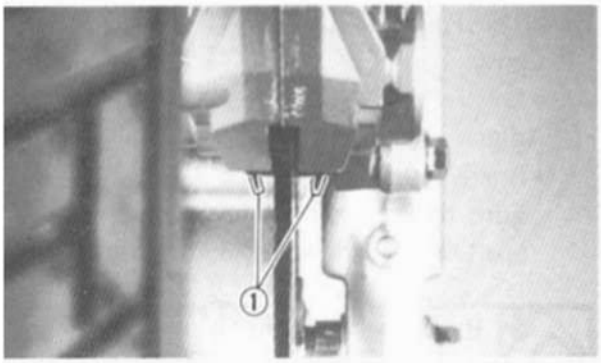

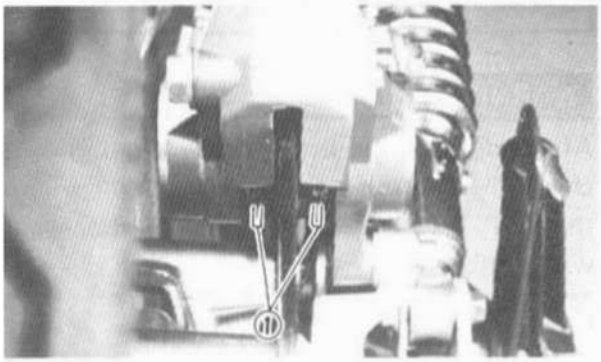

FRONT AND REAR BRAKE PAD INSPECTION

1. Activate the brake lever or brake pedal.
2. Inspect:
   - Wear indicator ①
     Indicator almost contact disc → Replace pads.
     Refer to "CHAPTER 5. CHASSIS" section.

FRONT BRAKE ADJUSTMENT

1. Loosen:
   - Locknut ①
2. Adjust:
   - Free play ⓐ
     Turn the adjuster ② until the free play ⓐ is within the specified limits.

	Free Play ⓐ : **2 ~ 5 mm (0.08 ~ 0.20 in)**

CAUTION:

Proper lever free play is essential to avoid excessive brake drag.

WARNING:

A soft or spongy feeling in the brake lever can indicate the pressence of air in the brake system.

This air must be removed by bleeding the brake system before the motorcycle is operated. Air in the system will cause greatly diminished braking capability and can result in loss of control and an accident. Inspect and bleed the system if necessary.

3. Tighten:
   - Locknut

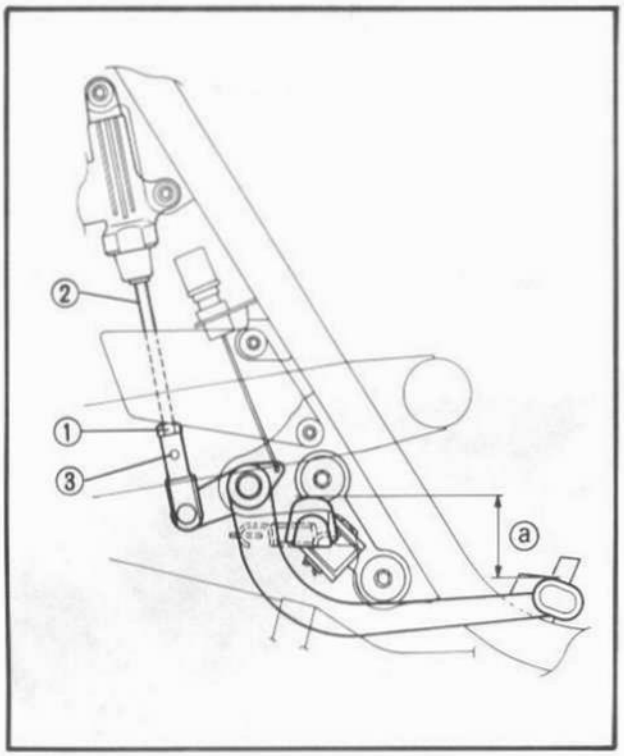

REAR BRAKE ADJUSTMENT

1. Loosen:
   - Locknut ①
2. Adjust:
   - Brake pedal height ⓐ
     Turn the adjuster ② until the brake pedal position is at the specified height.

Brake Pedal Height ⓐ :
50 mm (2.0 in)
Below the top of the footrest

WARNING:

After adjusting the brake pedal height, visually check the adjuster end through the hole ③ of the joint holder. The adjuster end must appear within this hole.

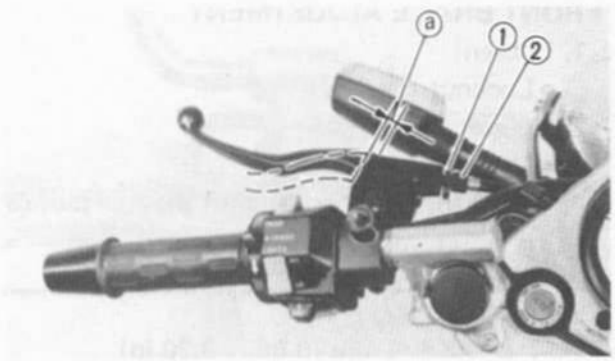

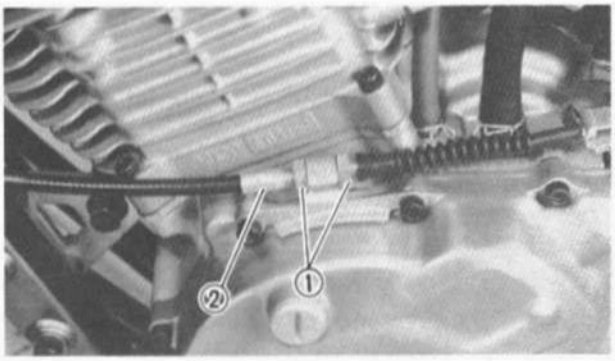

CLUTCH ADJUSTMENT

Free Play Adjustment

1. Loosen:
   - Locknuts ①
2. Adjust:
   - Free play ⓐ
     Turn the adjusters ② until the free play is within the specified limits.

Free Play ⓐ :
2 ~ 3 mm (0.08 ~ 0.12 in)

3. Tighten:
   - Locknuts

NOTE:
The above procedure provides for maximum cable free play to allow for proper clutch actuating mechanism adjustment.

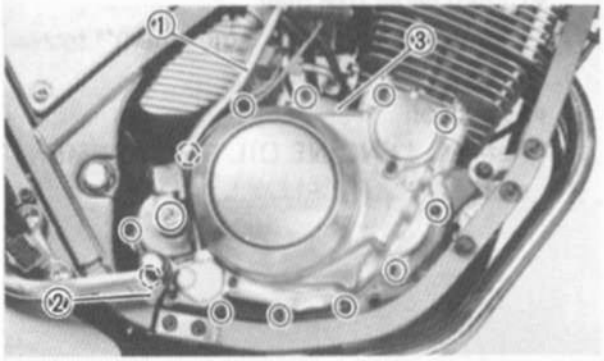

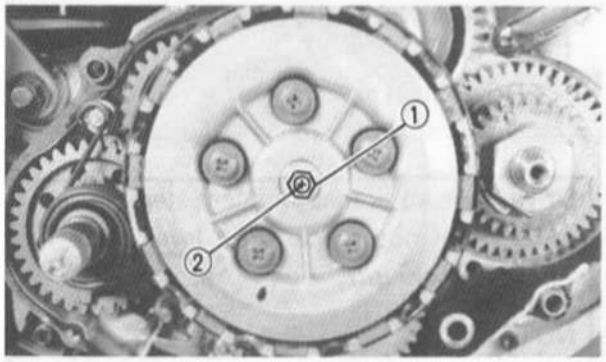

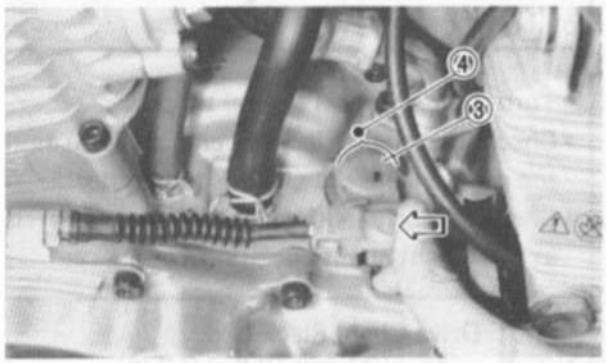

Mechanism Adjustment

1. Loosen:
   - Cable length adjuster locknuts (Fully)
2. Tighten:
   - Cable length adjusters (Until tight)
3. Remove:
   - Kick crank ①
   - Stopper (Kickcrank) ②
   - Crankcase cover (Right) ③
     Darin the engine oil.
   - Gasket
   - Dowel pins
4. Adjust:
   - Free play

Clutch mechanism free play adjustment steps:
- Loosen the locknut ①.
- Push the push lever toward the front of the engine with your finger until it stops.
- With the push lever in this position, turn the adjuster ② either in or out until the push lever mark ③ and crankcase match mark ④ are aligned.
- Tighten the locknut.

Locknut:
8 Nm (0.8 m·kg, 5.8 ft·lb)

5. Install:
   - Dowel pins
   - Gasket (New)
   - Crankcase cover (Right)

Crankcase Cover (Right):
10 Nm (1.0 m·kg, 7.2 ft·lb)

6. Install:
   - Stopper (Kick crank)
   - Kick crank

Stopper (Kick crank):
26 Nm (2.6 m·kg, 19 ft·lb)
Kick Crank:
50 Nm (5.0 m·kg, 36 ft·lb)

7. Adjust:
   - Clutch cable free play
     Refer to "Free Play Adjustment" section.
8. Apply:
   - Engine oil
     Refer to "ENGINE OIL REPLACEMENT" section.

DRIVE CHAIN SLACK CHECK

1. Measure:
   - Drive chain slack ⓐ
     Out of specification → Adjust.

Drive chain slack measurement steps:
- Place the motorcycle on a level place, and hold it in an upright position.

NOTE:
The both wheels on the ground without ride on it.

- Turn the rear wheel several times.
- Check the chain slack several times to find the point where the chain is the tightest.
- Check the chain slack when the wheel is in this "tight chain" position.

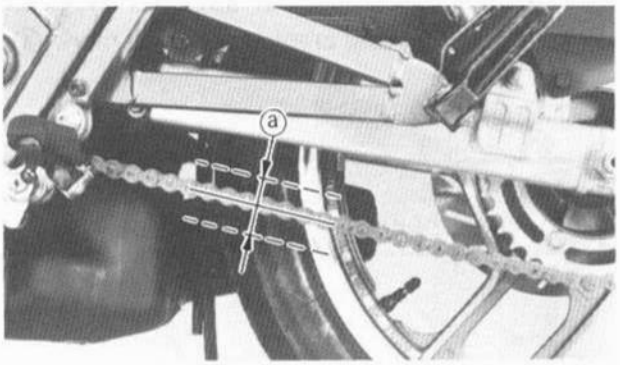

Drive Chain Slack ⓐ :
15 ~ 20 mm (0.6 ~ 0.8 in)

- If the chain slack exceeds 20 mm (0.8 in), adjust the chain slack.

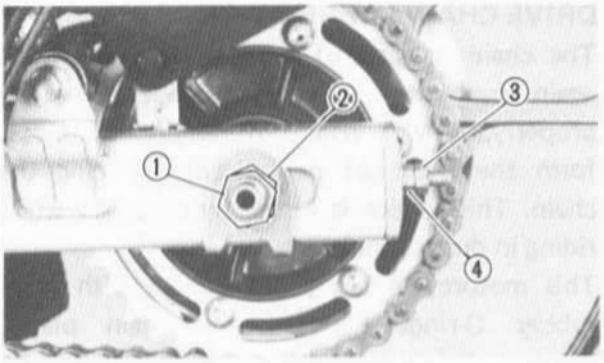

DRIVE CHAIN SLACK ADJUSTMENT

1. Adjust:
   - Drive chain slack
     Out of specification → Replace.

Drive chain slack adjustment steps:
- Remove the axle locknut ①.
- Loosen the axle nut ②.
- Loosen the locknuts ③.
- Adjust chain slack by turning the adjusters ④.

To Tighten → Turn adjuster ④ clockwise.
To Loosen → Turn adjuster ④ counterclockwise and push wheel forward.

Drive Chain Slack:
15 ~ 20 mm (0.6 ~ 0.8 in)

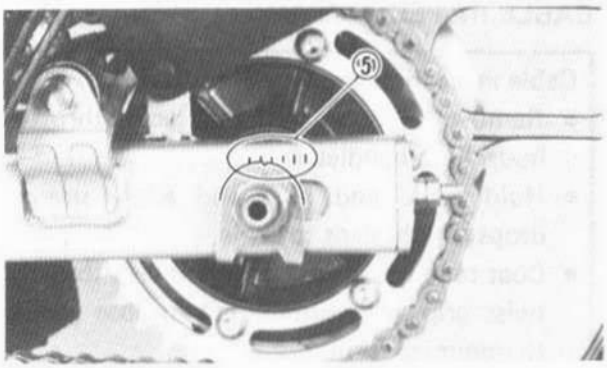

- Turn each adjuster exactly the same amount to maintain correct axle alignment. (There are marks on each side of the swing arm ⑤ and on each chain puller alignment.)

CAUTION:

Excessive chain tension will overload the engine and other vital parts; keep the tension within the specified limits.

- If the chain slack can not be adjusted, replace the sprockets and drive chain as a set.
- Tighten the axle locknut, axle nut and locknuts.

Locknuts (Chain Puller):
6 Nm (0.6 m·kg, 4.3 ft·lb)
Axle Nut:
105 Nm (10.5 m·kg, 75 ft·lb)
Locknut (Rear Axle):
60 Nm (6.0 m·kg, 43 ft·lb)

DRIVE CHAIN LUBRICATION/ CABLE INSPECTION AND LUBRICATION

DRIVE CHAIN LUBRICATION

The chain consists of many parts which work against each other. If the chain is not maintained properly, it will wear out rapidly, therefore, form the habit of periodically servicing the chain. This service is especially necessary when riding in dusty conditions.

This motorcycle has a drive chain with small rubber O-rings between the chain plates. Steam cleaning, high-pressure washes, and certain solvents can damage these O-rings. Use only kerosene to clean the drive chain. Wipe it dry, and thoroughly lubricate it with SAE 30 ~ 50W motor oil. Do not use any other lubricants on the drive chain. They may contain solvents that could damage the O-rings.

CABLE INSPECTION AND LUBRICATION

Cable inspection and lubrication steps:

- Remove the two screws that secure throttle housing to handlebar.
- Hold cable end high and apply several drops of lubricant to cable.
- Coat metal surface of disassembled throttle twist grip with suitable all-purpose grease to minimize friction.
- Check for damage to cable insulation. Replace any corroded or obstructed cables.
- Lubricate any cables that do not operate smoothly.

Yamaha Chain and Cable Lube or SAE 10W30 Motor Oil

BRAKE AND CHANGE PEDALS/BRAKE AND CLUTCH LEVERS LUBRICATION

Lubricate pivoting parts of each lever and pedal.

Yamaha Chain and Cable Lube or SAE 10W30 Motor Oil

SIDESTAND LUBRICATION

Lubricate sidestand at their pivot points.

Yamaha Chain and Cable Lube or SAE 10W30 Motor Oil

SWINGARM LUBRICATION

Lubricate the swingarm at pivot point.

Lithium Base Waterproof Wheel Bearing Grease

FRONT FORK OIL CHANGE

WARNING:

- **Fork oil leakage can cause loss of stability and safe handling. Have any problem corrected before operating the motorcycle.**
- **Securely support the motorcycle so there is no danger of it falling over.**

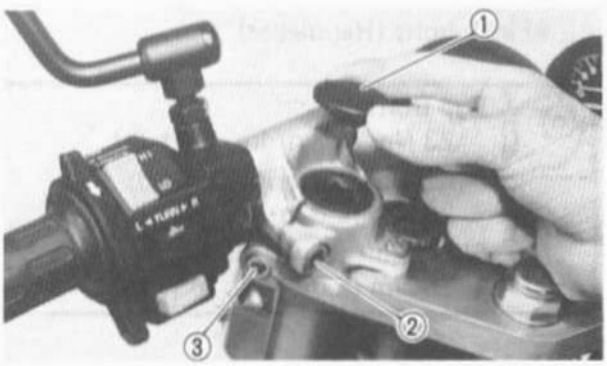

1. Place a suitable stand under the engine to raise the front wheel off the ground.
2. Remove:
   - Fork caps ①
3. Loosen:
   - Pinch bolts (Handlebar) ②
   - Pinch bolts (Steering crown) ③

FRONT FORK OIL CHANGE

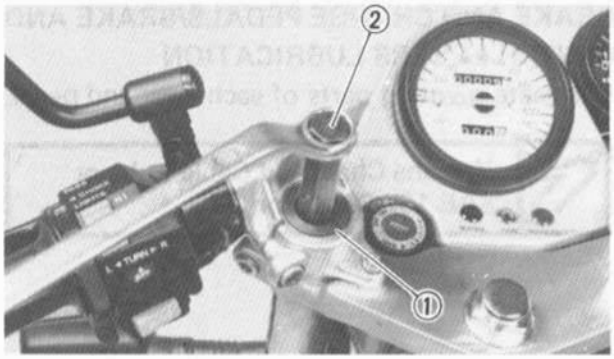

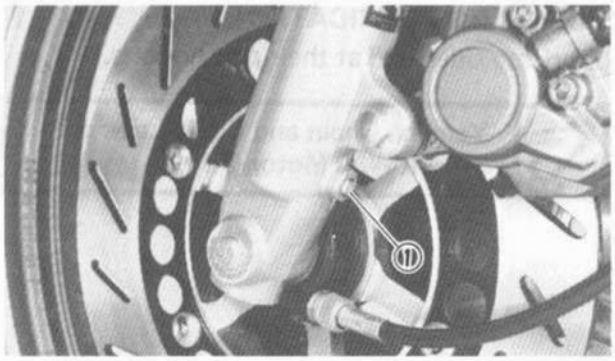

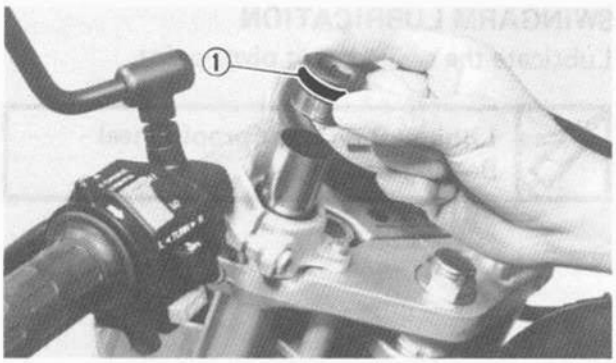

4. Remove:
   - Cap bolt ①
     Use the Front Fork Cap Socket (YM-01104) ②.
5. Place a receptacles under the drain screws.
6. Remove:
   - Drain screws ①
     Drain the fork oil.

WARNING:

Do not allow any oil to contact the disc brake components. If oil is discovered, be sure to remove it, otherwise diminished braking capacity and damage to the rubber components of the brake assembly will occur.

7. Inspect:
   - O-rings (Cap bolt) ①
   - Gaskets (Drain screw)
     Wear/Damage → Replace.
8. Install:
   - Drain screws
9. Fill:
   - Front forks

Each Fork:
321 cm³ (11.3 Imp oz, 10.9 US oz)
Yamaha fork oil 10wt or equivalent

After filling pump the forks slowly up and down to distribute the oil.

10. Tighten:
    - Cap bolt
      Use the Front Fork Cap Socket (YM-01104).
    - Pinch bolts (Steering crown)
    - Pinch bolts (Handlebar)

Cap Bolt:
23 Nm (2.3 m·kg, 17 ft·lb)
Pinch Bolt (Steering Crown):
20 Nm (2.0 m·kg, 14 ft·lb)
Pinch Bolt (Handlebar):
20 Nm (2.0 m·kg, 14 ft·lb)

11. Install:
    - Fork caps

REAR SHOCK ABSORBER ADJUSTMENT

1. Adjust:
    - Spring preload

NOTE:

The spring preload of the rear shock absorbers can be adjusted to suit rider's preference, weight, and the course condition.

WARNING:

Always adjust rear shock absorber preload to the same setting. Uneven adjustment can cause poor handling and loss of stability.

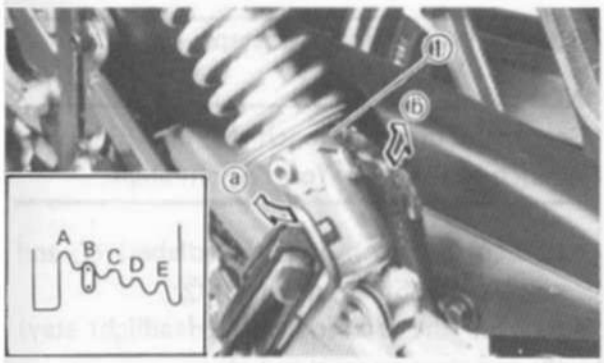

Spring preload adjustment steps:

- Using the screwdriver, adjust the spring preload.

Stiffer ⓐ → Increase the spring preload. (Turn the spring seat ⓘ clockwise.)
Softer ⓑ → Decrease the spring preload. (Turn the spring seat ⓘ counterclockwise.)

Standard Position: B
Softest Position (Minimum Position): A
Stiffest Position (Maximum Position): E

CAUTION:

Never attempt to turn the spring seat beyond the maximum or minimum setting.

STEERING HEAD INSPECTION/ STEERING HEAD ADJUSTMENT

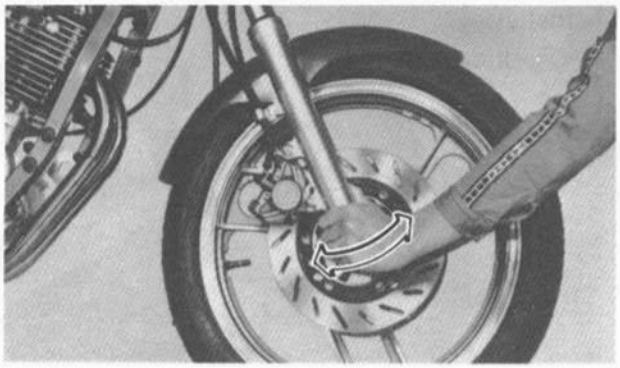

STEERING HEAD INSPECTION

WARNING:

Securely support the motorcycle so there is no danger of it falling over.

1. Elevate the front wheel by placing a suitable stand under the engine.
2. Check:
   - Steering assembly bearings
     Grasp the bottom of the forks and gently rock the fork assembly back and forth. Looseness → Adjust steering head.

STEERING HEAD ADJUSTMENT

WARNING:

Securely support the motorcycle so there is no danger of it falling over.

1. Elevate the front wheel by placing a suitable stand under the engine.
2. Adjust:
   - Steering head tightening condition

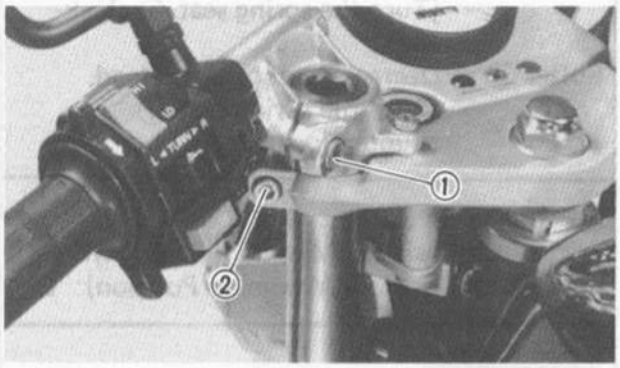

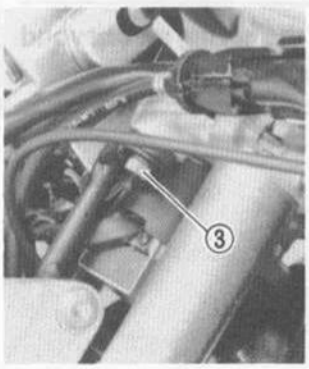

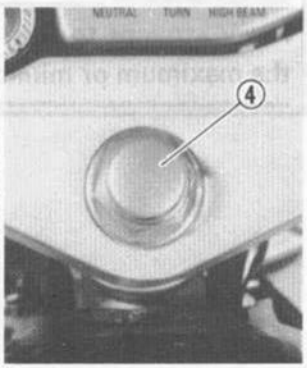

Steering head adjustment steps:

NOTE:
Set the Torque Wrench to the Ring Nut Wrench so that they form a right angle.

- Loosen the pinch bolts (Handlebar) ① and pinch bolts (Steering crown) ②.
- Remove the securing nuts (Headlight stay) ③ and steering stem nut ④.
- Lift up the steering crown.

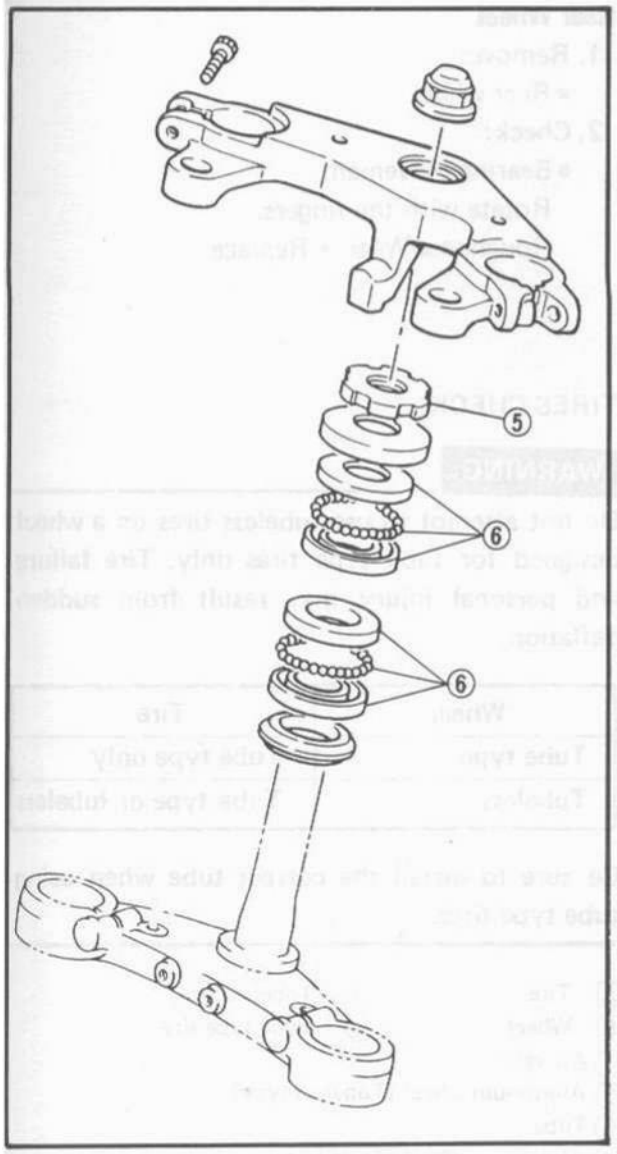

- Tighten the ring nut ⑤ using the Ring Nut Wrench (YU-01268).

Ring Nut (Initial Tightening):
38 Nm (3.8 m·kg, 27 ft·lb)

- Loosen the ring nut one turn.
- Retighten the ring nut using the Ring Nut Wrench.

WARNING:

Avoid over-tightening.

Ring Nut (Final Tightening):
10 Nm (1.0 m·kg, 7.2 ft·lb)

- Check the steering stem by turning it lock to lock. If there is any binding, remove the steering stem assembly and inspect the steering bearings ⑥.
  See "CHAPTER 5. STEERING HEAD" for more details.
- Push down the steering stem.
- Install the securing nuts (Headlight stay) and steering stem nut.

Steering Stem Nut:
110 Nm (11.0 m·kg, 80 ft·lb)

- Tighten the pinch bolts (Steering crown) and pinch bolts (Handlebar).

Pinch Bolts (Steering Crown):
20 Nm (2.0 m·kg, 14 ft·lb)
Pinch Bolts (Handlebar):
20 Nm (2.0 m·kg, 14 ft·lb)

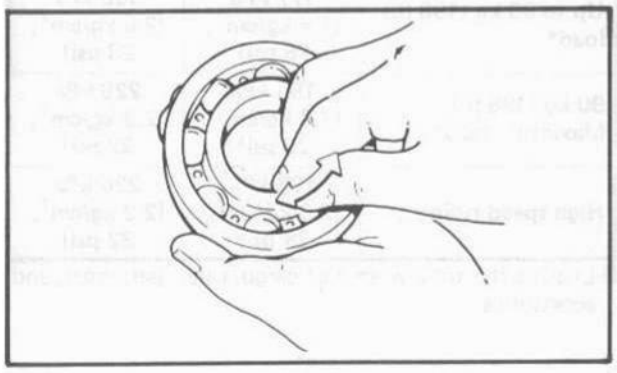

WHEEL BEARINGS CHECK

Front Wheel

1. Check:
   - Front wheel bearings
     Raise the front end of the motorcycle, and spin the wheel by hand. Touch the axle or front fork while spinning the wheel.
     Excessive vibration → Replace bearings.

Rear Wheel

1. Remove:
   - Rear wheel
2. Check:
   - Bearing movement
     Rotate with the fingers.
     Roughness/Wear → Replace.

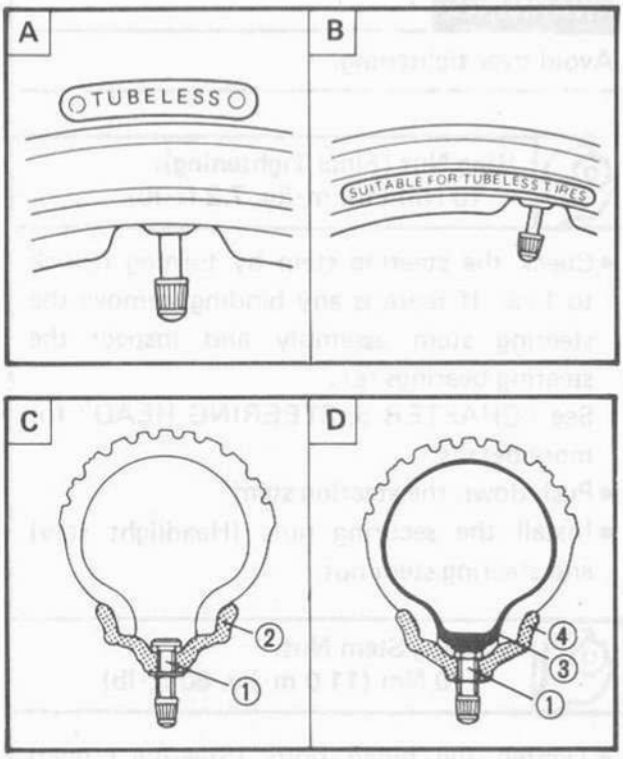

TIRES CHECK

WARNING:

Do not attempt to use tubeless tires on a wheel designed for tube type tires only. Tire failure and personal injury may result from sudden deflation.

Wheel	Tire
Tube type	Tube type only
Tubeless	Tube type or tubeless

Be sure to install the correct tube when using tube type tires.

A Tire
B Wheel
C Tubeless tire
D Tube type tire
① Air valve
② Aluminum wheel (Tubeless type)
③ Tube
④ Aluminum wheel (Tube type)

1. Measure:
   - Tire pressure
     Out of specification → Adjust.

Basic weight: With oil and full fuel tank	SRX600S: 176 kg (388 lb) SRX600SC: 176.5 kg (389 lb)	
Maximum load*	SRX600S: 204 kg (450 lb) SRX600SC: 203.5 kg (449 lb)	
Cold tire pressure	Front	Rear
Up to 90 kg (198 lb) load*	177 kPa (1.8 kg/cm², 26 psi)	196 kPa (2.0 kg/cm², 28 psi)
90 kg (198 lb) ~ Maximum load*	196 kPa (2.0 kg/cm², 28 psi)	226 kPa (2.3 kg/cm², 32 psi)
High speed riding	196 kPa (2.0 kg/cm², 28 psi)	226 kPa (2.3 kg/cm², 32 psi)

* Load is the total weight of cargo, rider, passenger, and accessories.

WARNING:

- **Tire inflation pressure should be checked and adjusted when the temperature of the tire equals the ambient air temperature. Tire inflation pressure must be adjusted according to total weight of cargo, rider, passenger, and accessories (fairing, saddlebargs, etc. if approved for this model), and vehicle speed.**
- **Proper loading of your motorcycle is important for the handling, braking and other performance and safet characteristics of your motorcycle. Do not carry loosely packed items that can shift. Securely pack your heaviest items close to the center of the motorcycle, and destribute the weight evenly from side to side. Properly adjust the suspension for your load, and check the condition and pressure of your tires. NEVER OVERLOAD YOUR MOTORCYCLE. Make sure the total weight of the cargo, rider, passenger, and accessories (fairing, saddlebags, etc. if approved for this model) does not exceed the maximum load of the motorcycle. Operation of an overloaded motorcycle could cause tire damage, an accident, or even injury.**

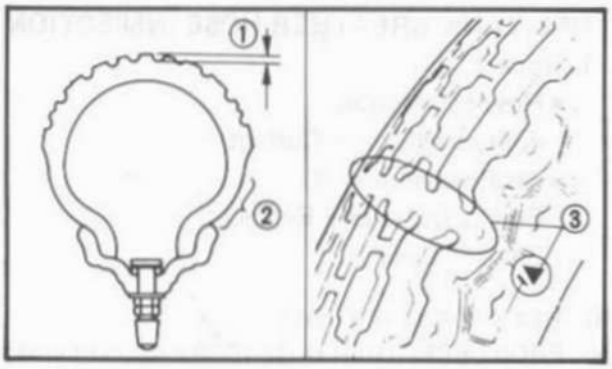

2. Inspect:
   - Tire surfaces
     Wear/Damage → Replace.

Minimum Tire Tread Depth:
(Front and Rear)
1.0 mm (0.04 in)

① Tread depth
② Side wall
③ Wear indicator

WARNING:

- **It is dangerous to ride with a wornout tire. When a tire tread begins to show lines, replace the tire immediately.**
- **Patching a punctured tube is not recommended. If it is absolutely necessary to do so, use great care and replace the tube as soon as possible with a good quality replacement.**

WHEELS CHECK/FUEL TANK BREATHER HOSE INSPECTION

WHEELS CHECK

1. Inspect:
   - Aluminum wheels
     Damage/Bends → Replace.

NOTE:

Always balance the wheel when a tire or wheel has been changed or replaced.

WARNING:

Never attempt even small repairs to the wheel.

2. Tighten:
   - Valve stem locknut

	Valve Stem Locknut: 1.5 Nm (0.15 m·kg, 1.1 ft·lb)

WARNING:

Ride conservatively after installing a tire to allow it to seat itself properly on the rim.

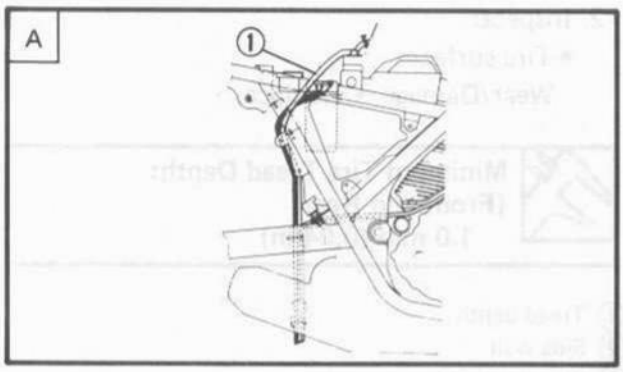

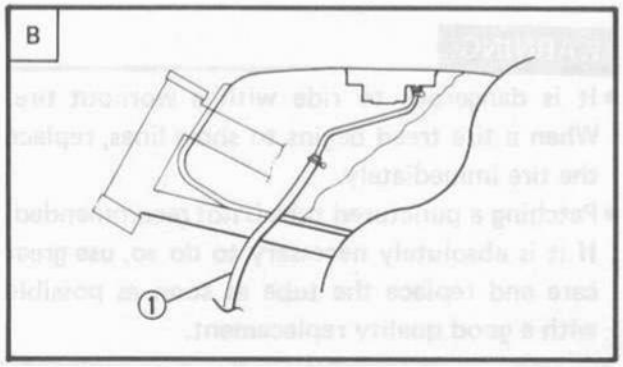

FUEL TANK BREATHER HOSE INSPECTION

1. Inspect:
   - Hose connection
     Poor condition → Correct.
   - Breather hose(s) ①
     Cracks/Damage → Replace.
     Clogs → Clean.

A REAR BREATHER HOSE
B FRONT BREATHER HOSE (FOR CALIFORNIA)

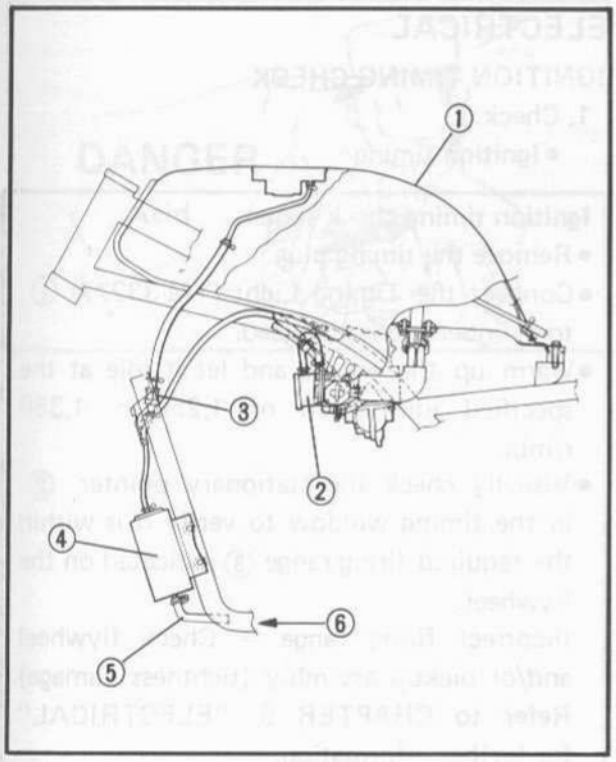

CANISTER INSPECTION (FOR CALIFORNIA)

1. Inspect:
   - Hose connection
     Poor condition → Correct.
   - Hoses
   - Canister
     Cracks/Damage → Replace.
     Clogs → Clean.

① Fuel tank
② Carburetor
③ Roll over valve
④ Canister
⑤ Face hose toward the backward
⑥ To atmosphere

ELECTRICAL

IGNITION TIMING CHECK

1. Check:
   - Ignition timing

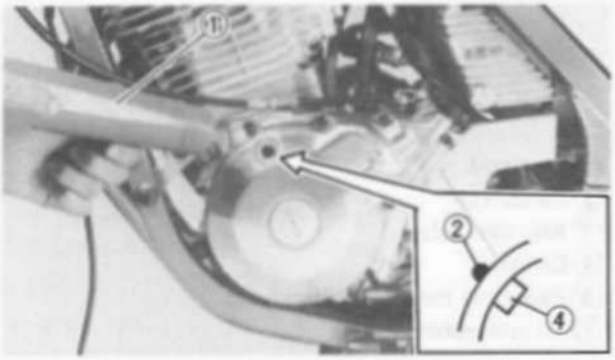

Ignition timing check steps:
- Remove the timing plug.
- Connect the Timing Light (YM-33277) ① to cylinder spark plug lead.
- Warm up the engine and let it idle at the specified idle speed of 1,250 ~ 1,350 r/min.
- Visually check the stationary pointer ② in the timing window to verify it is within the required firing range ③ indicated on the flywheel.
  Incorrect firing range → Check flywheel and/or pickup assembly (tightness damage) Refer to CHAPTER 6, "ELECTRICAL" for further information.

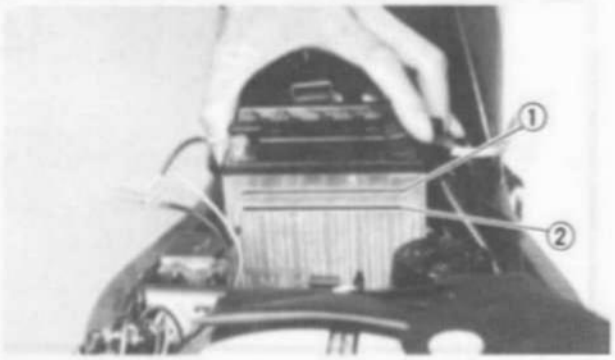

BATTERY INSPECTION

1. Check:
   - Battery fluid level
     Incorrect → Refill.
     Fluid level should be between upper and lower level marks.

① Upper level
② Lower level

CAUTION:

Refill with distilled water only; tap water contains minerals harmful to a battery.

WARNING:

Battery electrolyte is dangerous; it contains sulfuric acid and therefore is poisonous and highly caustic.

BRAKE LIGHT SWITCH ADJUSTMENT/ SPARK PLUG INSPECTION

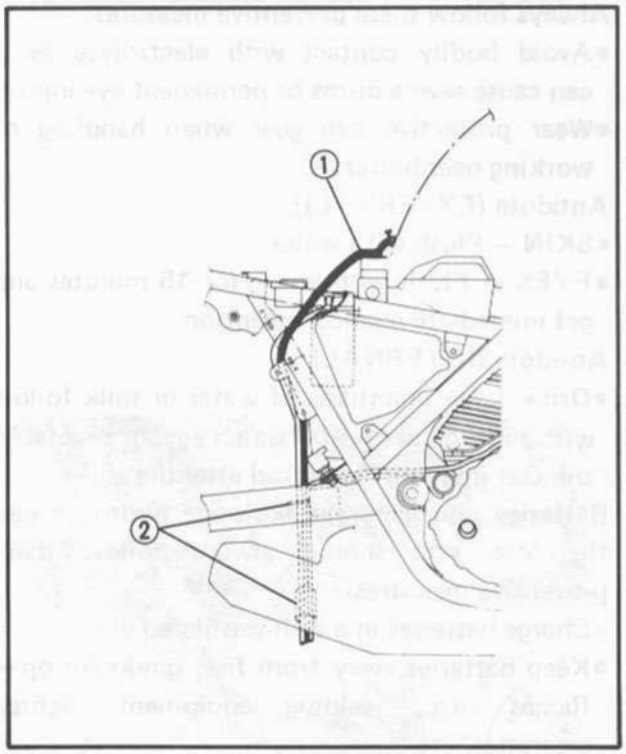

CAUTION:

When inspecting the battery, be sure the breather hose is routed correctly. If the breather hose touches the frame or exits in such a way as to cause battery electrolyte or gas to exit onto the frame, structural and cosmetic damage to the motorcycle can occur.

① Battery
② Pass through guide

6. Inspect:
   - Breather hose
     Obstruction → Remove.
     Damage → Replace.

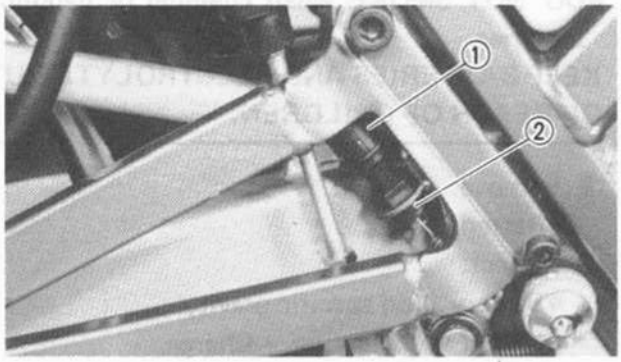

BRAKE LIGHT SWITCH ADJUSTMENT

1. Adjust:
   - Brake light operating timing
     Hold the main body ① of the switch with your hand so that it does not rotate, and turn the adjuster ② until the operating timing is correct.

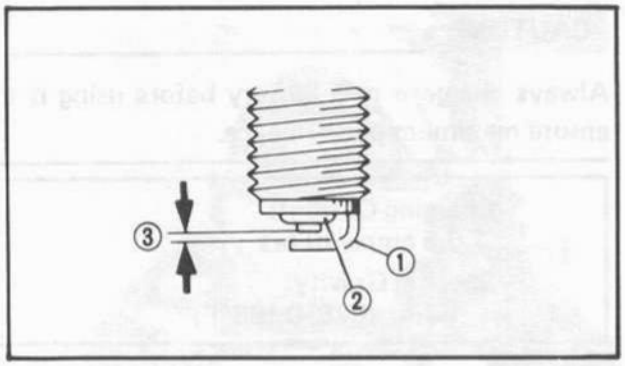

SPARK PLUG INSPECTION

1. Inspect:
   - Electrode ①
     Wear/Damage → Replace.
   - Insulator color ②
     Normal condition is a medium to light tan color.
     Distinctly different color → Check the engine condition.

③ Spark plug gap

2. Clean:
   - Spark plug
     Clean the spark plug with a spark plug cleaner or wire brush.
3. Inspect:
   - Spark plug type
     Incorrect → Replace

Standard Spark Plug:
DP8EA-9 (NGK) or
X24EP-U9 (N.D.)

4. Measure:
   - Spark plug gap
     Out of specification → Regap.
     Use a wire gauge.

Spark Plug Gap:
0.8 ~ 0.9 mm (0.031 ~ 0.035 in)

5. Tighten:
   - Spark Plug

NOTE:

Before installing a spark plug, clean the gasket surface and plug surface.

Spark Plug:
17.5 Nm (1.75 m·kg, 12.5 ft·lb)

NOTE:

If a torque wrench is not available when you are installing a spark plug, a good estimate of the correct torque is 1/4 to 1/2 turns part finger tight. Have the spark plug torqued to the correct value as soon as possible with a torque wrench.

HEADLIGHT BULB REPLACEMENT

1. Remove:
   - Headlight lens unit ①
2. Disconnect:
   - Headlight lens unit leads

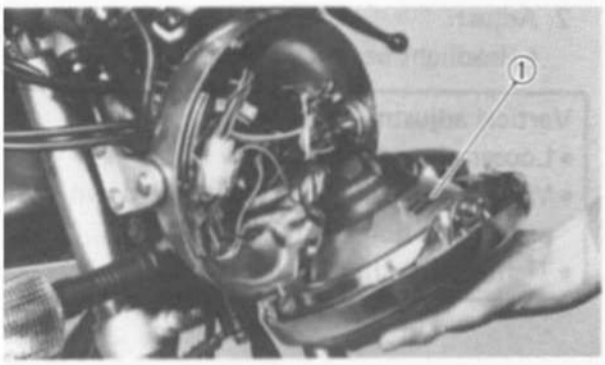

3. Remove:
   - Bulb
     Turn the bulb holder ① counterclockwise to release bulb.

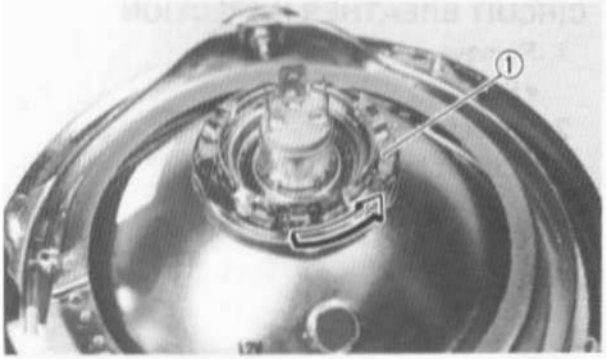

WARNING:

Do not touch headlight bulb when it is on as the bulb generates enormous heat; keep flammable objects away.

HEADLIGHT BEAM ADJUSTMENT

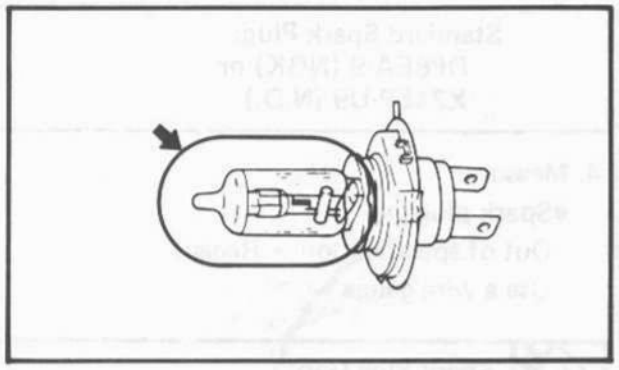

4. Install:
   - Bulb (New)

   Secure the new bulb with the bulb holder.

CAUTION:

Avoid touching glass part of bulb. Also keep it free from oil otherwise, transparency of glass, bulb life and illuminous flux will be adversely affected. If oil gets on bulb, clean it with a cloth moistened thoroughly with alcohol or lacquer thinner.

5. Connect:
   - Headlight lens unit leads
6. Install:
   - Headlight lens unit
7. Adjust:
   - Headlight beam

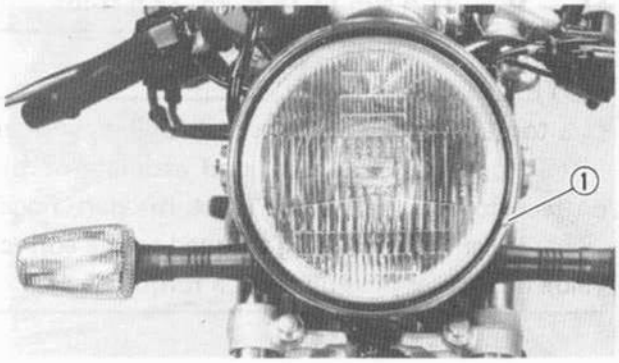

HEADLIGHT BEAM ADJUSTMENT

1. Adjust:
   - Headlight beam (Horizontally)

	Horizontal Adjustment
Right	Turn adjusting screw ① clockwise
Left	Turn adjusting screw ① counterclockwise

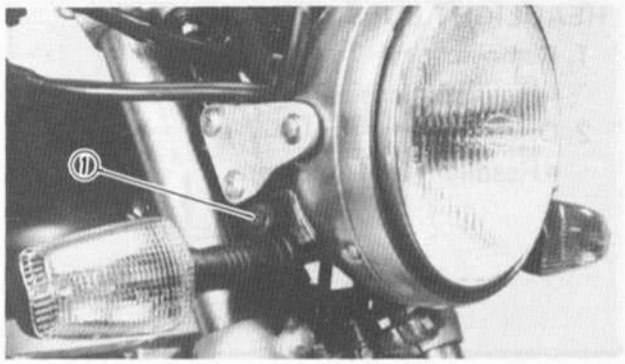

2. Adjust:
   - Headlight beam (Vertically)

Vertical adjustment steps:
- Loosen the adjusting screw ①.
- Move the headlight body up or down until proper position is attained.
- Tighten the adjusting screw.

CIRCUIT BREATHER INSPECTION

1. Remove:
   - Seat
2. Inspect:
   - Circuit breaker

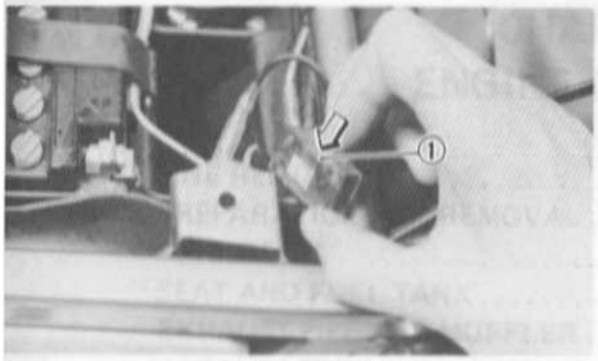

Circuit breaker inspection steps:

- Turn off the ignition switch and switch in the circuit in question.
- Push in the breaker knob ①.

CAUTION:

Wait 30 seconds before resetting the circuit breaker.

- Turn on the switches and see if the electrical device operates.
  Circuit breaker interrupts the circuit again → Check electrical system.
  Refer to "CHAPTER 6. ELECTRICAL" for further information.

CHAPTER 3.
ENGINE OVERHAUL

ENGINE REMOVAL 3-1
- PREPARATION FOR REMOVAL 3-1
- CANISTER 3-1
- SEAT AND FUEL TANK 3-2
- EXHAUST PIPE AND MUFFLER 3-2
- CARBURETOR 3-3
- VENTILATION HOSE AND CLUTCH CABLE 3-3
- WIRING 3-4
- OIL TANK AND DRIVE CHAIN 3-4
- ENGINE REMOVAL 3-5

DISASSEMBLY 3-7
- CYLINDER HEAD 3-7
- CYLINDER 3-8
- PISTON 3-8
- CDI MAGNETO 3-9
- CLUTCH 3-10
- OIL PUMP 3-13
- KICK AXLE 3-13
- SHIFT SHAFT 3-13
- CRANKCASE 3-14
- TRANSMISSION 3-15
- CRANKSHAFT 3-16
- OIL STRAINER 3-16

INSPECTION AND REPAIR 3-17
- ROCKER ARMS AND ROCKER ARM SHAFT 3-17
- CAMSHAFT 3-18
- CAM CHAIN 3-18
- CAM SPROCKET AND CAM DRIVE SPROCKET 3-18
- CHAIN DAMPERS 3-19
- CAM CHAIN TENSIONER 3-19
- CYLINDER HEAD 3-19
- VALVE, VALVE GUIDE, AND VALVE SEAT 3-20
- CYLINDER 3-27
- PISTON, PISTON RING, AND PISTON PIN 3-28
- KICK STARTER 3-30
- PRIMARY GEARS 3-31
- CLUTCH 3-31
- OIL PUMP 3-32
- CRANKSHAFT 3-33
- DRIVE GEAR 3-34
- TRANSMISSION 3-35
- BEARINGS 3-36
- CIRCLIPS AND WASHERS 3-36

ENGINE ASSEMBLY AND ADJUSTMENT 3-37
CRANKSHAFT 3-37
BALANCER AND OIL STRAINER 3-37
SHIFTER AND TRANSMISSION 3-40
CRANKCASE 3-41
SHIFT SHAFT 3-42
KICK AXLE 3-42
OIL PUMP 3-43
CLUTCH 3-44
PISTON 3-48
CYLINDER 3-48
CYLINDER HEAD 3-50
CDI MAGNETO 3-54
REMOUNTING ENGINE 3-55

ENGINE OVERHAUL

ENGINE REMOVAL

NOTE:

It is not necessary to remove the engine in order to remove the following components:

- Cylinder head
- Cylinder
- Piston

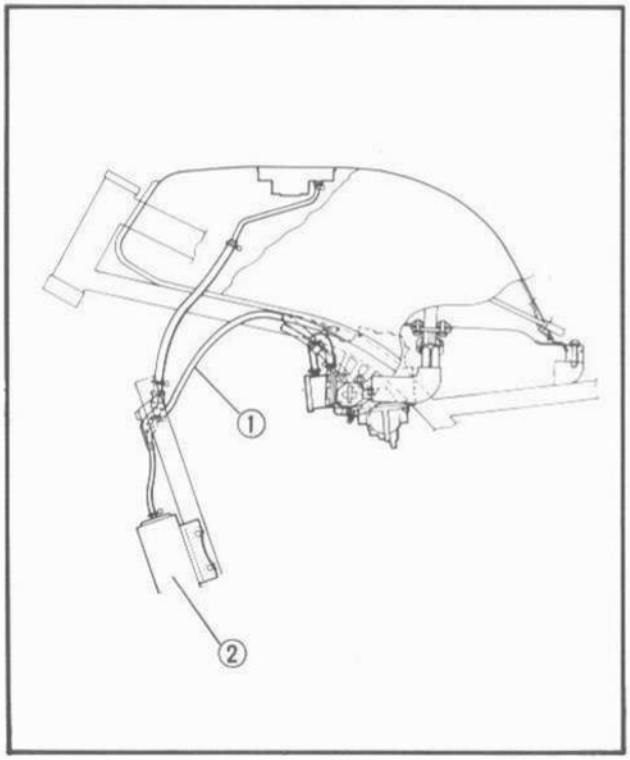

PREPARATION FOR REMOVAL

1. Remove all dirt, mud, dust, and foreign material before removal and disassembly.
2. Use proper tools and cleaning equipment. Refer to "CHAPTER 1. GENERAL INFORMATION-SPECIAL TOOLS" section.

NOTE:

When disassembling the engine, keep mated parts together. This includes gears, cylinders, pistons, and other parts that have been "mated" through normal wear. Mated parts must be reused as an assembly or replaced.

3. During engine disassembly, clean all parts and place them in trays in the order of disassembly. This will speed up assembly time and help assure that all parts are correctly reinstalled in the engine.
4. Start the engine and allow it to warm up.
5. Drain the engine oil completely. Refer to "CHAPTER 2. PERIODIC INSPECTIONS AND ADJUSTMENTS – ENGINE OIL REPLACEMENT" section.

CANISTER (FOR CALIFORNIA)

1. Disconnect:
   - Hoses (Canister) ①
2. Remove:
   - Canister ②

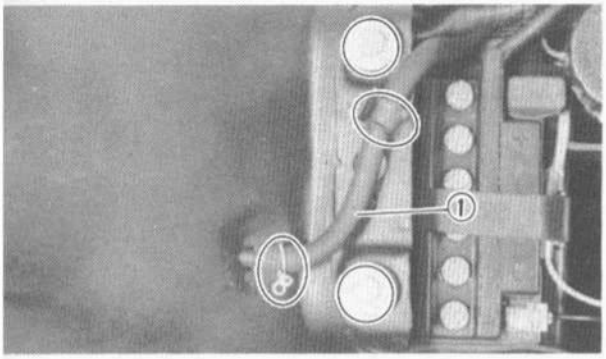

SEAT AND FUEL TANK

1. Remove:
   - Seat
   - Bolts (Fuel tank)
2. Disconnect:
   - Breather hose (Fuel tank – Rear) ①
     Slowly lift up the fuel tank.

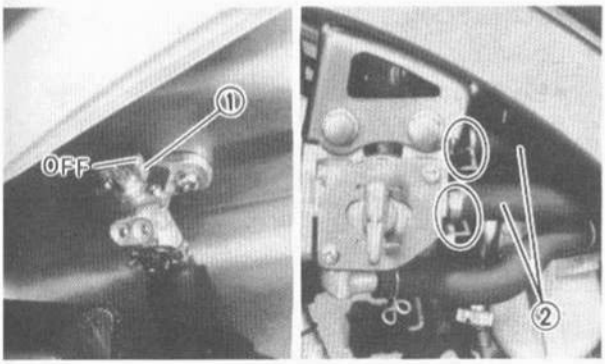

3. Turn the sub fuel cock lever ① to "OFF".
4. Disconnect:
   - Fuel hoses (Main fuel cock) ②
   - Breather hose (Fuel tank – Front) ③
     (For California)
5. Remove:
   - Fuel tank

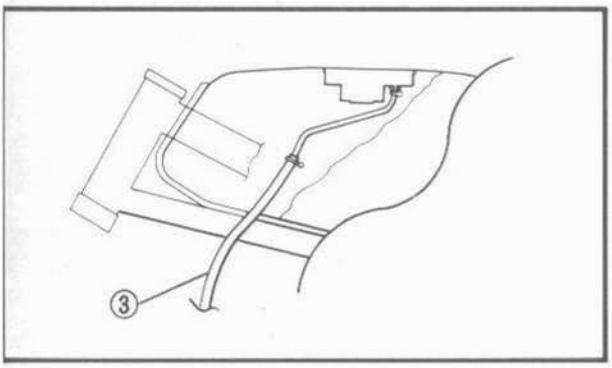

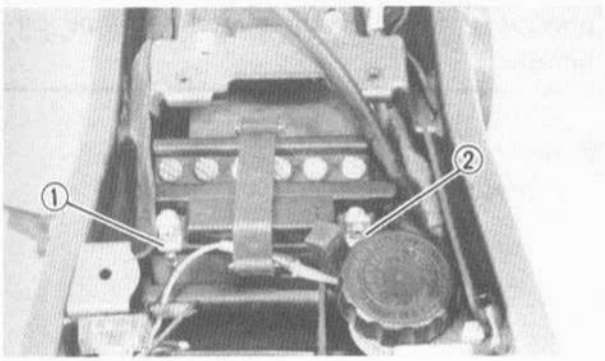

6. Disconnnect:
   - Battery negative lead ①
   - Battery positive lead ②

NOTE:
Disconnect the negative lead ① first.

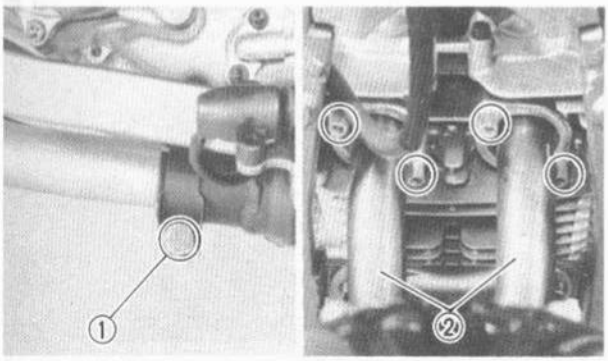

EXHAUST PIPE AND MUFFLER

1. Loosen:
   - Bolts (Muffler band) ①
2. Remove:
   - Exhaust pipes ②

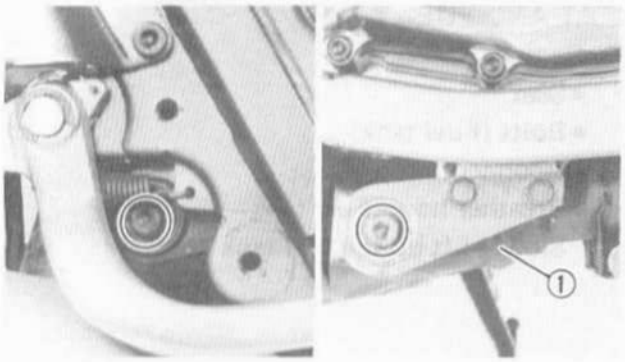

3. Remove:
   - Footrest (Right)
   - Muffler ①

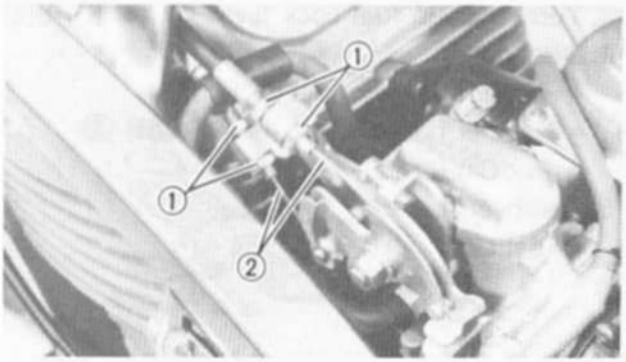

CARBURETOR

1. Loosen:
   - Locknuts ①
2. Remove:
   - Throttle cables ②

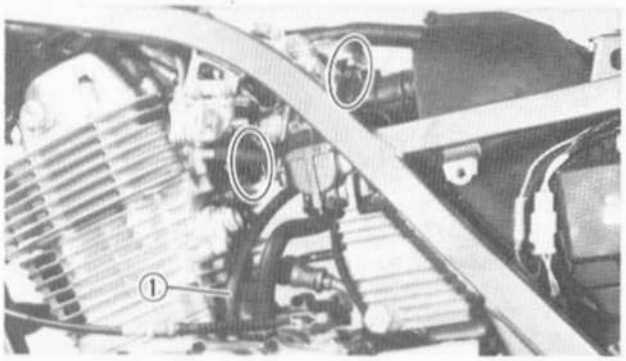

3. Remove:
   - Side covers (Left and right)
   - Hose (Oil tank) ①
   - All hoses
   - Carburetor

NOTE:

- Noting the presence, location, and routing of all vent and overflow tubes, remove the carburetor.
- Cover the carburetor with a clean rag to prevent dirt or foreign matter into the carburetor.

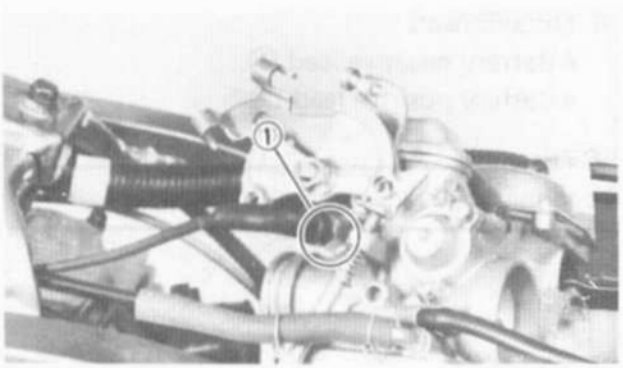

4. Remove:
   - Starter plunger ①

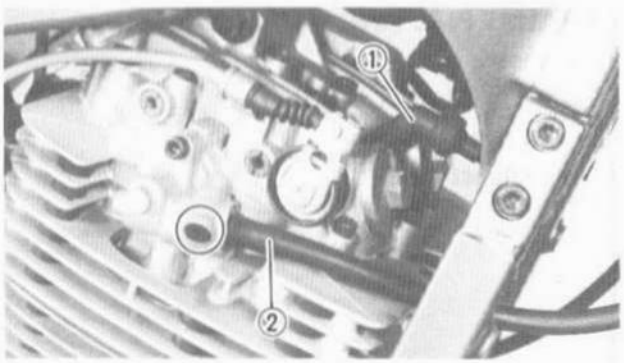

VENTILATION HOSE AND CLUTCH CABLE

1. Remove:
   - Spark plug cap ①
   - Tachometer cable ②

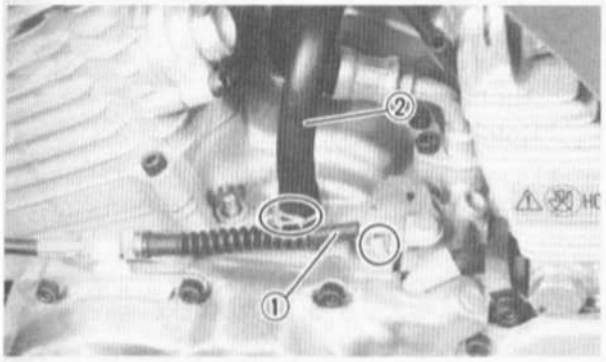

2. Disconnect:
   - Clutch cable ①
     First disconnect the handlebar lever side, and then crankcase side.
   - Ventilation hose ②

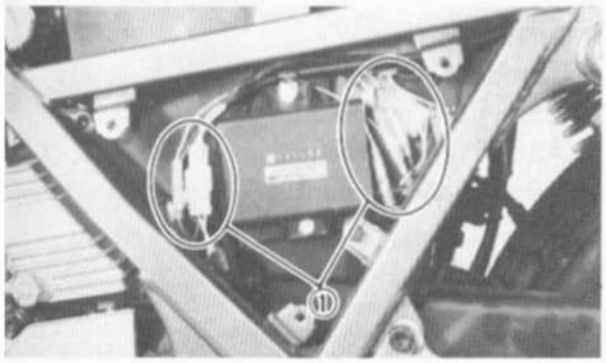

WIRING

1. Disconnect:
   - CDI magneto leads ①

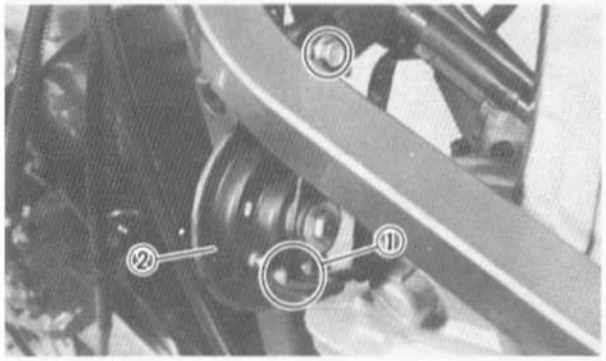

2. Disconnect:
   - Horn leads ①
3. Remove:
   - Horn ②

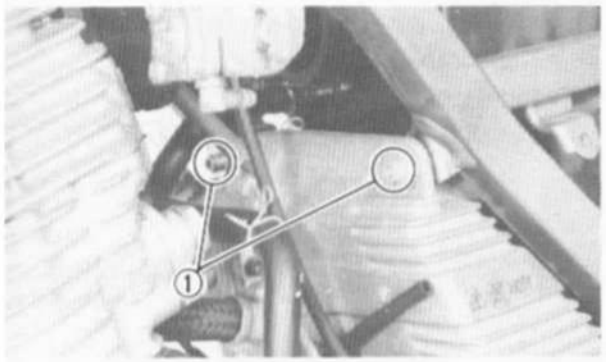

OIL TANK AND DRIVE CHAIN

1. Remove:
   - Bolts (Oil tank) ①

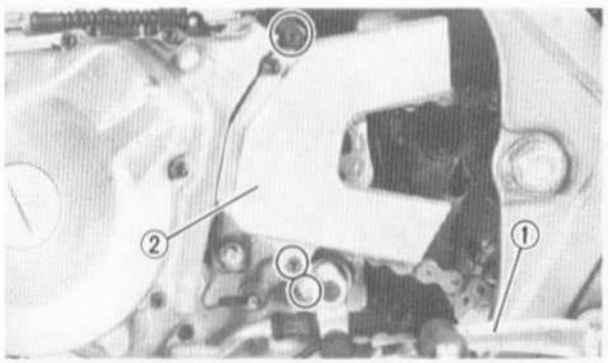

2. Remove:
   - Change pedal ①
   - Sprocket cover ②

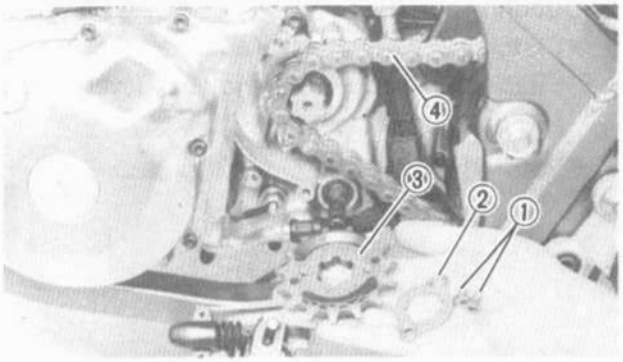

3. Remove:
   - Bolts (Drive sprocket) ①
     Apply the rear brake.
   - Holding plate ②
   - Drive sprocket ③
   - Drive chain ④

NOTE:

Before removing the drive sprocket and drive chain, increase the drive chain slack.

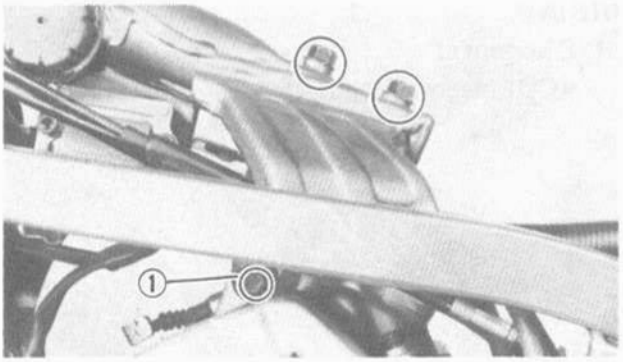

ENGINE REMOVAL

1. Remove:
   - Stay (Engine mounting – Top) ①
   - Stays (Engine mounting – Front) ②, ③
   - Bolt (Engine mounting – Front) ④

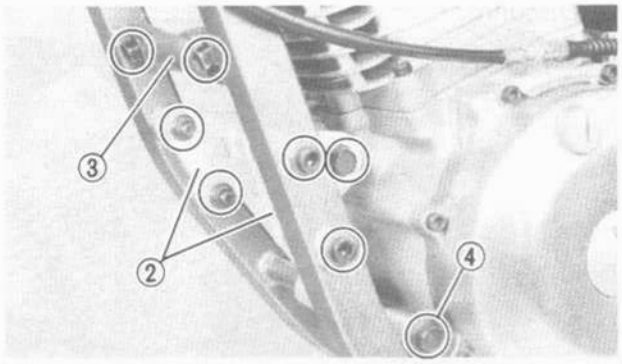

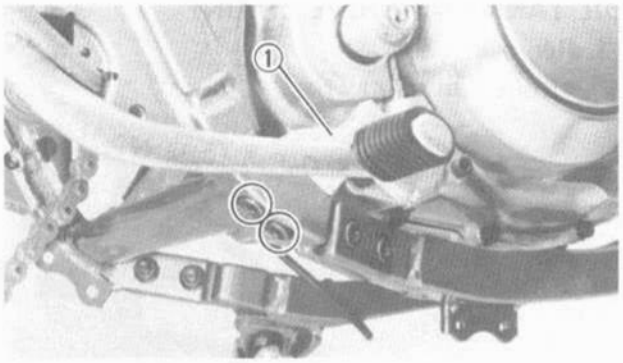

2. Remove:
   - Kick crank stopper ①
   - Sidestand switch
   - Down tubes (Left and right) ②

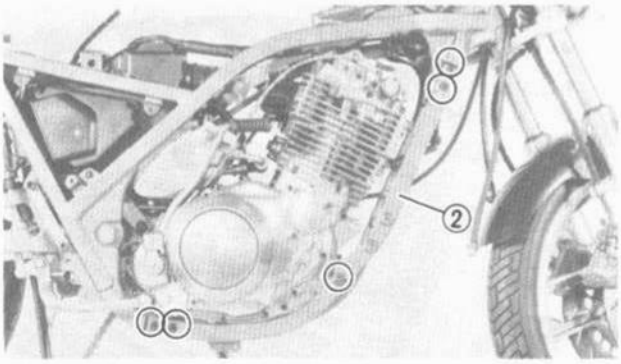

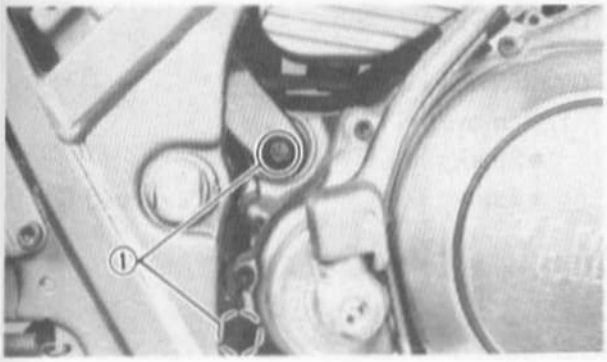

3. Place a suitable stand under the engine.
4. Remove:
   - Bolts (Engine mounting – Rear) ①

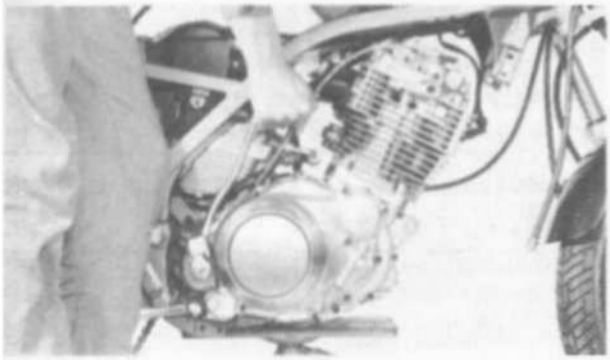

5. Remove:
   - Engine
     To the right.

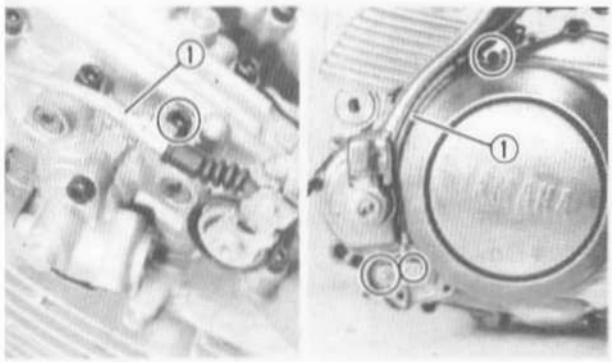

6. Remove:
   - Decompression cable ①

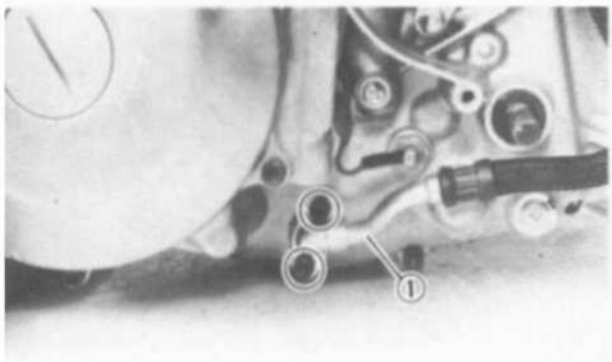

7. Remove:
   - Oil hose (Inlet) ①
   - Oil hose (Outlet) ②
8. Remove:
   - Oil tank

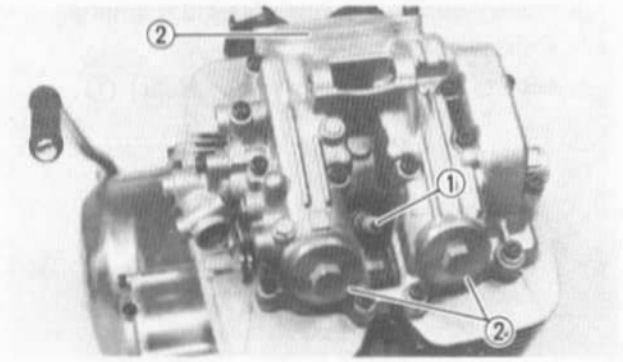

DISASSEMBLY

CYLINDER HEAD

1. Remove:
   - Spark plug ①
   - Tappet covers (Intake and exhaust) ②

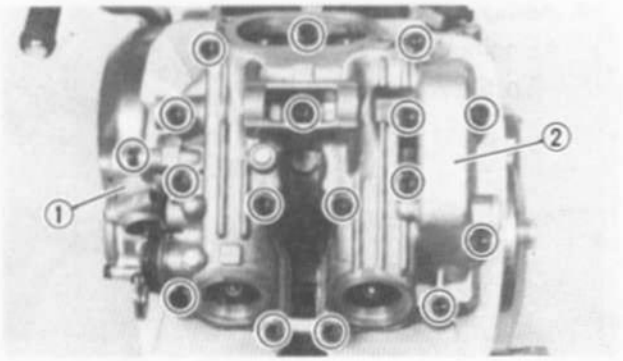

2. Remove:
   - Tachometer gear housing ①
   - Cylinder head cover ②

NOTE:
Loosen the bolts in this stage, using a criss-cross pattern.

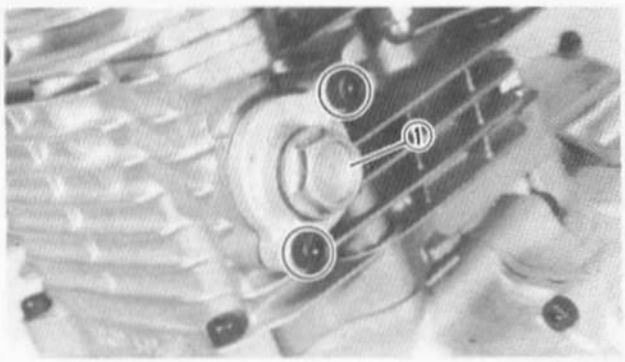

3. Loosen:
   - End plug (Cam chain tensioner) ①
4. Remove:
   - Cam chain tensioner body
   - Gasket (Cam chain tensioner)
   - Cam chain damper (Front) ②
   - Dowel pins ③

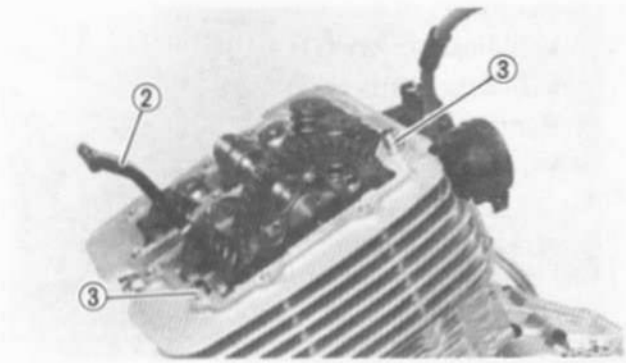

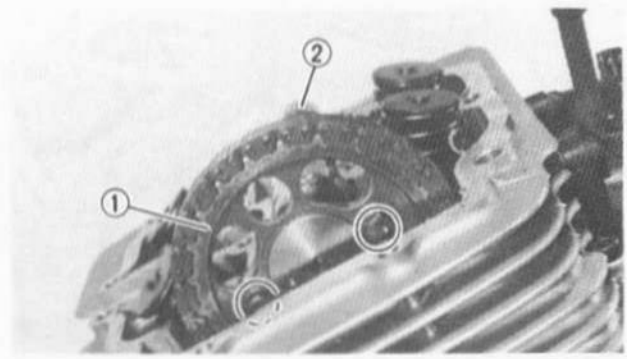

5. Remove:
   - Cam sprocket ①

NOTE:
When removing the cam sprocket, it is not necessary to separate the cam chain.

   - Camshaft ②

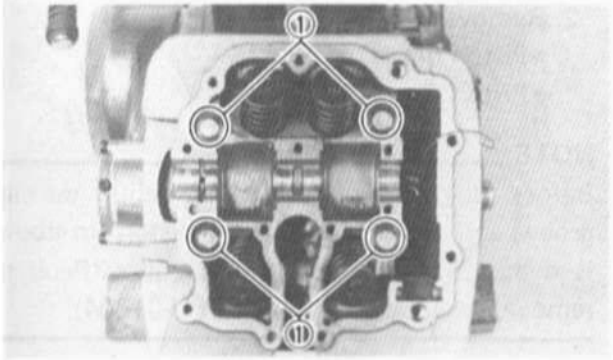

6. Remove:
   - Bolts (Cylinder head) ①
   - Nuts (Cylinder head) ②
   - Cylinder head
   - Gasket (Cylinder head)
   - Dowel pins
   - O-ring

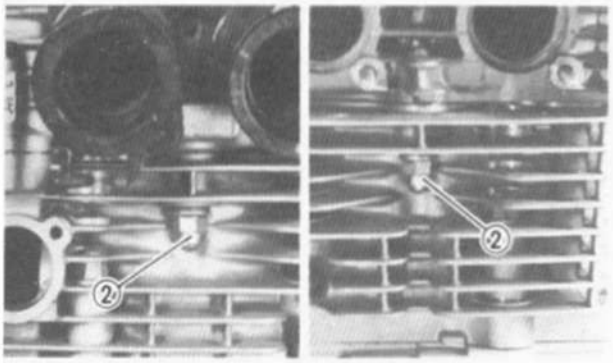

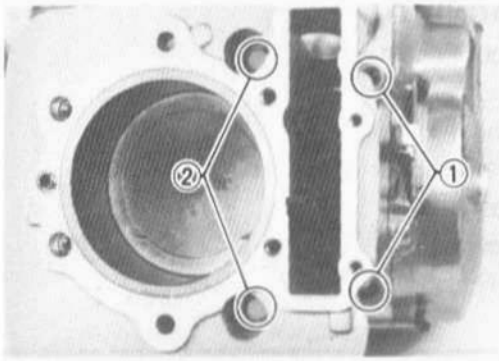

CYLINDER

1. Remove:
   - Bolts (Cylinder) ①
   - Nuts (Cylinder) ②
   - Cylinder

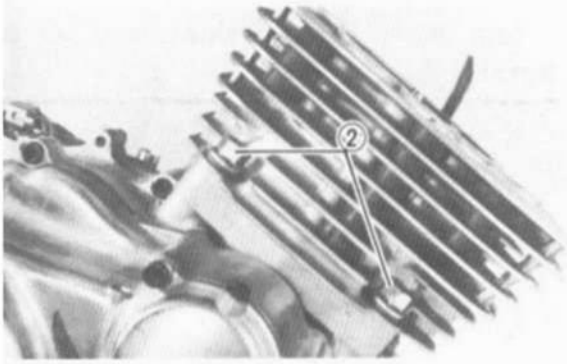

PISTON

1. Remove:
   - Piston pin clip ①

NOTE:

Before removing the piston pin clip, cover the crankcase with a clean rag so you will not accidentally drop the clip into the crankcase.

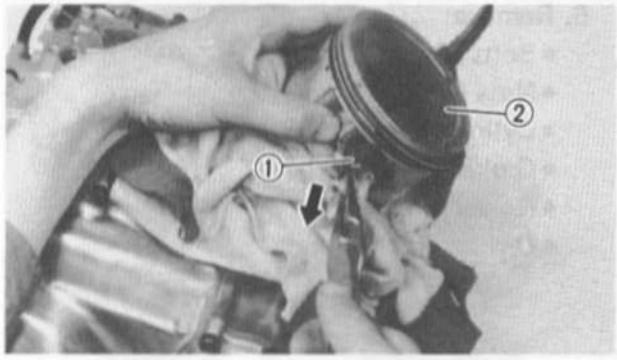

2. Remove:
   - Piston pin ①
   - Piston ②

NOTE:

Before removing the piston pin, deburr the clip groove and pin hole area. If the piston pin groove is deburred and piston pin is still difficult to remove, use Piston Pin Puller (YU-01304).

CAUTION:

Do not use a hammer to drive the piston pin out.

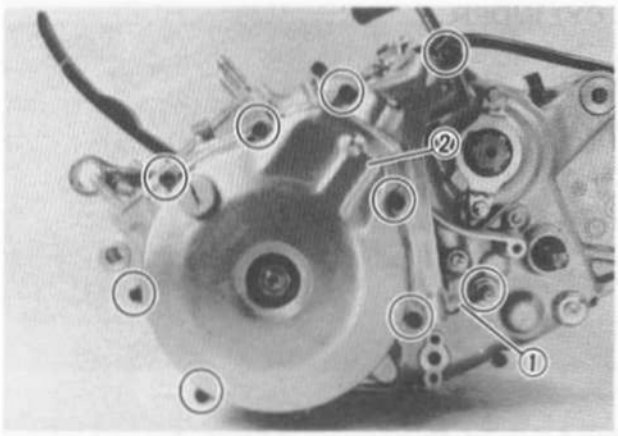

CDI MAGNETO

1. Disconnect:
   - Neutral switch lead ①
2. Remove:
   - Crankcase cover (Left) ②
   - Gasket
   - Dowel pins
   - O-rings

NOTE:

Working in a crisscross pattern, loosen the bolts 1/4 turn each. Remove them after all are loosened.

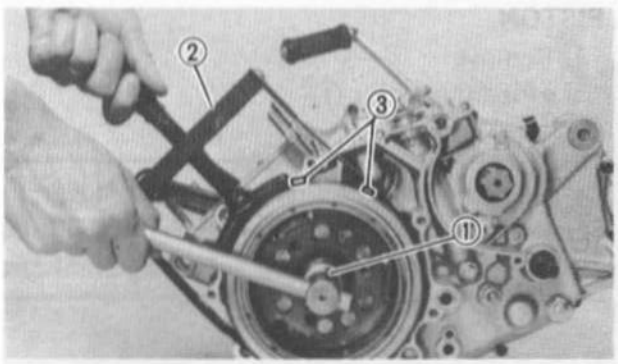

3. Remove:
   - Nut (Rotor) ①
     Using the Sheave Holder ② (YS-01880) to lock the rotor.

NOTE:

Do not allow the special tool to touch the projections ③ on the rotor.

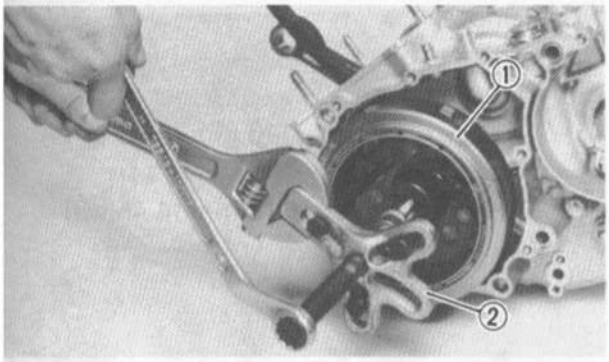

4. Remove:
   - Rotor ①
     Use the Flywheel Puller Set ② (YU-33270).
   - Woodruff key

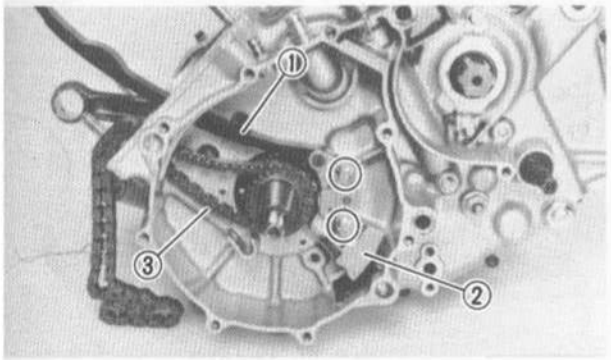

5. Remove:
   - Cam chain damper (Rear) ①
   - Oil baffle plate ②
   - Cam chain ③

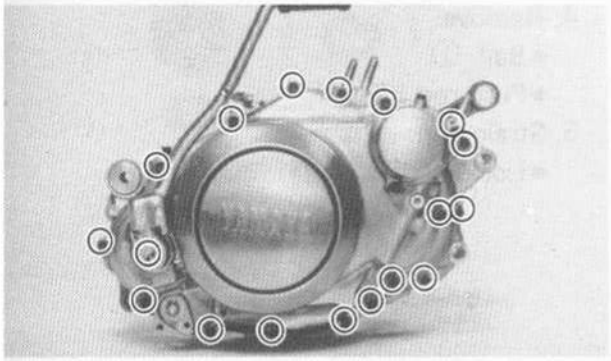

CLUTCH

1. Remove:
   - Kick crank
   - Crankcase cover (Right)
   - Gasket
   - Dowel pins

NOTE:
- For this removal, slits in the crankcase can be use as shown.
- Be sure not to give damages to the mating surface.

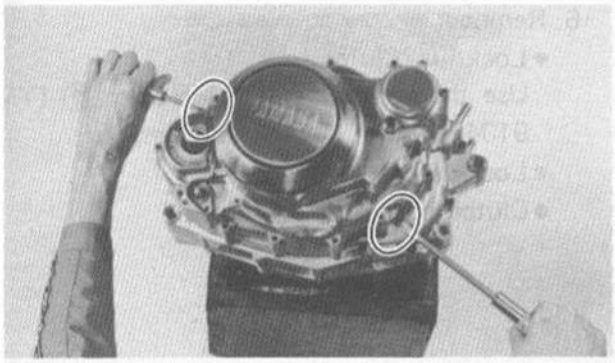

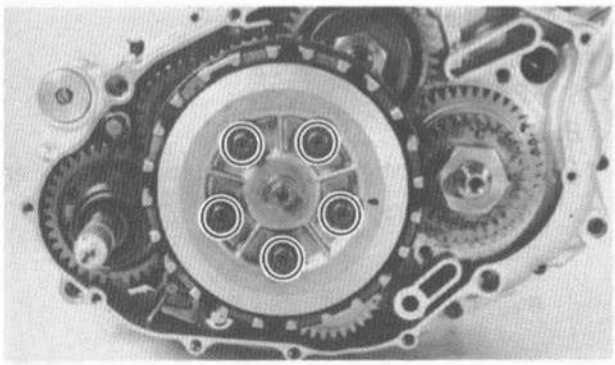

2. Remove:
   - Screws (Clutch spring)
   - Clutch springs

NOTE:
Loosen the screws in this stage, using a crisscross pattern.

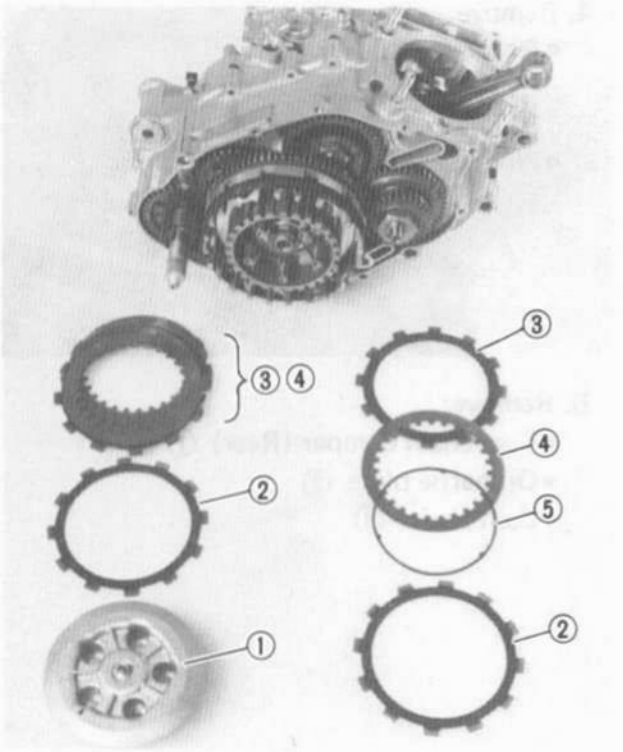

3. Remove:
   - Pressure plate ①
   - Friction plates ②
     (Inside diameter: 116 mm (4.57 in))
   - Friction plates ③
     (Inside diameter: 113 mm (4.45 in))
   - Clutch plates ④
   - Wave plate ⑤

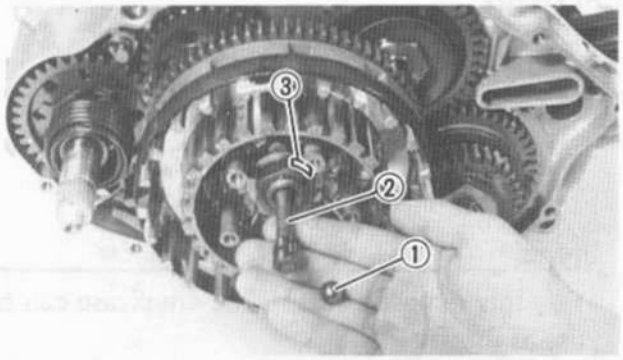

4. Remove:
   - Ball ①
   - Push rod #2 ②
5. Straighten:
   - Lock washer tab ③

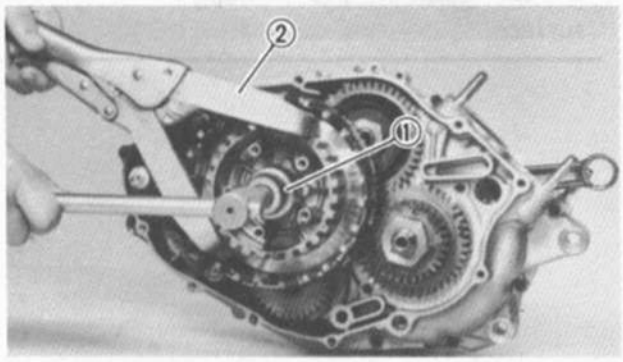

6. Remove:
   - Locknut (Clutch boss) ①
     Use the Universal Clutch Holder ② (YM-91042) to hold the clutch boss.
   - Lock washer
   - Clutch boss

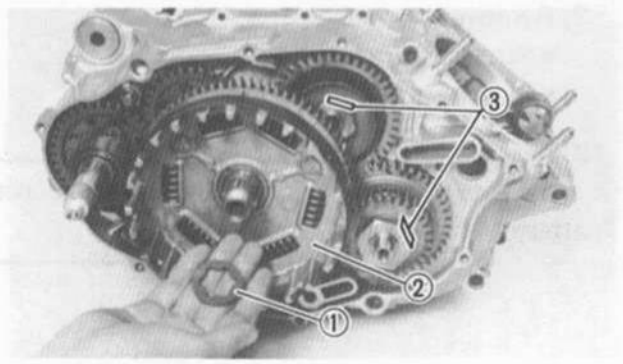

7. Remove:
   - Holding plate ①
   - Primary driven gear ②
8. Straighten:
   - Lock washer tabs (Balancer gear and primary drive gear) ③

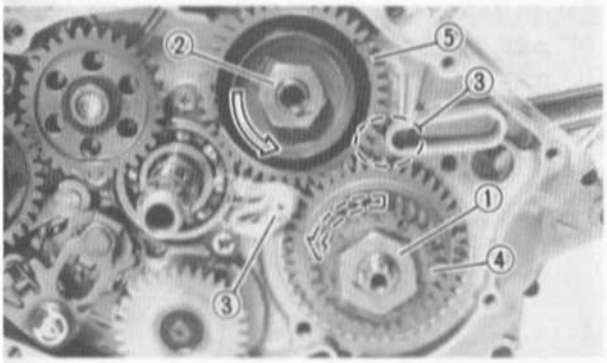

9. Loosen:
   - Nut (Primary drive gear) ①
   - Nut (Balancer gear) ②

   Place a folded rag ③ between the teeth of the drive gear ④ and balancer gear ⑤ to lock them.

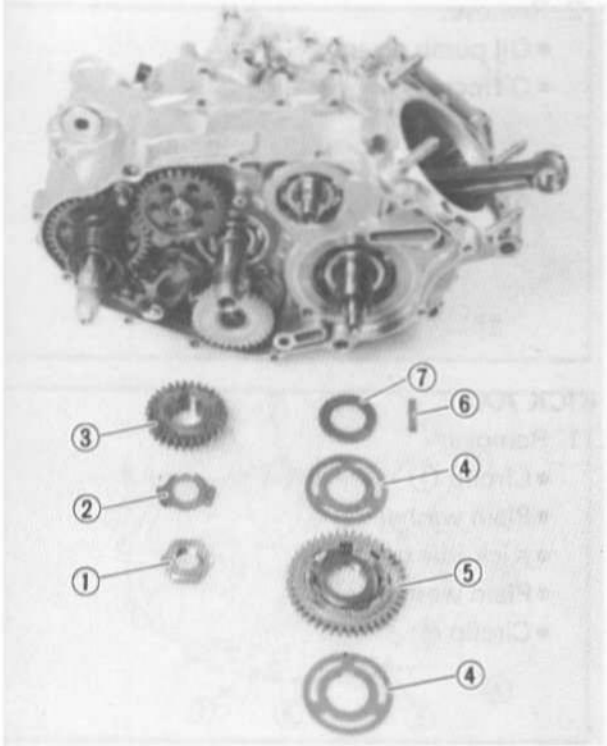

10. Remove:
    - Nut (Primary drive gear) ①
    - Lock washer ②
    - Primary drive gear ③
    - Holding plates ④
    - Drive gear assembly ⑤
    - Key ⑥
    - Plain washer ⑦

NOTE:

The drive gear has eight springs and four pins. Use care so that they do not fall out when removing the drive gear.

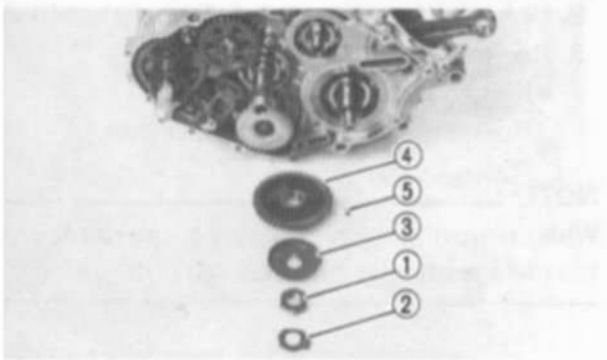

11. Remove:
    - Nut (Balancer gear) ①
    - Lock washer ②
    - Holding plate ③
    - Balancer gear ④
    - Key ⑤

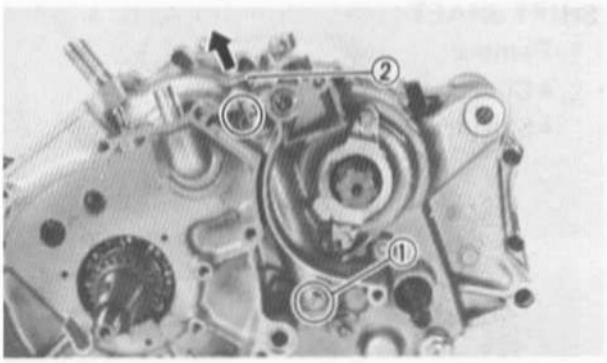

12. Remove:
    - Set screw ①
    - Clutch push lever axle assebmly ②

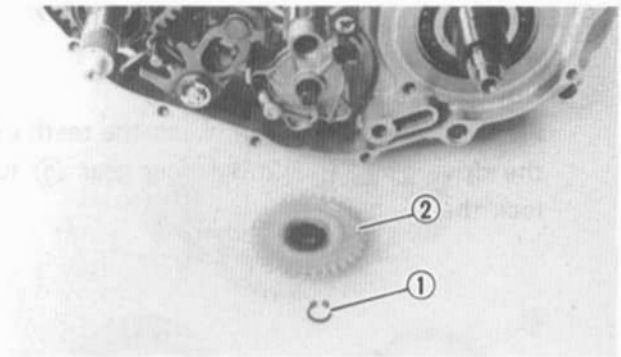

OIL PUMP

1. Remove:
   - Circlip ①
   - Oil pump driven gear ②

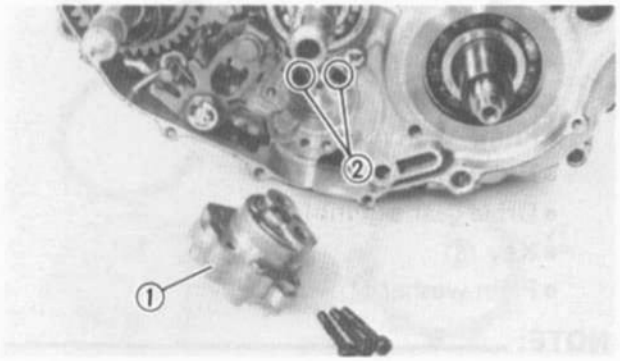

2. Remove:
   - Oil pump assembly ①
   - O-rings ②

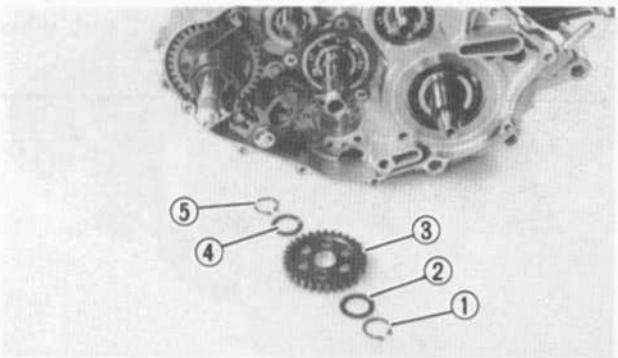

KICK AXLE

1. Remove:
   - Circlip ①
   - Plain washer ②
   - Kick idle gear ③
   - Plain washer ④
   - Circlip ⑤

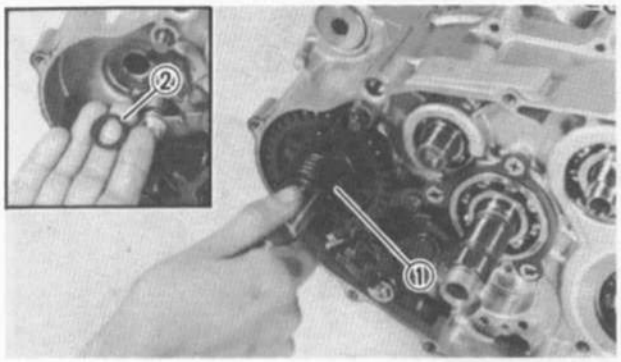

2. Unhook the kick spring from its position.
3. Remove:
   - Kick axle assembly ①
     Rotate the shaft counterclockwise.

NOTE:

When removing the kick axle, be sure not to lose the plain washer ② that may fall out.

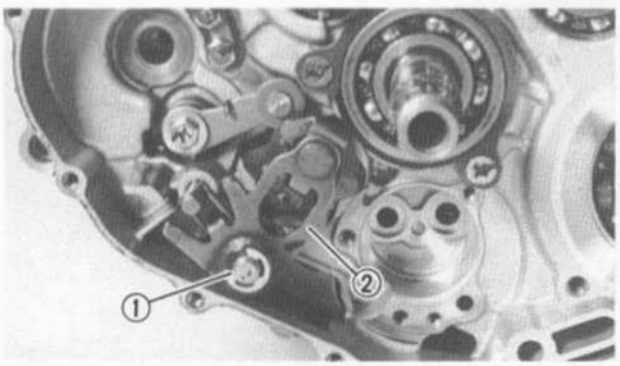

SHIFT SHAFT

1. Remove:
   - Circlip ①
   - Shift lever ②

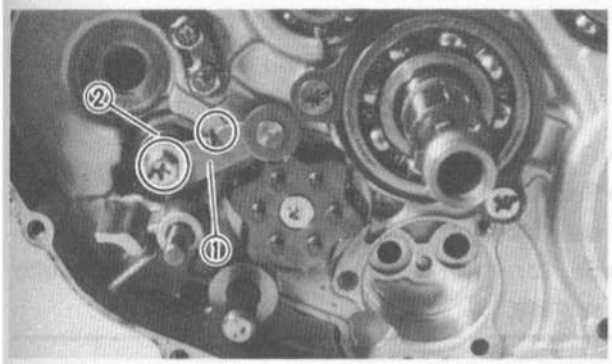

2. Unhook the torsion spring from its position.
3. Remove:
   - Stopper lever ①
   - Spring ②

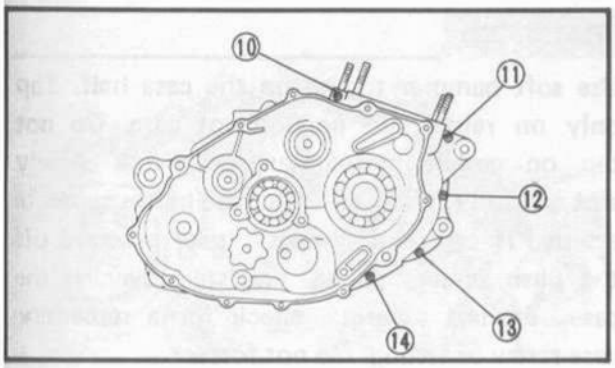

CRANKCASE

1. Remove:
   - Bolts (Crankcase) ① ~ ⑭

NOTE:

- Remove the bolts starting with the highest numbered one.
- Turn the shift cam to the position shown in the figure so that it does not contact the crankcase when separating the crankcase.

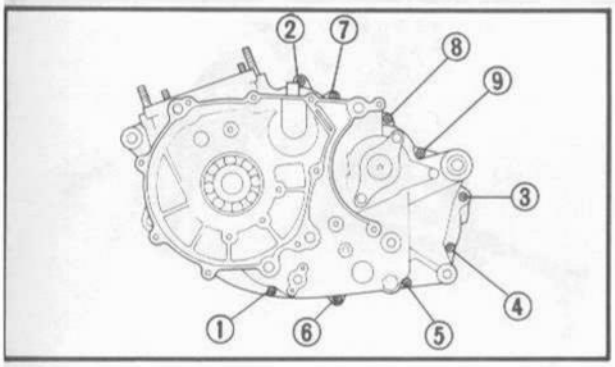

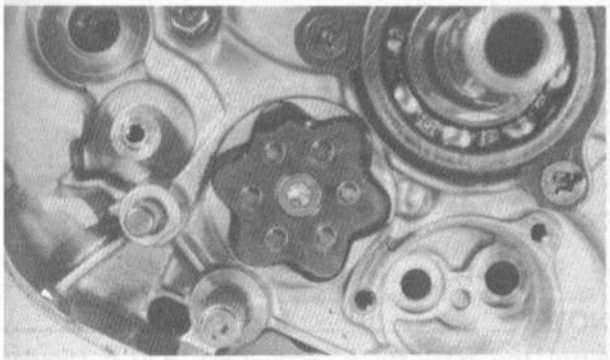

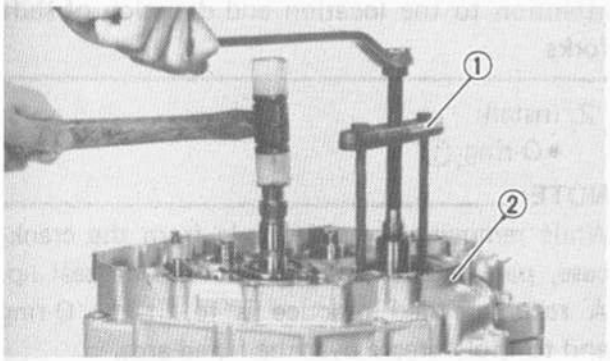

2. Attach:
   - Crankcase Separating Tool ① (YU-01135)
3. Remove:
   - Crankcase (Right) ②

NOTE:

Fully tighten the tool holding bolts, but make sure the tool body is parallel with the case. If necessary, one screw may be backed out slightly to level tool body.

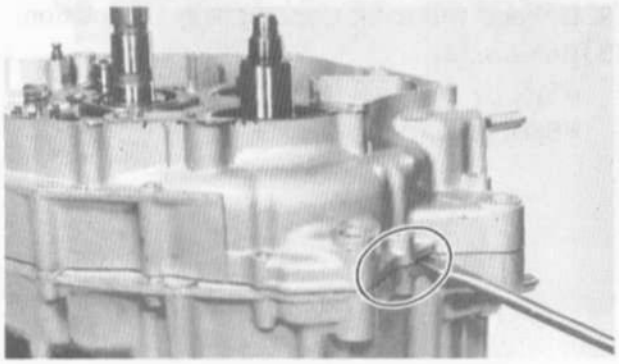

4. As pressure is applied, alternately tap on the front engine mounting boss, transmission shafts, and shift cam.

NOTE:

- For this removal, slits in the crankcase can be use as shown.
- Be sure not to give damages to the mating surface.

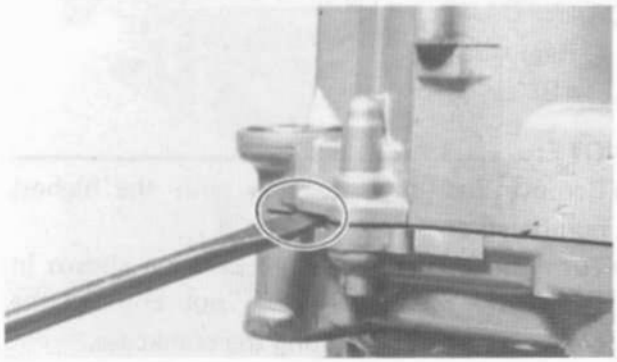

CAUTION:

Use soft hammer to tap on the case half. Tap only on reinforced portions of case. Do not tap on gasket mating surface. Work slowly and carefully. Make sure the case halves separate evenly. If one end "hangs", take pressure off the push screw, realign, and start over. If the cases do not separate, check for a remaining case screw or fitting. Do not force.

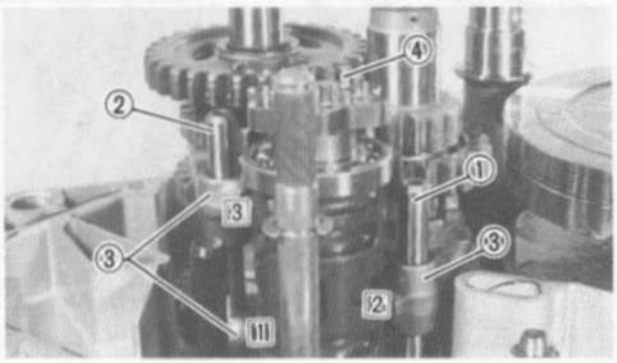

TRANSMISSION

1. Remove:
   - Guide bar (Shorter) ①
   - Guide bar (Longer) ②
   - Shift forks ③
   - Shift cam ④
   - Change shaft
   - Shift shaft

NOTE:

Note the position of each part. Pay particular attention to the location and direction of shift forks.

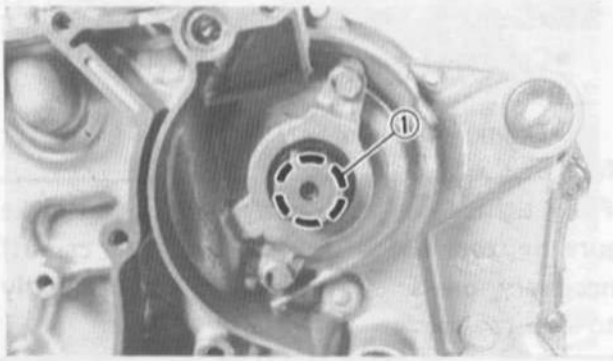

2. Install:
   - O-ring ①

NOTE:

While removing the drive axle from the crankcase, pay careful attention to the oil seal lip. A recommended practice is to fit the O-ring and to apply grease over the fitted area.

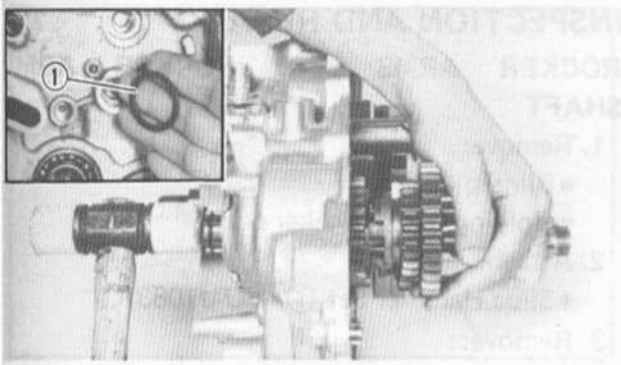

3. Remove:
   - Transmission assembly
     Tap lightly on the transmission drive shaft with a soft hammer.

NOTE:
When removing the transmission assembly, be sure not to lose the shim ① that may fall out.

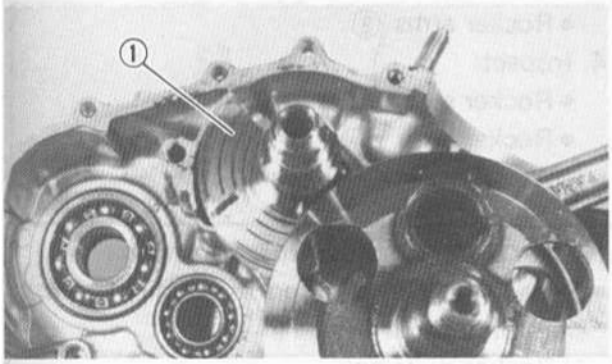

4. Remove:
   - Balancer weight ①

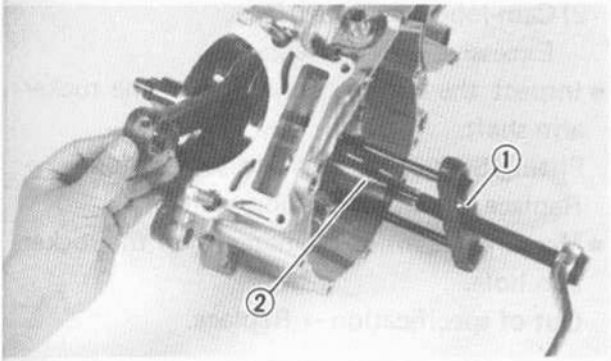

CRANKSHAFT

1. Attach:
   - Crankcase Separating Tool ① (YU-01135)
2. Remove:
   - Crankshaft ②

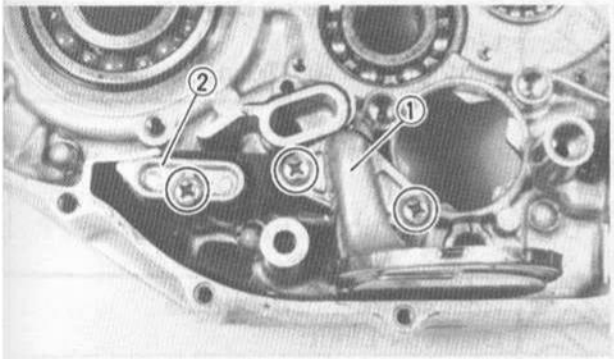

OIL STRAINER

1. Remove:
   - Oil strainer ①
   - Oil passage cover ②
   - Gasket

NOTE:
It is recommended that the oil strainer be replaced whenever the engine is disassembled.

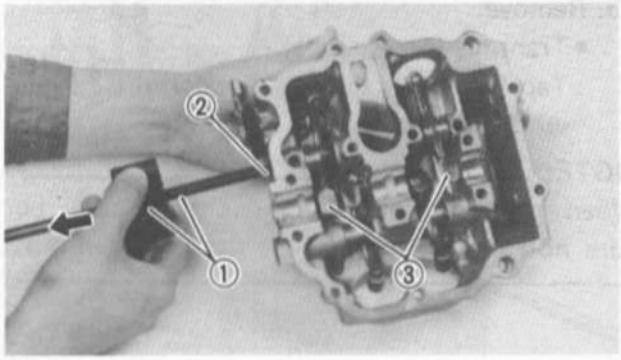

INSPECTION AND REPAIR

ROCKER ARMS AND ROCKER ARM SHAFT

1. Remove:
   - Blind plug
   - Holding bolts (Rocker shaft)
2. Attach:
   - Slide Hammer Set ① (YU-01083)
3. Remove:
   - Rocker shaft ②
   - Rocker arms ③
4. Inspect:
   - Rocker shaft
   - Rocker arm

   Wear/Damage → Replace.

Rocker shaft and arm inspection steps:

- Inspect the two areas on the rocker arm for sings of unusual wear.
  1) Rocker shaft hole
  2) Cam-lobe-contact surface

  Excessive wear → Replace.
- Inspect the surface condition of the rocker arm shaft.

  Pitting/Scratches/Blue discoloration → Replace/Check lubrication system.
- Measure the inside diameter ⓐ of the rocker arm hole.

  Out of specification → Replace.

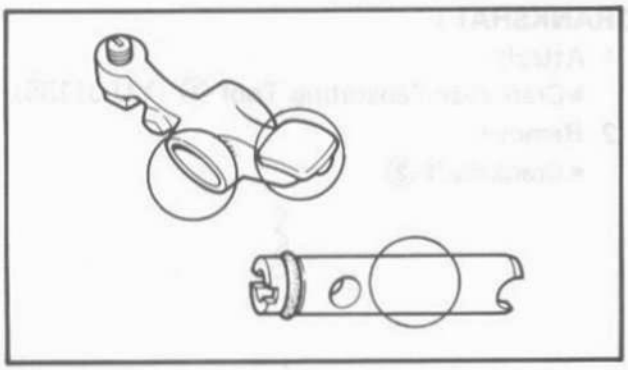

Rocker Arm Inside Diameter Limit:
12.05 mm (0.474 in)

- Measure the outside diameter ⓑ of the rocker arm shaft.

  Out of specification → Replace.

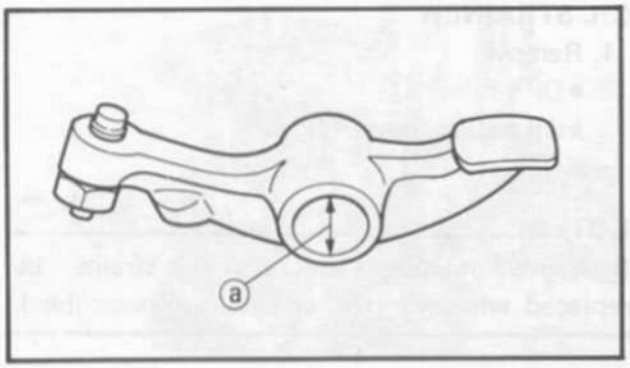

Rocker Arm Shaft Outside Diameter Limit:
11.95 mm (0.471 in)

- Calculate the clearance by subtracting the rocker-arm-shaft outside diameter from the rocker-arm inside diameter.

  Clearance is greater than 0.1 mm (0.004 in) → Replace either or both parts.

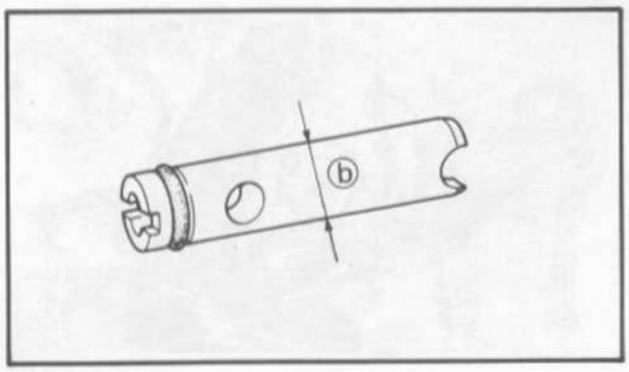

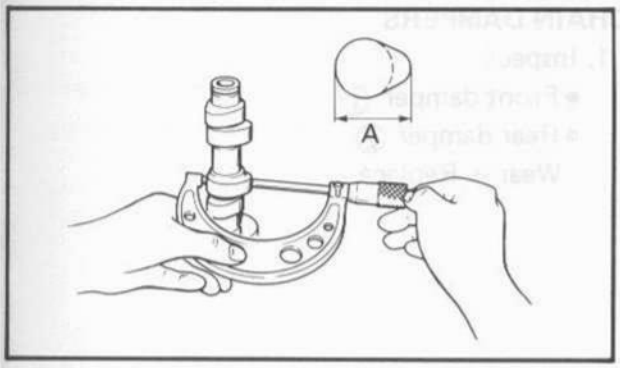

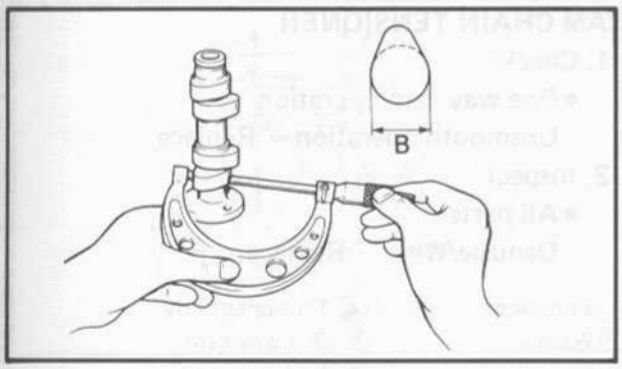

CAMSHAFT

1. Inspect:
   - Cam lobes
     Pitting/Scratches/Blue discoloration → Replace.
2. Measure:
   - Cam lobes
     Use a Micrometer
     Out of specification → Replace.

	Cam Lobe Limit "A"	Cam Lobe Limit "B"
Intake	36.42 mm (1.434 in)	30.01 mm (1.182 in)
Exhaust	36.57 mm (1.440 in)	30.06 mm (1.184 in)

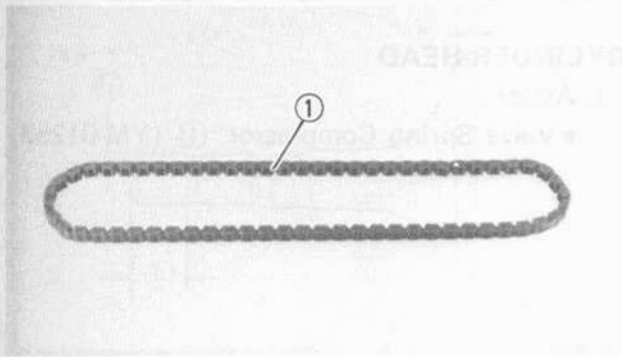

CAM CHAIN

1. Inspect:
   - Cam chain ①
     Chain stretch/Cracks → Replace.

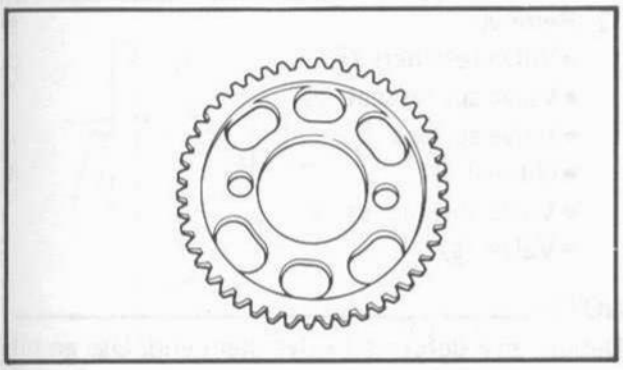

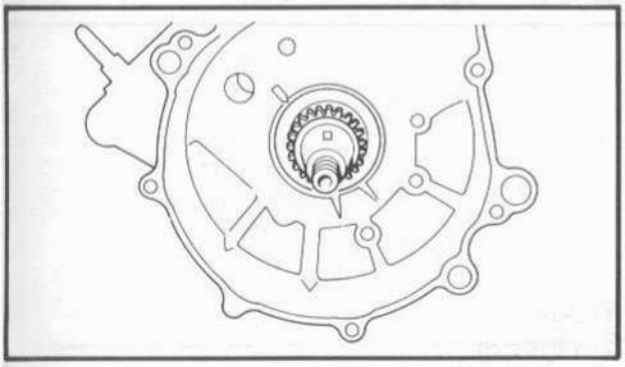

CAM SPROCKET AND CAM DRIVE SPROCKET

1. Inspect:
   - Cam sprocket
   - Cam drive sprocket
     Wear/Damage → Replace.

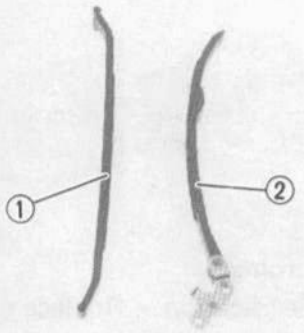

CHAIN DAMPERS

1. Inspect:
   - Front damper ①
   - Rear damper ②

   Wear → Replace.

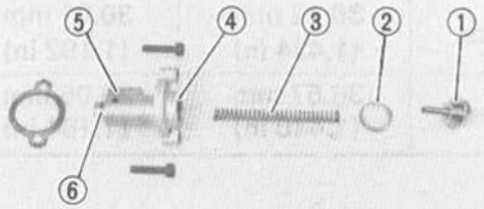

CAM CHAIN TENSIONER

1. Check:
   - One-way cam operation

   Unsmooth operation → Replace.
2. Inspect:
   - All parts

   Damage/Wear → Replace.

① End plug
② Washer
③ Spring
④ Tensioner body
⑤ One way cam
⑥ Tensioner rod

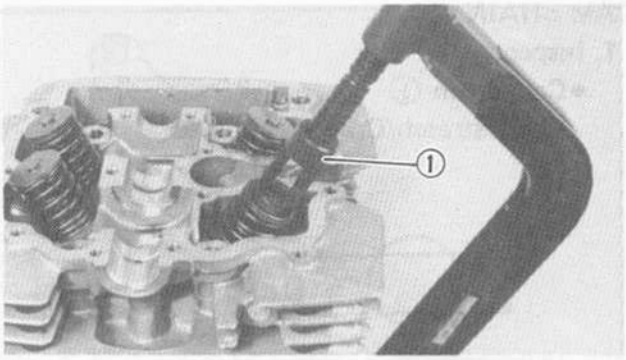

CYLINDER HEAD

1. Attach:
   - Valve Spring Compressor ① (YM-01253)

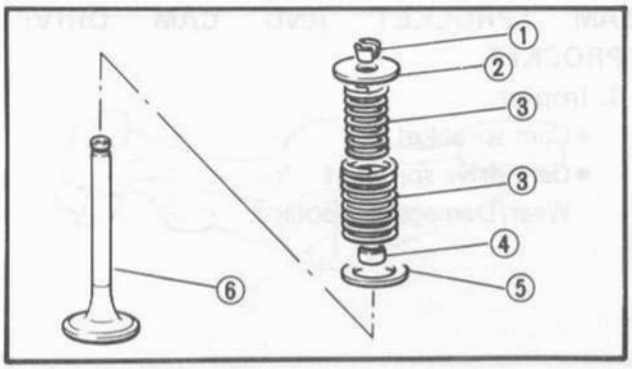

2. Remove:
   - Valve retainers ①
   - Valve spring seat ②
   - Valve springs ③
   - Oil seal ④
   - Valve spring seat ⑤
   - Valve ⑥

NOTE:

Deburr any deformed valve stem end. Use an oil stone to smooth the stem end.

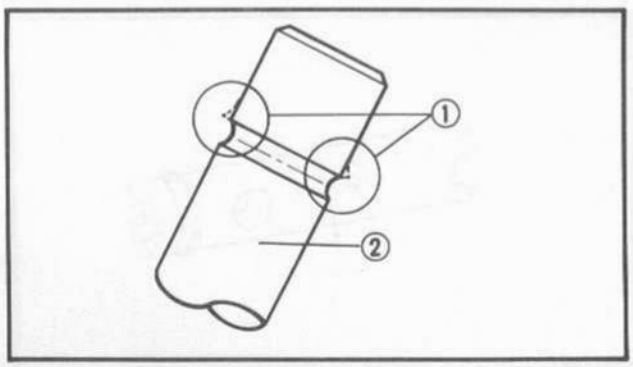

① Deburr
② Valve stem

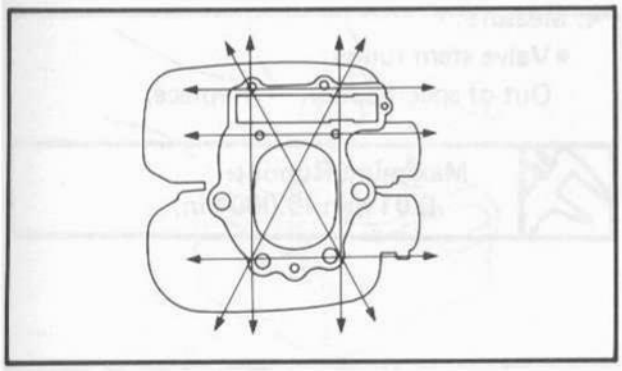

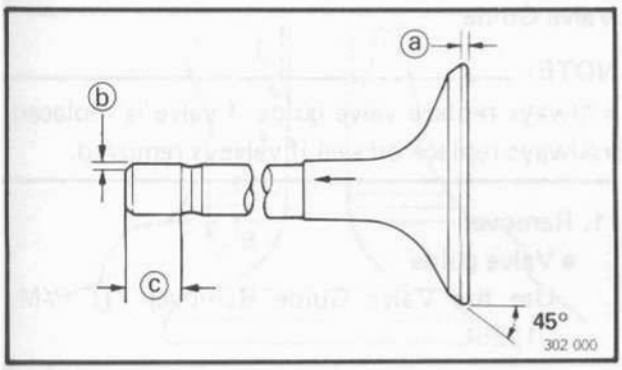

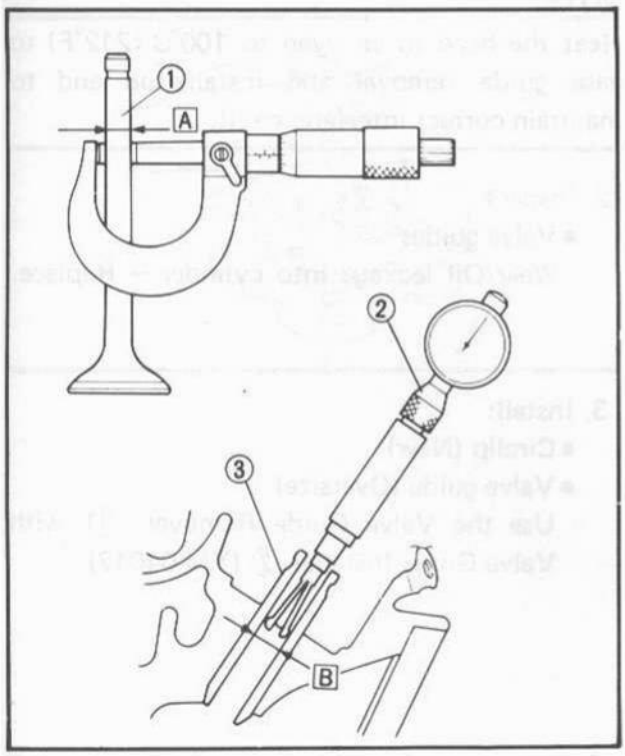

3. Eliminate:
   - Carbon deposit
     Use the rounded scraper.

NOTE:

Do not use a sharp instrument and avoid damaging or scratching:
- Spark plug threads
- Valve seat
- Cylinder head

4. Measure:
   - Cylinder head warpage
     Out of specification → Resurface/Replace.

Cylinder Head Warp Limit:
Less than 0.03 mm (0.0012 in)

VALVE, VALVE GUIDE, AND VALVE SEAT

Intake and Exhaust Valve

1. Inspect:
   - Valve face
   - Stem end
     Wear/Pitting/Out of specification → Replace.

Minimum Thickness (Service limit) ⓐ :
0.7 mm (0.028 in)
Beveled ⓑ : 0.5 mm (0.020 in)
Minimum Length (Service limit) ⓒ :
4.0 mm (0.157 in)

2. Measure:
   - Valve stem clearance
     Use the Micrometer and Bore gauge ②.
     Out of specification → Replace either valve ① and/or guide ③.

Valve Stemp Clearance = B – A

	Valve Stem Clearnce	Maximum
Intake	0.010 ~ 0.037 mm (0.0004 ~ 0.0015 in)	0.10 mm (0.004 in)
Exhaust	0.030 ~ 0.057 mm (0.0012 ~ 0.0022 in)	0.12 mm (0.005 in)

A Valve stem outside diameter
B Valve guide inside diameter

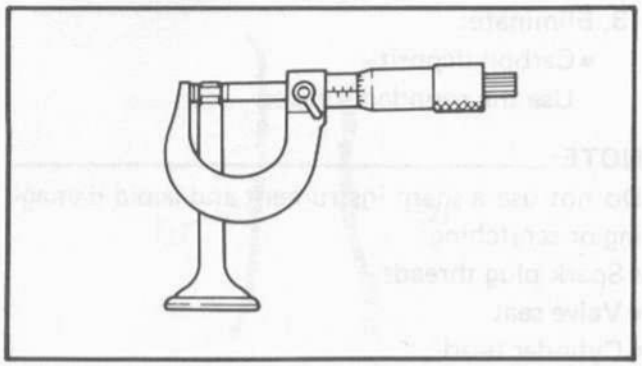

3. Inspect:
   - Valve stem end
     Mushroom shape/Larger diameter than rest of stem → Replace valve, valve guide, and oil seal.

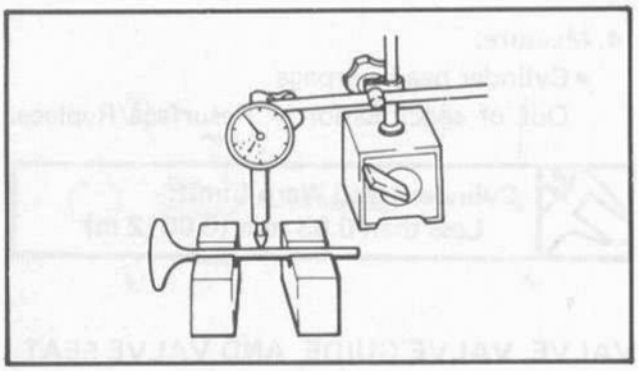

4. Measure:
   - Valve stem runout
     Out of specification → Replace.

Maximum Runout: 0.01 mm (0.0004 in)

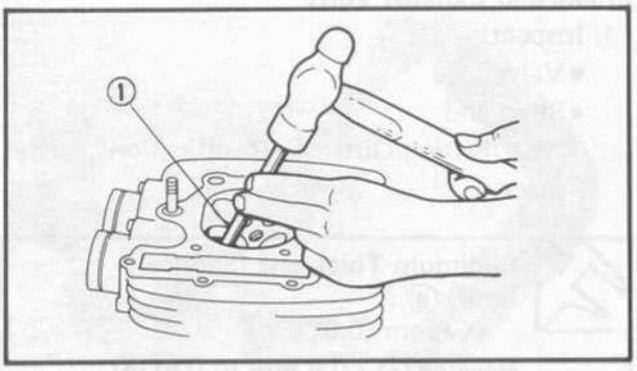

Valve Guide

NOTE:
- Always replace valve guide if valve is replaced.
- Always replace oil seal if valve is removed.

1. Remove:
   - Valve guide
     Use the Valve Guide Remover ① (YM-01225).

NOTE:
Heat the head in an oven to 100°C (212°F) to ease guide removal and installation and to maintain correct interference fit.

2. Inspect:
   - Valve guides
     Wear/Oil leakage into cylinder → Replace.

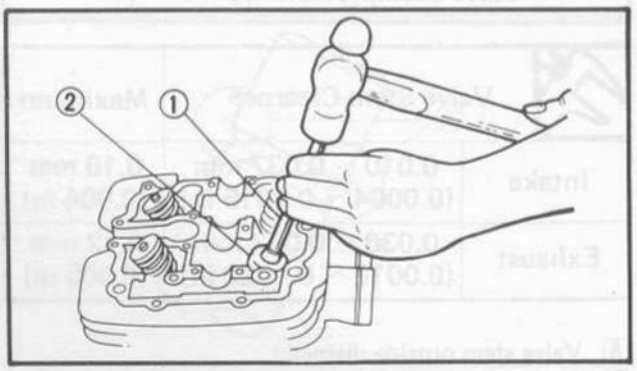

3. Install:
   - Circlip (New)
   - Valve guide (Oversize)
     Use the Valve Guide Remover ① with Valve Guide Installer ② (YM-04017).

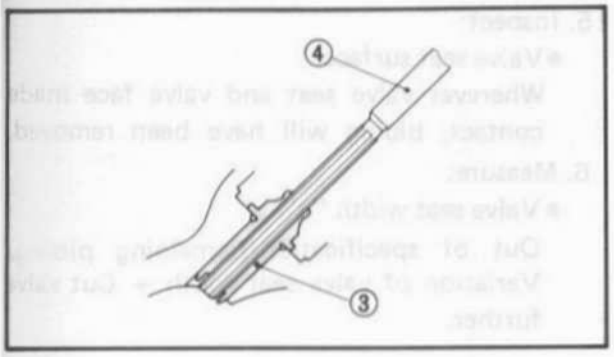

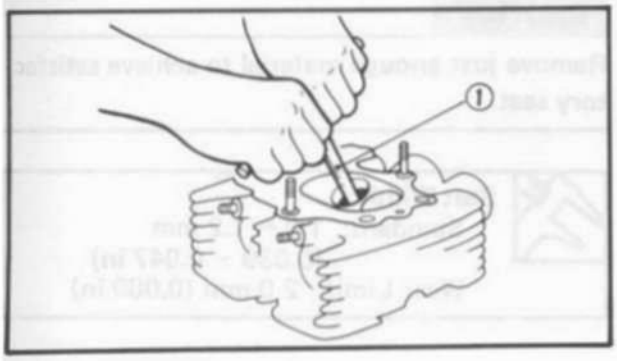

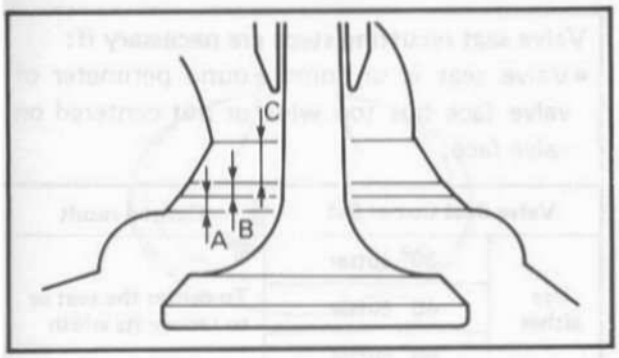

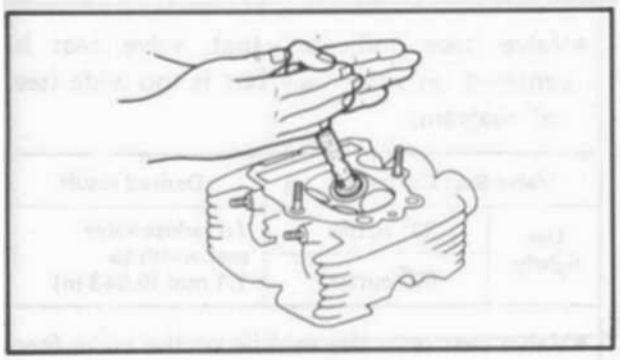

NOTE:

After installing valve guide ③:

- Use the 7 mm (0.28 in) Valve Guide Reamer ④ (YM-01227) to obtain proper valve guide/valve stem clearance.
- Recut the valve seat.

Valve Seat

1. Inspect:
   - Valve seat
     Wear/Pitting/Valve replacement →
     Resurface seat at 45° angle.

CAUTION:

Clean valve seat if pitted or worn using a 45° Valve Seat Cutter (YM-91043) ①. When twisting cutter, keep an even downward pressure to prevent chatter marks.

Cut sections as follows	
Section	Cutter
A	30°
B	45°
C	60°

2. Measure:
   - Valve seat width
3. Apply:
   - Mechanics bluing dye (Dykem)
     To valve and seat.
   - Fine grinding compound (Small amount)
     Ground surface of valve face.
4. Position:
   - Valves
     Into cylinderhead.
     Spin it rapidly back and forth, then lift valve and clean off all grinding compound.

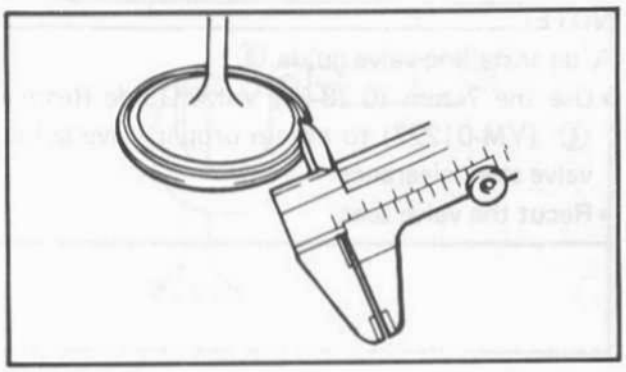

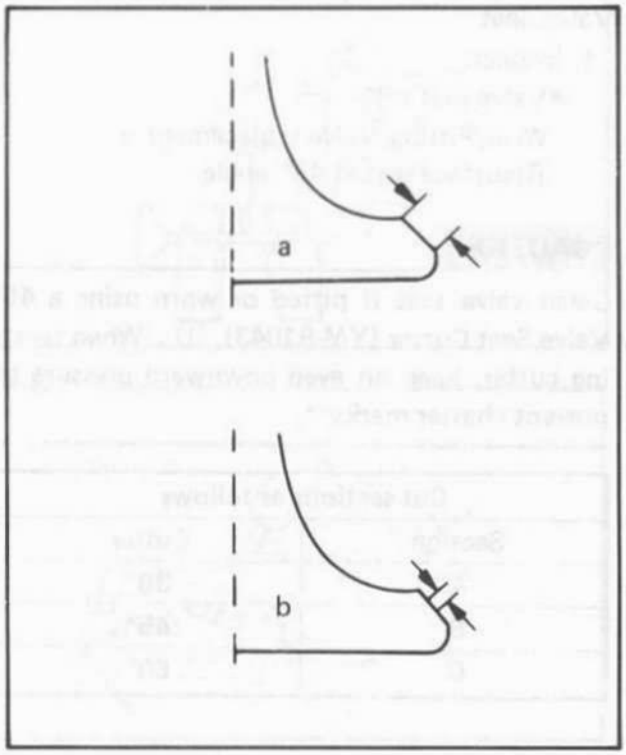

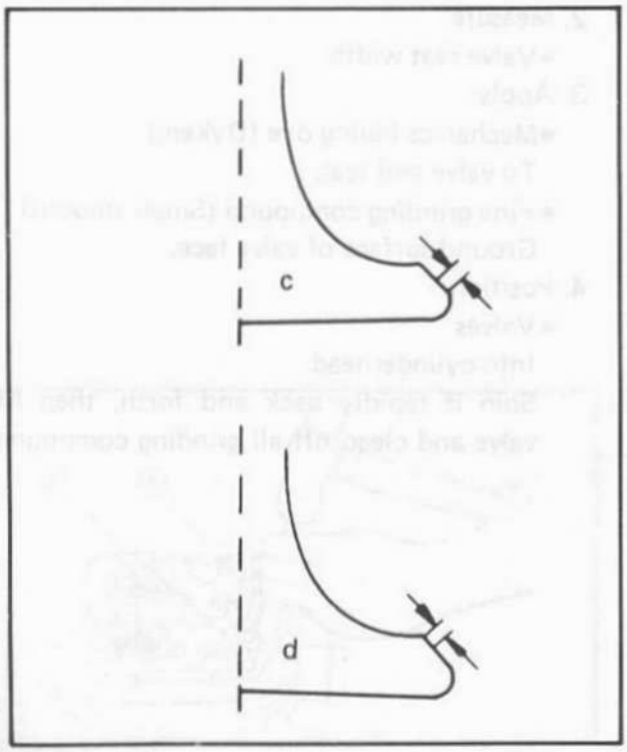

5. Inspect:
   - Valve seat surface
     Wherever valve seat and valve face made contact, bluing will have been removed.
6. Measure:
   - Valve seat width "a"
     Out of specification/Remaining pitting/Variation of valve seat width → Cut valve further.

CAUTION:

Remove just enough material to achieve satisfactory seat.

Seat Width:
Standard: 1.0 ~ 1.2 mm (0.039 ~ 0.047 in)
Wear Limit: 2.0 mm (0.080 in)

Valve seat recutting steps are necessary if:

- Valve seat is uniform around perimeter of valve face but too wide or not centered on valve face.

Valve Seat Cutter Set		Desired result
Use either	30° cutter	To center the seat or to reduce its width
	45° cutter	
	60° cutter	

- Valve face indicates that valve seat is centered on valve face but is too wide (see "a" diagram).

Valve Seat Cutter Set		Desired result
Use lightly	30° cutter	To reduse valve seat width to 1.1 mm (0.043 in)
	60° cutter	

- Valve seat is in the middle of the valve face but too narrow (see "b" diagram).

Valve Seat Cutter Set		Desired Result
Use	45° cutter	To achieve a uniform valve seat width of 1.1 mm (0.043 in)

• Valve seat is too narrow and right up near valve margin (see "c" diagram).

Valve Seat Cutter Set		Desired Result
Use	30° cutter, first	To center the seat and to increase its width
	45° cutter	

• Valve seat is too narrow and is located down near the bottom edge of the valve face (see diagram "d").

Valve Seat Cutter Set		Desired Result
Use	60° cutter, first	To center the seat and to increase its width
	45° cutter	

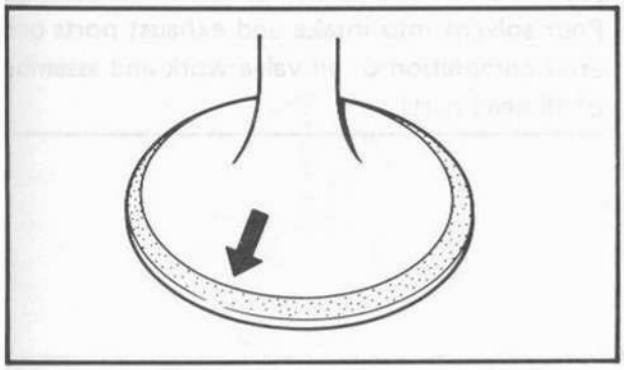

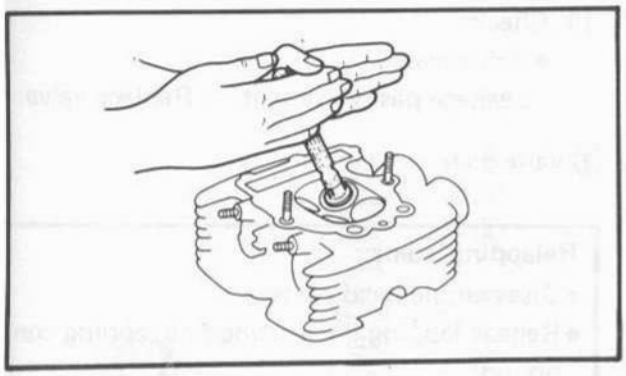

Valve/Valve Seat Assembly Lapping

1. Apply:
   - Coarse lapping compound (Small amount)
     To valve face.
   - Molybdenum disulfide oil
     To valve stem.
2. Position:
   - Valves
     In cylinder head.
3. Rotate:
   - Valve
     Turn until valve and valve seat are evenly polished, then clean off all compound.
4. Apply:
   - Fine lapping compound (Small amount)
     To valve face.
5. Repeat steps 2 and 3.

NOTE:

Be sure to clean off all compound from valve face after every lapping operation.

6. Inspect:
   - Valve face
     Not yet uniformly smooth → Repeat procedure from step 1.
7. Apply:
   - Mechanics bluing dye (Dykem)
     To valve face and seat.
8. Rotate:
   - Valve
9. Inspect:
   - Valve face
     Valve must make full seat contact indicated by grey surface all around. The valve face where bluing was removed.
     Faulty contact → Replace.
     (See procedure below)
10. Apply:
    - Solvent
      Into each intake and exhaust port.

NOTE:
Pour solvent into intake and exhaust ports only after completion of all valve work and assembly of all head parts.

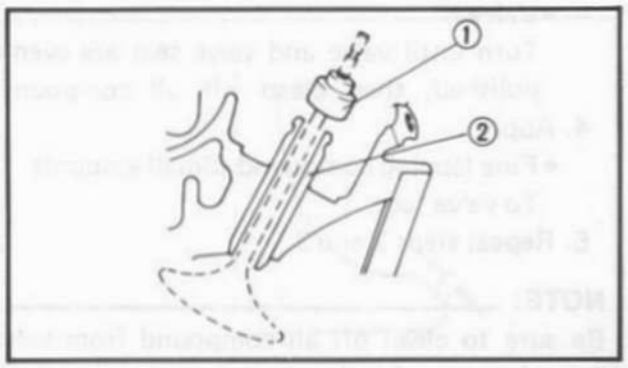

11. Check:
    - Valve seals ①
      Leakage past valve seat → Replace valve.

② Valve guide

Relapping steps:
- Disassemble head parts.
- Repeat lapping steps using fine lapping compound.
- Clean all parts thoroughly.
- Reassemble and check for leakage again using solvent.
- Repeat steps as often as necessary to effect a satisfactory seal.

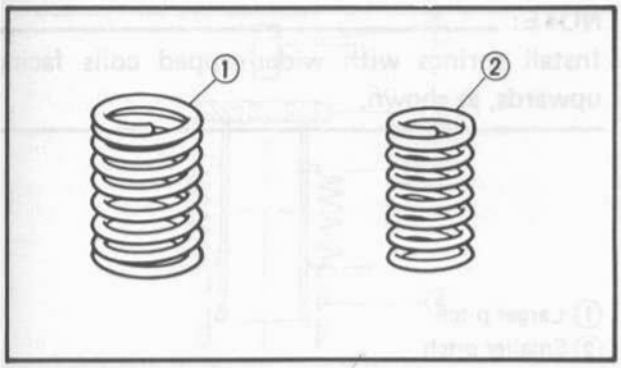

Valve Spring

This engine uses two springs of different sizes to prevent valve float or surging. Valve spring specifications show the basic value characteristics.

① Outer spring
② Inner spring

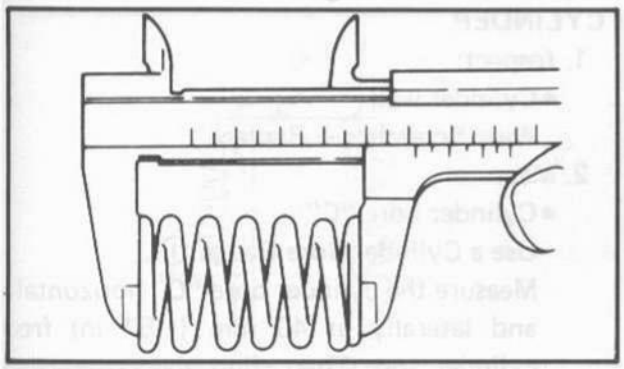

1. Measure:
   - Spring free length
     Out of specification → Replace.

Minimum Free Length:
Outer: 41.8 mm (1.65 in)
Inner: 38.1 mm (1.50 in)

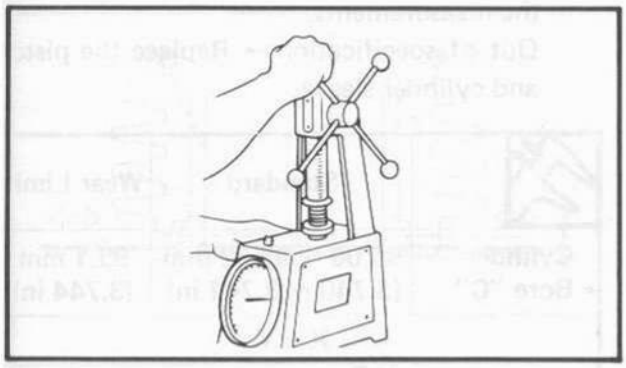

2. Measure:
   - Spring force (Installed length)
     Out of specification → Replace.

Valve Compressed Force:
Outer: 37.1 ~ 49.6 kg (81.8 ~ 109.3 lb) at 25.7 mm (1.01 in)
Inner: 16.8 ~ 19.4 kg (37.0 ~ 42.8 lb) at 22.7 mm (0.89 in)

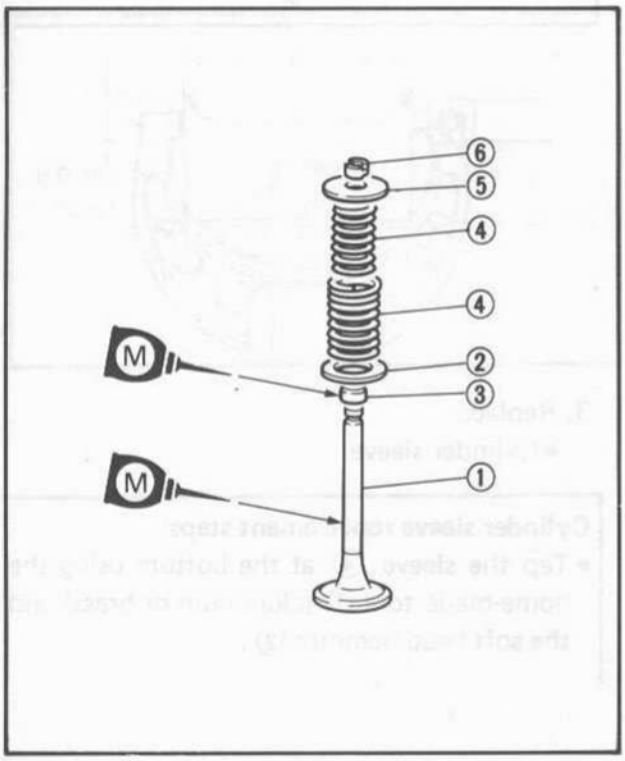

Valve Installation

1. Lubricate:
   - Valve stem
   - Oil seal

High-Quality Molybdenum Disulfide Motor Oil or Molybdenum Disulfide Grease

2. Install:
   - Valve ①
   - Valve spring seat ②
   - Oil seal ③
   - Valve springs ④
   - Valve spring seat ⑤
   - Valve retainers ⑥

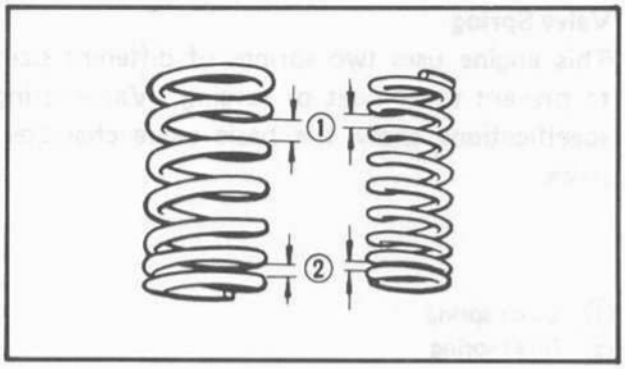

NOTE:

Install springs with wider-gapped coils facing upwards, as shown.

① Larger pitch
② Smaller pitch

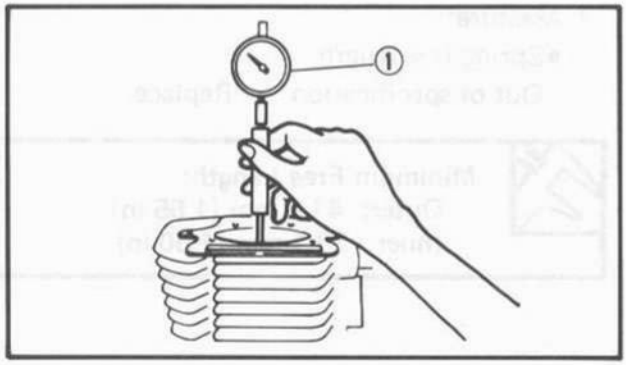

CYLINDER

1. Inspect:
   - Cylinder wall
     Wear/Scratches → Replace.
2. Measure:
   - Cylinder bore "C"
     Use a Cylinder Bore Gauge ①.
     Measure the cylinder bore "C" horizontally and laterally at 40 mm (1.57 in) from cylinder top. Then, find the coverage of the measurements.
     Out of specification → Replace the piston and cylinder sleeve.

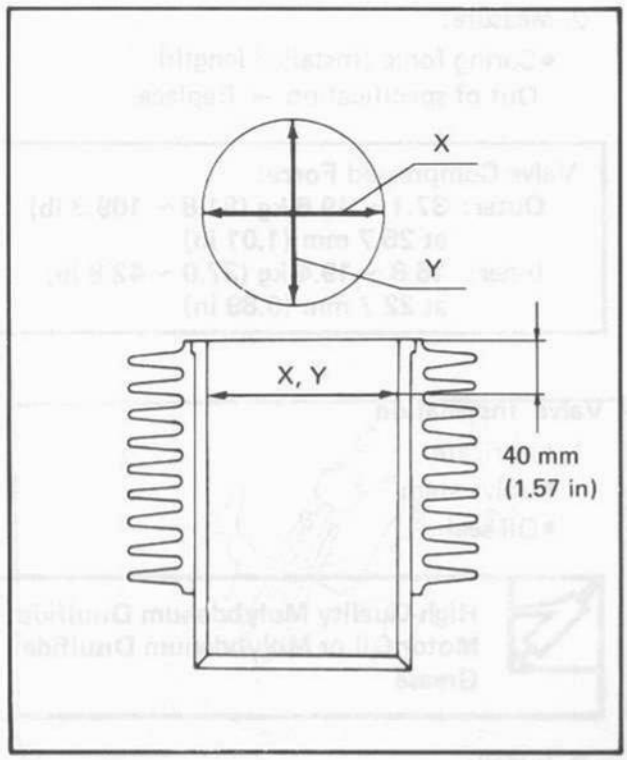

	Standard	Wear Limit
Cylinder Bore "C"	95.00 ~ 95.02 mm (3.740 ~ 3.741 in)	95.1 mm (3.744 in)
$C = \frac{X + Y}{2}$		

3. Replace:
   - Cylinder sleeve

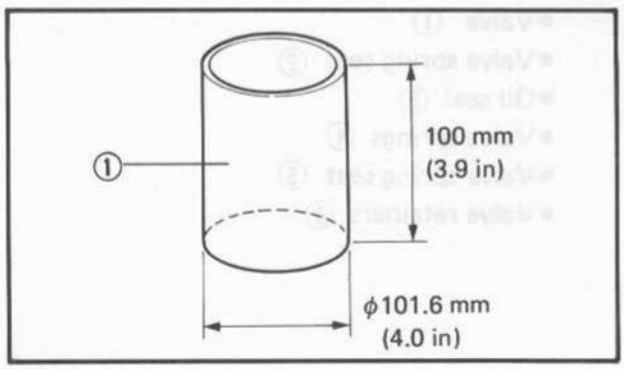

Cylinder sleeve replacement steps:

- Tap the sleeve ④ at the bottom using the home-made tool ① (aluminum or brass) and the soft head hammer ②.

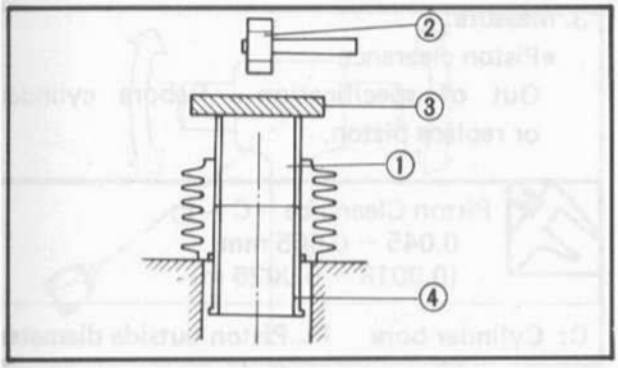

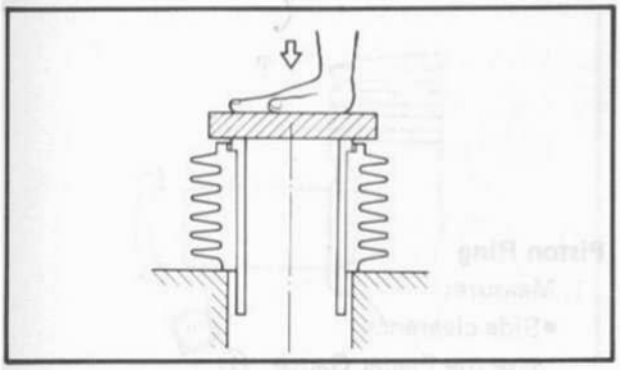

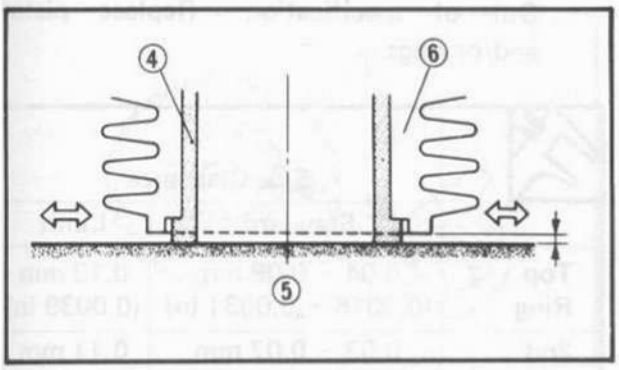

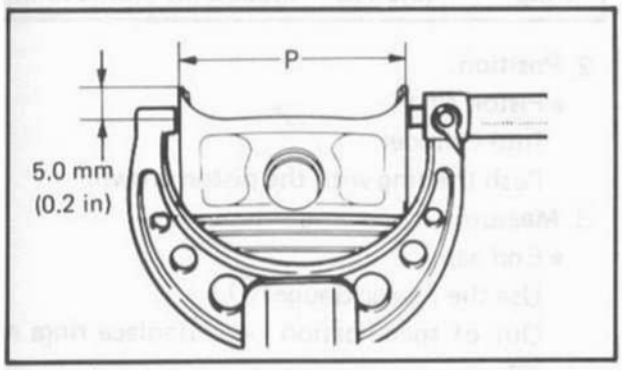

NOTE:

Do not use a press to remove the sleeve, or the cylinder may be scratched on its inner surface.

③ Protective metal plate

- Polish the inner surface of the cylinder with #600 emery paper to remove the carbon buildup or burrs.
- Heat the cylinder to 70 ~ 80°C (158 ~ 176°F) in hot water or in an oven.
- Install the cold sleeve from the top of the cylinder.
- Push down the sleeve fully by hand for approximately 30 seconds so that the flange bottom of the sleeve can have close contact with the cylinder.
- Grind to top surface of the sleeve first using #200 emery paper, and then #800 for finish on a surface plate ⑤ until the sleeve ④ top can be flat with the cylinder ⑥ top.

PISTON, PISTON RING, AND PISTON PIN

Piston

1. Inspect:
   - Piston wall
     Wear/Scratches/Damage → Replace.
2. Measure:
   - Piston outside diameter "P"
     Use a Micrometer.
     Out of specification → Replace.

NOTE:

Measurement should be made at a point 5.0 mm (0.2 in) above the bottom edge of the piston.

Piston Outside Diameter "P":
94.915 ~ 94.965 mm
(3.737 ~ 3.739 in)

3. Measure:
   - Piston clearance
   Out of specification → Rebore cylinder or replace piston.

Piston Clearance = C – P: 0.045 ~ 0.065 mm (0.0018 ~ 0.0026 in)	
C: Cylinder bore	P: Piston outside diameter

Piston Ring

1. Measure:
   - Side clearance
   Use the Feeler Gauge ①.
   Out of specification → Replace piston and/or rings.

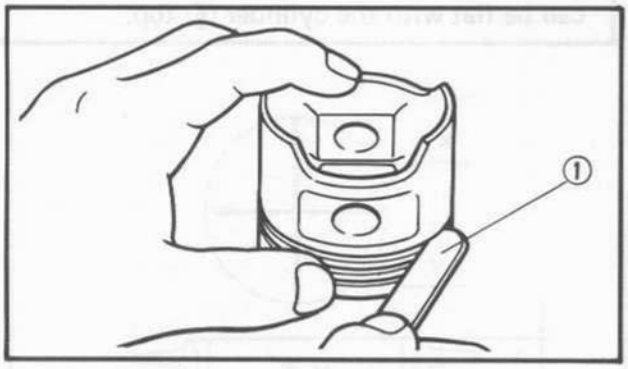

	Side Clearance	
	Standard	Limit
Top Ring	0.04 ~ 0.08 mm (0.0016 ~ 0.0031 in)	0.10 mm (0.0039 in)
2nd Ring	0.03 ~ 0.07 mm (0.0012 ~ 0.0028 in)	0.11 mm (0.0043 in)

2. Position:
   - Piston ring
   Into cylinder.
   Push the ring with the piston crown.

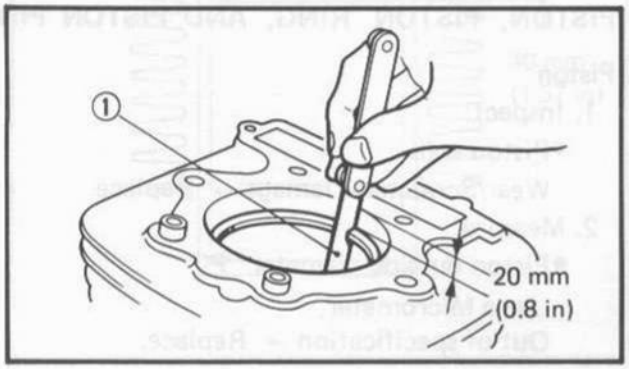

3. Measure:
   - End gap
   Use the Feeler Gauge ①
   Out of specification → Replace rings as set.

	End Gap	
	Standard	Limit
Top Ring	0.30 ~ 0.45 mm (0.012 ~ 0.018 in)	0.60 mm (0.024 in)
2nd Ring	0.30 ~ 0.45 mm (0.012 ~ 0.018 in)	0.60 mm (0.024 in)
Oil Ring	0.2 ~ 0.7 mm (0.008 ~ 0.028 in)	–

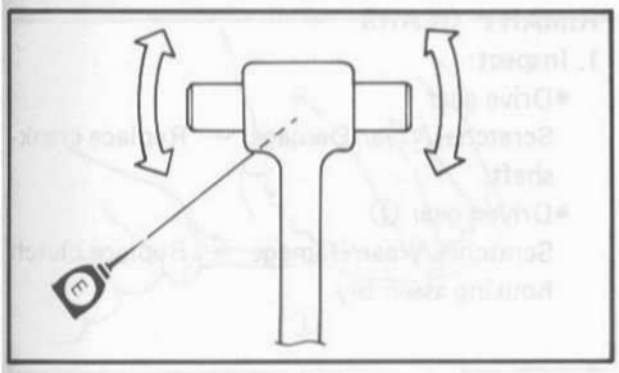

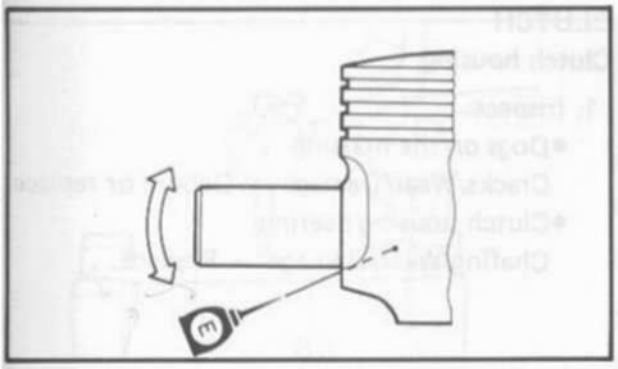

Piston Pin

1. Lubricate:
   - Piston pin (Lightly)
2. Install:
   - Piston pin
     Into small end of connecting rod.
3. Check:
   - Free play
     Free play → Inspect connecting rod and piston pin for wear.
4. Position:
   - Piston pin
     Into piston.
5. Check:
   - Free play
     When pin is in place in piston.
     Free play → Replace piston pin and/or piston.

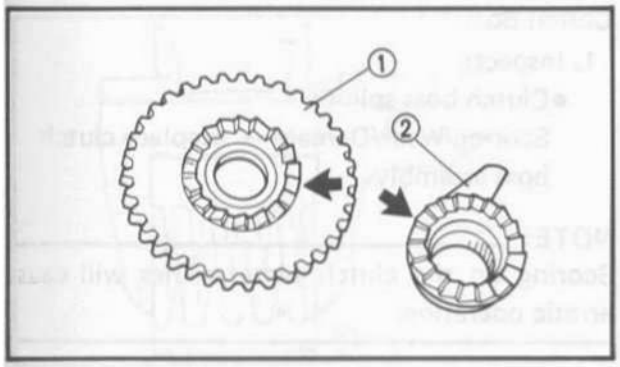

KICK STARTER

1. Inspect:
   - Kick gear ①
   - Ratchet wheel ②
     Pitting/Wear/Damage → Replace as a set.
2. Check:
   - Kick axle operation
     Unsmooth operation → Replace.
3. Inspect:
   - Ratchet wheel spring
     Damage/Fatigue → Replace.

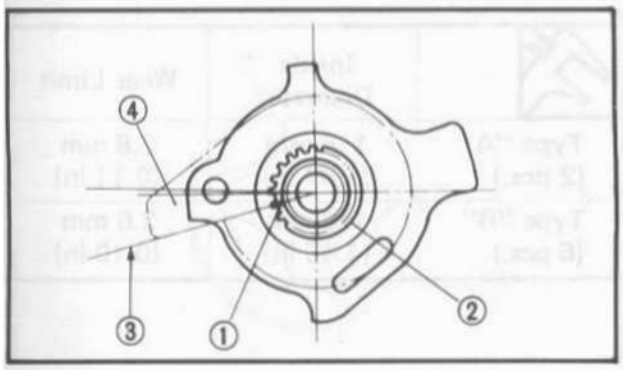

4. Install:
   - Kick axle

NOTE:

Align the punched mark ① on the kick axle ② with this line ③ on the ratchet wheel ④.

PRIMARY GEARS

1. Inspect:
   - Drive gear
     Scratches/Wear/Damage → Replace crankshaft.
   - Driven gear ①
     Scratches/Wear/Damage → Replace clutch housing assembly.

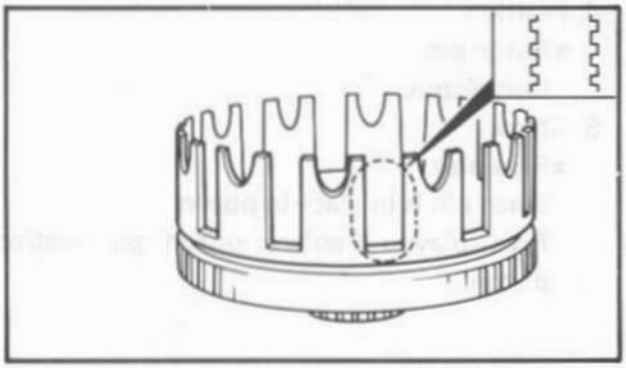

CLUTCH

Clutch housing

1. Inspect:
   - Dogs on the housing
     Cracks/Wear/Damage → Deburr or replace.
   - Clutch housing bearing
     Chafing/Wear/Damage → Replace.

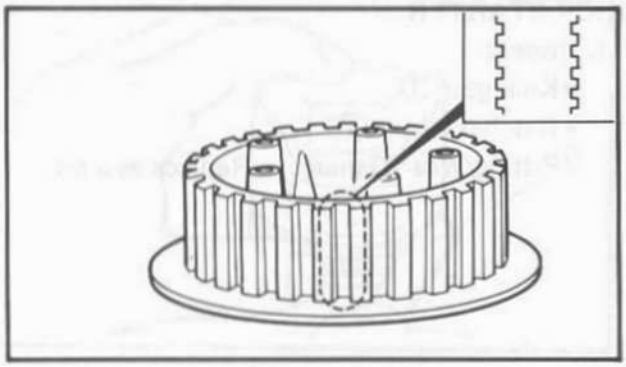

Clutch Boss

1. Inspect:
   - Clutch boss splines
     Scoring/Wear/Damage → Replace clutch boss assembly.

NOTE:
Scoring on the clutch plate splines will cause erratic operation.

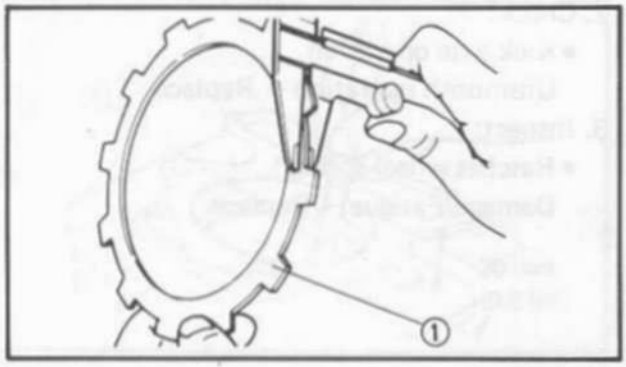

Friction Plates

1. Inspect:
   - Friction plate ①
     Damage/Wear → Replace friction plate as a set.
2. Measure:
   - Friction plate thickness
     Measure at all four points.
     Out of specification → Replace friction plate as a set.

	Inside Diameter	Wear Limit
Type "A" (2 pcs.)	116 mm (4.57 in)	2.8 mm (0.11 in)
Type "B" (6 pcs.)	113 mm (4.45 in)	2.6 mm (0.10 in)

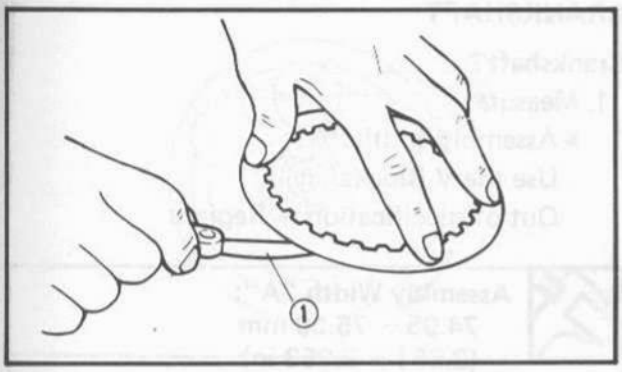

Clutch Plates

1. Measure:
   - Clutch plate warpage
     Use the surface plate and the Feeler Gauge ①.
     Out of specification → Replace.

Warp Limit:
0.2 mm (0.008 in)

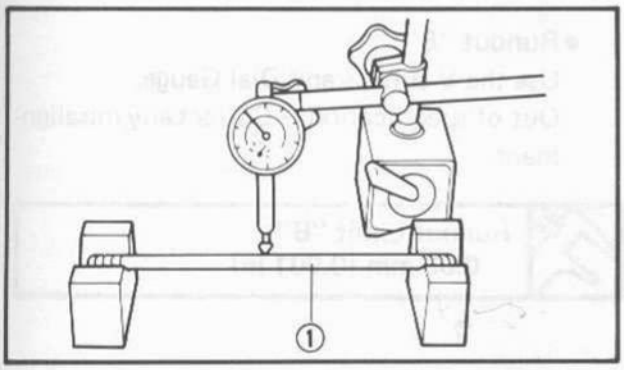

Push Rod

1. Measure:
   - Push rod runout (Long rod) ①
     Use the V-Blocks and Dial Gauge.
     Out of specification → Replace.

Bending Limit:
0.5 mm (0.02 in)

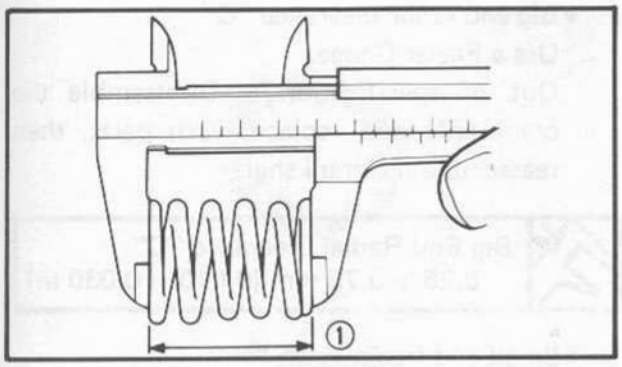

Clutch Spring

1. Measure:
   - Clutch spring free length ①
     Out of specification → Replace as a set.

Clutch Spring Free Length Limit:
40.8 mm (1.61 in)

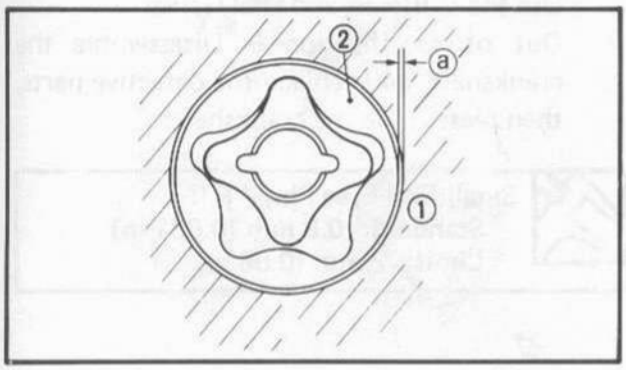

OIL PUMP

1. Measure:
   - Housing ①/Outer rotor ② clearance ⓐ
     Use a Feeler Gauge.
     Out of specification → Replace oil pump assembly.

Side Clearance Limit:
0.08 mm (0.003 in)

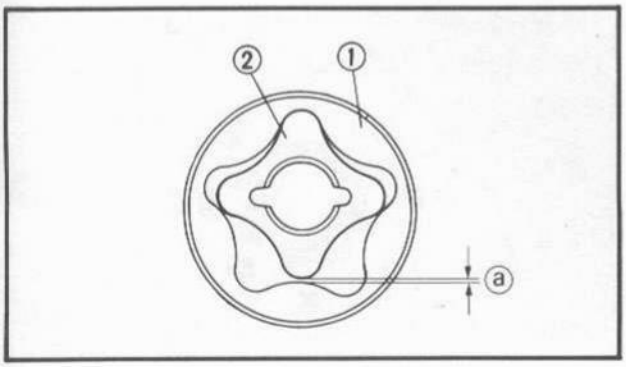

2. Measure:
   - Outer rotor ①/Inner rotor ② clearance ⓐ
     Use a Feeler Gauge.
     Out of specification → Replace oil pump assembly.

Tip Clearance Limit:
0.17 mm(0.007 in)

CRANKSHAFT

Crankshaft

1. Measure:
   - Assembly width "A"
     Use the V-Blocks.
     Out of specification → Replace.

Assembly Width "A":
74.95 ~ 75.00 mm
(2.951 ~ 2.953 in)

   - Runout "B"
     Use the V-Blocks and Dial Gauge.
     Out of specification → Correct any misalignment.

Runout Limit "B":
0.03 mm (0.001 in)

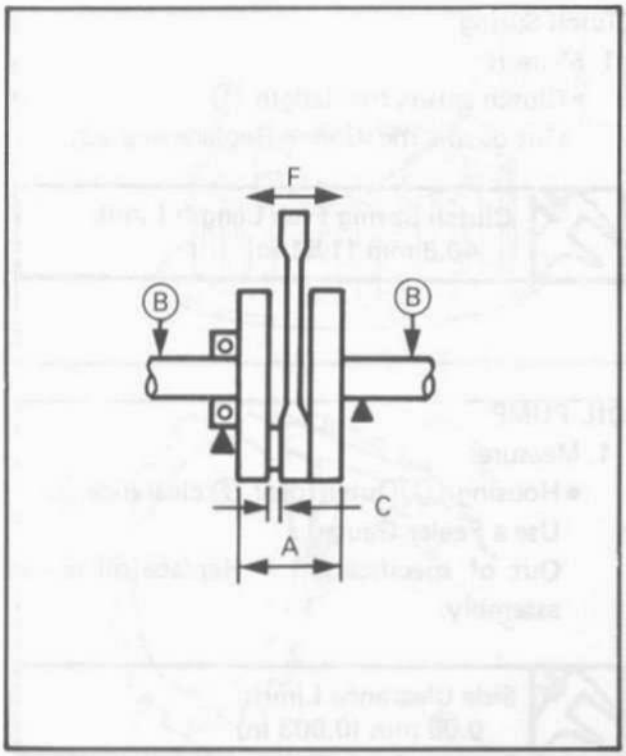

   - Big end radial clearance "C"
     Use a Feeler Gauge.
     Out of specification → Disassemble the crankshaft and replace worn parts, then reassemble the crankshaft.

Big End Radial Clearance "C":
0.25 ~ 0.75 mm (0.010 ~ 0.030 in)

   - Small end free play "F"
     Use the V-Blocks and Dial Gauge.
     Out of specification → Disassemble the crankshaft, and replace the defective parts, then reassemble the crankshaft.

Small End Free Play "F":
Standard: 0.8 mm (0.031 in)
Limit: 2 mm (0.08 in)

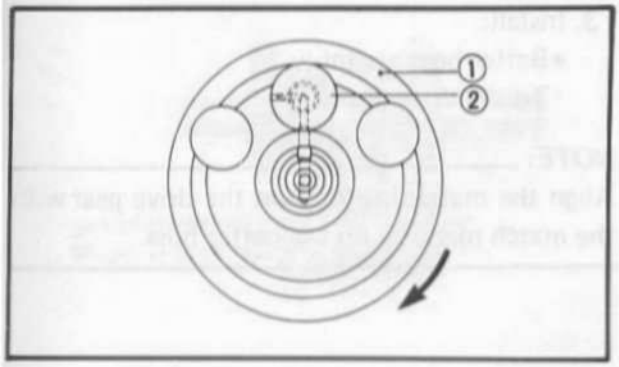

Crankshaft Reassembling

1. Install:
   - Crank pin ②

NOTE:

The crankshaft ① and the crank pin ② oil passages must be properly interconnected with a tolerance of less than 1 mm (0.04 in).

Crankshaft Bearing

1. Inspect:
   - Crankshaft bearing
     Pitting/Rust spots → Replace.

NOTE:

Lubricate the bearings immediately after examining them to prevent rust.

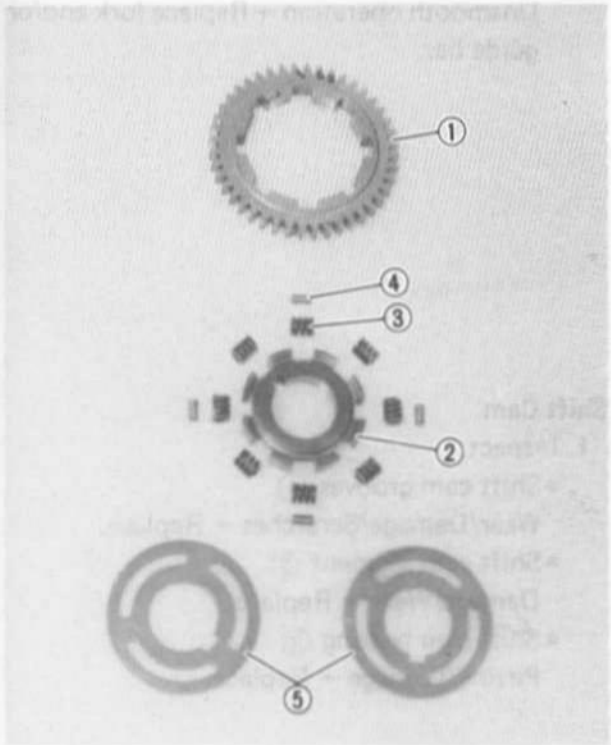

DRIVE GEAR

1. Inspect:
   - Drive gear ①
   - Baffer boss ②
   - Springs ③
   - Dowel pins ④
   - Holding plates ⑤
     Damage/Wear/Fatigue → Replace.

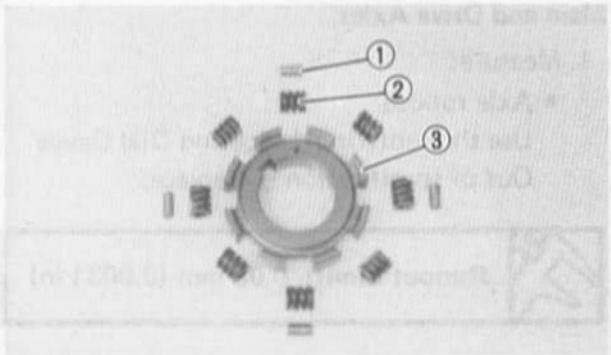

2. Install:
   - Dowel pins ①
   - Springs ②
     To the baffer boss ③.

NOTE:

Place the pins as illustrated position.

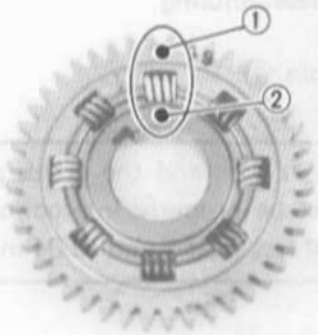

3. Install:
   - Baffer boss assembly
     To the drive gear.

NOTE:
Align the match mark ① on the drive gear with the match mark ② on the baffer boss.

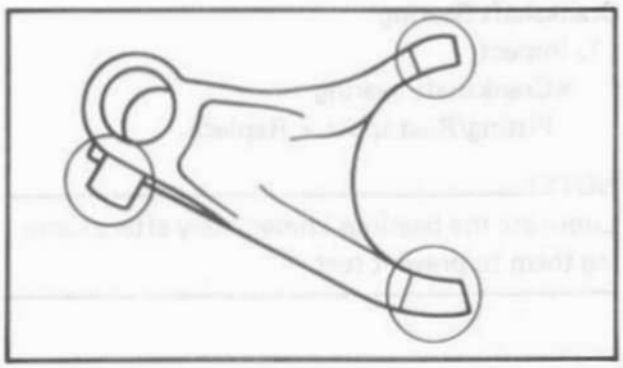

TRANSMISSION

Shift Fork

1. Inspect:
   - Shift forks
     On the gear and shift cam contact surfaces.
     Wear/Chafing/Bends/Damage → Replace.
2. Check:
   - Shift fork movement
     On its guide bar.
     Unsmooth operation → Replace fork and/or guide bar.

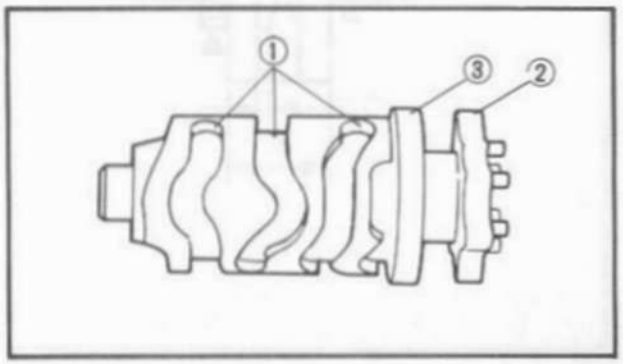

Shift Cam

1. Inspect:
   - Shift cam grooves ①
     Wear/Damage/Scratches → Replace.
   - Shift cam segment ②
     Damage/Wear → Replace.
   - Shift cam bearing ③
     Pitting/Damage → Replace.

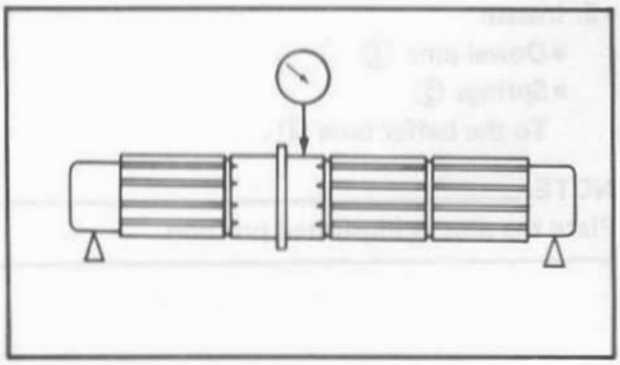

Main and Drive Axles

1. Measure:
   - Axle runout
     Use the centering device and Dial Gauge
     Out of specification → Replace.

Runout Limit: 0.08 mm (0.0031 in)

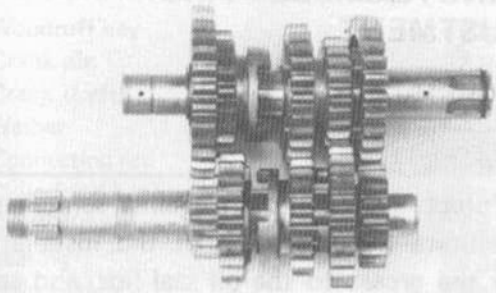

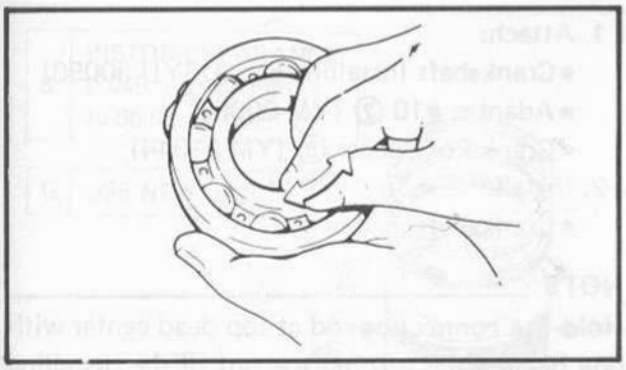

Gears

1. Inspect:
   - Gears
     Damage/Wear → Replace.
2. Check:
   - Gear movement
     Unsmooth operation → Replace.
3. Inspect:
   - Mating dogs
     Cracks/Wear/Damage → Replace.

BEARINGS

1. Inspect:
   - Axle bearings
   - Shift cam bearing
     Pitting/Damage → Replace.

CIRCLIPS AND WASHERS

1. Inspect:
   - Circlips
   - Washers
     Damage/Looseness/Bends → Replace.

ENGINE ASSMEBLY AND ADJUSTMENT

CRANKSHAFT

CAUTION:

To protect the crankshaft against scratches or to facilitate the operation of the installation. Apply the grease to the oil seal lips, and apply the engine oil to each bearing.

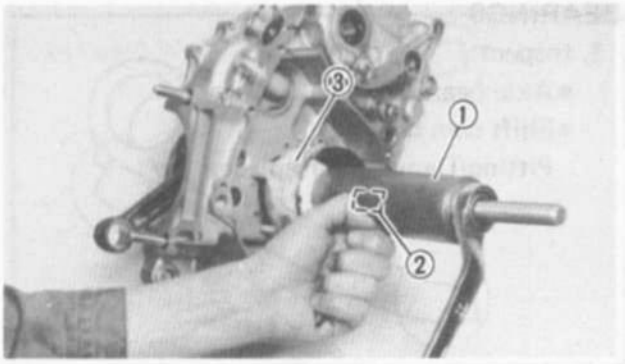

1. Attach:
   - Crankshaft Installing Set ① (YU-90050)
   - Adapter #10 ② (YM-90069)
   - Crank Pot Spacer ③ (YM-91044)
2. Install:
   - Crankshaft

NOTE:

Hold the connecting rod at top dead center with one hand while turning the nut of the Installing Tool with the other. Operate the Installing Tool until the crankshaft bottoms against the bearing.

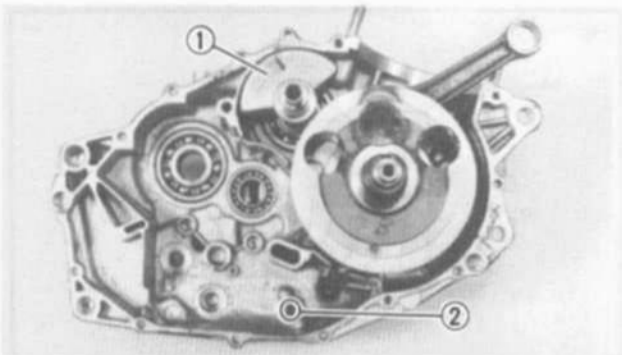

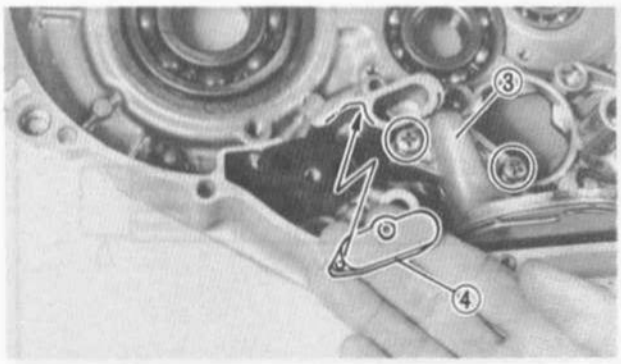

BALANCER AND OIL STRAINER

1. Install:
   - Balancer weight ①
   - O-ring (Inlet oil passage) ②
   - Gasket (New)
   - Oil strainer (New) ③
   - Oil passage cover ④

NOTE:

Make sure that the oil passage cover is stopped at the stopper of the crankcase.

Oil Strainer:
10 Nm (1.0 m·kg, 7.2 ft·lb)
LOCTITE®
Oil Passage Cover:
10 Nm (1.0 m·kg, 7.2 ft·lb)
LOCTITE®

CRANKSHAFT AND BALANCER

1. Woodruff key
2. Crank pin
3. Crank (Left)
4. Washer
5. Connecting rod
6. Cylindrical bearing
7. Crank (Right)
8. Bearing
9. Plain washer
10. Holding plate
11. Drive gear assembly (44T)
12. Holding plate
13. Balancer gear (44T)
14. Oil seal
15. Bearing
16. Straight key
17. Balancer weight
18. Bearing
19. Piston ring set
20. Piston

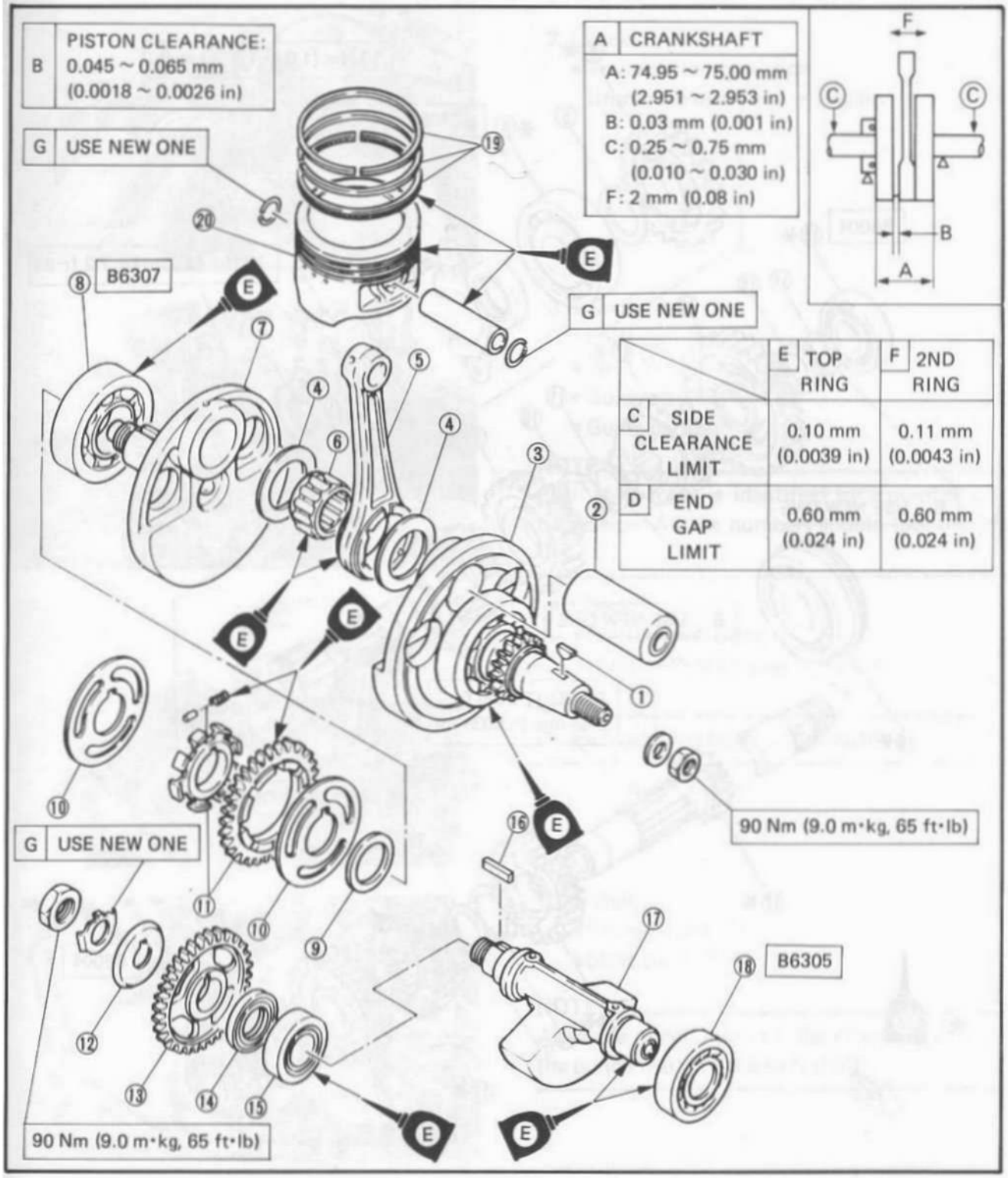

	E TOP RING	F 2ND RING
C SIDE CLEARANCE LIMIT	0.10 mm (0.0039 in)	0.11 mm (0.0043 in)
D END GAP LIMIT	0.60 mm (0.024 in)	0.60 mm (0.024 in)

TRANSMISSION

① Holding plate
② Drive sprocket (14T)
③ Cover plate
④ Oil seal
⑤ Shim
⑥ 2nd wheel gear (27T)
⑦ Drive axle
⑧ 5th wheel gear (21T)
⑨ 3rd wheel gear (24T)
⑩ Special washer
⑪ Circlip
⑫ 4th wheel gear (21T)
⑬ 1st wheel gear (30T)
⑭ Plain washer
⑮ Bearing
⑯ Bearing
⑰ Main axle (13T)
⑱ 4th pinion gear (22T)
⑲ 3rd pinion gear (20T)
⑳ 5th pinion gear (27T)
㉑ 2nd pinion gear (17T)
㉒ Bearing

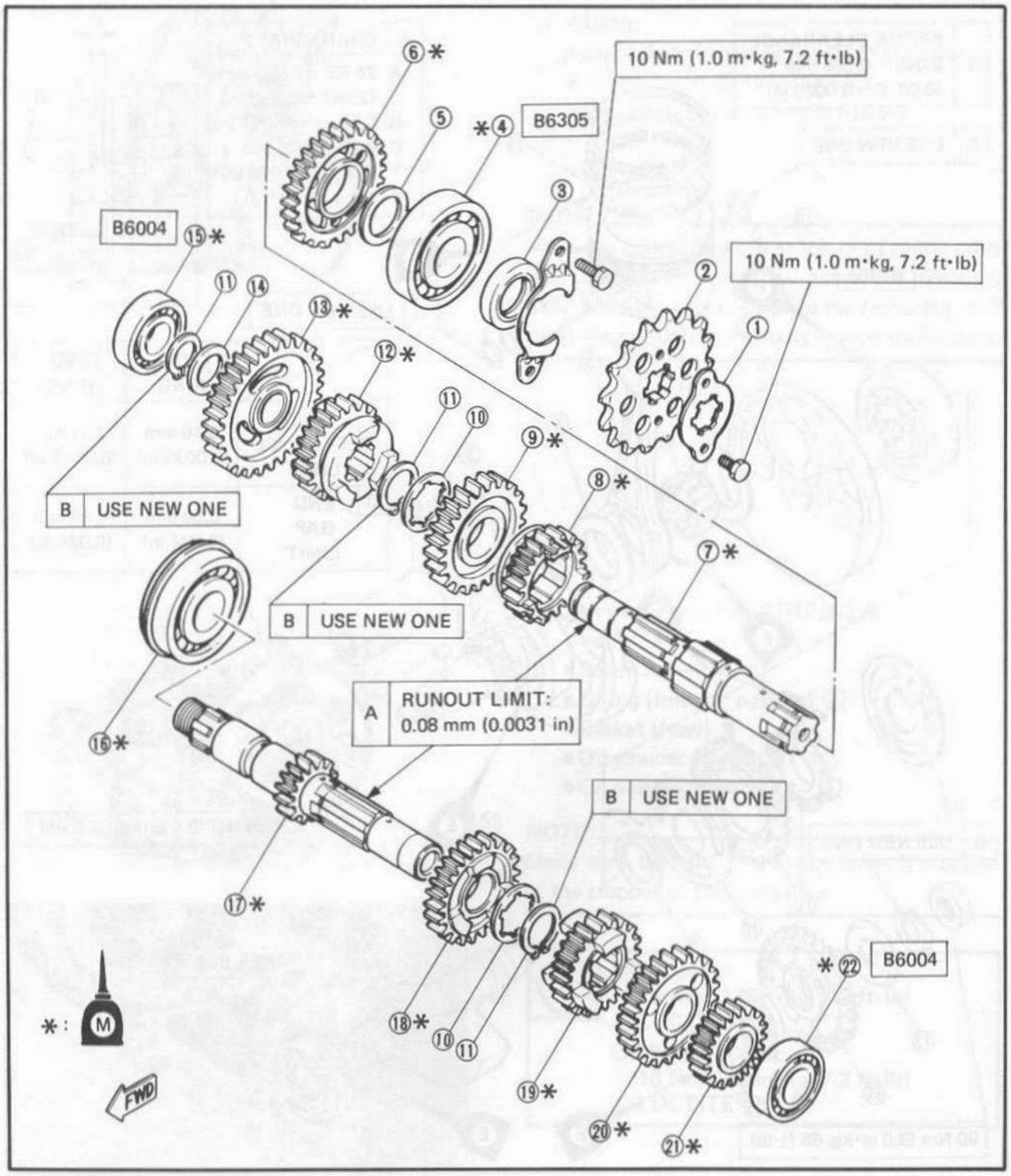

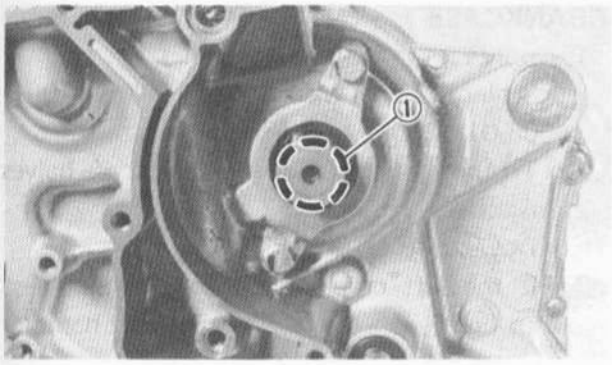

SHIFTER AND TRANSMISSION

1. Install:
   - Transmission assembly

NOTE:

- Before installing the transmission assembly, do not forget to fit the shim.
- While installing the drive axle into the crankcase, pay careful attention to the oil seal lip. A recommended practice is to fit the O-ring ① and apply grease over the fitted area.

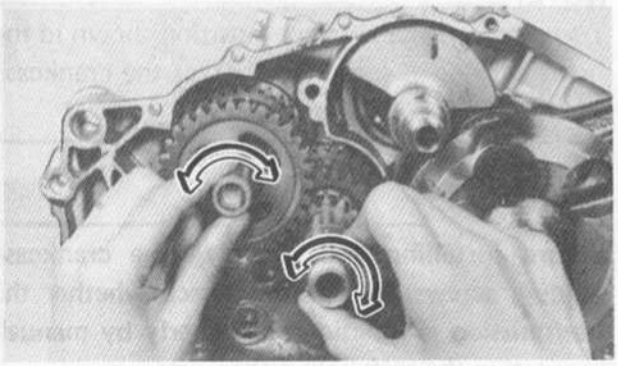

2. Check:
   - Transmission operation
     Unsmooth operation → Repair.

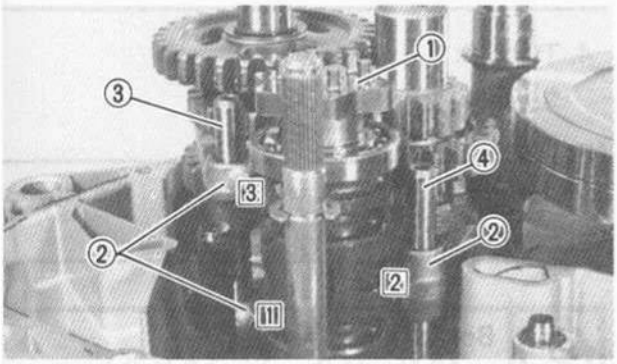

3. Install:
   - Shift cam ①
   - Shift forks ②
   - Guide bar (Longer) ③
   - Guide bar (Shorter) ④

NOTE:

Each shift forks is identified by a number cast on its side. All the numbers should face the left side.

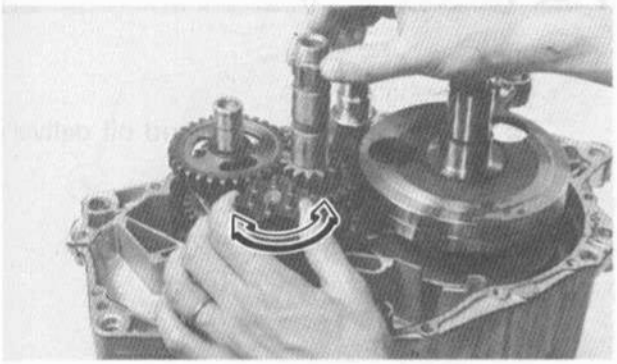

4. Check:
   - Shifter operation
     Unsmooth operation → Repair.

NOTE:

Oil each gear and bearing thoroughly.

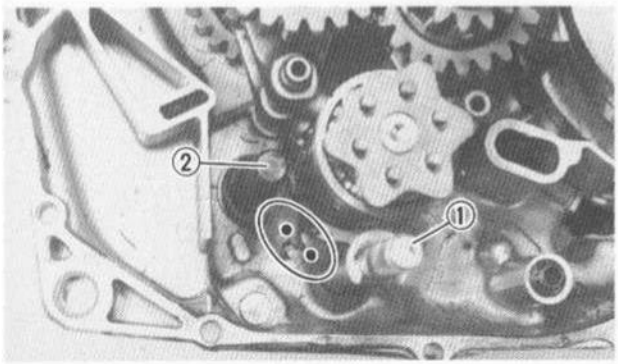

5. Install:
   - Change shaft ①
   - Shift shaft ②

NOTE:

Align the punch mark on the change shaft with the punch mark on the shift shaft.

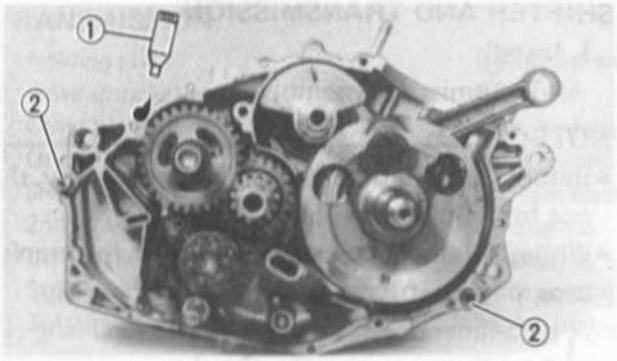

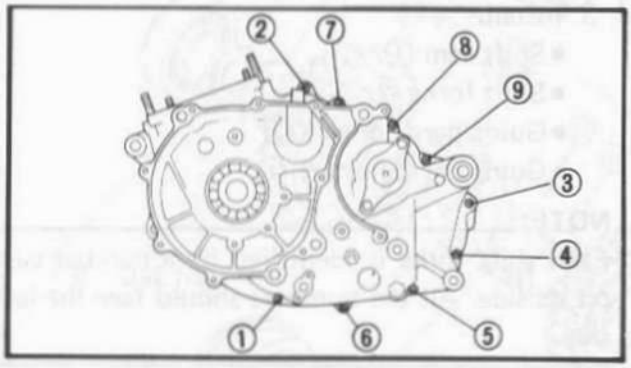

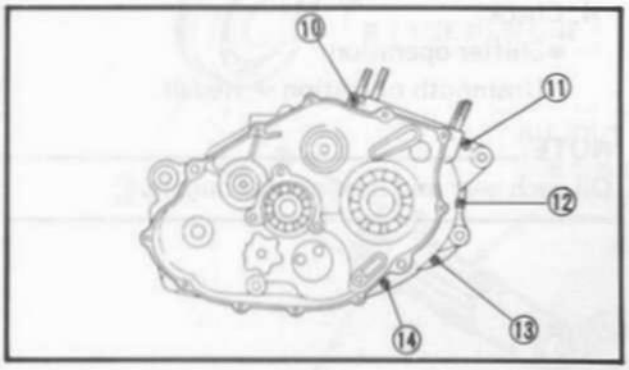

CRANKCASE

1. Apply:
   - Sealant (Quick Gasket®) ① (ACC-11001-05-01)
     To the mating surfaces of both case halves.
2. Install:
   - Dowel pins ②
3. Fit the left crankcase onto the right case. Tap lightly on the case with a soft hammer.

NOTE:

Turn the shift cam to the position shown in the figure so that it does not contact the crankcase when installing the crankcase.

CAUTION:

Before installing and torquing the crankcase holding screws, be sure to check whether the transmission is functioning properly by manually rotating the shift cam either way.

4. Tighten:
   - Bolts (Crankcase) ① ~ ⑭

NOTE:

Tighten the bolts starting with the lowest numbered one.

Bolts (Crankcase):
10 Nm (1.0 m·kg, 7.2 ft·lb)

5. Apply:
   - 4-stroke engine oil
     To the crank pin, bearing and oil delivery hole.
6. Check:
   - Crankshaft and transmission operation
     Unsmooth operation → Repair.

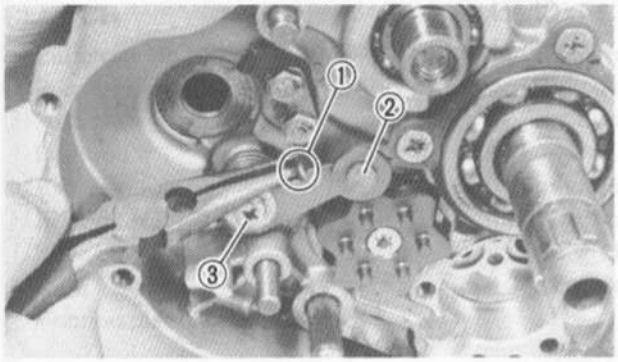

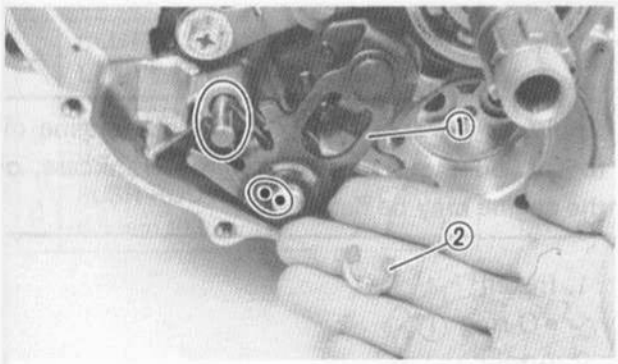

SHIFT SHAFT

1. Install:
   - Spring ①
   - Stopper lever ②
   - Nut (Stopper lever) ③
2. Set the stopper lever and torsion spring as properly position.
3. Tighten:
   - Nut (Stopper lever)

Nut (Stopper lever):
10 Nm (1.0 m·kg, 7.2 ft·lb)
LOCTITE®

4. Install:
   - Shift lever ①
   - Circlip ②

NOTE:

When installing the shift lever, align the punched mark on the shift lever with the punched mark on the shift shaft.

5. Check:
   - Change operation
     Unsmooth operation → Repair.

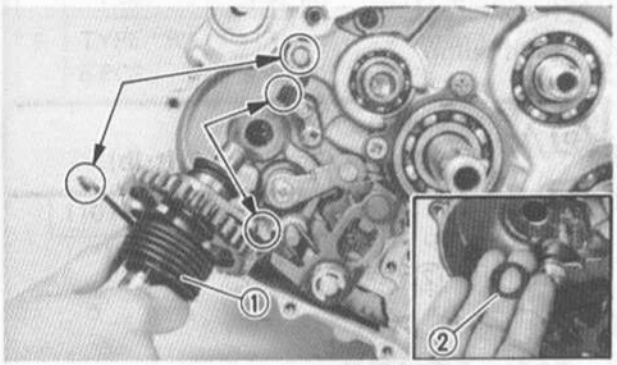

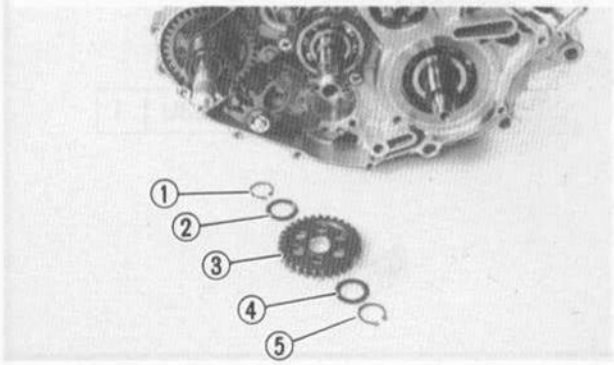

KICK AXLE

1. Install:
   - Kick axle assembly ①
     Rotate the shaft clockwise.

NOTE:

- Before installing the kick axle assembly, do not forget to fit the plain washer.
- Make sure that the ratchet wheel guide is stopped at the stopper of the crankcase.

2. Set the kick spring to the spring hook.
3. Install:
   - Circlip ①
   - Plain washer ②
   - Kick idle gear ③
   - Plain washer ④
   - Circlip ⑤

4. Check:
   - Kick axle operation
     Unsmooth operation → Repair.

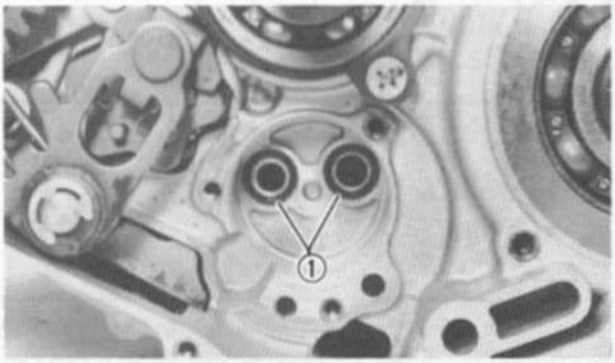

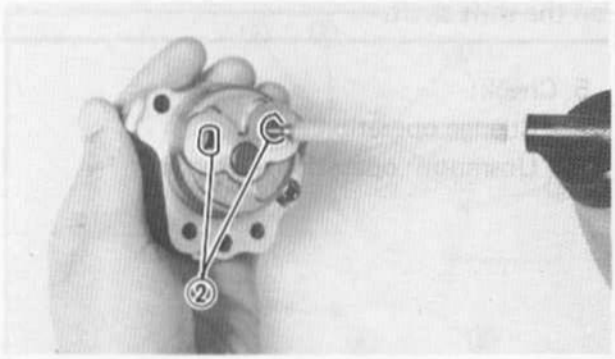

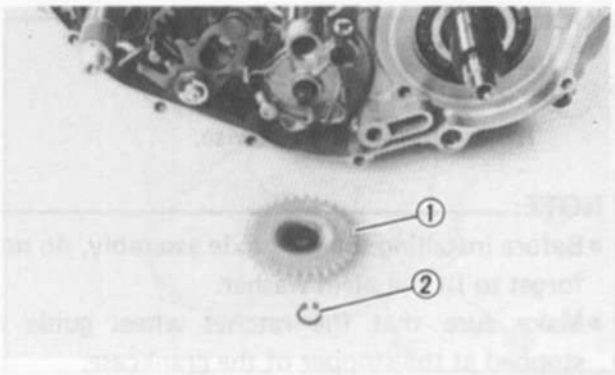

OIL PUMP

CAUTION:

Apply a liberal amount of 4-stroke engine oil to the oil pump passages in the crankcase, or the engine may be damaged.

1. Install:
   - O-ring ①
2. Apply:
   - 4-stroke engine oil
     To the oil passages ②.

3. Install:
   - Oil pump

Oil Pump:
10 Nm (1.0 m·kg, 7.2 ft·lb)

- Oil pump driven gear ①
- Circlip ②

CLUTCH

① Clutch spring
② Pressure plate
③ Push plate
④ Push rod #1
⑤ Ball
⑥ Friction plate (Type "A")
⑦ Wave plate
⑧ Clutch plate
⑨ Friction plate (Type "B")
⑩ Clutch boss
⑪ Holding plate
⑫ Primary driven gear comp. (74T)
⑬ Push rod #2
⑭ Push lever comp.
⑮ Set screw
⑯ Straight key
⑰ Primary drive gear (31T)

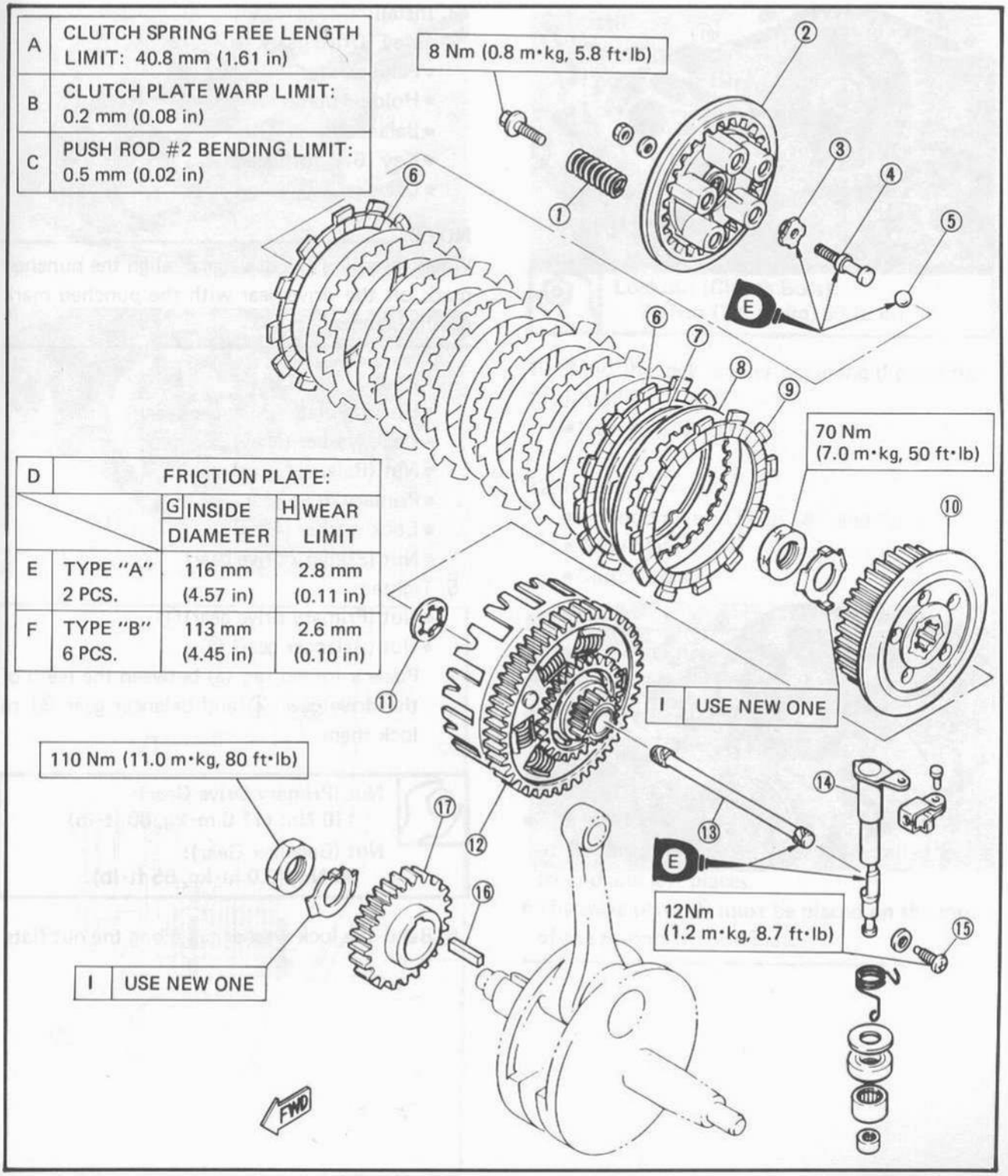

A	CLUTCH SPRING FREE LENGTH LIMIT: 40.8 mm (1.61 in)
B	CLUTCH PLATE WARP LIMIT: 0.2 mm (0.08 in)
C	PUSH ROD #2 BENDING LIMIT: 0.5 mm (0.02 in)

D	FRICTION PLATE:		
		G INSIDE DIAMETER	H WEAR LIMIT
E	TYPE "A" 2 PCS.	116 mm (4.57 in)	2.8 mm (0.11 in)
F	TYPE "B" 6 PCS.	113 mm (4.45 in)	2.6 mm (0.10 in)

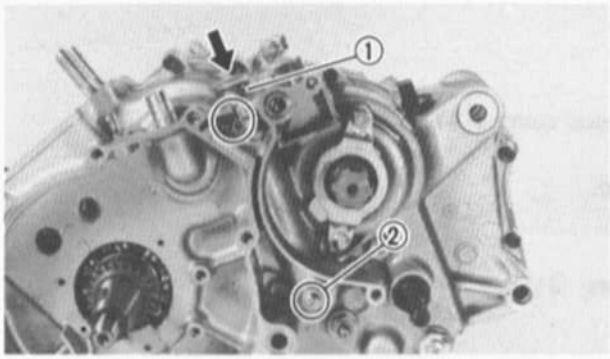

CLUTCH

1. Install:
   - Clutch push lever axle assembly ①
   - Set screw ②

Set Screw:
12 Nm (1.2 m·kg, 8.7 ft·lb)

2. Set the push lever axle spring to its position.

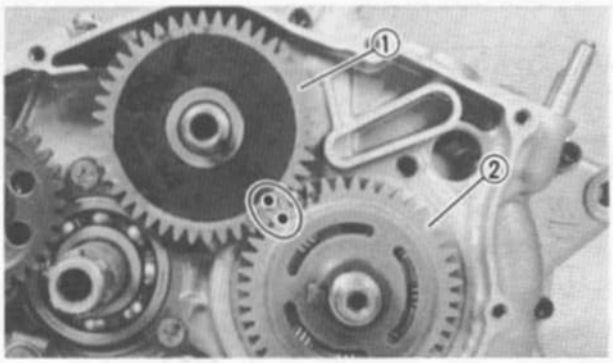

3. Install:
   - Key (Drive gear)
   - Plain washer
   - Holding plates
   - Balancer gear ①
   - Key (Balancer gear)
   - Drive gear ②

NOTE:

When installing the drive gear, align the punched mark on the drive gear with the punched mark on the balancer gear.

4. Install:
   - Holding plate (Balancer gear)
   - Lock washer (New)
   - Nut (Balancer gear)
   - Primary drive gear
   - Lock washer (New)
   - Nut (Primary drive gear)
5. Tighten:
   - Nut (Primary drive gear) ①
   - Nut (Balancer gear) ②

   Place a folded rag ③ between the teeth of the drive gear ④ and balancer gear ⑤ to lock them.

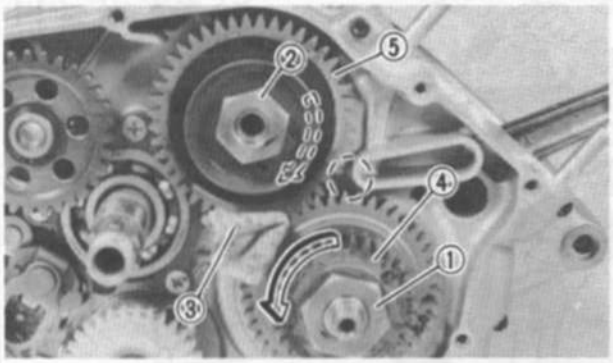

Nut (Primary Drive Gear):
110 Nm (11.0 m·kg, 80 ft·lb)
Nut (Balancer Gear):
90 Nm (9.0 m·kg, 65 ft·lb)

6. Bend the lock washer tab along the nut flats.

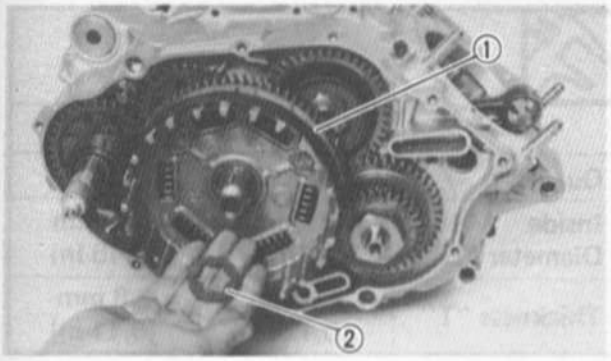

7. Install:
   - Primary driven gear ①
   - Holding plate ②

NOTE:
Install the primary driven gear while turning the kick idle gear, primary drive gear and balancer gear.

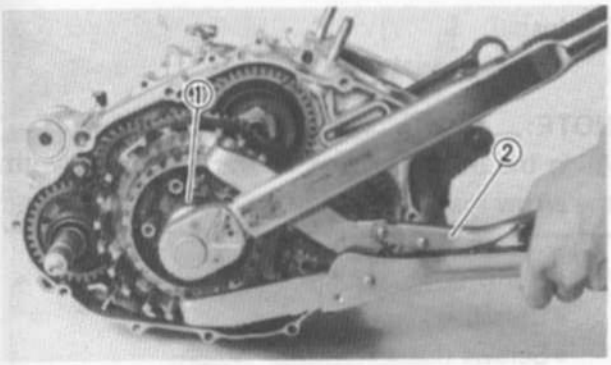

8. Install:
   - Clutch boss
   - Lock washer (New)
   - Locknut (Clutch boss)
9. Tighten:
   - Locknut (Clutch boss) ①
     Use the Universal Clutch Holder ② (YM-91042) to hold the clutch boss.

	Locknut (Clutch Boss): **70 Nm (7.0 m·kg, 50 ft·lb)**

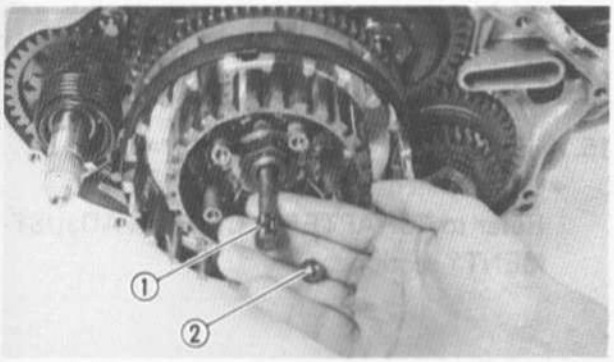

10. Bend the lock washer tab along the nut flats.
11. Install:
    - Push rod #2 ①
    - Ball ②
12. Install:
    - Friction plates (Type "A" and "B")
    - Wave plate
    - Clutch plates

NOTE:
Install the clutch plates and friction plate alternately on the clutch boss, starting with a friction plate and ending with a friction plate.

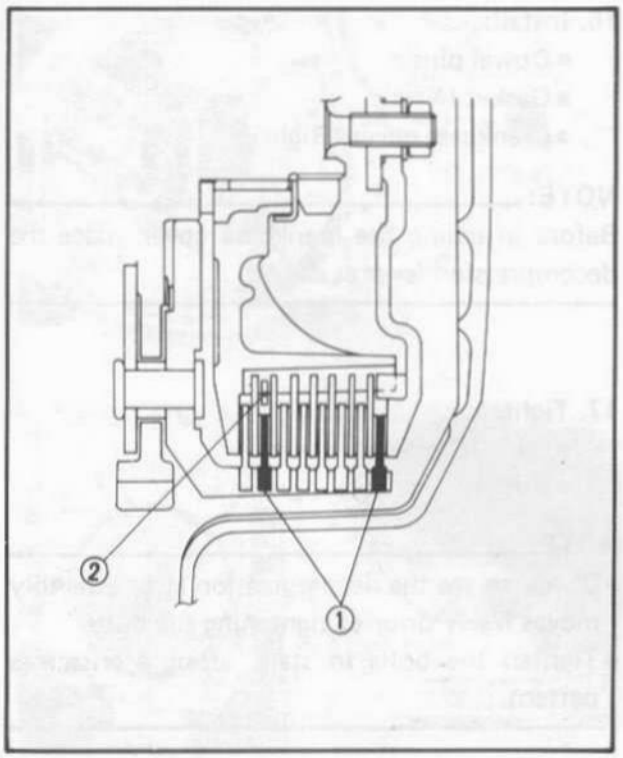

CAUTION:

- **The friction plates (Type A) ① with the larger of the inside diameter must be installed in the second and last places.**
- **The wave plate ② must be placed on the inside of the second friction plate.**

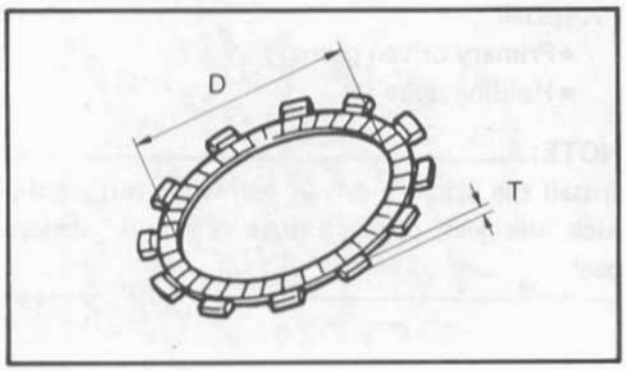

	Friction Plate	
	Type "A"	Type "B"
Quantity	2 pcs.	6 pcs.
Inside Diameter "D"	116 mm (4.57 in)	113 mm (4.45 in)
Thickness "T"	3.0 mm (0.12 in)	2.8 mm (0.11 in)

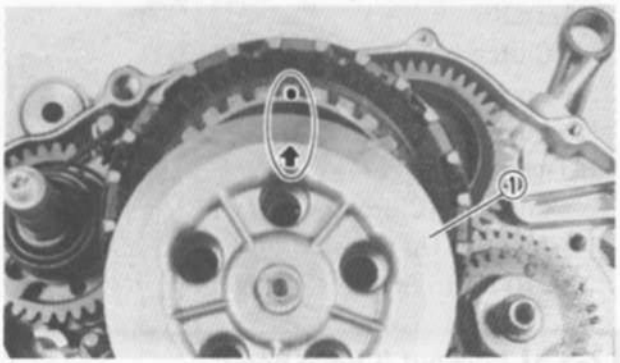

13. Install:
    - Pressure plate ①

NOTE:
Align the punched mark on the clutch boss with the arrow mark on the clutch pressure plate.

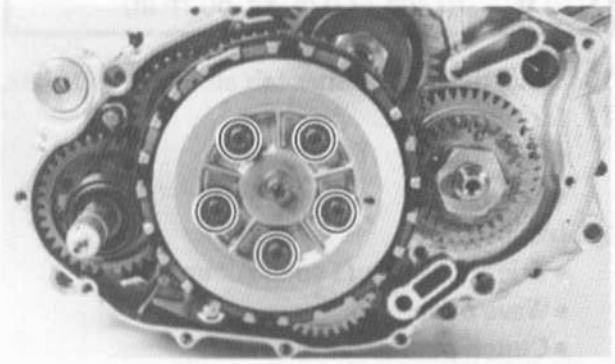

14. Install:
    - Clutch springs
    - Screws (Clutch spring)

Screws (Clutch Spring):
8 Nm (0.8 m·kg, 5.8 ft·lb)

15. Adjust:
    - Clutch mechanism free play
      Refer to "CHAPTER 2. CLUTCH ADJUSTMENT" section.

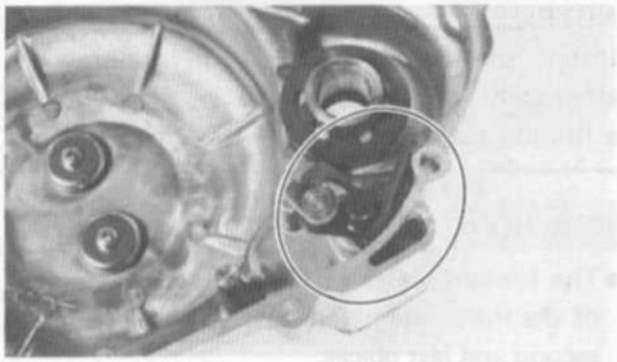

16. Install:
    - Dowel pins
    - Gasket (New)
    - Crankcase cover (Right)

NOTE:
Before installing the crankcase cover, place the decompression lever as shown.

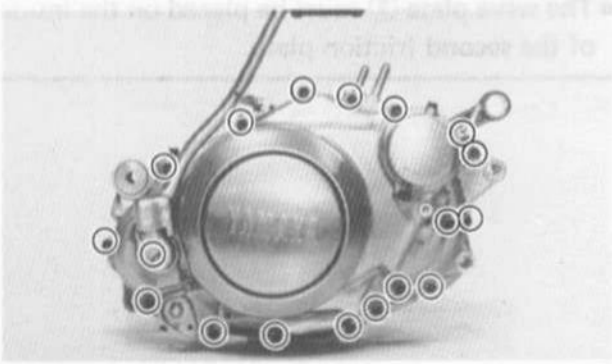

17. Tighten:
    - Bolts (Crankcase cover)
    - Nut (Kick crank)

NOTE:
- Check to see the decompression lever assembly moves freely prior to tightening the bolts.
- Tighten the bolts in stage, using a crisscross pattern.

Bolts (Crankcase Cover):
10 Nm (1.0 m·kg, 7.2 ft·lb)
Nut (Kick Crank):
50 Nm (5.0 m·kg, 36 ft·lb)

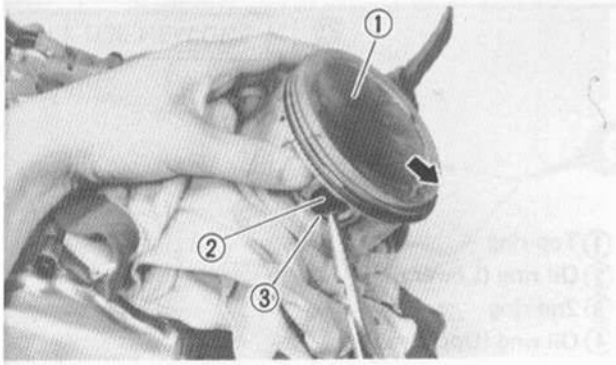

PISTON

1. Install:
   - Piston ①
   - Piston pin ②
   - Piston pin clip ③

NOTE:
- The arrow on the piston must point to the front of the engine.
- Before installing the piston pin clip, cover the crankcase with a clean towel or rag so you will not accidentally drop the pin clip and material into the crankcase.
- Always use a new piston pin clip.

2. Apply:
   - 4-stroke engine oil
     To the piston pin, bearing, piston ring grooves and piston skirt areas.

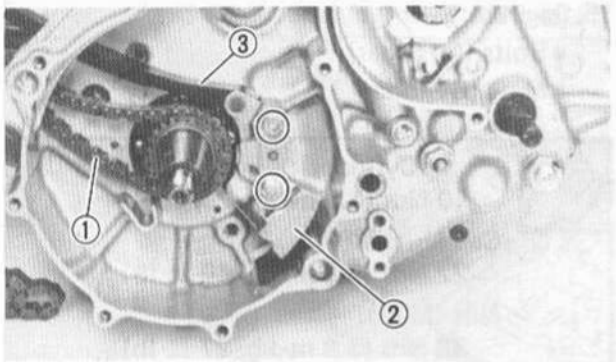

CYLINDER

1. Install:
   - Cam chain ①
   - Oil baffle plate ②
   - Cam chain damper (Rear) ③

Cam Chain Damper (Rear):
8 Nm (0.8 m·kg, 5.8 ft·lb)

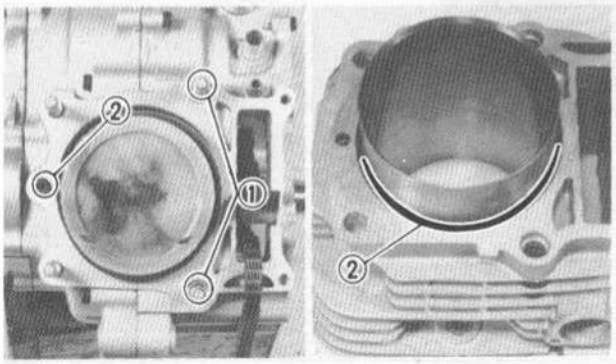

2. Install:
   - Gasket (New)
   - Dowel pins ①
   - O-rings ②

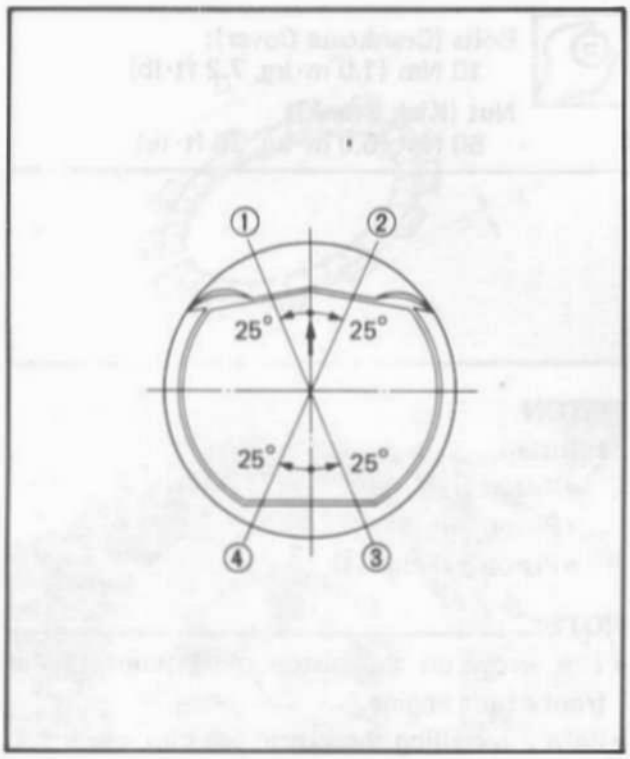

3. Offset the piston ring end gaps as shown.

NOTE:
- Be sure to check the manufacturer's marks or numbers stamped on the rings are on the top side of the rings.
- Before installing the cylinder, apply a liberal coating of 4-stroke engine oil to the piston rings.

① Top ring
② Oil ring (Lower rail)
③ 2nd ring
④ Oil ring (Upper rail)

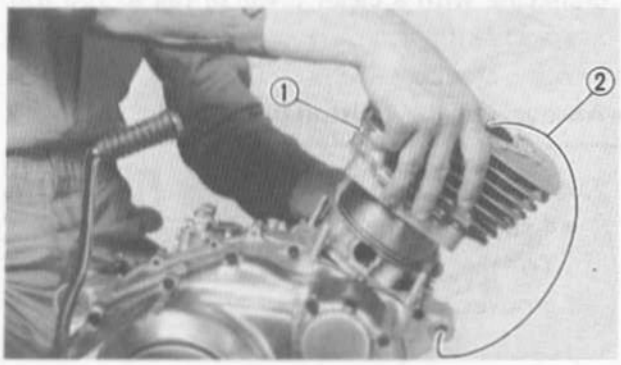

4. Install:
   - Cylinder ①

NOTE:
- Install the cylinder with one hand while compressing the piston rings with the other hand.
- Tie the cam chain with a piece of mechanics wire ② , and feed it through the chain opening.

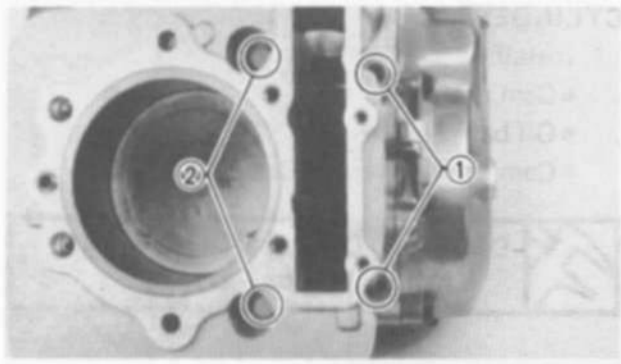

5. Tighten:
   - Bolts (Cylinder) ①
   - Nuts (Cylinder) ②

Bolts (Cylinder):
10 Nm (1.0 m·kg, 7.2 ft·lb)
Cap Nut (M8):
22 Nm (2.2 m·kg, 16 ft·lb)
Nut (M10):
38 Nm (3.8 m·kg, 27 ft·lb)

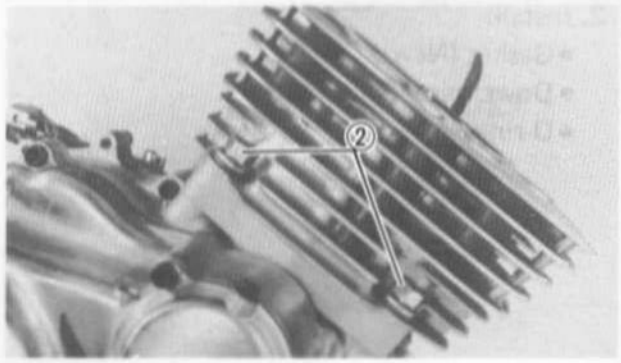

CYLINDER HEAD

① Camshaft
② Cam sprocket
③ Cam chain damper (Front)
④ Cam chain
⑤ Cam chain damper (Rear)
⑥ Cam chain tensioner
⑦ Valve
⑧ Valve spring seat
⑨ Valve spring (Outer)
⑩ Valve spring (Inner)
⑪ Oil seal
⑫ Valve spring seat
⑬ Valve retainers
⑭ Rocker shaft
⑮ Rocker arm
⑯ Wave washer
⑰ Valve adjuster
⑱ Locknut
⑲ O-ring

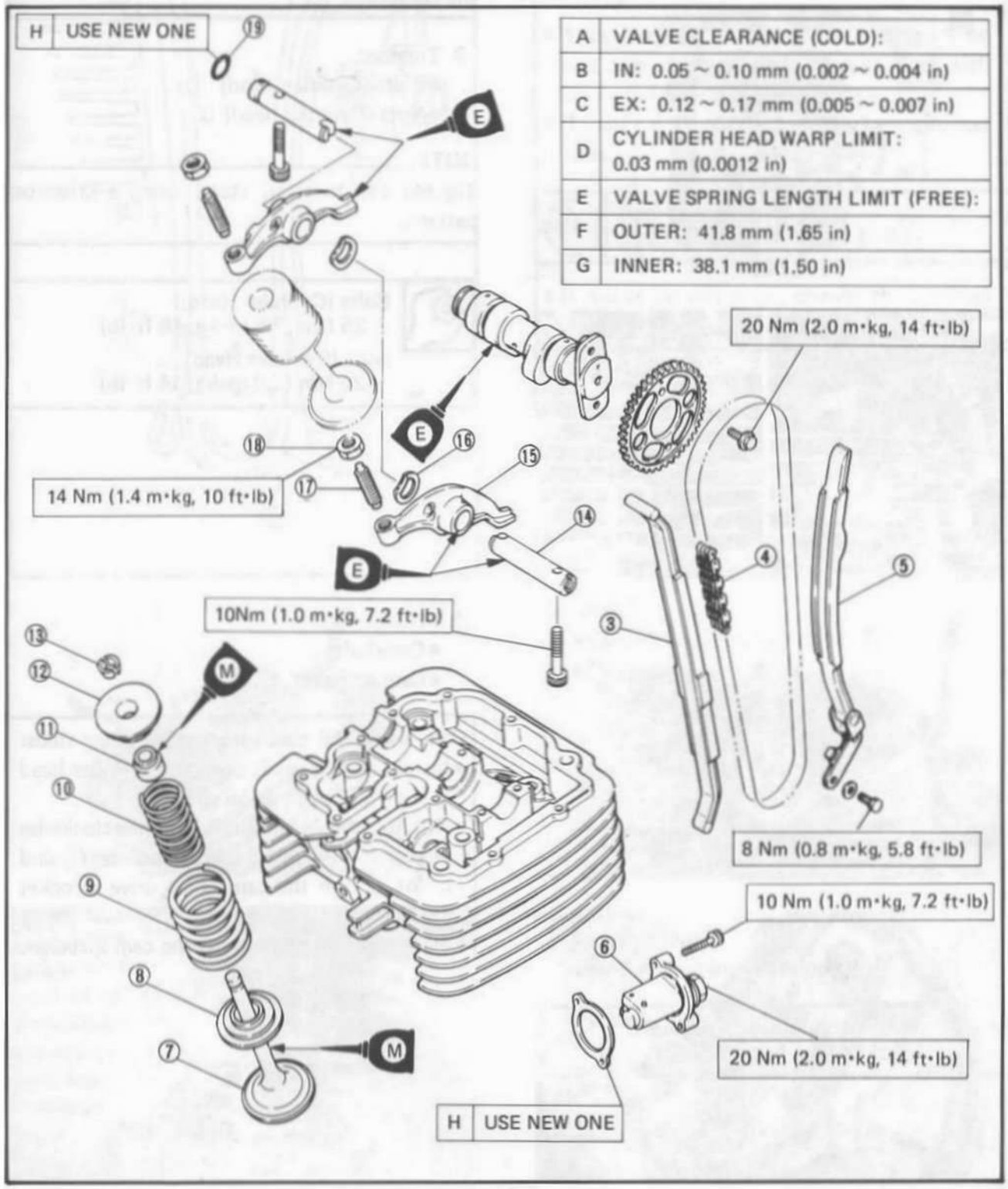

A	VALVE CLEARANCE (COLD):
B	IN: 0.05 ~ 0.10 mm (0.002 ~ 0.004 in)
C	EX: 0.12 ~ 0.17 mm (0.005 ~ 0.007 in)
D	CYLINDER HEAD WARP LIMIT: 0.03 mm (0.0012 in)
E	VALVE SPRING LENGTH LIMIT (FREE):
F	OUTER: 41.8 mm (1.65 in)
G	INNER: 38.1 mm (1.50 in)

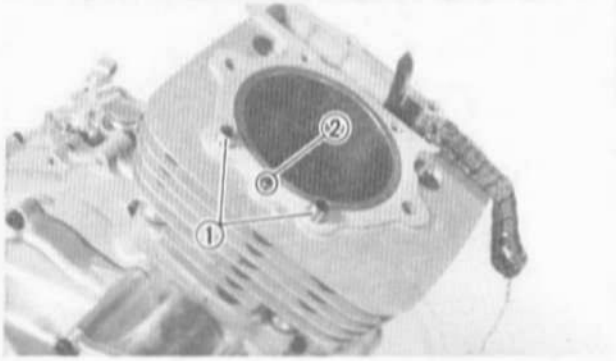

CYLINDER HEAD

1. Install:
   - Dowel pins ①
   - O-ring ②
   - Gasket (New)
2. Install:
   - Cylinder head

NOTE:

Tie the cam chain so that it does not fall into the crankcase.

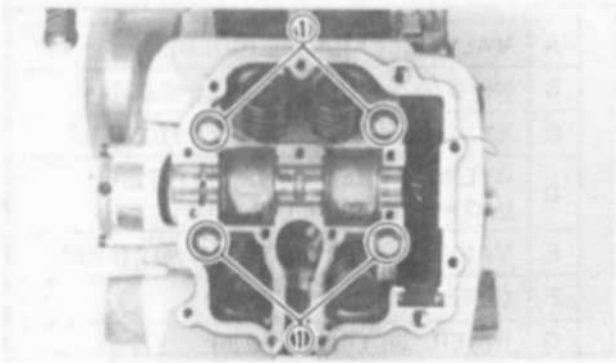

3. Tighten:
   - Bolts (Cylinder head) ①
   - Nuts (Cylinder head) ②

NOTE:

Tighten the bolts in stage, using a crisscross pattern.

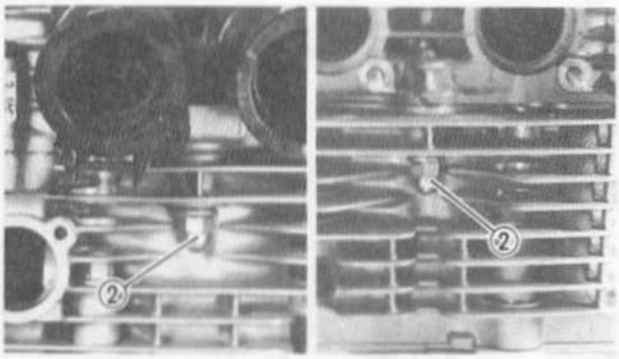

Bolts (Cylinder Head):
25 Nm (2.5 m·kg, 18 ft·lb)
Nuts (Cylinder Head):
20 Nm (2.0 m·kg, 14 ft·lb)

4. Install:
   - Camshaft
   - Cam sprocket

Cam shaft and cam sprocket installing steps:
- Install the camshaft onto the cylinder head as shown (Compression stroke).
- Rotate the crankshaft counterclockwise direction until the crankcase pointer ① and a dot ② on the cam chain drive sprocket are aligned.
- Place the cam chain onto the cam sprocket.

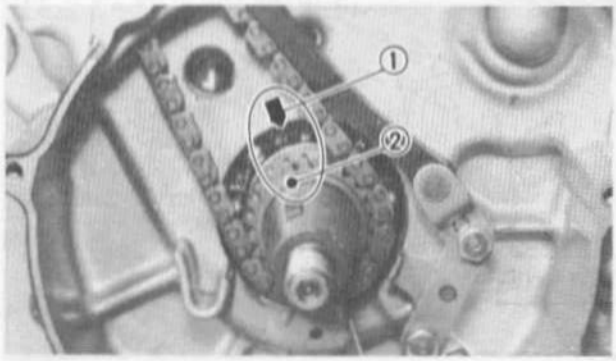

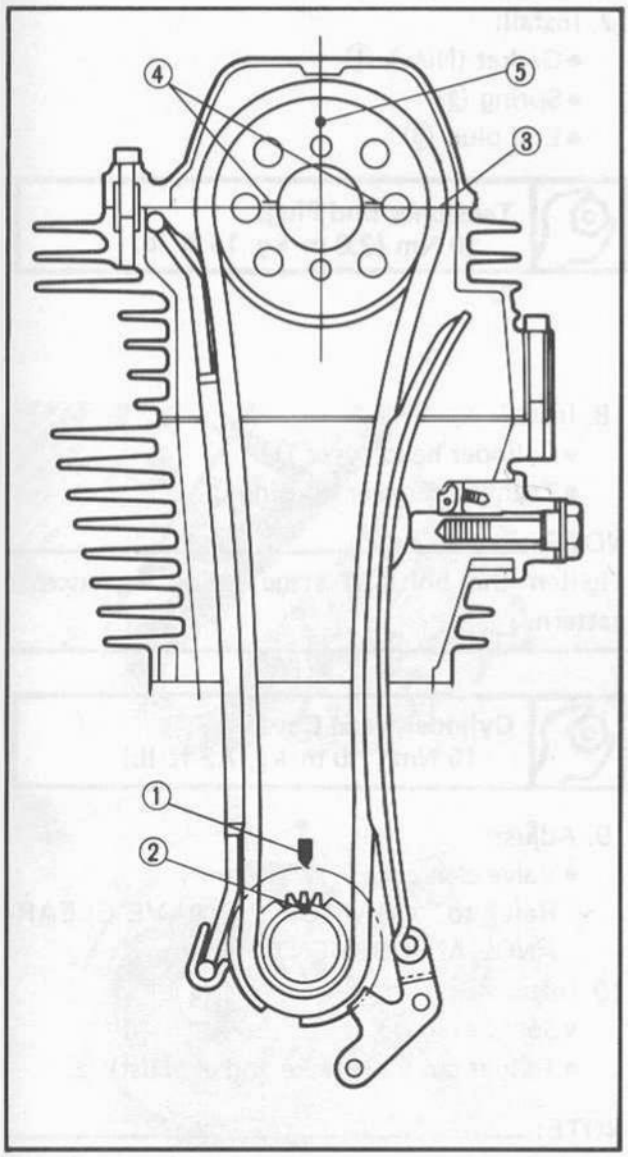

- Install the sprocket with timing marks are shown, and finger tighten the sprocket bolts.

③ Cylinder head upper surface
④ Timing marks
⑤ Upper position mark

- Force the camshaft clockwise and counter-clockwise to remove the cam chain slack.
- Insert your finger into the cam chain tensioner hole, and push the cam chain damper inward.
- While pushing the cam chain damper, be sure cam sprocket timing marks align with the cylinder head upper surface.
- If marks is aligned, tighten the cam sprocket bolts.

Cam Sprocket:
20 Nm (2.0 m·kg, 14 ft·lb)

- If marks do not align, change the meshing piston of sprocket and cam chain.

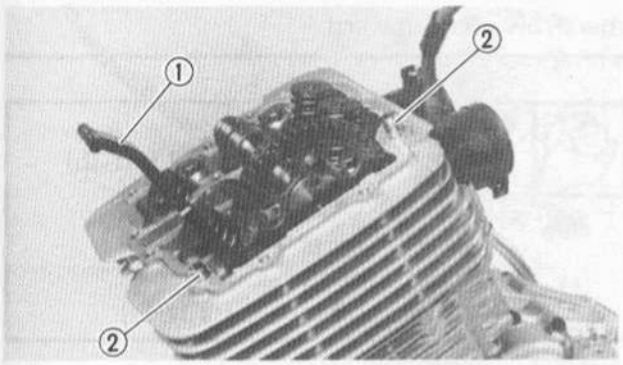

5. Install:
   - Cam chain damper (Front) ①
   - Dowel pins ②

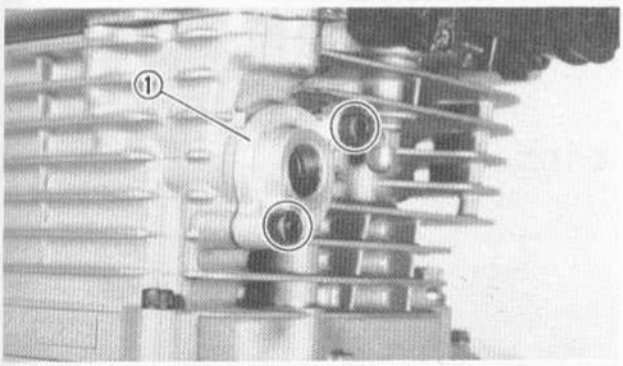

6. Install:
   - Gasket (New)
   - Cam chain tensioner body ①

Cam Chain Tensioner:
10 Nm (1.0 m·kg, 7.2 ft·lb)

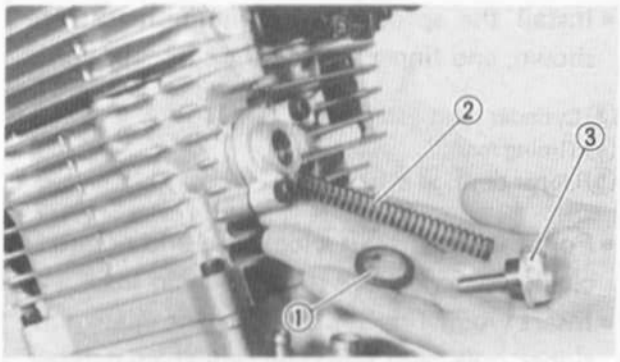

7. Install:
   - Gasket (New) ①
   - Spring ②
   - End plug ③

Tensioner End Plug:
20 Nm (2.0 m·kg, 14 ft·lb)

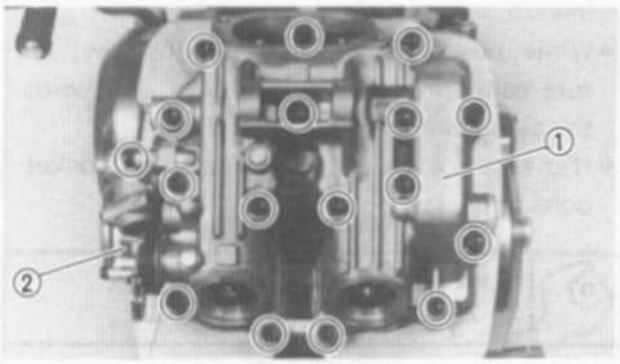

8. Install:
   - Cylinder head cover ①
   - Tachometer gear housing ②

NOTE:
Tighten the bolts in stage, using a crisscross pattern.

Cylinder Head Cover:
10 Nm (1.0 m·kg, 7.2 ft·lb)

9. Adjust:
   - Valve clearance
     Refer to "CHAPTER 2. VALVE CLEARANCE ADJUSTMENT" section.
10. Install:
   - Spark plug ①
   - Tappet covers (Intake and exhaust) ②

NOTE:
The intake tappet cover should be installed with the arrow mark upward.

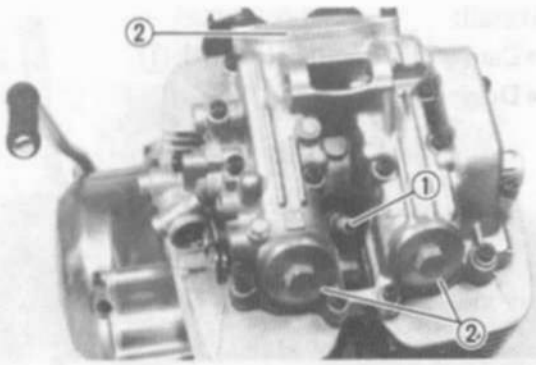

Spark Plug:
17.5 Nm (1.75 m·kg, 12.5 ft·lb)
Tappet Cover (Exhaust):
10 Nm (1.0 m·kg, 7.2 ft·lb)
Tappet Cover (Intake):
10 Nm (1.0 m·kg, 7.2 ft·lb)

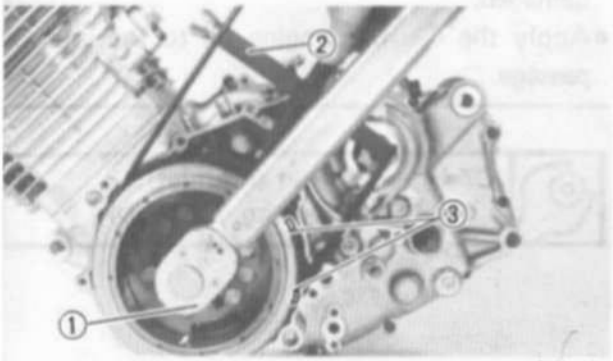

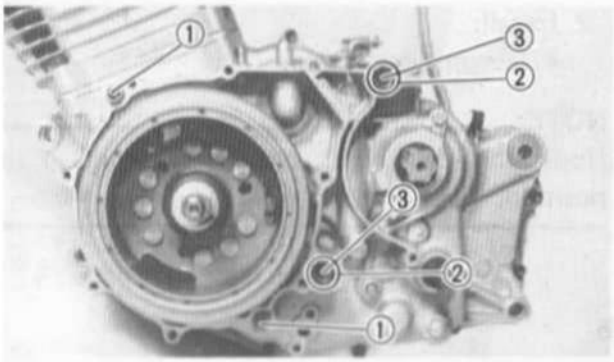

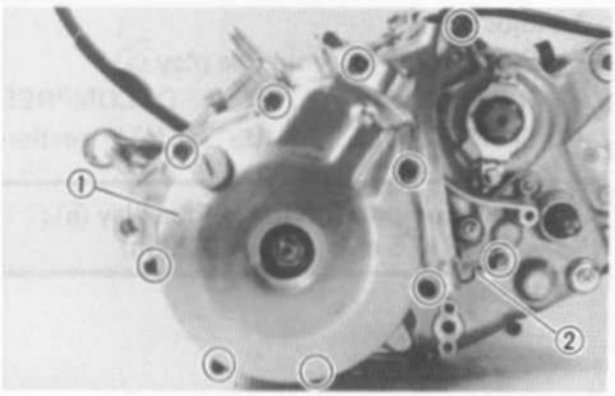

CDI MAGNETO

1. Install:
   - Woodruff key
   - Rotor
   - Plain washer
   - Nut (Rotor)

NOTE:

When installing the CDI rotor, make sure the woodruff key is properly seated in the key way of the crankshaft. Apply a light coating of lighium soap base grease to the tapered portion of the crankshaft end.

2. Tighten:
   - Nut (Rotor) ①

     Use the Sheave Holder ② (YS-01880) to lock the rotor.

NOTE:

Do not allow the special tool to touch the projections ③ on the rotor.

Nut (CDI Rotor):
90 Nm (9.0 m·kg, 65 ft·lb)

3. Install:
   - Dowel pins ①
   - O-rings ②
   - Gasket (New)
4. Apply:
   - 4-stroke engine oil

     To the oil pssages ③ .
5. Install:
   - Crankcase cover (Left) ①

NOTE:

Tighten the bolts in stage, using the crisscross pattern.

Crankcase Cover (Left):
10 Nm (1.0 m·kg, 7.2 ft·lb)

6. Connect:
   - Neutral switch lead ②

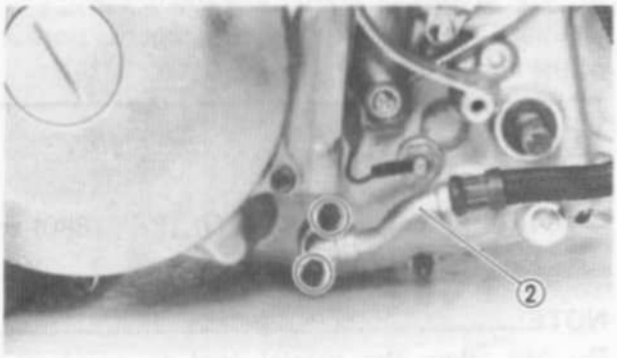

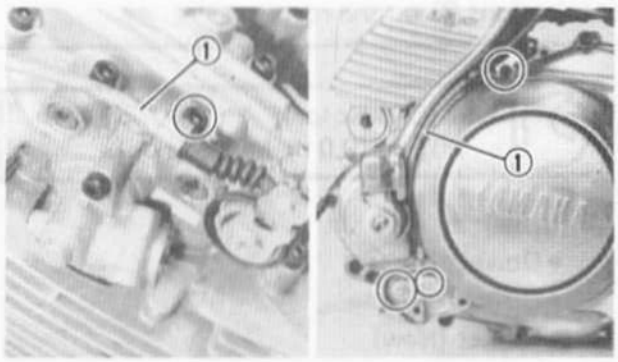

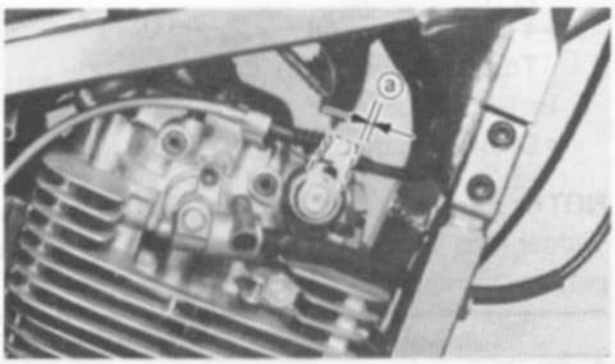

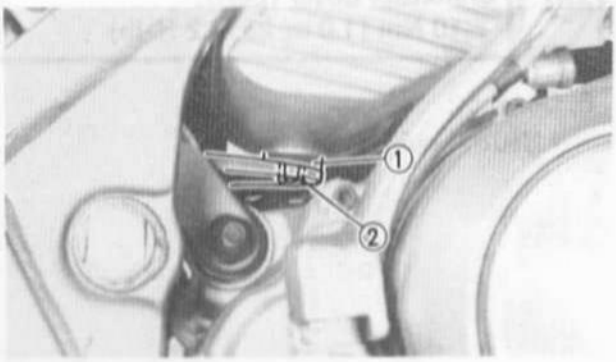

REMOUNTING ENGINE

When remounting the engine, reverse the removal procedure. Note the following points.

1. Install:
   - Oil tank
   - Oil hose (Outlet) ①
   - Oil hose (Inlet) ②

NOTE:

- Inspect the O-rings, and replace them if damaged.
- Apply the 4-stroke engine oil to the inlet oil passage.

Oil Hoses (Outlet and Inlet):
10 Nm (1.0 m·kg, 7.2 ft·lb)

2. Install:
   - Decompression cable ①

NOTE:

Hook the decompression shaft spring to its position.

3. Adjust:
   - Decompression cable free play ⓐ
     Refer to "CHAPTER 2. DECOMPRESSION CABLE ADJUSTMENT" section.

Decompression Cable Free Play ⓐ :
3 ~ 5 mm (0.12 ~ 0.20 in)

4. Install:
   - Engine
     From the right.

NOTE:

Insert the lobe ① on the oil tank into the hole ② on the frame.

5. Place a suitable stand under the engine.

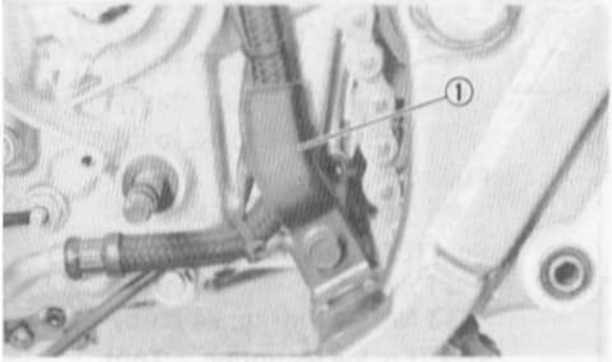

6. Install:
   - Bolts (Engine mounting – Rear)
   - Down tubes (Left and right)
   - Kick crank stopper

NOTE:
- Before tightening the rear engine mounting bolt, pass the inlet oil hose behind the oil hose protector ①.
- Temporarily tighten the bolts in this stage.

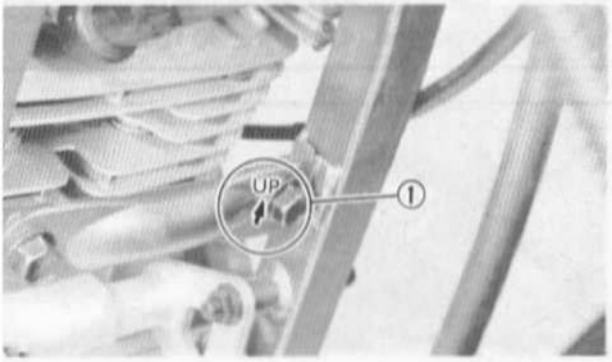

7. Install:
   - Stay (Engine mounting – Top)
   - Stays (Engine mounting – Front)
   - Bolt (Engine mounting – Front)

NOTE:
- The front stay (Upper) should be installed with the "UP" mark ① upward.
- Temporarily tighten the bolts in this stage.

8. Tighten:
   - All bolts and nut
     (Components in the above steps 6 and 7)
     Refer to illustration.

Nut (Engine Mounting – Rear) ① :
42 Nm (4.2 m·kg, 30 ft·lb)

Down Tubes (Left and Right) ② :
25 Nm (2.5 m·kg, 18 ft·lb)

Kick Crank Stopper ③ :
25 Nm (2.5 m·kg, 18 ft·lb)

Stay (Engine Mounting – Top) and Frame ④ :
33 Nm (3.3 m·kg, 24 ft·lb)

Stay (Engine Mounting – Top) and Engine ⑤ :
42 Nm (4.2 m·kg, 30 ft·lb)

Stay (Engine Mounting – Front Upper) ⑥ :
35 Nm (3.5 m·kg, 25 ft·lb)

Bolt (Engine Mounting – Front) ⑦ :
42 Nm (4.2 m·kg, 30 ft·lb)

Stay (Engine Mounting – Front Lower and Frame ⑧):
33 Nm (3.3 m·kg, 24 ft·lb)

Stay (Engine Mounting – Front Lower) and Engine ⑨ :
42 Nm (4.2 m·kg, 30 ft·lb)

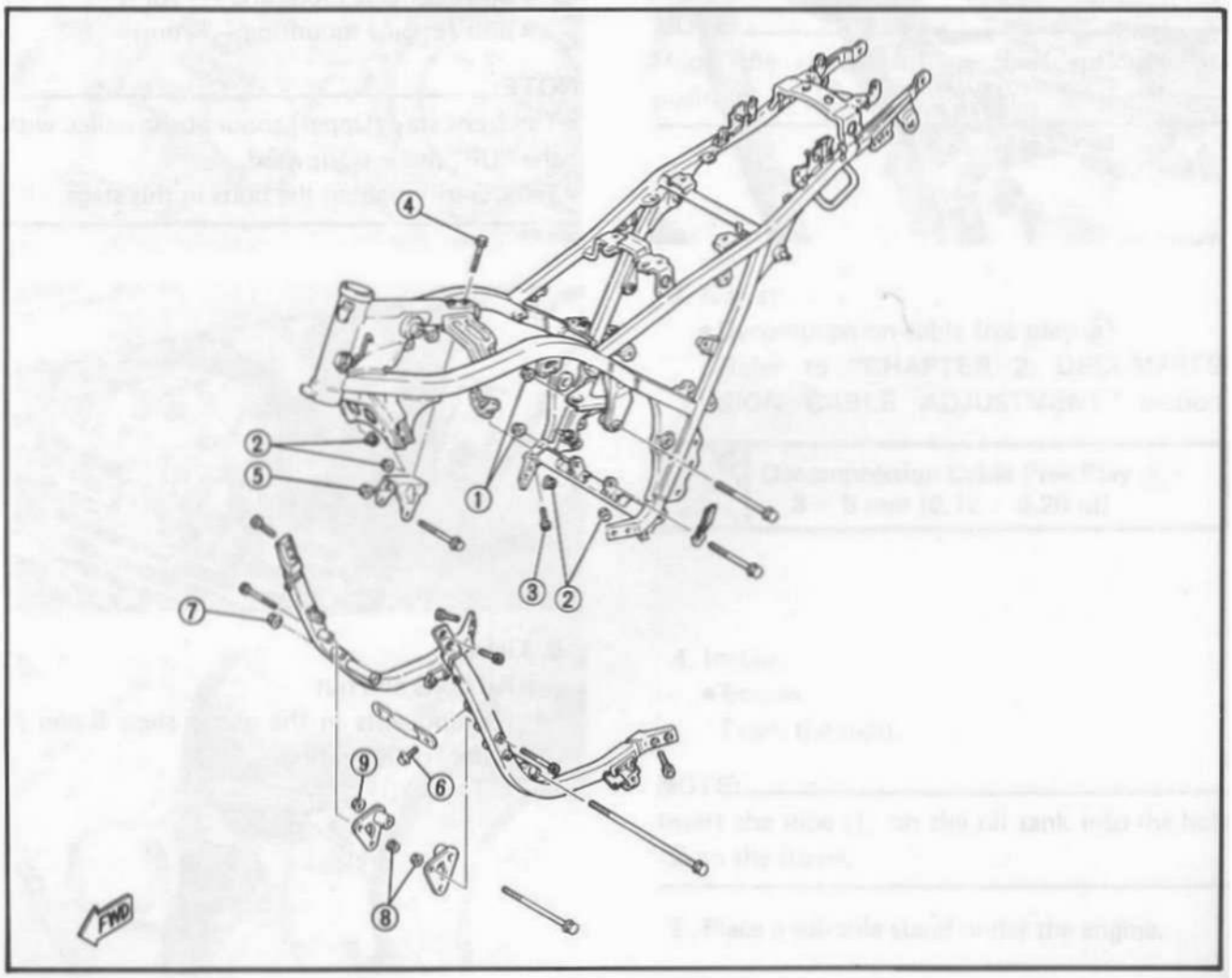

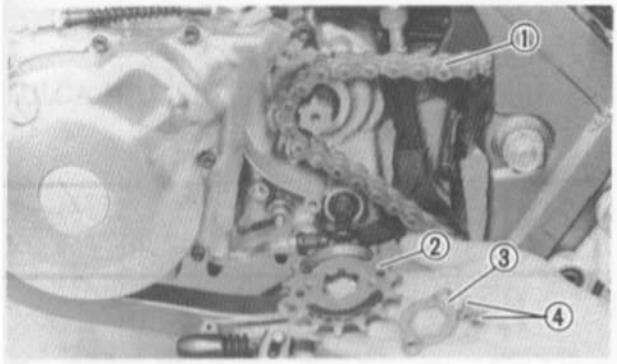

9. Install:
   - Drive chain ①
   - Drive sprocket ②
   - Holding plate ③
   - Bolt (Drive sprocket) ④

   Apply the rear brake.

Bolts (Drive Sprocket):
10 Nm (1.0 m·kg, 7.2 ft·lb)

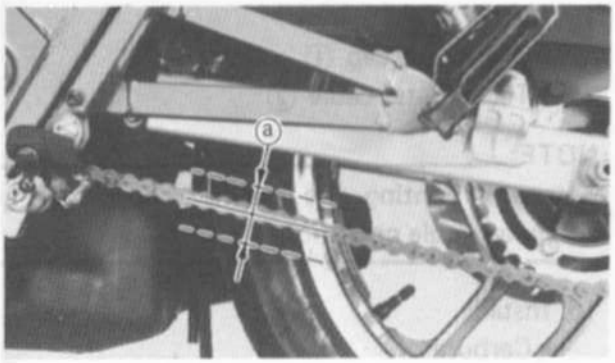

10. Adjust:
   - Drive chain slack

   Refer to "CHAPTER 2. DRIVE CHAIN SLACK ADJUSTMENT" section.

Drive Chain Slack ⓐ :
15 ~ 20 mm (0.6 ~ 0.8 in)

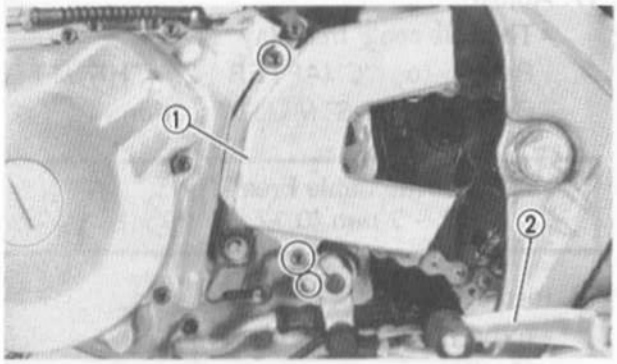

11. Install:
   - Sprocket cover ①
   - Change pedal ②

Sprocket Cover:
7 Nm (0.7 m·kg, 5.1 ft·lb)
Change Pedal:
8 Nm (0.8 m·kg, 5.8 ft·lb)

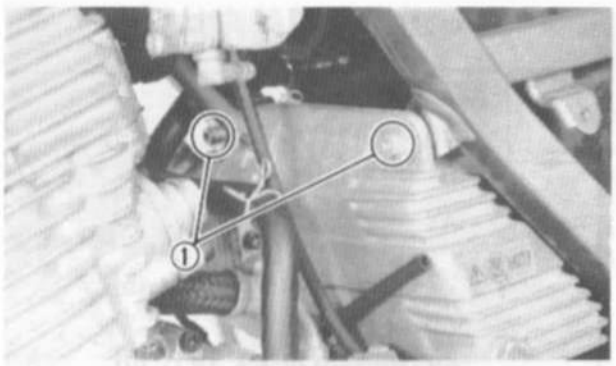

12. Install:
   - Bolts (Oil tank) ①

Bolt (Oil Tank):
10 Nm (1.0 m·kg, 7.2 ft·lb)

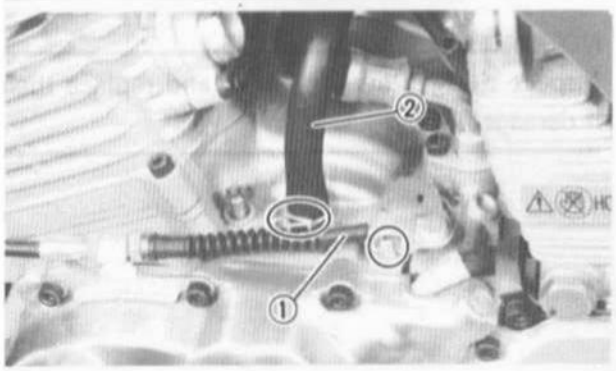

13. Connect:
   - Clutch cable ①
   - Ventilation hose ②

   Refer to "WIRING DIAGRAM" section.

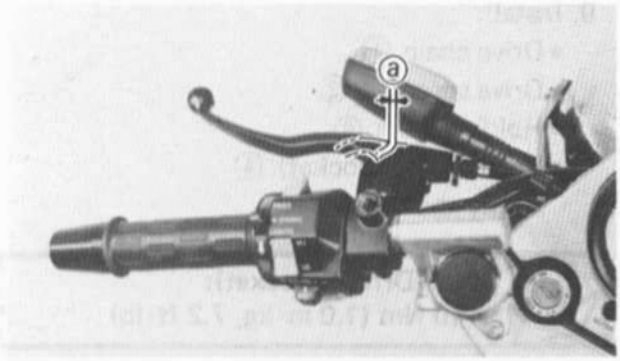

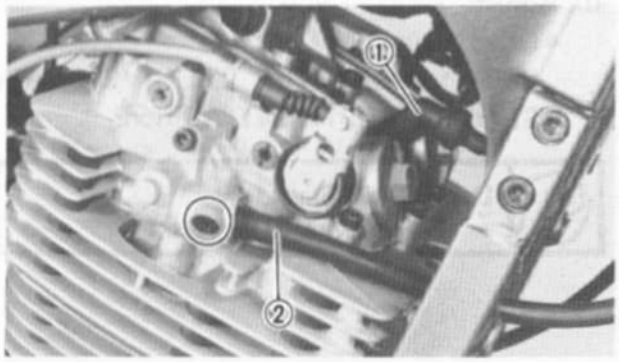

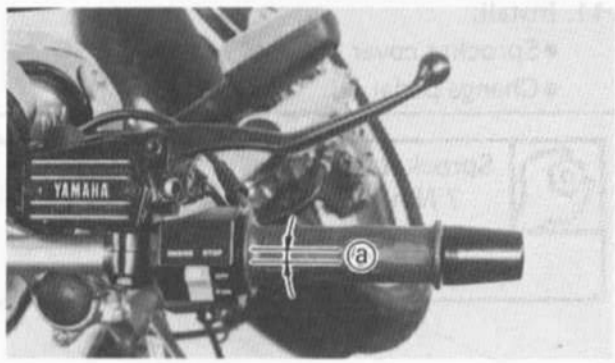

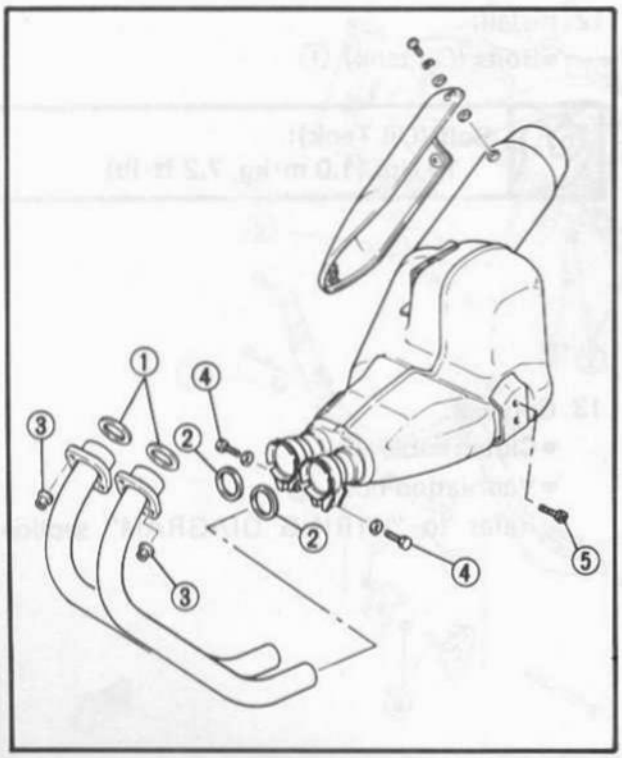

14. Adjust:
    - Clutch cable free play
      Refer to "CHAPTER 2. CLUTCH ADJUTMENT" section.

Free Play ⓐ :
2 ~ 3 mm (0.08 ~ 0.12 in)

15. Install:
    - Spark plug cap ①
    - Tachometer cable ②

NOTE:
After remounting the engine, check the tachometer cable operation.

16. Install:
    - Carburetor
17. Adjust:
    - Throttle cable free play
      Refer to "CHAPTER 2. THROTTLE CABLE ADJUSTMENT" section.

Throttle Cable Free Play ⓐ :
3 ~ 7 mm (0.12 ~ 0.28 in)

18. Install:
    - Exhaust pipes
    - Muffler
    - Footrest (Right)

Exhaust Pipe Flange ③ :
10 Nm (1.0 m·kg, 7.2 ft·lb)
Muffler Clamp ④ :
20 Nm (2.0 m·kg, 14 ft·lb)
Muffler Bracket ⑤ :
27 Nm (2.7 m·kg, 19 ft·lb)
Footrest (Right):
26 Nm (2.6 m·kg, 19 ft·lb)

NOTE:
Inspect the gaskets ①, ②, and replace them if damaged.

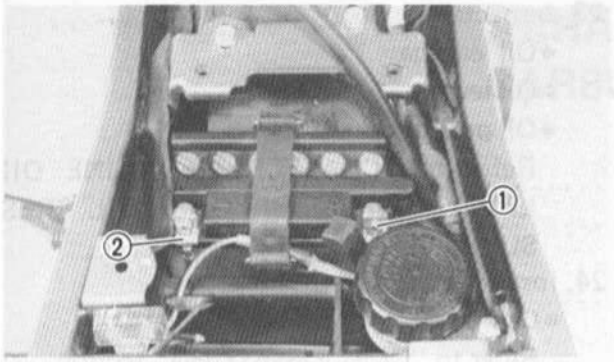

19. Connect:
    - Battery positive lead ①
    - Battery negative lead ②

NOTE:
Connect the positive lead ① first.

20. Connect:
    - Breather hose (Fuel tank – Rear)
    - Breather hose (Fuel tank – Front) (For California)

NOTE:
- When installing the fuel tank, be sure the breather hose is routed correctly.
  Refer to "FUEL TANK BREATHER HOSE INSPECTION" section.
- Turn the sub fuel cock lever ① to "ON".

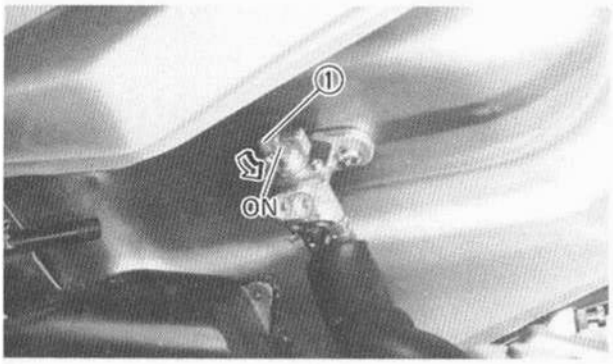

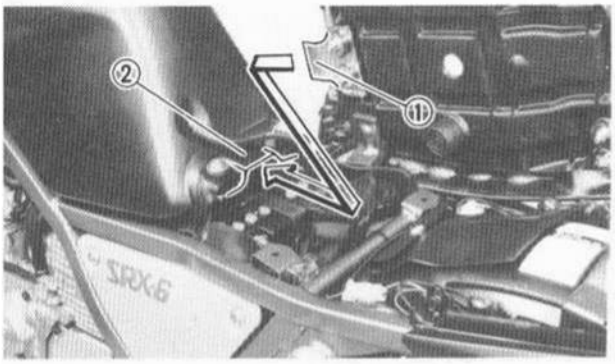

21. Install:
    - Seat

NOTE:
Insert the lobe ① on the seat front into the receptacle ② on the frame, then push down the seat at the rear.

22. Apply:
    - Engine oil

Recommended Oil:
Yamalube 4-cycle oil or
SAE 20W40 type SE motor oil
Total Amount:
2.4 L (2.1 Imp qt, 2.5 US qt)

23. Inspect:
    - Oil leakage
    - Oil level
    - Oil pressure

    Refer to "CHAPTER 2. ENGINE OIL LEVEL INSPECTION" and "OIL PRESSURE INSPECTION" section.
24. Install:
    - Canister

    Refer to "CABLE ROUTING" section.

CHAPTER 4.
CARBURETION

CARBURETOR 4-1
SECTIONAL VIEW 4-2
REMOVAL 4-4
DISASSEMBLY 4-4
INSPECTION 4-7
ASSEMBLY 4-8
INSTALLATION 4-11
ADJUSTMENT 4-11

CARBURETION

CARBURETOR

① Connection arm
② Jet needle set (Primary)
③ Throttle valve
④ Coasting enricher assembly
⑤ Needle valve set
⑥ O-ring
⑦ Main nozzle (Primary)
⑧ Main jet (Primary)
⑨ Pilot jet
⑩ Pilot screw set
⑪ Throttle screw set
⑫ Float
⑬ Starter plunger set
⑭ Drain screw
⑮ Main jet (Secondary)
⑯ Main nozzle (Secondary)
⑰ Secondary piston
⑱ Jet needle set (Secondary)

SPECIFICATIONS		
	PRIMARY	SECONDARY
MAIN JET	#118	#100
JET NEEDLE	5C3F	5Z71
PILOT JET	#46	–
PILOT SCREW	Preset	–
STARTER JET	φ0.64	–
FUEL LEVEL	6.5 ~ 7.5 mm (0.26 ~ 0.30 in)	–
FLOAT HEIGHT	26 ~ 28 mm (1.02 ~ 1.10 in)	–
ENGINE IDLING SPEED	1,250 ~ 1,350 r/min	–

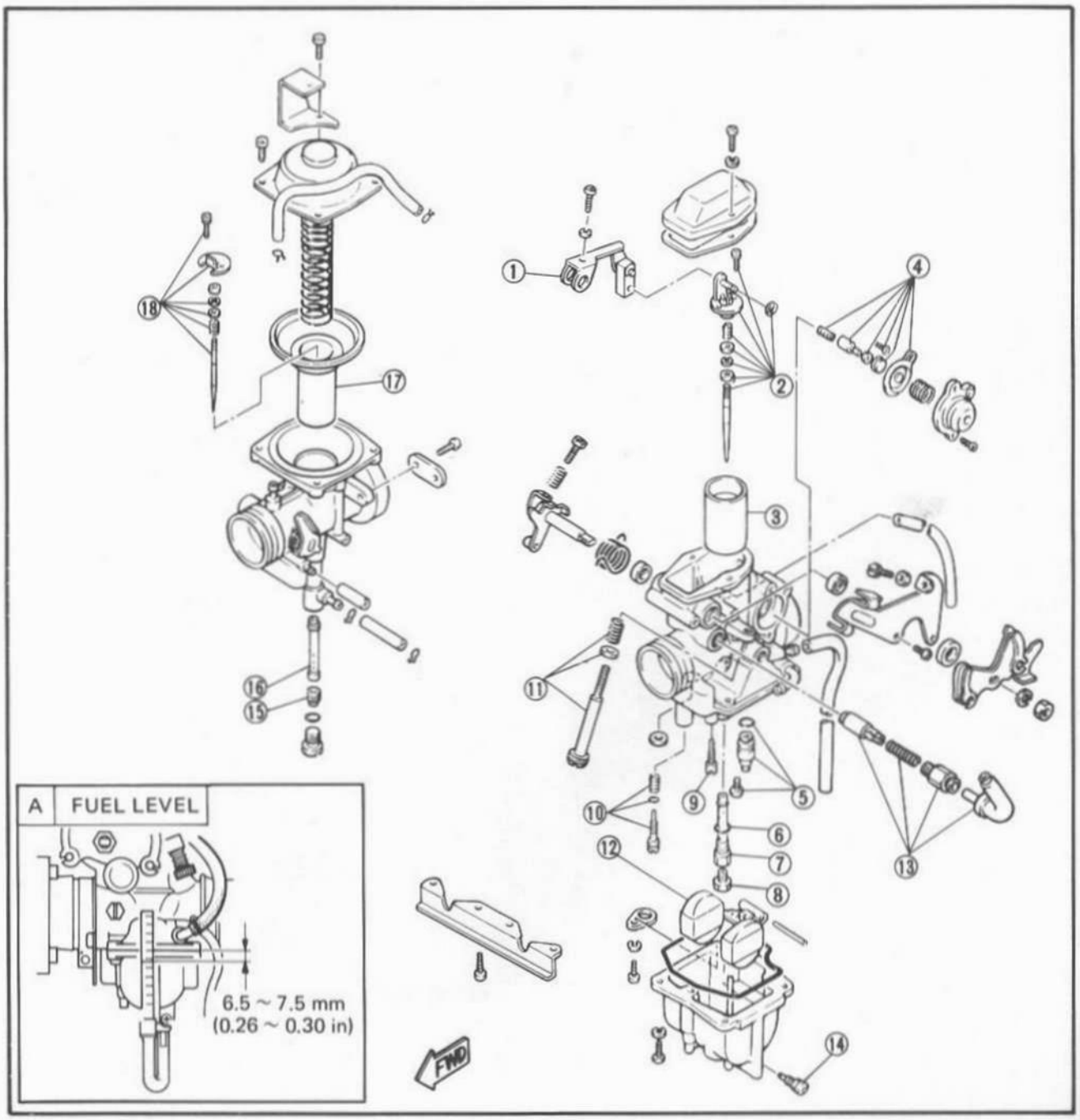

SECTIONAL VIEW

① Rod (Coasting enricher)
② Diaphragm (Coasting enricher)
③ Air jet (Secondary)
④ Air jet (Primary)
⑤ Air jet (Coasting enricher)
⑥ Needle valve
⑦ Pilot air jet
⑧ Main jet (Primary)
⑨ Main nozzle (Primary)
⑩ Pilot jet
⑪ Pilot screw
⑫ Pilot air passage
⑬ Primary air passage

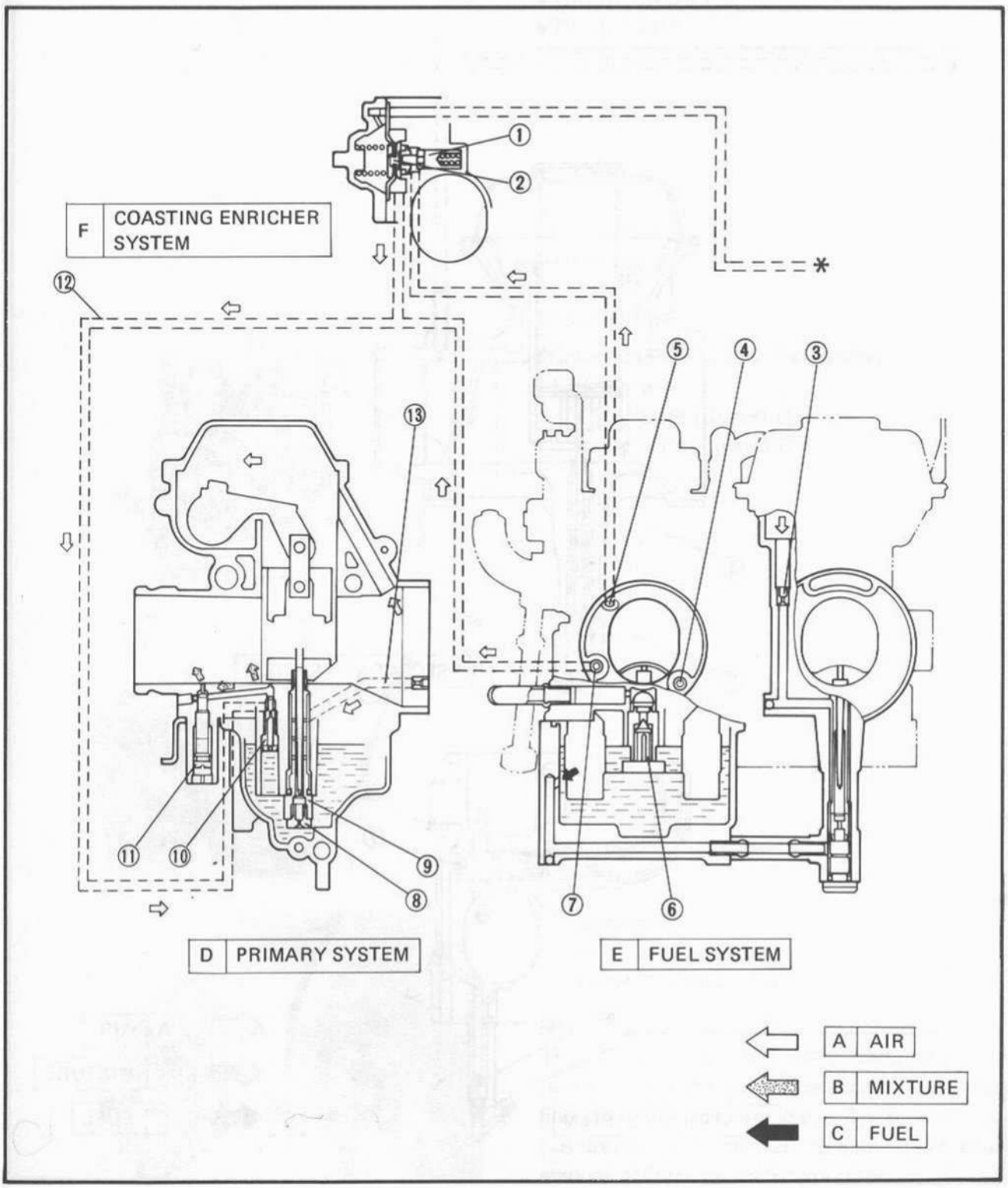

CARBURETOR

① Throttle valve (Secondary)
② Main jet (Secondary)
③ Main nozzle (Secondary)
④ Starter valve
⑤ Starter jet 1
⑥ Starter jet 2
⑦ Starter plunger

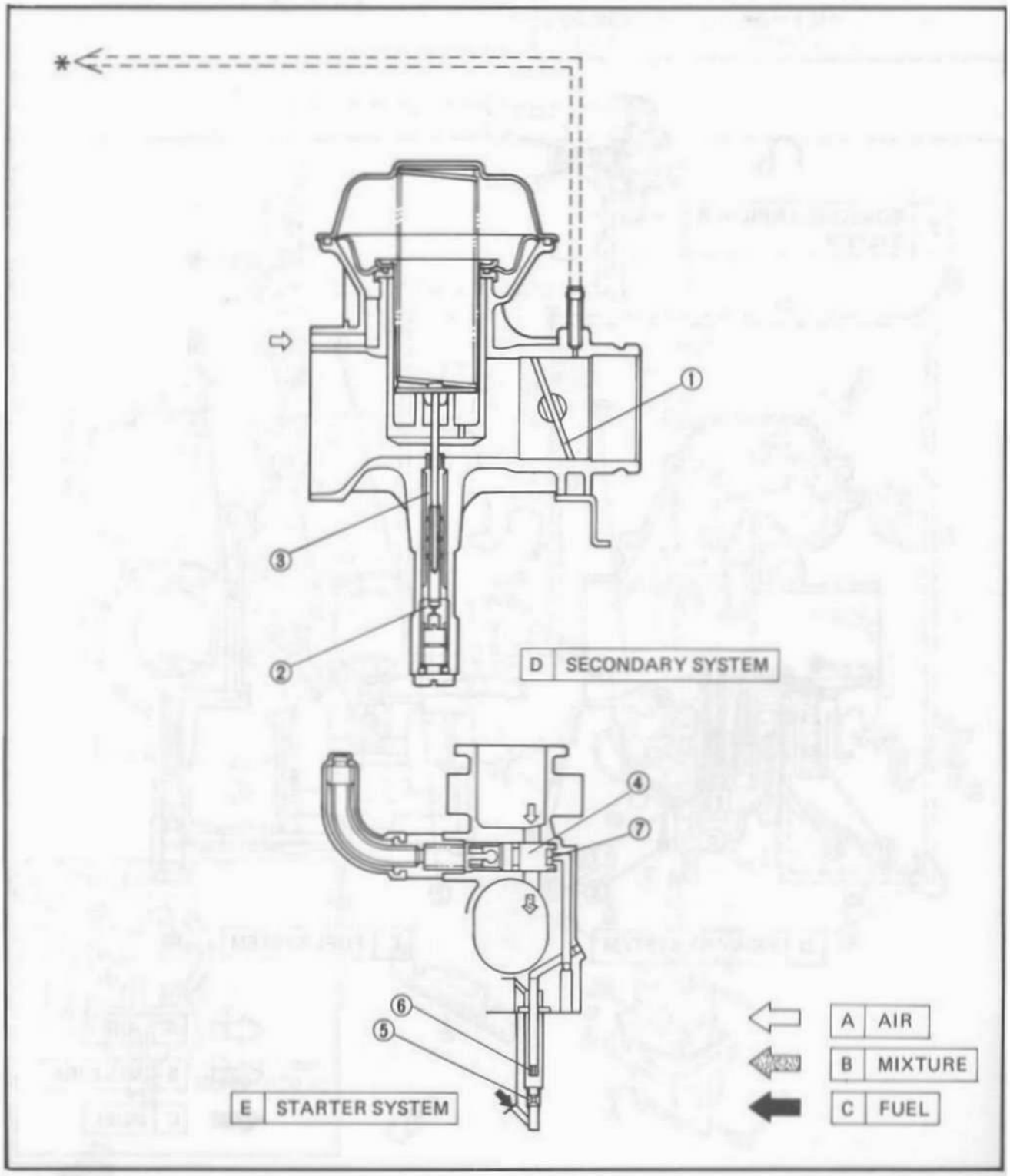

REMOVAL

1. Remove:
   - Carburetor assembly
     Refer to engine removal section.

NOTE:

The following parts can be cleaned and inspected without disassembly.
- Coasting enricher
- Starter plunger
- Throttle stop screw
- Throttle valve

DISASSEMBLY

Primary and Secondary Carburetors

1. Remove:
   - Stay plate (Upper) ①
   - Stay plate (Lower) ②

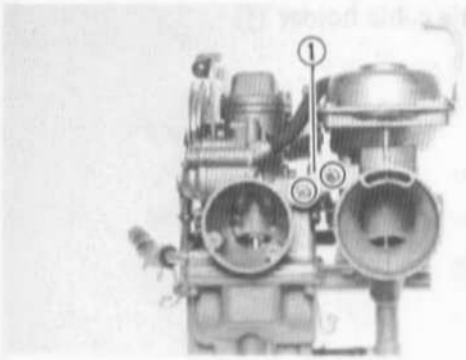

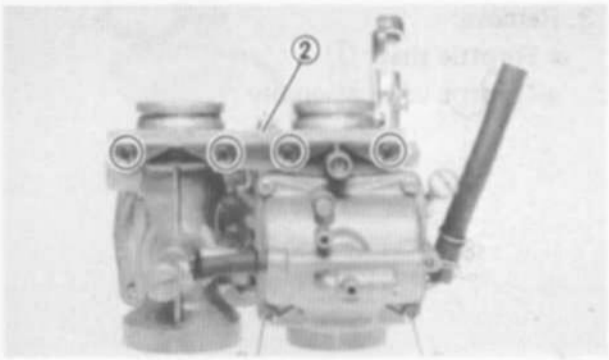

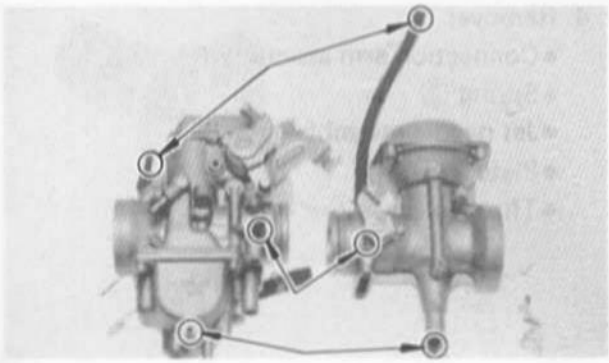

2. Separate:
   - Primary carburetor
   - Secondary carburetor

NOTE:

The primary and secondary carburetors are connected by the rubber balance pipe, the fuel line and the vacuum pipe. To separate the carburetors, pull them apart, applying an equal amount of force on each carburetor.

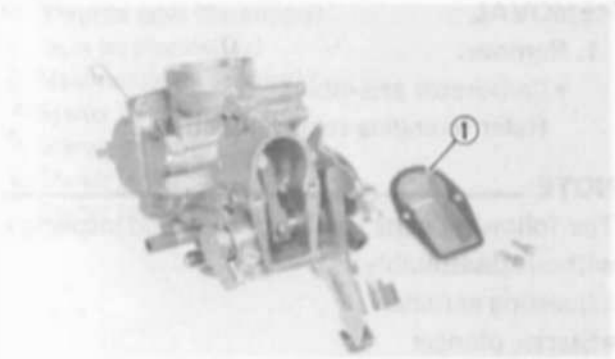

Primary Carburetor

1. Remove:
   - Primary carburetor cap ①

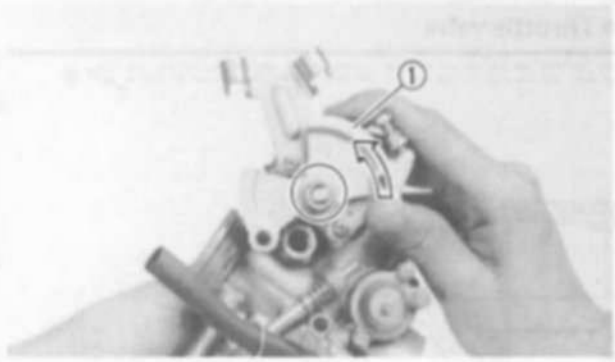

2. Remove:
   - Nut (Throttle shaft)
   - Throttle lever ①
   - Collar ②

NOTE:

When removing the throttle lever, push the spring with one hand as they will turn.

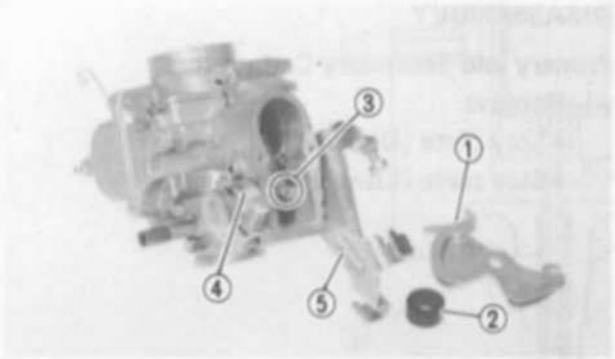

- Screw (Connection arm) ③
- Spring ④
- Throttle cable holder ⑤

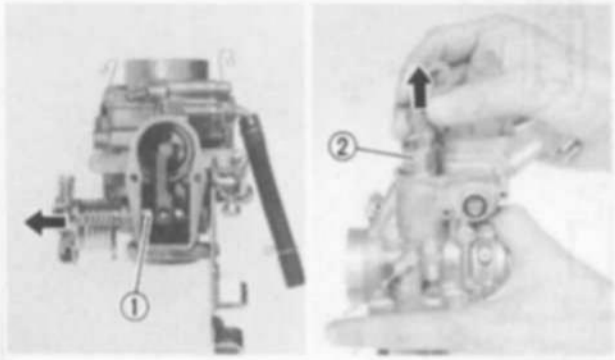

3. Remove:
   - Throttle shaft ①
   - Throttle valve assembly ②

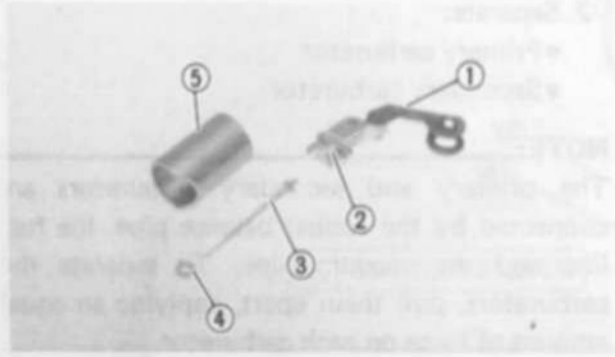

4. Remove:
   - Connection arm assembly ①
   - Spring ②
   - Jet needle assembly ③
   - Plate ④
   - Throttle valve ⑤

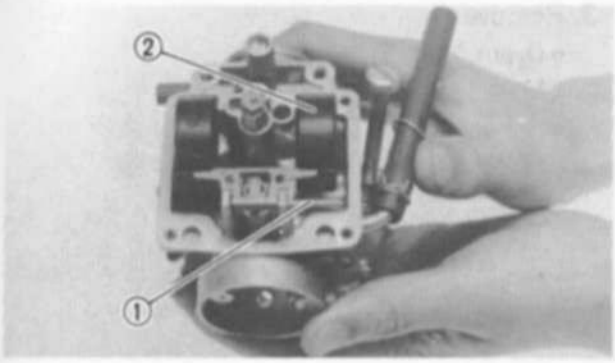

5. Remove:
   - Float chamber cover
   - Float pin ①
   - Float ②

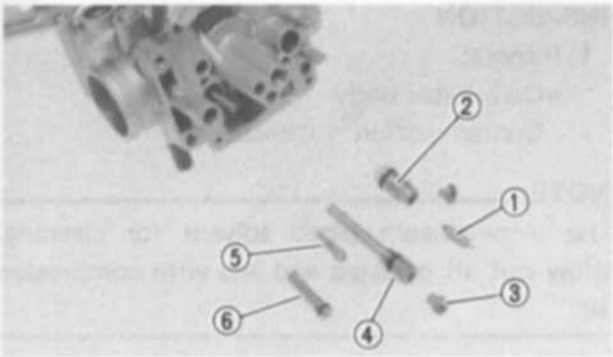

6. Remove:
   - Needle valve ①
   - Valve seat ②
   - Main jet ③
   - Main nozzle ④
   - Pilot jet ⑤
   - Pilot screw ⑥

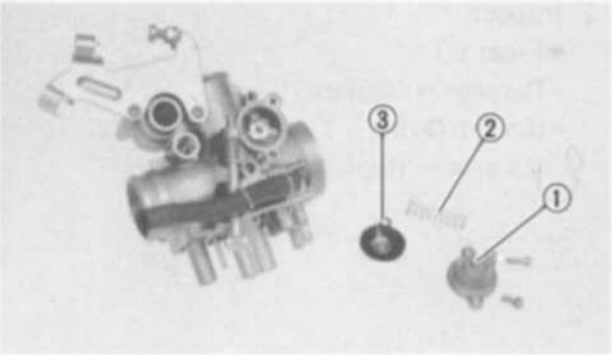

7. Remove:
   - Coasting enricher cap ①
   - Spring ②
   - Diaphragm ③

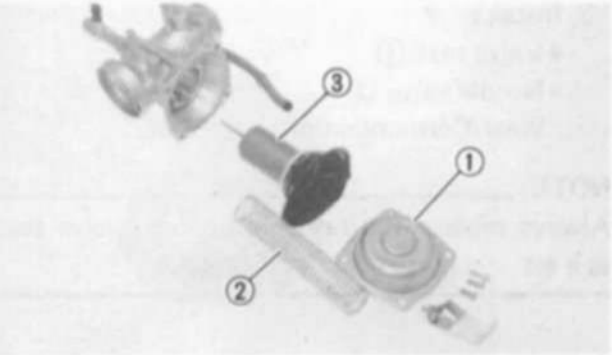

Secondary Carburetor

1. Remove:
   - Secondary carburetor cap ①
   - Spring ②
   - Vacuum piston assembly ③

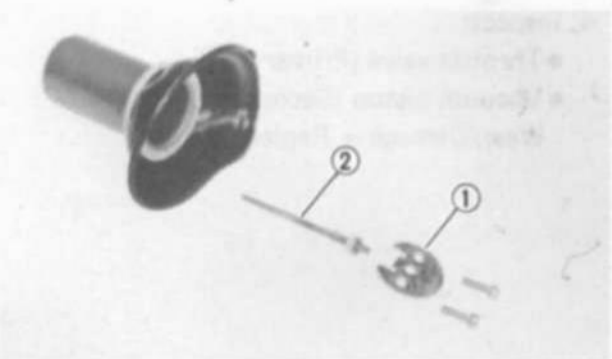

2. Remove:
   - Plate (Jet needle) ①
   - Jet needle assembly ②

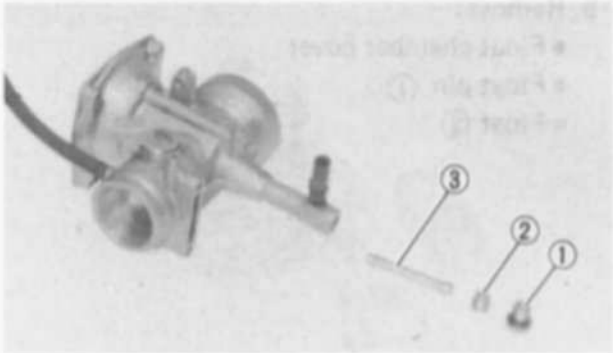

3. Remove:
   - Drain plug ①
   - Main jet ②
   - Needle jet ③

INSPECTION

1. Inspect:
   - Carburetor body
     Contamination → Clean.

NOTE:

Use a petroleum based solvent for cleaning. Blow out all passages and jets with compressed air.

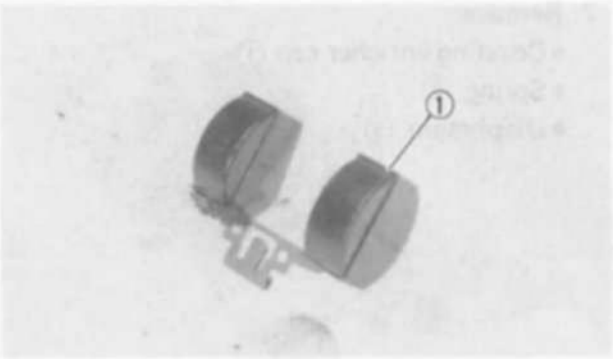

2. Inspect:
   - Float ①
     Damage → Replace.
   - Gasket/O-ring
     Damage → Replace.

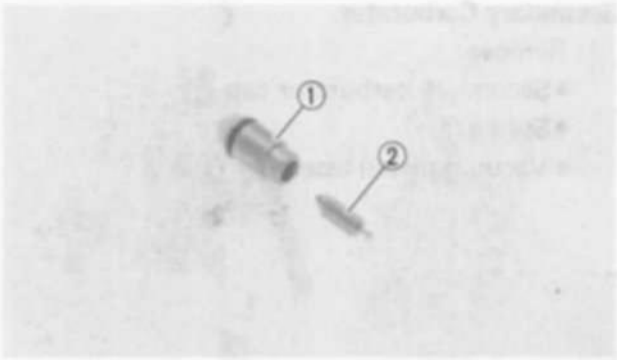

3. Inspect:
   - Valve seat ①
   - Needle valve ②
     Wear/Contamination → Replace.

NOTE:

Always replace the needle valve and valve seat as a set.

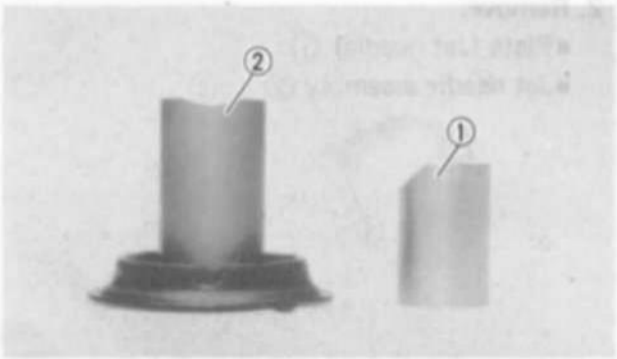

4. Inspect:
   - Throttle valve (Primary) ①
   - Vacuum piston (Secondary) ②
     Wear/Damage → Replace.

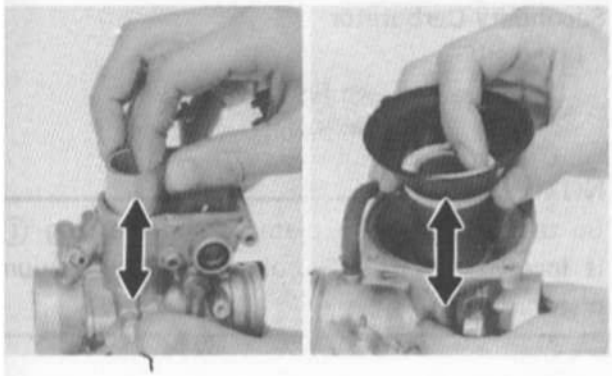

5. Check:
   - Free movement
     Stick → Replace.
     Insert the throttle valve and vacuum piston into the primary and secondary carburetor bodys, and check for free movement.

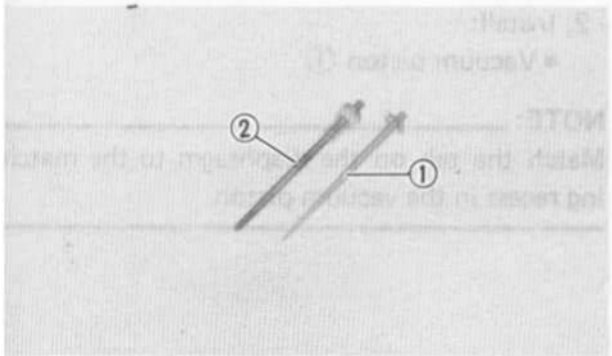

6. Inspect:
   - Jet needle (Primary) ①
   - Jet needle (Secondary) ②
     Bends/Wear → Replace.

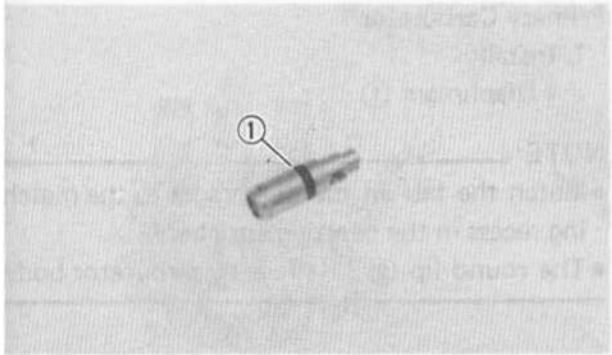

7. Inspect:
   - Starter plunger ①
     Wear/Contamination → Replace.

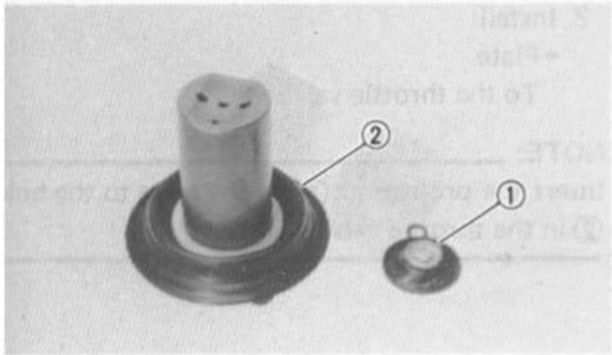

8. Inspect:
   - Diaphragm (Coasting enricher) ①
   - Diaphragm (Vacuum piston) ②
     Damage → Replace.

ASSEMBLY

To assemble the carburetors, reverse the disassembly procedures. Note the following points.

CAUTION:

- **Before reassembling, wash all parts in clean gasoline.**
- **Always use a new gasket.**

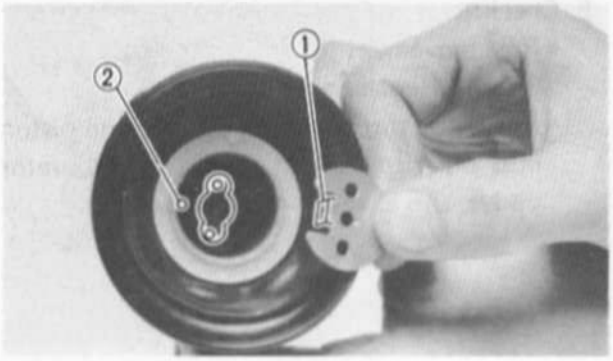

Secondary Carburetor

1. Install:
   - Jet needle assembly
     To the vacuum piston.

NOTE:

Be sure to install the plate so that the tang ① is located toward the hole ② in the vacuum piston.

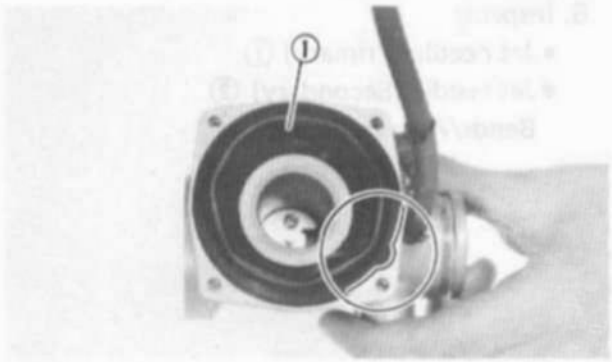

2. Install:
   - Vacuum piston ①

NOTE:

Match the tab on the diaphragm to the matching recess in the vacuum piston.

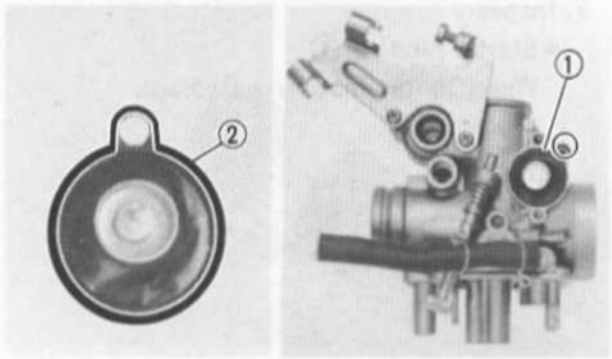

Primary Carburetor

1. Install:
   - Diaphragm ①

NOTE:

- Match the tab on the diaphragm to the matching recess in the coasting enricher.
- The round lip ② side face to carburetor body.

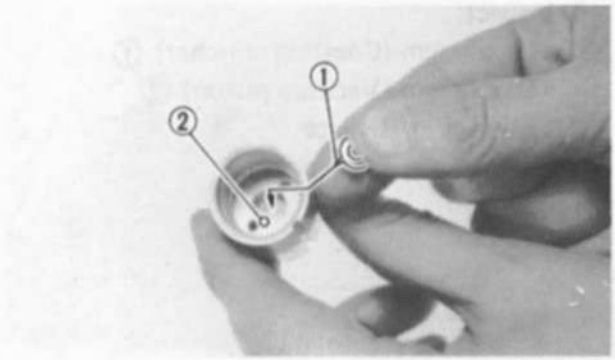

2. Install:
   - Plate
     To the throttle valve.

NOTE:

Insert the projection ① on the plate to the hole ② in the throttle valve.

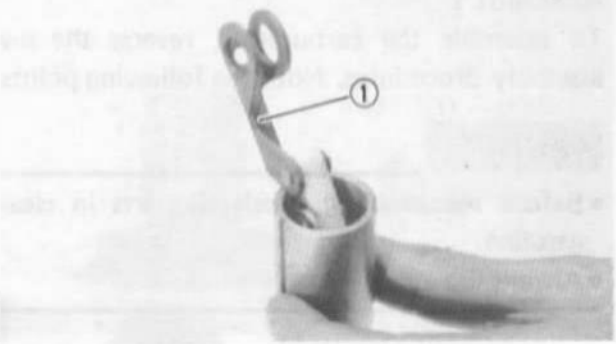

3. Install:
   - Connection arm assembly ①
     To the throttle valve.

NOTE:

Make sure that the connection arm assembly is at the illustrated position.

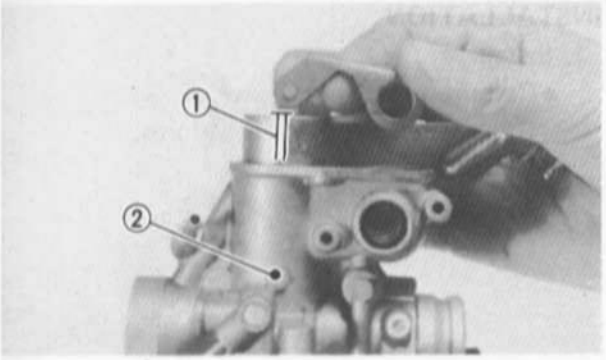

4. Install:
   - Throttle valve assembly

NOTE:

Align the groove ① of the throttle valve with the projection ② of the carburetor body.

5. Measure:
   - Fuel height

   Out of specification → Adjust.

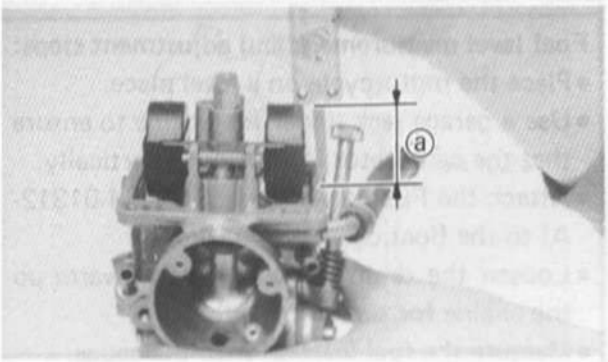

Float height measurement and adjustment steps:

- Remove the float chamber.
- Hold the carburetor in an upside down position.
- Measure the float height ⓐ between the mating surface of the float chamber (gasket removed) and top of the float using a gauge.

NOTE:

The float arm should be resting on the needle valve, but not compressing the needle valve.

Float Height ⓐ :
26 ~ 28 mm (1.02 ~ 1.10 in)

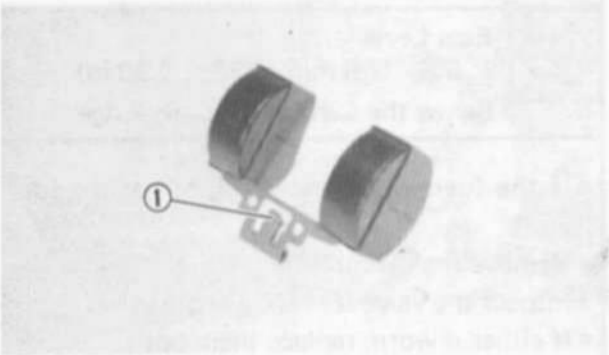

- If the float height is not within specification, inspect the valve seat and needle valve.
- If either is worn, replace them both.
- If both are fine, adjust the float height by bending the float tang ① on the float.
- Recheck the float height.

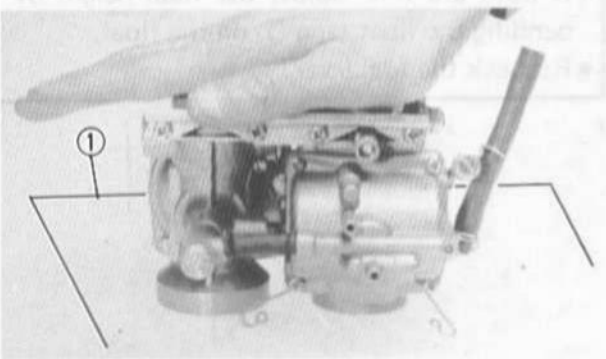

Primary and Secondary Carburetors

1. Install:
   - Stay plate (Upper)
   - Stay plate (Lower)

NOTE:

When reassembling, the surface plate ① should be used for proper carburetor alignment.

INSTALLATION

1. Install:
   - Carburetor assembly
     Reserve the removal procedures.

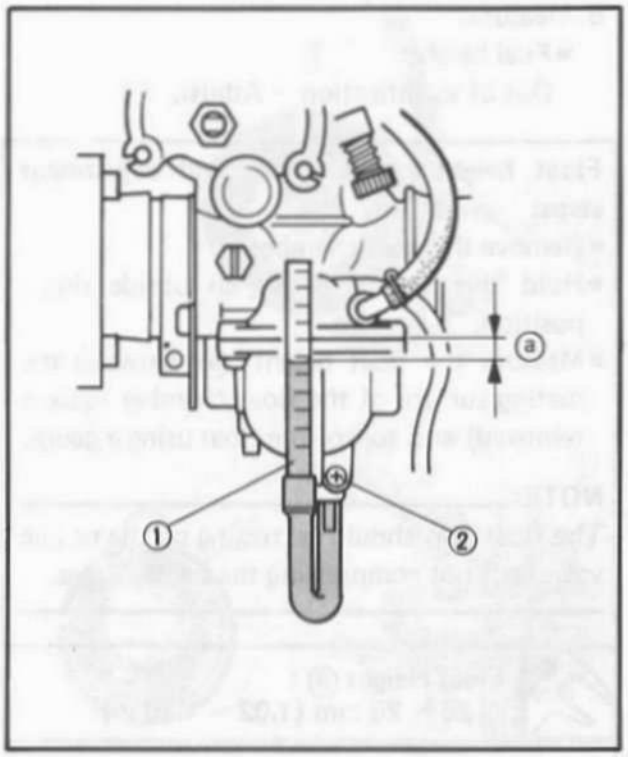

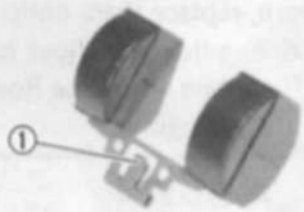

ADJUSTMENT

Fuel Level Adjustment

NOTE:
Before adjusting the fuel level, the float height should be adjusted.

1. Measure:
   - Fuel level ⓐ
     Out of specification → Adjust.

Fuel level measurement and adjustment steps:
- Place the motorcycle on a level place.
- Use a garage jack under the engine to ensure that the carburetor is positioned vertically.
- Attach the Fuel Level Gauge ① (YM-01312-A) to the float chamber nozzle.
- Loosen the drain screw ②, and warm up the engine for several minutes.
- Measure the fuel level ⓐ with the gauge.

Fuel Level ⓐ :
6.5 ~ 7.5 mm (0.26 ~ 0.30 in)
Below the Carburetor Body Edge

- If the fuel level is incorrect, adjust the fuel level.
- Remove the carburetor.
- Inspect the valve seat and needle valve.
- If either is worn, replace them both.
- If both are fine, adjust the float height by bending the float tang ① on the float.
- Recheck the fuel level.

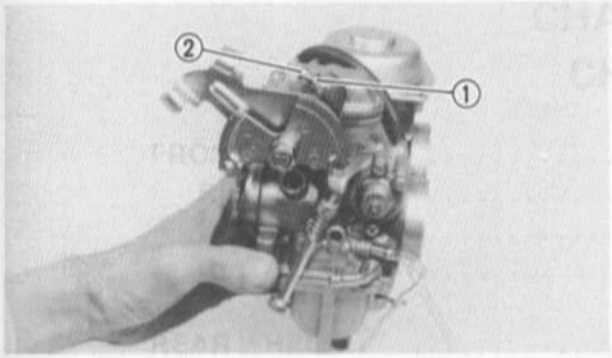

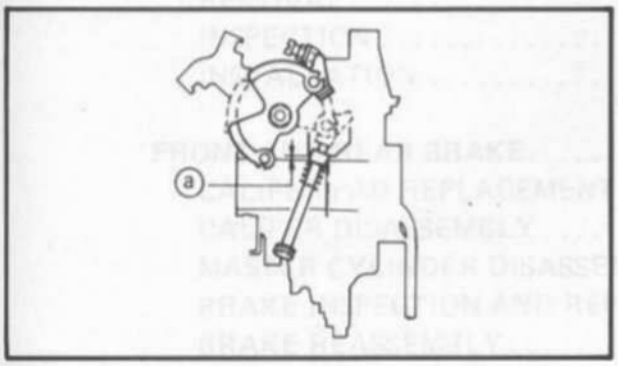

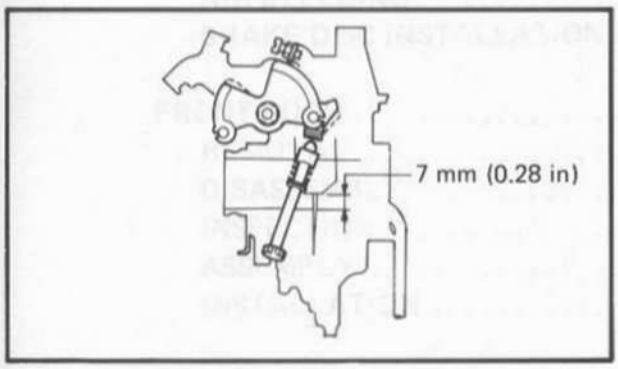

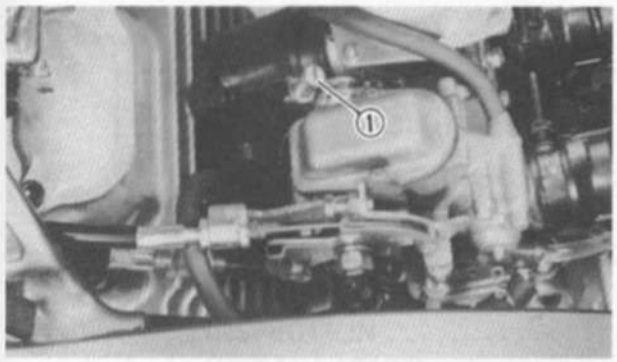

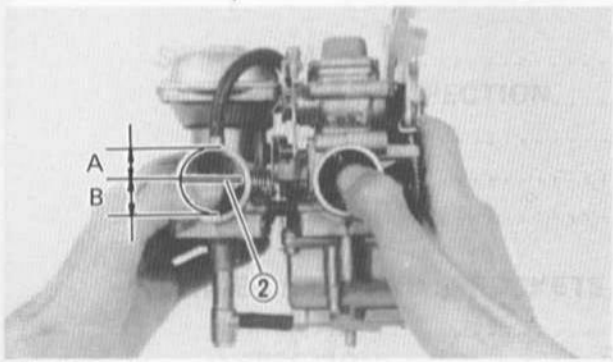

Primary Carburetor Full-open Adjustment

1. Adjust:
   - Throttle valve position

Throttle valve position adjustment steps:

- Loosen the locknut ①.
- Turn the throttle grip to move the drum wire assembly to the full-throttle position.
- Turn the adjuster ② in or out so that carburetor valve bottom is positioned within the limits as specified.

Throttle Valve Position ⓐ:
0 ~ 1.0 mm (0 ~ 0.04 in)

- Tighten the locknut.

Secondary Carburetor Synchronization

1. Adjust:
   - Secondary carburetor synchronization

Secondary carburetor synchronization adjustment steps:

- Raise the primary carburetor valve to a height of 7 mm (0.28 in) as indicated.
- Adjust the synchronizing screw ① so the secondary throttle shaft just contacts the secondary throttle push lever.
- Make sure that the secondary valve ② is opened horizontally (A = B) when the primary carburetor valve is fully opened.

CHAPTER 5.
CHASSIS

FRONT WHEEL 5-1
REMOVAL 5-2
INSPECTION 5-2
INSTALLATION 5-4

REAR WHEEL 5-6
REMOVAL 5-7
INSPECTION 5-7
INSTALLATION 5-8

FRONT AND REAR BRAKE 5-9
CALIPER PAD REPLACEMENT 5-11
CALIPER DISASSEMBLY 5-12
MASTER CYLINDER DISASSEMBLY 5-13
BRAKE INSPECTION AND REPAIR 5-16
BRAKE REASSEMBLY 5-17
AIR BLEEDING 5-19
BRAKE DISC INSTALLATION 5-20

FRONT FORK 5-21
REMOVAL 5-22
DISASSEMBLY 5-23
INSPECTION 5-24
ASSEMBLY 5-25
INSTALLATION 5-26

STEERING HEAD 5-28
REMOVAL 5-29
INSPECTION 5-30
INSTALLATION 5-31

REAR SHOCK ABSORBER 5-33
HANDLING NOTES 5-34
NOTES ON DISPOSAL 5-34
REMOVAL 5-35
INSPECTION 5-35
INSTALLATION 5-35

SWINGARM 5-37
FREE PLAY INSPECTION 5-38
REMOVAL 5-38
INSPECTION 5-39
INSTALLATION 5-39

DRIVE CHAIN AND SPROCKETS 5-41
REMOVAL 5-41
INSPECTION 5-41
ASSEMBLY 5-42

CHASSIS

FRONT WHEEL

① Collar
② Oil seal
③ Bearing
④ Spacer
⑤ Spacer flange
⑥ Meter clutch
⑦ Clutch retainer
⑧ Oil seal
⑨ Gear unit

Basic weight: With oil and full fuel tank	SRX600S: 176 kg (388 lb) SRX600SC: 176.5 kg (389 lb)	
Maximum load*	SRX600S: 204 kg (450 lb) SRX600SC: 203.5 kg (449 lb)	
Cold tire pressure	Front	Rear
Up to 90 kg (198 lb) load*	177 kPa (1.8 kg/cm², 26 psi)	196 kPa (2.0 kg/cm², 28 psi)
90 kg (198 lb) ~ Maximum load*	196 kPa (2.0 kg/cm², 28 psi)	226 kPa (2.3 kg/cm², 32 psi)
High speed riding	196 kPa (2.0 kg/cm², 28 psi)	226 kPa (2.3 kg/cm², 32 psi)

*Load is the total weight of cargo, rider, passenger, and accessories.

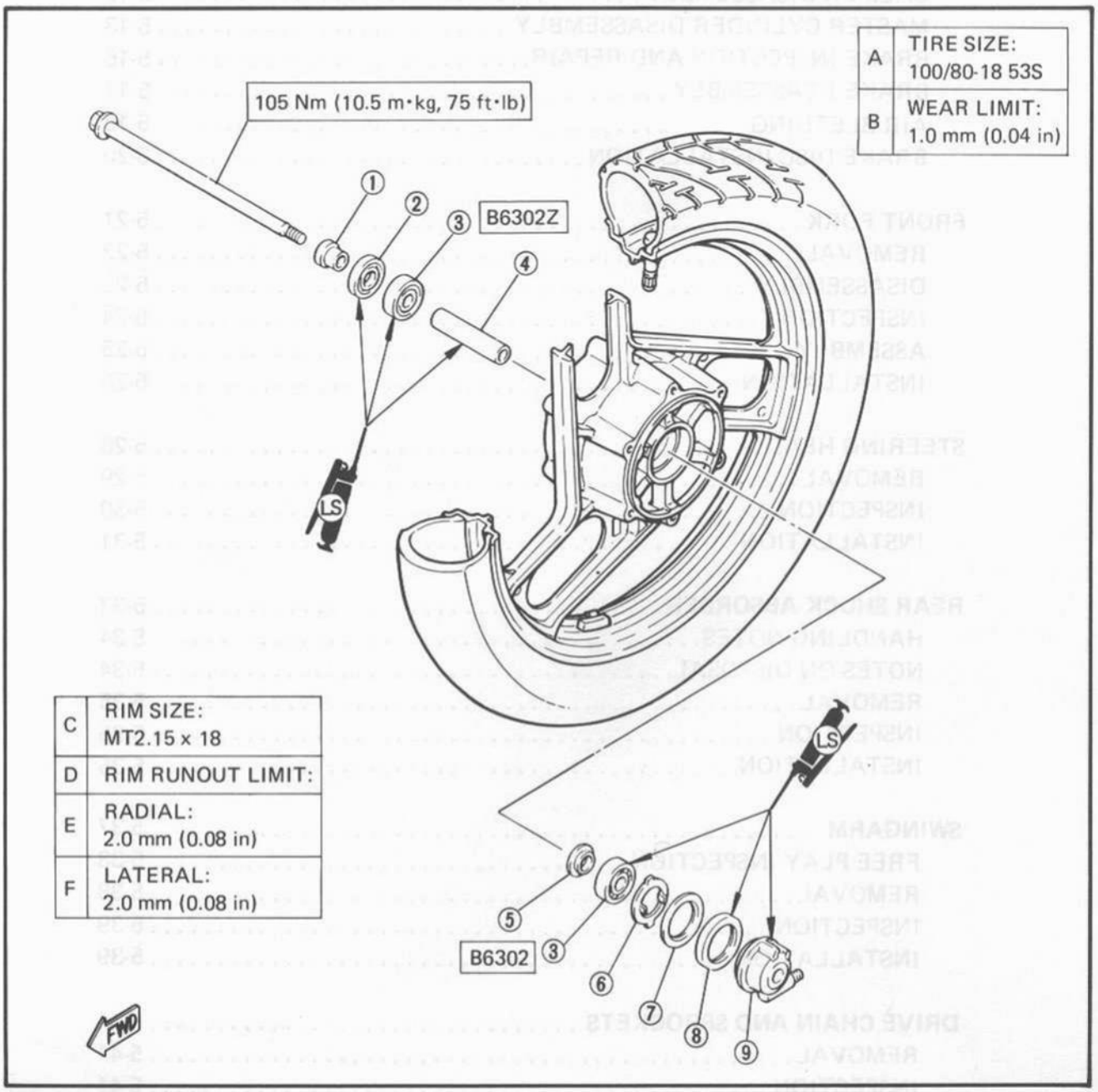

REMOVAL

WARNING:

Securely support the motorcycle so it won't fall over when the front wheel.

1. Place the motorcycle on level place.
2. Remove:
   - Speedometer cable ①

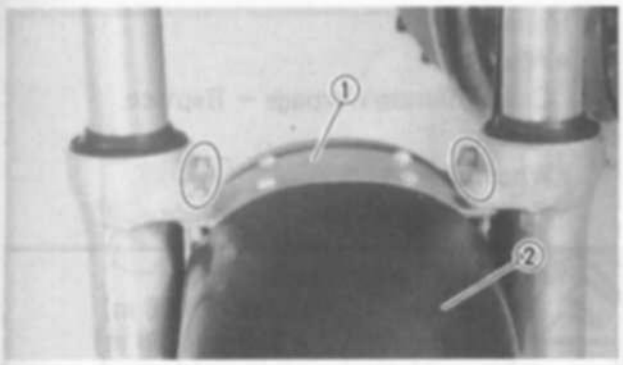

3. Remove:
   - Fork brace ①
   - Front fender ②

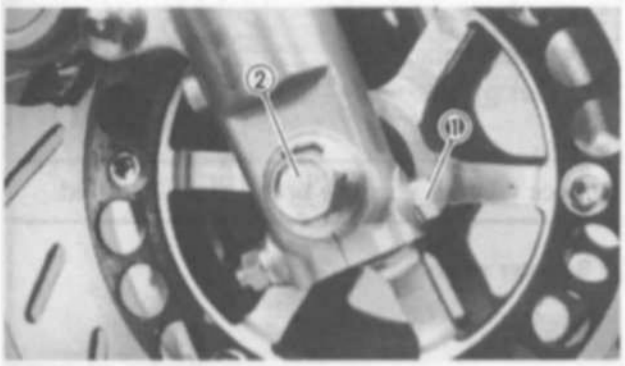

4. Loosen:
   - Pinch bolt (Front axle) ①
   - Front axle ②
5. Elevate the front wheel by placing a suitable stand under the engine.
6. Remove:
   - Front axle
   - Front wheel

   Lower the wheel until the brake discs come off the calipers. Turn the brake calipers outward so they do not obstruct the wheel.

NOTE:

Do not squeeze the brake lever while the wheel is off the motorcycle.

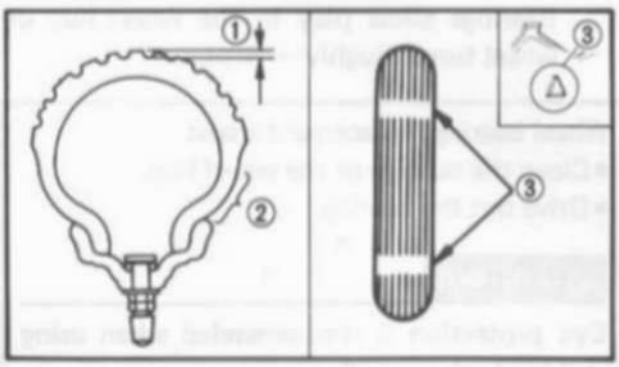

INSPECTION

1. Inspect:
   - Tire

     Tire tread shows crosswise lines (Minimum tread depth)/Cracks → Replace.

Minimum Tire Tread Depth:
1.0 mm (0.04 in)

① Tread depth ② Sidewall ③ Wear indicator

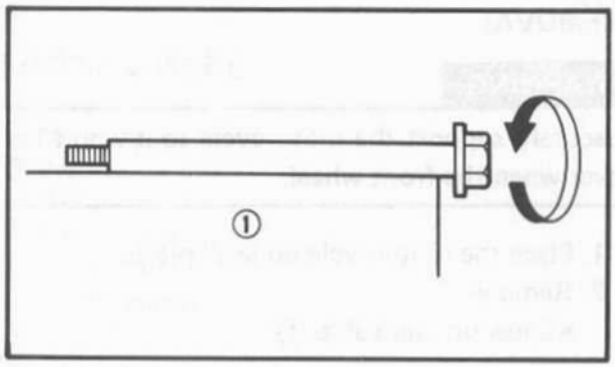

2. Inspect:
   - Front axle
     Bends → Replace.
     Roll the axle on a flat surface ①.

WARNING:

Do not attempt to straighten a bent axle.

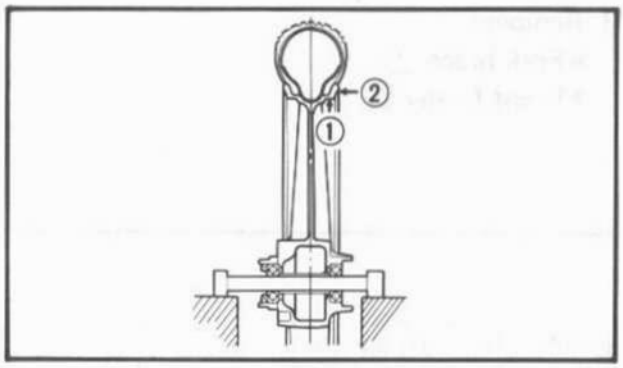

3. Inspect:
   - Wheel
     Cracks/Bends/Warpage → Replace.
4. Measure:
   - Wheel runout
     Out of specification → Replace.

Rim Runout Limits:
Raidal ① : 2.0 mm (0.08 in)
Lateral ② : 2.0 mm (0.08 in)

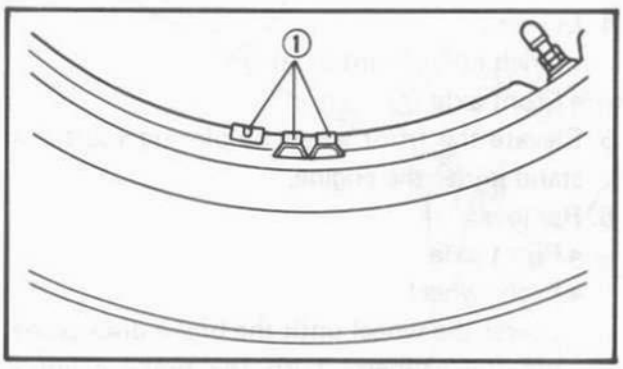

5. Check:
   - Wheel balance
     Out of balance → Adjust.

NOTE:

Balance wheels with the brake discs installed.

① Balancer weight

CAUTION:

Be sure the valve stem locknut is tightened securely after repairing or replacing a tire and/or wheel.

WARNING:

Ride conservatively after installing a tire to allow the tire to seat itself correctly on the rim.

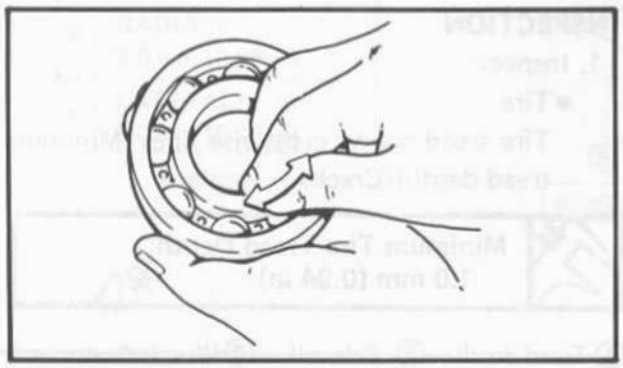

6. Inspect:
   - Wheel bearings
     Bearings allow play in the wheel hub or wheel turns roughly → Replace.

Wheel bearing replacement steps:
- Clean the outside of the wheel hub.
- Drive out the bearing.

WARNING:

Eye protection is recommended when using striking tools.

- Install the new bearing by reversing the previous steps.

CAUTION:

Do not strike the center race or balls of the bearing. Contact should be made only with the outer race.

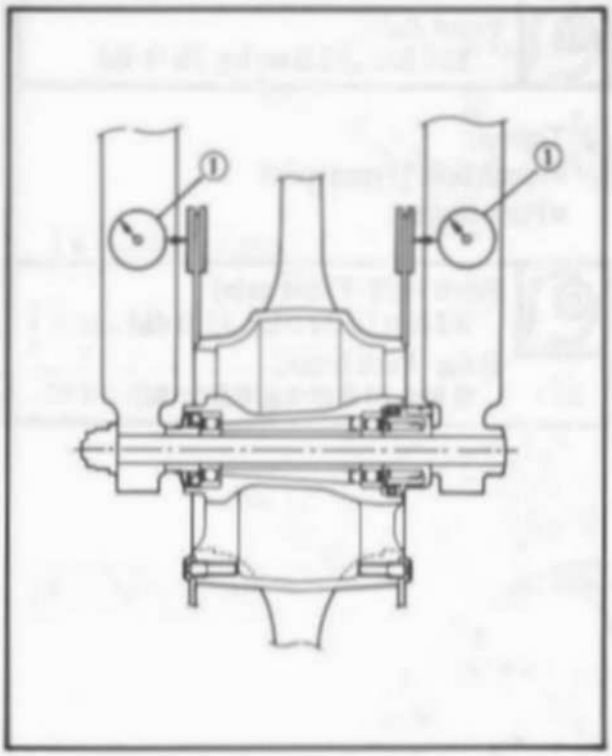

7. Inspect:
   - Brake disc
     Out of specification → Replace.

Maximum Deflection (Front and Rear):
0.15 mm (0.006 in)

Minimum Disc Thickness (Front and Rear):
4.5 mm (0.18 in)

① Dial gauge

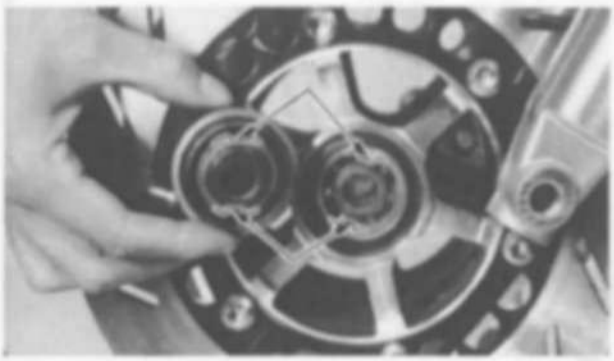

INSTALLATION

When installing the front wheel, reverse the removal procedure. Note the following points.

1. Apply:
   - Lithium base grease
     Lightly grease to the oil seal and gear unit.
2. Install:
   - Gear unit assembly

NOTE:

Be sure that the two projections inside the wheel hub mesh with the two slots in the gear unit assembly.

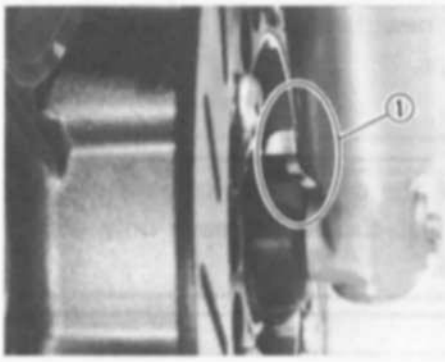

3. Install:
   - Front wheel

NOTE:
Be sure that the projecting portion (Torque stopper) ① of the gear unit housing is positioned correctly.

4. Tighten:
   - Front axle

Front Axle:
105 Nm (10.5 m·kg, 75 ft·lb)

5. Tighten:
   - Pinch bolt (Front axle)
   - Fork brace

Pinch Bolt (Front axle):
20 Nm (2.0 m·kg, 14 ft·lb)
Bolts (Fork brace):
9 Nm (0.9 m·kg, 6.5 ft·lb)

REAR WHEEL

① Indicator plate
② Drive chain puller
③ Collar
④ Oil seal
⑤ Bearing
⑥ Spacer flange
⑦ Spacer
⑧ Damper
⑨ Clutch hub
⑩ Driven sprocket
⑪ Collar
⑫ Drive chain
⑬ Tension bar

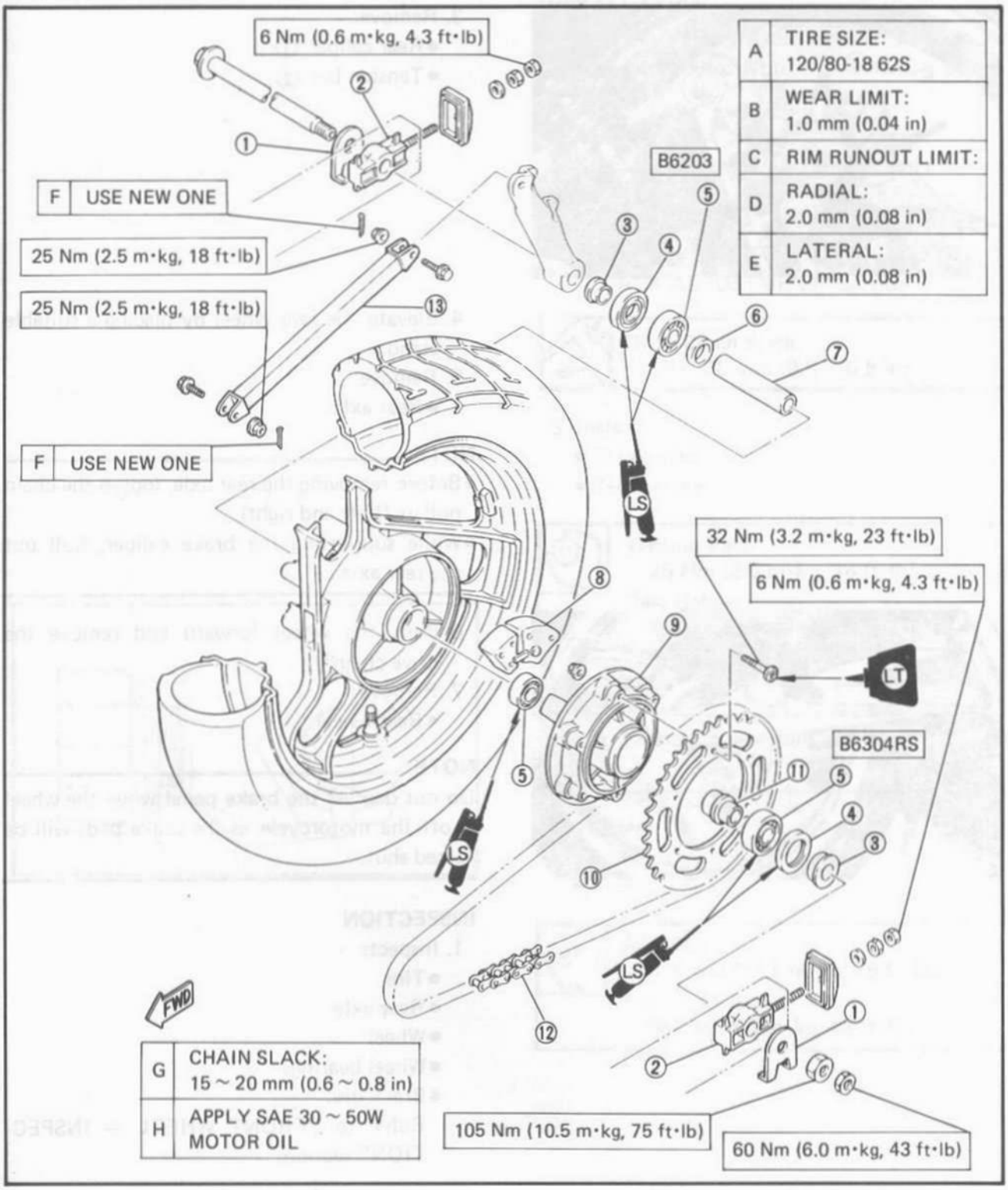

A	TIRE SIZE: 120/80-18 62S
B	WEAR LIMIT: 1.0 mm (0.04 in)
C	RIM RUNOUT LIMIT:
D	RADIAL: 2.0 mm (0.08 in)
E	LATERAL: 2.0 mm (0.08 in)

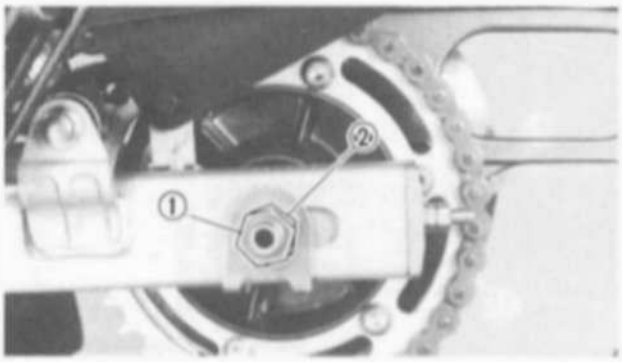

REMOVAL

1. Place the motorcycle on level place.
2. Remove:
   - Axle locknut ①
   - Axle nut ②

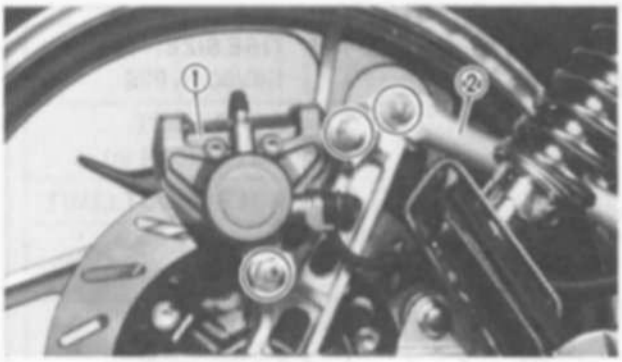

3. Remove:
   - Rear caliper ①
   - Tension bar ②
4. Elevate the rear wheel by placing a suitable stand.
5. Remove:
   - Rear axle

NOTE:

- Before removing the rear axle, loosen the chain pullers (Left and right).
- While supporting the brake caliper, pull out the rear axle.

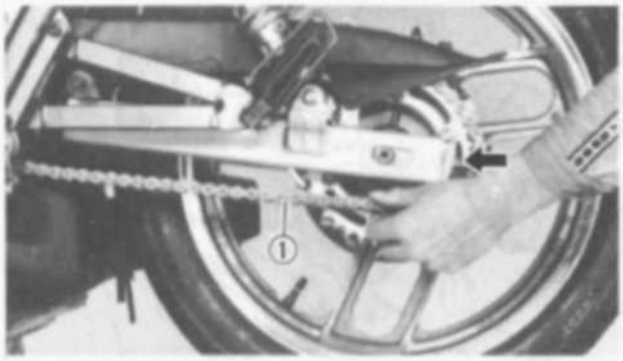

6. Push the wheel forward and remove the drive chain ①.
7. Remove:
   - Rear wheel

NOTE:

Do not depress the brake pedal when the wheel is off the motorcycle as the brake pads will be forced shut.

INSPECTION

1. Inspect:
   - Tire
   - Rear axle
   - Wheel
   - Wheel bearings
   - Brake disc

   Refer to "FRONT WHEEL – INSPECTION" section.

2. Measure:
   - Wheel runout
     Refer to "FRONT WHEEL – INSPECTION" section.
3. Check:
   - Wheel balance
     Refer to "FRONT WHEEL – INSPECTION" section.

INSTALLATION

When installing the rear wheel, reverse the removal procedure. Note the following points.

1. Apply:
   - Lithium base grease
     Lightly grease to the oil seals and bearings.
2. Adjust:
   - Drive chain slack
     Refer to "CHAPTER 2. DRIVE CHAIN SLACK ADJUSTMENT" section.

Drive Chain Slack:
15 ~ 20 mm (0.6 ~ 0.8 in)

3. Install:
   - Tension bar
   - Rear caliper

Tension Bar:
25 Nm (2.5 m·kg, 18 ft·lb)
Rear Caliper:
35 Nm (3.5 m·kg, 25 ft·lb)

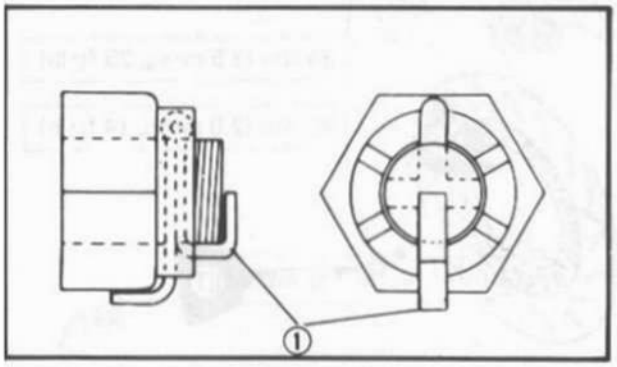

CAUTION:

Always use new cotter pins ① on the tension bar bolts.

4. Tighten:
   - Axle nut
   - Axle locknut

Axle Nut:
105 Nm (10.5 m·kg, 75 ft·lb)
Axle Locknut:
60 Nm (6.0 m·kg, 43 ft·lb)

FRONT AND REAR BRAKE

① Air bleed screw
② Retaining pin
③ Dust seal
④ Piston seal
⑤ Piston
⑥ Shim

F – ⓐ: Install the pad spring with its round side ⓐ facing towards the disc rotating direction.
G – ⓐ: Be sure to position the shim ① so that its top hook ⓐ points in the rotating direction ⓑ of the disc plate rotation.

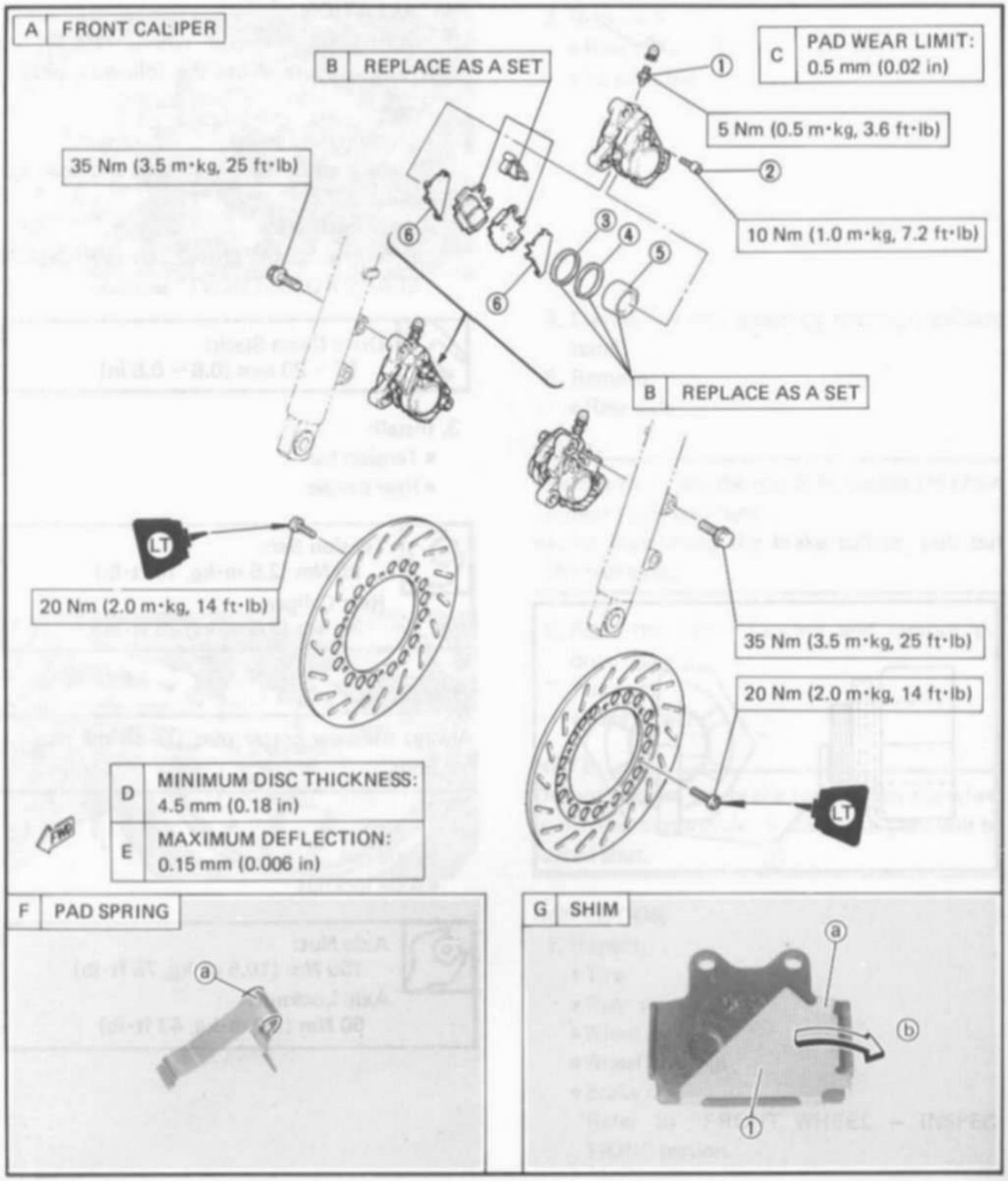

① Air bleed screw
② Retaining pin
③ Dust seal
④ Piston seal
⑤ Piston

F – ⓐ: Install the pad spring with its round side ⓐ facing towards the disc rotating direction.

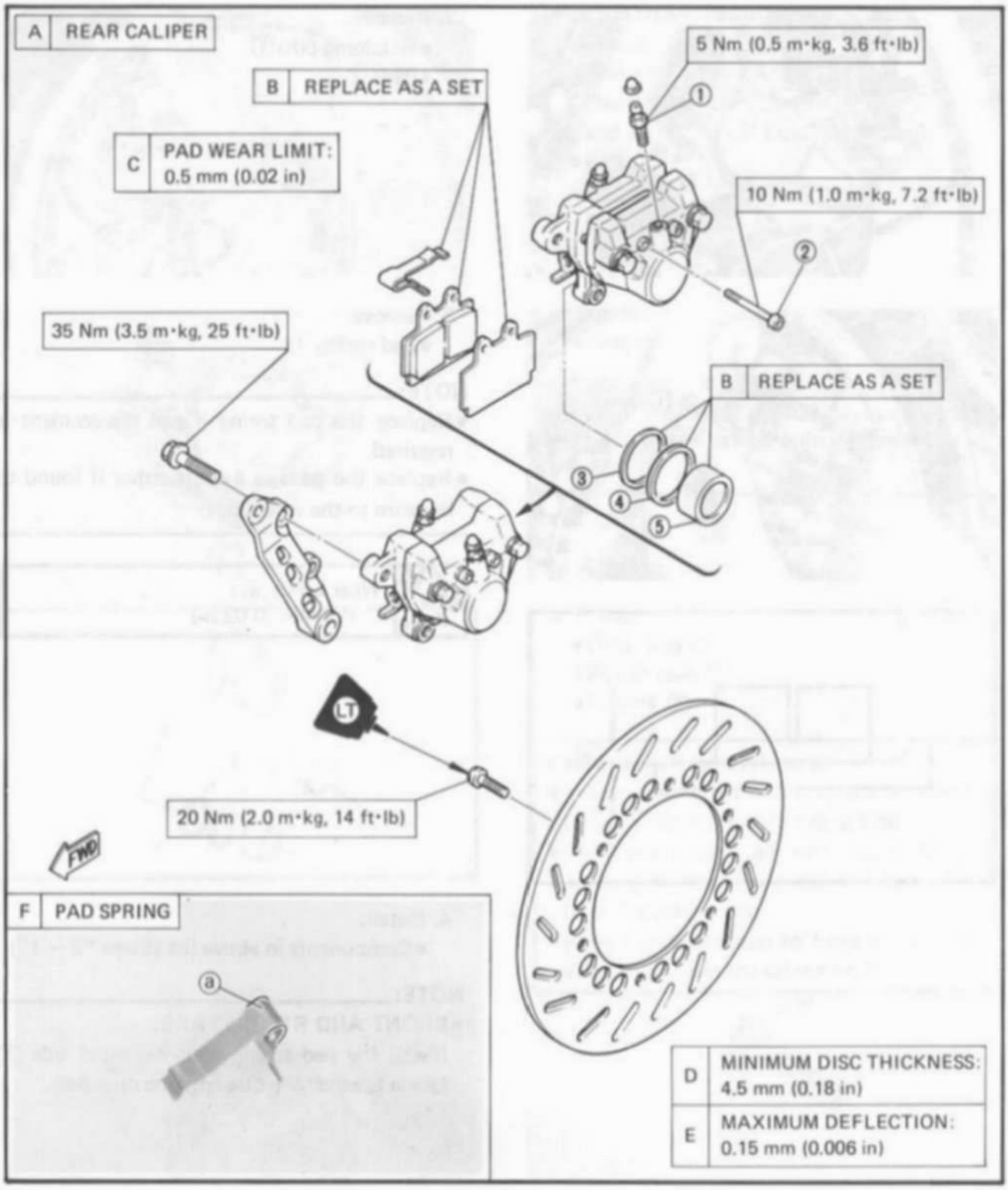

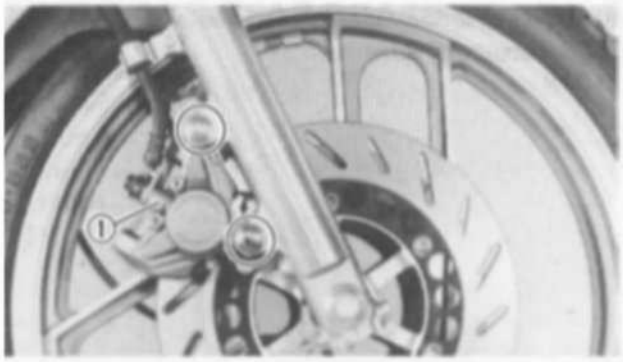

CALIPER PAD REPLACEMENT

It is not necessary to disassembly the brake hose to replace the brake pads.

1. Remove:
   - Caliper ①

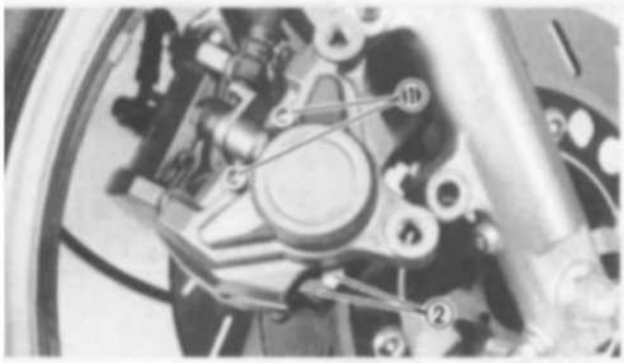

2. Remove:
   - Retaining pins ①
   - Pads ②

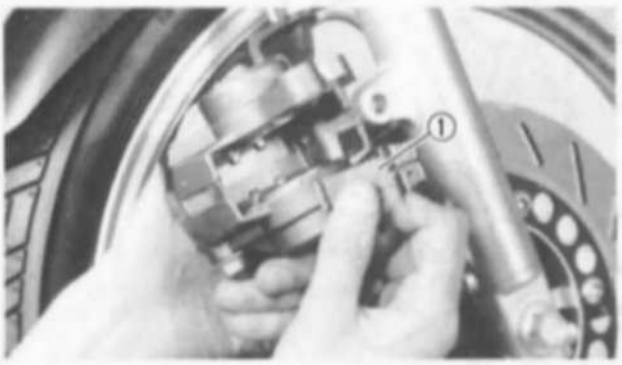

3. Remove:
   - Pad spring ①

NOTE:
- Replace the pad spring if pad replacement is required.
- Replace the pads as a set if either if found to be worn to the wear limit.

Wear Limit ⓐ :
0.5 mm (0.02 in)

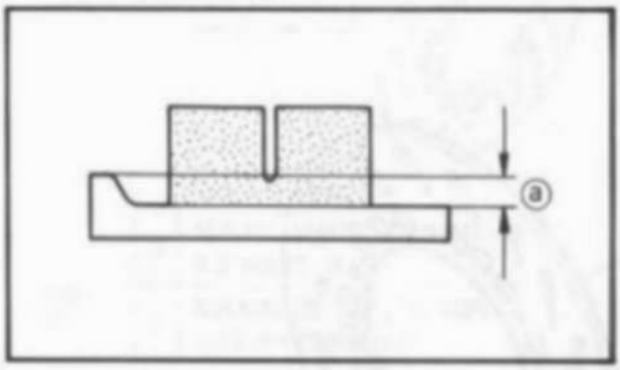

4. Install:
   - Components in above list (Steps "3 ~ 1")

NOTE:
- FRONT AND REAR BRAKE:
  Install the pad spring with its round side ⓐ facing towards the disc rotating direction.

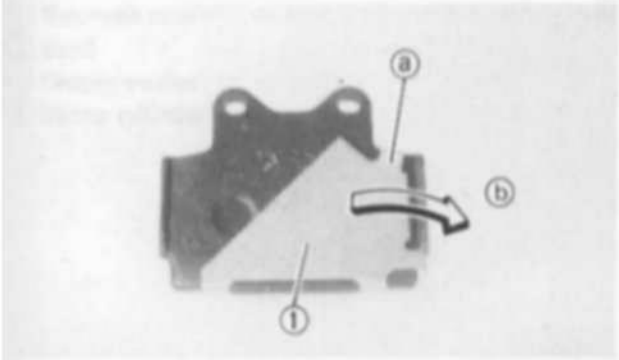

• FRONT BRAKE ONLY:
Be sure to position the shim ① so that its top hook ⓐ points in the rotating direction ⓑ of the disc plate rotation.

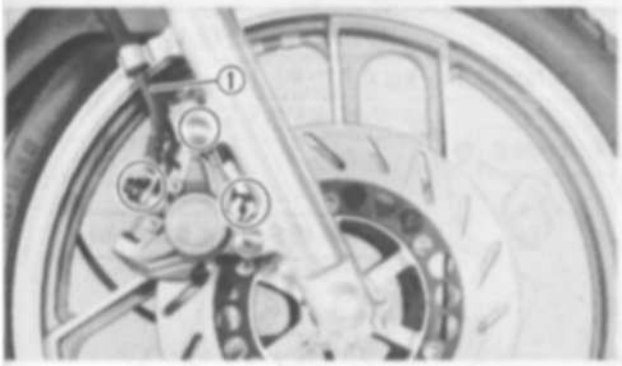

CALIPER DISASSEMBLY

1. Remove:
   • Brake hose ①
   Place the open hose end into a container and pump the old fluid out carefully.
   • Pads
   Refer to "CALIPER PAD REPLACEMENT" section.

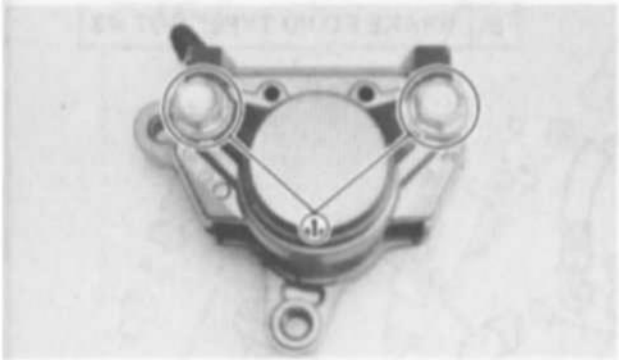

2. Remove:
   • Caliper

CAUTION:

Never loosen the bridge bolts ① on either side of the caliper.

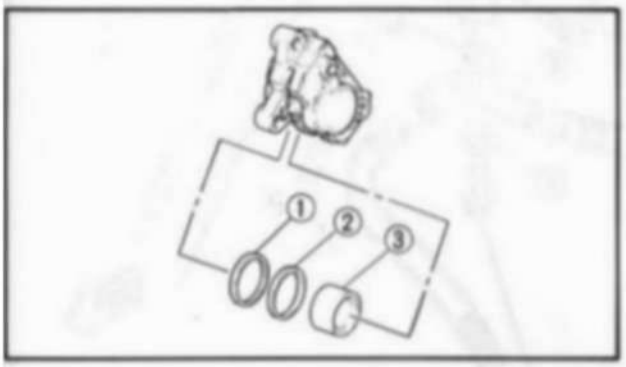

3. Remove:
   • Dust seals ①
   • Piston seals ②
   • Pistons ③

Caliper piston removal steps:
- Insert a piece of wooden board ④ into the caliper to lock the right side piston.
- Blow compressed air into the tube joint opening to force out the left side piston from the caliper body.
- Repeat previous step to force out the right side piston from the caliper body.

MASTER CYLINDER DISASSEMBLY

① Master cylinder cap
② Rubber seal
③ Master cylinder kit
④ Copper washer
⑤ Brake joint

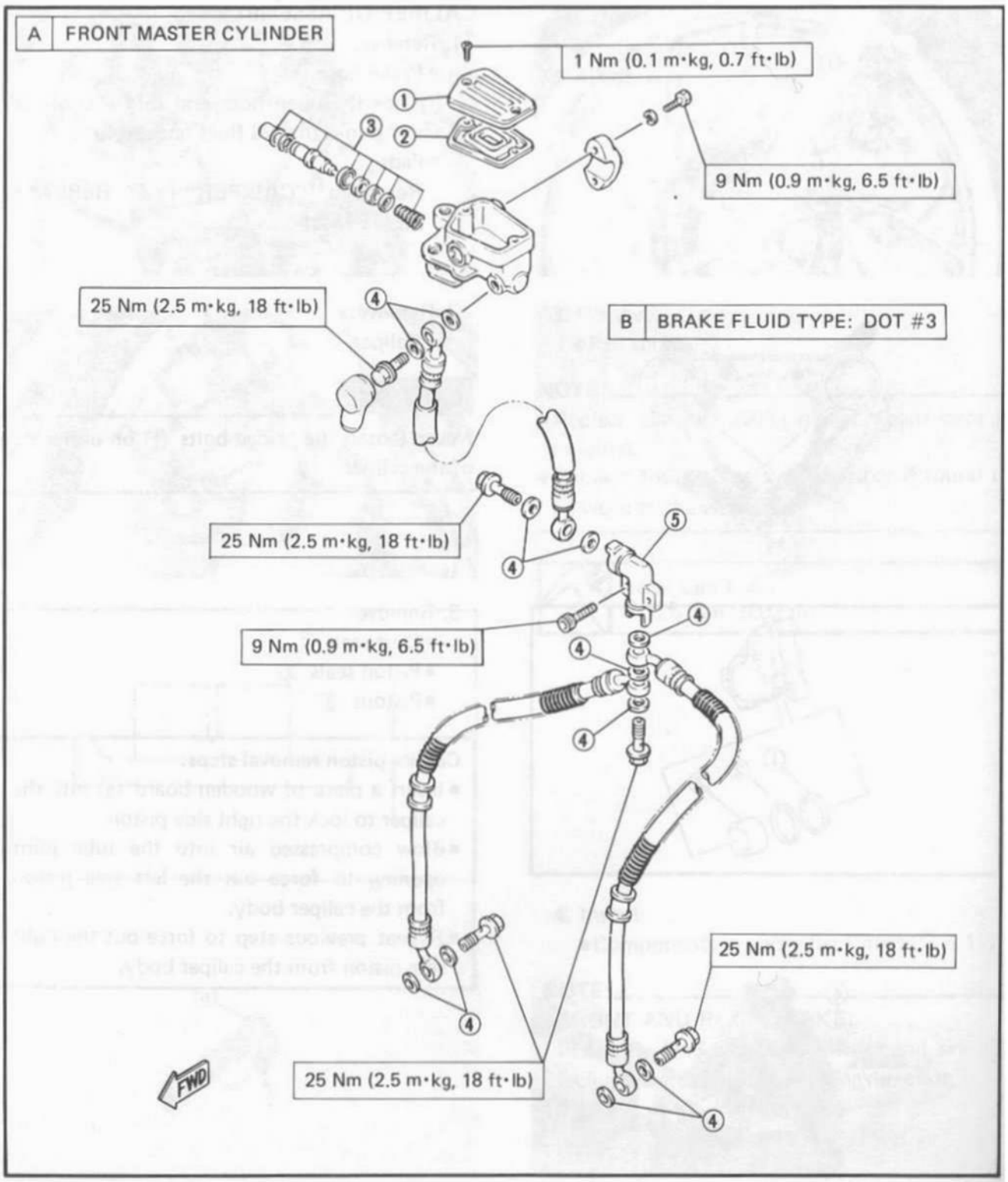

① Reservoir tank
② Band
③ Copper washer
④ Master cylinder kit

D BRAKE HOSE ROUTING:
When installing the rear brake hose, lightly touch the brake pipe ① with the projection ② on the master cylinder.

A REAR MASTER CYLINDER

B BRAKE FLUID TYPE: DOT #3

20 Nm (2.0 m·kg, 14 ft·lb)

9 Nm (0.9 m·kg, 6.5 ft·lb)

25 Nm (2.5 m·kg, 18 ft·lb)

FWD

C BRAKE PEDAL HEIGHT:

50 mm (2.0 in)

D BRAKE HOSE ROUTING

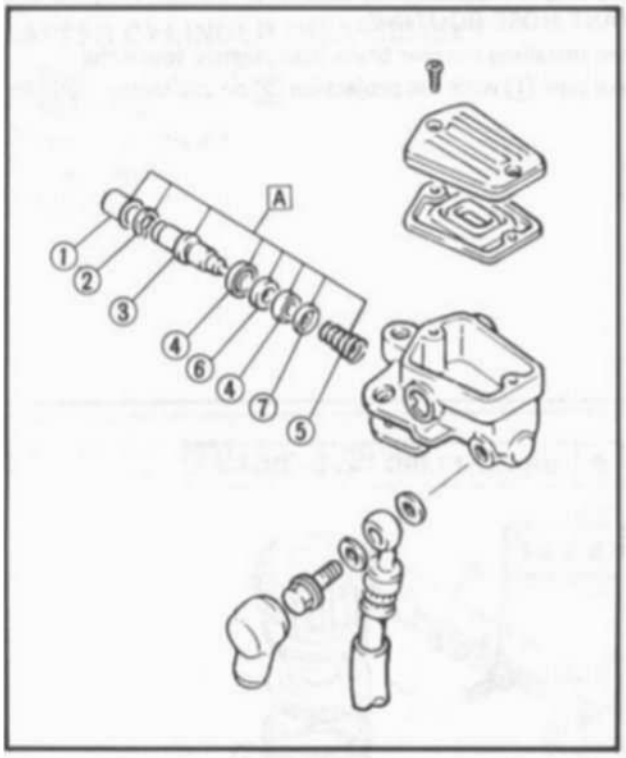

Front Brake Master Cylinder Disassembly

NOTE:

Drain the brake fluid before removing master cylinder.

① Dust boot
② Circlip
③ Piston
④ Piston cups
⑤ Return spring
⑥ Washer
⑦ Seat
Ⓐ MASTER CYLINDER KIT (Replace as a set)

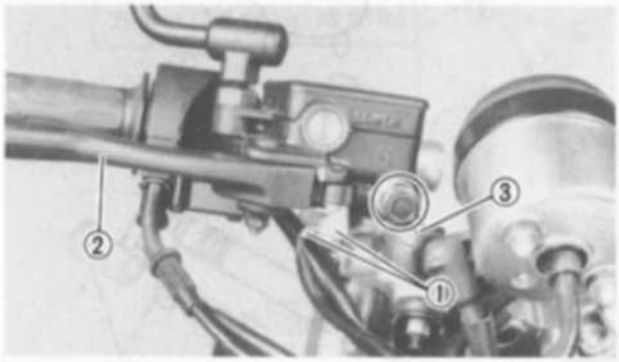

1. Remove:
   - Brake light switch leads ①
   - Brake lever ②
   - Lever spring
2. Disconnect:
   - Brake hose ③

   Drain the fluid.

3. Remove:
   - Master cylinder ①
   - Master cylinder cap ②

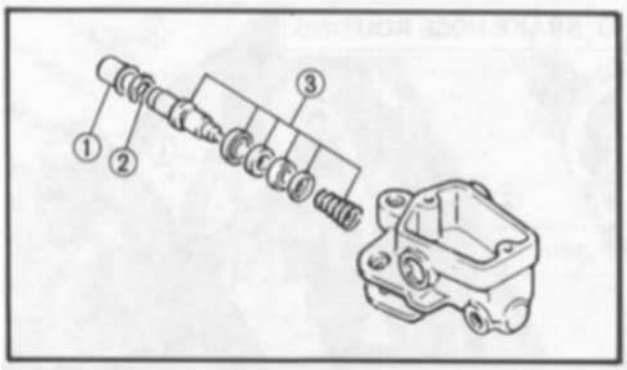

4. Remove:
   - Dust boot ①
   - Circlip ②
   - Master cylinder kit ③

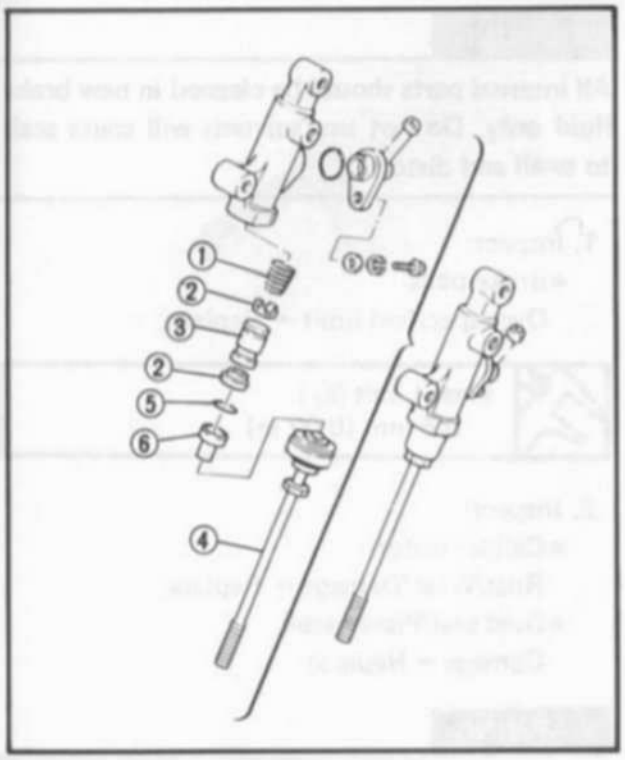

Rear Brake Master Cylinder Disassembly

NOTE:
Drain the brake fluid before removing master cylinder.

1. Remove:
   - Side cover (Right)
2. Disconnect:
   - Brake hose

① Spring
② Piston cup
③ Piston
④ Adjusting rod
⑤ Circlip
⑥ Dust boot
Ⓐ MASTER CYLINDER KIT (Replace as a set)

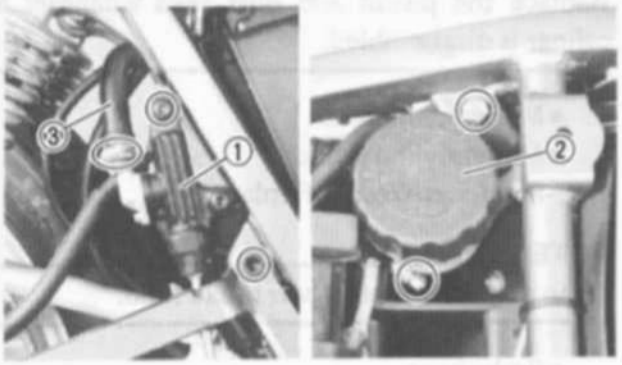

3. Remove:
   - Master cylinder ①
   - Fluid reservoir tank ②
     Drain the fluid.
4. Disconnect:
   - Tank hose ③

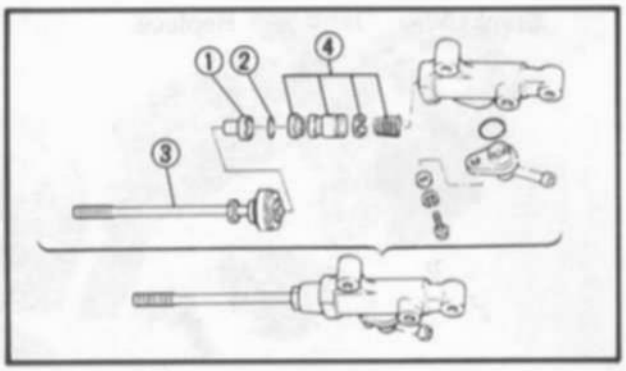

5. Remove:
   - Dust boot ①
   - Circlip ②
   - Adjusting rod ③
   - Master cylinder kit ④
     Drain the excess fluid.

BRAKE INSPECTION AND REPAIR

Recommended Brake Component Replacement Schedule:	
Brake pads	As required
Piston seal, dust seal	Every two years
Brake hoses	Every four years
Brake fluid	Replace only when brakes are disassembled

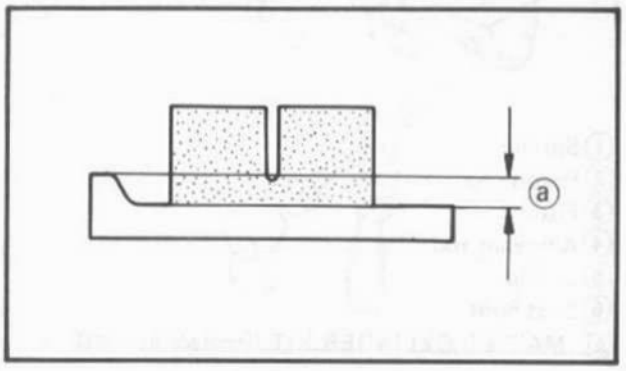

WARNING:

All internal parts should be cleaned in new brake fluid only. Do not use solvents will cause seals to swell and distort.

1. Inspect:
   - Brake pads
     Over specified limit → Replace.

Wear Limit ⓐ :
0.5 mm (0.02 in)

2. Inspect:
   - Caliper piston
     Rust/Wear/Damage → Replace.
   - Dust seal/Piston seal
     Damage → Replace.

WARNING:

Replace the piston and dust seals whenever a caliper is disassembled.

- Master cylinder kit
- Master cylinder body
  Scratches/Wear → Replace.

NOTE:
Clean all passages with new brake fluid.

- Brake hose
  Cracks/Wear/Damage → Replace.

BRAKE REASSEMBLY

WARNING:

- **All internal parts should be cleaned in new brake fluid only.**
- **Internal parts should be lubricated with brake fluid when installed.**

Brake Fluid:
DOT #3

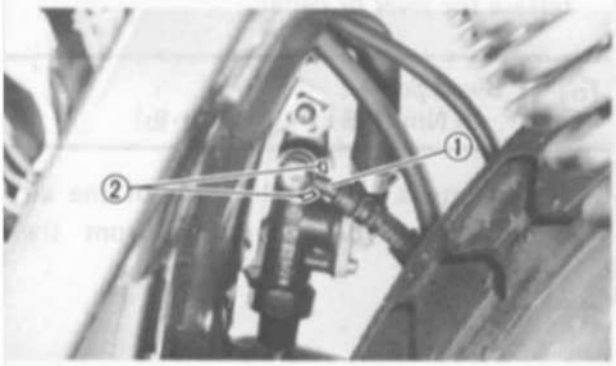

Caliper Reassembly

When assembling the caliper, reverse the disassembly procedure. Note the following points.

1. Install:
   - Brake calipers
   - Brake hoses

Brake Caliper:
35 Nm (3.5 m·kg, 25 ft·lb)
Brake Hose:
25 Nm (2.5 m·kg, 18 ft·lb)

2. Bleed the air completely from the brake system.

Master Cylinder Reassembly

When assembling the master cylinder, reverse the disassembly procedure. Note the following points.

1. Install:
   - Master cylinder kit

WARNING:

Internal parts should be lubricated with brake fluid when installed.

2. Install:
   - Master cylinders (Front and rear)
   - Brake hoses

Front Master Cylinder:
9 Nm (0.9 m·kg, 6.5 ft·lb)
Rear Master Cylinder:
20 Nm (2.0 m·kg, 14 ft·lb)
Brake Hose:
25 Nm (2.5 m·kg, 18 ft·lb)

CAUTION:

When installing the rear brake hose, lightly touch the brake pipe ① with the projection ② on the master cylinder.

3. Fill:
   - Master cylinders

Brake Fluid:
DOT #3

4. Bleed the air completely from the brake system.

AIR BLEEDING

WARNING:

Bleed the brake system it:
- **The system has been disassembled.**
- **A brake hose has been loosened or removed.**
- **The brake fluid is very low.**
- **The brake operation is faulty.**

A dangerous loss of braking performance may occur if the brake system is not properly bled.

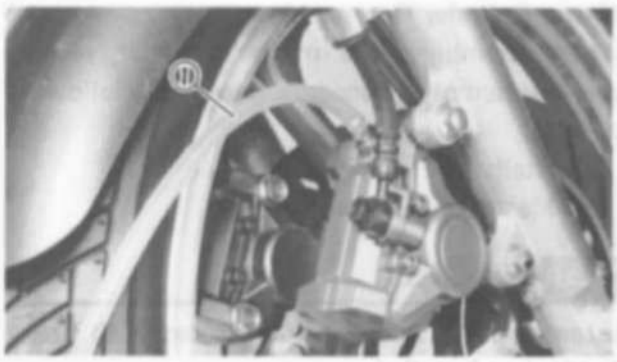

1. Bleed:
   - Brake fluid

Air bleeding steps:
a. Add proper brake fluid to the reservoir.
b. Install the diaphragm. Be careful not to spill any fluid or allow the reservoir to overflow.
c. Connect the clear plastic tube ① tightly to the caliper bleed screw.
d. Place the other end of the tube into a container.
e. Slowly apply the brake lever or pedal several times.
f. Pull the lever in or push down on the pedal. Hold the lever or pedal in position.
g. Loosen the bleed screw and allow the lever or pedal to travel towards its limit.
h. Tighten the bleed screw when the lever or pedal limit has been reached; then release the lever or pedal.

Bleed Screw:
5 Nm (0.5 m·kg, 3.6 ft·lb)

i. Repeat steps (e) to (h) until of the air bubbles have been removed from the system.

NOTE:

If bleeding is difficult, it may be necessary to let the brake fluid system stabilize for a few hours. Repeat the bleeding procedure when the tiny bubbles in the system have disappered.

j. Add brake fluid to the level line on the reservoir.

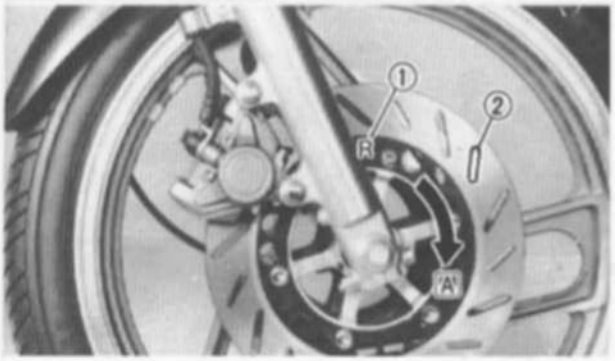

BRAKE DISC INSTALLATION

1. Install:
   - Brake disc(s)

NOTE:

FRONT BRAKE ONLY:

- The brake disc should be installed with the identified mark (L or R) ① face outward.

FRONT AND REAR BRAKE:

- The slots ② in the disc must point in the rotating direction [A] of the wheel.

2. Tighten:
   - Bolts (Disc)

Bolts:
20 Nm (2.0 m·kg, 14 ft·lb)
LOCTITE®

FRONT FORK

1. Fork cap
2. O-ring
3. Cap bolt
4. Collar
5. Spring seat
6. Fork spring
7. Rebound spring
8. Cylinder complete
9. Oil lock piece
10. Inner fork tube
11. Guide bush
12. Dust cover
13. Retaining clip
14. Oil seal
15. Seal spacer
16. Slide bush
17. Outer fork tube
18. Drain screw

A	FORK OIL (EACH):
B	CAPACITY: 310 cm^3 (10.9 Imp oz, 10.5 US oz)
C	GRADE: YAMAHA FORK OIL 10WT OR EQUIVALENT
D	FORK SPRING FREE LENGTH (LIMIT): 494 mm (19.5 in)

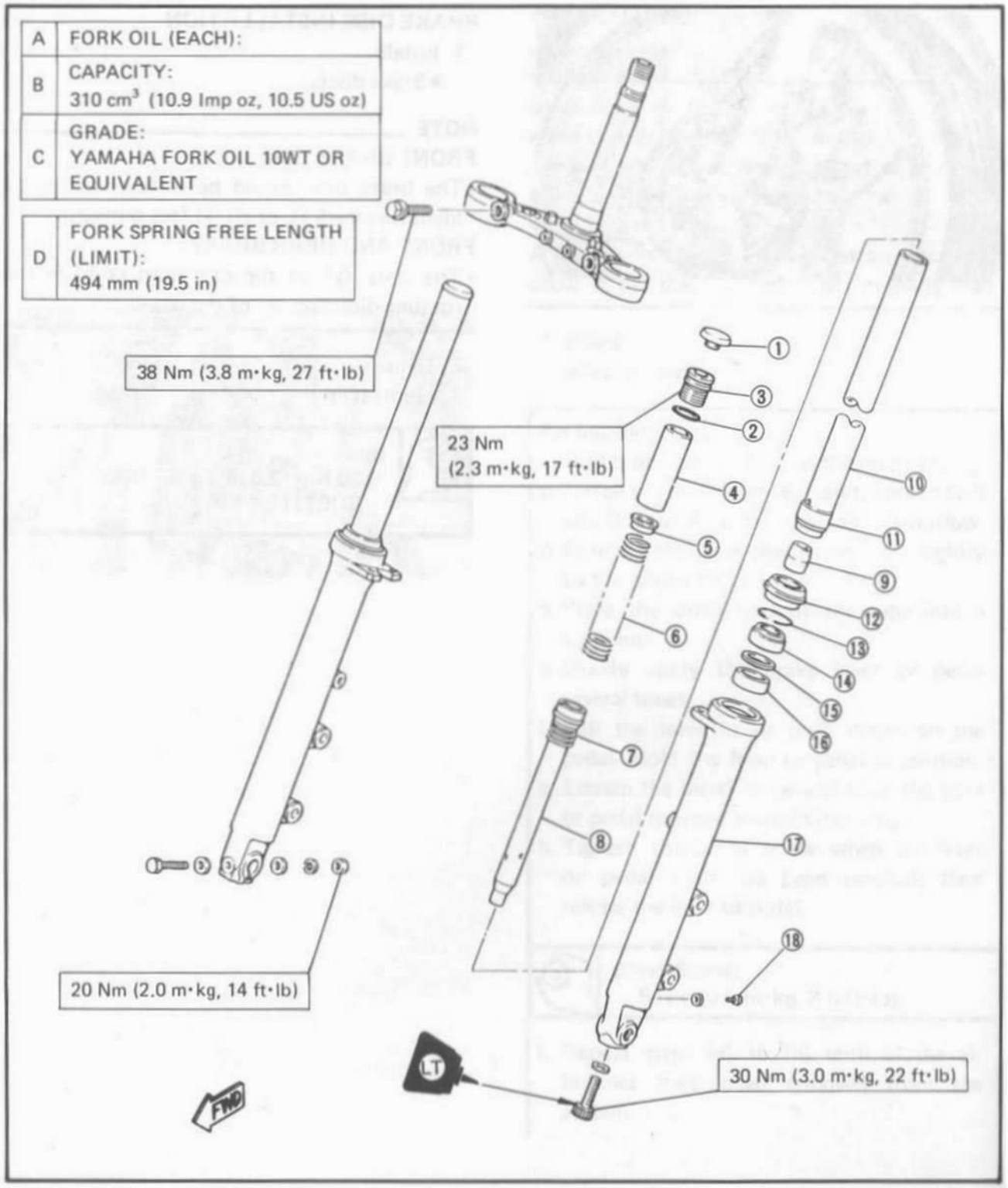

REMOVAL

WARNING:

Securely support the motorcycle so it won't fall over when the front wheel and front forks are removed.

1. Remove:
   - Front wheel
     Refer to "FRONT WHEEL" section.
   - Brake calipers
2. Remove:
   - Fork cap ①
3. Loosen:
   - Pinch bolts (Handlebar) ②
   - Pinch bolts (Steering crown) ③

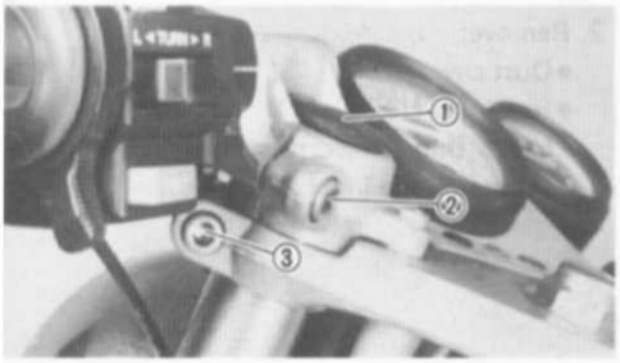

4. Loosen:
   - Cap bolt ①
     Use the Front Fork Cap Socket ② (90890-01104).

5. Loosen:
   - Pinch bolts (Under bracket) ①

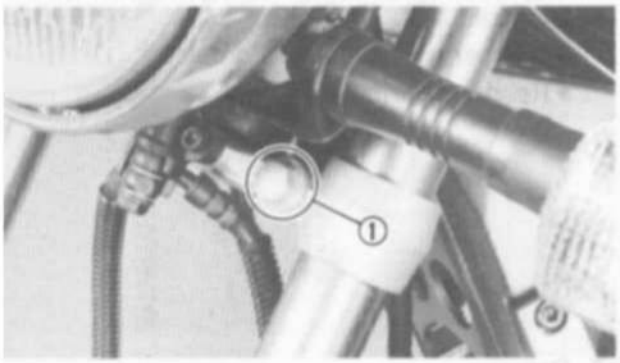

6. Remove:
   - Front fork(s) ①

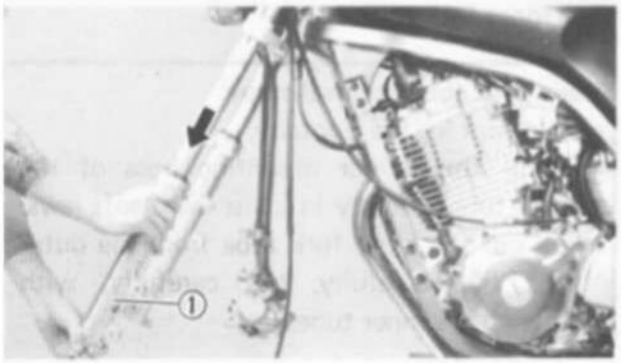

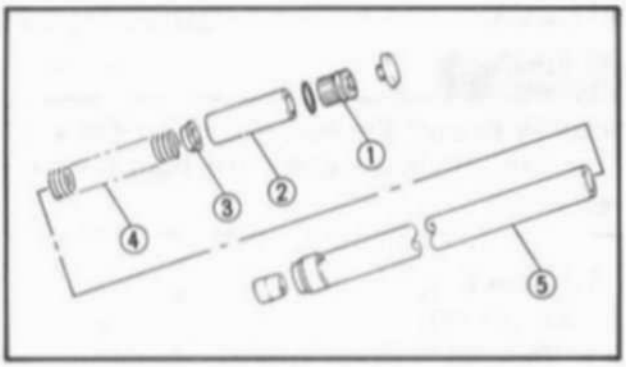

DISASSEMBLY

1. Remove:
   - Cap bolt ①
     Use the Front Fork Cap Socket (YM-01104).
   - Collar ②
   - Spring seat ③
   - Fork spring ④
     Drain the fork oil.

⑤ Inner fork tube

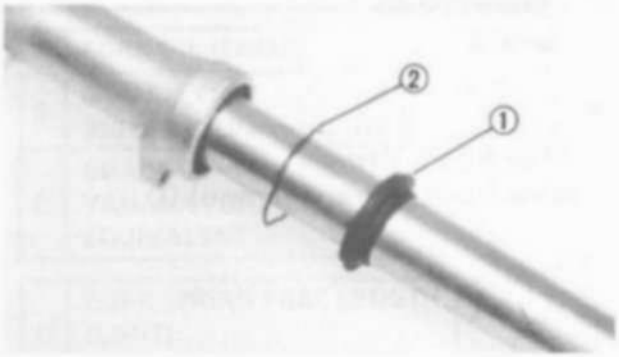

2. Remove:
   - Dust cover ①
   - Retaining clip ②
     Use a thin screwdriver, and be careful not to scratch the inner fork tube.

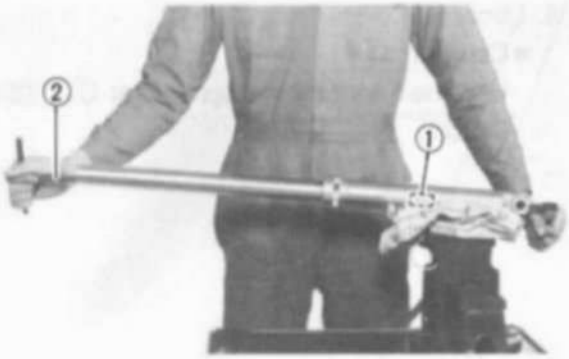

3. Remove:
   - Bolt (Cylinder complete)
     Use the Damper Rod Holder ① (YM-33298) and the T-Handle ② (YM-01326) to lock the damper rod.

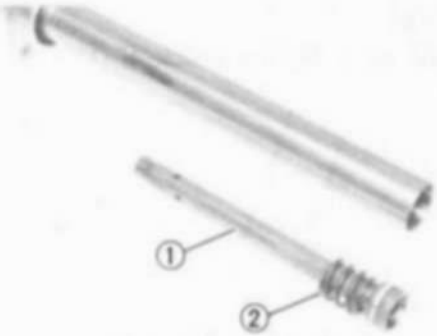

4. Remove:
   - Damper rod (Cylinder complete) ①
   - Rebound spring ②

5. Remove:
   - Inner fork tube

Inner fork tube removal steps:
- Hold fork leg horizontally.
- Clamp the caliper mounting boss of the outer tube securely in a vise with soft jaws.
- Pull out the inner fork tube from the outer tube by forcefully, but carefully, with drawing the inner tube.

NOTE:

- Excessive force will damage the oil seal and/or the bushes. Damaged oil seal and bushing must be replaced.
- Avoid bottoming the inner tube in the outer tube during the above procedure, as the oil lock piece will be damaged.

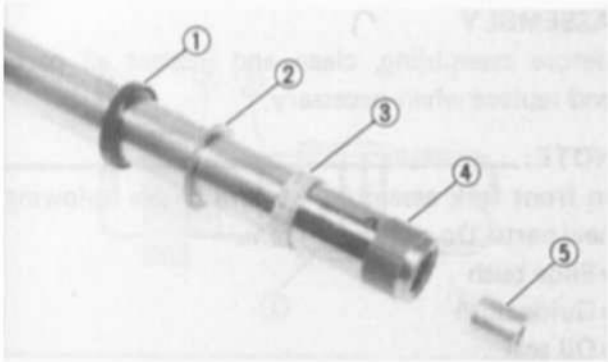

6. Remove:
   - Oil seal ①
   - Seal spacer ②
   - Slide bush ③
   - Guide bush ④
   - Oil lock piece ⑤

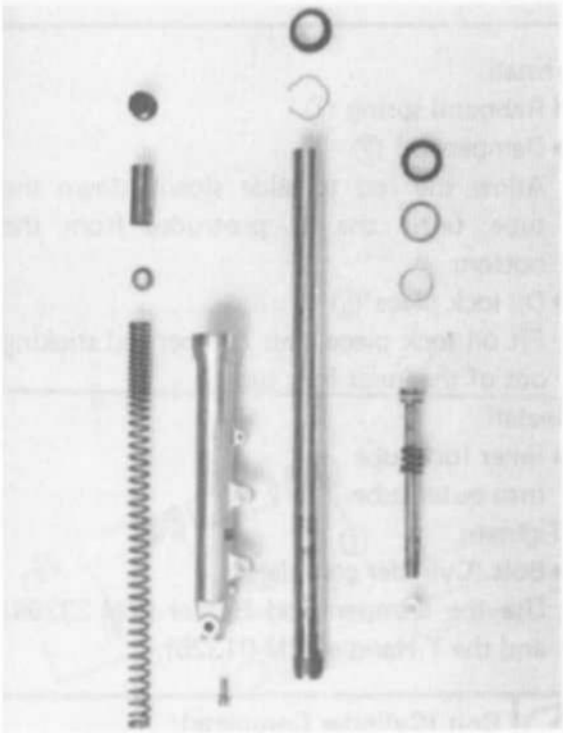

INSPECTION

1. Inspect:
   - Inner fork tube
     Scratches/Bends → Replace.

WARNING:

Do not attempt to straighten a bent inner fork tube as this may dangerously weaken the tube.

   - Outer fork tube
     Scratches/Bends/Damage → Replace.
   - Fork spring
     Over specified limit → Replace.

Fork Spring Free Length (Limit):
494 mm (19.5 in)

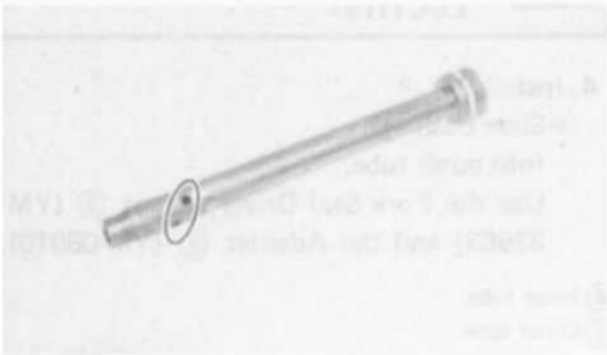

2. Inspect:
   - Damper rod
     Wear/Damage → Replace.
     Contamination → Blow out all oil passages with compressed air.

3. Inspect:
   - O-ring (Cap bolt) ①
   - Oil lock piece ②
     Damage → Replace.
   - Seals
     Wear/Damage → Replace.

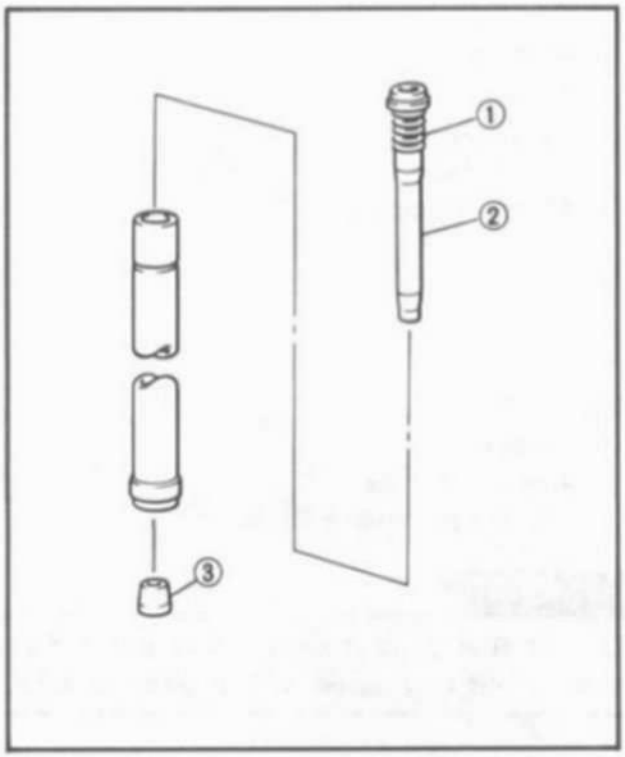

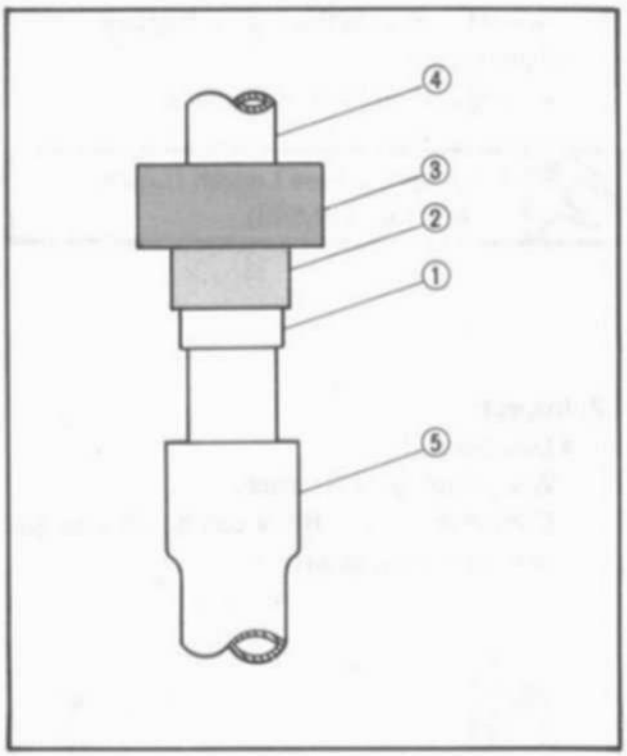

ASSEMBLY

Before assembling, clean and inspect all parts and replace when necessary.

NOTE:

In front fork assembly, be sure to use following new parts. Do not reuse them.
- Slide bush
- Guide bush
- Oil seal
- Dust seal

1. Install:
   - Rebound spring ①
   - Damper rod ②
     Allow the rod to slide slowly down the tube until the it protrudes from the bottom.
   - Oil lock piece ③
     Fit oil lock piece over damper rod sticking out of the inner fork tube.
2. Install:
   - Inner fork tube
     Into outer tube.
3. Tighten:
   - Bolt (Cylinder complete)
     Use the Damper Rod Holder (YM-33298) and the T-Handle (YM-01326).

Bolt (Cylinder Complete):
30 Nm (3.0 m·kg, 22 ft·lb)
LOCTITE®

4. Install:
   - Slide bush ①
     Into outer tube.
     Use the Fork Seal Driver Weight ③ (YM-33963) and the Adapter ② (YM-08010).

④ Inner tube
⑤ Outer tube

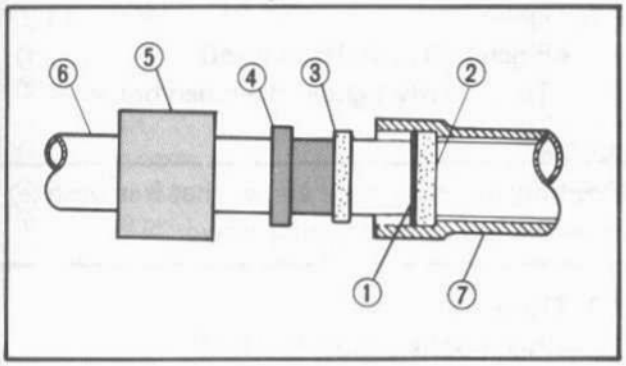

5. Install:
   - Seal spacer ①
     On top of the slide bush ②.
   - Oil seal ③
     Use the Fork Seal Driver Weight ⑤ (YM-33963) and the Adapter ④ (YM-08010), and install with numbered side up.

⑥ Inner tube
⑦ Outer tube

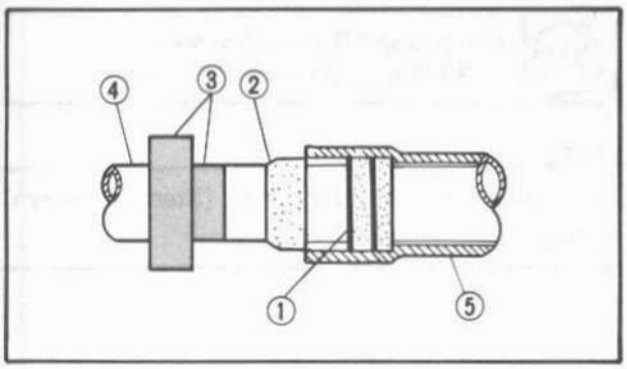

6. Install:
   - Retaining clip ①
   - Dust seal ②
     Use the Special Tools ③ (YM-33963, YM-08010)

④ Inner tube
⑤ Outer tube

7. Fill:
   - Front fork

Each Fork:
310 cm³ (10.9 Imp oz, 10.5 US oz)
Yamaha fork oil 10wt or equivalent
After filling, slowly pump the fork up and down to distribute oil.

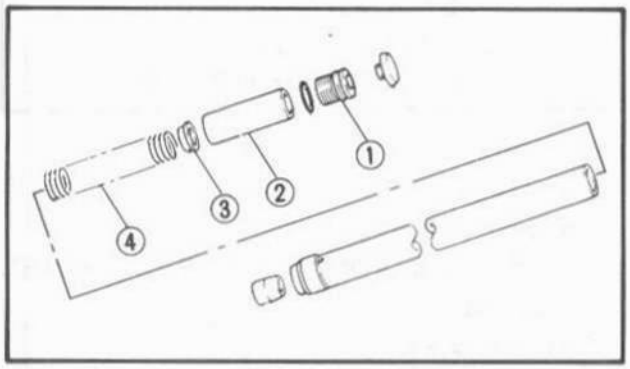

8. Install:
   - Fork spring ④
     With smaller pitch side up.
   - Spring seat ③
   - Collar ②
   - Cap bolt ①
     Temporarily tighten the cap bolt.

INSTALLATION

1. Install:
   - Front fork(s)
     Into underbracket.

2. Tighten:
   - Pinch bolts (Under bracket)
     Temporarily tighten the pinch bolts.

NOTE:
Position the inner tube end so that it is flush ⓐ with the top of the steering crown.

3. Tighten:
   - Pinch bolts (Under bracket)

	Pinch Bolts (Under Bracket): **38 Nm (3.8 m·kg, 27 ft·lb)**

NOTE:
Do not tighten the pinch bolt (Steering crown) in this stage.

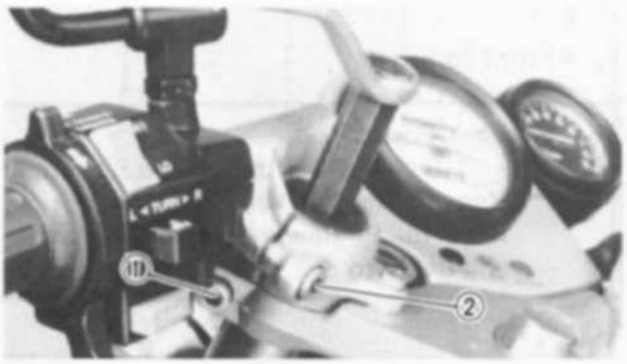

4. Tighten:
   - Cap bolt
     Use the Front Fork Cap Socket (YM-01104).
   - Pinch bolts (Steering crown) ①
   - Pinch bolts (Handlebar) ②

	Cap Bolt: **23 Nm (2.3 m·kg, 17 ft·lb)** **Pinch Bolts (Steering Crown):** **20 Nm (2.0 m·kg, 14 ft·lb)** **Pinch Bolts (Handlebar):** **20 Nm (2.0 m·kg, 14 ft·lb)**

5. Install:
   - Fork cap
   - Brake calipers
     Refer to "FRONT AND REAR BRAKE" section.
   - Front wheel
     Refer to "FRONT WHEEL" section.

STEERING HEAD

① Steering stem nut
② Steering crown
③ Ring nut
④ Bearing cover
⑤ Ball race (Upper – Top)
⑥ Ball (19 pcs.)
⑦ Ball race (Upper – Bottom)
⑧ Ball race (Under – Top)
⑨ Ball (19 pcs.)
⑩ Ball race (Under – Bottom)
⑪ Steering seal
⑫ Steering stem

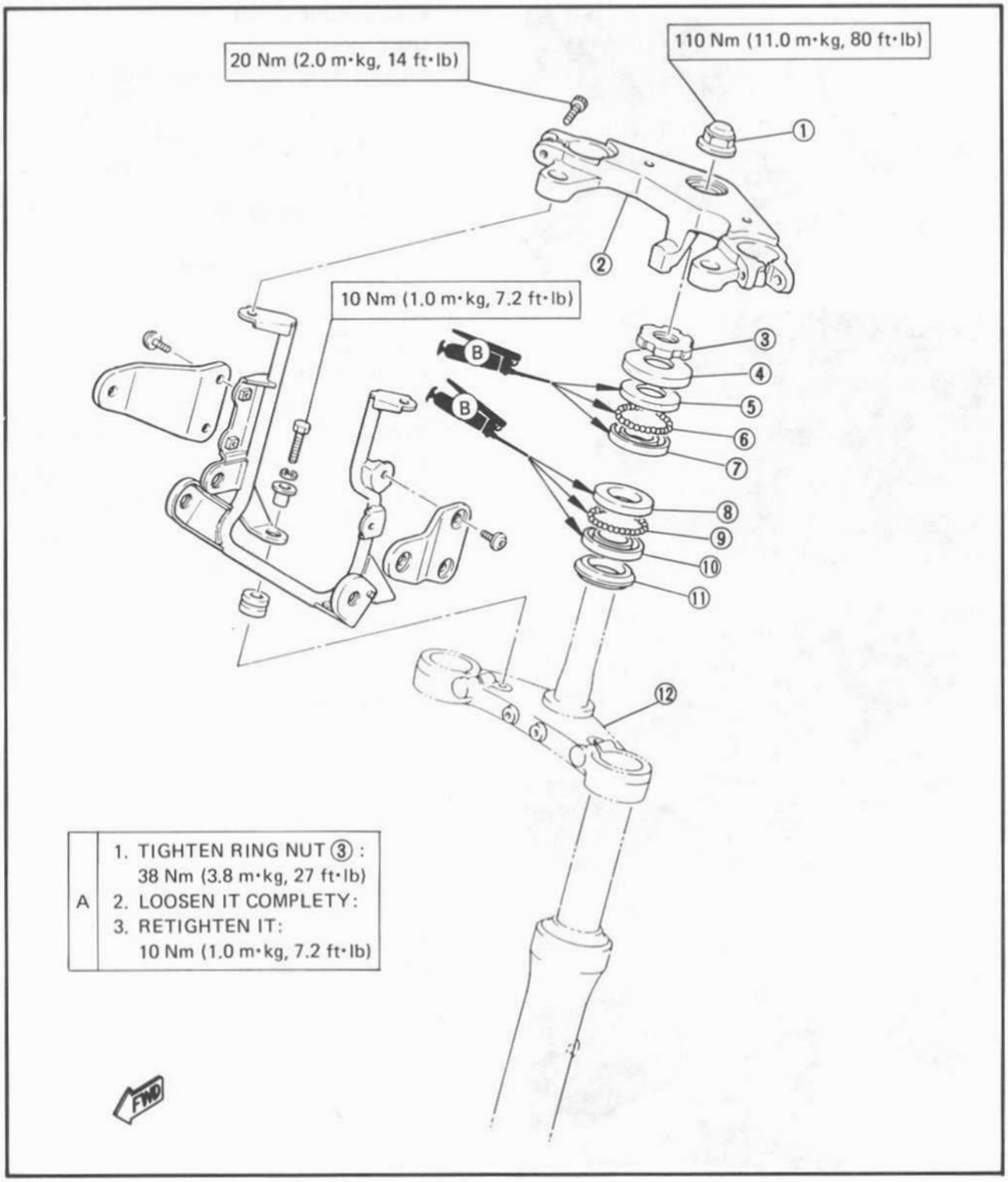

A	1. TIGHTEN RING NUT ③ : 38 Nm (3.8 m·kg, 27 ft·lb) 2. LOOSEN IT COMPLETY: 3. RETIGHTEN IT: 10 Nm (1.0 m·kg, 7.2 ft·lb)

REMOVAL

WARNING:

Securely support the motorcycle so there is no danger of it falling over.

1. Remove:
   - Front wheel
   - Front forks
2. Remove:
   - Headlight lens unit ①
3. Disconnect:
   - All leads (In the headlight body)

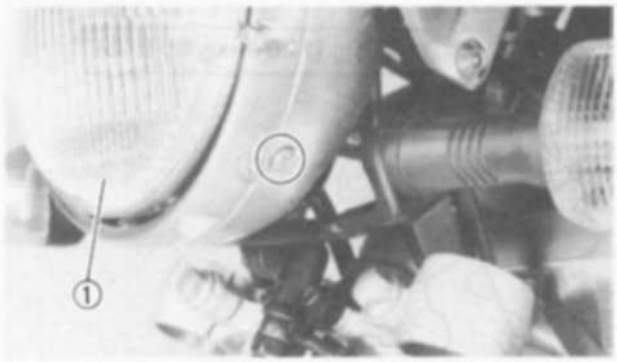

4. Remove:
   - Headlight body ①
   - Nuts (Headlight stay) ②
   - Bolts (Headlight stay) ③
5. Disconnect:
   - Tachometer cable
   - Speedometer cable

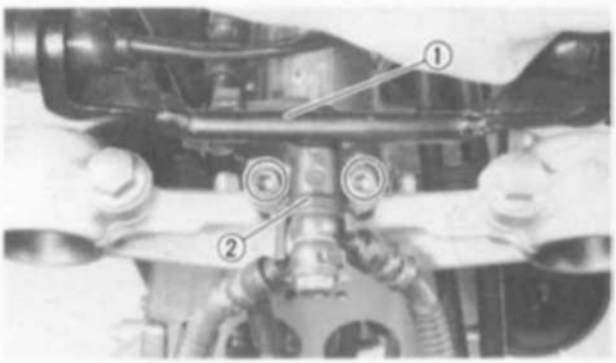

6. Remove:
   - Meter assembly
   - Headlight stay ①
   - Brake hose joint ②

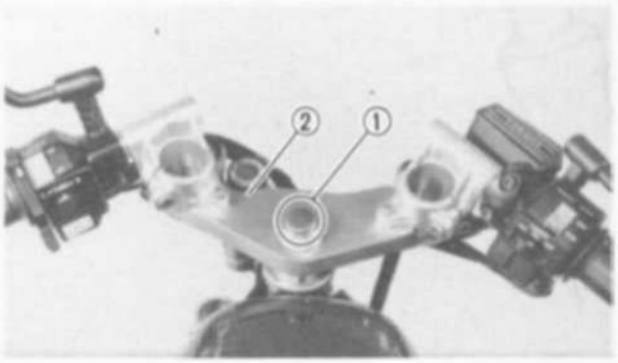

7. Remove:
   - Nut (Steering crown) ①
   - Steering crown ②

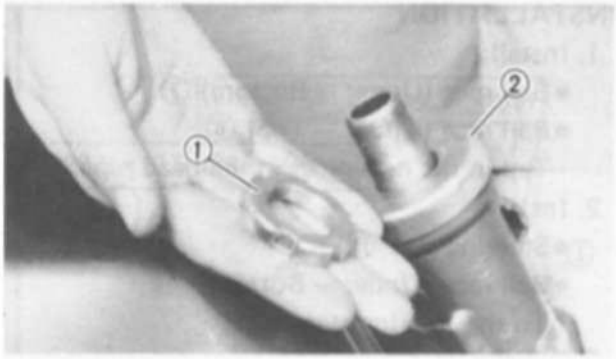

8. Remove:
   - Ring nut ①
     Use the Ring Nut Wrench (YU-01268).
   - Bearing cover ②

WARNING:

Support the under bracket so that it may not fall down.

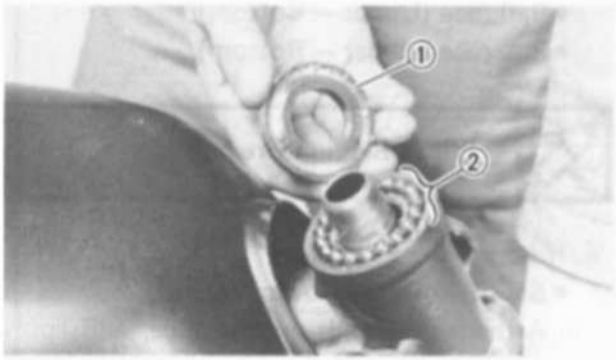

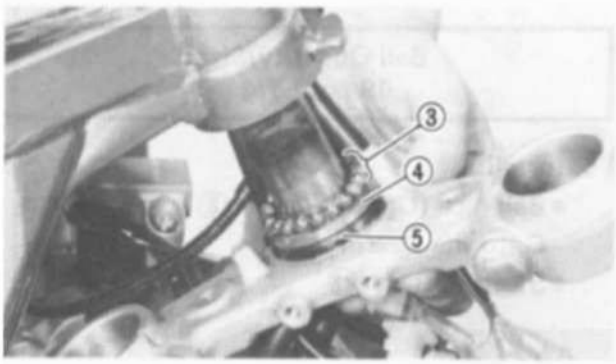

9. Remove:
   - Steering stem
   - Ball race (Upper – Top) ①
   - Ball (19 pcs.) ②
   - Ball (19 pcs.) ③
   - Ball race (Under – Bottom) ④
   - Steering seal ⑤

10. Remove:
    - Ball race (Upper – Bottom)
    - Ball race (Under – Top)
      Use a drift punch and a hammer.

NOTE:

Work the race out gradually by tapping lightly around its complete backside diameter.

INSPECTION

1. Wash the bearing in a solvent.
2. Inspect:
   - Balls
   - Ball races
     Pitting/Damage → Replace.

NOTE:

Always replace ball and race as a set.

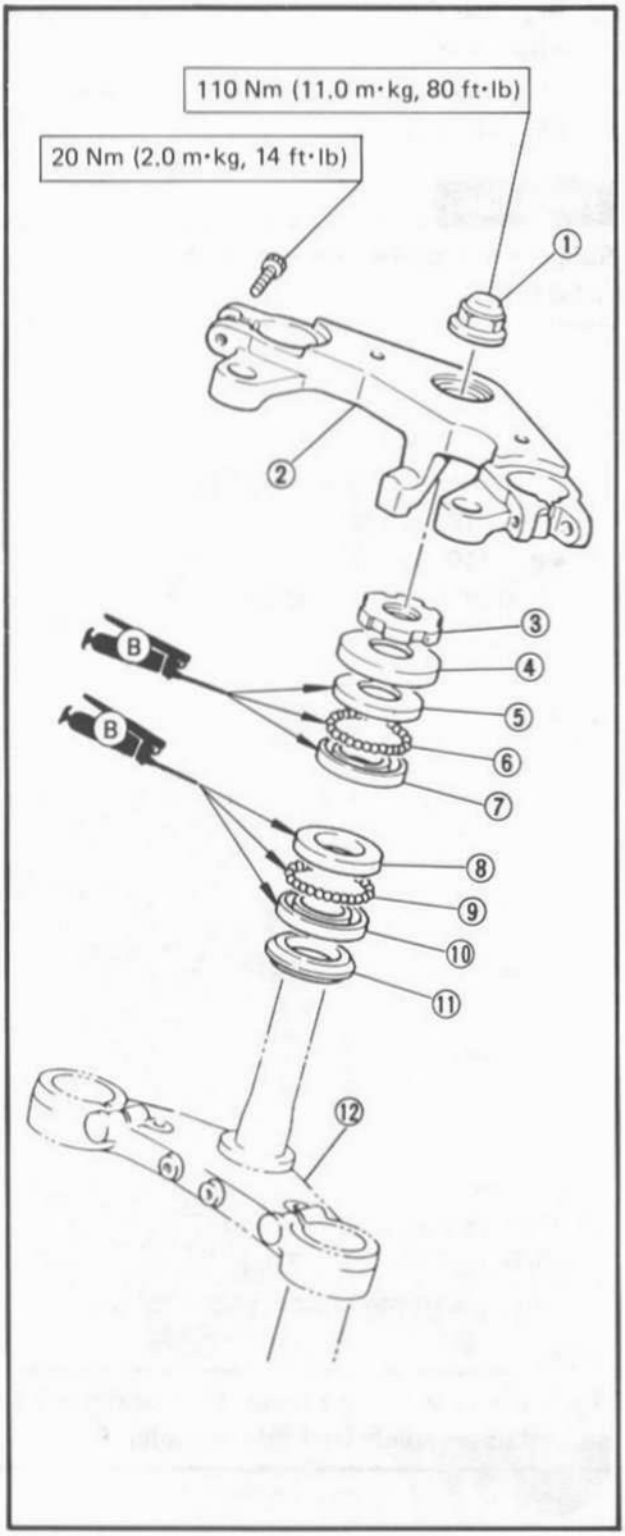

INSTALLATION

1. Install:
   - Ball race (Upper – Bottom) ⑦
   - Ball race (Under – Top) ⑧

   Tap in the new races in the head pipe.
2. Install:
   - Steering seal ⑪
   - Ball race (Under – Bottom) ⑩

   To the steering stem.
3. Lubricate:
   - Ball race (Upper – Bottom)
   - Ball race (Under – Bottom)

Wheel Bearing Grease

4. Install:
   - Balls (Upper and lower) ⑥ ⑨

   Arrange the balls around race, and apply more grease.

Ball Quantity/Size:
19 pcs./ 1/4 in

5. Install:
   - Ball race (Under – Top) ⑧

   Onto the steering stem.
   - Steering stem ⑫

CAUTION:

Hold the steering stem until it is secured.

- Ball race (Upper – Top) ⑤
- Bearing cover ④
- Ring nut ③

NOTE:

The tapered side of ring nut must face downward.

6. Tighten:
   - Ring nut ③

Ring nut tightening steps:

NOTE:

Set the Torque Wrench to the Ring Nut Wrench so that they form a right angle.

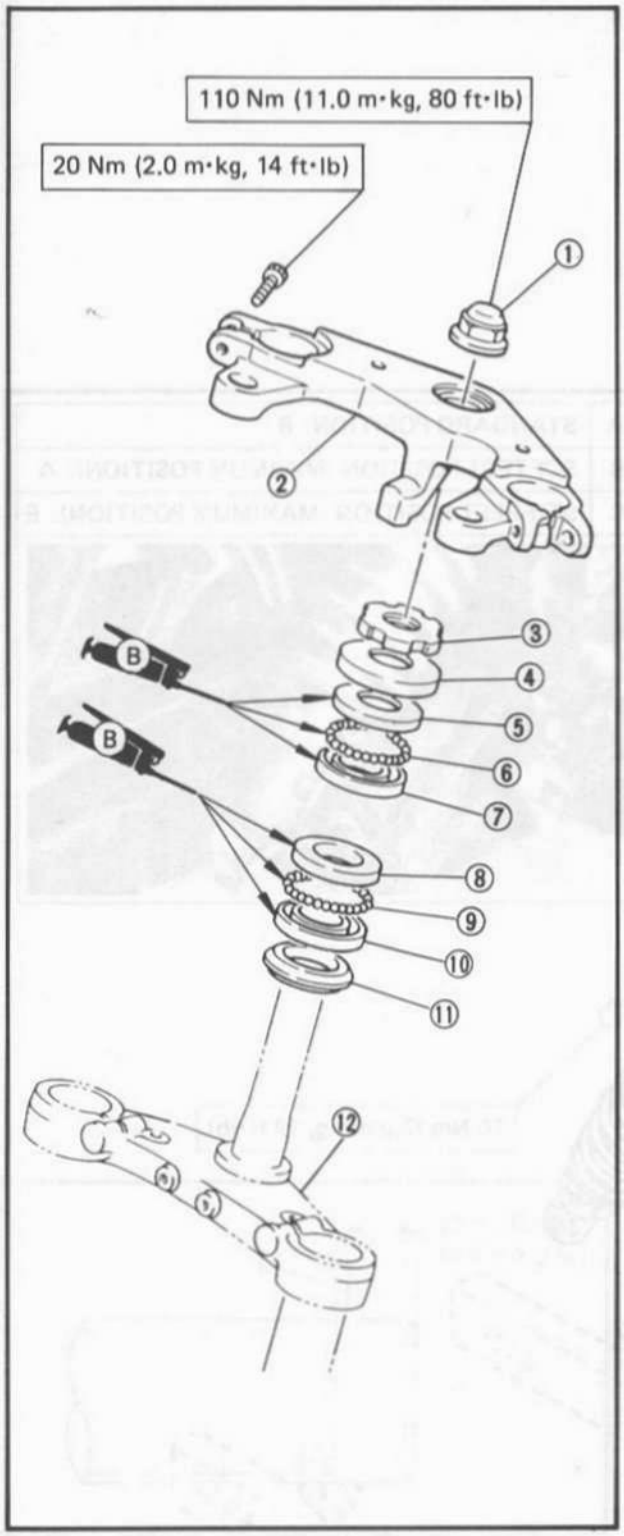

- Tighten the ring nut ③ using the Ring Nut Wrench (YU-01268).

Ring Nut (Initial Tightening):
38 Nm (3.8 m·kg, 27 ft·lb)

- Loosen the ring nut ③ completely and retighten it to specification.

WARNING:

Do not over-tightening.

Ring Nut (Final Tightening):
10 Nm (1.0 m·kg, 7.2 ft·lb)

- Check the steering stem by turning it lock to lock. If there is any binding, remove the steering stem assembly and inspect the steering bearings ⑥, ⑩.
- Install the steering crown ② and tighten the steering stem nut ① to specification.

Nut (Steering stem):
110 Nm (11.0 m·kg, 80 ft·lb)

7. Install:
   - Components in aforementioned list (Steps "5 ~ 1")
     Refer to "FRONT FORK" and "FRONT WHEEL" section.

Headlight Stay:
10 Nm (1.0 m·kg, 7.2 ft·lb)
Pinch Bolts (Steering Crown):
20 Nm (2.0 m·kg, 14 ft·lb)
Pinch Bolts (Handlebar):
20 Nm (2.0 m·kg, 14 ft·lb)

8. Adjust:
   - Headlight beam
     Refer to "CHAPTER 2. HEADLIGHT BEAM ADJUSTMENT" section.

REAR SHOCK ABSORBER

① Rear shock absorber assembly

A	STANDARD POSITION: B
B	SOFTEST POSITION (MINIMUM POSITION): A
C	STIFFEST POSITION (MAXIMUM POSITION): E

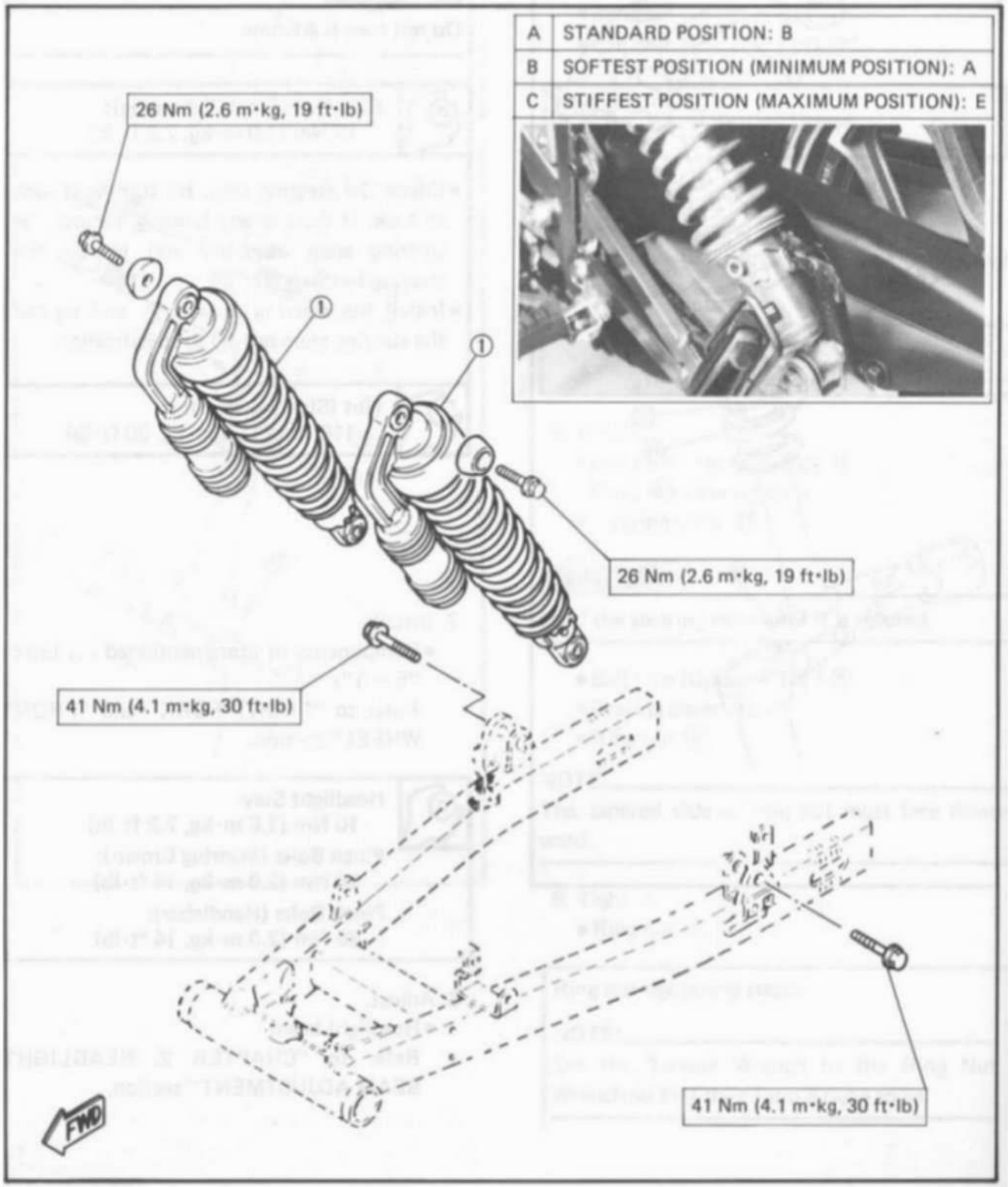

HANDLING NOTES

WARNING:

This shock absorber contains highly pressurized nitrogen gas. Read and understand the following information before handling the shock absorber. The manufacturer cannot be held responsible for property damage or personal injury that may result from improper handling.

- **Do not tamper with or attempt to open the cylinder assembly.**
- **Do not subject shock absorber to an open flame or other high heat source. This may cause the unit to explode due to excessive gas pressure.**
- **Do not deform or damage the cylinder in any way. Cylinder damage will result in poor damping performance.**
- **Take care not to scratch the contact surface of the piston rod with the cylinder; or oil could leak out.**
- **When scrapping the shock absorber, follow the instructions on disposal.**

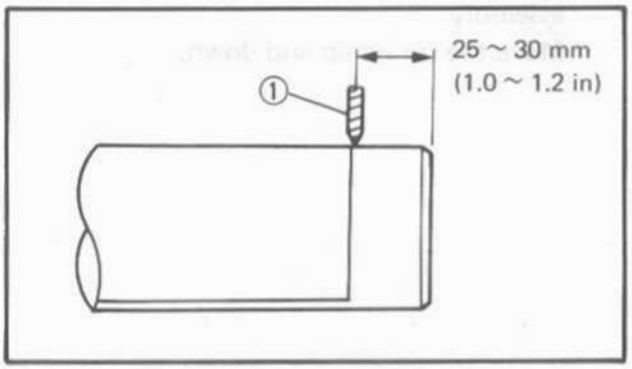

NOTES ON DISPOSAL

Shock absorber disposal steps:

Gas pressure must be released before disposing of shock absorber. To do so, drill ① a 2 ~ 3 mm (0.08 ~ 0.12 in) hole through the cylinder wall at a point 25 ~ 30 mm (1.0 ~ 1.2 in) from the bottom end of the gas chamber.

CAUTION:

Wear eye protection to prevent eye damage from escaping gas and/or metal chips.

REAR SHOCK ABSORBER

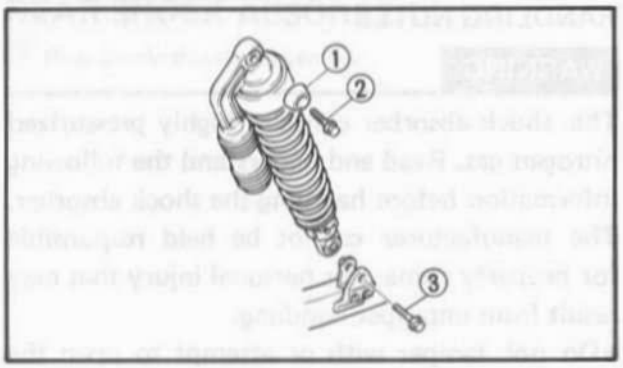

REMOVAL

1. Remove:
   - Bolt (Shock absorber top) ①
   - Special washer ②
   - Bolt (Shock absorber bottom) ③

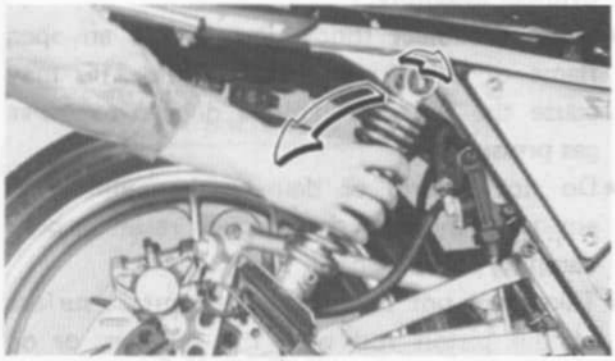

2. Pull out the shock absorber top, and turn the shock absorber clockwise.
3. Remove:
   - Rear shock absorber

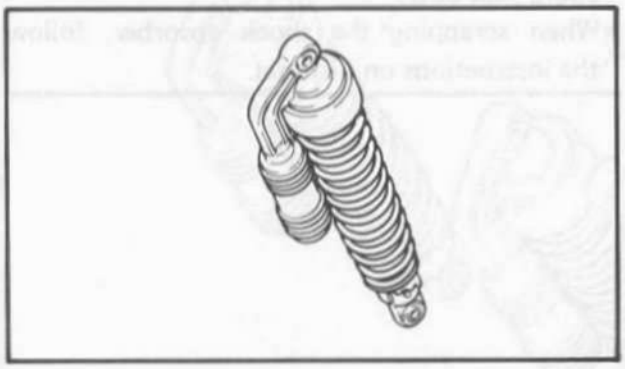

INSPECTION

1. Inspect:
   - Shock absorber rod
     Bends/Damage → Replace the shock absorber assembly.
   - Shock absorber
     Oil leakes → Replace the shock absorber assembly.
   - Spring
     Fatigue → Replace the shock absorber assembly.
     Move the spring up and down.

INSTALLATION

When installing the rear shock absorber, reverse the removal procedure. Note the following points.

1. Apply:
   - Lithium base grease
     To the pivot points.

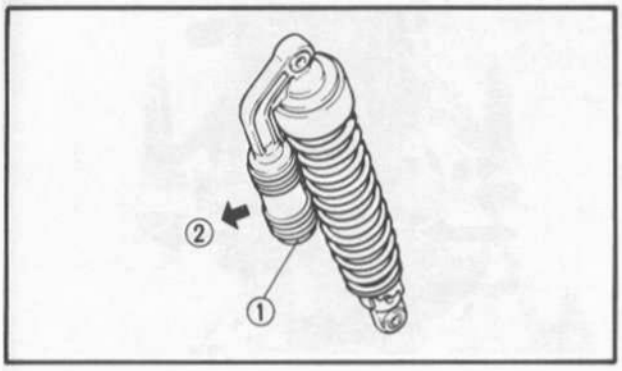

2. Install:
   - Rear shock absorber

NOTE:

The rear shock absorber should be installed so that the gas chamber ① on the shock absorber faces forward ② .

3. Tighten:
   - Bolt (Shock absorber top)
   - Nut (Shock absorber bottom)

Bolt (Shock Absorber Top):
26 Nm (2.6 m·kg, 19 ft·lb)
Bolt (Shock Absorber Bottom):
41 Nm (4.1 m·kg, 30 ft·lb)

4. Adjust:
   - Spring preload

   Refer to "CHAPTER 2. REAR SHOCK ABSORBER ADJUSTMENT" section.

SWINGARM

① Pivot shaft
② Thrust cover
③ Plain washer
④ Taper roller bearing
⑤ Chain guide
⑥ Bushing

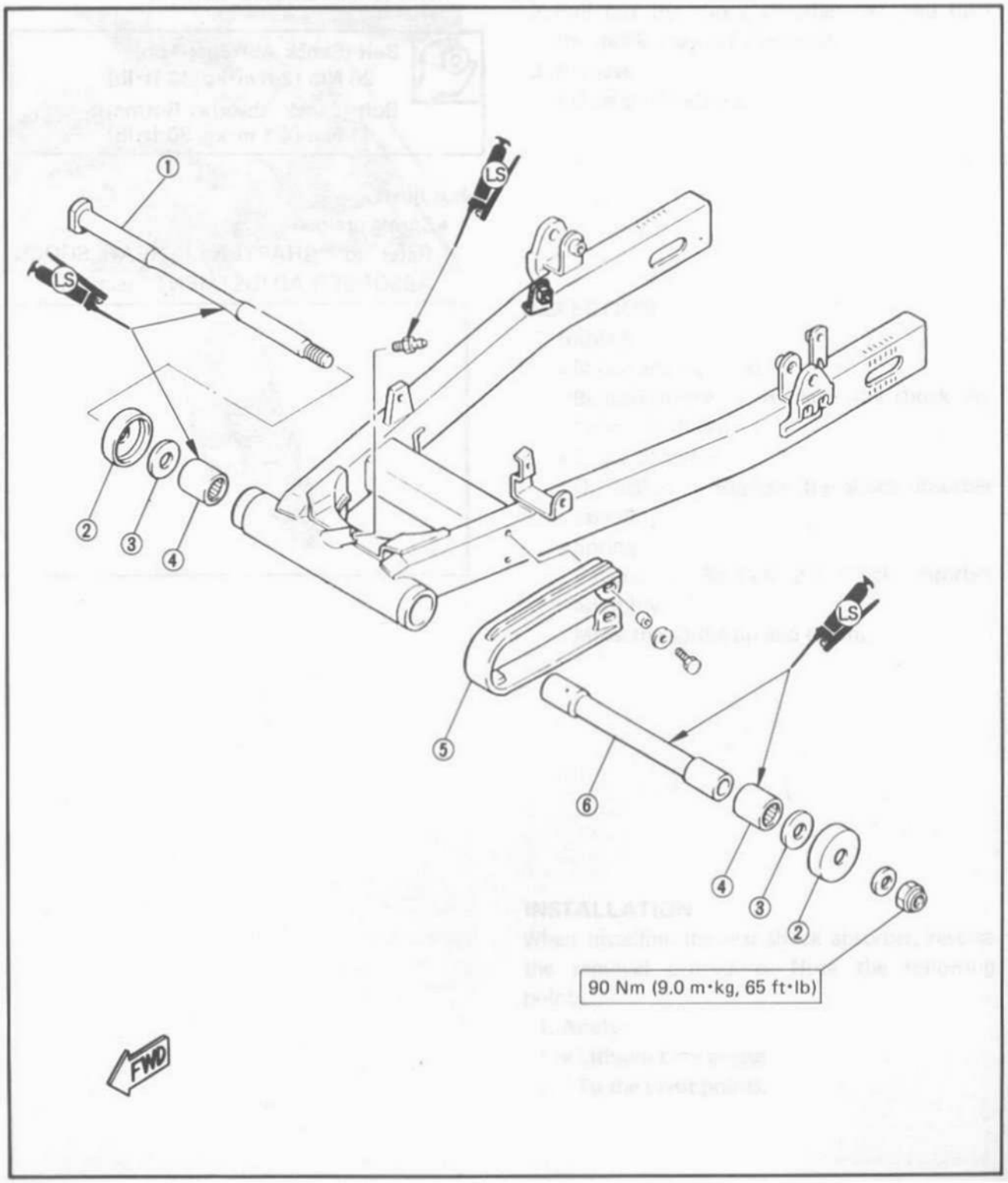

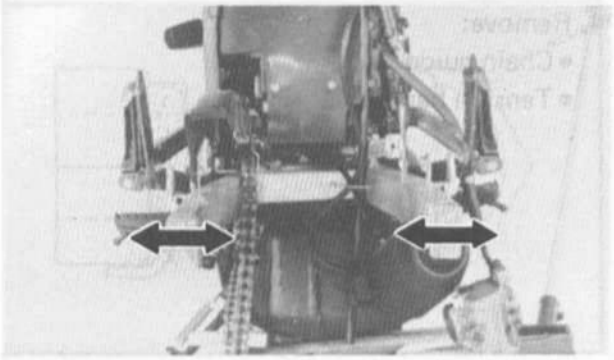

FREE PLAY INSPECTION

1. Remove:
   - Rear wheel
   - Rear shock absorbers
2. Check:
   - Swingarm (Side play)

     Side play → Replace taper roller bearings and bushing.

     Move the swingarm from side to side.

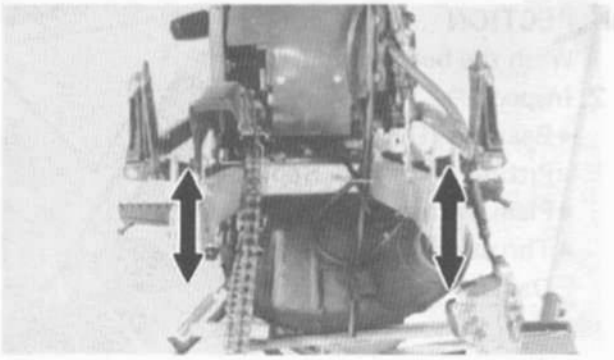

Side Play (At End of Swingarm): 1.0 mm (0.04 in)

3. Check:
   - Swingarm (Vertical movement)

     Tightness/Binding/Rough spots → Replace bearings.

     Move the swingarm up and down.

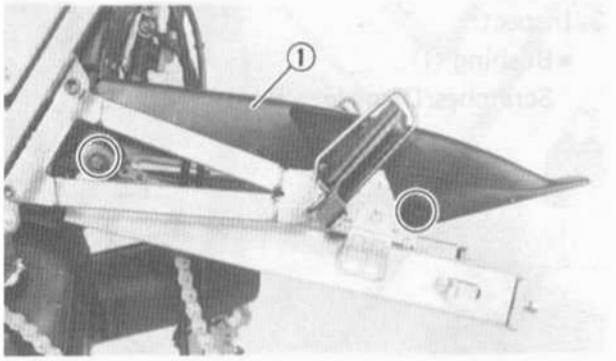

REMOVAL

1. Remove:
   - Rear wheel
   - Rear shock absorbers
   - Chain case ①

NOTE:

Before removing the rear wheel, remove the drive sprocket and drive chain.

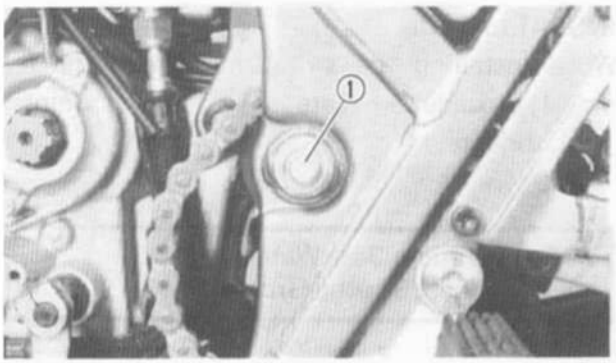

2. Remove:
   - Pivot shaft ①

     Pull out the pivot shaft.

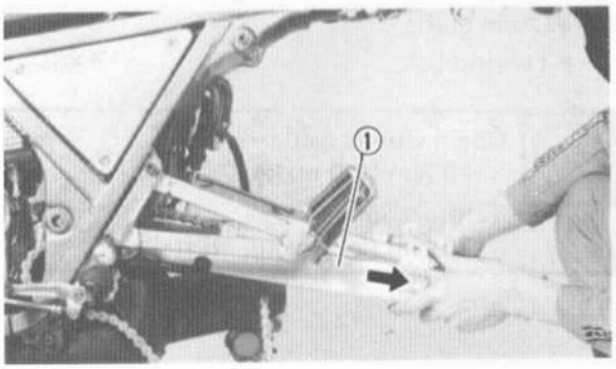

3. Remove:
   - Swingarm ①

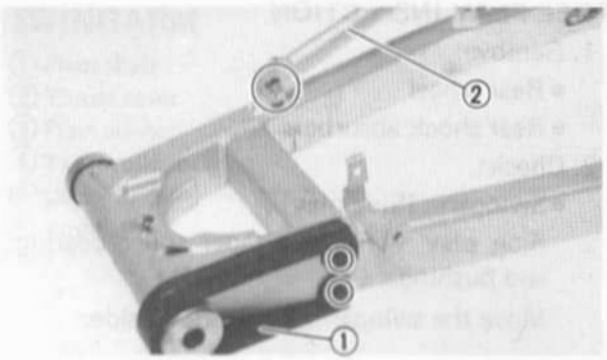

4. Remove:
   - Chain guide ①
   - Tension bar ②

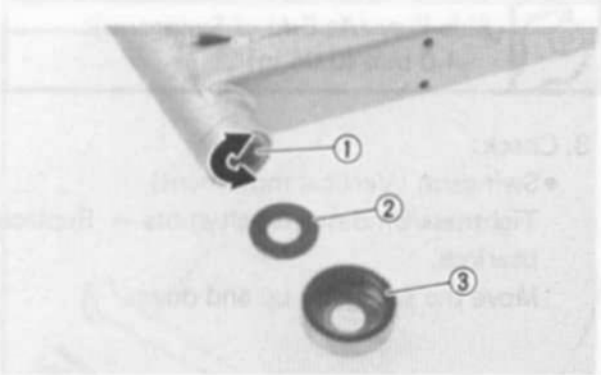

INSPECTION

1. Wash the bearings in a solvent.
2. Inspect:
   - Bearings (Race/Rollers) ①
     Pitting/Damage → Replace.
   - Plain washer ②
   - Thrust cover ③
     Damage → Replace.

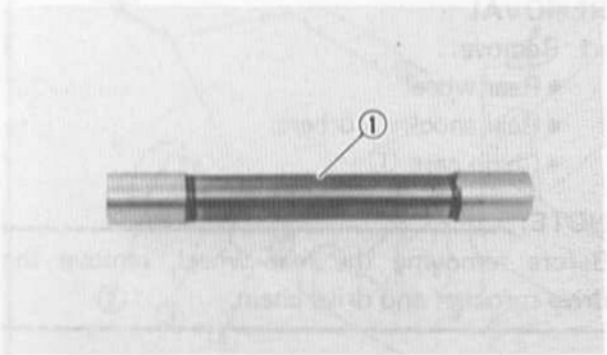

3. Inspect:
   - Bushing ①
     Scratches/Damage → Replace.

INSTALLATION

When installing the swingarm, reverse the removal procedures. Note the following points.

1. Lubricate:
   - Bearings

Lithium Base Waterproof Wheel Bearing Grease

2. Install:
   - Chain guide
   - Tension bar

Chain Guide:
10 Nm (1.0 m·kg, 7.2 ft·lb)
Tension Bar:
25 Nm (2.5 m·kg, 18 ft·lb)

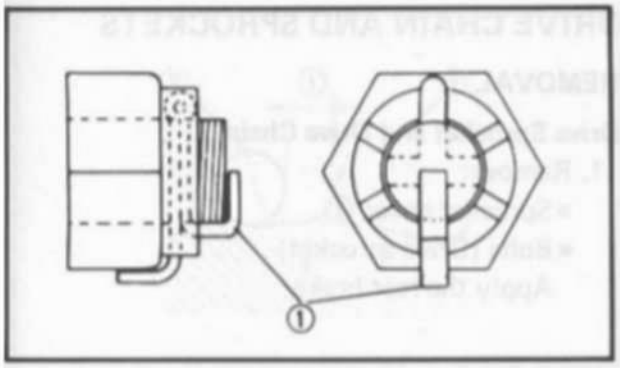

NOTE:
Always use new cotter pins ① on the tension bar bolts.

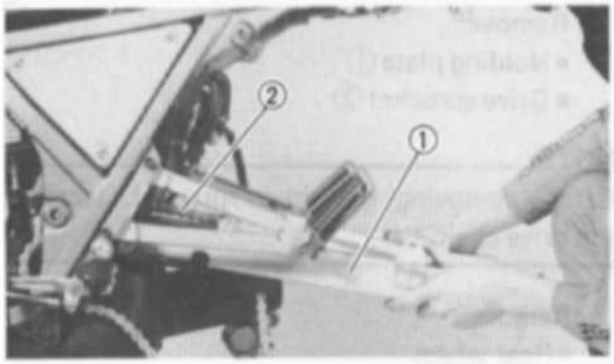

3. Install:
   - Swingarm ①
   - Pivot shaft

NOTE:
Before installing the swingarm ①, fit the drive chain ② to the swingarm.

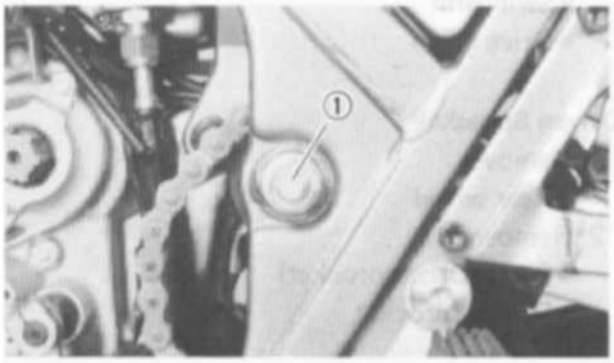

4. Tighten:
   - Nut (Pivot shaft) ①

	Nut (Pivot Shaft): **90 Nm (9.0 m·kg, 65 ft·lb)**

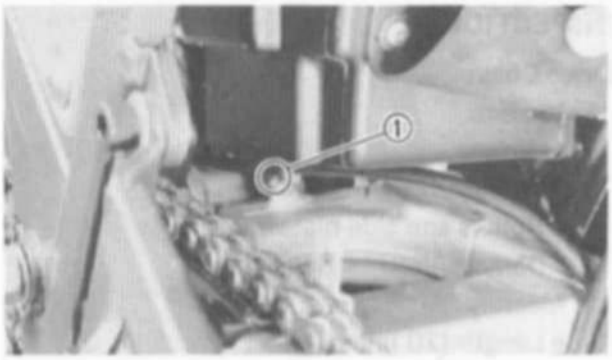

5. Check:
   - Swingarm (Side play)
   - Swingarm (Vertical movement)
   Refer to "FREE PLAY INSPECTION" section.
6. Lubricate:
   - Grease nipple ①
   Using a grease gun.

	Lithium Base Waterproof Wheel Bearing Grease

7. Install:
   - Chain case ①
   - Rear shock absorbers
   - Rear wheel
   Refer to "REAR SHOCK ABSORBER" and "REAR WHEEL" section.
   - Drive sprocket

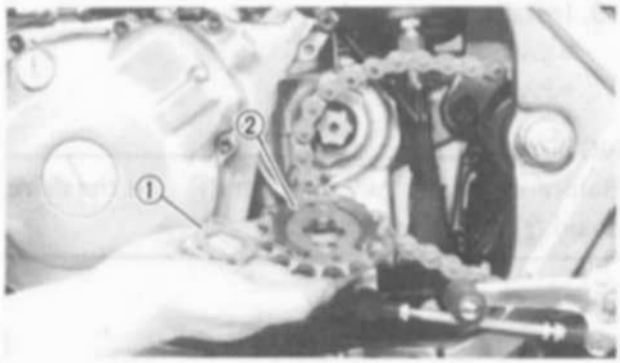

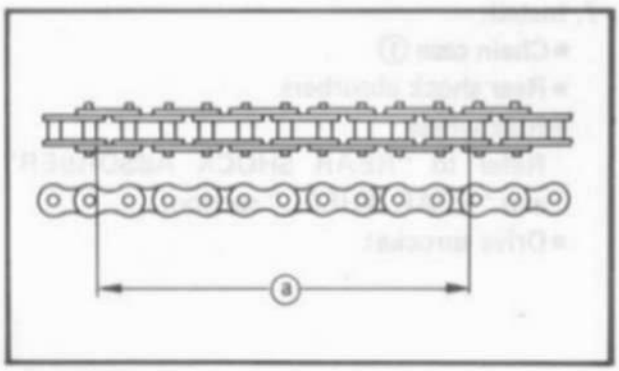

DRIVE CHAIN AND SPROCKETS

REMOVAL

Drive Sprocket and Drive Chain

1. Remove:
   - Sprocket cover ①
   - Bolts (Drive sprocket)

   Apply the rear brake.

2. Remove:
   - Holding plate ①
   - Drive sprocket ②

NOTE:
Before removing the drive sprocket, increase the drive chain slack.

3. Remove:
   - Rear wheel
   - Swingarm
   - Drive chain

Driven Sprocket

1. Remove:
   - Rear wheel
2. Remove:
   - Bolts (Drive sprocket)
   - Driven sprocket

INSPECTION

Drive Chain

1. Inspect:
   - O-rings

     Damage/Miss → Replace.
   - Rollers and side plates

     Damage/Wear → Replace.
2. Measure:
   - Length (10 links) ⓐ

     Out of specification → Replace.

Drive Chain Length (10 links)
Limit:
150.08 mm (5.91 in)

NOTE:
Replace the sprockets and drive chain as a set.

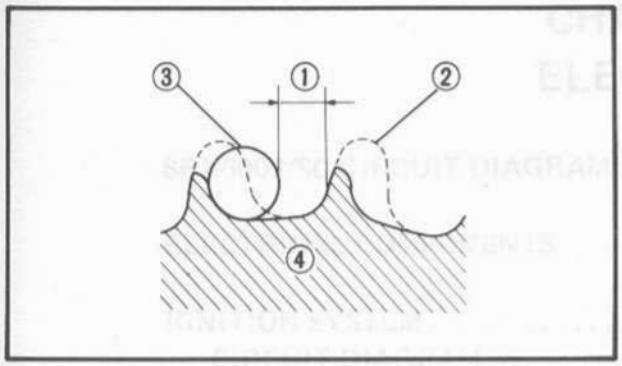

Drive and Driven Sprockets

1. Inspect:
   - Drive and driven sprockets
     Wear/Damage → Replace.

① 1/4 tooth
② Correct
③ Roller
④ Sprocket

ASSEMBLY

When assembling the sprockets, reverse the removal procedure. Note the following points.

1. Tighten:
   - Bolts (Drive sprocket)
   - Bolts (Driven sprocket)

Bolts (Drive Sprocket):
20 Nm (2.0 m·kg, 14 ft·lb)
LOCTITE®

Bolts (Drive Sprcoket):
32 Nm (3.2 m·kg, 23 ft·lb)
LOCTITE®

2. Adjust:
   - Drive chain slack
   - Rear brake free play
     Refer to "CHAPTER 2. DRIVE CHAIN SLACK ADJUSTMENT and REAR BRAKE ADJUSTMENT" section.

CHAPTER 6.
ELECTRICAL

SRX600S/SC CIRCUIT DIAGRAM 6-1

ELECTRICAL COMPONENTS 6-3

IGNITION SYSTEM 6-5
- CIRCUIT DIAGRAM 6-5
- TROUBLESHOOTING 6-7
- IGNITION CONTROL CIRCUIT OPERATION 6-12

CHARGING SYSTEM 6-13
- CIRCUIT DIAGRAM 6-13
- TROUBLESHOOTING 6-15

LIGHTING SYSTEM 6-17
- CIRCUIT DIAGRAM 6-17
- TROUBLESHOOTING 6-19

SIGNAL SYSTEM 6-23
- CIRCUIT DIAGRAM 6-23
- TROUBLESHOOTING 6-25
- SELF-CANCELLING FALSHER SYSTEM 6-31
- SWITCHES TEST 6-31

ELECTRICAL

SRX600S/SC CIRCUIT DIAGRAM

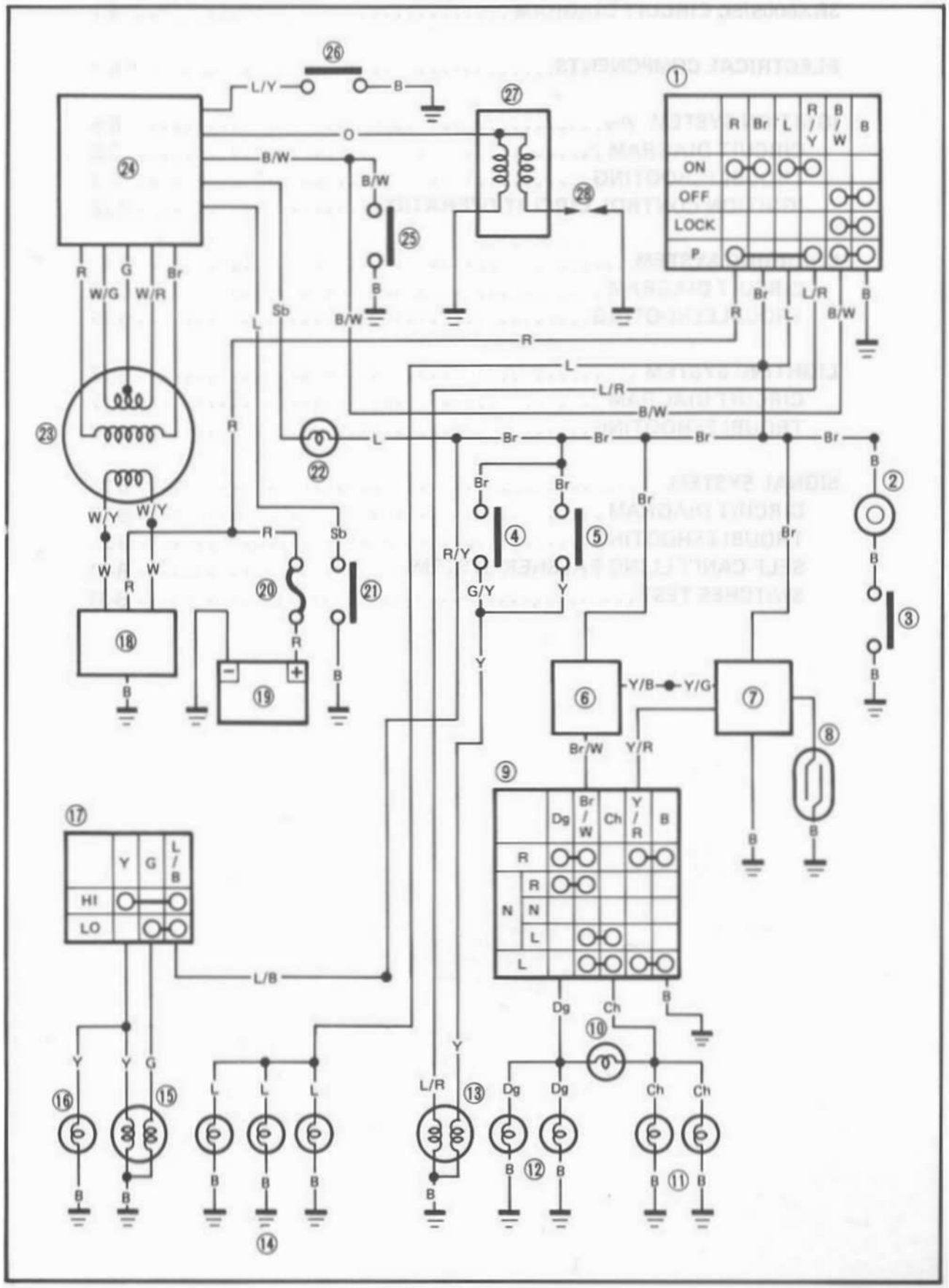

① Main switch
② Horn
③ "HORN" switch
④ Front brake switch
⑤ Rear brake switch
⑥ Flasher relay
⑦ Cancelling unit
⑧ Reed switch
⑨ "TURN" switch
⑩ "TURN" indicator light
⑪ Flasher light (Left)
⑫ Flasher light (Right)
⑬ Tail/brake light
⑭ Meter light
⑮ Headlight
⑯ "HIGH BEAM" indicator light
⑰ "LIGHTS" (Dimmer) switch
⑱ Rectifier/regulator
⑲ Battery
⑳ Circuit breaker
㉑ Neutral switch
㉒ "NEUTRAL" indicator light
㉓ CDI magneto
㉔ CDI unit
㉕ "ENGINE STOP" switch
㉖ Sidestand switch
㉗ Ignition coil
㉘ Spark plug

COLOR CODE

B	Black
R	Red
L	Blue
G	Green
Dg	Dark green
Sb	Sky blue
Br	Brown
O	Orange
Y	Yellow
Ch	Chocolate
P	Pink
W	White
B/W	Black/White
R/Y	Red/Yellow
L/B	Blue/Black
L/R	Blue/Red
L/Y	Blue/Yellow
G/Y	Green/Yellow
Br/W	Brown/White
Y/B	Yellow/Black
Y/R	Yellow/Red
W/R	White/Red
W/G	White/Green
W/Y	White/Yellow

ELECTRICAL COMPONENTS (1)

① Wire harness
② Rectifier with regulator
③ CDI unit
④ Circuit breaker
⑤ Battery
⑥ Ignition coil
⑦ Main switch

SPECIFICATIONS	RESISTANCE
IGNITION COIL:	
PRIMARY	0.48 ~ 0.72Ω
SECONDARY	5.2 ~ 7.8 kΩ
PICKUP	92 ~ 138Ω

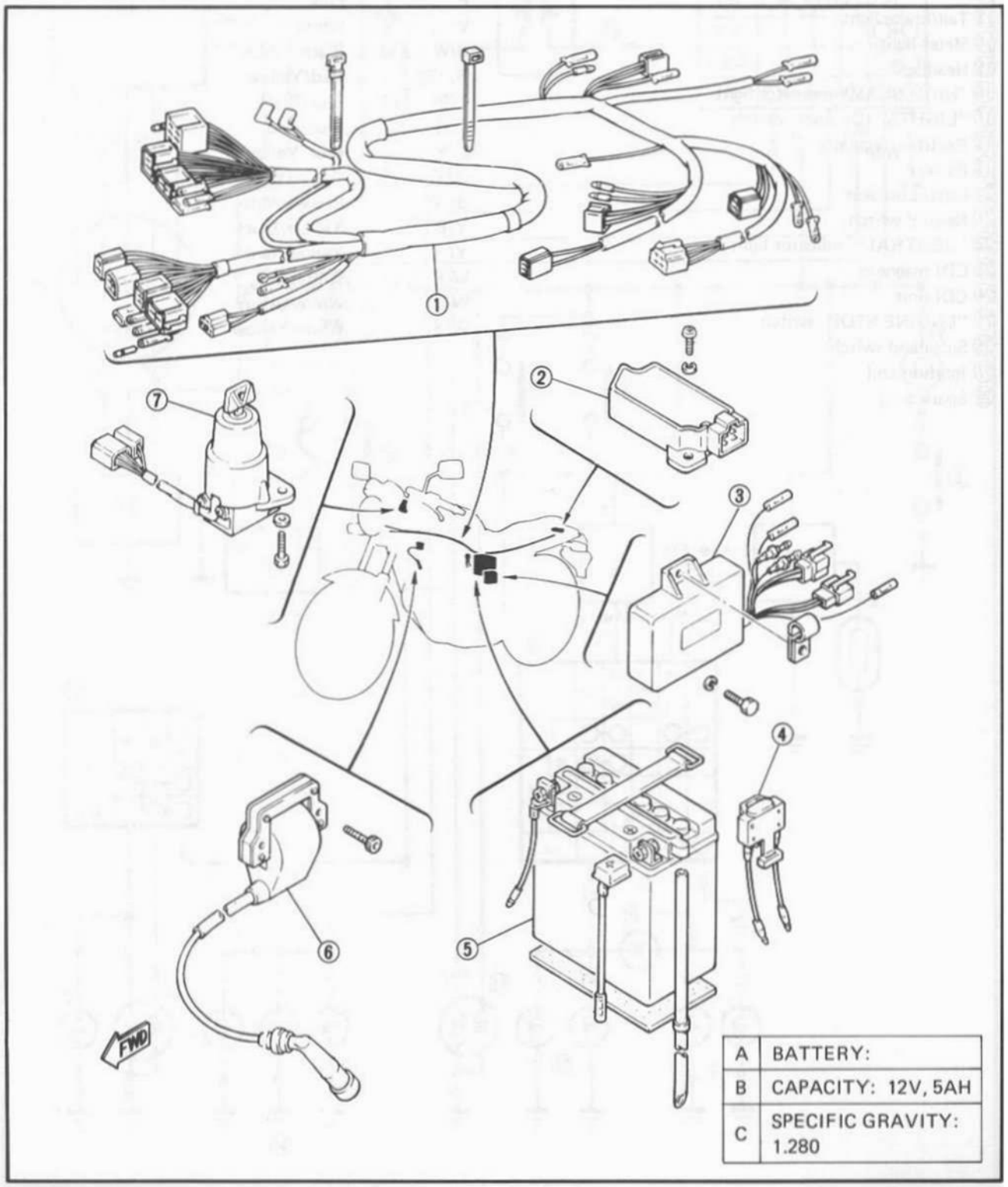

A	BATTERY:
B	CAPACITY: 12V, 5AH
C	SPECIFIC GRAVITY: 1.280

ELECTRICAL COMPONENTS (2)

① Rear brake switch
② Sidestand switch
③ Neutral switch
④ Flasher relay
⑤ Horn

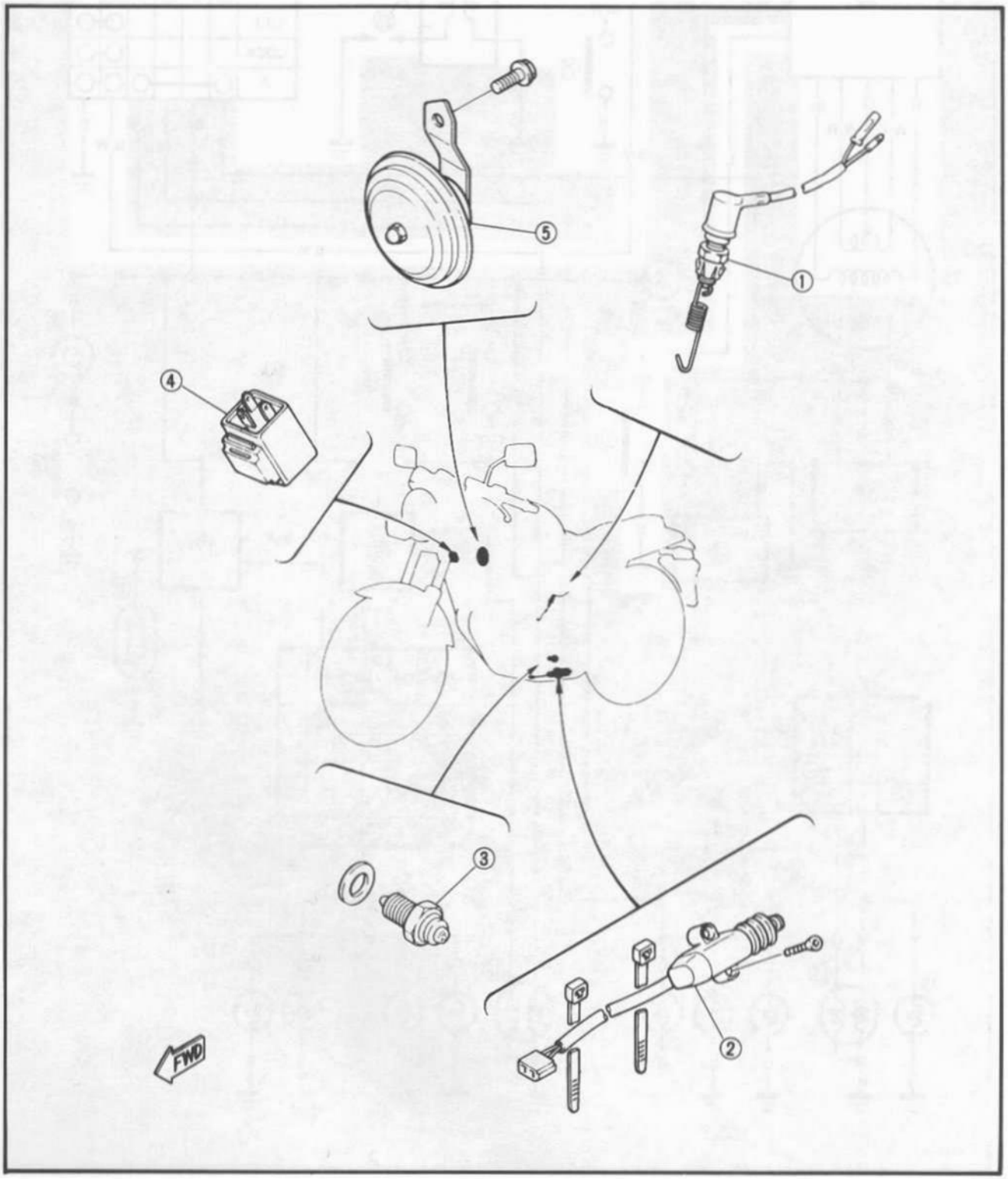

IGNITION SYSTEM

CIRCUIT DIAGRAM

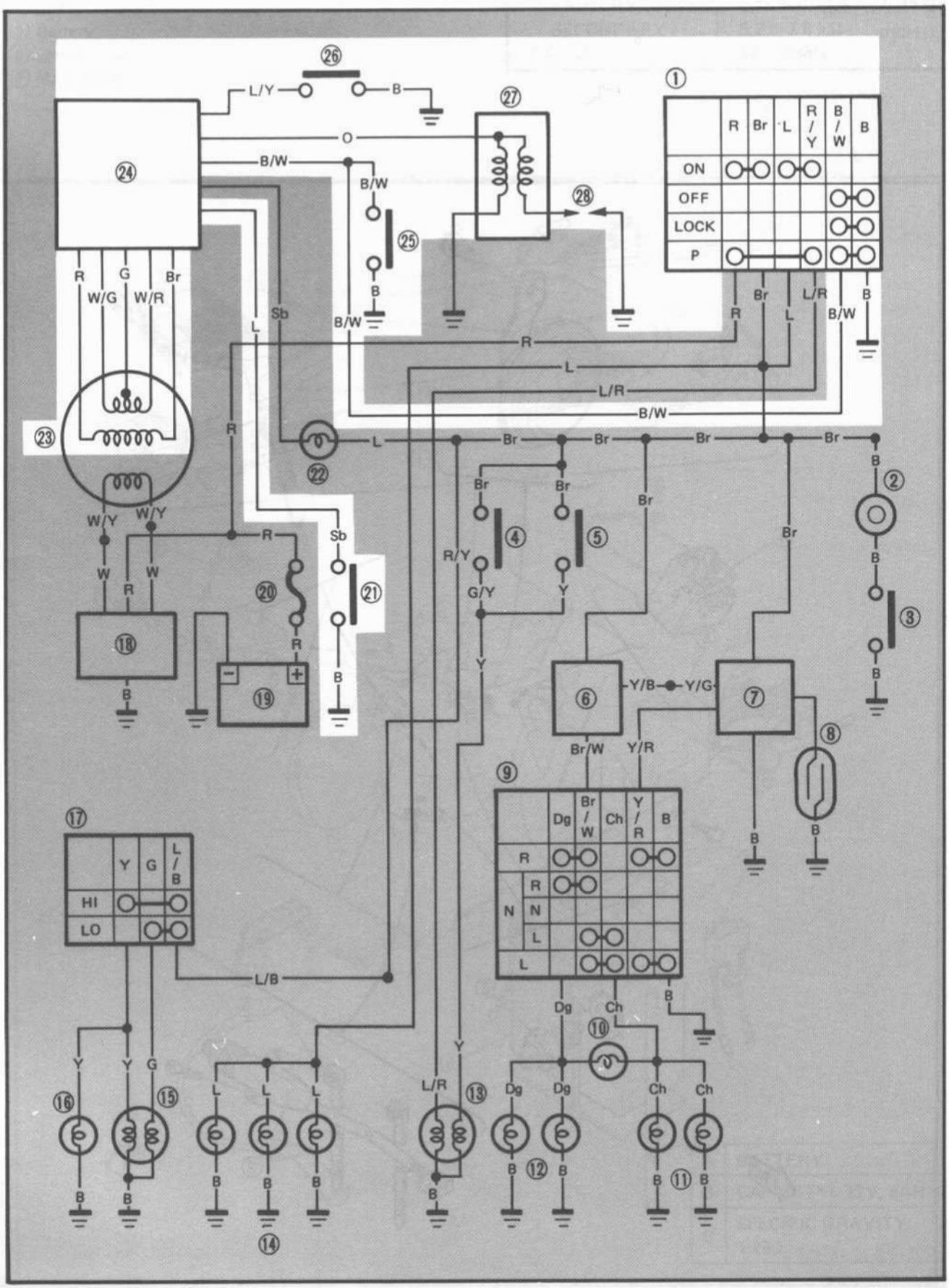

Aforementioned circuit diagram shows ignition circuit in wiring diagram.

NOTE:

For the encircled numbers and color codes, see page 6-2.

① Main switch
㉑ Neutral switch
㉓ CDI magneto
㉔ CDI unit
㉕ "ENGINE STOP" switch
㉖ Sidestand switch
㉗ Ignition coil
㉘ Spark plug

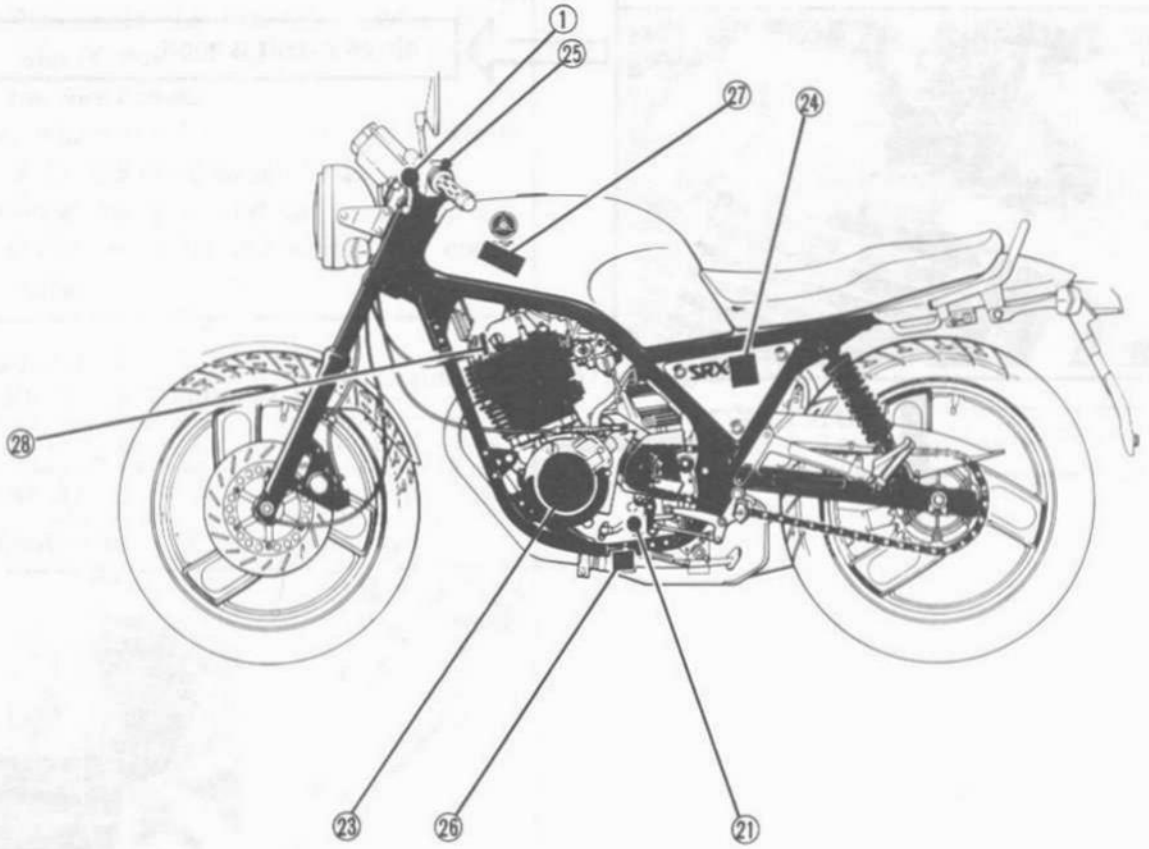

TROUBLESHOOTING

NOTE:
Before this troubleshooting, remove the side covers, seat and fuel tank.

IF IGNITION SYSTEM SHOULD BECOME INOPERATIVE (NO SPARK OR INTERMITTENT SPARK).

1. Spark plug inspection
   - Check the spark plug condition. Refer to "CHAPTER 2. SPARK PLUG INSPECTION" section.

FAULTY → Replace or regap spark plug.

OK ↓

2. Ignition spark test (With spark plug)
   - Install the spark plug to the plug cap.
   - Ground the spark plug to the cylinder head.
   - Turn the main switch to "ON" and "ENGINE STOP" switch to "RUN", then, shift the gear in neutral and down the sidestand.
   - Kick the kick starter forcefully.
   - Check the ignition spark condition.

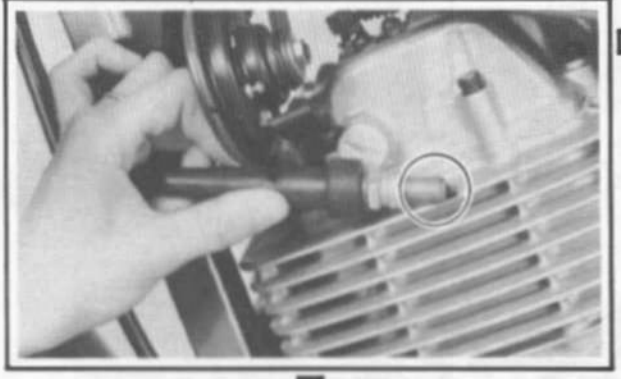

SPARK → Ignition circuit is good.

NO SPARK ↓

*

*

3. Ignition spark gap test (Without spark plug and cap)
   - Remove the spark plug and plug cap.
   - Hold the spark plug lead 6 mm (0.24 in) from the cylinder head.
   - Repeat the aforementioned test.
   - Check the ignition spark condition.

SPARK → Spark plug and/or plug cap is faulty. Replace faulty part(s).

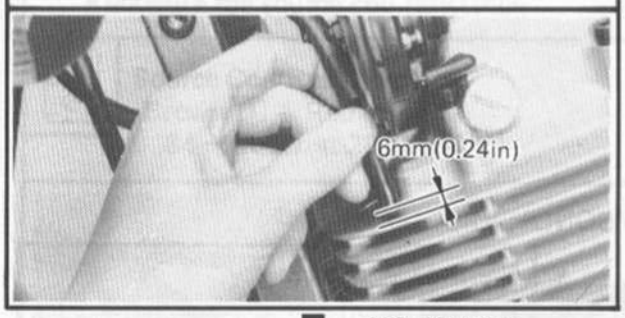

NO SPARK

4. "ENGINE STOP" and main switches conduct check.
   - Check the "ENGINE STOP" and main switches for continuity. Refer to "SIGNAL SYSTEM" section.

FAULTY → "ENGINE STOP" and/or main switches is faulty. Replace faulty part(s).

OK

5. Sidestand switch conduct check
   - Disconnect the sidestand switch leads (Blue/Yellow ① and Black ②) from the wire harness.
   - Connect the Pocket Tester (YU-33260) to the sidestand switch leads.
   - Move the sidestand up or down, and check the sidestand switch for continuity.

Sidestand Position	Good Condition	Bad Condition		
Up ③	○	○	X	X
Down ④	X	○	X	○

○: Continuity X: Discontinuity

BAD CONDITION → Sidestand switch is faulty. Replace it.

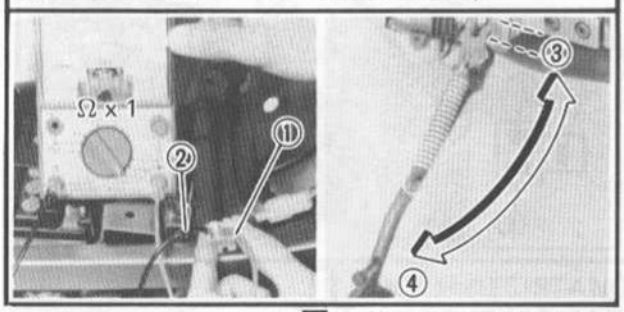

GOOD CONDITION

*

*

6. Neutral switch conduct check
   - Disconnect the neutral switch lead (Sky blue ①) from the wire harness.
   - Connect the positive lead of the Pocket Tester (YU-33260) to the neutral switch lead.
   - Ground the negative lead of the Pocket Tester to the engine.
   - Shift the gear, and check the neutral switch for continuity.

Transmission Position	Good Condition	Bad Condition		
In neutral	○	○	X	X
In gear	X	○	X	○

○: Continuity X: Discontinuity

BAD CONDITION → Neutral switch is faulty. Replace it.

GOOD CONDITION

7. Ignition coil resistance test
   - Disconnect the ignition coil lead (Orange ①) and spark plug lead ② .
   - Connect the Pocket Tester (YU-33260) as shown.
   - Measure the primary and secondary coil resistances.

Primary Coil Resistance Ⓐ :
0.48 ~ 0.72Ω at 20°C (68°F)

Secondary Coil Resistance Ⓑ :
5.2 ~ 7.8 kΩ at 20°C (68°F)

OUT OF SPECIFICATION → Ignition coil is faulty. Replace it.

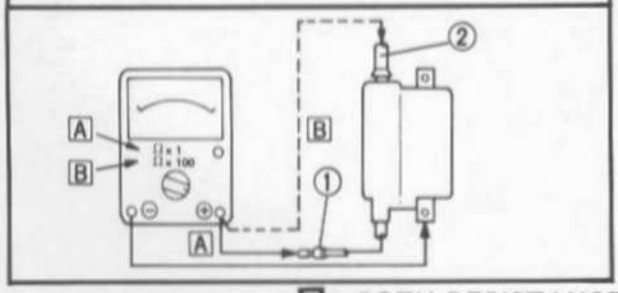

BOTH RESISTANCES MEET SPECIFICATIONS
*

*

8. Source coil resistance test
- Disconnect the CDI magneto leads Brown ① and Red ②) from the wire harness.
- Connect the Pocket Tester (YU-33260) to the CDI magneto leads.
- Measure the source coil resistance.

Source Coil Resistance (Brown ① – Red ②): 84 ~ 156Ω at 20°C (68°F)

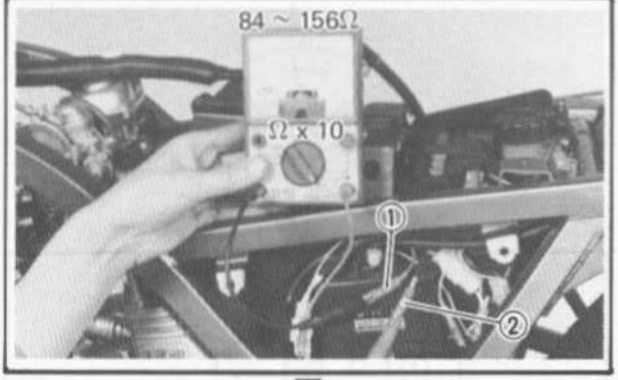

OUT OF SPECIFICATION → Source coil is faulty. Replace stator assembly.

OK

9. Pickup coil resistance test
- Disconnect the pickup coil leads (White/Green ①, White/Red ② and Green ③) from the CDI unit.
- Connect the Pocket Tester (YU-33260) to the pickup coil leads.
- Measure the pickup coil resistance.

Pickup Coil Resistance (White/Green ① – Green ③ , White/Red ② – Green ③): 92 ~ 138Ω at 20°C (68°F)

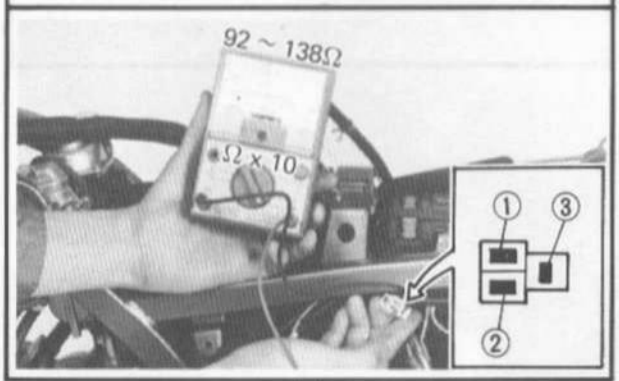

OUT OF SPECIFICATION → Pickup coil is faulty. Replace stator assembly.

BOTH RESISTANCES MEET SPECFICATIONS

*

*

10. Check entire ignition system for connections.
    - Refer to "WIRING DIAGRAM" section.

POOR CONNECTION → Correct.

OK ↓

CDI unit is faulty. Replace it.

IGNITION CONTROL CIRCUIT OPERATION

The ignition control circuit on this model consists of the CDI unit, neutral switch and sidestand switch. If the engine stop switch and main switch are both on, the ignition spark can produce only if:

- The transmission is in neutral (The neutral switch is on).

OR

- The sidestand is up (The sidestand switch is on).

When one of both of the above conditions have been met, and the engine can be started by kicking the kick starter.

WHEN THE TRANSMISSION IS IN NEUTRAL

WHEN THE SIDESTAND IS UP

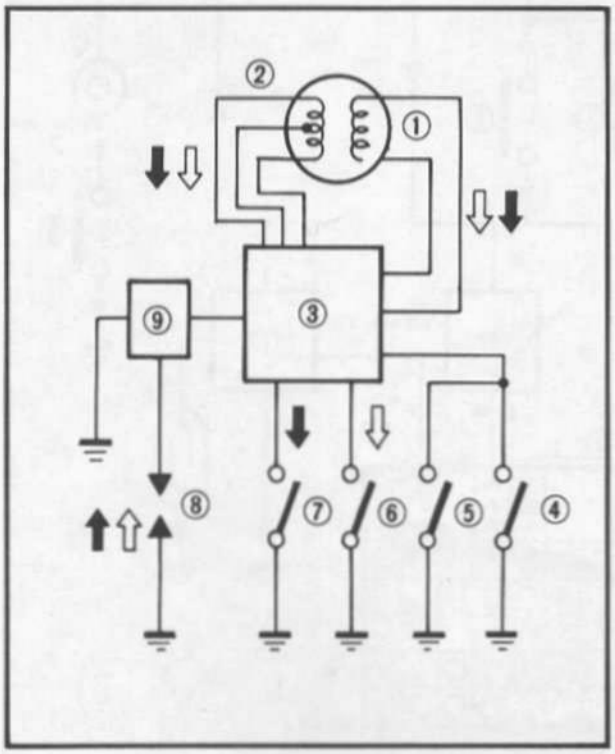

① Source coil
② Pickup coil
③ CDI unit
④ "ENGINE STOP" switch
⑤ Main switch
⑥ Neutral switch
⑦ Sidestand switch
⑧ Spark plug
⑨ Ignition coil

CHARGING SYSTEM

CIRCUIT DIAGRAM

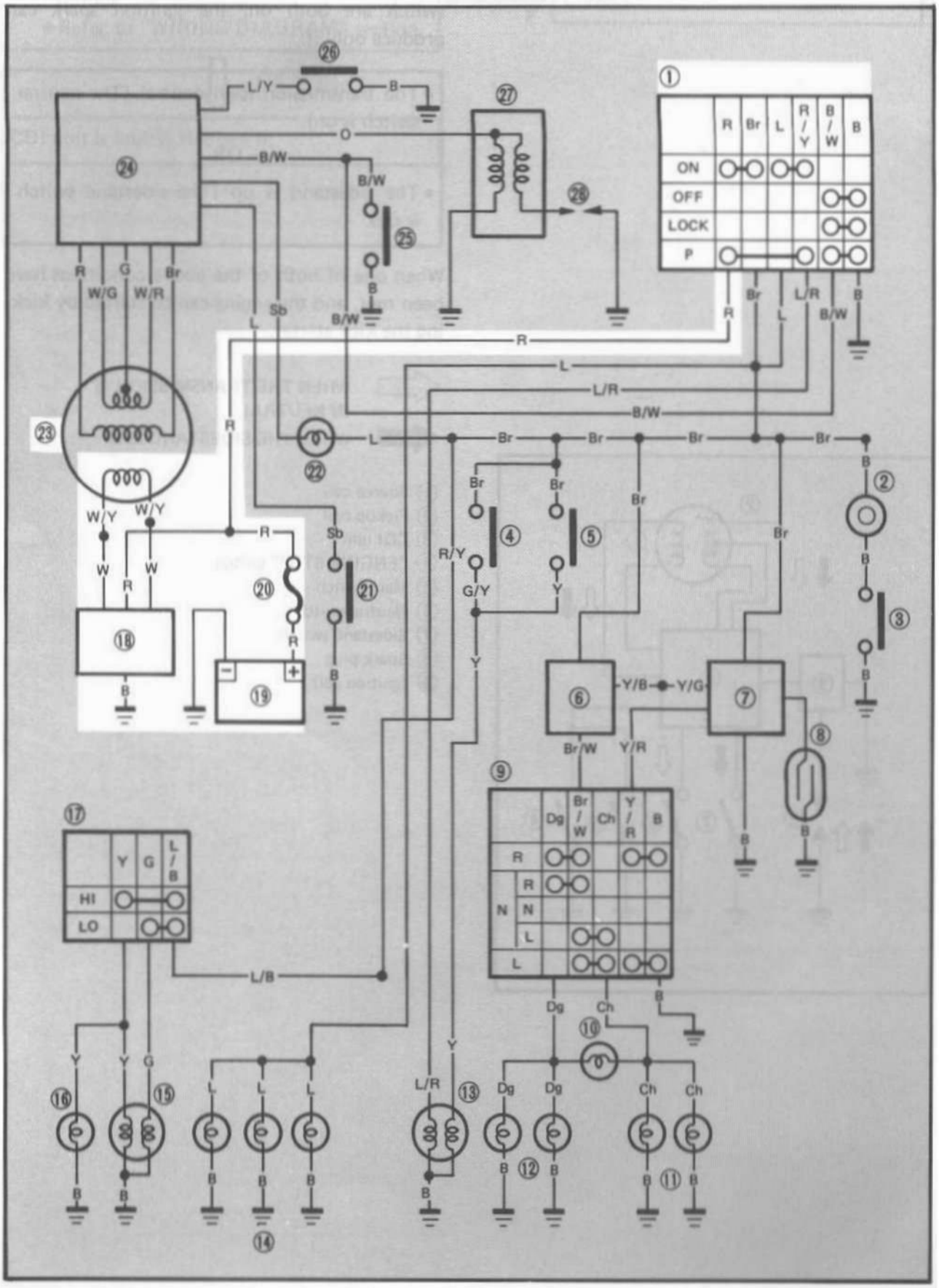

Aforementioned circuit diagram shows charging circuit in wiring diagram.

NOTE:

For the encircled numbers and color codes, see page 6-2.

① Main switch
⑱ Rectifier/Regulator
⑲ Battery
⑳ Circuit breaker
㉓ CDI magneto

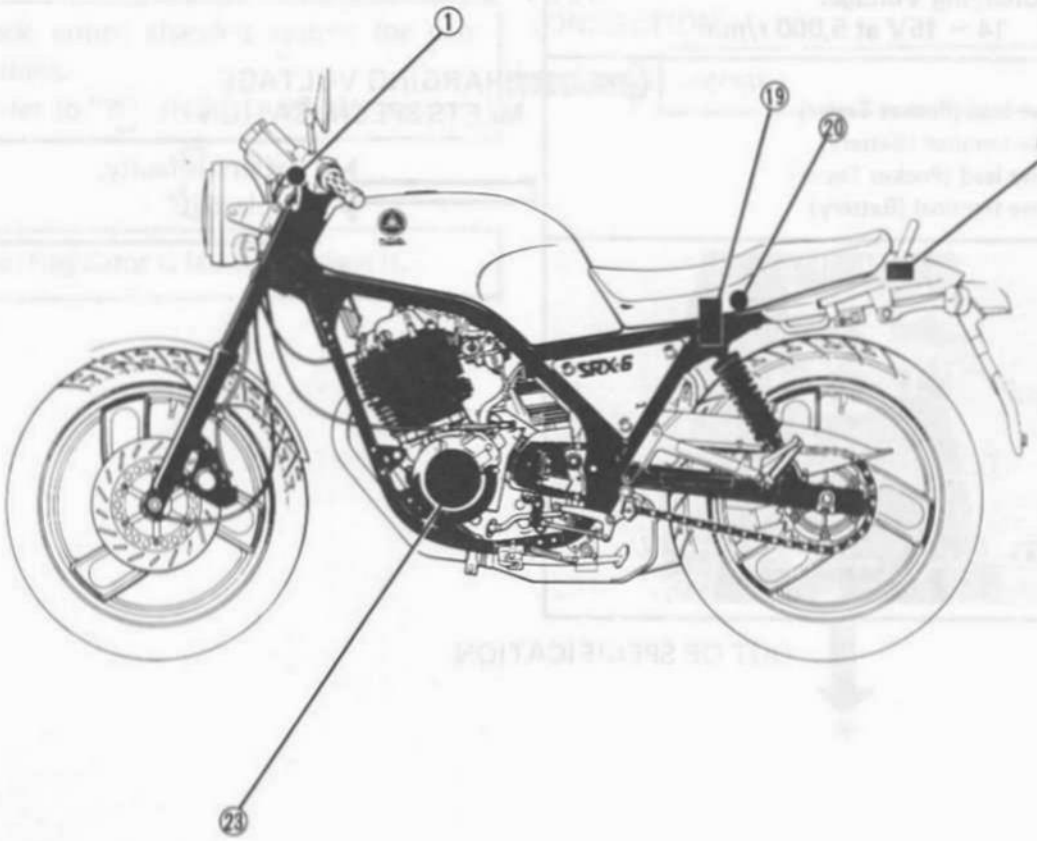

CHARGING SYSTEM

TROUBLESHOOTING

NOTE:

Before this troubleshooting, remove the side covers and seat.

1. Circuit breaker inspection
   - Check the circuit breaker condition. Refer to "CHAPTER 2. CIRCUIT BREAKER INSPECTION" section.

FAULTY → Circuit breaker is faulty. Replace it.

OK ↓

2. Battery inspection
   - Check the battery condition. Refer to "CHAPTER 2. BATTERY INSPECTION" section.

FAULTY → Battery is faulty. Recharge or replace it.

OK ↓

3. Charging voltage test
   - Connect the Pocket Tester (YU-33260) to the battery.
   - Start the engine and accelerate to about 5,000 r/min.
   - Measure the charging voltage.

Charging Voltage:
14 ~ 15V at 5,000 r/min

① Positive lead (Pocket Tester)
② Positive terminal (Battery)
③ Negative lead (Pocket Tester)
④ Negative terminal (Battery)

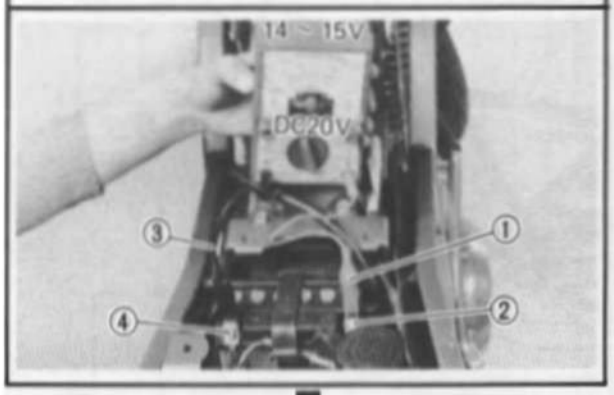

CHARGING VOLTAGE MEETS SPECIFICATION → Battery is faulty. Replace it.

OUT OF SPECIFICATION ↓

*

*

4. Charging coil resistance test
   - Disconnect the CDI magneto leads (White/Yellow ① and White/Yellow ②) from the wire harness.
   - Connect the Pocket Tester (YU-33260) to the CDI magneto leads.
   - Measure the charging coil resistance.

Charging Coil Resistance (White/Yellow ① – White/Yellow ②): 0.2 ~ 0.6Ω at 20°C (68°F)

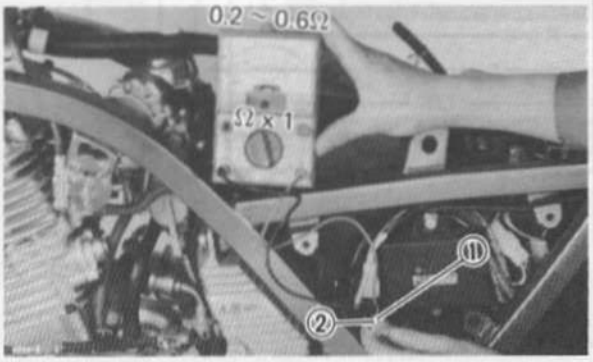

OUT OF SPECIFICATION → Charging coil is faulty. Replace stator assembly.

RESISTANCE MEETS SPECIFICATION

5. Check entire charging system for connections.
   - Refer to "WIRING DIAGRAM" section.

POOR CONNECTION → Correct.

OK

Rectifier/Regulator is faulty. Replace it.

LIGHTING SYSTEM

CIRCUIT DIAGRAM

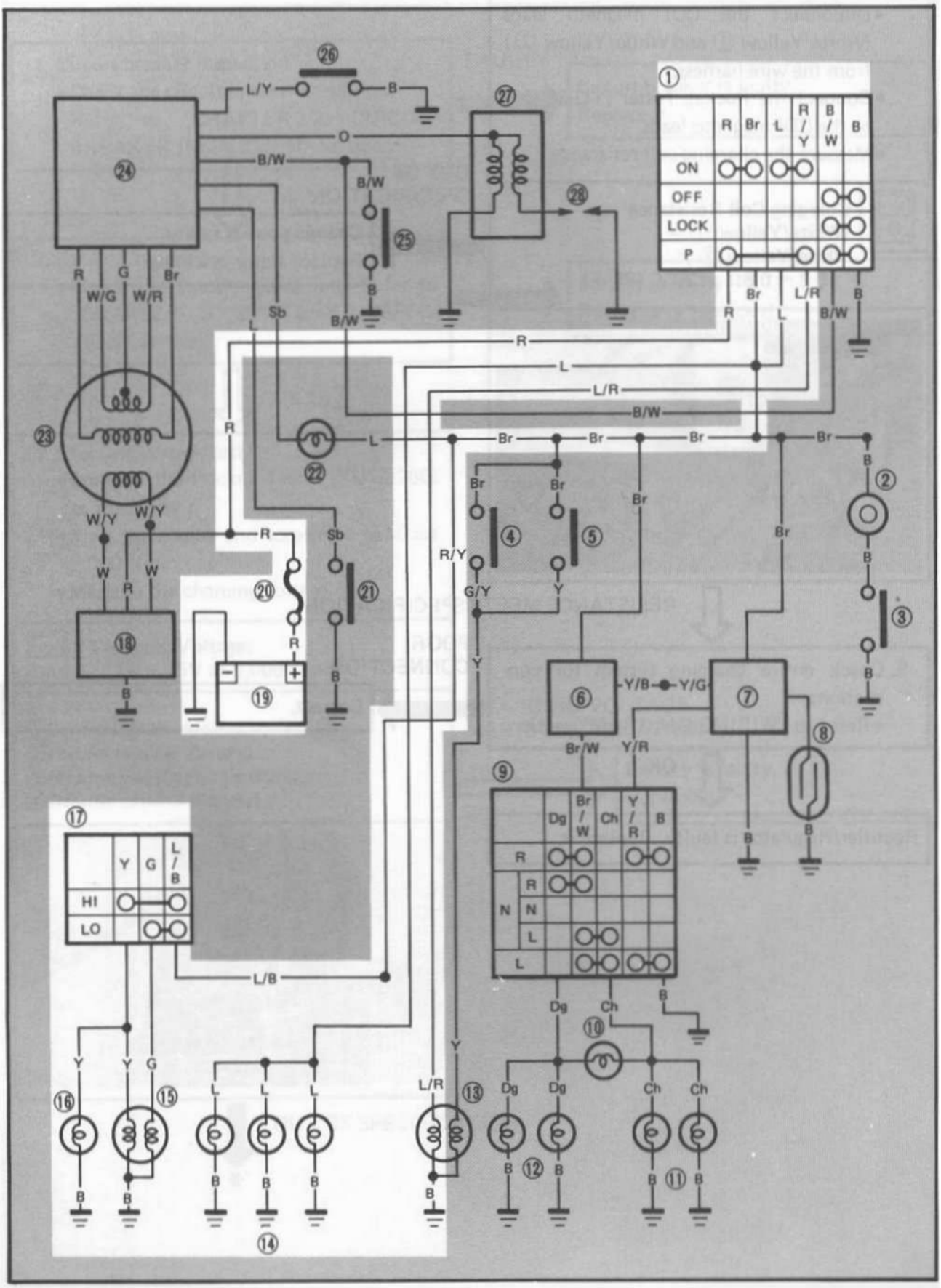

Aforementioned circuit diagram shows lighting circuit in wiring diagram.

NOTE:

For the encircled numbers and color codes, see page 6-2.

① Main switch
⑬ Tail/Brake light
⑭ Meter light
⑮ Headlight
⑯ "HIGH BEAM" indicator light
⑰ "LIGHTS" (Dimmer) switch
⑲ Battery
⑳ Circuit breaker

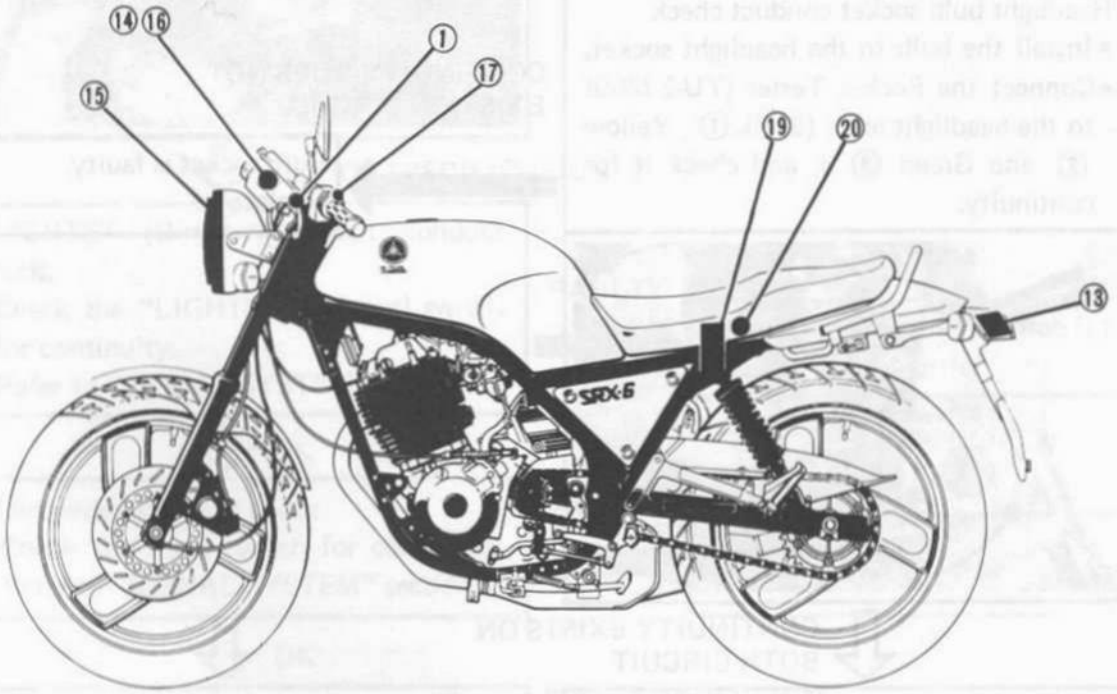

TROUBLESHOOTING

NOTE:

Before this troubleshooting, remove the side covers and seat.

HEADLIGHT DOES NOT COME ON.

1. Headlight bulb conduct check
   - Remove the headlight bulb ①. Refer to "CHAPTER 2. HEADLIGHT BULB REPLACEMENT" section.
   - Connect the Pocket Tester (YU-33260) to the bulb terminals as shown, and check the bulb for continuity.

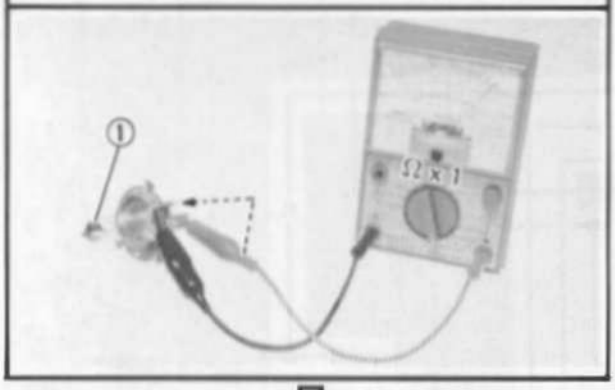

CONTINUITY DOES NOT EXIST ON CIRCUIT → Bulb is faulty. Replace it.

CONTINUITY EXISTS ON BOTH CIRCUIT ↓

2. Headlight bulb socket conduct check
   - Install the bulb to the headlight socket.
   - Connect the Pocket Tester (YU-33260) to the headlight leads (Black ①, Yellow ② and Green ③), and check it for continuity.

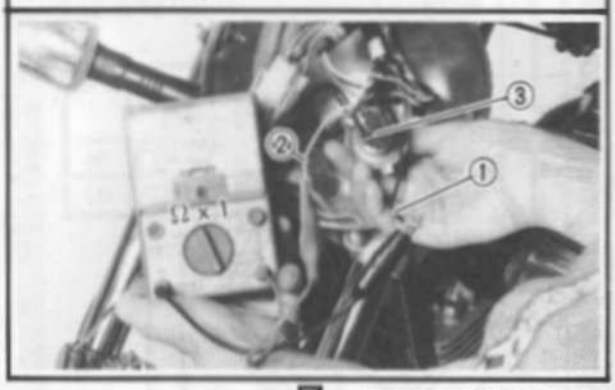

CONTINUITY DOES NOT EXIST ON CIRCUIT → Bulb socket is faulty. Replace it.

CONTINUITY EXISTS ON BOTH CIRCUIT ↓

3. Circuit breaker inspection
   - Check the circuit breaker condition. Refer to "CHAPTER 2. CIRCUIT BREAKER INSPECTION" section.

FAULTY → Circuit breaker is faulty. Replace it.

OK ↓

*

*

4. Battery inspection
   - Check the battery condition. Refer to "CHAPTER 2. BATTERY INSPECTION" section.

FAULTY → Battery is faulty. Recharge or replace it.

OK

5. Lighting voltage test
   - Connect the Pocket Tester (YU-33260) to the headlight leads (Black ①, Yellow ② and Green ③).
   - Turn the "LIGHTS" (Dimmer) switch to "LO" position.
   - Start the engine and accelerate to about 5,000 r/min.
   - Measure the lighting voltage.

Lighting Voltage:
14 ~ 15V at 5,000 r/min

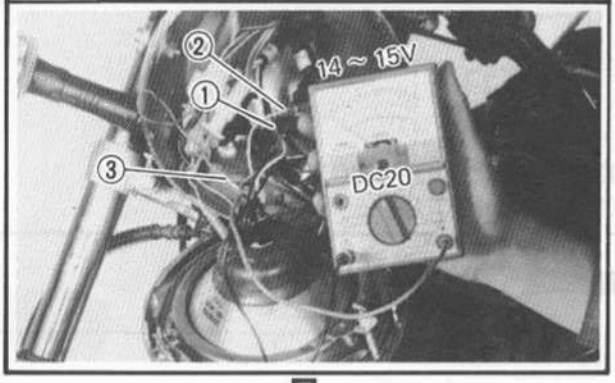

LIGHTING VOLTAGE MEETS SPECIFICATION → Lighting system (Headlight) is good.

OUT OF SPECIFICATION

6. "LIGHTS" (Dimmer) switch conduct check.
   - Check the "LIGHTS" (Dimmer) switch for continuity. Refer to "SIGNAL SYSTEM" section.

FAULTY → "LIGHTS" (Dimmer) switch is faulty. Replace faulty part(s).

OK

7. Main switch conduct check
   - Check the main switch for continuity. Refer to "SIGNAL SYSTEM" section.

FAULTY → Main switch is faulty. Replace it.

OK

8. Check entire lighting system for connections.
   - Refer to "WIRING DIAGRAM" section.

POOR CONNECTION → Correct.

OK

Check the charging system.

TAILLIGHT DOES NOT COME ON.

1. Taillight bulb conduct check
   - Remove the taillight lens and bulb ①.
   - Connect the Pocket Tester (YU-33260) to the bulb terminals as shown, and check the bulb for continuity.

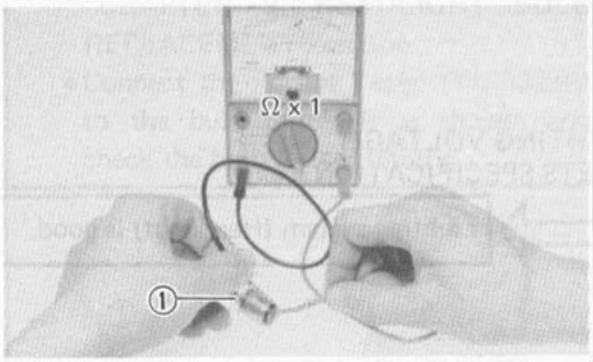

NO CONTINUITY → Bulb is faulty. Replace it.

CONTINUITY ↓

2. Taillight bulb socket conduct check
   - Install the bulb to taillight socket.
   - Disconnect the taillight leads (Blue ①, Black ② and Yellow ③).
   - Connect the Pocket Tester (YU-33260) to the taillight leads as shown, and check it for continuity.

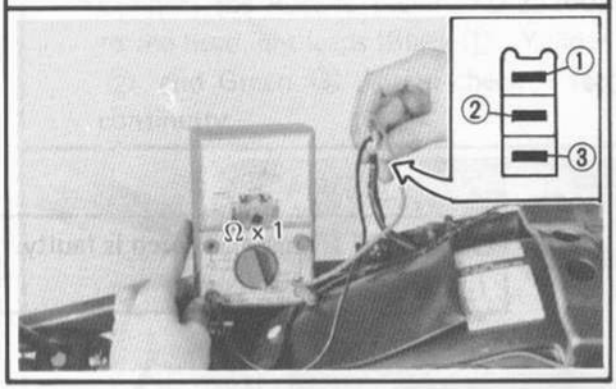

CONTINUITY DOES NOT EXIST ON CIRCUIT → Bulb socket is faulty. Replace it.

CONTINUITY EXISTS ON BOTH CIRCUIT ↓

3. Circuit breaker inspection
   - Check the circuit breaker condition. Refer to "CHAPTER 2. CIRCUIT BREAKER INSPECTION" section.

FAULTY → Circuit breaker is faulty. Replace it.

OK ↓

*

*

4. Battery inspection
   - Check the battery condition. Refer to "CHAPTER 2. BATTERY INSPECTION" section.

FAULTY → Battery is faulty. Recharge or replace battery.

OK

5. Lighting voltage test
   - Connect the Pocket Tester (YU-33260) to the taillight leads (Blue ①, Black ② and Yellow ③).
   - Start the engine and accelerate to about 5,000 r/min.
   - Measure the lighting voltage.

Lighting Voltage:
14 ~ 15V at 5,000 r/min

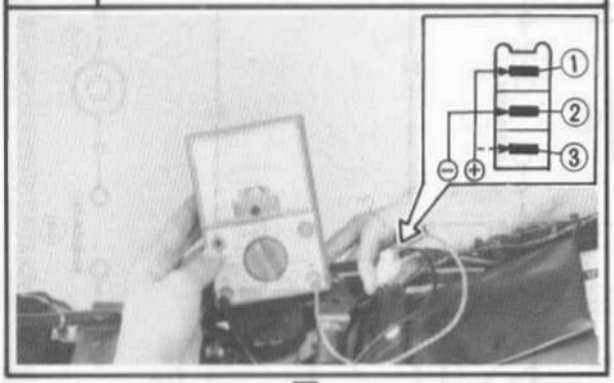

LIGHTING VOLTAGE MEETS SPECIFICATION → Lighting system (Taillight) is good.

OUT OF SPECIFICATION

6. Main switch conduct check
   - Check the main switch for continuity. Refer to "SIGNAL SYSTEM" section.

FAULTY → Main switch is faulty. Replace it.

OK

7. Check entire lighting system for connections.
   - Refer to "WIRING DIAGRAM" section.

POOR CONNECTION → Correct.

OK

Check the charging system.

SIGNAL SYSTEM

CIRCUIT DIAGRAM

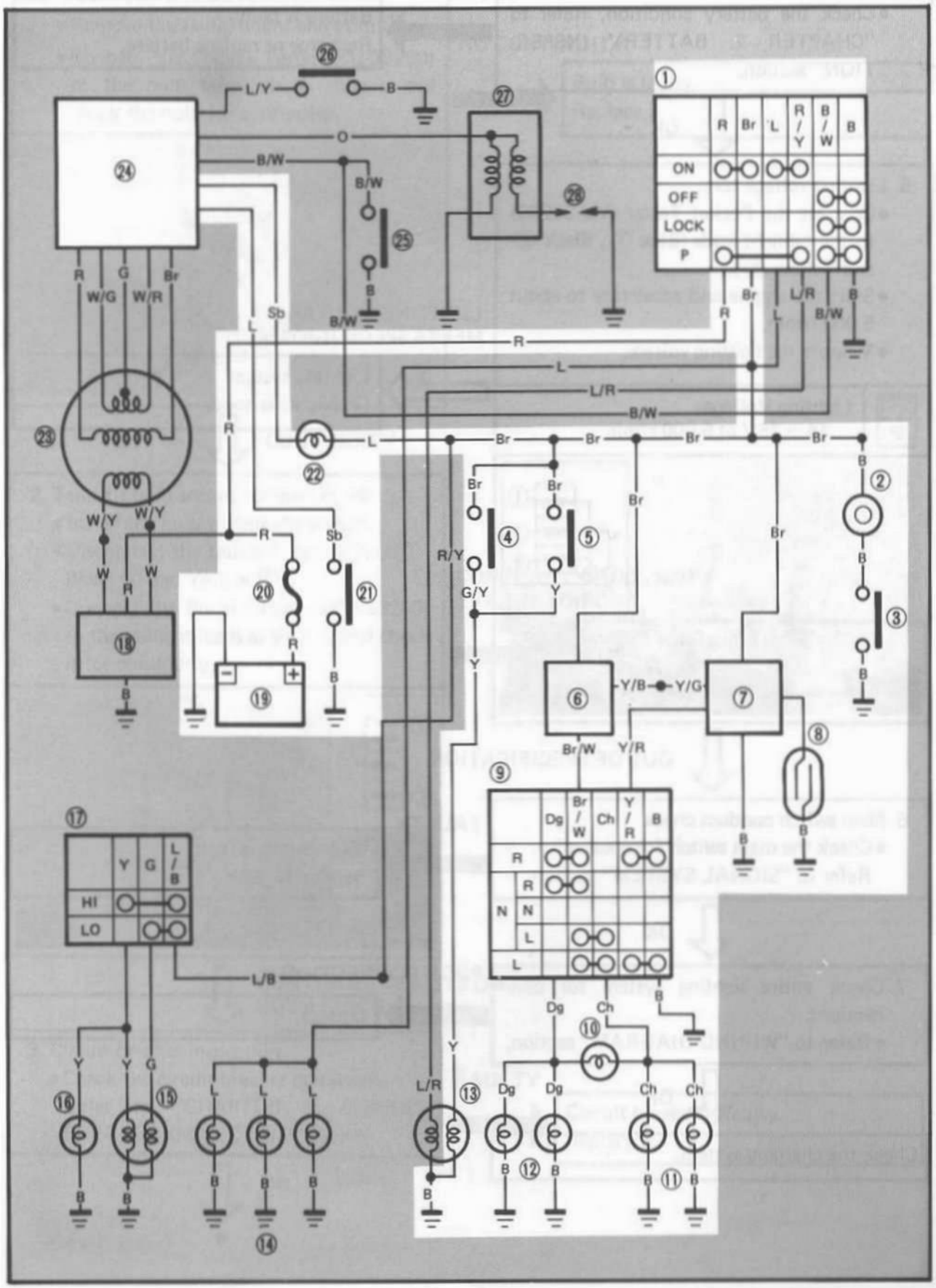

Aforementioned circuit diagram shows signal circuit in wiring diagram.

NOTE:

For the encircled numbers and color codes, see page 6-4.

① Main switch
② Horn
③ "HORN" switch
④ Front brake switch
⑤ Rear brake switch
⑥ Flasher relay
⑦ Cancelling unit
⑧ Reed switch
⑨ "TURN" switch
⑩ "TURN" indicator light
⑪ Flasher light (Left)
⑫ Flasher light (Right)
⑬ Tail/Brake light
⑲ Battery
⑳ Circuit breaker
㉑ Neutral switch
㉒ "NEUTRAL" indicator light
㉔ CDI unit

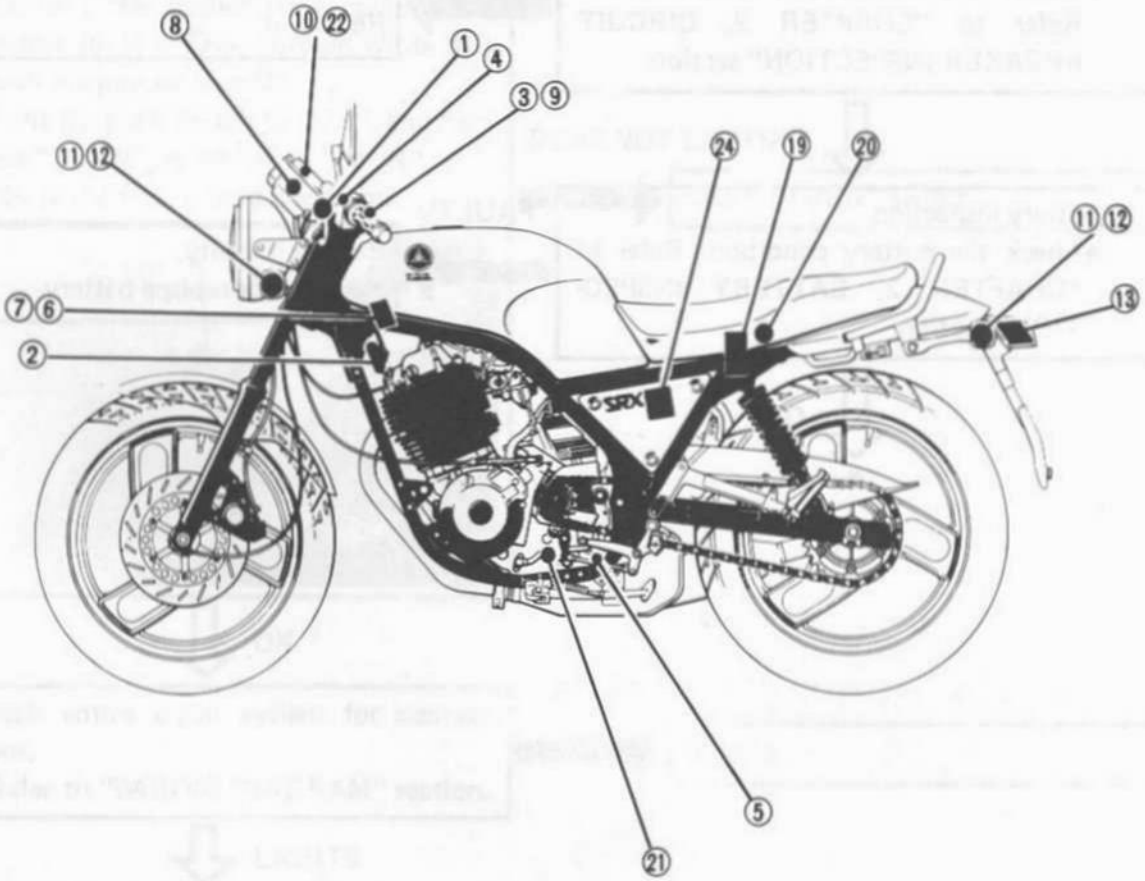

TROUBLESHOOTING

NOTE:
Before this troubleshooting, remove the side covers, seat and fuel tank.

THE FLASHER LIGHT AND INDICATOR LIGHT DO NOT COME ON.

1. Flasher light and indicator bulbs conduct check
   - Check the flasher light and indicator bulbs condition. Refer to "LIGHTING SYSTEM" section.

FAULTY → Flasher light and/or indicator bulb(s) is faulty. Replace faulty part(s).

OK ↓

2. Flasher light and indicator bulb sockets conduct check
   - Check the flasher light and indicator bulb sockets condition. Refer to "LIGHTING SYSTEM" section.

FAULTY → Flasher light and/or indicator bulb socket(s) is faulty. Replace faulty part(s).

OK ↓

3. Circuit breaker inspection
   - Check the circuit breaker condition. Refer to "CHAPTER 2. CIRCUIT BREAKER INSPECTION" section.

FAULTY → Circuit breaker is faulty. Replace it.

OK ↓

4. Battery inspection
   - Check the battery condition. Refer to "CHAPTER 2. BATTERY INSPECTION" section.

FAULTY → Battery is faulty. Recharge or replace battery.

OK ↓

*

5. Battery voltage test
- Disconnect the flasher relay coupler.
- Connect the positive lead ① of the Pocket Tester (YU-33260) to the falsher relay lead (Brown ② – Wire harness side).
- Ground the negative lead ③ of the Pocket Tester to the frame.
- Turn the main switch to "ON", and measure the battery voltage.

LESS THAN 12V → Check main switch.

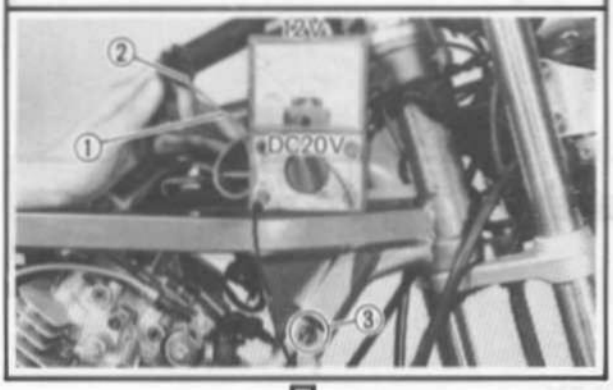

MORE THAN 12V

6. Flasher relay test
- Connect the flasher relay coupler terminals (Brown ① and Brown/White ②) with the jumper lead ③.
- Turn the main switch to "ON", and turn the "TURN" switch to "L" or "R".
- Check the flasher light condition.

DOES NOT LIGHT → Check "TURN" switch.

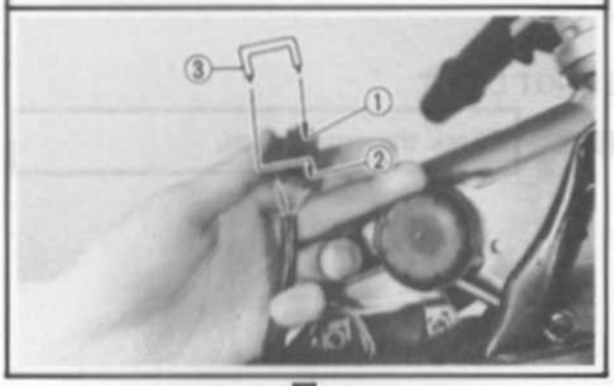

OK

7. Check entire signal system for connections.
- Refer to "WIRING DIAGRAM" section.

FAULTY → Correct.

LIGHTS

Replace flasher relay.

THE BRAKE LIGHT DOES NOT COME ON.

1. Brake light bulb conduct check
   - Remove the taillight lens and bulb.
   - Check the brake light bulb condition. Refer to "LIGHTING SYSTEM" section.

FAULTY → Brake light bulb is faulty. Replace it.

OK ↓

2. Brake light bulb socket conduct check
   - Check the brake light bulb socket condition. Refer to "LIGHTING SYSTEM" section.

FAULTY → Brake light bulb socket is faulty. Replace it.

OK ↓

3. Circuit breaker inspection
   - Check the circuit breaker condition. Refer to "CHAPTER 2. CIRCUIT BREAKER INSPECTION" section.

FAULTY → Circuit breaker is faulty. Replace it.

OK ↓

4. Battery inspection
   - Check the battery condition. Refer to "CHAPTER 2. BATTERY INSPECTION" section.

FAULTY → Battery is faulty. Recharge or replace battery.

OK ↓

5. Front and rear brake switches test
   - Disconnect the front and rear brake switch couplers.
   - Connect the front brake switch terminals (Brown ① and Green/Yellow ②) and rear brake switch terminals (Brown ③ and Yellow ④) with the jumper leads ⑤.
   - Turn the main switch to "ON", and check the brake light condition.

DOES NOT LIGHT → Check the main switch.

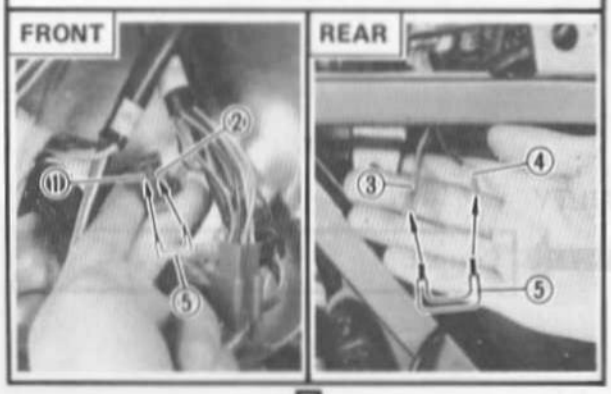

LIGHTS ↓

*

*

6. Check entire signal system for connections.

FAULTY → Correct.

OK ↓

Replace front and/or rear brake switch(es).

THE "NEUTRAL" INDICATOR LIGHT DOES NOT COME ON.

1. "NEUTRAL" indicator light bulb conduct check
   - Check the "NEUTRAL" indicator light bulb condition. Refer to "LIGHTING SYSTEM" section.

FAULTY → "NEUTRAL" indicator light bulb is faulty. Replace it.

OK ↓

2. "NEUTRAL" indicator light bulb socket conduct check
   - Check the "NEUTRAL" indicator light bulb socket condition. Refer to "LIGHTING SYSTEM" section.

FAULTY → "NEUTRAL" indicator light bulb socket is faulty. Replace it.

OK ↓

3. Circuit breaker inspection
   - Check the circuit breaker condition. Refer to "CHAPTER 2. CIRCUIT BREAKER INSPECTION" section.

FAULTY → Circuit breaker is faulty. Replace it.

OK ↓

4. Battery inspection
   - Check the battery condition. Refer to "CHAPTER 2. BATTERY INSPECTION" section.

FAULTY → Battery is faulty. Recharge or replace battery.

OK ↓

*

*

5. Battery voltage test
   - Disconnect the neutral switch lead (Blue ① – Wire harness side).
   - Connect the positive lead ② of the Pocket Tester (YU-33260) to the neutral switch lead.
   - Ground the negative lead ③ of the Pocket Tester to the engine.
   - Turn the main switch to "ON", and measure the battery voltage.

LESS THAN 12V → Check main switch.

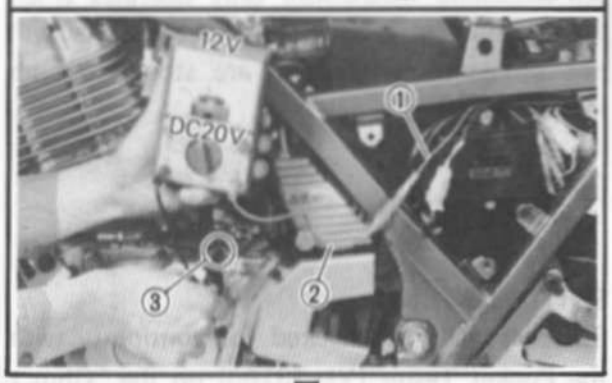

MORE THAN 12V

6. Neutral switch test
   - Ground the neutral switch lead (Blue ① – Wire harness side) to the engine with the jumper lead ②.
   - Shift the gear in neutral.
   - Turn the main switch to "ON", and check the "NEUTRAL" indicator light condition.

LIGHTS → Neutral switch is faulty. Replace it.

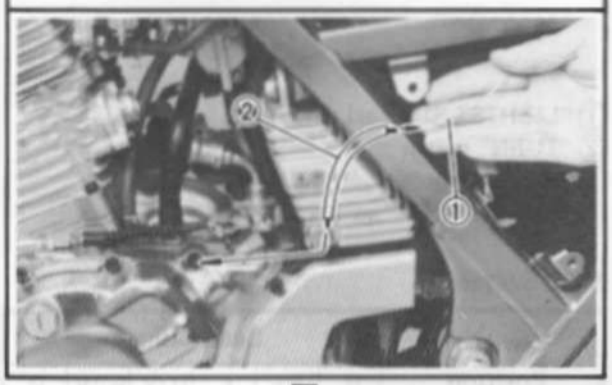

DOES NOT LIGHT

7. Check entire signal system for connection.
   - Refer to "WIRING DIAGRAM" section.

FAULTY → Correct.

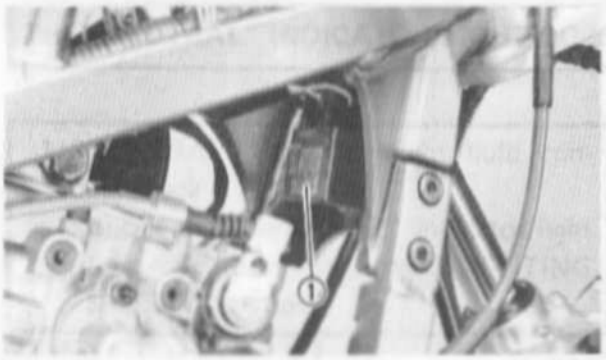

SELF-CANCELLING FLASHER SYSTEM (Except for Germany)

Description

The self-cancelling flasher system turns off the turn signal after a period of time or distance involved in turning or changing lanes. Generally, the signal will cancel after either 10 seconds, or 150 meters (490 feet), whichever is greater. At very low speed, the function is determined by distance; at high speed, especially when changing speeds, the cancelling determination is a combination of both times and distance. The self-cancelling mechanism only operates when the motorcycle is moving; thus the signal will not self-cancel while you are stopped at an intersection.

① Flasher relay

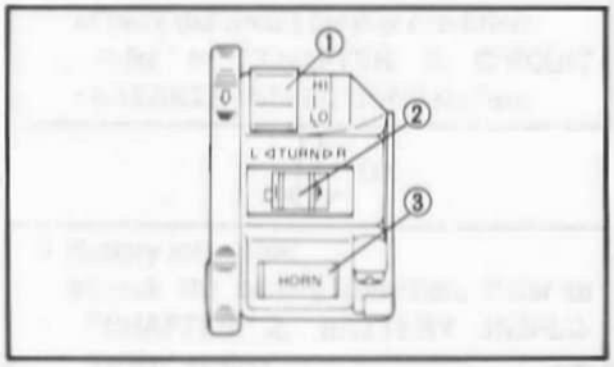

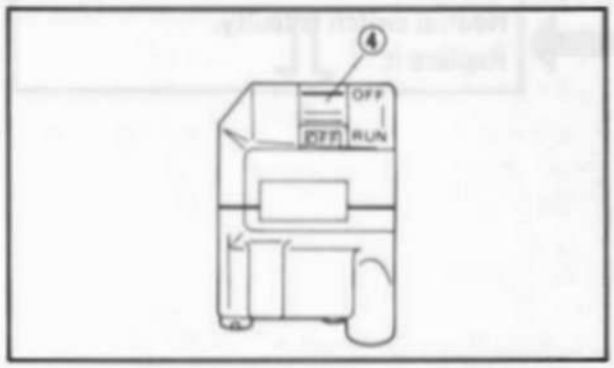

SWITCHES TEST

Switches may be checked for continuity with the Pocket Tester (YU-33260) on the "Ohm x 1" position.

① "LIGHTS" (Dimmer) switch
② "TURN" switch
③ "HORN" switch
④ "ENGINE STOP" switch

Main Switch

Switch Position	Lead Color					
	R	Br	L	R/Y	B/W	B
ON	○—○		○—○			
OFF					○—○	
LOCK					○—○	
P	○—		—○		○—○	

"LIGHTS" (Dimmer) Switch

Switch Position	Lead Color		
	Y	G	L/B
HI	O		O
LO		O	O

"TURN" Switch

Switch Position		Lead Color				
		Dg	Br/W	Ch	Y/R	B
R		O	O		O	O
N	R	O	O			
	N					
	L		O	O		
L			O	O	O	O

"HORN" Switch

Switch Position	Lead Color	
	P	B
OFF		
ON	O	O

"ENGINE STOP" Switch

Switch Position	Lead Color	
	B	B/W
OFF	O	O
RUN		

CHAPTER 7.
APPENDICES

SPECIFICATIONS 7-1
GENERAL SPECIFICATIONS 7-1
MAINTENANCE SPECIFICATIONS 7-4

GENERAL TORQUE SPECIFICATIONS 7-17

DEFINITION OF UNITS 7-17

CONVERSION TABLES 7-18

LUBRICATION DIAGRAM 7-19

CABLE ROUTING 7-23

SRX600S/SC WIRING DIAGRAM

APPENDICES

SPECIFICATIONS

GENERAL SPECIFICATIONS

Model	SRX600S/SC
Model Code Number:	SRX600S: 2EF SRX600SC: 2EG
Vehicle Identification Number:	SRX600S: JYA2EF00 * GA000101 SRX600SC: JYA2EG00 * GA000101
Engine Starting Number:	SRX600S: 2EF-000101 SRX600SC: 2EG-000101
Dimensions:	
Overall Length	2,120 mm (83.5 in)
Overall Width	705 mm (27.8 in)
Overall Height	1,055 mm (41.5 in)
Seat Height	760 mm (29.9 in)
Wheelbase	1,385 mm (54.5 in)
Minimum Ground Clearance	145 mm (5.7 in)
Basic Weight:	
With Oil and Full Fuel Tank	SRX600S: 176 kg (388 lb) SRX600SC: 176.5 kg (389 lb)
Minimum Turning Radius	2,600 mm (102.4 in)
Engine:	
Engine Type	Air cooled 4-stroke, SOHC
Cylinder Arrangement	Single cylinder
Displacement	595 cm^3
Bore x Stroke	95.0 x 84.0 mm (3.740 x 3.307 in)
Compression Ratio	8.5 : 1
Compression Pressure	1,177 kPa (12 kg/cm^2, 171 psi)
Starting System	Kick starter
Lubrication System	Dry sump
Oil Type or Grade:	
Engine Oil	Yamalube 4-cycle oil or SAE 20W40 type SE motor oil
Oil Capacity:	
Engine Oil:	
Periodic Oil Change	2.0 L (1.8 Imp qt, 2.1 US qt)
With Oil Filter Replacement	2.1 L (1.9 Imp qt, 2.2 US qt)
Total Amount	2.4 L (2.1 Imp qt, 2.5 US qt)
Air Filter	Dry type element
Fuel:	
Type	Regular gasoline
Tank Capacity	15.0 L (3.3 Imp gal, 4.0 US gal)
Reserve Amount	3.0 L (0.7 Imp gal, 0.8 US gal)

Model	SRX600S/SC	
Carburetor:		
Type/Manufacturer	Y27PV x 1/TEIKEI KIKAI	
Spark Plug:		
Type/Manufacturer	DP8EA-9, X24EP-U9/NGK, N.D.	
Gap	0.8 ~ 0.9 mm (0.031 ~ 0.035 in)	
Clutch Type	Wet, multiple-disc	
Transmission:		
Primary Reduction System	Gear	
Primary Reduction Ratio	74/31 (2.387)	
Secondary Reduction System	Chain	
Secondary Reduction Ratio	37/15 (2.466)	
Transmission Type	Constant mesh, 5-speed	
Operation	Left foot operation	
Gear Ratio: 1st	30/13 (2.307)	
2nd	27/17 (1.588)	
3rd	24/20 (1.200)	
4th	21/22 (0.954)	
5th	21/27 (0.777)	
Chassis:		
Frame Type	Double cradle	
Caster Angle	26°	
Trail	103 mm (4.06 in)	
Tire:		
Type	Tubeless	
Size (Front)	100/80-18 53S BRIDGESTONE YKD	
Size (Rear)	120/80-18 62S BRIDGESTONE KJK	
Wear Limit	1.0 mm (0.04 in)	
Tire Pressure (Cold Tire):		
Basic Weight:		
With Oil and Full Fuel Tank	SRX600S: 176 kg (388 lb) SRX600SC: 176.5 kg (389 lb)	
Maximum Load*	SRX600S: 204 kg (450 lb) SRX600SC: 203.5 kg (449 lb)	
Cold Tire Pressure:	FRONT	REAR
Up to 90 kg (198 lb) Load*	177 kPa (1.8 kg/cm², 26 psi)	196 kPa (2.0 kg/cm², 28 psi)
90 kg (198 lb)* ~ Maximum Load*	196 kPa (2.0 kg/cm², 28 psi)	226 kPa (2.3 kg/cm², 32 psi)
High Speed Riding	196 kPa (2.0 kg/cm², 28 psi)	226 kPa (2.3 kg/cm², 32 psi)
	* Load is the total weight of cargo, rider, passenger, and accessories.	

Model	SRX600S/SC
Brake:	
Front Brake Type	Dual disc brake
Operation	Right hand operation
Rear Brake Type	Single disc brake
Operation	Right foot operation
Suspension:	
Front Suspension	Telescopic fork
Rear Suspension	Swingarm
Shock Absorber:	
Front Shock Absorber	Coil spring, Oil damper
Rear Shock Absorber	Coil spring, Oil/Gas damper
Wheel Travel:	
Front Wheel Travel	140 mm (5.5 in)
Rear Wheel Travel	100 mm (3.9 in)
Electrical:	
Ignition System	CDI
Generator System	AC Magneto generator
Battery Type	12N5-3B
Battery Capacity	12V, 5AH
Headlight Type	Bulb type (Quartz bulb)
Bubl Wattage/Quantity:	
Headlight	12V, 60W/55W x 1
Tail/Brake Light	12V, 8W/27W x 1
Flasher Light	12V, 27W x 4
Indicator Light:	
"NEUTRAL"	12V, 3.4W x 1
"HIGH BEAM"	12V, 3.4W x 1
"TURN"	12V, 3.4W x 1
Meter Light	12V, 3.4W x 2

MAINTENANCE SPECIFICATIONS

Engine

Model	SRX600S/SC
Cylinder Head:	
Warp Limit	< 0.03 mm (0.0012 in) >
	✱Lines indicate straightedge measurement.
Cylinder:	
Bore Size	95.00 ~ 95.02 mm (3.740 ~ 3.741 in)
Measuring Point✱	40 mm (1.57 in)
Out of Round Limit	0.05 mm (0.002 in)
Camshaft:	
Drive Method	Chain (Left)
Cam Cap Inside Diameter	23.000 ~ 23.021 mm (0.9055 ~ 0.9063 in)
Camshaft Outside Diameter	22.967 ~ 22.980 mm (0.9042 ~ 0.9047 in)
Shaft-to-cap Clearance	0.020 ~ 0.054 mm (0.0008 ~ 0.0021 in)
Cam Dimensions:	
Intake:	
"A"	36.47 ~ 36.57 mm (1.436 ~ 1.440 in)
< Limit >	< 36.42 mm (1.434 in) >
"B"	30.06 ~ 30.16 mm (1.183 ~ 1.187 in)
< Limit >	< 30.01 mm (1.182 in) >
"C"	6.41 mm (0.252 in)
Exhaust:	
"A"	36.62 ~ 36.72 mm (1.442 ~ 1.446 in)
< Limit >	< 36.57 mm (1.440 in) >
"B"	30.11 ~ 30.21 mm (1.185 ~ 1.189 in)
< Limit >	< 30.06 mm (1.184 in) >
"C"	6.51 mm (0.256 in)
Camshaft Runout Limit	< 0.03 mm (0.001 in) >
Cam Chain Type/Number of Links	75-010/126 Links
Cam Chain Adjustment Method	Automatic
Rocker Arm/Rocker Arm Shaft:	
Arm Inside Diameter	12.000 ~ 12.018 mm (0.4724 ~ 0.4731 in)
< Limit >	< 12.05 mm (0.474 in) >
Shaft Outside Diameter	11.976 ~ 11.991 mm (0.4715 ~ 0.4721 in)
< Limit >	< 11.95 mm (0.471 in) >
Arm-to-shaft Clearance	0.009 ~ 0.042 mm (0.0004 ~ 0.0017 in)

Model		SRX600S/SC
Valve, Valve Seat, Valve Guide:		
Valve Clearance (Cold):		
	IN.	0.05 ~ 0.10 mm (0.002 ~ 0.004 in)
	EX.	0.12 ~ 0.17 mm (0.005 ~ 0.007 in)
Valve Dimensions:		
"A" Head Dia.		
"B" Face Width		
"C" Seat Width		
"D" Margin Thickness		
"A" Head Diameter:	IN.	35.9 ~ 36.1 mm (1.413 ~ 1.421 in)
	EX.	30.9 ~ 31.1 mm (1.217 ~ 1.224 in)
"B" Face Width:	IN.	2.26 mm (0.089 in)
	EX.	2.26 mm (0.089 in)
"C" Seat Width:	IN.	1.0 ~ 1.2 mm (0.039 ~ 0.047 in)
	EX.	1.0 ~ 1.2 mm (0.039 ~ 0.047 in)
< Limit >	IN.	< 2.0 mm (0.080 in) >
	EX.	< 2.0 mm (0.080 in) >
"D" Margin Thickness:	IN.	1.0 ~ 1.4 mm (0.039 ~ 0.055 in)
	EX.	0.8 ~ 1.2 mm (0.031 ~ 0.047 in)
< Limit >	IN.	< 0.7 mm (0.028 in) >
	EX.	< 0.7 mm (0.028 in) >
Stem Outside Diameter:	IN.	6.975 ~ 6.990 mm (0.2746 ~ 0.2752 in)
	EX.	6.955 ~ 6.970 mm (0.2738 ~ 0.2744 in)
< Limit >	IN.	< 6.945 mm (0.273 in) >
	EX.	< 6.915 mm (0.272 in) >
Guide Inside Diameter:	IN.	7.000 ~ 7.012 mm (0.2756 ~ 0.2761 in)
	EX.	7.000 ~ 7.012 mm (0.2756 ~ 0.2761 in)
< Limit >	IN.	< 7.10 mm (0.280 in) >
	EX.	< 7.10 mm (0.280 in) >
Stem-to-guide Clearance:	IN.	0.010 ~ 0.037 mm (0.0004 ~ 0.0015 in)
	EX.	0.030 ~ 0.057 mm (0.0012 ~ 0.0022 in)
< Limit >	IN.	< 0.10 mm (0.004 in) >
	EX.	< 0.12 mm (0.005 in) >
Stem Runout Limit		< 0.01 mm (0.0004 in) >

Model		SRX600S/SC
Valve Spring:		
Inner Spring:		
Free Length	IN.	40.1 mm (1.58 in)
	EX.	40.1 mm (1.58 in)
< Limit >	IN.	< 38.1 mm (1.50 in) >
	EX.	< 38.1 mm (1.50 in) >
Set Length (Valve Closed)	IN.	22.7 mm (0.89 in)
	EX.	22.7 mm (0.89 in)
Compressed Pressure (Installed)	IN.	16.8 ~ 19.4 kg (37.0 ~ 42.8 lb)
	EX.	16.8 ~ 19.4 kg (37.0 ~ 42.8 lb)
Tilt Limit *	IN.	< 2.5°/1.7 mm (0.067 in) >
	EX.	< 2.5°/1.7 mm (0.067 in) >
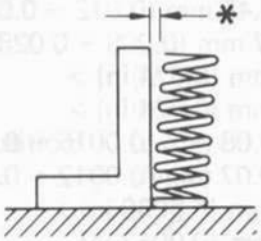		
Direction of Winding	IN.	Right
	EX.	Right
Outer Spring:		
Free Length	IN.	43.8 mm (1.72 in)
	EX.	43.8 mm (1.72 in)
< Limit >	IN.	< 41.8 mm (1.65 in) >
	EX.	< 41.8 mm (1.65 in) >
Set Length (Valve Closed)	IN.	34.2 mm (1.35 in)
	EX.	34.2 mm (1.35 in)
Compressed Pressure (Installed)	IN.	37.1 ~ 49.6 kg (81.8 ~ 109.3 lb)
	EX.	37.1 ~ 49.6 kg (81.8 ~ 109.3 lb)
Tilt Limit *	IN.	< 2.5°/1.7 mm (0.067 in) >
	EX.	< 2.5°/1.7 mm (0.067 in) >
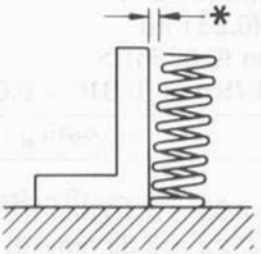		
Direction of Winding	IN.	Left
	EX.	Left
Piston:		
Piston Size "D"/ Measuring Point "H"	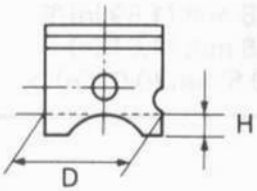	94.915 ~ 94.965 mm (3.737 ~ 3.739 in)/ 5 mm (0.20 in) (From bottom line of piston skirt)
Piston Clearance		0.045 ~ 0.065 mm (0.0018 ~ 0.0026 in)
Oversize: 2nd		95.50 mm (3.760 in)
4th		96.00 mm (3.780 in)

Model		SRX600S/SC
Valve Spring:		
Inner Spring:		
Free Length	IN.	40.1 mm (1.58 in)
	EX.	40.1 mm (1.58 in)
< Limit >	IN.	< 38.1 mm (1.50 in) >
	EX.	< 38.1 mm (1.50 in) >
Set Length (Valve Closed)	IN.	22.7 mm (0.89 in)
	EX.	22.7 mm (0.89 in)
Compressed Pressure (Installed)	IN.	16.8 ~ 19.4 kg (37.0 ~ 42.8 lb)
	EX.	16.8 ~ 19.4 kg (37.0 ~ 42.8 lb)
Tilt Limit *	IN.	< 2.5°/1.7 mm (0.067 in) >
	EX.	< 2.5°/1.7 mm (0.067 in) >
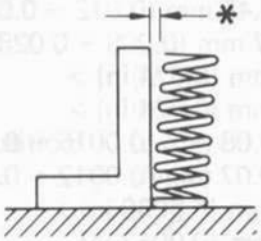		
Direction of Winding	IN.	Right
	EX.	Right
Outer Spring:		
Free Length	IN.	43.8 mm (1.72 in)
	EX.	43.8 mm (1.72 in)
< Limit >	IN.	< 41.8 mm (1.65 in) >
	EX.	< 41.8 mm (1.65 in) >
Set Length (Valve Closed)	IN.	34.2 mm (1.35 in)
	EX.	34.2 mm (1.35 in)
Compressed Pressure (Installed)	IN.	37.1 ~ 49.6 kg (81.8 ~ 109.3 lb)
	EX.	37.1 ~ 49.6 kg (81.8 ~ 109.3 lb)
Tilt Limit *	IN.	< 2.5°/1.7 mm (0.067 in) >
	EX.	< 2.5°/1.7 mm (0.067 in) >
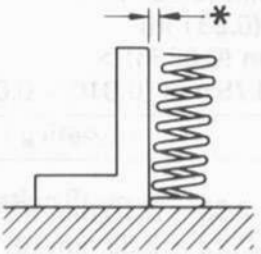		
Direction of Winding	IN.	Left
	EX.	Left
Piston:		
Piston Size "D"/ Measuring Point "H"	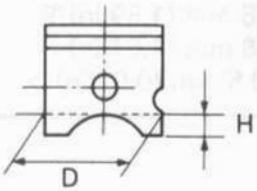	94.915 ~ 94.965 mm (3.737 ~ 3.739 in)/ 5 mm (0.20 in) (From bottom line of piston skirt)
Piston Clearance		0.045 ~ 0.065 mm (0.0018 ~ 0.0026 in)
Oversize: 2nd		95.50 mm (3.760 in)
4th		96.00 mm (3.780 in)

Model		SRX600S/SC
Piston Ring:		
Sectional Sketch:		
Top Ring	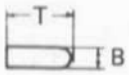	Barrel B = 1.2 mm (0.05 in) T = 3.8 mm (0.15 in)
2nd Ring	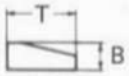	Taper B = 1.2 mm (0.05 in) T = 3.8 mm (0.15 in)
Oil Ring	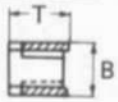	Expander B = 2.5 mm (0.10 in) T = 3.4 mm (0.13 in)
End Gap (Installed):	Top Ring	0.30 ~ 0.45 mm (0.012 ~ 0.018 in)
	2nd Ring	0.30 ~ 0.45 mm (0.012 ~ 0.018 in)
	Oil Ring	0.2 ~ 0.7 mm (0.008 ~ 0.028 in)
< Limit >	Top Ring	< 0.60 mm (0.024 in) >
	2nd Ring	< 0.60 mm (0.024 in) >
Side Clearance (Installed):	Top Ring	0.04 ~ 0.08 mm (0.0016 ~ 0.0031 in)
	2nd Ring	0.03 ~ 0.07 mm (0.0012 ~ 0.0028 in)
< Limit >	Top Ring	< 0.10 mm (0.0039 in) >
	2nd Ring	< 0.11 mm (0.0043 in) >
Crankshaft:	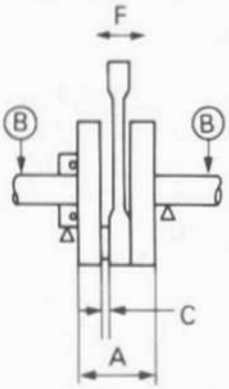	
Crank Width "A"		74.95 ~ 75.00 mm (2.951 ~ 2.953 in)
< Runout Limit "B" >		< 0.03 mm (0.001 in) >
Small End Free Play "F"		0.8 mm (0.031 in)
< Limit >		< 2.0 mm (0.08 in) >
Big End Radial Clearance "C"		0.25 ~ 0.75 mm (0.010 ~ 0.030 in)
Balancer Drive Method		Gear
Clutch:		
Friction Plate Thickness/Quantity		Type A: 2.90 ~ 3.10 mm (0.114 ~ 0.122 in)/2 Type B: 2.72 ~ 2.88 mm (0.107 ~ 0.113 in)/6
Wear Limit		Type A: < 2.80 mm (0.110 in) > Type B: < 2.60 mm (0.102 in) >
Clutch Plate Thickness/Quantity		1.2 mm (0.047 in)/7
Warp Limit		< 0.2 mm (0.008 in) >
Clutch Spring Free Length/Quantity		42.8 mm (1.69 in)/5
Clutch Spring Minimum Length		40.8 mm (1.61 in)
Push Rod Bending Limit		< 0.5 mm (0.02 in) >

Model		SRX600S/SC	
Transmission:			
Main Axle Deflection Limit		< 0.08 mm (0.0031 in) >	
Drive Axle Deflection Limit		< 0.08 mm (0.0031 in) >	
Kick Starter:			
Kick Starter Type		Ratchet Type	
Decompression Device:			
Type		Kick synchronous	
Cable Free Play		3 ~ 5 mm (0.12 ~ 0.20 in)	
Air Filter Oil Grade (Oiled Filter)		SAE 10W30 SE motor oil	
Carburetor:			
I.D. Mark		SRX600S: 2EF00	SRX600SC: 2EG00
		Primary carburetor	Secondary carburetor
Main Jet	(M.J.)	#118	#100
Main Air Jet	(M.A.J.)	ϕ0.8	ϕ1.3
Jet Needle-Clip Position	(J.N.)	5C3F-1/1	5Z71-1/1
Main Nozzle	(M.N.)	ϕ2.60	ϕ2.60
Cutaway	(C.A.)	#5.5	
Pilot Jet	(P.J.)	#46	
Pilot Air Jet	(P.A.J.)	ϕ0.6	
Enricher Air Jet	(E.A.J.)	ϕ1.1	
Pilot Screw	(P.S.)	Preset	
Valve Seat	(V.S.)	ϕ2.5	
Starter Jet	(G.S.)	ϕ0.64	
Fuel Level	(F.L.)	6.5 ~ 7.5 mm (0.26 ~ 0.30 in)	
Float Level		26 ~ 28 mm (1.02 ~ 1.10 in)	
Engine Idling Speed		1,250 ~ 1,350 r/min	
Vacuum Pressure at Idling Speed		26.6 kPa (200 mmHg, 7.9 inHg) or more	
Lubrication System:			
Oil Filter Type		Paper, Wire mesh	
Oil Pump Type		Trochoid pump	
Tip Clearance		0.12 mm (0.005 in)	
< Limit >		< 0.17 mm (0.007 in) >	
Side Clearance		0.03 ~ 0.08 mm (0.001 ~ 0.003 in)	
< Limit >		< 0.08 mm (0.003 in) >	
Bypass Valve Setting Pressure		78.5 ~ 117.7 kPa (0.8 ~ 1.2 kg/cm², 11.4 ~ 17.1 psi)	
Relief Valve Operating Pressure		78.5 ~ 117.7 kPa (0.8 ~ 1.2 kg/cm², 11.4 ~ 17.1 psi)	

Model	SRX600S/SC

Lubrication Chart:
Pressure

Feed
Splashed

Oil Tank
Cylinder Head
Cam Shaft
Drive Shaft
Main Shaft
Crank Pin
Rocker Arm
Valve
Oil Cleaner Assembly
Piston
Piston Pin
Oil Cleaner
Bypass Valve
Check Valve
Kick Shaft
Oil Pump
Oil Pump
Cam Chain Chamber
Oil Strainer
Oil Pan

Crankcase Tightening Sequence:
Left Side

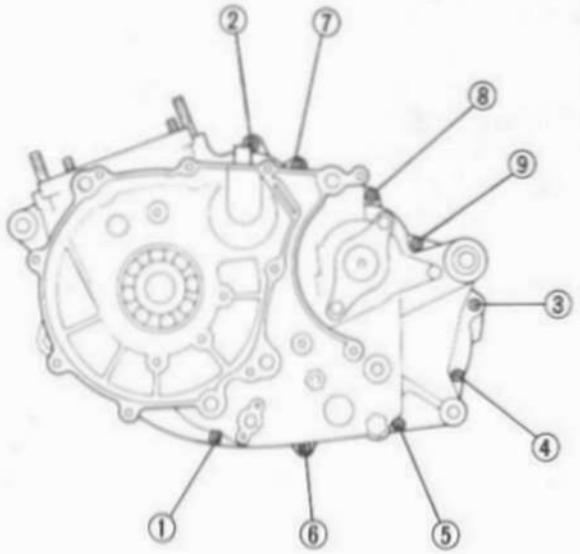

Right Side

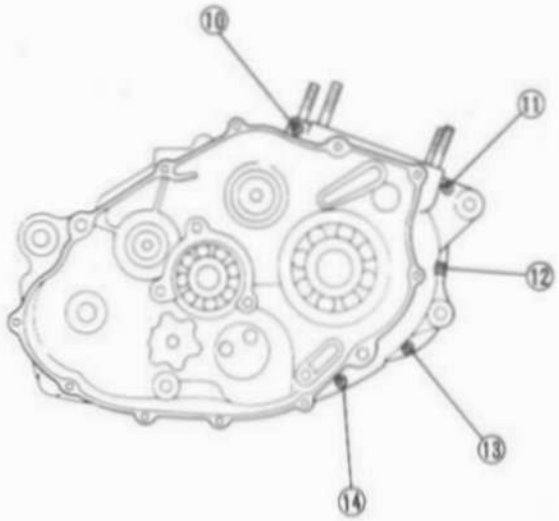

Tightening Torque

Parts to be tightened	Part name	Thread size	Q'ty	Tightening torque Nm	m·kg	ft·lb	Remarks
ENGINE:							
Cyinder Head	Flange bolt	M8 x 1.25	4	25	2.5	18	
	Nut	M10 x 1.25	2	20	2.0	14	
	Bolt	M6	1	10	1.0	7.2	
	Stud bolt	M6	4	7	0.7	5.1	
Spark Plug	–	M12 x 1.25	1	17.5	1.75	12.5	
Cylinder Head Cover	Bolt	M6	16	10	1.0	7.2	
Tappet Cover	Bolt	M6	2	10	1.0	7.2	
	Bolt	M32 x 1.5	2	12	1.2	8.7	
Cylinder	Cap nut	M8 x 1.25	2	22	2.2	16	
	Nut	M10 x 1.25	4	38	3.8	27	
	Bolt	M6 x 1.25	2	10	1.0	7.2	
Balance Weight Gear	Nut	M16 x 1.0	1	90	9.0	65	Use lock washer
A.C. Generator Rotor	Nut	M14 x 1.5	1	90	9.0	65	
Valve Clearance	Nut	M6	4	14	1.4	10	
Stopper Guide	Bolt	M6	2	8	0.8	5.8	
Cam Sprocket	Flange bolt	M7	2	20	2.0	14	
Tensioner Assembly	Bolt	M6	2	10	1.0	7.2	
Decompression Cam	Bolt	M6	1	8	0.8	5.8	
Rocker Shaft Stopper	Bolt	M6	2	10	1.0	7.2	
Oil Pump Assembly	Bolt	M6	3	10	1.0	7.2	
Oil Pump Cover	Screw	M6	1	7	0.7	5.1	
Strainer Housing	Screw	M6	2	7	0.7	5.1	
Drain Plug	Plug	M14 x 1.5	1	30	3.0	22	
Oil Filter Cover	Bolt	M6	3	10	1.0	7.2	
Oil Filter Air Bleed	Screw	M5	1	5	0.5	3.6	
Oil Hose	Bolt	M6	4	10	1.0	7.2	
	Union nut	M16 x 1.5	2	50	5.0	36	
Carburetor Joint	Bolt	M6	4	10	1.0	7.2	
Carburetor Assembly	Hose clamp	M4	2	2	0.2	1.4	
Exhaust Pipe	Nut	M6	4	10	1.0	7.2	
Exhaust Pipe Protector	Screw	M6	2	7	0.7	5.1	
Outlet Pipe	Screw	M6	1	7	0.7	5.1	
Exhaust Pipe Muffler Joint	Bolt	M8 x 1.25	1	20	2.0	14	
Muffler Mounting	Bolt	M8 x 1.25	2	27	2.7	19	
Crankcase	Bolt	M6	14	10	1.0	7.2	
Crankcase	Stud bolt	M10 x 1.25	4	20	2.0	14	
Clamp (Lead)	Screw	M6	1	7	0.7	5.1	
Decompression Cover	Bolt	M6	2	10	1.0	7.2	
Bridge Plate Cover	Screw	M6	3	7	0.7	5.1	
Ratchet Wheel Guide	Bolt	M6	2	10	1.0	7.2	
Decompression Lever	Nut	M6	1	8	0.8	5.8	

Parts to be tightened	Part name	Thread size	Q'ty	Tightening torque			Remarks
				Nm	m·kg	ft·lb	
Clutch Boss	Nut	M20 x 1.0	1	70	7.0	50	Use lock washer
Primary Drive Gear	Nut	M20 x 1.0	1	110	11.0	80	Use lock washer
Push Lever Stopper	Screw	M8 x 1.0	1	12	1.2	8.7	
Push Lever Positioning	Nut	M6	1	8	0.8	5.8	
Drive Sprocket	Bolt	M6	2	10	1.0	7.2	
Oil Seal Cover	Bolt	M6	2	10	1.0	7.2	
Stopper Lever	Nut	M6	1	10	1.0	7.2	
Shift Pedal	Bolt	M6	1	10	1.0	7.2	
Coil	Screw	M6	6	7	0.7	5.1	
Tensioner End Plug	Plug	M32 x 1.5	1	20	2.0	14	
Kick crank	Nut	M14	1	50	5.0	36	

Chassis

Model		SRX600S/SC
Steering System:		
Steering Bearing Type		Ball bearing
Front Suspension:		
Front Fork Travel		140 mm (5.5 in)
Fork Spring Free Length		499 mm (19.6 in)
< Limit >		< 494 mm (19.5 in) >
Collar Length		70 mm (2.8 in)
Spring Ratel Stroke:	K1	3.68 N/mm (0.375 kg/mm, 21.0 lb/in)/ 0 ~ 84.5 mm (0 ~ 3.33 in)
	K2	5.39 N/mm (0.55 kg/mm, 30.8 lb/in)/ 84.5 ~ 150 mm (3.33 ~ 5.91 in)
Oil Capacity or Oil Level		310 cm^3 (10.9 Imp oz, 10.5 US oz) 152 mm (5.98 in) (From top of inner tube fully compressed without spring.)
Oil Grade		Yamaha fork oil 10Wt or equivalent
Rear Suspension:		
Shock Absorber Travel		75 mm (2.95 in)
Spring Free Length		240.5 mm (9.47 in)
< Limit >		< 238 mm (9.37 in) >
Fitting Length		215.5 mm (8.48 in)
Spring Rate/Stroke:	K1	16.2 N/mm (1.65 kg/mm, 92.4 lb/in)/ 0 ~ 40.5 mm (0 ~ 1.59 in)
	K2	20.6 N/mm (2.1 kg/mm, 117.6 lb/in)/ 40.5 ~ 75.0 mm (1.59 ~ 2.95 in)
Enclosed Gas Pressure:	Standard	981 kPa (10 kg/cm^2, 142 psi)
	Minimum ~ Maximum	883 ~ 1,079 kPa (9 ~ 11 kg/cm^2, 128 ~ 156 psi)
Swingarm:		
Swingarm Free Play Limit: End		< 1.0 mm (0.04 in) >
Wheel:		
Front Wheel Type		Cast Wheel
Rear Wheel Type		Cast Wheel
Rim Size/Material:	Front	MT2.15 x 18/Aluminum
	Rear	MT2.75 x 18/Aluminum
Rim Runout Limit:	Vertical	< 2.0 mm (0.08 in) >
	Lateral	< 2.0 mm (0.08 in) >
Drive Chain:		
Type/Manufacturer		520VSR/DAIDO
Number of Links		104 Links
Chain Slack		15 ~ 20 mm (0.6 ~ 0.8 in)

Model	SRX600S/SC
Front Disc Brake:	
Type	Dual disc
Outside Diameter x Thickness	267 x 5 mm (10.5 x 0.20 in)
< Limit >	< 4.5 mm (0.18 in) >
Pad Thickness	5.5 mm (0.22 in)
< Limit >	< 0.5 mm (0.02 in) >
Master Cylinder Inside Diameter	15.8 mm (0.62 in)
Caliper Cylinder Inside Diameter	38.18 mm (1.50 in)
Brake Fluid Type	DOT #3
Rear Disc Brake:	
Type	Single disc
Outside Diameter x Thickness	245 x 5 mm (9.6 x 0.20 in)
< Limit >	< 4.5 mm (0.18 in) >
Pad Thickness	5.5 mm (0.22 in)
< Limit >	< 0.5 mm (0.02 in) >
Master Cylinder Inside Diameter	14 mm (0.55 in)
Caliper Cylinder Inside Diameter	38.18 mm (1.50 in)
Brake Fluid Type	DOT #3
Brake Lever & Brake Pedal:	
Brake Lever Free Play	2 ~ 5 mm (0.08 ~ 0.20 in)
Brake Pedal Position	50 mm (2.0 in) Below the top of the footrest
Clutch Lever Free Play/Position	2 ~ 3 mm (0.08 ~ 0.12 in)/at lever pivot

Tightening Torque

Parts to be tightened	Thread size	Tightening torque			Remarks
		Nm	m·kg	ft·lb	
CHASSIS:					
Front Wheel Axle	M14 x 1.5	105	10.5	75	
Rear Wheel Axle	M16 x 1.5	105	10.5	75	
Front Fork and Fork Brace	M6 x 1.0	9	0.9	6.5	
Steering Crown and Inner Tube	M8 x 1.25	20	2.0	14	
Steering Crown and Steering Shaft	M22 x 1.0	110	11.0	80	
Handlebar and Inner Tube	M8 x 1.25	20	2.0	14	
Handlebar and Steering Crown	M6 x 1.0	9	0.9	6.5	
Steering Shaft and Ring Nut	M25 x 1.0	38	3.8	27	See NOTE
Front Master Cylinder and Master Bracket	M6 x 1.0	9	0.9	6.5	
Front Master Cylinder and Master Cylinder Cap	M5 x 0.8	1	0.1	0.7	
Brake Hose and Union Bolt	M10 x 1.25	25	2.5	18	
Brake Joint and Under Bracket	M6 x 1.0	9	0.9	6.5	
Caliper and Bleed Screw	M8 x 1.25	5	0.5	3.6	
Front Caliper and Front Fork	M10 x 1.25	35	3.5	25	
Engine Stay and Frame	M8 x 1.25	33	3.3	24	
Engine Mounting (Front Upper)	M10 x 1.25	42	4.2	30	
Engine Mounting (Front Lower)	M10 x 1.25	42	4.2	30	
Engine Mounting (Rear Upper)	M10 x 1.25	42	4.2	30	
Engine Mounting (Rear Under)	M10 x 1.25	42	4.2	30	
Engine Stay and Frame (Top)	M8 x 1.25	33	3.3	24	
Engine Mounting (Top)	M10 x 1.25	42	4.2	30	
Frame and Down Tube	M8 x 1.25	25	2.5	18	
Pivot Shaft	M14 x 1.5	90	9.0	65	
Rear Shock Absorber (Top)	M8 x 1.25	26	2.6	19	
Rear Shock Absorber (Bottom)	M10 x 1.25	41	4.1	30	
Rear Master Cylinder and Frame	M8 x 1.25	20	2.0	14	
Footrest Bracket and Frame	M8 x 1.25	26	2.6	19	
Brake Disc and Cast Wheel	M8 x 1.25	20	2.0	14	
Rear Caliper and Caliper Bracket	M10 x 1.25	35	3.5	25	
Rear Sprocket Wheel	M8 x 1.25	32	3.2	23	
Tension Bar	M8 x 1.25	25	2.5	18	
Kick Crank Stopper and Frame	M8 x 1.25	25	2.5	18	
Swingarm End and Swingarm	M6 x 1.0	6	0.6	4.3	
Inner Tube and Under Bracket	M12 x 1.25	38	3.8	27	
Cross Tube and Down Tube	M10 x 1.25	35	3.5	25	
Rear Footrest Bracket and Frame	M10 x 1.25	64	6.4	46	
Rear Footrest Bracket and Frame	M10 x 1.25	30	3.0	22	

NOTE:

1. First, tighten the ring nut approximately 38 Nm (3.8 m·kg, 27 ft·lb) by using the torque wrench, then loosen the ring nut one turn.
2. Retighten the ring nut 10 Nm (1.0 m·kg, 7.2 ft·lb).

Electrical

Model	SRX600S/SC
Voltage	12V
Ignition System:	
Ignition Timing (B.T.D.C.)	12° at 1,200 r/min
Advancer Type	Electrical

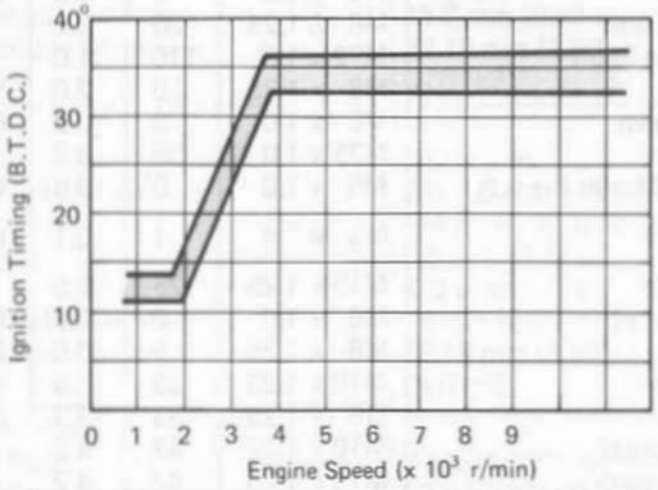

CDI:	
Magneto-Model/Manufacturer	VCD48/NIPPONDENSO
Pickup Coil Resistance (Color)	92 ~ 138Ω at 20°C (68°F) (Green – White/Green) (Green – White/Red)
Source Coil Resistance (Color)	84 ~ 156Ω at 20°C (68°F) (Brown – Red)
CDI Unit-Model/Manufacturer	QAB50/NIPPONDENSO
Ignition Coil:	
Model/Manufacturer	12970-102/NIPPONDENSO
Minimum Spark Gap	6 mm (0.24 in)
Primary Winding Resistance	0.48 ~ 0.72Ω at 20°C (68°F)
Secondary Winding Resistance	5.2 ~ 7.8 kΩ at 20°C (68°F)
Spark Plug Cap Resistance	5 kΩ
Charging System	AC Magneto generator
AC Generator:	
Model/Manufacturer	VCD48/NIPPON DENSO
Nominal Output	14.5V, 11A at 5,000 r/min

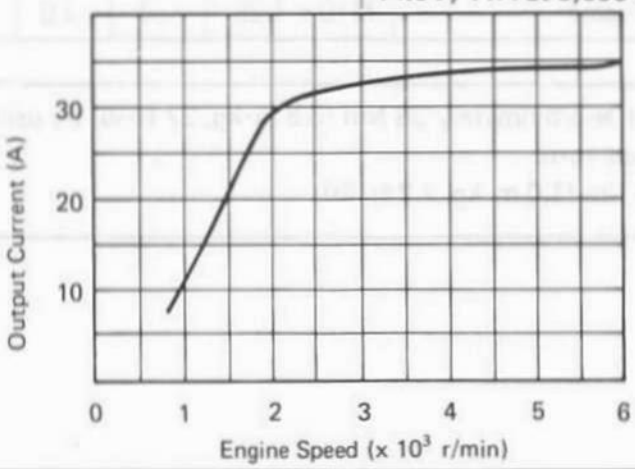

Model	SRX600S/SC
Charging Coil Resistance (Color)	0.2 ~ 0.6Ω at 20°C (68°F) (Yellow – White/Yellow)
Voltage Regulator: Type Model/Manufacturer No Load Regulated Voltage	 Short control SH565/SHINDENGEN 14 ~ 15V
Rectifier: Model/Manufacturer Capacity Withstand Voltage	 SH565/SHINDENGEN 12A 200V
Battery: Capacity Specific Gravity	 12V, 5AH 1.280
Horn: Type/Quantity Model/Manufacturer Maximum Amperage	 Plain type/1 MF-12/NIKKO 1.5A
Flash Relay: Type Model/Manufacturer Self Cancelling Device Flasher Frequency Wattage	 Condenser type FU257CD/NIPPONDENSO Yes 75 ~ 95 cycle/min 27W x 2 + 3.4W
Circuit Breaker: Type	 Non fuse breaker

GENERAL TORQUE SPECIFICATIONS

This chart specifies torque for standard fasteners with standard I.S.O. pitch threads. Torque specifications for special components or assemblies are included in the applicable sections of this book. To avoid warpage, tighten multi-fastener assemblies in a crisscross fashion, in progressive stages, until full torque is reached. Unless otherwise specified, torque specifications call for clean, dry threads. Components should be at room temperature.

A (Nut)	B (Bolt)	General torque specifications		
		Nm	m·kg	ft·lb
10 mm	6 mm	6	0.6	4.3
12 mm	8 mm	15	1.5	11
14 mm	10 mm	30	3.0	22
17 mm	12 mm	55	5.5	40
19 mm	14 mm	85	8.5	61
22 mm	16 mm	130	13.0	94

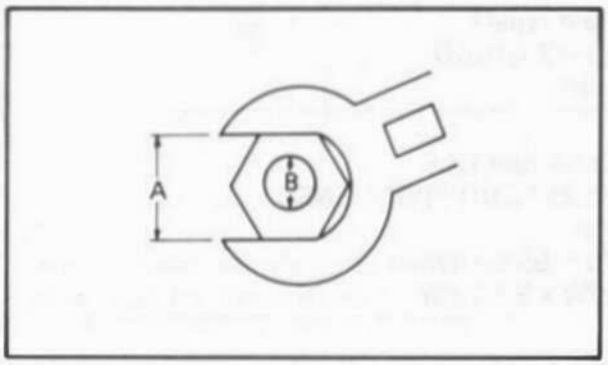

A: Distance across flats
B: Outside thread diameter

DEFINITION OF UNITS

Unit	Read	Definition	Measure
mm cm	millimeter centimeter	10^{-3} meter 10^{-2} meter	Length Length
kg	kilogram	10^{3} gram	Weight
N	Newton	1 kg x m/sec^2	Force
Nm m·kg	Newton meter Meter kilogram	N x m m x kg	Torque Torque
Pa N/mm	Pascal Newton per millimeter	N/m^2 N/mm	Pressure Spring rate
L cm^3	Liter Cubic centimer	—	Volume or Capacity
r/min	Rotation per minute	—	Engine Speed

CONVERSION TABLES

Metric to inch system		
Known	Multiplier	Result
m·kg	7.233	ft·lb
m·kg	86.80	in·lb
cm·kg	0.0723	ft·lb
cm·kg	0.8680	in·lb
kg	2.205	lb
g	0.03527	oz
km/lit	2.352	mpg
km/hr	0.6214	mph
km	0.6214	mi
m	3.281	ft
m	1.094	yd
cm	0.3937	in
mm	0.03937	in
cc (cm^3)	0.03382	oz (US liq)
cc (cm^3)	0.06102	cu in
lit (liter)	2.1134	pt (US liq)
lit (liter)	1.057	qt (US liq)
lit (liter)	0.2642	gal (US liq)
kg/mm	56.007	lb/in
kg/cm^2	14.2234	psi (lb/in^2)
Centigrade (°C)	9/5 (°C) + 32	Fahrenheit (°F)

Inch to metric system		
Known	Multiplier	Result
ft·lb	0.13826	m·kg
in·lb	0.01152	m·kg
ft·lb	13.831	cm·kg
in·lb	1.1521	cm·kb
lb	0.4535	kg
oz	28.352	g
mpg	0.4252	km/lit
mph	1.609	km/hr
mi	1.609	km
ft	0.3048	m
yd	0.9141	m
in	2.54	cm
in	25.4	mm
oz (US liq)	29.57	cc (cm^3)
cu in	16.387	cc (cm^3)
pt (US liq)	0.4732	lit (liter)
qt (US liq)	0.9461	lit (liter)
gal (US liq)	3.785	lit (liter)
lb/in	0.017855	kg/mm
psi (lb/in^2)	0.07031	kg/cm^2
Fahrenheit (°C)	5/9 (°F − 32)	Centigrade (°F)

LUBRICATION DIAGRAM

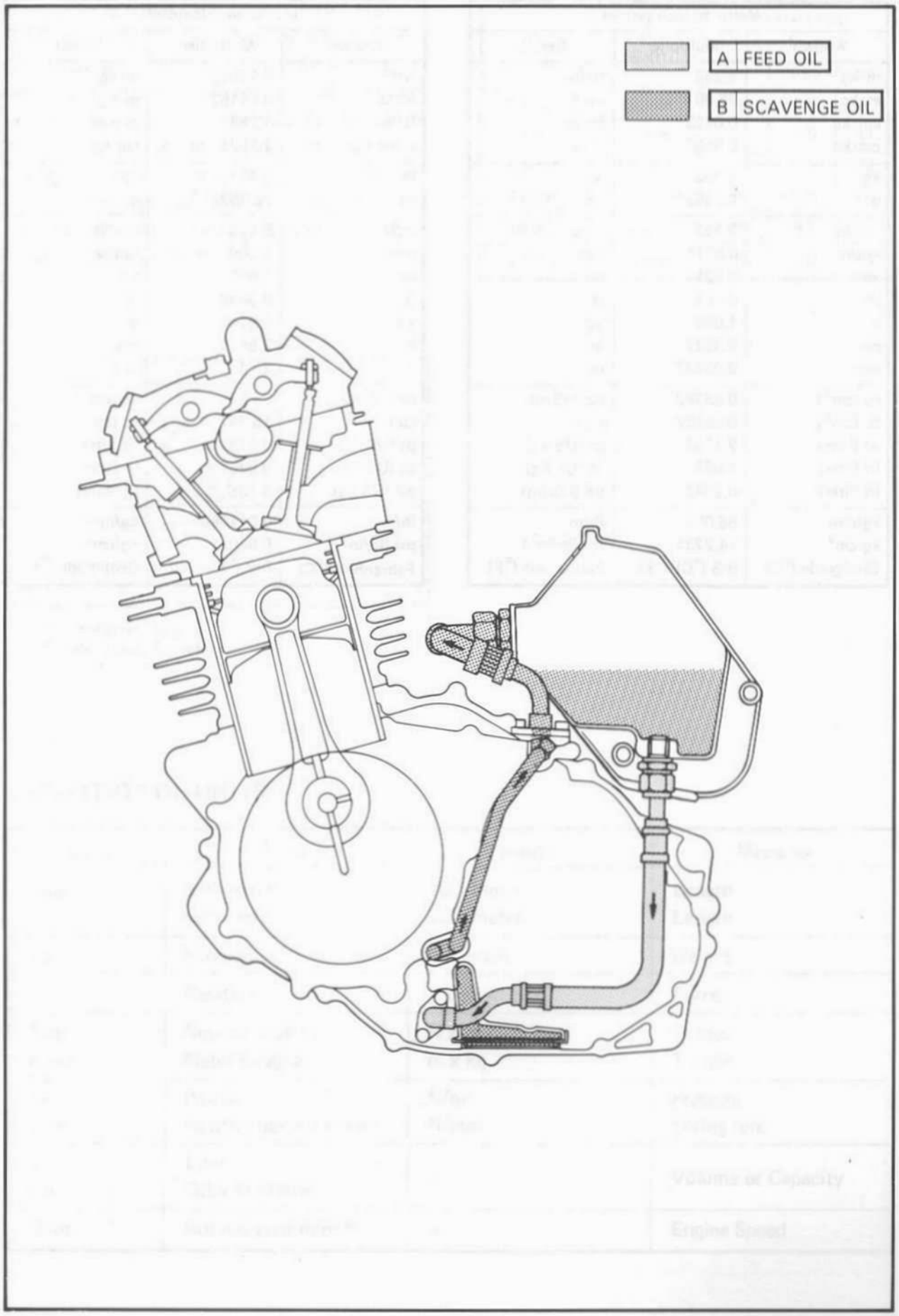

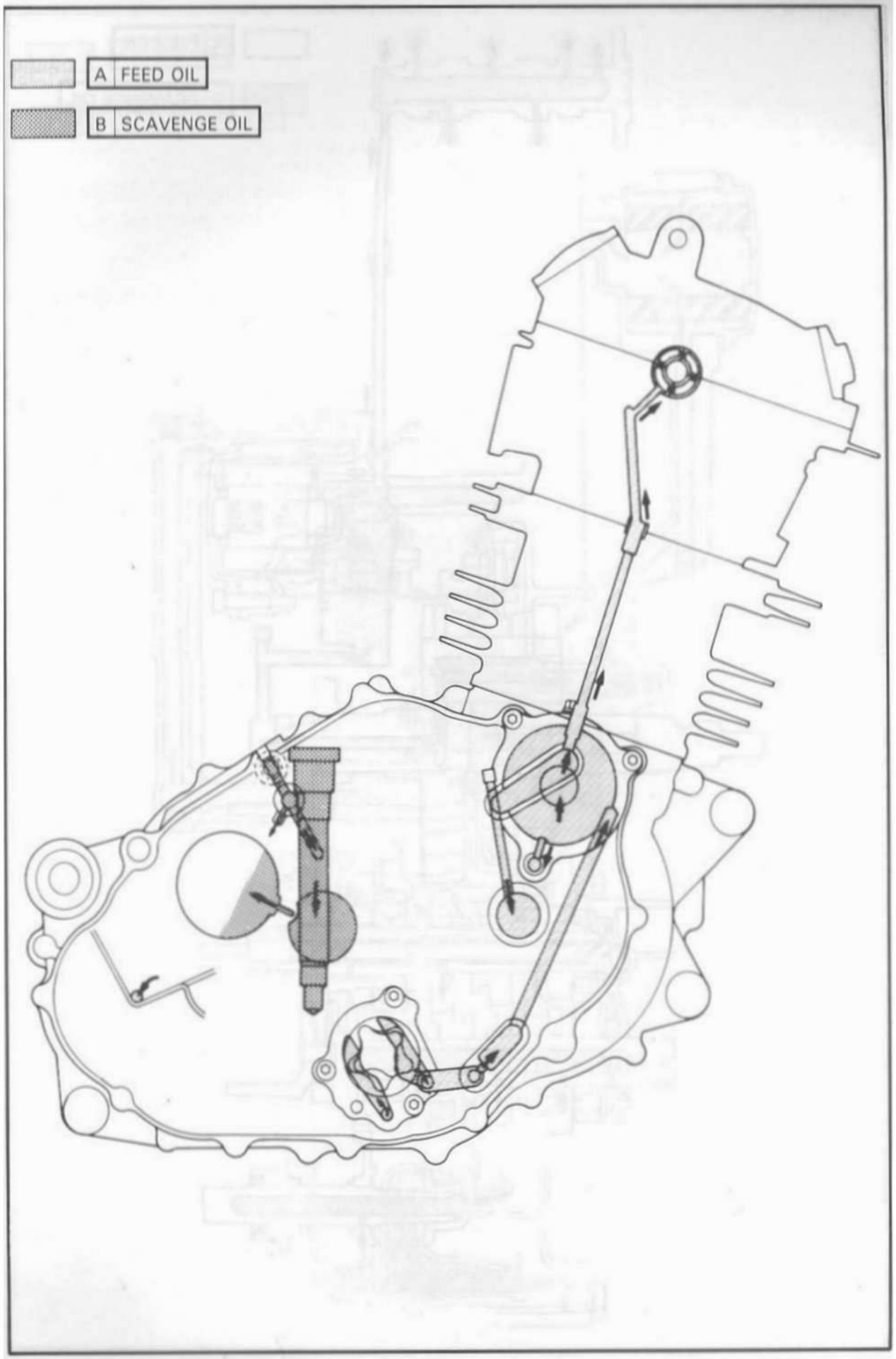
A FEED OIL
B SCAVENGE OIL

LUBRICATION DIAGRAM

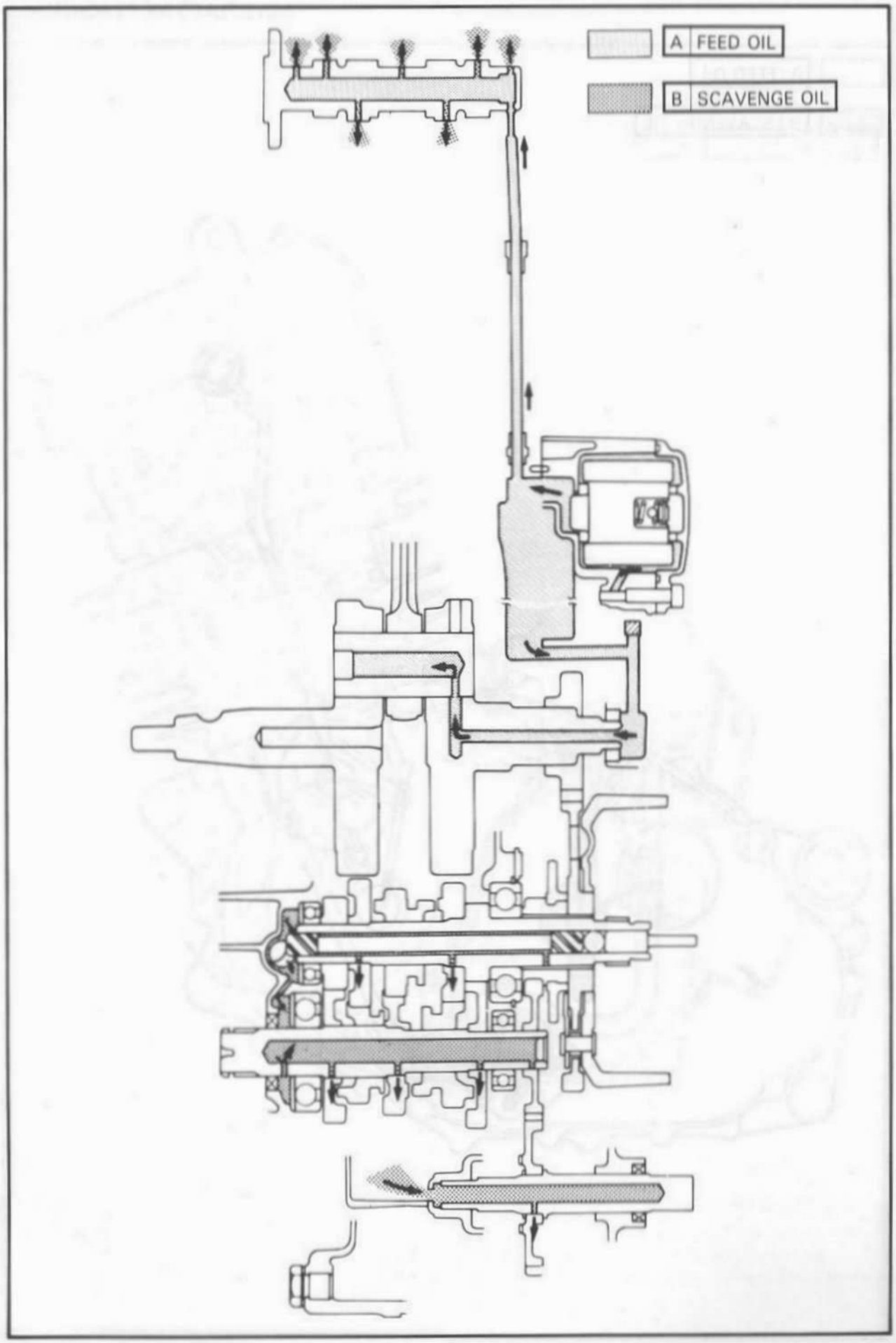

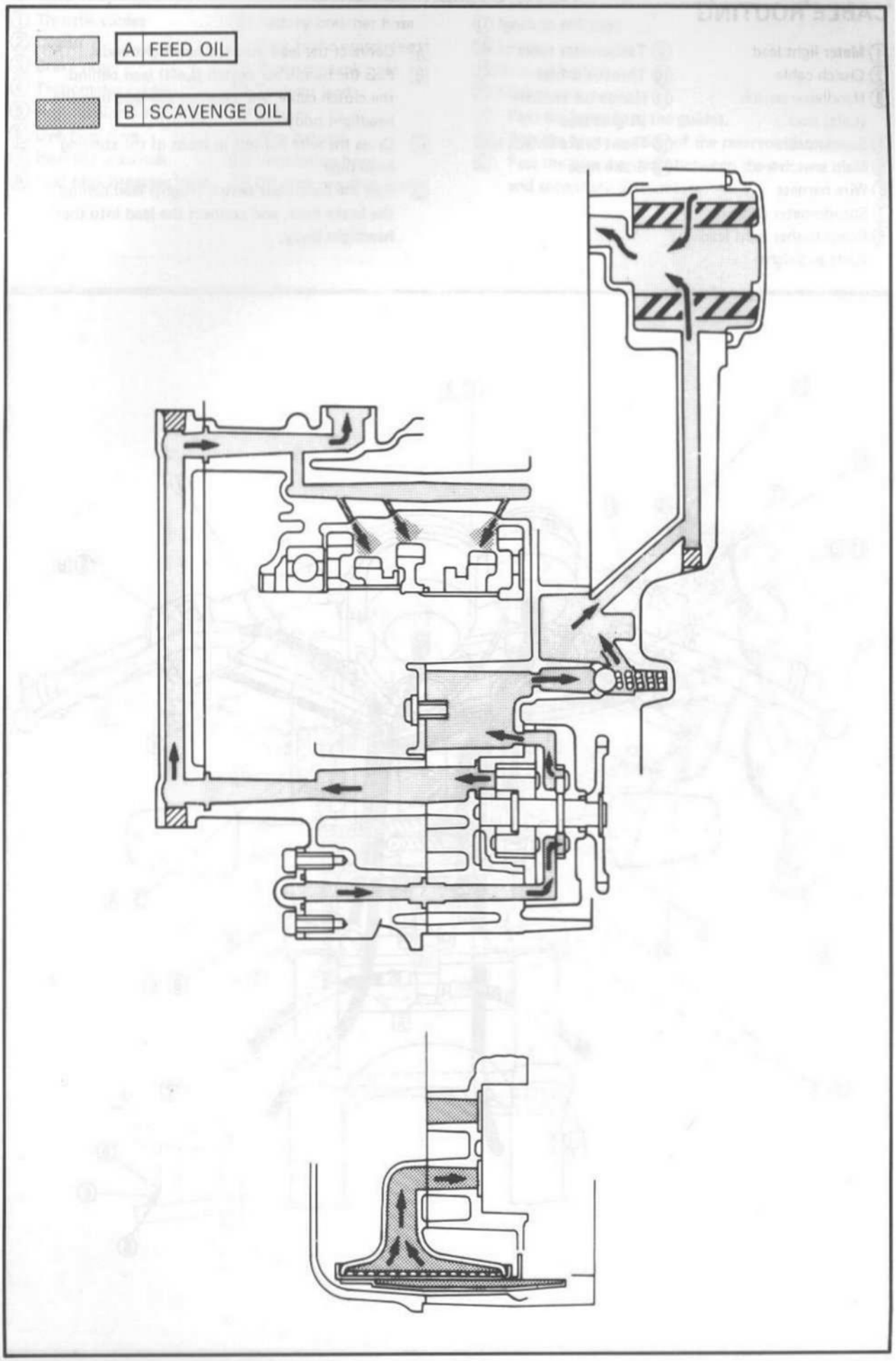
A FEED OIL
B SCAVENGE OIL

CABLE ROUTING

① Meter light lead
② Clutch cable
③ Handlebar switch (Left) lead
④ Starter cable
⑤ Main switch lead
⑥ Wire harness
⑦ Speedometer cable
⑧ Front flasher light leads (Left and right)
⑨ Tachometer cable
⑩ Throttle cables
⑪ Handlebar switch (Right) lead
⑫ Front brake switch lead
⑬ Brake hose

[A] Connect the lead into the headlight body.
[B] Pass the handlebar switch (Left) lead behind the clutch cable, and connect the lead into the headlight body.
[C] Cross the wire harness in front of the steering head pipe.
[D] Pass the handlebar switch (Right) lead behind the brake hose, and connect the lead into the headlight body.

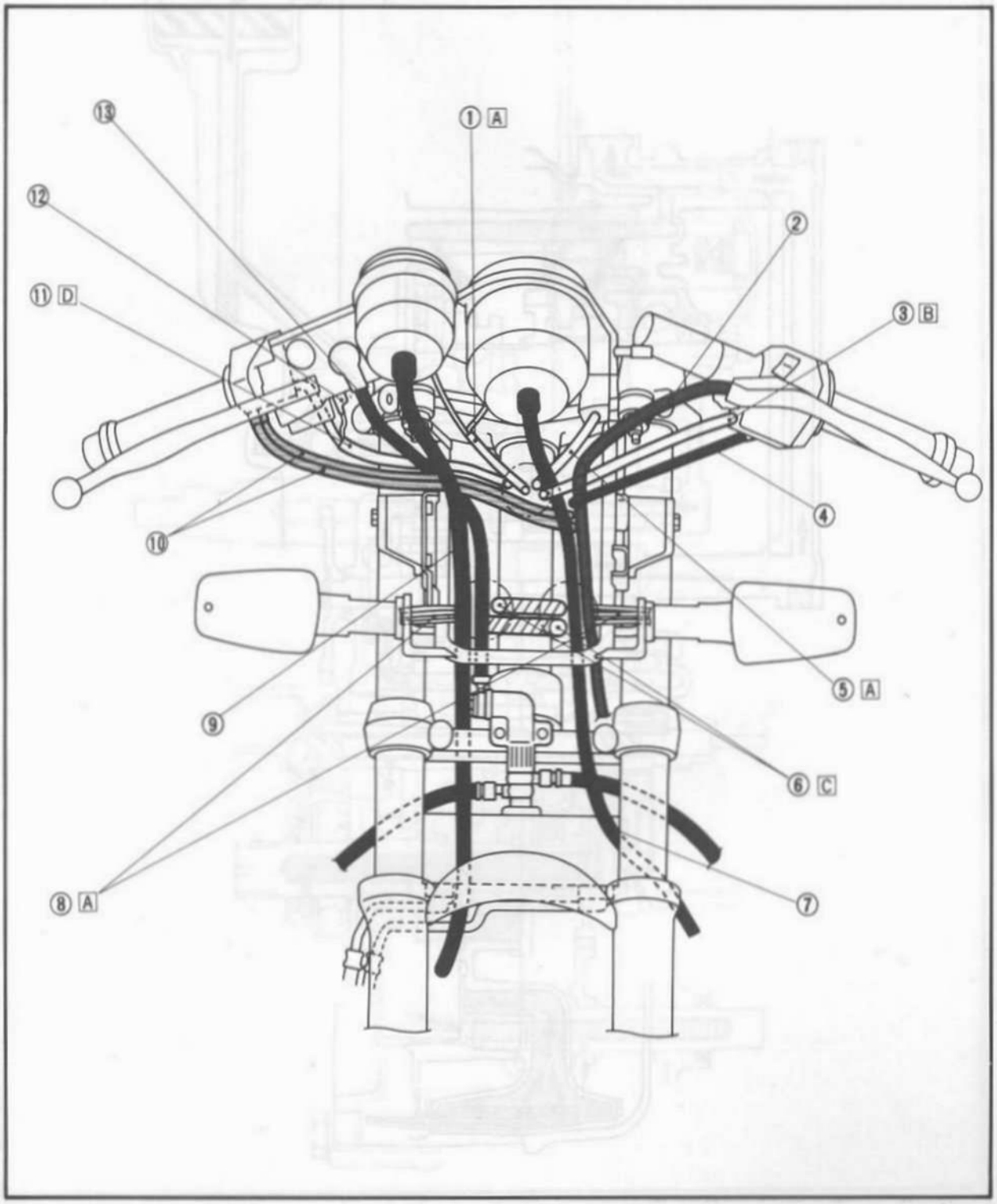

① Throttle cables
② Clamp
③ Brake hose
④ Tachometer cable
⑤ High tension cord
⑥ Overflow hose
⑦ Rear brake switch
⑧ Fuel tank breather hose
⑨ Battery breather hose
⑩ Rear brake switch lead
⑪ Reservoir tank hose
⑫ Taillight lead
⑬ Battery
⑭ Wire harness
⑮ Ventilation hose
⑯ Oil tank breather hose
⑰ Ignition coil lead
⑱ Ignition coil
⑲ Ground lead
⑳ Flasher relay
[A] Pass the hoses into the guides.
[B] Pass the hoses outside of the reservoir tank hose.
[C] Pass the breather hose between the primary and secondary carburetors.

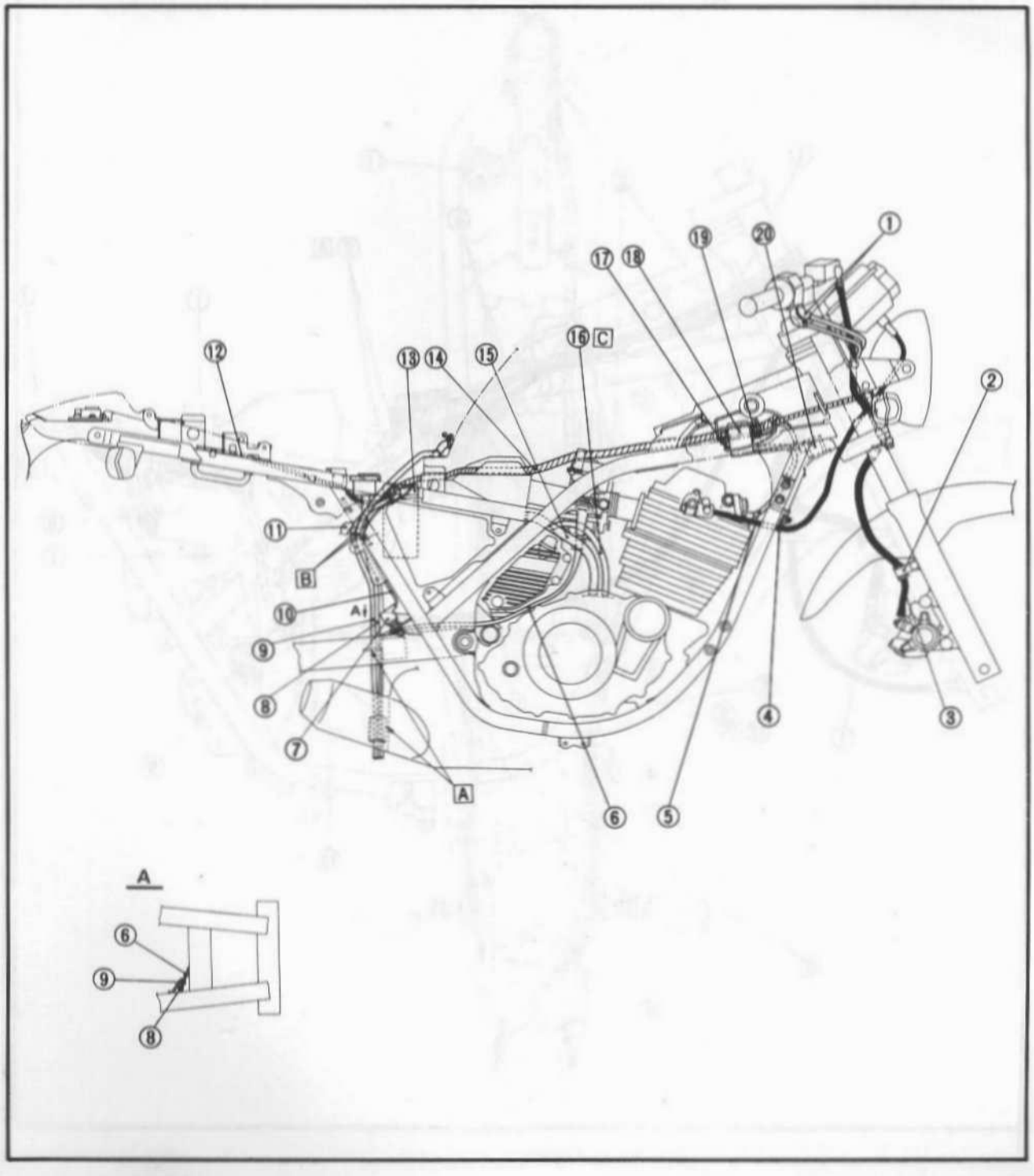

CABLE ROUTING

① Clamp
② Wire harness
③ Band
④ Throttle cables
⑤ Starter cable
⑥ Air vent hose
⑦ Rectifier/Regulator lead
⑧ CDI unit
⑨ CDI unit lead
⑩ Oil tank hose
⑪ Clutch cable
⑫ Speedometer cable
⑬ Brake hose

A Pass the hoses at the back of the oil tank.
B Pass the speedometer cable into the cable holder.

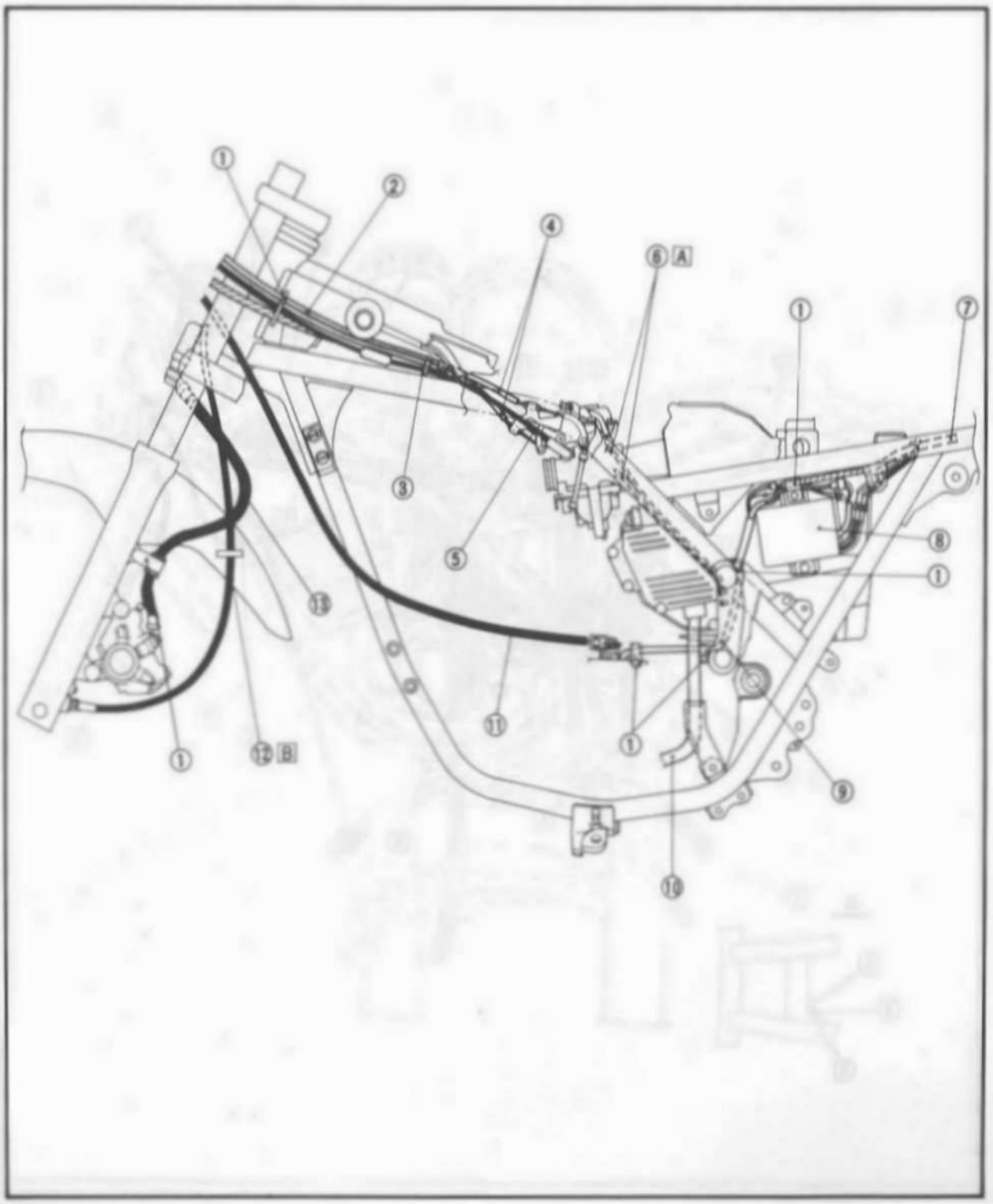

① Horn
② Clamp
③ Carburetor
④ Wire harness
⑤ Battery positive lead
⑥ Brake reservoir tank
⑦ Rear flasher light lead (Right)
⑧ Taillight lead
⑨ Rectifier/Regulator
⑩ Rear flasher light (Left)
⑪ To CDI unit lead
⑫ To CDI unit
⑬ Circuit breaker
⑭ Battery negative lead
⑮ Fuel tank breather hose

[A] White taping:
Match the white tape to the main pipe end.
[B] Pass the lead between the mud guard and frame.

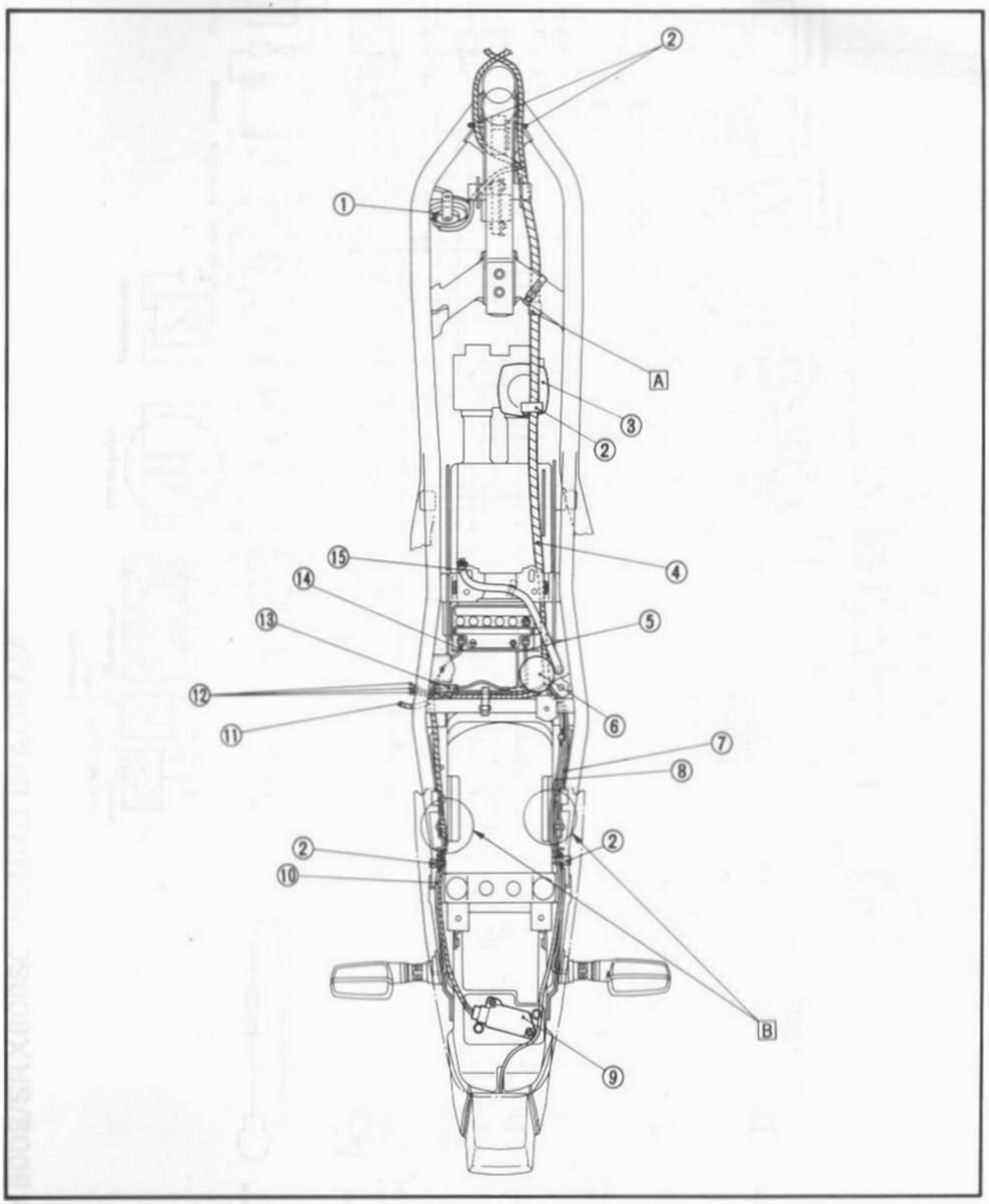

SRX600S/SRX600SC WIRING DIAGRAM

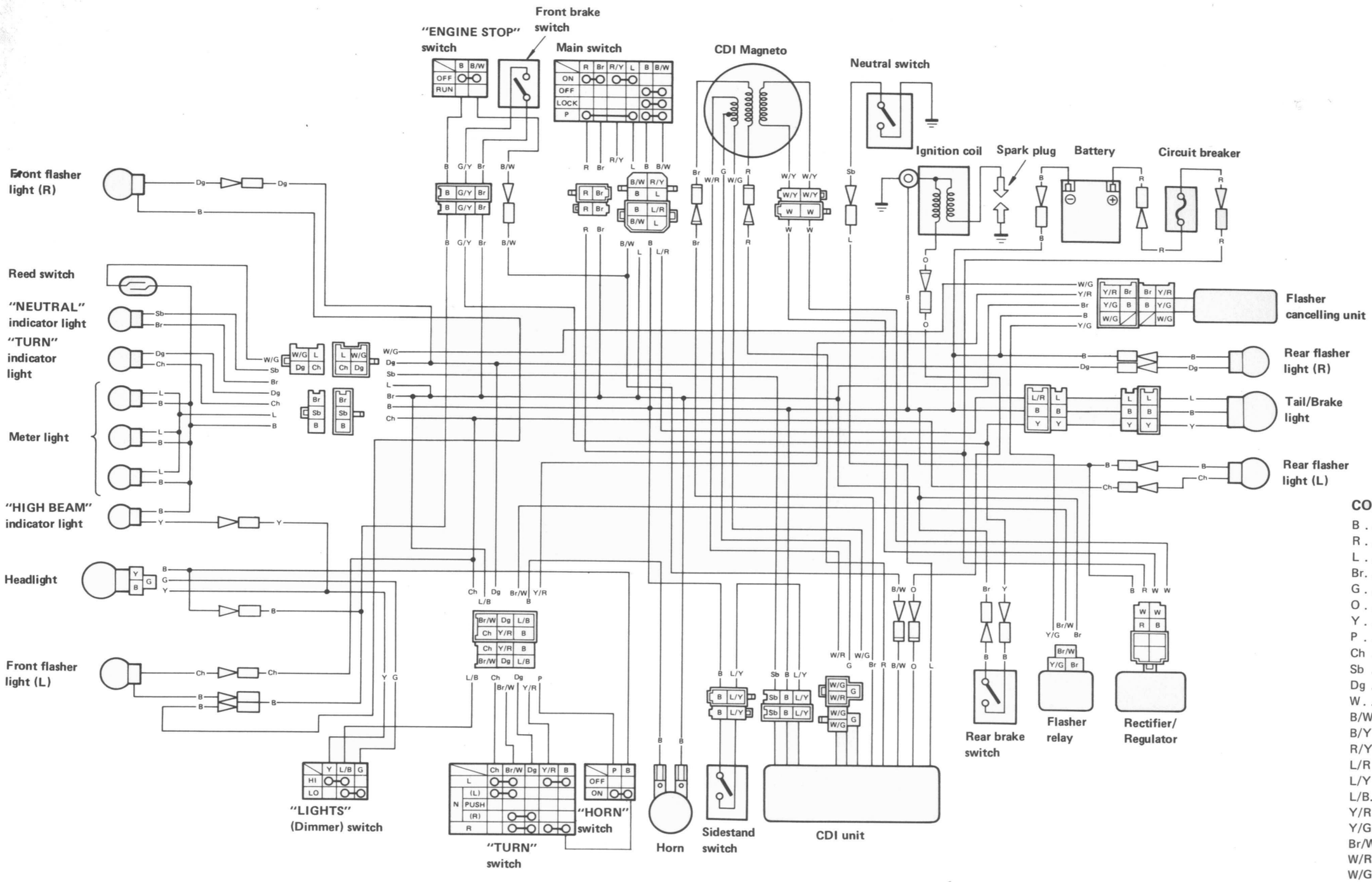

COLOR CODE

B . . . . . .Black
R . . . . . .Red
L . . . . . .Blue
Br. . . . . .Brown
G . . . . . .Green
O . . . . . .Orange
Y . . . . . .Yellow
P . . . . . .Pink
Ch . . . . . .Chocolate
Sb . . . . . .Sky blue
Dg . . . . . .Dark green
W . . . . . .White
B/W . . . . .Black/White
B/Y . . . . .Black/Yellow
R/Y . . . . .Red/Yellow
L/R . . . . .Blue/Red
L/Y . . . . .Blue/Yellow
L/B. . . . . .Blue/Black
Y/R . . . . .Yellow/Red
Y/G . . . . .Yellow/Green
Br/W. . . . .Brown/White
W/R . . . . .White/Red
W/G . . . . .White/Green
W/Y . . . . .White/Yellow

YAMAHA MOTOR CO.,LTD.
IWATA, JAPAN

PRINTED IN U.S.A.