Official

HONDA

SHOP MANUAL

CT90·110

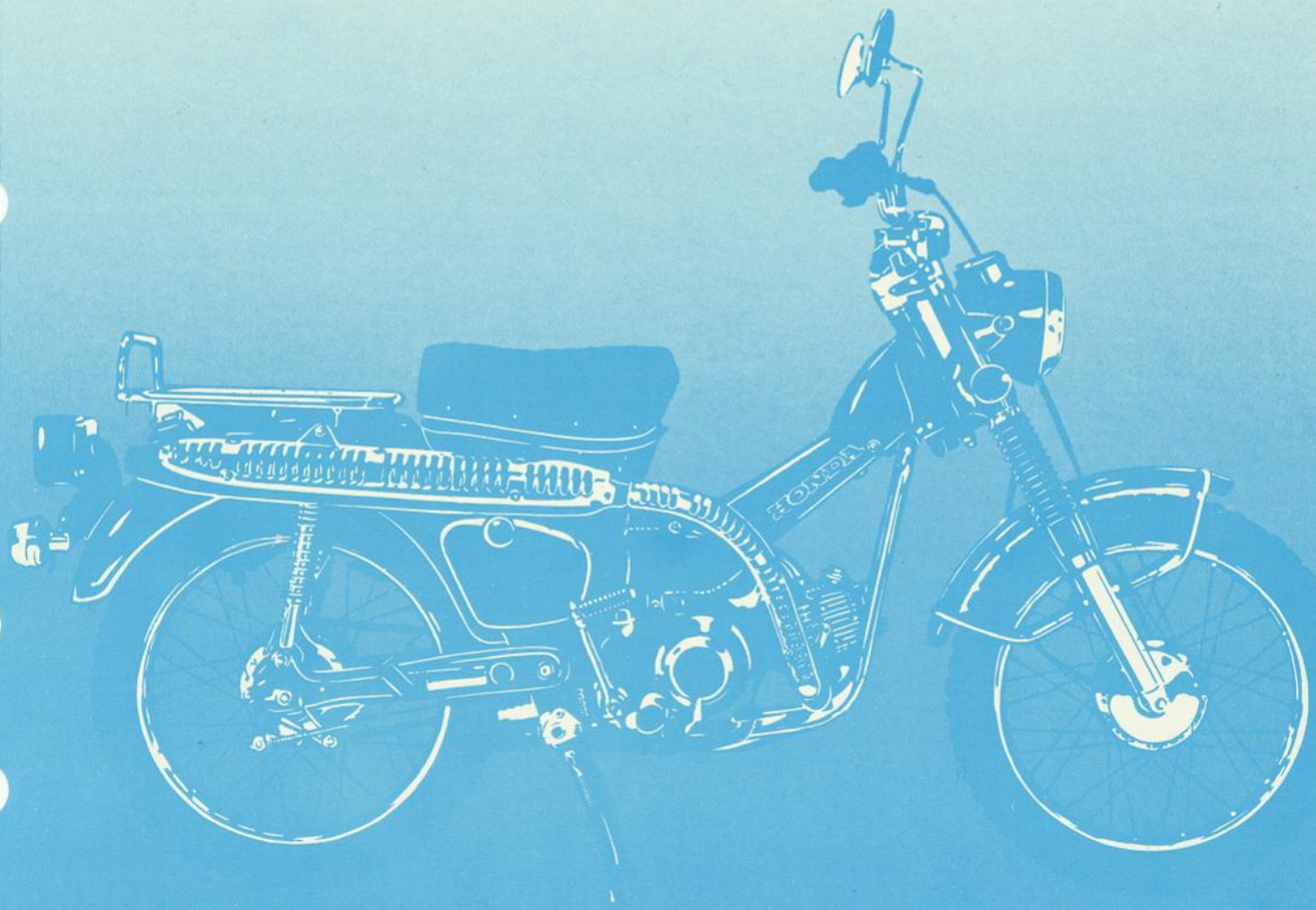

CT90 '77-'79

CT110 '80-'82

© HONDA MOTOR CO., LTD. 1982

PRINTED IN USA

6110205

IPC Ⓗ A 5009802C

INTRODUCTION

This shop manual contains service information and procedures for 1977 through 1979 CT90's and 1980 through 1982 Honda CT110's. Motorcycles manufactured after December 31, 1977 are equipped with emission controls. These are covered in this shop manual, in Section VII ('78½ EMISSIONS ADDENDUM).

CT110 service information begins on page 141.

ALL INFORMATION, ILLUSTRATIONS, DIRECTIONS AND SPECIFICATIONS INCLUDED IN THIS PUBLICATION ARE BASED ON THE LATEST PRODUCT INFORMATION AVAILABLE AT THE TIME OF APPROVAL FOR PRINTING. HONDA MOTOR CO., LTD. RESERVES THE RIGHT TO MAKE CHANGES AT ANY TIME WITHOUT NOTICE AND WITHOUT INCURRING ANY OBLIGATION WHATEVER.

NO PART OF THIS PUBLICATION MAY BE REPRODUCED WITHOUT WRITTEN PERMISSION.

HONDA MOTOR CO., LTD.
Service Publications Office

©HONDA MOTOR CO., LTD.

CONTENTS

I SPECIFICATIONS. 3

II SERVICE INFORMATION

1. SERVICE DATA 5
2. TORQUE SPECIFICATIONS 7
3. SPECIAL TOOLS 8
4. LUBRICATION POINTS 9
5. WIRING DIAGRAM 10
6. TROUBLE SHOOTING CHART 11
7. MAINTENANCE SCHEDULE 20

III INSPECTION/ADJUSTMENT 22

IV ENGINE

1. ENGINE REMOVAL/INSTALLATION 36
2. CYLINDER HEAD/VALVES 38
3. CYLINDER/PISTON 50
4. LUBRICATION SYSTEM 56
5. CLUTCH/GEAR SHIFT/OIL PUMP 57
6. AUXILIARY TRANSMISSION 65
7. A.C. GENERATOR/CAM CHAIN TENSIONER 68
8. TRANSMISSION/CRANKSHAFT/KICK STARTER 71
9. CARBURETOR 78

V FRAME

1. FRONT WHEEL/FRONT SUSPENSION/STEERING 83
2. REAR WHEEL/REAR SUSPENSION 90
3. TAIL LIGHT/FUEL TANK 96
4. WIRING 97

VI ELECTRICAL

1. BATTERY CHARGING SYSTEM 99
2. IGNITION SYSTEM 103
3. SWITCHES 106

VII '78½ EMISSIONS ADDENDUM 109

VIII '79 ADDENDUM 137

IX '80 CT110 ADDENDUM 141

X '81 CT110 ADDENDUM 171

XI '82 CT110 ADDENDUM 185

Date of Issue: Mar., 1982
©HONDA MOTOR CO., LTD.

I SPECIFICATIONS

Items	Specifications
DIMENSION	
Overall Length	1,870 mm (73.6 in)
Overall Width	740 mm (29.1 in)
Overall Height	1,060 mm (41.7 in)
Wheel Base	1,220 mm (48.0 in)
Seat Height	775 mm (30.5 in)
Ground Clearance	165 mm (6.5 in)
Dry Weight	90 kg (198.5 lb.)
FRAME	
Type	Back bone
Front Suspension, Travel	Telescopic fork, 102 mm (4.0 in)
Rear Suspension, Travel	Swing arm, 77 mm (3.0 in)
Front Tire Size, Type	2. 75–17–4 PR Knobby, tire air pressure 1.75 kg/cm^2 (25 psi)
Rear Tire Size, Type	2. 75–17–4 PR Knobby, tire air pressure 2.25 kg/cm^2 (32 psi)
Front Brake	Internal expanding shoes
Rear Brake	Internal expanding shoes
Fuel Capacity	5.5 lit. (1.4 U.S. gal. 1.21 Imp. gal.)
Fuel Reserve Capacity	0.8 lit. (0.2 U.S. gal. 0.18 Imp. gal)
Auxiliary Fuel Tank Capacity	2.3 lit. (0.6 U.S. gal. 0.54 Imp. gal)
Caster Angle	63°
Trail Length	75 mm (3 in)
Front Fork Oil Capacity	125 – 135 cc (4.2 – 4.6 ozs.) To fill dry fork assembly 130 - 140 cc (4.4 - 4.7 oz.) To refill after draining 120 - 130 cc (4.1 - 4.4 oz.)
ENGINE	
Type	Air cooled 4-stroke O.H.C. engine
Cylinder Arrangement	Single cylinder 75 inclined from vertial
Bore and Stroke	50 x 45.6 mm (1.970 x 1.797 in)
Displacement	89.5 cc (5.46 cu in)
Compression Ratio	8.2 : 1
Carburetor, Venturi Dia.	Piston valve type, venturi dia. 16 mm (0.64 in)
Valve train	Chain driven over head camshaft
Oil Capacity	0.9 lit. (0.95 U.S. qt. 0.80 Imp. qt.)
Lubri cation System	Forced pressure and wet sump
Fuel Required	Low-lead or regular gasoline of 91 research octane (86 pump octane) or higher
Air Filtration	Oiled polyurethane foam filter

Date of Issue: Oct., 1977
© HONDA MOTOR CO., LTD.

[ ] k9 (1978) model

Items	Specifications
Intake Valve : Opens	5° BTDC
Closes	20° ABDC
Exhaust Valve: Opens	25° BBDC
Closes	5° ATDC
Valve Clearance	IN/EX. 0.05 mm (0.002 in)
Engine Dry Weight	24 kg (52.9 lb.)
Air Screw Opening	1
Pilot Screw Opening	[1-1/4]
Idle Speed	1,300 rpm
DRIVE TRAIN	
Clutch	Wet multi plate automatic
Transmission	4-speed constant mesh
Primary Reduction	3.722
Gear Ratio I	2.538
II	1.611
III	1.190
IV	0.958
Auxiliary Transmission High/Low	1.000 / 1.867
Final Reduction	3.000, drive sprocket 15 T, driven sprocket 45 T
Gear Shift Pattern	Left foot operated return system
ELECTRICAL	
Ignition	Battery and ignition coil
Ignition Advance :	1,300 rpm
" F " mark	10° TDC
Max. advance	26° – 32°
Starting System	Kick starter
Alternator	A.C. Generator 0.062 kw/6,000 rpm
Battery Capacity	6 V – 5.5 AH
Fuse Capacity	15 amp.
Spark Plug	U.S.A. model D8HA (NGK), X24FS-U (ND) Canada model DR8HS (NGK), X24FSR-U (ND)
Condenser Capacity	0.27 – 0.33 μF

Date of Issue: Oct., 1977
© HONDA MOTOR CO., LTD.

ENGINE

Unit: mm (in.)

Item			Standard		Service Limit	
Cylinder		I.D.	50.00–50.01	(1.9685 – 1.9689)	50.10	(1.9724)
		Taper	0 – 0.01	(0 – 0.0004)	0.05	(0.002)
		Out-of-round	0 – 0.01	(0 – 0.0004)	0.05	(0.002)
Piston O. D.			49.97–49.99	(1.9673 – 1.9681)	49.80	(1.9606)
Piston pin I. D.			14.002–14.008	(0.5513 – 0.5515)	14.04	(0.5528)
Piston pin O. D.			13.994–14.000	(0.5509 – 0.5512)	13.960	(0.5496)
Piston ring end gap		Top/second	0.15–0.35	(0.006 – 0.014)	0.50	(0.020)
		Oil	0.15–0.40	(0.006 – 0.016)	0.50	(0.020)
Piston-to-piston ring clearance		Top/second	0.010–0.045	(0.0004 – 0.0018)	0.12	(0.0047)
		Oil	0.010–0.045	(0.0004 – 0.0018)	0.12	(0.0047)
Piston ring thickness		Top/second	1.175–1.190	(0.0463 – 0.0469)	1.130	(0.0445)
		Oil	2.475–2.490	(0.0974 – 0.0980)	2.43	(0.957)
Valve stem O. D.		IN	5.455–5.465	(0.2148 – 0.2152)	5.435	(0.2139)
		EX	5.435–5.445	(0.2140 – 0.2144)	5.415	(0.2132)
Valve guide I. D.		IN/EX	5.475–5.485	(0.2157 – 0.2161)	5.525	(0.2175)
Valve-to-valve guide clearance		IN	0.010–0.030	(0.0004 – 0.0012)	0.08	(0.0032)
		EX	0.030–0.050	(0.0012 – 0.0020)	0.10	(0.0040)
Valve spring	Free length	Outer	31.8	(1.252)	30.6	(1.205)
		Inner	26.5	(1.043)	25.5	(1.004)
	Preload/length	Outer kg/mm (lbs./in.)	19–21/22.3	(41.8–46.21/0.878)	———	
		Inner kg/mm (lbs./in.)	9.5–10.5/18.4	(20.9–23.1/0.724)	———	
Valve face width		IN/EX	1.2–1.5	(0.048 – 0.060)	1.8	(0.072)
Valve seat width		IN/EX	1.0	(0.04)	1.6	(0.064)
Cam height		IN/EX	24.90–24.98	(0.9803 – 0.9835)	24.6	(0.9685)
Camshaft O. D.		R. End	17.927–17.938	(0.7058 – 0.7062)	17.90	(0.7047)
		L. End	25.917 – 25.930	(1.0204 – 1.0209)	25.90	(1.0197)
Camshaft end bearing I. D.		R. End	18.000–18.018	(0.7087 – 0.7094)	18.05	(0.7106)
		L. End	26.000–26.020	(1.0236 – 1.0244)	26.05	(1.0256)
Clutch disc thickness			2.8–2.9	(0.1102 – 0.1142)	2.4	(0.0945)
Clutch plate thickness			1.93–2.07	(0.0760 – 0.0815)	1.85	(0.0729)
Clutch plate warpage			0.2	(0.008)	0.5	(0.02)
Clutch spring	Free length		27.0	(1.0630)	26.0	(1.0236)
	Preload/length kg/mm (lbs/in)		10–10.4/15	(22–22.9/0.591)	———	
Crankshaft run out (at ends)			0 – 0.015	(0 – 0.0006)	0.10	(0.0040)
Crankshaft bearing play		Axial	0.10–0.35	(0.004 – 0.019)	0.8	(0.032)
		Radial	0. – 0.01	(0. – 0.0004)	0.05	(0.002)
Connecting rod small end I. D.			14.012–14.028	(0.5517– 0.5523)	14.050	(0.5531)
Connecting rod big end side clearance			0.10–0.35	(0.004 – 0.019)	0.8	(0.032)
Connecting rod big end radial clearance			0 – 0.01	(0 – 0.0004)	0.05	(0.002)
Clutch drive gear I.D.			24.00–24.02	(0.9449 – 0.9457)	24.15	(0.9508)
Clutch center guide O.D			22.0–22.1	(0.8661 – 0.8701)	21.85	(0.8602)
Clutch center guide-to-crankshaft clearance			0.005–0.047	(0.0002 – 0.0019)	0.15	(0.0060)

© HONDA MOTOR CO., LTD.

Item		Standard		Service Limit	
Rocker arm shaft O. D.		9.972–9.987	(0.3926 – 0.3932)	9.92	(0.3906)
Rocker arm I. D.		10.000–10.015	(0.3937 – 0.3943)	10.10	(0.3976)
Primary drive gear I. D.		24.00–24.02	(0.945 – 0.946)	24.15	(0.951)
Crankshaft-to-clutch center guide clearance		0.005–0.047	(0.0002 – 0.0019)	0.15	(0.060)
Tensioner spring free length	Spring A	65	(2.6)	60	(2.4)
	Spring B	49.8	(19.92)	40	(1.6)
Oil pump	Inner-to-outer rotor clearance	0.15	(0.006)	0.2	(0.008)
	Outer rotor-to-body clearance	0.15–0.20	(0.0060 – 0.0080)	0.25	(0.010)
	Rotor-to-cover clearance	0.02–0.07	(0.0008 – 0.0028)	0.12	(1.0047)
Shift fork I. D.		42.00	(1.6535)	42.1	(1.6575)
Shift fork ends thickness		5.96–6.04	(0.2346 – 0.2378)	5.70	(0.2244)
Shift drum O. D.		41.950–41.975	(1.6516 – 1.6526)	41.80	(1.6457)
Shift drum groove width		6.1–6.2	(0.2402 – 0.2441)	6.4	(0.2520)
Shift fork-to-shift drum clearance		0.05	(0.0020)	0.2	(0.008)
Auxiliary transmission	Idler gear shaft O. D.	12.966–12.984	(0.5105 – 0.5112)	12.85	(0.5140)
	Idler gear I. D.	13.000–13.018	(0.5200 – 0.5207)	13.10	(0.5157)

FRAME

Item		Standard		Service Limit	
Front/rear axle shaft bend		0 – 0.05	(0 – 0.002)	0.2	(0.008)
Front/rear wheel bearing play	Axial	0 – 0.05	(0 – 0.002)	0.1	(0.004)
	Radial	0.003–0.008	(0.0001 – 0.0003)	0.04	(0.0016)
Front/rear brake drum I. D.		110.0	(4.3307)	111.0	(4.3701)
Wheel rim	Face runout	0 – 0.5	(0 – 0.02)	1.0	(0.04)
	Eccentricity	0 – 0.5	(0 – 0.02)	1.0	(0.04)
Front fork spring	Free length	203	(8.0)	185	(7.3)
Rear shock absorber spring	Free length	223	(8.78)	207	(8.16)
Front fork piston O. D.		30.950–30.975	(1.219 – 1.220)	30.85	(1.215)
Front fork bottom case I. D.		31.000–31.039	(1.221 – 1.223)	31.10	(1.225)
Brake lining thickness		4.0	(0.16)	2.0	(0.08)

Date of Issue: Oct., 1977
© HONDA MOTOR CO., LTD.

2. TORQUE SPECIFICATIONS

ENGINE

Tightening point	Q'ty	Thread dia.	Torque kg-m (lbs ft)
Cylinder head nut	4	8	2.0 – 2.5 (14.5 – 18.1)
Camshaft sprocket bolt	2	6	0.9 – 1.2 (6.5 – 8.7)
Cam chain guide roller bolt	1	6	0.9 – 1.4 (6.5 – 10.1)
Spark advancer bolt	1	6	0.8 – 1.2 (5.8 – 8.7)
Clutch lock nut	1	16	3.8 – 4.5 (27.4 – 32.5)
A. C. generator rotor bolt	1	8	2.6 – 3.2 (18.8 – 23.2)
A. C. generator stator bolt	3	6	0.8 – 1.2 (5.8 – 8.7)
Shift drum bolt	1	6	0.8 – 1.2 (5.8 – 8.7)

FRAME

Tightening point	Q'ty	Thread dia.	Torque kg-m (lbs-ft)
Handlebars setting bolts	4	6	0.8 – 1.2 (5.8 – 8.7)
Steering stem nut	1	22	6.0 – 7.0 (43.4 – 50.7)
Front fork bolt	2	10	3.5 – 4.5 (25.3 – 32.6)
Steering bottom bridge bolt	2	8	1.8 – 2.5 (13.0 – 18.1)
Swingarm pivot bolt	1	10	4.0 – 6.0 (29.0 – 43.4)
Rear shock absorber upper nut	2	10	2.5 – 3.5 (18.1 – 25.3)
Rear shock absorber lower nut	2	8	2.5 – 3.5 (18.1 – 25.3)
Front axle nut	1	10	3.5 – 5.0 (25.3 – 36.2)
Rear axle nut	1	10	3.5 – 5.0 (25.3 – 36.2)
Rear axle sleeve nut	1	16	3.5 – 4.5 (25.3 – 32.6)
Driven sprocket bolt	4	8	1.8 – 2.5 (13.0 – 18.1)
Rear brake stop arm bolt	2	8	1.8 – 2.5 (13.0 – 18.1)
Engine hanger bolt	2	10	3.0 – 4.0 (21.7 – 29.0)
Step bar bolt	14	8	1.8 – 2.5 (13.0 – 18.1)

Torque specifications listed above are important tightening points. Others should be tightened to standard torque below.

Standard Torque Specifications

Type	Torque kg-m (lbs-ft)	Type	Torque kg-m (lbs-ft)
5 mm bolt and nut	0.45 – 0.60 (3.3 – 4.3)	5 mm screw	0.35 – 0.50 (2.5 – 3.6)
6 mm bolt and nut	0.8 – 1.2 (5.8 – 8.7)	6 mm screw	0.7 – 1.1 (5.1 – 8.0)
8 mm bolt and nut	1.8 – 2.5 (13.0 – 18.1)	6 mm flange bolt and nut	1.0 – 1.4 (7.2 – 10.1)
10 mm bolt and nut	3.0 —4.0 (21.7 – 29.0)	8 mm flange bolt and nut	2.4 – 3.0 (17.4 – 21.7)
12 mm bolt and nut	5.0 —6.0 (36.2 – 43.4)	10 mm flange bolt and nut	3.0 – 4.0 (21.7 – 29.0)

© HONDA MOTOR CO., LTD.

TOOL NAME	PART NO.	REFERENCE PAGE
Float valve gauge	07401 – 0010000	81
36mm pin spanner	07902 – 0010000	86
Tappet adjusting wrench	07908 – 0010000	24
Steering stem nut wrench	07915 – 0300000	86
16mm lock nut wrench	07916 – 3710000	58
Clutch outer holder	07932 – 0340000	58
Rotor puller	07933 – 2160000	69
Valve guide driver	07942 – 3290100	42
Valve guide driver	07942 – 1180100	42
Valve spring compressor	07957 – 3290001	41
Valve guide reamer	07984 – 0980000	42
Bearing driver	07949 – 3000000	85, 91
Bearing driver attachment	07945 – 0980000	85, 91
Bearing driver	07949 – 6110000	92
Bearing driver attachment	07945 – 3330100	92
Ball race driver	07944 – 1150001	86
Fork seal driver	07974 – 1180001	87
Oil seal guide	07974 – 1280000	43
Rear shock absorber dis/assembling tool	07959 – 3290000	93
Spring holder	07967 – 1150100	93

Date of Issue: Oct., 1977
© HONDA MOTOR CO., LTD.

4. LUBRICATION POINTS

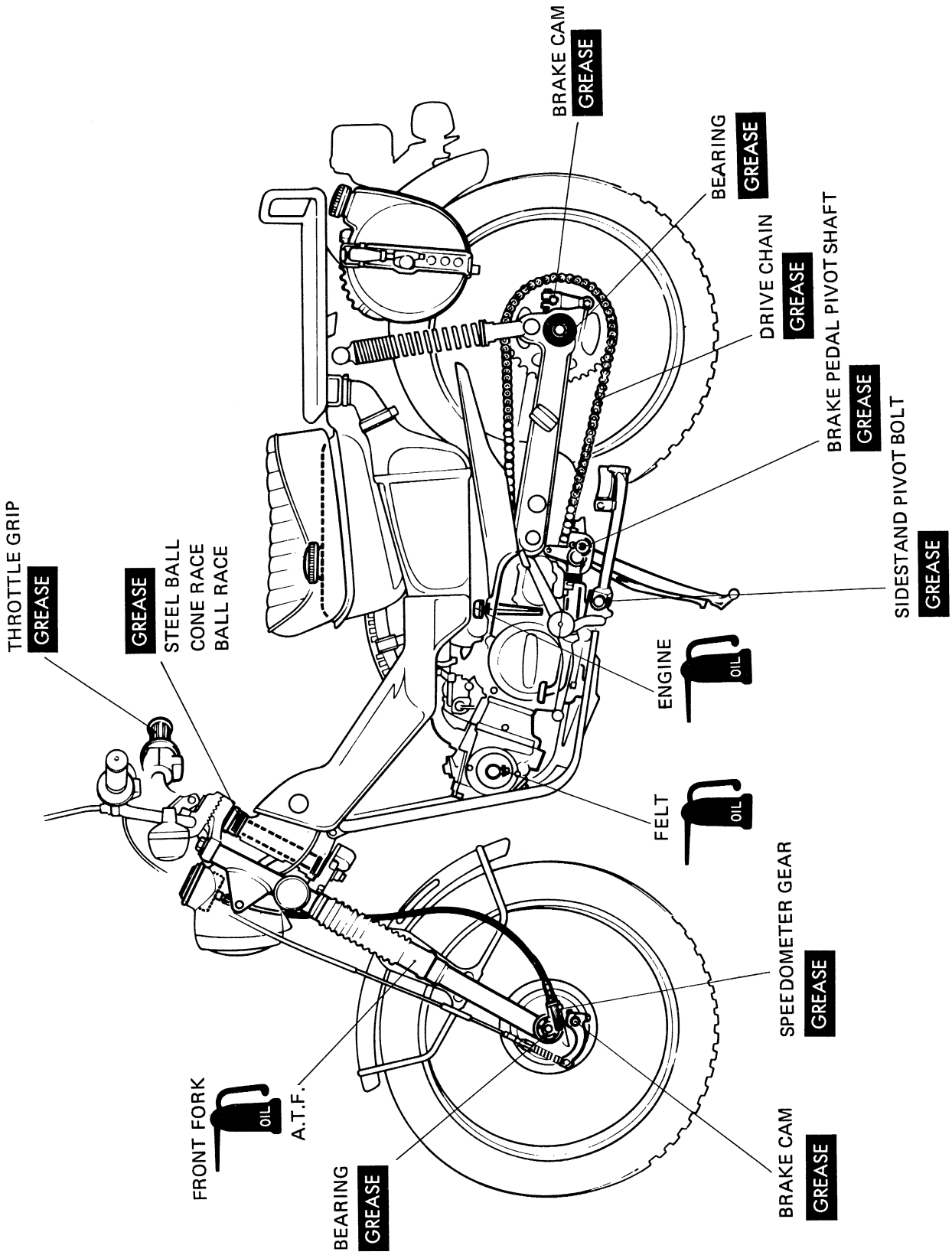

© HONDA MOTOR CO., LTD.

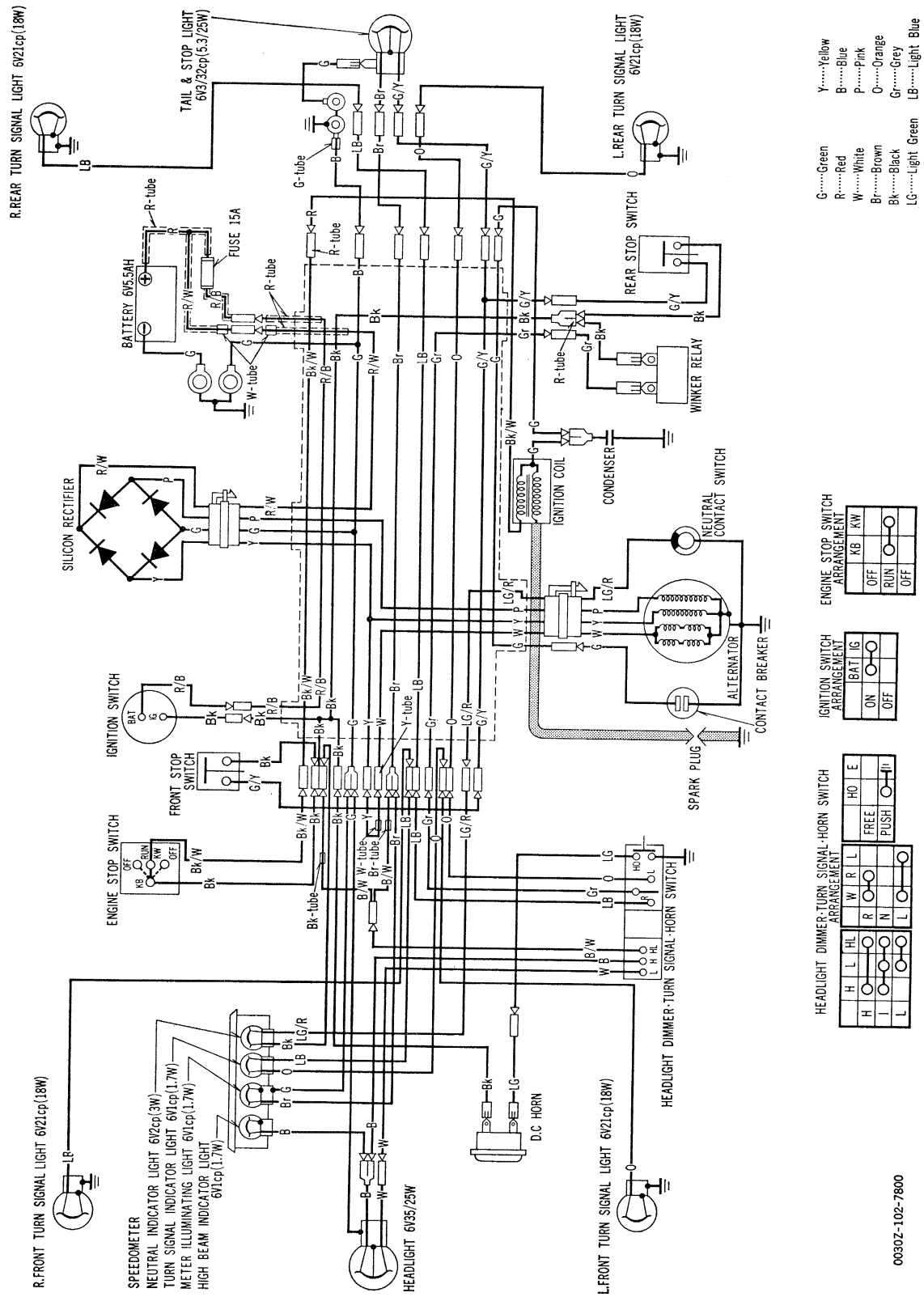

Date of Issue: Oct., 1977
© HONDA MOTOR CO., LTD.

6. TROUBLE SHOOTING CHART

A. ENGINE WILL NOT START (OR HARD STARTING)

	RESULT	CHECK OR ADJUSTMENT	POSSIBLE CAUSE
1	Gasoline reaches carburetor / Gasoline does not reach carburetor	Check if gasoline reaches carburetor by turning drain plug (NOTE) Use a container to receive the drained gasoline	(1) Lack of fuel in fuel tank (2) Clogged fuel line between fuel tank and carburetor (3) Clogged fuel cock (4) Clogged fuel tank cap breather hole
2	Spark occurs / No spark occurs Weak spark	Remove spark plug and try spark test	(1) Faulty spark plug (2) Fouled spark plug (3) Fouled, burnt or pitted contact breaker points (4) Improper breaker point gap (5) Faulty condenser (6) Broken or shorted high tension cord (7) Open or shorted ignition coil (8) Faulty ignition switch (9) Improper ignition timing
3	• Compression normal / Compression leak or no compression	Test cylinder compression	(1) Engine not cranked (clutch slipping) (2) No valve clearance (3) Valve stuck open (4) Worn cylinder and piston rings (5) Blown cylinder head gasket (6) Flaw in cylinder head (7) Improper valve timing
4	Engine misses / Engine fires but does not start	Start engine	(1) Choke valve excessively open (2) Carburetor air screw opened excessively (3) Air leaking through intake manifold (4) Improper ignition timing
5	Spark plug not wet / Spark plug wet	Remove spark plug	(1) Flooded carburetor (2) Choke valve closed excessively (3) Throttle valve opened excessively
		Start engine with choke valve closed	

© HONDA MOTOR CO., LTD.

B. ENGINE LACKS POWER (AUX. TRANSMISSION OPERATES PROPERLY)

	RESULT		CHECK OR ADJUSTMENT	POSSIBLE CAUSE
1	Wheels spin freely	Wheels spin sluggishly	Raise wheels off ground and spin by hand	(1) Brake dragging (2) Faulty wheel bearing (3) Drive chain too tight (4) Over tightened axle nut
2	Proper tire pressure	Improper tire pressure	Check tire pressure	(1) Tire punctured (2) Faulty tire valve
3	Accelerated	Not accelerated (with engine speed raised)	Try rapid acceleration from low to second with stepping on change pedal.	(1) Clutch slipping (2) Worn clutch discs (3) Clutch plate uneven (4) Worn clutch weight (5) Clutch spring weakened
4	Engine speed increased	Engine speed not increased	Rev up gradually	(1) Carburetor choked (2) Air cleaner clogged (3) Clogged fuel line (4) Clogged breather hole in fuel tank cap (5) Clogged muffler
5	Ignition timing correct	Improper ignition timing	(Test ride on paved road) Check ignition timing	(1) Ignition timing improper
6	Tappet clearance correct	Improper tappet clearance	Check tappet clearance	(1) Improper valve clearance (2) Worn valve seat (valve not seating on valve seat)
7	Compression normal	Loss of compression	Test cylinder compression (with compression gauge)	(1) Valve stuck open (2) Worn cylinder and piston rings (3) Blown cylinder head gasket (4) Improper valve timing

Date of Issue: Oct., 1977
© HONDA MOTOR CO., LTD.

TROUBLESHOOTING CHART

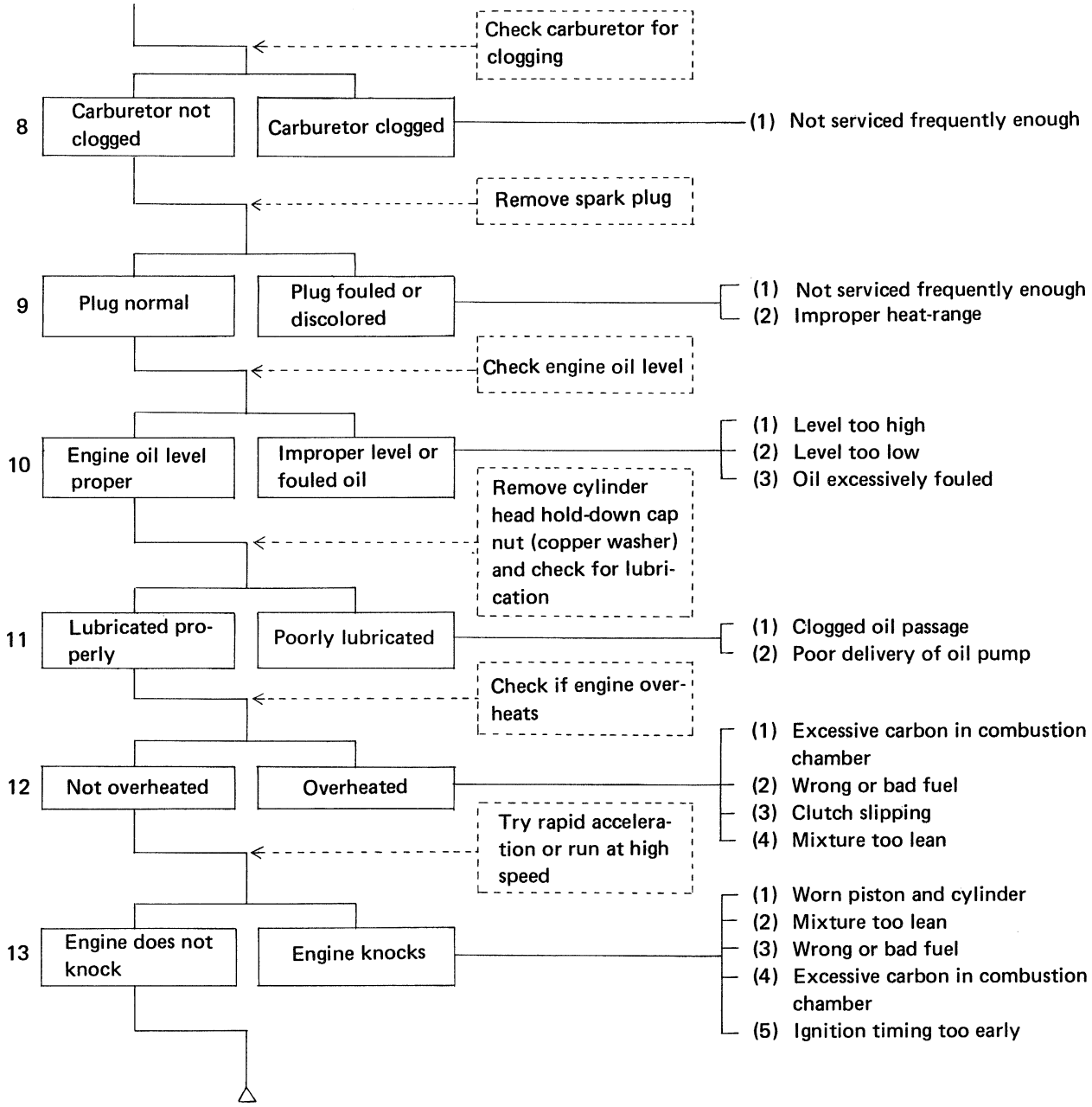

© HONDA MOTOR CO., LTD.

C. ROUGH IDLE OR POOR LOW SPEED PERFORMANCE (CARBURETOR IS CORRECTLY JETTED FOR LOCAL ALTITUDE.)

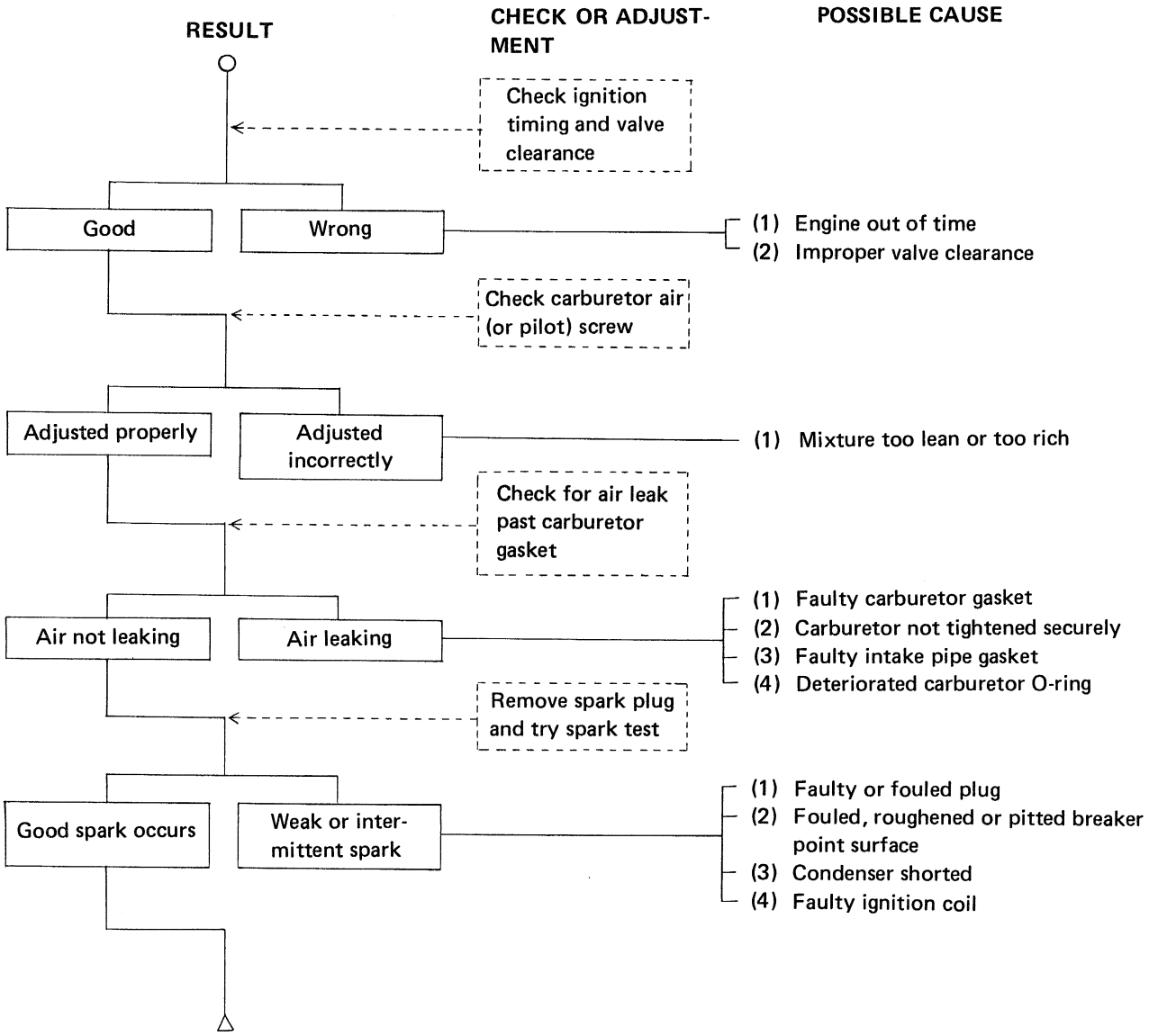

Date of Issue: Oct., 1977
© HONDA MOTOR CO., LTD.

D. ENGINE LACKS HIGH SPEED PERFORMANCE

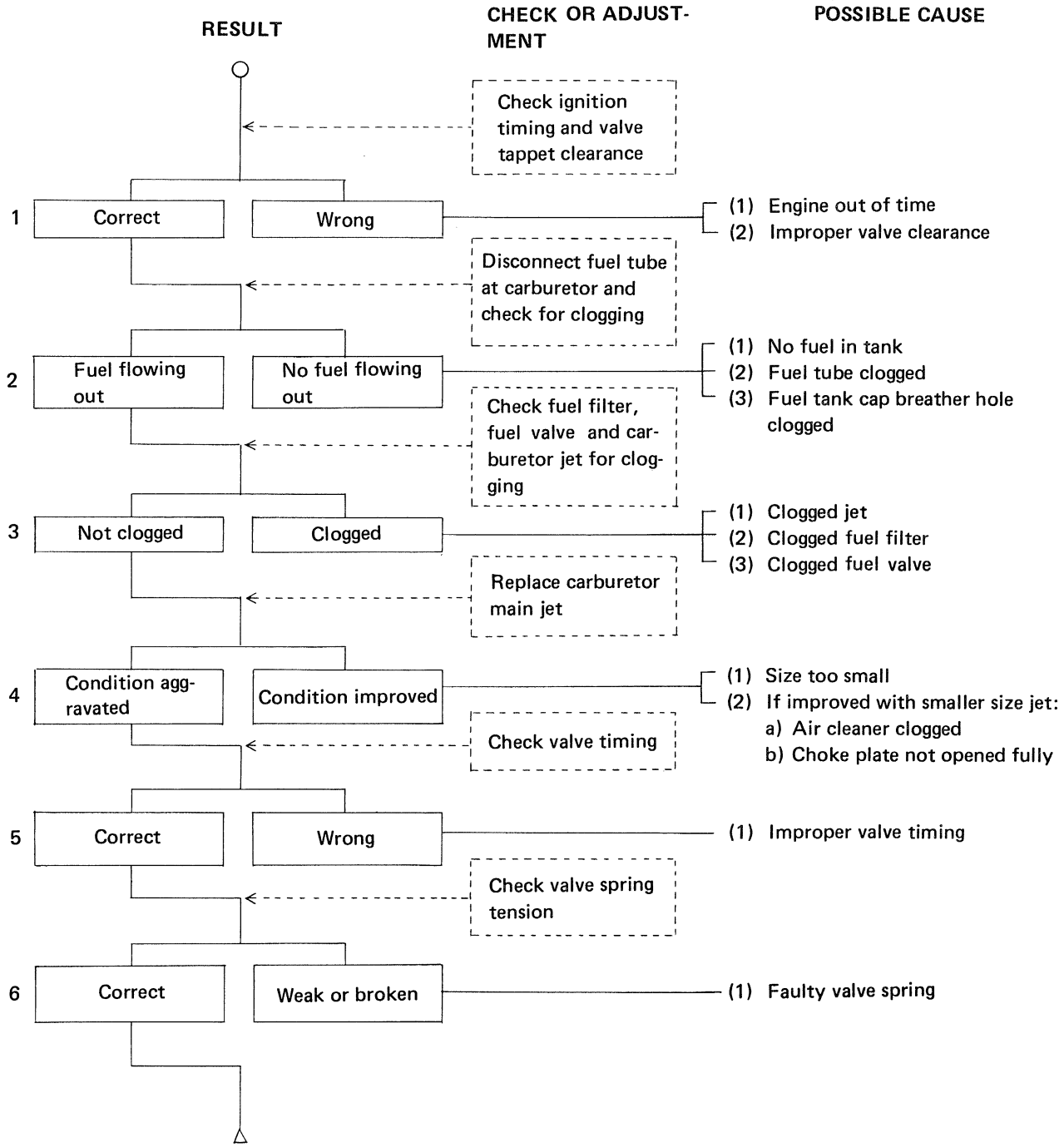

© HONDA MOTOR CO., LTD.

E. SMOKY EXHAUST

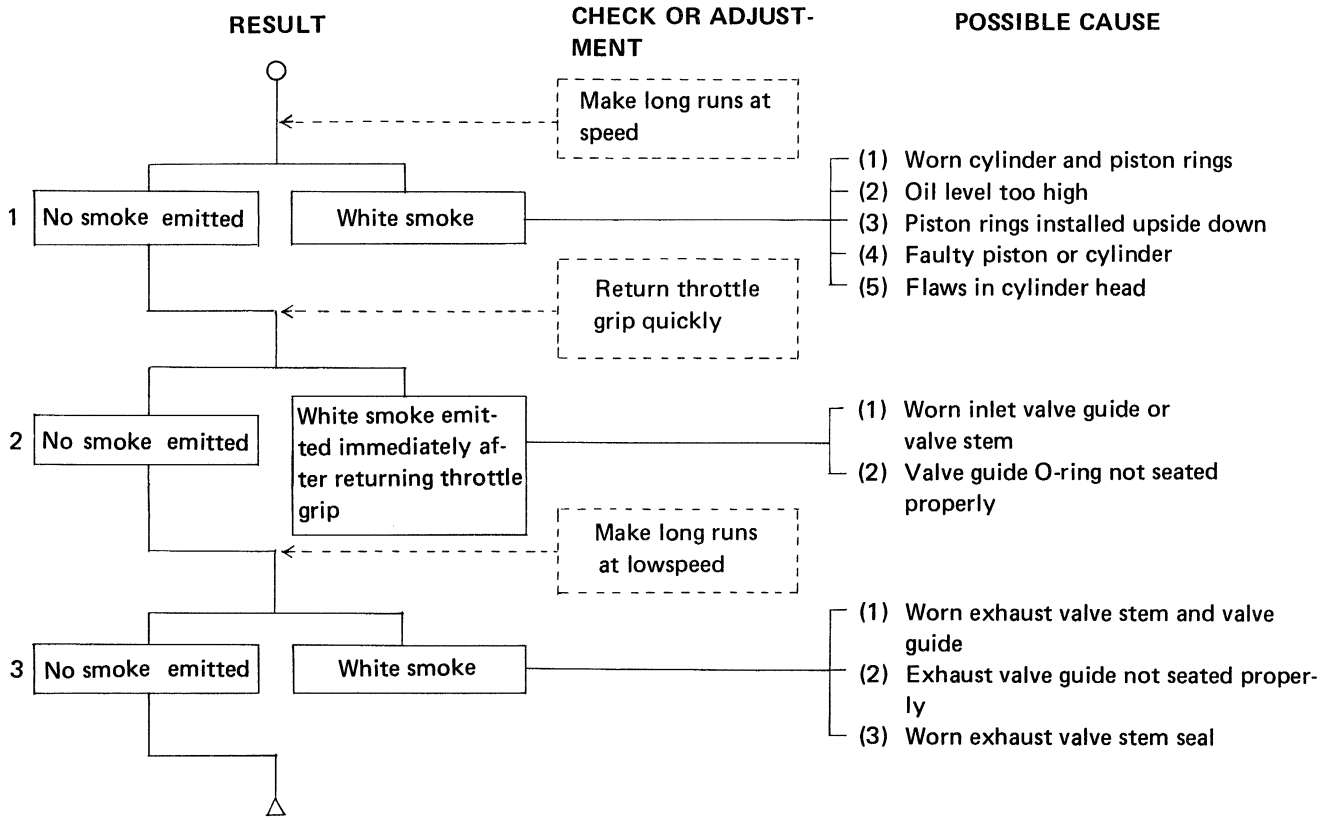

F. DEFECTIVE CLUTCH

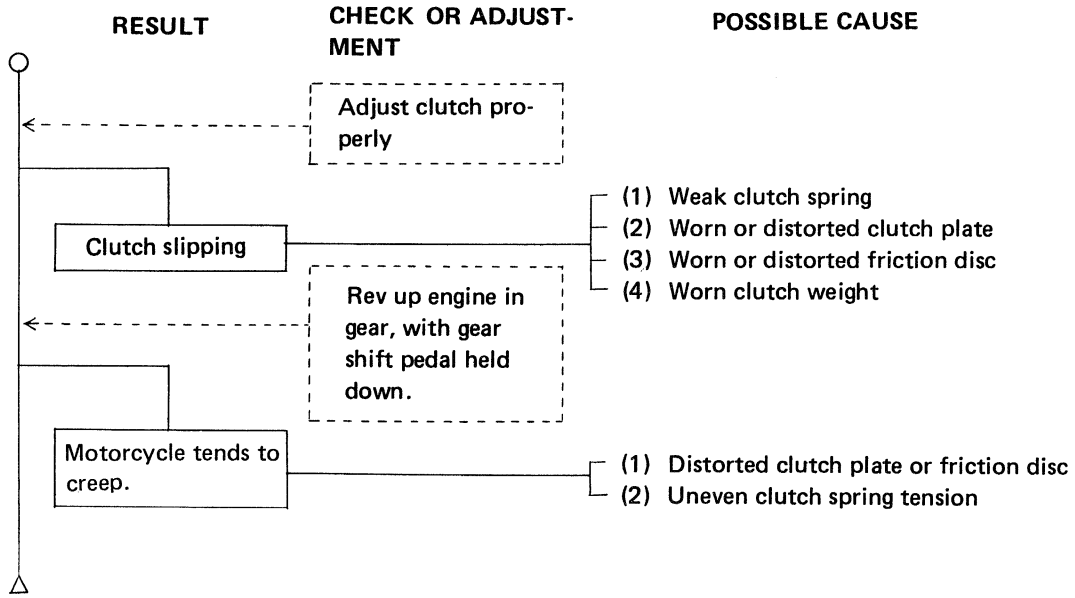

Date of Issue: Oct., 1977
© HONDA MOTOR CO., LTD.

G. HARD SHIFTING

COMPLAINT	POSSIBLE CAUSE
(Clutch is normal)	
Hard shifting	(1) Gearshift arm spring broken (2) Shift fork broken (3) Sluggish movement of shift drum and shift fork (4) Transmission gear dog chipped or broken (5) Shift arm pawl coming out of shift drum pin (6) Improper setting stopper plate and stopper
Pedal not returned to neutral	(1) Broken shift return spring (2) Shift shaft interferring with case or cover
Gears jumping out of position during operation	(1) Worn or broken shift fork guide pin (2) Bent or worn shift fork (3) Broken or weakened shift drum stopper spring

H. ENGINE NOISE

COMPLAINT	POSSIBLE CAUSE
Tappet noise	(1) Excessive valve clearance (2) Worn tappet
Piston slap	(1) Worn piston and cylinder (2) Excessive carbon in combustion chamber (3) Worn piston pin and connecting rod small end
Cam chain noise	(1) Worn camshaft bearing (2) Worn camshaft sprocket teeth (3) Excessively elongated cam chain
Clutch noise	(1) Excessive backlash between clutch plate and clutch outer (2) Weakened clutch spring
Drive and driven gear noise	(1) Worn or deteriorated driven gear damper (2) Worn gear teeth

© HONDA MOTOR CO., LTD.

I. MOTORCYCLE PULLED TO ONE SIDE

COMPLAINT	POSSIBLE CAUSE
(Front and rear tire pressures are normal)	
Hard steering in both directions	(1) Steering head top thread nut excessively tightened (2) Broken steering steel balls (3) Bent steering stem
Wheel wobbling	(1) Excessive play in wheel bearing (2) Distorted wheel rim (3) Loose spokes (4) Twisted frame (5) Drive chain adjuster not adjusted equally
Motorcycle tends to be pulled only to one side	(1) Unbalanced front and rear shock absorbers (2) Front and rear wheels out of line (3) Bent front fork (4) Bent rear fork

J. FAULTY FRONT AND REAR SHOCK ABSORBERS

COMPLAINT	POSSIBLE CAUSE
(Front and rear tires properly inflated)	
Soft ride	(1) Weakened spring (2) Excessive load (3) Lack of oil in front fork (4) Oil leak
Hard ride	(1) Faulty front fork (2) Faulty rear shock absorber (3) Excessive oil in front fork
Noise in suspension	(1) Lack of oil in front fork (2) Faulty shock absorber stopper rubber (3) Lack of oil in shock absorber

Date of Issue: Oct., 1977
© HONDA MOTOR CO., LTD.

K. FAULTY BRAKE

COMPLAINT	POSSIBLE CAUSE
(Brakes are properly adjusted)	
Adjuster no longer effective	(1) Worn brake lining (2) Worn brake shoe cam (3) Worn brake cam (4) Worn brake drum
Squeaking	(1) Worn brake shoe (2) Foreign particles on brake lining (3) Roughened brake drum shoe contacting face (4) Worn brake panel bushing
Ineffective brake	(1) Front brake cable out of order (2) Brake shoe has poor contact with drum (3) Mud or water in brake (4) Oil or grease getting on brake lining

L. PREMATURE ELONGATION OF DRIVE CHAIN

COMPLAINT	POSSIBLE CAUSE
Premature elongation of drive chain	(1) Improper adjustment (2) Lack of lubricant (3) Worn sprocket

© HONDA MOTOR CO., LTD.

1977 (K8) model

This maintenance schedule is based upon average riding conditions.
Machines subjected to severe use, or ridden in unusually dusty areas, require more frequent servicing.

		INITIAL SERVICE PERIOD	REGULAR SERVICE PERIOD Perform at every indicated month or mileage interval, whichever occurs first.			
	Month	–	1	3	6	12
	Mile	500	500	1,500	3,000	6,000
	Km	1,000	1,000	2,500	5,000	10,000
ENGINE OIL		R		R		
CENTRIFUGAL OIL FILTER						C
OIL FILTER SCREEN						C
SPARK PLUG					I	
CONTACT BREAKER POINT		I			I	
IGNITION TIMING		I			I	
VALVE CLEARANCE		I			I	
CAM CHAIN TENSION		I			I	
POLYURETHANE FOAM AIR FILTER ELEMENT		(service more frequently if operated in dusty areas.)		C		
CARBURETOR		I			I	
THROTTLE OPERATION		I			I	
FUEL FILTER SCREEN		I			I	
FUEL LINES					C	
CLUTCH		I			I	
DRIVE CHAIN		** I & L	I & L			
BRAKE SHOES					I	
BRAKE CONTROL LINKAGE		I			I	
WHEEL RIMS		I			I	
TIRES		I	I			
FRONT FORK OIL		*** R				
FRONT AND REAR SUSPENSION		I			I	
REAR FORK BUSHING					I	
STEERING HEAD BEARINGS						I
SIDE STAND					I	
BATTERY		I		I		
LIGHTING EQUIPMENT		I	I			
NUTS, BOLTS (TIGHTEN)		I	I			

I– Inspection, clean, adjust or replace if necessary. R–Replace C–Clean L–Lubricate
Initial service period 200 miles. * Initial service period 1,500 miles.

Date of Issue. Oct., 1977
© HONDA MOTOR CO., LTD.

MAINTENANCE SCHEDULE

1978 (K9) model

FREQUENCY / ITEM	WHICHEVER → COMES FIRST ↓ EVERY	ODOMETER READING [NOTE (2)] 600 mi. (1000km)	2400 mi. (4000km)	4800 mi. (8000km)	7200 mi. (12000km)
ENGINE OIL	YEAR	R	REPLACE EVERY 1200mi. (2000km)		
* ENGINE OIL FILTER ROTOR				C	
* ENGINE OIL FILTER SCREEN				C	
AIR CLEANER	NOTE (1)		C	C	C
* FUEL LINES			I	I	I
SPARK PLUG			I	I	R
* VALVE CLEARANCE		I	I	I	I
* CONTACT BREAKER POINTS		I	I	I	I
* IGNITION TIMING		I	I	I	I
* CAM CHAIN TENSION		A	A	A	A
* THROTTLE OPERATION		I	I	I	I
* CARBURETOR IDLE SPEED		I	I	I	I
* CARBURETOR CHOKE			I	I	I
DRIVE CHAIN	NOTE (3)		INSPECT EVERY 600mi. (1000 km)		
BATTERY ELECTROLYTE	MONTH	I	I	I	I
BRAKE SHOE WEAR			I	I	I
BRAKE FREE PLAY		I	I	I	I
* BRAKE LIGHT SWITCH		I	I	I	I
* HEADLIGHT AIM		I	I	I	I
SIDE STAND			I	I	I
CLUTCH		I	I	I	I
* SUSPENSION		I	I	I	I
* SPARK ARRESTOR			C	C	C
* NUTS, BOLTS, FASTENERS		I	I	I	I
** WHEELS/SPOKES		I	I	I	I
** STEERING HEAD BEARING		I			I

I: INSPECTION, CLEAN, ADJUST, OR REPLACE IF NECESSARY.

C: CLEAN

R: REPLACE

A: ADJUST

** IN THE INTEREST OF SAFETY, WE RECOMMEND THESE ITEMS BE SERVICED ONLY BY AN AUTHORIZED HONDA DEALER.

* SHOULD BE SERVICE BY AN AUTHORIZED HONDA DEALER, UNLESS THE OWNER HAS PROPER TOOLS AND SERVICE DATA AND IS MECHANICALLY QUALIFIED.

NOTES (1) More frequent service may be required when riding in dusty areas.

(2) For higher odometer readings, repeat at the frequency interval established here.

(3) Initial service period 200 miles.

© HONDA MOTOR CO., LTD.

• CONTACT BREAKER POINT GAP

INSPECTION

• Remove the point and generator covers.

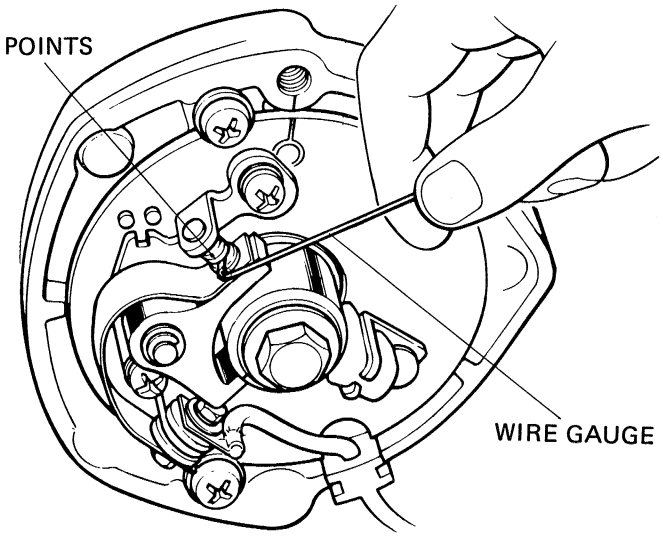

ADJUSTMENT

NOTE

Contact breaker point gap must be adjusted before the ignition timing adjustment is performed.

POINT GAP

0.3-0.4 mm (0.012-0.16 in.)

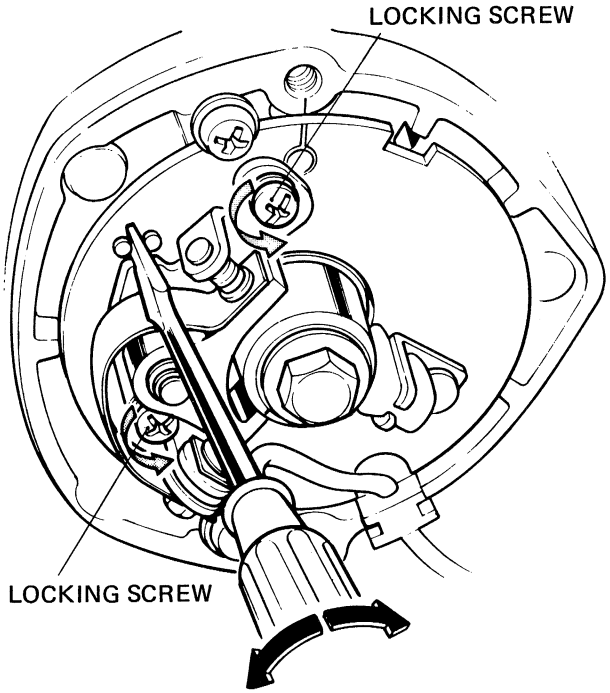

(1) Rotate the A.C. generator counterlockwise to find the position where the point gap is at maximum.
(2) Check the point gap with wire gauge.

POINT GAP

0.3-0.4 mm (0.012-0.016 in.)

• When adjustment is necessary, observe the following:

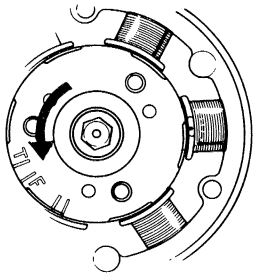

(1) Rotate the A. C. generator rotor counterclockwise to find the position where the point gap is at maximum.
(2) Loosen the contact breaker plate locking screws and move the contact breaker plate to achieve correct gap.
(3) When properly adjusted, retighten the locking screws.

NOTE

Do not allow the plate to move when tightening the locking screws.

(4) Rotate the A.C. generator rotor several times and recheck the breaker point gap. If the gap is incorrect, repeat the steps (1) thru (4) above.

Date of Issue: Oct., 1977
© HONDA MOTOR CO., LTD.

• IGNITION TIMING

Do not perform this operation until point gap has been adjusted.

Static test (with a use of test lamp)

CAUTION

Use caution when adjusting the timing not to touch the points with a screwdriver.

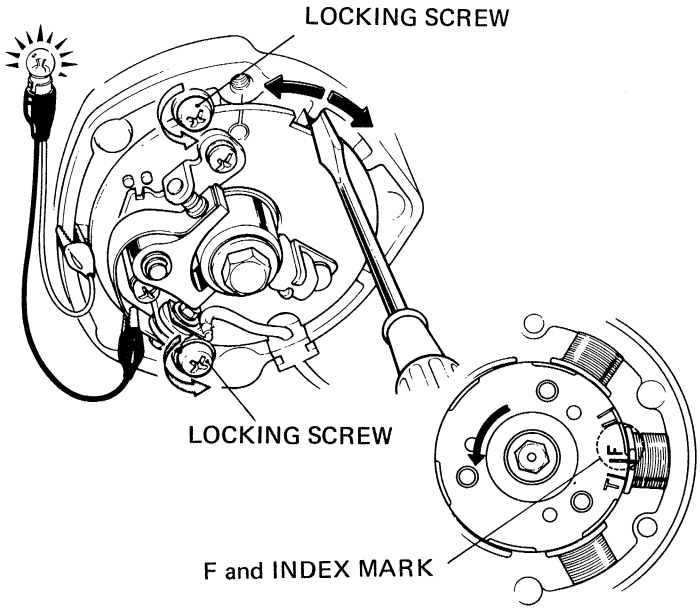

(1) Remove the point and generator covers.
(2) Turn on the ignition switch.
(3) Rotate the A.C. generator rotor slowly in the counterclockwise direction.
(4) Align the "F" mark on the rotor with the index mark on the stator on compression stroke.
(5) The contact breaker points should just start to open when both marks align (the timing light should come on). If the timing of the breaker point opening is incorrect, adjustment is made by loosening the base plate locking screws and carefully rotating the base plate until the light comes on.

TO ADVANCE TIMING. . . .	Rotate the base plate clockwise.
TO RETARD TIMING.	Rotate the base plate counterclockwise.

(6) Retighten the base plate locking screws securely, exercising care not to allow the base plate to move.
(7) Rotate the A.C. generator rotor several times and recheck the timing. If the moment of point opening is incorrect, repeat the steps (3) thru (7) above.

Dynamic test (with a use of stroboscopic light)

Make the connections as described in the booklet furnished with the service tester.

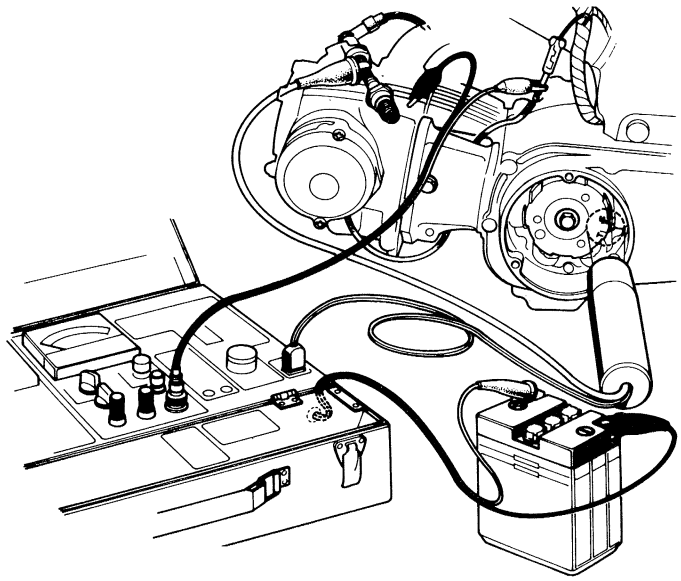

Idling: 1300 rpm
"F" MARK ALIGNED WITH INDEX MARK

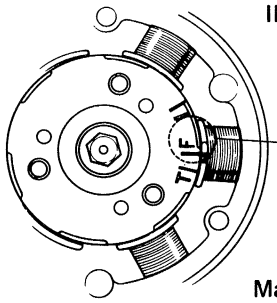

Max. Advance: 2600 rpm
"ADVANCE" MARKS ALIGNED WITH INDEX MARK

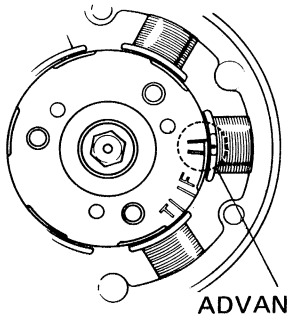

© HONDA MOTOR CO., LTD.

• SPARK PLUG

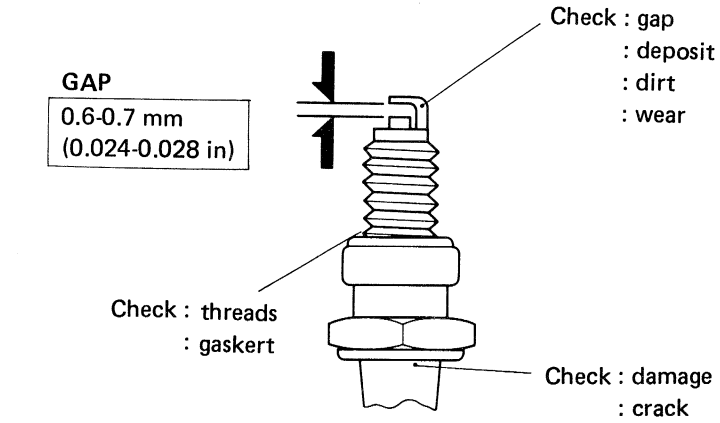

To clean use a plug cleaner or steel wire.

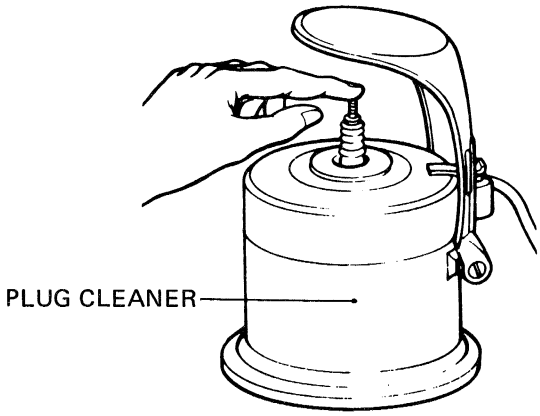

To install, first thighten finger tight, then tighten with a spark plug wrench to compress the washer.

• VALVE CLEARANCE

Valve tappet clearance inspection and adjustment should be performed while the engine is cold.

(1) Remove the tappet hole caps and generator cover.

VALVE CLEARANCE (IN, EX)

0.05 ±0.02 mm (0.002 ±0.0008 in.)

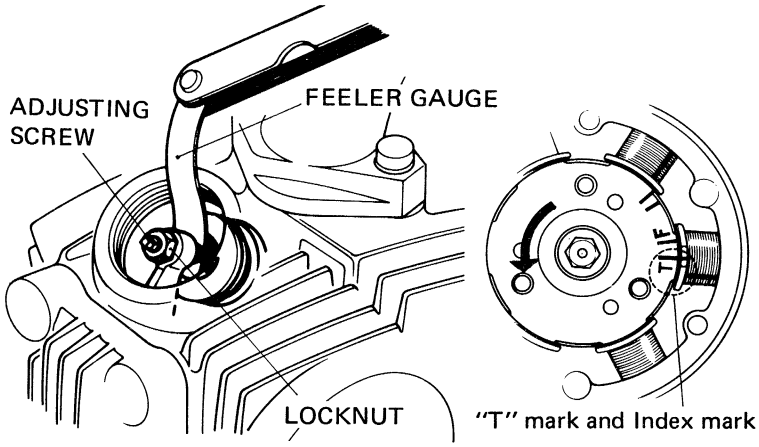

(2) Rotate the A.C. generator rotor in the counterclockwise direction and align the "T" mark on the rotor with the index mark on the stator.

Perform this operation with the cylinder at T.D.C. (top-dead-center) of the compression stroke. In this position, the intake and exhaust valves should be fully closed.

(3) Check the clearance of both valves by inserting a feeler gauge between the tappet adjusting screw and the valve stem.

(4) Adjustment is made by loosening the tappet screw lock nut and turning the adjusting screw until there is a slight drag on the feeler gauge.

TAPPET ADJUSTING WRENCH
NO. 07908-0010000

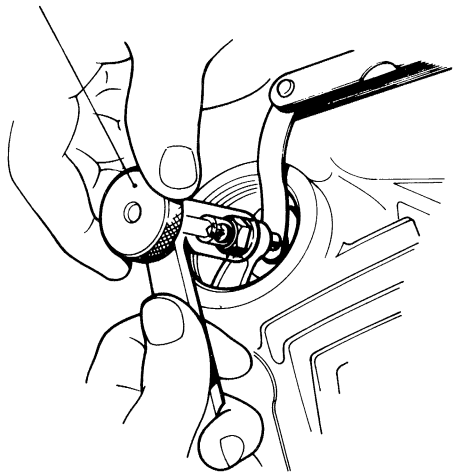

Hold the adjusting screw while the lock nut is being tightened.

(5) Rotate the A.C. generator rotor several times and recheck the clearance with the feeler gauge.

Date of Issue: Oct., 1977
© HONDA MOTOR CO., LTD.

• IDLE SPEED AND MIXTURE

Perform this operation while the engine is hot.

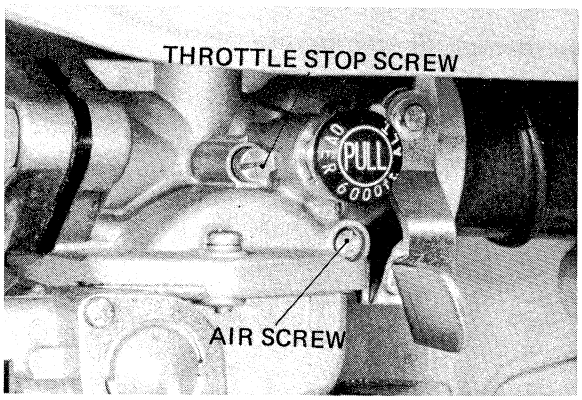

(1) With engine running at operating temperature, turn the throttle stop screw counterclockwise to obtain the lowest stable idle speed possible.

(2) Turn the air screw (pilot screw on 1978 (K9 model) in either direction to find the setting that produces the highest idle speed obtainable without readjusting the throttle stop screw.

NOTE: If air/pilot screw adjustment causes idle speed to increase beyond 1300 rpm, turn the throttle stop screw farther counterclockwise to lower the idle speed and repeat step 2.

(3) After air/pilot screw adjustment has been completed, adjust the throttle stop screw to achieve the specified idle speed of 1300 rpm. Open and close the throttle a few times to verify proper throttle response, prompt return to idle, and stable idle speed.

IDLE SPEED	1300 rpm

STANDARD AIR SCREW OPENING	1 turn 1977(k8) model

STANDARD PILOT SCREW OPENING	1¼ turn 1978(k9) model

• THROTTLE CABLE

(1) Minor adjustment is made with the upper adjuster.

(2) Major adjustment is made with the lower adjuster.

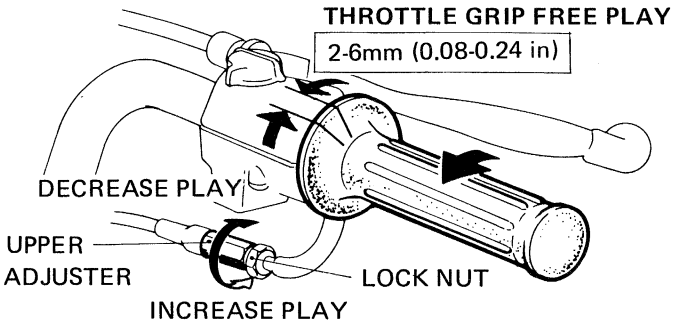

- If adjustment is to be made with the lower adjuster, loosen the upper adjuster.
- Make sure the rubber cap is tightened securely.

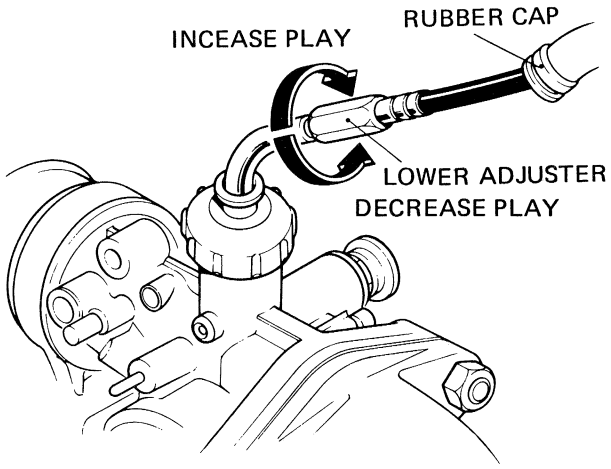

Replace the throttle cable if both adjustments are no longer effective.

© HONDA MOTOR CO., LTD.

• CAM CHAIN TENSIONER

Perform this adjustment while the engine is idling.

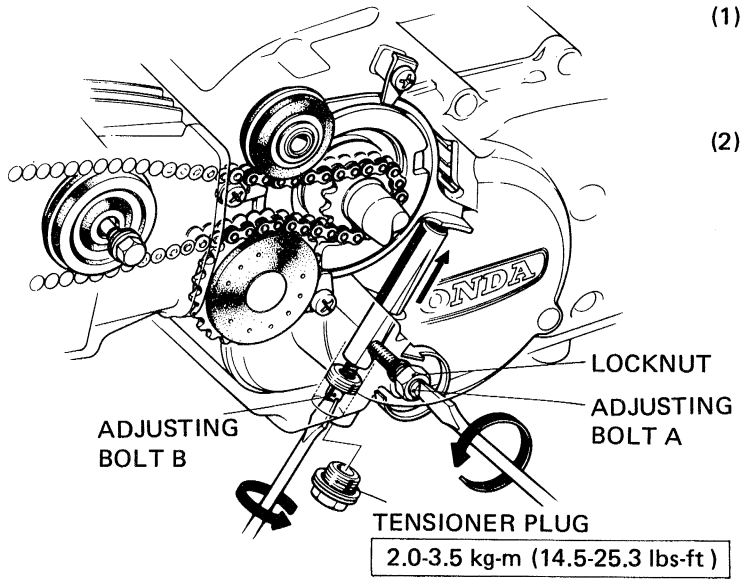

(1) Loosen the lock nut and loosen the adjusting bolt A approximately 1½ turn. At this, the chain should be automatically adjusted by force of the tensioner springs.
(2) If the chain is still noisy, remove the tensioner plug and screw in the adjusting bolt B gradually until the cam chain is no longer noisy.
After completing adjustment tighten the adjusting bolt A, lock nut and plug.

• AIR CLEANER CLEANING

WARNING

Gasoline or low flash point solvents are highly flammable and must not be used to clean the air cleaner element.

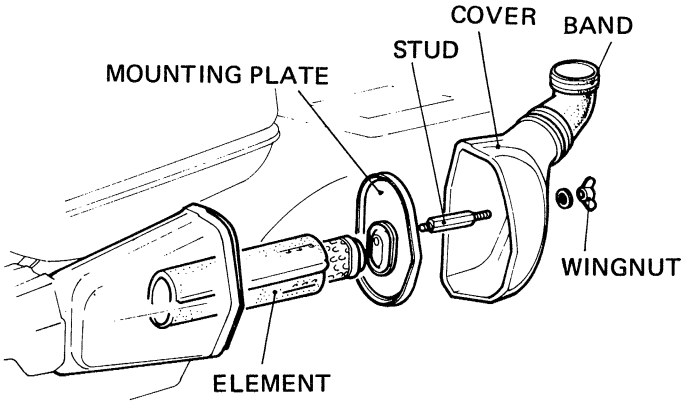

(1) Remove the wing nut and loosen the band, and remove the cover and band.
(2) Remove the stud and mounting plate.
(3) Pull out the air cleaner element.

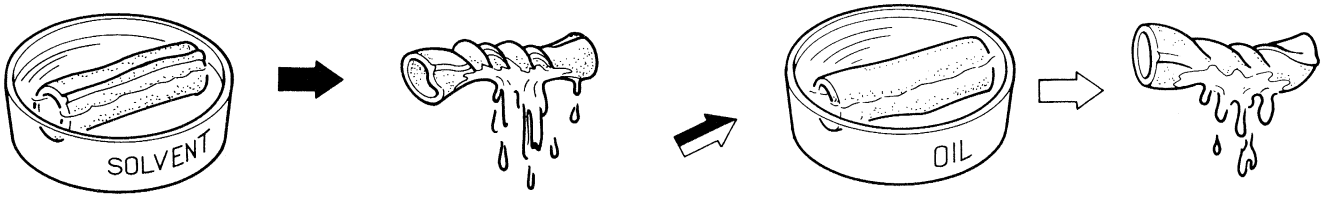

(4) WASH IN CLEAN SOLVENT
(5) WAING OUT AND ALLOW TO DRY
(6) SOAK IN GEAR OIL SAE # 80~90
(7) SQUEEZE OUT EXCESSIVE OIL

Date of Issue: Oct., 1977
© HONDA MOTOR CO., LTD.

• OIL FILTER CLEANING

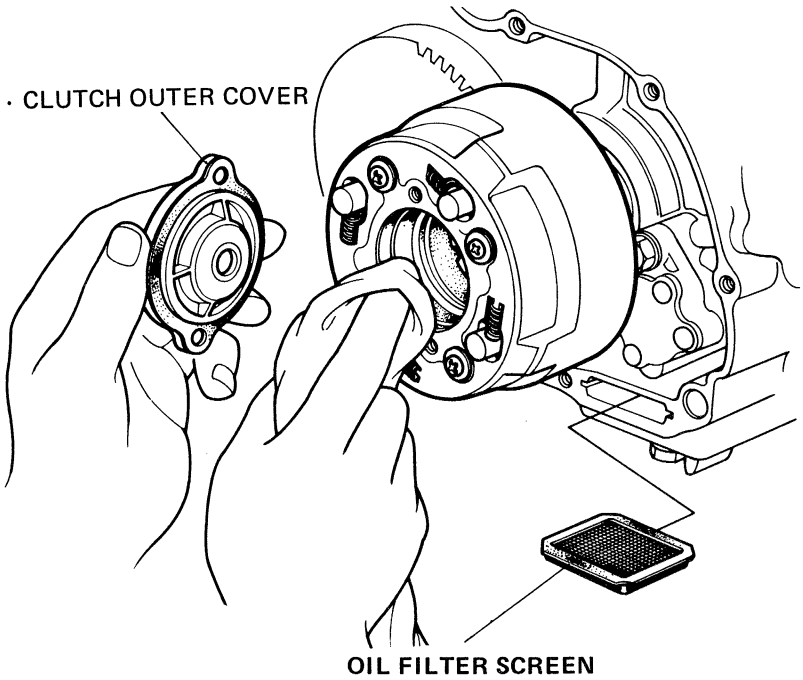

(1) Drain engine oil.
(2) Remove the kick pedal and right crankcase cover.
(3) Remove the clutch outer cover and clean the filter chamber with lintfree cloth.
(4) To clean the oil filter screen, pull the screen out, and wash in clean solvent.

• FUEL FILTER CLEANING

WARNING

Fuel is inflammable.

(1) Turn the fuel valve to the "OFF" position.
(2) Drain fuel from the carburetor by removing the drain screw.

Use a container to receive the drained fuel.

After assembly, turn the FUEL valve to "ON" and check for leaks.

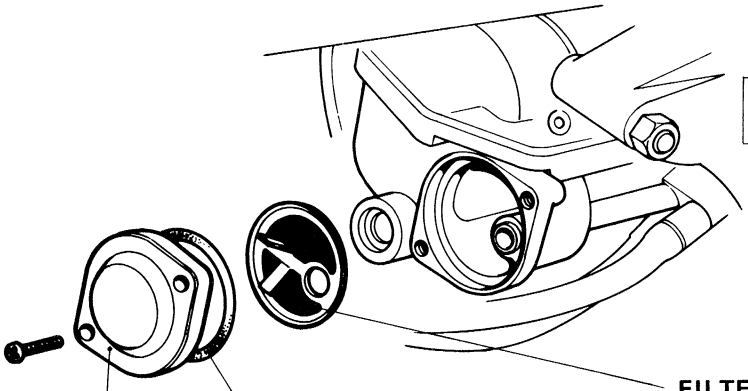

Replace whenever disassembled.

FILTER SCREEN

Wash in clean solvent or blow off dust and dirt with compressed air.

© HONDA MOTOR CO., LTD.

• ENGINE OIL

· Oil Level

(1) Operate engine for approximately a few minutes.
(2) Stop the engine, place the motorcycle on the center stand.
(3) Check the oil level with the filler cap dipstick
(4) To check the oil level, insert the dipstick, but do not screw in. Oil level must be between the upper and lower level marks.
(5) If the level is low, fill with recommended grade oil to the upper level mark on the gauge. Drain the oil and pour fresh oil if the oil is contaminated.

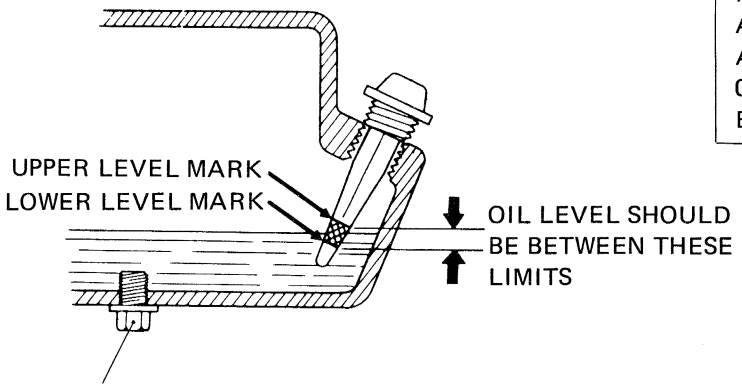

DRAIN PLUG

2.0-3.5 kg-m (14.5-25.3 lbs-ft)

OIL CAPACITY

0.9 lit. (0.95 US qt; 0.80 Imp. qt)

· Oil Change

(1) Remove the drain plug to drain oil from the engine.
(2) Operate the kick starter pedal several times to drain all residual oil remaining in the crankcase.
(3) Reinstall the drain plug and refill with fresh oil to the upper level mark.
(4) Recheck the oil level.

OIL SPECIFICATION

Use Honda 4-stroke oil or equivalent.	
API service classification – SE	
All temp. – SAE 10 – 40	
Above 15° C (59° F)	SAE 30
0° C (32° F)-15° C (59° F)	SAE 20 or SAE 20W
Below 0° C (32° F)	SAE 10W

• CLUTCH

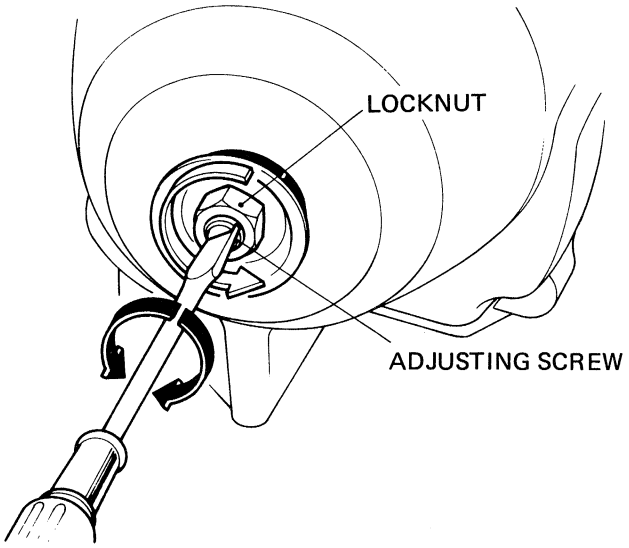

(1) The clutch is adjusted with the engine off. Remove the cover protector and loosen the adjuster lock nut.
(2) Turn the clutch adjusting screw clockwise about one turn; do not turn excessively.
(3) Next, slowly turn the screw counterclockwise and stop when the screw meets resistance.
(4) From this point, turn the adjusting screw clockwise 1/8 to 1/4 turn, and tighten the lock nut.

- Don't turn out the adjusting screw more than necessary.
- Hold the adjusting screw while tightening the lock nut.

(5) Check the operation of the clutch.

NOTE

- After the adjustment has been made, check to see that the engine starts easily and that the clutch is not slipping and is properly disengaging.
- Make sure that the engine will not stall or lunge when the gears are shifted.

Date of Issue: Oct., 1977
© HONDA MOTOR CO., LTD.

• CYLINDER COMPRESSION

Engine should be warmed up

(1) Turn the choke lever to the fully open position.

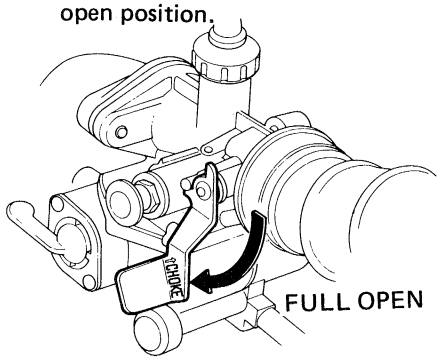

(2) Turn the throttle to the fully open position.

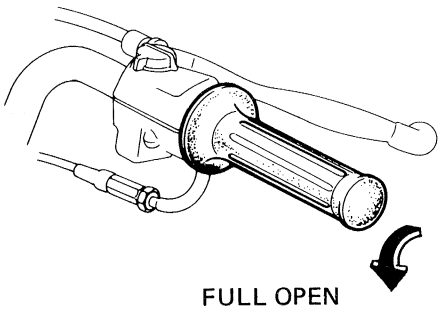

Pressure

10-12 kg/cm^2 (142-170 psi)

■ **Low compression is due to the following causes:**

- Leaking valve
- Faulty piston rings, piston and cylinder
- Blown cylinder head gasket
- Insufficient valve clearance.

■ Unusually high compression is due to excessive carbon deposits on the combustion chamber or on the piston head.

● Engine must be disassembled for complete inspection or repair in these cases.

NOTE

To avoid leaks, screw gauge adapter into spark plug hole securely.

(3) Kich several times

Kick with rapid, full strokes until gauge needle reaches the highest reading.

© HONDA MOTOR CO., LTD.

- **FRONT BRAKE**

FREE PLAY

20-30 mm (0.8-1.2 in)

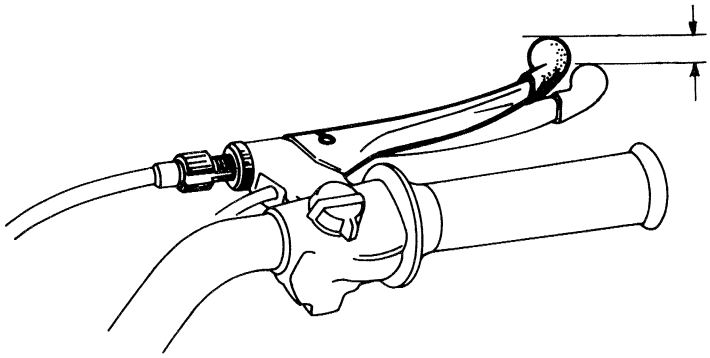

(1) Perform major free play adjustments at the front wheel. Loosen the lock nut and turn the adjusting nut to increase or decrease brake lever free play.
(2) Perform minor free play adjustments at the handlebar. Loosen the lock nut and turn the adjuster to increase or decrease brake lever free play.

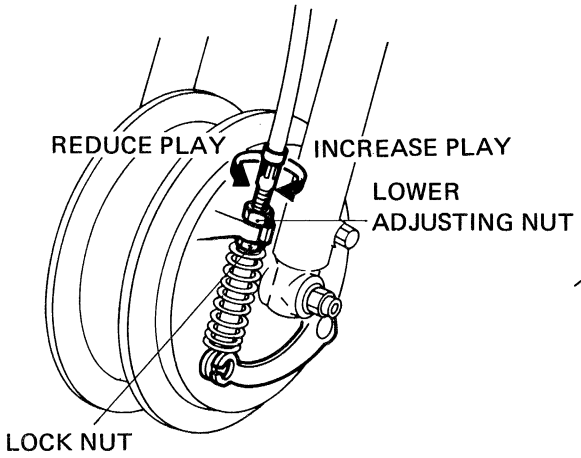

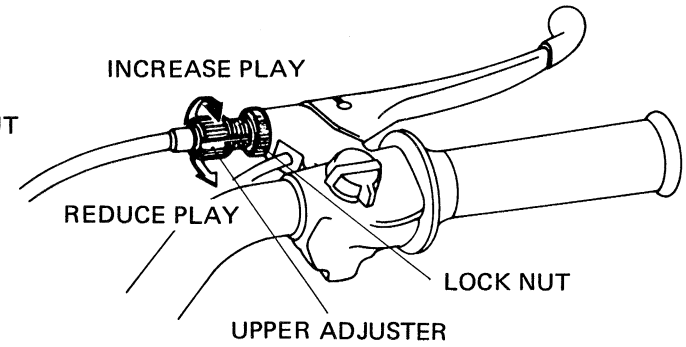

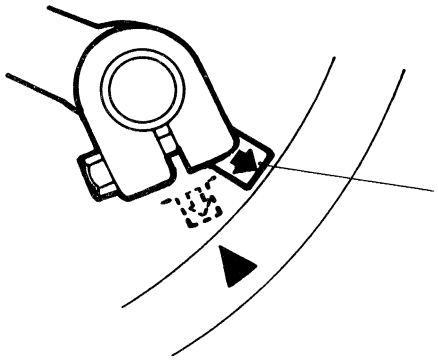

If the " ⬆ " mark on the indicator aligns with the "▲" mark on the brake panel at full application of the brake, replace the brake shoes.

Date of Issue: Oct., 1977
© HONDA MOTOR CO., LTD.

- **REAR BRAKE**

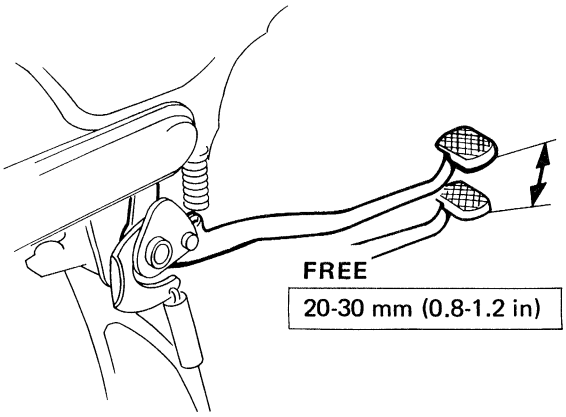

Adjust rear brake pedal free play by turning the adjusting nut which is located at the rear wheel.

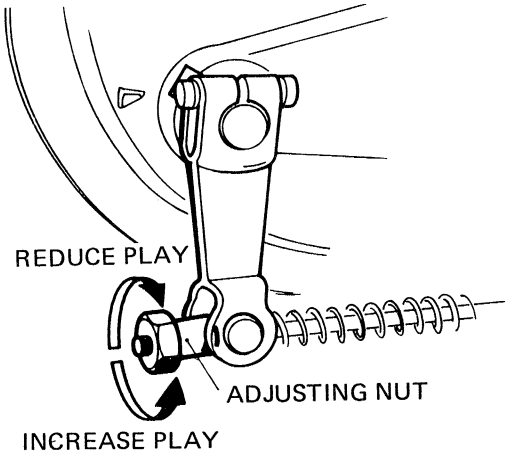

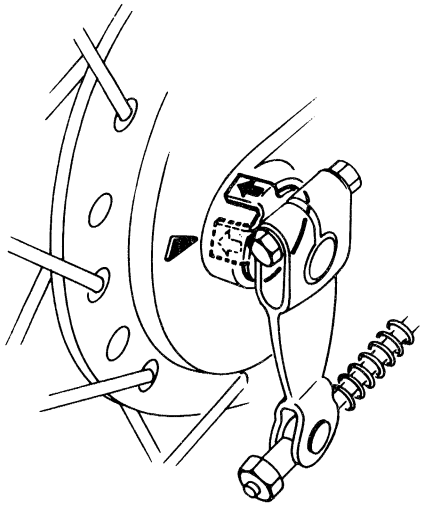

WEAR INDICATOR

If the " ⬆ " mark on the indicator aligns with the " ▲ " mark on the brake panel at full application of brake, replace the brake shoes.

- **REAR BRAKE STOPLIGHT SWITCH**

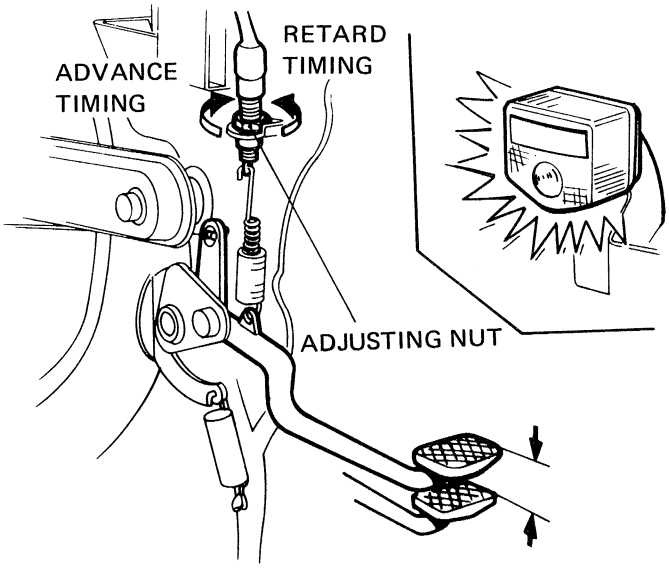

Turn the adjusting nut as required.
The stoplight should come on when the brake pedal is depressed to the point where the rear brake just starts to take hold.

© HONDA MOTOR CO., LTD.

• DRIVE CHAIN

· INSPECTION

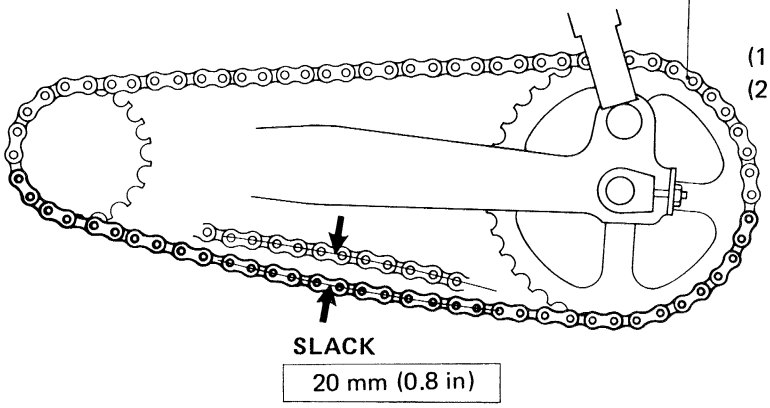

NOTE

Periodically clean and lubricate chain.

(1) Place the motorcycle on its center stand.
(2) Check drive chain tension midway between the drive sprocket and driven sprocket.

· ADJUSTMENT

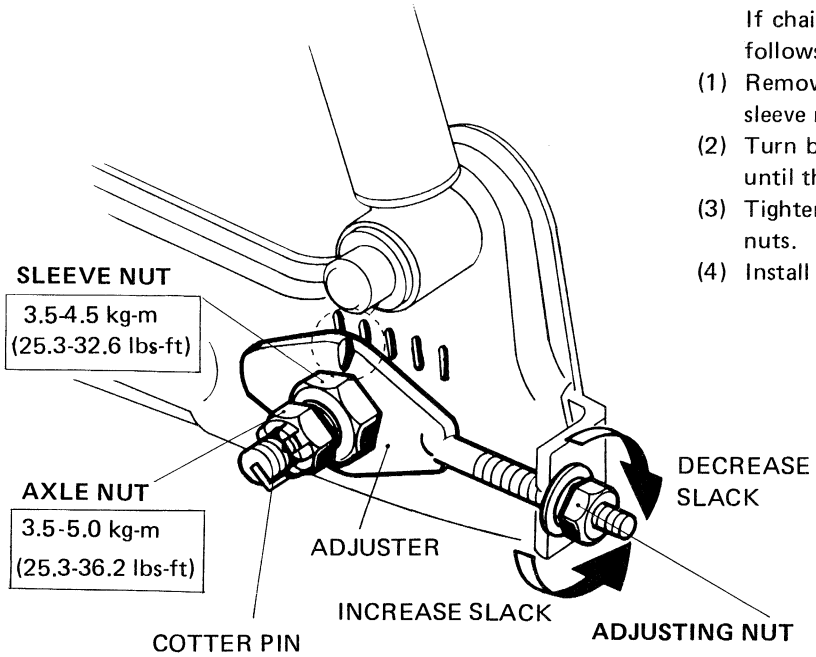

If chain slack is found to exceed the limit, adjust as follows:

(1) Remove the cotter pin, loosen the axle nut and sleeve nut.
(2) Turn both adjusting nuts an equal number of turns until the drive chain tension is obtained.
(3) Tighten the sleeve nut, axle nut and both adjusting nuts.
(4) Install the cotter pin and spread the ends.

Date of Issue: Oct., 1977
© HONDA MOTOR CO., LTD.

- BATTERY

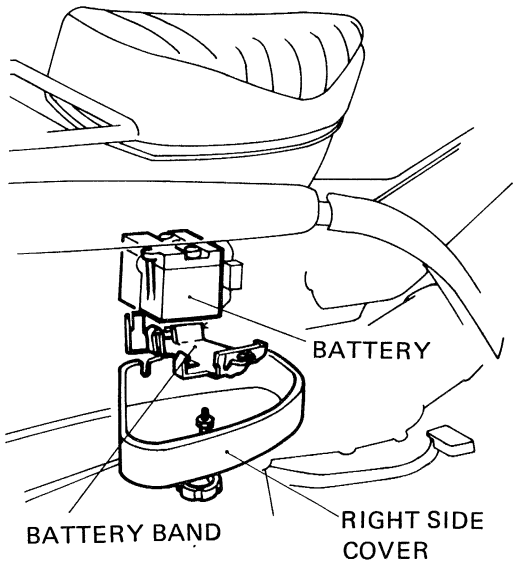

(1) Remove the right side cover.
(2) Remove the battery band bolt and pull the battery out.
(3) Check electrolyte level. The level should be between the upper and lower level marks.
(4) If it is not, add distilled water to the upper level.

NOTE

- Replace the battery if sulfation is evident.
- Replace the battery if there is excessive sediment on the bottom of the cells.

WARNING

- The battery contains sulfuric acid and should be handled with care.
- Do not overfill beyond the UPPER level.
- Avoid contact with skin, eyes or clothing. Flush with water and get prompt medical attention when in contact with skin or eyes.

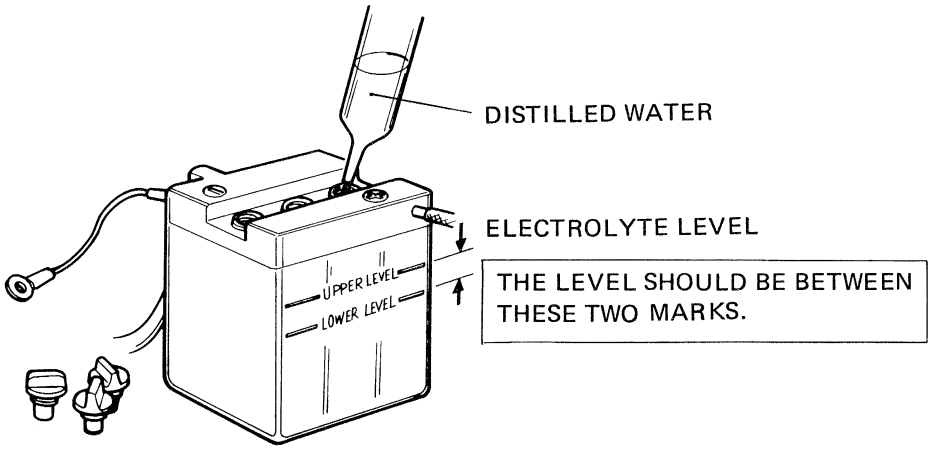

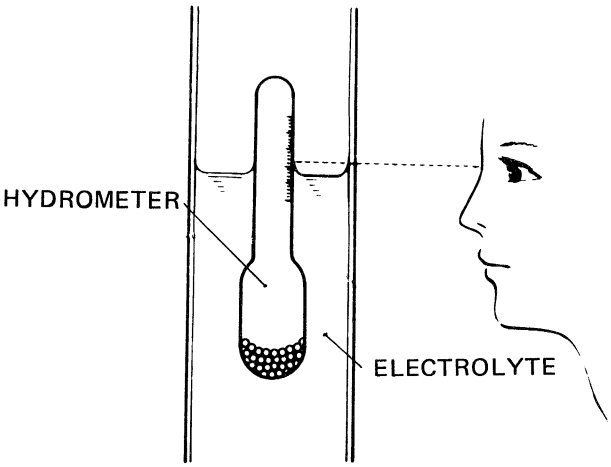

ELECTROLYTE SPECIFIC GRAVITY

1.260-1.280 [20°C (68°F)]

1.250 or below: Undercharged
1.220 or below: Recharge the battery

For relationship between electrolyte temperature and specific gravity, see page 102

© HONDA MOTOR CO., LTD.

• FRONT FORK OIL CHANGE

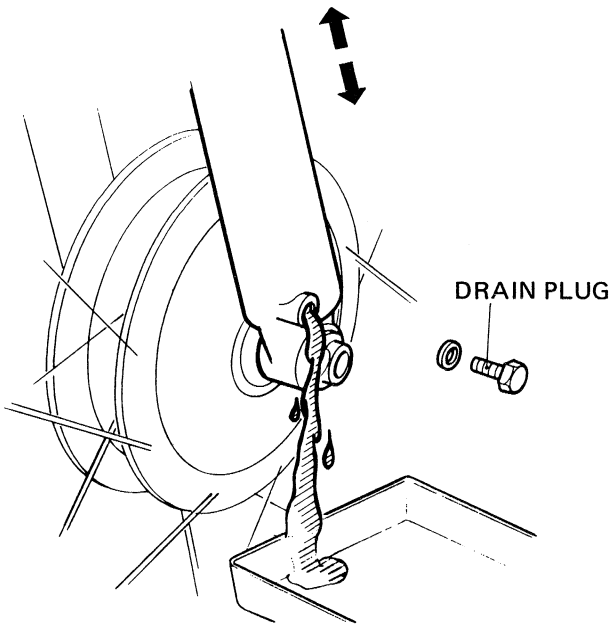

(1) Remove the front fork drain plugs and fork filler plugs.
(2) Drain the oil by pumping the fork up and down.
(3) Replace the drain plugs after draining.

• Drain and refill both fork legs at the same time.

FILLER PLUG

3.5-4.5 kg-m (25.3-32.6 lbs-ft)

ATF

To fill dry fork assembly
130-140 cc (4.4-4.7 oz.)
To refill after draining
120-130 cc (4.1-4.4 oz.)

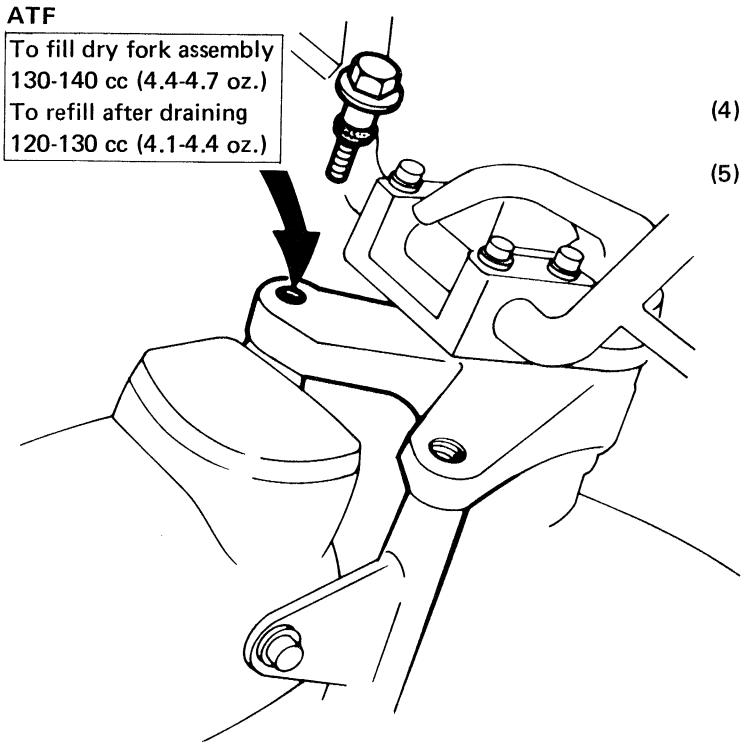

(4) Pour ATF (automatic transmission fluid) into each fork leg.
(5) Securely tighten the filler plugs.

Date of Issue: Oct., 1977
© HONDA MOTOR CO., LTD.

- SIDE STAND

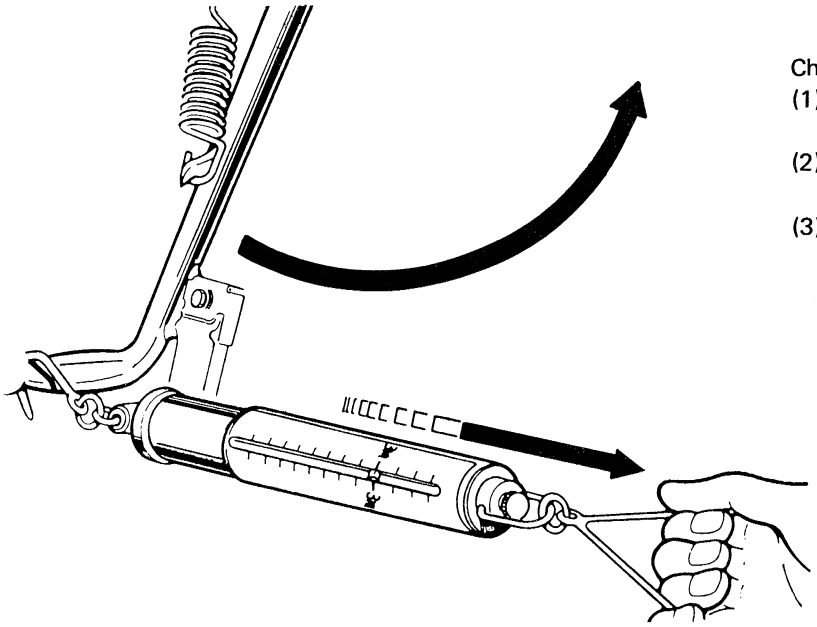

Check the side stand for proper return operation.

(1) With the side stand lowered, raise the stand off the ground using the center stand.

(2) Attach a spring scale to the lower end of the stand and measure the force required to raise the stand.

(3) The stand condition is correct if the measurement falls within 2-3kg (4.4-6.6 lbs.).
If excessive force is required to raise the stand, this may be due to neglected lubrication over tightened pivot bolt, worn side stand bar or bracket or otherwise excessive tension.

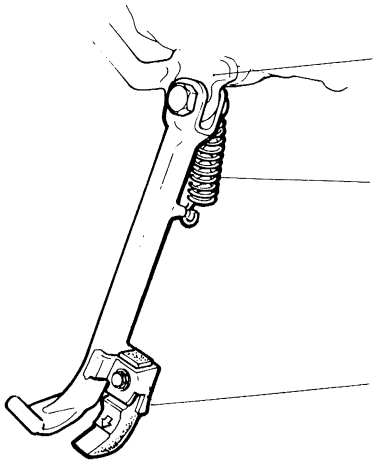

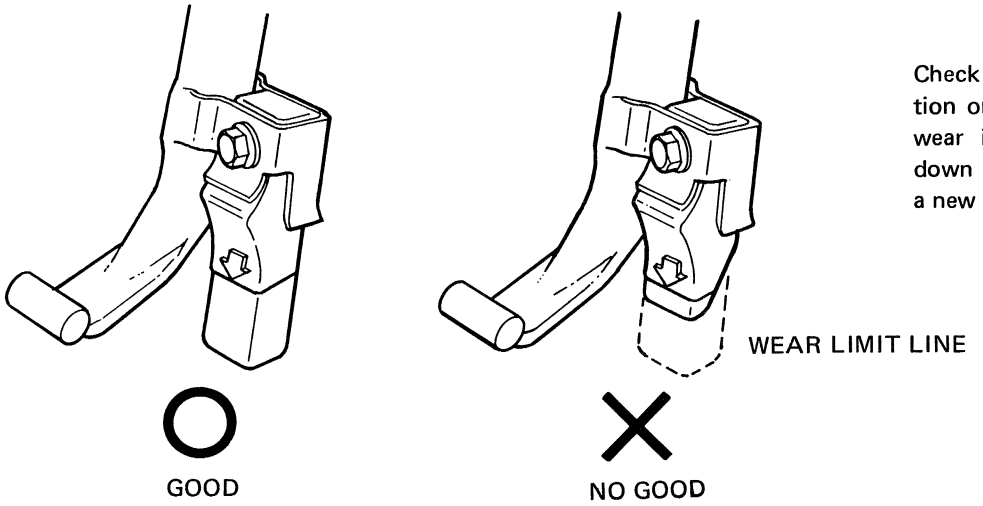

Check the rubber block for deterioration or wear. When the rubber block wear is so excessive that it is worn down to the wear line, replace it with a new one.

© HONDA MOTOR CO., LTD.

- Shift the transmission into neutral position.
- Set the motorcycle on the center stand.
- Turn the ignition switch to the OFF position.

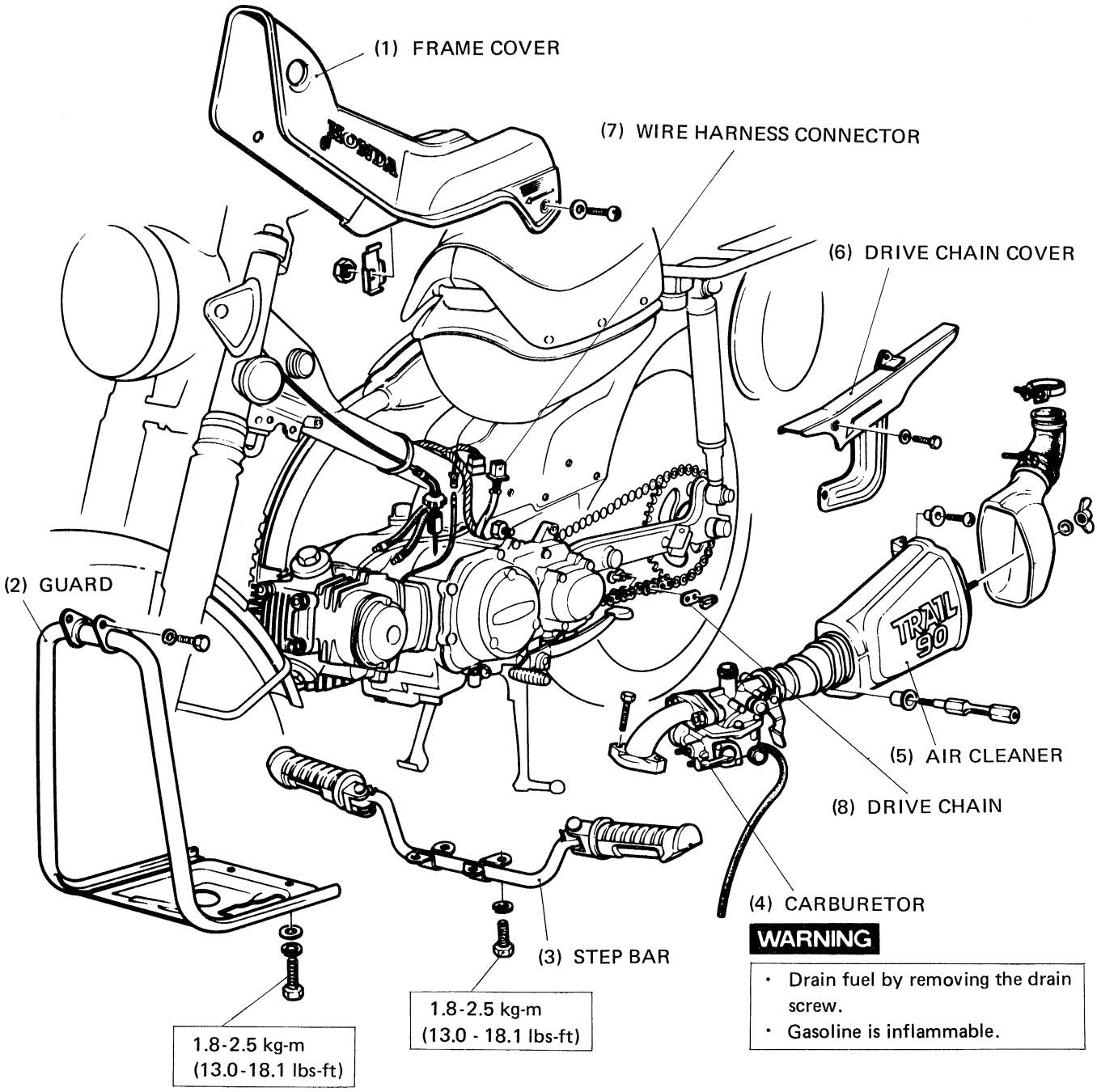

WARNING

- Drain fuel by removing the drain screw.
- Gasoline is inflammable.

Date of Issue: Oct., 1977
© HONDA MOTOR CO., LTD.

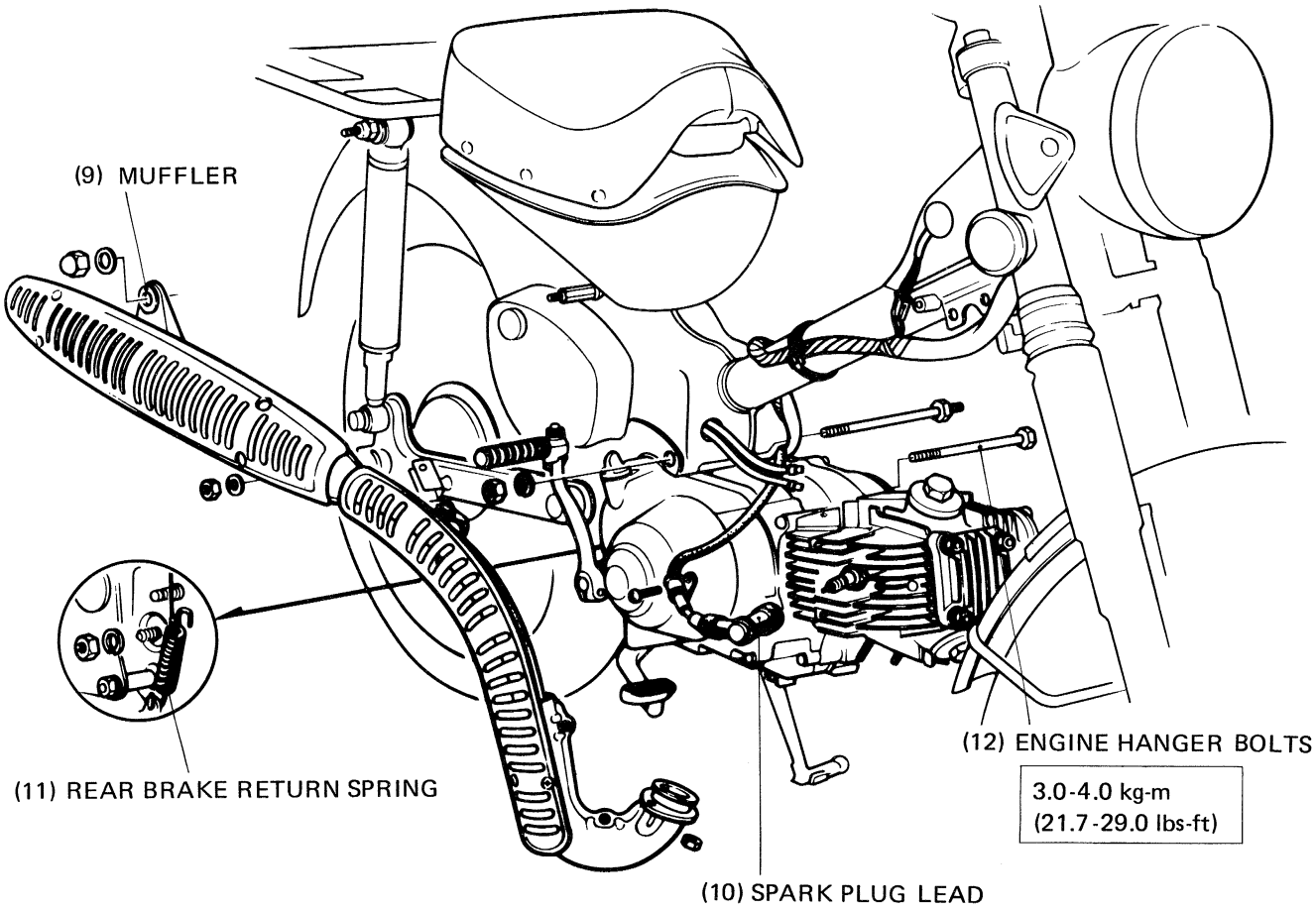

Perform the following with care while/after installing the engine.

- Rear brake adjustment . . . . . page 31
- Stop light Switch adjustment . . . . . page 31
- Drive chain adjustment . . . . . page 32
- Installation direction of carburetor top . . . . page 78
- Installation direction of drive chain . . . . . page 90
- Connection of fuel tubes . . . . . page 96

© HONDA MOTOR CO., LTD.

· Remove the intake pipe, exhaust muffler and generator cover.

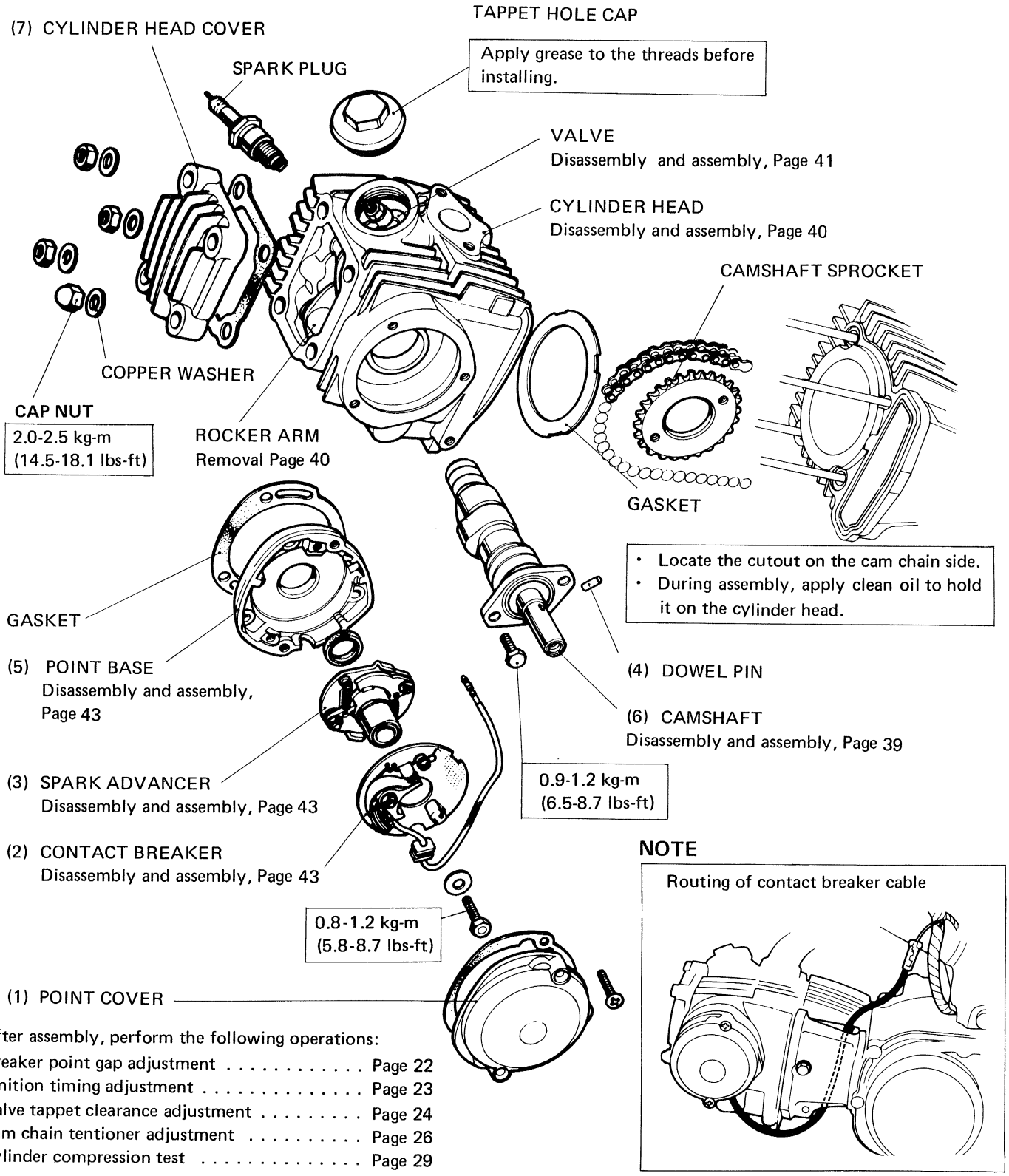

NOTE

Routing of contact breaker cable

After assembly, perform the following operations:

Breaker point gap adjustment . . . . . Page 22
Ignition timing adjustment . . . . . Page 23
Valve tappet clearance adjustment . . . . . Page 24
Cam chain tentioner adjustment . . . . . Page 26
Cylinder compression test . . . . . Page 29

Date of Issue: Oct., 1977
© HONDA MOTOR CO., LTD.

a. DISASSEMBLY/ASSEMBLY

- **CAMSHAFT DISASSEMBLY**

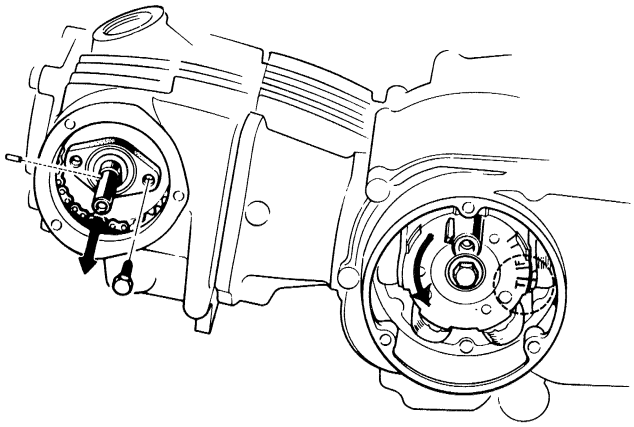

(1) Rotate the A.C. generator rotor counterclockwise and align the "T" mark on the rotor with the index mark on the stator at compression stroke.
(2) Remove the two 6 mm bolts from the camshaft.
(3) Pull out the camshaft.

NOTE

The cylinder head hold-down nuts should be tight while the camshaft is removed. Failure to do so will result in difficulty in removing the shaft due to increased tention on the cam chain.

- **CAMSHAFT ASSEMBLY (VALVE TIMING ADJUSTMENT)**

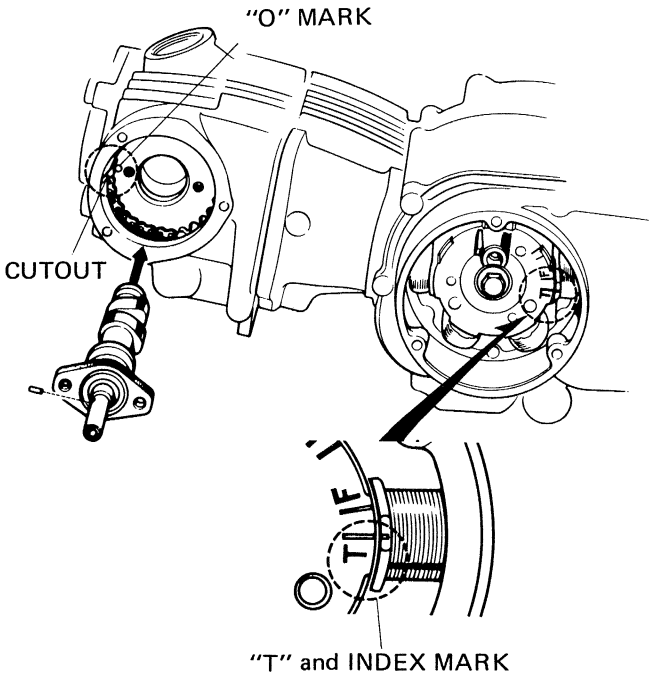

(1) Rotate the A.C. generator rotor and align the "T" mark on the rotor with the index mark (at T.D.C.).
(2) Place the cam chain on the camshaft sprocket.
(3) Install the cylinder head.

NOTE

Make sure that the "O" mark on the sprocket is aligned with the cutout in the cylinder head.

(4) Install the cylinder head cover and tighten to the specified torque.
(5) Install the camshaft and the two 6 mm bolts with the dowel hole in the shaft facing toward the "O" mark.

© HONDA MOTOR CO., LTD.

- **ROCKER ARM DISASSEMBLY/ASSEMBLY**

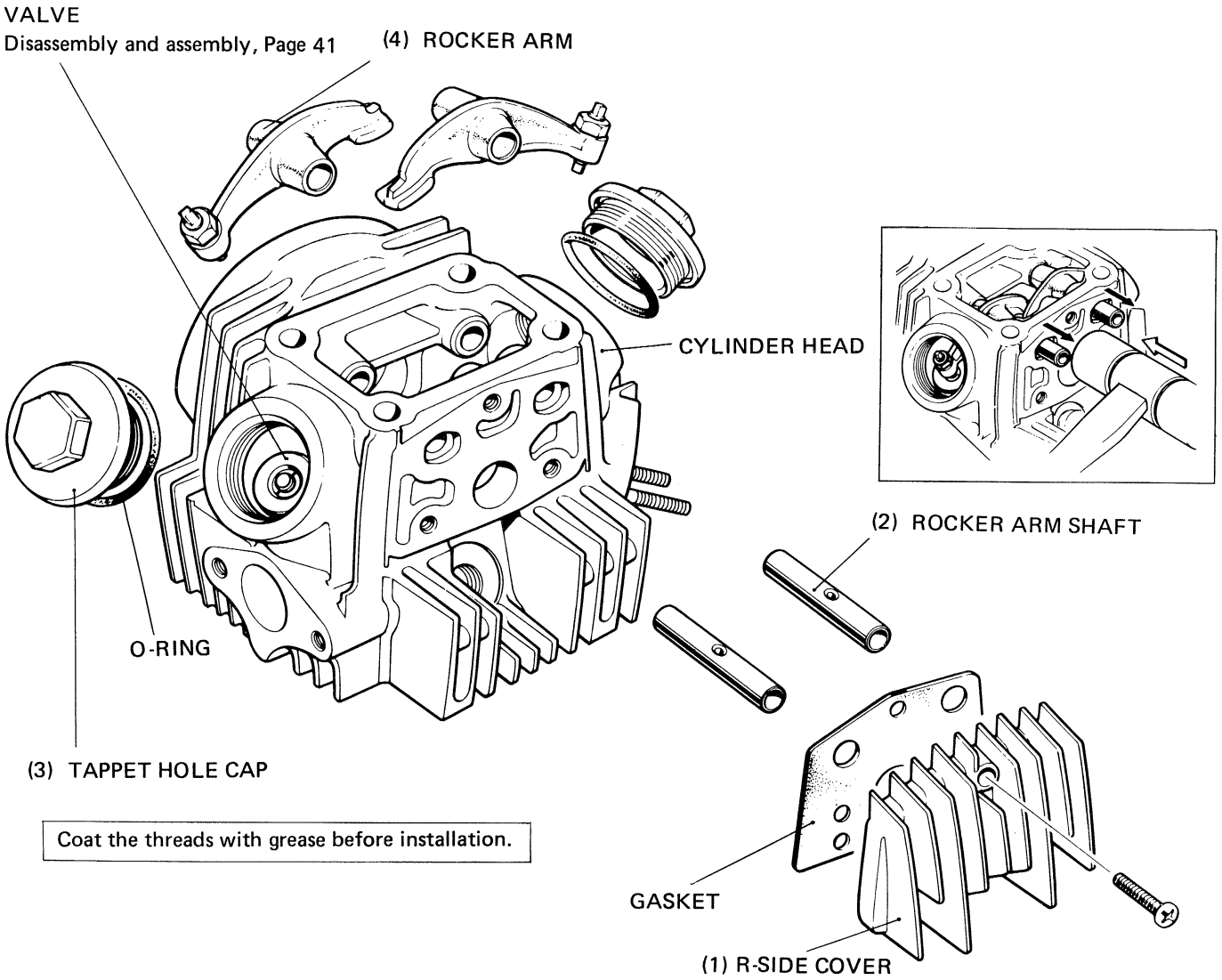

Date of Issue: Oct., 1977
© HONDA MOTOR CO., LTD.

- **VALVE DISASSEMBLY/ASSEMBLY**

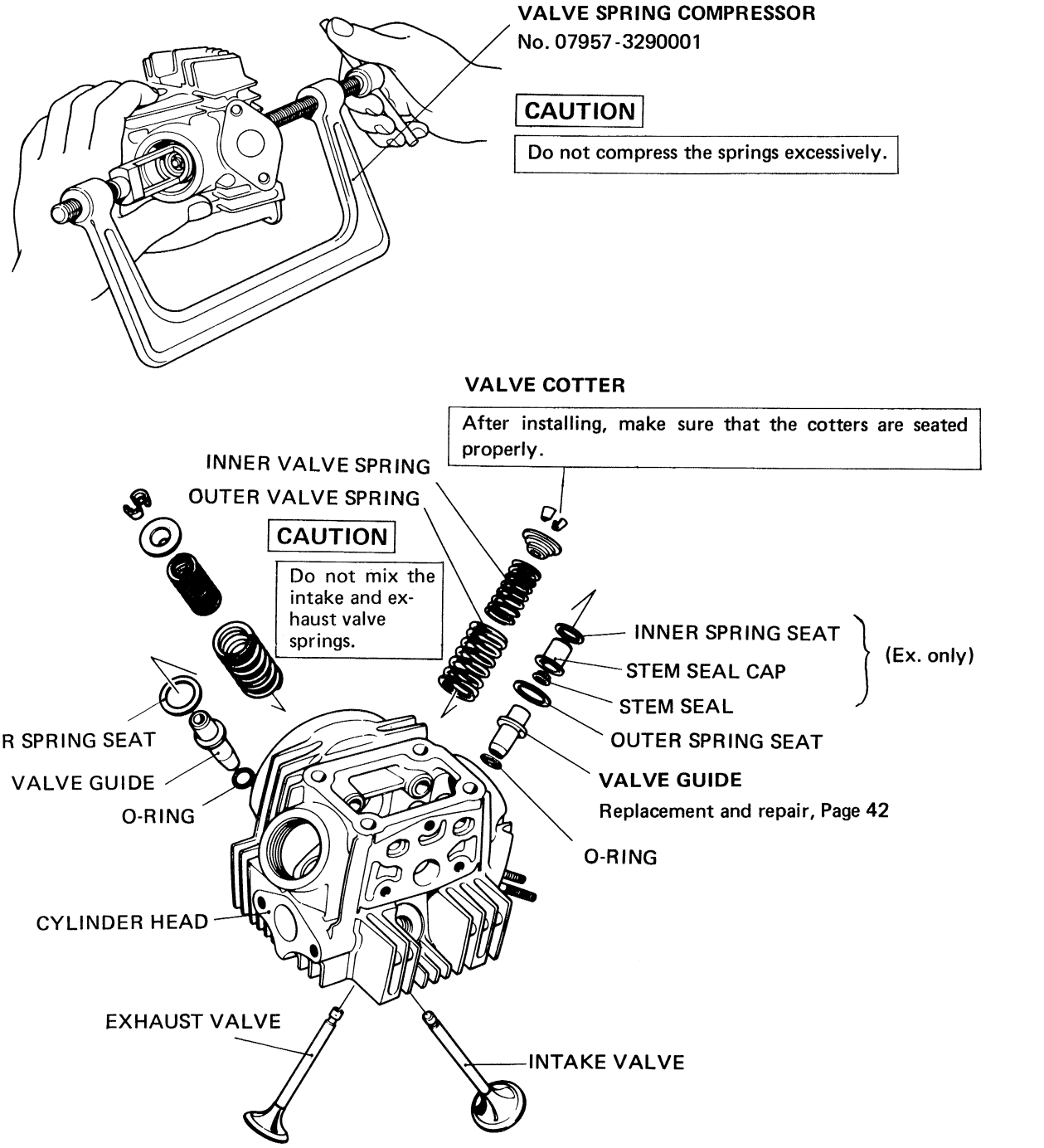

When installing a new valve, check the contact between the valve face and valve seat and correct if necessary.

© HONDA MOTOR CO., LTD.

VALVE GUIDE REPLACEMENT/REPAIR

It is recommended to replace the valves when the valve guides are renewed.

- **DRIVING OUT VALVE GUIDE**

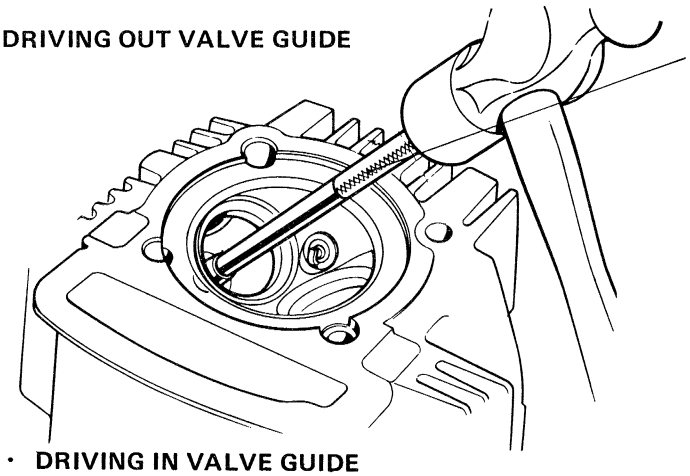

TOOL
VALVE GUIDE DRIVER
No. 07942-3290100

- **DRIVING IN VALVE GUIDE**

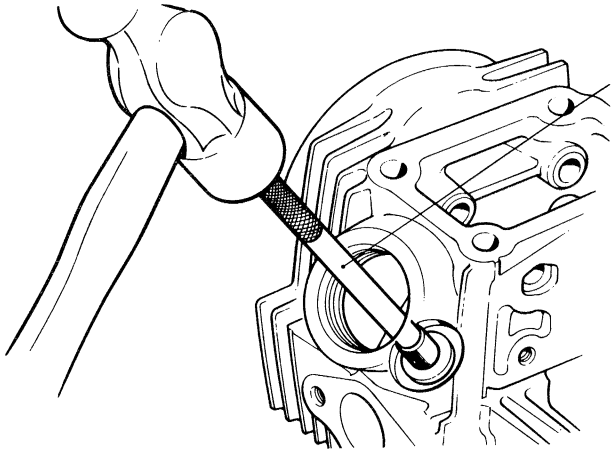

VALVE GUIDE DRIVER
INTAKE: No. 07942–1180100
EXHAUST: No. 07942–3290100

After a new valve guide has been driven to the proper depth, check that it is not damaged.

- **REAMING VALVE GUIDE**
  After installing a new guide, ream the guide to size using the Valve Guide Reamer.

VALVE GUIDE I.D.
IN/EX 5.475-5.485 mm (0.2157-0.2161 in.)

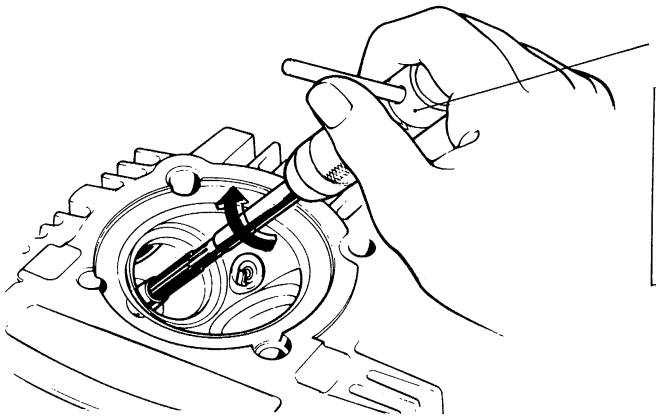

VALVE GUIDE REAMER
No. 07984-0980000

- Always rotate the reamer in the clockwise direction when reaming the guide.
- To keep the reamed surface from being scratched, rotate the reamer clockwise as it is pulled out.
- Remove all traces of metal particles from the guide with solvent.

Date of Issue: Oct., 1977
© HONDA MOTOR CO., LTD.

- **CONTACT BREAKER POINT BASE ASSEMBLY**

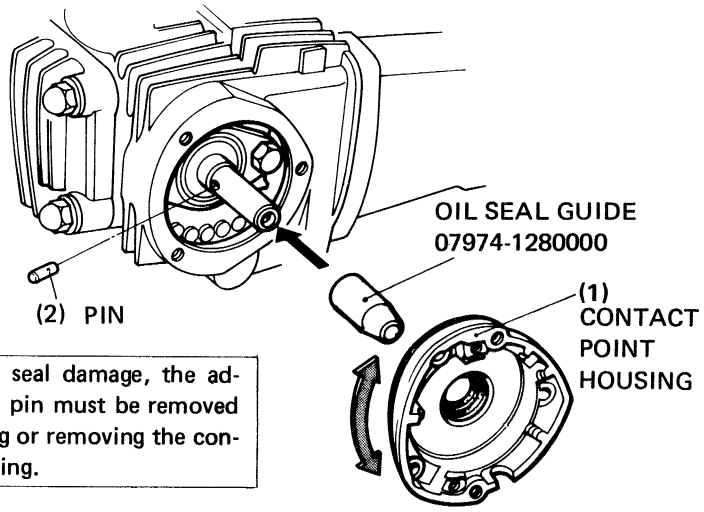

Place the oil seal guide over the camshaft end. Spread a thin film of oil on the guide to ease seal installation. Carefully install the contact point housing and oil seal. Remove the oil seal guide and check that the oil seal is properly seated. Insert the advancer locating pin.

CAUTION

To prevent oil seal damage, the advancer locating pin must be removed before installing or removing the contact point housing.

- **SPARK ADVANCER ASSEMBLY**

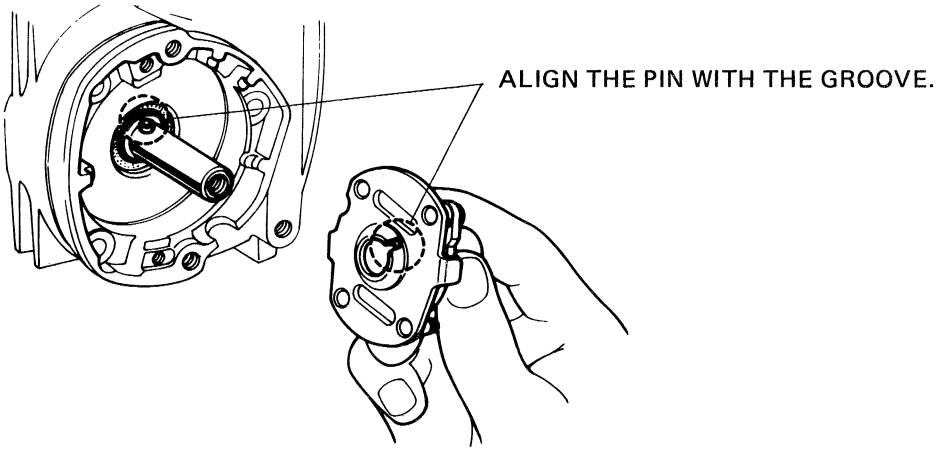

- **CONTACT BREAKER DISASSEMBLY/ASSEMBLY**

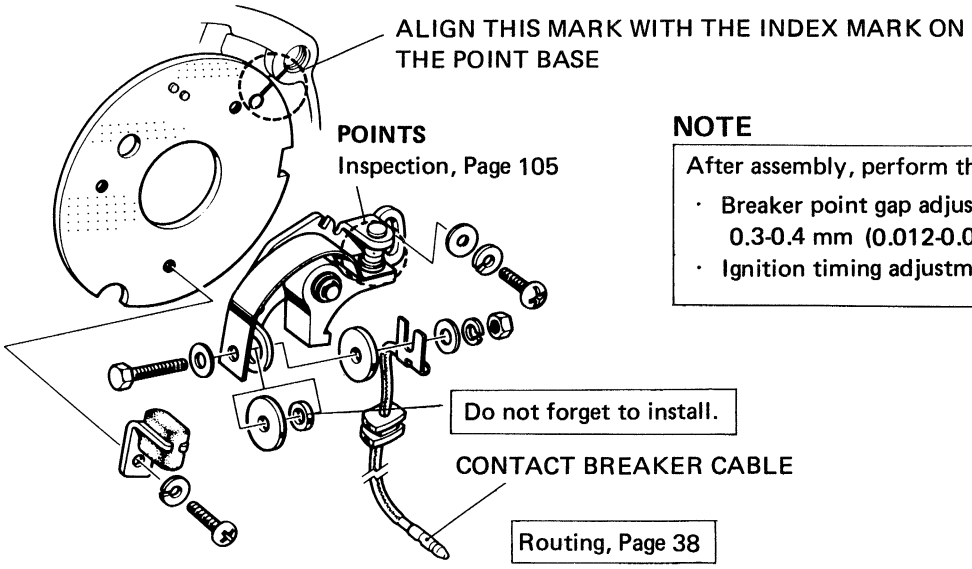

NOTE

After assembly, perform the following operations:

- Breaker point gap adjustment . . . . . Page 22
  0.3-0.4 mm (0.012-0.016 in)
- Ignition timing adjustment . . . . . Page 23

© HONDA MOTOR CO., LTD.

b. INSPECTION

- **VALVE SEAT WIDTH**

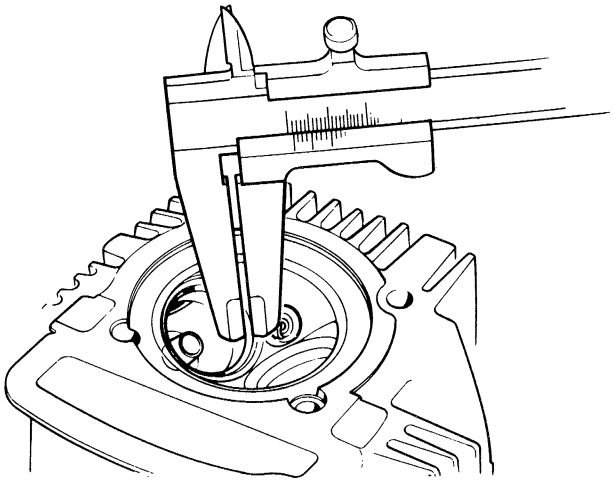

Take measurements at several points.

	Standard	Service Limit
IN/EX	1.0 mm (0.04 in.)	1.6 mm (Replace) (0.064 in.)

- **VALVE GUIDE I.D.**

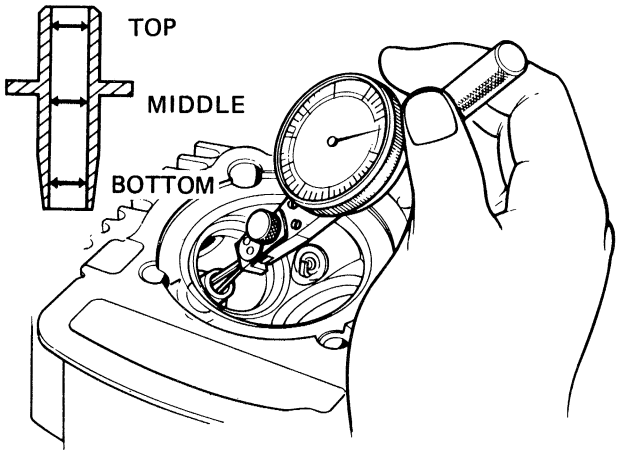

Measure the valve guide at the top, middle and bottom and in two directions at right angles to each other.

	Standard	Service Limit
IN/EX	5.475-5.485 mm (0.2157-0.2161 in.)	5.525 mm (Replace) (0.2175 in.)

- **VALVE STEM O.D.**

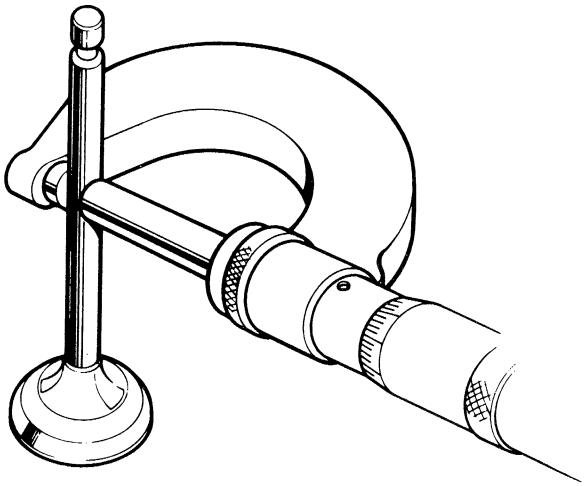

Measure the valve stem at three points along its sliding surface and in two directions at right angles to each other.

	Standard	Service Limit
IN	5.455-5.465 mm (0.2148-0.2152 in.)	5.435 mm (Replace) (0.2139 in)
EX	5.435-5.445 mm (0.2140-0.2144 in.)	5.415 mm (Replace) (0.2132 in.)

Date of Issue: Oct., 1977
© HONDA MOTOR CO., LTD.

- **VALVE FACE WIDTH**

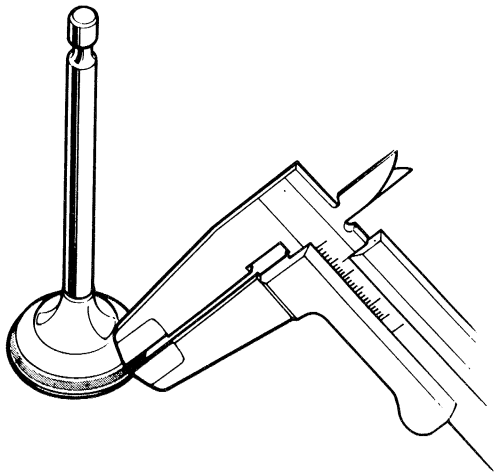

Measure the valve face width at several points.

	Standard	Service Limit
IN/EX	1.2-1.5 mm (0.048-0.060 in.)	1.8 mm (Replace) (0.072 in.)

- **ROCKER ARM I.D.**

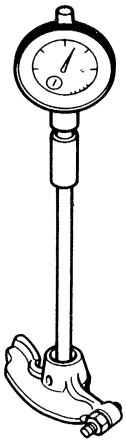

Measure the rocker arm I.D. in two direction at right angles to each other.

	Standard	Service Limit
IN/EX	10.000-10.015 mm (0.3937-0.3943 in.)	10.10 mm (Replace) (0.3976 in.)

- **ROCKER ARM WEAR/DAMAGE**

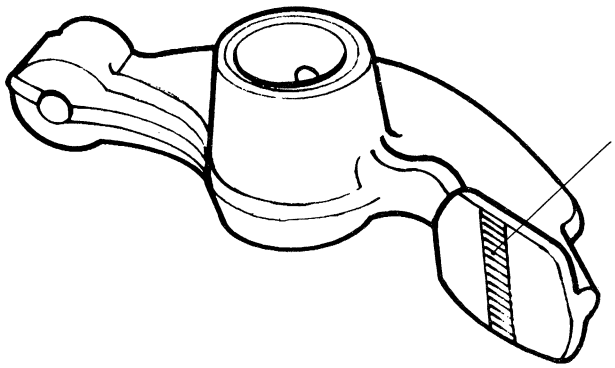

© HONDA MOTOR CO., LTD.

- **CAM HEIGHT**

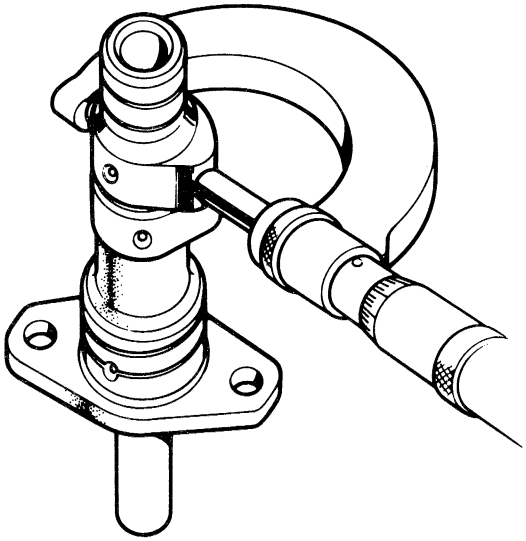

	Standard	Service Limit
IN/EX	24.90-24.98 mm (0.9803-0.9835 in.)	24.6 mm (Replace) (0.9685 in.)

- **CAMSHAFT O.D.**

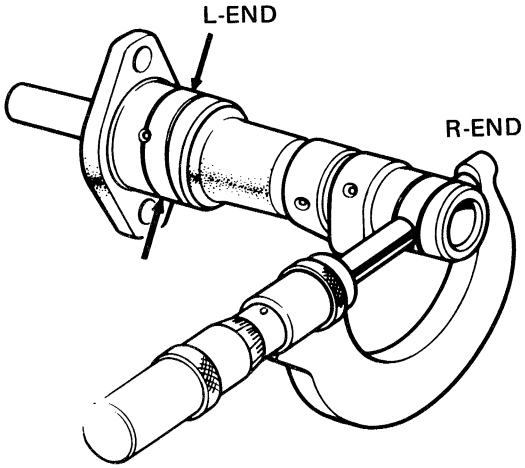

Measure the camshaft in two directions at right angles to each other (both ends).

	Standard	Service Limit
L-END	25.917-25.930 mm (1.0204-1.0208 in.)	25.90 mm (1.0197 in.)
R-END	17.927-17.938 mm (0.7058-0.7062 in.)	17.90 mm (Replace) (0.7047 in.)

- **CAMSHAFT END HOLE I.D.**

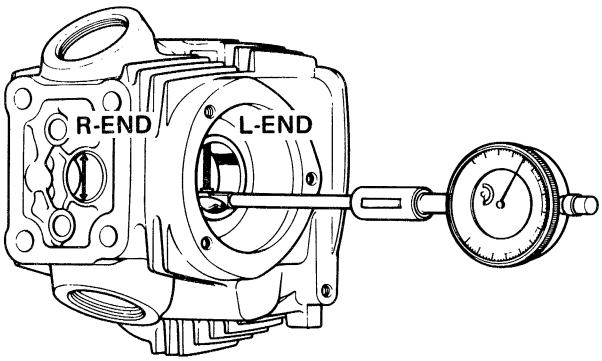

Measure the end hole in two directions at right angles to each other (both ends).

	Standard	Service Limit
L-END	26.000-26.020 mm (1.0236-1.0244 in.)	26.05 mm (Replace) (1.0256 in.)
R-END	18.000-18.018 mm (0.7087-0.7094 in.)	18.05 mm (Replace) (0.7106 in.)

Date of Issue: Oct., 1977
© HONDA MOTOR CO., LTD.

- **VALVE SPRING FREE LENGTH**

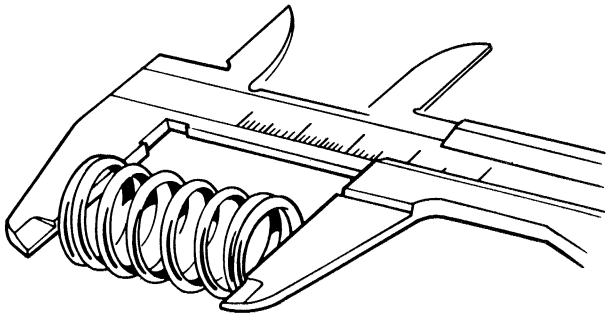

VALVE SPRING FREE LENGTH

	Standard	Service Limit
OUTER SPRING	31.8 mm (1.252 in.)	30.6 mm (Replace) (1.205 in.)
INNER SPRING	26.5 mm (1.043 in.)	25.5 mm (Replace) (1.004 in.)

- **ROCKER ARM SHAFT O.D.**

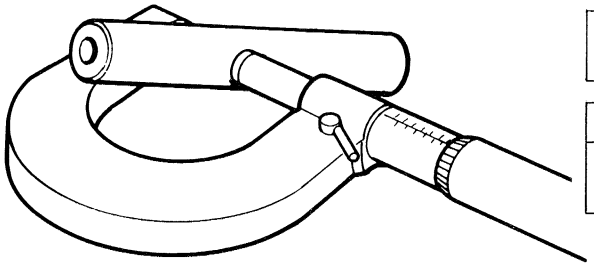

Measure the rocker arm shaft at its sliding surface in two directions at right angles to each other.

	Standard	Service Limit
IN/EX	9.972-9.987 mm (0.3926-0.3932 in.)	9.92 mm (Replace) (0.3906 in.)

- **SPARK ADVANCER**

INSPECTION:

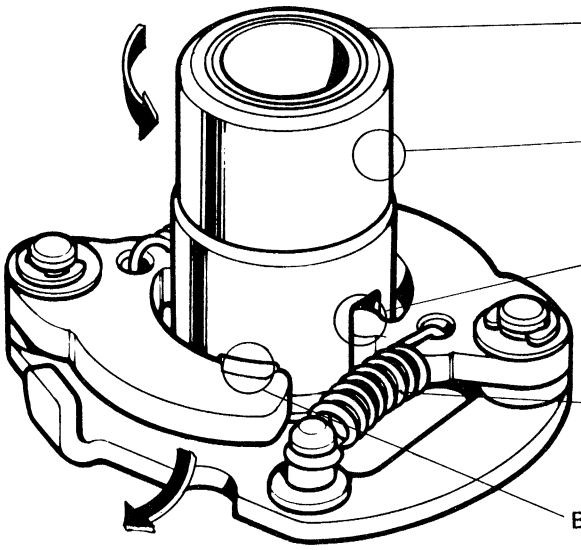

© HONDA MOTOR CO., LTD.

- **VALVE SEAT REFACING**

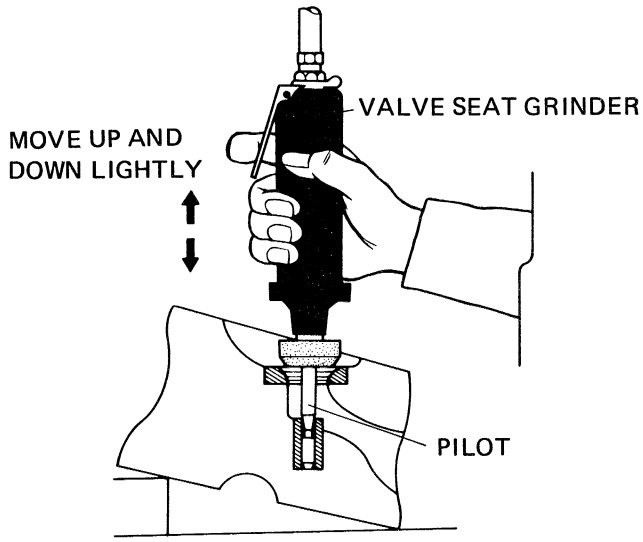

- Check the contact between the valve face and the seat. Coat the valve face lightly with Prussion blue, put the valve into the seat and turn it with light pressure about one full turn.
- If the Prussian blue does not transfer evenly to the seat, or if the contact is excessive, the valve must be replaced, and the seat ground with a valve seat grinder.

NOTE

Grinding stones must be dressed before each usage to ensure that they will refinish valve seats accurately. Follow all instructions supplied with the grinder.

- **VALVE SEAT REFACING**

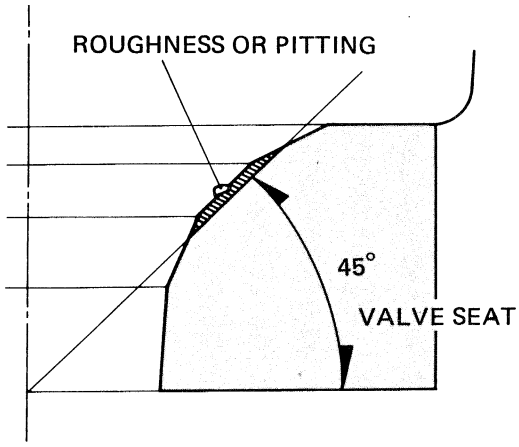

(1) Dress the grinding stones to assure even, uniform grinding of the valve seat.
(2) As a first step in the operation, remove all the roughness or pitting from the seat using the 45° grinding stone.

NOTE

Grinding should be performed until all pits in the seat are removed.

	Grinding Stone (O. D.)	Grinding Angle
IN	29 mm (1.142 in)	45°
EX	26 mm (1.024 in)	

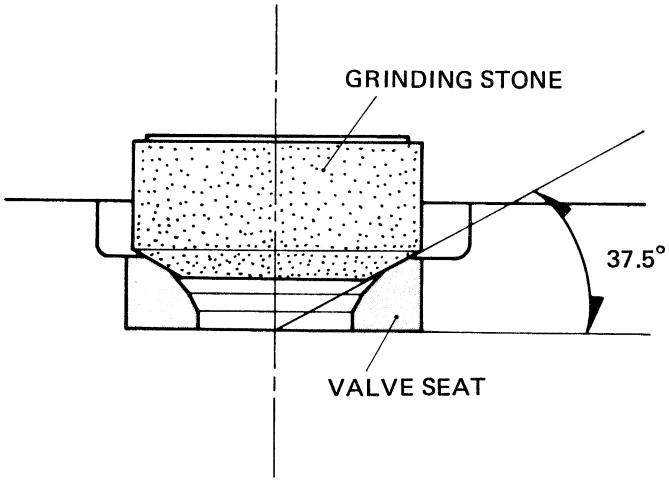

(3) Narrow the seat with the dressed 37.5° stone.

	Grinding Stone (O. D.)	Grinding Angle
IN	29 mm (1.142 in)	37.5°
EX	26 mm (1.024 in)	

Date of Issue: Oct., 1977
© HONDA MOTOR CO., LTD.

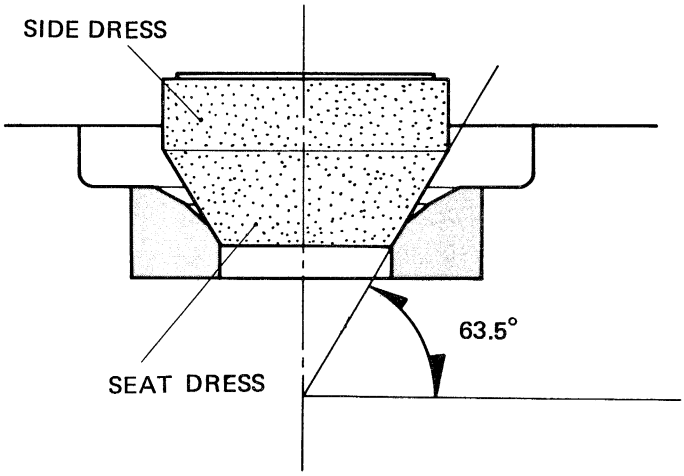

(4) Narrow the seat at the bottom with the 63.5° grinding stone.

	Grinding Stone	Grinding Angle
IN	32 mm (1.260 in)	63.5°
EX	26 mm (1.024 in)	

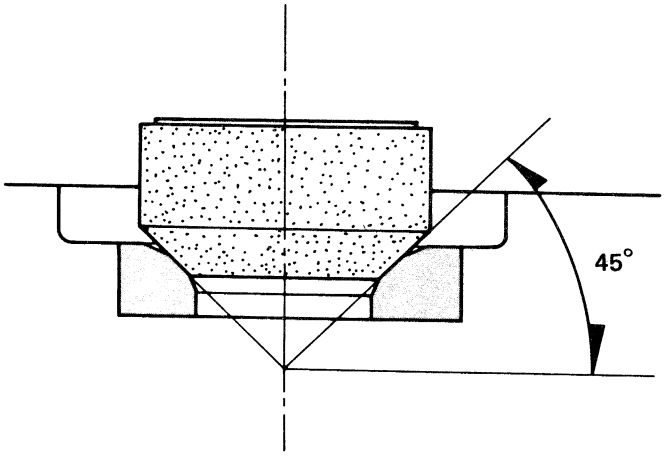

(5) Bring the seat to the correct width and location on the valve face with the 45° stone as was used in Step (2).

STANDARD VALVE SEAT WIDTH

1.0 mm (0.04 in)

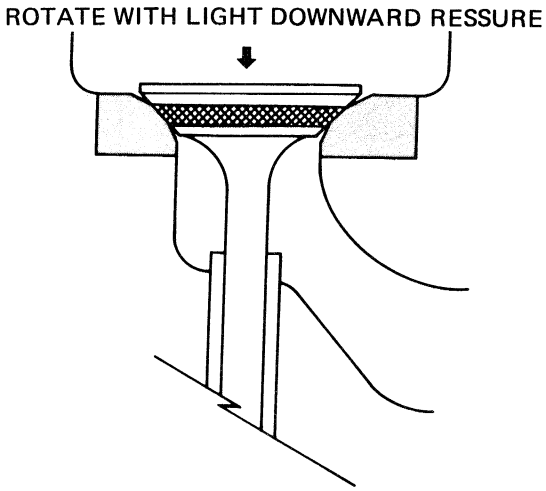

(6) Apply a small amount of fine grinding compound to the valve seat and lap the two surfaces lightly together by rotating the handle of a suction cup.

CAUTION

Do not allow the lapping compound to enter the valve guide.

(7) After lapping, apply a thin coating of Prussian blue to the seat, set the valve into the seat and rotate the valve one full turn.
The contact is satisfactory if the blue is transfered to the center of the valve evenly.

© HONDA MOTOR CO., LTD.

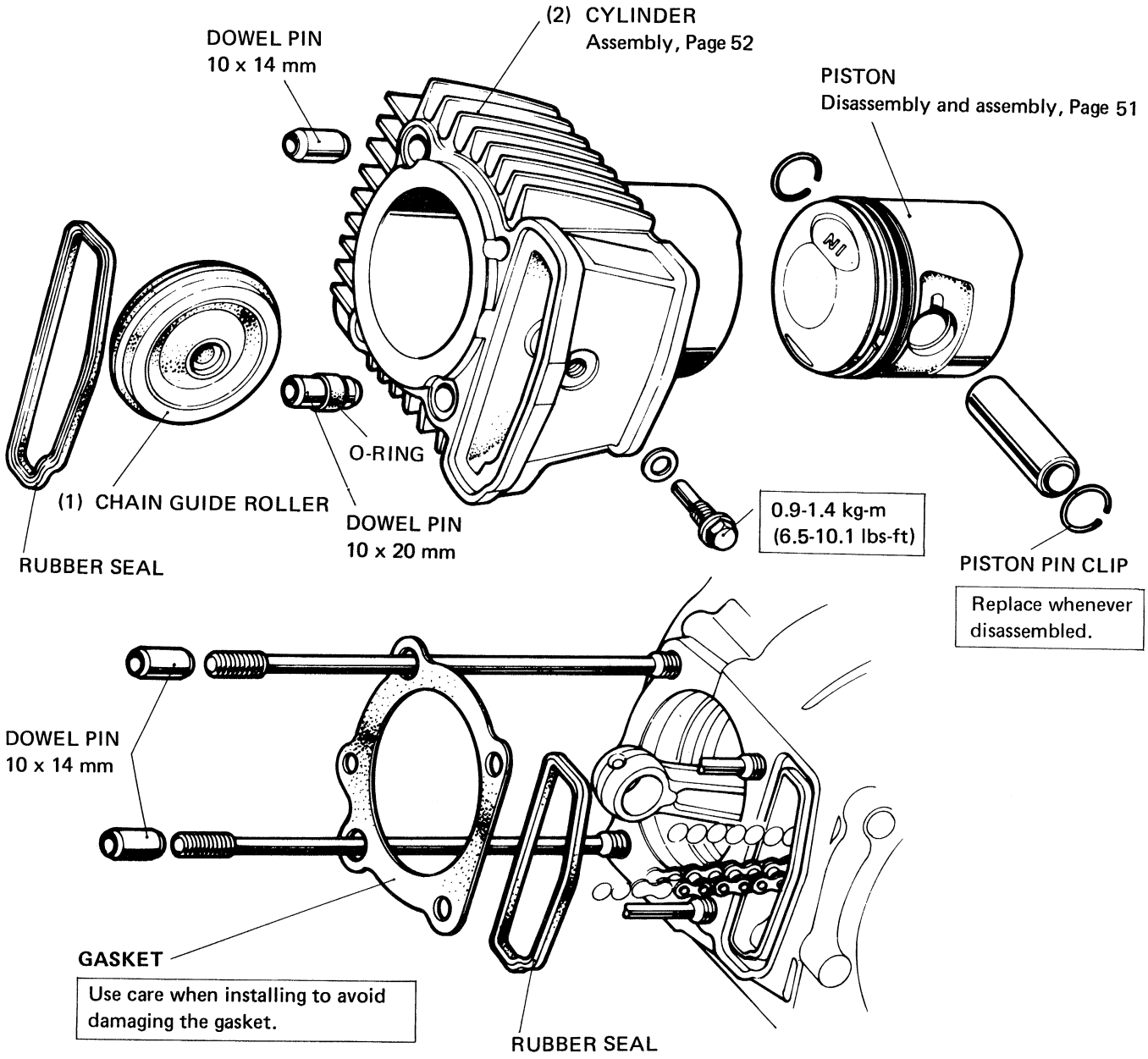

Perform the following operations after assembling:

Cam chain tensioner adjustment . . . . . Page 26
Cylinder compression test . . . . . Page 29

Date of Issue: Oct., 1977
© HONDA MOTOR CO., LTD.

a. DISASSEMBLY/ASSEMBLY

- **PISTON**

CAUTION

Avoid damaging the piston when installing .

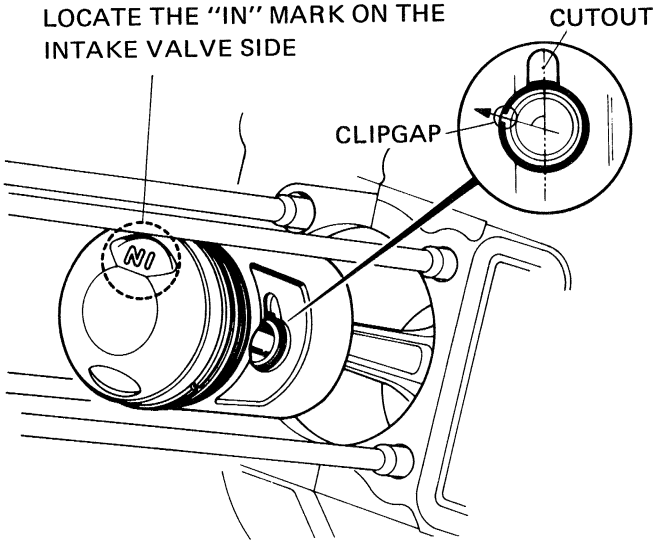

Install the clip so that the clip gap and cutout in the piston are not aligned.

Be careful to prevent the clip from falling into the crank-case .

- **PISTON RING**

CAUTION

Avoid damaging the piston when installing and removing rings.

Position piston rings so end gaps are 120° apart and no gap is in line with the ends of the piston pin.

REMOVE RINGS IN THE ARROW DIRECTION.

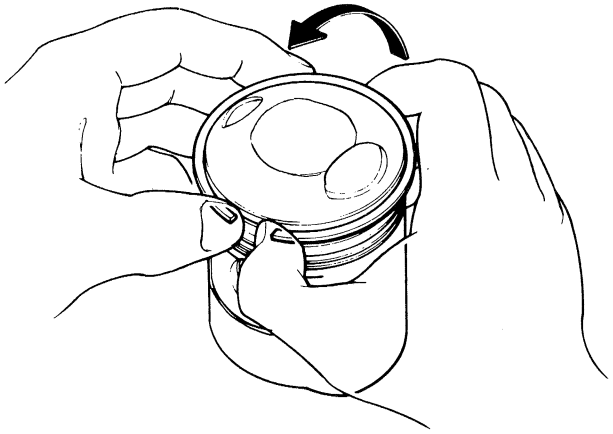

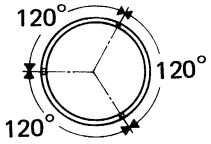

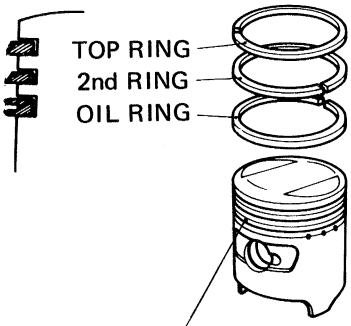

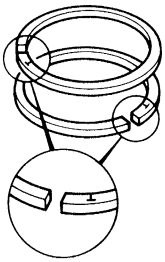

Before installing the piston rings, clean the ring grooves and oil holes thoroughly.

Install the rings with the markings up.

© HONDA MOTOR CO., LTD.

- **CYLINDER INSTALLATION**

Apply a thin coat of oil on the cylinder wall and piston rings before installing the cylinder. As the cylinder is installed, compress the piston rings with your fingers to ease entry of the piston into the cylinder.

CAUTION

Avoid damaging the piston rings when inserting the piston in the cylinder.

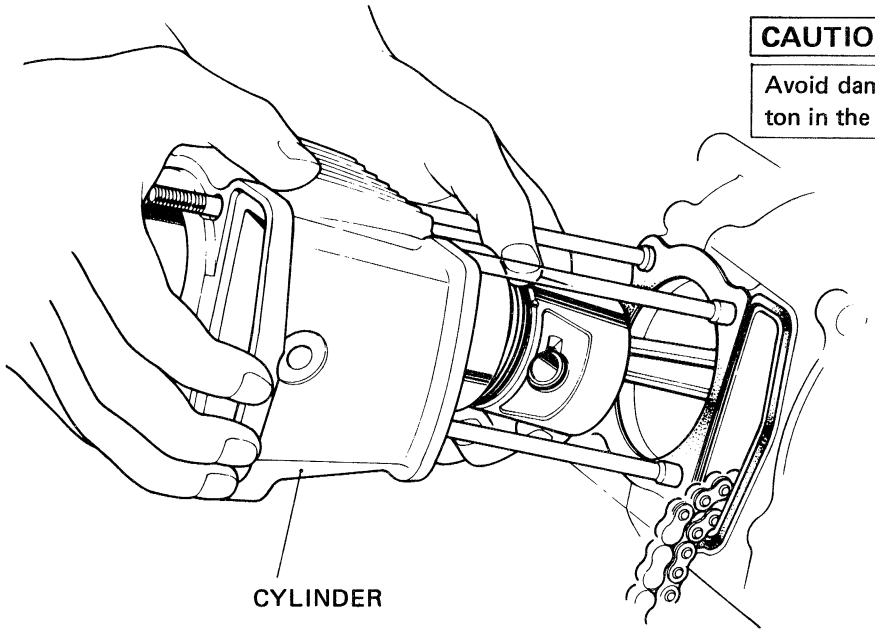

After the piston has entered the cylinder, route the chain forward through the hole in the cylinder.

- **GUIDE ROLLER ASSEMBLY**

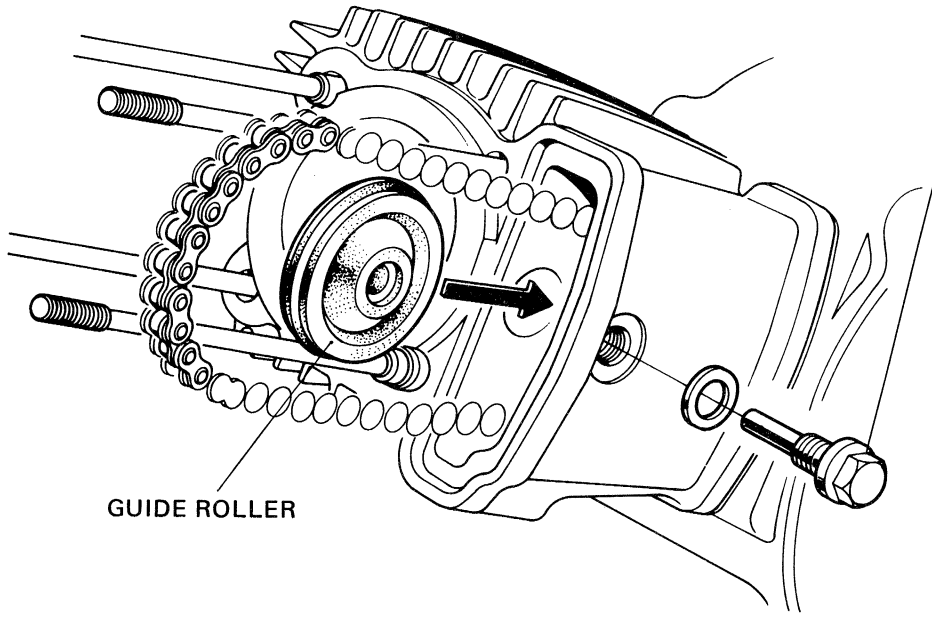

Date of Issue: Oct., 1977
© HONDA MOTOR CO., LTD.

b INSPECTION

- **CYLINDER**

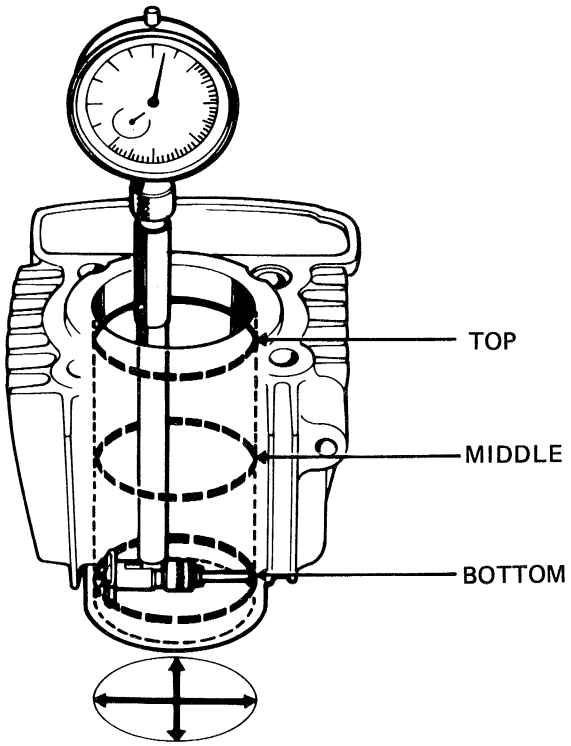

Measure I.D. of the cylinder in at least three places, top, middle and bottom of piston travel, and in two directions at right angles to each other.

	Standard	Service Limit
I.D.	50.00-50.01 mm (1.9685-1.9689 in.)	50.10 (Repair or replace) (1.9724 in.)
TAPER	0.01 mm (0.0004 in.)	0.05 mm (Repair or replace) (0.002 in.)
OUT-OF-ROUND	0.01 mm (0.0004 in.)	0.05 mm (Repair or replace) (0.002 in.)

If the above limits are exceeded, the cylinder must be rebored and oversize piston and piston rings fitted.

STANDARD OVERSIZES:
0.25 mm, 0.50 mm, 0.75 mm, 1.00 mm
(0.01 in, 0.02 in 0.03 in 0.04 in)

- **PISTON O.D.**

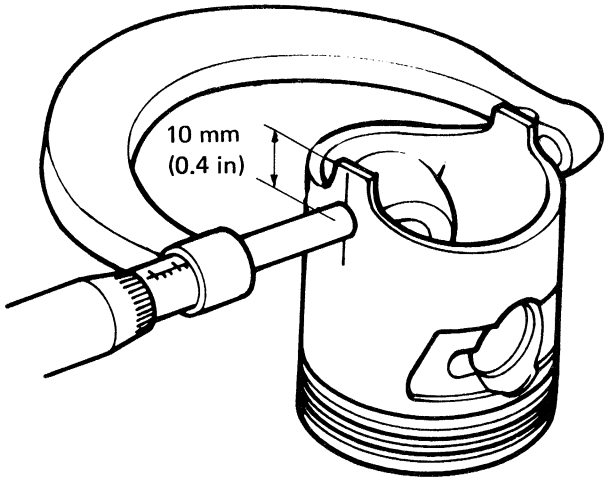

Measurements should be taken at a point 10 mm (0.4 in.) from the lower end.

Standard	Service Limit
49.97-49.99 mm (1.9673-1.9681 in.)	49.80 mm (Replace) (1.9606 in.)

© HONDA MOTOR CO., LTD.

- **PISTON-TO-PISTON RING CLEARANCE**

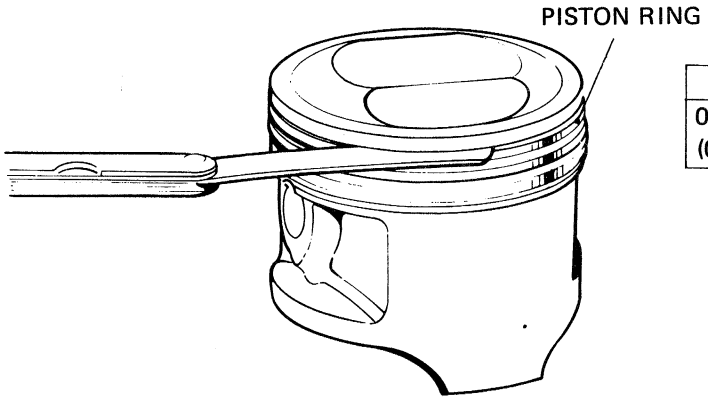

Standard	Service Limit
0.010-0.045 mm (0.0004-0.0018 in.)	0.12 mm (Replace) (0.0047 in.)

- **PISTON PIN BORE I.D.**

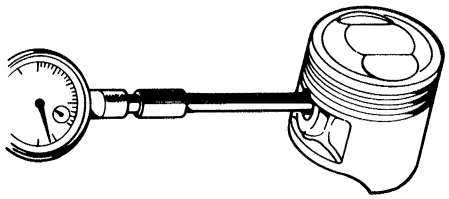

Standard	Service Limit
14.002-14.008 (0.5513-0.5515 in.)	14.04 mm (Replace) (0.5528 in.)

- **PISTON RING END GAP**

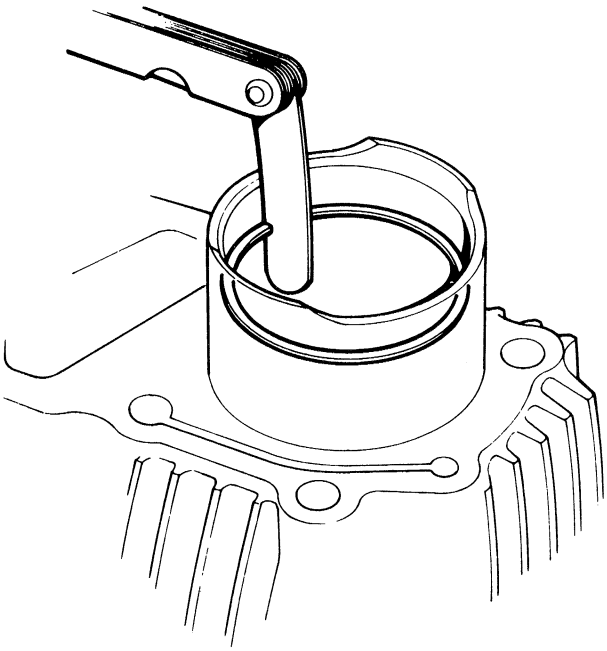

Measure the ring end gap with the ring inserted in the cylinder to a point 10 mm (0.4 in.) from bottom.

	Standard	Service Limit
TOP/SECOND	0.15-0.35 mm. (0.006-0014 in.)	0.50 mm (Replace) (0.02 in.)
OIL	0.15-0.40 mm (0.006-0.016 in)	0.50 (Replace) (0.02 in)

Date of Issue: Oct., 1977
© HONDA MOTOR CO., LTD.

- **PISTON RING THICKNESS**

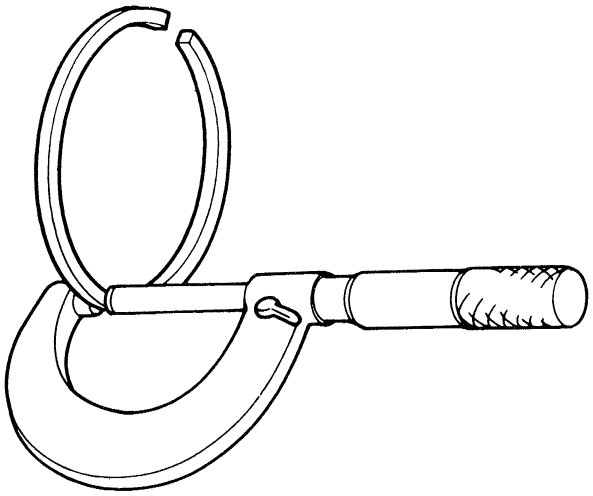

Take measurements at several points.

	Standard	Service Limit
TOP and SECOND	1.175-1.190 mm (0.0463-0.0469 in.)	1.13 mm (Replace) (0.0445 in.)
OIL RING	2.475-2.490 mm (0.0974-0.0980 in.)	2.43 mm (Replace) (0.0957 in.)

- **PISTON PIN O.D.**

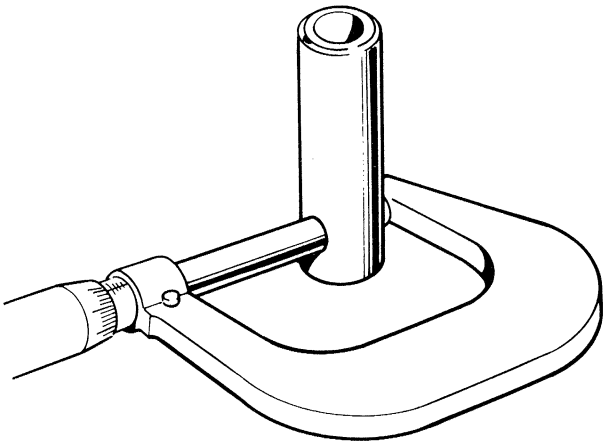

Standard	Service Limit
13.994-14.000 mm (0.5509-0.5513 in.)	13.960 mm (Replace) (0.5496 in.)

© HONDA MOTOR CO., LTD.

- **LUBRICATION CIRCUIT DIAGRAM**

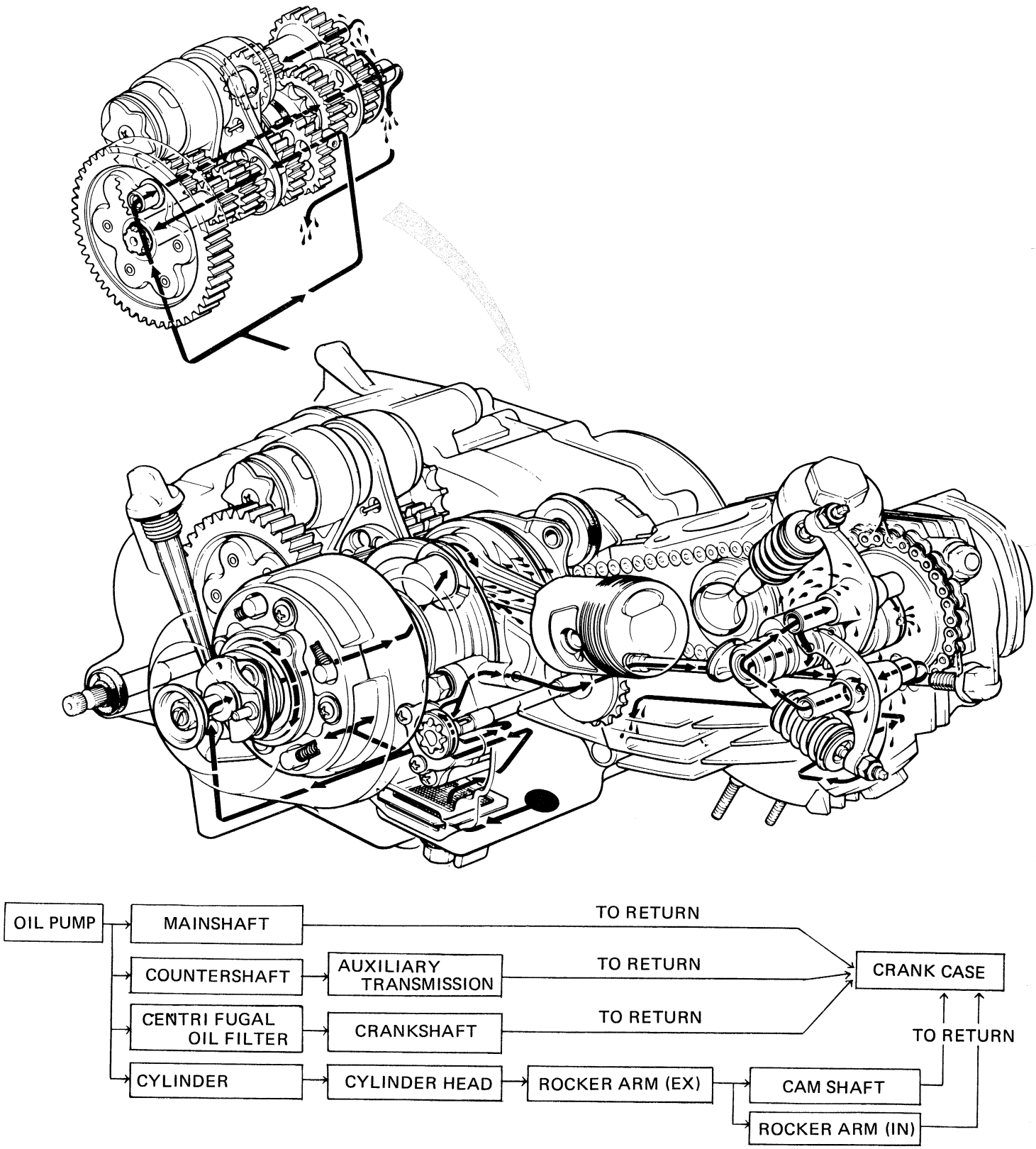

Date of Issue: Oct., 1977
© HONDA MOTOR CO., LTD.

5. CLUTCH/GEAR SHIFT/OIL PUMP

- **Drain engine oil.**
- **Remove the step bar and shift pedal.**

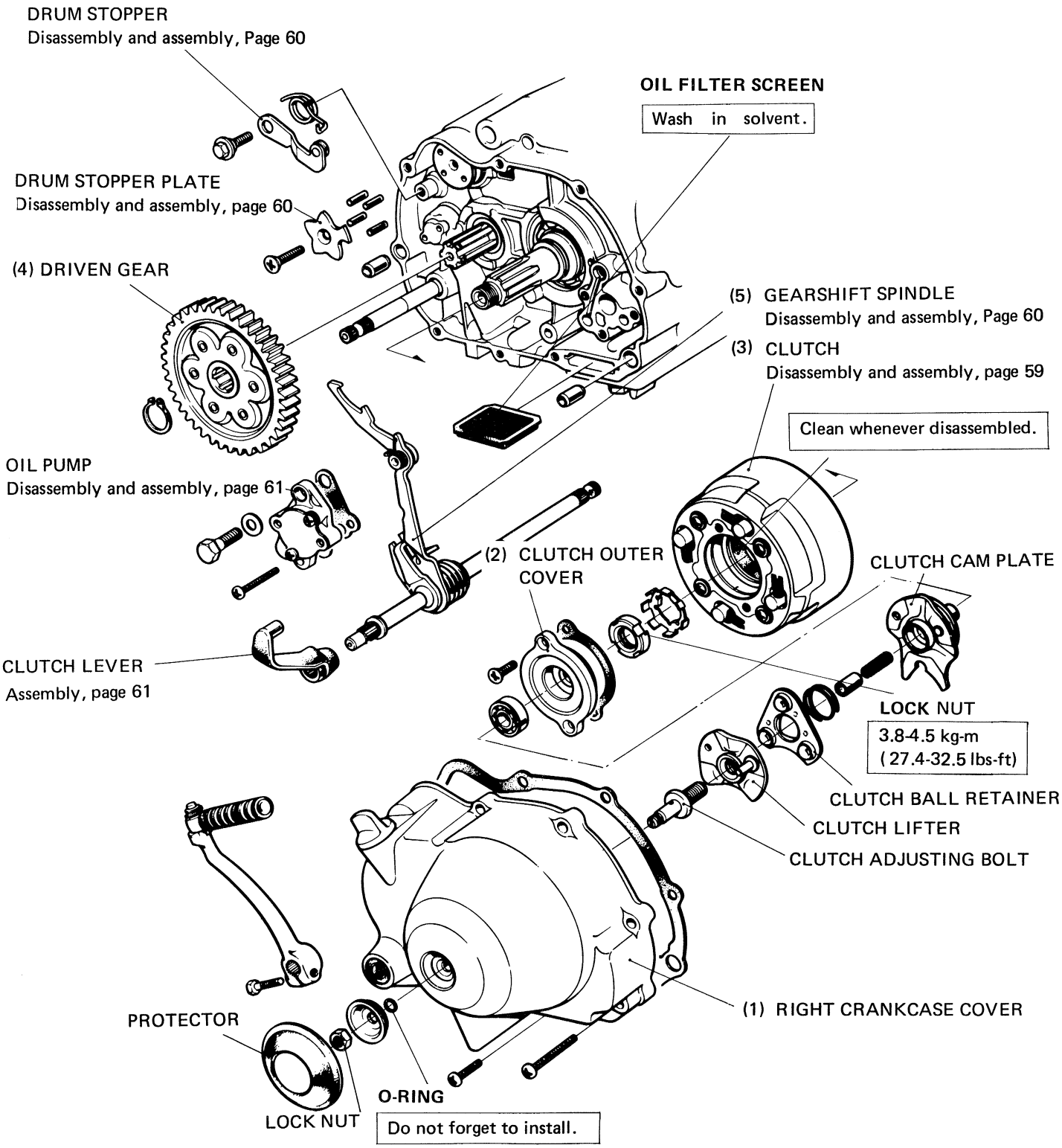

After installation, check and adjust the clutch, Page 28.

© HONDA MOTOR CO., LTD.

a. DISASSEMBLY/ASSEMBLY

• CLUTCH REMOVAL AND INSTALLATION

- Drain the engine oil
- Remove the clutch outer cover.

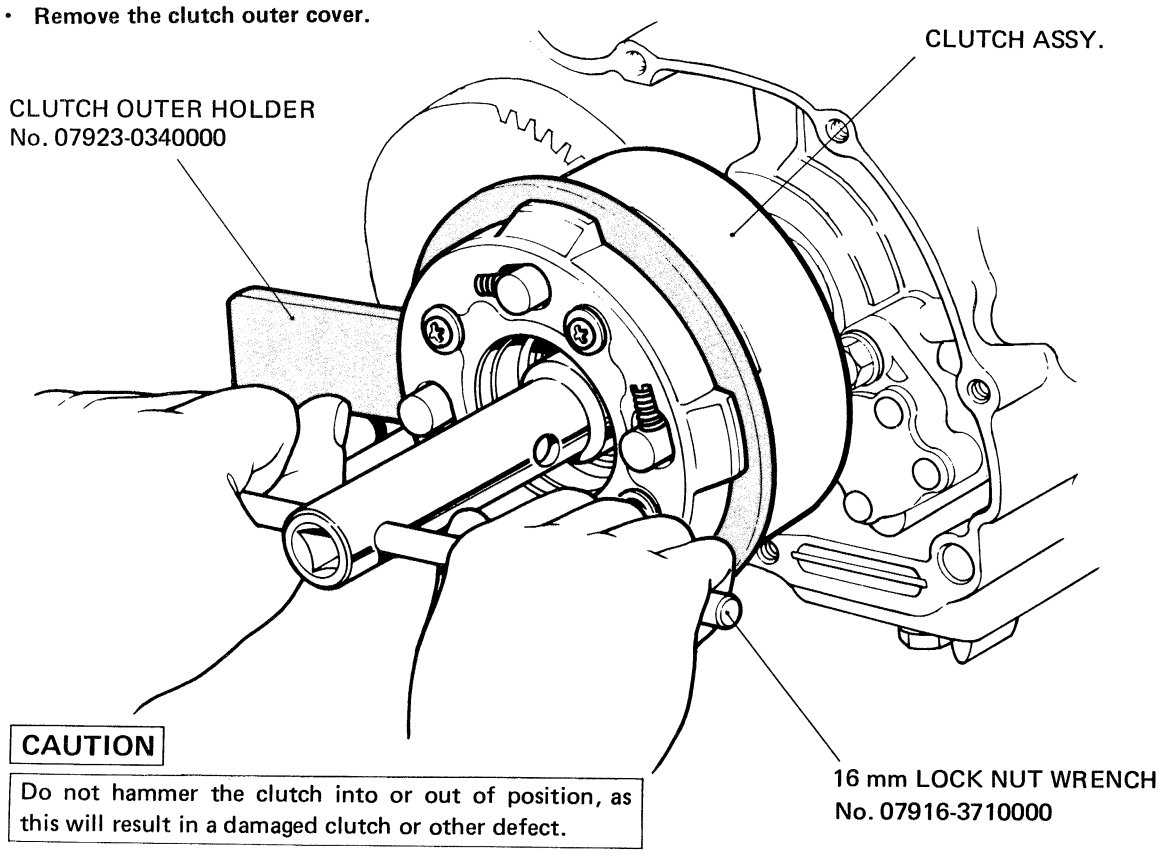

CAUTION

Do not hammer the clutch into or out of position, as this will result in a damaged clutch or other defect.

• LOCK WASHER INSTALLATION

CAUTION

- After tightening the lock nut, bend a tab of the lock washer to prevent loosening.
- Always turn in the lock nut to align the tab with the groove in the head of the lock nut.

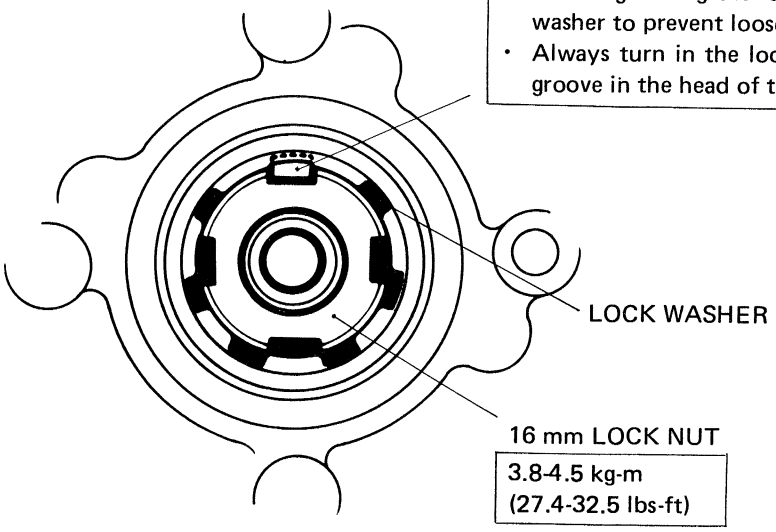

Date of Issue: Oct., 1977
© HONDA MOTOR CO., LTD.

CLUTCH DISASSEMBLY/ASSEMBLY

- **DAMPER SPRING DISASSEMBLY/ASSEMBLY**

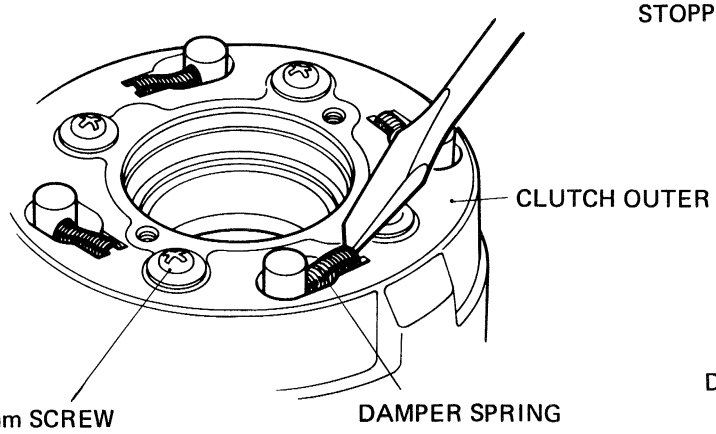

Tighten these screws in a criss-cross pattern and in two or more steps.

- **CLUTCH WEIGHT INSTALLATION**

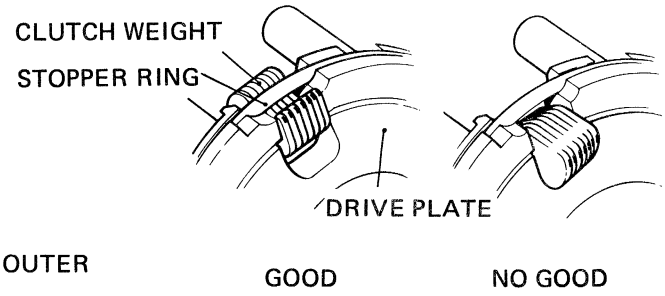

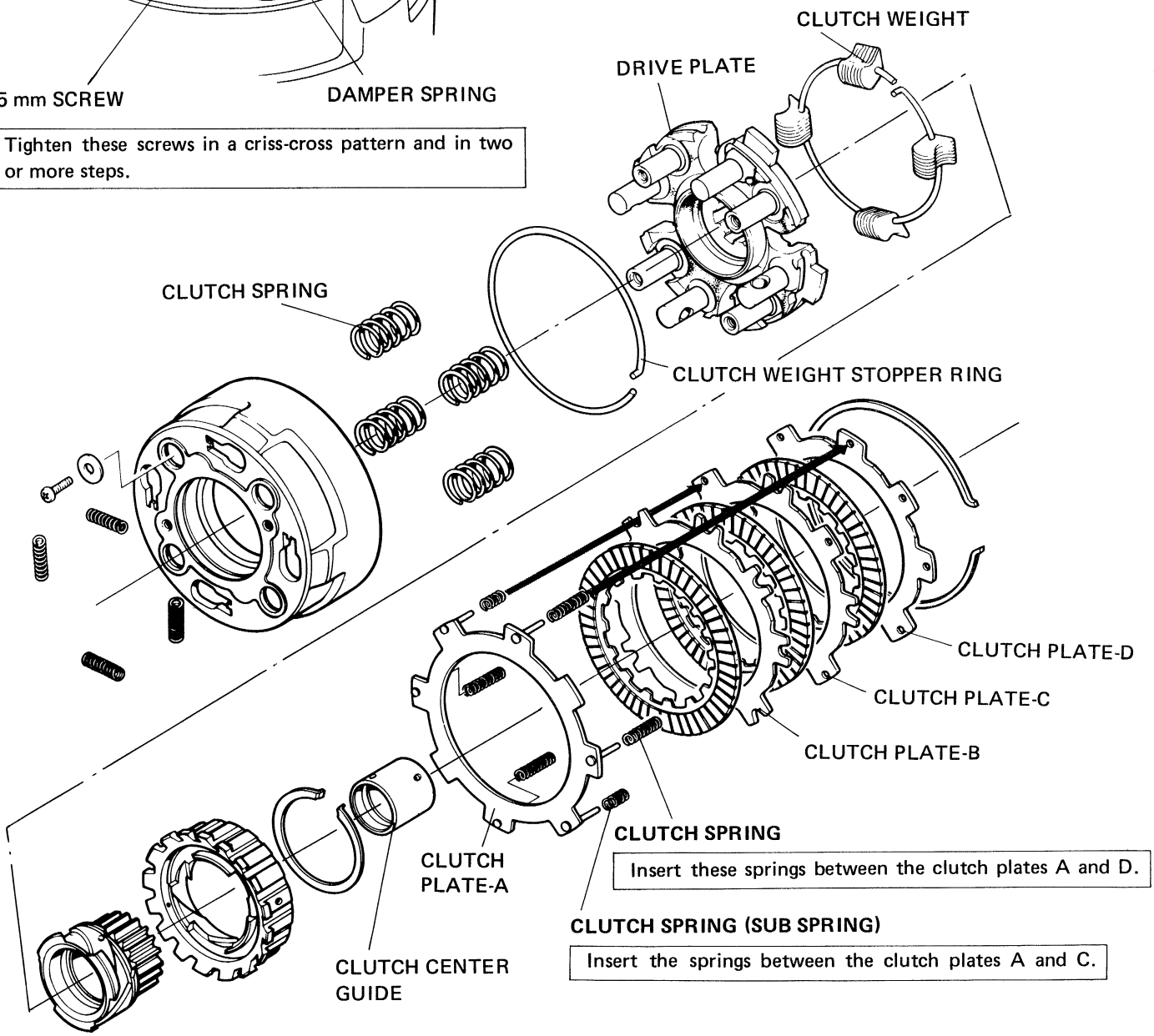

Insert these springs between the clutch plates A and D.

Insert the springs between the clutch plates A and C.

© HONDA MOTOR CO., LTD.

- **SHIFT SPINDLE DISASSEMBLY/ASSEMBLY**

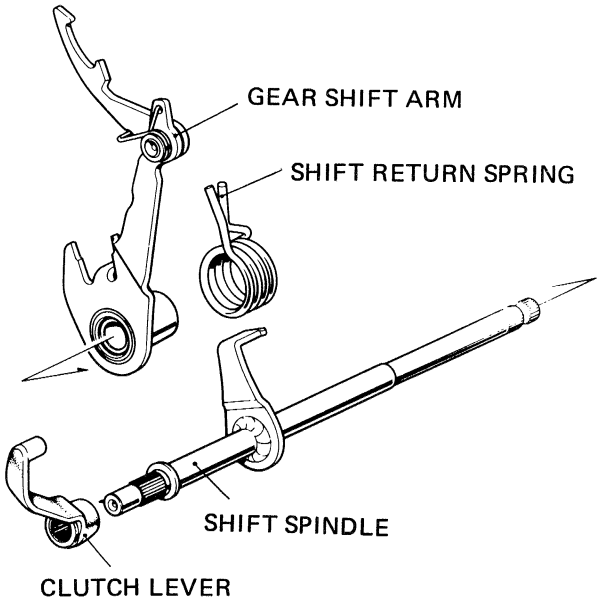

After installing the lever, check for operation.

The shift spindle hole in the left crankcase cover is provided with an oil seal and care must be used in installing the spindle to avoid damage to it by rotating it by hand.

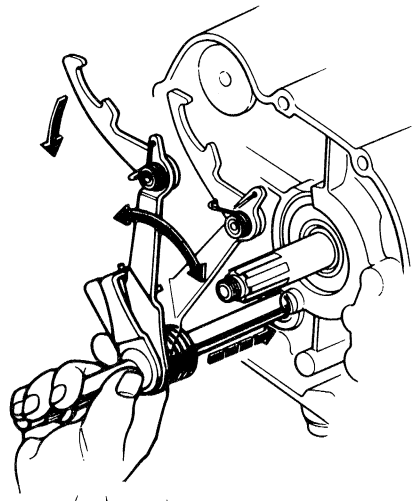

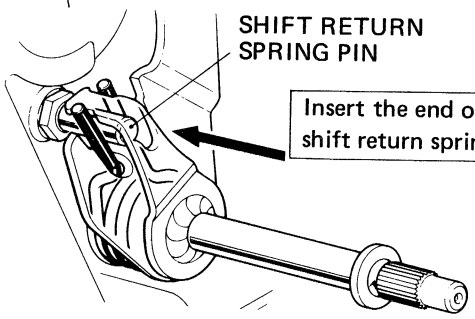

Insert the end of the spring into the shift return spring pin.

- **DRUM STOPPER PLATE INSTALLATION**

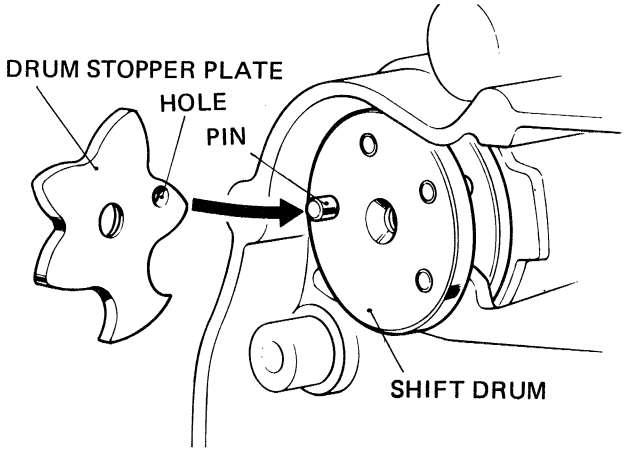

Hold the plate against the drum firmly until the pin on the drum has entered the pin hole.

- **DRUM STOPPER INSTALLATION**

Before tightening the pivot bolt, make sure that the stopper is positioned properly.

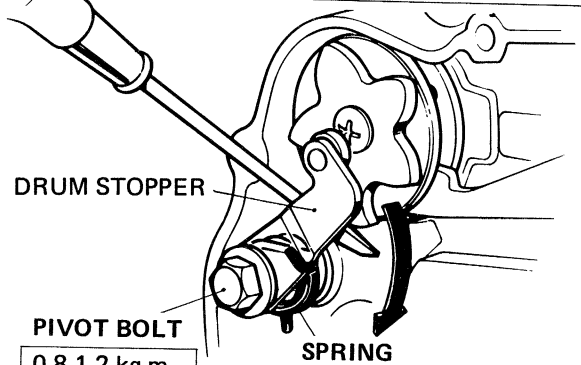

0.8-1.2 kg-m
(5.8-8.7 lbs-ft)

After the bolt has been tightened, check the stopper for operation.

Date of Issue: Oct., 1977
© HONDA MOTOR CO., LTD.

- **CLUTCH LEVER INSTALLATION**

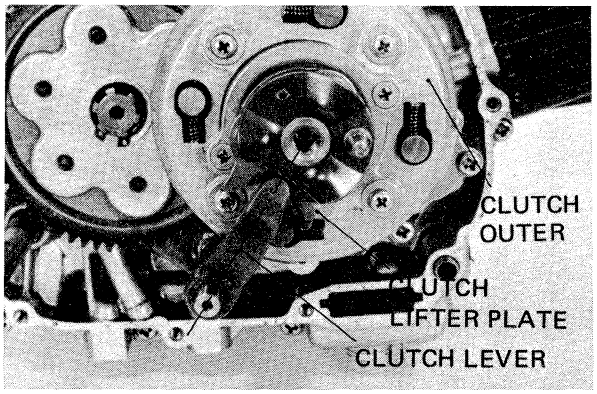

Install the clutch lever towards the center of the clutch as shown,

- **OIL PUMP DISASSEMBLY/ASSEMBLY**

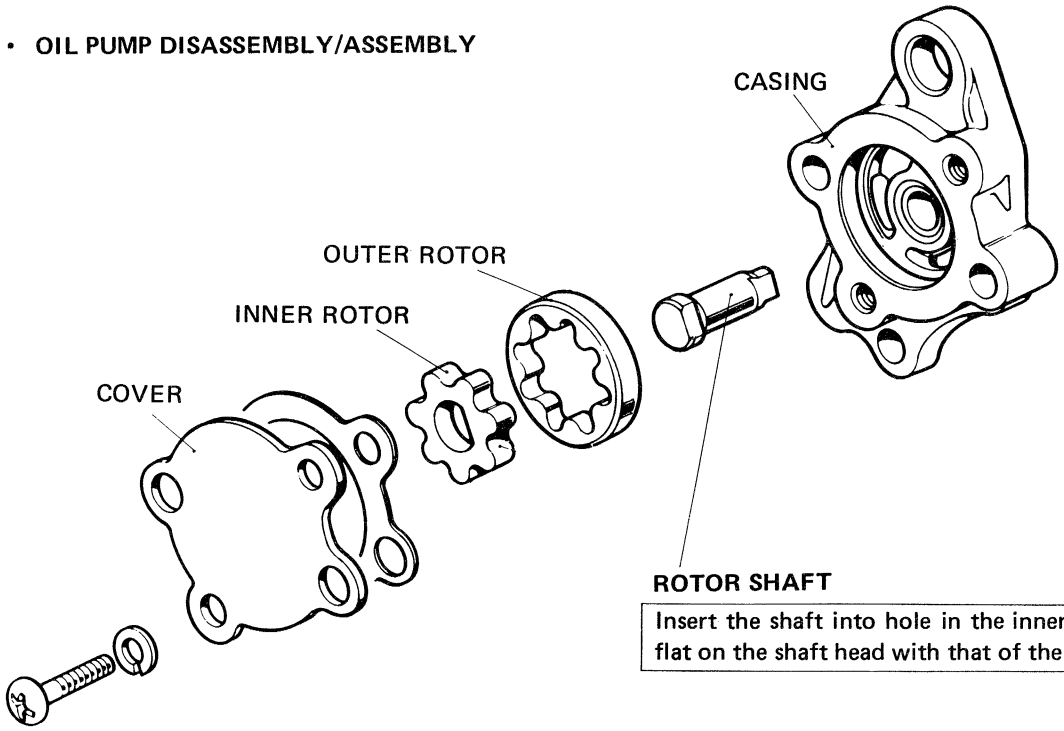

ROTOR SHAFT

Insert the shaft into hole in the inner rotor, aligning the flat on the shaft head with that of the hole.

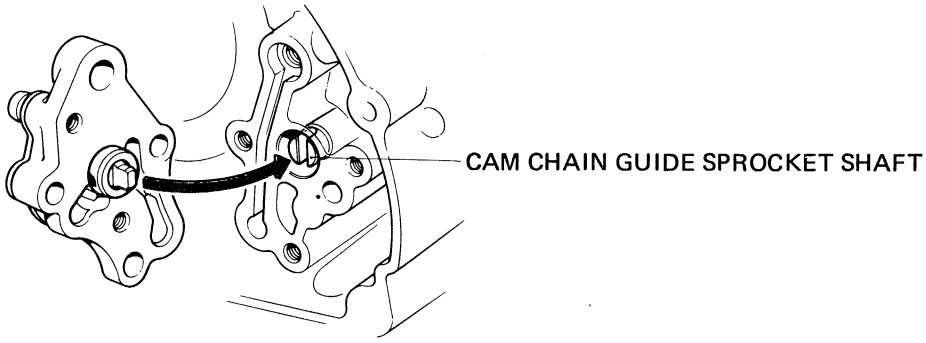

Check that the end of the rotor shaft engages the groove in the end of the sprocket shaft.

© HONDA MOTOR CO., LTD.

b. INSPECTION

- **OIL PUMP ROTOR TIP CLEARANCE**

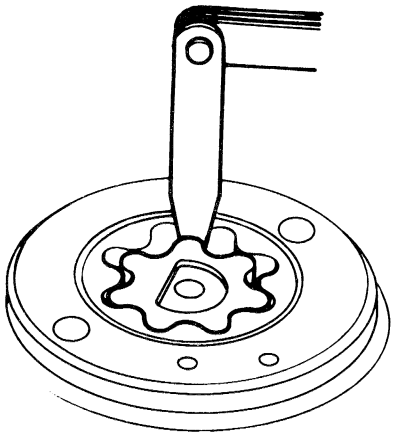

Standard	Service Limit
0.15 mm (0.006 in.)	0.2 mm (Replace) (0.008 in.)

- **OIL PUMP OUTER ROTOR-TO-BODY CLEARANCE**

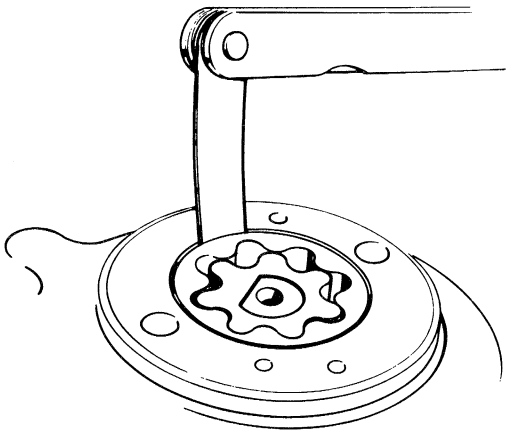

Standard	Service Limit
0.15-0.20 mm (0.006-0.008 in.)	0.25 mm (Replace) (0.010 in.)

Check the rotors for wear, nicks or scratches, and for freedom of any foreign matter.

- **FRICTION DISC THICKNESS**

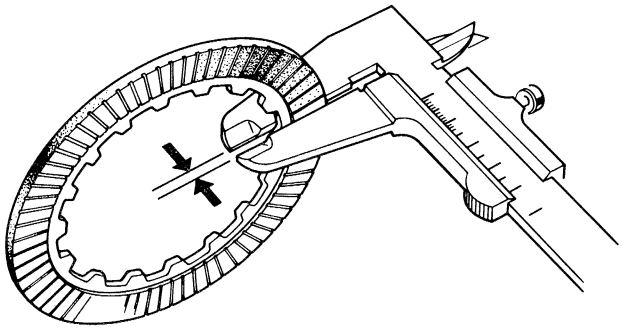

Standard	Service Limit
2.8-2.9 mm (0.1102-0.1142 in.)	2.4 mm (Replace) (0.0945 in.)

Check the friction discs, replacing those which are found to be worn or damaged.

Date of Issue: Oct., 1977
© HONDA MOTOR CO., LTD.

- **CLUTCH PLATE THICKNESS**

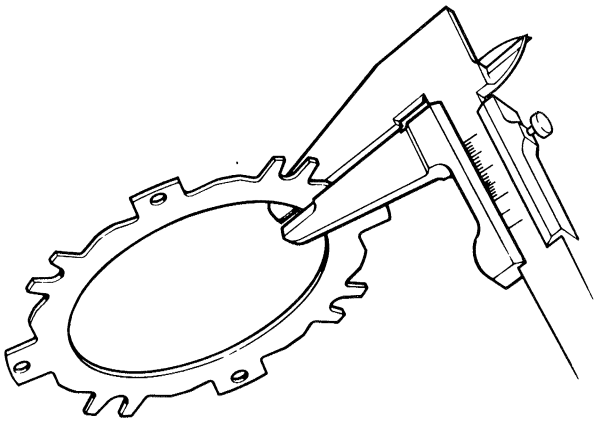

Standard	Service Limit
1.93-2.07 mm (0.0760-0.0815 in.)	1.85 mm (Replace) (0.0729 in.)

Take measurements at several points.

- **CLUTCH PLATE WARPAGE**

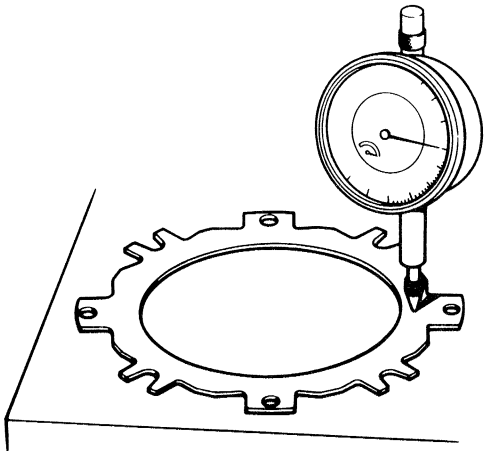

Standard	Service Limit
0.2 mm (0.008 in.)	0.5 mm (Replace) (0.020 in.)

The plate must be within specifications along its entire circumference.

- **CLUTCH SPRING FREE LENGTH**

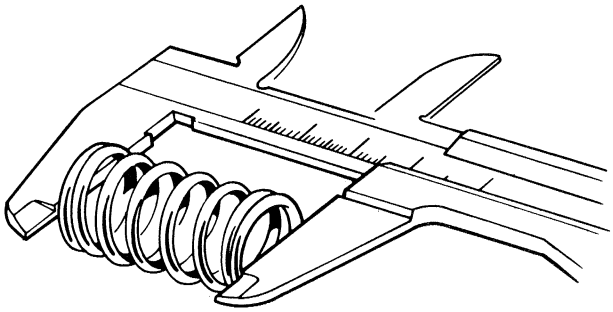

FREE LENGTH

Standard	Service Limit
27 mm (1.0630 in.)	26 mm (Replace) (1.0236 in.)

© HONDA MOTOR CO., LTD.

- **CLUTCH DRIVE GEAR I.D.**

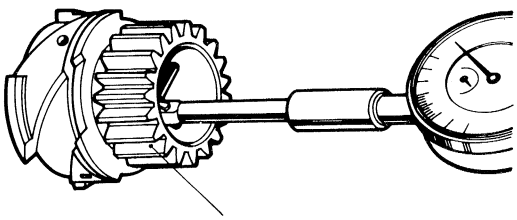

Standard	Service Limit
24.00-24.02 (0.9449-0.9457 in.)	24.15 mm (Replace) (0.9508 in.)

Check the driven gear if the drive gear is worn or damaged.

- **CLUTCH CENTER GUIDE**

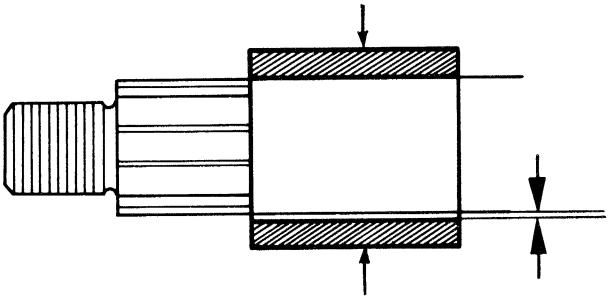

	Standard	Service Limit
O.D.	22.0-22.1 mm (0.8661-0.870 in)	21.85 mm (Replace) (0.8602 in)
GUIDE-TO-CRANKSHAFT CLEARANCE	0.005-0.047 mm (0.0002-0.0019 in)	0.15 mm (Replace) (0.060 in)

Date of Issue: Oct., 1977
© HONDA MOTOR CO., LTD.

6. AUXILIARY TRANSMISSION

SHIFT FORKSHAFT
KNOCK PIN
IDLER GEAR SHAFT
SHIFT FORK
Disassembly and assembly, Page 66
IDLER GEAR
Disassembly and assembly, Page 66
PLATE
O-RING
GREASE
CHANGE LEVER
HIGH GEAR
LOW GEAR
Disassembly and assembly, Page 66
COVER

Shift lever installation

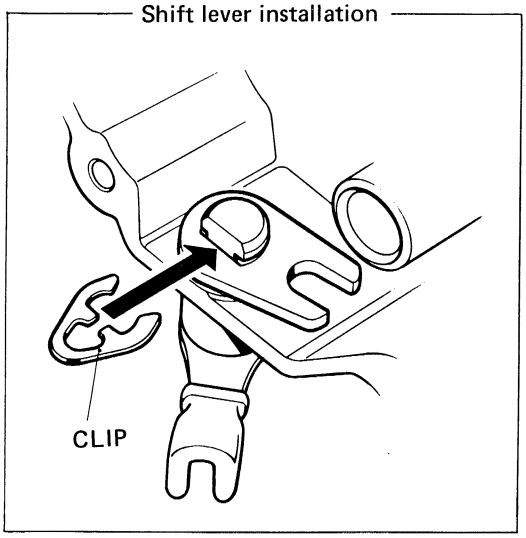

© HONDA MOTOR CO., LTD.

a. DISSASEMBLY/ASSEMBLY

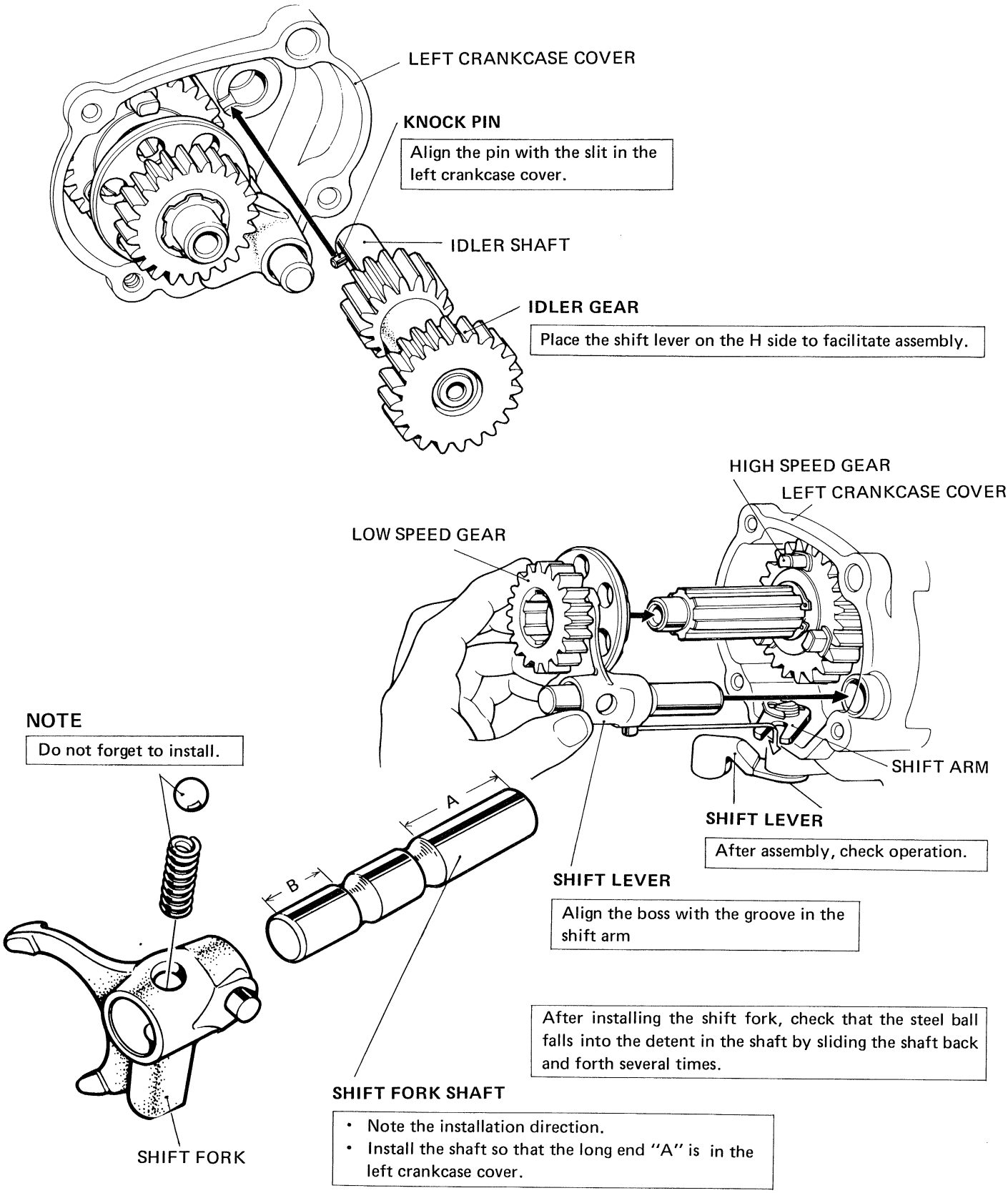

Date of Issue: Oct., 1977
© HONDA MOTOR CO., LTD.

b. INSPECTION

- **IDLER GEAR I.D.**

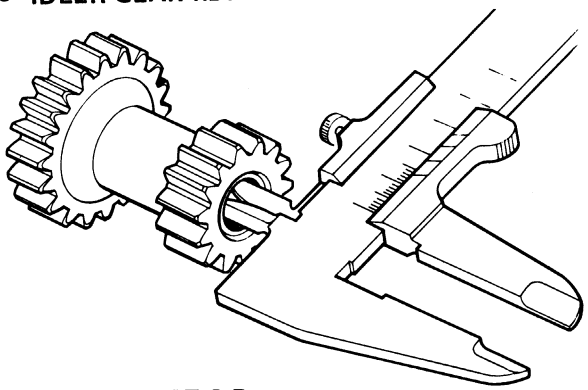

Standard	Service Limit
13.000-13.018 mm 0.5118-0.5125 in.)	13.10 mm (0.5157 in)

- **IDLER SHAFT O.D.**

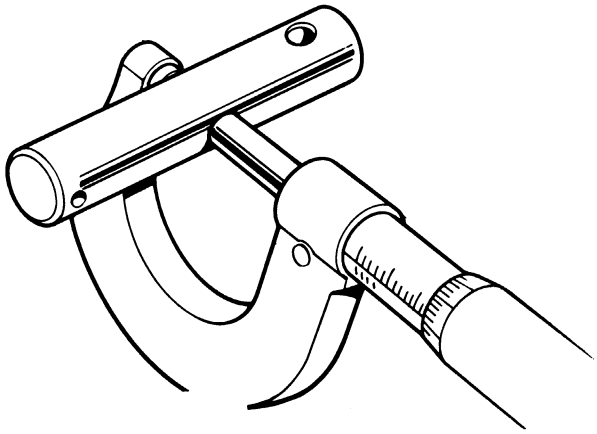

Standard	Service Limit
12.966-12.984 mm (0.5105-0.5112 in)	12.85 mm (0.5140 in)

- **GEARS**

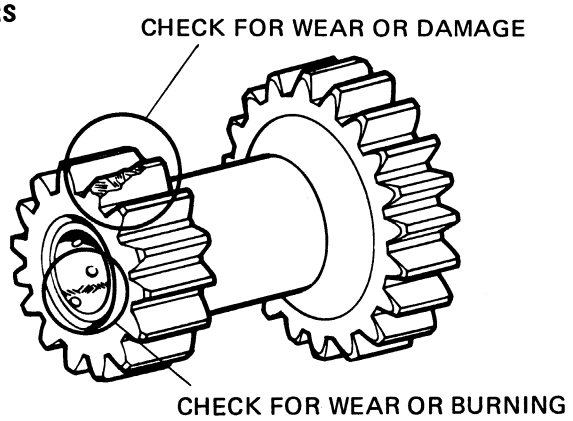

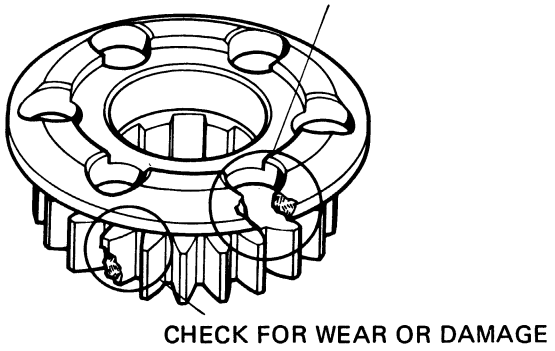

- **SHIFT FORK**

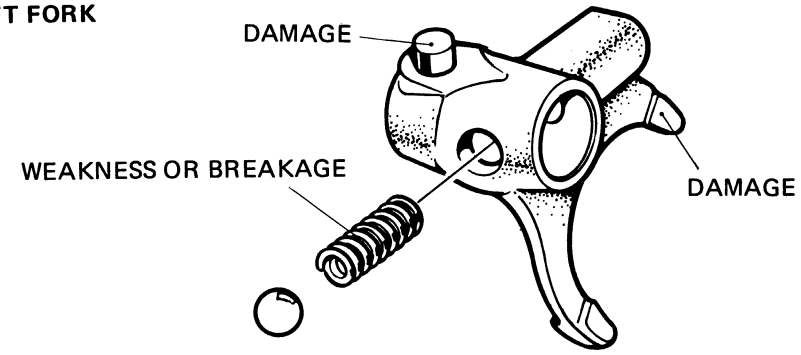

© HONDA MOTOR CO., LTD.

7. A.C.GENERATOR/CAM CHAIN TENSIONER

- Before disassembly, drain the oil from the engine.
- Remove the auxiliary transmission.
- Perform Steps (4) thru (6) after the cylinder has been removed.

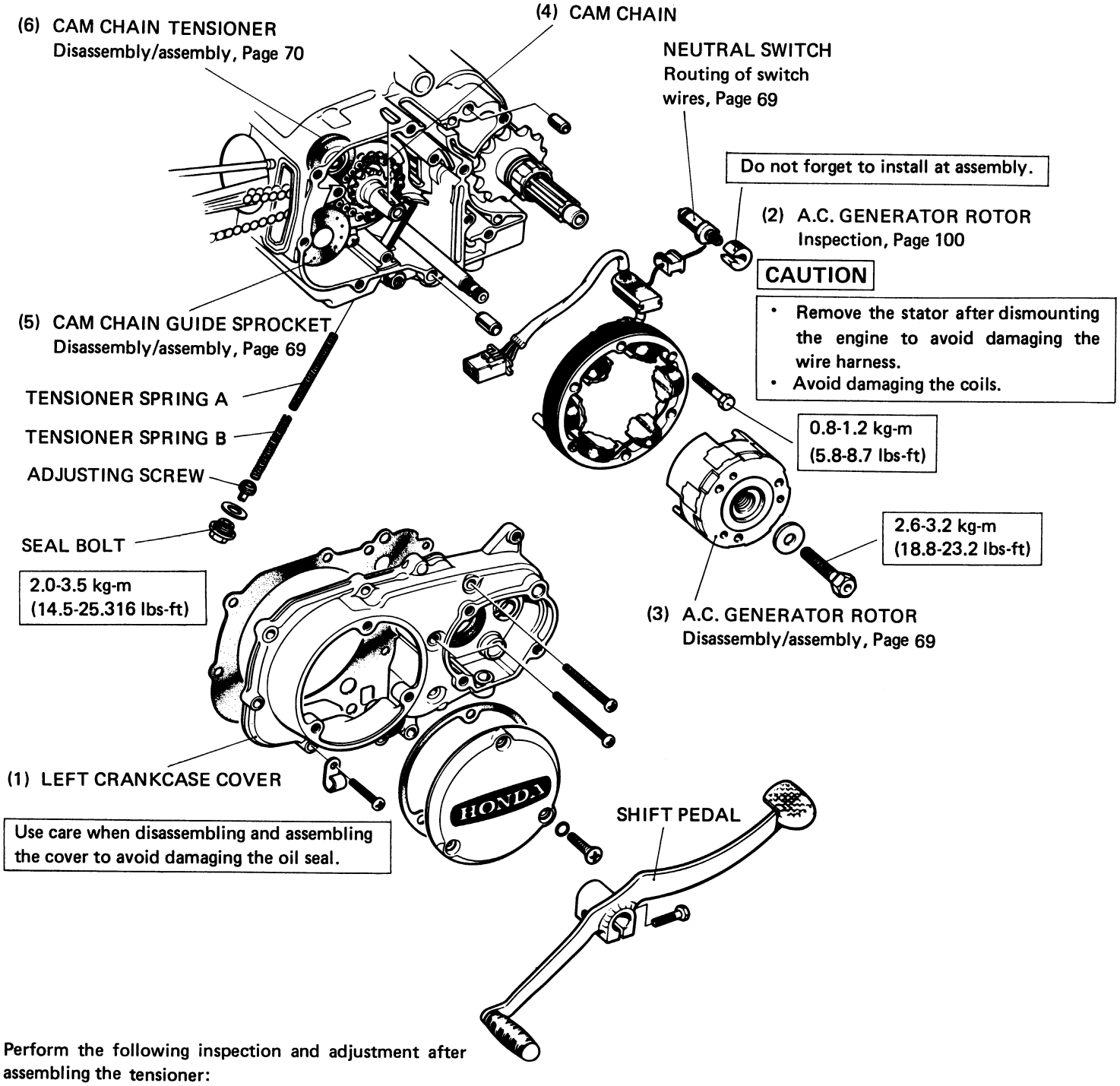

Perform the following inspection and adjustment after assembling the tensioner:

Cam chain tension Page 26

Date of Issue. Oct., 1977
© HONDA MOTOR CO., LTD.

a. DISASSEMBLY/ASSEMBLY

- **A.C. GENERATOR ROTOR REMOVAL**

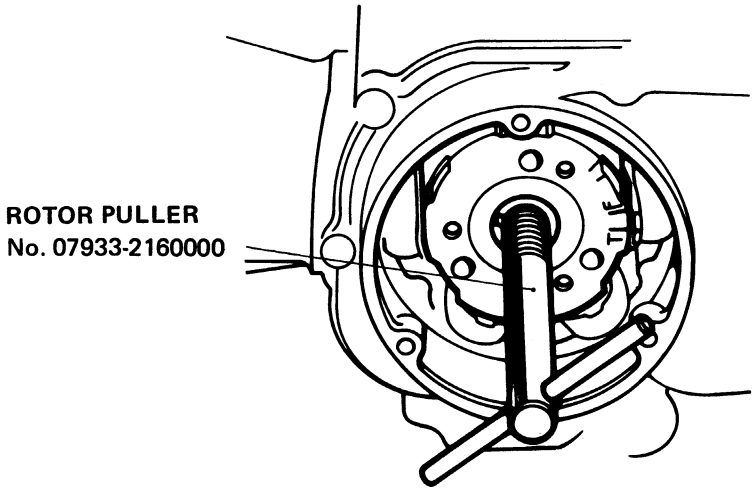

- **NEUTRAL SWITCH WIRE INSTALLATION**

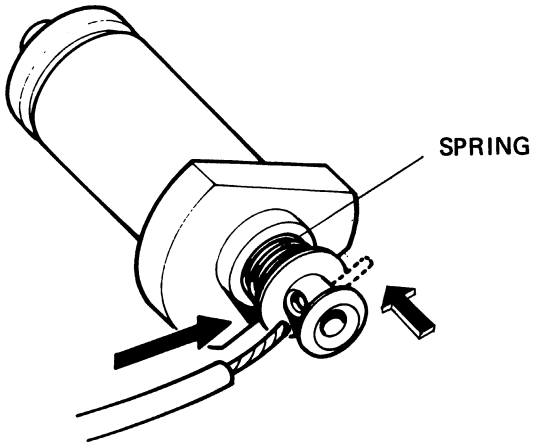

Route the end of the wire through the hole in the switch while compressing the spring.

- **CAM CHAIN GUIDE SPROCKET INSTALLATION**

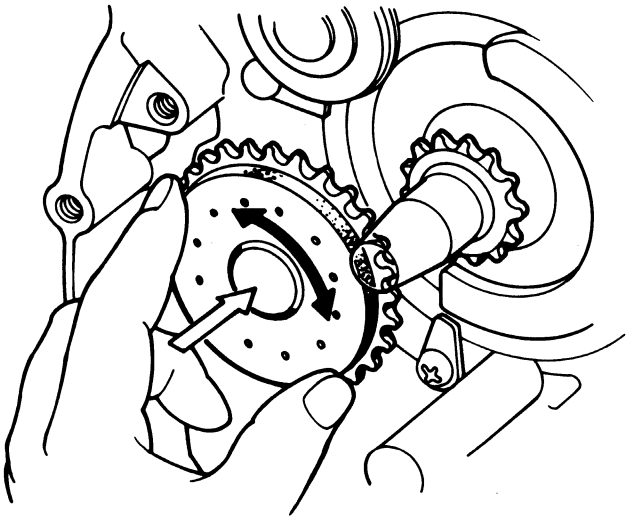

- Align the cutout in the end with the pump rotor shaft while rotating the sprocket by hand.
- Apply clean engine oil to the shaft during assembly.

© HONDA MOTOR CO., LTD.

- **CAM CHAIN TENSIONER DISASSEMBLY/ ASSEMBLY**

(1) Remove the cylinder head.

(2) Remove the cam chain.

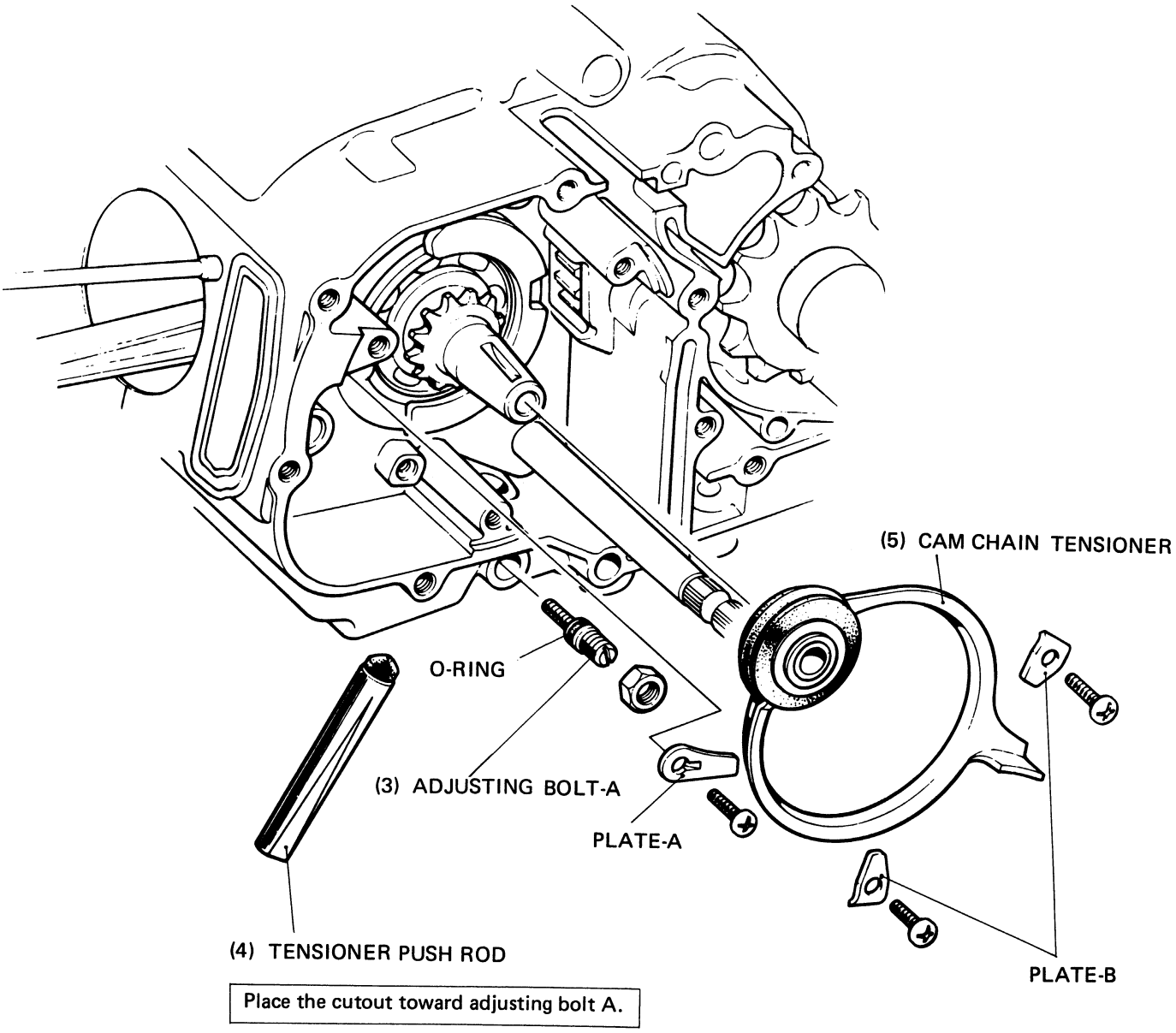

Place the cutout toward adjusting bolt A.

Date of Issue: Oct., 1977
© HONDA MOTOR CO., LTD.

8. TRANSMISSION/CRANKSHAFT/ KICK SARTER

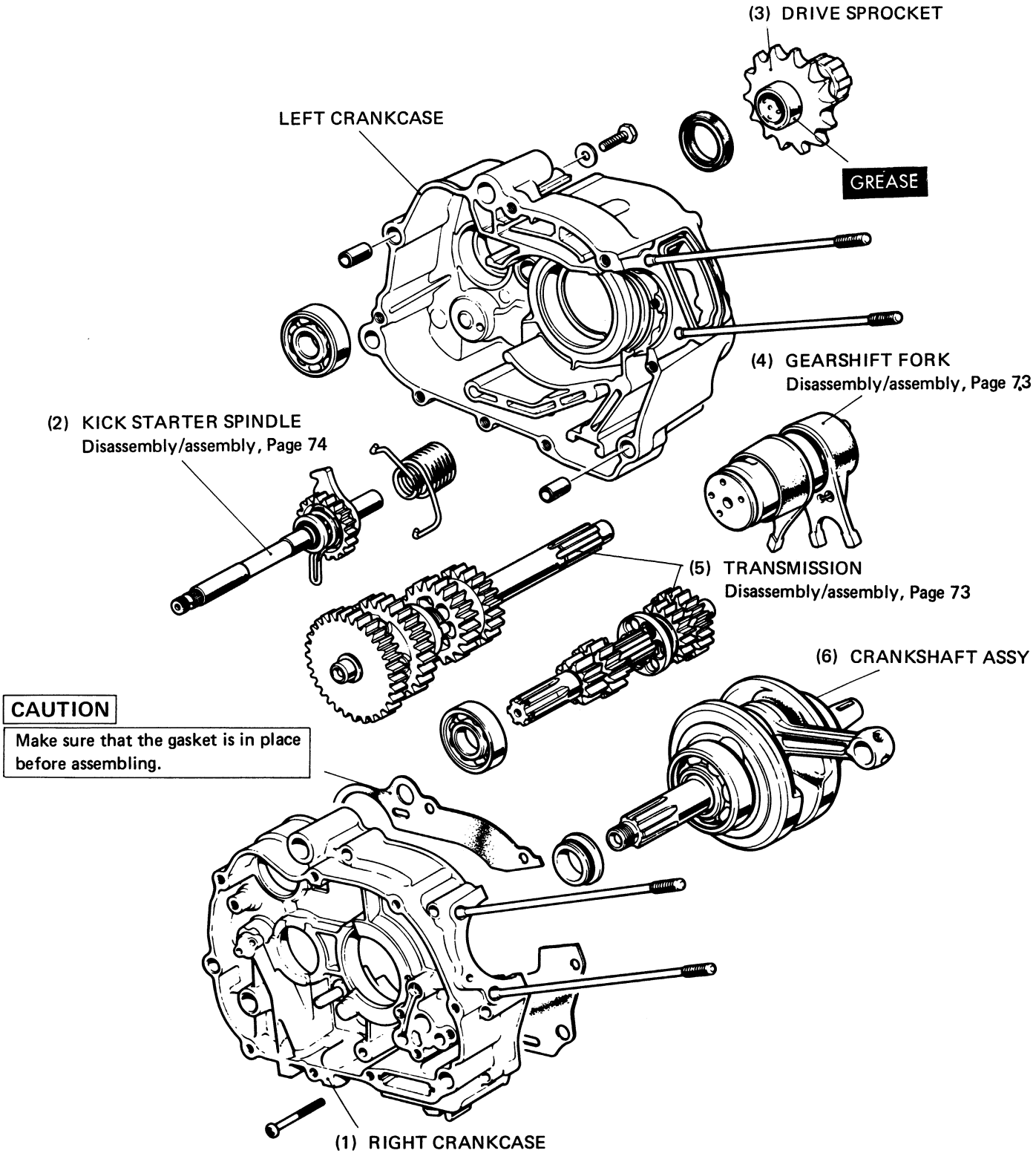

CAUTION

Make sure that the gasket is in place before assembling.

Parts (4) and (5) can be removed as an assembled unit.

© HONDA MOTOR CO., LTD.

a. DISASSEMBLY/ASSEMBLY

• TRANSMISSION ASSEMBLY

- With the gearshift drum in place, engage the counter-gear assembly with the main drive gear assembly. Then, while holding the assemblies together, slip the ends of the shafts into holes in the left crankcase.

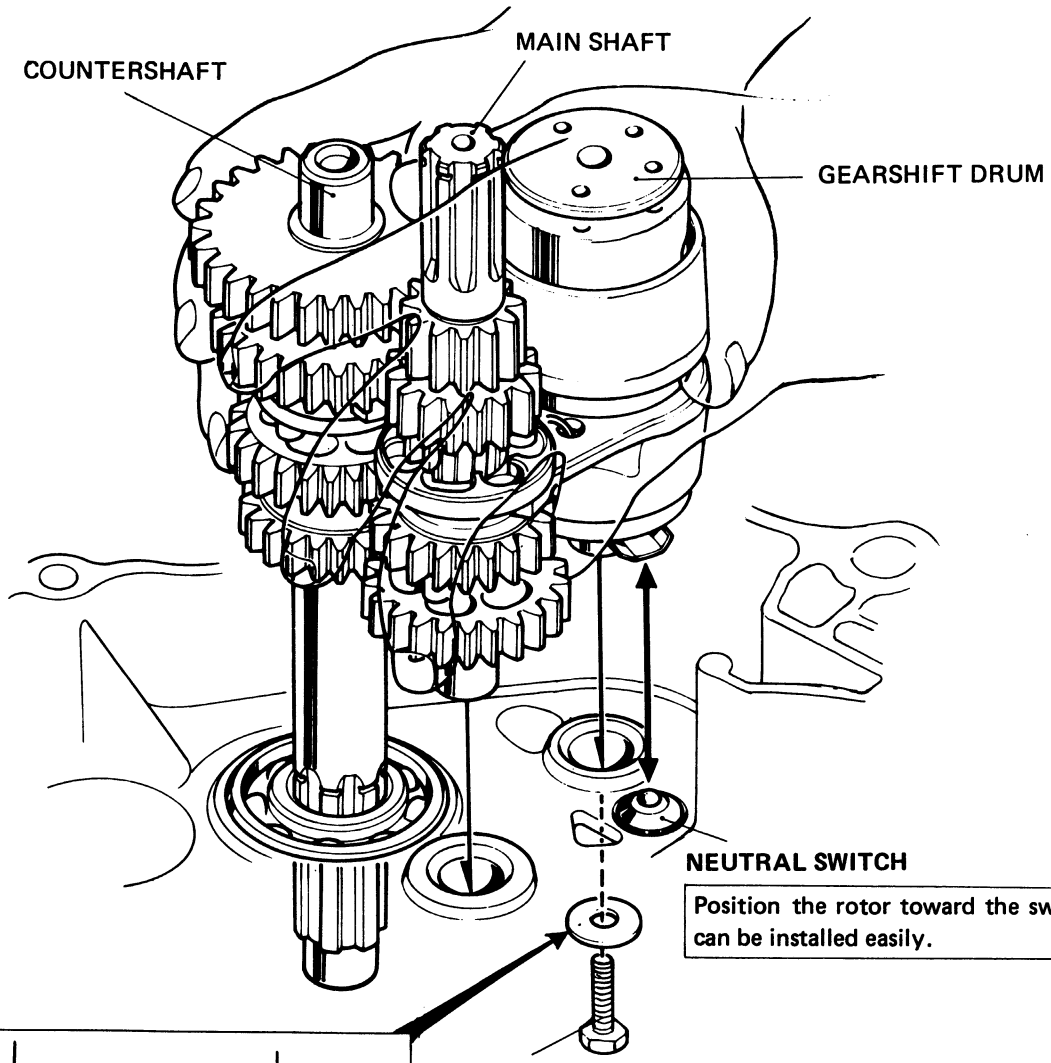

Position the rotor toward the switch so that the switch can be installed easily.

0.8-1.2 kg-m
(5.8-8.7 lbs-ft)

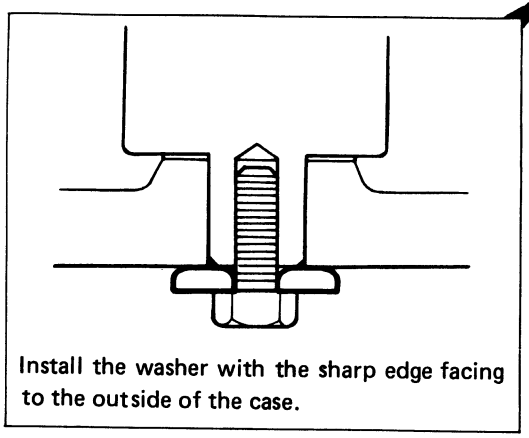

Install the washer with the sharp edge facing to the outside of the case.

After the transmission has been assembled, rotate the main shaft to check that the gears rotate freely.

Date of Issue: Oct., 1977
© HONDA MOTOR CO., LTD.

- **TRANSMISSION GEARS**

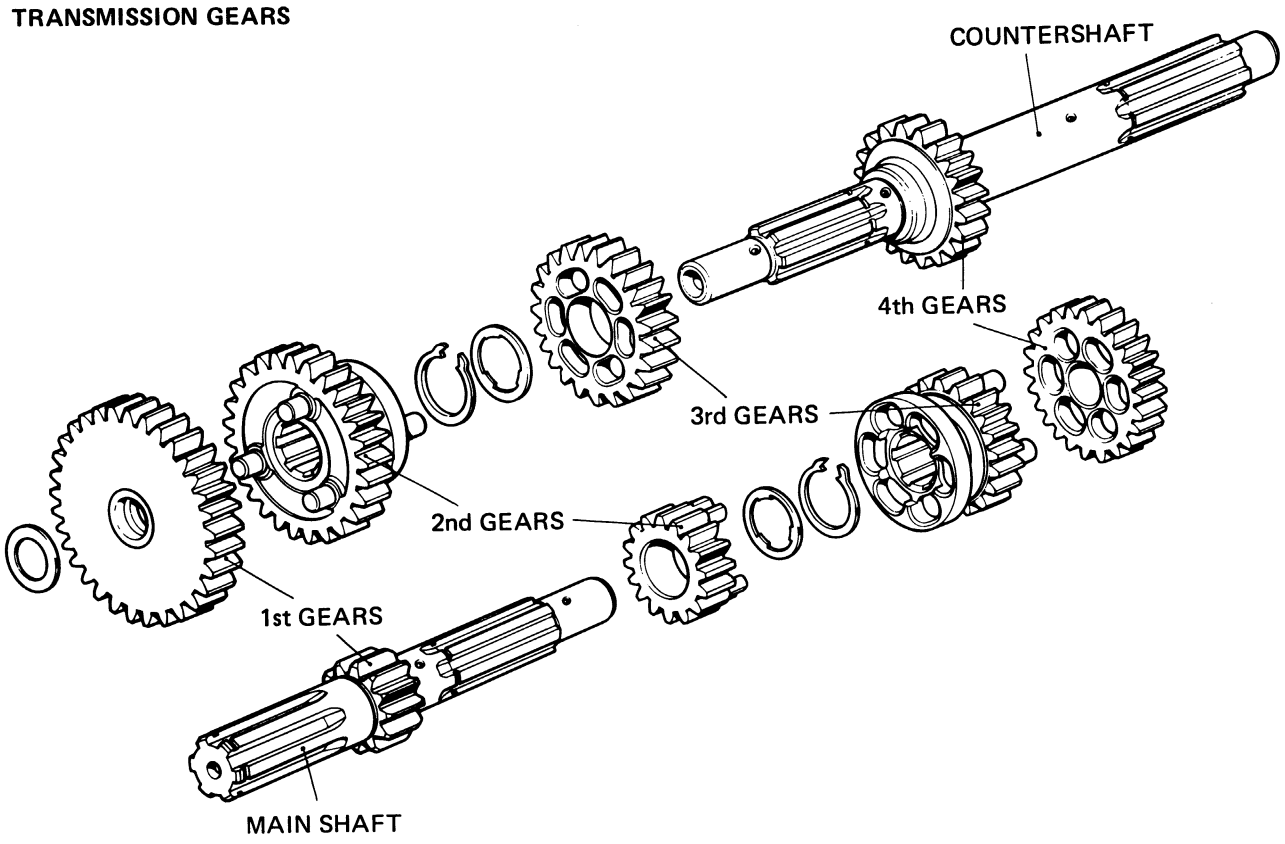

- **GEARSHIFT DRUM ASSEMBLY**

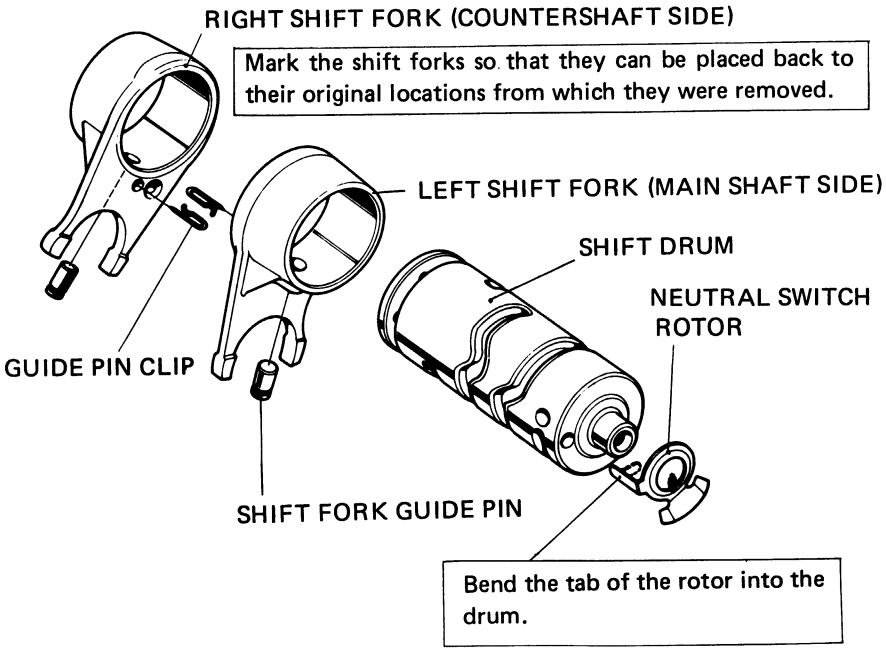

© HONDA MOTOR CO., LTD.

- **KICK STARTER**

- Assemble the ratchet spring (1), stopper (2) and return spring (3) in the order named.

(2) STOPPER

Align the stopper with the boss of the right crankcase.

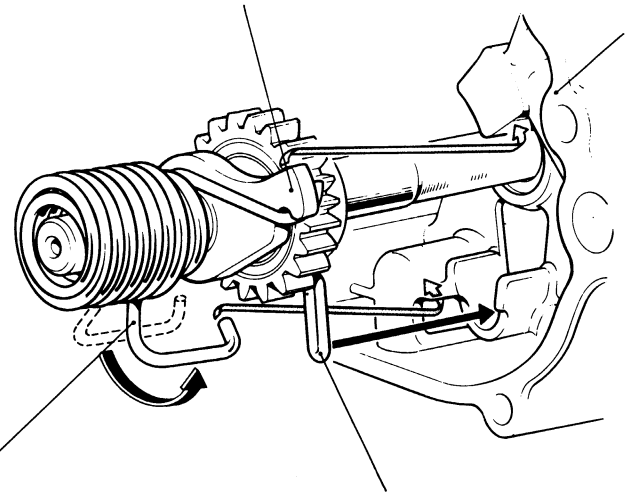

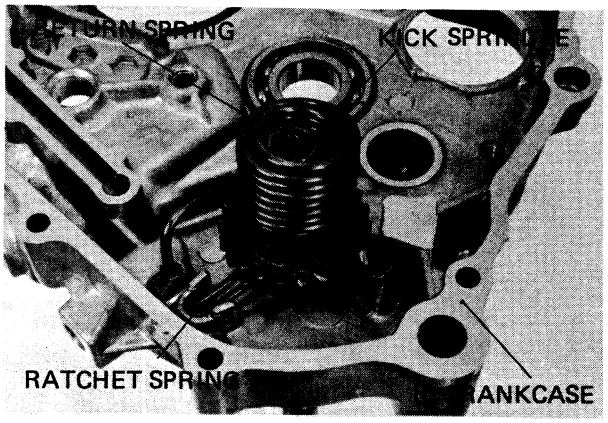

(3) RETURN SPRING

Place this end of the return spring into hole in the cutout in the right crankcase.

(1) RATCHET SPRING

Line up the spring with the groove in the right crankcase.

- **TIMING GEAR**

· **DISASSEMBLY**

Scribe an aligning mark over the crankshaft from the center between two teeth. Then, remove the sprocket.

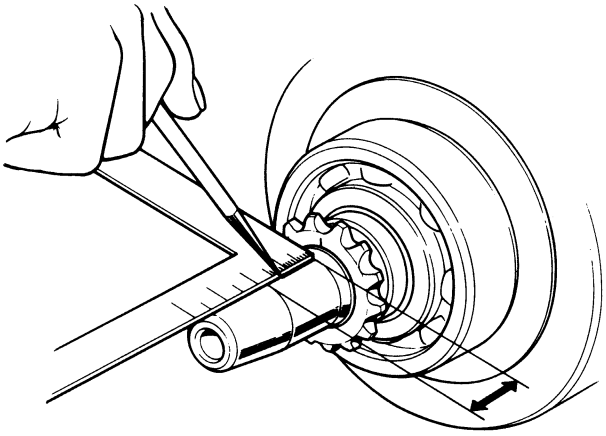

NEVER SCRIBE ACROSS OIL SEAL CONTACTING SURFACES.

· **ASSEMBLY**

Scribe an aligning mark over a new sprocket at the center of two teeth. Install the sprocket on the crankshaft with the marking on the sprocket aligned with the marking on the crankshaft.

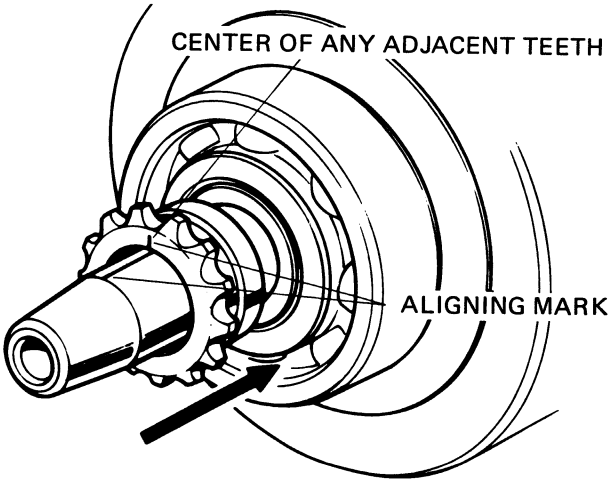

Date of Issue. Oct., 1977
© HONDA MOTOR CO., LTD.

b. INSPECTION

- **TRANSMISSION GEARS**

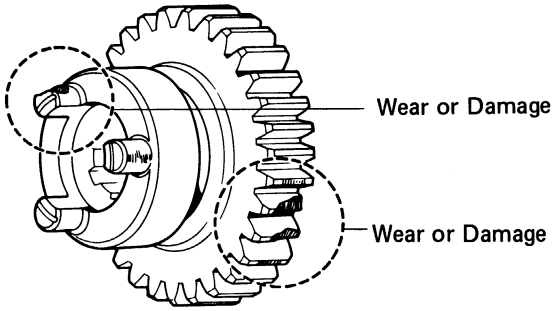

- **GEARSHIFT DRUM/GUIDE PIN INSPECTION**

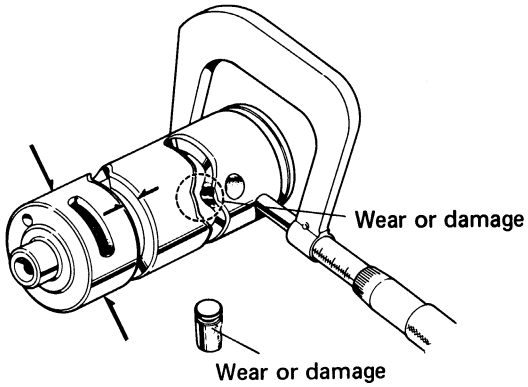

	Standard	Service Limit
O.D.	41.950-41.975 mm (1.6516-1.6526 in.)	41.80 mm (Replace) (1.6457 in.)
Groove width	6.1-6.2 mm (0.2402-0.2441 in.)	6.4 mm (Replace) (0.2520 in.)

- **GEARSHIFT FORK I.D.**

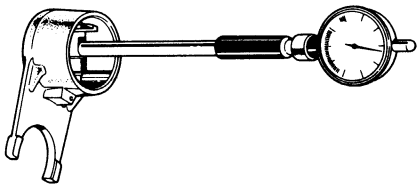

Check the bore diameter in two positions at right angle to each other.

Standard	Service Limit
42.00 mm (1.6535 in.)	42.10 mm (Replace) (1.6575 in.)

- **GEARSHIFT FORK END THICKNESS**

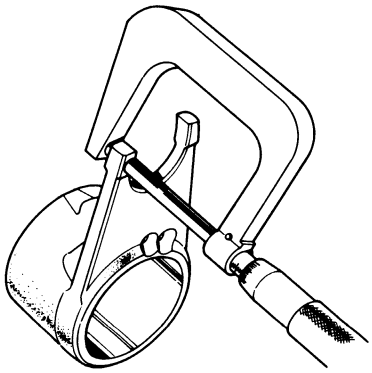

Standard	Service Limit
5.96-6.04 mm (0.2346-0.2378 in.)	5.70 mm (Replace) (0.2244 in.)

© HONDA MOTOR CO., LTD.

- **CONNECTING ROD SMALL END I.D.**

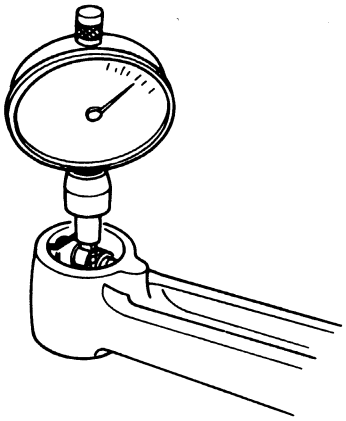

Standard	Service Limit
14.012-14.028 mm (0.5517-0.5523 in.)	14.05 mm (Replace) (0.5531 in.)

- **CONNECTING ROD BIG END SIDE CLEARANCE**

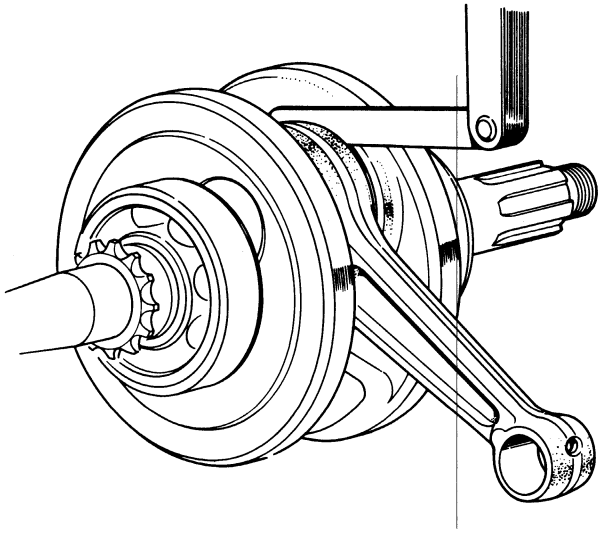

Standard	Service Limit
0.10-0.35 mm (0.004-0.019 in.)	0.8 mm (Replace) (0.032 in.)

- **CONNECTING ROD BIG END RADIAL CLEARANCE**

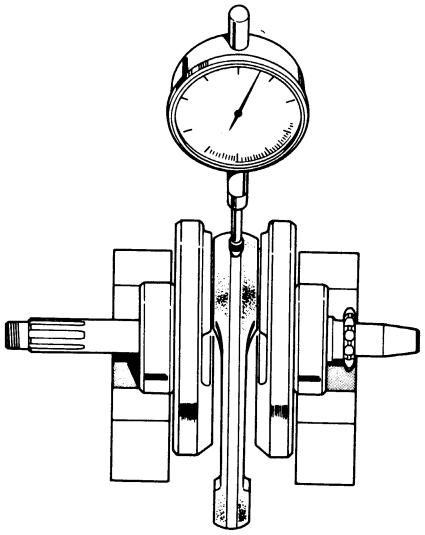

Measure the radial clearance in two directions.

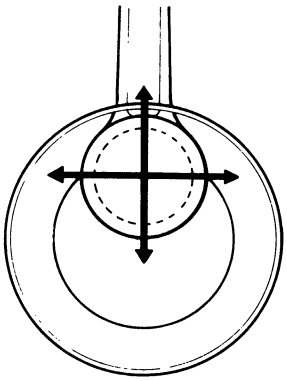

Standard	Service Limit
0-0.01 mm (0-0.0004 in.)	0.05 mm (Replace) (0.002 in)

Date of Issue: Oct., 1977
© HONDA MOTOR CO., LTD.

- **CRANKSHAFT BEARING PLAY**

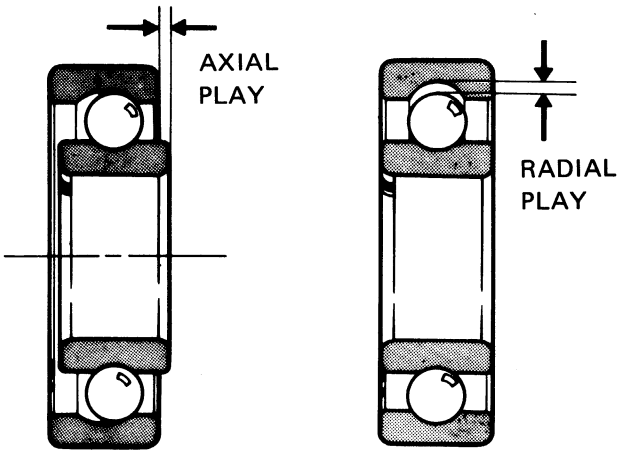

	Standard	Service Limit
Axial play	0.10-0.35 mm (0.004-0.019 in.)	0.80 mm (Replace) (0.032 in.)
Radial play	0.01 mm (0-0.0004 in.)	0.05 mm (Replace) (0.002 in.)

- **CRANKSHAFT RUNOUT**

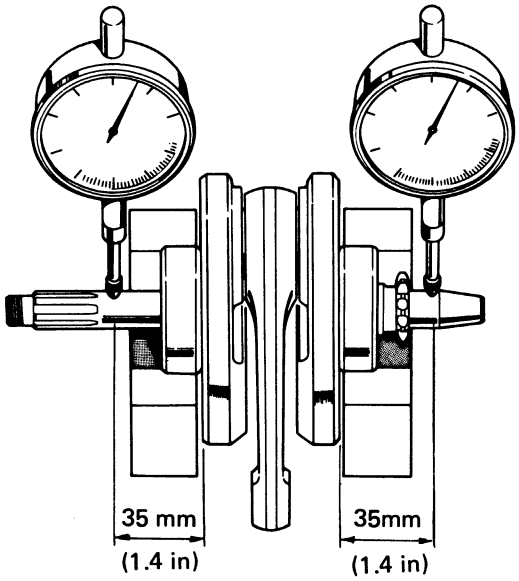

Standard	Service Limit
0-0.015 mm (0-0.0006 in.)	0.1 mm (Replace) (0.004 in.)

Measure runout at points shown.

© HONDA MOTOR CO., LTD.

1977 (K8) model

WARNING

- Drain fuel from the carburetor by loosening the drain screw.
- Do not bring an open flame near gasoline. Wipe off spilled gasoline at once.

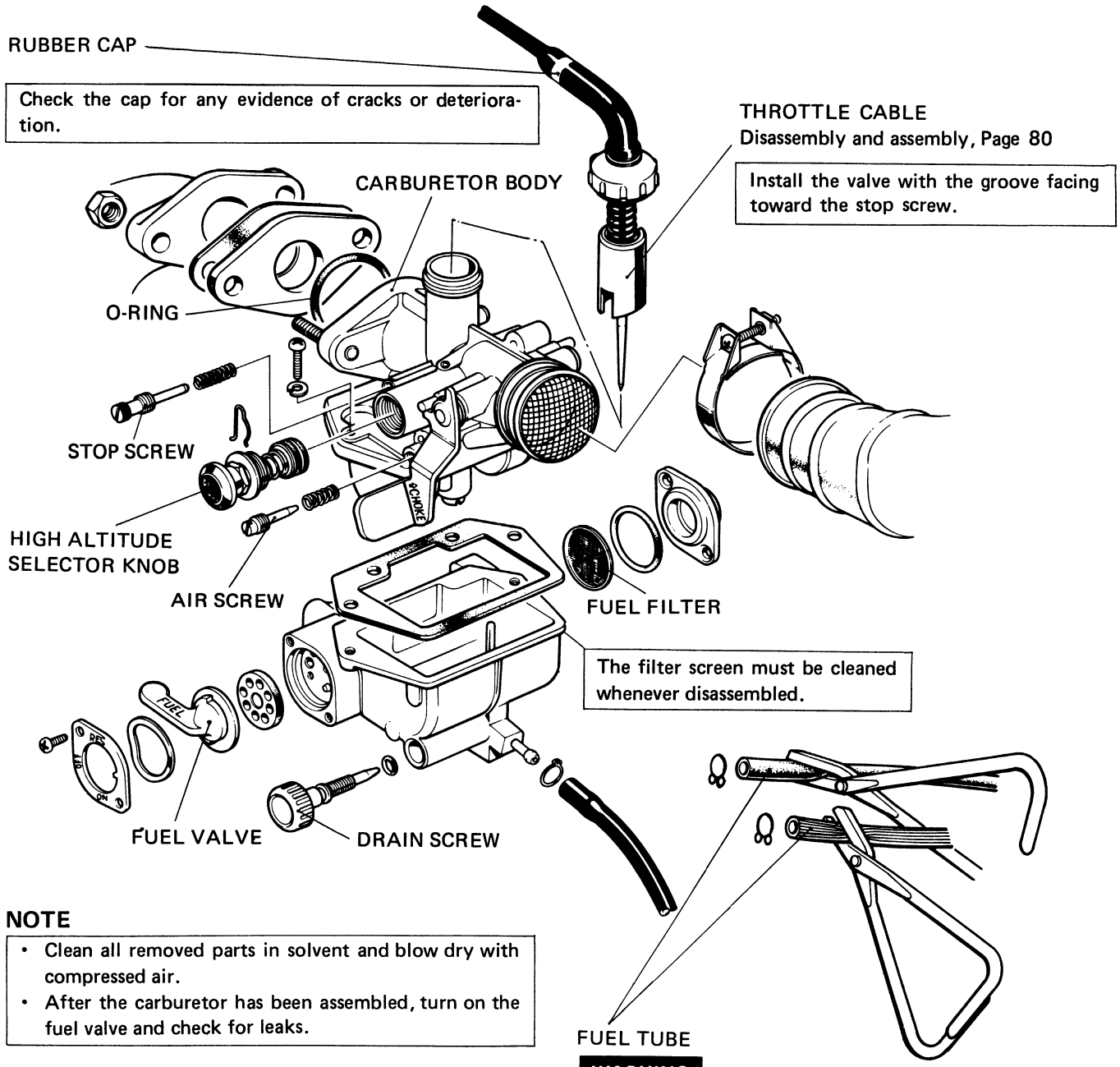

NOTE

- Clean all removed parts in solvent and blow dry with compressed air.
- After the carburetor has been assembled, turn on the fuel valve and check for leaks.

Perform the following operations after assembling the carburetor:

Throttle grip free play . . . . . Page 25
Idle speed adjustment . . . . . Page 25

WARNING

Clamp fuel tank tubes to seal them before disconnecting the tubes from the carburetor or dismantling the fuel valve.

- Check each tube for cracks or deterioration.
- To reconnect the tubes, refer to page 96 .

Date of Issue: Oct., 1977
© HONDA MOTOR CO., LTD.

1978(K9) model

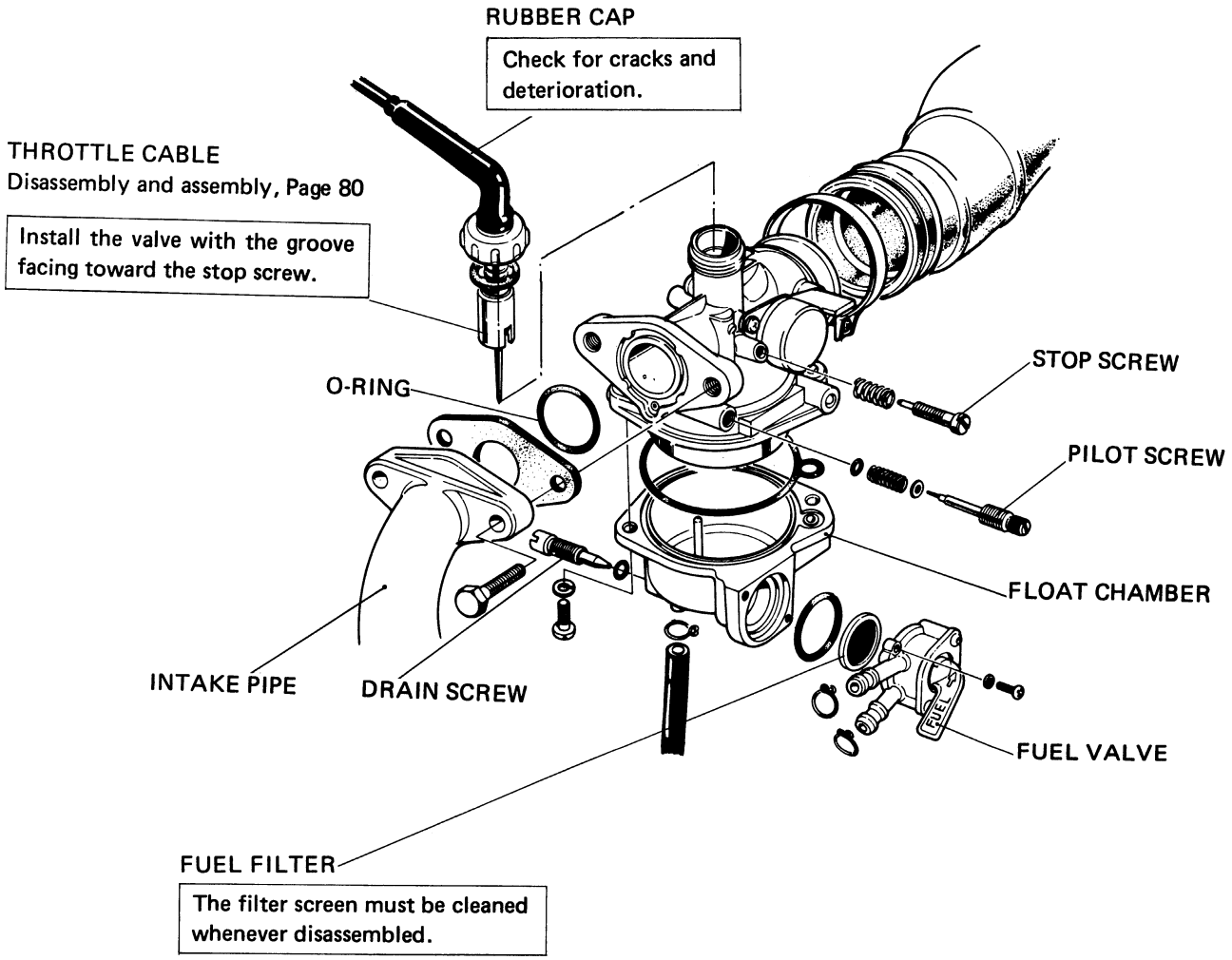

- Clean all removed parts in solvent and blow dry with compressed air.
- After the carburetor has been assembled, turn on the fuel valve and check for leaks.

Perform the following operations after assembling the carburetor:

Throttle grip free play . . . . . Page 25
Idle speed adjustment . . . . . Page 25

© HONDA MOTOR CO., LTD.

a. DISASSEMBLY/ASSEMBLY

• THROTTLE VALVE

- Disconnect the end of the throttle cable from the groove in the throttle valve.

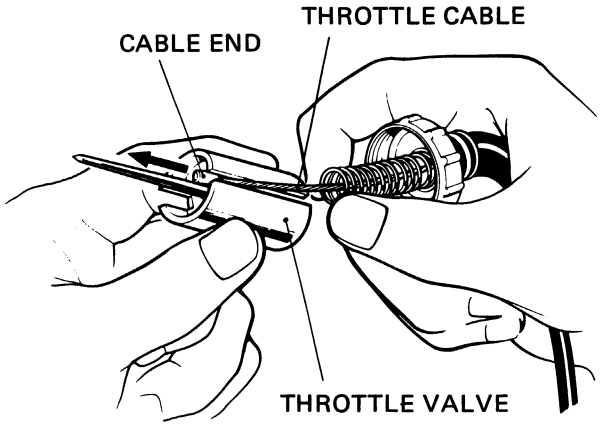

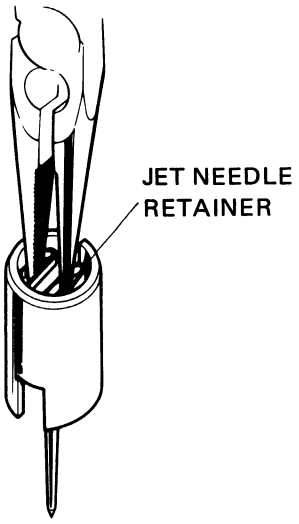

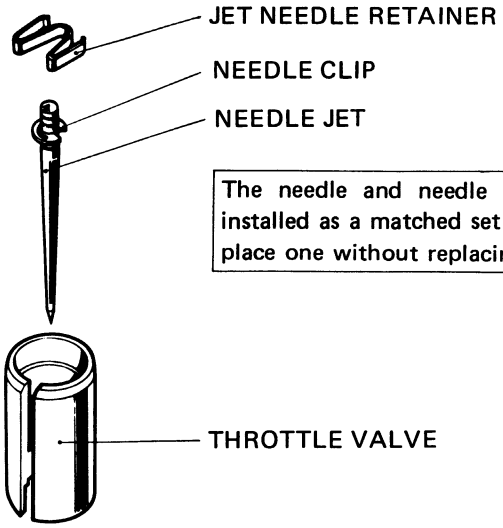

The needle and needle jet must be installed as a matched set. Do not replace one without replacing the other.

Set the jet needle retainer in the bottom properly at assembly.

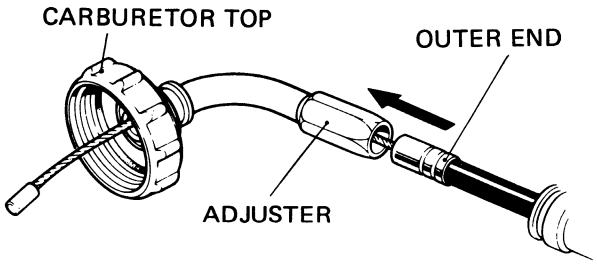

- At assembly, turn in the adjuster all the way as far as it will go.
- Make sure that the outer end of the throttle cable is inserted in the hole in the cable adjuster properly.

Date of Issue: Oct., 1977
© HONDA MOTOR CO., LTD.

- CARBURETOR FLOAT AND JETS (1977 K8 model)

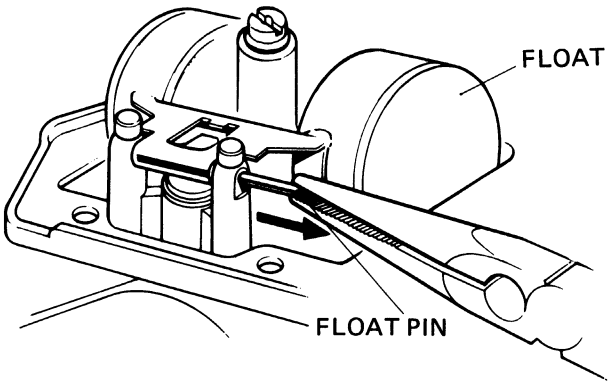

- CARBURETOR FLOAT AND JETS (1978 K9 model)

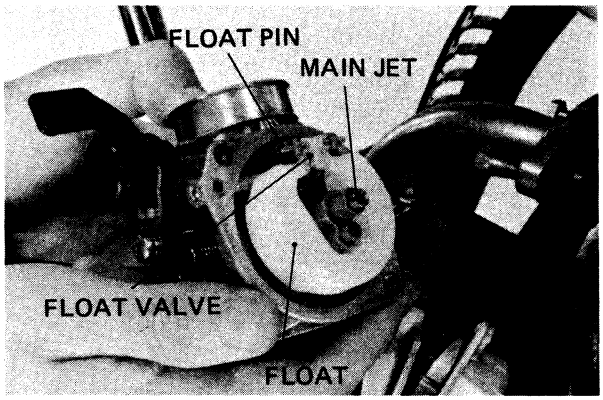

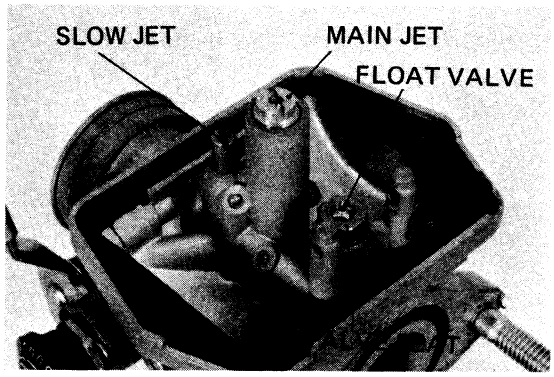

(1) Turn the fuel valve to OFF.
(2) Drain fuel from the carburetor by loosening the drain screw.
(3) Remove the throttle valve and air cleaner band. Remove the carburetor.
(4) Remove the float chamber for access to the float and jets.

WARNING

Gasoline is inflammable.

CAUTION

- Use extreme caution in assembling and disassembling the carburetor to avoid damaging the carburetor jets.
- Clean all removed parts in solvent and blow with compressed air.

© HONDA MOTOR CO., LTD.

b. INSPECTION

- **FLOAT HEIGHT**

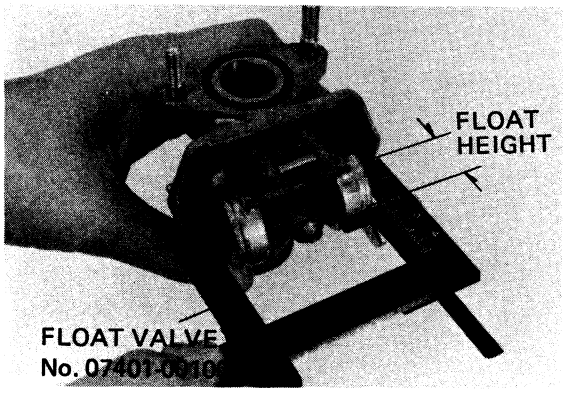

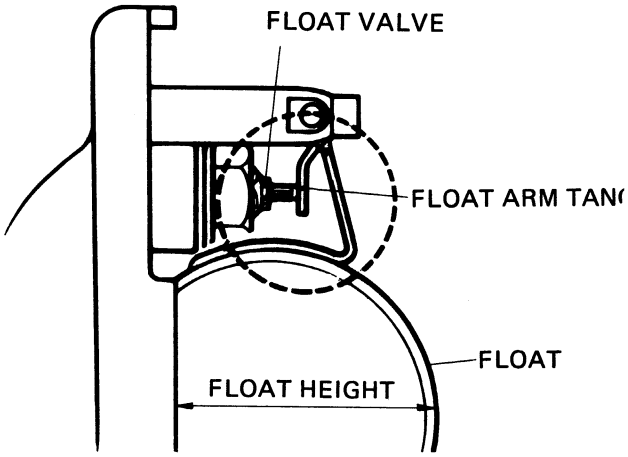

(1) Hold the carburetor with its main bore in a vertical position, so the float arm tang will just close the float valve, without compressing the spring loaded pin in the end of the valve.
(2) Position the gauge on the carburetor with the end of the float height indicator against the float. If the gauge has been set to the specified float height, and the carburetor float level is properly adjusted, the end of the indicator will just touch the float, without causing the float to move.
(3) If float height is found to be incorrect, carefully bend the float arm tang toward or away from the float valve until the specified float height is obtained.

- **FLOAT VALVE**

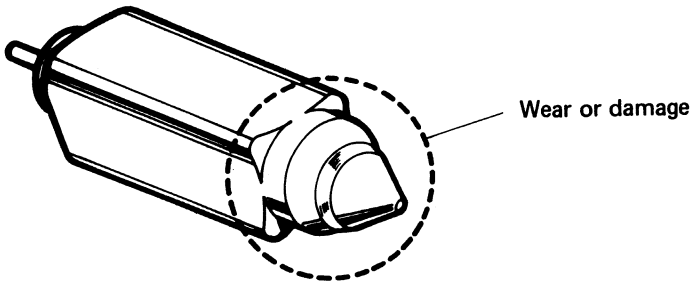

- **CARBURETOR SETTING TABLE**

	1977 (K8) model	1978 (K9) model
Identification mark	556A	B27A
Main jet No.	# 62	#65
Slow jet No.	# 35	#38
Jet needle setting	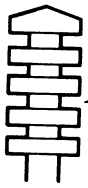 3rd groove LEAN MIXTURE ↑ STANDARD ↓ RICH MIXTURE	2nd groove
Air screw opening	1 turn	1-¼
Float height	20 mm (0.8 in.)	10.7 mm (0.43 in)
Idle speed	1,300 rpm	←

Date of Issue: Oct., 1977
© HONDA MOTOR CO., LTD.

1. FRONTWHEEL/FRONT SUSPENSION/STEERING

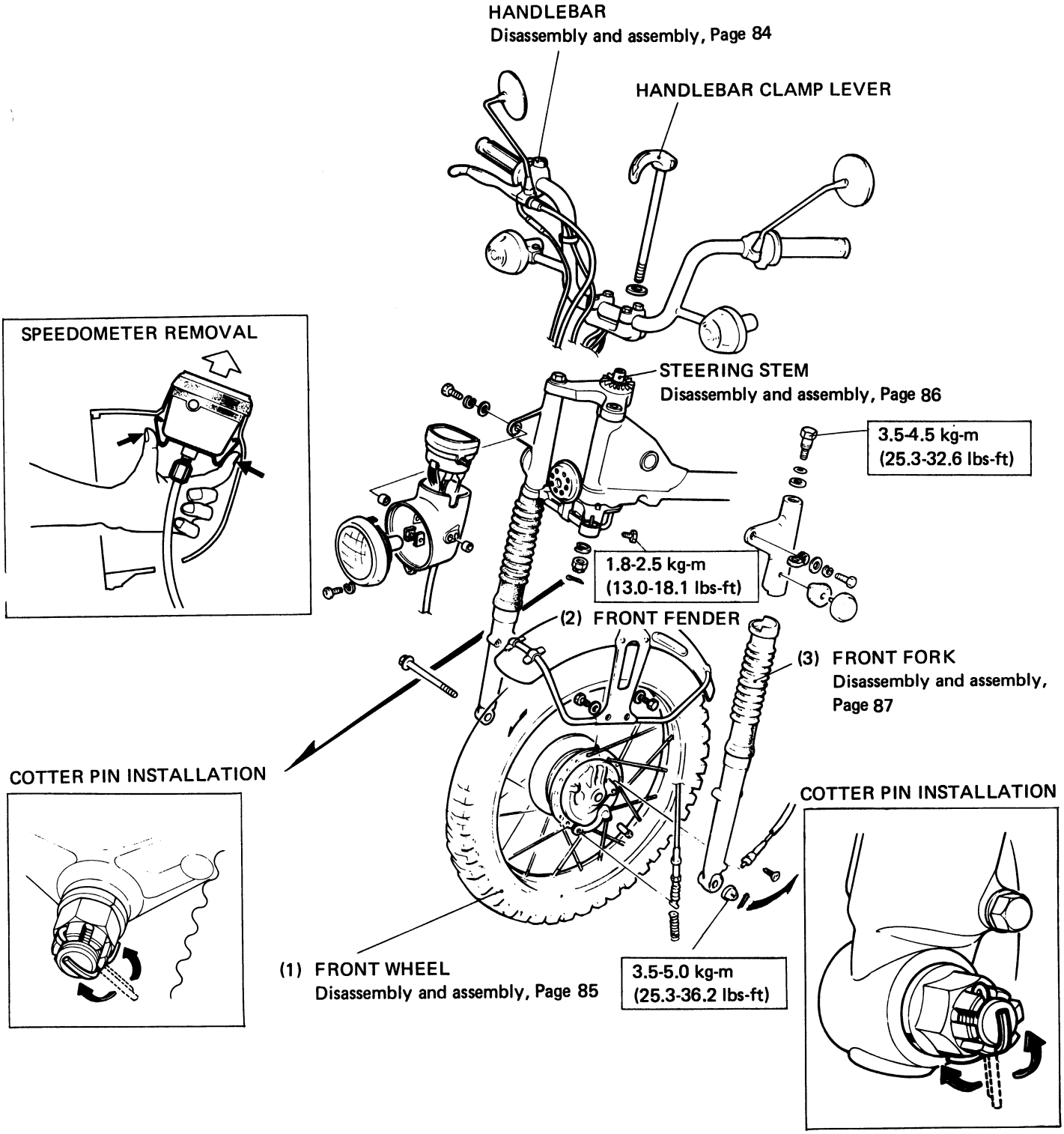

After assembly, perform the following operations:

Throttle grip free play adjustment . . . . . Page 25

Brake lever free play adjustment . . . . . Page 30

© HONDA MOTOR CO., LTD.

a. DISASSEMBLY/ASSEMBLY

- **HANDLEBAR**

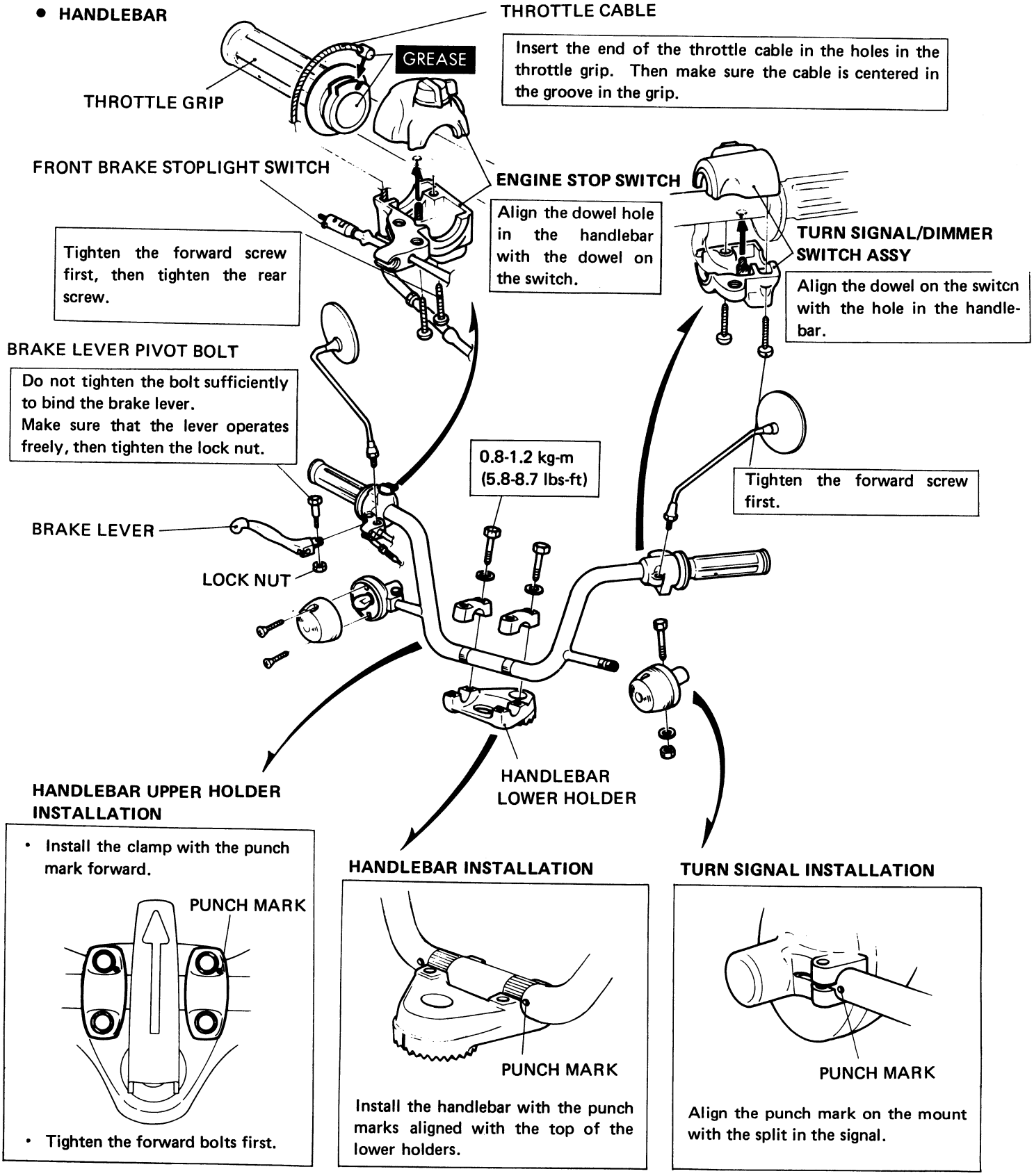

Date of Issue: Oct., 1977
© HONDA MOTOR CO., LTD.

- **FRONT WHEEL**

NOTE

Install tire with arrow pointing in direction of rotation.

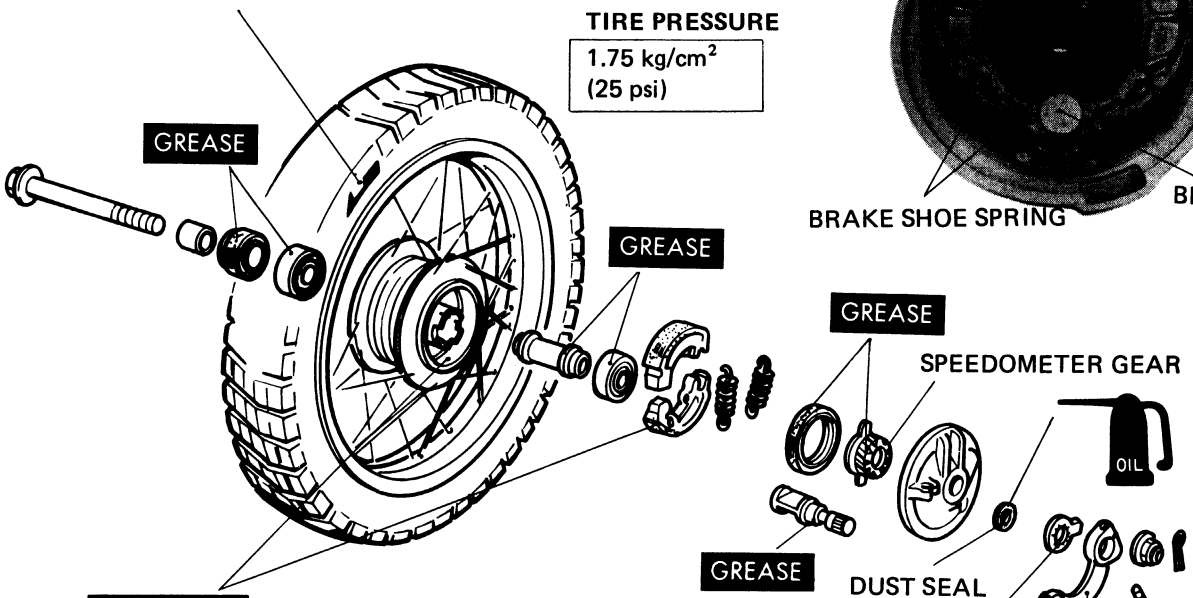

BRAKE SHOE INSTALLATION

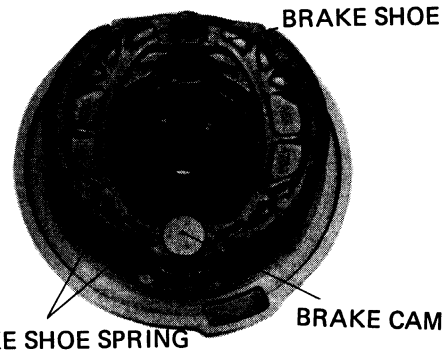

WARNING

Be careful to keep oil or grease off the brake linings or brake drum.

- **DRIVING WHEEL BEARING**

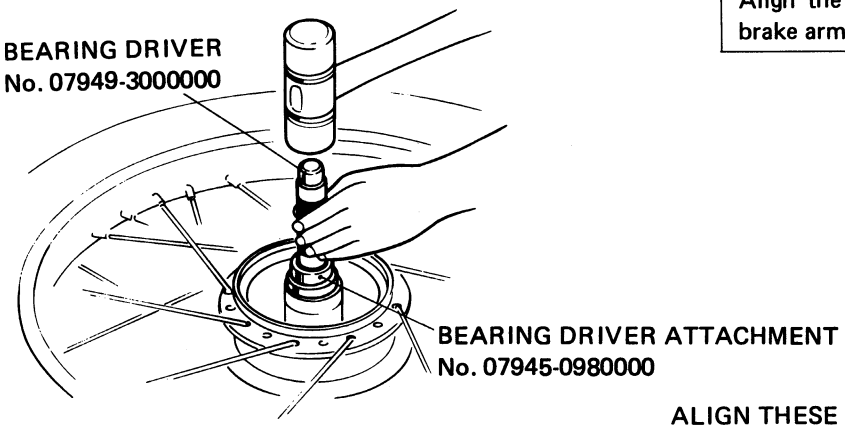

NOTE

- Use caution in driving the bearing not to allow it to tilt.
- Install the bearing with the sealed end facing outside.

- **BRAKE ARM INSTALLATION**

Align the tab on the indicator with the cutouts in the brake arm.

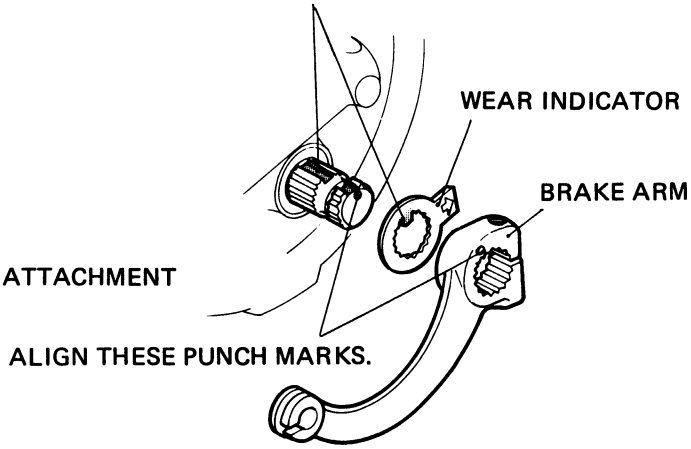

© HONDA MOTOR CO., LTD.

- **STEERING STEM**

STEERING HEAD TOP THREAD NUT

36 mm PIN SPANNER
No. 07902-0010000

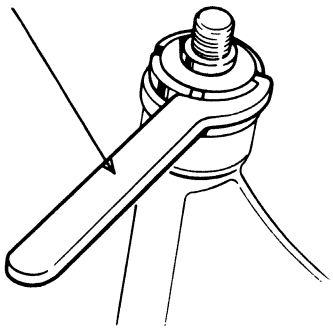

Screw in the top thread nut until resistance is felt, then, back it off about 1/8 turn to ensure smooth rotation without play in all directions.

STEERING STEM NUT REMOVAL

STEERING STEM NUT WRENCH
No. 07915-0300000

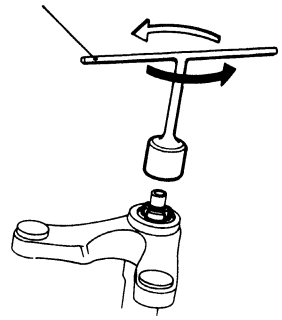

STEERING STEM NUT

6.0 – 7.0 kg-m
(43.4 – 50.7 lbs-ft)

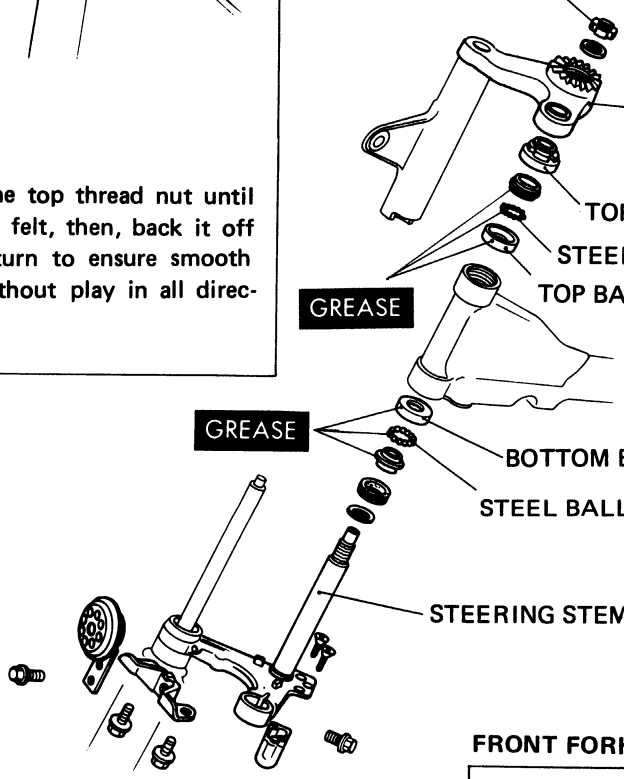

BALL RACE DRIVER
No. 07944-1150001

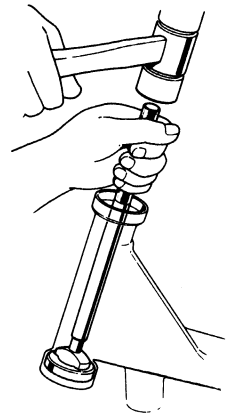

FRONT FORK INSTALLATION

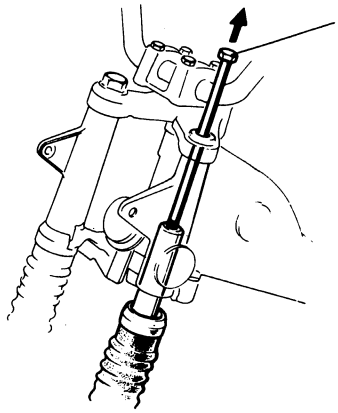

Pull up on each front fork into position in the top and bottom fork bridges using a long, 10-mm (pitch 1.5) bolt as shown.

Date of Issue. Oct., 1977
© HONDA MOTOR CO., LTD.

- **FRONT FORK**

Before disassembly, drain oil from the fork and remove the 37 mm snap ring.

37 mm SNAP RING INSTALLATION

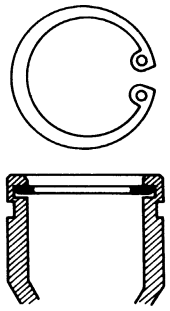

- Install the ring with the sharp edge end facing up.

FORK SEAL DRIVER
No. 07947-1180001

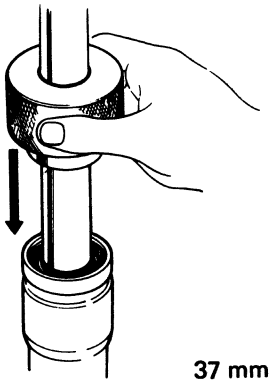

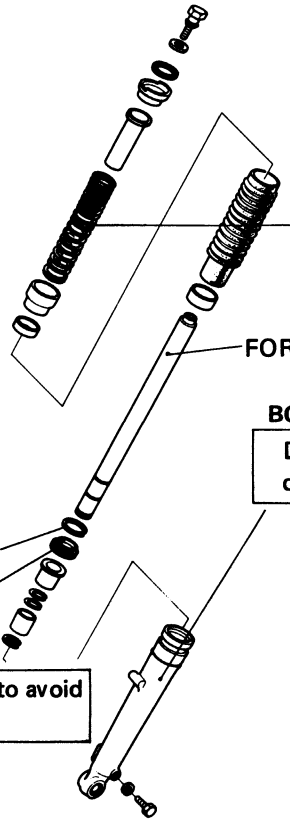

Install the spring with the narrow pich end up.

During assembly, be careful to prevent dust and dirt from entering.

CAUTION

Use care in assembling to avoid damaging the oil seal.

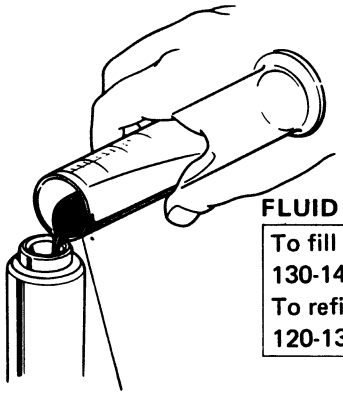

FLUID QUANTITY

To fill dry fork assembly
130-140 cc (4.4-4.7 oz.)
To refill after draining
120-130 cc (4.1-4.4 oz.)

ATF (Automatic Transmission Fluid)

NOTE

- After assembly, check for operation and signs of leaks.
- Wipe clean excess fluid from each fork.
- After assembling, check for oil leaks

© HONDA MOTOR CO., LTD.

b. Inspection

- **FRONT AXLE BEND**

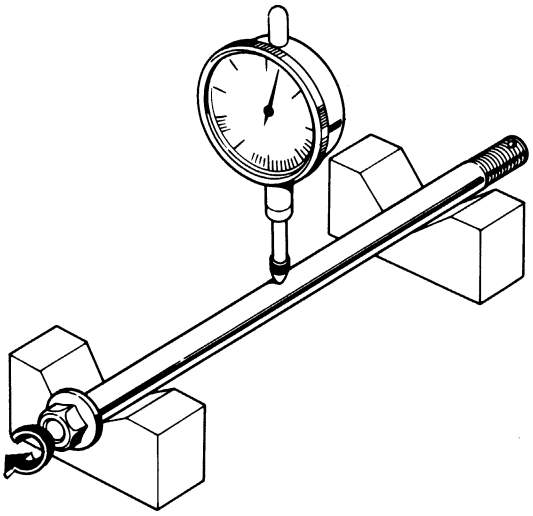

Standard	Service Limit
0-0.05 mm (0-0.002 in.)	0.2 mm (Replace) (0.008 in.)

Actual bend is 1/2 of total indicator reading.

- **BRAKE LINING THICKNESS**

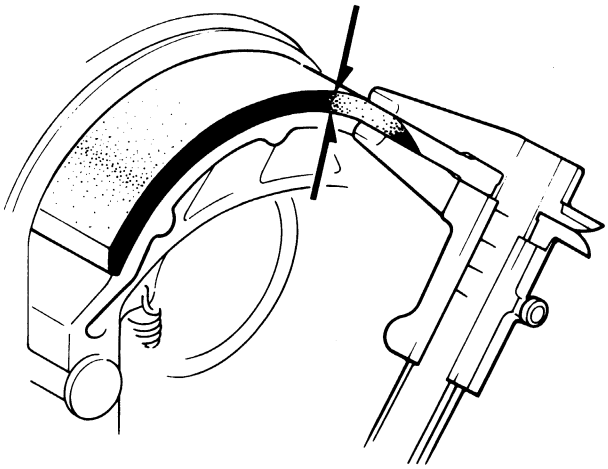

Standard	Service Limit
4.0 mm (0.16 in.)	2.0 mm (Replace) (0.08)

Take least measurement.

- **FRONT WHEEL RUNOUTS**

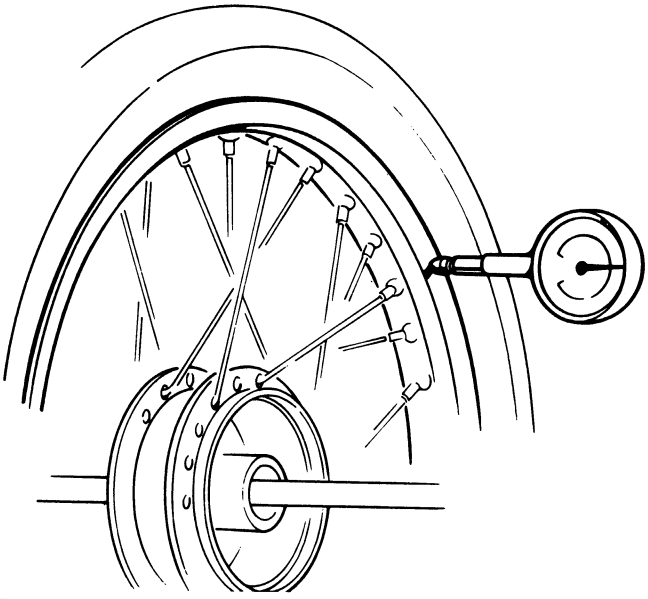

	Standard	Service Limit
Axial runout	0-0.5 mm (0-0.02 in.)	1.0 mm (Replace) (0.04 in.)
Radial runout	0-0.5 mm (0-0.02 in.)	1.0 mm (Replace) (0.04 in.)

NOTE

Check the spokes for looseness.

- **BRAKE DRUM I.D.**

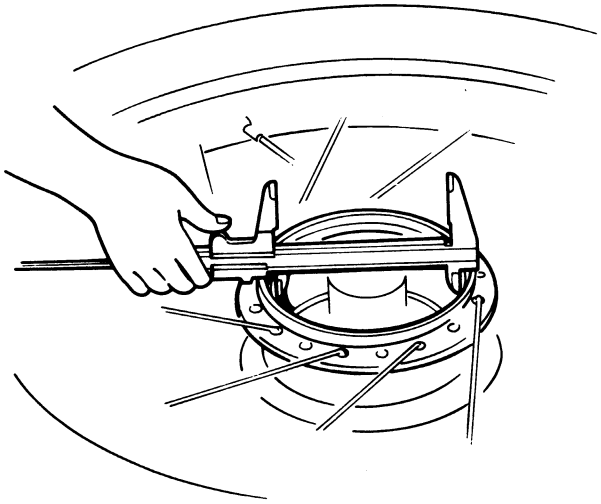

Standard	Service Limit
110.0 mm (4.3307 in.)	111.0 mm (Replace) (4.3701 in.)

Date of Issue: Oct., 1977
© HONDA MOTOR CO., LTD.

- **FRONT WHEEL BEARING PLAY**

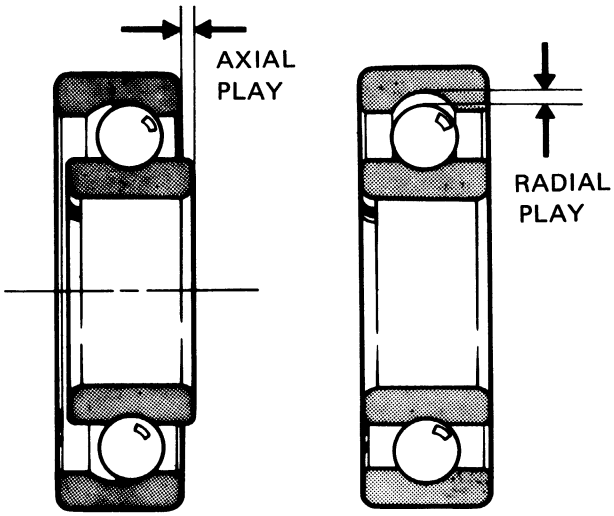

	Standard	Service Limit
Axial play	0-0.05 mm (0-0.002 in.)	0.1 mm (Replace) (0.004 in.)
Radial play	0.003-0.008 mm (0.0001-0.0003 in.)	0.04 mm (Replace) (0.0016 in.)

- **FRONT SUSPENSION SPRING FREE LENGTH**

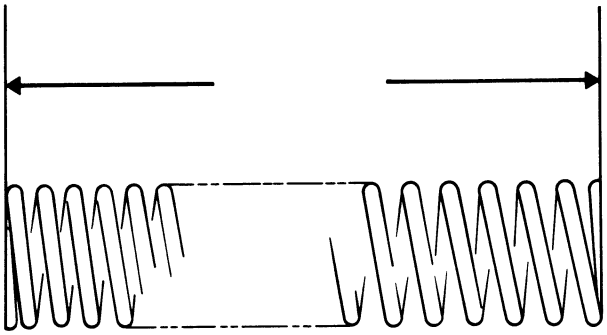

Standard	Service Limit
203 mm (8.0 in.)	185 mm (Replace) (7.3 in.)

NOTE

The front suspension springs should be installed as a matched set.

- **FRONT FORK PIPE INSPECTION**

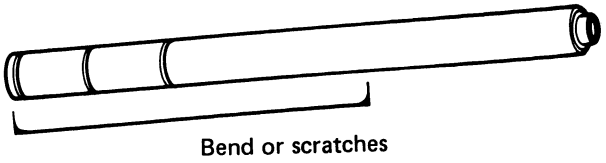

- **FRONT FORK PISTON O.D.**

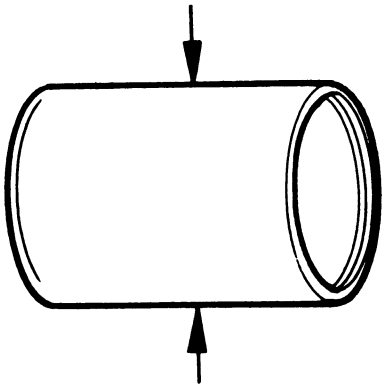

Standard	Service Limit
30.950-30.975 mm (1.219-1.220 in.)	30.85 mm (Replace) (1.215 in.)

- FRONT FORK BOTTOM CASE I.D.

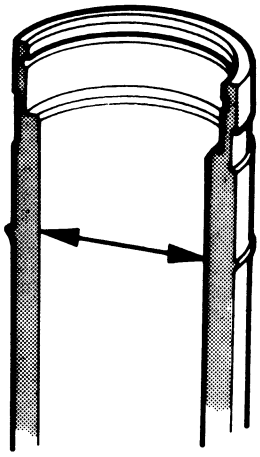

Standard	Service Limit
31.000-31.039 mm (1.221-1.223 in.)	31.10(Replace) (1.225 in.)

© HONDA MOTOR CO., LTD.

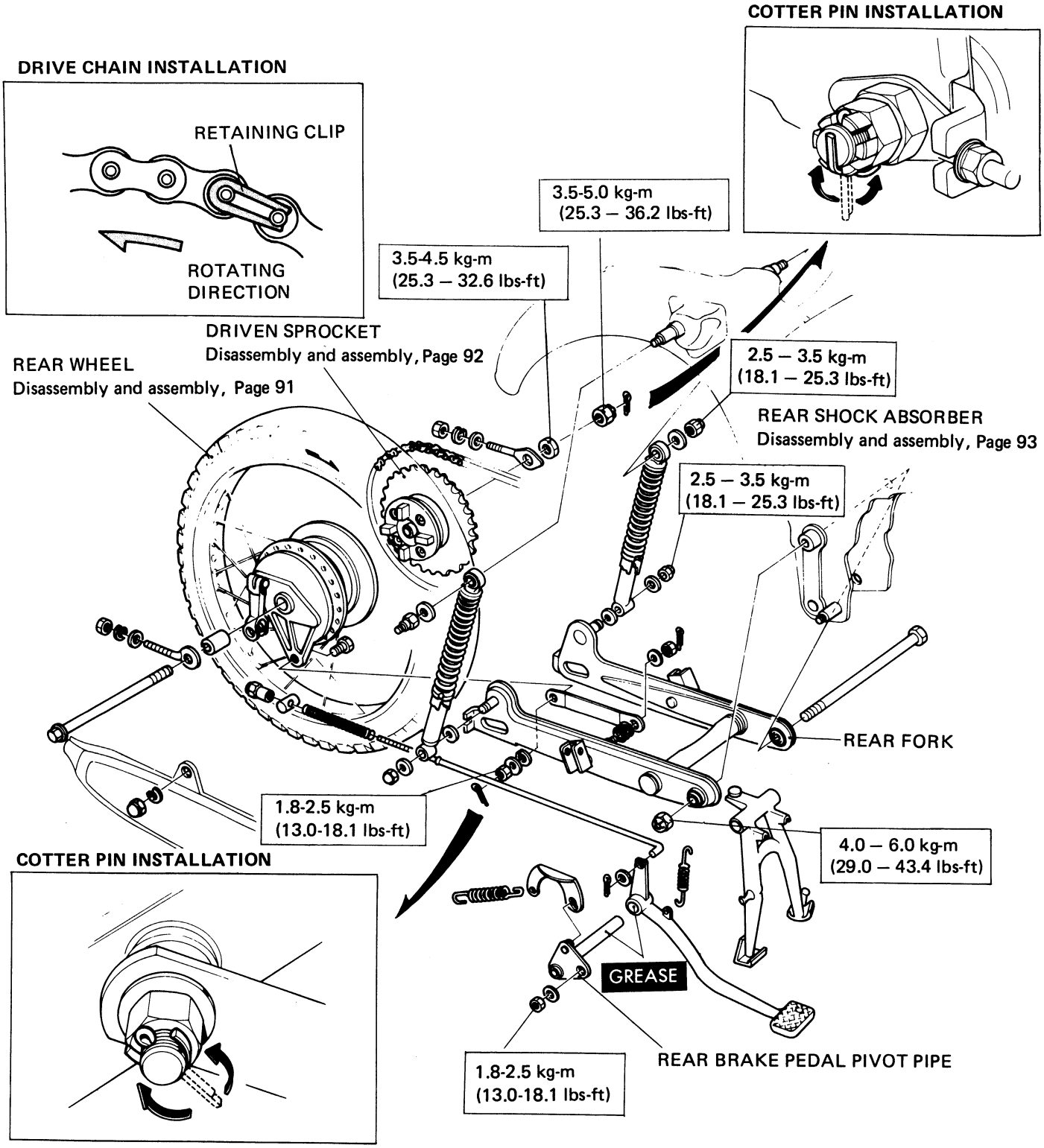

After assembling, perform the following operations:

Brake pedal play adjustment . . . . . Page 31
Rear brake stoplight switch adjustment . . . . . Page 31
Drive chain slack adjustment . . . . . Page 32

Date of Issue: Oct., 1977
© HONDA MOTOR CO., LTD.

a. DISASSEMBLY/ASSEMBLY

- **REAR WHEEL**

NOTE

Install tire with arrow pointing in direction of rotation.

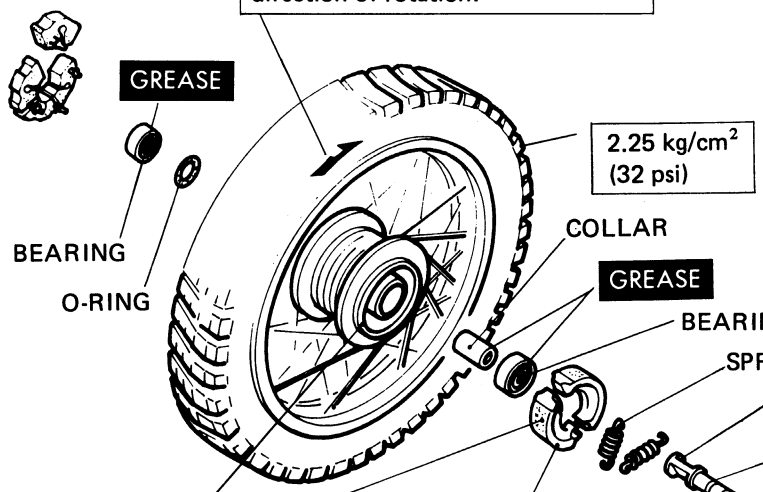

WARNING

- Do not allow oil or grease to come in contact with the brake drum surface and linings.

- **BRAKE SHOE ASSEMBLY**

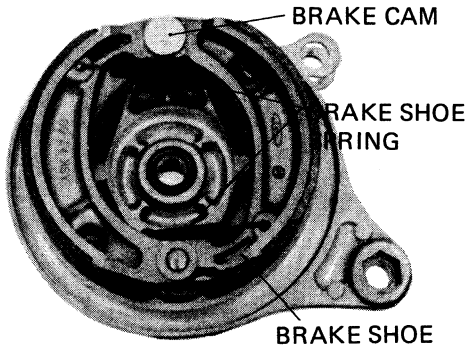

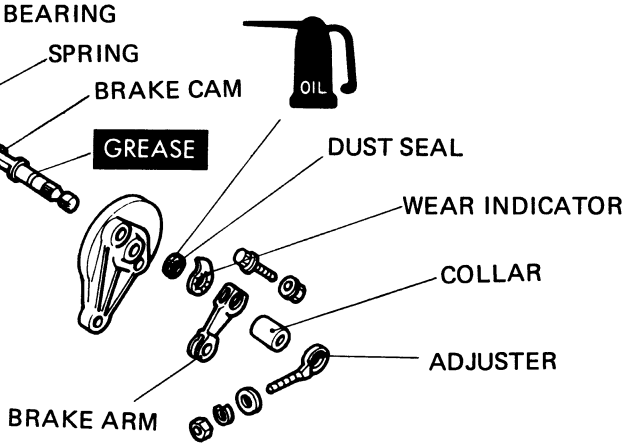

NOTE

The wheel can be removed by removing the axle shaft only (with the sleeve nut left intact) without removing the drive chain.

- **DRIVING WHEEL BEARING**

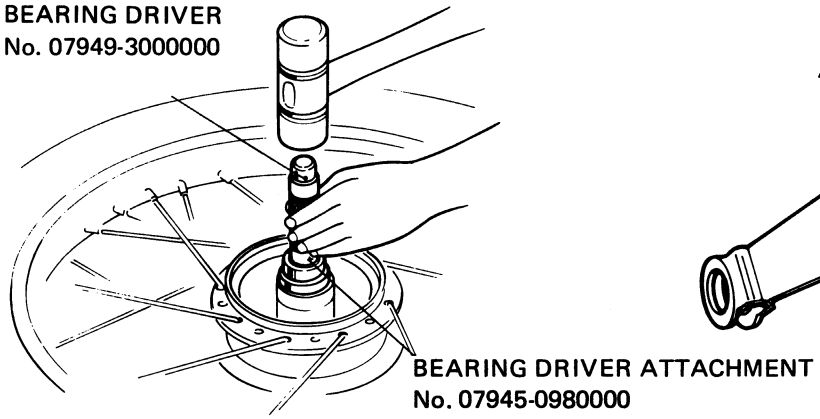

- BRAKE ARM INSTALLATION

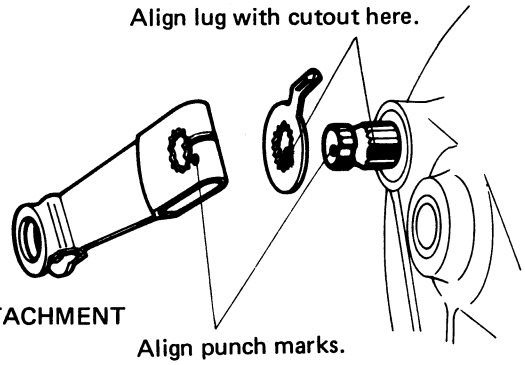

NOTE

- Drive the bearing squarely, being careful not to allow it to tilt.
- Install the bearing with the shield end outward.

© HONDA MOTOR CO., LTD.

- **DRIVEN FLANGE**

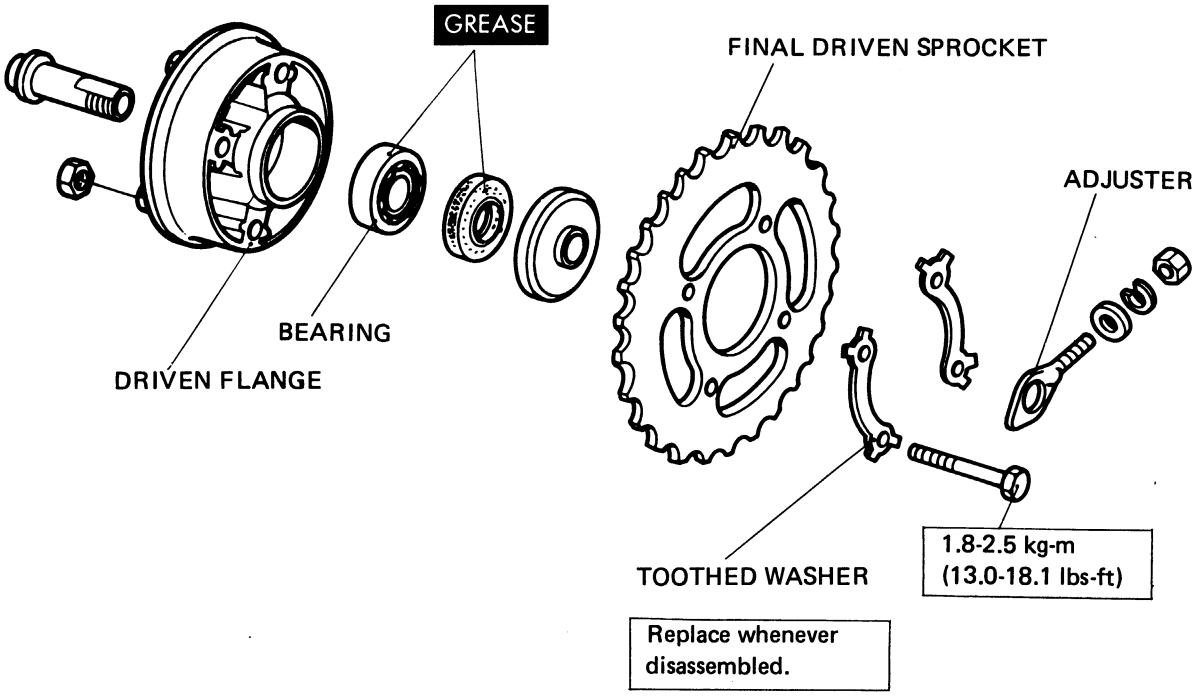

- DRIVING WHEEL BEARING

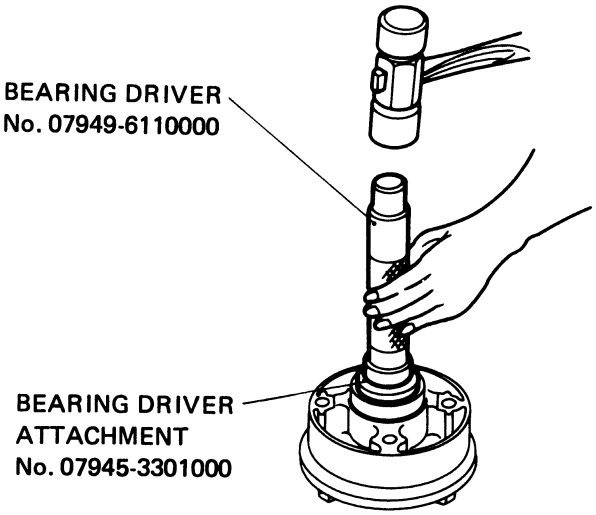

NOTE

Drive the bearing squarely, being careful not to allow it to tilt.

- TOOTHED WASHER INSTALLATION

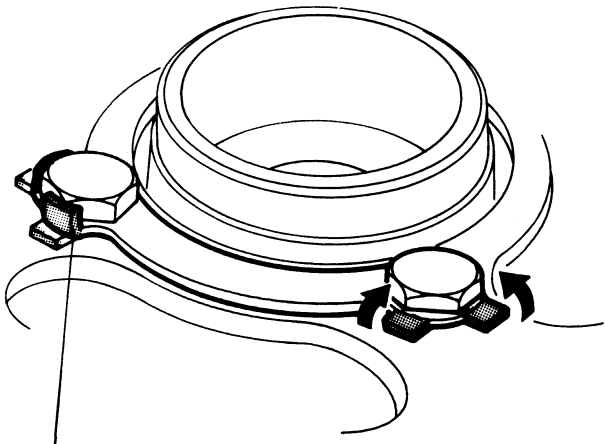

NOTE

Bend two tabs against the corresponding sides of head of each bolt.

Date of Issue: Oct., 1977
© HONDA MOTOR CO., LTD.

- REAR SHOCK ABSORBER

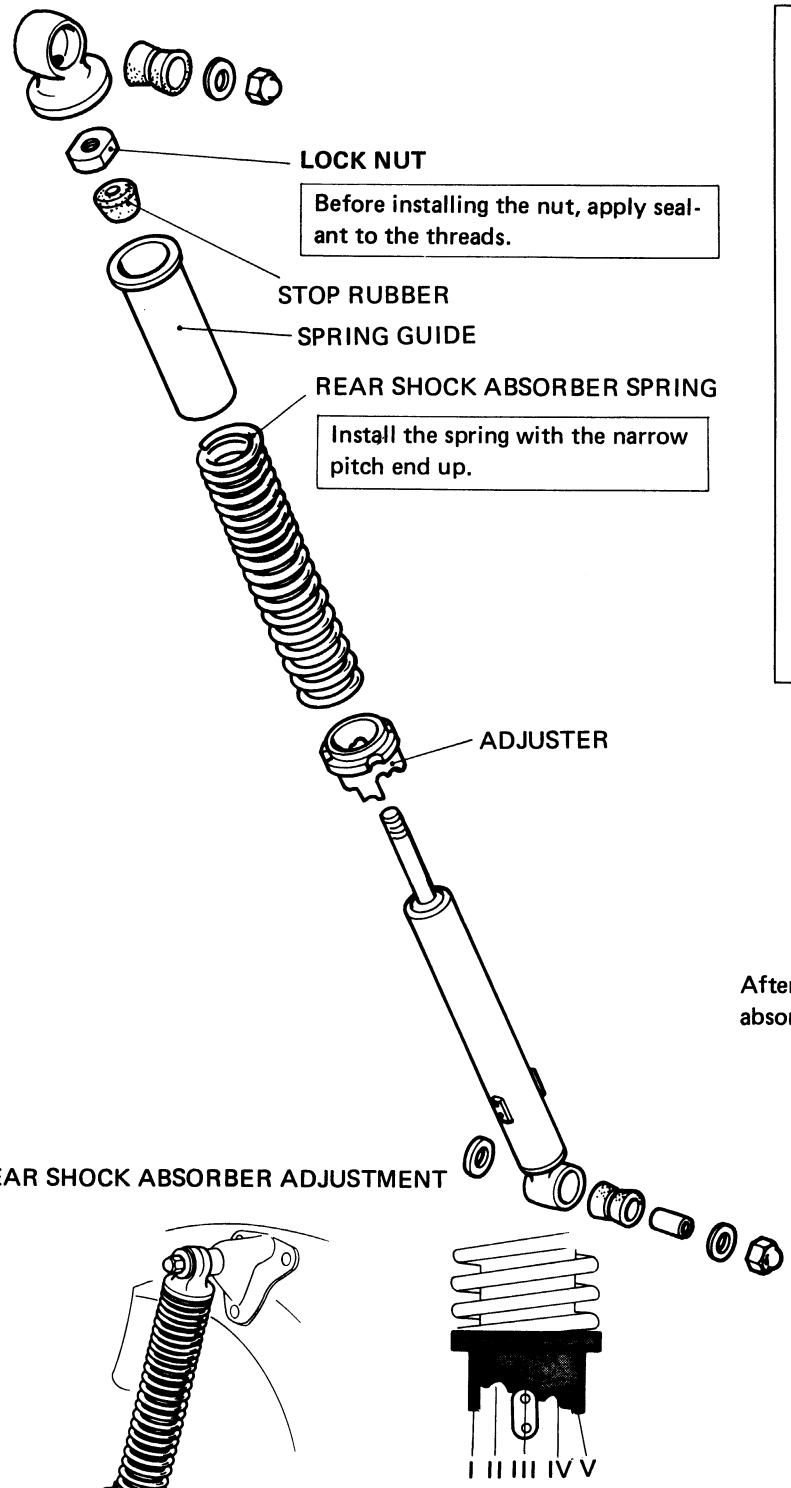

REAR SHOCK ABSORBER SPRING REMOVAL

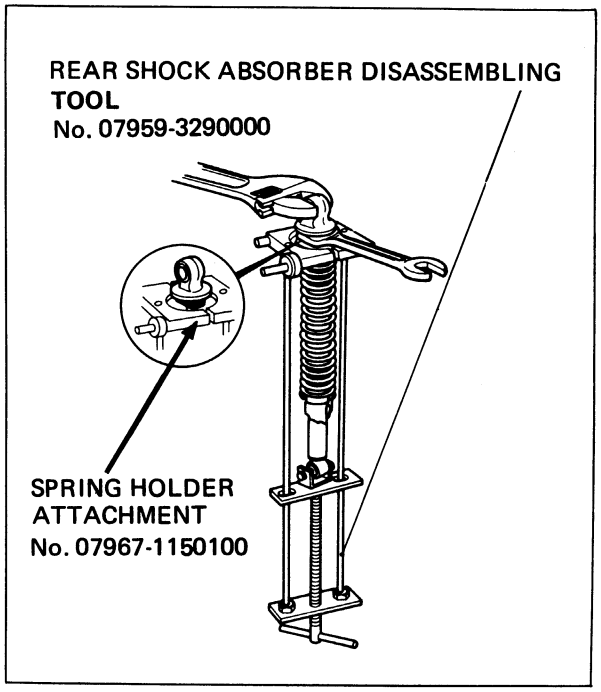

After installation, check the operation of the rear shock absorbers.

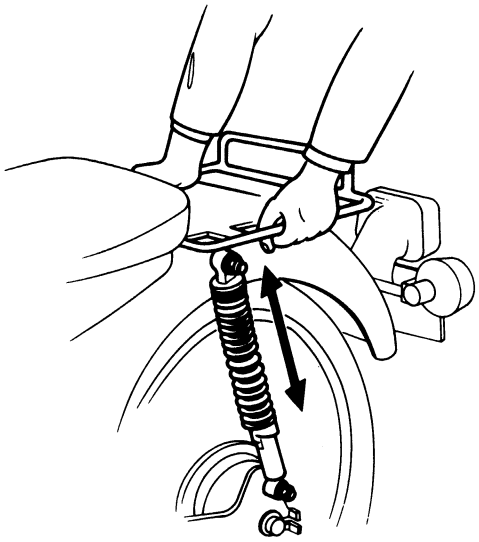

REAR SHOCK ABSORBER ADJUSTMENT

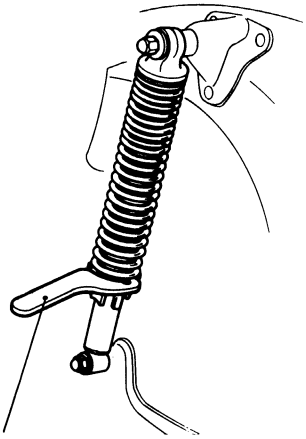

NOTE

- The adjusters should be set in position "III" under average riding condition.
- Set both adjusters at the same position.

© HONDA MOTOR CO., LTD.

b INSPECTION

- **REAR AXLE BEND**

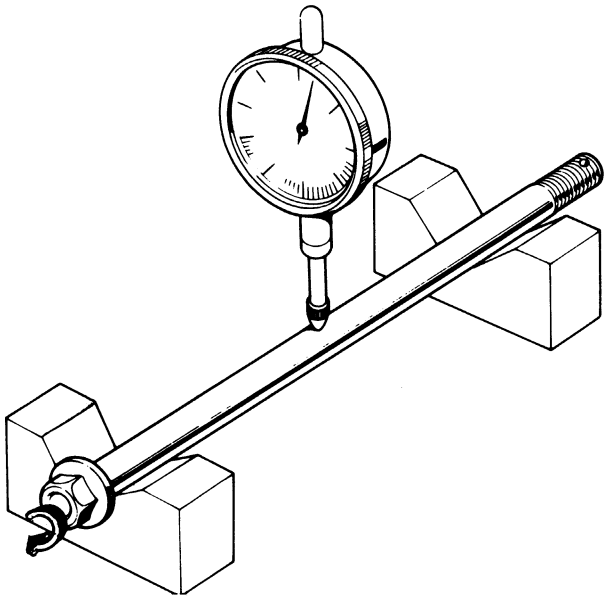

Standard	Service Limit
0-0.05 mm (0-0.002 in)	0.2 mm (Replace) (0.008 in.)

Actual bend is ½ of total indicator reading.

- **REAR WHEEL RUNOUT**

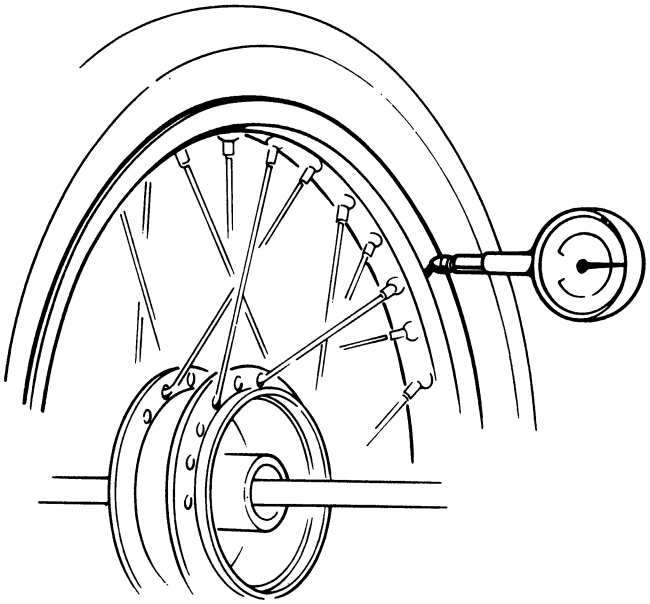

	Standard	Service Limit
Axial runout	0-0.5 mm (0.02 in)	1.0 mm (Replace) (0.04 in)
Radial runout	0-0.5 mm (0.02 in.)	1.0 mm (Replace) (0.04 in.)

- **BRAKE DRUM I.D.**

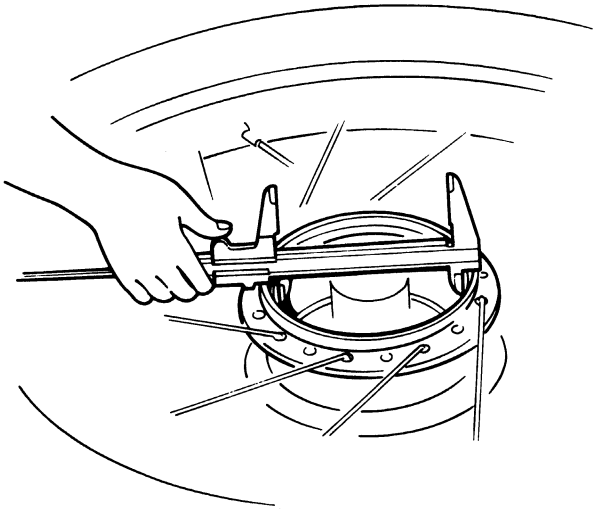

Standard	Service limit
110.0 mm (4.3307 in.)	110.0 mm (4.370 in.)

Check the diameter of the brake drum surface by using a clipper gauge and in two directions at right angles to each other.

- **BRAKE LINIG THICKNESS**

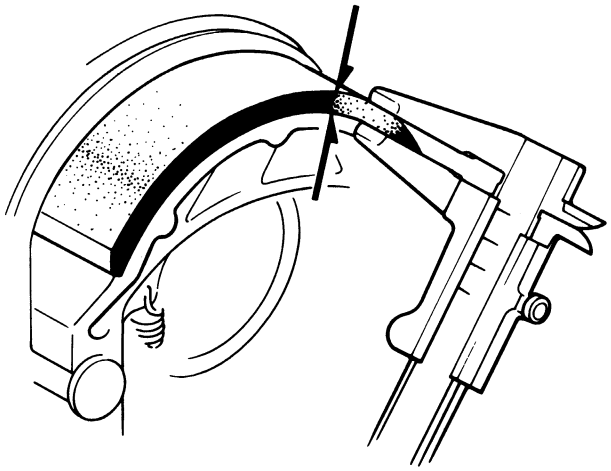

Standard	Service Limit
4.0 mm (0.16 in.)	2.0 mm (Replace) (0.08 in.)

Date of Issue: Oct., 1977
© HONDA MOTOR CO., LTD.

- **REAR WHEEL BEARING PLAY**

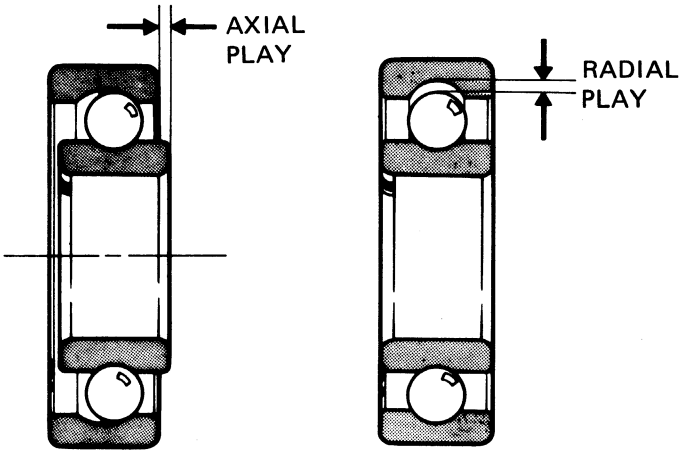

	Standard	Service Limit
Axial play	0-0.05 mm (0-0.002 in.)	0.1 mm (Replace) (0.004 in.)
Radial play	0.003-0.018 mm (0.0001-0.0007 in.)	0.04 mm (Replace) (0.0016 in.)

- **REAR SHOCK ABSORBER SPRING FREE LENGTH**

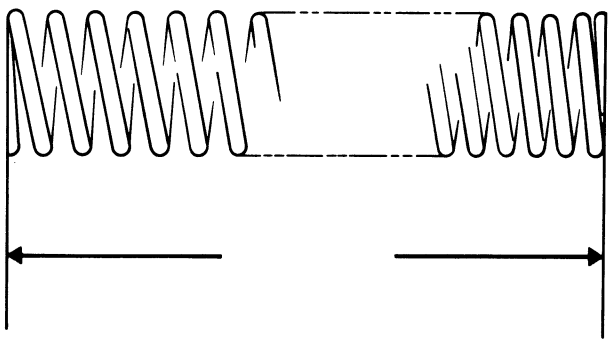

Standard	Service Limit
223 mm (8.78 in.)	207 mm (Replace) (8.16 in.)

- **REAR SHOCK ABSORBER CHECK**

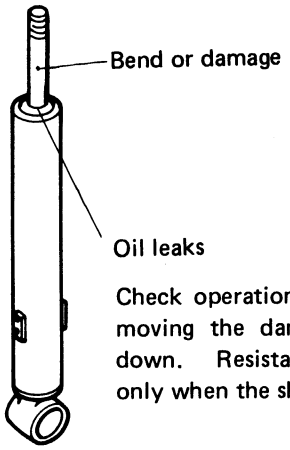

Check operation of the damper by moving the damper shaft up and down. Resistance should be felt only when the shaft is moved up.

- **FINAL DRIVEN SPROCKET CHECK**

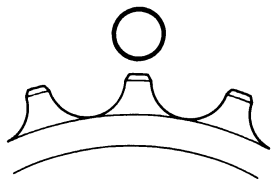

GOOD

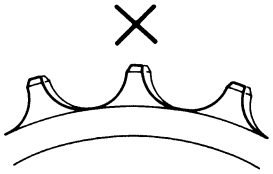

NO GOOD

NOTE

Also check the drive chain if the sprocket is worn or damaged.

© HONDA MOTOR CO., LTD.

- **TAILLIGHT**

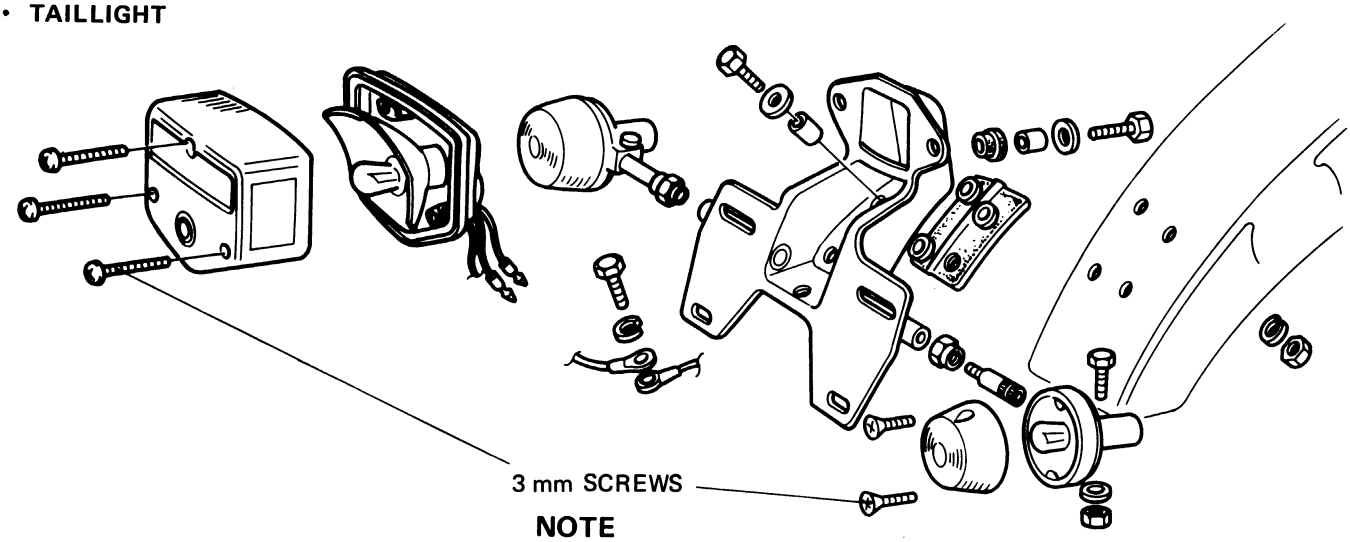

NOTE

Do not over tighten the screws, as over tightening may damage the lens.

- **FUEL TANK**

WARNING

Do not bring open flames near gasoline. Wipe off spilled gasoline at once.

FUEL TANK

5.5 liters (1.4 US gal; 1.2 Imp. gal) ; 0.8 liters for reserve (0.2 US gal; 0.18 Imp. gal)

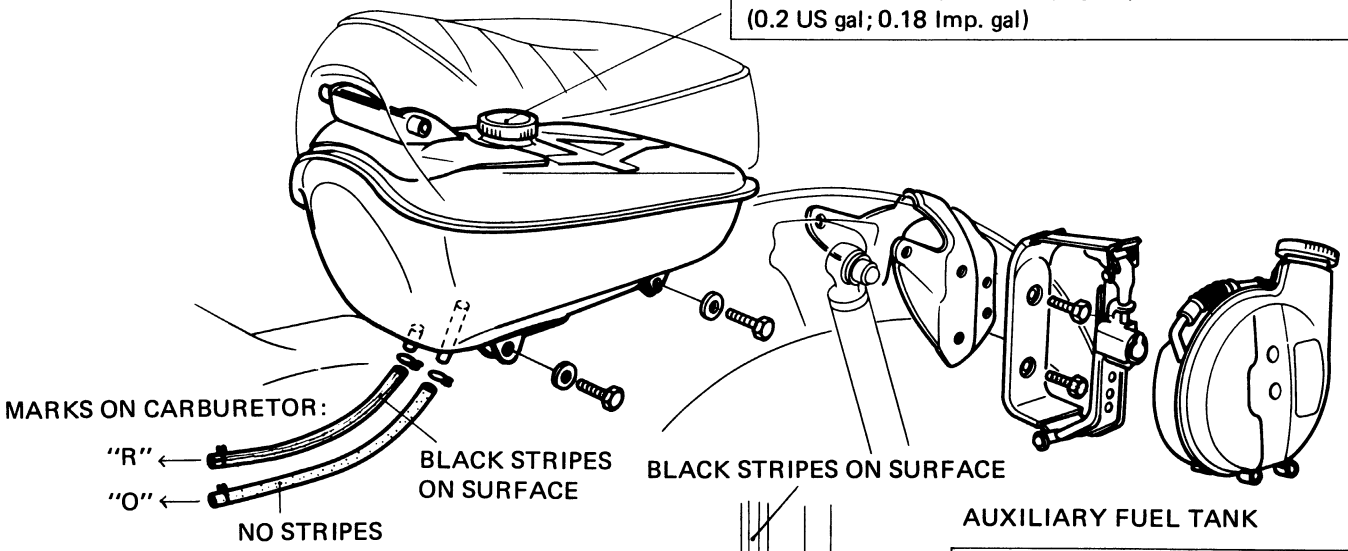

AUXILIARY FUEL TANK

2.3 liters (0.6 US gal; 0.54 Imp. gal)

NOTE

- Thoroughly clean the interior of the fuel tank.
- Check the fuel tubes for evidence of cracks or deterioration.

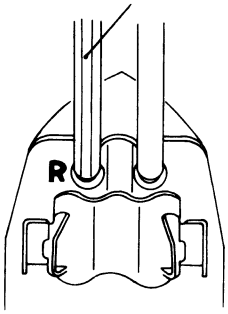

NOTE

Connect the tube with stripes to the "R" fitting on the fuel tank.

Date of Issue. Oct., 1977
© HONDA MOTOR CO., LTD.

- CABLE ROUTING

CAUTION

Route the brake, throttle and speedometer cables as shown.

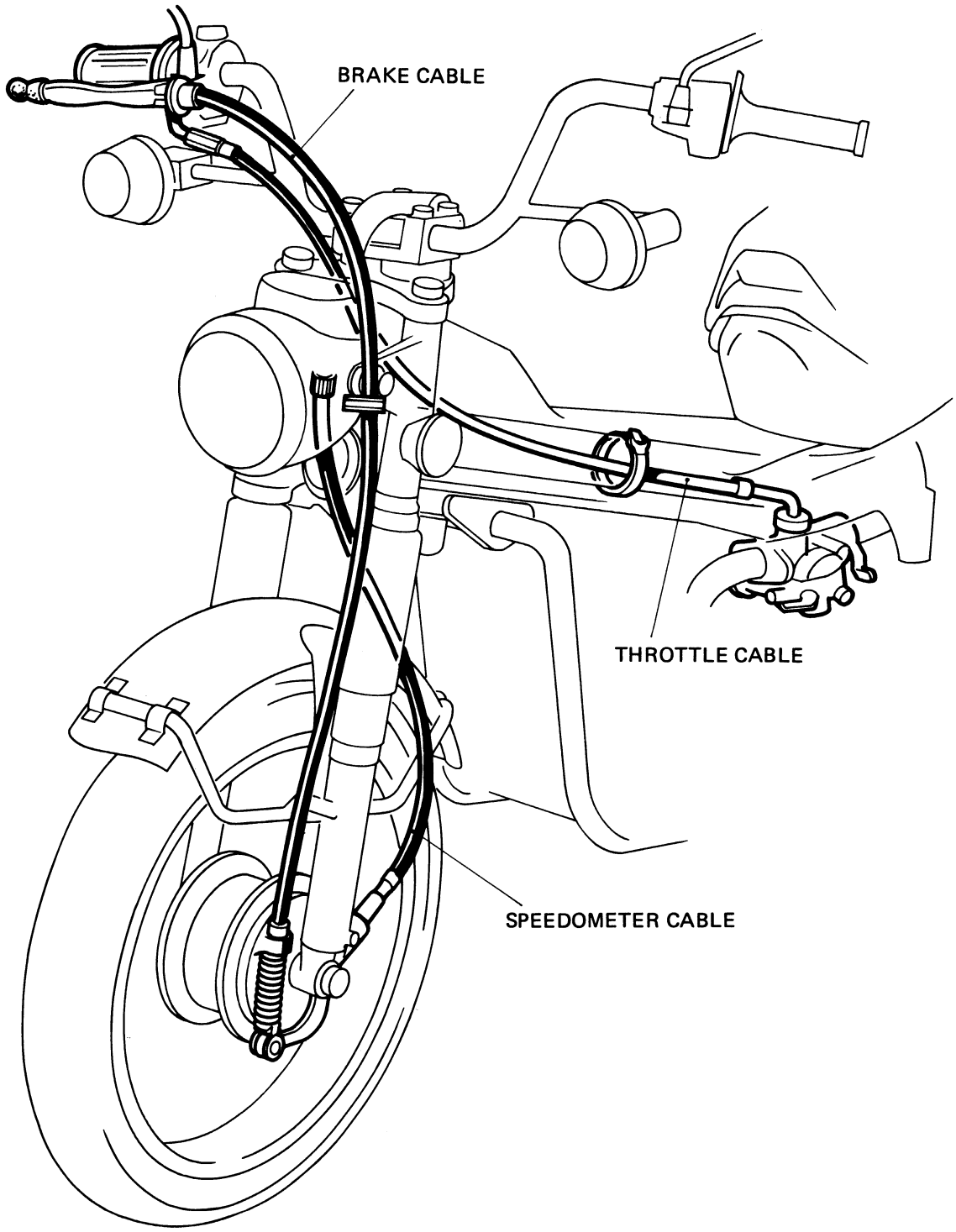

© HONDA MOTOR CO., LTD.

- **WIRE HARNESS ROUTING**

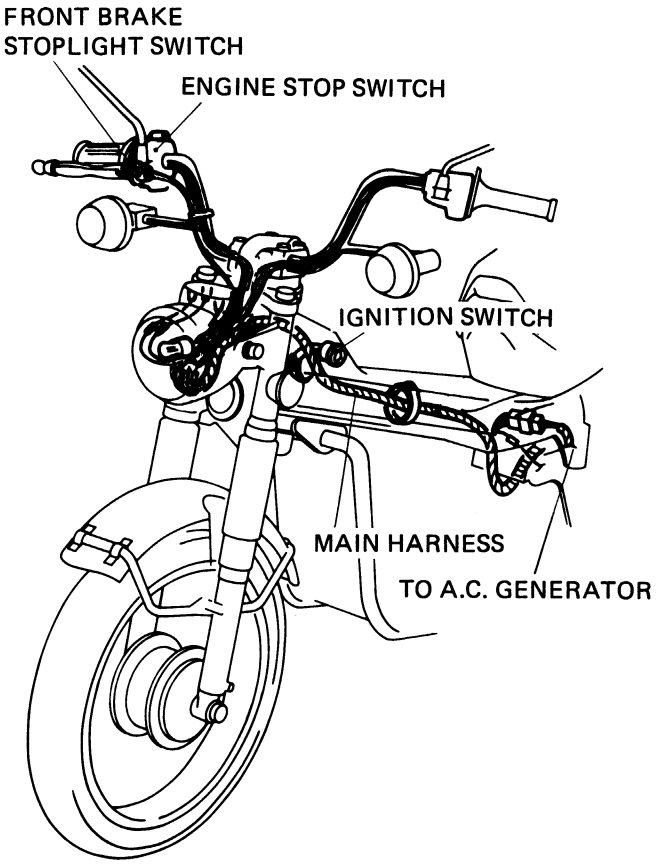

NOTE

Make sure that the battery cable is not pinched between the battery cover and frame.

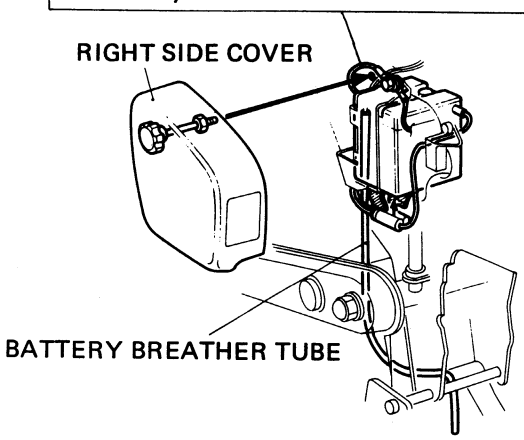

REAR HARNESS

Clamp the harness to the back of the rear fender.

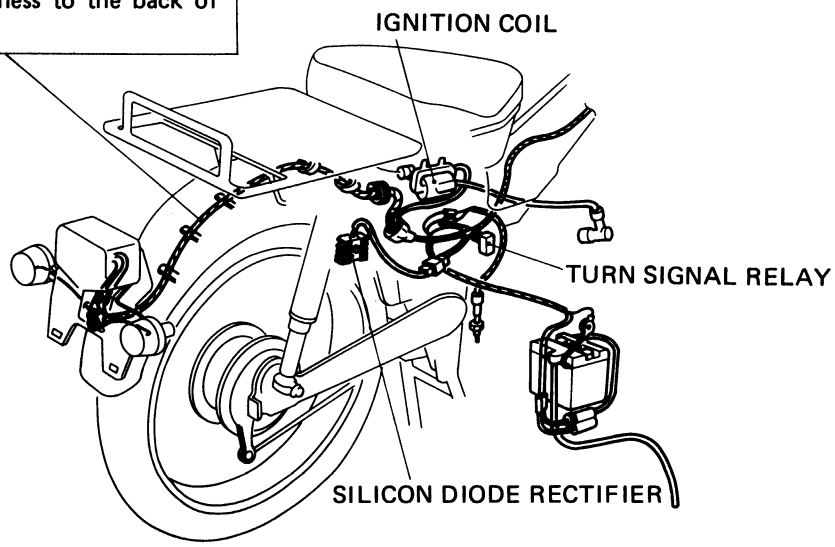

Date of Issue: Oct., 1977
© HONDA MOTOR CO., LTD.

1. BATTERY CHARGING SYSTEM

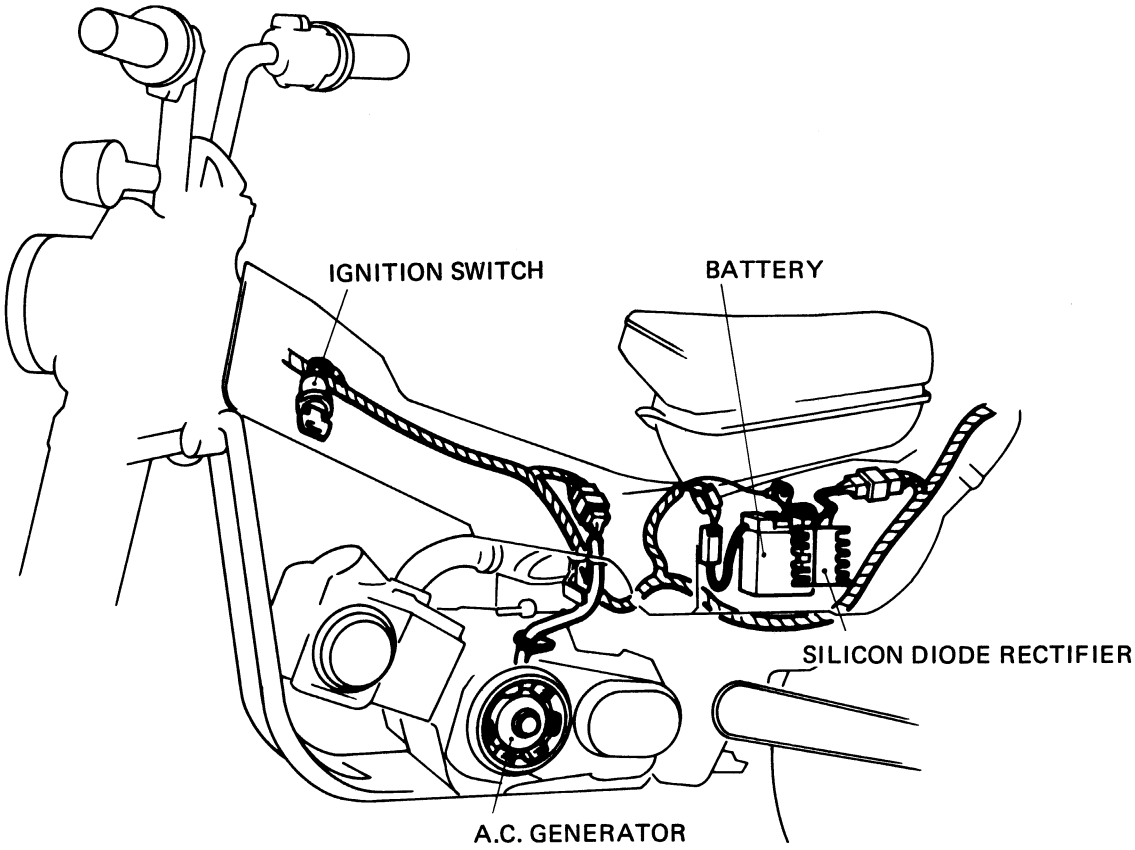

- **DIAGRAM**

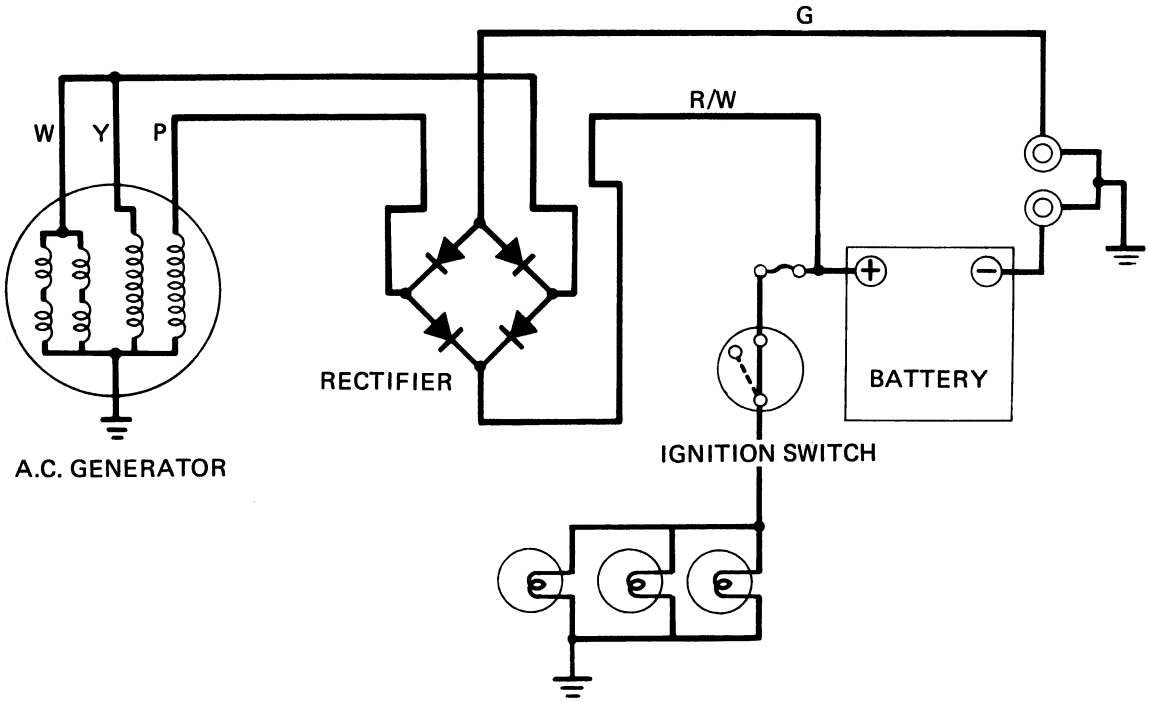

© HONDA MOTOR CO., LTD.

- **CHARGING TEST**

Connect the tester as shown below and run the engine at the following speeds:

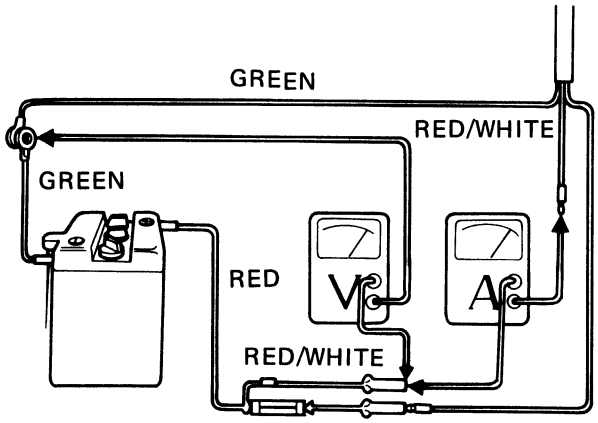

2,800 rpm . . . . . Charging should start (6.8V min.)
5,000 rpm . . . . . 1A min (7.2V min)
10,000 rpm . . . . . 3.0A min (8.8V min)

SPECIFIC GRAVITY OF BATTERY ELECTROLYTE :

1.260-1.280 [at 20°C (68°F)]

Raise the engine speed gradually and note the exact current and voltage indicated on the meters. Do not allow the needle of the meter to swing widely beyond the limit of needle travel.

- **STATOR COIL CONTINUITY TEST**

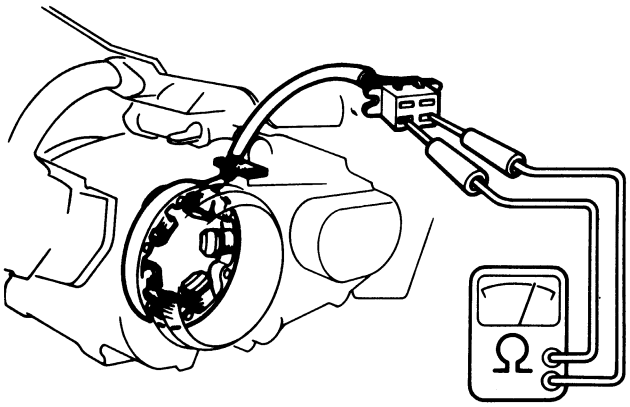

Pink	Yellow	White
o———	———o	
	o———	———o
o———	———	———o

The coil is normal if there is continuity between circuits (o—o).

Date of Issue: Oct., 1977
© HONDA MOTOR CO., LTD.

- **RECTIFIER CONTINUITY TEST**

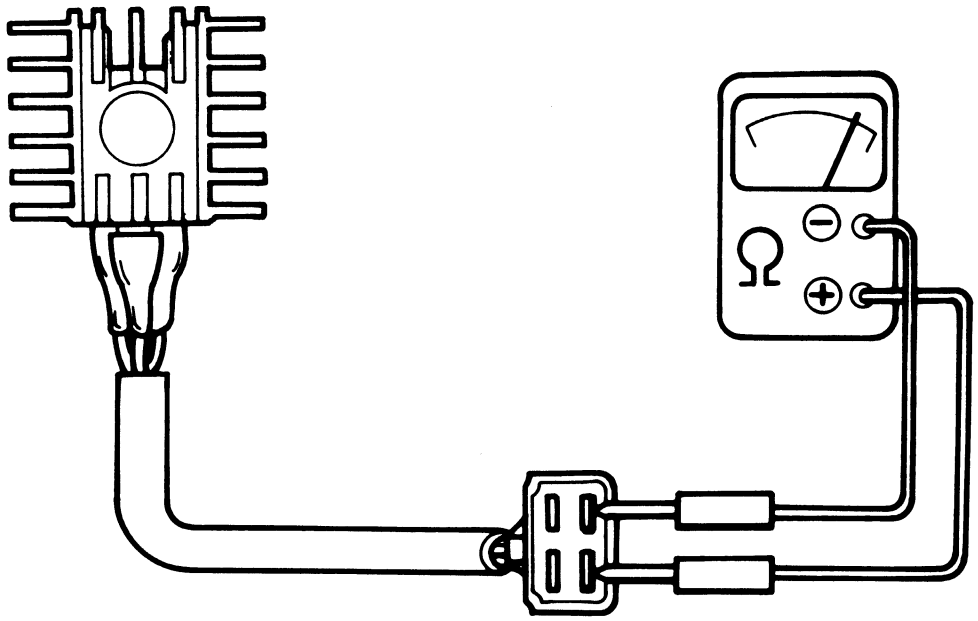

NOTE

Do not reverse porality.

Negative (−) terminal \ Positive (+) terminal	RED/WHITE	PINK	YELLOW	GREEN
RED/WHITE		X	X	X
PINK	0		X	X
YELLOW	0	X		X
GREEN	0	0	0	

The diode rectifier is normal if there is continuity between the terminals (marked "0"). There should be no continulty between the terminals marked "X".

© HONDA MOTOR CO., LTD.

- **BATTERY SERVICE**
  - **Charging Battery**

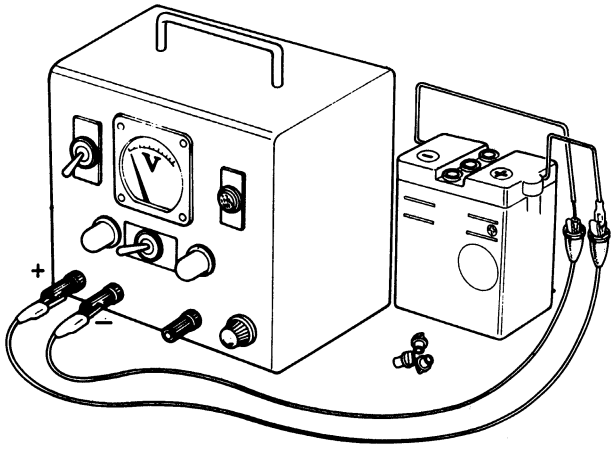

Hook-up instruction	Connect the positive (+) terminal of the charger to the positive (+) terminal of the battery. Connect the negative (−) terminal of the charger to the negative terminal of the battery.
Charging current	0.5A
State of charge of battery	Continue charging until the specific gravity of the battery electrolyte is 1.260 to 1.280 [20°C (68°F)].
Charging time	About 3-15 hours if specific gravity is below 1.220 [20°C (68°F)].

WARNING

- Do not allow open flame or cigarettes near the battery while charging.
- Quick charging is not advisable. Stop charging if the temperature of the battery electrolyte is over 45°C (113°F).

Electrolyte Temperature Vs Specific Gravity

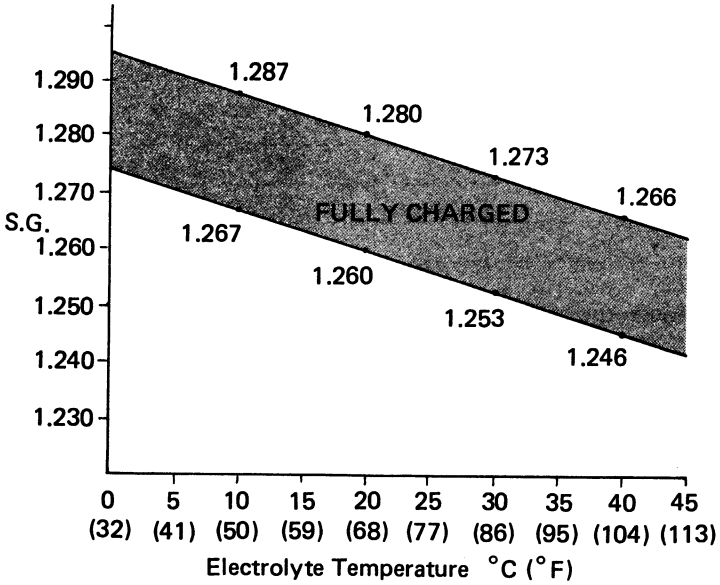

- The gravity of electrolyte changes 0.007 for every 10° temperature.

Date of Issue: Oct., 1977
© HONDA MOTOR CO., LTD.

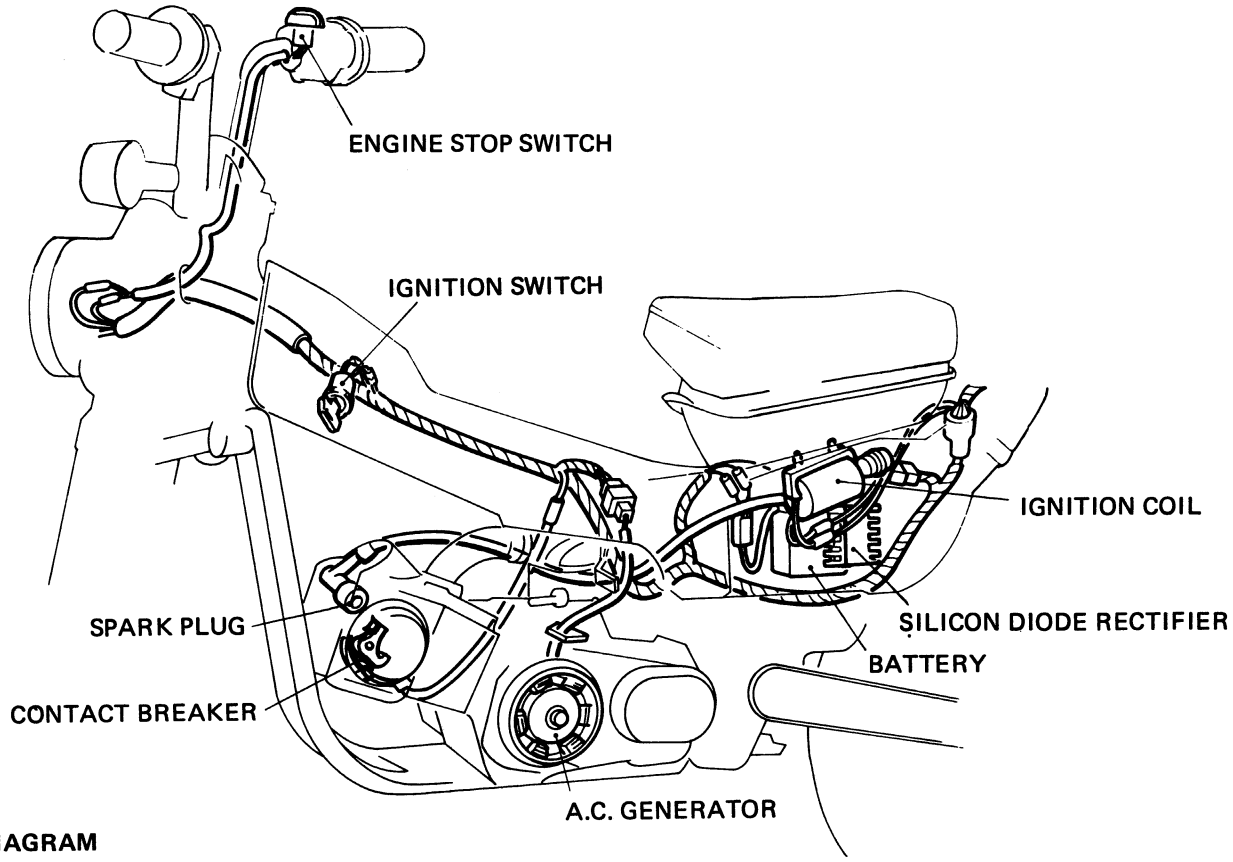

• DIAGRAM

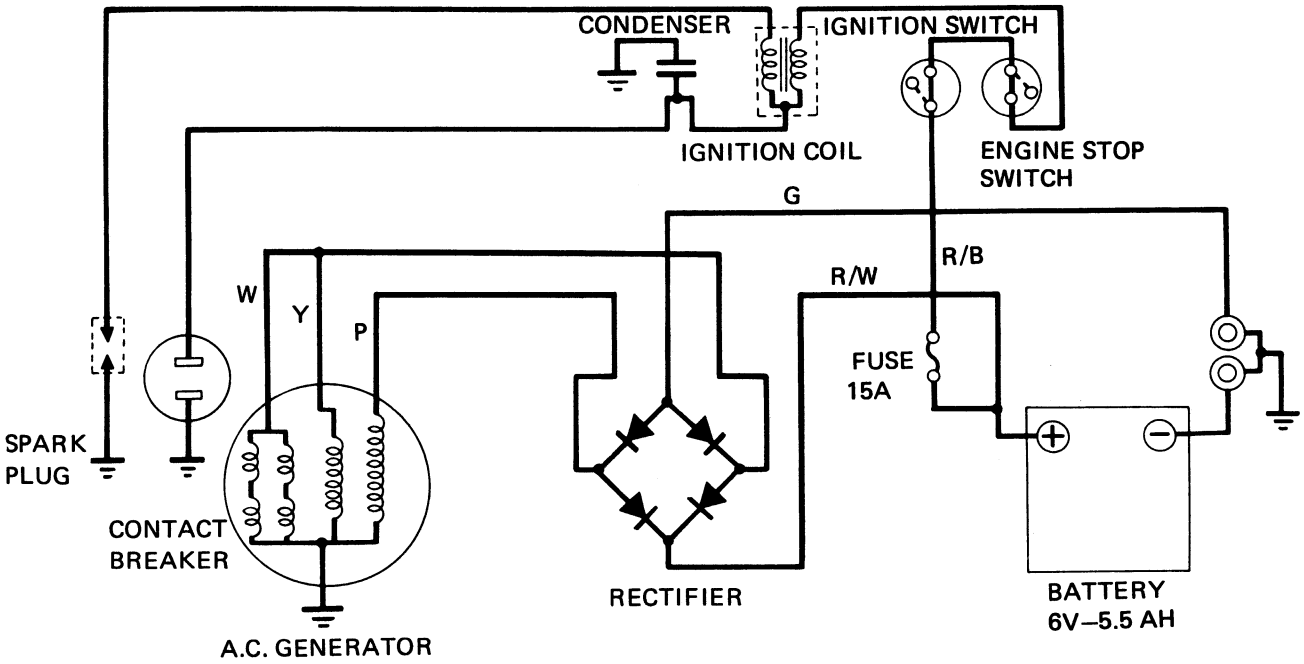

© HONDA MOTOR CO., LTD.

- **IGNITION COIL 3-POINT SPARK TEST**

Make the connections as described in the booklet furnished with the service tester.

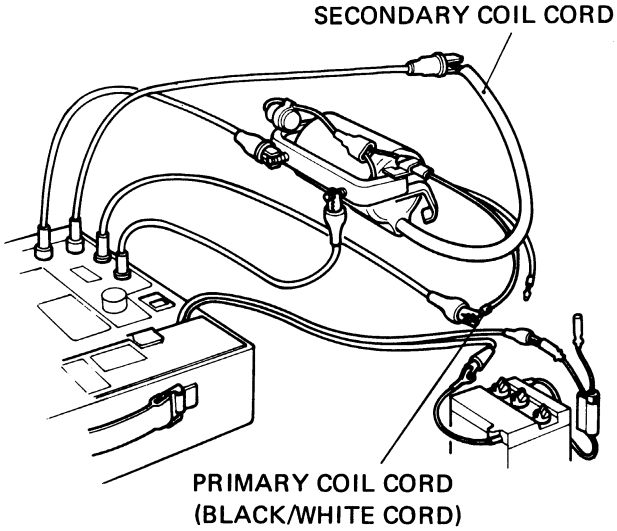

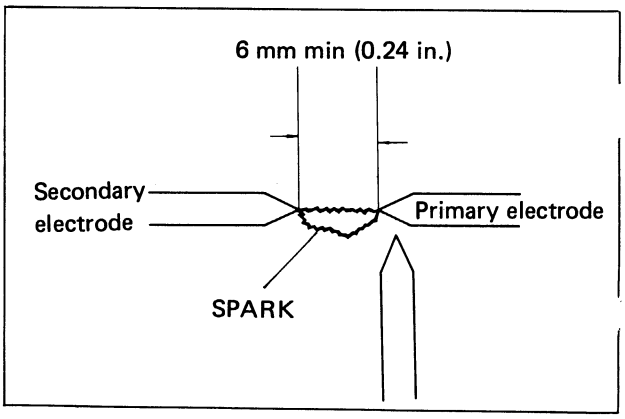

The ignition coil is normal if sparks jump across gap more than 6 mm (0.24 in.) under this test.

NOTE

- Perform this operation on an insulated surface.
- Keep the aligator clips on the secondary at least 50 mm away from each other.

- **CONDENSER CAPACITY TEST**

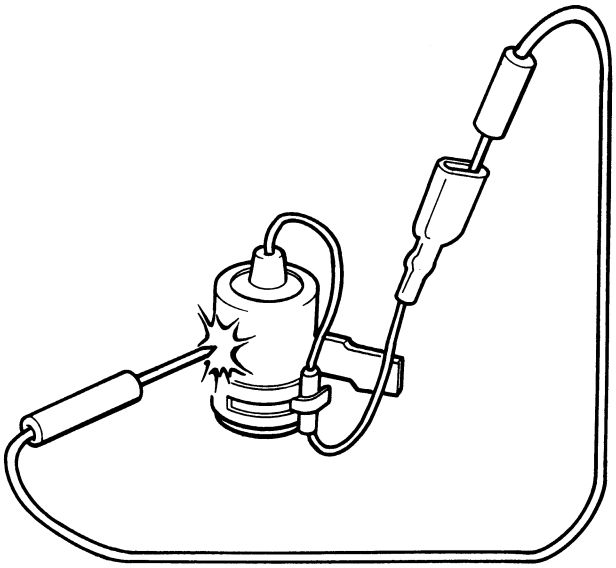

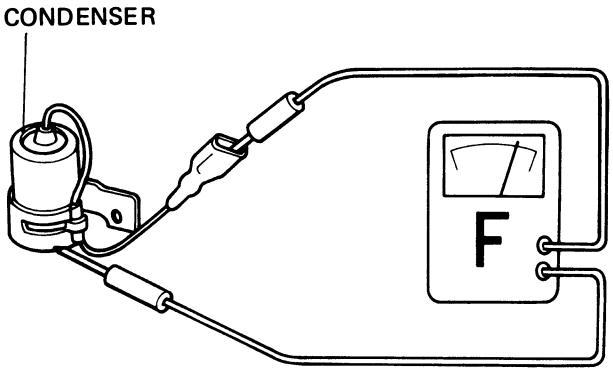

CAPACITY

0.27 - 0.33μF

- Before making a capacity test, discharge the condenser by touching the positive center lead to any case ground.

Perform this operation on an insulated surface.

Date of Issue: Oct., 1977
© HONDA MOTOR CO., LTD.

- **IGNITION COIL CONTINUTY TEST**

  - **Continuity between Primary and Secondary Coil Leads**

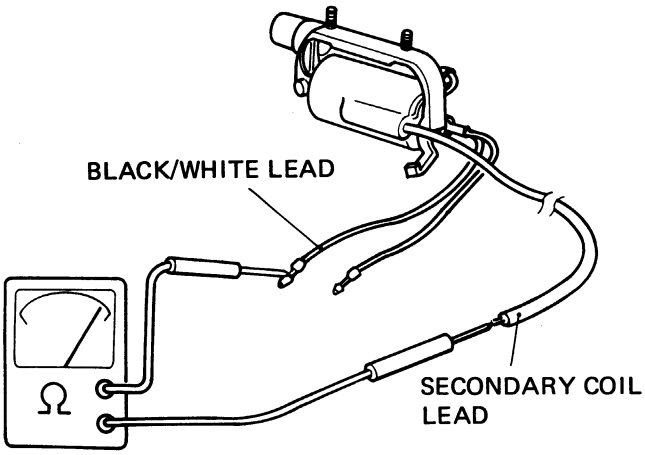

  - **Continuity between Secondary Coil Lead and Body Ground**

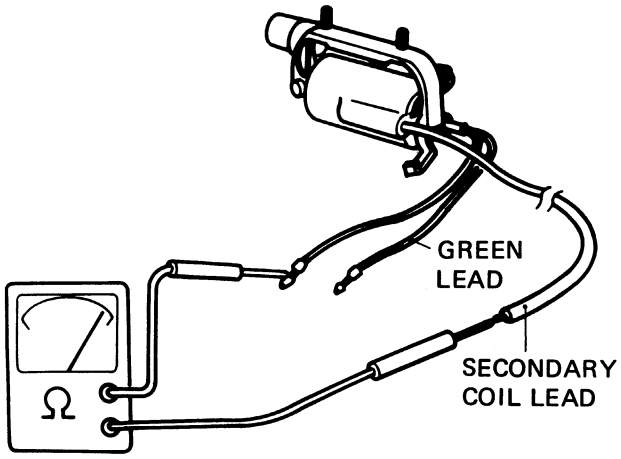

  - **Continuity between Primary coil Lead and Body Ground**

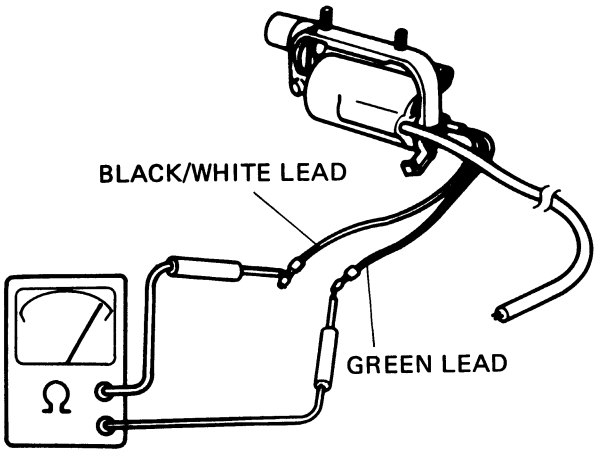

NOTE

Before making a continuty test, remove the noise supressor cap. To remove, turn the cap in the counterclockwise direction.

The ignition coil is correct if there is continuity in all cases.

- **CONTACT BREAKER POINT INSPECTION**

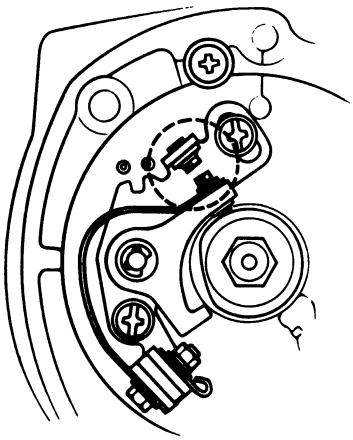

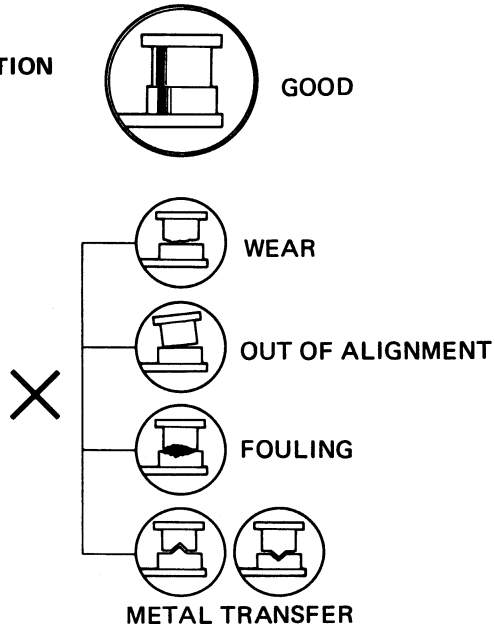

- Check the points for pitting or fouling. Replace if necessary. Use a point file to remove pitting.
- Replace the points if worn, out of alignment or with excessive metal transfer.

For inspection of point gap, see Page 22.

© HONDA MOTOR CO., LTD.

- **IGNITION SWITCH**

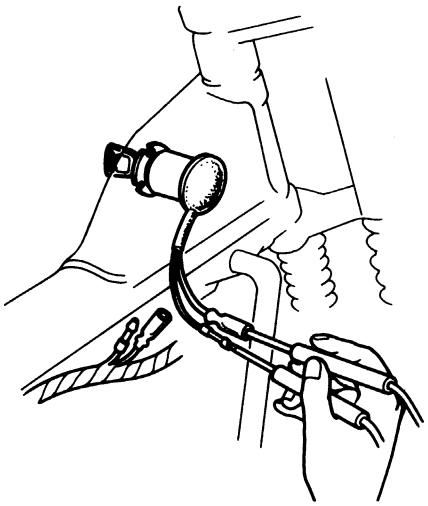

switch \ wire color	Black	Red/Blue
ON	○——○	
OFF		

The switch is normal if there is continuity between terminals (o—o).

- **TURN SIGNAL SWITCH**

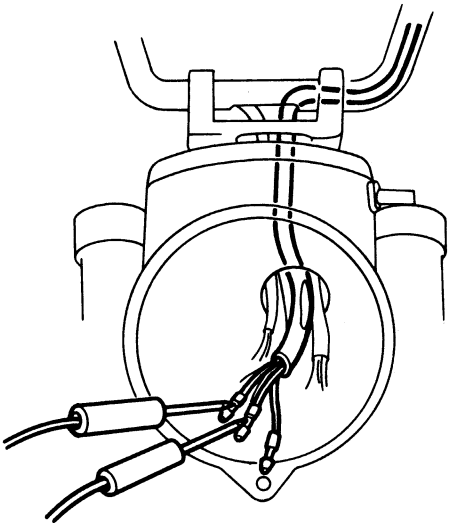

switch \ wire color	Light Blue	Grey	Orange
TURN L, R	○——○		
TURN L, R			
TURN L, R		○——○	

The switch is normal if there is continuity between terminals (o—o).

- **HORN SWITCH**

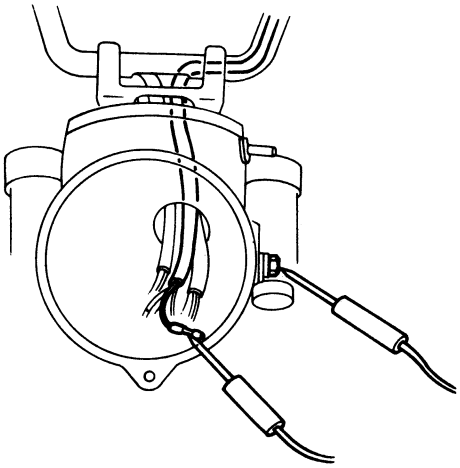

switch \ wire color	Light Green	Frame (ground)
PUSH	○——○	
FREE		

The switch is normal if there is continuity between terminals (o—o).

Date of Issue: Oct., 1977
© HONDA MOTOR CO., LTD.

- **HEAD LIGHT DIMMER SWITCH**

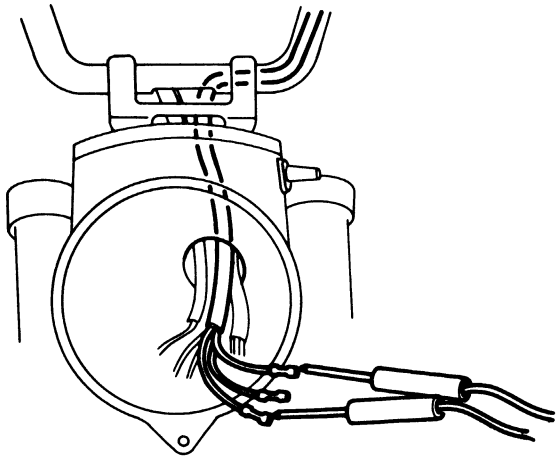

Switch \ Wire color	White	Green	Blue
HI / LO	o—o		
HI / LO		o—o	

The switch is normal if there is continuity between terminals (o—o).

- **ENGINE STOP SWITCH**

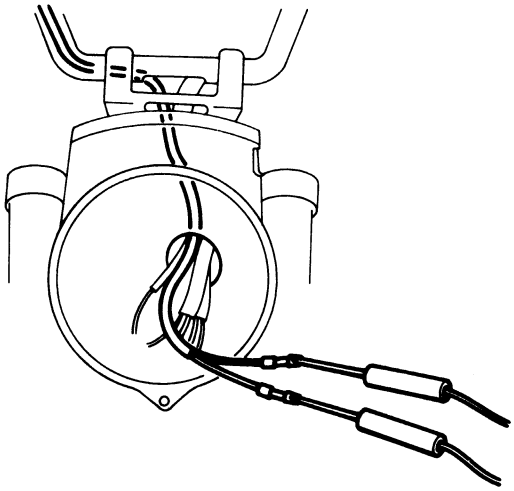

Switch \ Wire color	Black	Black White
ENGINE STOP: OFF / RUN / OFF	o—o	
ENGINE STOP: OFF / RUN / OFF		

The switch is normal if there is continuity between terminals (o—o).

- **FRONT BRAKE STOPLIGHT SWITCH**

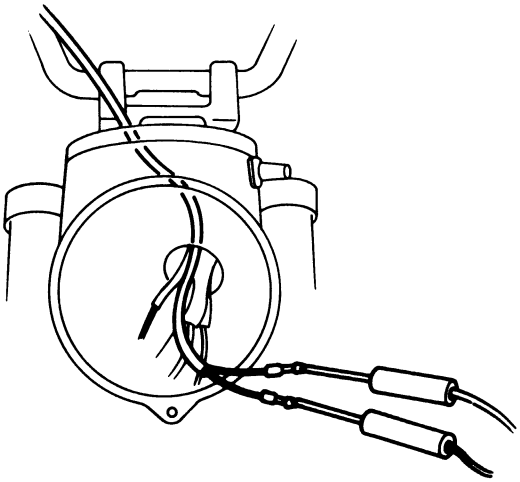

Switch \ Wire color	Black	Green/ Yellow
	o—o	

The switch is normal if there is continuity between terminals (o—o).

© HONDA MOTOR CO., LTD.

- **REAR BRAKE STOPLIGHT SWITCH**

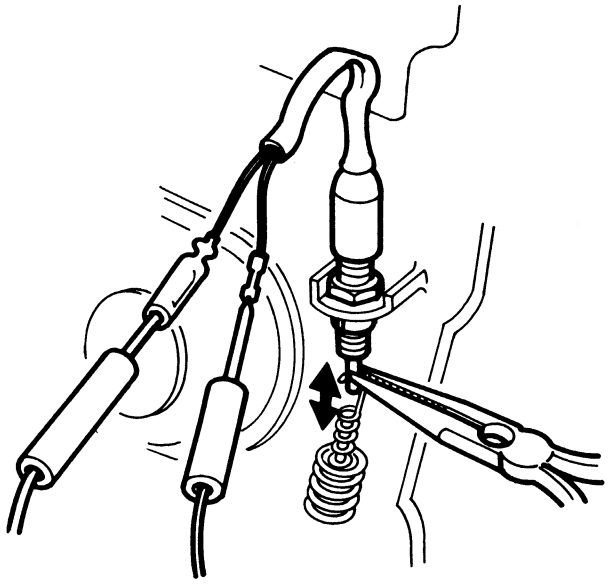

Switch \ Wire color	Black	Green/ Yellow
PULL	○	○
FREE		

The switch is normal if there is continuity between terminals (○—○).

- **HORN**

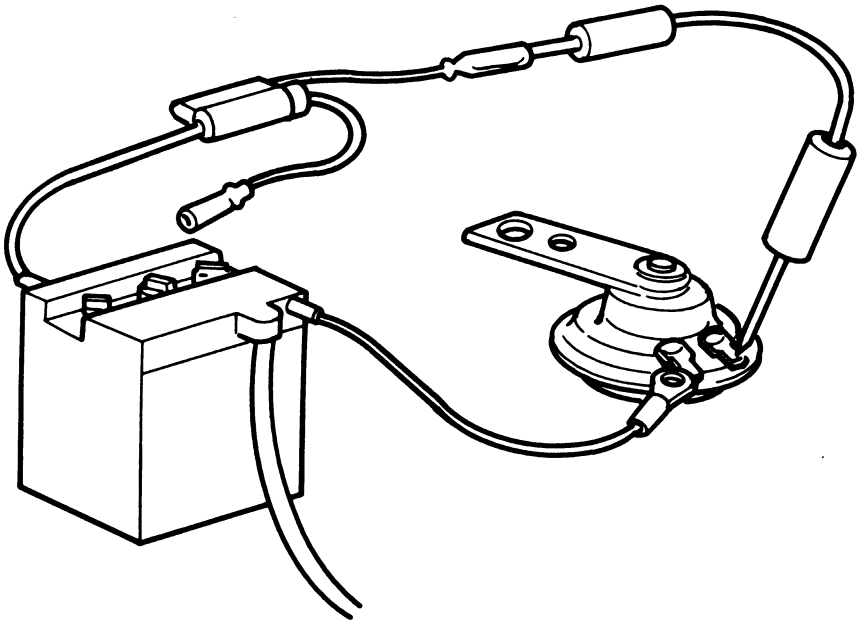

Date of Issue: Oct., 1977
© HONDA MOTOR CO., LTD.

VII '78½ EMISSIONS ADDENDUM

INTRODUCTION

This addendum contains mandatory emissions maintenance for CT90's manufactured after December 31, 1977.

Follow the Maintenance Schedule recommendations (Page. 6) to ensure that the vehicle is in peak operating condition and the emission levels are within Federal Clean Air Act Standards. Performing the first scheduled maintenance is very important. It compensates for the initial wear that occurs during break-in.

Refer to the base CT90 Shop Manual for service items not described in this addendum.

ALL INFORMATION, ILLUSTRATIONS, DIRECTIONS AND SPECIFICATIONS INCLUDED IN THIS PUBLICATION ARE BASED ON THE LATEST PRODUCT INFORMATION AVAILABLE AT THE TIME OF APPROVAL FOR PRINTING. HONDA MOTOR CO., LTD. RESERVES THE RIGHT TO MAKE CHANGES AT ANY TIME WITHOUT NOTICE AND WITHOUT INCURRING ANY OBLIGATION WHATEVER.

NO PART OF THIS PUBLICATION MAY BE REPRODUCED WITHOUT WRITTEN PERMISSION.

HONDA MOTOR CO., LTD.
Service Publications Office

CONTENTS

1. SPECIFICATIONS 110

2. EMISSION CONTROL SYSTEM 112

   1. CONTROL SYSTEM 112
   2. EMISSION CONTROL INFORMATION LABEL 113

3. MAINTENANCE SCHEDULE 114

4. INSPECTION AND ADJUSTMENT 115

ENGINE (EMISSIONS RELATED)

   1. ENGINE OIL 115
   2. ENGINE OIL FILTER SCREEN 116
   3. CRANKCASE BREATHER 117
   4. AIR CLEANER 117
   5. FUEL LINES 118
   6. SPARK PLUG 118
   7. VALVE CLEARANCE 119
   8. CONTACT BREAKER POINTS 119
   9. IGNITION TIMING 120
   10. SPARK ADVANCER 121
   11. CAM CHAIN TENSION 121
   12. THROTTLE OPERATION 122
   13. CARBURETOR IDLE SPEED 122
   14. CARBURETOR CHOKE 122

CHASSIS (NON-EMISSIONS RELATED)

   15. DRIVE CHAIN 123
   16. BATTERY 124
   17. BRAKE SHOE WEAR 125
   18. BRAKE SYSTEM 125
   19. STOP LIGHT SWITCH 127
   20. HEADLIGHT AIM 127
   21. CLUTCH FREE PLAY 128
   22. SIDE STAND 128
   23. SUSPENSION 128
   24. SPARK ARRESTER 129
   25. NUTS, BOLTS, FASTENERS 130
   26. WHEELS 130
   27. STEERING HEAD BEARING 131

5. CARBURETOR 132

   1. CARBURETOR SPECIFICATIONS 132
   2. DISASSEMBLY AND ASSEMBLY 132
   3. PILOT SCREW INITIAL SETTING 132
   4. PILOT SCREW ADJUSTMENT 133
   5. HIGH ALTITUDE ADJUSTMENT 133

6. BREATHER SYSTEM 134

7. TROUBLESHOOTING 135

Date of Issue: Feb., 1978
© HONDA MOTOR CO., LTD.

Item	Metric	English
DIMENSIONS		
Overall length	1870 mm	73.6 in
Overall width	740 mm	29.1 in
Overall height	1060 mm	41.7 in
Wheel base	1220 mm	48.0 in
Seat height	775 mm	30.5 in
Ground clearance	165 mm	6.5 in
Dry weight	90 kg	198.5 lb
FRAME		
Type	Back bone	
Front suspension, travel	Telescopic fork, 102 mm (4.0 in)	
Rear suspension, travel	Swing arm, 77 mm (3.0 in)	
Front tire size, type	2.75–17–4PR Knobby, (Tire air pressure: 1.75 kg/cm^2 · 25 psi)	
Rear tire size, type	2.75–17–4PR Knobby, (Tire air pressure: 2.25 kg/cm^2 · 32 psi)	
Front brake	Internal expanding shoes	
Rear brake	Internal expanding shoes	
Fuel capacity	5.5 lit.	1.4 US. gal.
Fuel reserve capacity	0.8 lit.	0.2 US. gal.
Auxiliary fuel tank capacity	2.3 lit.	0.6 US. gal.
Caster angle	63°	
Trail length	75 mm	3 in
Front fork oil capacity — To fill dry fork assy.	130–140 cc	4.4–4.7 US oz.
Front fork oil capacity — To refill after draining	120–130 cc	4.1–4.4 US oz.
ENGINE		
Type	Air cooled 4-stroke O.H.C. engine	
Cylinder arrangement	Single cylinder 75° inclined from vertical	
Bore and stroke	50 x 45.6 mm	1.970 x 1.797 in
Displacement	89.5 cc	5.46 cu in
Compression ratio	8.2 : 1	
Compression pressure	12 kg/cm^2 (1000~1200 rpm)	170 psi (1000~1200 rpm)
Carburetor, venturi dia.	Piston valve type, 16 mm (0.64 in)	
Valve train	Chain driven over head camshaft	
Oil capacity	0.9 lit	0.95 US qt
Lubrication system	Forced pressure and wet sump	
Fuel required	All gasoline of 91 research octane (86 pump octane) or higher	
Air filtration	Oiled polyurethane foam filter	
Valve timing — IN — Opens	5° BTDC (at 1mm lift)	58° BTDC (at 0 lift)
Valve timing — IN — Closes	20° ABDC (at 1 mm lift)	73° ABDC (at 0 lift)
Valve timing — EX — Opens	25° BBDC (at 1 mm lift)	74° BBDC (at 0 lift)
Valve timing — EX — Closes	5° ATDC (at 1 mm lift)	65° ATDC (at 0 lift)

Date of Issue: Feb., 1978
© HONDA MOTOR CO., LTD.

Item		Metric	English
Valve clearance	IN/EX	0.05 mm	0.002 in
Engine dry weight		24 kg	53 lb
Idle speed		1300 ± 100 rpm	
DRIVE TRAIN			
Clutch		Wet multi-plate semi-automatic	
Transmission		4-speed constant mesh	
Primary reduction		3.722	
Gear ratio	I	2.538	
	II	1.611	
	III	1.190	
	IV	0.958	
Auxiliary transmission	High/Low	1.000/1.867	
Final reduction		3.000, 15/45	
Gear shift pattern		Left foot operated return system	
ELECTRICAL			
Ignition		Battery and ignition coil	
Ignition advance	"F" mark	10° BTDC, Static and idle speed	
	Full advance mark	36°–42° BTDC	
	RPM from "F" to max. advance	1950-4800 rpm	
Starting system		Kick starter	
Alternator		AC. generator, 0.062 kw/6000 rpm	
Battery capacity		6 V-5.5 AH	
Fuse capacity		15 A	
Spark plug			
Condenser capacity		0.27-0.33μF	
CARBURETOR		Standard 2,000m (6,500 ft) max.	High altitude 1,500m (5,000 ft) min.
Identification number		PB28A	←
Main jet		# 65	# 60
Jet needle mark		18A	←
Float height		10.7mm (0.43 in)	←
Pilot screw		See page 24 ~ 25.	←

Usage / Brand	For cold climate (below 5°C, 41°F)	Standard	For extended high speed operation
NGK	D6HA	D8HA	D8HA
ND	X20FS-U	X24FS-U	X24FS-U

© HONDA MOTOR CO., LTD.

1. CONTROL SYSTEM (U. S. A. only)

The CT90 is equipped with two Separate Emission Control Systems.

*Exhaust Emission Control System

The exhaust emission control system is composed of a factory pre-set carburetor. No adjustment should be made except to the idle speed with the throttle stop screw.

*Crankcase Emission Control System

The engine is equipped with a "Closed System" to prevent crankcase emissions from entering the atmosphere. Blow-by gas is returned to the combustion chamber through the air cleaner and carburetor.

Crankcase Emission Control System

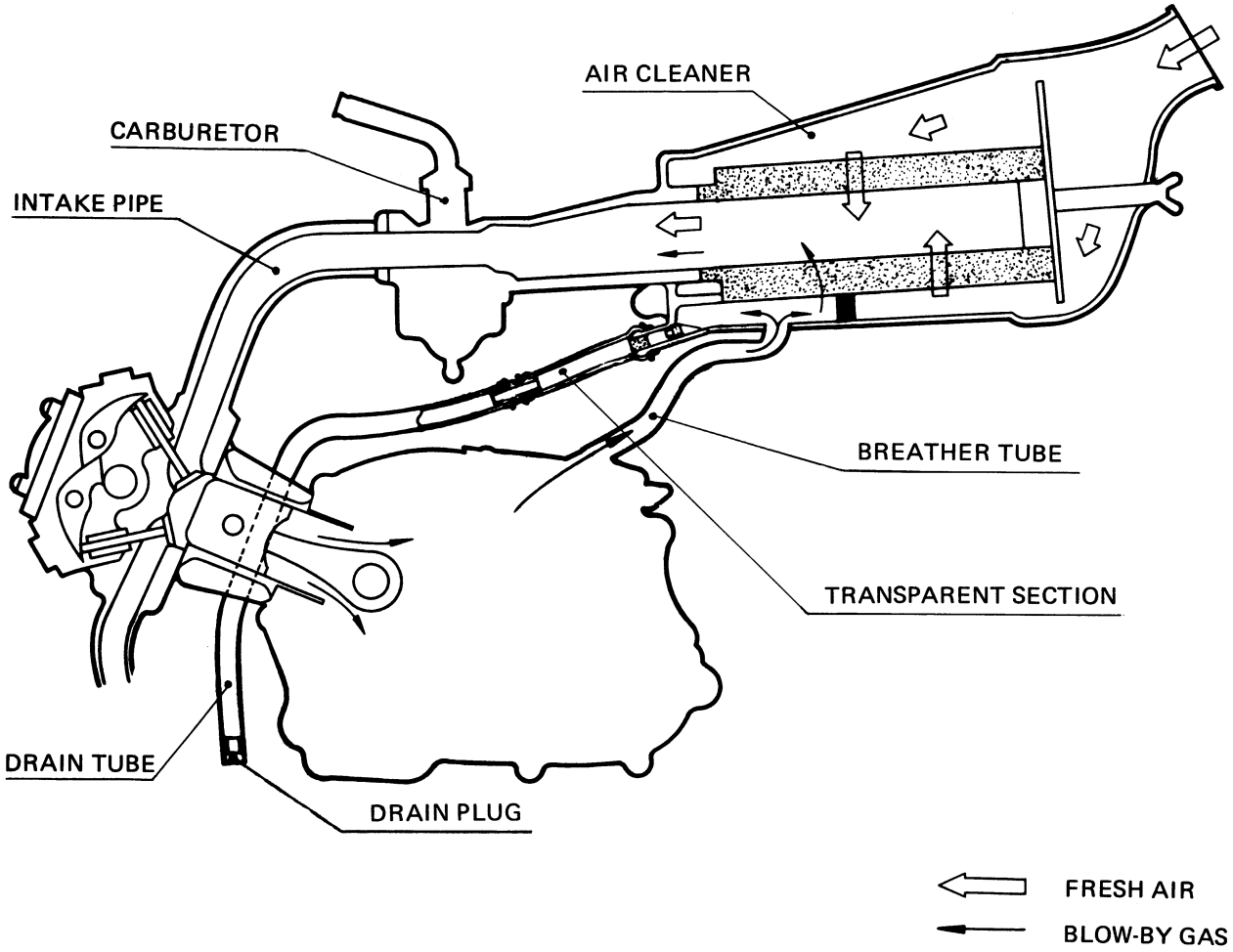

Date of Issue: Feb., 1978
© HONDA MOTOR CO., LTD.

2. EMISSION CONTROL INFORMATION LABEL (U.S.A. only)

CT90's manufactured after December 31, 1977 have an Emission Control Information Label on the frame as shown. It contains basic tune-up specifications for CT90's manufactured after December 31, 1977. Refer to the Shop Manual for more details.

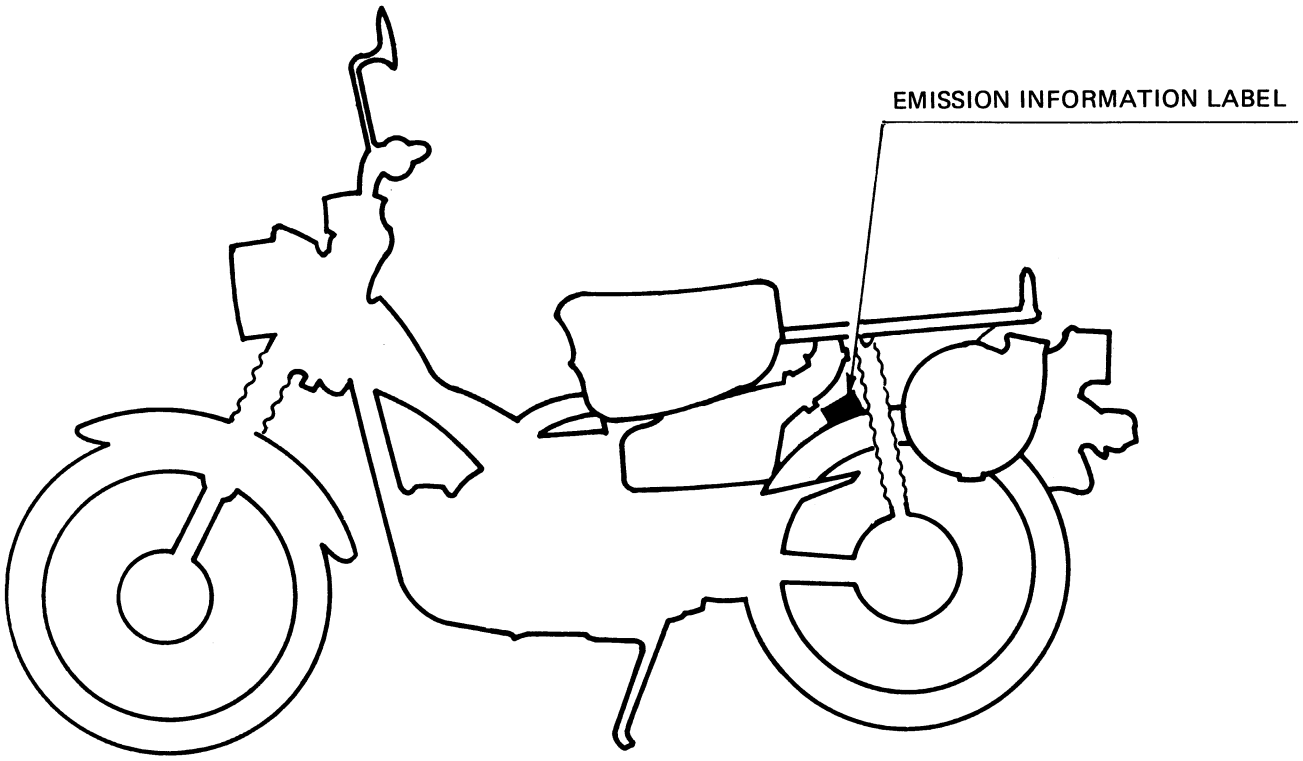

© HONDA MOTOR CO., LTD.

3. MAINTENANCE SCHEDULE
'78½ EMISSIONS ADDENDUM

Perform the PRE-RIDE INSPECTION in the Owner's Manual at each maintenance period.

I: Inspect, Clean, Adjust, Lubricate or Replace if necessary.
C: Clean
R: Replace
A: Adjust

	ITEM / FREQUENCY	WHICHEVER OCCURS FIRST → ↓ EVERY	ODOMETER READING NOTE (4) 600mi. (1000km)	2400mi. (4000km)	4800mi. (8000km)	7200mi. (12000km)	Refer to
EMISSION RELATED ITEMS	ENGINE OIL	YEAR	R	REPLACE EVERY 1200mi. (2000km)			Page 7
	* ENGINE OIL FILTER SCREEN				C		Page 8
	CRANKCASE BREATHER NOTE (1)			C	C	C	Page 9
	AIR CLEANER NOTE (2)			C	C	C	Page 9
	* FUEL LINES			I	I	I	Page 10
	SPARK PLUG			I	I	R	Page 10
	* VALVE CLEARANCE		I	I	I	I	Page 11
	* CONTACT BREAKER POINTS		I	I	I	I	Page 11
	* IGNITION TIMING		I	I	I	I	Page 12
	* CAM CHAIN TENSION		A	A	A	A	Page 13
	* THROTTLE OPERATION		I	I	I	I	Page 14
	* CARBURETOR IDLE SPEED		I	I	I	I	Page 14
	* CARBURETOR CHOKE			I	I	I	Page 14
NON-EMISSION RELATED ITEMS	DRIVE CHAIN NOTE (3)		I	EVERY 600mi. (1000km)			Page 15
	BATTERY	MONTH	I	I	I	I	Page 16
	BRAKE SHOE WEAR			I	I	I	Page 17
	BRAKE SYSTEM		I	I	I	I	Page 17
	* STOP LIGHT SWITCH		I	I	I	I	Page 19
	* HEADLIGHT AIM		I	I	I	I	Page 19
	CLUTCH FREE PLAY		I	I	I	I	Page 20
	SIDE STAND			I	I	I	Page 20
	* SUSPENSION		I	I	I	I	Page 20
	* SPARK ARRESTER			C	C	C	Page 21
	* NUTS, BOLTS, FASTENERS		I	I	I	I	Page 22
	** WHEELS		I	I	I	I	Page 22
	** STEERING HEAD BEARING		I			I	Page 23

* Should be serviced by an authorized HONDA dealer, unless the owner has proper tools and service data and is mechanically qualified.

** In the interest of safety, we recommend these items be serviced ONLY by an authorized HONDA dealer.

NOTE:

(1) More frequent service may be required when riding in rain or at full throttle openings. (U.S.A. only)
(2) More frequent service may be required when riding in dusty areas.
(3) Initial service period 200 miles (300km).
(4) For higher odometer readings, repeat at the frequency interval established here.

Date of Issue: Feb., 1978
© HONDA MOTOR CO., LTD.

1. ENGINE OIL

• ENGINE OIL LEVEL CHECK

1. Place the vehicle on its center stand, and remove the oil filler cap/dipstick and wipe it clean.
2. Reinsert the dipstick and check the oil level.

NOTE

Do not screw in the dipstick when making this check.

3. If the oil level is below the lower level mark, fill to the upper level mark with the recommended oil.

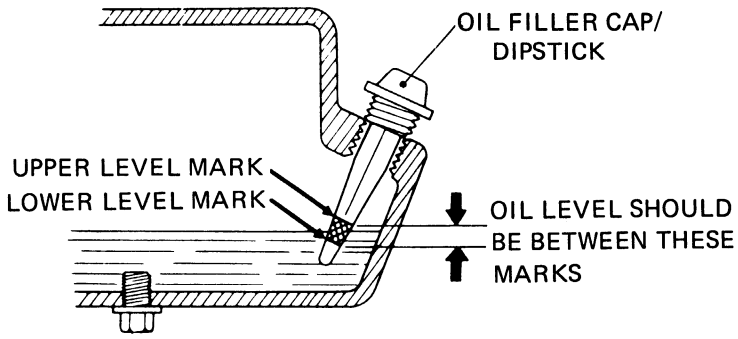

• ENGINE OIL CHANGE

1. Remove oil filler cap and drain plug after the engine is warm, and drain the oil.
2. Install the drain plug, and check the sealing washer condition.
   dition.
   TORQUE: 2.0–3.5 kg-m
   (14.5–25.3 ft-lbs)
3. Fill crankcase with the recommended oil.

   OIL CAPACITY: 0.9 lit. (0.95 US.qt.) approximately.

RECOMMENDED OIL: Use HONDA 4-STROKE OIL or equivalent. API SERVICE CLASSIFICATION: SE VISCOSITY: General, all temperatures; SAE 10W–40 Alternate;

Above 15°C/59°F	SAE 30
0°C/32°F - 15°C/59° F	SAE 20 or SAE 20W
Below 0°C/32°F	SAE 10W

4. Reinstall the oil filler cap.
5. Start the engine and allow it to idle for 2-3 minutes.
6. Stop the engine, and make sure that the oil level is at the upper level mark with the vehicle in an upright position, and that there are no oil leaks.

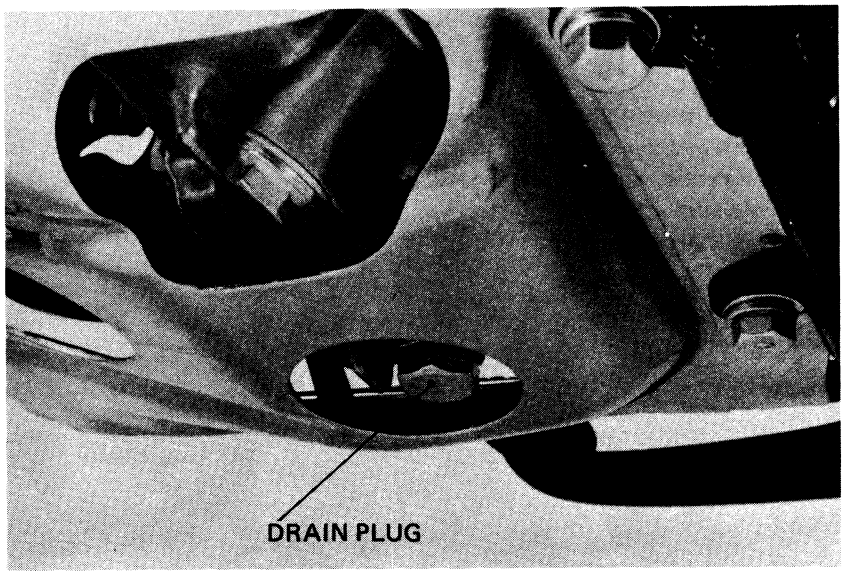

OIL SPECIFICATION

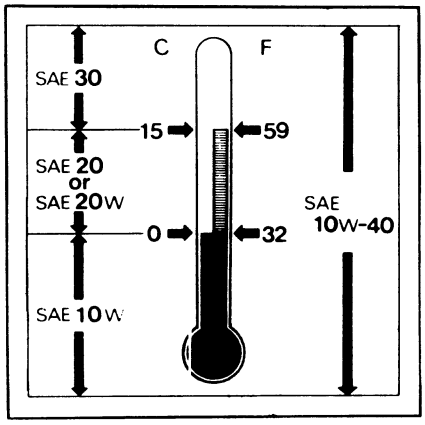

© HONDA MOTOR CO., LTD.

2. ENGINE OIL FILTER SCREEN

NOTE

Perform this maintenance before filling the engine with oil.

1. Warm up the engine.
2. Remove the oil filler cap and drain plug and drain the oil.

   Turn the fuel valve "OFF". Loosen the carburetor drain plug and drain gasoline from the float bowel.

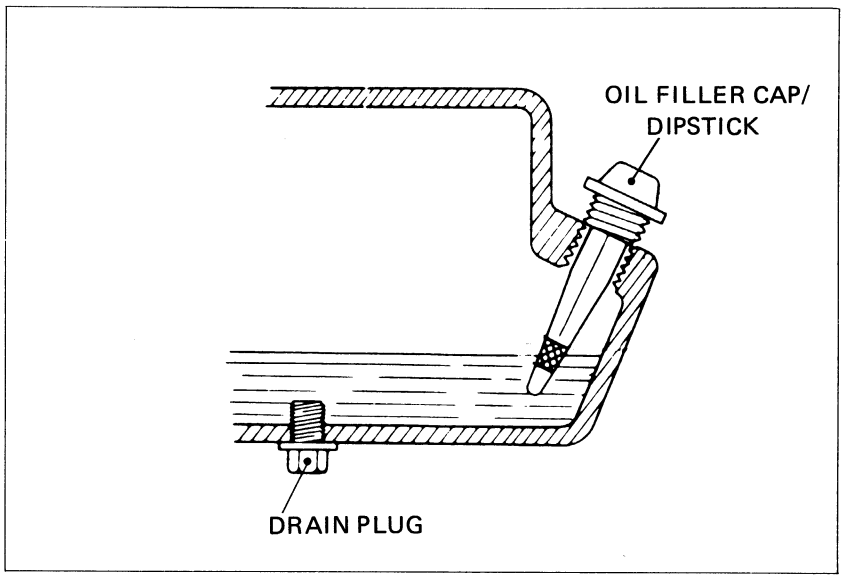

3. Remove the kick starter pedal and foot peg, and loosen four bolts on crankcase protector.
4. Remove the right crankcase cover.
5. Remove and clean the oil filter screen.
6. Reinstall the oil filter screen and right crankcase cover.
7. Reinstall the foot peg.

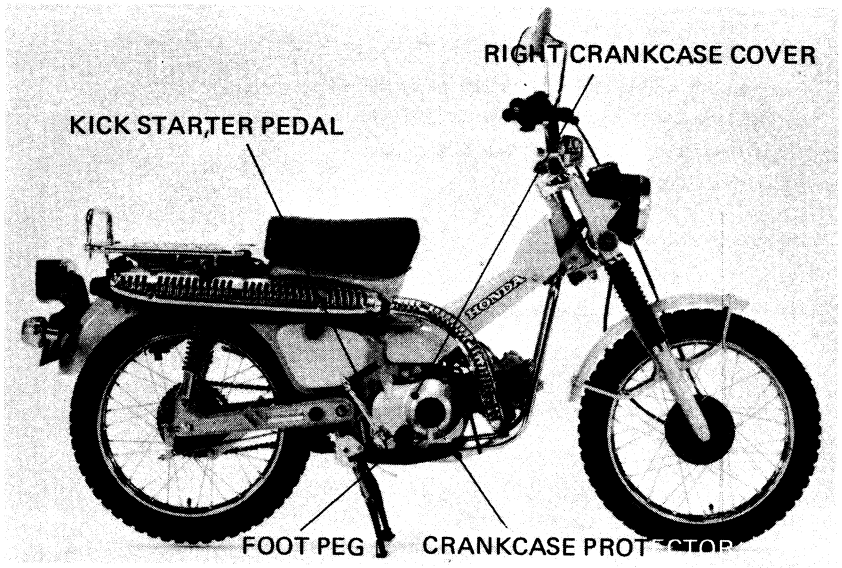

8. Reinstall the kick starter pedal.
9. Retighten four lock bolts on the crankcase protector.
10. Fill the crankcase with the recommended engine oil, and start the engine.
11. Stop the engine, check the oil level and for oil leaks.

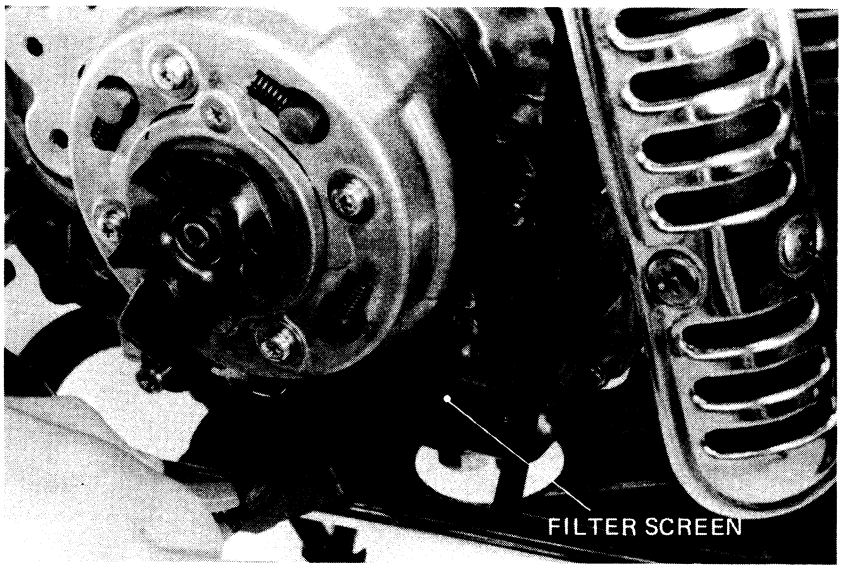

Date of Issue: Feb., 1978
© HONDA MOTOR CO., LTD.

3. CRANKCASE BREATHER
(U. S. A. only)

1. Remove the drain plug from the drain tube, and drain deposits.
2. Reinstall the drain plug.

NOTE

Service more frequently when driven in rain or at full throttle openings, or if deposit level can be seen in the transparent section of drain tube.

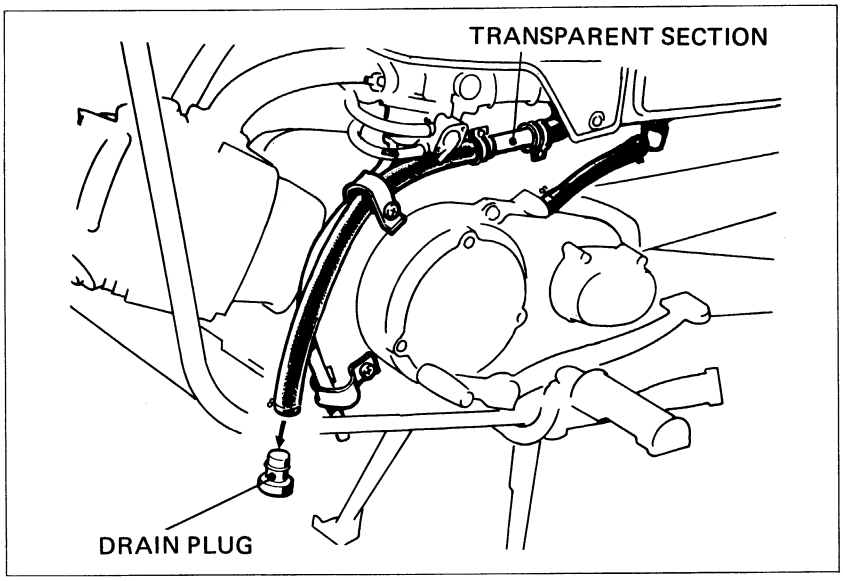

4. AIR CLEANER

1. Remove the air cleaner connecting tube and cover.
2. Remove the air cleaner cover stud, element cap, and air cleaner element.

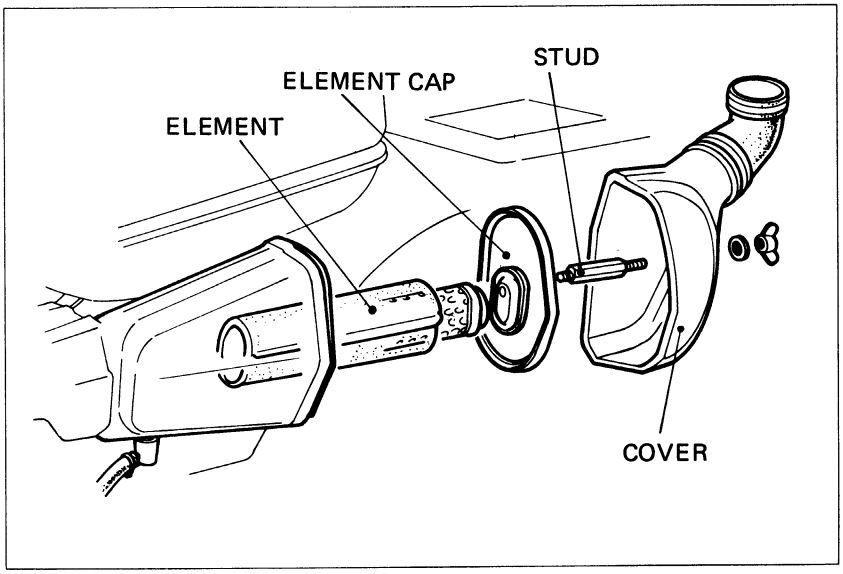

3. Wash the air cleaner element in non-flammable or high flash point solvent and allow to dry.
4. Soak the air cleaner element in gear oil (#80 – #90), and squeeze out excess.
5. Reinstall the air cleaner element.
6. Reinstall the cap and air cleaner cover stud.
7. Reinstall the air cleaner case cover and air cleaner connecting tube.

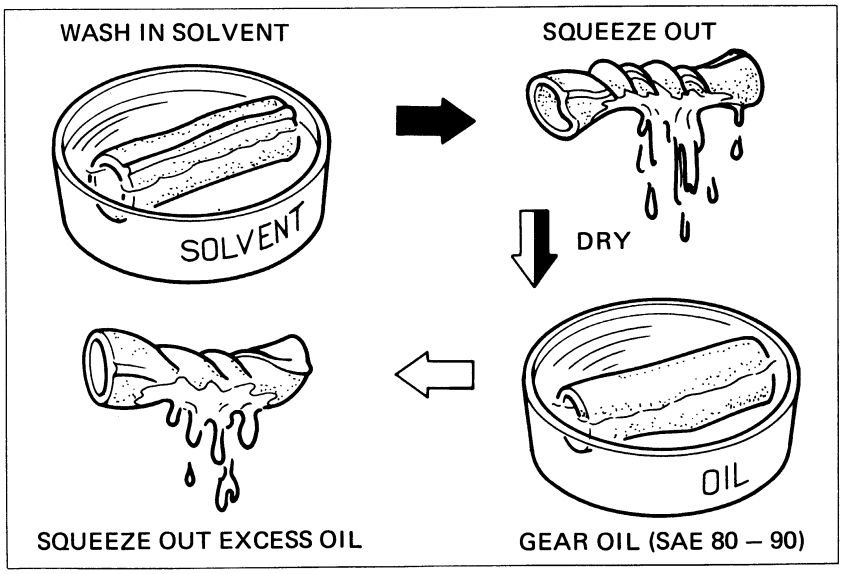

© HONDA MOTOR CO., LTD.

5. FUEL LINES

Replace any parts which show signs of deterioration, damage or leakage.

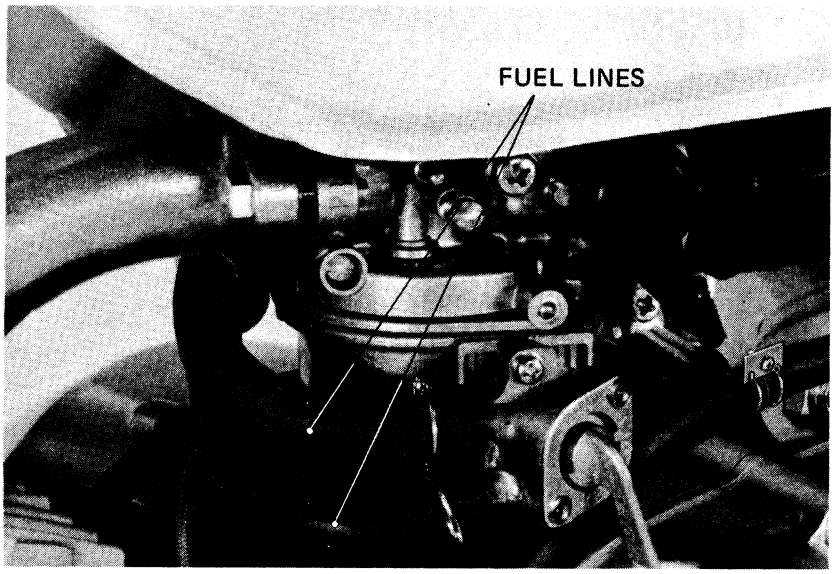

6. SPARK PLUG

1. Disconnect the spark plug cap, and remove spark plug.
2. Visually inspect the spark plug electrodes for wear.
   The center electrode should have square edges and the side electrode should have a constant thickness. Discard the spark plug if there is apparent wear or if the insulator is cracked or chipped. If the spark plug deposits can be removed by sandblasting it can be reused.

Spark Plugs VS Operating Conditions			
Usage / Brand	For cold climate (below 5°C, 41°F)	Standard	For extended high speed driving
NGK	D6HA	D8HA	D8HA
ND	X20FS-U	X24FS-U	X24FS-U

3. Use a feeler gauge to make sure the spark plug gap is 0.6–0.7mm (0.024–0.028 in). Adjust by bending the side electrode.
4. Reinstall the spark plug and reconnect the spark plug cap.

NOTE

First turn the spark plug finger tight, then tighten with a spark plug wrench.

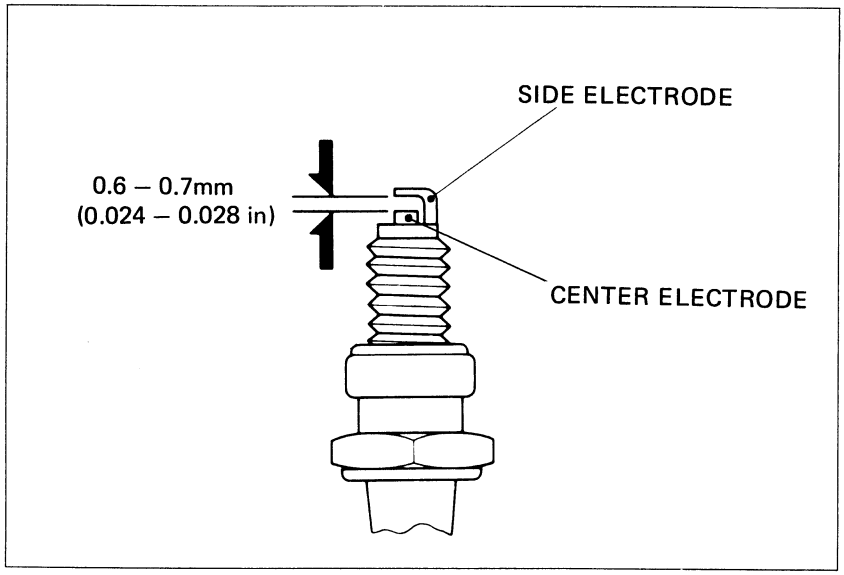

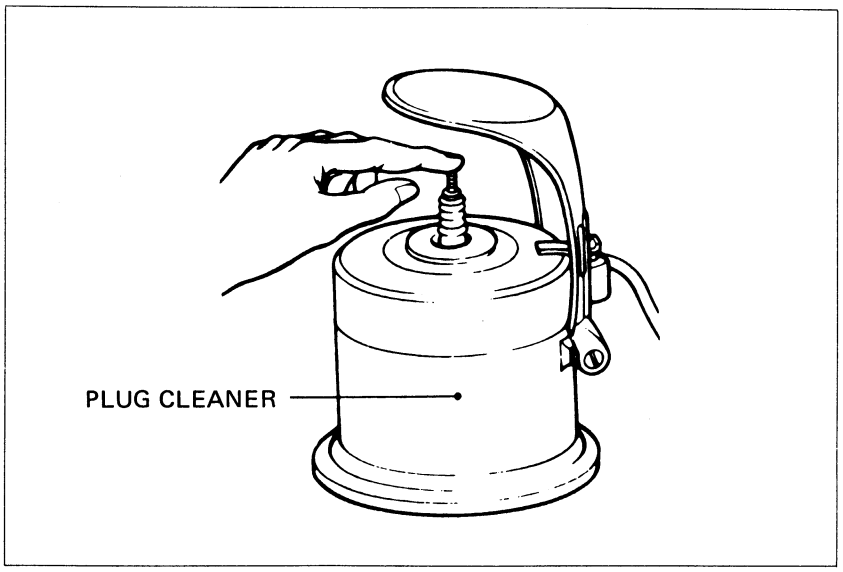

Date of Issue: Feb., 1978
© HONDA MOTOR CO., LTD.

7. VALVE CLEARANCE

NOTE

Valve clearance adjustment must be performed while the engine is cold.
(below 35°C, 95°F)

1. Remove the generator cover and valve adjusting caps.
2. Rotate the rotor counterclockwise, and align the "T" mark on the rotor with the index mark on the stator. The piston must be at T.D.C. of the compression stroke.

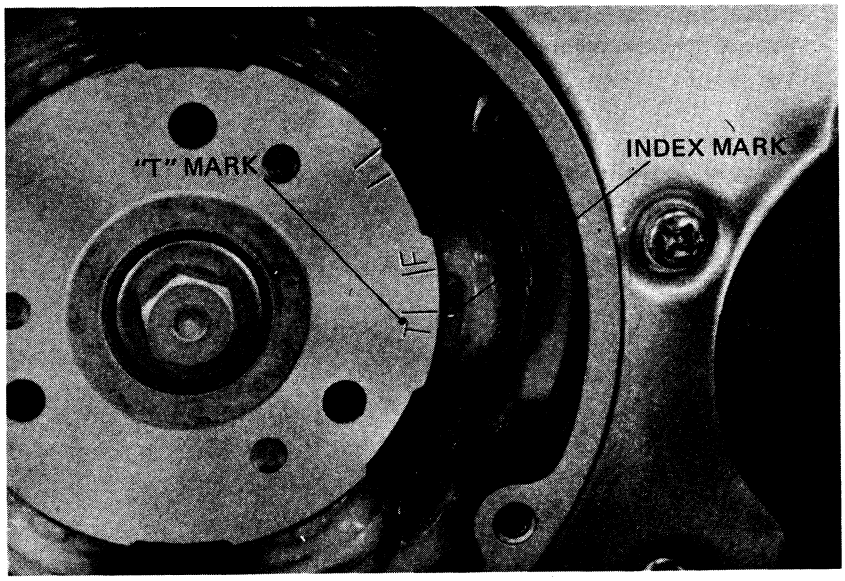

3. Measure the intake and exhaust valve clearances with a 0.05mm (0.002 in) feeler gauge. Insert the feeler gauge between the valve adjusting screw and valve stem.
4. Adjust by loosening the valve adjusting screw lock nut and turning the adjusting screw until there is a slight drag on the feeler gauge.
5. Hold the adjusting screw and tighten the lock nut.
6. Recheck the clearance.
7. Reinstall the generator cover and valve adjusting caps.

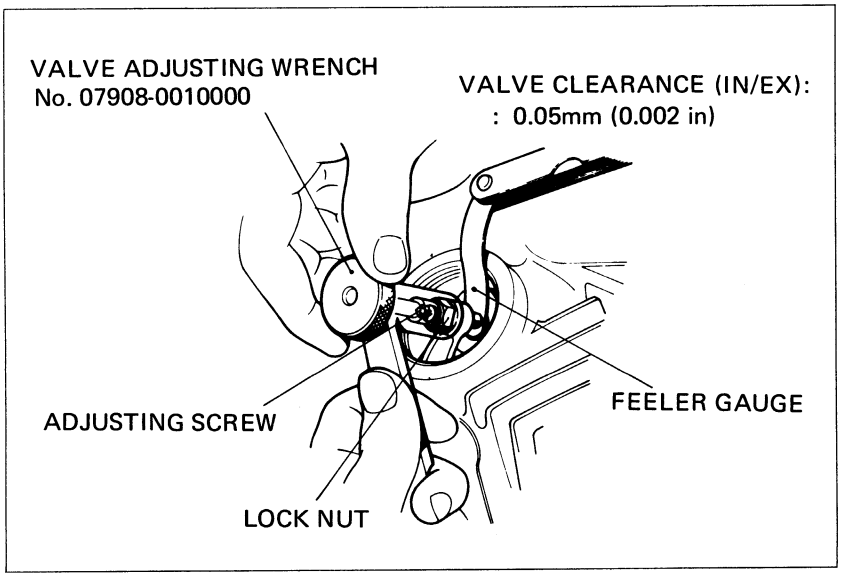

8. CONTACT BREAKER POINTS

1. Remove the generator and point covers.
2. Clean the point contact surfaces with an electrical contact cleaner to remove any oil film or dirt. If the contact surfaces are level but grayish in color or are slightly pitted, file them lightly with a point file. If the points have a noticeable transfer of metal from one surface to the other, have evidence of heavy arcing, or are worn at an angle, they should be replaced.

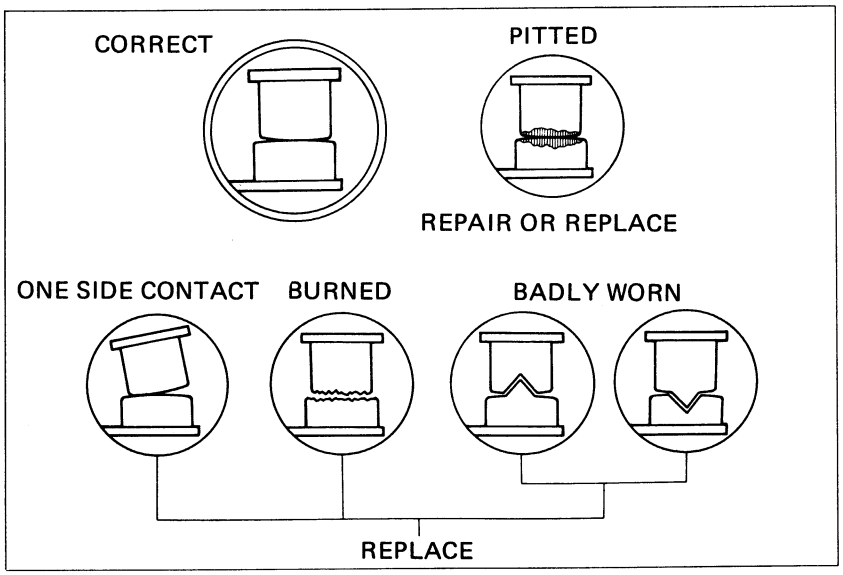

© HONDA MOTOR CO., LTD.

3. Rotate the rotor counterckockwise, and measure the maximum point gap with a fleer gauge.
   POINT GAP: 0.3–0.4 mm (0.012–0.016 in)
4. Adjust by loosening two contact breaker plate locking screws and moving the contact breaker plate.
5. Retighten the locking screws and recheck the point gap.

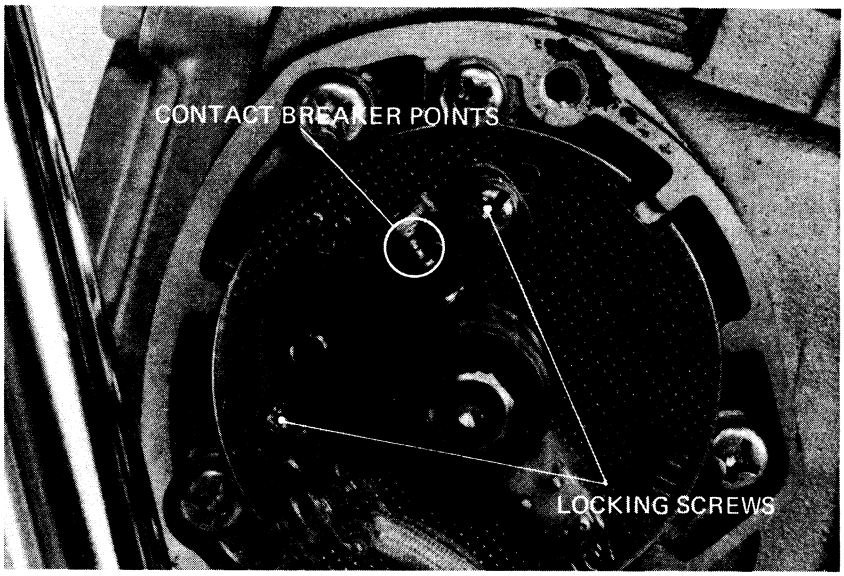

9. IGNITION TIMING ADJUSTMENT

NOTE

Adjust the contact breaker point gap before adjusting ignition timing.

- STATIC TIMING

1. Obtain a fully charged 6V battery and a continuity light (6V-3W).
2. Connect one lead of the continuity light to the contact breaker terminal, and the other lead to the battery positive (+) terminal.
3. Ground the battery negative (–) terminal to the frame.

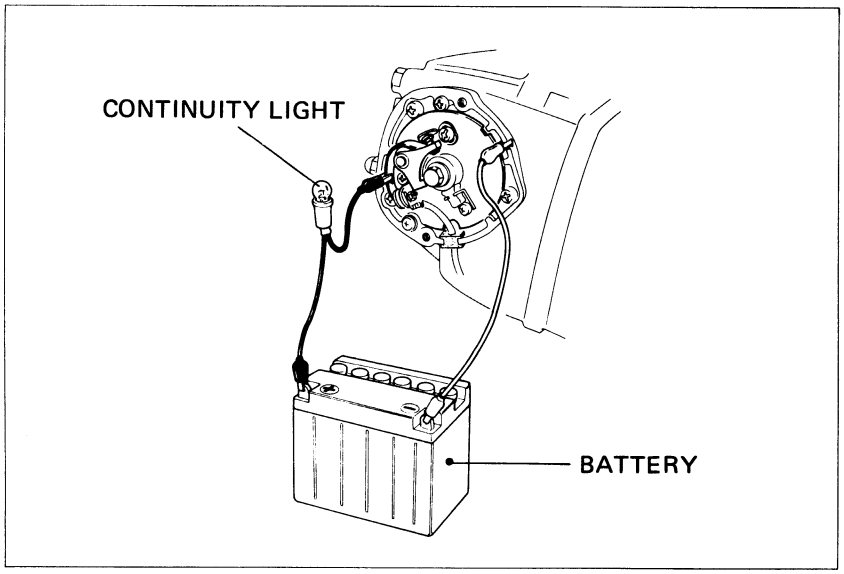

NOTE

This check can also be made using the battery on the vehicle ; make sure that the ignition switch is ON.

4. Rotate the rotor counterclockwise and align the "F" mark on the rotor with the index mark on stator. The timing is correct if the light goes out when both marks align.
5. If the timing is advanced, adjust by loosening the contact breaker locking screws and rotate the base plate counterclockwise.
   If the timing is retarded, rotate the base plate clockwise.
   Retighten the locking screws and recheck the timing.

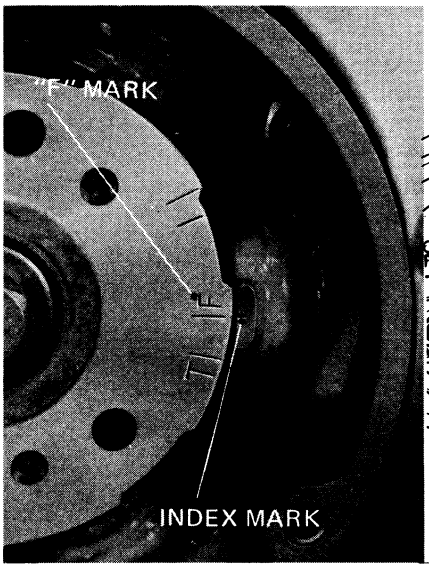

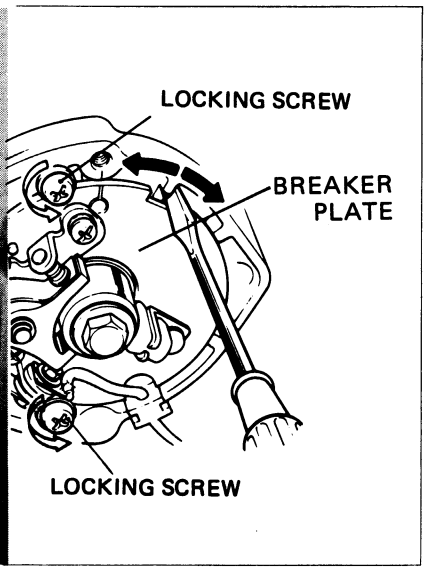

Date of Issue: Feb., 1978
© HONDA MOTOR CO., LTD.

- DYNAMIC TIMING

1. Connect a tachometer and a stroboscopic timing light.
2. Start the engine and adjust the idle in neutral to 1,300 ± 100 rpm.
3. The timing is correct, if the "F" mark on the rotor aligns with the index mark on the stator.
4. If necessary, adjust the timing as described for use with a continuity light step 5.

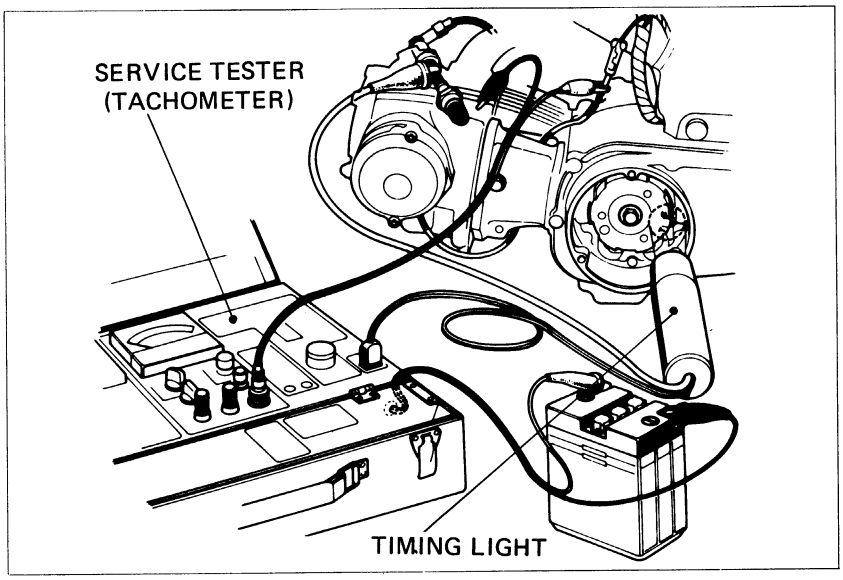

10.SPARK ADVANCER

NOTE

> Before performing this test, check and adjust the ignition timing.

1. Connect a tachometer and a timing light.
2. Start the engine.
3. Make sure the index mark on the stator is between the full-advance marks on the rotor at 4,800 rpm.
4. If not, check the spark advancer operation.

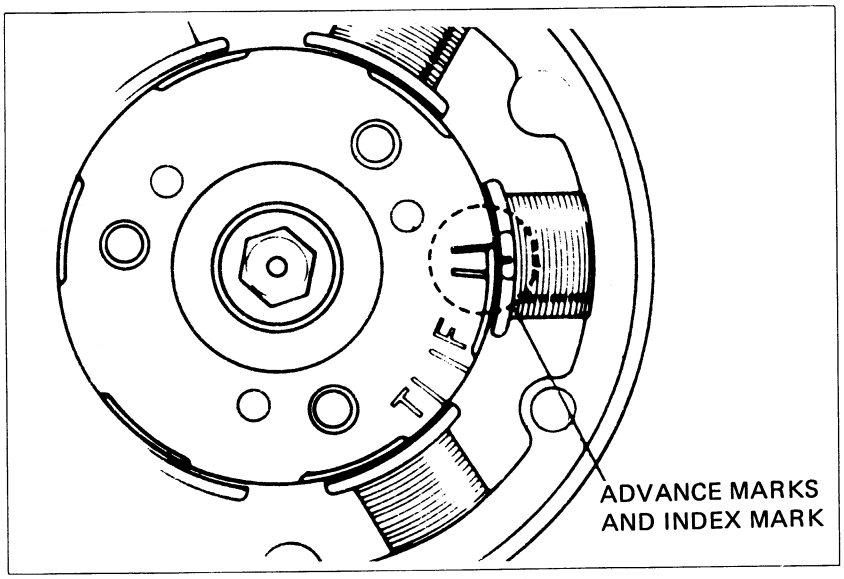

11. CAM CHAIN TENSION

1. Start the engine and allow it to idle.
2. Loosen the cam chain tensioner lock nut and tensioner adjusting bolt A.
3. When adjusting bolt A is loosened, the tensioner will automatically position itself to provide the correct tension.
4. Retighten adjusting bolt A and lock nut.

TORQUE: 0.9–1.4 kg-m (6.5–10.0 ft-lbs)

NOTE

> If the chain is still noisy, remove tensioner plug and screw in adjusting bolt B gradually until cam chain is no longer noisy.
> After adjustment, tighten the lock bolt, lock nut and plug.

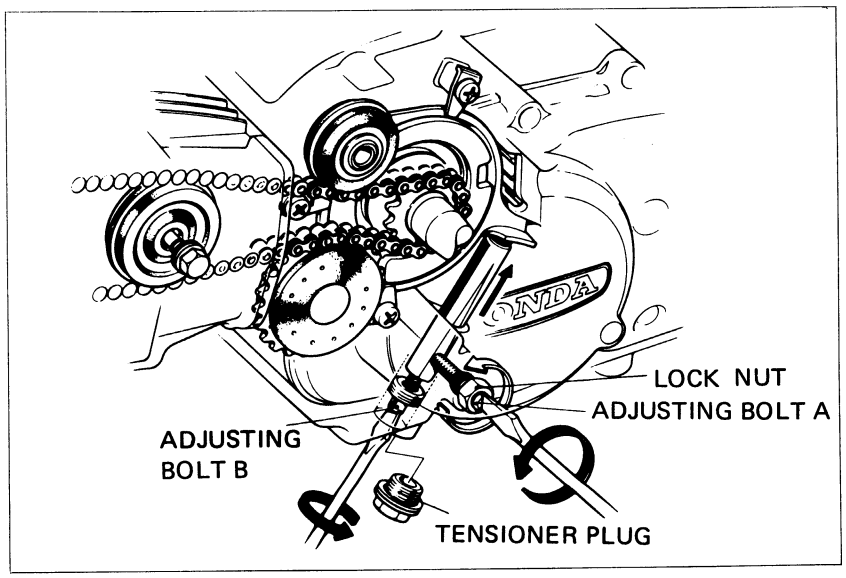

© HONDA MOTOR CO., LTD.

12. THROTTLE OPERATION

1. Check that there is no deterioration, damage or kinks in the throttle cable, and that the throttle grip free play is 2–6 mm (1/8–1/4 in) at the throttle grip outer flange.
2. Check for smooth throttle grip rotation. Check that the throttle grip returns automatically from the fully open to the fully closed position when released. Check in all steering positions.
3. Adjust with either the upper or lower cable adjuster, or replace if necessary. Tighten the lock nuts.

NOTE

> Install rubber cap securely after adjustment.

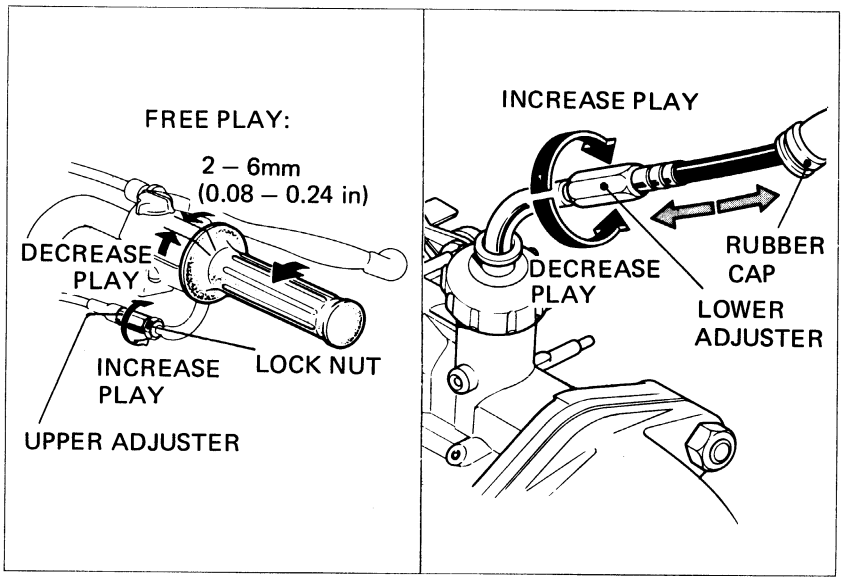

13. CARBURETOR IDLE SPEED

NOTE

> The engine must be warm for accurate idle adjustment. Ten minutes of stop and go driving is sufficient.

1. Place the vehicle on its center stand. Warm up the engine and determine if the engine idle speed is 1,300 ±100 rpm with the transmission in neutral.
2. Adjust the idle speed with the throttle stop screw.

NOTE

> The pilot screw is factory pre-set.
> Do not adjust the pilot screw except after overhauling the carburetor or if a high altitude main jet is installed (See page 25.).

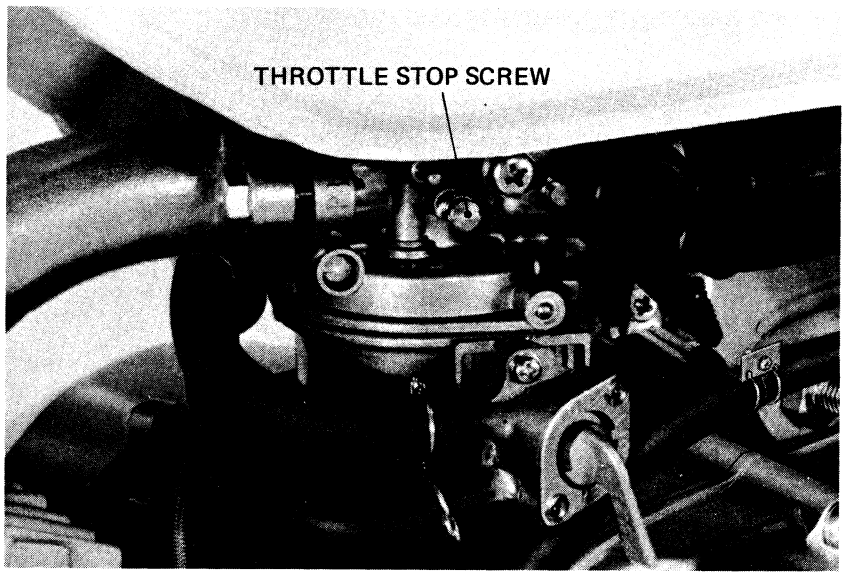

14. CARBURETOR CHOKE

1. Disconnect the air cleaner tube from the carburetor.
2. Check the choke lever for smooth operation and that the choke plate opens and closes folly. Inspect the choke plate for damage.
3. Reinstall the carburetor and connect the air cleaner tube.

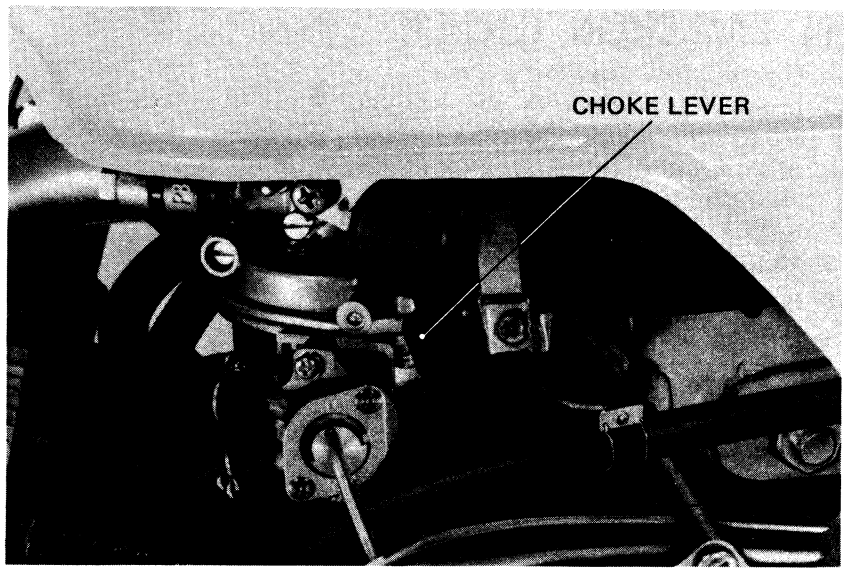

Date of Issue: Feb., 1978
© HONDA MOTOR CO., LTD.

15. DRIVE CHAIN

NOTE

Perform this maintenance with the ignition switch off.

• DRIVE CHAIN FREE PLAY

1. Place the vehicle on its center stand and shift the transmission into neutral.
2. Measure the drive chain free play midway between the sprockets on the lower chain run.
   FREE PLAY : 15–25 mm (5/8–1 in)

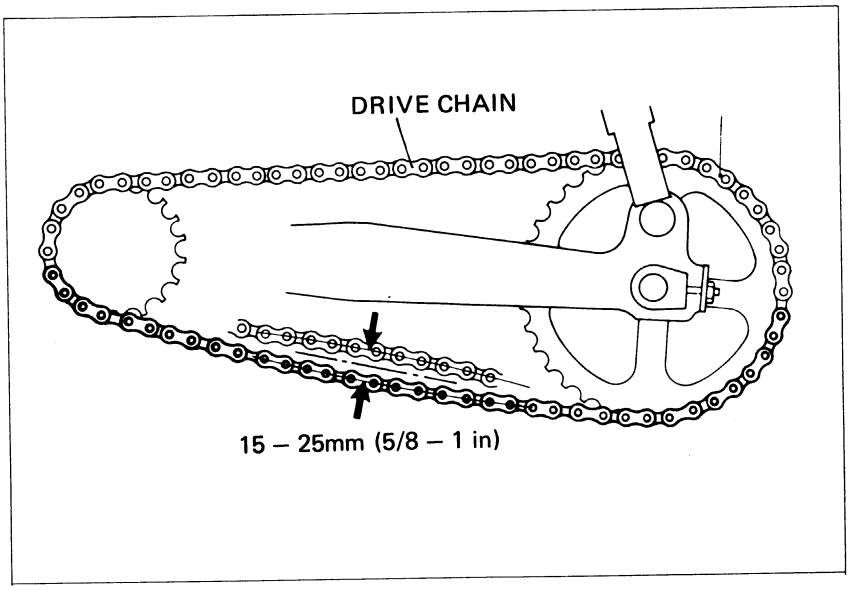

• ADJUSTMENT

1. Remove the cotter pin from rear axle nut, and loosen the nut.
2. Turn nuts on both adjusters as required until the correct drive chain free play is obtained.

NOTE

Be sure that the index mark aligns with the same graduation of the scale on both sides.

3. Tighten the axle nut and install a new cotter pin.
   TORQUE : 3.5–5.0 kg-m (26–36 ft-lbs)
4. Lubricate the drive chain.

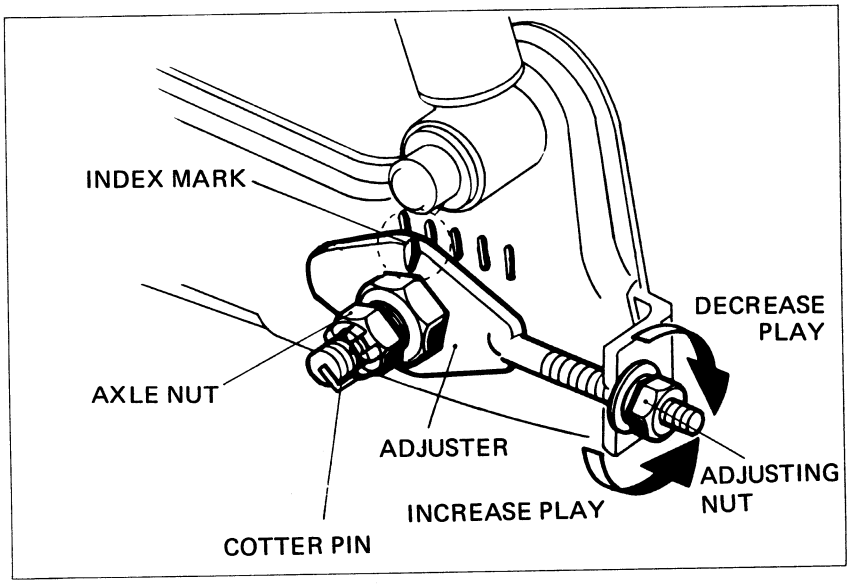

• CLEANING / LUBRICATION

When the drive chain becomes extremely dirty, it should be removed and cleaned prior to lubrication.

Remove the master link retaining clip.

NOTE

Do not bend or twist the clip.

Remove the master link. Remove the drive chain. Clean the drive chain with non-flammable or high flash point solvent and brush and allow to dry. Inspect the drive chain for possible wear or damage. Replace any chain that is damaged or excessively worn. Inspect the sprocket teeth for excessive wear or damage. Replace if necessary.

NOTE

Never install a new drive chain on worn sprockets or a worn chain on new sprockets. Both chain and sprockets must be in good condition, or the new replacement chain or sprockets will wear rapidly.
Commercial aerosol type drive chain lubricants are recommended.

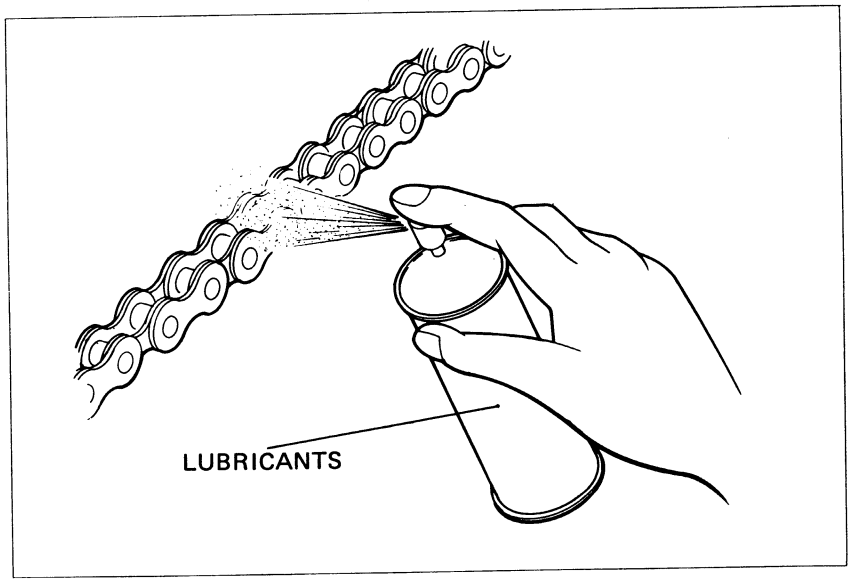

© HONDA MOTOR CO., LTD.

Lubricate the drive chain. Saturate each chain link joint. Install the drive chain and master link. Install the master link retaining clip so that the closed end faces the direction of forward wheel rotation. Master links are reusable, if they remain in excellent condition, but it is recommended that a new master link be installed whenever the drive chain is reassembled.
Adjust the drive chain. (See page 15.)

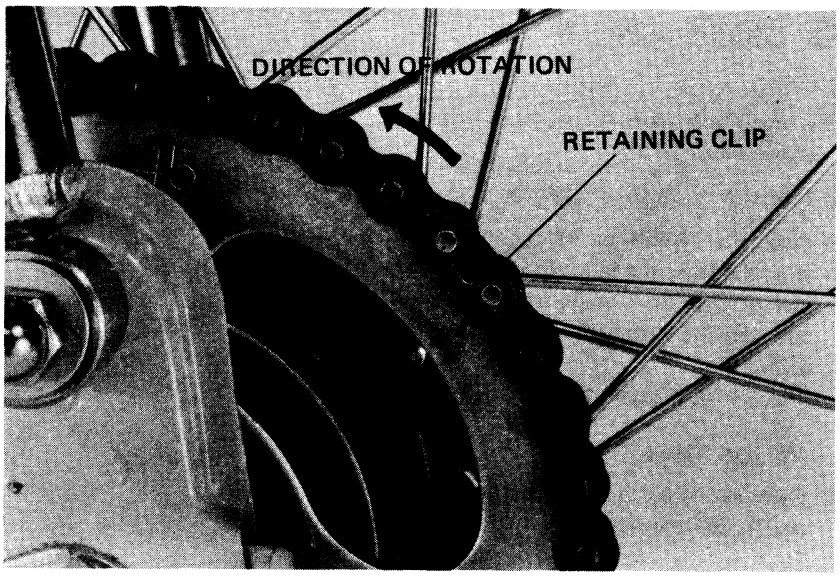

16. BATTERY

1. Remove the right side cover.
2. Remove the battery band bolt and remove the battery.
3. Check the fluid level. Add distilled water to the upper level mark. The electrolyte level must be maintained between the upper and lower level marks.
4. If sulfation forms or sediments (paste) accumulate on the bottom, replace the battery.

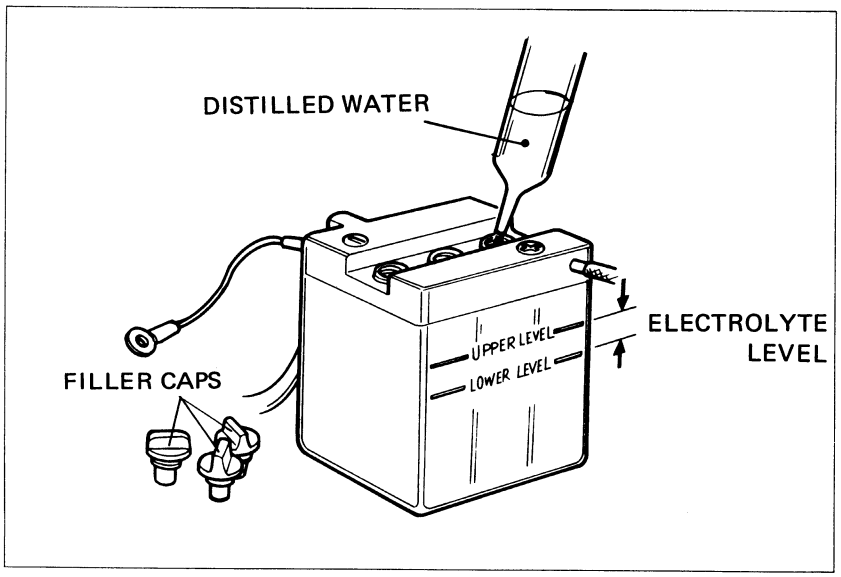

NOTE

Add distilled water only. Tap water will shorten the service life of the battery.

WARNING

The battery electrolyte contains sulfuric acid.
Protect your eyes, skin and clothing. In case of contact, flush thoroughly with water and call a doctor if your eyes were exposed.

5. Route the battery breather tube as shown in the diagram.

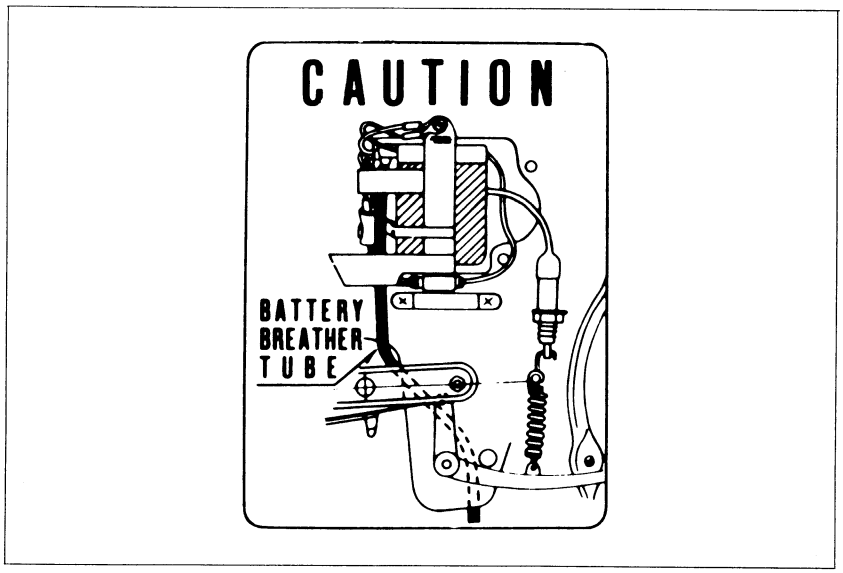

Date of Issue: Feb., 1978
© HONDA MOTOR CO., LTD.

17. BRAKE SHOE WEAR

Replace the brake shoes if the arrow on the brake arm aligns with the reference mark "▲" on the backing plate during full application.

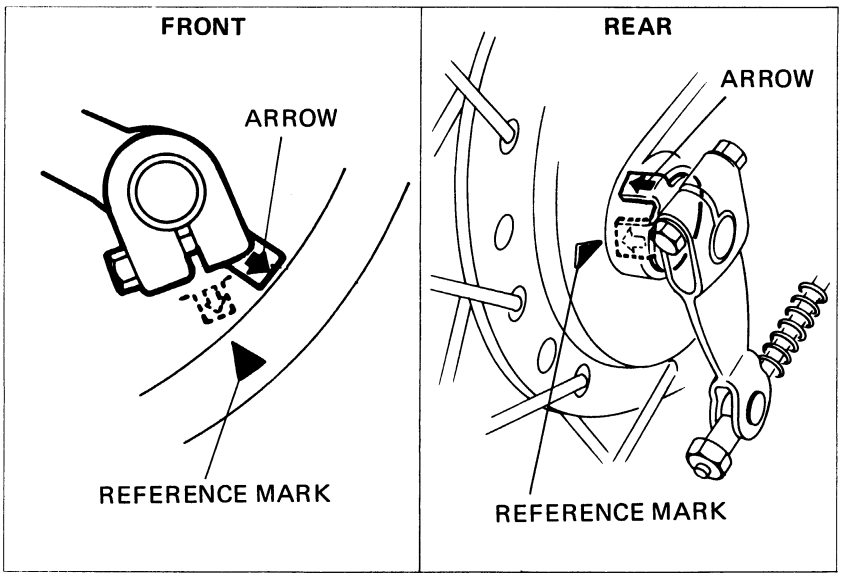

18. BRAKE SYSTEM

- FRONT BRAKE FREE PLAY

1. Measure the brake lever free play at lever end.
   FREE PLAY : 20–30mm (3/4–1-1/4 in)

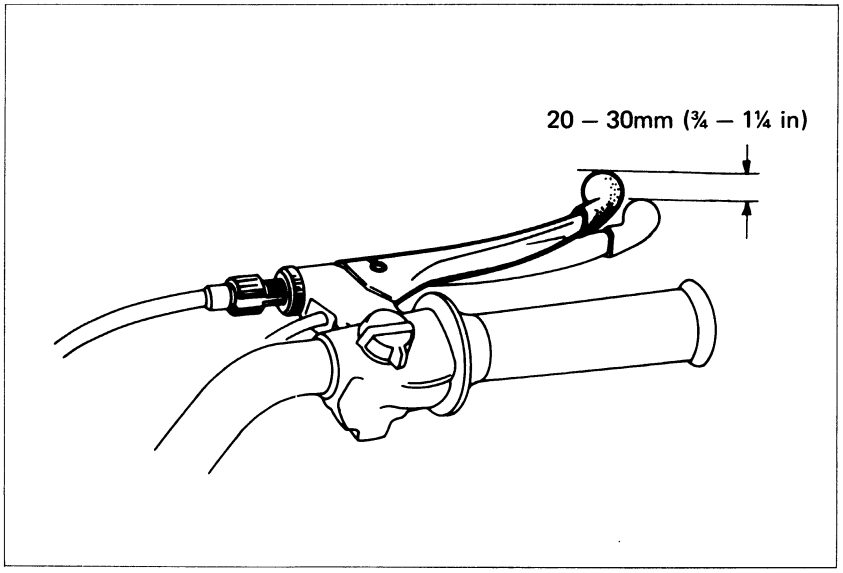

2. Make major adjustments with the adjuster located at the front wheel hub. Loosen the lock nut and turn the adjusting nut.

NOTE

Turn in the upper adjuster on the brake lever before adjusting at the wheel hub. Tighten the lock nut.

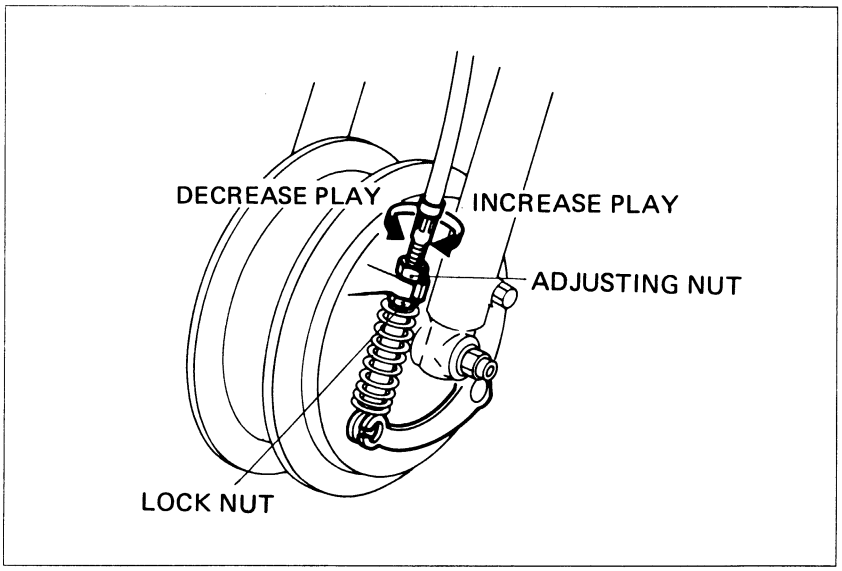

© HONDA MOTOR CO., LTD.

3. Minor adjustment can be made with the upper adjuster located on the brake lever. Loosen the lock nut and turn the adjuster. Tighten the lock nut.
4. Recheck the brake operation.

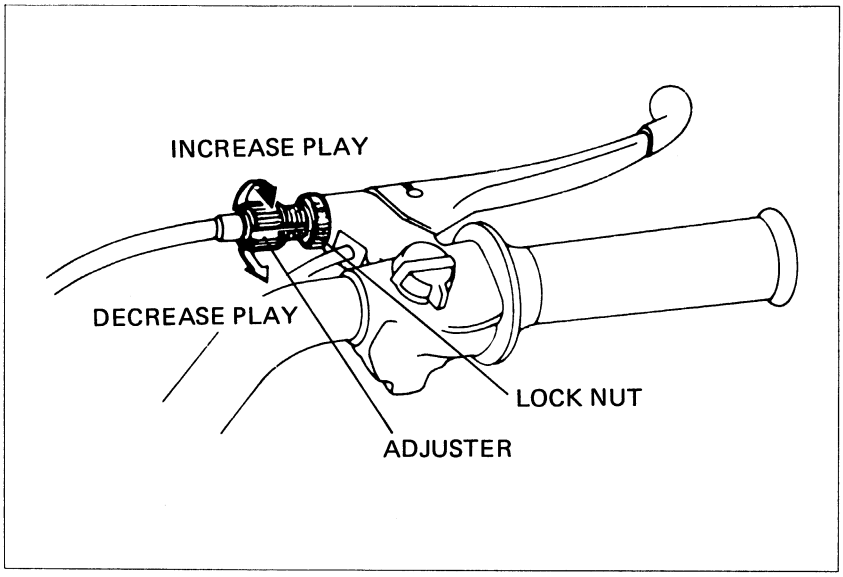

- REAR BRAKE FREE PLAY

1. Check the brake pedal free play.
   FREE PLAY : 20–30mm (3/4–1-1/4 in)

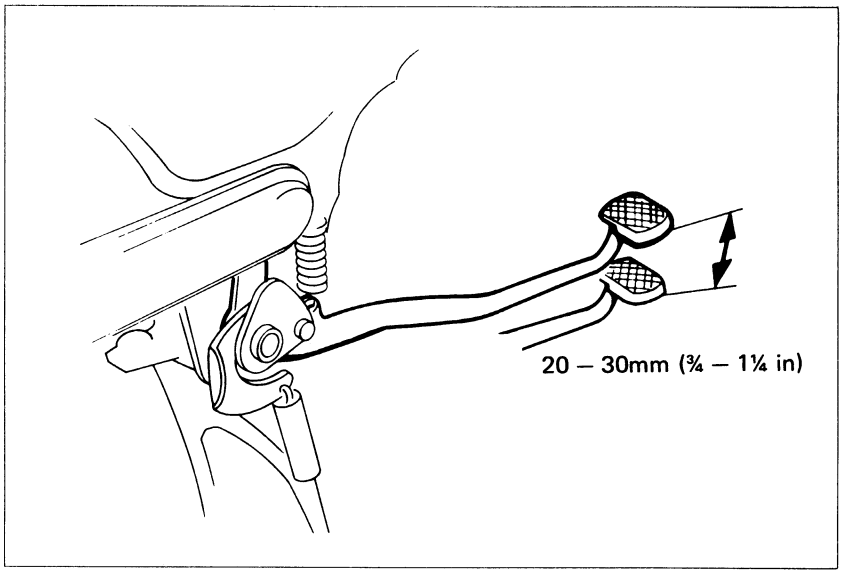

2. If adjustment is necessary, turn the rear brake adjusting nut.

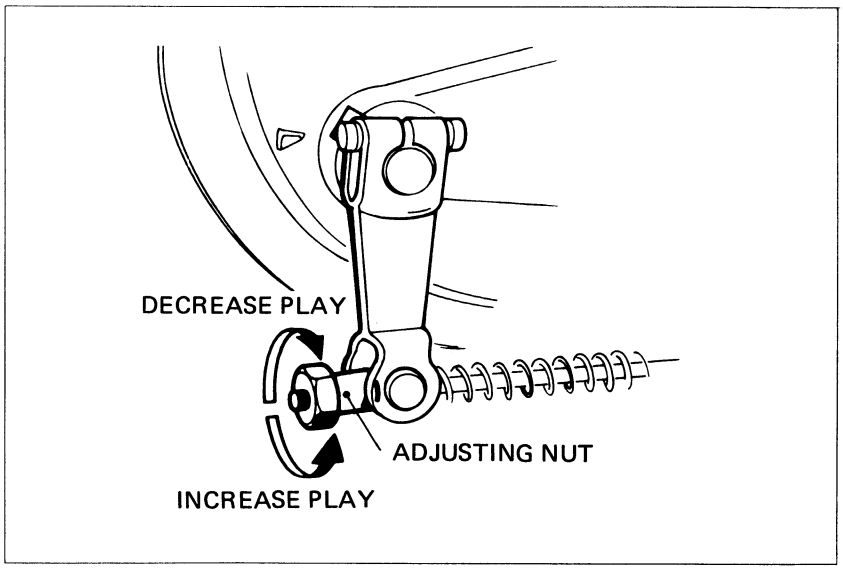

Date of Issue: Feb., 1978
© HONDA MOTOR CO., LTD.

- BRAKE LINKAGE INSPECTION

Check the brake rod and brake lever for loose connections, excessive play, bending or damage. Replace or repair if necessary. Inspect the brake and stopper arms for loose connections or damage. Check that the cotter pin is installed properly.

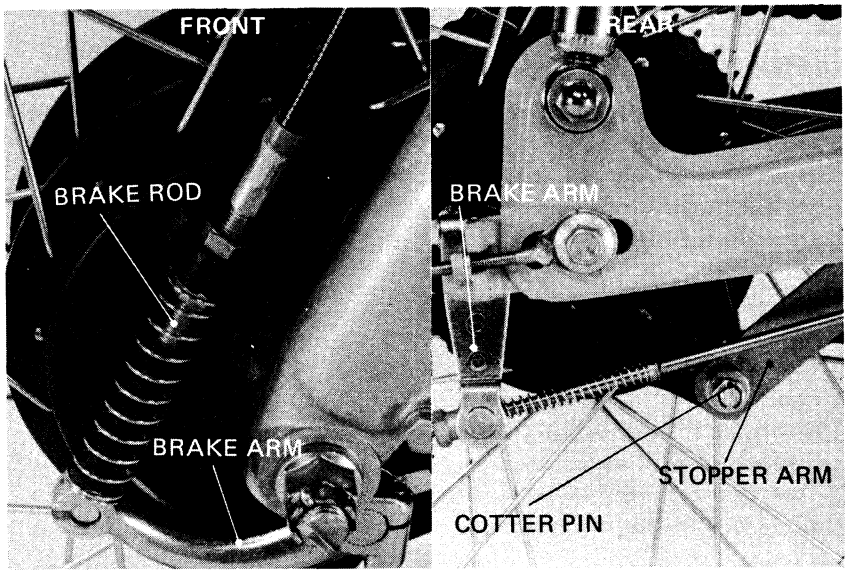

19. BRAKELIGHT SWITCH

Adjust the brakelight switch so that the brakelight will come on when the brake pedal is depressed 20 mm (3/4 in) where the brake begins engagement. Adjust by turning the switch adjusting nut.

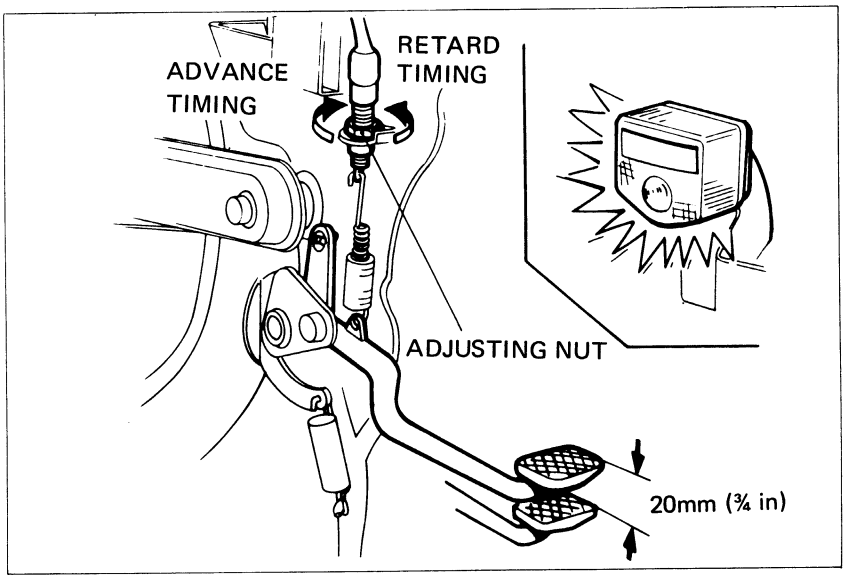

20. HEADLIGHT AIM

Headlight beam can be adjusted vertically and horizontally.

1. Adjust vertically by loosening the headlight mounting bolts.
2. Adjust the horizontal beam with the beam adjusting screw shown.

NOTE

Adjust the headlight beam as specified by local laws and regulations.

WARNING

An improperly adjusted headlight may blind oncoming drivers, or it may fail to light the road for a safe distance.

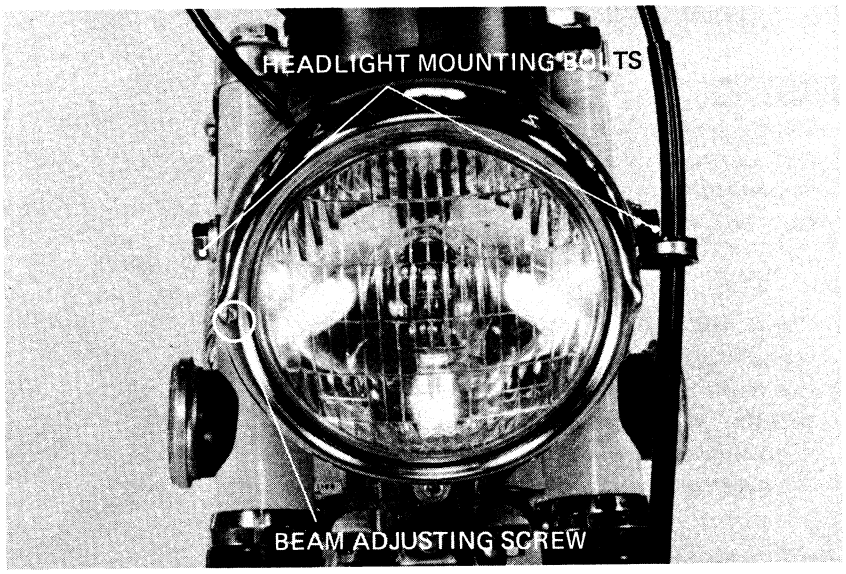

© HONDA MOTOR CO., LTD.

21. CLUTCH FREE PLAY

- INSPECTION

1. Check that the engine starts easily without the clutch slipping.
2. Check that clutch operation is smooth and light when changing gears, especially when down shifting to neutral.

- ADJUSTMENT

1. Loosen the adjusting screw lock nut.
2. Turn the adjusting screw clockwise one turn.
3. Slowly turn the adjusting screw counterclockwise until a resistance is felt.
4. Then turn the adjusting screw clockwise 1/8–1/4 turn, and tighten the lock nut.

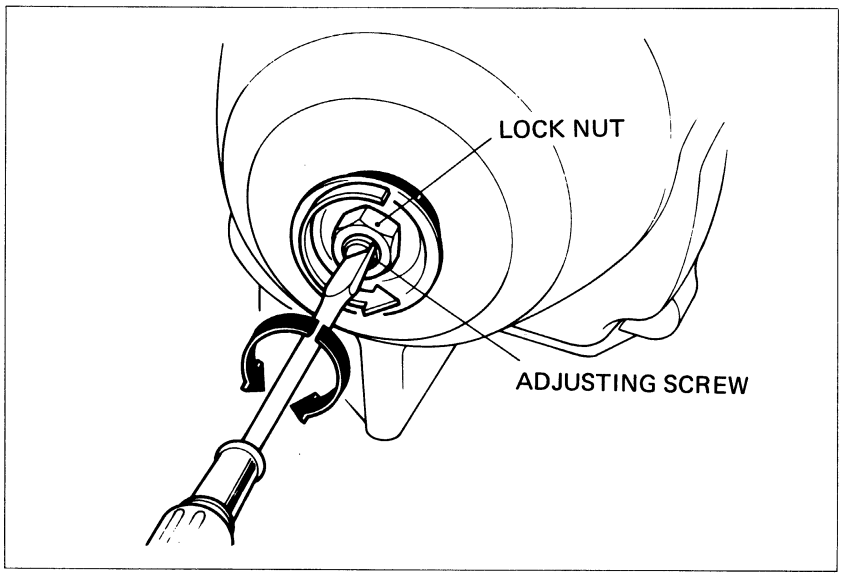

22. SIDE STAND

1. Check the rubber pad for deterioration or wear.
2. Replace if any wear extends to wear line as shown.
3. Check the side stand spring for damage or loss of tension, and the side stand assembly for freedom of movement and bend.

NOTE

When replacing, use a rubber pad with the mark "BELOW 259 lbs ONLY". Spring tension is correct if the measurements fall with 2–3kg (4.4–6.6 lbs.) when pulling the side stand lower end using a spring scale.

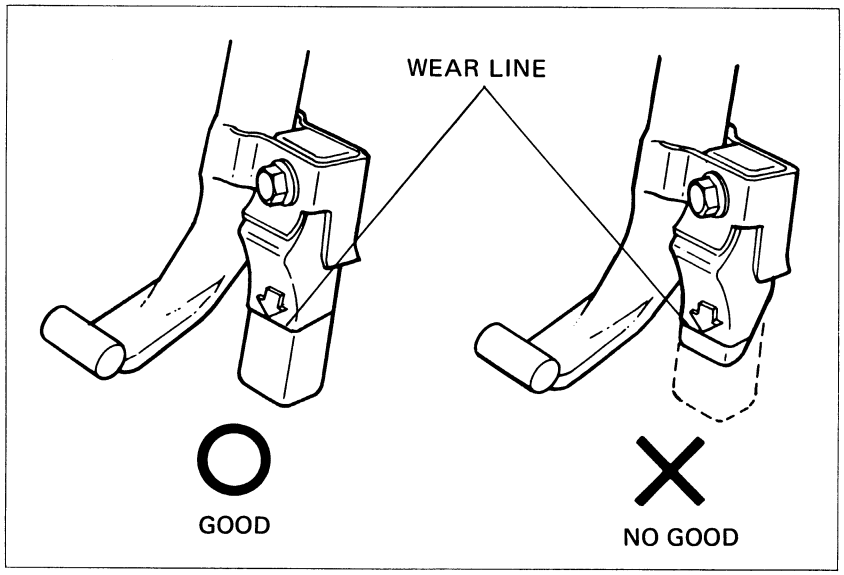

23. SUSPENSION

WARNING

Do not ride a vehicle with faulty suspension. Loose, worn or damaged suspension components may impair vehicle stability, safety and rider control.

- FRONT

1. Check the action of the front forks by compressing them several times.
2. Check the entire fork assembly for signs of leaks, or damage. Replace any components which are unrepairable.
3. Torque all bolts and nuts.

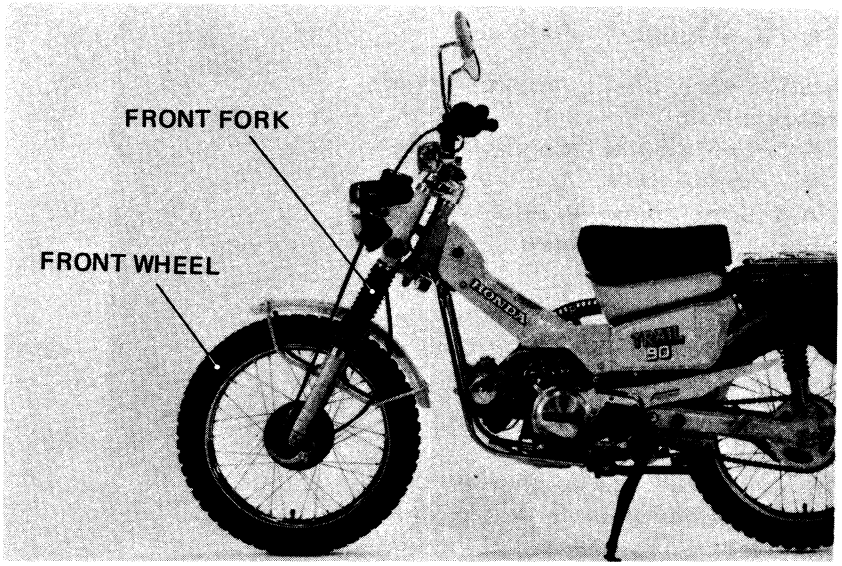

Date of Issue: Feb., 1978
© HONDA MOTOR CO., LTD.

- REAR

1. Place the vehicle on its center stand.
2. Move the rear wheel sideways with force to see if the swing arm bushings are worn. Replace if excessively worn.
3. Check the entire suspension assembly to see if it is securely mounted, damaged or distorted.

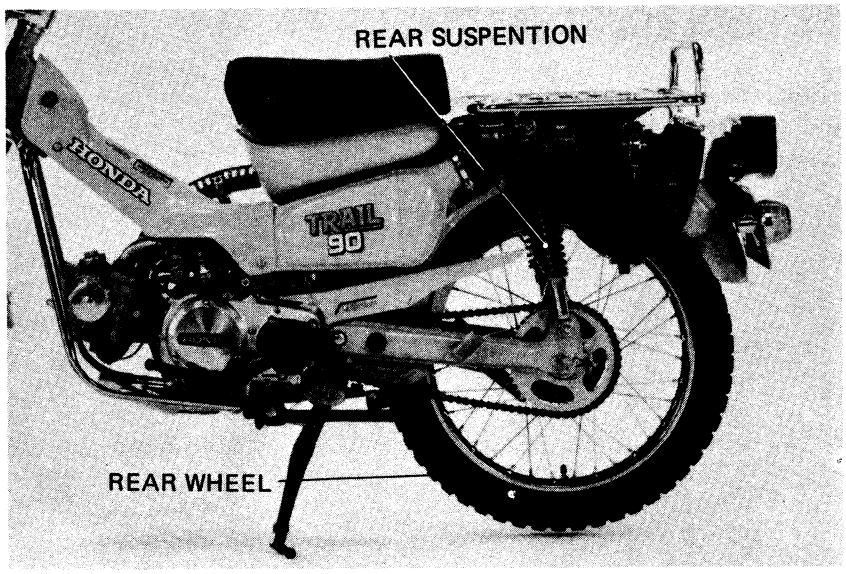

24. SPARK ARRESTER

Clean the spark arrester periodically.

1. Remove the spark arrester mounting bolt.
2. Remove the spark arrester.
3. Start the engine and remove carbon from the muffler by momentarily revving up the engine.
4. Clean the spark arrester with a wire brush.
5. Reinstall the spark arrester and mounting bolt.

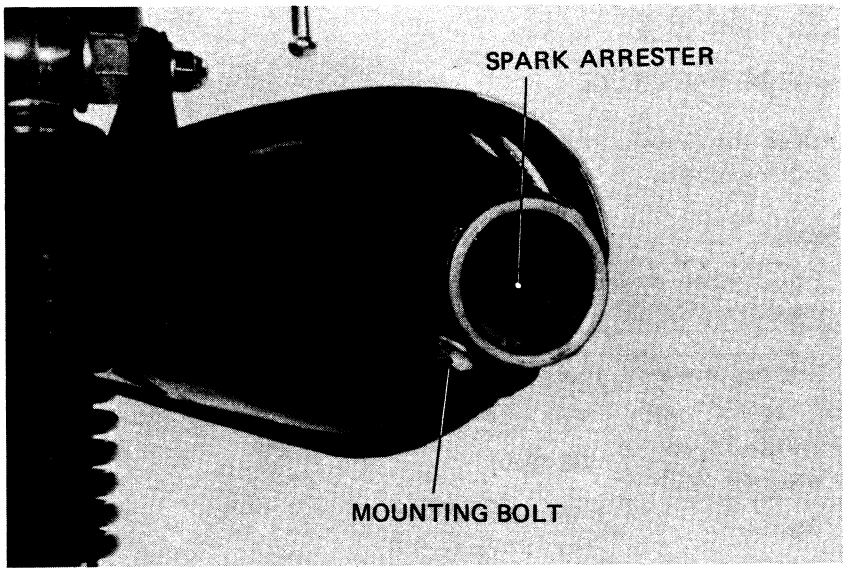

WARNING

- *Do not perform this maintenance immediately after the engine has been run because the exhaust system becomes very hot.*
- *Because of the fire hazard ensure that there are no combustible materials in the area.*
- *Exhaust gases contain poisonous carbon monoxide. Perform this operation only in a well ventilated area.*
- *Wear eye protection.*

© HONDA MOTOR CO., LTD.

25. NUTS, BOLTS, FASTENERS

Check that all chassis nuts, bolts and fasteners are tightened to their correct torque values. (Refer to page 7)

26. WHEELS

• TIRE PRESSURE

Check the tires for cuts, imbedded nails, or other objects.

NOTE

Tire pressure should be checked when the tires are COLD.

Cold tire pressure kg/cm² (psi)	Front ; 1.75 (24)
	Rear ; 2.25 (32)
Vehicle capacity load limit kg(lbs)	100 (220)
Tire size	Front ; 2.75-17-4PR
	Rear ; 2.75-17-4PR

WARNING

Replace tires when tread depth becomes less than 3 mm (1/8 in).

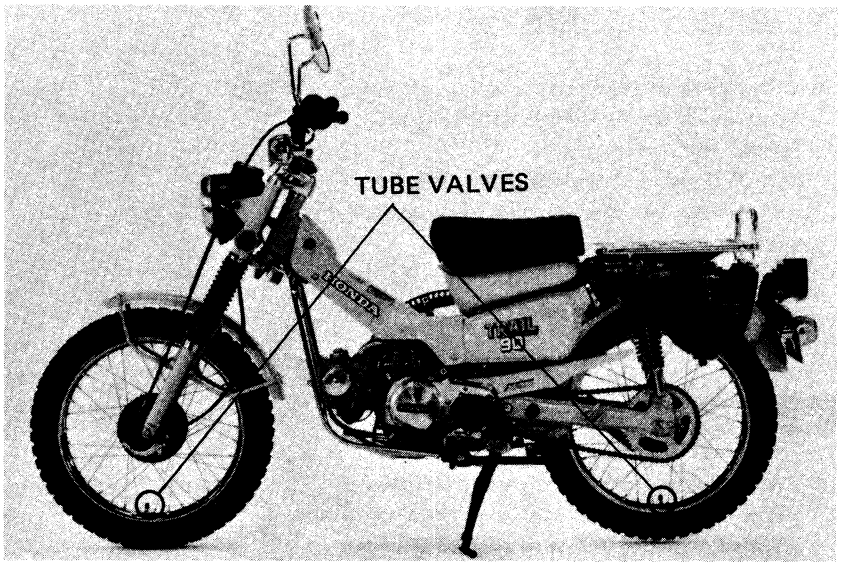

• WHEEL SPOKE RETIGHTENING

1. Retighten the wheel spokes periodically.
   TORQUE : 0.15–0.30 kg-m
   (1.1–2.2 ft-lbs)
2. Check front and rear wheel trueness.

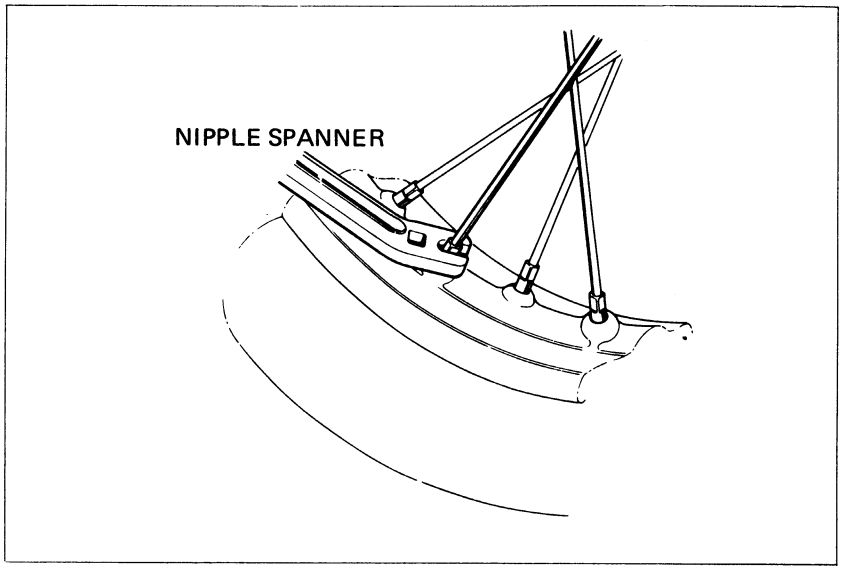

Date of Issue: Feb., 1978
© HONDA MOTOR CO., LTD.

27. STEERING HEAD BEARING

NOTE

Check that the control cables do not interfere with the rotation of the handlebars.

Raise the front wheel off the ground. Check that the handlebar rotates freely.
If the handlebar moves unevenly, binds or has vertical movement, adjust the steering head bearing by turning the steering head adjusting nut with a pin spanner.

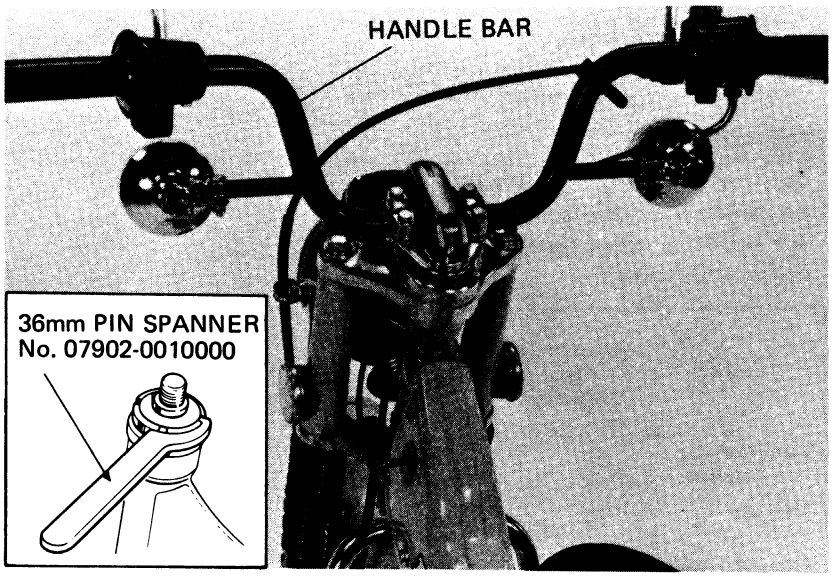

© HONDA MOTOR CO., LTD.

1. CARBURETOR SPECIFICATIONS

WARNING

Gasoline is extremely flammable and is explosive under certai.. conditions. Do not smoke or allow flames or sparks in your working area.

Item	Standard spec. (2,000m. 6,500ft max.)	High altitude spec. (1,500m. 5,000ft min.)
Identification number	PB28A	←———
Main jet	#65	#60 (optional)
Jet needle mark	18A	←———
Float height	10.7mm (0.43 in)	←———
Idle speed	1,300±100rpm	←———
Pilot screw	See page 24	

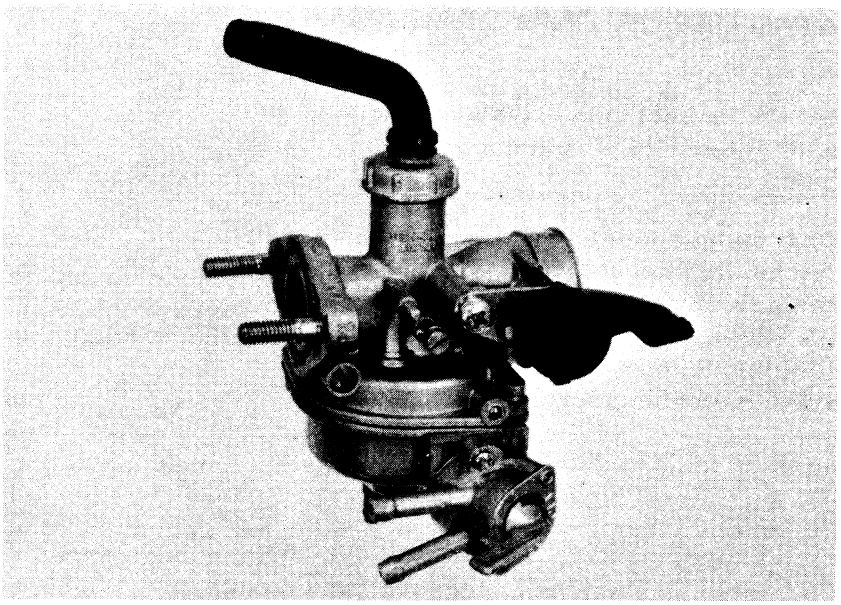

2. DISASSEMBLY AND ASSEMBLY

Refer to the base CT90 Shop Manual for disassembly and assembly procedures.

NOTE

When disassembling fuel system parts, not the O-ring locations. Replace them with new ones during reassembly. The float bowl has a drain plug that can be loosened to drain residual gasoline.

3. PILOT SCREW INITIAL SETTING

NOTE

The pilot screw is factory pre-set. Do not adjust unless the carburetor is overhauled or a high altitude main jet installed.

Turn the pilot screw clockwise until it seats lightly and back it out 1-1/4 turns. This is a preliminary setting prior to the final Pilot Screw Adjustment.

CAUTION

Damage to the pilot screw seat will occur if the pilot screw is tightened against the seat.

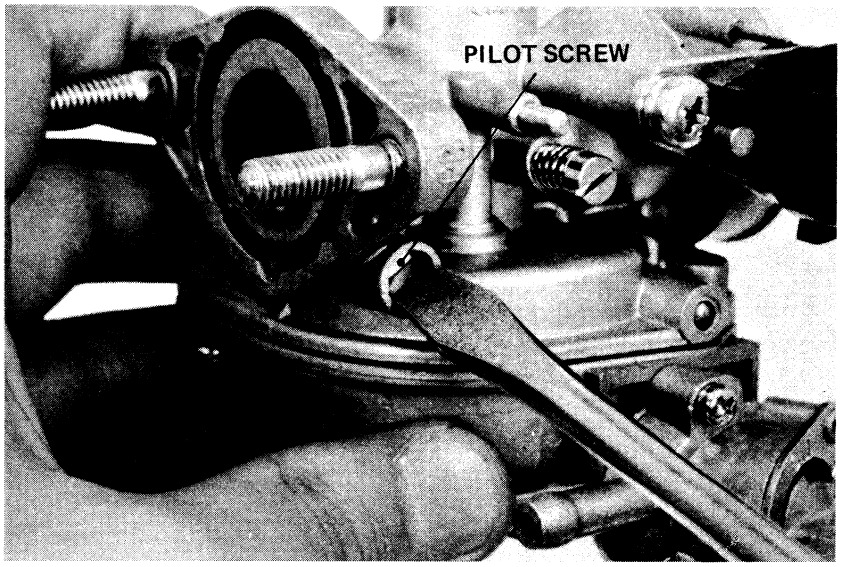

Date of Issue: Feb., 1978
© HONDA MOTOR CO., LTD.

4.PILOT SCREW ADJUSTMENT

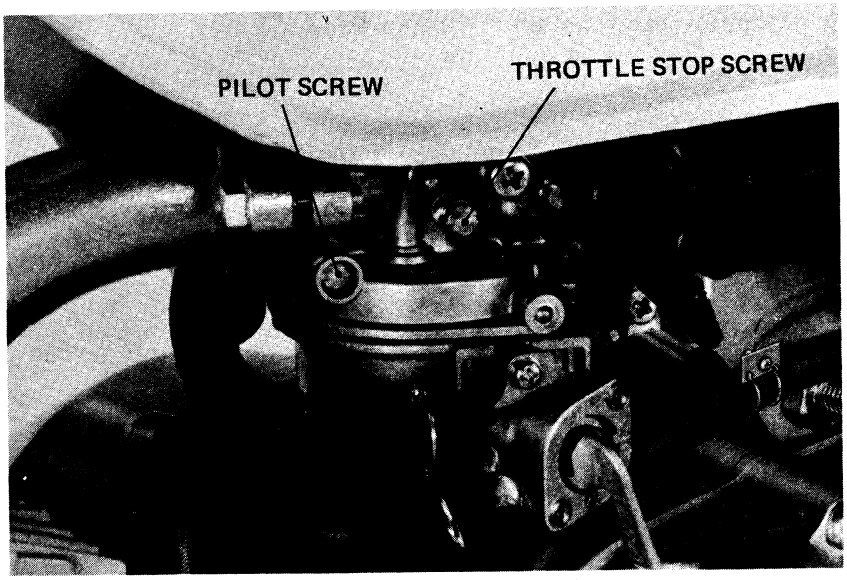

1. Warm up the engine to operating temperature. Stop and go driving for ten minutes is sufficient.
2. Attach a tachometer.
3. Adjust the idle speed with the throttle stop screw.
   IDLE SPEED : 1,300 ± 100 rpm
4. Screw the pilot screw in gradually until the engine stops.
5. Turn the pilot screw 1 turn out from this position.
6. Restart the engine and readjust the idle speed stop screw, if necessary.

5. HIGH ALTITUDE ADJUSTMENT

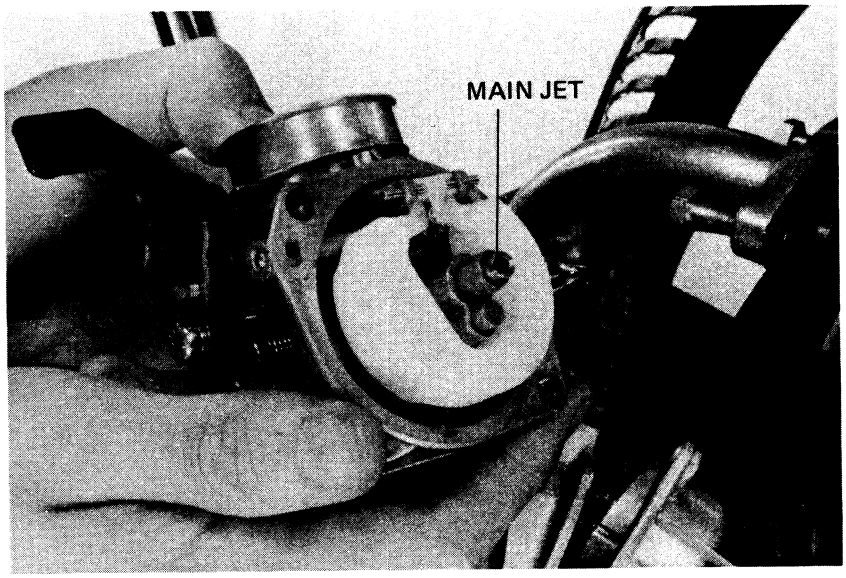

The carburetor must be adjusted for high altitude riding (above 2000m 6500ft).

STANDARD SETTING : 2000m (6500ft) max.

HIGH ALTITUDE SETTING : 1500m (5000ft) min.

High altitude carburetor adjustment is done as follows:

1. Remove and disassemble the carburetor.
2. Replace the main jet with the high altitude type. (See page 24.)
3. Assemble and install the carburetor.
4. Screw the pilot screw in 3/8 of a turn.
5. Start the engine and adjust the idle speed with the throttle stop screw.

NOTE

* Adjust the idle speed at high altitude to ensure proper high altitude operation.
* Readjust the pilot screw if the engine idles rough, misses, or stalls, according to the instructions on pages 24 and 25.

CAUTION

Sustained operation at altitudes lower than 1,500m (5,000 ft) with the high altitude specifications may cause engine overheating and damage.
Reinstall the standard main jet and turn the pilot screw 3/8 turn out when operating the vehicle below 1,500 m (5,000 ft).

© HONDA MOTOR CO., LTD.

Check the pipe routing and secure the drain plug.

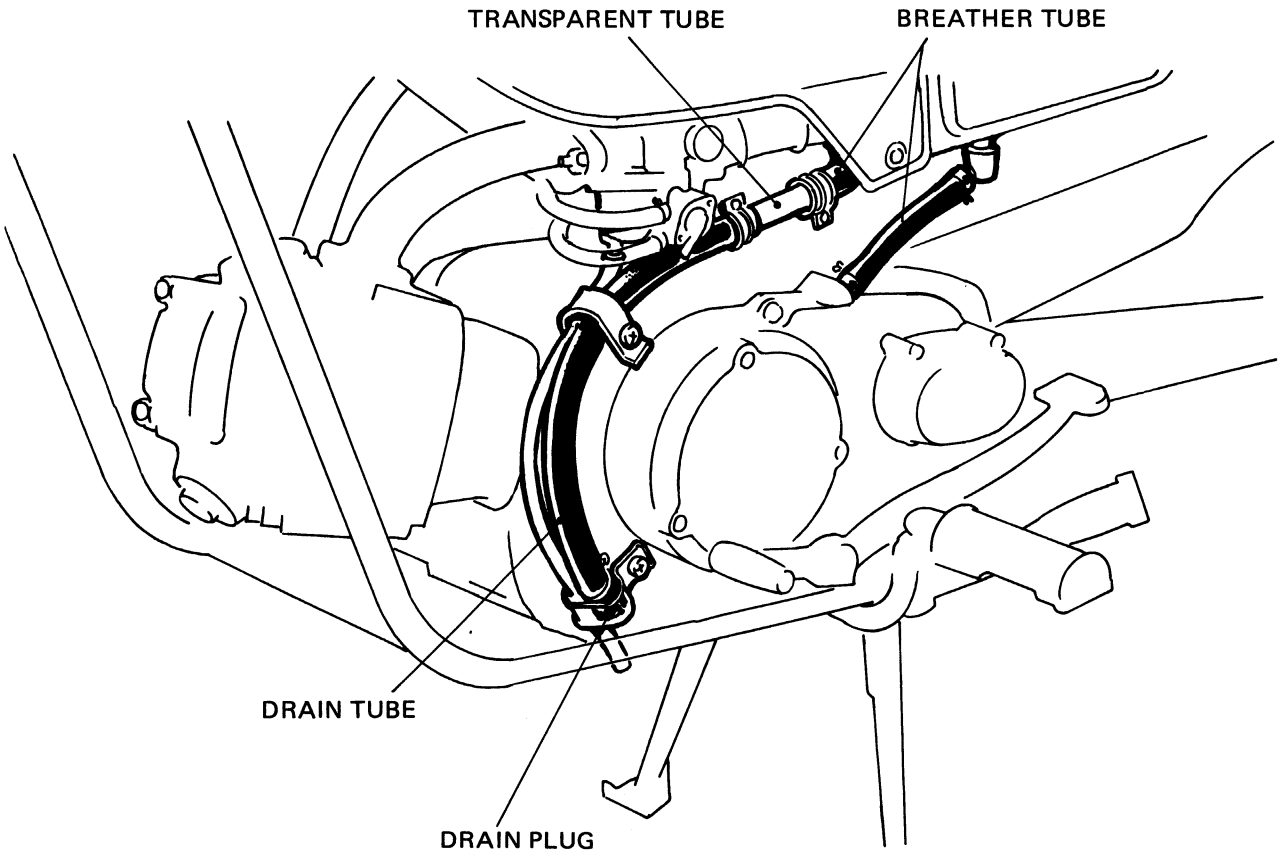

Date of Issue: Feb., 1978
© HONDA MOTOR CO., LTD.

1. Engine cranks but won't start

* No spark at plug – Ref. 2
* Ignition malfunction
* No fuel in tank
* No fuel to carburetor
* Engine flooded with fuel
* Air cleaner clogged
* Intake air leak
* Improper choke operation
* Improper throttle operation
* Low oil level – Ref. 6
* No or low oil pressure – Ref. 8, 10

2. Hard starting or stalling after starting

* Worn spark plug and /or breaker points
* Ignition timing incorrect – Ref. 1
* Ignition malfunction
* Idle speed incorrect
* Incorrect idle air/fuel mixture – Ref. 4, 5
* Carburetor malfunction
* Fuel contaminated
* Improper choke operation
* Low compression – Ref. 3
* Clogged muffler
* Oil level low – Ref. 6
* No or low oil pressure – Ref. 8, 10

3. Rough idle

* Worn spark plug and/or breaker points
* Ignition timing incorrect – Ref. 1
* Ignition malfunction
* Idle speed incorrect
* Incorrect carburetor air/fuel mixture – Ref. 4, 5
* Carburetor malfunction
* Fuel contaminated
* Low compression – Ref. 3

4. Misfiring during acceleration

* Worn spark plug, breaker points and/or ignition wires
* Incorrect ignition timing – Ref. 1
* Ignition malfunction
* Incorrect carburetor air/fuel mixture – Ref. 4, 5

5. Backfiring

* Ignition timing incorrect – Ref. 1
* Ignition malfunction
* Incorrect carburetor air/fuel mixture – Ref. 4, 5
* Carburetor malfunction

6. Poor performance (Driveability) and poor fuel economy

* Ignition timing incorrect – Ref. 1
* Ignition malfunction
* Incorrect carburetor air/fuel mixture – Ref. 4, 5
* Fuel system clogged
* Low compression – Ref. 3
* Oil level too low – Ref. 6
* Oil contamination – Ref. 7
* Low oil pressure – Ref. 8
* High oil pressure – Ref. 9

☆ Ref. 1 ~ 10 are described on page 28.

© HONDA MOTOR CO., LTD.

Ref. 1: Ignition timing incorrect

* Incorrect breaker point gap
* Faulty spark advancer

Ref. 2: No spark at plug

* Poorly connected, broken or shorted wires
* Faulty ignition switch
* Faulty ignition coil
* Faulty high tension cord
* Faulty AC generator
* Battery charge low
* Burned or pitted contact breaker points
* Faulty spark plug
* Ignition timing incorrect

Ref. 3: Low compression

* Incorrect valve adjustment
* Burned or bent valves
* Incorrect valve timing
* Weak valve spring
* Leaking or damaged head gasket
* Warped or cracked cylinder head
* Improper valve seating
* Worn piston rings and/or cylinder

Ref. 4: Lean mixture

* Clogged fuel jets
* Faulty float valve
* Float level low
* Fuel cap vent blocked
* Fuel strainer screen clogged
* Restricted fuel line
* Intake air leak
* Pilot screw misadjusted

Ref. 5: Rich mixture

* Clogged air jets
* Faulty float valve
* Float valve too high
* Choke stuck closed
* Pilot screw misadjusted
* Clogged air cleaner

Ref. 6: Oil level low

* External oil leaks
* Worn piston rings
* Worn valve guide and/or stem seal

Ref. 7: Oil contamination

* Engine oil not changed regularly
* Worn piston rings
* Oil filter rot cleaned regularly.

Ref. 8: Low oil pressure; Oil pressure lamp lights on.

* Plugged oil filter screen
* Worn oil pump
* Oil level low

Ref. 9: High oil pressure; Broken oil ring or gasket

* Incorrect oil being used

Ref. 10: No oil pressure

* No oil in crankcase
* Faulty oil pump
* Leaks from oil circuit

Date of Issue: Feb., 1978
© HONDA MOTOR CO., LTD.

VIII '79 ADDENDUM

INTRODUCTION

This HONDA CT90 1979 Shop Manual Addendum contains information pertinent to the 1979 CT90. Refer to the base shop manual for procedures and service data not included in this addendum.

CONTENTS

MAINTENANCE SCHEDULE 138

INSPECTION AND ADJUSTMENT 139

ALL INFORMATION, ILLUSTRATIONS, DIRECTIONS AND SPECIFICATIONS INCLUDED IN THIS PUBLICATION ARE BASED ON THE LATEST PRODUCT INFORMATION AVAILABLE AT THE TIME OF APPROVAL FOR PRINTING. HONDA MOTOR CO., LTD. RESERVES THE RIGHT TO MAKE CHANGES AT ANY TIME WITHOUT NOTICE AND WITHOUT INCURRING ANY OBLIGATION WHATEVER.

NO PART OF THIS PUBLICATION MAY BE REPRODUCED WITHOUT WRITTEN PERMISSION.

HONDA MOTOR CO., LTD.
Service Publications Office

© HONDA MOTOR CO., LTD.

I. MAINTENANCE SCHEDULE

Perform the PRE-RIDE INSPECTION in the Owner's Manual at each maintenance period.

I: Inspect, Clean, Adjust, Lubricate or Replace if necessary.
C: Clean
R: Replace
A: Adjust
L: Lubricate

	ITEM \ FREQUENCY	WHICHEVER OCCURS FIRST → ↓ EVERY	ODOMETER READING NOTE (3) 600mi. (1000km)	2500mi (4000km)	5000mi. (8000km)	7.500mi. (12000km)	Refer to 78½ Emissions Addendum
EMISSION RELATED ITEMS	ENGINE OIL	YEAR	R	REPLACE EVERY 1250mi (2000km)			Page 7
	* ENGINE OIL FILTER SCREEN				C		Page 8
	CRANKCASE BREATHER	NOTE (1)		C	C	C	Page 9
	AIR CLEANER	NOTE (2)		C	C	C	Page 9
	* FUEL LINES			I	I	I	Page 10
	SPARK PLUG			I	I	R	Page 10
	* VALVE CLEARANCE		I	I	I	I	Page 11
	* CONTACT BREAKER POINTS		I	I	I	I	Page 11
	* IGNITION TIMING		I	I	I	I	Page 12
	* CAM CHAIN TENSION		A	A	A	A	Page 13
	* THROTTLE OPERATION		I	I	I	I	Page 14
	* CARBURETOR IDLE SPEED		I	I	I	I	Page 14
	* CARBURETOR CHOKE			I	I	I	Page 14
NON-EMISSION RELATED ITEMS	DRIVE CHAIN	NOTE (4)	I, L EVERY 300 mi (500km)				Page 15
	BATTERY	MONTH	I	I	I	I	Page 16
	BRAKE SHOE WEAR			I	I	I	Page 17
	BRAKE SYSTEM		I	I	I	I	Page 17
	* BRAKE LIGHT SWITCH		I	I	I	I	Page 19
	* HEADLIGHT AIM		I	I	I	I	Page 19
	CLUTCH FREE PLAY		I	I	I	I	Page 20
	SIDE STAND			I	I	I	Page 20
	* SUSPENSION		I	I	I	I	Page 20
	* SPARK ARRESTER			C	C	C	Page 21
	* NUTS, BOLTS, FASTENERS	NOTE (4)	I	I	I	I	Page 22
	** WHEELS/SPOKES	NOTE (4)	I	I	I	I	Page 22
	** STEERING HEAD BEARING		I			I	Page 23

* Should be serviced by an authorized HONDA dealer, unless the owner has proper tools and service data and is mechanically qualified.

** In the interest of safety, we recommend these items be serviced ONLY by an authorized HONDA dealer.

NOTES: (1) Service more frequently when riding in rain or at full throttle (U.S.A. only)
(2) Service more frequently if riding in dusty areas.
(3) For higher odometer readings, repeat at the frequency interval established here.
(4) Service more frequently when riding OFF-ROAD.

Date of Issue: Feb., 1978
© HONDA MOTOR CO., LTD.

II. INSPECTION AND ADJUSTMENT

1. ENGINE OIL

• ENGINE OIL LEVEL CHECK

1. Place the vehicle on its center stand, and remove the oil filler cap/dipstick and wipe it clean.
2. Reinsert the dipstick and check the oil level.

NOTE

Do not screw the dipstick in when making this check.

3. If the oil level is below the lower level mark, fill to the upper level mark with the recommended oil.

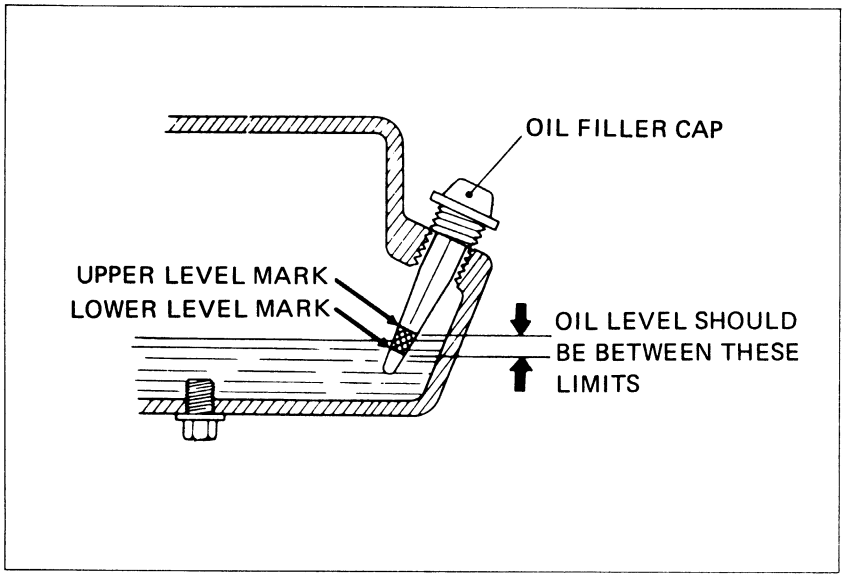

• ENGINE OIL CHANGE

1. Remove oil filler cap and drain plug after the engine is warm, and drain the oil.
2. Install the drain plug, and make sure that the sealing washer is in good condition.
   TORQUE: 2.0–3.5 kg-m
   (15–25ft-lbs)
3. Fill crankcase with the recommended oil.

   OIL CAPACITY: 0.9 lit. (0.95 US.qt.) approx.

RECOMMENDED OIL: Use HONDA 4-STROKE OIL or equivalent. API SERVICE CLASSIFICATION: SE VISCOSITY: General, all temperatures; SAE 10W–40 Alternates:

Above 15°C/60°F	SAE 30
–10°C/15°F-15°C/60°F	SAE 20 or SAE 20W
Above –10°C (15°F)	SAE 20W-50
Below 0°C/32°F	SAE 10W

4. Reinstall the oil filler cap.
5. Start the engine and allow it to idle for 2-3 minutes.
6. Stop the engine and make sure that the oil level is at the upper level mark with the vehicle in an upright position, and that there are no oil leaks.

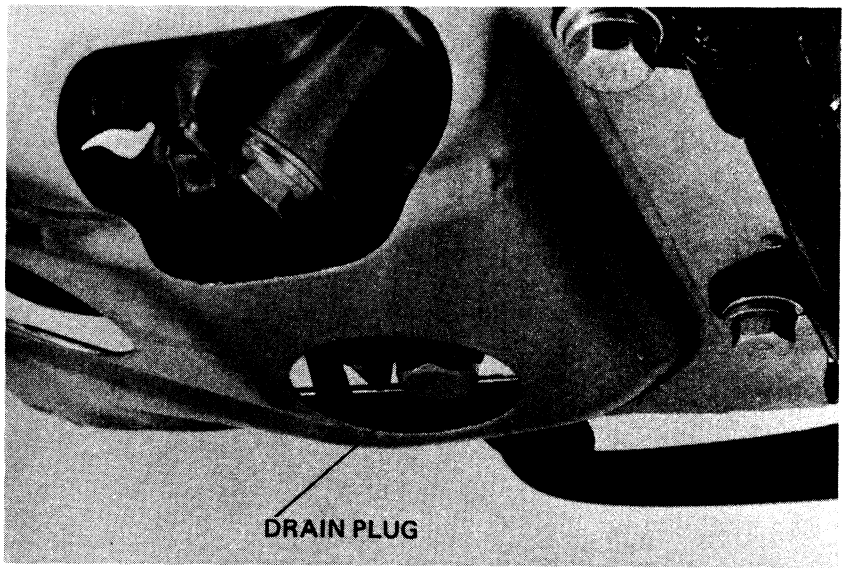

OIL SPECIFICATION

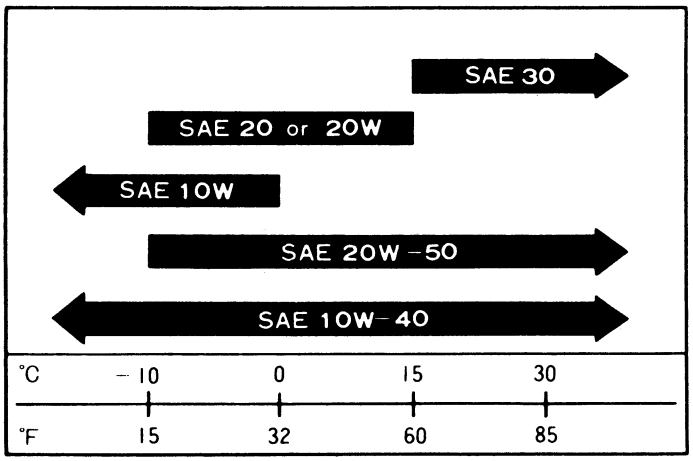

© HONDA MOTOR CO., LTD.

MEMO

© HONDA MOTOR CO., LTD.

IX '80 CT110 ADDENDUM

INTRODUCTION

This 1980 Shop Manual Addendum contains information for the 1980 CT110. Refer to the base shop manual for procedures and service data not included in this addendum.

ALL INFORMATION, ILLUSTRATIONS, DIRECTIONS AND SPECIFICATIONS INCLUDED IN THIS PUBLICATION ARE BASED ON THE LATEST PRODUCT INFORMATION AVAILABLE AT THE TIME OF APPROVAL FOR PRINTING. HONDA MOTOR CO., LTD. RESERVES THE RIGHT TO MAKE CHANGES AT ANY TIME WITHOUT NOTICE AND WITHOUT INCURRING ANY OBLIGATION WHATEVER.

NO PART OF THIS PUBLICATION MAY BE REPRODUCED WITHOUT WRITTEN PERMISSION.

HONDA MOTOR CO., LTD.
Service Publications Office

CONTENTS

I. SPECIFICATIONS 142
II. SERVICE INFORMATION 144
III. INSPECTION/ADJUSTMENT 151
IV. ENGINE 155
V. CARBURETOR 161
VI. REAR WHEEL/TAIL LIGHT 164
VII. ELECTRICAL 166
VIII. WIRING DIAGRAM 170

Date of Issue: Sept., 1979
© HONDA MOTOR CO., LTD.

I. SPECIFICATIONS

Items	Specifications
DIMENSION	
Overall Length	1,870 mm (73.6 in)
Overall Width	750 mm (29.5 in)
Overall Height	1,060 mm (41.7 in)
Wheel Base	1,220 mm (48.0 in)
Seat Height	775 mm (30.5 in)
Ground Clearance	180 mm (7.1 in)
Dry Weight	89 kg (196 lb)
FRAME	
Type	Back bone
Front Suspension, Travel	Telescopic fork, 102 mm (4.0 in)
Rear Suspension, Travel	Swing arm, 77 mm (3.0 in)
Front Tire Size, Type	2. 75–17–4 PR Knobby, tire air pressure 1.75 kg/cm^2 (24 psi)
Rear Tire Size, Type	2. 75–17–4 PR Knobby, tire air pressure 2.25 kg/cm^2 (32 psi)
Front Brake	Internal expanding shoes
Rear Brake	Internal expanding shoes
Fuel Capacity	5.5 lit. (1.5 U.S. gal, 1.2 Imp. gal)
Fuel Reserve Capacity	0.8 lit. (0.2 U.S. gal, 0.18 Imp. gal)
Auxiliary Fuel Tank Capacity	2.3 lit. (0.6 U.S. gal, 0.54 Imp. gal)
Caster Angle	63°
Trail Length	82 mm (3.2 in)
Front Fork Oil Capacity	To fill dry fork assembly 130 - 140 cc (4.4 - 4.7 ozs) To refill after draining 120 - 130 cc (4.1 - 4.4 ozs)
ENGINE	
Type	Air cooled 4-stroke O.H.C. engine
Cylinder Arrangement	Single cylinder 75 inclined from vertial
Bore and Stroke	52 x 49.5 mm (2.047 x 1.948 in)
Displacement	105.1 cc (6.39 cu in)
Compression Ratio	8.5 : 1
Carburetor, Venturi Dia.	Piston valve type, venturi dia. 18 mm (0.71 in)
Valve train	Chain driven over head camshaft
Oil Capacity	1.1 lit. (1.2 U.S. qt. 1.0 Imp. qt)
Lubri cation System	Forced pressure and wet sump
Fuel Required	All gasoline 91 RON min.
Air Filtration	Oiled polyurethane foam filter

Date of Issue: Sept., 1979
© HONDA MOTOR CO., LTD.

Items	Specifications
Intake Valve : Opens	5° BTDC
Closes	20° ABDC
Exhaust Valve: Opens	25° BBDC
Closes	5° ATDC
Valve Clearance	IN/EX. 0.05 mm (0.002 in)
Engine Dry Weight	23 kg (51 lb)
Pilot Screw Setting	See page 162
Idle Speed	1,300 rpm
DRIVE TRAIN	
Clutch	Wet multi-plate automatic
Transmission	4-speed constant mesh
Primary Reduction	3.722
Gear Ratio I	2.538
II	1.611
III	1.190
IV	0.958
Final Reduction	3.000, drive sprocket 15 T, driven sprocket 45 T
Gear Shift Pattern	Left foot operated return system 1-N-2-3-4
Drive Chain	D.I.D. 428D, RK428M ; 104 links
ELECTRICAL	
Ignition	A.C. generator and ignition coil
Ignition Advance :	
" F " mark	10° BTDC
Max. advance	22 ± 2° at 3,400 rpm
Starting System	Kick starter
Alternator	A.C. Generator, 66w/5,000 rpm
Battery Capacity	6V – 4 AH
Fuse Capacity	10 amp.
Spark Plug	
[ ] Canada Model	For cold climate (below 5°C/41°F): ND X22ES-U [X22 ESR-U]; NGK D7EA [DR7ES]
	Standard: ND X24ES-U [X24ESR-U]; NGK D8EA [DR8ES-L]
	For extended high speed riding: ND X27ES-U [X27ESR-U]; NGK D9EA [DR8ES]
Condenser Capacity	0.25μF ± 10%

© HONDA MOTOR CO., LTD.

II. SERVICE INFORMATION

1. SERVICE DATA

ENGINE

Unit: mm (in.)

Item			Standard		Service Limit	
Cylinder		I.D.	52.020–52.030	(2.0480–2.0483)	52.10	(2.051)
		Taper	0–0.010	(0–0.0004)	0.05	(0.002)
		Out-of-round	0–0.010	(0–0.0004)	0.05	(0.002)
Piston O. D.			51.970–51.990	(2.0461–2.0468)	51.80	(2.039)
Piston pin I. D.			15.002–15.008	(0.5906–0.5909)	15.04	(0.5921)
Piston pin O. D.			14.994–15.000	(0.5903–0.5906)	14.96	(0.589)
Piston ring end gap		Top	0.15–0.35	(0.006–0.014)	0.50	(0.020)
		Second	0.15–0.35	(0.006–0.014)	0.50	(0.020)
Piston-to-piston ring clearance		Top	0.010–0.040	(0.0004–0.0016)	0.12	(0.005)
		Second	0.015–0.045	(0.0006–0.0018)	0.12	(0.005)
Piston ring thickness		Top	1.175–1.190	(0.0463–0.0469)	1.13	(0.044)
		Second	1.175–1.190	(0.0463–0.0469)	1.13	(0.044)
Valve stem O. D.		IN	5.450–5.465	(.0.2146–0.2152)	5.435	(0.2139)
		EX	5.430–5.445	(0.2138–0.2144)	5.415	(0.2132)
Valve guide I. D.		IN/EX	5.475–5.485	(0.2157–0.2161)	5.525	(0.2175)
Valve-to-valve guide clearance		IN	0.010–0.035	(0.0004–0.0014)	0.08	(0.003)
		EX	0.030–0.055	(0.0012–0.0022)	0.10	(0.004)
Valve spring	Free length	Outer	35.0	(1.38)	33.7	(1.32)
		Inner	31.1	(1.22)	29.9	(1.18)
	Preload/length	Outer kg/mm (lbs./in.)	7.2–8.8/29.6	(15.88–19.40/1.17)	———	
		Inner kg/mm (lbs./in.)	3.5–4.3/25.5	(7.72–9.48/1.00)	———	
Valve face width		IN/EX	1.2–1.5	(0.05–0.06)	1.8	(0.07)
Valve seat width		IN/EX	1.0	(0.04)	1.6	(0.06)
Cam height		IN/EX	24.118–24.278	(0.9495–0.9756)	23.8	(0.94)
Camshaft O. D.		R. End	17.934–17.945	(0.7060–0.7065)	17.90	(0.705)
		L. End	25.932–25.945	(1.0210–1.0215)	25.90	(1.020)
Camshaft end bearing I. D.		R. End	18.000–18.018	(0.7087–0.7094)	18.05	(0.711)
		L. End	26.000–26.020	(1.0236–1.0244)	26.05	(1.026)
Clutch disc thickness			2.8–2.9	(0.1102–0.1142)	2.4	(0.10)
Clutch plate thickness			1.93–2.07	(0.076–0.082)	1.85	(0.073)
Clutch plate warpage			0.2	(0.01)	0.5	(0.02)
Clutch spring	Free length		27.0	(1.06)	26.0	(1.02)
	Preload/length kg/mm (lbs/in)		10.4/15	(22.9/0.6)	———	
Crankshaft run out (at ends)			0–0.025	(0–0.0010)	0.10	(0.004)
Crankshaft bearing play		Axial	0.10–0.35	(0.004–0.019)	0.8	(0.03)
		Radial	0.–0.01	(0.–0.0004)	0.05	(0.002)
Connecting rod small end I. D.			15.016–15.034	(0.5912–0.5919)	15.05	(0.593)
Connecting rod big end side clearance			0.10–0.35	(0.004–0.019)	0.8	(0.03)
Connecting rod big end radial clearance			0–0.01	(0–0.0004)	0.05	(0.002)
Clutch drive gear I.D.			24.00–24.02	(0.945–0.496)	24.15	(0.951)
Clutch center guide O.D.			22.00–22.10	(0.866–0.870)	21.85	(0.860)
Clutch center guide-to-crankshaft clearance			0.005–0.047	(0.0002–0.0019)	0.15	(0.006)

Date of Issue: Nov., 1979
© HONDA MOTOR CO., LTD.

mm (in)

Item		Standard		Service Limit	
Rocker arm shaft O. D.		9.972–9.987	(0.3926–0.3932)	9.92	(0.391)
Rocker arm I. D.		10.000–10.015	(0.3937–0.3943)	10.10	(0.398)
Crankshaft-to-clutch center guide clearance		0.005–0.047	(0.0002–0.0019)	0.15	(0.060)
Tensioner spring free length	Spring A	65	(2.6)	60	(2.4)
	Spring B	49.8	(19.92)	40	(1.6)
Oil pump	Inner-to-outer rotor clearance	0.15	(0.006)	0.2	(0.01)
	Outer rotor-to-body clearance	0.15–0.20	(0.006–0.008)	0.25	(0.010)
	Rotor-to-cover clearance	0.02–0.07	(0.001–0.003)	0.12	(0.005)
Shift fork I. D.		42.00	(1.654)	42.1	(1.66)
Shift fork ends thickness		5.96–6.04	(0.235–0.238)	5.70	(0.224)
Shift drum O. D.		41.950–41.975	(1.6516–1.6526)	41.80	(1.646)
Shift drum groove width		6.1–6.2	(0.240–0.244)	6.4	(0.25)
Shift fork-to-shift drum clearance		0.05	(0.002)	0.2	(0.01)

FRAME

Item		Standard		Service Limit	
Front/rear axle shaft runout		0–0.05	(0–0.002)	0.2	(0.01)
Front/rear wheel bearing play	Axial	0–0.05	(0–0.002)	0.1	(0.004)
	Radial	0.003–0.008	(0.0001–0.0003)	0.04	(0.002)
Front/rear brake drum I. D.		110.0	(4.33)	111.0	(4.37)
Wheel rim	Face runout	0–0.5	(0–0.02)	1.0	(0.04)
	Eccentricity	0–0.5	(0–0.02)	1.0	(0.04)
Front fork spring	Free length	203	(8.0)	185	(7.3)
Rear shock absorber spring	Free length	223	(8.8)	207	(8.2)
Front fork piston O. D.		30.95–30.97	(1.219–1.220)	30.85	(1.215)
Front fork slider I.D.		31.00–31.04	(1.221–1.223)	31.10	(1.225)
Brake lining thickness		4.0	(0.16)	2.0	(0.08)

© HONDA MOTOR CO., LTD.

2. TORQUE SPECIFICATIONS

ENGINE

Tightening point	Q'ty	Thread dia.	Torque kg-m (lbs-ft)
Cylinder head nut	4	8	1.8 – 2.1 (13.0 – 15.2)
Camshaft sprocket bolt	2	6	0.9 – 1.2 (6.5 – 8.7)
Cam chain guide roller bolt	1	6	0.9 – 1.4 (6.5 – 10.1)
Spark advancer bolt	1	6	0.8 – 1.2 (5.8 – 8.7)
Clutch lock nut	1	16	4.0 – 5.0 (29.0 – 36.2)
A. C. generator rotor nut	1	14	6.0 – 7.0 (43.4 – 50.7)
Shift drum bolt	1	6	0.8 – 1.2 (5.8 – 8.7)

FRAME

Tightening point	Q'ty	Thread dia.	Torque kg-m (lbs-ft)
Handlebar setting bolts	4	6	0.8 – 1.2 (5.8 – 8.7)
Steering stem nut	1	22	6.0 – 7.0 (43.4 – 50.7)
Front fork bolt	2	10	3.5 – 4.5 (25.3 – 32.6)
Steering stem bolt	2	8	1.8 – 2.5 (13.0 – 18.1)
Swingarm pivot bolt	1	10	4.0 – 6.0 (29.0 – 43.4)
Rear shock absorber upper nut	2	10	2.5 – 3.5 (18.1 – 25.3)
Rear shock absorber lower nut	2	8	2.5 – 3.5 (18.1 – 25.3)
Front axle nut	1	10	3.5 – 5.0 (25.3 – 36.2)
Rear axle nut	1	10	4.0 – 5.0 (28.9 – 36.2)
Rear brake stop arm bolt	2	8	1.8 – 2.5 (13.0 – 18.1)
Engine hanger bolt	2	10	3.0 – 4.0 (21.7 – 29.0)
Foot peg bolt	4	8	1.8 – 2.5 (13.0 – 18.1)

Torque specifications listed above are important tightening points. Others should be tightened to standard torque specifications below.

Standard Torque Specifications

Type	Torque kg-m (lbs-ft)	Type	Torque kg-m (lbs-ft)
5 mm bolt and nut	0.45 – 0.60 (3.3 – 4.3)	5 mm screw	0.35 – 0.50 (2.5 – 3.6)
6 mm bolt and nut	0.8 – 1.2 (5.8 – 8.7)	6 mm screw	0.7 – 1.1 (5.1 – 8.0)
8 mm bolt and nut	1.8 – 2.5 (13.0 – 18.1)	6 mm flange bolt and nut	1.0 – 1.4 (7.2 – 10.1)
10 mm bolt and nut	3.0 —4.0 (21.7 – 29.0)	8 mm flange bolt and nut	2.4 – 3.0 (17.4 – 21.7)
12 mm bolt and nut	5.0 —6.0 (36.2 – 43.4)	10 mm flange bolt and nut	3.0 – 4.0 (21.7 – 29.0)

Date of Issue: Nov., 1979
© HONDA MOTOR CO., LTD.

3. TOOLS

SPECIAL TOOLS

TOOL NAME	TOOL NO.
Ball race driver	07944–1150001
Valve guide reamer	07984–0980000

COMMON TOOLS

TOOL NAME	TOOL NO.	SPECIAL TOOL NO.
Float level gauge	07401–0010000	————
Pin spanner	07702–0010000	07902–2400000
Tappet adjust wrench 8 x 9	07708–0030100	07908–0010000
Tappet adjuster B	07708–0030400	
Lock nut wrench 20 x 24	07716–0020100	07916–6390001
Lock nut wrench 26 x 30	07716–0020200	07915–0300000
Extension bar	07716–0020500	————
Flywheel puller	07733–0010000	07933–0010000
Bearing driver outer 37 x 40	07746–0010200	07945–0980000 07946–3640000
Driver pilot 12	07746–0040200	————
Bearing driver outer 12 x 47	07746–0010300	07946–3000200 07945–3330100
Driver pilot 20	07746–0040500	————
Driver handle inner B	07746–0020100	07945–8120200
Driver handle inner C	07746–0030100	07945–3330200
Bearing driver inner 25	07746–0030200	07945–3710200
Driver handle outer A	07749–0010000	07949–3000000 07949–6110000
Driver body	07747–0010100	07947–1180001
Driver attachment	07747–0010300	
Valve spring compressor	07757–0010000	07957–3290001
Shock absorber compressor	07959–3290001	————
Nipple spanner	07701–0020100	————
Valve guide remover 5.5	07742–0010100	07942–3290100
Valve guide driver B	07742–0020200	07942–3290200
Valve guide cutter	07742–0030100	————
Pilot 5.5 mm	07742–0030200	————

© HONDA MOTOR CO., LTD.

4. MAINTENANCE SCHEDULE

Perform the PRE-RIDE INSPECTION in the Owner's Manual at each scheduled maintenance period.

I: Inspect and Clean, Adjust, Lubricate or Replace, if necessary.
C: Clean
R: Replace
A: Adjust
L: Lubricate

	FREQUENCY / ITEM	WHICHEVER → COMES FIRST ↓ EVERY	ODOMETER READING (NOTE 4) 600mi. (1,000km)	2,500mi. (4,000km)	5,000mi. (8,000km)	7,500mi. (12,000km)	Refer to
EMISSION RELATED ITEMS	* FUEL LINE			I	I	I	Page 118
	* THROTTLE OPERATION		I	I	I	I	Page 122
	* CARBURETOR-CHOKE			I	I	I	Page 122
	AIR CLEANER	NOTE 1		C	C	C	Page 117
	CRANKCASE BREATHER (USA only)	NOTE 2		C	C	C	Page 117
	SPARK PLUG			R	R	R	Page 151
	* VALVE CLEARANCE		I	I	I	I	Page 152
	* CONTACT BREAKER POINTS		I	I	R	I	Page 152
	* IGNITION TIMING		I	I	I	I	Page 153
	ENGINE OIL	YEAR	R	REPLACE EVERY 1,250mi. (2,000km)			Pages 151
	* ENGINE OIL FILTER SCREEN				C		Page 116
	* CAM CHAIN TENSION		A	A	A	A	Page 121
	* CARBURETOR-IDLE SPEED		I	I	I	I	Page 122
NON-EMISSION RELATED ITEMS	DRIVE CHAIN	NOTE 3	I, L EVERY 300mi. (500km)				Page 123
	BATTERY	MONTH	I	I	I	I	Page 154
	BRAKE SHOE WEAR			I	I	I	Page 125
	BRAKE SYSTEM		I	I	I	I	Page 125
	* BRAKE LIGHT SWITCH		I	I	I	I	Page 127
	* HEADLIGHT AIM		I	I	I	I	Page 127
	CLUTCH		I	I	I	I	Page 128
	SIDE STAND			I	I	I	Page 128
	* SUSPENSION		I	I	I	I	Page 128
	** SPARK ARRESTER (USA only)			C	C	C	Page 129
	* NUTS, BOLTS, FASTENERS	NOTE 3	I	I	I	I	Page 130
	** WHEELS/SPOKES	NOTE 3	I	I	I	I	Page 130
	** STEERING HEAD BEARING		I			I	Page 131

* Should be serviced by an authorized HONDA dealer, unless the owner has proper tools and service data and is mechanically qualified.

** In the interest of safety, we recommend these items be serviced ONLY by an authorized HONDA dealer.

NOTE: 1. Service more frequently when riding in dusty areas.
2. Service more frequently when riding in rain or at full throttle. (USA ONLY)
3. Service more frequently when riding OFF-ROAD.
4. For higher odometer readings, repeat at the frequency interval established here.

Date of Issue: Sept., 1979
© HONDA MOTOR CO., LTD.

5. CABLE AND HARNESS ROUTING

- **CABLE ROUTING**

Route the brake, throttle and speedometer cables as shown.

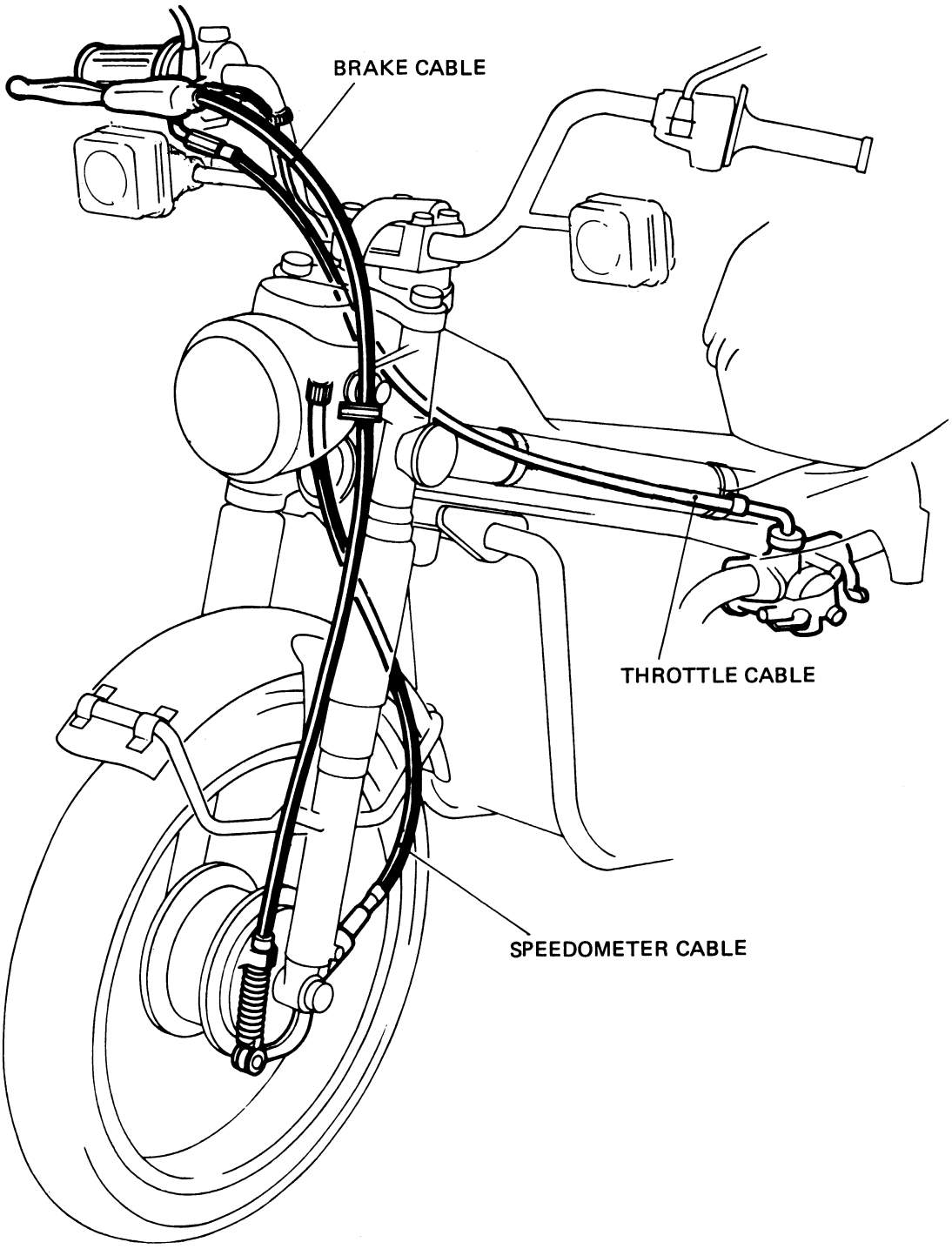

© HONDA MOTOR CO., LTD.

- **WIRE HARNESS ROUTING**

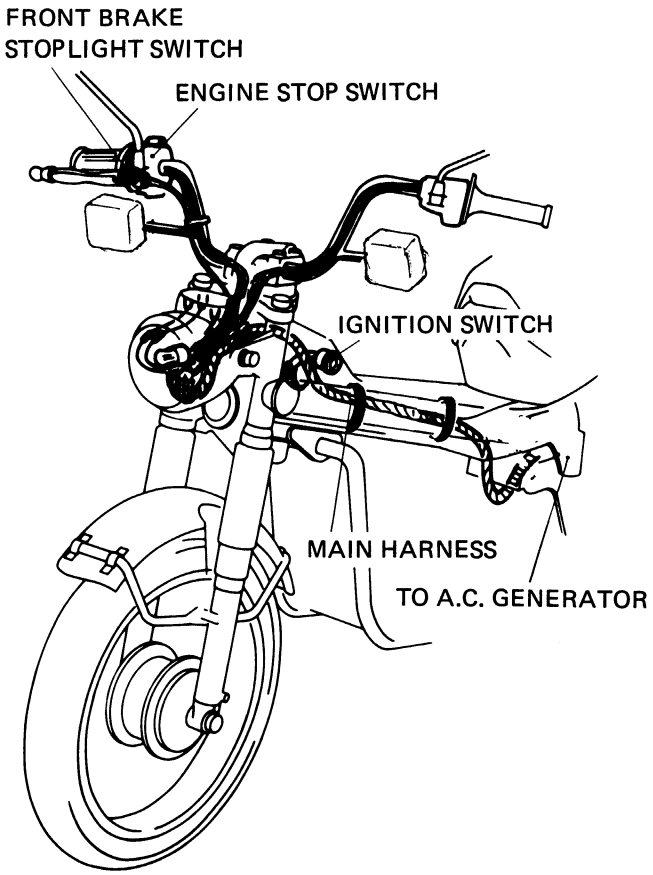

NOTE

Make sure that the battery cable is not pinched between the battery cover and frame.

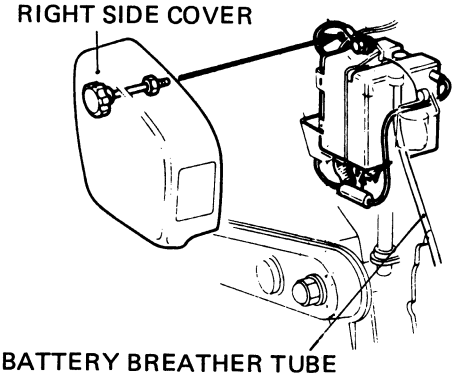

REAR HARNESS

Clamp the harness to the back of the rear fender.

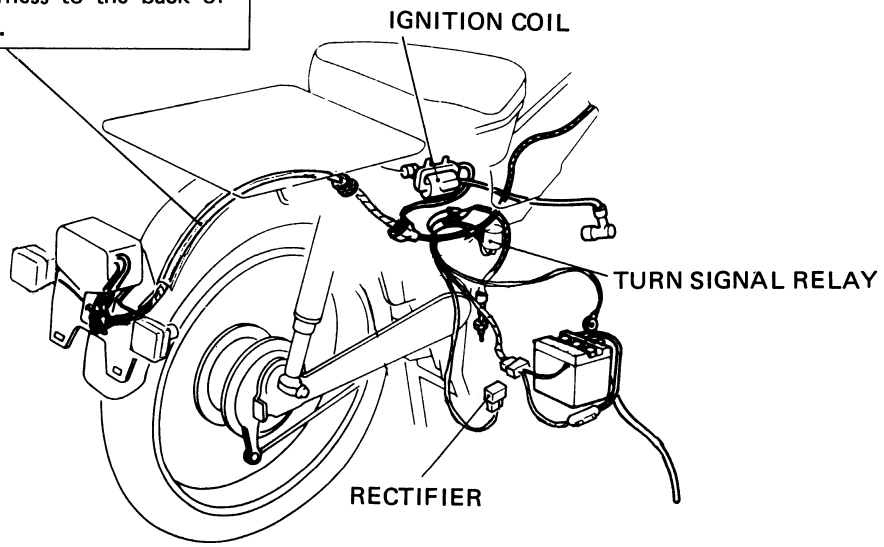

Date of Issue: Sept., 1979
© HONDA MOTOR CO., LTD.

III. INSPECTION/ADJUSTMENT

1. ENGINE OIL CHANGE

Remove oil filler cap and drain plug after the engine is warm, and drain the oil. Install the drain plug, and check the sealing washer condition.

TORQUE: 2.0–3.5 kg-m
(14.5–25.3 ft-lbs)

Fill crankcase with the recommended oil.

OIL CAPACITY: 1.1 lit. (1.2 US qt, 1.0 Imp qt) approximately.

RECOMMENDED OIL:
Use HONDA 4-STROKE OIL or equivalent.
API SERVICE CLASSIFICATION: SE
VISCOSITY: SAE 10W–40

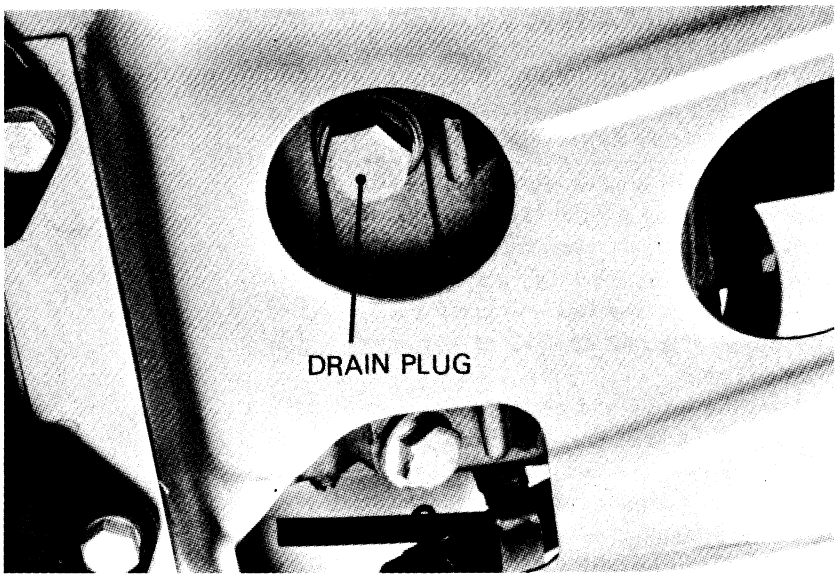

Reinstall the oil filler cap.
Start the engine and allow it to idle for 2–3 minutes.
Stop the engine, and make sure that the oil level is at the upper level mark with the vehicle in an upright position, and that there are no oil leaks.

Other viscosities shown in the chart may be used when the average temperature in your riding area is within the indicated range.

OIL VISCOSITIES

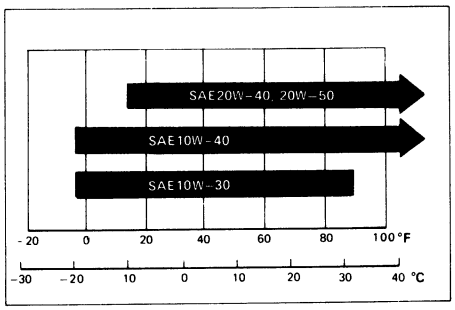

2. SPARK PLUG REPLACEMENT

Clean any dirt from around the spark plug base.
Disconnect the spark plug cap.
Remove and discard the spark plug.
Measure the new spark plug gap using a wire-type feeler gauge.
Adjust the plug gap by bending the side electrode carefully.

SPARK PLUG CAP: 0.6–0.7mm
(0.024–0.028 in)

With the spark plug washer attached, thread the spark plug in by hand to prevent cross-threading.
Tighten the spark plug ½ turn with a spark plug wrench to compress the washer.
Connect the spark plug cap.

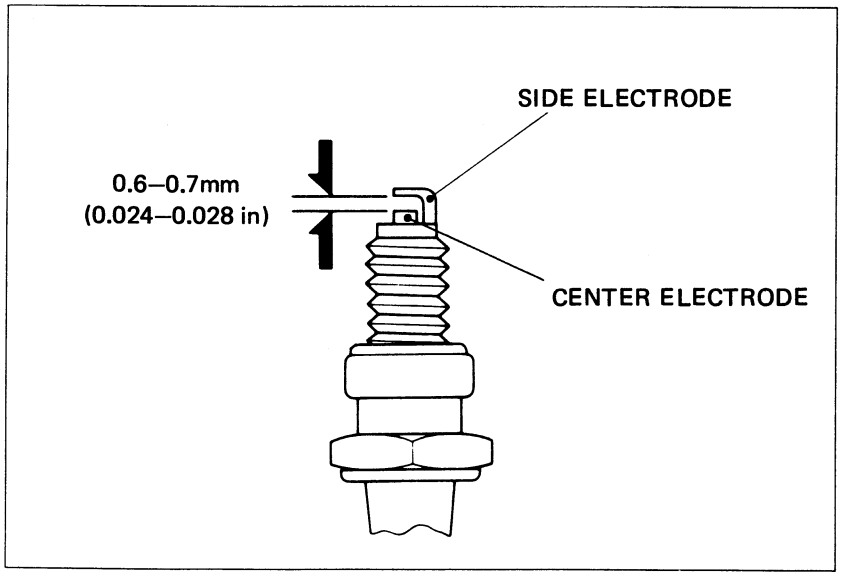

RECOMMENDED SPARK PLUG

	Usage / Manufacturer	For cold climate (below 5°C, 41°F)	Standard	For extended high speed riding
USA Model	ND	X22ES-U	X24ES-U	X27ES-U
	NGK	D7EA	D8EA	D9EA
CANADA Model	ND	X22ESR-U	X24ESR-U	X27ESR-U
	NGK	DR7ES	DR8ES-L	DR8ES

© HONDA MOTOR CO., LTD.

3. VALVE CLEARANCE

NOTE

Inspect and adjust valve clearance while the engine is cold (below 35°C, 95°F).

Remove the left crankshaft hole cap, timing mark hole cap and adjuster caps.
Turn the crankshaft counterclockwise and align the "T" mark on the rotor with the index mark on the left crankcase cover. The piston must be at TDC of the compression stroke.
Measure the intake and exhaust valve clearances with a 0.05mm (0.002 in) feeler gauge. Insert the feeler gauge between the valve adjusting screw and valve stem.
Adjust by loosening the lock nut and turning the adjusting screw until there is a slight drag on the feeler gauge.
Hold the adjusting screw and tighten the lock nut.
Recheck the valve clearance.
Reinstall the removed parts in the reverse order of disassembly.

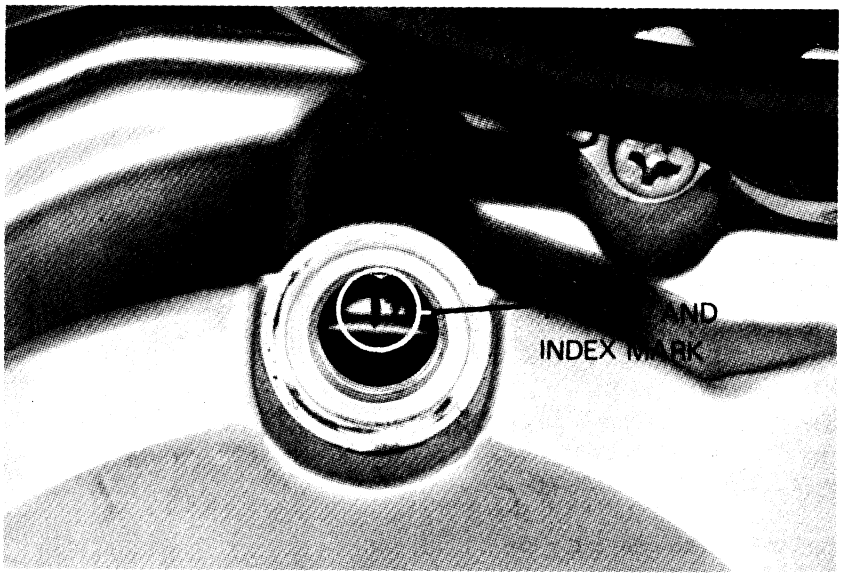

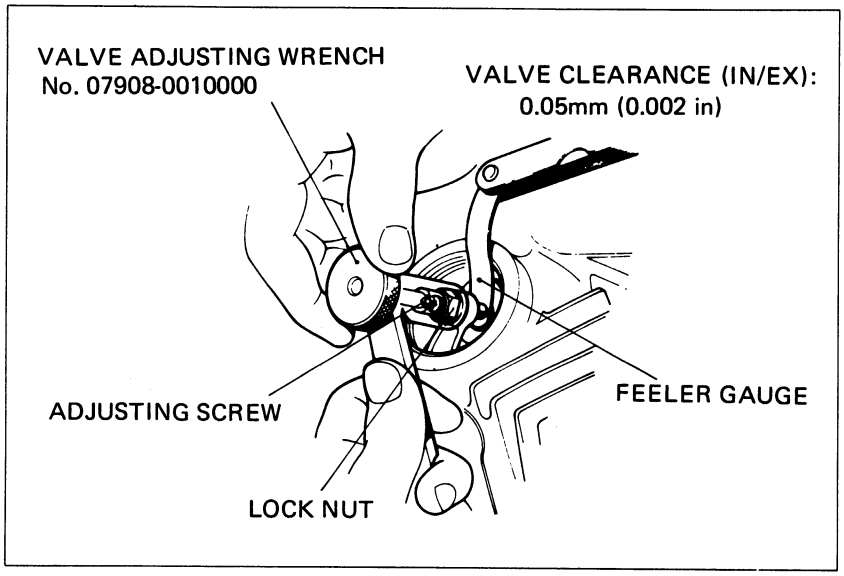

4. CONTACT BREAKER POINTS

Remove the crankshaft hole cap and point cover.
Clean the point contact surfaces with an electrical contact cleaner to remove any oil film or dirt. If the contact surfaces are level but grayish in color or are slightly pitted, file them lightly with a point file. If the points have a noticeable transfer of metal from one surface to the other, have evidence of heavy arcing, or are worn at an angle, they should be replaced.
Rotate the crankshaft counterclockwise and measure the maximum point gap with a feeler gauge.

POINT GAP: 0.3–0.4mm (0.012–0.016 in)

Adjust by loosening the two point locking screws and moving the contact breaker plate to achieve the correct gap.
Tighten the locking screws and recheck the point gap.
Adjust the ignition timing after the point gap has been adjusted (page 153).

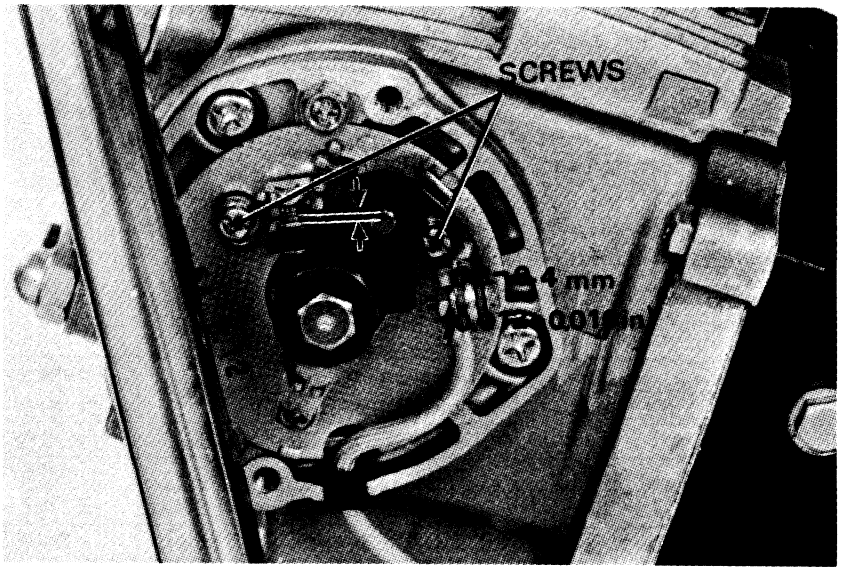

Date of Issue: Sept., 1979
© HONDA MOTOR CO., LTD.

5. IGNITION TIMING

NOTE

Adjust the contact breaker point gap before this adjustment.

STATIC

Obtain a fully charged 6V battery and a continuity light (6V-3W).
Remove the crankshaft hole cap, timing mark hole cap and point cover.
Connect one lead of the continuity light to the contact breaker terminal, and the other lead to the fully charged battery positive (+) terminal. Ground the battery negative (–) terminal to the frame.
Rotate the crankshaft counterclockwise and align the "F" mark on the rotor with the index mark on the left crankcase cover. The timing is correct if the light goes out when both marks align.
If the timing is incorrect, loosen the contact breaker base plate locking screws.
Rotating the base plate clockwise will advance the ignition timing.
Rotating the base plate counterclockwise will retard the ignition timing.
Tighten the base plate locking screws. Recheck the ignition timing and point gap.
Install the removed parts in the reverse order of disassembly.

DYNAMIC

Connect a tachometer and a stroboscopic timing light.
Remove the timing mark cap and start the engine and adjust the idle speed to 1,300 ± 100 rpm.
The timing is correct, if the "F" mark on the rotor aligns with the index mark on the left crankcase cover.
If necessary, adjust the ignition timing by removing the point cover and loosening the point base plate locking screws and turning the base plate.
Disconnect the timing light and tachometer and install the removed parts in the reverse order of disassembly.

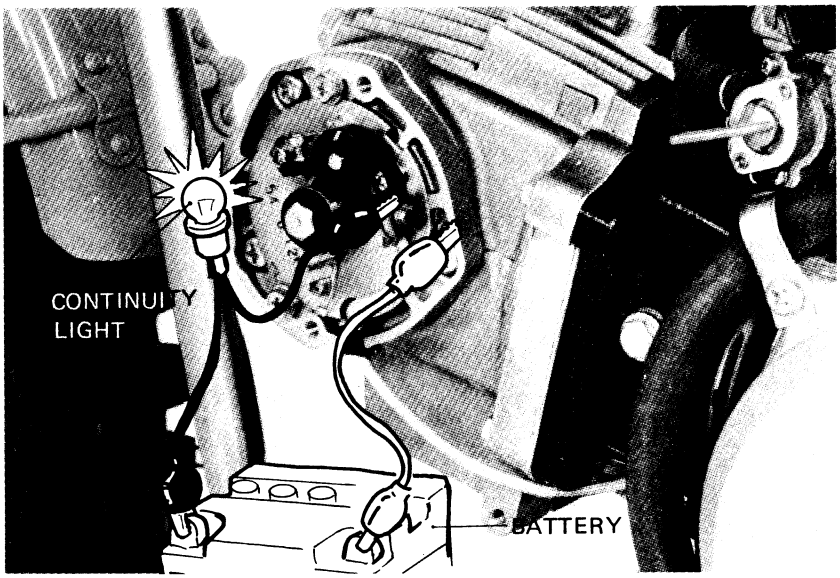

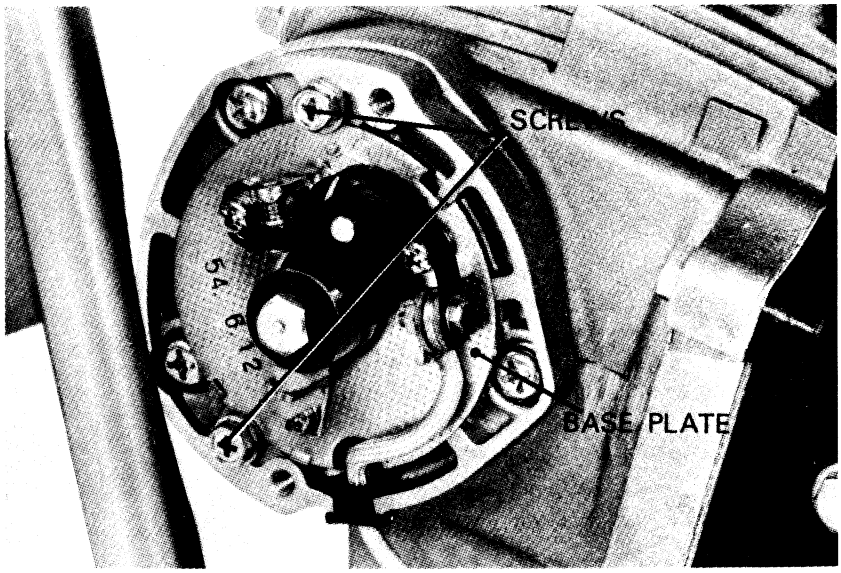

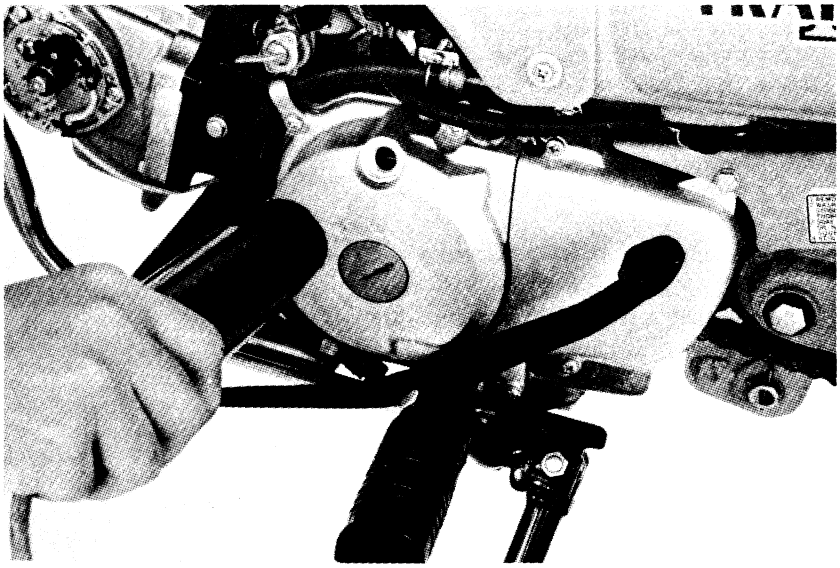

© HONDA MOTOR CO., LTD.

6. SPARK ADVANCER

NOTE

> Before performing this test, check and adjust the ignition timing.

Remove the timing mark cap.
Connect a tachometer and a stroboscopic timing light.
Start the engine.
Make sure the index mark on the left crankcase cover is between the full-advance marks on the rotor at 3,400 rpm.
If not check the spark advancer operation.

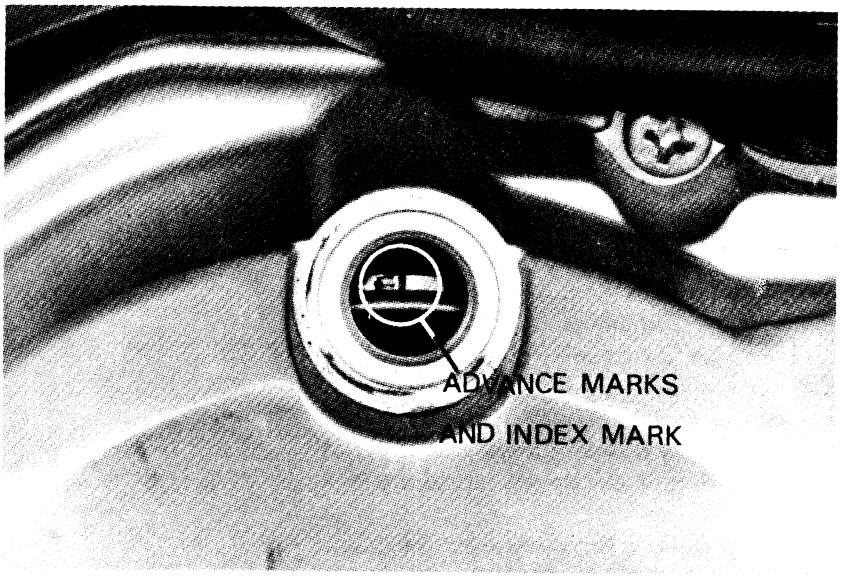

7. CONTROL CABLE LUBRICATION

Disconnect the throttle and brake control cables at their upper ends. Thoroughly lubricate the cables and their pivot points with a commercialy available cable lubricant.

8. BATTERY

Remove the frame right side cover.
Remove the battery holder and battery.
Check the fluid level.
Remove the battery cover and filler caps.
Add distilled water to the upper level mark.
The electrolyte level must be maintained between the upper and lower level marks.
If sulfation forms or sediments (paste) accumulate on the bottom, replace the battery.

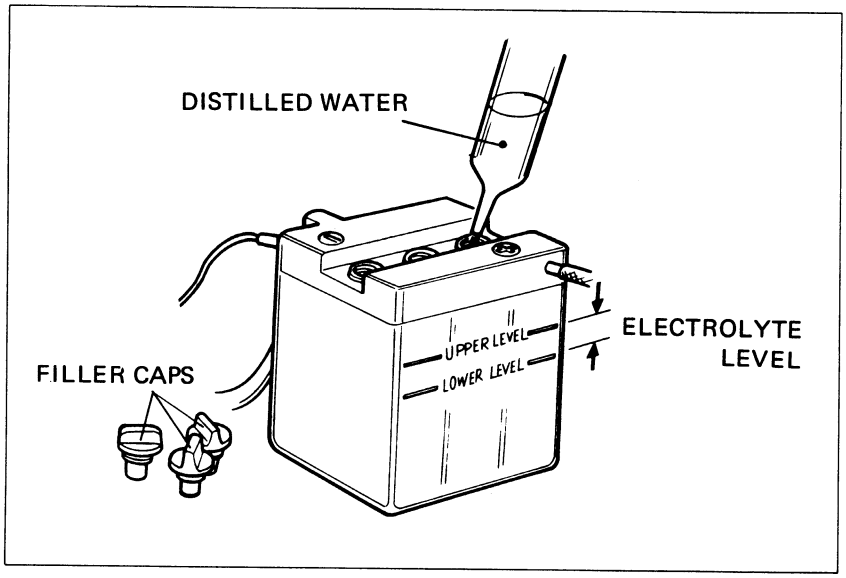

NOTE

> Add distilled water only. Tap water will shorten the service life of the battery.

WARNING

> ***The battery electrolyte contains sulfuric acid.***
> ***Protect your eyes, skin and clothing. In case of contact, flush thoroughly with water and call a doctor if your eyes were exposed.***

Route the battery breather tube as shown in the diagram.

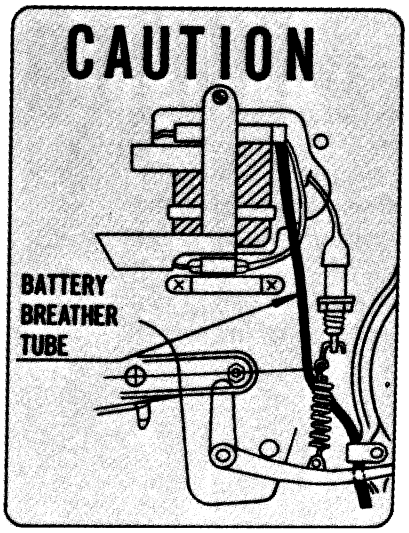

Date of Issue: Sept., 1979
© HONDA MOTOR CO., LTD.

IV. ENGINE

1. CYLINDER HEAD/VALVES

For dis/assembly procedures and service information not described, refer to the base shop Manual.

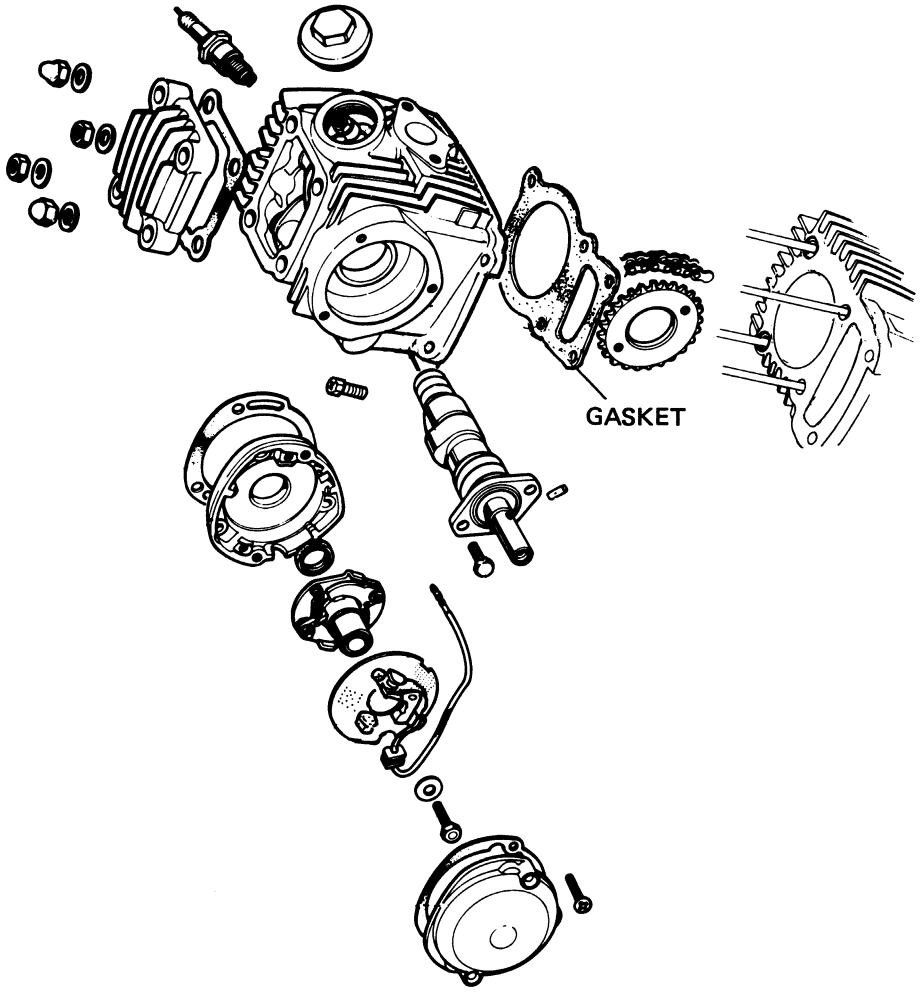

- **CONTACT BREAKER POINT DIS/ASSEMBLY**

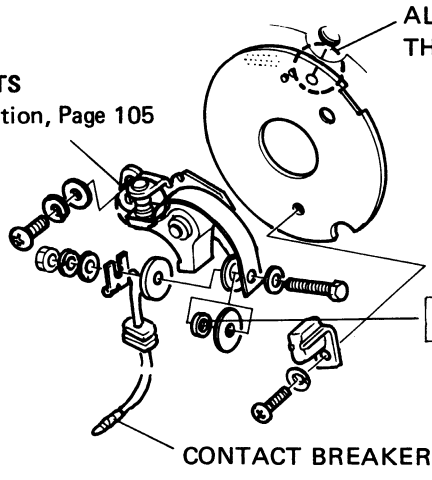

NOTE

After assembly, perform the following operations:
- Breaker point gap adjustment . . . . . Page 152
  0.3–0.4 mm (0.012–0.016 in)
- Ignition timing adjustment . . . . . Page 153

© HONDA MOTOR CO., LTD.

2. CYLINDER/PISTON

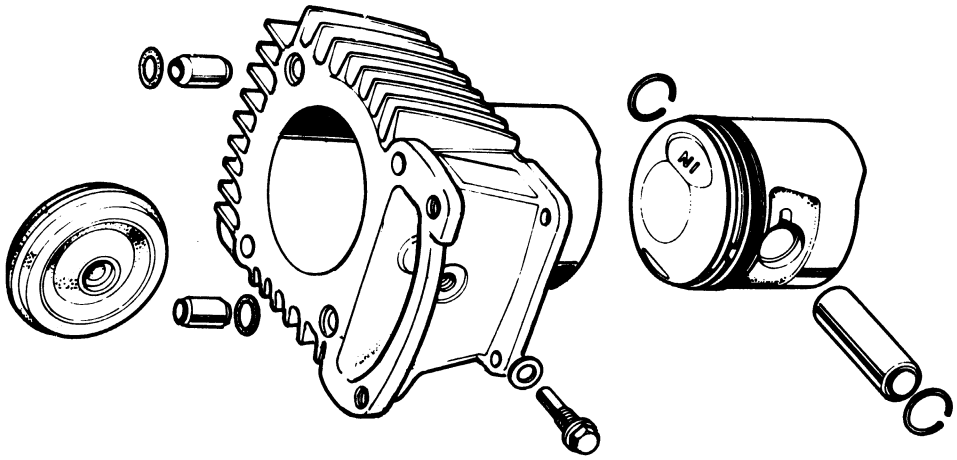

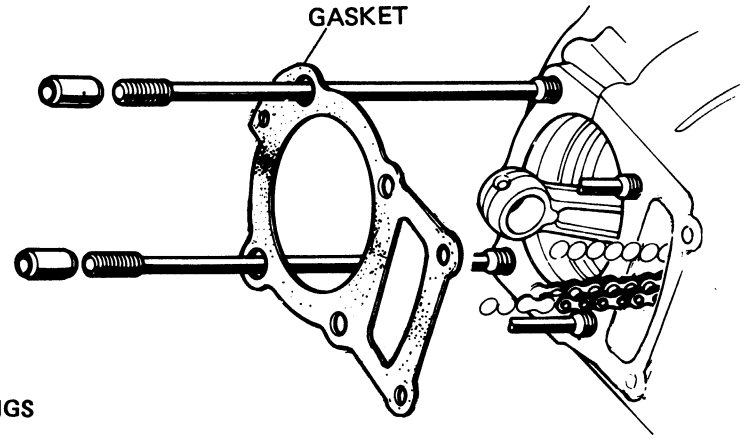

- PISTON RINGS

FACE THE MARKS UP

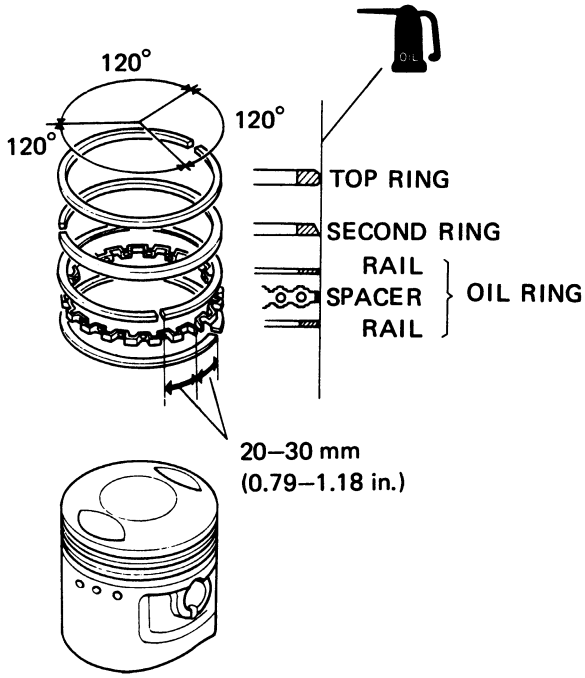

NOTE

- Clean the ring grooves and oil holes before installing the piston rings. When installing, be sure the rings do not bind in their grooves.
- Install the oil ring spacer first, then rails. Stagger oil ring end gap.
- Position 1st, 2nd, and oil rings so end gaps are 120 degrees apart and no gap is in line with the piston pin ends.

Date of Issue: Sept., 1979
© HONDA MOTOR CO., LTD.

3. A.C. GENERATOR/CAM CHAIN TENSIONER

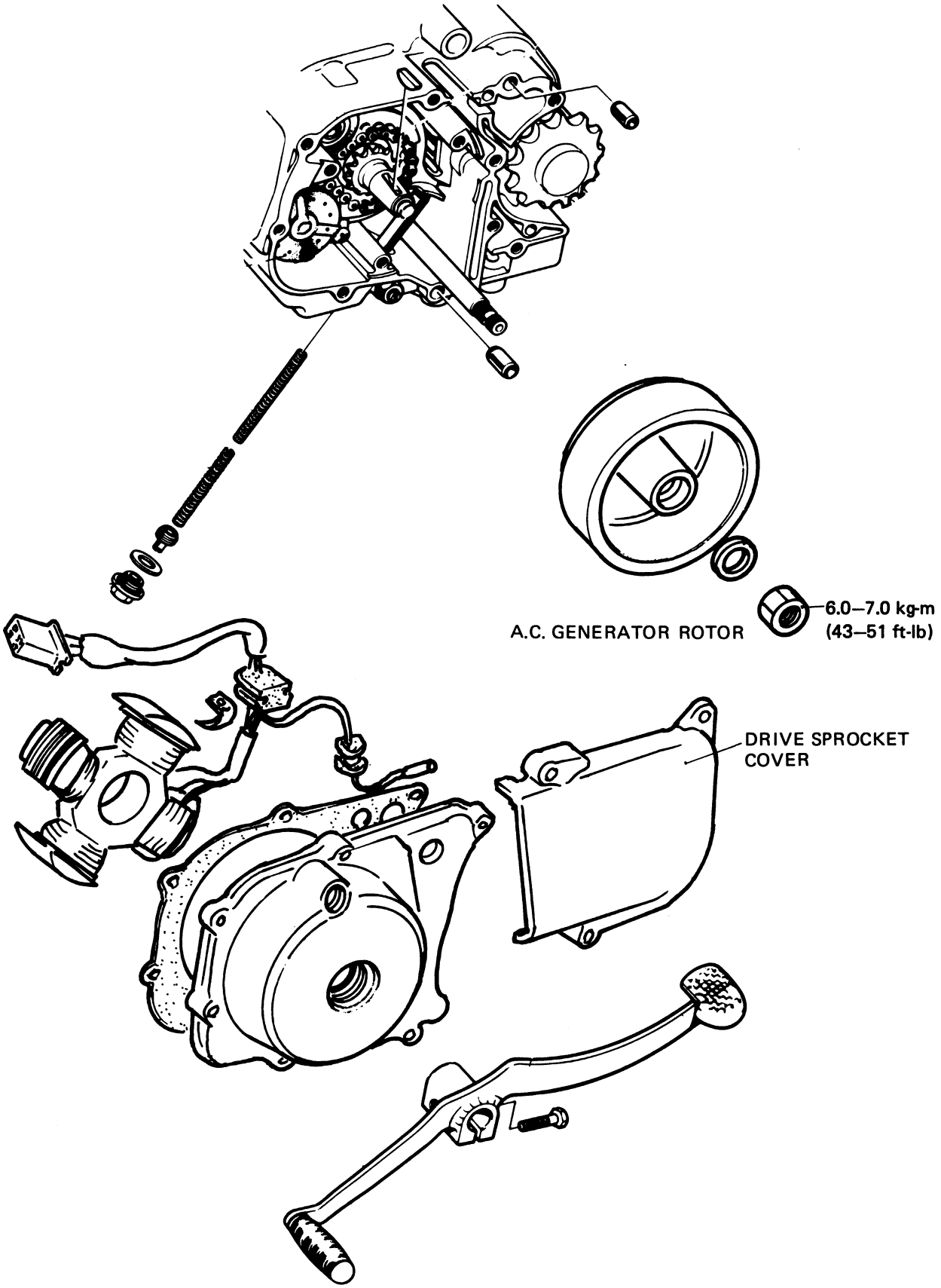

© HONDA MOTOR CO., LTD.

- **A.C. GENERATOR REMOVAL**

Drain the oil from the engine.
Disconnect the A.C. Generator wires.
Remove the drive sprocket cover.
Remove gearshift pedal.

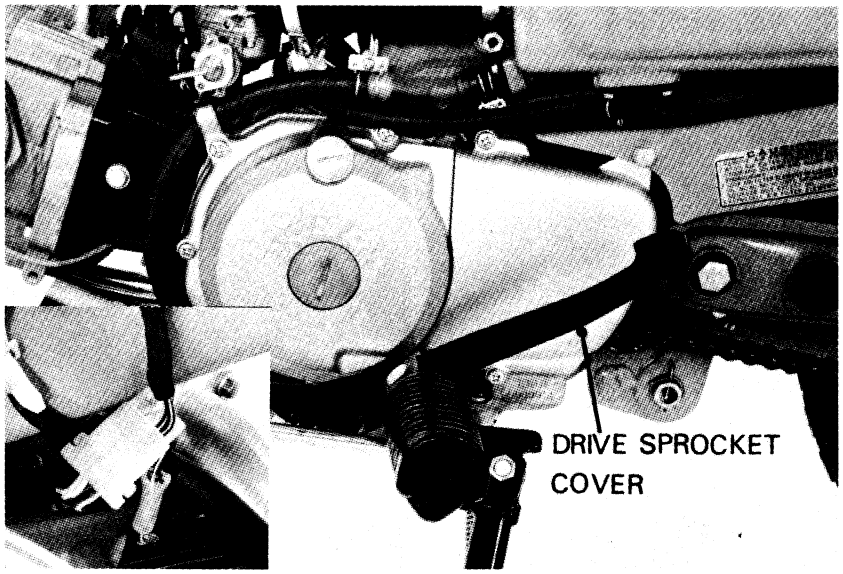

Remove the left crankcase cover.

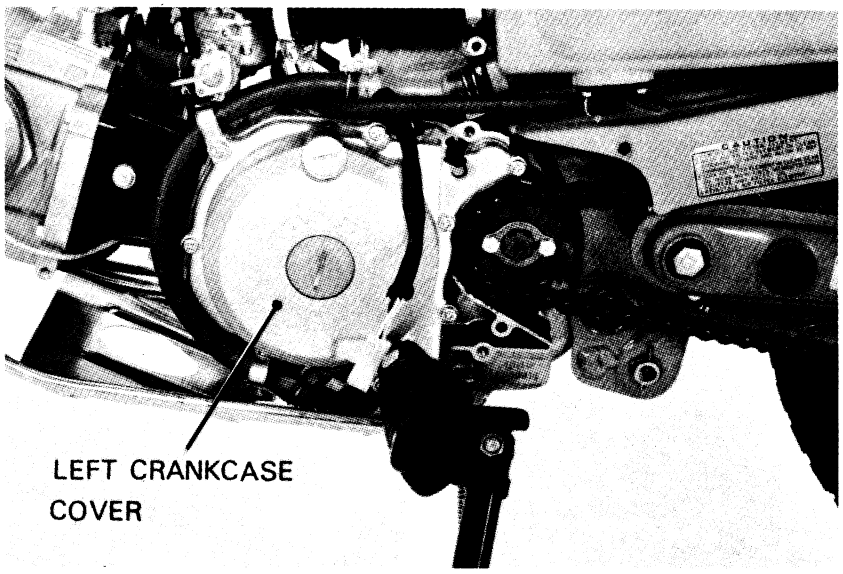

Remove the A.C. Generator rotor.

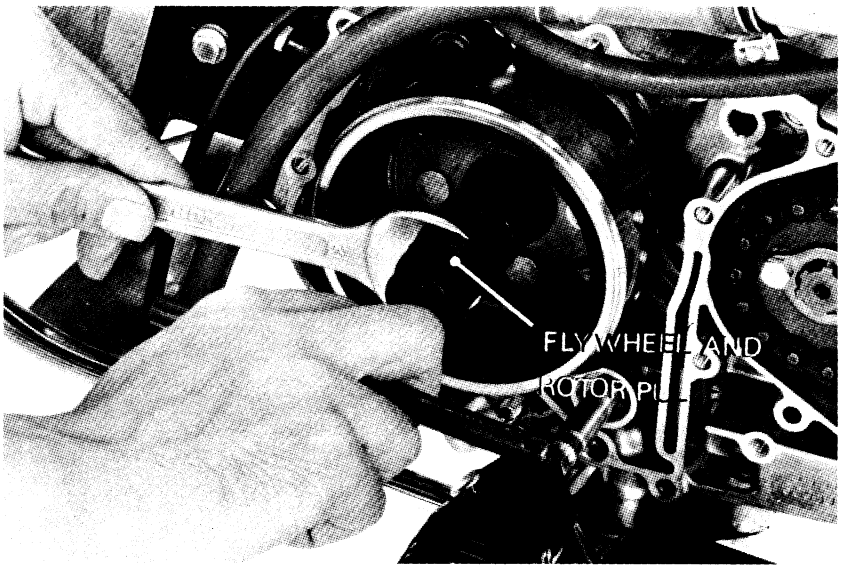

Date of Issue: Sept., 1979
© HONDA MOTOR CO., LTD.

- **CAM CHAIN TENSIONER REMOVAL**

Remove the seal bolt, adjust bolt B, and tensioner spring A and B (See page 68)
Loosen the lock nut and adjusting bolt A.
Remove the tensioner push rod.
Remove the tensioner set plate A and B.
Remove the cam chain guide sprocket.
Remove the cam chain from the crankshaft sprocket and remove the cam chain tensioner.

- **CAM CHAIN TENSIONER INSTALLATION**

Install the cam chain tensioner in the reverse order of the removal.

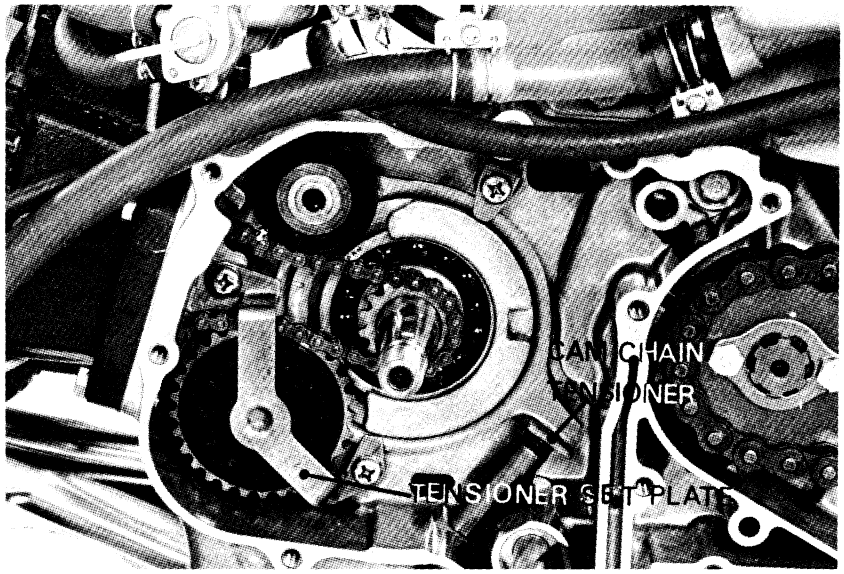

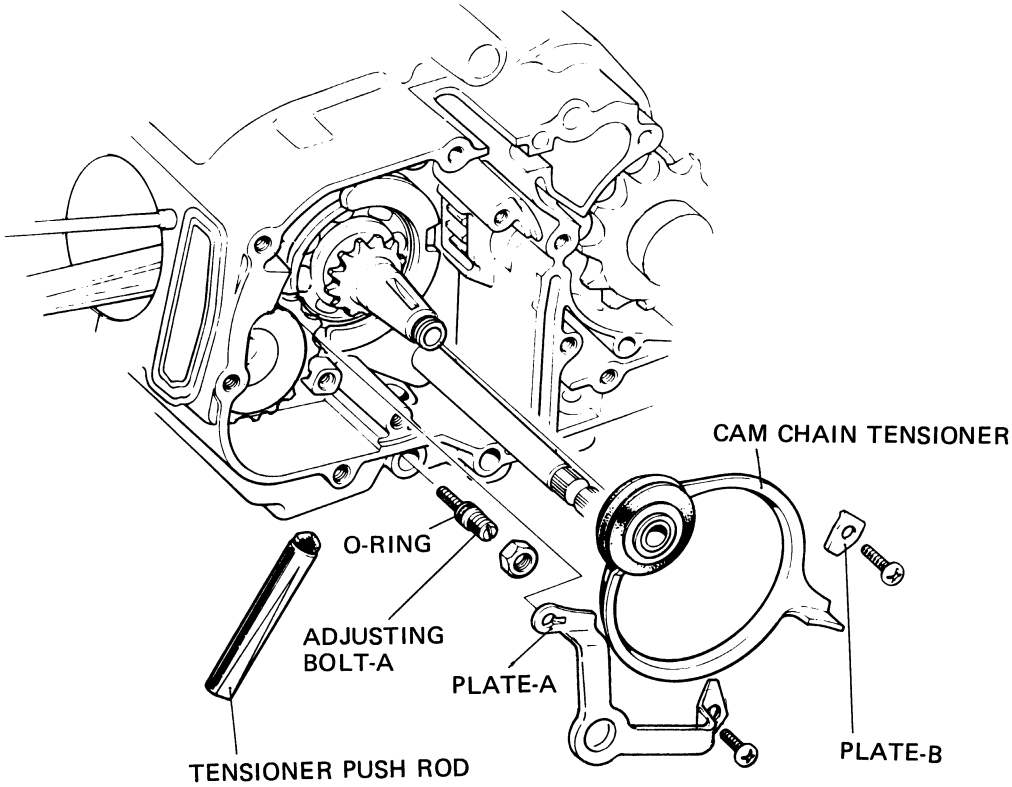

Place the cutout toward adjusting bolt A.

© HONDA MOTOR CO., LTD.

- **NEUTRAL SWITCH INSTALLATION**

Install the neutral switch onto the left crankcase.
Install the rubber seal on the switch.
Install the left crankcase cover.
Connect the neutral switch wire connector to the neutral switch as shown.

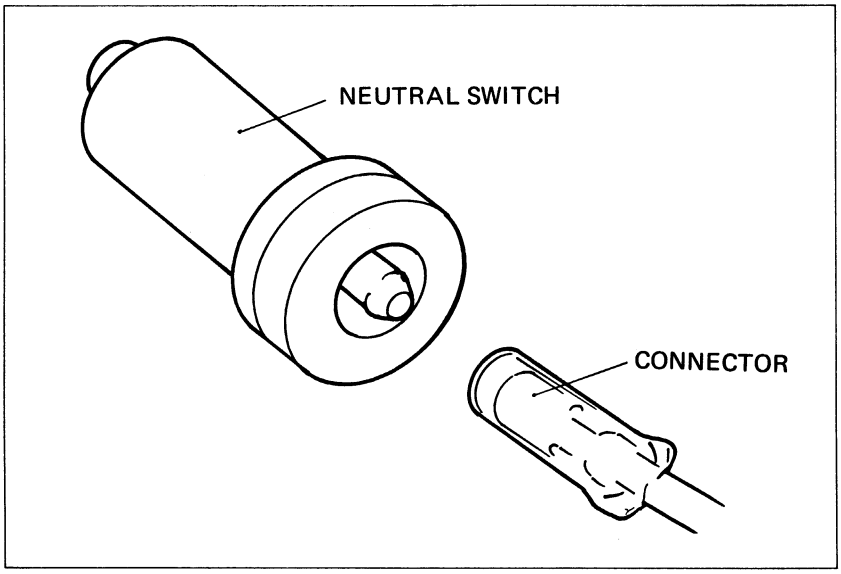

- **STATOR COIL REMOVAL/INSTALLATION**

Remove the drive sprocket cover.
Disconnect the stator wires.
Remove the gearshift pedal.
Remove the left crankcase cover.
Remove the stator coil.
Install the stator coil and wire holder as shown.
Install the left crankcase cover in the reverse order of the removal.

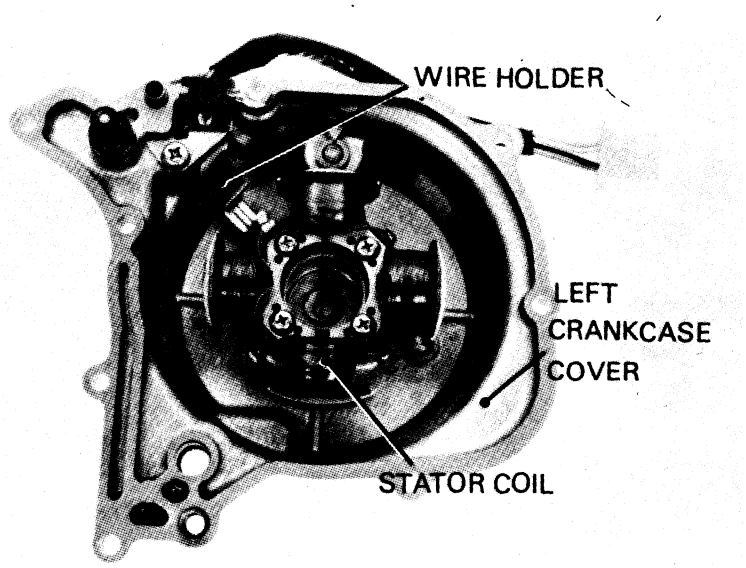

Date of Issue: Sept., 1979
© HONDA MOTOR CO., LTD.

V. CARBURETOR

1. CARBURETOR SPECIFICATIONS

Identification mark	PB21A
Main jet	#72
Jet needle mark	17D
Float level	10.7 mm
Idle speed	1300 ± 100 rpm
Pilot screw setting	See page 162

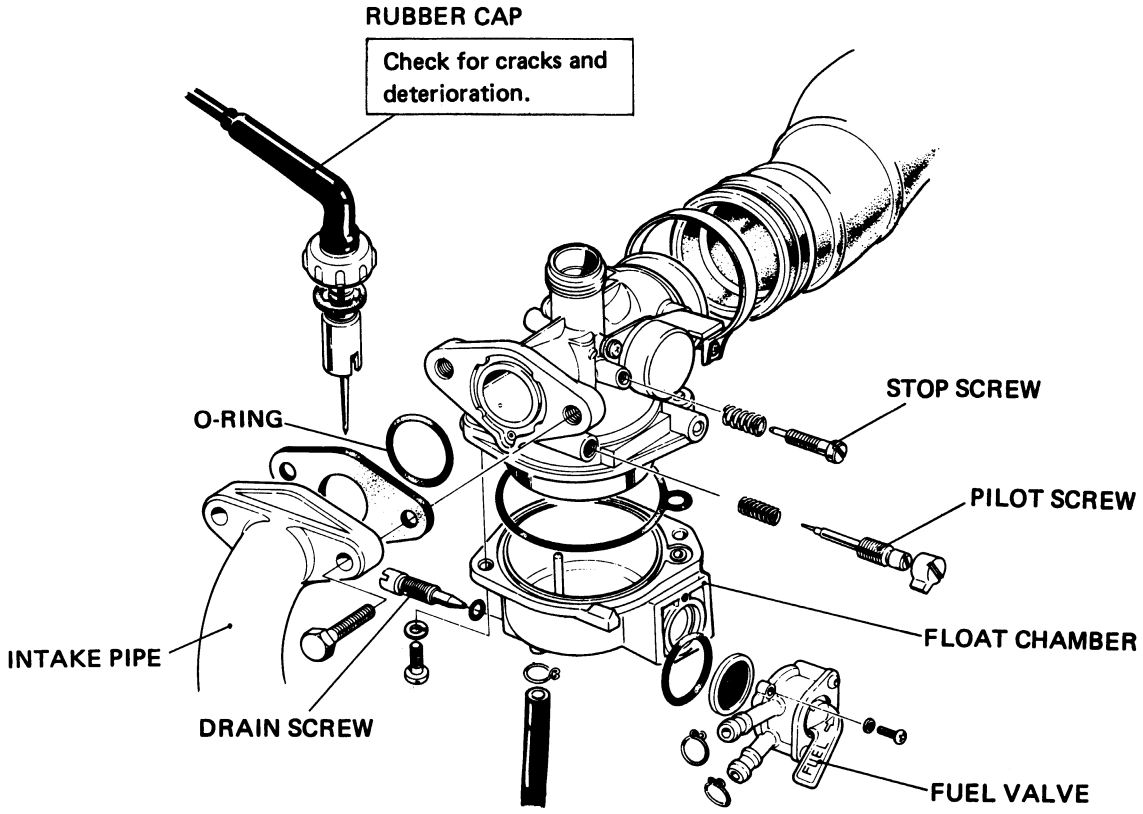

© HONDA MOTOR CO., LTD.

2. PILOT SCREW REMOVAL/ INSTALLATION

NOTE

> The pilot screw is factory pre-set and should not be removed unless the carburetor is overhauled.

Remove the carburetor.
Remove the float chamber.
Turn the pilot screw in and carefully count the number of turns before it seats lightly. Make a note of this to use as a reference when installing the pilot screw.

CAUTION

> Damage to the pilot screw and seat will occur if the pilot screw is tightened against the seat.

Remove the pilot screw with the limiter cap attached.

CAUTION

> Any forcible attempt to remove the pilot screw limiter cap will break the screw.

Inspect the pilot screw for wear and replace if necessary.
Install the pilot screw and return it to its original position as noted during removal. Perform pilot screw adjustment if a new pilot screw is installed.

NOTE

> Do not install a limiter cap on a new pilot screw until after adjustment has been made (see below).

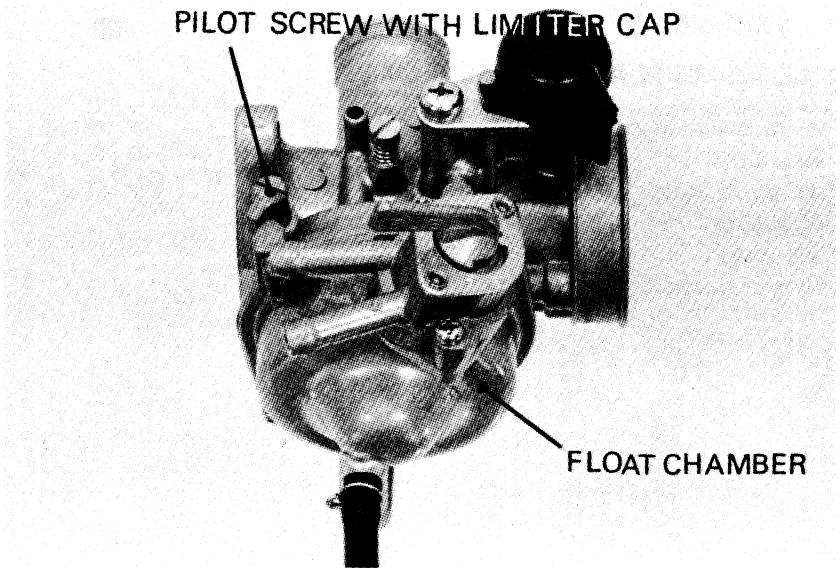

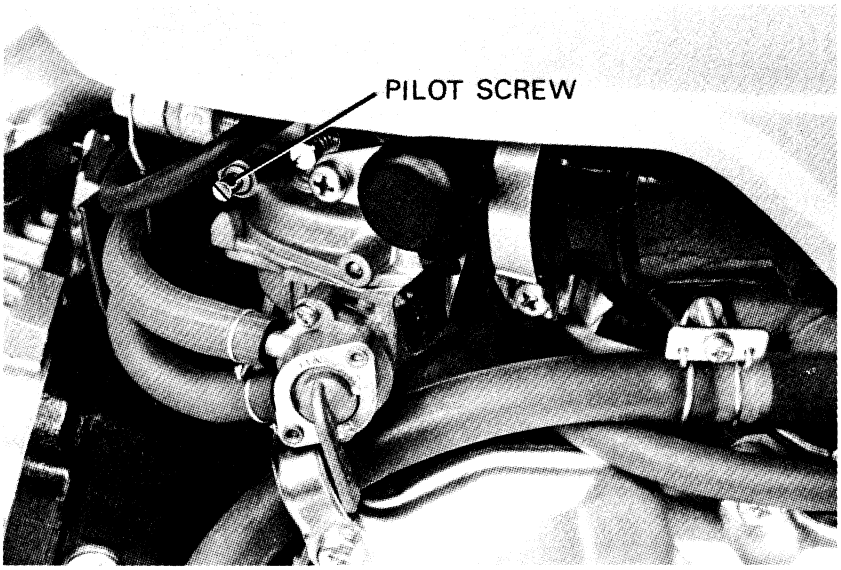

3. PILOT SCREW ADJUSTMENT

NOTE

> · The pilot screw is factory pre-set and no adjustment is necessary unless the pilot screw is replaced (see removal above).

Turn the pilot screw clockwise until it seats lightly and back it out to the specification given.
This is an initial setting prior to the final pilot screw adjustment.
INITIAL OPENING: 1-1/2 TURNS OUT

CAUTION

> Damage to the pilot screw and seat will occur it the pilot screw is tightened against the seat.

Warm the engine up to operating temperature. Stop and go driving for 10 minutes is sufficient.
Connect a tachometer.
Adjust the idle speed with the throttle stop screw.
IDLE SPEED: 1300 rpm
Turn the pilot screw in or out to obtain the highest engine speed.
Readjust the idle speed to 1300 ± 100 rpm, using the throttle stop screw.

Date of Issue: Sept., 1979
© HONDA MOTOR CO., LTD.

• LIMITER CAP INSTALLATION

If the pilot screw has been replaced, a new limiter cap must be installed after pilot screw adjustment is completed.

After adjustment, cement the limiter cap over the pilot screw, using LOCTITE® #601 or equivalent. The limiter cap should be placed against its stop, preventing further adjustment the would enrich the fuel mixture (limiter cap position permits clockwise rotation and prevents counterclockwise rotation).

NOTE

A pilot screw limiter cap must be installed. It prevents misadjustment that could cause poor performance and increase emissions.

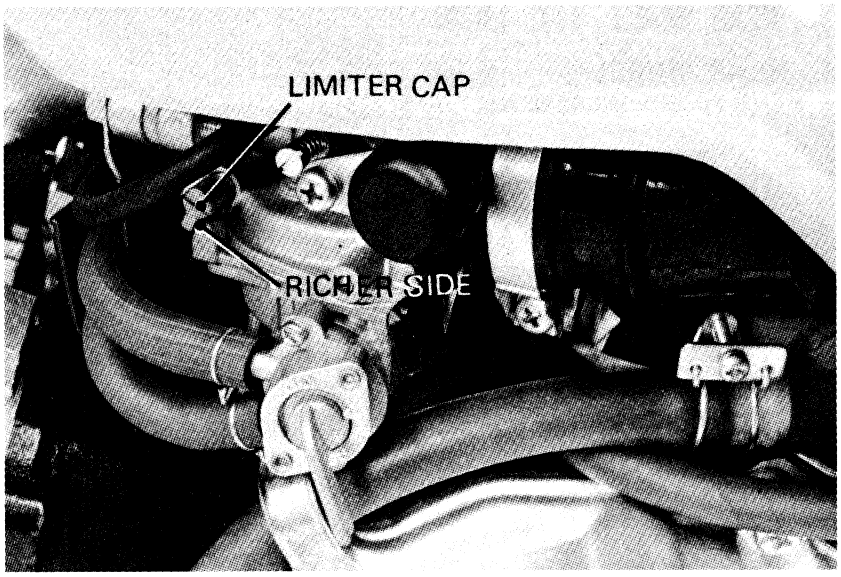

• HIGH ALTITUDE ADJUSTMENT

For sustained High altitude operation (above 2,000 m/6,500 ft) install a #70 main jet and readjust idle speed.

(1) Remove the carburetor from the engine and remove the float bowl.
(2) Replace the standard #72 main jet with the high altitude #70 main jet.
(3) Assemble and install the carburetor.
(4) Adjust idle speed to 1300 ± 100 rpm., using the throttle stop screw.

CAUTION

Sustained operation at altitudes lower than 1,500m (5,000 ft) with the high altitude main jet installed may cause engine overheating and damage. For sustained operation below 1,500 m (5,000 ft), reinstall the standard main jet and readjust idle speed.

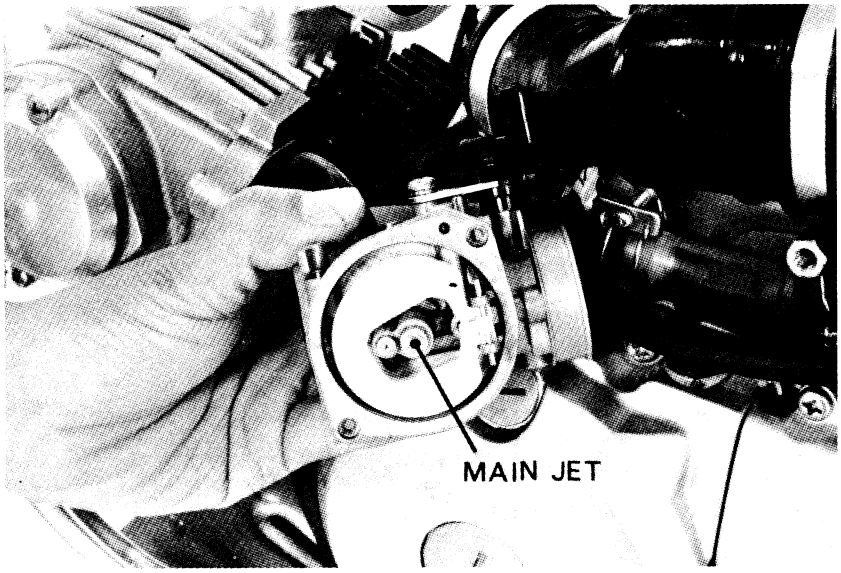

	Standard 2000m (6500ft) max.	High altitude type. 1500m (5000ft) min.
Main jet	#72	#70
Idle speed	1300 ±100rpm	←
Pilot screw opening	Factory pre-set	←

© HONDA MOTOR CO., LTD.

VI. REAR WHEEL/TAIL LIGHT

1. REAR WHEEL

- **REAR WHEEL DISASSEMBLY/ASSEMBLY**

WARNING
Be careful to keep oil or grease off the linings or brake drum.

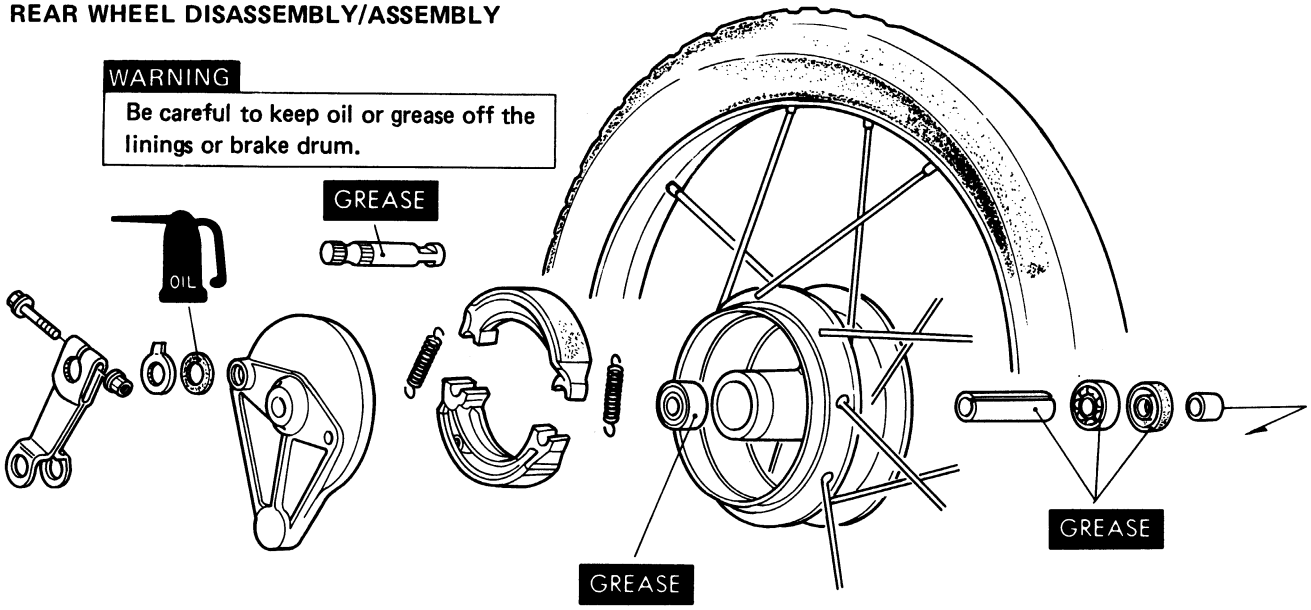

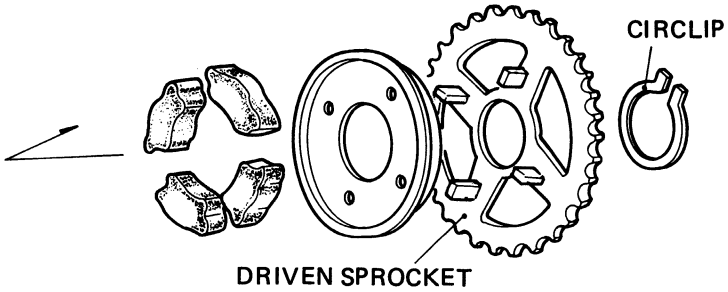

- **REAR WHEEL BEARING INSTALLATION**

Drive the right bearing in first, then install the distance collar and drive in the left bearing.

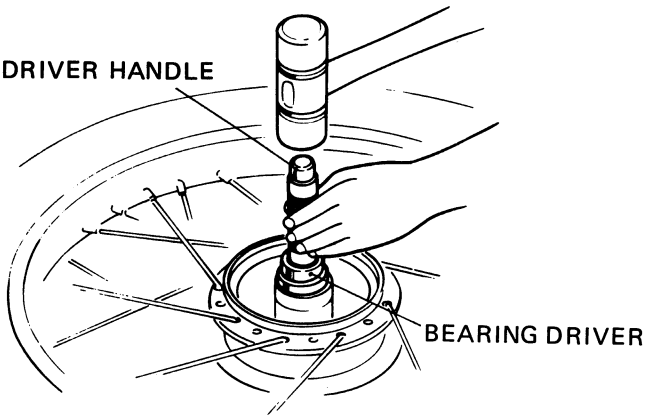

NOTE

- Drive the bearing squarely, being careful not to allow it to tilt.
- Install the bearing with the shield end outward.

Date of Issue: Sept., 1979
© HONDA MOTOR CO., LTD.

2. REAR SHOCK ABSORBER

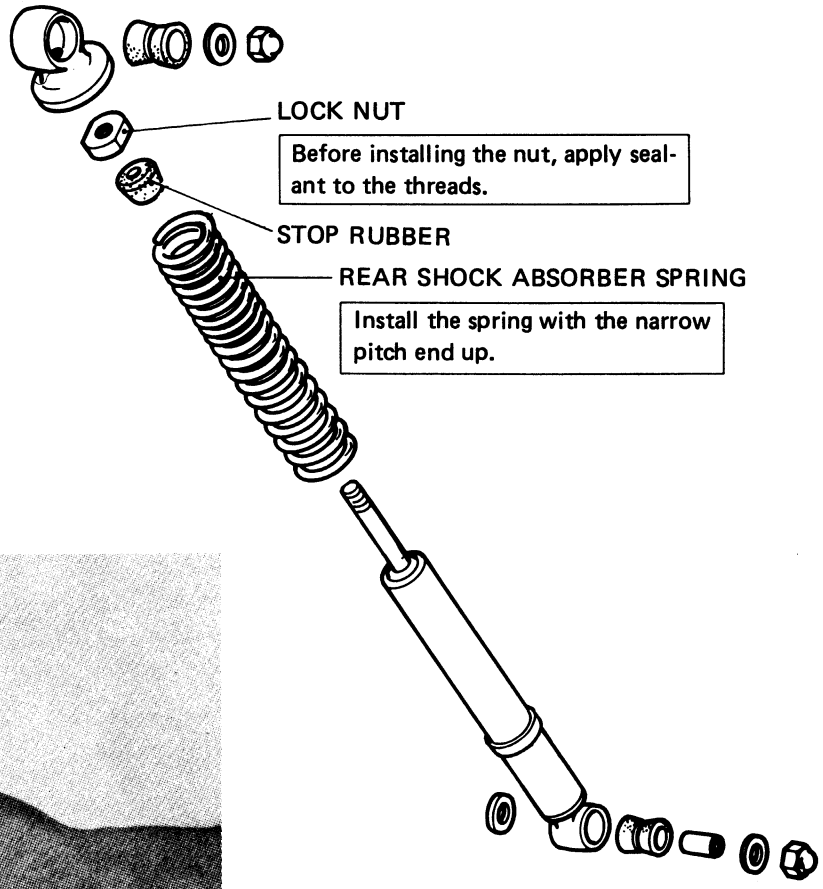

3. TAILLIGHT AND TURN SIGNAL

- **LENS REMOVAL/INSTALLATION**

Remove the lens by pulling the top edge forward.
Install the lens by pressing it in, bottom edge first, then top.

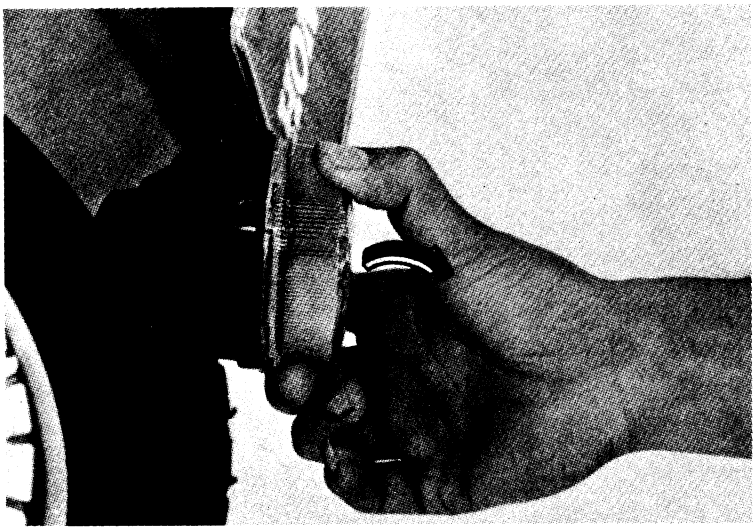

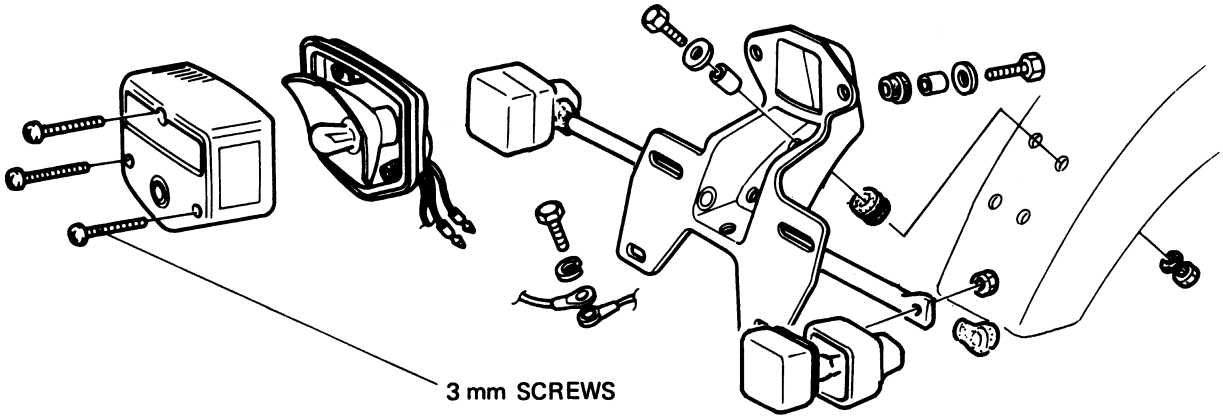

CAUTION
Overtightening the screws may damage the lens.

© HONDA MOTOR CO., LTD.

VII. ELECTRICAL

1. BATTERY CHARGING SYSTEM

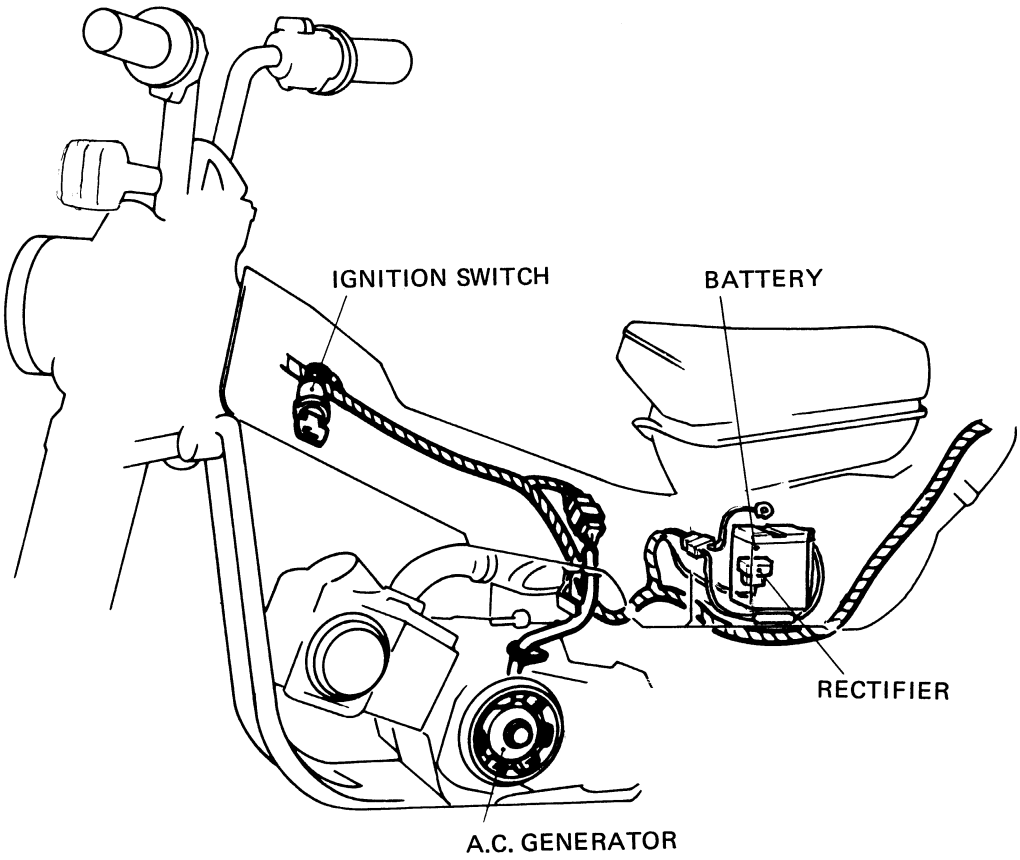

- **DIAGRAM**

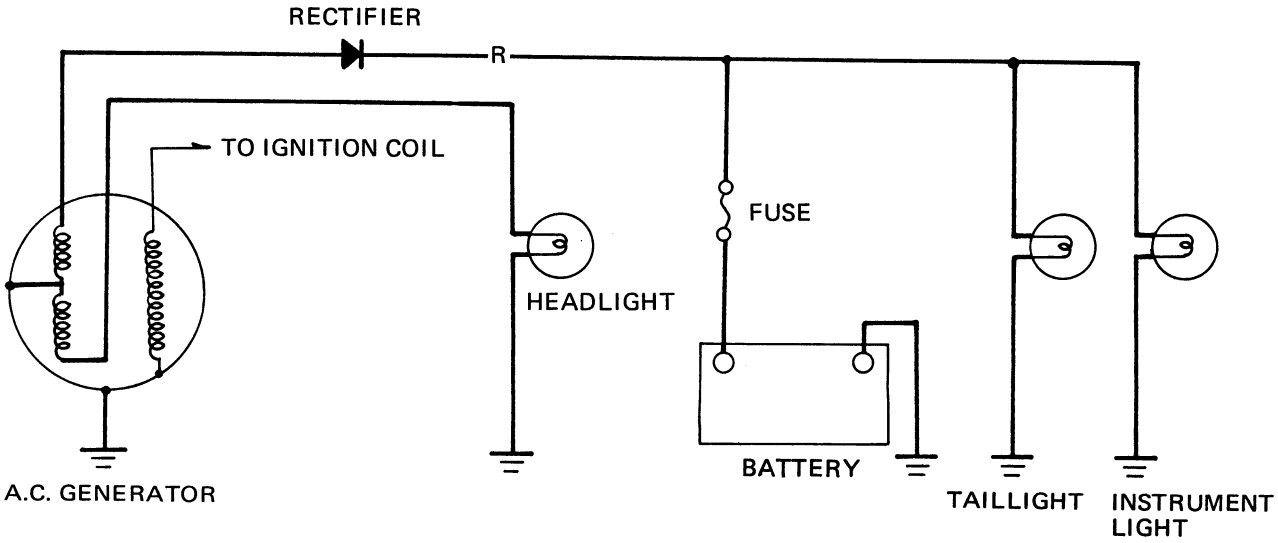

Date of Issue: Sept., 1979
© HONDA MOTOR CO., LTD.

- **CHARGING TEST**

Connect a tachometer. Turn high beam on.
Connect the tester as shown below and run the engine at the following speeds:

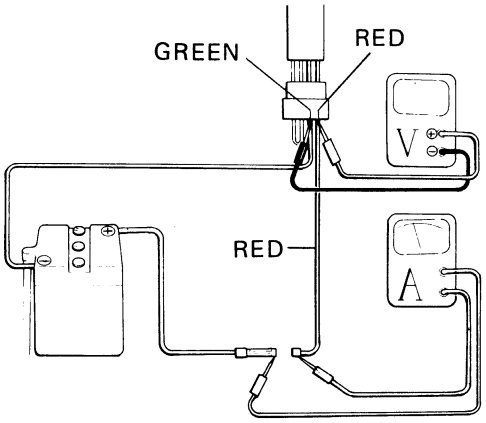

2,500 rpm . . . . . .Charging should start (6.8V min.)
5,000 rpm . . . . . .0.8A min. (8.7V min.)

SPECIFIC GRAVITY OF BATTERY ELECTROYTE:

1.260-1.280 [at 20°C (68°F)]

NOTE

Raise the engine speed gradually and note the exact current and voltage indicated on the meters. Do not allow the needle of the meter to swing beyond the limit of needle travel.

- **STATOR COIL CONTINUITY TEST**

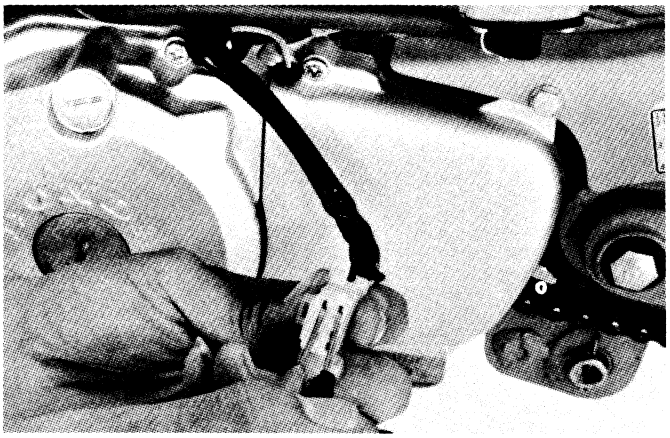

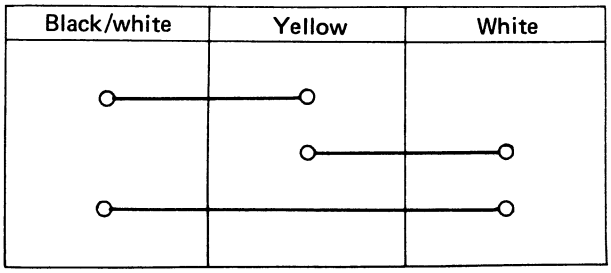

The coil is normal if there is continuity between circuits (o—o).
Refer to stator coil replacement on page 161, if necessary.

Rectifier Test

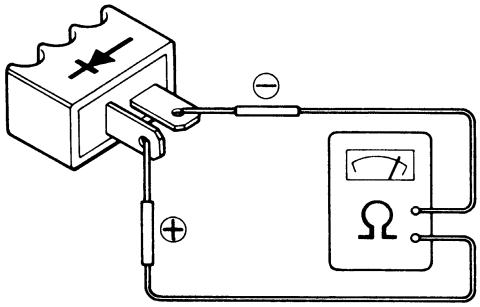

The rectifier is normal if there is continuity only in one direction. Replace the rectifier if there is continuity in the reverse direction.

NOTE

The direction of continuity depends on your tester's polarity.

© HONDA MOTOR CO., LTD.

2. IGNITION SYSTEM

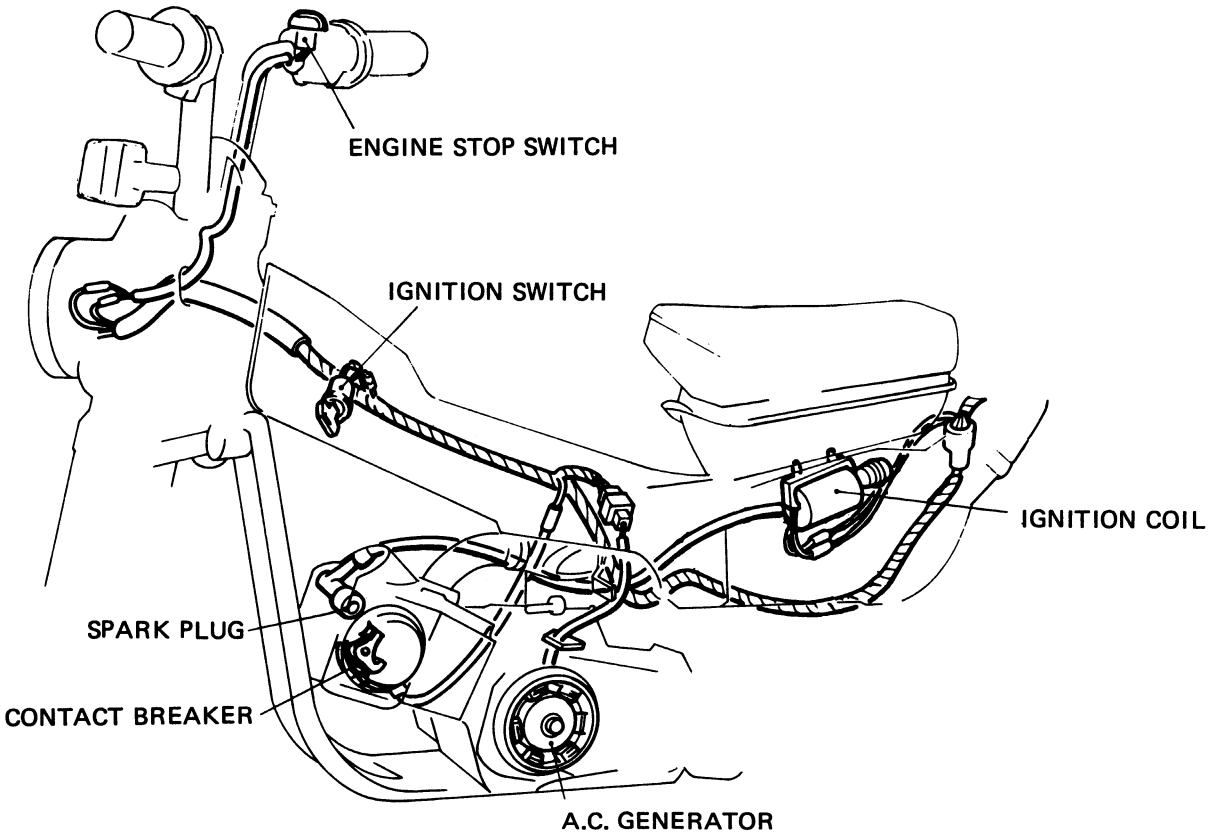

- **DIAGRAM**

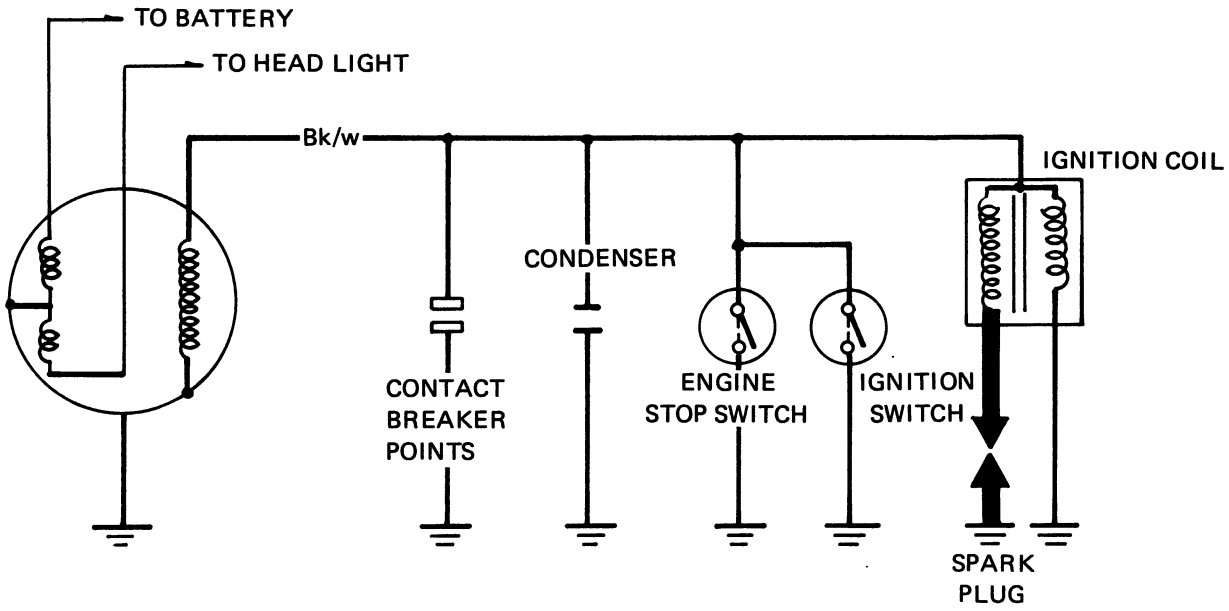

Date of Issue: Sept., 1979
© HONDA MOTOR CO., LTD.

3. SWITCHES

• IGNITION SWITCH

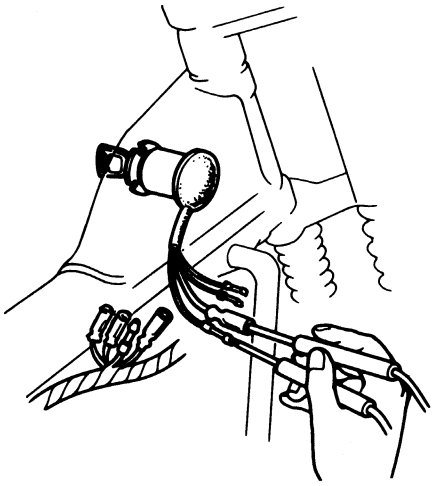

switch \ wire color	Red	Black	Green	Black/White
ON	○	○		
OFF			○	○

The switch is normal if there is continuity between terminals (o—o).

• HORN, HEADLIGHT DIMMER, ENGINE STOP SWITCH

Remove the headlight, disconnect the switch leads and check for continuity. The switch is normal if there is continuity between terminals (o—o).

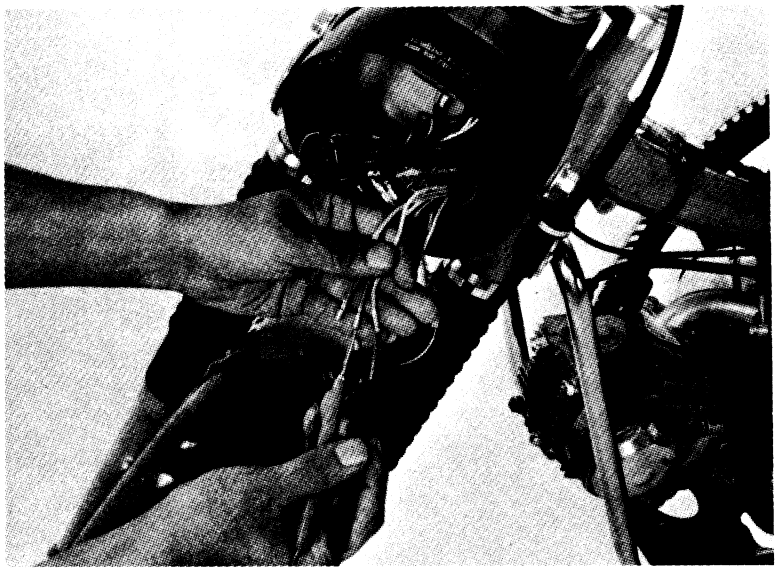

• HORN SWITCH

switch \ wire color	Light Green	Green
PUSH	○	○
FREE		

The switch is normal if there is continuity between terminals (o—o).

• HEADLIGHT DIMMER SWITCH

Switch \ Wire color	Blue/White	Blue	White
HI / LO	○		○
HI / LO	○	○	○
HI / LO	○	○	

The switch is normal if there is continuity between terminals (o—o).

• ENGINE STOP SWITCH

Switch \ Wire color	Green	Black/White
ENGINE STOP: OFF / RUN / OFF		
ENGINE STOP: OFF / RUN / OFF	○	○

The switch is normal if there is continuity between terminals (o—o).

© HONDA MOTOR CO., LTD.

VIII. WIRING DIAGRAM

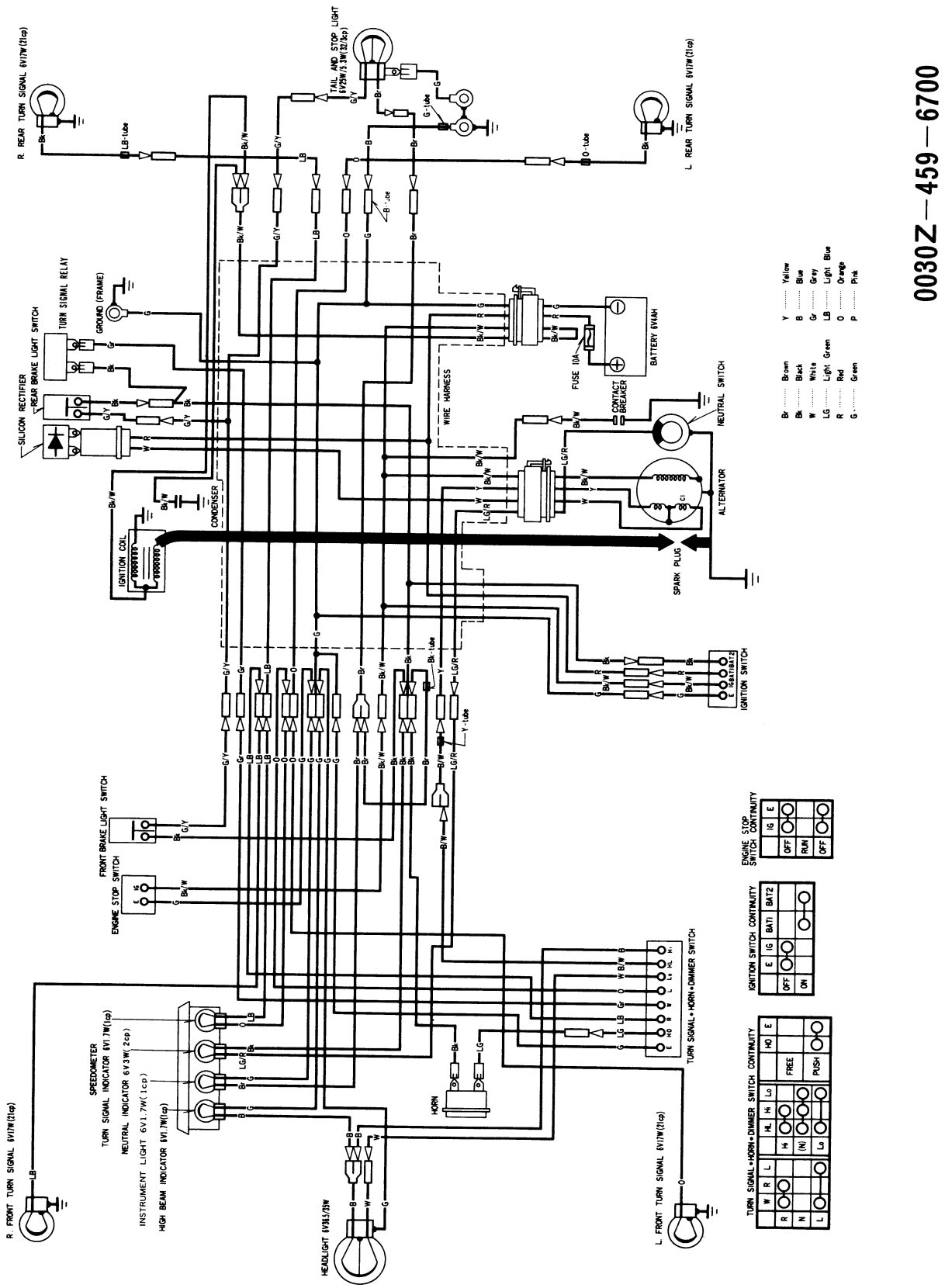

0030Z—459—6700

Date of Issue: Sept., 1979
© HONDA MOTOR CO., LTD.

X'81 CT110 ADDENDUM

INTRODUCTION

This 1981 Shop Manual Addendum contains information for the 1981 CT110. Refer to the base shop manual and the 1980 CT110 Addendum for procedures and service data not included in this addendum.

ALL INFORMATION, ILLUSTRATIONS, DIRECTIONS AND SPECIFICATIONS INCLUDED IN THIS PUBLICATION ARE BASED ON THE LATEST PRODUCT INFORMATION AVAILABLE AT THE TIME OF APPROVAL FOR PRINTING. HONDA MOTOR CO., LTD. RESERVES THE RIGHT TO MAKE CHANGES AT ANY TIME WITHOUT NOTICE AND WITHOUT INCURRING ANY OBLIGATION WHATEVER.

NO PART OF THIS PUBLICATION MAY BE REPRODUCED WITHOUT WRITTEN PERMISSION.

HONDA MOTOR CO., LTD.
Service Publications Office

CONTENTS

1. SPECIFICATIONS 172
2. LUBRICATION SYSTEM 172
3. AUXILIARY TRANSMISSION 173
4. A.C. GENERATOR/CAM CHAIN TENSIONER 176
5. CARBURETOR 178
6. CABLE AND HARNESS ROUTING 180
7. BATTERY 182
8. TAILLIGHT AND TURN SIGNALS 182
9. WIRING DIAGRAM 183

Date of Issue: Sept., 1980
© HONDA MOTOR CO., LTD.

1. SPECIFICATIONS

The specifications below are only those which are new for 1981.
See pages 142 - 146 for other CT110 specifications which apply to the 1981 model.

Items		Specifications			
Dry Weight		92.5 kg (203.5 lbs)			
Engine Dry Weight		24.9 kg (54.9 lbs)			
Pilot Screw Setting		See page 179			
Idle Speed		1,500 ± 100 rpm			
Gear Ratio	I	High Range	2.538 : 1	Low Range	4.692 : 1
	II		1.611 : 1		2.978 : 1
	III		1.190 : 1		2.200 : 1
	IV		0.958 : 1		1.771 : 1

2. LUBRICATION SYSTEM

- **LUBRICATION CIRCUIT DIAGRAM**

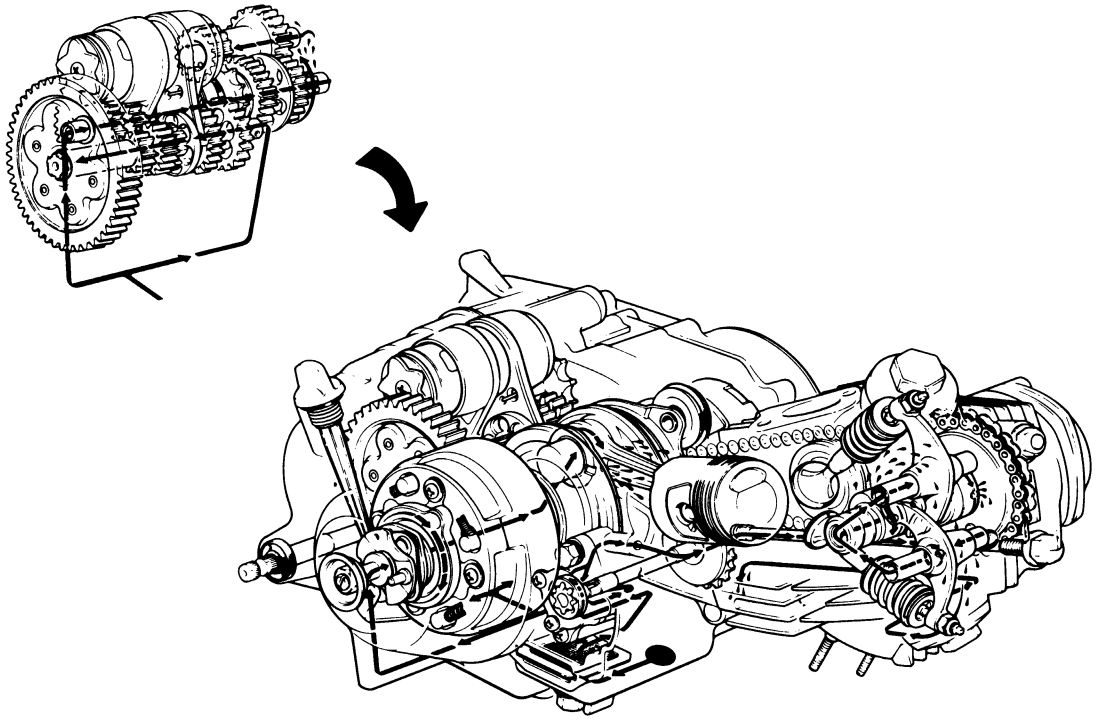

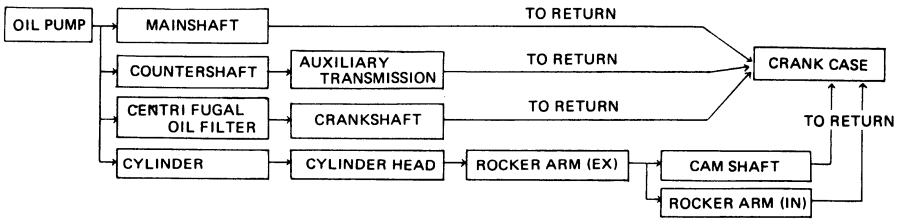

Date of Issue: Sept., 1980
© HONDA MOTOR CO., LTD.

3. AUXILIARY TRANSMISSION

SHIFT FORKSHAFT
KNOCK PIN
IDLER GEAR SHAFT
SHIFT FORK
Disassembly and assembly, Page 174
IDLER GEAR
Disassembly and assembly, Page 174
PLATE
O-RING
GREASE
CHANGE LEVER
HIGH GEAR
BUSHING A
DRIVE SPROCKET
LOW GEAR
Disassembly and assembly, Page 174
COVER

Shift lever installation

CLIP

© HONDA MOTOR CO., LTD.

a. DISSASEMBLY/ASSEMBLY

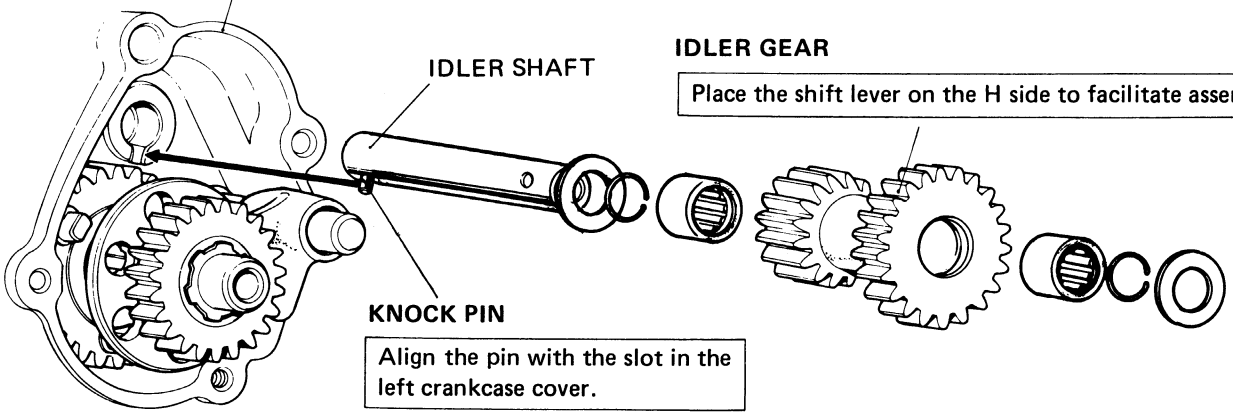

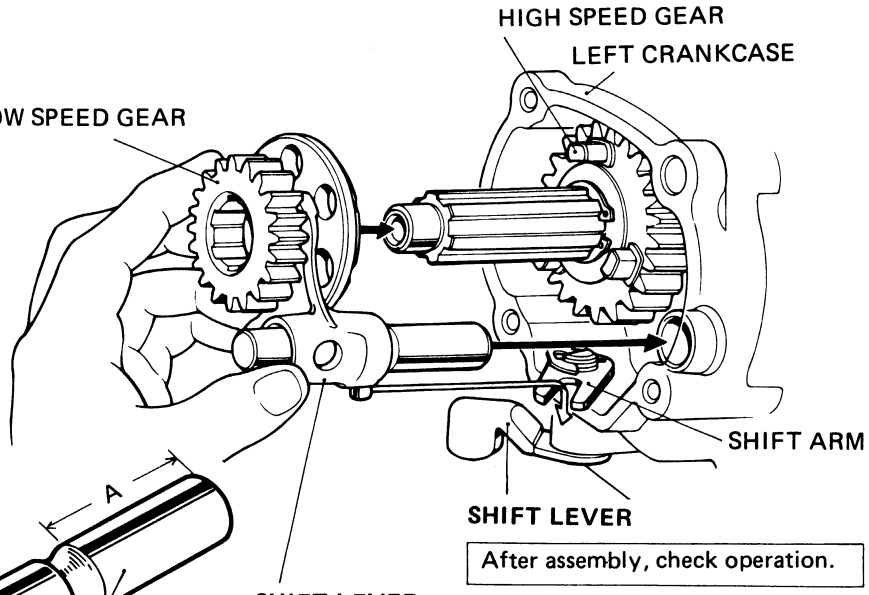

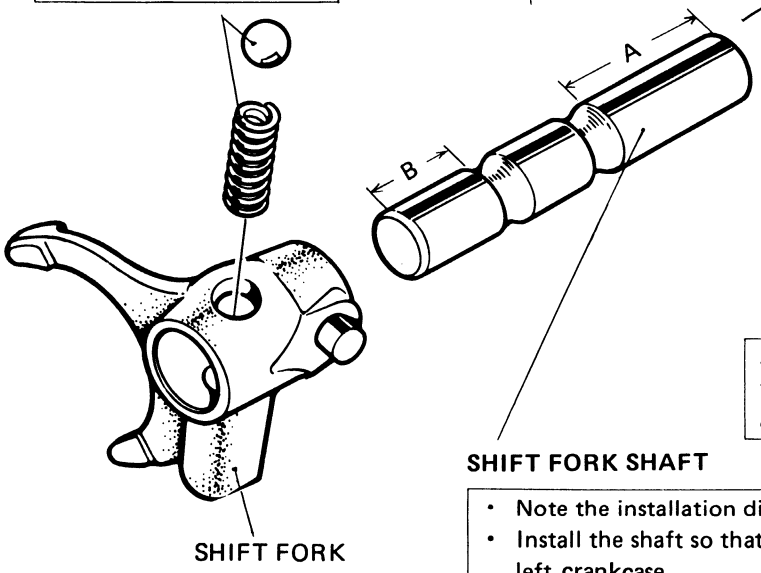

After installing the shift fork, check that the steel ball falls into the detent in the shaft by sliding the shaft back and forth several times.

SHIFT FORK SHAFT

- Note the installation direction.
- Install the shaft so that the long end "A" is in the left crankcase.

Date of Issue: Sept., 1980
© HONDA MOTOR CO., LTD.

b. INSPECTION

- **IDLER GEAR**

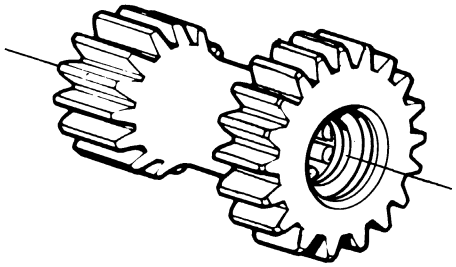

Make sure that the bearings rotate smoothly and are in good condition.

- **IDLER SHAFT O.D.**

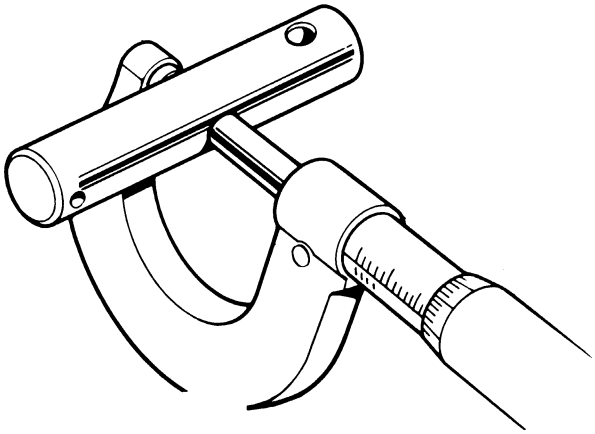

Standard	Service Limit
13.000–12.989 mm (0.5118–0.5114 in)	12.979 mm (0.5110 in)

- **GEARS**

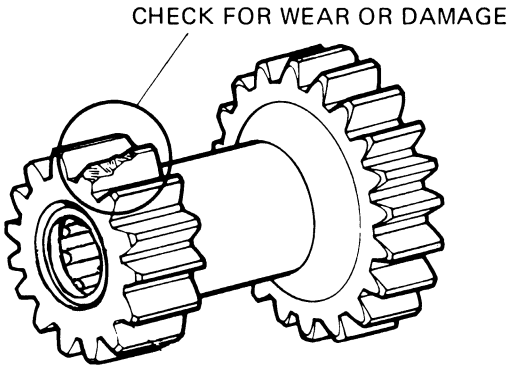

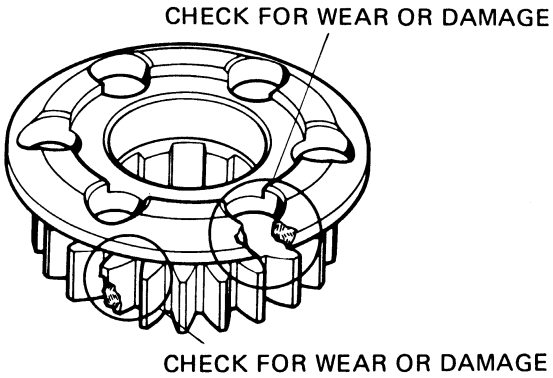

- **SHIFT FORK**

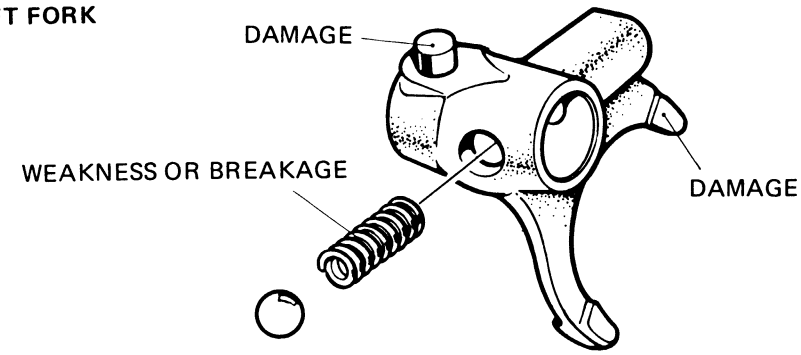

© HONDA MOTOR CO., LTD.

4. A.C.GENERATOR/CAM CHAIN TENSIONER

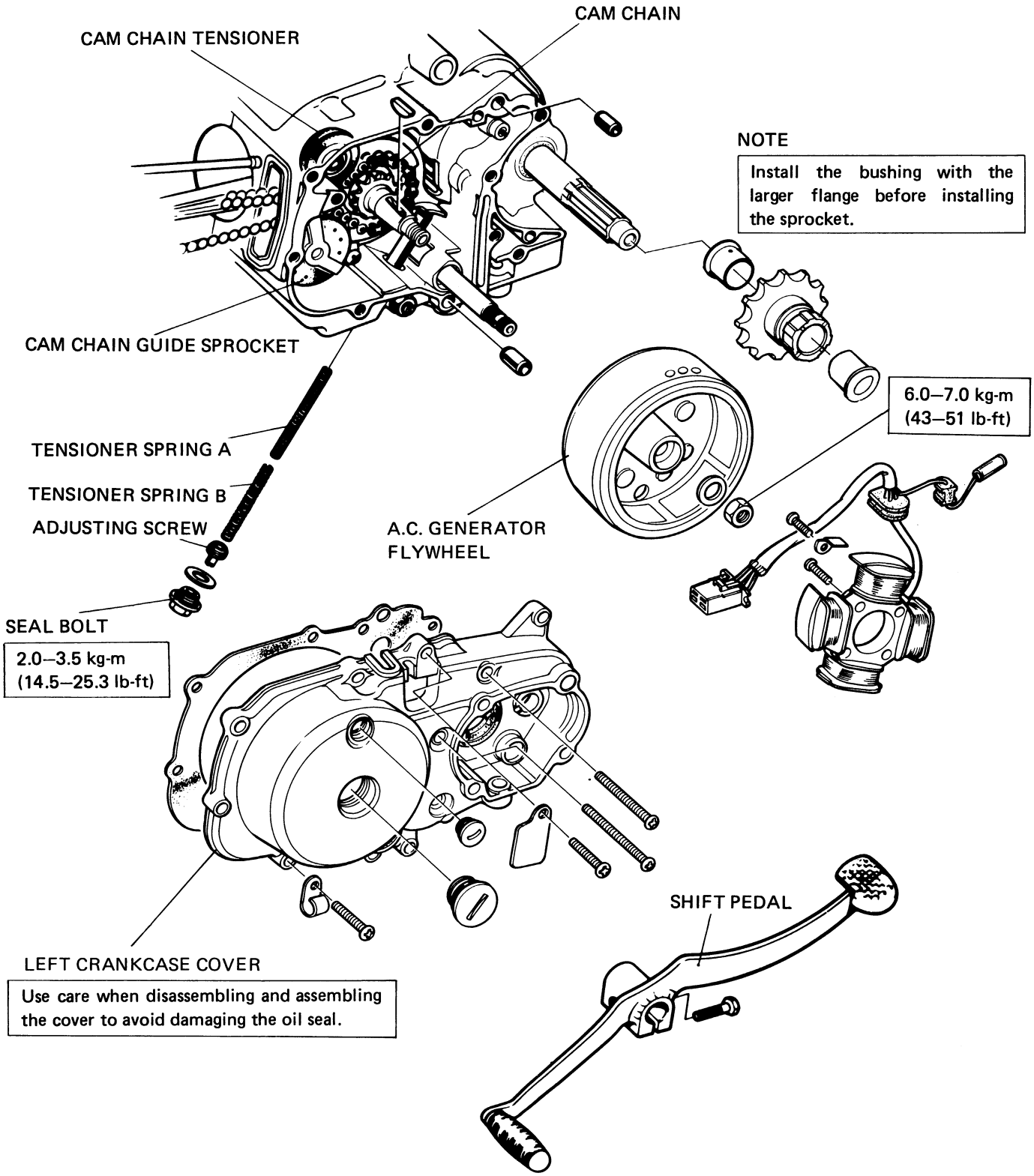

Date of Issue: Sept., 1980
© HONDA MOTOR CO., LTD.

- **A.C. GENERATOR REMOVAL**

Drain the oil from the engine.
Disconnect the A.C. Generator wires.
Loosen the foot peg bracket bolts.
Remove gearshift pedal.

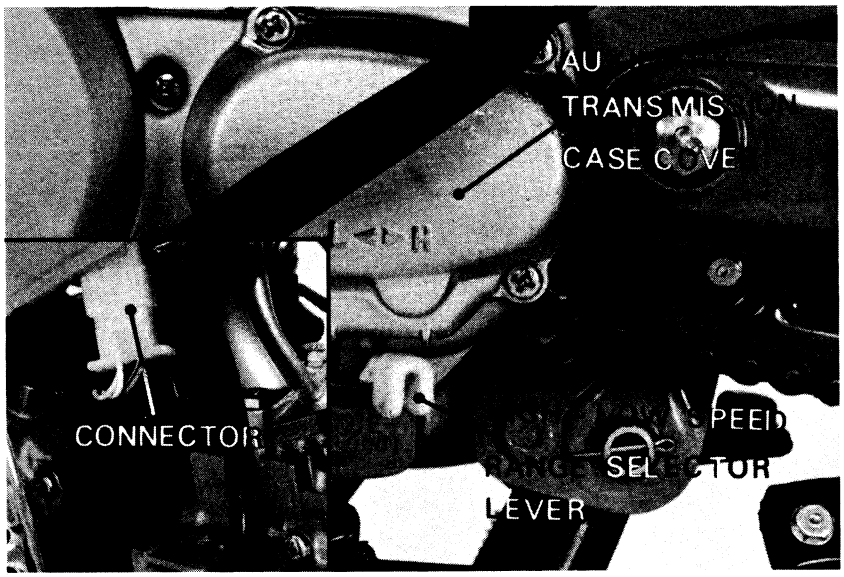

Remove the auxiliary transmission case cover and gears.
Remove the left crankcase cover.

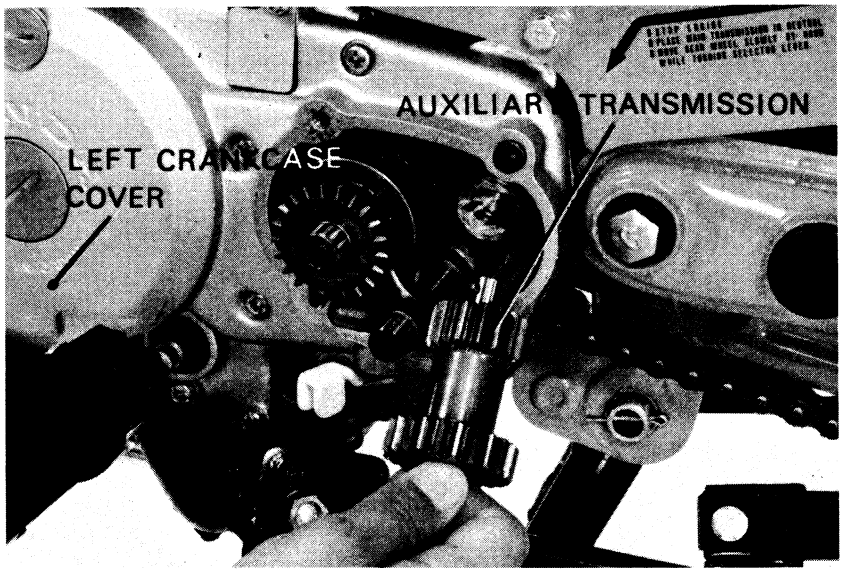

Remove the A.C. Generator rotor using the flywheel and rotor puller.

FLYWHEEL AND ROTER PULLER
(T/N 07933–0010000)

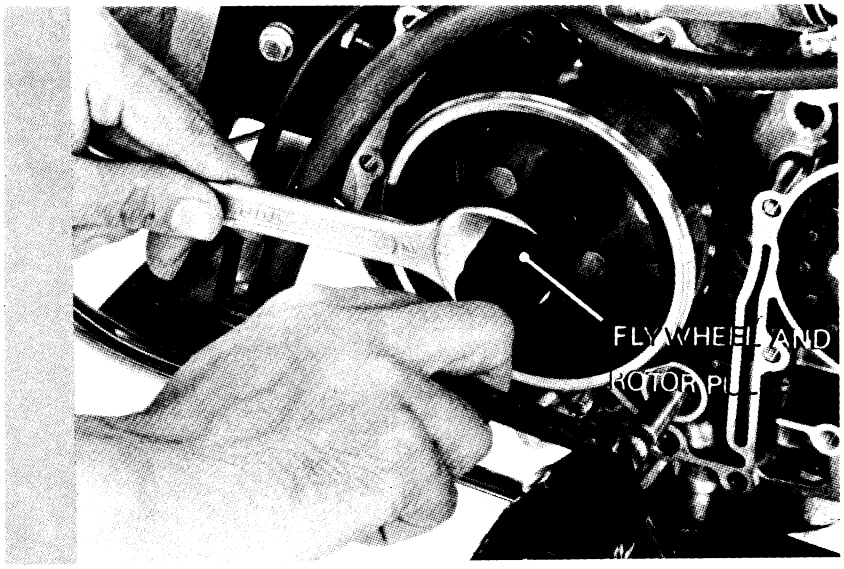

© HONDA MOTOR CO., LTD.

5. CARBURETOR

• CARBURETOR SPECIFICATIONS

Identification mark	PB21A
Main jet	#72
Jet needle mark	17D
Float level	10.7 mm
Idle speed	1500 ± 100 rpm
Pilot screw setting	See page 179

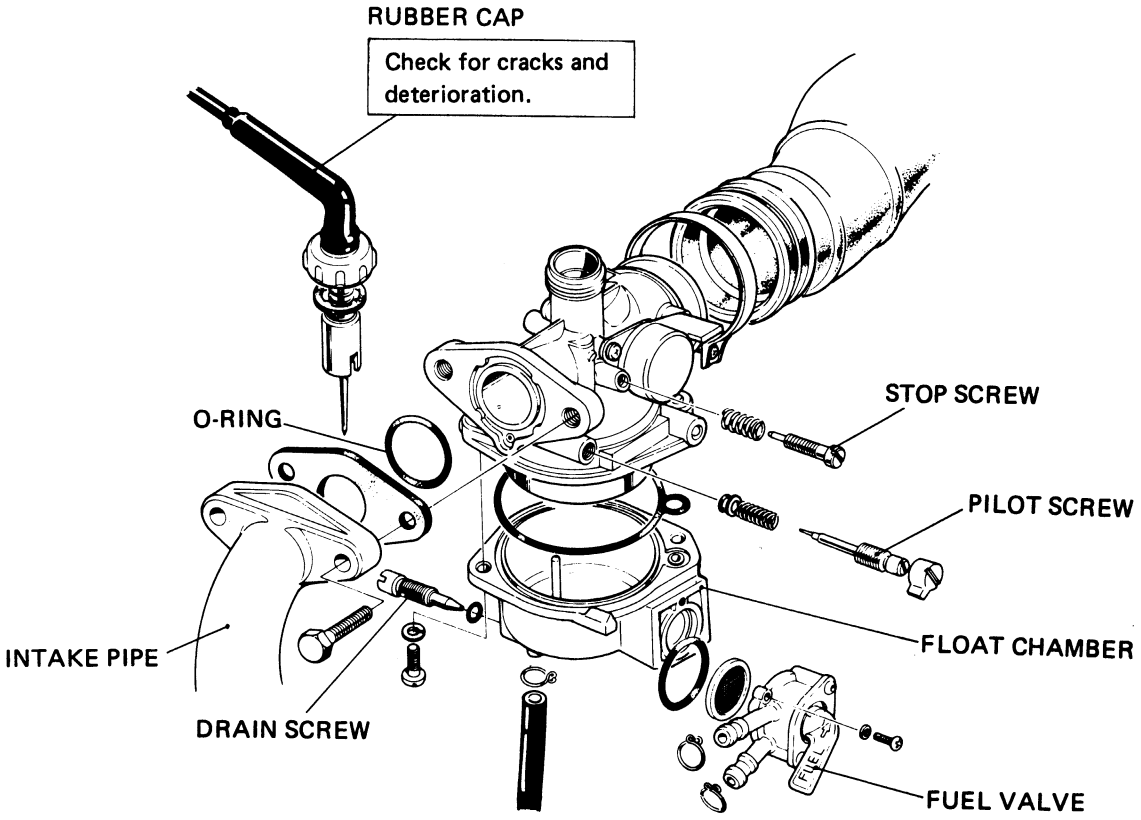

Date of Issue: Sept., 1980
© HONDA MOTOR CO., LTD.

• PILOT SCREW ADJUSTMENT

NOTE

- The pilot screw is factory pre-set and no adjustment is necessary unless the pilot screw is replaced.
- Refer to page 162 for pilot screw removal/installation.

Turn the pilot screw clockwise until it seats lightly and back it out to the specification given.
This is an initial setting prior to the final pilot screw adjustment.
INITIAL OPENING: 1-1/2 TURNS OUT

CAUTION

Damage to the pilot screw and seat will occur if the pilot screw is tightened against the seat.

Warm the engine up to operating temperature. Stop and go driving for 10 minutes is sufficient.
Connect a tachometer.
Adjust the idle speed with the throttle stop screw to 1500 rpm
Turn the pilot screw in or out to obtain the highest engine speed.
Readjust the throttle stop screw to obtain the specified idle speed.

IDLE SPEED: 1500 ± 100 rpm

• HIGH ALTITUDE ADJUSTMENT

For sustained High altitude operation (above 2,000 m/6,500 ft) install a #70 main jet and readjust idle speed.

(1) Remove the craburetor from the engine and remove the float bowl.
(2) Replace the standard #70 main jet.
(3) Assemble and install the carburetor.
(4) Adjust idle speed to 1500 ± 100 rpm., using the throttle stop screw.

CAUTION

Sustained operation at altitudes lower than 1,500m (5,000 ft) with the high altitude main jet installed may cause engine overheating and damage. For sustained operation below 1,500 m (5,000 ft), reinstall the standard main jet and readjust idle speed.

	Standard 2000m (6500ft) max.	High altitude type. 1500m (5000ft) min.
Main jet	#72	#70
Idle speed	1500 ± 100rpm	←
Pilot screw opening	Factory pre-set	←

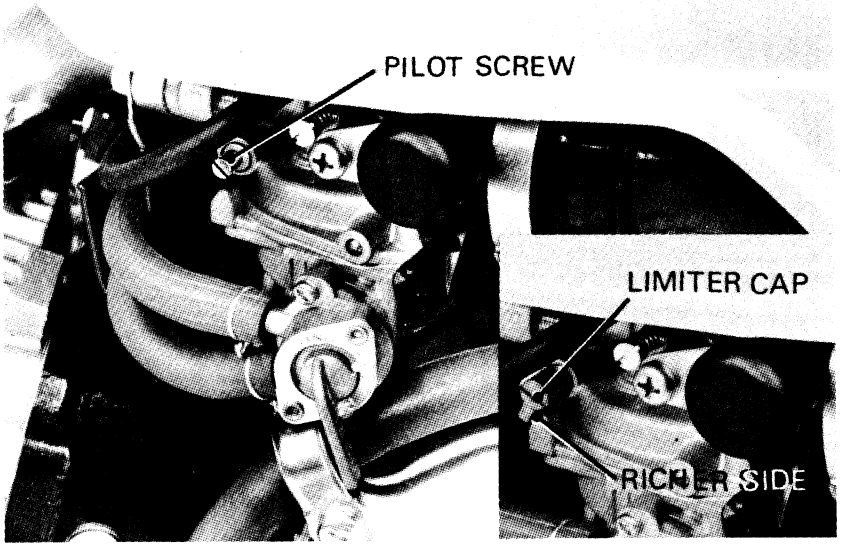

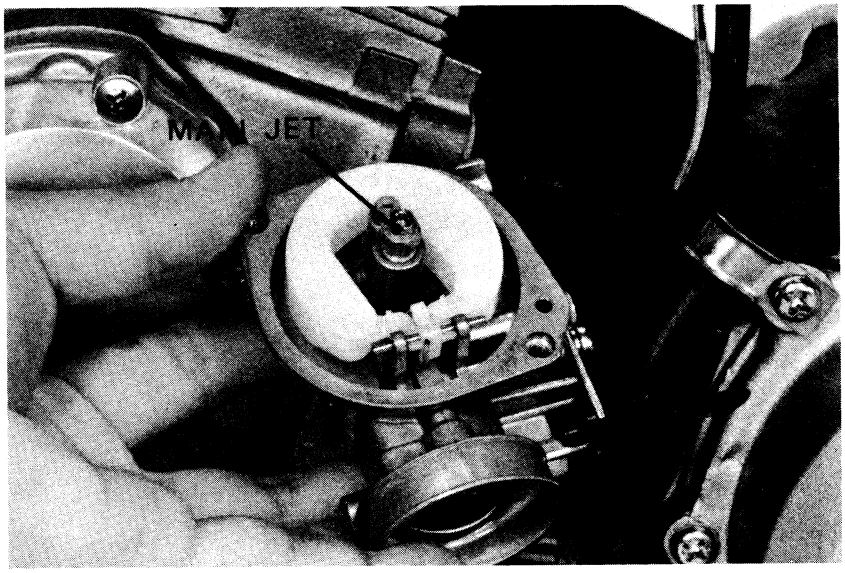

© HONDA MOTOR CO., LTD.

6. CABLE AND HARNESS ROUTING

- **CABLE ROUTING**

Route the brake, throttle and speedometer cables as shown.

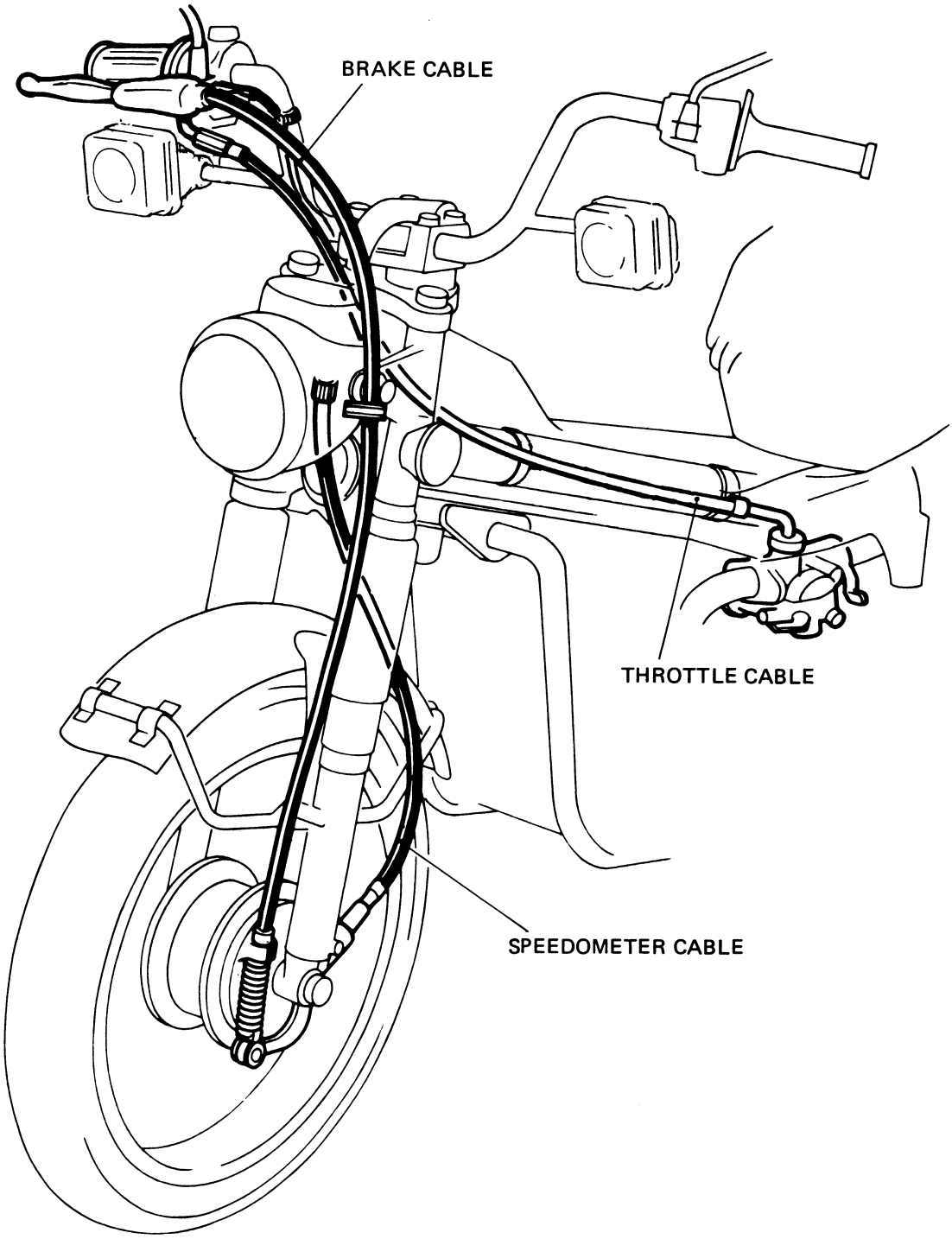

Date of Issue: Sept., 1980
© HONDA MOTOR CO., LTD.

- **WIRE HARNESS ROUTING**

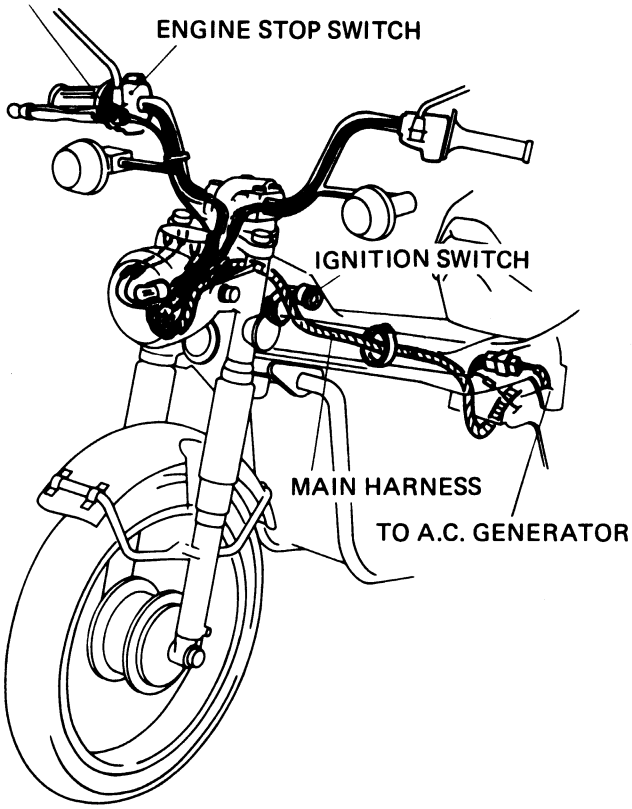

NOTE

Make sure that the battery cable is not pinched between the battery cover and frame.

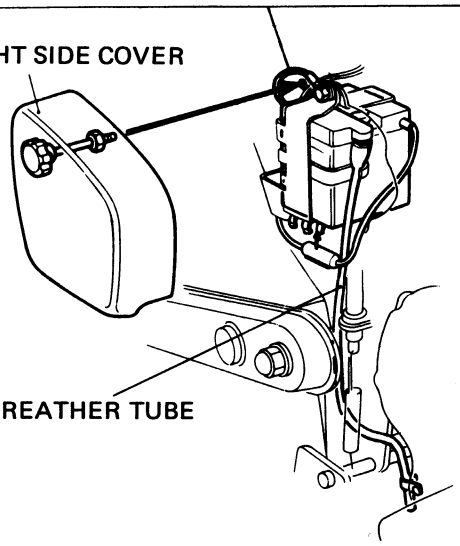

REAR HARNESS

Clamp the harness to the back of the rear fender.

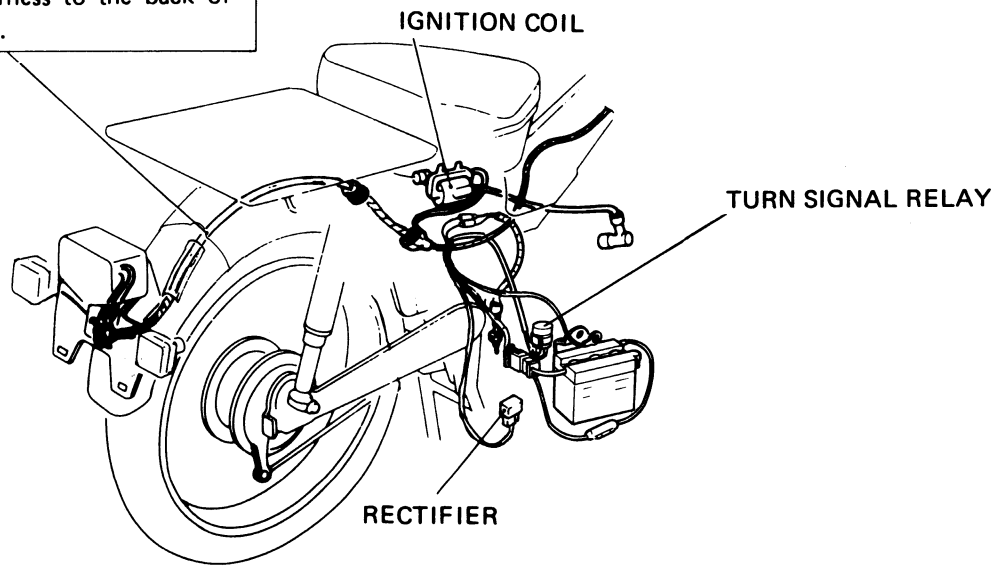

© HONDA MOTOR CO., LTD.

7. BATTERY

Remove the frame right side cover.
Remove the battery holder and battery.
Check the fluid level.
Remove the battery cover and filler caps. Add distilled water to the upper level mark. The electrolyte level must be maintained between the upper and lower level marks. If sulfation forms or sediments (paste) accumulate on the bottom, replace the battery.

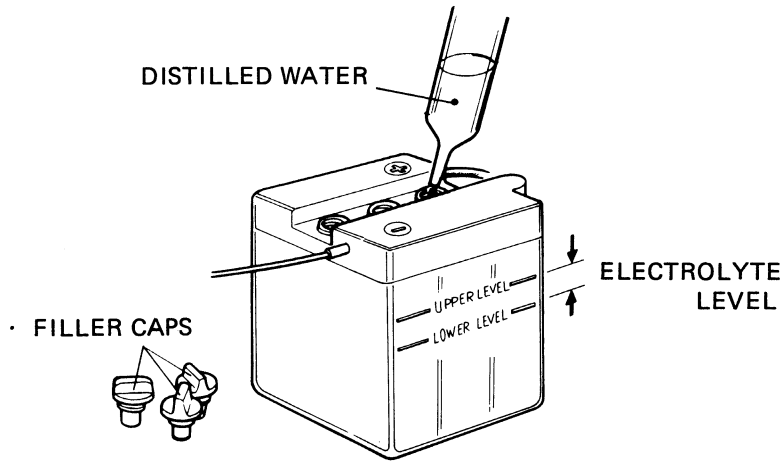

NOTE

Add distilled water only. Tap water will shorten the service life of the battery,

WARNING

The battery electrolyte contains sulfuric acid. *Protect your eyes, skin and clothing. In case of contact, flush thoroughly with water and call a doctor if your eyes were exposed.*

CAUTION

When checking battery electrolyte level or adding distilled water, make sure the breather tube is connected to the battery breather outlet.

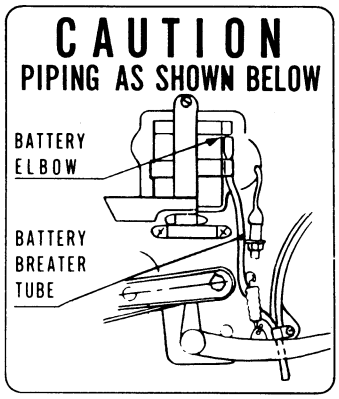

INSERT THE BATTERY BREATHER TUBE SECURELY

459 77

8. TAILLIGHT AND TURN SIGNALS

- **LENS REMOVAL/INSTALLATION**

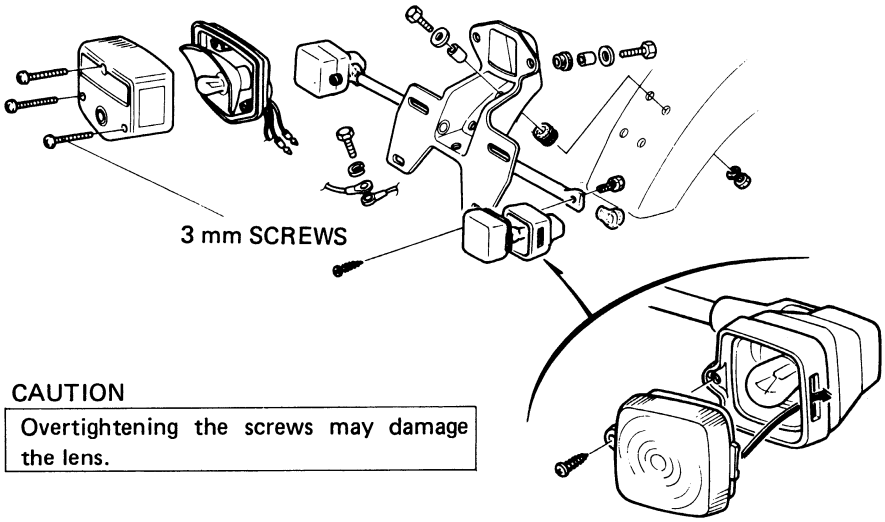

CAUTION

Overtightening the screws may damage the lens.

Date of Issue: Sept., 1980
© HONDA MOTOR CO., LTD.

9. WIRING DIAGRAM

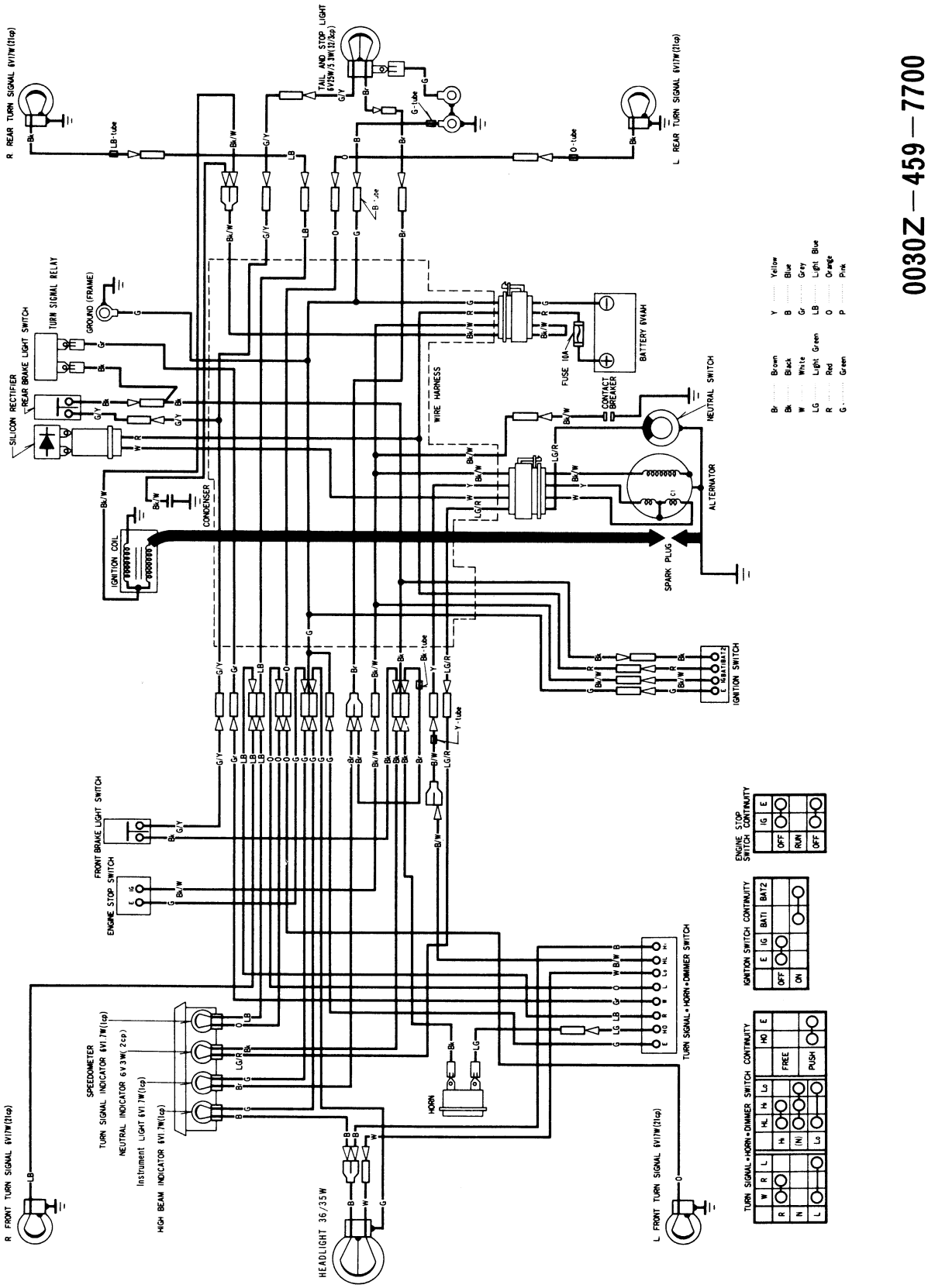

0030Z—459—7700

© HONDA MOTOR CO., LTD.

M E M O

Date of Issue: Sept., 1980
©HONDA MOTOR CO., LTD.

XI. '82 CT110 ADDENDUM

INTRODUCTION

This Shop Manual Addendum contains information for the 1982 CT110. Refer to the base shop manual and the previous addendums for procedures and service data not included in this addendum.

ALL INFORMATION, ILLUSTRATIONS, DIRECTIONS AND SPECIFICATIONS INCLUDED IN THIS PUBLICATION ARE BASED ON THE LATEST PRODUCT INFORMATION AVAILABLE AT THE TIME OF APPROVAL FOR PRINTING. HONDA MOTOR CO., LTD. RESERVES THE RIGHT TO MAKE CHANGES AT ANY TIME WITHOUT NOTICE AND WITHOUT INCURRING ANY OBLIGATION WHATEVER.

NO PART OF THIS PUBLICATION MAY BE REPRODUCED WITHOUT WRITTEN PERMISSION.

HONDA MOTOR CO., LTD.
Service Publications Office

CONTENTS

I. SPECIFICATIONS 186
II. SERVICE INFORMATION 187
III. INSPECTION/ADJUSTMENT 192
IV. CARBURETOR 192
V. IGNITION SYSTEM 194
VI. WIRING DIAGRAM 198

Date of Issue: Mar., 1982
©HONDA MOTOR CO., LTD.

1. SPECIFICATIONS

This addendum lists only specifications which are new for 1982. Refer to the base shop manual and to previous addendums for information not covered here.

FRAME		
Caster Angle	68°	
ELECTRICAL		
Ignition	CDI	
A.C. Generator	6V, 102W/5,000 rpm	
Spark Plug	Standard	DR8ES-L (NGK) or X24ESR-U (ND)
	For cold climate, below 5°C (41°F)	DR7ES (NGK) or X22ESR-U (ND)
	For extended high speed riding	DR8ES (NGK) or X27ESR-U (ND)

Date of Issue: Mar., 1982
©HONDA MOTOR CO., LTD.

2. SERVICE INFORMATION

TROUBLESHOOTING

ENGINE DOES NOT START OR IS HARD TO START

		Probable Cause:
1. Check if fuel is getting to carburetor	NOT GETTING TO CARBURETOR →	(1) No fuel in fuel tank (2) Clogged fuel tube or fuel filter (3) Clogged float valve (4) Clogged fuel tank cap breather tube.
GETTING TO CARBURETOR ↓		
2. Try spark test	WEAK OR NO SPARK →	(1) Faulty spark plug (2) Fouled spark plug (3) Faulty CDI unit (4) Broken or shorted high tension wire (5) Faulty A.C. generator (6) Broken or shorted ignition coil (7) Faulty pulse generator (8) Poorly connected, broken or shorted wires
GOOD SPARK ↓		
3. Test cylinder compression	LOW COMPRESSION →	(1) Faulty recoil starter (2) Valve clearance too small (3) Valve stuck open (4) Worn cylinder and piston rings (5) Damaged cylinder head gasket (6) Seized valve (7) Improper valve timing
COMPRESSION NORMAL ↓		
4. Start by following normal starting procedure	ENGINE FIRES BUT SOON STOPS →	(1) Choke excessively open (2) Carburetor pilot screw excessively closed (3) Air leaking past carburetor insulator (4) Improper ignition timing (CDI unit or pulse generator faulty)
ENGINE DOES NOT FIRE ↓		
5. Remove spark plug	WET PLUG →	(1) Carburetor flooded (2) Carburetor choke excessively closed (3) Throttle valve excessively open
DRY ↓		
6. Start with choke applied		

© HONDA MOTOR CO., LTD.

ENGINE LACKS POWER

		Probable Cause:
1. Raise wheels off ground and spin by hand	WHEEL DOES NOT SPIN FREELY →	(1) Brake dragging (2) Worn or damaged wheel bearing (3) Wheel bearing needs lubrication (4) Drive chain too tight (5) Rear axle nut excessively tightened
WHEEL SPINS FREELY ↓		
2. Check tire pressure with tire gauge	PRESSURE TOO LOW →	(1) Punctured tire (2) Faulty tire valve
PRESSURE NORMAL ↓		
3. Try rapid acceleration from low to second	ENGINE SPEED DOES NOT CHANGE WHEN CLUTCH IS RELEASED →	(1) Clutch slipping (2) Worn clutch disc/plate (3) Warped clutch disc/plate
ENGINE SPEED LOWERED WHEN CLUTCH IS RELEASED ↓		
4. Lightly accelerate engine	ENGINE SPEED NOT INCREASED SUFFICIENTLY →	(1) Carburetor choke closed (2) Clogged air cleaner (3) Restricted fuel flow (4) Clogged fuel tank breather tube (5) Clogged muffler
ENGINE SPEED INCREASED ↓		
5. Check ignition timing	INCORRECT →	(1) Faulty CDI unit (2) Faulty pulse generator (3) Faulty ignition advancer
CORRECT ↓		
6. Check valve clearance	INCORRECT →	(1) Improper valve adjustment (2) Worn valve seat
CORRECT ↓		
7. Test cylinder compression using a compression gauge	TOO LOW →	(1) Valve stuck open (2) Worn cylinder and piston rings (3) Leaking head gasket (4) Improper valve timing
NORMAL ↓		
8. Check carburetor for clogging	CLOGGED →	(1) Carburetor not serviced frequently enough
NOT CLOGGED ↓		
9. Remove spark plug	FOULED OR DISCOLORED →	(1) Use of plug with improper heat range
NOT FOULED OR DISCOLORED ↓		

Date of Issue: Mar., 1982
©HONDA MOTOR CO., LTD.

10. Remove oil level gauge and check oil level	OIL LEVEL INCORRECT →	(1) Oil level too high (2) Oil level too low (3) Contaminated oil
CORRECT ↓		
11. Remove cylinder head cover and inspect lubrication	VALVE TRAIN NOT LUBRICATED PROPERLY →	(1) Clogged oil passage (2) Clogged oil control orifice
VALVE TRAIN LUBRICATED PROPERLY ↓		
12. Check if engine overheats	OVERHEATED →	(1) Excessive carbon build-up in combustion chamber (2) Use of improper quality of fuel (3) Clutch slipping (4) Fuel-air mixture too lean
NOT OVERHEATED ↓		
13. Accelerate or run at high speed	ENGINE KNOCKS →	(1) Worn piston and cylinder (2) Fuel-air mixture too lean (3) Use of improper grade of fuel (4) Excessive carbon build-up in combustion chamber (5) Ignition timing too advanced (Faulty CDI unit or spark advancer)
ENGINE DOES NOT KNOCK		

POOR PERFORMANCE AT LOW AND IDLE SPEEDS

		Probable Cause:
1. Check ignition timing and valve clearance	INCORRECT →	(1) Improper valve clearance (2) Improper ignition timing (Faulty CDI unit or spark advancer)
CORRECT ↓		
2. Check carburetor pilot screw adjustment	INCORRECT →	(1) Fuel-air mixture too lean (2) Fuel-air mixture too rich
CORRECT ↓		
3. Check if air is leaking past carburetor insulator	LEAKING →	(1) Deteriorated insulator O-ring (2) Loose carburetor
NOT LEAKING ↓		
4. Try spark test	WEAK OR INTERMITTENT SPARK →	(1) Faulty, carbon or wet fouled spark plug (2) Faulty CDI unit (3) A.C. generator faulty (4) Faulty ignition coil (5) Faulty pulse generator (6) Faulty spark advancer
GOOD SPARK		

©HONDA MOTOR CO., LTD.

POOR PERFORMANCE AT HIGH SPEEDS

		Probable Cause:
1. Check ignition timing and valve clearance	INCORRECT →	(1) Improper valve clearance (2) Faulty CDI unit (3) Faulty pulse generator (4) Faulty spark advancer
CORRECT ↓		
2. Disconnect fuel tube at carburetor	FUEL FLOW RESTRICTED →	(1) Lack of fuel in tank (2) Clogged fuel line (3) Clogged fuel tank breather tube (4) Clogged fuel valve
FUEL FLOWS FREELY ↓		
3. Remove carburetor and check for clogged jet	CLOGGED →	(1) Clean
NOT CLOGGED ↓		
4. Clean valve timing	INCORRECT →	(1) Cam sprocket not installed properly
CORRECT ↓		
5. Check valve spring tension	WEAK →	(1) Faulty spring
NOT WEAKENED		

Date of Issue: Mar., 1982
©HONDA MOTOR CO., LTD.

MAINTENANCE SCHEDULE

Perform the PRE-RIDE INSPECTION in the Owner's Manual at each scheduled maintenance period.

I: Inspect and Clean, Adjust, Lubricate or Replace, if necessary.
C: Clean
R: Replace
A: Adjust
L: Lubricate

	FREQUENCY / ITEM	WHICHEVER → COMES FIRST ↓ / EVERY	ODOMETER READING (NOTE 4) 600mi. (1,000km)	2,500mi. (4,000km)	5,000mi. (8,000km)	7,500mi. (12,000km)	Refer to Page
EMISSION RELATED ITEMS	*FUEL LINE			I	I	I	118
	*FUEL STRAINER		C	C	C	C	193
	*THROTTLE OPERATION		I	I	I	I	122
	*CARBURETOR-CHOKE			I	I	I	122
	AIR CLEANER	NOTE 1		C	C	C	117
	CRANKCASE BREATHER (USA only)	NOTE 2		C	C	C	117
	SPARK PLUG			R	R	R	151
	*VALVE CLEARANCE		I	I	I	I	152
	ENGINE OIL	YEAR	R	REPLACE EVERY 1,250mi. (2,000km)			151
	*ENGINE OIL FILTER SCREEN				C		116
	*CAM CHAIN TENSION		A	A	A	A	121
	*CARBURETOR-IDLE SPEED		I	I	I	I	122
NON-EMISSION RELATED ITEMS	DRIVE CHAIN	NOTE 3	I, L EVERY 300mi. (500km)				123
	BATTERY	MONTH	I	I	I	I	154
	BRAKE SHOE WEAR			I	I	I	125
	BRAKE SYSTEM		I	I	I	I	125
	*BRAKE LIGHT SWITCH		I	I	I	I	127
	*HEADLIGHT AIM		I	I	I	I	127
	CLUTCH		I	I	I	I	128
	SIDE STAND			I	I	I	128
	*SUSPENSION		I	I	I	I	128
	**SPARK ARRESTER (USA only)			C	C	C	129
	*NUTS, BOLTS, FASTENERS	NOTE 3	I	I	I	I	130
	**WHEELS/SPOKES	NOTE 3	I	I	I	I	130
	**STEERING HEAD BEARING		I			I	131

* Should be serviced by an authorized HONDA dealer, unless the owner has proper tools and service data and is mechanically qualified.
** In the interest of safety, we recommend these items be serviced ONLY by an authorized HONDA dealer.

NOTES:
1. Service more frequently when riding in dusty areas.
2. Service more frequently when riding in rain or at full throttle. (USA ONLY)
3. Service more frequently when riding OFF-ROAD.
4. For higher odometer readings, repeat at the frequency interval established here.

©HONDA MOTOR CO., LTD.

3. INSPECTION/ ADJUSTMENT

ENGINE OIL RECOMMENDATION

Use HONDA 4-STROKE OIL or equivalent.
API SERVICE CLASSIFICATION: SE or SF
Viscosity: SAE 10W-40
Other viscosities may be used when the average temperature in your riding area is within the chart's indicated range.

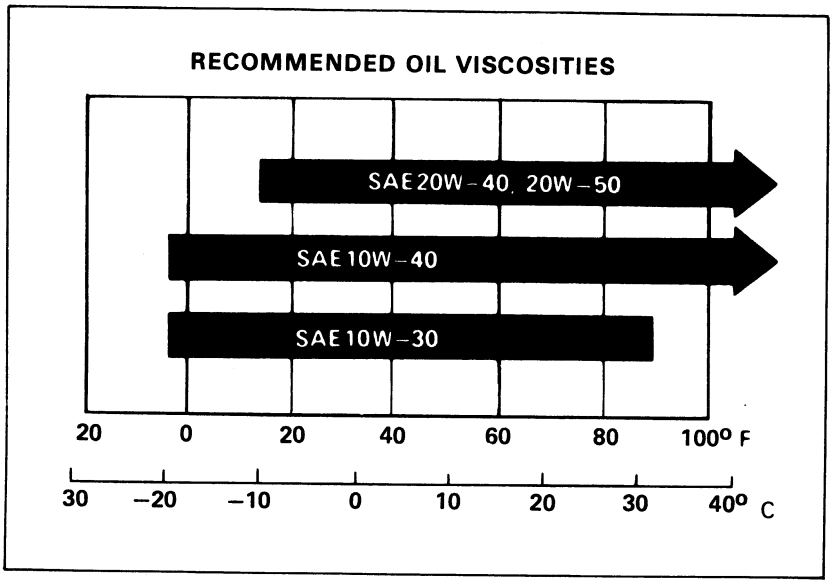

FUEL STRAINER

Turn the fuel valve OFF.
Loosen the carburetor drain screw and drain the fuel from the carburetor into a suitable container.

WARNING

Gasoline is flammable and is explosive under certain conditions. Do not smoke or allow flames or sparks near the equipment while draining fuel.

Remove the fuel filter bolt and pull out the fuel filter and O-rings.
Wash the fuel filter in clean non-flammable or high flash point solvent.
Reinstall the fuel filter and new O-rings into the fuel valve. Then make sure the new O-rings are in place.
Hand tighten the fuel filter bolt, then torque to specification.

TORQUE: 3-5 N·m (0.3-0.5 kg-m, 2-4 ft-lb)

After installing, turn the fuel valve ON and check that there are no fuel leaks.

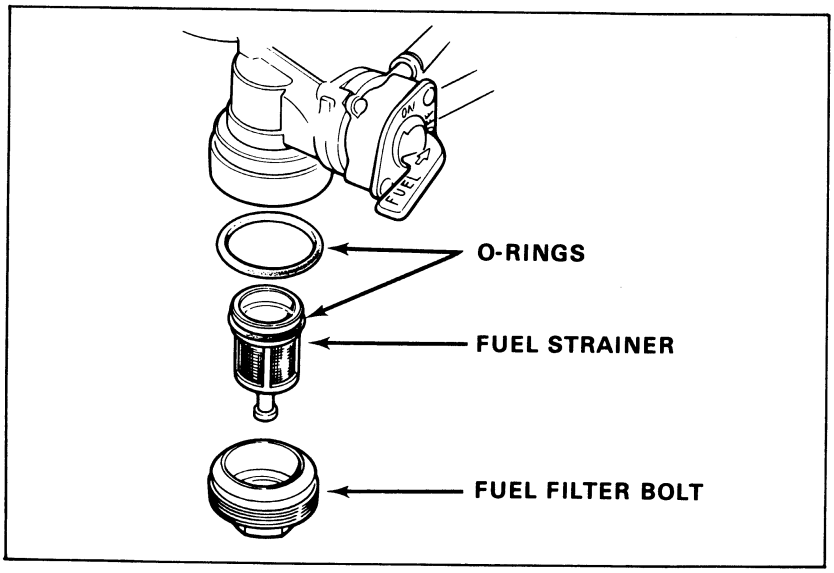

4. CARBURETOR

SLOW JET

Remove the carburetor (see pages 78-79).
Remove the float chamber body.
Remove the float arm pin.
Remove the float and float valve.

Remove the main jet, needle jet holder, needle jet and slow jet.
Blow out all jets and body openings with compressed air.
Inspect each part for wear and damage.

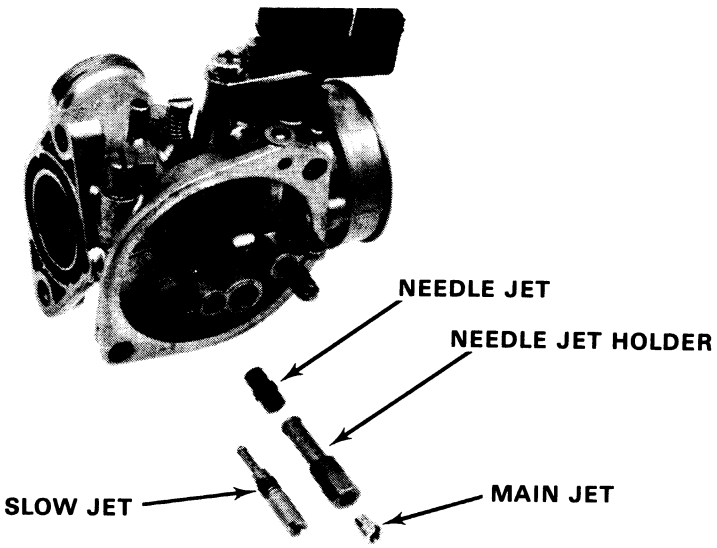

Date of Issue: Mar., 1982
©HONDA MOTOR CO., LTD.

HIGH ALTITUDE ADJUSTMENT (U.S.A. only)

When the vehicle is to be operated continuously above 6,500 feet (2,000 m), the carburetor must be readjusted as described below to improve driveability and decrease exhaust emissions.

Remove the carburetor.
Remove the carburetor float chamber.
Remove the #72 main jet and install the #70 main jet.

MAIN JET SPECIFICATIONS

Altitude	Main Jet
Above 6,500 feet (2,000 m)	#70
Below 5,000 feet (1,500 m)	#72

Reassemble and install the carburetor.
Warm up the engine to operating temperature. Stop and go driving for 10 minutes is sufficient.

Adjust the idle speed to 1,500 ± 100 rpm with the throttle stop screw.

NOTE

This adjustment must be made at high altitude to ensure proper high altitude operation.

Attach the Vehicle Emission Control Information Update label as shown.

NOTE

- Instructions for obtaining Vehicle Emission Control Information Update labels are given in Service Newsletter No. 132.
- Do not attach the label to any part that can be easily removed from the vehicle.

CAUTION

Continuous operation at an altitude lower than 5,000 feet (1,500 m) with the carburetor adjusted for high altitudes may cause the engine to idle roughly and stall and could cause engine damage from overheating.

When the vehicle is to be operated continuously below 5,000 feet (1,500 m), reinstall the #72 main jet and adjust the idle speed to 1,500 ± 100 rpm. Be sure to do these adjustments at low altitude.

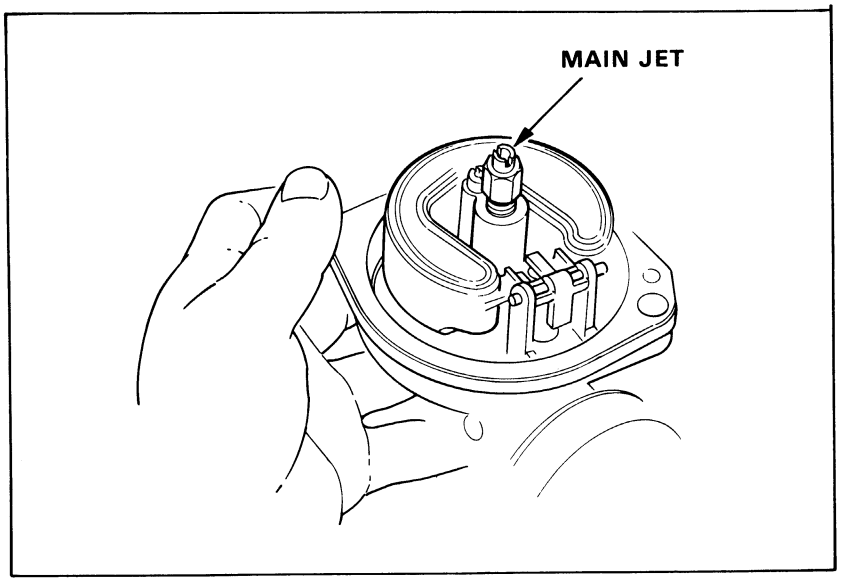

VEHICLE EMISSION CONTROL UPDATE LABEL

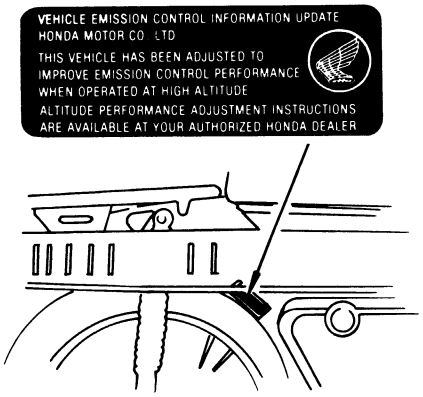

©HONDA MOTOR CO., LTD.

5. IGNITION SYSTEM

Ignition timing does not normally need to be adjusted since the CDI (Capacitive Discharge Ignition) is factory pre-set.

Item	Specification	
Spark plug	Standard	DR8ES-L (NGK) or X24ESR-U (ND)
	For cold climate below 5°C (41°F)	DR7ES (NGK) or X22ESR-U (ND)
	For extended high speed riding	DR8ES (NGK) or X27ESR-U (ND)
Spark plug gap	0.6-0.7 mm (0.0024-0.0028 in)	
Ignition timing		
Initial	10 ± 2° BTDC at 1,500 rpm (F mark)	
Advance starts	1,950 ± 150 rpm	
Full advance	32 ± 2° BTDC at 3,400 rpm	
A.C. generator	102 W at 5,000 rpm	

IGNITION

TROUBLESHOOTING

The probable causes listed below cover ignition-related trouble only. Refer to Troubleshooting, page 187, and qualify other factors that affect performance (fuel delivery, compression, etc.).

Engine starts hard or not at all

1. No spark at plug
2. Improper ignition timing
3. Faulty spark plug

No spark at plug

1. Engine stop switch "OFF"
2. Poorly connected, broken or shorted wires
   — Between A.C. generator and ignition coil
   — Between CDI unit and engine stop switch
   — Between CDI unit and ignition coil
   — Between ignition coil and spark plug
   — Between pulse generator and CDI unit
3. Faulty ignition coil
4. Faulty CDI unit
5. Faulty pulse generator
6. Faulty A.C. generator

Engine starts but runs poorly

1. Ignition primary circuit
   — Faulty ignition coil
   — Loose or bare wire
   — Faulty A.C. generator
2. Ignition secondary circuit
   — Faulty plug
   — Faulty CDI unit
   — Faulty pulse generator
   — Faulty high tension wire
3. Improper ignition timing
   — Faulty advancer rotor
   — Faulty pulse generator
   — Faulty CDI unit

Date of Issue: Mar., 1982
©HONDA MOTOR CO., LTD.

IGNITION COIL

REMOVAL

Remove the exhaust pipe.
Remove the fuel tank (page 96).
Remove the spark plug cap from the spark plug.
Remove the two bolts holding the ignition coil.
Disconnect the ignition coil wire.
Remove the ignition coil.

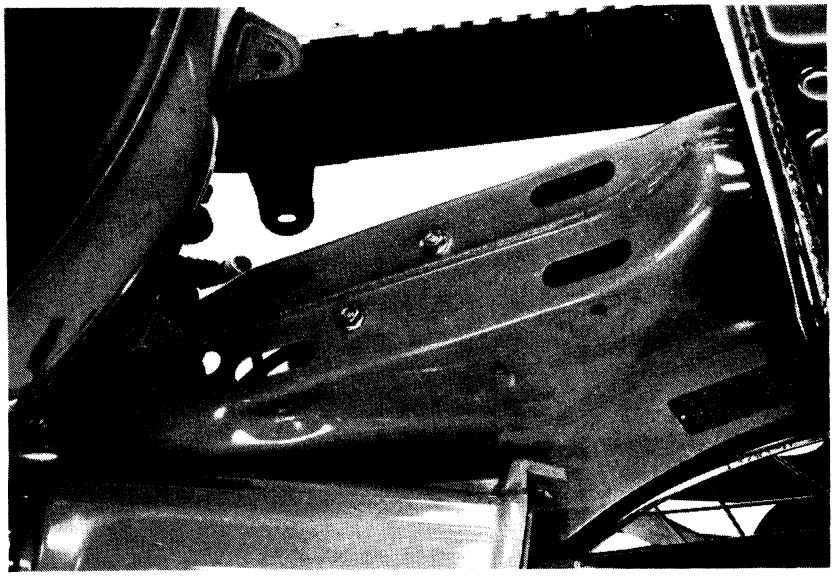

INSPECTION

Check the resistance of the primary and secondary coils.

PRIMARY COIL: 0.2 - 0.8 Ω
SECONDARY COIL: 8 - 15K Ω

If either resistance is not within its specified range, replace the coil.

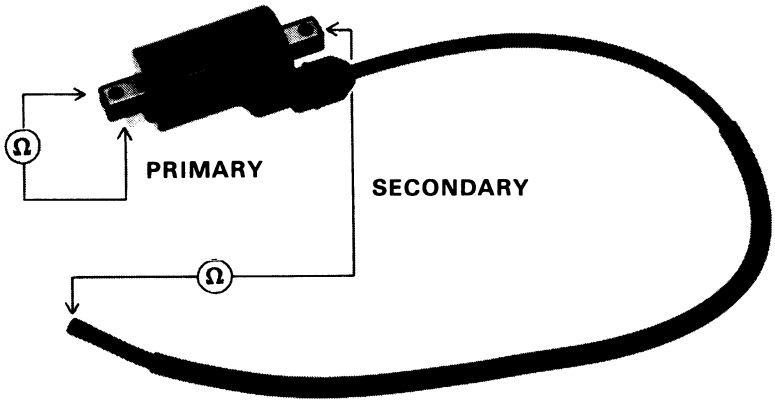

INSTALLATION

Install the ignition coil in the reverse order of removal.

A.C. GENERATOR

Disconnect the A. C. generator wire coupler and test as follows:

NOTE

It is not necessary to remove the stator coil to make this test.

Check the resistance for the wires listed.

Yellow and ground:	0.3 — 0.6 Ω
Black/red and ground:	290 — 520 Ω
Pink and white/yellow:	0.3 — 0.6 Ω

If one or more resistance is not within the ranges given, replace the stator (page 160).

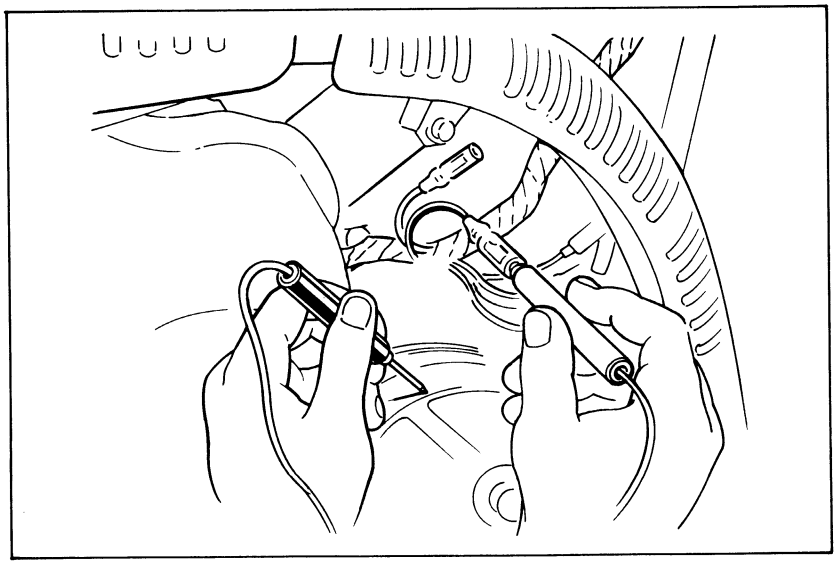

© HONDA MOTOR CO., LTD.

CDI UNIT

Remove the right side cover, and battery case.
Disconnect the CDI wire coupler.
Remove the CDI unit.

CDI UNIT INSPECTION

Replace the CDI unit if any of the readings are not within the limits shown in the table.

Check resistances between the leads with either a SANWA (P/N 7308-002-0000) or KOWA (TH-5H) electrical tester.

Make sure the tester is equipped with serviceable batteries.

Select the correct range and perform zero adjustment before testing to ensure accurate readings.

SANWA: xK
KOWA: x100

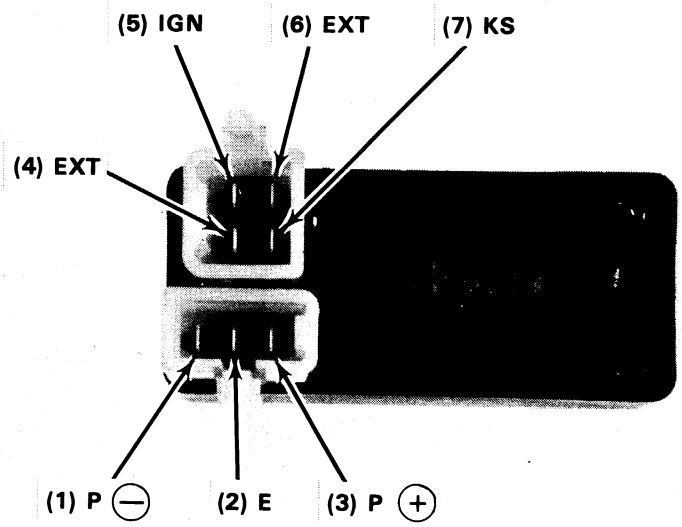

(−) \ (+)	(7)	(6)	(4)	(2)	(3)	(1)	(5)
(7)		∞	∞	∞	∞	∞	∞
(6)	5-100		∞	∞	∞	∞	∞
(4)	∞	∞		∞	∞	∞	∞
(2)	∞	∞	1-50		∞	0	∞
(3)	∞	∞	2-60	2-60		2-60	∞
(1)	∞	∞	1-50	0	∞		∞
(5)	∞	∞	∞	∞	∞	∞	

Date of Issue: Mar., 1982
©HONDA MOTOR CO., LTD.

PULSE GENERATOR RESISTANCE

Disconnect the pulse generator wires.
Measure the resistance between the blue/yellow and green wires.

RESISTANCE: 90-110 Ω

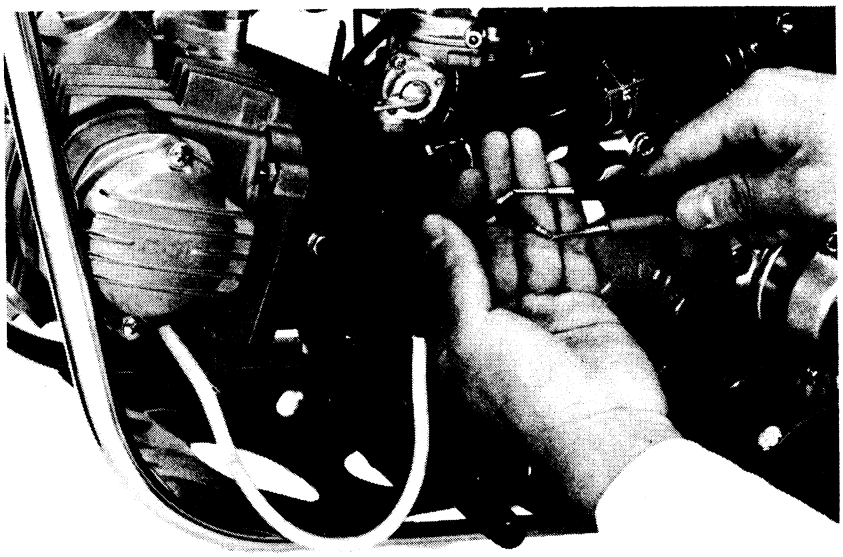

IGNITION TIMING

Remove the timing hole cap.
Connect a timing light.
Start the engine and allow it to idle.

IDLE (1,500 rpm): F mark should be aligned with index mark.

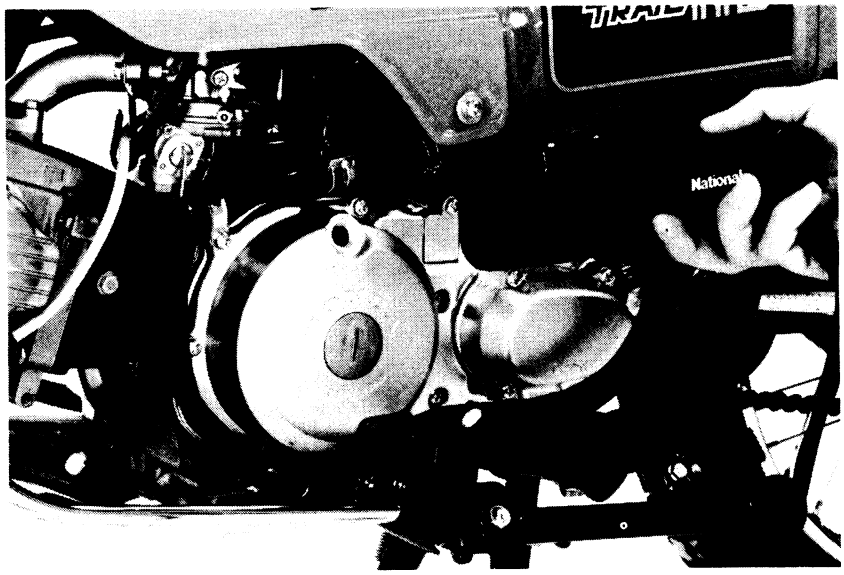

©HONDA MOTOR CO., LTD.

6. WIRING DIAGRAM

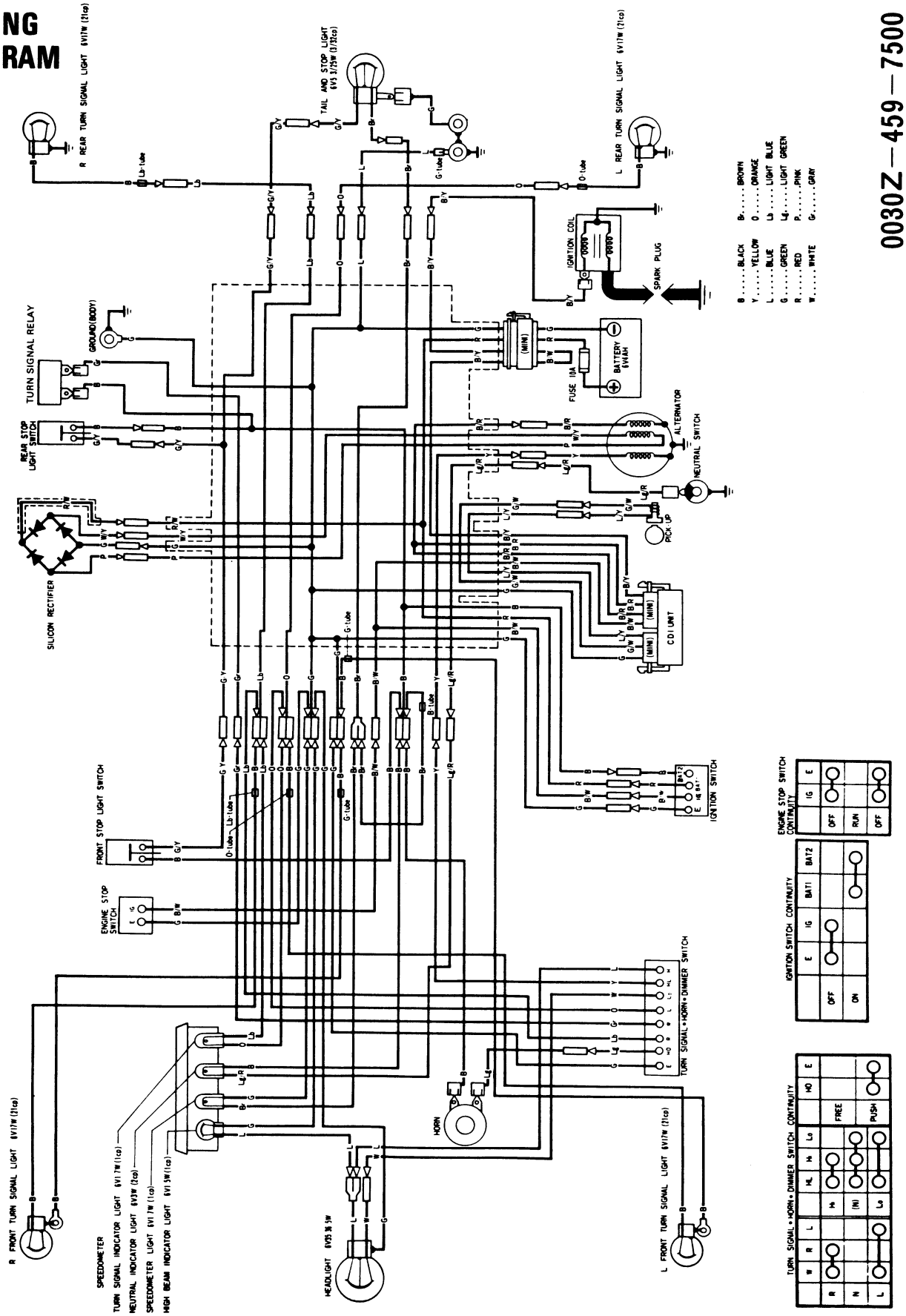

0030Z—459—7500

Date of Issue: Mar., 1982
©HONDA MOTOR CO., LTD.