# Repair Manual
# BMW R 60/7 – R 100 RS

**BMW AG Sparte Motorrad**
Service Department

# Workshop Manual

# BMW R 60/7
# R 75/7
# R 80/7
# R 100/7
# R 100 T
# R 100
# R 100 S
# R 100 CS
# R 100 RT
# R 100 RS

IS

3
5
7
9
11
13
15
16
17

# Table of contents


| section | chapter | Page |
|---|---|---|
| 00 | Maintenance and general hints | 00 – 0/1 |
| | Introduction | 00 – 0/3 |
| 11 | Engine | 11 – 0/1 |
| 12 | Engine-Electrical | 12 – 0/1 |
| 13 | Fuel supply and adjustments | 13 – 0/1 |
| 16 | Fuel tank and lines | 16 – 0/1 |
| 18 | Exhaust system | 18 – 0/1 |
| 21 | Clutch | 21 – 0/1 |
| 23 | Transmission | 23 – 0/1 |
| 26 | Drive shaft | 26 – 0/1 |
| 31 | Front fork | 31 – 0/1 |
| 32 | Steering | 32 – 0/1 |
| 33 | rear wheel drive | 33 – 0/1 |
| 34 | Brakes | 34 – 0/1 |
| 35 | Pedal assembly | 35 – 0/1 |
| 36 | Wheels and tyres | 36 – 0/1 |
| 46 | Frame | 46 – 0/1 |
| 51 | Equipment | 51 – 0/1 |
| 52 | Dual seat | 52 – 0/1 |
| 61 | General electrics | 61 – 0/1 |
| 62 | Instruments | 62 – 0/1 |
| 63 | Lights | 63 – 0/1 |


# 00 Maintenance and general instructions


Introduction ..... Page 00-0/ 3
Tightening torques to BMW and DIN standards ..... 00-0/ 5
Bolts and nuts, DIN standards and strength categories ..... 00-0/ 7
Summary of tightening torques ..... 00-0/ 9
Conversion and comparison table for statutory units of measurement ..... 00-0/11
Determining engine oil and fuel consumption ..... 00-0/13
Engine oil viscosity chart ..... 00-0/15
Conversion Table ..... 00-0/16
Engine oil circuit ..... 00-0/17

# INTRODUCTION

This workshop manual is intended to assist you in performing all the necessary repair and maintenance work on the motorcycle correctly. It should be made available to workshop personnel as a means of adding to the practical and theoretical knowledge they have received at the BMW Service Training School. Regular reference to this manual whenever necessary should make even higher service quality possible.

The numerical layout of the workshop manual is in accordance with the main motorcycle component and assembly group system, from 00 to 99, as used in the Flat Rate Manual.

Example of page numbering system:

33 - 10 / 2

Main group | Sub-group | page-number within sub-group

Specifications are provided at the start of each main group.

The special tools needed for correct and efficient repair work are summarized in the Service Information "Service Promotion, Group. Equipment Advisory", No. 0 16 80 (143R) and its supplements. Use of the special tools for the various operations is illustrated together with the descriptive text in this manual.

Note that the text always describes removal work in full. If installation by following the same work procedure in reverse is not possible, a note is provided.

Supplements to this manual include additions and alterations. A sheet marked "Alteration" is a substitute for and existing sheet and should be filed in its place. A sheet marked "Addition" is new, and should be added to the manual at the correct point.

*If technical modifications make it necessary to duplicate repair jobs under the same number, the second repair procedure with the identical number is printed on coloured paper and filed as an addition to the manual.*

When necessary, repair instructions will also be published as Service Information. Such instructions are automatically included in the next supplement to the workshop manual. As an additional source of information, you are recommended to refer to the illustrated Parts Service microfilms.

BMW Motorrad GmbH + Co.
Service Department (Technical)

All rights reserved. Not to be reproduced, translated or duplicated wholly or in part without written permission.
Subject to technical modifications, errors and omissions excepted.
Published by BMW Motorrad GmbH + Co.

Printed in Western Germany

# Tightening torques and preload forces

**Applicable** only to bolts in accordance with DIN 912, 931, 933, 960, 961, 6912 and nuts with a nut height of 0.8 x d in accordance with DIN 934 and exclusively for $\mu$ ges = 0.14 (Bolts phosphate treated, nuts without aftertreatment or galvanized. Lubricated condition: either non-lubricated or oiled.)

For cadmium plated bolts or nuts ($\mu$ ges $\approx$ 0.08 to 0.09) the tightening torque must be – 30% less than in the table with the same utilization factor of the bolt material.

**Not applicable** when another surface or lubricated condition of the thread is used or if there is a variation in the nut height. In such cases it is necessary to determine the values separately.

**Not applicable** to bolts with expansion shanks, self-locking screw connections as well as screw connections of parts made of different materials. The utilization factor of the bolt in the case of a standard metric thread is:

$$\sigma_{red} = 0.09 \cdot \sigma_{0.2}$$

| Thread | Tightening torque $M_A$ $\frac{mkp}{ft.\,lb}$ | | | | | | Preload force P v $\frac{kp}{lb}$ | | | | | |
|---|---|---|---|---|---|---|---|---|---|---|---|---|
| | Strength rating as per DIN 267 | | | | | | Strength rating as per DIN 267 | | | | | |
| | 5.6 | 6.8 | 6.9 | 8.8 | 10.9 | 12.9 | 5.6 | 6.8 | 6.9 | 8.8 | 10.9 | 12.9 |
| M 6 | $0.4^{+01}$<br>$2.9^{+07}$ | $0.6^{+01}$<br>$4.3^{+07}$ | $0.7^{+01}$<br>$5^{+07}$ | $0.9^{+01}$<br>$6.5^{+07}$ | $1.2^{+02}$<br>$8.7^{+14}$ | $1.5^{+02}$<br>$10.8^{+14}$ | 425<br>937 | 600<br>1323 | 685<br>1510 | 855<br>1885 | 1210<br>2668 | 1440<br>3175 |
| M 8 | $1.0^{+01}$<br>$7.25^{+07}$ | $1.6^{+02}$<br>$11.6^{+14}$ | $1.8^{+02}$<br>$13^{+14}$ | $2.2^{+02}$<br>$16^{+14}$ | $3.0^{+03}$<br>$21.7^{+22}$ | $3.6^{+04}$<br>$26^{+29}$ | 740<br>1631 | 1190<br>2624 | 1330<br>2932 | 1570<br>3462 | 2170<br>4785 | 2630<br>5799 |
| M 10 | $2.0^{+02}$<br>$14.5^{+14}$ | $3.2^{+04}$<br>$23.1^{+29}$ | $3.6^{+04}$<br>$26^{+29}$ | $4.3^{+05}$<br>$29^{+36}$ | $6.0^{+07}$<br>$43.4^{+5}$ | $7.3^{+08}$<br>$52.8^{+58}$ | 1160<br>2558 | 1880<br>4145 | 2090<br>4608 | 2500<br>5512 | 3480<br>7673 | 4200<br>9261 |
| M 20 x 1.5 | $1.0^{+01}$<br>$7.2^{+07}$ | $1.0^{+02}$<br>$7.2^{+14}$ | $1.8^{+02}$<br>$13^{+14}$ | $2.2^{+02}$<br>$16^{+14}$ | $3.0^{+03}$<br>$21.7^{+22}$ | $3.6^{+04}$<br>$26^{+29}$ | 740<br>1631 | 1190<br>2624 | 1330<br>2932 | 1610<br>3550 | 2200<br>4851 | 2670<br>5887 |
| M 8 x 1 | $2.0^{+02}$<br>$14.5^{+14}$ | $3.2^{+04}$<br>$23.1^{+29}$ | $3.6^{+04}$<br>$26^{+29}$ | $4.3^{+05}$<br>$29^{+36}$ | $6.0^{+07}$<br>$43.4^{+5}$ | $7.3^{+08}$<br>$52.8^{+58}$ | 1160<br>2558 | 1900<br>4189 | 2120<br>4674 | 2520<br>5556 | 3530<br>7784 | 4250<br>9371 |
| M 10 x 1.25 | $3.4^{+04}$<br>$24.6^{+29}$ | $5.4^{+06}$<br>$39^{+43}$ | $6.1^{+07}$<br>$44.1^{+5}$ | $7.2^{+08}$<br>$52^{+58}$ | $10.3^{+1}$<br>$74.5^{+72}$ | $12.0^{+15}$<br>$86.7^{+108}$ | 1720<br>3792 | 2710<br>5975 | 3070<br>6769 | 3610<br>7960 | 5100<br>11245 | 6090<br>13428 |
| M 12 x 1.25 | $3.4^{+04}$<br>$24.6^{+29}$ | $5.4^{+06}$<br>$39^{+43}$ | $6.1^{+07}$<br>$44.1^{+5}$ | $7.2^{+08}$<br>$52^{+58}$ | $10.3^{+1}$<br>$74.5^{+72}$ | $12.0^{+15}$<br>$86.7^{+108}$ | 1690<br>3726 | 2670<br>5887 | 3030<br>6681 | 3570<br>7872 | 5040<br>11113 | 6000<br>13230 |
| M 12 x 1.5 | $5.4^{+06}$<br>$39^{+43}$ | $8.6^{+1}$<br>$62.2^{+72}$ | $9.8^{+1}$<br>$71^{+72}$ | $11.5^{+15}$<br>$83^{+108}$ | $16.0^{+2}$<br>$115.7^{+145}$ | $20^{+2}$<br>$144.6^{+145}$ | 2330<br>5137 | 3720<br>8202 | 4180<br>9217 | 5030<br>11091 | 6970<br>15369 | 8510<br>18764 |
| M 14 x 1.5 | $8.3^{+1}$<br>$60.0^{+72}$ | $13.5^{+15}$<br>$97.6^{+108}$ | $15.5^{+15}$<br>$112^{+108}$ | $18.0^{+2}$<br>$130^{+145}$ | $25^{+3}$<br>$180.7^{+22}$ | $30.0^{+4}$<br>$217^{+29}$ | 3240<br>7144 | 5190<br>11444 | 5840<br>12877 | 6920<br>15258 | 9710<br>21410 | 11770<br>25953 |
| M 16 x 1.5 | $11.0^{+15}$<br>$19.5^{+108}$ | $18.0^{+2}$<br>$130^{+145}$ | $20.0^{+25}$<br>$144.6^{+18}$ | $24.0^{+3}$<br>$173.5^{+22}$ | $34.0^{+4}$<br>$246^{+29}$ | $40.0^{+5}$<br>$289^{+36}$ | 3890<br>8577 | 6240<br>13759 | 7020<br>15479 | 8380<br>18478 | 11800<br>26019 | 13960<br>30782 |
| M 18 x 1.5 | $16.0^{+2}$<br>$115.7^{+145}$ | $26.0^{+3}$<br>$188^{+22}$ | $29.0^{+35}$<br>$210^{+25}$ | $34.0^{+4}$<br>$246^{+29}$ | $49.0^{+5}$<br>$354^{+36}$ | $59.0^{+6}$<br>$426.6^{+434}$ | 5070<br>11179 | 8170<br>18015 | 9180<br>20242 | 10680<br>23549 | 15200<br>33516 | 18250<br>40159 |

The values stipulated in the table apply to a screw connection which corresponds to the above conditions. The tightening torque including tolerance is only given on the layout or assembly drawing if

a) a value different from the Standard sheet is necessary for operational reasons,
b) the strength rating of the bolt and nut is not evident.

**Note:** All deviations from this table have been taken into account in the technical data

A BMW Standard regarding tightening and test torques for screw connections with self-locking nuts as per DIN 985 and BMW N 113 48.0 is being prepared.

# Tightening torques

for self-locking nuts

BMW N 113 49.0

**Applicable** only to nuts in accordance with BMW N 113 48.0 and DIN 985.

Surface condition: Bolt phosphate treated or galvanized, nut galvanized and not waxed.
Lubricated condition of bolt: either non-lubricated or lightly oiled.

For cadmium plated bolts or nuts the tightening torque, with the same utilization factor of the bolt material, must be ≈ 30% less than the value in the table.

**Not applicable** in the case of another surface or lubricated condition of the thread, a strength rating of the bolt of less than 8.8 (e. g. 6.9) in conjunction with expansion bolts.

In such cases it is necessary to determine the values separately.

| Thread | Tightening torque $M_A$ mkp / ft. lb | | | | | |
|---|---|---|---|---|---|---|
| | Nuts as per BMW N 113 48.0 Strength rating | | | Nuts as per DIN 985 Strength rating | | |
| | 8 | 10 | 12 | 8 | 10 | 12 |
| M 6 | 1.1+0.1<br>7.9+0.7 | 1.5+0.2<br>10.8+1.4 | 1.8+0.2<br>13.0+1.4 | 1.0+0.1<br>7.2+0.7 | 1.3+0.2<br>9.4+1.4 | 1.6+0.2<br>11.6+1.4 |
| M 8<br>M 8 x 1 | 2.5+0.3<br>18.0+2.2 | 3.4+0.4<br>24.6+2.9 | 4.0+0.5<br>29.0+3.6 | 2.5+0.2<br>18.0+1.4 | 3.3+0.3<br>24.0+2.2 | 3.9+0.4<br>28.2+2.5 |
| M 10<br>M 10 x 1.25 | 35.4+0.5<br>4.9+3.6 | 6.8+0.8<br>49.0+5.8 | 8.0+0.9<br>57.8+6.5 | 4.7+0.5<br>34.0+3.6 | 6.4+0.7<br>46.3+5 | 7.7+0.8<br>55.7+5.8 |
| M 12<br>M 12 x 1.5 | 8.1+0.9<br>58.5+6.5 | 11.4+1.3<br>82.4+9.4 | 13.5+1.5<br>97.6+10.8 | 7.8+0.8<br>56.4+5.8 | 10.9+1<br>78.8+7.2 | 12.6+1.5<br>91.0+10.8 |
| M 14<br>M 14 x 1.5 | 13.0+1.5<br>94.0+10.8 | 18.0+2<br>130.0+14.5 | 22.0+2<br>159.0+14.5 | 12.7+1.5<br>92.0+10.8 | 17.0+2<br>123.0+14.5 | 21.0+2<br>152.0+14.5 |
| M 16<br>M 16 x 1.5 | 22.5+2<br>162.7+14.5 | 28.0+3<br>202.0+22 | 33.0+4<br>238.6+29 | 19.5+2<br>141.0+14.5 | 26.0+3<br>188.0+22 | 31.0+4<br>224.0+29 |
| M 18<br>M 18 x 1.5 | 27.0+3<br>195.0+22 | 38.0+4<br>274.7+29 | 44.0+5<br>318.0+36 | 26.0+3<br>188.0+22 | 36.0+4<br>260.0+29 | 42.0+5<br>303.6+36 |

The respective preload forces Pv (kp/lb), according to the individual strength ratings, can be taken from the table "Tightening torques and preload forces" in BMW N 600 02.0.

The values stipulated in the table apply to a screw connection which corresponds to the above mentioned conditions. The tightening torque including tolerance is only given on the layout or assembly drawing if a value different from the Standard sheet is necessary for operational reasons.

In the case of a screw connection which is highly stressed dynamically an exact examination by means of calculations and tests is essential.

BMW N 600 02.0

## Bolts and Screws

| Description | Head shape | DIN No. | Strength rating |
|---|---|---|---|
| Hexagon bolts | | 931<br>933<br>960<br>961<br>70614 | 8.8<br>10.9<br>12.9 |
| | | 561 | 8.8 |
| Cheese-head screws | | 84 | 4.8<br>8.8 |
| | | 912<br>6912 | 8.8<br>10.9 |
| Button-headed screws | | 7986 | 4.8 |
| Carriage bolts | | 603 | 4.6<br>8.8 |
| Countersunk screws | | 63 | 4.8<br>8.8 |
| | | 7987 | 4.8<br>8.8 |
| Oval-head screws | | 920<br>921 | 5.6[4] |
| | | 7985 | 4.8 |
| Oval-head countersunk screws | | 91 | 4.8<br>8.8 |
| | | 7988 | 4.8 |
| Cheese-head self-tapping screws | | 7971 | [1] |
| Hexagon self-tapping screws | | 7976 | [1] |

| Description | Head shape | DIN No. | Strength rating |
|---|---|---|---|
| Countersunk self-tapping screws | | 7982 | [1] |
| Oval-head self-tapping screws | | 7981 | [1] |
| Oval-head countersunk self-tapping screws | | 7983 | [1] |
| Stud bolts | – | 833<br>835<br>836<br>838<br>939<br>940 | 8.8 |
| Threaded pins | | 417<br>551<br>553 | [2] [4] |
| | | 438 | 4.8[4] |
| Shoulder studs | | 427 | 5.8 |
| Winged screws | | 316 | 4.6 |
| Screw plugs | | 906<br>908 | 4.6 |
| | | 910<br>7604 | 5.6[4] |
| Hollow screws | | 7623<br>71436 | 6.8 |
| Cap screws | | 3871 | 5.6[4] |
| Slotted plugs | | 71022 | 5.6[4] |

## Nuts

| Description | shape | DIN No. | Strength rating |
|---|---|---|---|
| Hexagon nuts | | 439 | [5] |
| | | 985 | 8<br>10[4] |
| | | 934 | [3] |
| | | 936 | 6G<br>8G |
| | | 70615<br>70616 | 8/10[4]<br>6G/8G[4] |
| Castellated nuts | | 935<br>937 | 8/10<br>6S/8G |
| Wing nuts | | 315 | GTS |

| Description | shape | DIN No. | Strength rating |
|---|---|---|---|
| Square nuts | | 557 | 5–2 |
| | | 562 | 4D–2 |
| Cap nuts | | 986 | 8[4] |
| | | 1587 | 6–2 |
| Slotted nuts | | 70851<br>70852 | 6G[4] |
| Screw caps | | 3870<br>7606 | 5D–2[4] |
| Knurled nuts | | 466<br>467 | 5–2 |
| Ball collar nuts<br>Flat collar nuts | | 74361 | 8/10 |

[1] Case hardened steel, tempered file-hard, depth of case 0.1 . . . 0.2 mm (0.004 . . . 0.008")
[2] up to M 10: 4.8, from M 12: 4.6
[3] up to M 4: 5–2, from M 5: 8 and 10
[4] The stipulated strength characteristics deviate from the DIN specification
[5] up to M 8: 4D-2, for M 10: 5S-2

# Summary of tightening torques for R 60/7 . . . R 100 RS in Nm (lb.ft)

| | Nm | lb.ft |
|---|---|---|
| **Engine** | | |
| Cylinder head nuts (in 3 stages) | 15 | 11 |
| | 25 | 18.5 |
| | 35 + 4 | 26 + 3 |
| Big end bolts | 50 ± 2 | (37 ± 1.5) |
| Clutch housing (flywheel) | 100 + 5 | 74 + 3.7 |
| Nut for valve adjusting screw | 20 ± 2 | 14.7 ± 1.5 |
| Threaded stub pipe for carburettor connection | 50 | 37 |
| Oil drain plug | 30 + 5 | 22 + 3.7 |
| **Engine electrical system** | | |
| Alternator armature retaining bolt | 25 ± 2 | 18.4 ± 1.5 |
| Spark plugs | 20 + 5 | 14.7 + 3.7 |
| **Exhaust system** | | |
| Star nuts for exhaust pipes | 200 + 20 | 147 + 15 |
| **Clutch** | | |
| Clutch housing cover | 20 + 2 | 14.7 + 1.5 |
| **Gearbox** | | |
| Attachment to engine | 33 | 24.3 |
| Bearing mount | 19 | 14 |
| Output flange at gearbox output shaft | 221.5 | 163 |
| Gearbox cover to gearbox housing | 8 | 5.9 |
| Nut (cotter pin) for kick starter lever | 22.5 | 16.6 |
| Oil filler plug | 31 | 22.9 |
| Oil drain plug | 26 | 19.2 |
| **Drive shaft** | | |
| Twelve-sided bolts | 40 | 29.5 |
| **Front forks** | | |
| Fork bridge clamp bolts | 40 | 29.5 |
| Damper retaining bolt at slider tube | 35 | 25.8 |
| Upper spring support | 120 | 88 |
| Oil filler plugs | 9 | 6.6 |
| Oil drain plugs | 8 | 5.9 |
| **Steering** | | |
| Cap nut for steering bearing | 120 | 88 |
| Slotted nut | Free from play | |

# n and comparison table for statutory units of measurement

# Summary of tightening torques for R 60/7 . . . R 100 RS in Nm (ft.lb)

(continued)

| | Nm | lb.ft. |
|---|---|---|
| **Rear wheel drive with swinging fork** | | |
| Nut on input pinon | 165 | 122 |
| Threaded ring in axle housing | 118 | 87 |
| Nuts for axle housing cover | 17.7 | 13 |
| Oil level check plug on axle housing | 10 | 7.4 |
| Oil drain plug on axle housing | 25.5 | 18.8 |
| Swinging fork pivot pin | 10 + 2 | 7.4 + 1.5 |
| Oil filler plug on swinging fork | Screwed in but not fully tightened | |
| Oil drain plug on swinging fork | 15.7 | 11.6 |
| Locknut for swinging fork pivot pin | 100 + 20 | 74 + 15 |
| Damper rod at spring strut lug | 38 ± 2 | 28 ± 1.5 |
| Retaining nuts (twelve-sided) for axle housing at swinging fork | | |
| Spring strut retaining bolts | 47 | 34.7 |
| **Brakes** | 35 + 5 | 25.8 + 3.7 |
| Brake pipe to master cylinder | 8 + 2 | 5.9 + 1.5 |
| Brake pipe to brake caliper | 8 + 2 | 5.9 + 1.5 |
| Brake pipe to brake hose | 12 + 3 | 8.8 + 2.2 |
| **Wheels and tyres** | | |
| Wheel bearing friction moment at specified axle nut tightening torque (front wheel) | 0.15 . . . | 0.11 . . . |
| Quick-release axle nut | 0.30 | 0.22 |
| Axle clamp bolts | 48 | 35.4 |
| | 17 | 12.5 |





# Conversion and comparison table for statutory units of measurement

| Name of unit | | Unit symbols old | Unit symbols new | Values | | |
|---|---|---|---|---|---|---|
| Length | | m | m | 1 m = 1000 mm | 1 km = 1000 m | 1 μm = 0.001 mm |
| Area | | $m^2$<br>sq.m | $m^2$ | 1 $m^2$ = $10^6$ $mm^2$ | 1 $mm^2$ = 0.01 $cm^2$ | |
| Volume | | $m^3$<br>cu.m | $m^3$ | 1 $m^3$ = $10^6$ $cm^3$ | 1 $dm^3$ = 0.001 $m^3$ | |
| | | l | l | 1 l = 1 $dm^3$ | | |
| Angle | surface | ° | °,rad | 1 rad = 1 m/m ≈ 57° | 1° = π/180 rad | |
| | spatial | $(°)^2$ | sr | 1 sr = 1 $m^2/m^2$ | $(1°)^2$ = $(\pi 180)^2$ sr | |
| Mass | | kg | kg | 1 kg = 1000 g | 1 g = 1000 mg | 1 t = 1 Mg = 1000 kg |
| Density | | $kg/m^3$ | $kg/m^3$ | 1 $kg/m^3$ = 0.001 $kg/dm^3$ | | 1 $kg/dm^3$ = 1 kg/l |
| Imbalance | | kgm | kgm | 1 kgm = 1000 000 gmm | | |
| Time | | sec<br>s | s | 1 min = 60 s | 1 h = 60 min | |
| Speed of rotation | | rps<br>rpm | 1/s<br>1/min | 1 rpm = 1/min | 1/min = 1/(60s) | |
| Speed (velocity) | | m/s | m/s | 1 m/s = 3.6 km/h | | |
| Acceleration | | $m/s^2$ | $m/s^2$ | | | |
| Force | | kp | N | 1 N = 1 $kgm/s^2$ | 1 kp = 9.81 N | |
| Pressure (gas, liquid) | | atm<br>$kp/cm^2$<br>mWS<br>Torr<br>mmHg | $N/m^2$<br>Pa<br>bar | 1 atm = 1 $kp/cm^2$ = 0.981 bar = 98 066.5 Pa<br>1 m WS = 9 806.65 Pa = 9 806.65 $N/cm^2$<br>1 Torr = 1.333 224 mbar<br>1 mmHg = 133.322 Pa = 133.322 $N/m^2$ | | |
| Mechanical stress | | $kp/mm^2$ | $N/m^2$<br>Pa<br>$N/mm^2$ | 1 $N/m^2$ = 1 Pa<br>1 $kp/mm^2$ = 9.81 $N/mm^2$ | | |
| Energy, work, quantity of heat | | kpm<br>hp/s<br>cal | J<br>kWh | 1 J = 1 Nm<br>1 cal = 4.1868 J | 1 kWh = 3.6 MJ | 1 kpm = 9.81 J |
| Torque | | kpm | Nm | 1 kpm = 9.81 Nm | | |
| Power output | | hp<br>kpm/s<br>kcal/h | kW<br>Nm/s | 1 kW = 1000 W<br>1 PS = 736 W = 75 kpm/s = 632 kcal/h<br>1 kW = 1.36 PS = 102 kpm/s = 860 kcal/h = 0.239 kcal/s | 1 W = 1 Nm/s = 1 J/s | |
| Viscosity | dynamic | P | Pas | 1 Pas = 1 $Ns/m^2$ | 1 P = 0.1 Pas = 1 g/cms | |
| | kinetic | St | $m^2/s$ | 1 $m^2/s$ = 1 Pas $m^3/kg$ | 1 St = 1 $cm^2/s$ = 0.0001 $m^2/s$ | |
| Temperature | | deg<br>°C<br>°K | °C<br>K | 9° C ≙ 273.15 K<br>1 grd 1° K = 1 K = 1° C (temperature difference) | | |
| Electric current | | A | A | 1 mA = 0.001 A | 1 kA = 1000 A | |
| Electric voltage | | V | V | 1 V = 1 W/A | 1 mV = 0.001 V | 1 MV = $10^6$ V |
| Electric resistance | | Ω | Ω | 1 Ω = 1 V/A = 1/S | | |
| Magnetic flux | | M | Wb, Vs | 1 Wb = Vs | 1 M = $10^{-8}$ Wb | |
| Magnetic flux density | | G | T | 1 T = $Wb/m^2$ | 1 G = $10^{-4}$ T | |
| Magnetic field strength | | 0e | A/m | 1 A/m = 1 N/Wb | 10 e = $10^3/4\pi$ A/m | |
| Light intensity | | HK | cd | 1 cd = 1.107 HK | 1 HK = 0.903 342 cd | |
| Illumination density | | sb | $cd/m^2$ | 1 sb = $10^4$ $cd/m^2$ | | |
| Illumination intensity | | ph | lx | 1 ph = $10^4$ lx | | |

**Determining oil consumption**

Oil consumption can be measured after the motorcycle has covered a distance of approximately 7 500 km (5 000 miles). This distance is necessary for oil consumption to stabilize.
The engine must not exhibit any oil leaks.
Drain the engine oil at normal operating temperature.
Renew the filter element.
Add fresh oil to the engine.
Run the motorcycle under normal operating conditions until the oil level has dropped to the lower mark on the dipstick. (Difference between MIN and MAX marks = 0.85 l (1.2 Imp. pints/0.89 US quart).
Consumption can also be determined by draining off the oil.)
Measurement over a distance of 500 – 1 000 km (app. 300 – 600 miles) is always inaccurate, since experience has shown that the first half-liter of oil tends to be consumed more quickly.
Oil consumption should not exceed 0.1 l/100 km (app. 350 Imp. miles/pint, app. 590 US miles/quart).

Possible causes of excessive oil consumption:

1. Running-in not yet completed
2. Leakage past valve guides
3. Consequences of piston seizure
4. Piston rings installed incorrectly, broken or worn
5. Excessive running clearance between valve stems and valve guides.

**Determining fuel consumption in accordance with German DIN 70030 standard test method**

The carburettor and ignition setting[1]) of the motorcycle must be to standard specification.
The tire sizes must be as stated in the motorcycle's registration documents.
Tire pressures must be corrected if necessary to the specified values.
The brakes must be fully released.
The engine should have covered at least 7 500 km (5 000 miles), and be at normal operating temperature.
During fuel consumption measurement, the motorcycle should carry a weight halfway between its unladen weight and its gross weight limit.
Road speed over the entire test course should be as uniform as possible, and three-quarters of the top speed of which the motorcycle is capable.
The test speed should not, however, exceed 110/km/h (68 mile/h).
The test course should be as flat as possible and dry; a distance of app. 10 km (6 miles) should be covered in each direction. Uphill and downhill gradients not exceeding 1.5% (l in 67) are acceptable.
Air temperature should be between +10 and +30° C (+50 and +86° F), and wind velocity should not exceed 3 m (9.85 ft) /s.
The engine should be supplied with a standard commercially-available grade of fuel (in accordance with the maufacturer's requirements).

Fuel consumption can be determined with a commercial meter or by applying the follwing formula; an allowance of 10% should be added for unfavorable circumstances.

$$\frac{\text{Fuel consumed} \times 100}{\text{Distance in km}} = \text{Fuel consumption by standard test method in l/100 km}$$

(Conversion: $\frac{282.47}{\text{Fuel consumption in l/100 km}}$ = Fuel consumption in Imperial mile/gal

$\frac{235.2}{\text{Fuel consumption in l/100 km}}$ = Fuel consumption in US mile/gal)

[1]) see Specifications

# Engine oil viscosity chart
## (Oil grades for use at various outside temperatures)

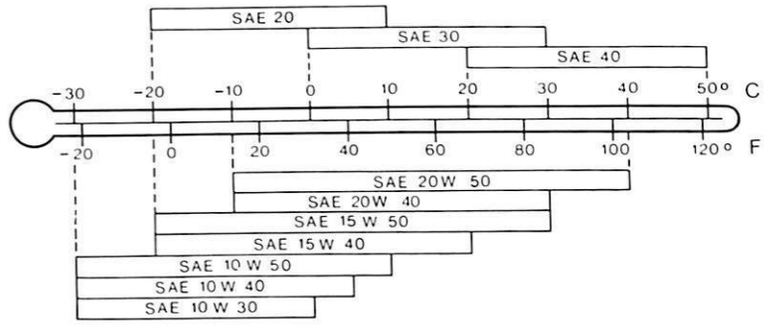


**Use only HD engine oil of API SE or SF specifications;**
it should be of reputable make and suitable for use in four-stroke spark-ignition engines.

# Conversion Table

| From Metric System: | | To English (F. P. S.) System: | | Multiply With Conv. Factor |
|---|---|---|---|---|
| Millimeters | mm | Inches | in. | 0.039 |
| Centimeters | cm | Inches | in. | 0.394 |
| Meters | m | Feet | ft. | 3.281 |
| Kilometers | km | Miles | mi. | 0.621 |
| Kilometers/hour | km/h | Miles/hour | mph | 0.621 |
| Square centimeters | $cm^2$ | Square inches | sq. in. | 0.155 |
| Cubic centimeters | $cm^3$, cc | Cubic inches | cu. in. | 0.061 |
| Liters | l | US quarts | qt. | 1.057 |
| Kilograms | kg | Pounds | lb. | 2.205 |
| Newton-meter | Nm | Foot pounds | ft. lb. | 0.723 |
| Bar | bar | Pounds/square inch | psi | 14.5 |

| From English (F. P. S.) System: | | To Metric System: | | Multiply With Conv. Factor |
|---|---|---|---|---|
| Inches | in. | Millimeters | mm | 25.40 |
| Inches | in. | Centimeters | cm | 2.54 |
| Feet | ft. | Meters | m | 0.305 |
| Miles | mi. | Kilometers | km | 1.609 |
| Miles/hour | mph | Kilometers/hour | km/h | 1.610 |
| Square inches | sq. in. | Square centimeters | $cm^2$ | 6.452 |
| Cubic inches | cu. in. | Cubic centimeters | $cm^3$, cc | 16.387 |
| US quarts | qt. | Liters | l | 0.946 |
| Pounds | lb. | Kilograms | kg | 0.454 |
| Foot pounds | ft. lb. | Newton-meter | Nm | 1.383 |
| Pounds/square inch | psi | Bar | bar | 0.069 |

# Engine oil circuit

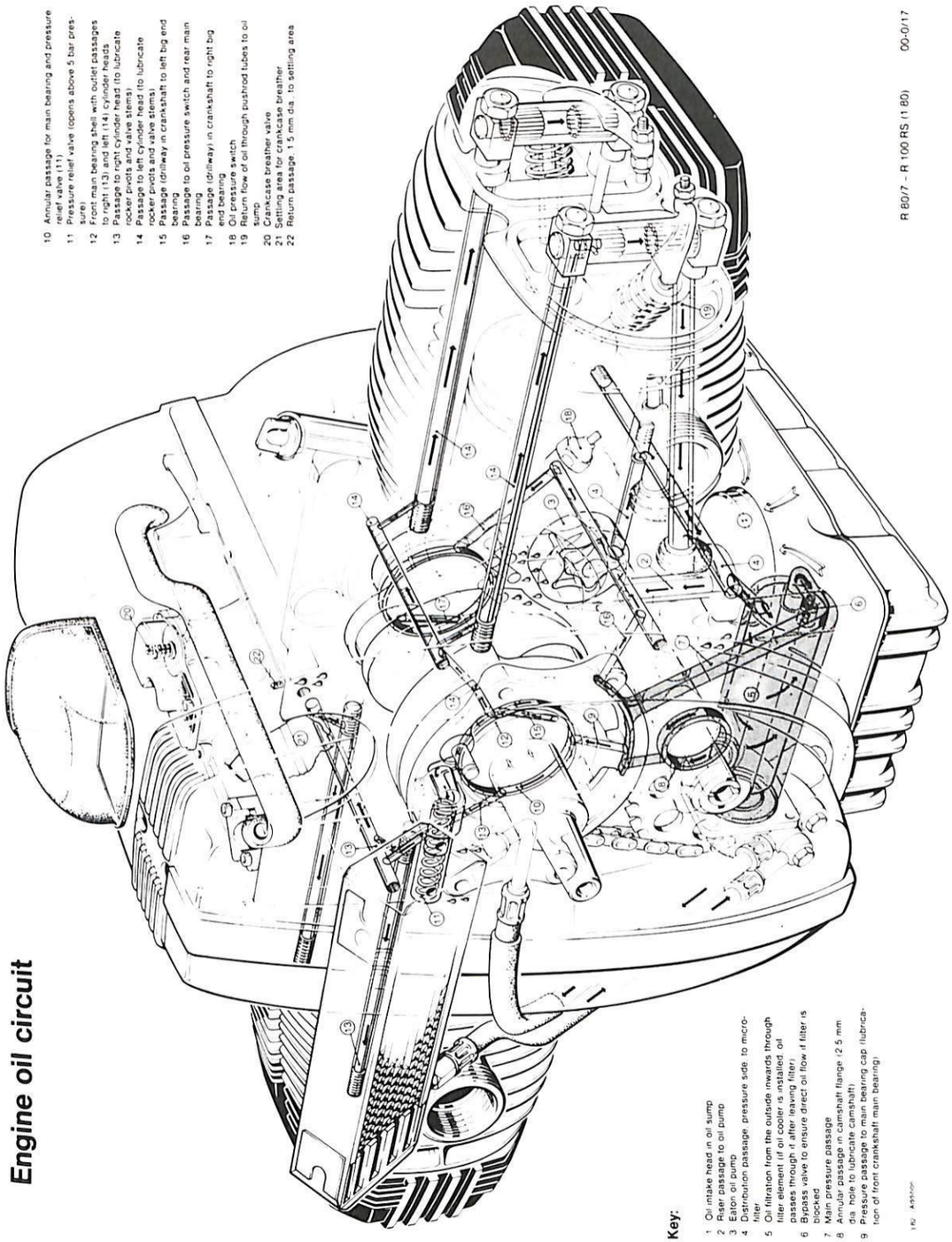

**Key:**

1. Oil intake head in oil sump
2. Riser passage to oil pump
3. Eaton oil pump
4. Distribution passage: pressure side to micro-filter
5. Oil filtration from the outside inwards through filter element (if oil cooler is installed, oil passes through it after leaving filter)
6. Bypass valve to ensure direct oil flow if filter is blocked
7. Main pressure passage
8. Annular passage in camshaft flange (2.5 mm dia. hole to lubricate camshaft)
9. Pressure passage to main bearing cap (lubrication of front crankshaft main bearing)
10. Annular passage for main bearing and pressure relief valve (11)
11. Pressure relief valve (opens above 5 bar pressure)
12. Front main bearing shell with outlet passages to right (13) and left (14) cylinder heads
13. Passage to right cylinder head (to lubricate rocker pivots and valve stems)
14. Passage to left cylinder head (to lubricate rocker pivots and valve stems)
15. Passage (drilling) in crankshaft to left big end bearing
16. Passage to oil pressure switch and rear main bearing
17. Passage (drilling) in crankshaft to right big end bearing
18. Oil pressure switch
19. Return flow of oil through pushrod tubes to oil sump
20. Crankcase breather valve
21. Settling area for crankcase breather
22. Return passage, 1.5 mm dia., to settling area

# Conversion Table

| From Metric System: | | To English (F. P. S.) System: | | Multiply With Conv. Factor |
|---|---|---|---|---|
| Millimeters | mm | Inches | in. | 0.039 |
| Centimeters | cm | Inches | in. | 0.394 |
| Meters | m | Feet | ft. | 3.281 |
| Kilometers | km | Miles | mi. | 0.621 |
| Kilometers/hour | km/h | Miles/hour | mph | 0.621 |
| Square centimeters | $cm^2$ | Square inches | sq. in. | 0.155 |
| Cubic centimeters | $cm^3$, cc | Cubic inches | cu. in. | 0.061 |
| Liters | l | US quarts | qt. | 1.057 |
| Kilograms | kg | Pounds | lb. | 2.205 |
| Newton-meter | Nm | Foot pounds | ft. lb. | 0.723 |
| Bar | bar | Pounds/square inch | psi | 14.5 |

| From English (F. P. S.) System: | | To Metric System: | | Multiply With Conv. Factor |
|---|---|---|---|---|
| Inches | in. | Millimeters | mm | 25.40 |
| Inches | in. | Centimeters | cm | 2.54 |
| Feet | ft. | Meters | m | 0.305 |
| Miles | mi. | Kilometers | km | 1.609 |
| Miles/hour | mph | Kilimeters/hour | km/h | 1.610 |
| Square inches | sq. in. | Square centimeters | $cm^2$ | 6.452 |
| Cubic inches | cu. in. | Cubic centimeters | $cm^3$, cc | 16.387 |
| US quarts | qt. | Liters | l | 0.946 |
| Pounds | lb. | Kilograms | kg | 0.454 |
| Foot pounds | ft. lb. | Newton-meter | Nm | 1.383 |
| Pounds/square inch | psi | Bar | bar | 0.069 |



# Engine oil circuit

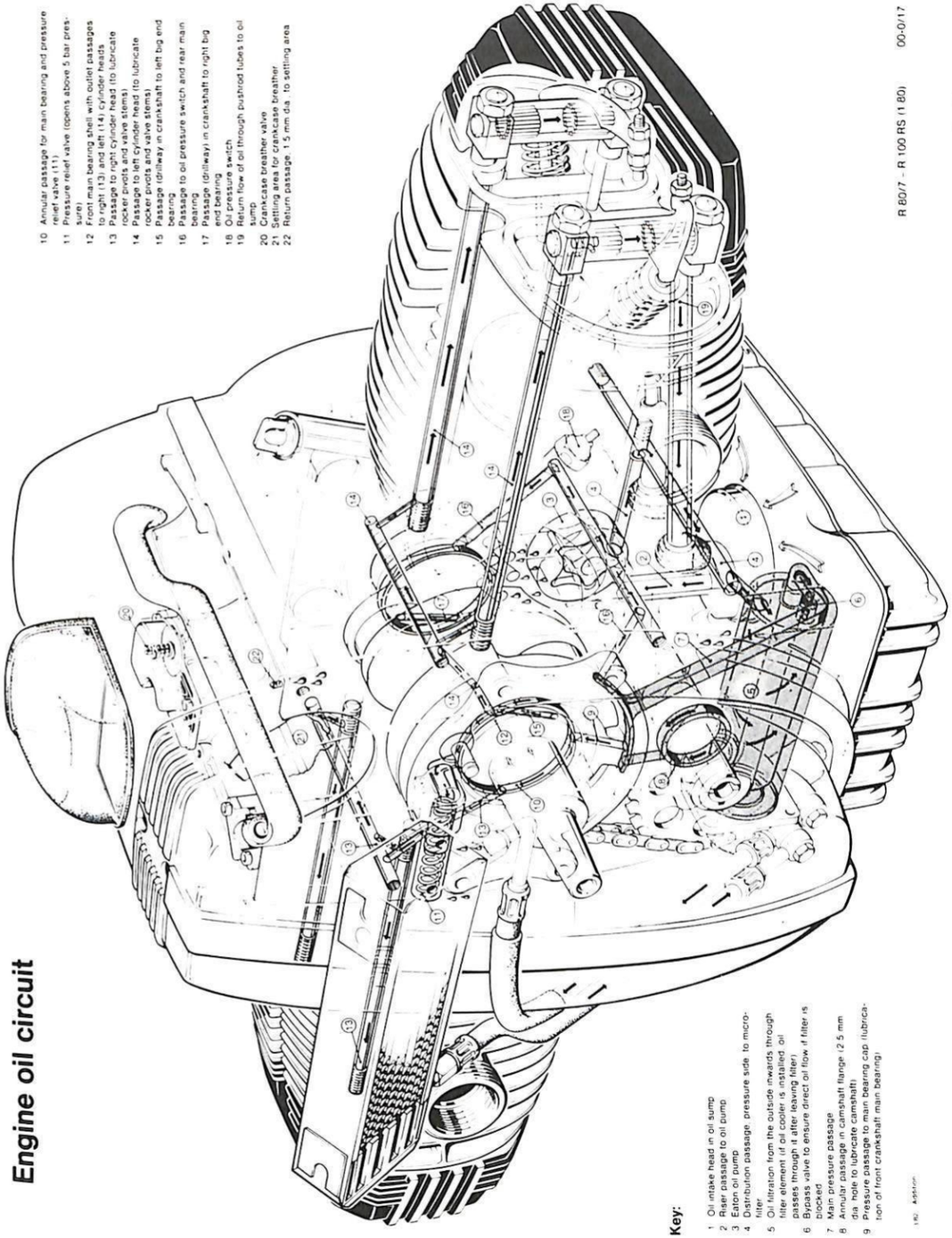

**Key:**

1 Oil intake head in oil sump
2 Riser passage to oil pump
3 Eaton oil pump
4 Distribution passage, pressure side, to micro-filter
5 Oil filtration from the outside inwards through filter element (if oil cooler is installed, oil passes through it after leaving filter)
6 Bypass valve to ensure direct oil flow if filter is blocked
7 Main pressure passage
8 Annular passage in camshaft flange (2.5 mm dia. hole to lubricate camshaft)
9 Pressure passage to main bearing cap (lubrication of front crankshaft main bearing)
10 Annular passage for main bearing and pressure relief valve (11)
11 Pressure relief valve (opens above 5 bar pressure)
12 Front main bearing shell with outlet passages to right (13) and left (14) cylinder heads
13 Passage to right cylinder head (to lubricate rocker pivots and valve stems)
14 Passage to left cylinder head (to lubricate rocker pivots and valve stems)
15 Passage (drilleway in crankshaft to left big end bearing
16 Passage to oil pressure switch and rear main bearing
17 Passage (drilleway) in crankshaft to right big end bearing
18 Oil pressure switch
19 Return flow of oil through pushrod tubes to oil sump
20 Crankcase breather valve
21 Settling area for crankcase breather
22 Return passage, 1.5 mm dia. to settling area

# Engine oil - circuit diagram

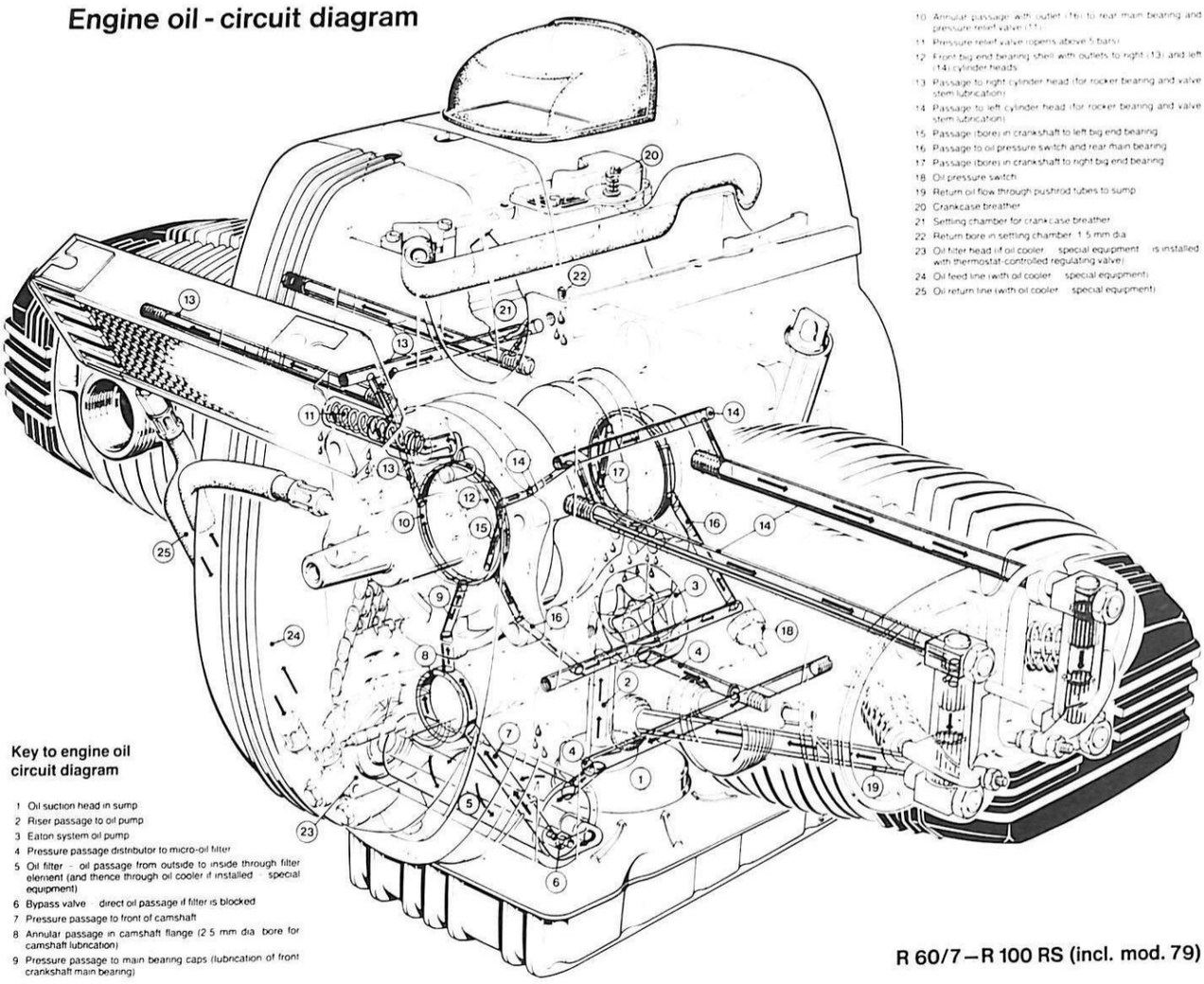

10 Annular passage with outlet (16) to rear main bearing and pressure relief valve (11)
11 Pressure relief valve (opens above 5 bars)
12 Front big end bearing shell with outlets to right (13) and left (14) cylinder heads
13 Passage to right cylinder head (for rocker bearing and valve stem lubrication)
14 Passage to left cylinder head (for rocker bearing and valve stem lubrication)
15 Passage (bore) in crankshaft to left big end bearing
16 Passage to oil pressure switch and rear main bearing
17 Passage (bore) in crankshaft to right big end bearing
18 Oil pressure switch
19 Return oil flow through pushrod tubes to sump
20 Crankcase breather
21 Settling chamber for crankcase breather
22 Return bore in settling chamber, 1.5 mm dia
23 Oil filter head (if oil cooler – special equipment – is installed with thermostat-controlled regulating valve)
24 Oil feed line (with oil cooler – special equipment)
25 Oil return line (with oil cooler – special equipment)

## Key to engine oil circuit diagram

1 Oil suction head in sump
2 Riser passage to oil pump
3 Eaton system oil pump
4 Pressure passage distributor to micro-oil filter
5 Oil filter – oil passage from outside to inside through filter element (and thence through oil cooler if installed – special equipment)
6 Bypass valve – direct oil passage if filter is blocked
7 Pressure passage to front of camshaft
8 Annular passage in camshaft flange (2.5 mm dia. bore for camshaft lubrication)
9 Pressure passage to main bearing caps (lubrication of front crankshaft main bearing)

# 11 Engine


| | | |
|---|---|---|
| Specifications | | Page 11- 03/3 |
| Specifications - 1979 models | | 11-0/18 |
| Specifications - 1981 models | | 11-0/35 |
| 11 00 039 | Compression test | 11-00/1 |
| 11 00 050 | Engine - removing and installing | 11-00/3 |
| 11 11 050 | Cylinder - removing and installing | 11-11/1 |
| 11 11 527 | Cylinder - reboring and honing | 11-11/3 |
| 11 12 080 | Cylinder head - removing and installing | 11-12/1 |
| 11 12 513 | Cylinder head - stripping, regrinding valves and assembling | 11-12/3 |
| 11 12 561 | Valve guides - renewing | 11-12/5 |
| 11 12 621 | One valve seat ring - renewing | 11-12/5 |
| 11 14 060 | Timing chain cover - detaching and attaching (models with ignition trigger) | 11-14/1 |
| 11 14 060 | Timing chain cover - detaching and attaching (models without ignition trigger) | 11-14/1 |
| 11 14 151 | Radial seal for crankshaft (gearbox end) - renewing | 11-14/2 |
| 11 14 651 | Radial seal for crankshaft (alternator end) - renewing | 11-14/3 |
| 11 14 671 | Radial seal for camshaft - renewing | 11-14/3 |
| 11 14 691 | Radial seal for revolution counter drive - renewing | 11-14/3 |
| 11 15 101 | Engine breather hose - renewing (single-sided breather) | 11-15/1 |
| 11 15 101 | Engine breather hose - renewing (double-sided breather) | 11-15/1 |
| 11 15 101 | Engine breather hose - renewing (1981 models) | 11-15/1 |
| 11 15 111 | Engine breather check valve - renewing | 11-15/1 |
| 11 21 001 | Crankshaft - removing and installing | 11-21/1 |
| 11 21 531 | Main bearing bushings - renewing | 11-21/3 |
| 11 22 000 | Flywheel - removing and installing | 11-22/1 |
| 11 22 000 | Clutch housing (flywheel) - removing and installing (1981 models) | 11-22/1 |
| 11 24 000 | Connecting rod - removing and installing | 11-24/1 |
| 11 25 000 | Piston - removing and installing | 11-25/1 |
| 11 31 061 | Timing chain sprockets - renewing (models without ignition trigger) | 11-31/1 |
| 11 31 061 | Timing chain sprockets - renewing (models with ignition trigger) | 11-31/1 |
| 11 34 504 | Valve clearances - adjusting | 11-34/1 |
| 11 41 000 | Oil pump - removing and installing | 11-41/1 |
| 11 42 310 | Oil cooler - removing and installing | 11-42/1 |

**Engine**

## Technical Data

| Model | R 60 7 | R 75 7 | R 80 7 | R 100 7 | R 100 S | R 100 RS |
|---|---|---|---|---|---|---|
| Engine design | 4 stroke horizontally opposed engine with overhead valves in V configuration | | | | | |
| Location of engine number | on engine block above oil filler pipe | | | | | |
| Cylinder bore mm (in) | 73.5 (2.89) | 82 (3.23) | 84.8 (3.34) | 94 (3.70) | 94 (3.70) | 94 (3.70) |
| Piston stroke mm (in) | 70.6 (2.78) | | | | | |
| Number of cylinders | 2 | | | | | |
| Cylinder arrangement | opposed | | | | | |
| Stroke bore ratio | 0.96 | 0.86 | 0.83 | 0.75 | 0.75 | 0.75 |
| Rated cubic capacity cm³ (in³) | 595 (36.3) | 740 (45.2) | 785 (47.9) | 971 (59.3) | 971 (59.3) | 971 (59.3) |
| Actual cubic capacity cm³ (in³) | 599 (36.6) | 745 (45.5) | 797.5 (48.7) | 978 (59.7) | 978 (59.7) | 978 (59.7) |
| Compression ratio | 9.2:1 | 9.0:1 | 9.2:1<br>* 8.2:1 | 9.1:1 | 9.5:1 | 9.5:1 |
| Maximum useful output DIN kW (hp) at engine speed min⁻¹ | 29.5 (40) 6400 | 36.8 (50) 6200 | 41 (55) 7000<br>* 37 (50) 7250 | 44.1 (60) 6500 | 48 (65) 6600 | 51.6 (70) 7250 |
| Maximum permissible constant engine speed min⁻¹ | 6500 | 6500 | 7200 | 6800 | 7000 | 7200 |
| Maximum permissible engine speed min⁻¹ | 7200 | 7400 | 7400 | 7400 | 7400 | 7400 |
| Idling speed min⁻¹ | 800 ... 1100 | | | | | |
| Maximum permissible engine speed during running in:<br>up to 1000 km (600 miles) min⁻¹<br>up to 2000 km (1200 miles) min⁻¹ | 4000<br>4500 | | | | | |
| Direction of engine rotation | clockwise viewed towards dynamo | | | | | |
| Maximum torque in Nm (mkp, lb. ft) at engine speed min⁻¹ | 48 (4.9, 35.4) 5000 | 58.8 (6, 43.4) 5000 | 62.5 (6.37, 46,1) 5500<br>* 56.6 (5.76, 41,7) 5500 | 73.5 (7.4, 54.2) 4000 | 75 (7.6, 55.3) 5500 | 76 (7.7, 56.1) 5500 |

* Low-compression engine for regular fuel
** from frame No. 6 007 001, 78 model

## *Engine oil - circuit diagram*

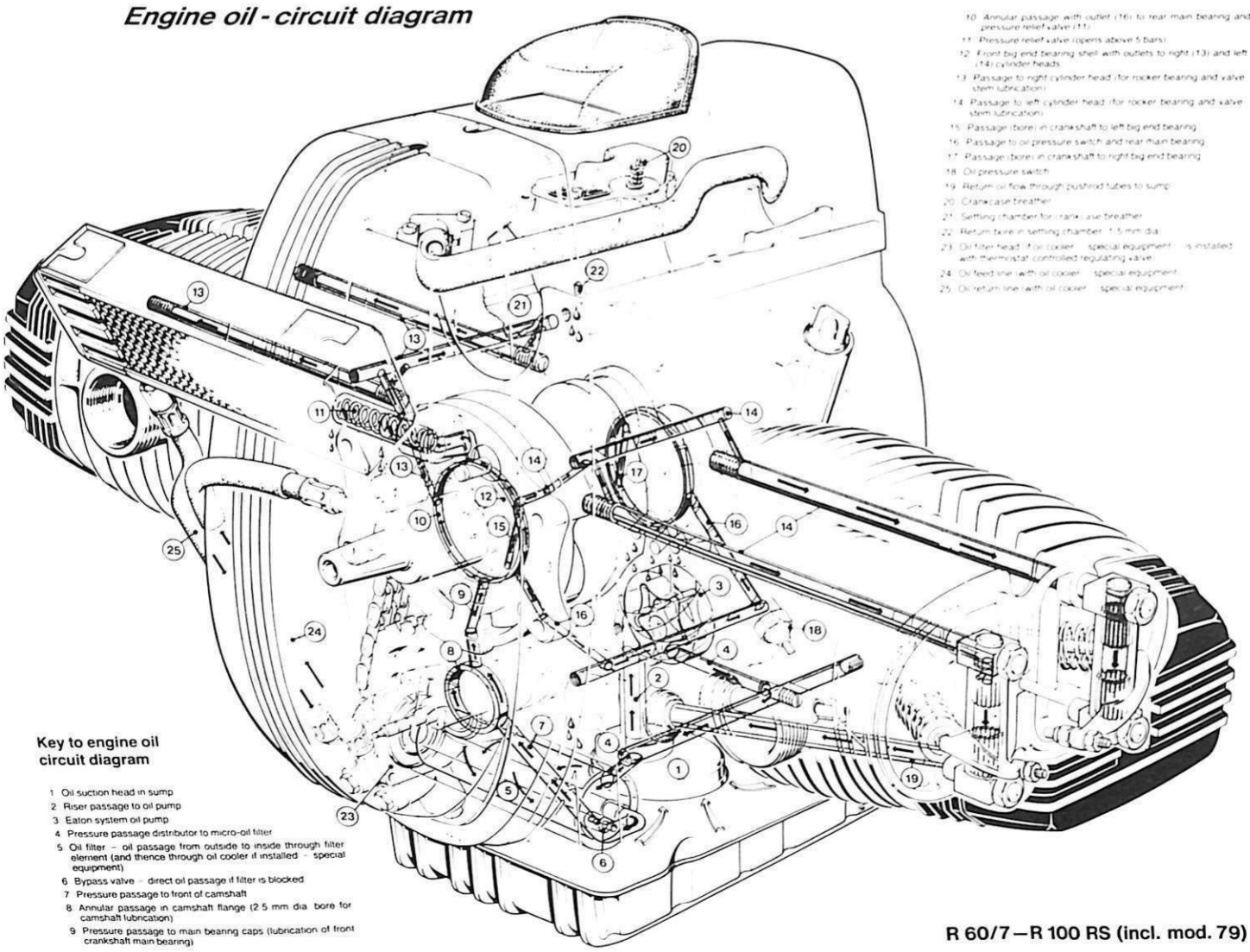

10 Annular passage with outlet (16) to rear main bearing and pressure relief valve (11)
11 Pressure relief valve (opens above 5 bars)
12 Front big end bearing shell with outlets to right (13) and left (14) cylinder heads
13 Passage to right cylinder head (for rocker bearing and valve stem lubrication)
14 Passage to left cylinder head (for rocker bearing and valve stem lubrication)
15 Passage (bore) in crankshaft to left big end bearing
16 Passage to oil pressure switch and rear main bearing
17 Passage (bore) in crankshaft to right big end bearing
18 Oil pressure switch
19 Return oil flow through pushrod tubes to sump
20 Crankcase breather
21 Settling chamber for crankcase breather
22 Return bore in settling chamber 1.5 mm dia
23 Oil filter head (for cooler – special equipment – is installed with thermostat controlled regulating valve)
24 Oil feed line (with oil cooler – special equipment)
25 Oil return line (with oil cooler – special equipment)

### Key to engine oil circuit diagram

1 Oil suction head in sump
2 Riser passage to oil pump
3 Eaton system oil pump
4 Pressure passage distributor to micro-oil filter
5 Oil filter – oil passage from outside to inside through filter element (and thence through oil cooler if installed – special equipment)
6 Bypass valve – direct oil passage if filter is blocked
7 Pressure passage to front of camshaft
8 Annular passage in camshaft flange (2.5 mm dia bore for camshaft lubrication)
9 Pressure passage to main bearing caps (lubrication of front crankshaft main bearing)

# 11 Engine


| | | |
|---|---|---|
| Specifications | | Page 11- 03/3 |
| Specifications - 1979 models | | 11-0/18 |
| Specifications - 1981 models | | 11-0/35 |
| 11 00 039 | Compression test | 11-00/1 |
| 11 00 050 | Engine - removing and installing | 11-00/3 |
| 11 11 050 | Cylinder - removing and installing | 11-11/1 |
| 11 11 527 | Cylinder - reboring and honing | 11-11/3 |
| 11 12 080 | Cylinder head - removing and installing | 11-12/1 |
| 11 12 513 | Cylinder head - stripping, regrinding valves and assembling | 11-12/3 |
| 11 12 561 | Valve guides - renewing | 11-12/5 |
| 11 12 621 | One valve seat ring - renewing | 11-12/5 |
| 11 14 060 | Timing chain cover - detaching and attaching (models with ignition trigger) | 11-14/1 |
| 11 14 060 | Timing chain cover - detaching and attaching (models without ignition trigger) | 11-14/1 |
| 11 14 151 | Radial seal for crankshaft (gearbox end) - renewing | 11-14/2 |
| 11 14 651 | Radial seal for crankshaft (alternator end) - renewing | 11-14/3 |
| 11 14 671 | Radial seal for camshaft - renewing | 11-14/3 |
| 11 14 691 | Radial seal for revolution counter drive - renewing | 11-14/3 |
| 11 15 101 | Engine breather hose - renewing (single-sided breather) | 11-15/1 |
| 11 15 101 | Engine breather hose - renewing (double-sided breather) | 11-15/1 |
| 11 15 101 | Engine breather hose - renewing (1981 models) | 11-15/1 |
| 11 15 111 | Engine breather check valve - renewing | 11-15/1 |
| 11 21 001 | Crankshaft - removing and installing | 11-21/1 |
| 11 21 531 | Main bearing bushings - renewing | 11-21/3 |
| 11 22 000 | Flywheel - removing and installing | 11-22/1 |
| 11 22 000 | Clutch housing (flywheel) - removing and installing (1981 models) | 11-22/1 |
| 11 24 000 | Connecting rod - removing and installing | 11-24/1 |
| 11 25 000 | Piston - removing and installing | 11-25/1 |
| 11 31 061 | Timing chain sprockets - renewing (models without ignition trigger) | 11-31/1 |
| 11 31 061 | Timing chain sprockets - renewing (models with ignition trigger) | 11-31/1 |
| 11 34 504 | Valve clearances - adjusting | 11-34/1 |
| 11 41 000 | Oil pump - removing and installing | 11-41/1 |
| 11 42 310 | Oil cooler - removing and installing | 11-42/1 |

**Engine**

## Technical Data

| Model | R 60 7 | R 75 7 | R 80 7 | R 100 7 | R 100 S | R 100 RS |
|---|---|---|---|---|---|---|
| Engine design | 4 stroke horizontally opposed engine with overhead valves in V configuration | | | | | |
| Location of engine number | on engine block above oil filler pipe | | | | | |
| Cylinder bore mm (in) | 73.5 (2.89) | 82 (3.23) | 84.8 (3.34) | 94 (3.70) | 94 (3.70) | 94 (3.70) |
| Piston stroke mm (in) | 70.6 (2.78) | | | | | |
| Number of cylinders | 2 | | | | | |
| Cylinder arrangement | opposed | | | | | |
| Stroke bore ratio | 0.96 | 0.86 | 0.83 | 0.75 | 0.75 | 0.75 |
| Rated cubic capacity cm³ (in³) | 595 (36.3) | 740 (45.2) | 785 (47.9) | 971 (59.3) | 971 (59.3) | 971 (59.3) |
| Actual cubic capacity cm³ (in³) | 599 (36.6) | 745 (45.5) | 797.5 (48.7) | 978 (59.7) | 978 (59.7) | 978 (59.7) |
| Compression ratio | 9.2:1 | 9.0:1 | 9.2:1<br>* 8.2:1 | 9.1:1 | 9.5:1 | 9.5:1 |
| Maximum useful output DIN kW (hp) at engine speed min⁻¹ | 29.5 (40) 6400 | 36.8 (50) 6200 | 41 (55) 7000<br>* 37 (50) 7250 | 44.1 (60) 6500 | 48 (65) 6600 | 51.6 (70) 7250 |
| Maximum permissible constant engine speed min⁻¹ | 6500 | 6500 | 7200 | 6800 | 7000 | 7200 |
| Maximum permissible engine speed min⁻¹ | 7200 | 7400 | 7400 | 7400 | 7400 | 7400 |
| Idling speed min⁻¹ | 800 ... 1100 | | | | | |
| Maximum permissible engine speed during running in:<br>up to 1000 km (600 miles) min⁻¹<br>up to 2000 km (1200 miles) min⁻¹ | 4000<br>4500 | | | | | |
| Direction of engine rotation | clockwise viewed towards dynamo | | | | | |
| Maximum torque in Nm (mkp, lb. ft) at engine speed min⁻¹ | 48 (4.9, 35.4) 5000 | 58.8 (6, 43.4) 5000 | 62.5 (6.37, 46,1) 5500<br>* 56.6 (5.76, 41,7) 5500 | 73.5 (7.4, 54.2) 4000 | 75 (7.6, 55.3) 5500 | 76 (7.7, 56.1) 5500 |

* Low-compression engine for regular fuel
** from frame No. 6 007 001, 78 model

**Engine**

## Technical Data

| Model | R 60 7 | R 75 7 | R 80 7 | R 100 7 | R 100 S | R 100 RS |
|---|---|---|---|---|---|---|
| Mean piston speed m s (ft min) at engine speed min⁻¹ | 15.1 (2972) 6400 | 14.6 (2874) 6200 | 16.4 (3228) * 17.1 (3366) 7000 7250 | 15.3 (3012) 6500 | 16.5 (3248) 7000 | 17.1 (3366) 7250 |
| Compression in bar good<br>normal<br>poor | more than 10.0<br>8.5 . . . 10.0<br>below 8.5 | | | | | |
| Compression test instructions (Motorcycle with starter) | 1. Unscrew spark plugs<br>2. Measurement to be carried out with a calibrated compression gauge with fully charged battery, engine at normal operating temperature and throttle twist grip fully open at starter speed. Remove constant pressure carburetor before test on R 60 7 only. | | | | | |
| Weight complete, kg (lbs) with starter, carburetor, oil | 63.5 (140.0) | 64.9 (143.1) | 63.5 (140.0) | 62.5 (137.8) | | |

**Engine**

## Technical Data

| Model | R 60/7 | R 75/7 | R 80/7 | R 100/7 | R 100 S | R 100 RS |
|---|---|---|---|---|---|---|
| Valve seat ring oversize, mm(in) | 0.2 (0.0079) | | | | | |
| **Valve guides:** Overall length, mm(in) inlet: | 48 (1.8898) | | | | | |
| exhaust: | 48 (1.8898) | | | | | |
| Outer diameter, mm(in) | $14^{+0.061}_{+0.050}$ $\left(0.5512^{+0.0024}_{+0.0020}\right)$ | | | | | |
| Inside diameter, mm(in) | | | | | | |

**Engine**

## Technical Data

| Model | R 60/7 | R 75/7 | R 80 7 | R 100 7 | R 100 S | R 100 RS |
|---|---|---|---|---|---|---|
| **Camshaft:** Flange bearing bore in crank case, diameter, mm(in) | | | $40^{+0.039}_{0}$ | $\left(1.575^{+0.0015}_{0}\right)$ | | |
| Flange bearing outer diameter, mm(in) | | | $40^{0}_{-0.016}$ | $\left(1.575^{0}_{-0.0006}\right)$ | | |
| Flange bearing bore diameter, mm(in) | | | $25^{+0.013}_{0}$ | $\left(0.984^{+0.0005}_{0}\right)$ | | |
| Camshaft bearing journals – alternator end, diameter, mm(in) | | | $25^{-0.020}_{-0.033}$ | $\left(0.984^{-0.0007}_{-0.0013}\right)$ | | |
| Bearing bore, flywheel end, for camshaft in crank case, diameter, mm(in) | | | $24^{+0.021}_{0}$ | $\left(0.945^{+0.0008}_{0}\right)$ | | |
| Camshaft bearing journal – flywheel end, diameter, mm(in) | | | $24^{-0.020}_{-0.033}$ | $\left(0.945^{-0.0008}_{-0.0013}\right)$ | | |
| Alternator and flywheel end radial clearance, mm(in) | | | 0.02...0.046 (0.0008...0.0018) | | | |
| Maximum permissible deflection of contact breaker shaft, mm(in) | | | 0.02 (0.00079) | | | |
| Axial float (clearance between camshaft starter collar and flange mounted bearing) mm(in) | | | 0.1 ± 0.02 (0.0039 ± 0.0008) | | | |
| Cam base circle diameter, mm(in) | | | 28 (1.102) | | | |

**Engine**

## Specifications

| Model | R 60/7 | R 75/7 | R 80/7 | R 100/7 | R 100/s | R 100/RS |
|---|---|---|---|---|---|---|
| Permissible out-of-roundness of cylinder bore mm (in) | 0.01 (0.0004) | | | | | |
| Permissible conicity of cylinder bore (narrower at top) mm (in) | 0.02 (0.0008) | | | | | |
| **Pistons:** | | | | | | |
| Pattern | Raised oval convex | | | | | |
| Weight group of complete piston | stamped with + or − | | | | | |
| Piston dia. (original equipment) − | | | | | | |
| A mm (in) | 73.470 (2.8925) | 81.965 (3.2270) | 84.765 (3.3372) | 93.960 (3.6992) | 93.960 (3.6992) | 93.960 (3.6992) |
| B mm (in) | 73.480 (2.8929) | 81.975 (3.2274) | 84.775 (3.3376) | 93.970 (3.6996) | 93.970 (3.6996) | 93.970 (3.6996) |
| C mm (in) | 73.490 (2.8933) | 81.985 (3.2277) | 84.785 (3.3380) | 93.980 (3.7000) | 93.980 (3.7000) | 93.980 (3.7000) |
| 1st oversize, +0.50 mm (0.0197 in) R 80/7 − R 100 RS + 0.25 mm (0.0098 in) | | | | | | |
| A mm (in) | 73.970 (2.9122) | 82.465 (3.2466) | 85.015 (3.3470) | 94.210 (3.7090) | 94.210 (3.7090) | 94.210 (3.7090) |
| B mm (in) | 73.980 (2.9126) | 82.475 (3.2470) | 85.025 (3.3474) | 94.220 (3.7094) | 94.220 (3.7094) | 94.220 (3.7094) |
| C mm (in) | 73.990 (2.9130) | 82.485 (3.2474) | 85.035 (3.3478) | 94.230 (3.7098) | 94.230 (3.7098) | 94.230 (3.7098) |
| 2nd oversize, + 1.00 mm (0.0394 in) | | | | | | |
| A mm (in) | 74.470 (2.9319) | 82.965 (3.2663) | | | | |
| B mm (in) | 74.480 (2.9323) | 82.975 (3.2667) | | | | |
| C mm (in) | 74.490 (2.9327) | 82.985 (3.2671) | | | | |
| Installed piston clearance mm (in) clearance mm (in) | 0.020 − 0.040 (0.0008 − 0.0016) | 0.019 . . . 0.041 (0.0007 . . . 0.0016) | 0.023 − 0.047 (0.0009 − 0.0019) | 0.028 . . . 0.052 (0.001 . . . 0.0020) | | |
| Max. permissible clearance between piston and cylinder caused by wear mm (in) | 0.08 (0.0031) | | | | | |
| Direction of piston installation | Arrow and "vorn" (front) inscription pointing to front of motorcycle | | | | | |





**Engine**

## Technical Data

| Model | R 60 7 | R 75 7 | R 80 7 | R 100 7 | R 100 S | R 100 RS |
|---|---|---|---|---|---|---|
| **Piston rings:** Rectangular ring first groove [1] Height, mm(in) | $1.75^{-0.010}_{-0.022}$ $\left(0.06890^{-0.00039}_{0.00086}\right)$ | | | | | |
| Ring gap, mm(in) | 0.25 . . . 0.40 (0.0098 . . . 0.0157) | 0.30 . . . 0.50 (0.0118 . . . 0.0197) | | | | |
| Side clearance, mm(in) | 0.06 . . . 0.09 (0.0024 . . . 0.0035) | | | | | |
| Lower compression ring, second groove [1] Height, mm(in) | $2.00^{-0.010}_{-0.022}$ $\left(0.07874^{+0.00039}_{+0.00087}\right)$ | | | | | |
| Ring gap, mm(in) | 0.25 . . . 0.40 (0.0098 . . . 0.0157) | 0.30 . . . 0.45 (0.0118 . . . 0.0177) | | | | |
| Side clearance, mm(in) | 0.04 . . . 0.07 (0.0016 . . . 0.0027) | | | | | |
| Equal chamfer ring, third groove [1] Height, mm(in) | $4.00^{-0.010}_{-0.022}$ $\left(0.15748^{+0.00039}_{+0.00087}\right)$ | | | | | |
| Ring gap, mm(in) | 0.25 . . . 0.35 (0.0098 . . . 0.0138) | 0.25 . . . 0.40 (0.0098 . . . 0.0157) | | | | |
| Side clearance, mm(in) | 0.02 . . . 0.05 (0.0008 . . . 0.0020) | 0.03 . . . 0.06 (0.0012 . . . 0.0024) | | | | |
| Fitting direction of piston rings | With marking "top" upward | | | | | |

[1] Not in accordance with DIN specifications – special BMW version

**Engine**

## Technical Data

| Model | R 60/7 | R 75/7 | R 80/7 | R 100/7 | R 100 S | R 100 RS |
|---|---|---|---|---|---|---|
| **Piston pins:** Piston pin offset from piston centre, mm(in) | 1.5 (0.059) | | | | | |
| Piston pin diameter, code colouring white, mm(in) | $22^{0}_{-0.003}$ | | | $\left(0.8661^{0}_{-0.00012}\right)$ | | |
| Piston pin diameter, code colouring black, mm(in) | $22^{-0.003}_{-0.006}$ | | | $\left(0.8661^{-0.00012}_{-0.00024}\right)$ | | |
| Bore diameter of piston boss, colour coding (white) W punched in piston crown, mm(in) | $22^{0.003}_{0}$ | | | $\left(0.8661^{+0.00012}_{0}\right)$ | | |
| Bore diameter of piston boss, colour code (black) S punched in piston crown, mm(in) | $22^{0.003}_{0}$ | | | $\left(0.8661^{-0.00012}_{0}\right)$ | | |
| Piston pin clearance[1]) in piston, mm(in) | 0 ... 0.006 | | | (0 ... 0.00024) | | |
| Running clearance of piston pin in connecting rod bush mm(in) | 0.015 ... 0.026 | | | (0.00059 ... 0.00102) | | |

[1]) Piston and piston pin must always be renewd together.



12.77 Alteration

**Engine**

## Technical Data

| Model | R 60/7 | R 75/7 | R 80/7 | | R 100/7 | R 100 S | R 100 RS |
|---|---|---|---|---|---|---|---|
| Road performance: | The actual maximum speed reached by the motorcycle after running in depends to a high degree on the air resistance offered by the driver and is governed by such variable factors as size, attitude and clothing, the condition of the road and weather conditions. | | | | | | |
| Speed, seated kph(mph) | 155 (96) | 165 (103) | 172 (107) | 165* (103) | 178 (111) | 195 (121) | 197 (122) |
| Speed, prone kph(mph) | 167 (104) | 177 (110) | 182 (113) | 177 (110) | 188 (117) | over 200 (124) | over 200 (124) |
| Acceleration 0 to 50 kph (31 mph) in secs | 2.2 | 2.0 | 1.8 | 1.9 | 1.6 | 1.6 | 1.6 |
| 0 to 80 kph (50 mph) in secs | 5.0 | 4.4 | 3.9 | 4.3 | 3.6 | 3.5 | 3.5 |
| 0 to 100 kph (62 mph) in secs | 7.7 | 6.7 | 5.9 | 6.5 | 5.1 | 4.7 | 4.6 |
| 0 to 120 kph (75 mph) in secs | 10.8 | 9.1 | 8.0 | 8.8 | 7.2 | 6.8 | 6.8 |
| 0 to 140 kph (87 mph) in secs | 16.0 | 13.1 | 11.3 | 12.6 | 9.8 | 8.8 | 8.8 |
| 0 to 160 kph (100 mph) in secs | 27.5 | 19.8 | 15.6 | 18.8 | 13.7 | 12.6 | 12.6 |

* values with low-compression engine

### Tightening torques in Nm (ft.lb)

| | |
|---|---|
| Cyl. head studs (in 3 stages 15—35—39) | 35...39 (25.8...28.8) |
| Connecting rod bolts | 48...52 (35.4...38.4) |
| Flywheel on crankshaft | 100...105 (73.7...77.4) |
| Oil sump at crankcase | 9...11 (6.6...8.1) |
| Nuts for valve adjustment screw | 18...23 (13.3...17.0) |
| Carburetor threaded stub pipe | 12+2 (8.8+1.5) |

All other nuts, screws and bolts are to be tightened with the values recommended in the manufacturer's tables or the latest BMW Standard Specification 00 002.0.

## Specification – '79 models

| Engine<br>Model | R 80/7 | R 100 T | R 100 S | R 100 RT | R 100 RS |
|---|---|---|---|---|---|
| **Engine Lubrication:**<br>Lubrication system | Force feed circulation | | | | |
| Oil filter | in main circuit (full flow) | | | | |
| Differential pressure for opening the bypass valve – bars (lb/in²) | 1.5 (21.3) | | | | |
| Oil pressure warning lamp lights at below | 0.2...0.5 bar (2.8...7.1 lb/in²) | | | | |
| Safety valve opening pressure bars (lb/in²) | 5.0 (71.1) | | | | |
| Oil filling quantity without filter change – liters (Imp. pints/US quarts)<br>with filter change – liters (Imp. pints/US quarts) | 2.0 (3.5/2.1)<br>2.25 (4.0/2.38) | | | | |
| Oil consumption litres/100 km max. | 0.1 (355 mile/Imp. pint) | | | | |
| Type of oil:<br>Viscosity at external temperature, primarily<br>over +30° C (86° F)<br>over 0° C (32° F)<br>below 0° C (32° F)<br>All the year round, down to –20° C (–4° F) | HD branded oil for spark ignition engines<br><br>SAE 40, SAE 20 W 50<br>SAE 20 W 40, SAE 20 W 50<br>SAE 10 W 30, SAE 10 W 40, SAE 10 W 50<br>SAE 15 W 50 | | | | |
| **Oil Pump**<br>Oil pump design | Eaton type (hyp. trochoidal gearing) | | | | |
| Delivery liters/hour at rev/min | 1400 (308 Imp. gal.)<br>6000 (1320 Imp. gal.) | | | | |
| Outer rotor diameter, mm (in) | $57.1^{0}_{-0.025}$ ($2.248^{0}_{-0.0010}$) | | | | |
| Housing inner diameter, mm (in) | $57.2^{+0.046}_{0}$ ($2.252^{+0.0018}_{0}$) | | | | |
| Outer rotor/pump housing clearance, mm (in) | 0.10...0.17 (0.0039...0.0067) | | | | |

11-78 Addition

11-78 Addition

## Specifications – '79 models

| Engine<br>Model | R 80/7 | R 100 T | R 100 S | R 100 RT | R 100 RS |
|---|---|---|---|---|---|
| Rotor height, mm (in) | $14^{-0.015}_{-0.045}$ ($0.5512^{0.00059}_{-0.00177}$) | | | | |
| Housing depth, mm (in) | $14^{+0.025}_{+0.010}$ ($0.5512^{+0.00098}_{+0.00039}$) | | | | |
| Clearance between pump housing base and rotor seal base, mm (in) | 0.025...0.070 (0.00098...0.00275) | | | | |
| Gap between inner and outer rotor, mm (in) | 0.12...0.20 (0.0047...0.0079) | | | | |
| Entry depth in cover, maximum, mm (in) | 0.05 (0.0020) | | | | |
| Length of excess pressure spring, unbased, mm (in) | 68 (2.677) | | | | |
| **Valve Clearance:**<br>Set with engine cold, max. 35° C (95° F)<br>Inlet valve, mm (in)<br>Exhaust valve, mm (in) | temperature<br><br>0.15 (0.006) (0.10 (0.004)<br>0.20 (0.008) (0.15 (0.006) after 1000 km [600 mile] Inspection) | | | | |
| Valve timing settings (tolerance ± 2.0°)<br>Inlet opens<br>Inlet closes<br>Exhaust opens<br>Exhaust closes | Camshaft setting with 2 mm (0.08 in) valve clearance<br>16° BTDC<br>44° ABDC<br>56° BBDC<br>4° BTDC | | | | |
| **Valves:**<br>Overall valve length<br>Inlet, mm (in)<br>Exhaust, mm (in) | 98.8–0.4 (3.890–0.016)<br>98.8–0.4 (3.890–0.016) | | | | |
| Valve head diameter<br>Inlet, mm (in) | 42 (1.654) | 44 (1.73) | | | |
| Valve head diameter<br>Exhaust, mm (in) | 38 (1.496) | 40 (1.575) | | | |
| Stem diameter<br>Inlet, mm (in) | $8^{-0.050}_{-0.065}$ ($0.3150^{-0.0020}_{-0.0026}$) | | | | |

**Engine**

## Specifications – '79 models

| Model | R 80/7 | R 100 T | R 100 S | R 100 RT | R 100 RS |
|---|---|---|---|---|---|
| Stem diameter<br>Exhaust, mm (in) | $8^{-0.050}_{-0.065}$ $(0.3150^{-0.0020}_{-0.0026})$ | | | | |
| Minimum rim thickness of valve head<br>Inlet, mm (in)<br>Exhaust, mm (in) | 1 (0.039)<br>1 (0.039) | | | | |
| Valve head deflection, mm (in) | 0.025 (0.0010) | | | | |
| **Valve seat ring:**<br>Outer diameter, mm<br>Inlet | $43{,}2^{0}_{-0{,}025}$ $(1.701^{0}_{-0.001})$ | $45.2^{0}_{-0.025}$ $(1.780^{0}_{-0.001})$ | | | |
| Outer diameter, mm<br>Exhaust | $43{,}2^{0}_{-0.066}$ $(1.701^{0}_{-0.002})$ | $45.2^{0}_{-0.025}$ $(1.780^{0}_{-0.001})$ | | | |
| Valve seat ring bore in cylinder head:<br>Inlet, mm | $43^{+0.025}_{0}$ $(1.693^{+0.001}_{0})$ | $45^{+0.025}_{0}$ $(1.772^{+0.001}_{0})$ | | | |
| Exhaust, mm | $43^{+0.025}_{0}$ $(1.693^{+0.001}_{0})$ | $45^{+0.025}_{0}$ $(1.772^{+0.001}_{0})$ | | | |
| Interference fit in head<br>Inlet, mm<br>Exhaust, mm | 0.15 . . . 0.20 (0.006 . . . 0.008)<br>0.11 . . . 0.15 (0.004 . . . 0.006) | | | | |
| Valve seat angle, degrees | 45 | | | | |
| **Valve seat width:**<br>Inlet, mm (in) | 1.5 (0.059) | | | | |
| Exhaust, mm (in) | 2.0 (0.079) | | | | |



**Engine**

## Specifications – '79 models

| Model | R 80/7 | R 100 T | R 100 S | R 100 RT | R 100 RS |
|---|---|---|---|---|---|
| Valve seat ring oversize, mm (in) | 0.2 (0.0079) | | | | |
| **Valve guides:**<br>Overall length, mm (in) inlet:<br>exhaust: | 48 (1.8898)<br>48 (1.8898) | | | | |
| Outer diameter, mm (in) | $14^{+0.061}_{+0.050}$ $(0.546^{+0.0023}_{+0.0019})$ | | | | |
| Inside diameter, mm (in) | 8 H 7 (0.31 H 0.27) | | | | |
| Bore in cylinder head, mm (in) | 14 H 7 (0.54 H 0.27) | | | | |
| Interference fit in cylinder head, mm (in) | 0.032 . . . 0.061 (0.0012 . . . 0.0023) | | | | |
| Oversize, first stage diameter, mm (in) | $14.1^{+0.061}_{+0.050}$ $(0.555^{+0.0024}_{+0.0020})$ | | | | |
| Second stage diameter, mm (in) | $14.2^{+0.061}_{+0.050}$ $(0.559^{+0.0024}_{+0.0020})$ | | | | |
| **Valve stem clearance:**<br>Inlet, mm (in) | 0.050 . . . 0.080 (0.0019 . . . 0.0031) | | | | |
| Exhaust, mm (in) | 0.050 . . . 0.080 (0.0019 . . . 0.0031) | | | | |
| Maximum permissible wear tolerance, mm (in) | 0.15 (0.0059) | | | | |
| **Valve gear:**<br>Valve operation | by the camshaft via hard cast tappets, push rods and rocker arms | | | | |
| Camshaft drive | 3/8 x 7/32 in single roller chain with socket insert and hydraulically damped chain tensioner | | | | |
| Number of links | 50 | | | | |

## Specifications — '79 models

| Model | R 80/7 | R 100 T | R 100 S | R 100 RT | R 100 RS |
|---|---|---|---|---|---|
| **Valve Springs:** Wire thickness, mm (in) | 4.25 (0.167) | | | | |
| Outer coil diameter, mm (in) | 31.9 (1.256) | | | | |
| Spring length, relaxed, mm (in) | approx. 43.5 (1.712) | | | | |
| Spring force in kp at test length, mm (lb/in) | 29 at 37.6 | 70 at 28.5 (63.9 at 1.48, 154 at 1.12) | | | |
| Coil direction | right hand | | | | |
| Number of windings, resilient | 4 | | | | |
| Number of windings, total | 6 | | | | |
| Fitting direction | With the windings painted green facing the cylinder head side | | | | |
| **Rocker arms:** | needle roller mounted | | | | |
| Axial float of rocker arm | Clearance-free but easily movable | | | | |
| Rocker arm ratio | 1 : 1.39 | | | | |



11.78 Addition

Engine

## Specifications — '79 models

| Model | R 80/7 | R 100 T | R 100 S | R 100 RT | R 100 RS |
|---|---|---|---|---|---|
| **Camshaft:** Flange bearing bore in crank case, diameter, mm (in) | $40^{+0.039}_{0}$ ($1.575^{+0.0015}_{0}$) | | | | |
| Flange bearing outer diameter, mm (in) | $40^{0}_{-0.016}$ ($1.575^{0}_{-0.0006}$) | | | | |
| Flange bearing bore diameter, mm (in) | $25^{+0.013}_{0}$ ($0.984^{+0.0005}_{0}$) | | | | |
| Camshaft bearing journals – alternator end, diameter, mm (in) | $25^{-0.020}_{0.033}$ ($0.984^{-0.0007}_{-0.0012}$) | | | | |
| Bearing bore, flywheel end, for camshaft in crank case, diameter, mm (in) | $24^{+0.021}_{0}$ ($0.945^{0.0008}_{0}$) | | | | |
| Camshaft bearing journal – flywheel end, diameter, mm (in) | $24^{-0.020}_{-0.033}$ ($0.945^{-0.0008}_{-0.0012}$) | | | | |
| Alternator and flywheel end radial clearance, mm (in) | 0.02...0.046 (0.0008...0.0018) | | | | |
| Maximum permissible deflection of contact breaker shaft, mm (in) | 0.02 (0.00079) | | | | |
| Axial float (clearance between camshaft starter collar and flange mounted bearing) mm (in) | 0.1±0.02 (0.0039±0.0008) | | | | |
| Cam base circle diameter, mm (in) | 28 (1.102) | | | | |
| Cam lift, mm (in) | 6.756 (0.2660) | | | | |
| Tappet outer diameter, mm (in) | $22^{-0.025}_{-0.045}$ ($0.8661^{-0.0010}_{-0.0006}$) | | | | |
| Tappet bore in crankcase, diameter, mm (in) | $22^{+0.006}_{-0.015}$ ($0.8661^{+0.0002}_{-0.0006}$) | | | | |
| Tappet radial clearance, mm (in) | 0.01...0.051 (0.0004...0.0020) | | | | |
| Maximum permissible wear tolerance for tappets, mm (in) | 0.075 (0.0030) | | | | |
| Pushrod length, mm (in) | 275 ±0.3 | | | | |

**Engine**

## Specifications

| Model | | | R 80/7 | R 100 T | R 100 S | R 100 RT | R 100 RS |
|---|---|---|---|---|---|---|---|
| **Crankshaft and bearings** | | | | | | | |
| Crankshaft | | | Main bearing journal dia. mm (in) | | | | |
| | | | Generator end | | | Flywheel end | |
| Crankshaft markings | | red/red | 59.980 . . . 59.990 (2.3614 . . . 2.3618) | | | 59.980 . . . 59.990 (2.3614 . . . 2.3618) | |
| Standard | 0 | red/blue | 59.980 . . . 59.990 (2.3614 . . . 2.3618) | | | 59.971 . . . 59.980 (2.3611 . . . 2.3614) | |
| | | blue/red | 59.971 . . . 59.980 (2.3611 . . . 2.3614) | | | 59.980 . . . 59.990 (2.3614 . . . 2.3618) | |
| | | blue/blue | 59.971 . . . 59.980 (2.3611 . . . 2.3614) | | | 59.971 . . . 59.980 (2.3611 . . . 2.3614) | |
| Stage 1 | 0.25 mm (0.0098 in) | red/red | 59.730 . . . 59.740 (2.3516 . . . 2.3520) | | | 59.730 . . . 59.740 (2.3516 . . . 2.3520) | |
| | | red/blue | 59.730 . . . 59.740 (2.3516 . . . 2.3520) | | | 59.721 . . . 59.730 (2.3512 . . . 2.3516) | |
| | | blue/red | 59.721 . . . 59.730 (2.3512 . . . 2.3516) | | | 59.730 . . . 59.740 (2.3516 . . . 2.3520) | |
| | | blue/blue | 59.721 . . . 59.730 (2.3512 . . . 2.3516) | | | 59.721 . . . 59.730 (2.3512 . . . 2.3516) | |
| Stage 2 | 0.50 mm (0.0197 in) | red/red | 59.480 . . . 59.490 (2.3417 . . . 2.3421) | | | 59.480 . . . 59.490 (2.3417 . . . 2.3421) | |
| | | red/blue | 59.480 . . . 59.490 (2.3417 . . . 2.3421) | | | 59.471 . . . 59.480 (2.3414 . . . 2.3417) | |
| | | blue/red | 59.471 . . . 59.480 (2.3414 . . . 2.3417) | | | 59.480 . . . 59.490 (2.3417 . . . 2.3421) | |
| | | blue/blue | 59.471 . . . 59.480 (2.3414 . . . 2.3417) | | | 59.471 . . . 59.480 (2.3414 . . . 2.3417) | |
| Stage 3 | 0.75 mm (0.0295 in) | red/red | 59.230 . . . 59.240 (2.3319 . . . 2.3323) | | | 59.230 . . . 59.240 (2.3319 . . . 2.3323) | |
| | | red/blue | 59.230 . . . 59.240 (2.3319 . . . 2.3323) | | | 59.221 . . . 59.230 (2.3315 . . . 2.3319) | |
| | | blue/red | 59.221 . . . 59.230 (2.3315 . . . 2.3319) | | | 59.230 . . . 59.240 (2.3319 . . . 2.3323) | |
| | | blue/blue | 59.221 . . . 59.230 (2.3315 . . . 2.3319) | | | 59.221 . . . 59.230 (2.3315 . . . 2.3319) | |
| Bore for 3-layer bearing shell in engine block mm (in) | | | $65^{+0.019}_{0}$ $(2.5591^{+0.0007}_{0})$ | | | | |
| Bore for 3-layer bearing in bearing cap mm (in) | | | $65^{+0.019}_{0}$ $(2.5591^{+0.0007}_{0})$ | | | | |
| Main bearing journal radial clearance mm (in) | | | 0.035 . . . 0.065 (0.0014 . . . 0.0026) | | | | |
| Seat dia. for front crankshaft deep-groove ball bearing mm (in) | | | $35^{+0.025}_{+0.009}$ $(1.3780^{+0.0010}_{+0.0004})$ | | | | |
| Bearing seat bore for deep-groove ball bearing in timing chain cover mm (in) | | | $62^{-0.009}_{-0.039}$ $(2.4409^{-0.0004}_{0.0015})$ | | | | |

11.78 Addition

11.78 Addition

**Engine**

## Specifications

Engine

## Specifications

| Model | R 80/7 | R 100 T | R 100 S | R 100 RT | R 100 RS |
|---|---|---|---|---|---|
| Engine block | ∅ A (main bearing bores) = 65 (2.5591) H 7<br>red 65.000 . . . 65.015 (2.5591 . . . 2.5596)<br>blue 65.015 . . . 65.030 (2.5596 . . . | | | ∅ B (bearing cap bore) = 130 (5.1181)<br>I 130.000 . . . 130.020 (5.1181 . . . 5.1189) | |

**Engine**

## Specifications '79 models

| Model | R 80/7 | R 100 T | R 100 S | R 100 RT | R 100 RS |
|---|---|---|---|---|---|
| Seat dia. on crankshaft for chain sprocket mm (in) | $35.003^{+0.020}_{+0.009}$ $(1.3781^{+0.0008}_{+0.0004})$ | | | | |
| Chain sprocket mounting bore mm (in) | $35.003^{+0.003}_{-0.013}$ $(1.3781^{+0.0001}_{-0.0005})$ | | | | |
| Crankshaft endplay mm (in) | 0.08 . . . 0.15 (0.0031 . . . 0.0059) | | | | |
| Thrust washer red thickness "S" mm (in) | 2.483 . . . 2.530 (0.0978 . . . 0.0996) | | | | |
| blue thickness "S" mm (in) | 2.530 . . . 2.578 (0.0996 . . . 0.1015) | | | | |
| green thickness "S" mm (in) | 2.578 . . . 2.626 (0.1015 . . . 0.1034) | | | | |
| yellow thickness "S" mm (in) | 2.626 . . . 2.673 (0.1034 . . . 0.1052) | | | | |
| Max. play after wear mm (in) | 0.20 (0.0079) | | | | |
| Max. permissible runout at outer shaft journal (generator end when supported at main bearings mm (in) | 0.02 60.0008) | | | | |
| Max. permissible crankshaft imbalance (dynamic) without flywheel cmp | 20 | | | | |
| Max. flywheel lateral runout mm (in) | 0.1 (0.004) | | | | |
| **Connecting rods and bearings** | Crankpin dia. mm (in) | | | | |
| Standard 0 | $48.00^{-0.009}_{-0.025}$ $(1.8898^{-0.0004}_{-0.0010})$ | | | | |
| Stage 1 0.25 mm (0.010 in) | $47.75^{-0.009}_{-0.025}$ $(1.8799^{-0.0004}_{-0.0010})$ | | | | |
| Stage 2 0.50 mm (0.020 in) | $47.50^{-0.009}_{-0.025}$ $(1.8701^{-0.0004}_{-0.0010})$ | | | | |
| Stage 3 0.75 mm (0.030 in) | $47.25^{-0.009}_{-0.025}$ $(1.8602^{-0.0004}_{-0.0010})$ | | | | |
| Big end bearing bore mm (in) | $52^{+0.015}_{0}$ $(2.0472^{+0.0006}_{0})$ | | | | |
| Big end bearing radial clearance mm (in) | 0.023 . . . 0.069 (0.0009 . . . 0.0027) | | | | |
| Big end bearing width mm (in) | $22^{-0.065}_{-0.117}$ $(0.8661^{-0.0026}_{-0.0046})$ | | | | |
| Crankpin bearing width mm (in) | $22^{+0.149}_{+0.065}$ $(0.8661^{+0.0059}_{+0.0026})$ | | | | |
| Connecting rod axial play mm (in) | 0.130 . . . 0.266 (0.0051 . . . 0.0105) | | | | |
| Max. axial play after wear mm (in) | 0.32 (0.0126) | | | | |





**Engine**

## Specifications (1979 models)

| Model | R 80/7 | R 100 T | R 100 S | R 100 RT | R 100 RS |
|---|---|---|---|---|---|
| Distance between centers mm (in) | 135 (5 315) | | | | |
| Small-end bore (basic dimension) mm (in) | $24^{+0.021}_{0}$ $(0.9449^{+0.0008}_{0})$ | | | | |
| Small-end bushing extl. dia. mm (in) | 24.060 (0.9472) 24.100 (0.9488) | | | | |
| Bore in small-end bushing for piston pin mm (in) | $22^{+0.020}_{+0.015}$ $(0.8661^{+0.0008}_{+0.0006})$ | | | | |
| Bore in small-end bushing for piston pin, wear limit mm (in) | 22 + 0.040 (0.8661 + 0.0016) | | | | |
| Max. deviation from parallel of connecting rod bores with bearing shells at 150 mm (5.91 in) spacing mm (in) | 0.04 (0.0016) | | | | |
| Max. connecting rod bore twist at 150 mm (5.91 in) spacing mm (in) | 1.5 (0.06) | | | | |
| Permissible weight difference between the two connecting rods of the engine g (oz) | ± 3 (± 0.106) | | | | |
| **Cylinders:** | | | | | |
| Bore, initial value A mm (in) | 84.795 + 0.01 (3.3384 + 0.0004) | 94.005 + 0.01 (3.7010 + 0.0004) | | | |
| B mm (in) | 84.805 + 0.01 (3.3388 + 0.0004) | 94.015 + 0.01 (3.7014 + 0.0004) | | | |
| C mm (in) | 84.815 + 0.01 (3.3392 + 0.0004) | 94.025 + 0.01 (3.7018 + 0.0004) | | | |
| 1st oversize, + 0.50 mm (0.0197 in) R 100/7 – R 100 RS + 0.25 mm (0.0098 in) A mm (in) | 85.045 + 0.01 (3.3482 + 0.0004) | 94.255 + 0.01 (3.7108 + 0.0004) | | | |
| B mm (in) | 85.055 + 0.01 (3.3486 + 0.0004) | 94.265 + 0.01 (3.7112 + 0.0004) | | | |
| C mm (in) | 85.065 + 0.01 (3.3490 + 0.0004) | 94.275 + 0.01 (3.7116 + 0.0004) | | | |
| Surface roughness µm | 3 7 | | | | |

| | | | |
|---|---|---|---|
| | ...ng white, mm (in) | | −0.003 |
| Piston pin diameter, code | 0.003 | (0.00012) | |
| | ...olour red, mm (in) | | −0.006 |
| | ...or code (black) | | |

Piston and piston pin must always be renew together.

**Engine**

## Specifications (1981 models)

| Model | R 100 | R 100 CS | R 100 RT | R 100 RS |
|---|---|---|---|---|
| *Mean piston speed m/s (ft/min)*<br>*- at engine speed min⁻¹* | *16.4 (3228)*<br>*7000* | | | |
| *Compression test pressure bar (lb/in²) - good*<br>*- normal*<br>*- poor* | *above 10.0 (142.2)*<br>*8.5 . . . 10.0 (120.9 . . . 142.2)*<br>*below 8.5 (120.9)* | | | |
| *Compression test procedure (motorcycles with electric starter)* | *1. Unscrew and remove the spark plugs.*<br>*2. Measure with a calibrated compression tester: battery fully charged, engine at normal operating temperature, throttle twistgrip fully open. Turn engine over with starter motor.* | | | |
| *Fuel* | *Regular (2-star)* | *Premium (4-star)* | | |
| *Fuel consumption by DIN 70030 standard test method at 110 km/h (68 mile/h) 1/100 km (Imp./US mile/gal)* | *5.0 (56.5, 47.0)* | *5.75 (49.1, 40.9)* | | |



## Specifications (1981 models)

| Model | R 100 | R 100 CS | R 100 RT | R 100 RS |
|---|---|---|---|---|
| **Engine lubrication:**<br>System | Pressurized oil circuit | | | |
| Oil filter | Full-flow | | | |
| Pressure differential for bypass valve to open bar (lb/in²) | 1.5 (21.3) | | | |
| Oil pressure warning light comes on below bar (lb/in²) | 0.2 . . . 0.5 (2.8 . . . 7.1) | | | |
| Pressure relief valve opens at bar (lb/in²) | 5.0 (71.1) | | | |
| Oil content without filter renewal l (Imp. pints, US quarts)<br>- with filter renewal l (Imp. pints, US quarts) | 2.25 (4.4, 2.4)<br>2.50 (6.25, 2.64) | | | 2.50 (6.25, 2.64)<br>2.75 (6.88, 2.91) |
| Oil consumption, max. l/1000 km (miles/Imp. pint, miles/US quart) | 0.1 (355, 590) | | | |
| Oil grade | Brand-name HD oil for 4-stroke spark ignition engines, API Class SE or SF<br>- see viscosity and temperature chart in Group 00 | | | |
| **Oil pump:**<br>Type | Eaton system (hypotrochoid gearing) | | | |
| Output rate l (Imp./US gal)/h<br>- at running speed min⁻¹ | 1400 (308/370)<br>6000 | | | |
| External rotor diameter mm (in) | $57.1\ ^{0}_{-0.025}$ $(2.2480\ ^{0}_{-0.0010})$ | | | |
| Internal diameter of housing mm (in) | $57.2\ ^{+0.046}_{0}$ $(2.2520\ ^{+0.0018}_{0})$ | | | |
| Clearance between external rotor and pump housing mm (in) | 0.10 . . . 0.17 (0.0039 . . . 0.0067) | | | |

**Engine**

## Specifications (1981 models)

| Model | R 100 | R 100 CS | R 100 RT | R 100 RS |
|---|---|---|---|---|
| Rotor height mm (in) | $14^{-0.015}_{-0.045}$ ($0.5512^{-0.0006}_{-0.0018}$) | | | |
| Housing depth mm (in) | $14^{+0.025}_{+0.010}$ ($0.5512^{+0.0010}_{-0.0004}$) | | | |
| Clearance between joint face on pump housing and sealing face on rotor mm (in) | 0.025 . . . 0.070 (0.0010 . . . 0.0028) | | | |
| Gap between inner and outer rotors mm (in) | 0.12 . . . 0.20 (0.0047 . . . 0.0079) | | | |
| Max. wear depth in cover mm (in) | 0.05 (0.0020) | | | |
| Relaxed length of pressure relief spring mm (in) | 68 (2.677) | | | |
| **Valve clearances:** Adjust with engine cold | | | | |
| Inlet mm (in) | | 0,15 (0.005) | 0.10 (0.004) | after the 1000 km (600 mile) Inspection |
| Exhaust mm (in) | | 0.25 (0.01) | 0.20 (0.008) | |
| Valve timing (tolerance ± 2.5°) | Timing gear shaft setting at 2 mm (0.08 in) valve clearance (308° camshaft) | | | |
| Inlet opens | 16° bTDC | | | |
| Inlet closes | 44° aBDC | | | |
| Exhaust opens | 56° bBDC | | | |
| Exhaust closes | 4° aTDC | | | |
| **Valve:** Overall length | | | | |
| Inlet mm (in) | 98.8 – 0.4 (3.890 – 0.016) | | | |
| Exhaust mm (in) | 98.8 – 0.4 (3.890 – 0.016) | | | |
| Valve head dia. Inlet mm (in) | 44 (1.732) | | | |
| Valve head dia. Exhaust mm (in) | 40 (1.575) | | | |
| Valve stem dia. Inlet and exhaust mm (in) | $8^{-0.050}_{-0.065}$ ($0.3150^{-0.0020}_{-0.0026}$) | | | |





**Engine**

## Specifications (1981 models)

| Model | R 100 | R 100 CS | R 100 RT | R 100 RS |
|---|---|---|---|---|
| Exhaust mm (in) | $8^{-0.050}_{-0.065}$ | | | |
| Min. valve head rim thickness | | | | |
| Inlet mm (in) | 1 (0.04) | | | |
| Exhaust mm (in) | 1 (0.04) | | | |
| Max. valve head runout mm (in) | 0.025 (0.0010) | | | |
| **Valve seat ring:** Extl. dia. Inlet and exhaust mm (in) | $45.2^{0}_{-0.025}$ ($1.780^{0}_{-0.001}$) | | | |
| Bore in cylinder head for valve seat ring Inlet mm (in) | $45^{+0.025}_{0}$ ($1.772^{+0.001}_{0}$) | | | |
| Exhaust mm (in) | $43^{+0.025}_{0}$ ($1.772^{+0.001}_{0}$) | $43^{+0.025}_{0}$ ($1.772^{+0.001}_{0}$) | | |
| Shrink fit in cylinder head | | | | |
| Inlet mm (in) | 0.15 . . 0.20 (0.006 . . 0.008) | | | |
| Exhaust mm (in) | 0.11 . . 0.15 (0.004 . . 0.006) | | | |
| Valve seat angle ° | 45 | | | |
| **Valve seat width:** Inlet mm (in) | 1.5 (0.059) | | | |
| Exhaust mm (in) | 1.5 (0.059) | | | |

Engine

## Specifications (1981 models)

| Model | R 100 | R 100 CS | R 100 RT | R 100 RS |
|---|---|---|---|---|
| Valve seat ring oversize mm (in) | 0.2 (0.0079) | | | |
| **Valve guides:** Inlet<br>Overall length mm (in) Exhaust | 48 (1.8898)<br>48 (1.8898) | | | |
| Extl. dia. mm (in) | $14.1^{+0.061}_{+0.050}$ $(0.551^{+0.0024}_{+0.0020})$ | | | |
| Intl. dia. mm (in) | 8 (0.3150) H 7 | | | |
| Bore in cylinder head mm (in) | 14 (0.5512) H 7 | | | |
| Shrink fit in cylinder head mm (in) | 0.032 . . . 0.061 (0.0013 . . . 0.0024) | | | |
| Oversizes, stage 1 mm (in) | $14.1^{+0.061}_{+0.050}$ $(0.555^{+0.0024}_{+0.0020})$ | | | |
| stage 2 mm (in) | $14.2^{+0.061}_{+0.050}$ $(0.559^{+0.0024}_{+0.0020})$ | | | |
| Valve stem clearance<br>Inlet mm (in) | 0.050 . . . 0.080 (0.0020 . . . 0.0031) | | | |
| Exhaust mm (in) | 0.050 . . . 0.080 (0.0020 . . . 0.0031) | | | |
| Max. clearance after wear mm (in) | 0.15 (0.006) | | | |
| **Valve gear**<br>Valve operation | From camshaft, via chill-cast tappets, pushrods and rockers | | | |
| Camshaft drive | 3/8 x 7/32" single roller chain with spring link | | | |
| Number of chain links | 50 | | | |



3.82 Addition

Engine

## Specifications (1981 models)

| Model | R 100 | R 100 CS | R 100 RT | R 100 RS |
|---|---|---|---|---|
| **Valve springs:**<br>Wire thickness mm (in) | 4.25 (0.167) | | | |
| Extl. coil dia. mm (in) | 31.9 (1.256) | | | |
| Relaxed spring length mm (in) | app. 43.5 (1.713) | | | |
| Spring force in kp (lb.f) at test length mm (in) | 29 (63.9) at 37.6 (1.480), 70 (154.3) at 28.5 (1.122) | | | |
| Winding direction | clockwise (right-hand) | | | |
| Number of active spring turns | 4 | | | |
| Total number of spring turns | 6 | | | |
| Installed direction | green stripe on windings at cylinder head side | | | |
| **Rockers:** | with needle roller bearings | | | |
| Axial play | zero, but free-moving | | | |
| Rocker leverage ratio | 1 : 1.39 | | | |

**Engine**

## Specifications (1981 models)

| Model | R 100 | R 100 CS | R 100 RT | R 100 RS |
|---|---|---|---|---|
| **Camshaft** | | | | |
| Flange bearing bore in engine block mm (in) | | $40^{+0.039}_{0}$ | $(1.5748^{+0.0016}_{0})$ | |
| Flange bearing extl. dia. mm (in) | | $40^{0}_{-0.016}$ | $(1.5748^{0}_{-0.0006})$ | |
| Flange bearing bore mm (in) | | $25^{+0.013}_{0}$ | $(0.9842^{+0.0005}_{0})$ | |
| Camshaft bearing journal dia., generator end mm (in) | | $25^{-0.020}_{-0.033}$ | $(0.9842^{-0.0008}_{-0.0013})$ | |
| Camshaft bearing bore in engine block, flywheel end mm (in) | | $24^{+0.021}_{0}$ | $(0.9449^{+0.0008}_{0})$ | |
| Camshaft bearing journal dia., flywheel end mm (in) | | $24^{-0.020}_{-0.033}$ | $(0.9449^{-0.0008}_{-0.0013})$ | |
| Radial play at generator and flywheel ends mm (in) | | 0.02 . . . 0.046 (0.008 . . . 0.0018) | | |
| Axial play (endplay between camshaft thrust collar and flange bearing) mm (in) | | 0.1 . . . 0.02 (0.0039 . . . 0.0008) | | |
| Cam base circle mm (in) | | 28 (1.102) | | |

Wall thickness mm (in)

**Engine**

## Specifications (1981 models)

| Model | R 100 T | R 100 CS | R 100 RT | R 100 RS |
|---|---|---|---|---|
| Distance between centers mm (in) | 135 (5.315) | | | |
| Small-end bore (basic dimension) mm (in) | $24^{+0.021}_{0}$ $(0.9449^{+0.0008}_{0})$ | | | |
| Small-end bushing extl. dia. mm (in) | 24.060 . . . 24.100 (0.9472 . . . 0.9488) | | | |
| Bore in small-end bushing for piston pin mm (in) | $22^{+0.020}_{+0.015}$ $(0.8661^{+0.0008}_{+0.0006})$ | | | |
| Bore in small-end bushing for piston pin, wear limit mm (in) | 22 + 0.040 (0.8661 + 0.0016) | | | |
| Max. deviation from parallel of connecting rod bores with bearing shells at 150 mm (5.91 in) spacing mm (in) | 0.04 (0.0016) | | | |
| Max. connecting rod bore twist at 150 mm (5.91 in) spacing mm (in) | 1.5 (0.06) | | | |
| Permissible weight difference between the two connecting rods of the engine g (oz) | ± 3 (± 0.106) | | | |
| **Cylinders:** Bore, initial value A mm (in) | 94.005 + 0.01 (3.7010 + 0.0004) | | | |
| B mm (in) | 94.015 + 0.01 (3.7014 + 0.0004) | | | |
| C mm (in) | 94.025 + 0.01 (3.7018 + 0.0004) | | | |
| Surface roughess um µm | 1.5 | | | |

3.82 Addition

3.82 Addition

**Engine**

## Specifications (1981 models)

| Model | R 100 | R 100 CS | R 100 RT | R 100 RS |
|---|---|---|---|---|
| Permissible out-of-roundness of cylinder bore mm (in) | 0.01 (0.0004) | | | |
| Permissible conicity of cylinder bore (narrower at top) mm (in) | 0.02 (0.0008) | | | |
| **Pistons:** Pattern | Raised oval convex | | | |
| Weight group of complete piston | stamped with + or – | | | |
| Piston dia. (original equipment) A mm (in) | 93.960 (3.6992) | | | |
| B mm (in) | 93.970 (3.6996) | | | |
| C mm (in) | 93.980 (3.7000) | | | |
| Installed piston clearance mm (in) clearance mm (in) | 0.030 0.040 (0.0012 0.0016) | | | |
| Max. permissible clearance between piston and cylinder caused by wear mm (in) | 0.08 (0.0031) | | | |
| Direction of piston installation | Arrow and "vorn" (front) inscription pointing to front of motorcycle | | | |

**Engine**

## Specifications (1981 models)

| Model | R 100 | R 100 CS | R 100 RT | R 100 RS |
|---|---|---|---|---|
| **Piston rings**<br>1st groove – micro-chamfer ring[1])<br>Height mm (in) | $1.75^{-0.010}_{-0.022}$ ($0.0689^{-0.0004}_{-0.0009}$) | | | |
| Ring end gap mm (in) | 0.40 . . . 0.65 (0.016 . . . 0.026) | | | |
| Clearance in groove mm (in) | 0.06 . . . 0.09 (0.0024 . . . 0.0035) | | | |
| 2nd groove – stepped microchamfer ring[1])<br>Height mm (in) | $2.00^{+0.010}_{+0.022}$ ($0.0787^{+0.0004}_{+0.0009}$) | | | |
| Ring end gap mm (in) | 0.40 . . . 0.65 (0.016 . . . 0.026) | | | |
| Clearance in groove mm (in) | 0.04 . . . 0.07 (0.0016 . . . 0.0028) | | | |
| 3rd groove – penthouse-chamfer ring with tubular spring[1])<br>Height mm (in) | $4.00^{+0.010}_{+0.022}$ ($0.1575^{+0-0004}_{+0.0009}$) | | | |
| Ring end gap mm (in) | 0.25 . . . 0.40 (0.010 . . . 0.016) | | | |
| Clearance in groove mm (in) | 0.03 . . . 0.06 (0.0012 . . . 0.0024) | | | |
| Piston ring installed direction | With inscription (top) to front (grooves 1 and 2) | | | |

[1]) not to DIN standard
– special BMW version



**Engine**

## Specifications (1981 models)

| Model | R 100 | R 100 CS | R 100 RT | R 100 RS |
|---|---|---|---|---|
| **Piston pin:**<br>Offset from piston centerline mm (in) | 1 0 (0 04) | | | |
| Piston pin diameter mm (in) | $22^{-0\,004}$ ($0\,8661^{-0\,0002}$) | | | |
| Piston pin eye bore mm (in) | $22^{+0\,004}$ ($0\,8661^{+0\,0002}$) | | | |
| Piston pin clearance[1]) in piston mm (in) | 0 000 0 008 (0 0000 0 0003) | | | |
| Piston pin running clearance in small end bushing mm (in) | 0 015 0 025 (0 00059 0 00098) | | | |

[1]) Always renew piston and piston pin together

## Specifications (1981 models)

### Tightening torques Nm (lb.ft)

| | | |
|---|---|---|
| Cylinder head nuts (in 3 stages) | 5 | (11) |
| | 25 | (18.5) |
| | 35 + 4 | (26 + 3) |
| | 50 + 2 | (37 + 1.5) |
| Big end bolts | 100 + 5 | (74 + 3.7) |
| Clutch housing (flywheel) to crankshaft | | |
| Valve adjusting screw nut | 20 ± 2 | (14.7 ± 1.5) |
| Carburettor threaded stub pipes | 50 | (37) |
| Oil drain plug | 30 + 5 | (22 + 3.7) |

*All other bolts and nuts are to be tightened to the customary values as shown in manufacturers' tables or on the latest BMW 60002.0 standards sheet.*





# Measurement report for main bearing clearances

(see also Service Information (Group: Engine) 11 015 80 (146 R)

Model: Frame No. Speedometer reading

Order No.: Appendix to warranty claim No.

Measuring main bearing journals:

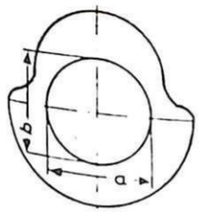


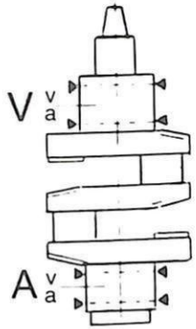


Using an external micrometer, measure front main bearing journal V and rear main bearing journal H in directions a and b (in each case three times at the same point) and in planes Vv, Vh, Hv and Hh. This yields 24 individual readings, which should be entered, in the table below. Then calculate the mean values as indicated.

| Measuring planes | | | a | b | Cross-total | Mean value for ÷ 6 = main bearing journals |
|---|---|---|---|---|---|---|
| 59. . . . mm (2.3 . . . in) | V | v | | | ÷ 6 = | ≙ 59. . . . mm (2.3 . . . in) |
| | | h | | | ÷ 6 = | ≙ 59. . . . mm (2.3 . . . in) |
| | H | v | | | ÷ 6 = | ≙ 59. . . . mm (2.3 . . . in) |
| | | h | | | ÷ 6 = | ≙ 59. . . . mm (2.3 . . . in) |

Measuring the main bearing shells:

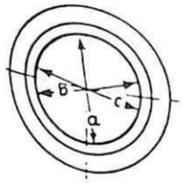


Measure the main bearing shells in directions a, b and c. Mark the engine block or bearing cap precisely as illustrated. Proceed otherwise as described above. This will yield 36 individual readings, which should be entered in the table below. Then calculate the mean values as indicated.

| Measuring planes | | | a | b | c | Cross-total | Mean value for ÷ 9 = main bearing shells |
|---|---|---|---|---|---|---|---|
| 60.0 . . mm (2.3 . . . in) | V | v | | | | ÷ 9 = | ≙ 60.0 . . mm (2.3 . . . in) |
| | | h | | | | ÷ 9 = | ≙ 60.0 . . mm (2.3 . . . in) |
| | H | v | | | | ÷ 9 = | ≙ 60.0 . . mm (2.3 . . . in) |
| | | h | | | | ÷ 9 = | ≙ 60.0 . . mm (2.3 . . . in) |

Calculating main bearing clearances:

Desired value = 0.020 . . . 0.065 mm (0.0008 . . . 0.0026 in)

| Measurements | | | Bearing shell dia. | | Journal dia. | Bearing clearance |
|---|---|---|---|---|---|---|
| V | v | | | minus | = | mm (in) |
| | | h | | minus | = | mm (in) |
| H | v | | | minus | = | mm (in) |
| | | h | | minus | = | mm (in) |

(Date) (Tester's signature)

# Valve gear

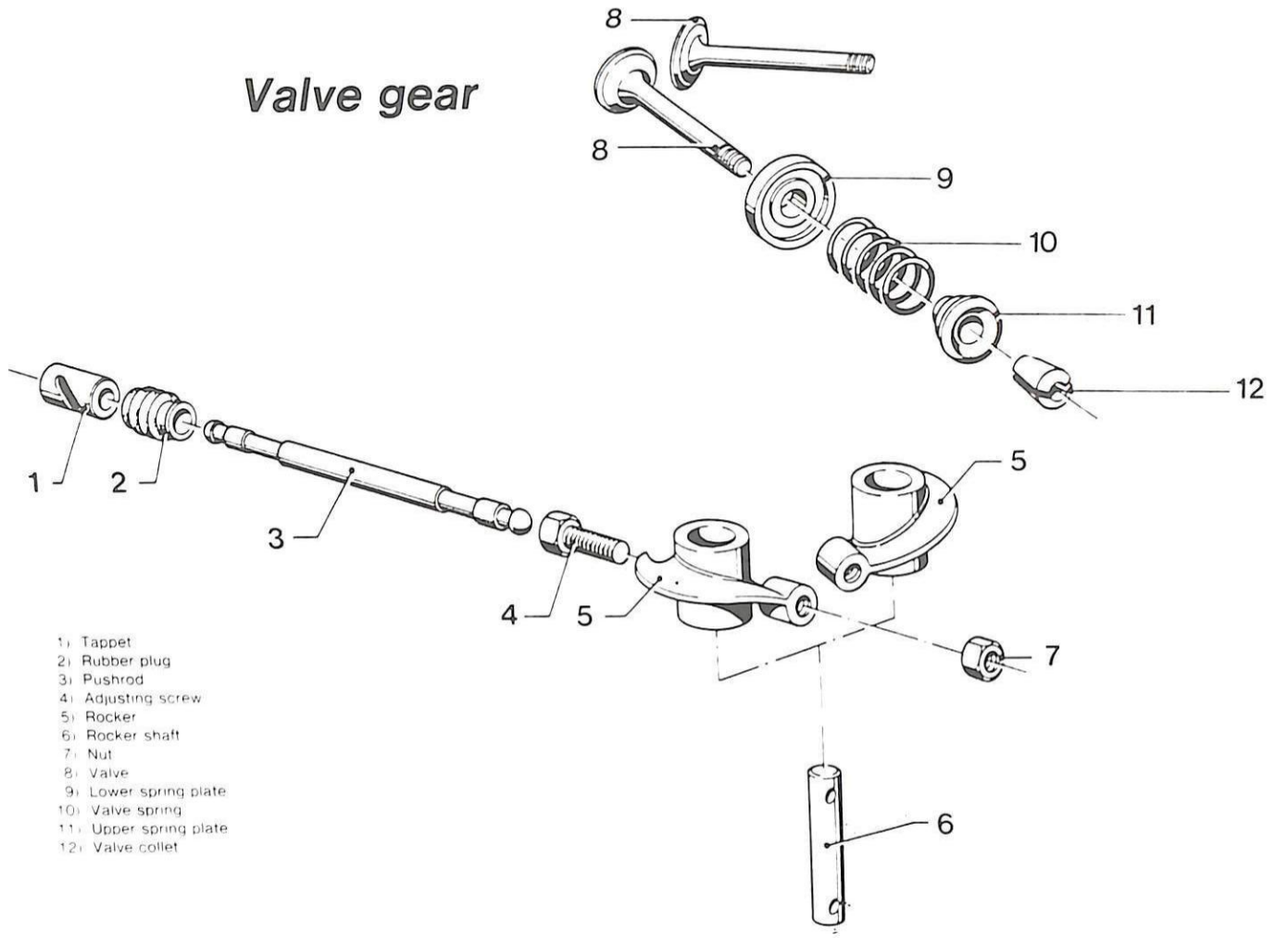


1) Tappet
2) Rubber plug
3) Pushrod
4) Adjusting screw
5) Rocker
6) Rocker shaft
7) Nut
8) Valve
9) Lower spring plate
10) Valve spring
11) Upper spring plate
12) Valve collet

# Camshaft and timing chain

(from 1979 models on)

1) Camshaft chain sprocket
2) Hex bolt
3) Snap ring
4) Flange bearing
5) Key
6) Camshaft
7) Timing chain
8) Lock washer
9) Chain tensioner
10) Spring
11) Plunger
12) Slide rail
13) Hex bolt
14) Snap ring

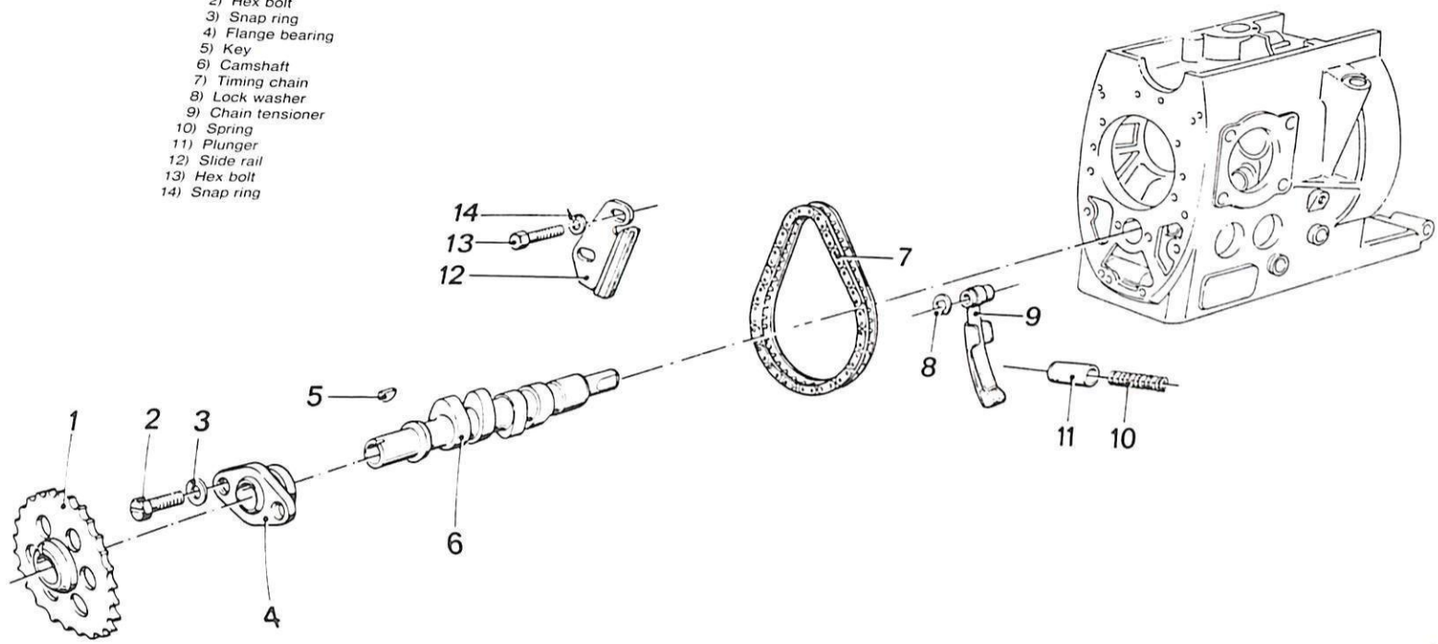


1982 Addition

# Crankshaft and bearings (from 1981 models on)

1982 Addition

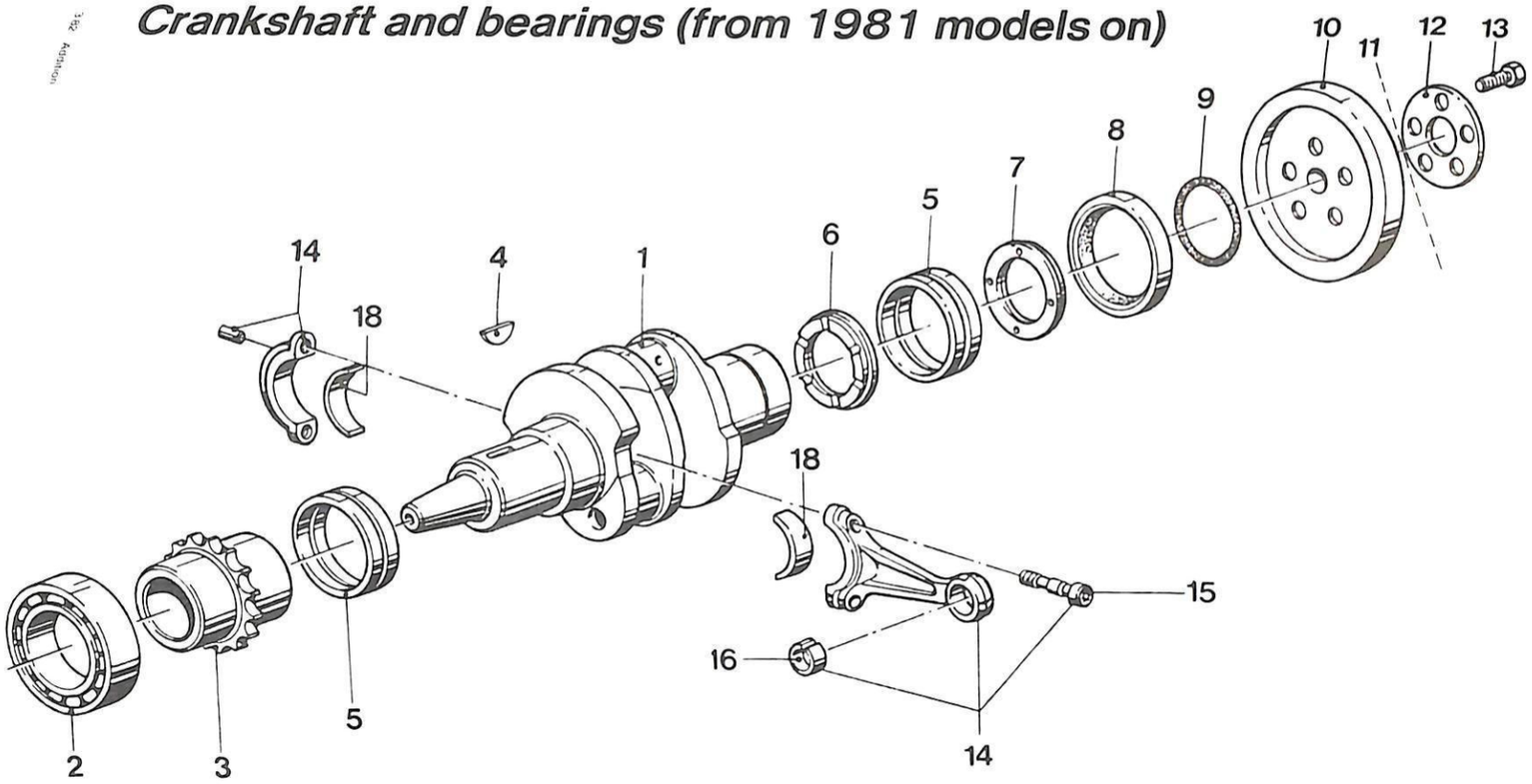


1) Crankshaft
2) Deep-groove ball bearing
3) Chain sprocket
4) Key
5) Main bearing shell
6) Thrust bearing, inner
7) Thrust bearing, outer
8) Shaft sealing ring
9) O-ring
10) Thrust ring
11) Clutch housing
12) Locating disc
13) Hex bolt
14) Connecting rod
15) Big end bolt
16) Small end bushing
17) Peg
18) Big end bearing shell

# Crankshaft and bearings

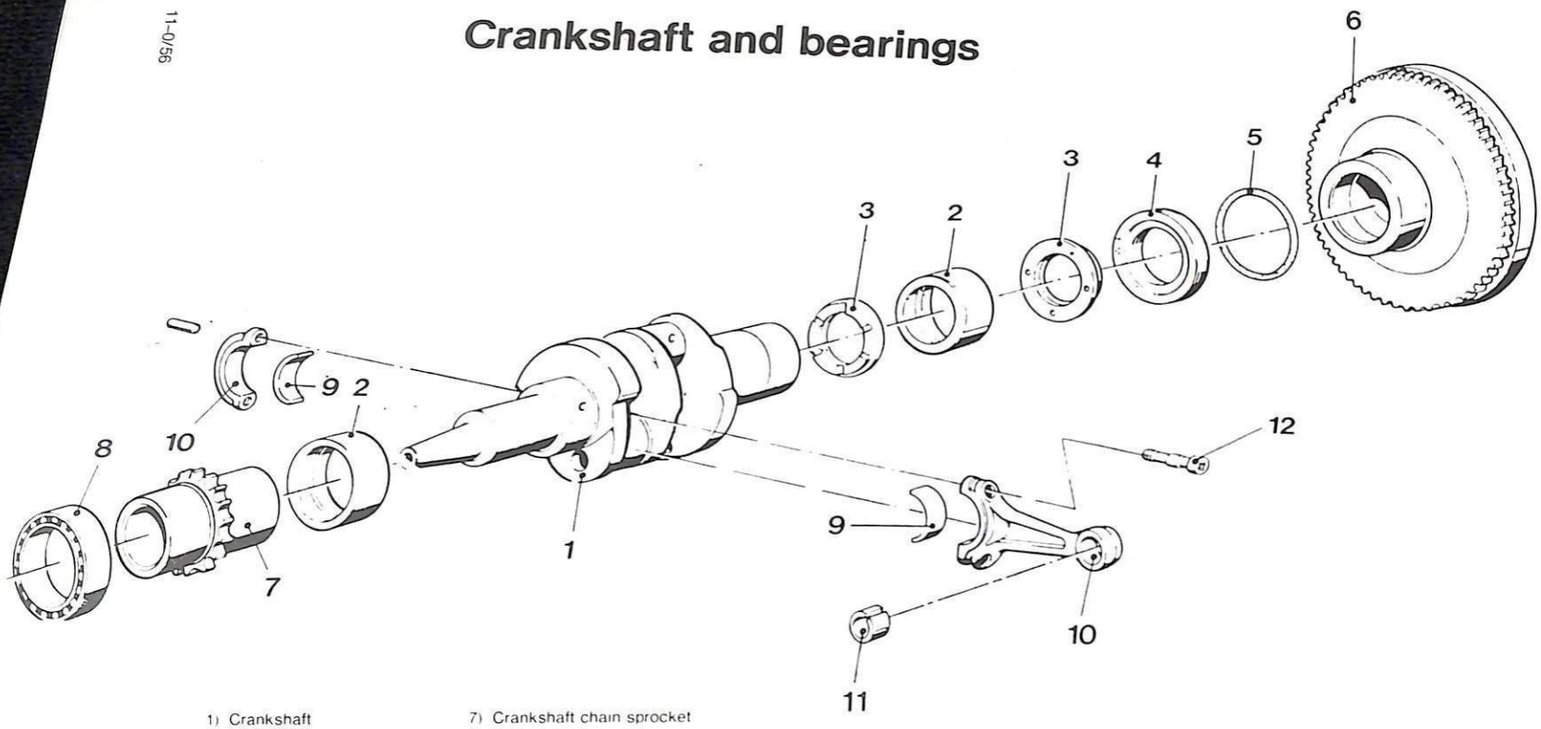


1) Crankshaft
2) Bearing bushing
3) Thrust washer
4) Shaft sealing ring
5) Cord ring seal
6) Flywheel
7) Crankshaft chain sprocket
8) Deep-groove ball bearing
9) Big end bearing shells
10) Connecting rod
11) Small end bushing
12) Big end bolts

3.82 Addition

3.82 Addition

# Oil cooler

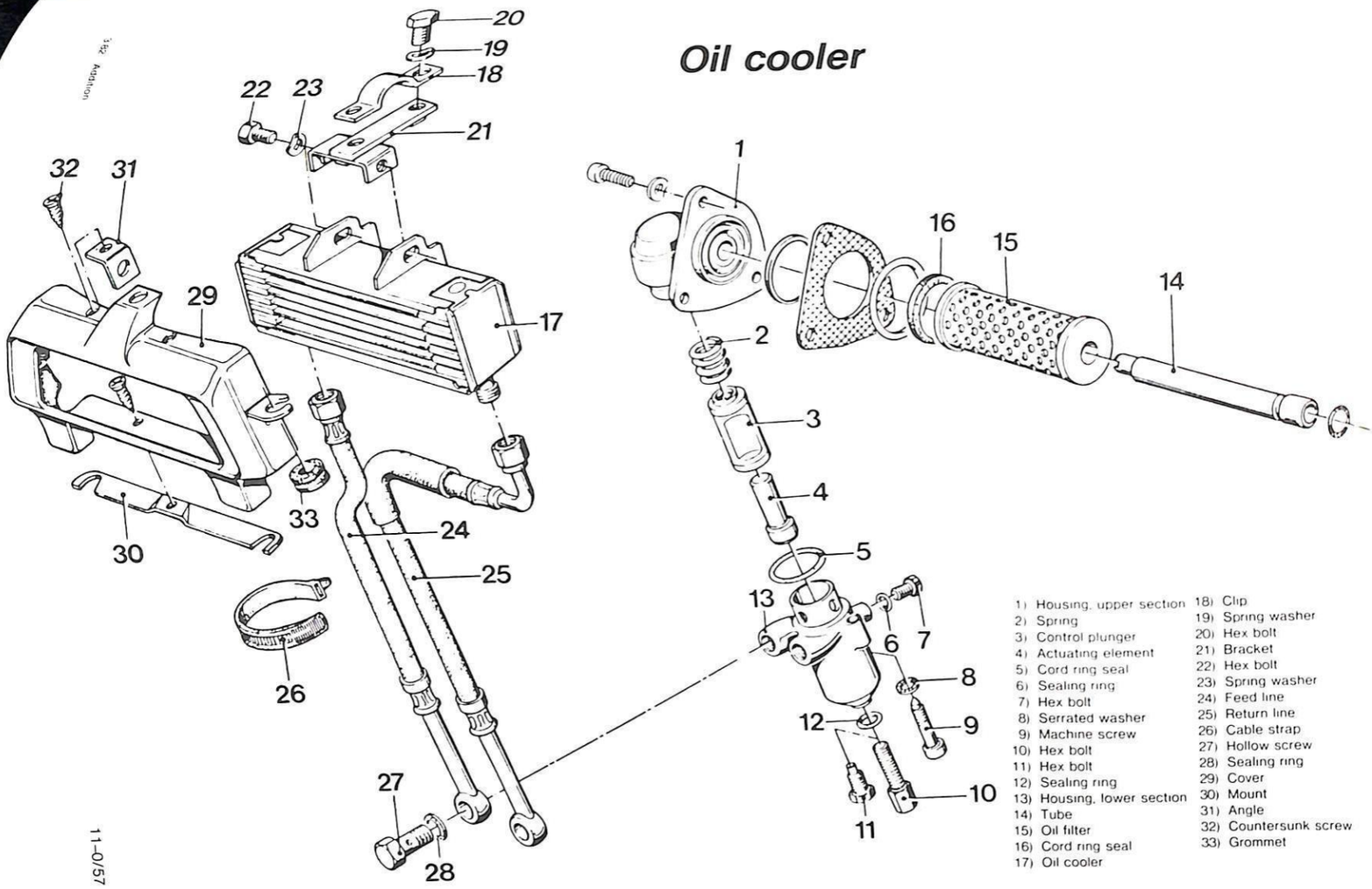


1) Housing, upper section
2) Spring
3) Control plunger
4) Actuating element
5) Cord ring seal
6) Sealing ring
7) Hex bolt
8) Serrated washer
9) Machine screw
10) Hex bolt
11) Hex bolt
12) Sealing ring
13) Housing, lower section
14) Tube
15) Oil filter
16) Cord ring seal
17) Oil cooler
18) Clip
19) Spring washer
20) Hex bolt
21) Bracket
22) Hex bolt
23) Spring washer
24) Feed line
25) Return line
26) Cable strap
27) Hollow screw
28) Sealing ring
29) Cover
30) Mount
31) Angle
32) Countersunk screw
33) Grommet

# Oil filter – methods of assembly

**Old version:** with paper gasket and steel washer

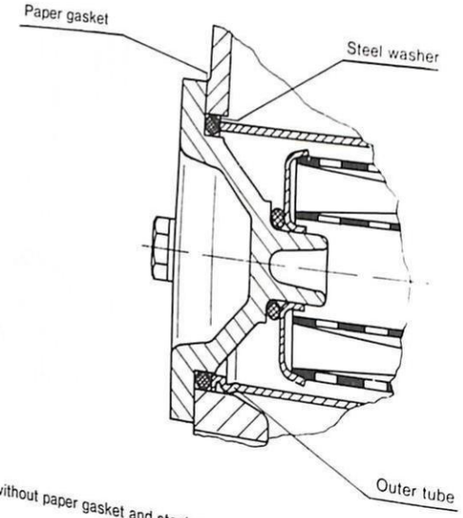


**New version:** without paper gasket and steel washer; with crimped end to outer tube

**New oil filter** with square-section rings attached with adhesive

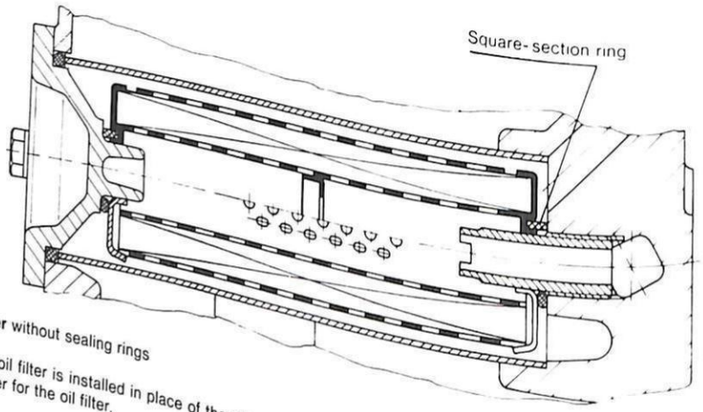


**Old oil filter** without sealing rings

If the new oil filter is installed in place of the old type, remove the sealing rings in the base of the filter housing and on the cover for the oil filter.





**New oil filter** with connecting hinge

This filter element is easier to install on motorcycles with RS or RT fairings.

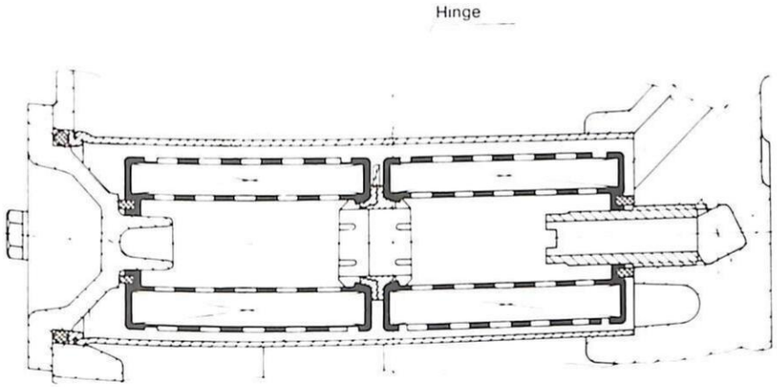


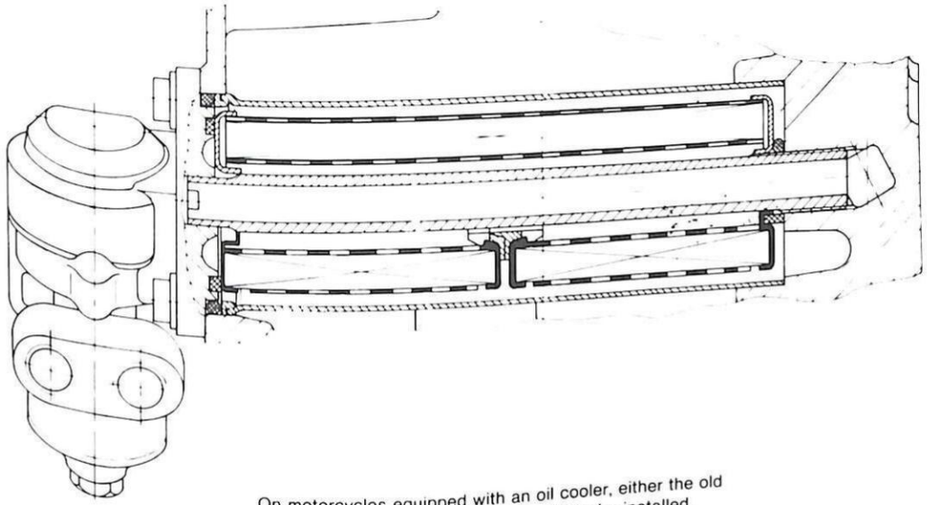

On motorcycles equipped with an oil cooler, either the old or the new filter element (with hinge) can be installed. The existing O-ring is provided to act as a seal at the filter head. **Important:** if using the hinged filter element, remove the sealing ring from inside the filter housing.

## 11 00 039 Compression test – all cylinders

1. Unscrew and remove the spark plugs.

   Measure with a calibrated compression tester. The battery must be fully charged, the engine at normal operating temperature and the throttle twistgrip fully open.

   Turn the engine over with the starter motor.

**Important on models from 1981 on:** the ignition circuit must be interrupted (plug connector at ignition unit – see 12 11 004).

Pen recording card for compression tester.

For compression values, see Specifications.

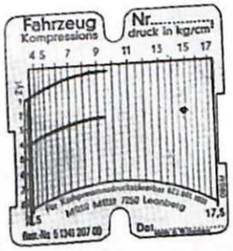


E81 11 011

## 11 00 050 Engine – removing and installing

Remove (install) exhaust system – 18 00 020

Remove (install) gearbox – 23 00 020

Detach (attach) fuel tank – 16 11 030

Lower the engine with the jack

Detach right carburettor from cylinder head and place both carburettors on top of the battery. Detach the spark plug caps and place the leads over the frame

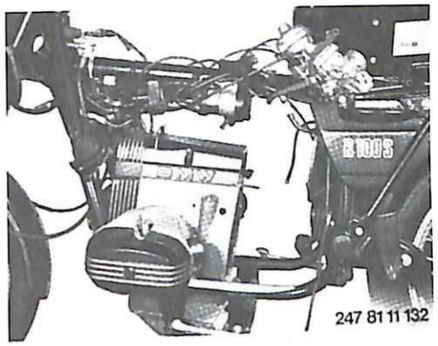

247 81 11 132

Detach multi-pin plug from control unit. Separate plug connectors (1) and (2) and detach multi-pin plug at regulator (arrow).

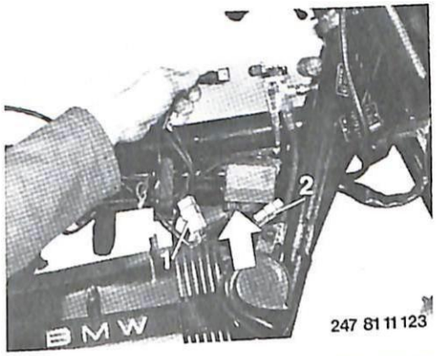

247 81 11 123

Take off the starter motor cover and disconnect the battery + (positive) lead from the starter (arrow).

Remove the right coil

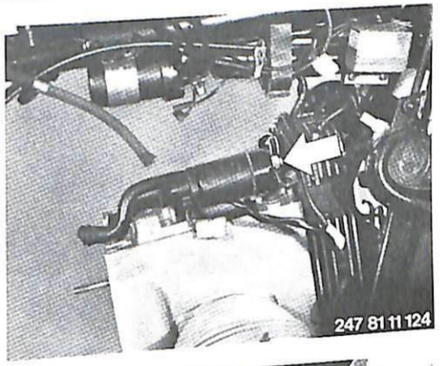
247 81 11 124

Move the engine back fully, raise it and tilt to the right (looking forwards) to remove it from the frame

247 81 11 125

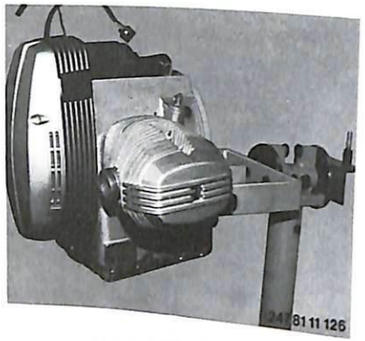


Install the engine in BMW fixture 11 0 600 on BMW assembly stand 00 1 490, and secure with 2 bolts.

■





## 11 11 050 Cylinder – removing and installing

Remove (install) cylinder head – 11 12 080.

Dislodge the cylinder with blows of a plastic-faced hammer, and pull away from engine block.

**Note:** make sure that the piston does not strike the engine block as the cylinder is pulled off.

■

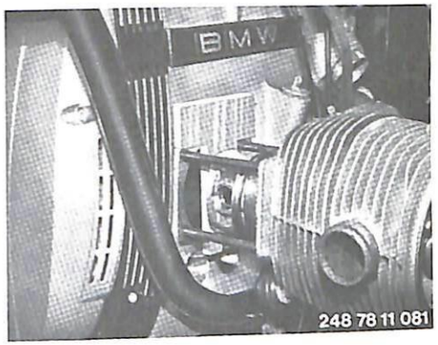


Whenever the cylinder is removed, the O-ring at the base of the cylinder (1) and the O-ring at the upper stud (2) must be renewed.

**When installing:** coat the base of the cylinder with Hylomar, Caril-T or Dirko sealant. For models from 1981 on, do not use any liquid sealant.

■

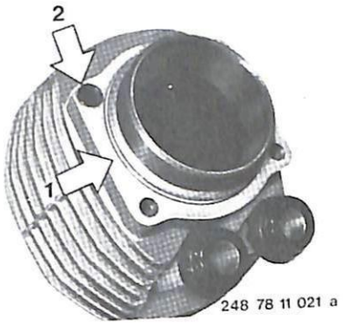


To insert the piston into the cylinder, use piston ring clamp BMW No. 11 2 915.

■

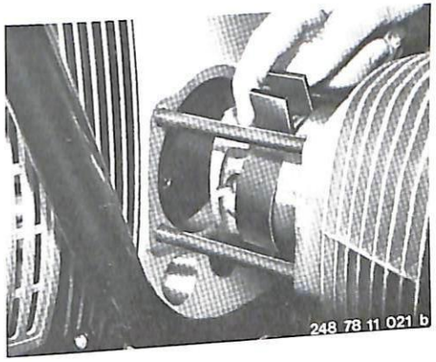

## 11 11 527 Cylinder – reboring and honing

(not permissible from 1981 models on)

Remove (install) cylinder head – 11 12 080

Remove (install) piston – 11 25 000

All the preliminary testing and repair work is to be carried out only if needed

Cylinder can be rebored in two stages. For oversizes, see Specifications

For reasons of thermal conductivity, a third rebore stage is not permitted. Measure oversize cylinders at the cylinder base. Determine piston oversize according to measured diameter of cylinder bore. For installed piston clearances, see Specifications ■

If the pushrod outer tubes are leaking at the rubber sleeve, the contact rings can be driven further in to improve the rubber sleeve contact pressure, using driver tube BMW No. 11 1 600

**Note:** from 1981 models on, the protective tube contact rings **can no longer be driven in,** since the rings are brazed into position

■

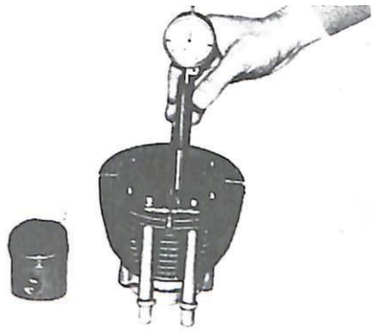

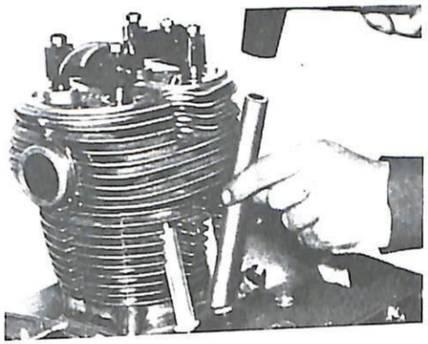

## 11 12 080 Cylinder head – removing and installing

Engine removed (11 00 050) or installed

If engine remains installed, take off the exhaust system.

Remove the carburettor

Unscrew the cap nut and the two nuts (arrows). Take off the rocker cover and the gasket

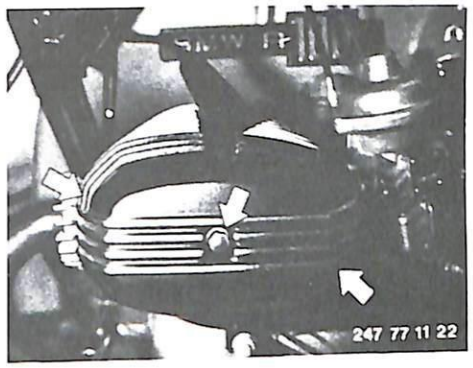


■

Unscrew the 4 shouldered nuts and remove the two rockers fron the tie-rods.
Pull out the pushrods.

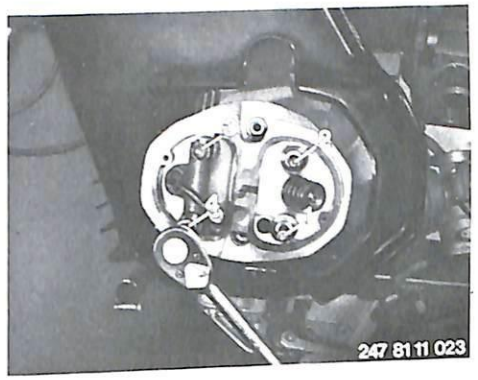


■

Unscrew the two hex nuts (arrows). Using a plastic-faced hammer, dislodge the cylinder head from the cylinder, and pull it off the tie-rods.

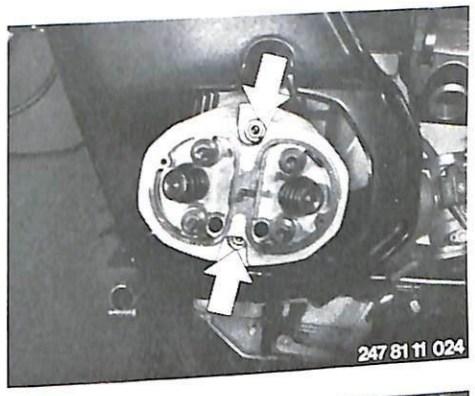


■

Tighten the cylinder head nuts with the engine cold in three stages – for tightening order, see illustration. For tightening torque, see Specifications.

**When installing:** before tightening down the cylinder heads, insert both exhaust pipes with cross-tube into the exhaust ports.

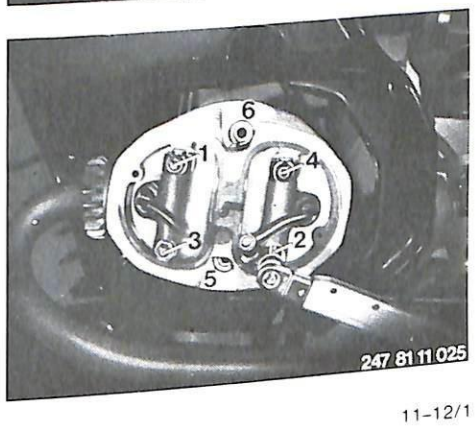




■

## 11 12 513 Cylinder head – stripping, regrinding valves and assembling

Remove (install) cylinder head – 11 12 080.

Attach valve spring clamp BMW No. 11 1 750, compress the valve spring, take out the valve collet and pull out the valve.

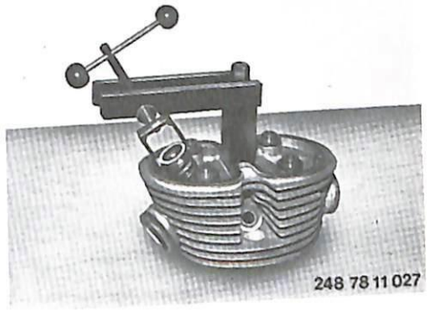


**Check cylinder head for:**

a) Cracks and poor sealing surfaces
b) Firm seating of valve guides (see illustration) and valve seats
c) Valve guide wear
d) Surface condition of pressure face and ball socket
e) Radial play at rockers
f) Check valve spring lengths and spring force (see Specifications)
g) Check tightness of threaded stub pipes for carburettors.
   If necessary, clean the stub pipe thread and apply Loctite No. 241 before inserting.

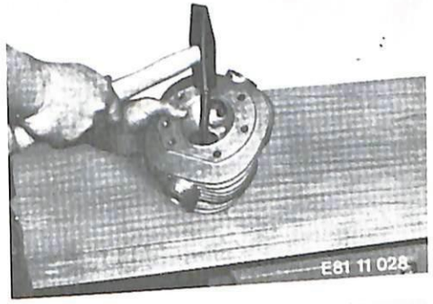


**Remachining valve seats**

The valve seat rings in the cylinder head can be turned with the 'Hunger' valve seat machining tool. The seat angle is 45° + 20'. The seat contact face width is 1.5 mm (0.06 in) for the inlet valve and 2.0 mm (0.08 in) for the exhaust valve, at a 45° angle. The chamfer towards the combustion chamber is 15°, and towards the exhaust port 75°. The sealing line should be close to the maximum diameter of the valve seat.

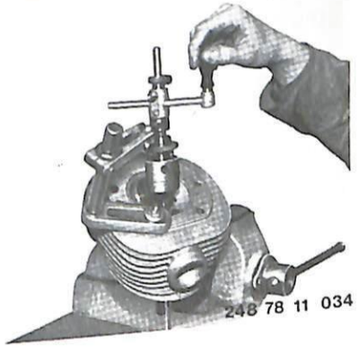


Grind the seat on the valve to 45° 20' on the grinding wheel. Maximum regrinding limit down to 1 mm (0.04 in) valve head rim thickness.

Ground valve heads and valve seat rings machined on the Hunger tool do not have to be lapped in, but after installation of the valves a leak test should be carried out by pouring gasoline (petrol) into the valve chamber.

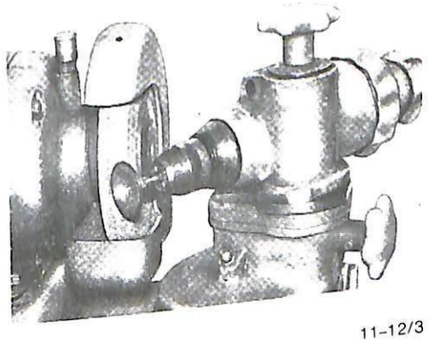

## 11 12 561 Valve guides – renewing

Remove (install) cylinder head – 11 12 080

Strip down (assemble) cylinder head and regrind valves – 11 12 513

Heat cylinder head to 240 ... 260° C (464 ... 500° F) and drive out the valve guide with drift BMW No 11 1 780, working from the combustion chamber

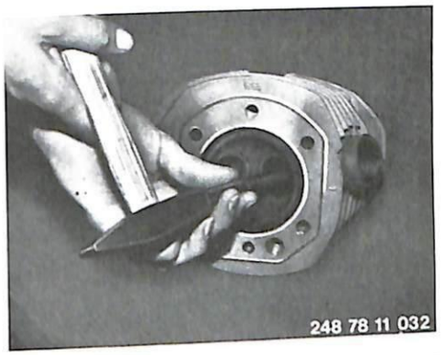


■

Install the new valve guides (for oversizes and bore diameter in cylinder head, see Specifications) with circlips into the cylinder head (heated to 240 ... 260° C [464 ... 500° F]) with drift BMW No 11 1 790

After the valve guide has cooled, ream out with fixed reamer 8 mm (0.315 in) H7

■

## 11 12 621 One valve seat ring – renewing

Cylinder head removed (11 12 080).

Strip down the cylinder head and regrind the valves (11 12 513).

If a valve seat ring has to be renewed after repeated valve seat machining, turn it out completely with the Hunger tool, but do not damage the bore in the cylinder head. Heat the cylinder head to 240 ... 260° C (464 ... 500° F) and insert the new valve seat ring (see Specifications).

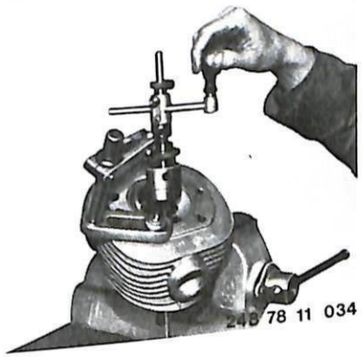


■

## 11 14 060 Timing chain cover – detaching and attaching (models without ignition trigger)

Engine removed (11 00 050) or installed. Illustrations and descriptions refer to engine removed.

Recondition the alternator (12 31 212).

Renew the breaker points (12 11 141).

Remove the nine Allen screws and three internal-hexagon buts with Allen key.

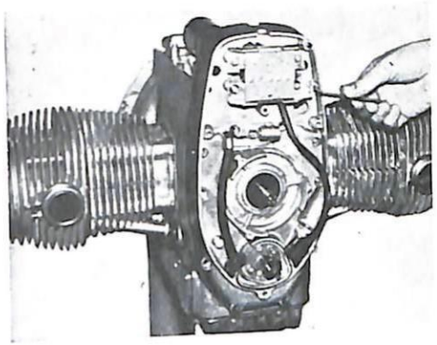

Bolt puller BMW No. 11 1 800 to the tapped retaining holes for the alternator housing with three M 5 Allen screws. Do not forget the thrust head for the puller. Pull off the timing chain cover.

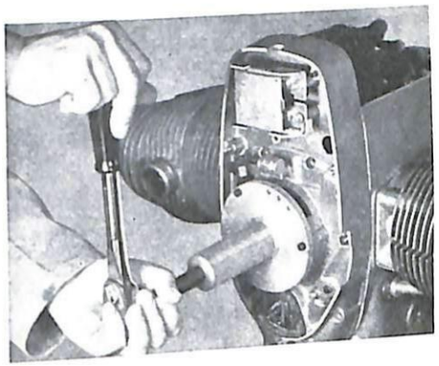

### Attaching the timing chain cover

Position the crankcase vertically in the assembly stand, and place the gasket on the housing.
Detach the diode carrier before installing the timing chain cover.

Heat the timing chain cover to 80 ... 100° C (176 ... 212° F).

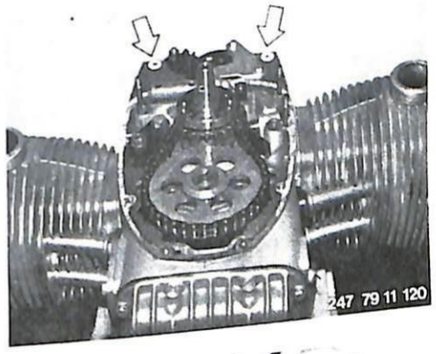


Place sleeve BMW No. 11 1 830 over the centrifugal ignition control shaft. Using centering bushing BMW No. 11 1 830, install the timing chain cover and center it. Tighten the Allen screws and internal hexagon nuts starting from the center. Relieve trapped stresses in the deep-groove ball bearings with a few light blows of a plastic-faced hammer on the bearing seat.

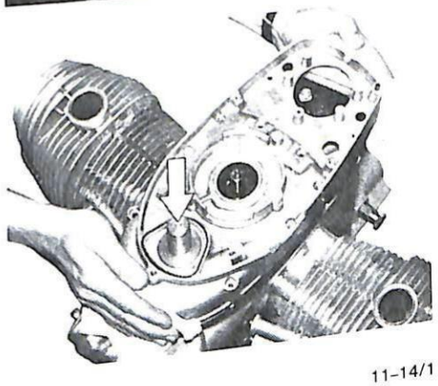

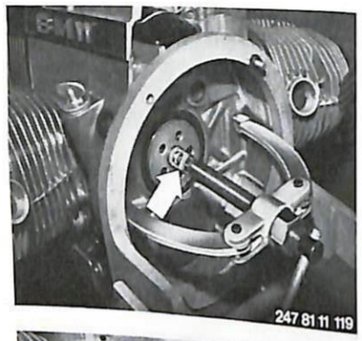

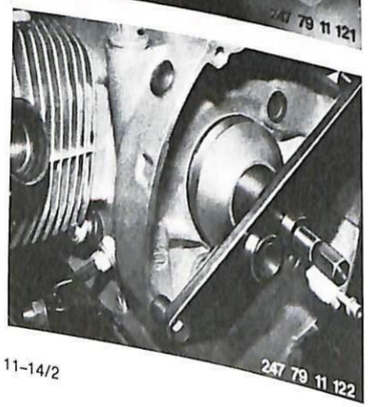


## 11 14 151 Radial seal for crankshaft – renewing
(gearbox end)

Pulling out the seal.
Remove (install) the clutch housing (flywheel) – 11 22 000.

From 1981 models on, the thrust ring must be pulled off the crankshaft before the radial seal can be extracted.

Offer up puller BMW No. 11 1 870 (arrow) from the side, and pull off the thrust ring using support bridge BMW No. 00 8 550.

■

Cut away the lip of the sealing ring at the lower left for a distance of app. 5 cm (2 in).

■

Attach the cross-member of puller BMW No. 11 1 890 to the crankcase (at the top right and bottom left). Insert the puller spindle.
Pass the eccentric lug through the cutaway section of the sealing ring as far as the thrust washer. The lug should face down.

Turn the nut clockwise, holding with a wrench to prevent turning. Pull out the sealing ring.

■

Pressing in the seal:
Attach cross-member to assembly tool 11 1 890 on the crankcase (top right and bottom left). Attach the seal to drift BMW 11 1 880 and place the thrust piece in position.

Place the drift against the crankcase, screw the spindle through to the front and press in the seal.

**Note:** leave the seal in oil for about 2 hours before installing.

■





## 11 14 060 Timing chain cover – detaching and attaching
(models with rotary ignition trigger)

Engine removed (11 00 050) or installed

Remove (install) alternator 12 31 020

Remove (install) ignition trigger 12 11 060

Remove nine Allen screws and three internal hexagon nuts.

■

Attach BMW puller 11 1 800 to the tapped holes for the alternator housing, using three M 5 Allen screws. Attach thrust head for puller and pull off the cover.

■

**Attaching timing chain cover:**
Heat the cover at the ball bearing seat to app. 80 °C (175 °F) and install on the engine.
Tighten the Allen screws and nuts, starting from the center. Strike the deep-groove ball bearing sharply several times with a plastic-faced hammer to relieve stresses at the bearing seat.

■

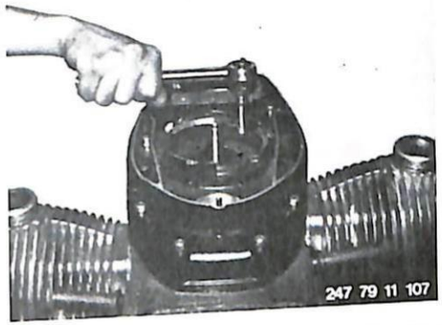


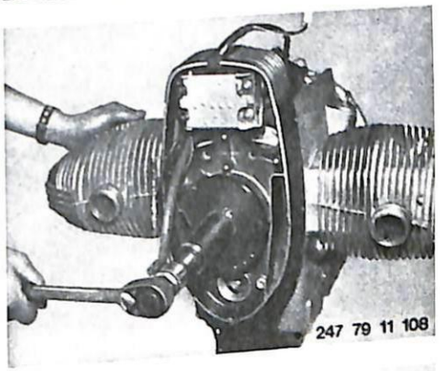


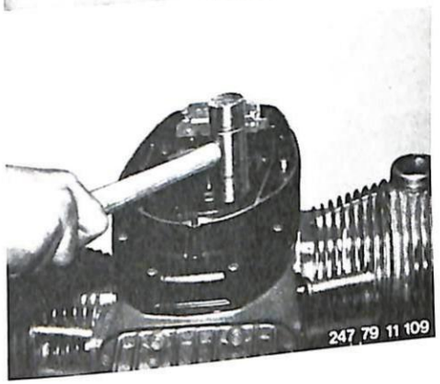

## 11 14 651 Radial seal for crankshaft – renewing
(alternator end)

Detach (attach) timing chain cover – 11 14 060.

Install radial seal for front crankshaft journal with drift BMW No. 11 1 850.

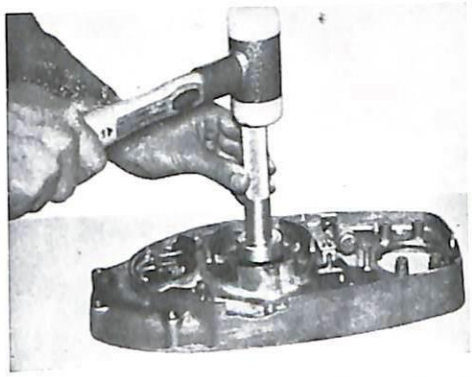

## 11 14 671 Radial seal for camshaft – renewing

Detach (attach) timing chain cover – 11 14 060.

Place the seal over the sleeve and drive in fully with special tool BMW No. 11 1 830.

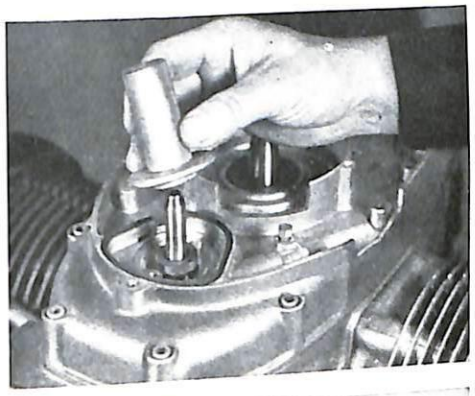

## 11 14 691 Radial seal for revolution counter drive – renewing

Detach (attach) timing chain cover – 11 14 060.

When renewing the radial seal for the revolution counter drive worm wheel, unscrew and remove the retaining screw and pull out the bushing with a suitable hook. Apply the aluminium drift to the worm wheel and drive out the radial seal.

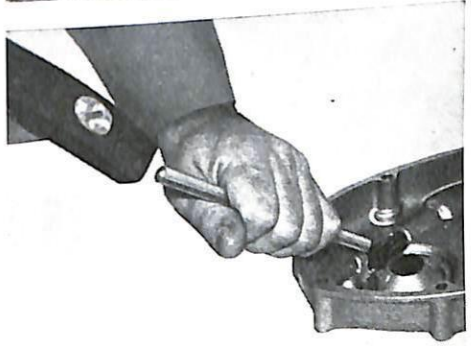

Install the worm wheel, thrust washer, radial seal and bushing, and drive in with a suitable drift.

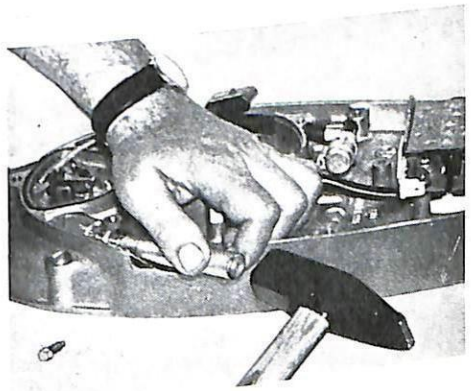

## 11 15 101 Engine Breather Hose – Renewing (single-sided breather)

Remove and refit fuel tank 16 11 030

Remove and refit air filter element 13 72 000

Disconnect both choke cables at the carburettor and lay to one side with left hand half of the air filter housing shell

With a straight ring spanner unscrew nut (1), slacken hexagon bolt (2) and take off the right hand half of the air filter housing shell, at the same time pushing breather hose (3) to the rear

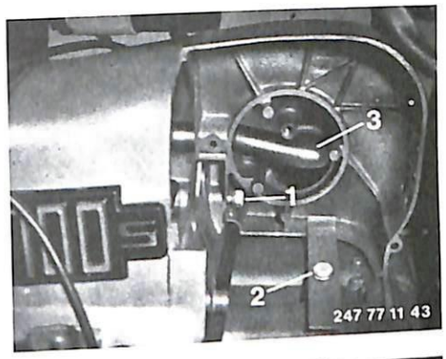


Disconnect battery

Detach starter motor cover

Disconnect wiring terminals at starter

Release hose clamp (arrow) and take off breather hose

## 11 15 111 Check Valve for Breather – Renewing

Renewing engine breather hose 11 15 101

Disconnect battery, remove tank and starter cover
Remove starter (12 41 020), loosen 2 Allen screws and take off breather cover

Replace plastic valve disc

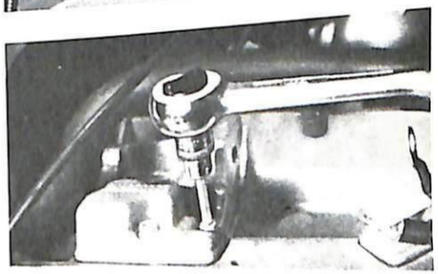

247 77 11 45

**Check valve (breather)**

1 Lock ring
2 Washer
3 Spring
4 Valve disc
5 Spring groove, R 60/7
6 Spring groove, R 75/7, R 100/7, R 100 S, R 100 RS
7 Valve body

## 11 15 101 Engine breather hose – renewing (double-sided breather)

Remove the fuel tank 16 11 030

Remove the Allen screws at the starter cover and take off the cover to the right.

Release the hose clip at the breather dome with a screwdriver (arrow).

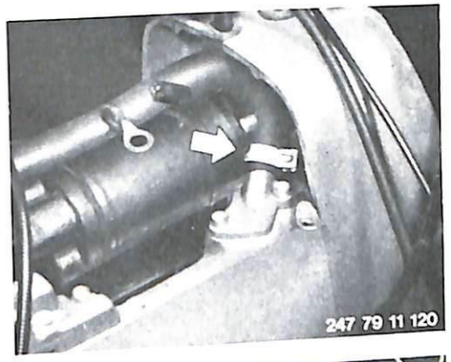


Pull the breather hose [illegible] cover at left and right.

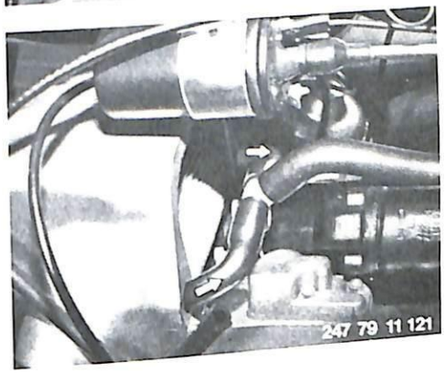

## 11 15 101 Engine breather hose – renewing (1981 models)

Take off fuel tank (16 11 030)

Take off the upper section of the air cleaner housing. Pull out the filter element (13 72 000)

Unscrew and remove the Allen screws in the starter motor cover and take off the cover. Using a screwdriver, loosen the clamp strap on the breather dome (arrow) and push back the breather hose

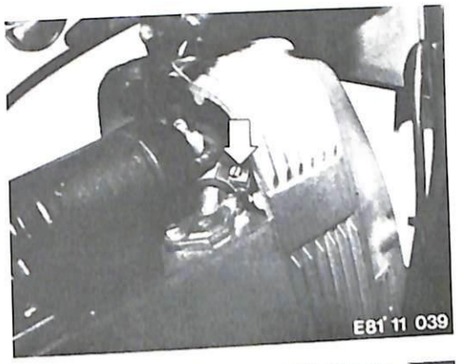


■

Pull the T-piece for the crankcase breather out of the air cleaner housing in the direction of the arrow. Press the breather hose back out of the air cleaner housing

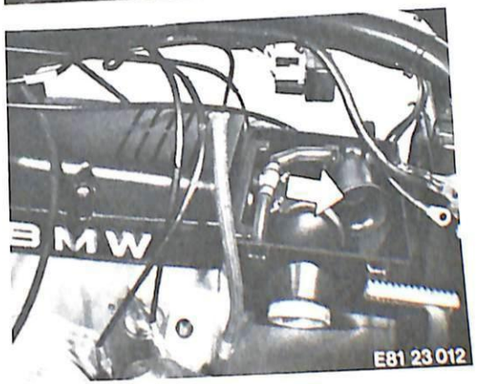


■

## 11 15 101 Engine breather hose – renewing (1981 models)

Take off fuel tank (16 11 030).

Take off the upper section of the air cleaner housing. Pull out the filter element (13 72 000).

Unscrew and remove the Allen screws in the starter motor cover and take off the cover. Using a screwdriver, loosen the clamp strap on the breather dome (arrow) and push back the breather hose.

■

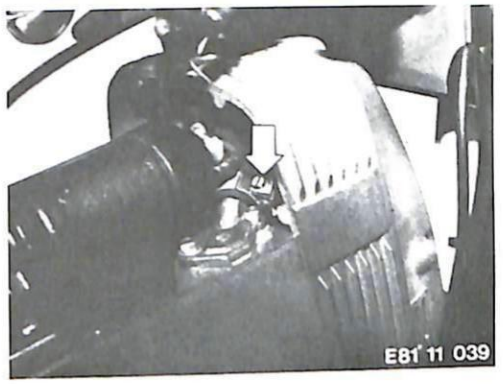


Pull the T-piece for the crankcase breather out of the air cleaner housing in the direction of the arrow. Press the breather hose back out of the air cleaner housing.

■

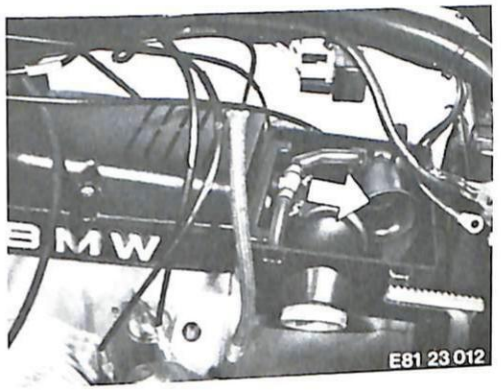

## 11 21 001 Crankshaft – removing and installing

Remove (install) the timing chain cover – 11 14 060

Remove (install) the timing chain sprockets – 11 31 061

Remove (install) pistons – 11 25 000

Remove (install) connecting rod – 11 24 000

Remove (install) flywheel (clutch housing) – 11 22 000

Slacken the remaining nuts retaining the bearing cap (arrow).

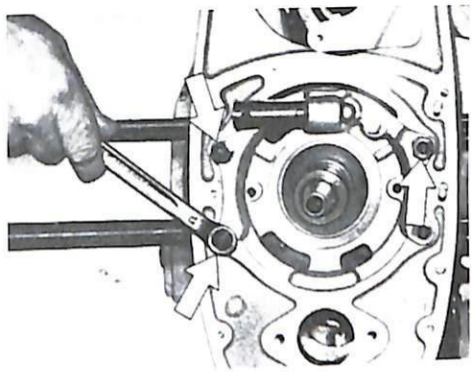

■

Position the engine vertically. Screw two bolts of puller BMW No. 00 7 500 into the tapped holes provided in the main bearing cap. Position the puller parallel to the main bearing cap. Do not forget the pressure head for the puller. Pull off the main bearing cap.

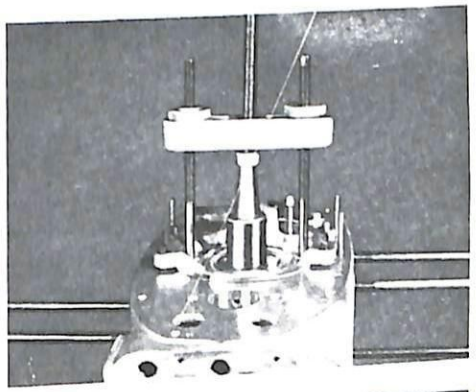

■

Turn the crankshaft until the heavy-metal plugs point in the direction of the starter.
Pull the crankshaft half-out, tilt down and then pull out fully.

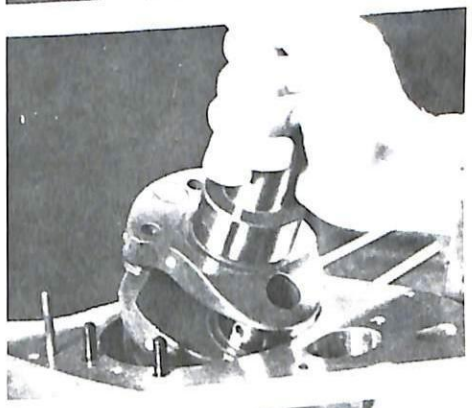

■

Using a screwdriver, lever the two thrust washers away from their locating pins.

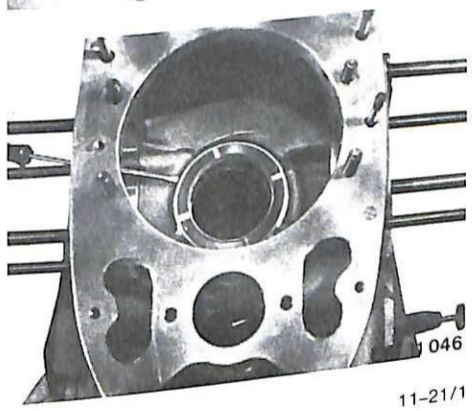

046

Measure the crankshaft and the bearing bushing.

Using a micrometer, measure the main bearing journal at 90° positions in two planes

at the front . . .

. . . and at the rear of the bearing journal

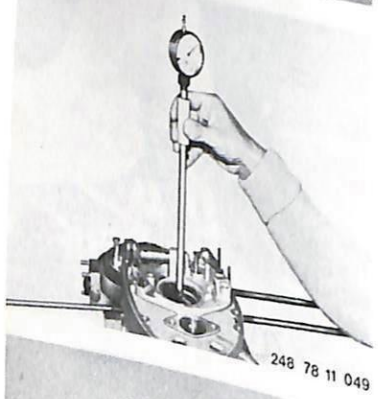


Measure the front main bearing only with the bearing cap installed.

**Note:** before installing the bearing cap, heat the crankcase to 100 . . . 120° C (212 . . . 248° F).

Allow the crankcase to cool down again before measuring.

**Important:** Main bearing play must be calculated using the measurement record sheet for main bearing play – see Technical Data.

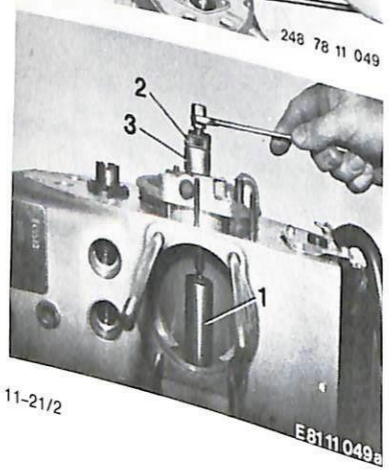


To press off the bearing cap (crankshaft removed), insert the arbor for the main bearings, BMW No. 11 2 720 (1) into the rear bearing. Using screw nipple BMW No. 11 1 710 (2) and the forcing-off bridge with spindle from Kukko extractor 17 K (3), force off the bearing cap.





Measure the crankpin.

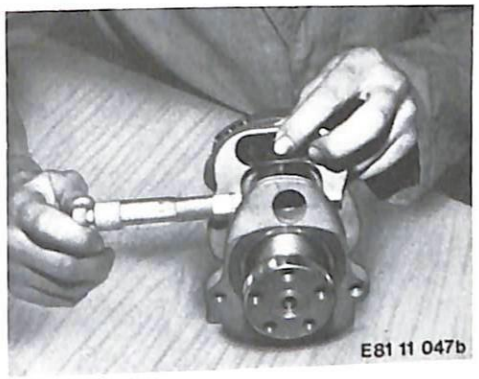


Measure the big end bearing, in both cases in the same manner as the crankshaft and main bearing bushing

For bearing play, see Specifications.

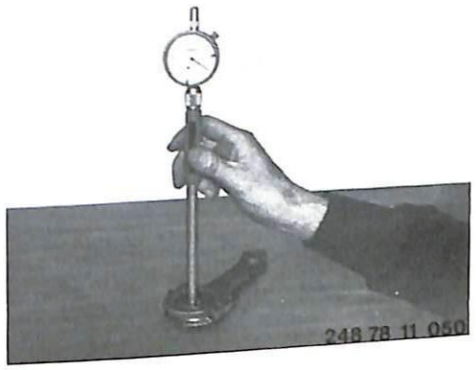

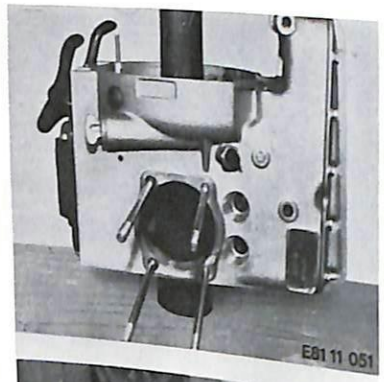

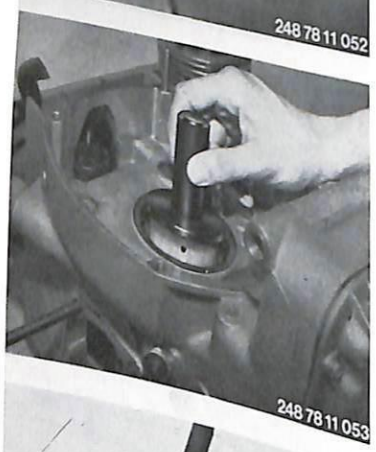

## 11 21 531 Main bearing bushings – renewing

Renew the crankshaft – 11 21 001

Pressing main bearing bushing out of the crankcase:

Heat the crankcase to 100 . . . 120° C (212 . . . 248° F) and then press it over the cylinder of extractor BMW 11 2 710 so that the locating pins for the inner thrust washer engage in the cylinder bores provided. Using extractor arbor BMW 11 2 700, press out the bearing bushing with a hand press. When pressing in, use aluminium section 11 2 710 together with a section of tube to absorb the pressure.

■

Heat the crankcase to 100 . . . 120° C (212 . . . 248° F). Place the aluminium dome of special tool BMW No. 11 2 710 on the pressing-out cylinder. Place the crankcase over the pressing-out tool so that the two locating pins engage in the bores provided in the aluminium dome support.

Offer up the new bearing bushing so that the gap is at the top right at the clutch housing end and the oil holes in the bearing bushing are at the bottom left and aligned with the hole in the housing.

■

Insert pressing-in arbor with plastic bushing from special tool BMW No. 11 2 710 into the bearing bushing. Make sure that the projecting locating pins in the housing enter the cutouts at the edge of the pressing-in arbor after the bearing bushing has been pressed in. The size of the bearing bushing is chosen to ensure that it is recessed slightly on both sides in the bearing bore in the crankcase.

■

Renewing main bearing bushing in main bearing cap:

Drive the bearing bushing locating pin out from the inside. Heat the bearing cap to 100 . . . 120° C (212 . . . 248° F) and place it on the cylinder of extractor tool BMW 11 2 710. Using a hand press and pressing-out arbor BMW 11 2 700, press out the bearing bushing; alternatively, drive it out with a hammer.

■





Press the new bearing bushing into the bearing cap after heating the cap to 100 . . . 120° C (212 . . . 248° F). The gap in the bearing bushing must be at the top of the bearing cap when installed, and the oil holes must be vertical. The bearing bushing gap must be at app. 26° to the vertical (arrows).

■

Clamp the bearing cap between soft jaws in the vice. Through the two existing 3.2 mm dia. holes, drill two additional oil holes, Items 1 and 2, into the bearing bushings. Carefully deburr the holes where they enter the bearing bushings.

■

Secure the bearing bushing in position. Working through the locating pin hole (4 H 8) in the bearing cap, and using a 3.9 mm twist drill, make a centering mark on the bearing bushing. Drill through the bearing bushing at 3.8 mm diameter (initial bore for reaming out).

Do not ream right through the bearing bushing with the 4 mm H 8 hand reamer, so that the locating pin cannot work its way inwards.

Carefully deburr the edge of the hole.

■

Clamp pressing-in arbor BMW No. 11 2 710 into the vice. Attach the bearing cap. Drive the retaining pin in only until it is 0.5 to 1.0 mm (0.02 to 0.04 in) clear of the bearing bushing bore. Secure the pin with three centerpunch marks.

■



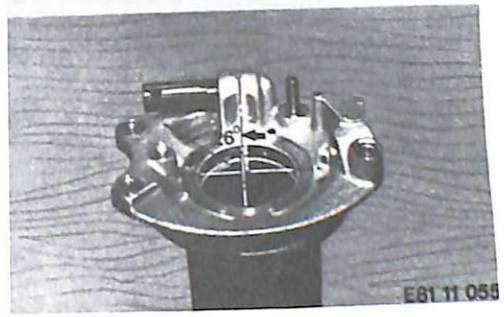


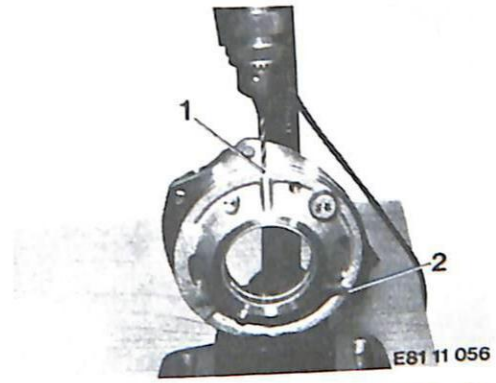


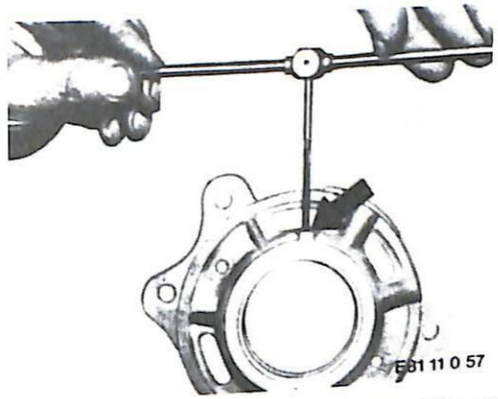


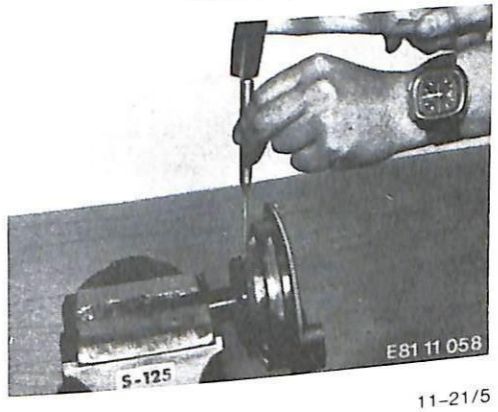

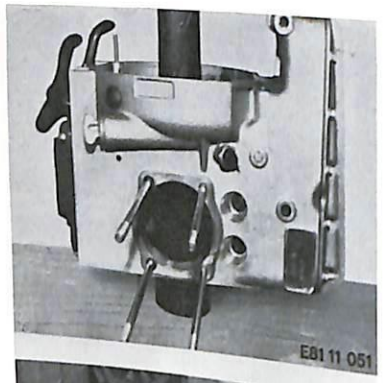

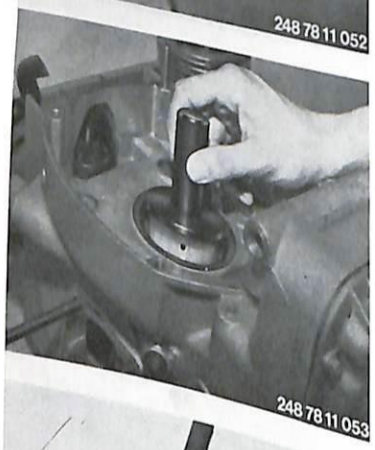

## 11 21 531 Main bearing bushings – renewing

Renew the crankshaft – 11 21 001

Pressing main bearing bushing out of the crankcase:

Heat the crankcase to 100 . . . 120° C (212 . . . 248° F) and then press it over the cylinder of extractor BMW 11 2 710 so that the locating pins for the inner thrust washer engage in the cylinder bores provided. Using extractor arbor BMW 11 2 700, press out the bearing bushing with a hand press. When pressing in, use aluminium section 11 2 710 together with a section of tube to absorb the pressure.

■

Heat the crankcase to 100 . . . 120° C (212 . . . 248° F). Place the aluminium dome of special tool BMW No. 11 2 710 on the pressing-out cylinder. Place the crankcase over the pressing-out tool so that the two locating pins engage in the bores provided in the aluminium dome support.

Offer up the new bearing bushing so that the gap is at the top right at the clutch housing end and the oil holes in the bearing bushing are at the bottom left and aligned with the hole in the housing.

■

Insert pressing-in arbor with plastic bushing from special tool BMW No. 11 2 710 into the bearing bushing. Make sure that the projecting locating pins in the housing enter the cutouts at the edge of the pressing-in arbor after the bearing bushing has been pressed in. The size of the bearing bushing is chosen to ensure that it is recessed slightly on both sides in the bearing bore in the crankcase.

■

Renewing main bearing bushing in main bearing cap:

Drive the bearing bushing locating pin out from the inside. Heat the bearing cap to 100 . . . 120° C (212 . . . 248° F) and place it on the cylinder of extractor tool BMW 11 2 710. Using a hand press and pressing-out arbor BMW 11 2 700, press out the bearing bushing; alternatively, drive it out with a hammer.

■





Press the new bearing bushing into the bearing cap after heating the cap to 100 . . . 120° C (212 . . . 248° F). The gap in the bearing bushing must be at the top of the bearing cap when installed, and the oil holes must be vertical. The bearing bushing gap must be at app. 26° to the vertical (arrows).

■

Clamp the bearing cap between soft jaws in the vice. Through the two existing 3.2 mm dia. holes, drill two additional oil holes, Items 1 and 2, into the bearing bushings. Carefully deburr the holes where they enter the bearing bushings.

■

Secure the bearing bushing in position. Working through the locating pin hole (4 H 8) in the bearing cap, and using a 3.9 mm twist drill, make a centering mark on the bearing bushing. Drill through the bearing bushing at 3.8 mm diameter (initial bore for reaming out).

Do not ream right through the bearing bushing with the 4 mm H 8 hand reamer, so that the locating pin cannot work its way inwards.

Carefully deburr the edge of the hole.

■

Clamp pressing-in arbor BMW No. 11 2 710 into the vice. Attach the bearing cap. Drive the retaining pin in only until it is 0.5 to 1.0 mm (0.02 to 0.04 in) clear of the bearing bushing bore. Secure the pin with three centerpunch marks.

■



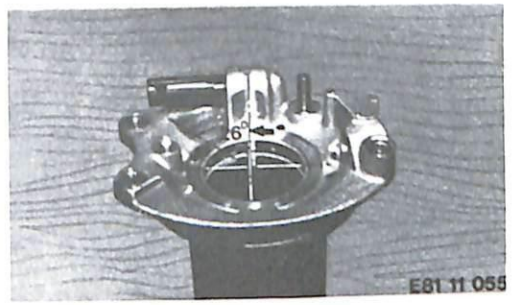


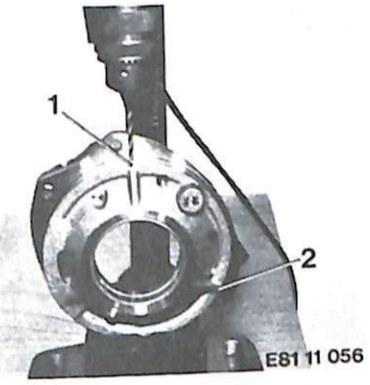


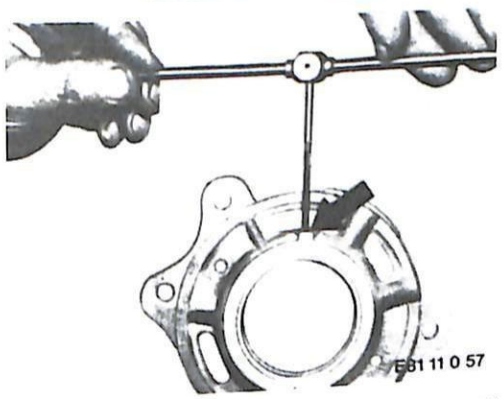


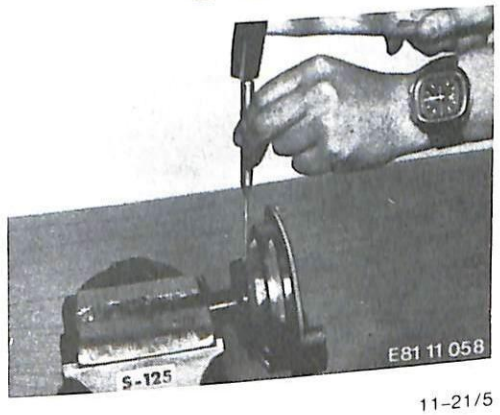

E81 11 059

E81 11 060

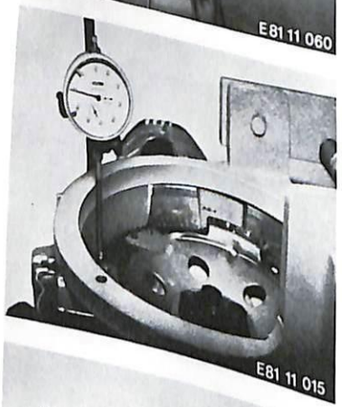
E81 11 015

E81 11 062

To reset crankshaft endplay:

See Specifications for thrust washer thickness tables.

To simplify crankshaft endplay adjustment, it is advisable to place a thrust washer marked in red on the locating pins at the inside and outside. Both locating pins must project by an equal amount in the housing at the clutch and crankshaft ends. Heat the crankcase to re-align or insert the locating pins.

■

Heat the crankcase to 100 – 120° C (212 – 248° F) and position it vertically in the assembly stand. Carefully insert the crankshaft into the crankcase. Place the bearing cap in position and tighten down. Turn the crankcase through 180 degrees.
Attach the clutch housing (flywheel).

Removing and installing clutch housing – 11 22 000.

■

Return the crankcase to a horizontal position. Screw dial gauge holder BMW No. 00 2 500 to the gearbox flange. Determine axial play (endplay).

Detach the clutch housing (flywheel) again and measure the thrust washer previously installed (marked in red) with a micrometer.

■

**Example:**

| | | |
|---|---|---|
| Endplay as determined: | 0.18 mm | (0.0071 in) |
| Desired endplay: | 0.12 mm | (0.0047 in) |
| Difference: | 0.06 mm | (0.0024 in) |
| Thickness of thrust washer when removed: | 2.48 mm | (0.0976 in) |
| Plus difference: | + 0.06 mm | (0.0024 in) |
| Thrust washer to be installed: | 2.54 mm | (0.1000 in) |

■





Select a thrust washer as close as possible in thickness to the value determined in this way, and not differing by more than + 0.03 mm (0.0012 in) or – 0.05 mm (0.0020 in). Place this thrust washer on the locating pins.

■

Using special tool BMW 11 1 890 with drift 11 1 880, press the shaft sealing ring into the crankcase. Press the drift in until it touches the thrust washer.

**Note:** before installing, place sealing rings in oil for about 2 hours.

■

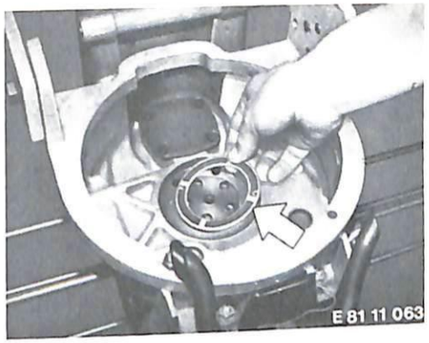
E 81 11 063

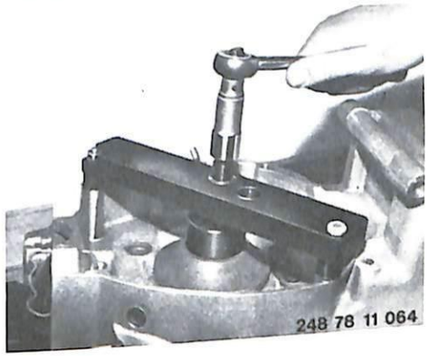
248 78 11 064

## 11 22 000 Flywheel – Removing and Refitting

**First possibility** remove and refit engine – 11 00 050
Remove and refit clutch – 21 21 000

**Second possibility:** remove and refit gearbox – 23 00 020

Engine remains in frame

Remove and refit clutch – 21 21 000

Fit BMW 11 2 800 back up plate in flywheel so that it comes to rest at the lower cast eyes in the housing

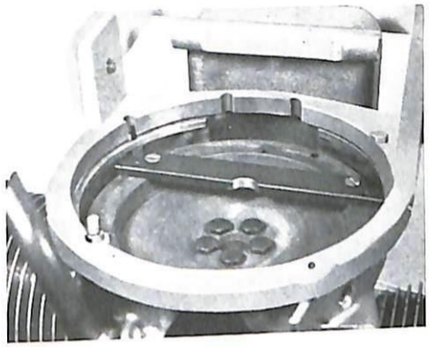

■

Release five fastening bolts and carefully lift out the flywheel after screwing in two clamping screws taking care not to tilt the flywheel. Alternatively pull the flywheel off the crankshaft stump with the BMW 11 2 810 extractor tool

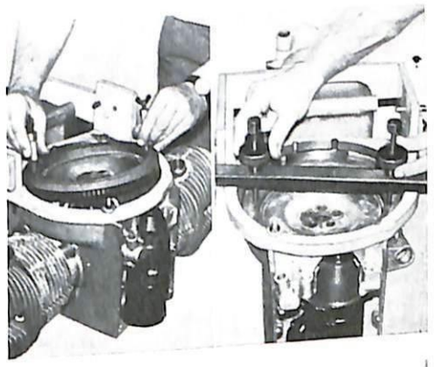

■

When refitting, set piston to top dead centre and place the flywheel on the crankshaft stump so that the TDC marking is visible in the sight aperture of the housing
Fit the BMW 11 2 800 back-up plate in the flywheel
Tighten five fastening screws to the prescribed torque ratings see Technical Data The flywheel fastening bolts are of the expanding head type and must be fitted in dry condition
Ensure that the contact surface of the flywheel, the front end of the crankshaft and the crankshaft tapped bores are free of oil (dry)

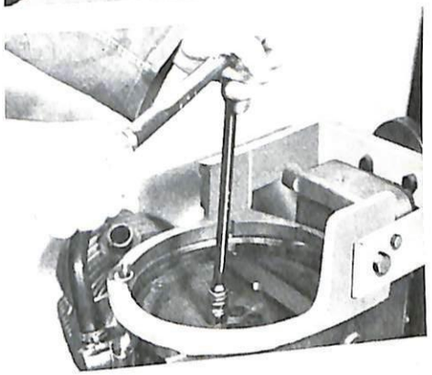

■

Use a dial gauge mounted in gauge holder BMW 00 2 500 to check the flywheel for wobble To eliminate end float on the crankshaft when checking the flywheel for wobble the engine must be positioned vertically in the assembly rig When the engine is in situ press against the crankshaft stump locator

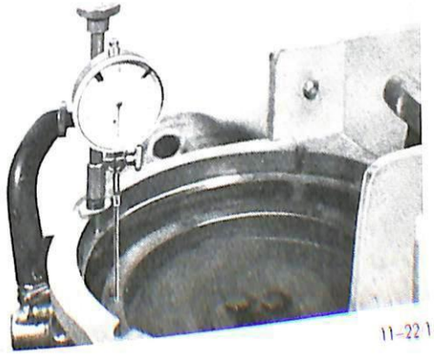

■

## 11 22 000 Clutch housing (flywheel) – removing and installing (1981 models)

Remove (install) clutch – 21 21 000

Attach retaining device BMW No. 11 2 800 to the clutch housing, and unscrew the bolts at the crankshaft

For correct tightening torques, see Specifications

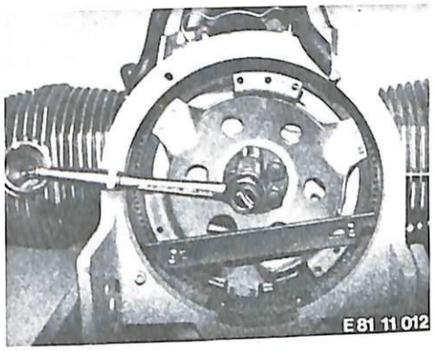


Take off the clutch housing (1) and steel shim (2)

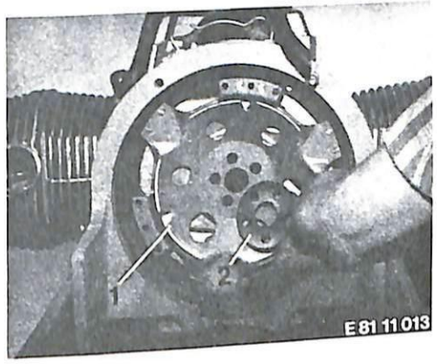

## 11 24 000 Connecting rod – removing and installing

Remove (install) engine – 11 00 050.

Remove (install) cylinder head – 11 12 080.

Remove (install) piston – 11 25 000.

All preliminary testing and repair work is to be performed only if needed.

The connecting rod is removed and installed with the crankshaft in the top dead center position. Using multi-sided wrench BMW No. 11 2 860, unscrew the big end bolts. Take out the connecting rod together with the big end bearing cap and bearing shells.

**When installing:** the locating pins on both connecting rods must be on the alternator side.

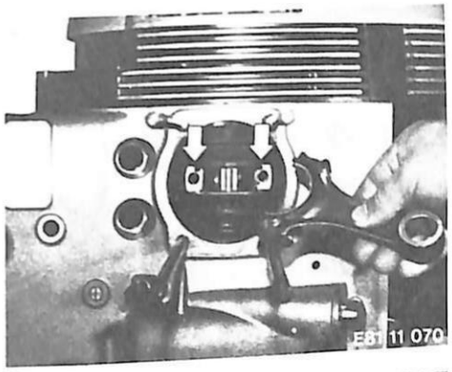


Testing and repair: measure width of connecting rod at crankpin bearing with a micrometer. For dimensions, see Specifications.

Within the engine, both connecting rods must have the same weight or colour markings.

Check that the small end bushing is firmly seated and to the correct dimensions.

If the internal diameter of the small end bushing is beyond the wear limit, press out the bushing. For dimensions, see Specifications.

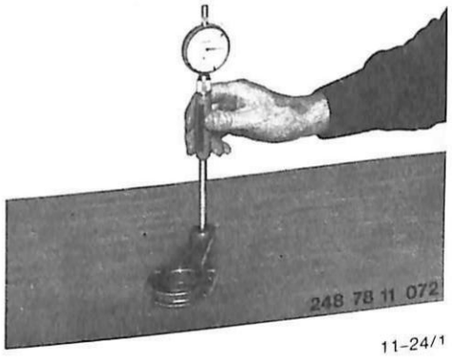

248 78 11 074

The piston pin should slide into a new small end bushing when light thumb pressure is applied.

■

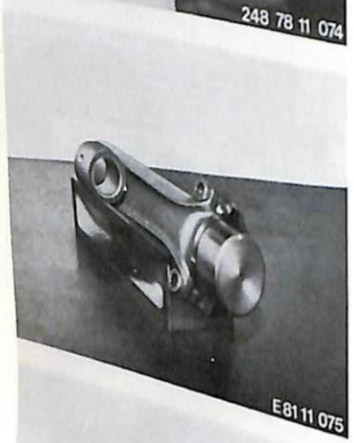
E 81 11 075

**Measuring the connecting rod**

Press the bearing shells used for test purposes into the connecting rod. Mount the connecting rod on the hardened and ground test mandrel and tighten the bolts. The test mandrel must not have any radial play in the crankpin bore.

Push a hardened and ground measuring mandrel approx. 150 mm (5.9 in) long into the small end bushing, so that it projects by the same amount on both sides.

■

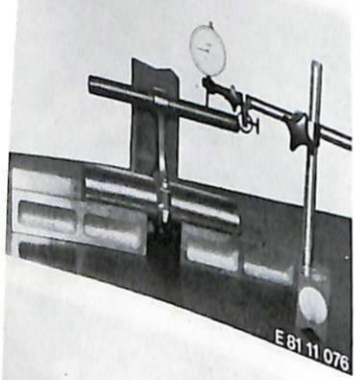
E 81 11 076

Place two Vee-guides of the same size on an alignment plate. Support the connecting rod by means of the test mandrel on the Vee-guides. Hold the connecting rod vertically. Using a dial gauge and stand, measure the height of the test mandrel at both sides to determine whether the small end bushing axis is parallel to the crankpin axis. For checking whether connecting rod is parallel, see Specifications.

■

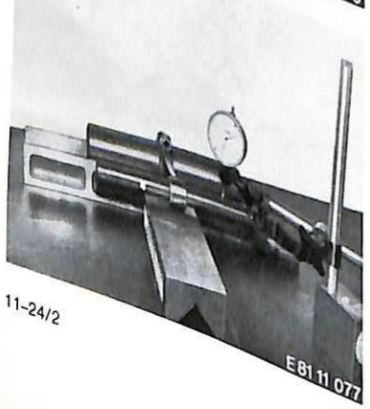
E 81 11 077

Check connecting rod twist: support the connecting rod in Vee-guides as before, and also under the small end until the distance between the alignment plate surface and the centerlines of the small and big end bores is approximately the same.

Apply the dial gauge on its stand to the ends of the test mandrel in the small end bushing to check for twist. Have the connecting rod straightened if necessary. For twist limit, see Specifications.

■





Press the bearing shells into the big end bore of the connecting rod, which should be clean.

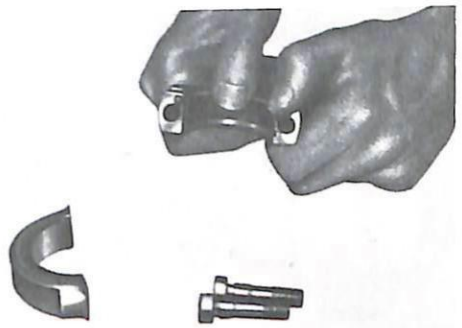
248 78 11 078

■

Before the big end bearing shells are installed again, they should be coated lightly with Molykote G paste.

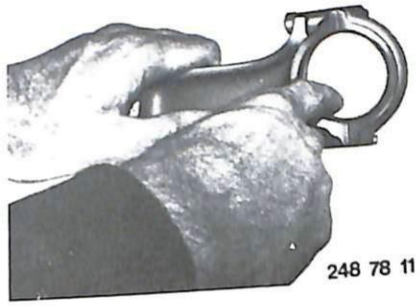
248 78 11 079

■

## 11 25 000 Piston – removing and installing

Remove (install) cylinder head 11 12 080

Pull the cylinder off its 4 tierods. Make sure that as the piston is exposed it does not become damaged by slipping out of the cylinder. Insert a piece of wood to protect the piston between the tierods behind and below the piston.

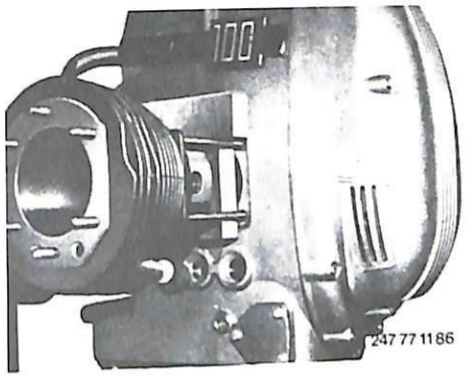


■

Press a scriber point or a small screwdriver into the cross-groove to release the piston pin circlip. Press the piston pin out with a commercial extractor tool or drift BMW No. 11 2 920.

From 1978 models on, the piston pin is retained by a Seeger-pattern circlip, which should be removed with the correct pliers.

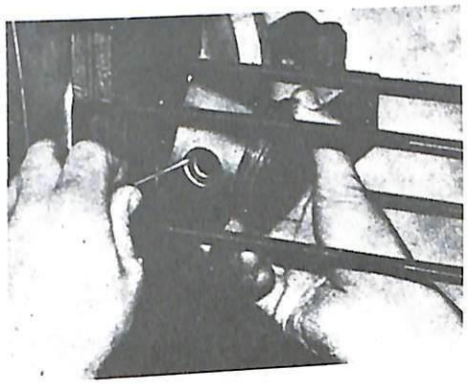

■

**When installing:** attach the piston with the marking "vorn" (front) on its crown pointing towards the front of the motorcycle. This will ensure the correct positioning of the offset-axis piston. The piston need not be heated to insert the piston pin.

Both pistons on an engine must be of the same weight group.

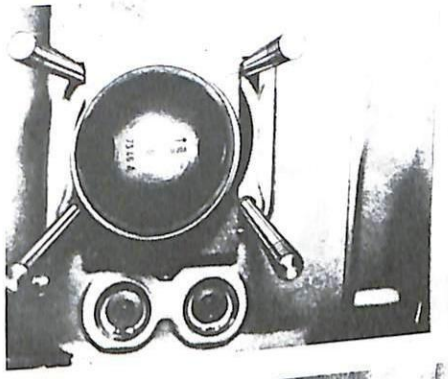

■

Insert the piston pin circlip in its groove so that one end easily covers the cross-groove. Press the center section of the circlip into the groove in the piston pin so that the two ends of the ring are as close together as possible. Use drift BMW No. 11 2 920 to press the ring fully into the groove.

**When installing:** before installing the cylinder, clean the cylinder base and contact faces on the engine block with nitro thinners, then apply "Hylomar" liquid sealant (not to be applied from 1981 models on). Make sure that the cord ring seals on the upper studs are not trapped and distorted.

Keep the sealant clear of the oilways, or they may become blocked.

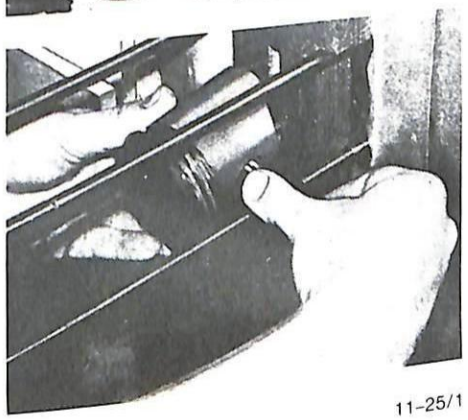



■

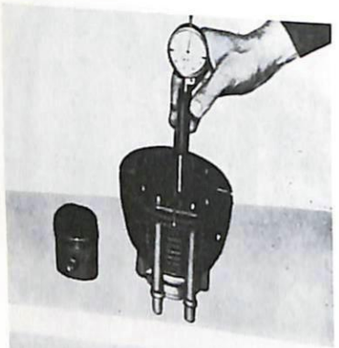

**Testing and repairing:** measure the cylinder bore along the line of the piston pin and at 90° to this line at points 10 mm (0.4 in) from the top, in the center and at the bottom, using an internal dial-gauge micrometer. This test should be performed at a room temperature of 20° C (68° F).

Measure piston diameter at the piston skirt, at a right angle to the piston pin bore, using a micrometer.

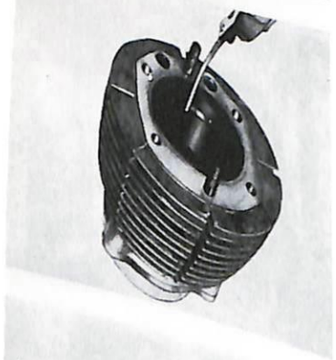

Determine piston ring end gap and

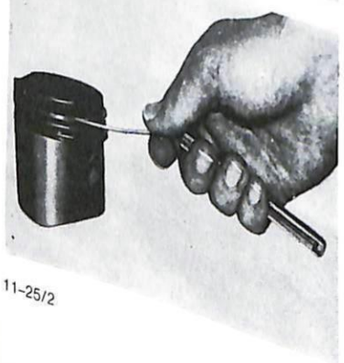

piston ring flank clearances with a feeler gauge. For nominal and oversize cylinder bore diameters, piston diameters and piston ring gap and flank clearances, see Specifications.





## 11 31 061 Timing chain sprockets – renewing (models without rotary ignition trigger)

Remove and refit engine 11 00 050
Remove and refit cylinder head 11 12 080
Remove and refit timing cover 11 14 060
Remove and refit flywheel 11 22 000
Remove and refit connecting rod 11 24 000
Remove and refit piston 11 25 000
Remove and refit oil pump 11 41 000
Remove and refit alternator 12 31 020
Remove and refit clutch 21 21 000

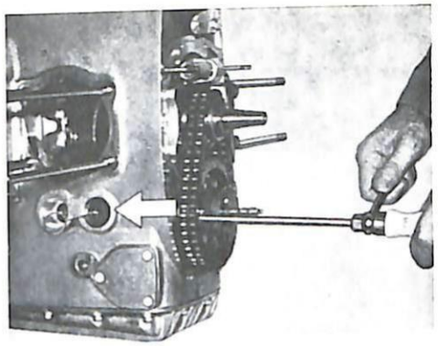

Unscrew the two slotted hexagon head screws fastening the camshaft flanged bearing with the aid of an M 10 spanner or a screwdriver. Withdraw the four push rods with the aid of a wire hook.

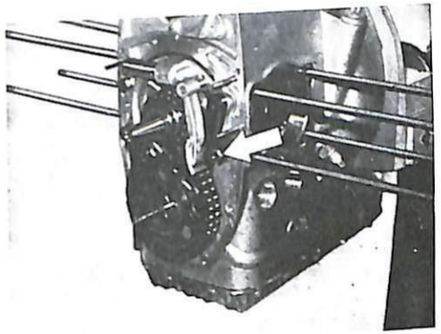

After removing the circlip, take off the chain tensioner. Remove the chain tensioner spring after releasing the nut (arrow).

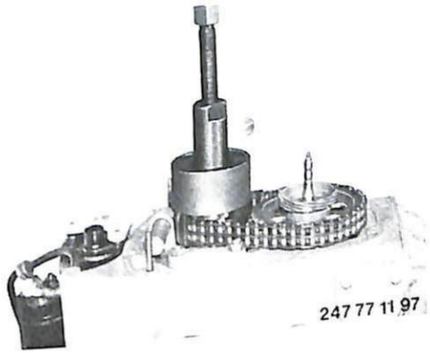


Fit the BMW 11 2 600 timing chain sprocket extractor on the crankshaft sprocket (not forgetting the extractor pad cap). Draw off the sprocket and ball bearing while tightening the camshaft.

Insert the camshaft into a suitable pipe (outer diameter approx. 106 mm (4.17 in), inner diameter approx. 90 mm (3.54 in) and length approx. 225 mm (8.86 in) so that the sprocket lies flat on the pipe. Fit BMW 11 3 600 sleeve on the camshaft end face and press out the sprocket together with the rev. counter drive gear.

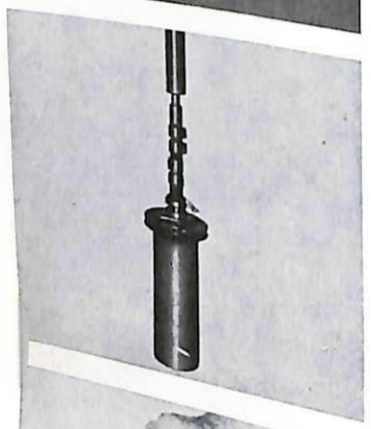

Before refitting the timing sprockets, grease the gear bores lightly with tallow.

The rev. counter drive is pressed on in reverse sequence to removal. Push the flanged bearing on to the camshaft, then push the sprocket followed by the rev. counter drive gear into place.

When pressing the camshaft into the sprocket hold a feeler gauge (see Technical Data for thickness) between the camshaft thrust collar and the flanged bearing.

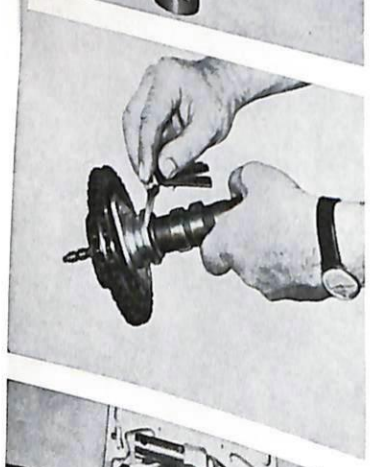

Check the end play on the camshaft flanged bearing once again with a feeler gauge.

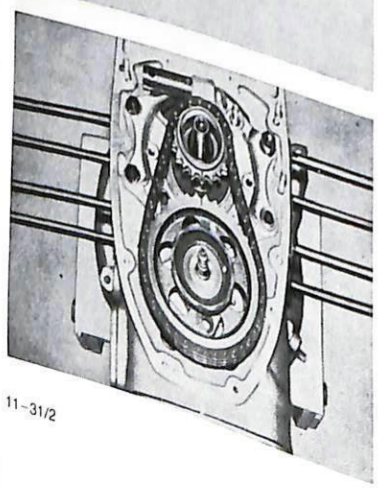

Position the crankcase vertically for fitting the camshaft. Lay the camshaft and crankshaft sprocket into the chain so that the tooth marking lines are exactly opposed.
Insert the camshaft in the crankcase and push the drive gear with slip collar on to the crankshaft stump so that the sprocket groove coincides with the fitting key.





## 11 31 061 Chain sprockets – renewing (models with rotary ignition trigger)

The engine can be either removed or left installed.
If installed, drain the engine oil.
Remove (install) engine – 11 00 500.
Remove (install) rotary ignition trigger – 12 11 060.
Detach (attach) timing chain cover – 11 14 060.
Remove chain guide rail (1) and chain tensioner arm (2).
Release spring link (3) and remove chain.

**When installing:**

The closed end of the spring link must face the direction of chain movement. The chain guide rail must be parallel to the chain.

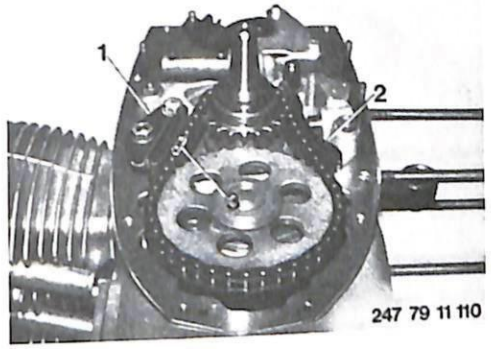


Pull the chain sprocket off the crankshaft together with the bearing. Use BMW puller 11 2 600, but replace disk 11 2 606 by one with a groove. This will enable the bearing to be re-used.

**When installing:**

Heat the chain sprocket to app. 80° C (175° F), then heat the bearing and push on.

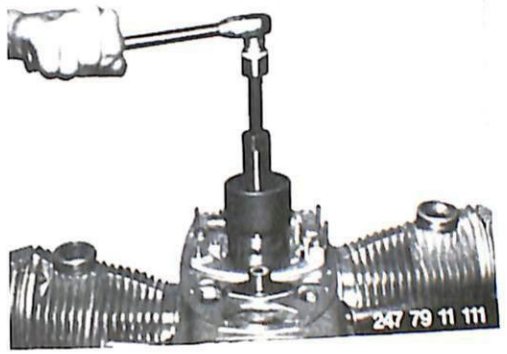


Press off the camshaft chain sprocket with two screwdrivers avoiding damage to the sealing face.

**When installing:**

The marks on the two chain sprockets should be opposite one another.

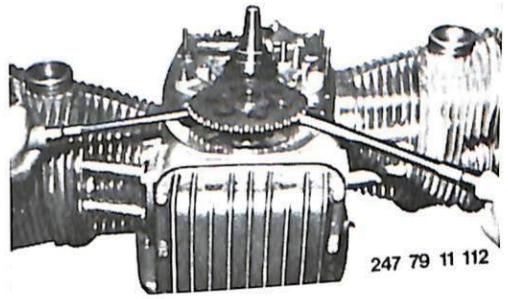

Screw the BMW 11 2 620 screw press with spindle into the crankshaft stump. Press the sprocket firmly into position ensuring that the camshaft is guided accurately into its bearing seat at the flywheel end.

**When installing:**
Do not screw the threaded spindle fully into the crankshaft. Hold with open-ended wrench.
Assembly can only be performed by 2 persons.

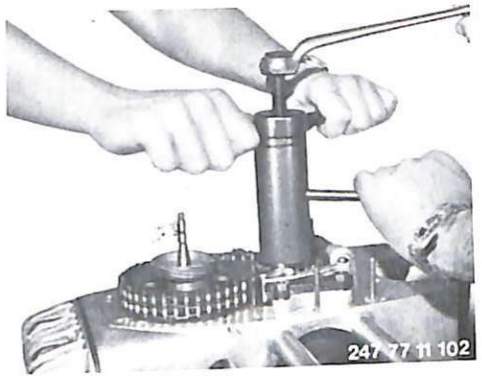


■

Tighten the camshaft flanged bearing with its two hex. slot screws. Heat the grooved bearing to approx. 80 ... 100 °C (175 ... 212 °F) and mount on crankshaft stump. Fit chain tensioner, ensuring that the rubber running surface is in good condition. Do not change the form or spring pressure of the timing chain tensioning spring.

■

## 11 34 504 Valve Clearance – Adjusting

Slacken off the cap nut and the two nuts (arrows), remove the cylinder head cover and gasket

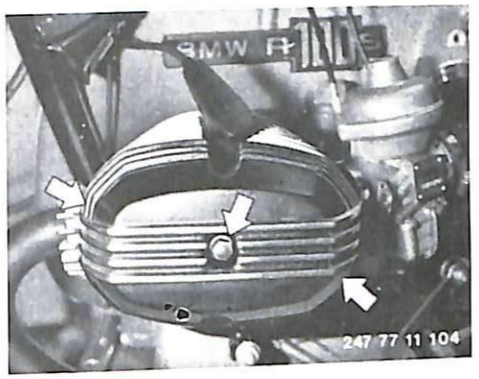


Adjust the valve clearance with the engine cold and stationary by inserting the appropriate feeler gauge between the valve stem and rocker arm. For this purpose take out the spark plugs and turn the engine with the kick starter till the cylinder to be adjusted is at top dead centre on the compression stroke. Both valves are closed. If necessary adjust the adjusting screw after releasing the lock nut and then secure with the lock nut. Recheck the valve clearance. See Technical Data for valve clearances

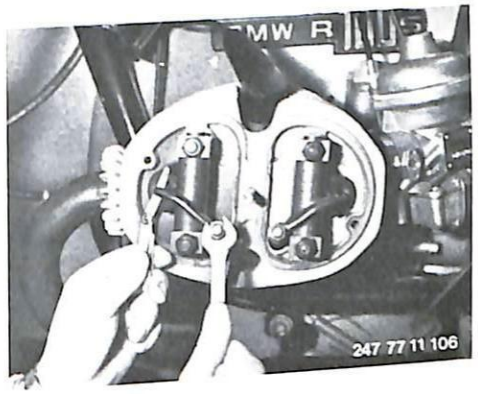

## 11 41 000 Oil Pump – Removing and Refitting

**First possibility:** Remove and refit engine – 11 00 050
The illustrations and text were prepared after this preliminary work

**Second possibility:** Remove and refit gearbox – 23 00 020
(Engine remains in frame)

Remove and refit clutch – 21 21 000
Remove and refit flywheel – 11 22 000

After unscrewing the four hexagon bolts, take off the oil pump housing cover

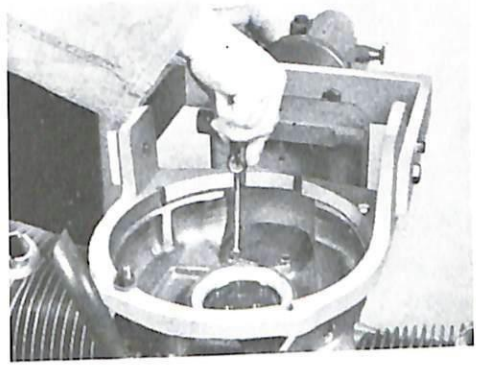

Take the inner and outer rotor out of the housing with the aid of a wire hook

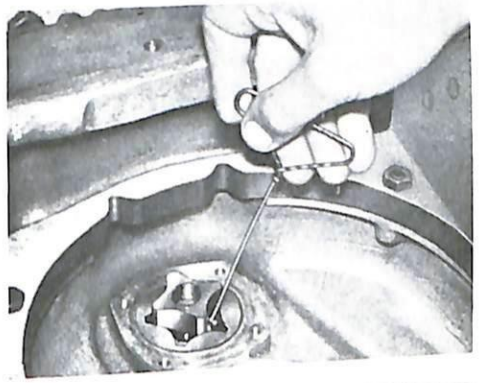

Before extracting the driver key (fitting key) for the inner rotor it is advisable to press a small rag into the oil pump housing bores

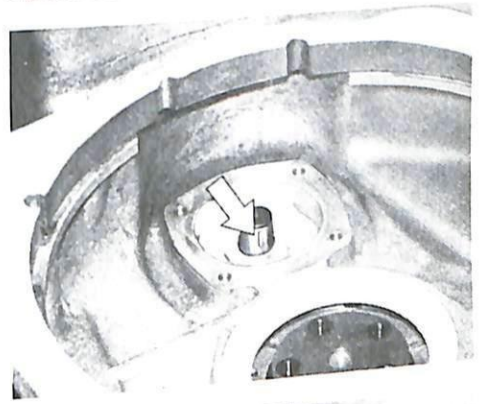

**Tests:**
See Technical Data for clearance between outer rotor and pump housing.

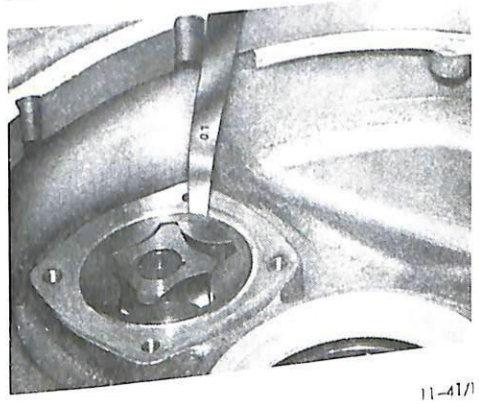

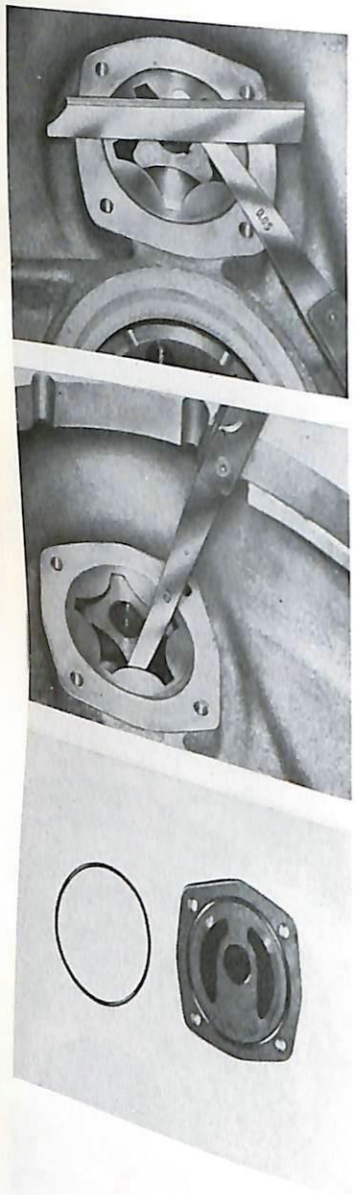

See Technical Data for clearance between pump housing contact surface and rotor sealing surface

■

Determine the gap between the inner and outer rotor with the aid of a feeler gauge. See Technical Data for clearances

When reassembling, do not forget to replace the fitting key and ensure that the O ring in the cover is in perfect condition

■

When assembled, the O ring must be compressed so that the cover lies flat on the housing contact surface

■



## 11 42 130 Oil cooler – removing and installing

Drain the engine oil

Detach and take off the center section of the engine panelling

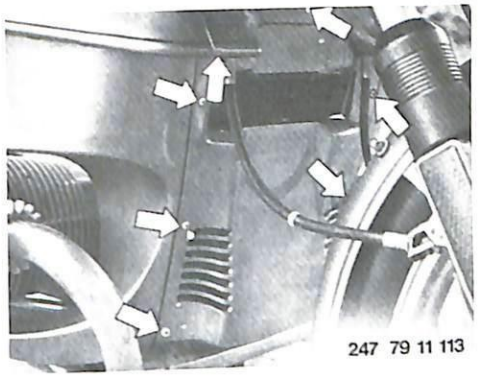

247 79 11 113

■

Unscrew the threaded union of the oil filter head

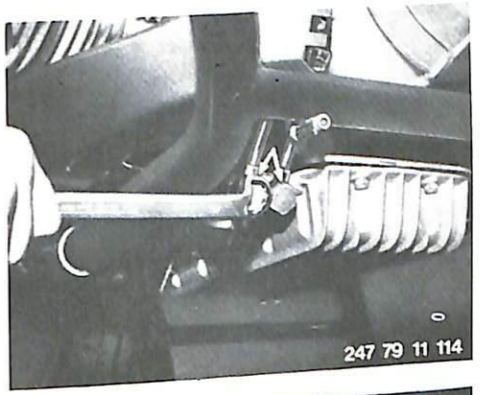

247 79 11 114

■

Remove the two hex bolts (arrows) at the oil cooler mount
Detach the oil cooler with hoses

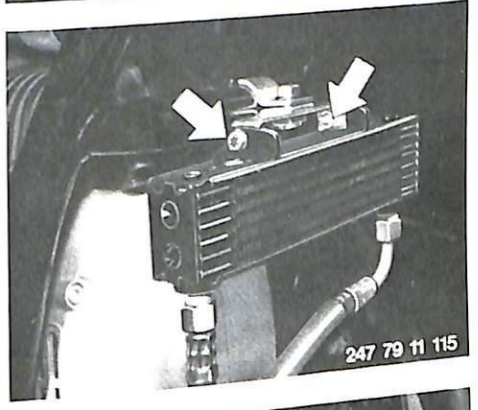

247 79 11 115

■

Remove the three Allen screws (arrows) at the oil filter head and take it off

**When installing:**

Tighten the Allen screws in several successive stages

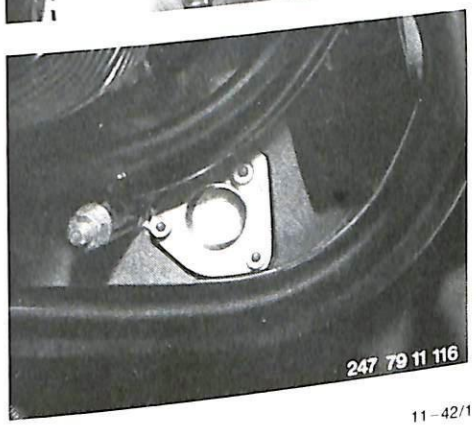

247 79 11 116

■

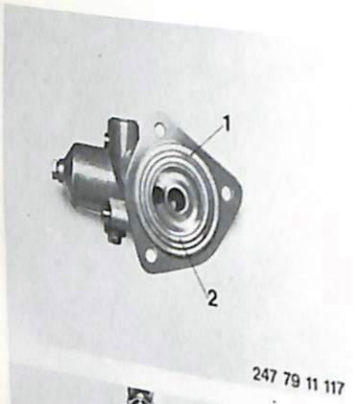


247 79 11 117

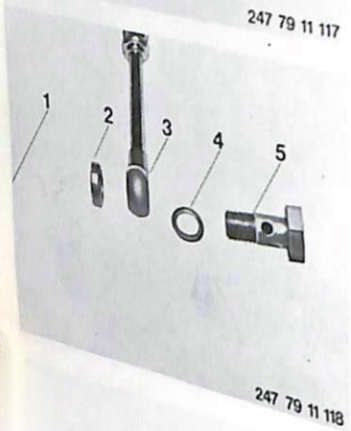


247 79 11 118

**Important:**

Use new O-rings (1 and 2) at filter head.

■

When assembling, make sure that the spacer between the pipe union and the filter head is correctly seated.

1 Filter head
2 Spacer
3 Union
4 Gasket
5 Hollow screw

Add oil (2.5 liters [2.7 US quarts, 4.4 Imp. pints, including oil cooler and hoses).

■





## Trouble-shooting – engine

| Fault | Cause | Remedy |
|---|---|---|
| Loss of compression | Valve leaking or bent | Regrind or renew |
| | Piston ring spring loading too weak, ring gap too large | Check, renew if necessary |
| | Piston rings broken | Renew |
| Low power output | Incorrect ignition timing | Check, adjust if necessary |
| | Float level too low | Check and adjust if necessary |
| | Air cleaner blocked | Renew element |
| | Fuel tap blocked | Clean, check flow rate |
| | Tank vent defective | Drill vent holes (see SI) |
| Engine reluctant to start or will not start at all | Valve clearances too low | Check and adjust if necessary |
| | Choke cannot be closed | Check choke setting |
| | Ignition timing incorrect | Check timing |
| | Breaker points gap too small | Reset points |
| | Contacts eroded | Renew |
| | Spark plug gaps incorrect | Reset |
| | Spark plugs wet | Dry out |
| Engine does not accelerate smoothly | Centrifugal ignition advance too small or not working | Renew centrifugal governor |
| | Broken springs | Renew springs |
| | Cam seized to shaft, shaft rusted | Free contact breaker cam |
| | Spark plug gaps incorrect | Reset |
| Engine starts, but immediately stalls | Break or short circuit at condenser | Renew condenser |
| Engine misfires, high fuel consumption | Defective ignition lead or spark plug cap | Renew |
| | Defective suppressor resistors | Renew |
| Pre-ignition (pinking) | Incorrect ignition timing | Retime ignition |
| | Incorrect needle position at carburetor | Reset needle to correct position |
| Oil pressure too low | Main bearing play excessive | Measure crankshaft and bearings |
| | Blocked oil suction head | Check, renew if necessary |
| | Pressure relief valve stuck open | Remove and repair valve |

# 12 Engine electrical system


| | | |
|---|---|---|
| | Specifications | Page 12- 0/3 |
| | Specifications (1979 models) | 12- 0/6 |
| | Specifications (1981 models) | 12- 0/9 |
| 12 11 004 | Timing the ignition (models without ignition trigger) | 12-11/1 |
| 12 11 004 | Timing the ignition (models with ignition trigger) | 12-11/1 |
| 12 11 060 | Timing the ignition (1981 models) | 12-11/1 |
| 12 11 141 | Ignition trigger - removing and installing | 12-11/3 |
| 12 11 141 | Breaker points - renewing (models without ignition trigger) | 12-11/4 |
| | Breaker points - renewing (models with ignition trigger) | 12-11/4 |
| | Troubleshooting - ignition system | 12-11/5 |
| 12 13 100 | Troubleshooting - ignition system (from 1981 models on) | 12-11/5 |
| 12 14 010 | One coil - removing and installing | 12-13/1 |
| 12 14 025 | Control unit - removing and installing | 12-14/1 |
| 12 31 009 | Heat sink - removing and installing | 12-14/1 |
| 12 31 019 | Alternator, diode board and regulator switch - checking | 12-31/1 |
| 12 31 020 | Alternator with regulator - quick check | 12-31/2 |
| 12 31 212 | Alternator - detaching and attaching | 12-31/2 |
| 12 31 689 | Alternator - reconditioning | 12-31/3 |
| 12 32 000 | Stator winding and rotor - checking | 12-31/3 |
| | Regulator switch for alternator - removing and installing | 12-31/5 |
| 12 41 009 | Troubleshooting - alternator | 12-31/5 |
| 12 41 020 | Starter - checking (installed) | 12-41/1 |
| 12 41 513 | Starter - removing and installing | 12-41/1 |
| 12 41 541 | Starter - stripping and assembling | 12-41/3 |
| 12 41 602 | Carbon brushes - renewing | 12-41/5 |
| 12 41 701 | Starter - reconditioning | 12-41/5 |
| | Exciter winding - renewing | 12-41/6 |
| | Troubleshooting - starter | 12-41/7 |

## Specifications – '79 models

| Model | R 80/7 | R 100 T | R 100 S | R 100 RT | R 100 RS |
|---|---|---|---|---|---|
| **Starter:** Type | Bosch DF 12 V 0.6 HP | | | | |
| Starting short circuit current strength A | 320 | | | | |
| Output HP | 0.6 | | | | |
| Torque mkp/ft lb | 0.75 (5.4) | | | | |
| Starter relay | Bosch | | | | |
| Axial float, armature, mm(in) | 0.10 0.15 (0.004 0.006) | | | | |
| **Alternator:** Type | Bosch G 1 14 V 20 A 21 280 W | | | Bosch G 1 14 V 18 A 22 240 W | |
| Alternator drive | direct from crankshaft | | | | |
| Maximum output W V | 280 14 | | | 250 14 | |
| Maximum current strength A | 20 | | | 18 | |
| Resistance between phase outputs, Ohms | 0.62 | | | | |
| Charging commences, rev min | 990 | | | | |
| Maximum rev min | 10 000 | | | | |
| Maximum deflection at slip rings, mm(in) | 0.06 (0.0024) | | | | |
| **Resistance between rotor sliprings, max. Ohms** | $3{,}4^{+0{,}34}$ | | | | |
| Minimum slip ring diameter, mm(in) | 26.8 (1.055) | | | | |
| **Voltage Regulator:** Type (Bosch) | 0 190 601 009 AD 1/14 V | | | | |
| Regulating voltage, without load, Volts<br>under load, Volts | 13.55—14.25<br>13.9–14.3 | | | | |

*Engine electrical system*

## *Technical Data*

| *Model* | *R 60/7* | *R 75/7* | *R 80/7* | *R 100/7* | *R 100 S* | *R 100 RS* |
|---|---|---|---|---|---|---|
| ***Diode carrier:*** *Type (Bosch)* | *D 120 915 158 14 V 20 A* | | | | | |
| ***Ignition coil:*** *Type (Bosch)* | *E 6 V* | | | | | |
| *Length of starting spark at 300 sparks/minute and 3 V, mm(in)* | *8 (0.32)* | | | | | |
| *Length of operating spark at 3600 sparks per minute, mm(in)* | *13.5 (0.53)* | | | | | |
| ***Spark plugs:*** *Thread* | *M 14 × 1.25* | | | | | |
| *Bosch* | *W 225 T 30* | *W 200 T 30* | *W 175 T 30* | *W 200 T 30* | *W 225 T 30* | *W 225 T 30* |
| *Beru* | *230 14 3A* | *200 14 3A* | *175 14 3A* | *200 14 3A* | *230 14 3A* | *230 14 3A* |
| *Champion* | *N 6 Y* | *N 7 Y* | *N 10 Y* | *N 7 Y* | *N 6 Y* | *N 6 Y* |
| *Electrode gap, mm(in)* | *0.7 (0.028)* | | | | | |
| **Contact breaker:** Type (Bosch) | Automatic centrifugal advance on camshaft | | | | | |
| Advance commences min⁻¹ | 1550 | | | | | |
| Advance ends min⁻¹ | 3000 | | | | | |
| Breaker lubricating felt and centrifugal advance lubrication | Bosch grease Ft 1 v 4 | | | | | |
| Bearing journal for centrifugal advance | Bosch grease Ft 1 v 26 | | | | | |
| Contact breaker points gap mm(in) | 0.35 ... 0.40 (0.014 ... 0.016) | | | | | |
| Contact spring pressure p | 450 | | | | | |

*Engine electrical system*

## Technical Data

| Model | R 60/7 | R 75/7 | R 80/7 | R 100/7 | R 100 S | R 100 RS |
|---|---|---|---|---|---|---|
| Dwell angle | 78° ± 1° | | | | | |
| Capacitor | 0.2 µF – 25 % | | | | | |
| Ignition timing, static for engine assembly | 6° ± 3° BTDC | | | | | |
| Adjustment range, crankshaft | 25° ± 2° | | | | | |

**Tightening torques Nm (ft. lb)**

| | | | |
|---|---|---|---|
| Armature fastening screw | 23 ... 27 (17.0 ... 19.9) | Spark plugs | 23 ... 30 (17.0 ... 22.1) |
| Starter fastening bolts | 47.5 (35.0) | Centrifugal advance unit | 5 ... 6 (3.7 ... 4.4) |

All other bolts and nuts are to be tightened in accordance with the usual figures shown in the manufacturer's tables or in accordance with the latest BMW Standard Specification 60 002.0.

## Specifications — '79 models

| Model | R 80/7 | R 100 T | R 100 S | R 100 RT | R 100 RS |
|---|---|---|---|---|---|
| **Starter:** Type | Bosch DF 12 V | | | | |
| Starting short circuit current strength A | 320 | | | | |
| Output kW | 0.7 | | | | |
| Torque mkp (ft/lb) | 0.75 (5.4) | | | | |
| Starter relay | Bosch | | | | |
| Axial float, armature, mm (in) | 0.10...0.15 (0.0039...0.0059) | | | | |
| **Alternator:** Type | Bosch G 1 14 V 20 A 21/280 W | Bosch G 1 14 V 18 A 22/240 W | | | |
| Alternator drive | direct from crankshaft | | | | |
| Maximum output W/V | 280/14 | 250/14 | | | |
| Maximum current strength A | 20 | 18 | | | |
| Resistance between phase outputs, Ohms | 0.62 | | | | |
| Charging commences, rev/min | 980 | | | | |
| Maximum rev/min | 10000 | | | | |
| Maximum deflection at slip rings, mm (in) | 0.06 (0.0023) | | | | |
| Resistance between rotor sliprings, max. Ohms | 3.4 - 0.34 | | | | |
| Minimum slip ring diameter, mm (in) | 26.8 (1.055) | | | | |
| **Voltage Regulator:** Type (Bosch) | 0 190 601 AD 1/14 V | | | | |
| Regulating voltage, without load, Volts<br>under load, Volts | 13.55 – 14.25<br>13.9 – 14.3 | | | | |





## Specifications (1979 models)

| Model | R 80/7 | R 100 T | R 100 S | R 100 RT | R 100 RS |
|---|---|---|---|---|---|
| **Diode board:** Type (Bosch) | D 120 915 158 14 V 20 A | | | | |
| **Coil:** Type (Bosch) | E 6 V | | | | |
| Starting spark length at 300 sparks/min and 3 V mm (in) | 8 (0.31) | | | | |
| Operating spark length at 3600 sparks/min mm (in) | 13.5 (0.53) | | | | |
| **Spark plugs:** Thread | M 14 x 1.25 mm | | | | |
| Bosch | W 175 T 30 | W 225 T 30 | | | |
| Beru | 175/14/3A | 230/14/3A | | | |
| Champion | N 10 Y | N 6 Y | | | |
| Electrode gap mm (in) | 0.7 (0.028) | | | | |
| **Contact breaker** Type (Bosch) | mechanical ignition contact breaker with centrifugal control in sealed housing; dynamic | | | | |
| Timing control starts $min^{-1}$ | 1550 | | | | |
| Timing control ends $min^{-1}$ | 3000 | | | | |
| Breaker points gap mm (in) | 0.45 ± 0.05 (0.018 ± 0.002) | | | | |

*Engine – electrical system*

## *Specifications (1979 models)*

| *Model* | *R 80/7* | *R 100 T* | *R 100 S* | *R 100 RT* | *R 100 RS* |
|---|---|---|---|---|---|
| *Dwell angle °* | *120° ± 3° (65% . . . 68%)* | | | | |
| *Condenser* | *0.2µF ± 20% Bosch No. 1 237 330 295* | | | | |
| *Static firing point (for engine assembly)* | *6° b TDC* | | | | |
| *Adjustment range ° CS* | *26°* | | | | |

### *Tightening torques Nm (lb.ft)*

| | | | |
|---|---|---|---|
| Armature retaining bolt | 25 ± 2 (18.4 ± 1.5) | Spark plugs | 20 ± 5 (14.7 ± 3.7) |
| Starter retaining bolts | 47.5 (35) | | |

All other bolts and nuts are to be tightened according to the customary values shown in the manufacturers' tables or on the latest BMW 60002.0 standards sheet



*Engine – electrical system*

## *Specifications (1981 models)*

| *Model* | R 100 | R 100 CS | R 100 RT | R 100 RS |
|---|---|---|---|---|
| **Starter:** Type | Bosch DF 12 V | | | |
| Starting short-circuit current A | 320 | | | |
| Power output kW | 0.7 | | | |
| Torque mkp | 0.750 | | | |
| Starter relay | Bosch | | | |
| Armature endplay mm (in) | 0.10 . . 0.15 (0.004 . . 0.006) | | | |
| **Generator (alternator):** Type | Bosch G 1 14 V 20 A 21/280 W | | | |
| Drive | direct from crankshaft | | | |
| Max. output W/V | 280/14 | | | |
| Max. current A | 20 | | | |
| Resistance between phase outlets Ohm | 0.62 | | | |
| Charging begins at $min^{-1}$ | 980 | | | |
| Max. speed $min^{-1}$ | 10 000 | | | |
| Max. runout at sliprings mm (in) | 0.06 (0.0024) | | | |
| Resistance between sliprings on rotor, max. Ohm | $3.4^{+0.34}$ | | | |
| Min. slipring diameter mm (in) | 26.8 (1.055) | | | |
| **Voltage regulator:** Type (Wehrle) | E 1051 B / 14 V | | | |

*Engine – electrical system*

## *Specifications (1981 models)*

| *Model* | *R 100* | *R 100 CS* | *R 100 RT* | *R 100 RS* |
|---|---|---|---|---|
| ***Diode board:*** *Type (Bosch)* | *D 120 915 158 14 V 20 A* | | | |
| ***Coil:*** *Type (Bosch)* | *E 6 V* | | | |
| ***Spark plugs:*** *Thread* | *M 14 x 1.25 mm* | | | |
| *Bosch* | *W 5 D* | | | |
| *Beru* | *14–5 D* | | | |
| *Champion* | *N 6 Y* | | | |
| *Electrode gap mm (in)* | *0 6 + 0 1 (0 024 + 0 004)* | | | |
| **Contact breaker** Type (Bosch) | Breakerless ignition pulse generator (Hall effect transmitter) with integral centrifugal ignition timing advance system | | | |
| Timing control starts min⁻¹ | 1550 | | | |
| Timing control ends ⁻¹ | 3000 | | | |





Engine – electrical system

## Specifications (1981 models)

| Model | R 100 | R 100 CS | R 100 RT | R 100 RS |
|---|---|---|---|---|
| Static firing point (for engine assembly) | 6° bTDC | | | |
| Adjustment range ° CS | 26° | | | |

**Tightening torques Nm (lb.ft)**

| | | | |
|---|---|---|---|
| Armature retaining bolt | 25 ± 2 (18.4 ± 1.5) | Spark plugs | 20 + 5 (14.7 + 3.7) |
| Starter retaining bolts | 47.5 (35) | | |

All other bolts and nuts are to be tightened according to the customary values shown in the manufacturers' tables or on the latest BMW 6002.0 standards sheet.

# Starter

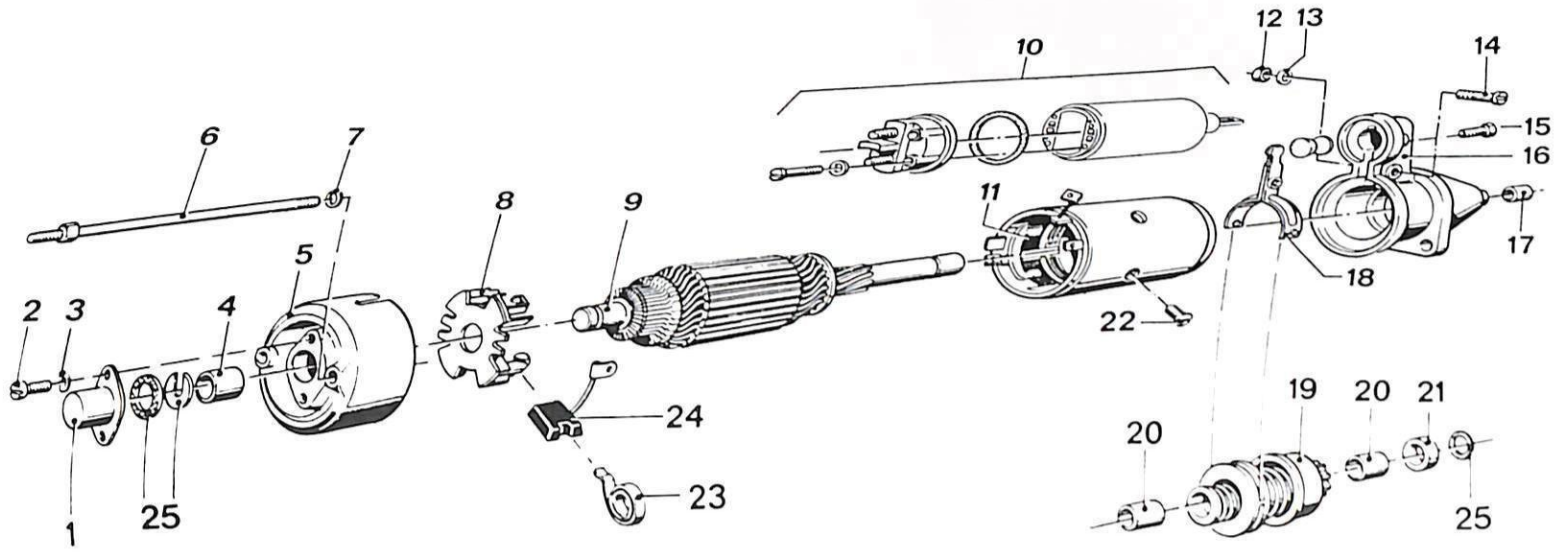


1) End cap
2) Machine screw
3) Spring washer
4) Bearing bushing
5) Commutator bearing
6) Machine screw
7) Shim washer
8) Brush holder plate
9) Armature
10) Solenoid switch
11) Exciter winding
12) Hex nut
13) Spring washer
14) Machine screw
15) Countersunk screw
16) Drive-end bearing
17) Bearing bushing
18) Actuating lever
19) Starter gears
20) Bearing bushing
21) Stop rings
22) Countersunk screw
23) Coil spring
24) Set of carbon brushes
25) Washers

# Alternator

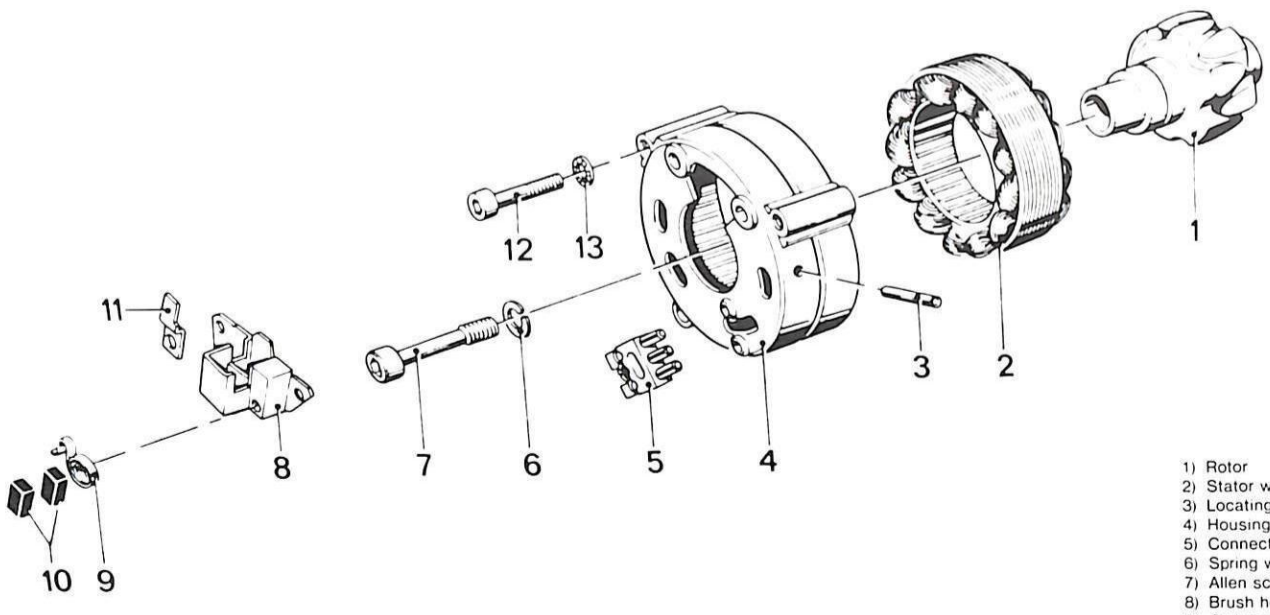


1) Rotor
2) Stator with winding
3) Locating peg
4) Housing
5) Connector
6) Spring washer
7) Allen screw
8) Brush holder
9) Coil spring
10) Set of carbon brushes
11) Flat pin plug
12) Machine screw
13) Spring washer

## 12 11 004 Ignition timing – adjusting (models without rotary ignition trigger)

Engine is removed (11 00 050) or fitted. Illustrations and text (apart from the two pictures with the timing gun) were prepared with engine removed.

Take off engine cover after unscrewing the three hexagon socket head bolts.

**Note when fitting:**

When assembling, ensure that the breather hose is first inserted in the engine cover.

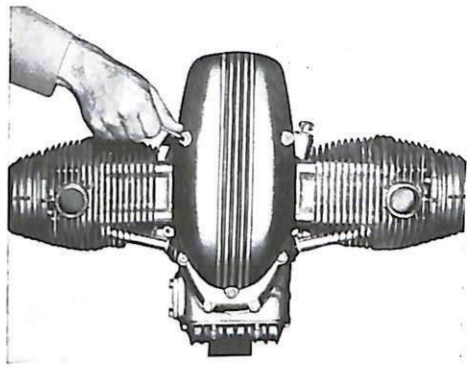

Where no dwell angle tester is available, turn the engine, with spark plugs removed, clockwise as viewed facing against direction of travel, with the aid of the hexagon socket head bolt used to secure the rotor.

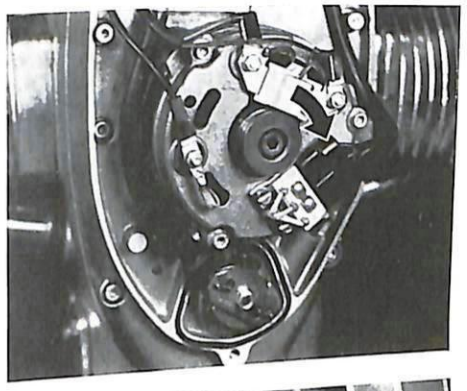

The contact breaker arm (hammer) must lift fully clear. Check points gap with feeler gauge. If necessary replace points 12 11 141.

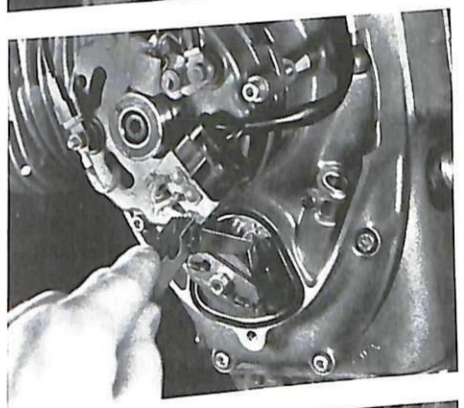

**Adjusting the points gap**

Slacken off the locking screw (arrow), insert screwdriver between the two pegs and in the slot of the anvil point and adjust the points gap by turning the screwdriver. Tighten locking screw.

Recheck the dwell angle and points gap.

See Technical Data for dwell angle and points gap.

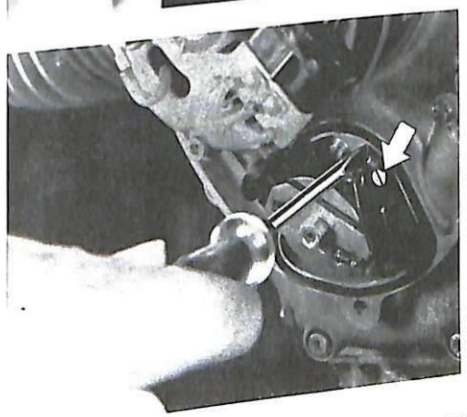

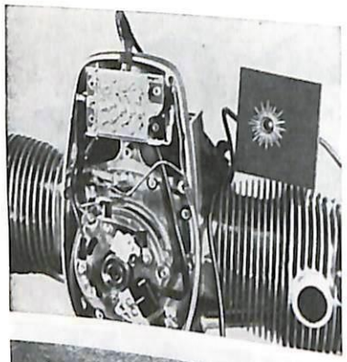

**Checking ignition timing**

a) With test lamp or buzzer

b) Timing light gun (stroboscope)

c) Connect the test lamp or buzzer with one terminal to the capacitor and the other to earth (Ω) on ignition

The test lamp must light up when the central "S" marking on the flywheel coincides with sight aperture marking when the engine is turned clockwise (centrifugal weights in rest position)
Between the left and right cylinders the ignition timing may deviate by a maximum of 6° (corresponding to 12 mm [0.47 in] on the flywheel circumference)
Markings on flywheel: notches 3° above and 3° below the "S" mark

b) Connect timing light gun (stroboscope) and aim at the flywheel marking in the sight aperture while the engine is running

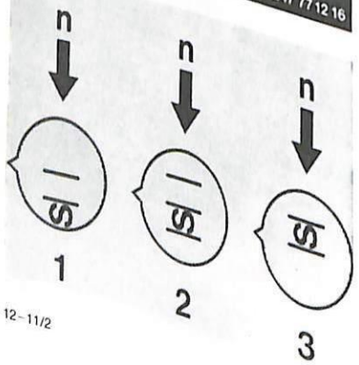


With the timing set correctly (2) the white spot coincides with the marking on the housing

As engine speed increases the flywheel marking "S" disappears upwards (adjustment commences at about 1550 min⁻¹) until as the revolution speed increases still further the flywheel marking "F" (full advance) appears from the bottom in the sight aperture and at 2800 ± 200 min⁻¹ it moves up to the housing mark.

At engine idling speed (600 – 800 min⁻¹) the white spot on the "S" flywheel marking must appear in the sight aperture. If the spot appears below the center (1) the timing is retarded, if above the center (3) the timing is advanced





## 12 11 004 Timing ignition (models with rotary ignition trigger)

Remove the two Allen screws and take off the engine cover

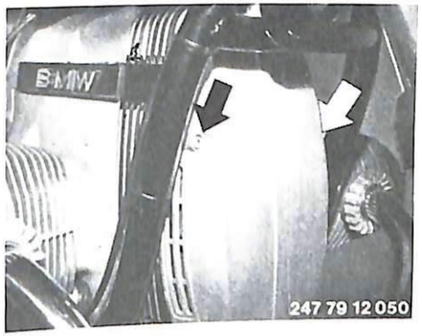


Remove the screw from the ignition trigger cover and take off the cover.

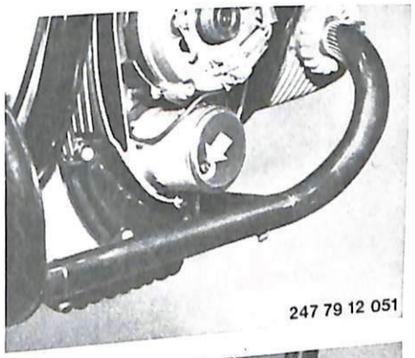


Remove the spark plugs and turn the engine over clockwise (looking from front) at the Allen screw used to retain the rotor

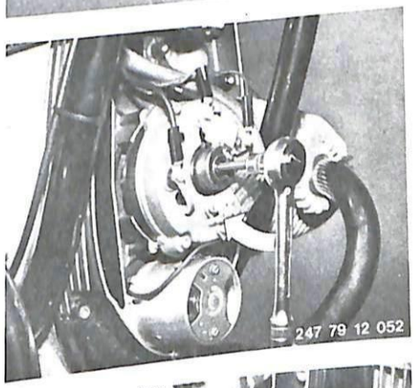


The contact breaker arm (hammer) must lift off fully. Check points gap with a feeler gauge: it must be 0.40 ± 0.05 mm (0.016 ± 0.002 in).
Renew breaker points if necessary 12 11 141

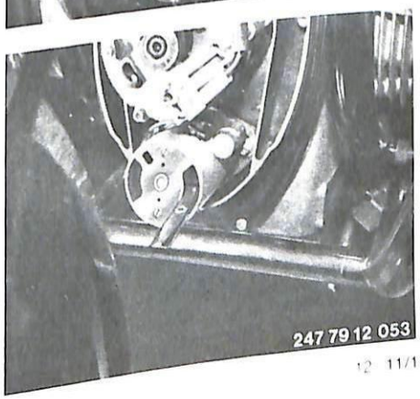

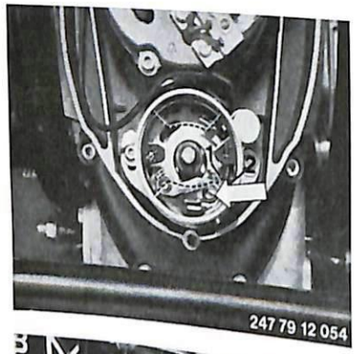


**Adjusting breaker points gap**

Slacken retaining screw (arrow), insert screwdriver blade into slot of opposing contact holder (1) and turn against block (2) until the correct points gap has been obtained.
Tighten the retaining screw again.
Check that the points gap has not altered and that the dwell angle is correct (use only correct dwell angle tester).
For points gap and dwell angle, see Specifications.

■

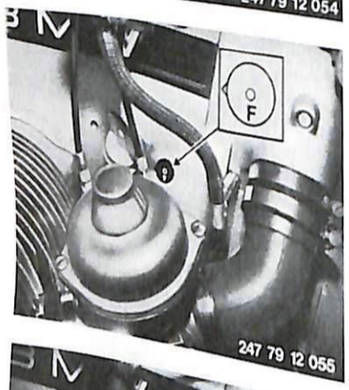


**Checking ignition timing:**

Connect the stroboscopic light to the battery and the ignition lead, start the engine and run at 3500 min⁻¹. When the light is directed on to the inspection hole the white spot F on the flywheel should be visible (full ignition advance).
To check the ignition advance characteristic, turn the adjusting thumbwheel on the timing light until the OT (top dead center) mark appears.
The scale marked on the timing light will then show the amount of ignition angle displacement in degrees.
For ignition advance angle, see Specifications.

■

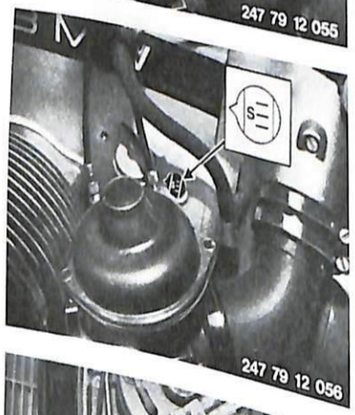


At engine idle speed (950 ± 150 min⁻¹), the central white line of flywheel mark S must be aligned with the notch in the flywheel inspection hole (2). If the upper of the tree marks (1) has reached or is below the notch mark, the ignition is retarded; if only the lower of the three marks (3) has reached or is still above the notch mark, the ignition is too far advanced.

■

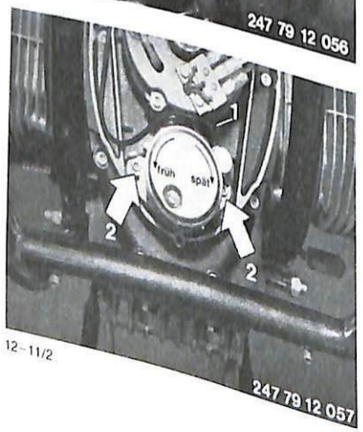


**Retiming the ignition** (dynamic, with engine running)

Slacken the Allen screws holding the ignition trigger (arrows). Turning the trigger assembly in the direction of engine rotation retards the ignition; turning it in the opposite direction to engine rotation advances the ignition. Note that the crankshaft and camshaft both rotate in the same direction. Retighten the screws.

■





## 12 11 004 Timing the ignition (static) – 1981 models

**Warning: this motorcycle has transistorized coil ignition, a high-performance system on which a fatal shock can result if any live components are touched when the engine is running.**

Unscrew the two Allen screws (arrows) and take off the engine end cover.

■

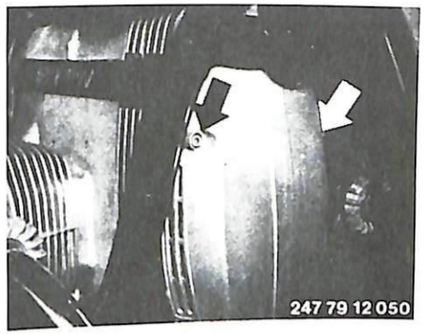


Separate the 3-pin plug (arrow) and connect ignition adjuster BMW No. 12 3 650 to the ignition unit.

**Note:** remove the wire clip from the plug connector.

■

With the spark plugs removed, turn the engine over clockwise (looking from front of motorcycle), using the Allen screw which retains the rotor.

■

The central white line on the flywheel ('S') must coincide with the mark at the inspection hole on the engine block (second picture, page 12–11/2) when the diode on the ignition tester comes on. If necessary, turn the ignition unit round as illustrated.

Clockwise = ignition timing retarded
Counterclockwise = ignition timing advanced

■

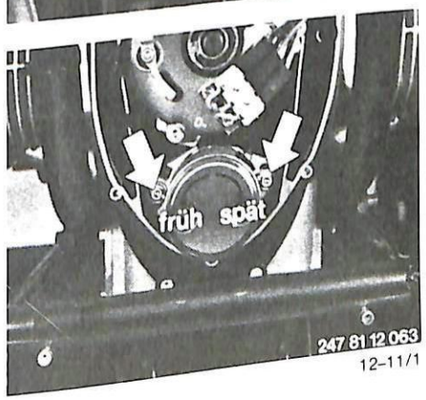

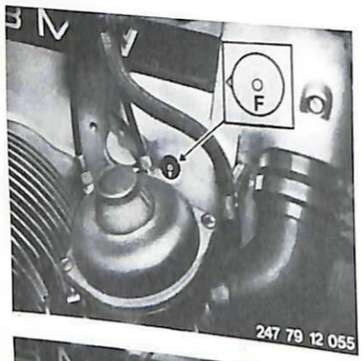

**Timing the ignition (dynamic)**

Connect strobe light to battery and to ignition lead. Start the engine and run up to a speed of 3500/min. When the light is directed on to the flywheel, the white 'F' spot should appear in the inspection hole (ignition fully advanced). To check the ignition control characteristic, turn the adjusting wheel on the strobe light until the 'OT' (TDC) mark appears. The calibrated scale on the light will then show the actual amount of ignition timing variation in degrees.

For ignition timing angle, see Specifications.

At engine idle speed (950 ± 150/min), the central white line 'S' on the flywheel must be aligned with the mark in the inspection hole. If the line is below center, the ignition is retarded, if the line is above center, the ignition is advanced too far.

For adjustment, see 12-11/1.





**Ignition Timing Adjustment:**

Slacken off two slotted screws (arrow) in the contact breaker base plate. Turning the base plate in the same rotary sense as the engine retards the timing and turning contrary to the rotary sense of the engine advances the timing (rotary sense of engine and camshaft are identical). Tighten the slotted screws.

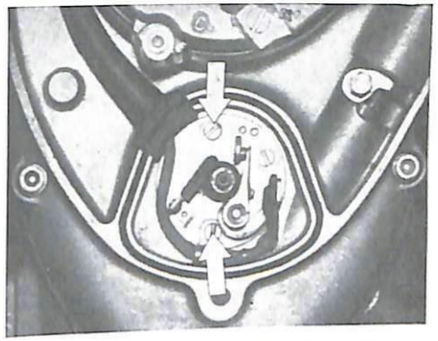

When checking the timing with a **test lamp,** turn the engine back 45° contrary to the direction of rotation of the engine (test lamp extinguishes) in order to eliminate all play between the moving elements for the subsequent rotation in the same direction of rotation as the engine. Recheck the timing.

Timing check with **timing light gun** (stroboscope).

If full advance cannot be reached check the ease of operation of the adjusting cam on the bearing journal.

If the timing sequence from one cylinder to the other is outside the stipulated tolerance check the bearing journal for runout.

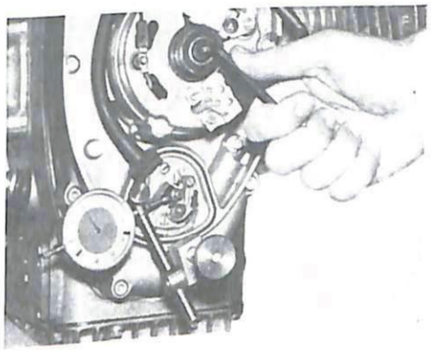

**Warning:**
To eliminate radial displacement of the camshaft on account of valve spring pressure, the rocker pivot pedestals should be slackened off or detached.

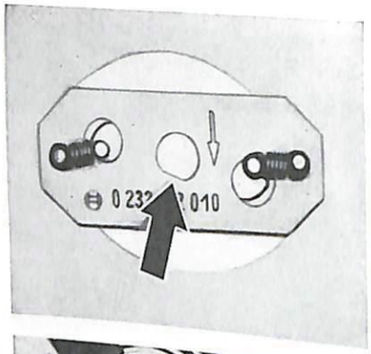

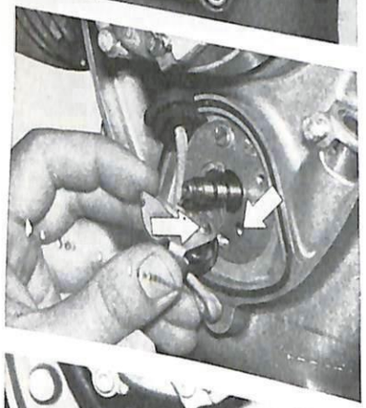

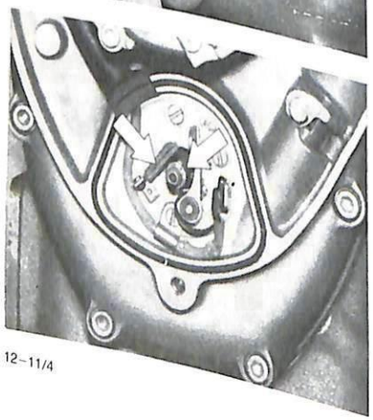

## 12 11 141 Contact Breaker Points – Renewing (models without rotary ignition trigger)

Take off the engine cover after unscrewing the three hexagonal socket head bolts. When refitting ensure that the breather hose is first inserted in the engine cover.

After unscrewing the hexagonal nuts remove the centrifugal timing advance.

When refitting the centrifugal timing advance note the locating surface (arrow).

■

Check the points for wear, smoothing with a point file in emergencies but preferably if worn they should be renewed. To replace the points unscrew the two cheese head screws (arrows) from the plate, pull off the lead plug from the capacitor and remove with contact breaker.

■

When fitting, ensure that the protruding brass pivot of the contact breaker arm (hammer) is inserted accurately in the relevant bore of the contact breaker plate (arrows).

■

Before fitting the centrifugal advance mechanism, check the breaker cam lubricating felt and, if necessary, rub in a little Bosch Ft 1 v 4 lubricating grease. Grease the centrifugal advance drive shaft with Bosch grease Ft 1 v 26. Ensure that the breaker cam on the drive shaft operates smoothly and easily.

■





## 12 11 060 Ignition trigger – removing and installing (1981 models)

Remove the front engine cover.

Unscrew and remove the Allen screws (arrows) and remove the ignition trigger from the chain case cover.

**Important:** Do not attempt to take the ignition trigger assembly apart – always replace as a complete unit.

■

Renew sealing ring (arrow) whenever the ignition trigger is removed.

■

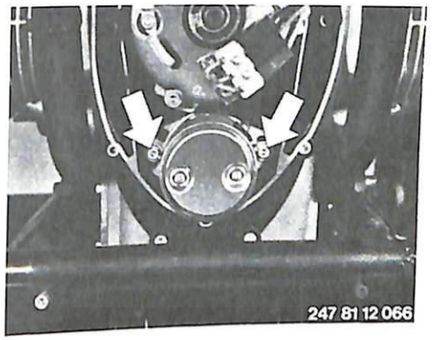


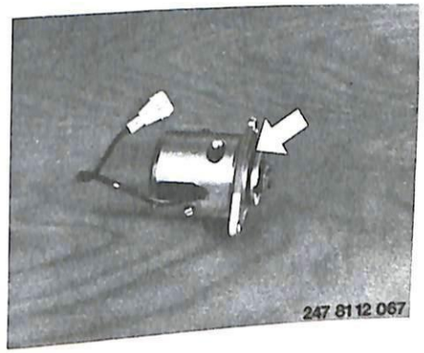

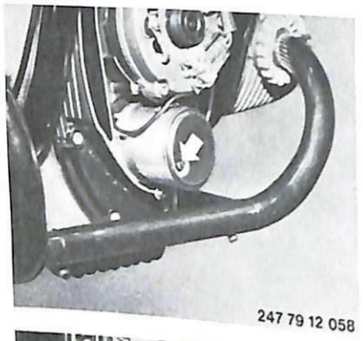

247 79 12 058

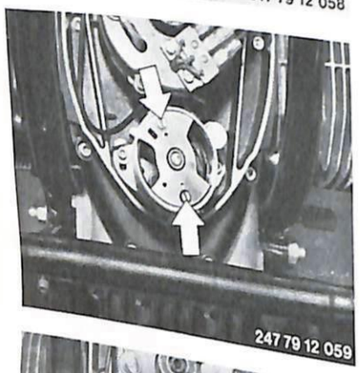

247 79 12 059

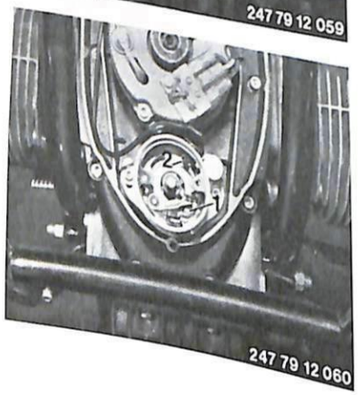

247 79 12 060

## 12 11 141 Breaker points – renewing (models with rotary ignition trigger)

Remove Allen screws and take off engine cover.
Remove screw at ignition trigger cover (arrow) and take off cover.

■

Remove the 2 screws holding the sub-point bearing (arrows) and take out the bearing.

■

Remove the machine screw. Pull out the flat pin socket (2) and pull out the complete breaker contact.

**Note:**

After renewing the breaker points the ignition timing must be checked and adjusted if necessary.

■



### Trouble-shooting – ignition system

| Fault | Cause | Remedy |
|---|---|---|
| Engine will not start, or misfires | Burnt or dirty breaker points | Renew breaker points |
| Low engine power output | Dwell angle incorrect | Reset dwell angle |
| Engine will not accelerate | Centrifugal ignition advance out of action | Check centrifugal advance unit, renew if necessary |
| Engine starts, but stalls immediately | Break or short circuit at condenser | Renew condenser |
| Engine misfires – high fuel consumption | Defective ignition lead<br>Defective spark plug cap<br>Defective suppressor resistors | Renew ignition lead<br>Renew spark plug cap<br>Renew suppressor resistors |

## Troubleshooting – ignition system (from 1981 models on)

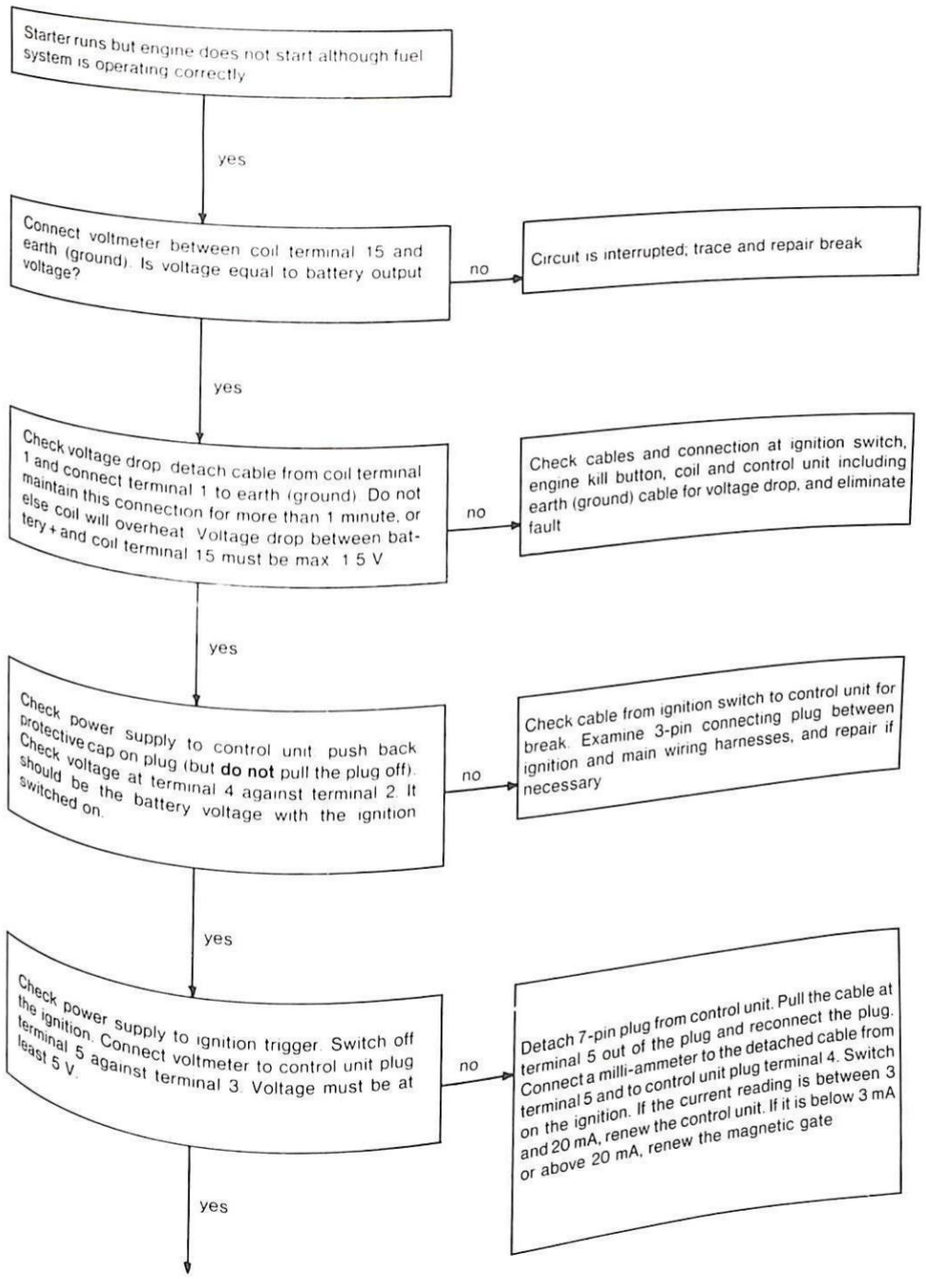

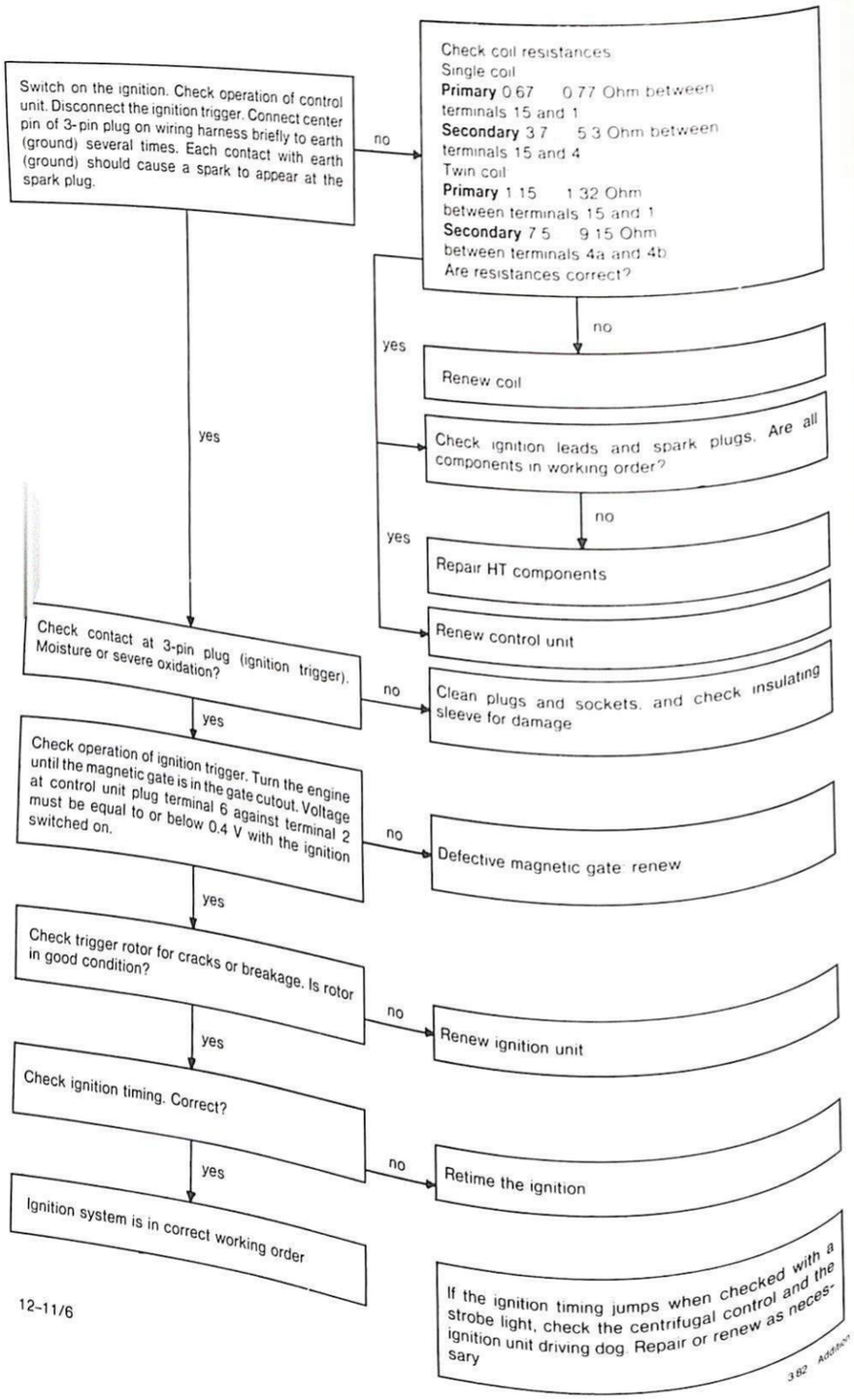






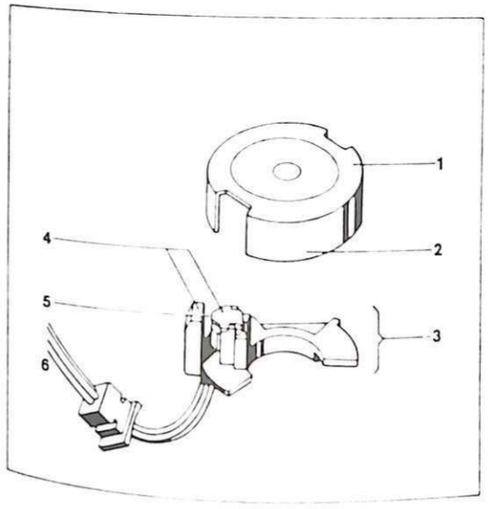


Components of Hall effect transmitter:
1 Gate rotor with cutouts
2 Gate
3 Magnetic gate
4 Guide
5 Air gap
6 Three-core transmitter cable

**Warning:** after the ignition switch has been turned on, the control unit cuts out after 1.5 seconds. For measurements at terminal 1, the ignition switch must be turned off and back on again.

## 12 13 100 One Ignition Coil – Removing and Refitting

Remove and refit fuel tank – 16 11 030.

Disconnect the battery earth lead fastened with the gearbox breather screw.

Remove leads "1" and "15" (arrows) and the high tension lead from the coil.

Unscrew the hexagonal socket head fastening bolts and remove coil.

**Note when fitting:**
Earth leads (arrows A and B) are fitted on the front fastening screws of the left hand coil.

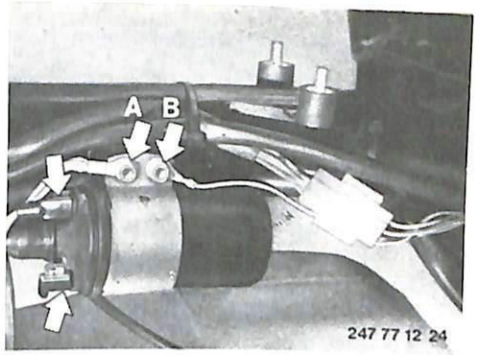

## 12 14 010 Control unit – removing and installing

Remove (install) fuel tank – 16 11 030.

Detach multi-pin plug (arrow) from control unit.

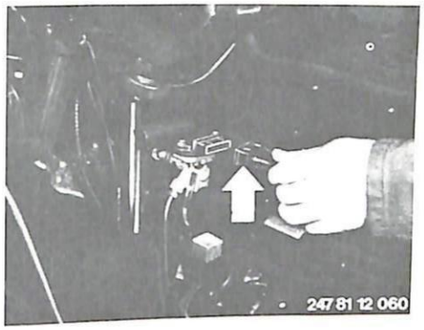


■

Slacken the retaining bolts on the control unit, using a ring wrench at the heat sink to prevent movement.

**When installing:** to avoid corrosion and the resulting poor heat transfer, apply Curil K 2 to the joint face between the control unit and the heat sink.

■

## 12 14 025 Heat sink – removing and installing

Remove (install) fuel tank – 16 11 030.

Remove (install) control unit – 12 14 010.

Unscrew the bolts holding the heat sink and take it off.

■

## 12 31 009 Alternator, Diode Carrier and Regulator – Testing

The picture shows the arrangement of the alternator, diode carrier and regulator.

**Warning:** The leads between battery, alternator and regulator should be parted only when the engine is stationary. If the battery is charged with a charger while still on the motor cycle, the positive and negative leads must be disconnected from the battery.

The battery warning lamp is used to pre-excite the alternator.

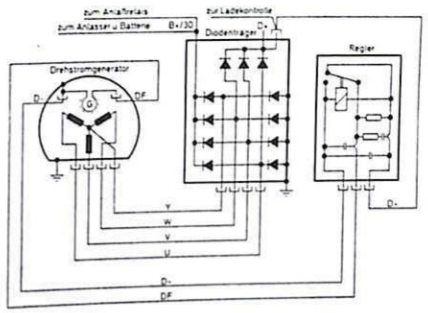


■

To check the regulator remove the B+ (black lead) from the diode carrier while the engine is stationary. Connect the volt meter to B+ and D-. Start engine. The voltage should read 13.5 to 14.2 volts shortly after the regulator commences operation.

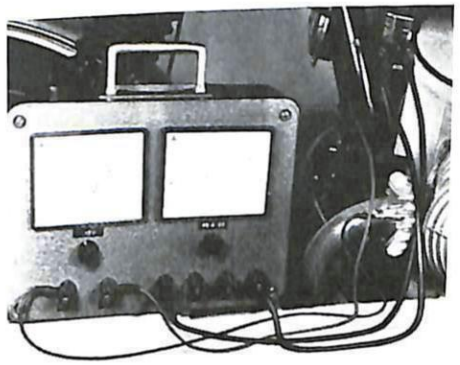

To check the charge current interpose an ammeter (measuring range 15–20 A) in the B+ lead. Switch on a consumer unit or slide resistor (potentiometer) allowing a loading of up to 13 amps, connect parallel with battery.

Allow engine to run at about 4000 rpm. Set maximum current on sliding resistor (potentiometer). Read off regulator voltage at load on volt meter, see Technical Data for values.

■

With the aid of a voltmeter (measuring range approx. 5 V) the voltage difference can also be measured direct between D+ and B+.

A voltage difference of up to 0.5 V indicates a fault in the regulator.

With a voltage difference of 1.5 V to 4 V the fault is in the diode carrier.

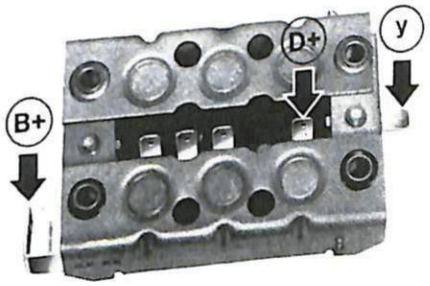


■

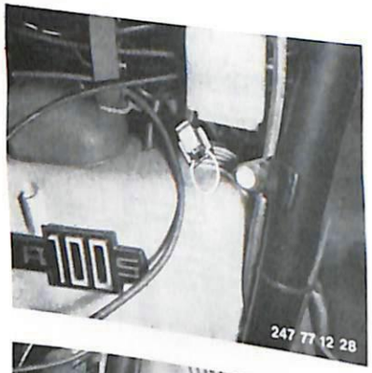

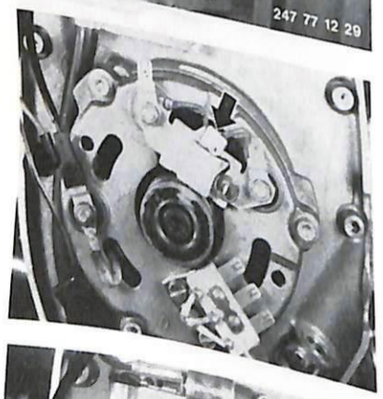

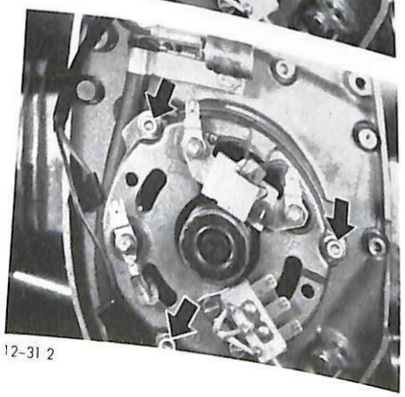

12-31 2

## 12 31 019 Alternator with Regulator – Quick Test

Fuel tank removed – 16 11 030

The check should be carried out only when the battery charge telltale remains permanently on while the engine is running.

Unplug the multiple plug from the regulator while the engine is stationary. Use a wire bridge to connect lead D - (blue) with lead DF (blue-black).

Start engine and allow to run at approx. 1000 ... 2000 rpm. If the battery charge telltale extinguishes immediately, this indicates a faulty regulator.

If the battery charge telltale glows or continues to display a bright light, this indicates that the alternator is defective.

■

## 12 31 020 Alternator – Removing and Refitting

Engine removed (11 00 050) or fitted.
Take off engine cover after unscrewing the three hexagonal socket head bolts.

**Note when fitting:**
During installation ensure that the breather hose is first inserted in the engine cover.

■

Pull the three-pin flat plug from the housing. Lift the brushes slightly and block in this position with thrust springs.

■

Unscrew the three hexagonal socket head bolts from the housing and remove housing.

■



Unscrew the rotor fastening screw and press the rotor off the crankshaft stump with the aid of screw press BMW 12 3 600.

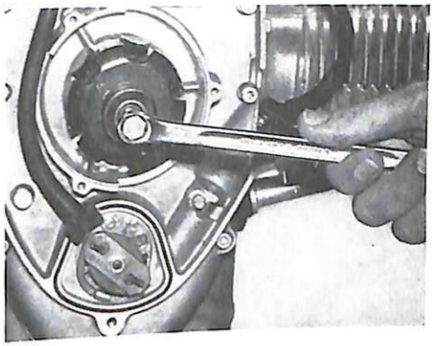

■

## 12 31 212 Alternator – Overhauling

Remove and refit alternator ... 12 31 020

Unscrew two nuts from the inside of the housing and draw out brush holder with brushes. If the brushes have to be renewed care must be taken when soldering (arrow) to ensure that no solder escapes into the copper wires.

Fit insulating bushes on the brush holder stud bolts. Retighten brush holder in housing, not forgetting insulating washers.

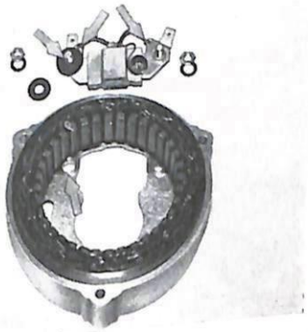

■

## 12 31 689 Stator Winding and Rotor – Testing

Overhaul alternator ... 12 31 212

Check stator winding for shorting with 40 V AC, make three measurements in each case.

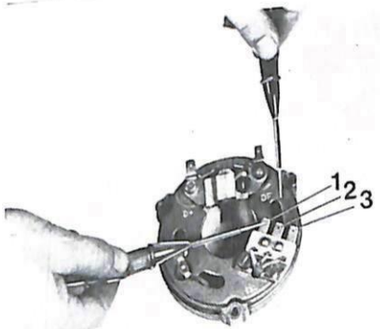


■

Check the resistance alternatively between the phase outputs, see Technical Data for values.

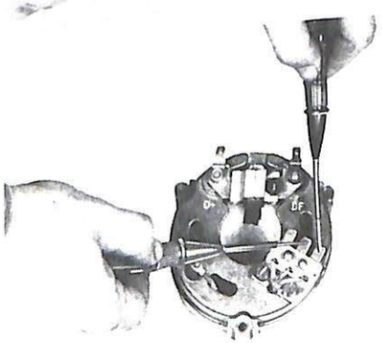

■



12-31 3

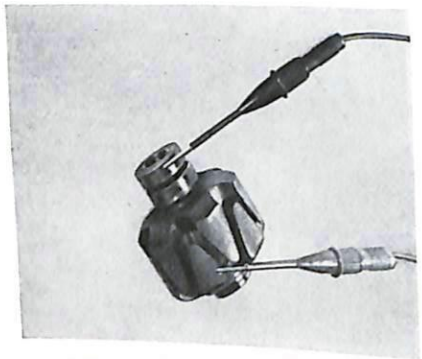

After removal, check the claw pole rotor with 40 V AC for shorting to ground (earth).

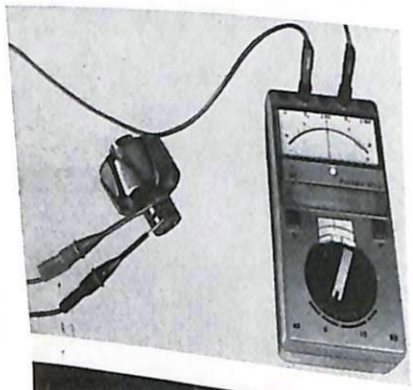

Check exciter winding (ohmmeter).

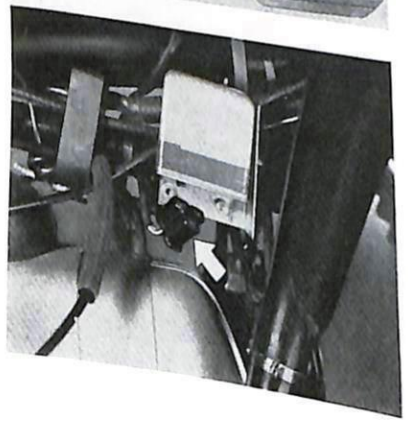

## 12 32 000 Regulator Switch for Alternator – Removing and Refitting

Remove fuel tank – 16 11 030

Detach battery earth lead. Remove plug (arrow) and take off regulator after unscrewing the two Allen screws.



## Troubleshooting – alternator

| Malfunction | Cause | Remedy |
|---|---|---|
| Alternator runs noisily | Carbon brushes whistling | Skim the sliprings, renew the carbon brushes |
| Telltale lamp lights up at half-intensity when engine is running | Poor cable contact | Check cables and connections |
| | Defective regulator | Renew regulator |
| | Defective carbon brushes | Renew carbon brushes |
| | Defective rectifier diode or short to earth (ground) | Renew rectifier diode |
| | Stator has short to earth (ground) | Renew stator |
| | Partial short to earth (ground) in rotor | Renew rotor |
| Battery producing large amounts of gas | Poor contact between regulator and alternator | Check cable connections at regulator and alternator |
| | Defective regulator | Renew regulator |
| Telltale lamp lights up at half or full intensity when engine is running | Defective regulator | Renew regulator |
| | Break or short-circuit at cables to lamp | Check cables and connections |
| | Defective carbon brushes | Renew carbon brushes |
| | Defective rotor winding | Renew rotor |
| | Break in power supply circuit | Check cable connections |
| | Diodes or diode board defective | Check diodes or diode board, and renew if necessary |
| | Short to earth (ground) at cable D+/61 | Eliminate short circuit or renew cable |
| Telltale lamp does not light up when engine is running | Telltale lamp bulb blown | Install a new 3 Watt bulb |
| | Cable 61 interrupted | Trace and repair break |
| Telltale lamp does not light up when engine is stopped but ignition switched on | Telltale lamp bulb blown | Install a new 3 Watt bulb |
| | Battery flat | Recharge battery |
| | Battery defective | Renew battery |
| | Cable loose or defective | Renew cable, check and tighten connections |
| | Short circuit at alternator positive diode | Disconnect charge cable at once or else battery will discharge when at a standstill; have alternator repaired |
| | Carbon brushes worn | Renew carbon brushes |
| | Oxide coating on sliprings, break in rotor winding | Repair alternator |

## 12 41 009 Starter – Testing in situ

Check the state of the battery charge, see Technical Data for values.

For the purpose of checking the starter, engage fourth gear and depress the footbrake. Actuate starter for two to three seconds. The starter voltage should not drop below 8 volts under load and must be uniform with the volt meter at 1 and 2, otherwise the earth connection to engine or battery is poor, at the same time read off the current input from the ammeter, see Technical Data.

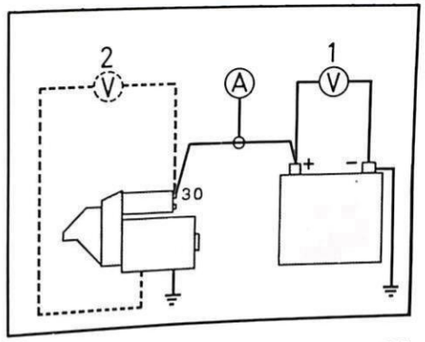


**Note:**
If, with the gear engaged, the engine should be killed, it is possible to start it again without disengaging the gear just by pulling the clutch.

1 Starting relay
2 Starter contact
3 Neutral indicating light
4 Neutral indicating switch
5 Clutch switch

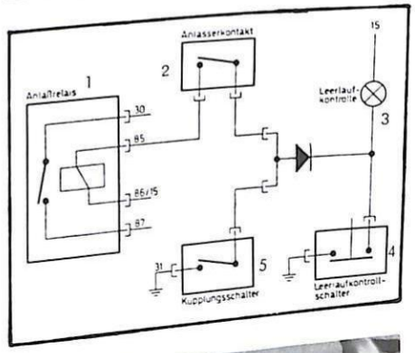


## 12 41 020 Starter – Removing and Refitting

Remove and refit air filter element – 13 72 000.

Remove and refit fuel tank – 16 11 030

Detach both choke cables at the carburettors and lay aside the left-hand half shell of the air filter housing with choke cables.

Unscrew nut (1) with straight ring spanner, slacken hexagonal bolt (2).

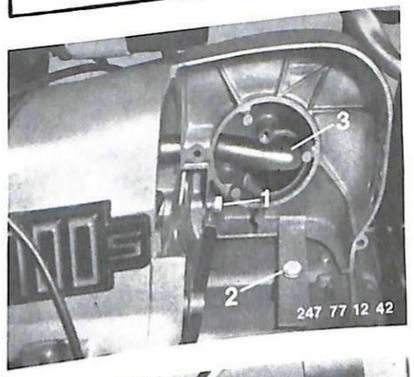


Remove the right-hand half shell of the air filter housing, at the same time pushing the breather hose (3) to the rear.

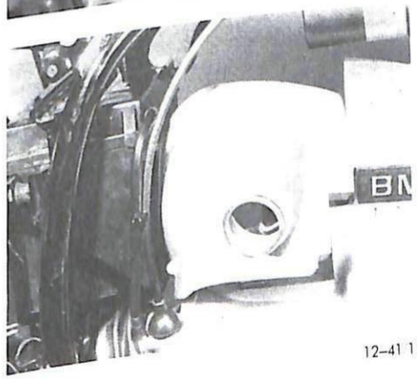

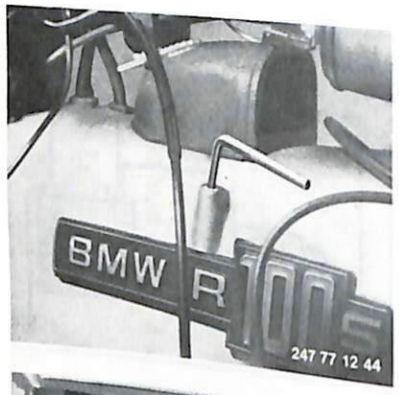


Slacken the two Allen screws and tilt the starter cover to the right to remove.

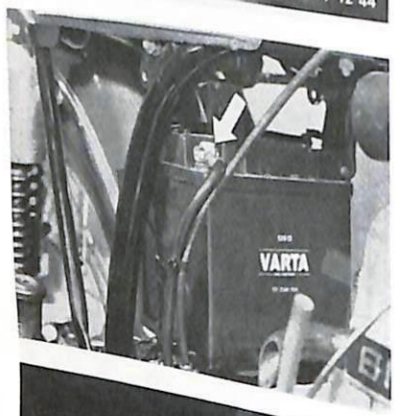


Raise cover at negative battery post and disconnect lead (arrow).

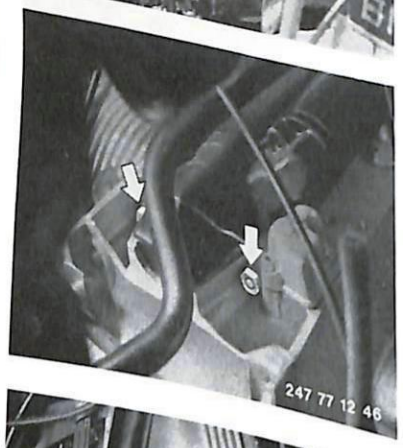


Detach lead from starter.

Remove rear fastening screws (arrows).

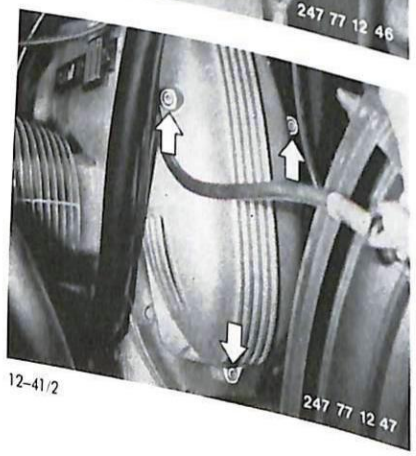


After unscrewing the three Allen screws, remove the engine cover.





Unscrew the hexagonal bolt (arrow) with a box spanner.

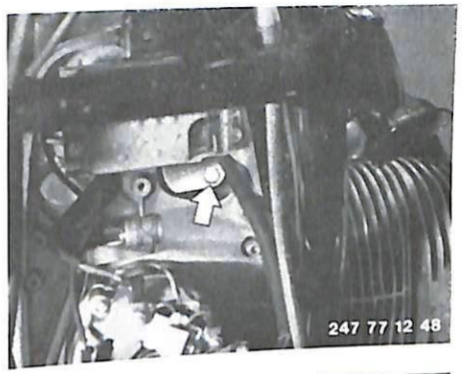


Remove engine breather hose 11 15 101

Lift the starter forward out of its guide

## 12 41 513 Starter – Dismantling and Assembling

Remove and refit starter 12 41 020

Unscrew the exciter lead
Detach solenoid switch
Disengage engaging arm

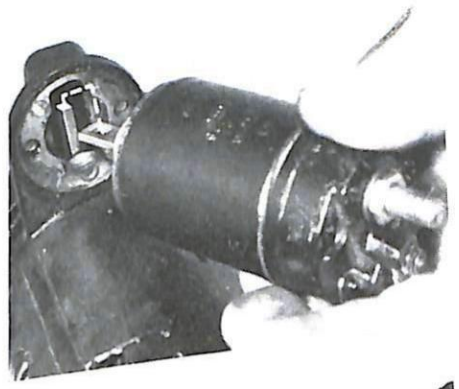

Remove dust cap
Take off lock washer, shim and gasket
Unscrew the pole housing screws
Pull off the cap

**Note when fitting:** Compensate axial armature float, see Technical Data
Check commutator bearings

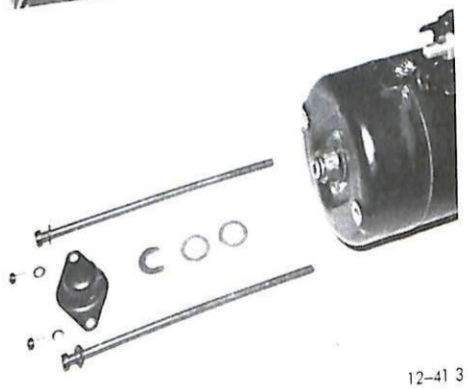

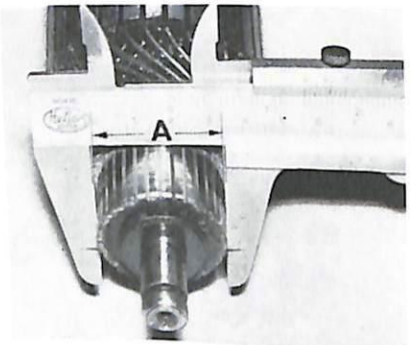


Superfinish the commutator. The commutator diameter (A) must not be less than 33 mm (1.3 in).

■

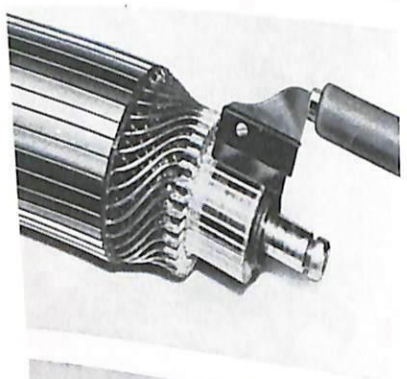

Undercut the commutator segments, and remove any swarf or metal dust with polishing cloth. The insulation should be 0.5 mm (0.02 in) deeper than the segments.

■

Press out worn bushing.

**Note when fitting:**
Before fitting the new bushing it should be soaked for at least 30 minutes in engine oil and pressed in to a flush fit.

■

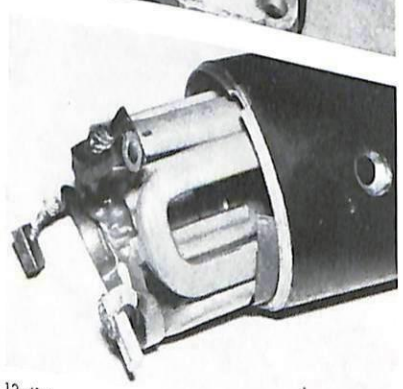

■

## 12 41 701 Exciter Coil – Renewing

Starter – dismantle and re-assemble 12 41 513.

Mark the pole terminals to ensure the same position on re-assembly. Unscrew the four pole terminal screws. Remove the pole terminals and exciter coil from the pole housing.

**Note when fitting:**
Before finally tightening down the pole screws, ensure that the pole terminals are aligned parallel to the longitudinal axis.
Lay paper insulating strip between the exciter coil and pole housing.

■





## Fauld finding on starter

| Fault | Test method | Remedy |
|---|---|---|
| Starter fails to turn when starter button is operated | Switch on light<br>a) Light does not burn<br>Battery dead<br>Battery feed interrupted<br>b) Light burns, becoming gradually dimmer as starter is actuated<br>c) Light burns but extinguishes immediately starter is actuated<br>Oxidized battery terminals or earth connection<br>d) Light burns normally<br>Bridge terminals 50 and 30 on the starter<br>The starter turns<br>Ignition/starter switch defective or input leads interrupted<br>e) Light burns normally<br>Solenoid switch actuates, starter fails to turn. Bridge with an appropriate lead from the battery positive pole to terminal 30 on the starter. Starter turns<br>Solenoid switch contact fouled or scorched | a) Measure battery voltage<br>Recharge battery<br>Check battery leads and terminals<br>b) Recharge battery<br>c) Clean battery terminals or earth connection<br>d) Replace ignition/starter switch, remedy interruption<br>e) Replace solenoid switch |
| Starter fails to turn when lead is run direct from the battery positive pole to terminal 30 | a) Brushes too short<br>b) Brushes jamming<br>c) Inadequate brush pressure | a) Replace brushes<br>b) Release jamming<br>c) Replace thrust springs |
| Starter turns too slowly, fails to turn engine over | c) Commutator fouled<br>b) Faulty armature or energizer coil | a) Clean commutator<br>b) Repair starter |
| Starter runs at high speed but engine does not turn or moves only in jerks | a) Drive pinion defective<br>b) Flywheel gear ring defective<br>c) Drive pinion not engaging, dirty or damaged spiral track | a) Renew drive pinion<br>b) Renew flywheel gear ring<br>c) Have starter repaired |
| Drive pinion does not engage and starter runs at high speed | a) Very dirty drive pinion<br>b) Defective coil spring in solenoid switch<br>c) Badly damaged teeth on flywheel gear ring | a) Clean drive pinion bearings<br>b) Renew solenoid switch<br>c) Renew gear ring |
| Drive pinion engages but starter does not turn engine over | a) Roller freewheel in drive pinion is slipping | a) Renew drive pinion |

# 13 Fuel supply and mixture control


| | | |
|---|---|---|
| Specifications | | Page 13- 0/3 |
| Specifications (1979 models) | | 13- 0/5 |
| Specifications (1981 models) | | 13- 0/7 |
| 13 00 004 | Engine idle speed and fuel-air mixture - adjusting | 13-00/1 |
| 13 10 004 | Fuel level - checking and adjusting | 13-10/1 |
| 13 10 009 | Carburettor - cleaning | 13-10/1 |
| 13 10 100 | Left and right carburettors - removing and installing | 13-10/1 |
| 13 10 370 | Cold-start (choke) housing - detaching and attaching | 13-10/2 |
| 13 23 080 | Choke control lever - removing and installing (1981 models) | 13-23/1 |
| 13 23 021 | Choke cable - removing and installing (handlebar end) -1981 models | 13-23/2 |
| 13 23 061 | Choke cable - removing and installing (carburettor end) - 1981 models | 13-23/2 |
| 13 72 000 | Air cleaner element - removing and installing (single-sided breather) | 13-72/1 |
| 13 72 000 | Air cleaner element - removing and installing (double-sided breather) | 13-72/1 |
| 13 72 000 | Air cleaner element - removing and installing (1981 models) | 13-72/1 |
| 13 72 110 | Intake venturi - removing and installing (1981 models) | 13-72/1 |
| 13 72 130 | Air cleaner housing - removing and installing (1981 models) | 13-72/2 |

*Fuel Preparation*

## *Technical Data*

| *Model* | *R 60 7* | *R 75 7* | *R 80 7* | *R 100 7* | *R 100 S* | *R 100 RS* |
|---|---|---|---|---|---|---|
| **Carburettor:** Construction | 2 inclined Bing slide type carburetors with needle jet and central level float | 2 inclined Bing constant vacuum carburetors with needle jet, vacuum plunger, throttle butterfly and central lever float | | | | |
| Carburettor type: Left-hand carburettor<br>Right-hand carburettor | 1 26 123<br>1 26 124 | 64 32 13<br>64 32 14 | 64 32 201<br>64 32 202 | 64 32 19<br>64 32 20 | 94 40 103<br>94 40 104 | 94 40 105<br>94 40 106 |
| Carburettor throat diameter, mm(in) | 26 (1.02) | 32 (1.26) | | | 40 (1.57) | |
| Main jets | 140 | 145 | | 150 | 170 | |
| Needle jets | 2.68 with accelerator pump | 2.66 | | 2.68 | 2.66 | 2.68 |
| Jet needle number | 4 | 46—241 | | | 46—341 | |
| Needle position | 2 | 3 | | | | 2 |
| Starting jet diameter, mm(in) | 0.9 (0.035) | 60 | | 70 | 80 | 80 |
| Starting air jet diameter, mm(in) (starting chamber vent) | 2.0 (0.079) | 2.0 (0.079) | | | | |
| Mixture passage dia. mm(in) | 7.5 (0.30) | — | | 6.0 (0.24) | | |
| Air passage dia. mm(in) | 6.0 (0.24) | — | | 6.0 (0.24) | | |
| Diameter of mixture bores in rotary slider, mm(in) | — | 2.0 1.2 0.7 (0.079/0.047/0.028) | | | | |
| Idling jets | 40 | 50 | | | 45 | |
| Idling air jet diameter, mm(in) | 0.8 (0.031) | 1.0 (0.04) | | | | |
| Idling air regulating screw opened (turns) | 1/4—1 1/4 | — | | | | |
| Idling mixture regulating screw opened (turns) | — | 1/2—1 | | 1 | 1—1 1/4 | |
| Bypass bore no. 1, dia., mm (in)<br>Bypass bore no. 2, dia., mm (in) | 0.8 (0.031) | 0.7 (0.028)<br>0.65 (0.026) | | | 0.8 (0.031)<br>0.65 (0.026) | 0.8 (0.031)<br>0.65 (0.026) |
| Float valve diameter mm(in) | 2.2 (0.087) | 2.5 | | | | |

## Technical Data

*Fuel preparation*

| Model | R 60/7 | R 75/7 | R 80/7 | R 100/7 | R 100 S | R 100 RS |
|---|---|---|---|---|---|---|
| Float chamber vent bore diameter, mm(in) | — | | | 2.0 (0.08) | 2.0 (0.08) | 2.0 (0.08) |
| Throttle valve | 20—570 | — | | | | |
| Idling outlet bore diameter, mm(in) | 0.8 (0.031) | 1.0 (0.04) | | | | |
| Induction air filter | A common "Micro Star" dry air filter for both carburetors | | | | | |
| **Fuel System:** Fuel grade | Super (premium) | | Super (premium) Regular * | Super (premium) | | |
| Minimum octane rating (RM) to DIN 51 600 standard | 98 | | 98 91 * | 98 | | |
| Fuel tank capacity (litres/Imp gal.) | 24 (5.3/6.3) Incl. 3.0 (0.6/0.8) reserve | | | | | |



## Specifications (1979 models)

*Mixture preparation*

| Model | R 80/7 | R 100 T | R 100 S | R 100 RT | R 100 RS |
|---|---|---|---|---|---|
| **Carburettor** Pattern | Two inclined Bing constant-depression carburettors with needle jet, vacuum slide, throttle and central lever float | | | | |
| Carburettor type left / right | 64/32/201 / 64/32/202 | 94/40/103 / 94/40/104 | 94/40/105 / 94/40/106 | | |
| Carburettor throat dia. mm (in) | 32 (1.26) | 40 (1.57) | | | |
| Main jet | 145 | 170 | | | |
| Needle jet | 2.66 | | 2.68 | | |
| Jet needle number | 46 – 241 | 46 – 341 | | | |
| Needle position | 3 | | 2 | | |
| Starting jet dia. | 60 | 80 | | | |
| Starting air jet dia. mm (in) | 2.0 (0.08) | | | | |
| Mixture passage dia. mm (in) | – | 6.0 (0.236) | | | |
| Air passage dia. mm (in) | – | 6.0 (0.236) | | | |
| Diameter of mixture passages in rotary slide mm (in) | 2.0/1.2/0.7 (0.08/0.048/0.028) | | | | |
| Idle jet | 50 | 45 | | | |
| Idle air jet dia. mm (in) | 1.0 (0.04) | | | | |
| Idle mixture regulating screw opening (turns) | ½ to 1 | 1 to 1¼ | | | |
| Bypass passage 1 dia. mm (in) / Bypass passage 2 dia. mm (in) | 0.7 (0.028) / 0.65 (0.026) | 0.8 (0.032) / 0.65 (0.026) | | | |
| Float valve dia. mm (in) | 2.5 (0.098) | | | | |

## Specifications (1979 models)

| Model | R 80/7 | R 100 T | R 100 S | R 100 RT | R 100 RS |
|---|---|---|---|---|---|
| Float chamber vent dia. mm (in) | 2.0 (0.08) | | | | |
| Idle outlet passage dia. mm (in) | 1.0 (0.04) | | | | |
| Intake air cleaner | Common "micro-star" dry-type filter for both carburettors | | | | |
| **Fuel system** Fuel | Super (premium) Regular * | Super (Premium) | | | |
| Min. octane number, research method (to DIN 51600 standard) | 98 91* | 98 | | | |

* Low-compression engine







## Specifications (1981 models)

| Model | R 100 | R 100 CS | R 100 RT | R 100 RS |
|---|---|---|---|---|
| **Carburettor** Pattern | Two inclined Bing constant-depression carburettors with needle jet, vacuum slide, throttle and central lever float | | | |
| Carburettor type left<br>right | 94/40/111<br>94/40/112 | | | |
| Carburettor throat dia. mm (in) | 40 (1.57) | | | |
| Main jet | 160 | | | |
| Needle jet | 2.66 | | | |
| Jet needle number | 46–341 | | | |
| Needle position | 3 | | | |
| Starting jet dia. | 80 | | | |
| Starting air jet dia. mm (in) | 2.0 (0.08) | | | |
| Mixture passage dia. mm (in) | 6.0 (0.236) | | | |
| Air passage dia. mm (in) | 6.0 (0.236) | | | |
| Diameter of mixture passages in rotary slide mm (in) | 2.0/1.2/0.7 (0.08/0.048/0.028) | | | |
| Idle jet | 45 | | | |
| Idle air jet dia. mm (in) | 1.0 (0.04) | | | |
| Idle mixture regulating screw opening (turns) | 1 to 1¼ | | | |
| Bypass passage 1 dia. mm (in)<br>Bypass passage 2 dia. mm (in) | 0.8 (0.032)<br>0.65 (0.026) | | | |
| Float valve dia. mm (in) | 2.5 (0.098) | | | |

## Specifications (1981 models)

| Mixture preparation | | | | |
|---|---|---|---|---|
| **Model** | R 100 | R 100 CS | R 100 RT | R 100 RS |
| Float chamber vent dia. mm (in) | 2.0 (0.08) | | | |
| Idle outlet passage dia. mm (in) | 1.0 (0.04) | | | |
| Intake air cleaner | Common plate-type filter for both carburettors | | | |
| **Fuel system** Fuel | Regular | Super (Premium) | | |
| Min. octane number, research method (to DIN 51600 standard) | 91 | 98 | | |



## 1/26 slide-type carburettor
(with choke and double float)

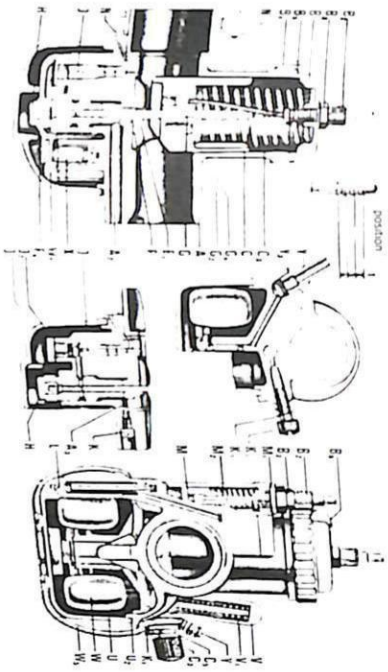


A Carburettor body
A2 Atomizer air passage
A3 Correcting air passage
B Cover plate
B1 Threaded cover
B2 Adjusting screw
B3 Nut
B5 Sealing ring
B6 Keeper spring
C Throttle slide
C2 Slide spring
C3 Adjusting screw
C5 Spring
E1 Atomizer
F Needle jet
F1 Sealing ring
F4 Mixing tube
G Jet needle
G2 Retaining plate
G4 Washer
H Main jet
J Idle jet
J1 Screw
J2 Sealing ring
K Correcting air jet
K1 Air regulating screw
K3 Spring
L Starting jet (fixed)
M Starting plunger
M1 Screw plug
M2 Coil spring
M3 Sleeve
N Clamp ring
N1 Clamp screw
N2 Nut
U Float housing
U2 Gasket
V Tickler
V1 Tickler spring
V3 Cotter
W Float
W2 Pin
W5 Spring clip
X Float needle
Y Hose sleeve
Y3 Sealing ring

## Type 64 . . . 94 constant-depression carburettor

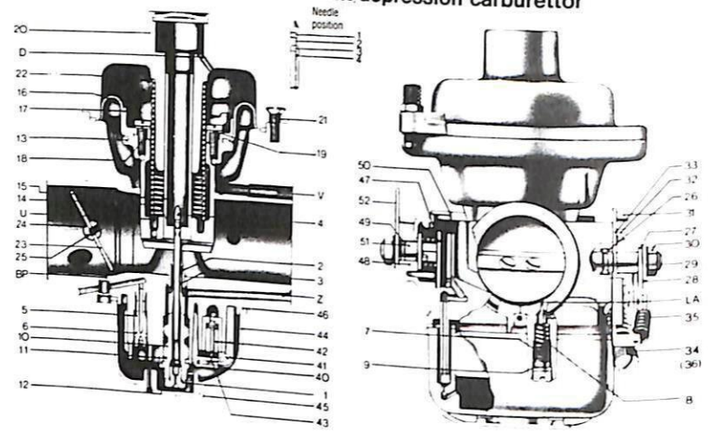


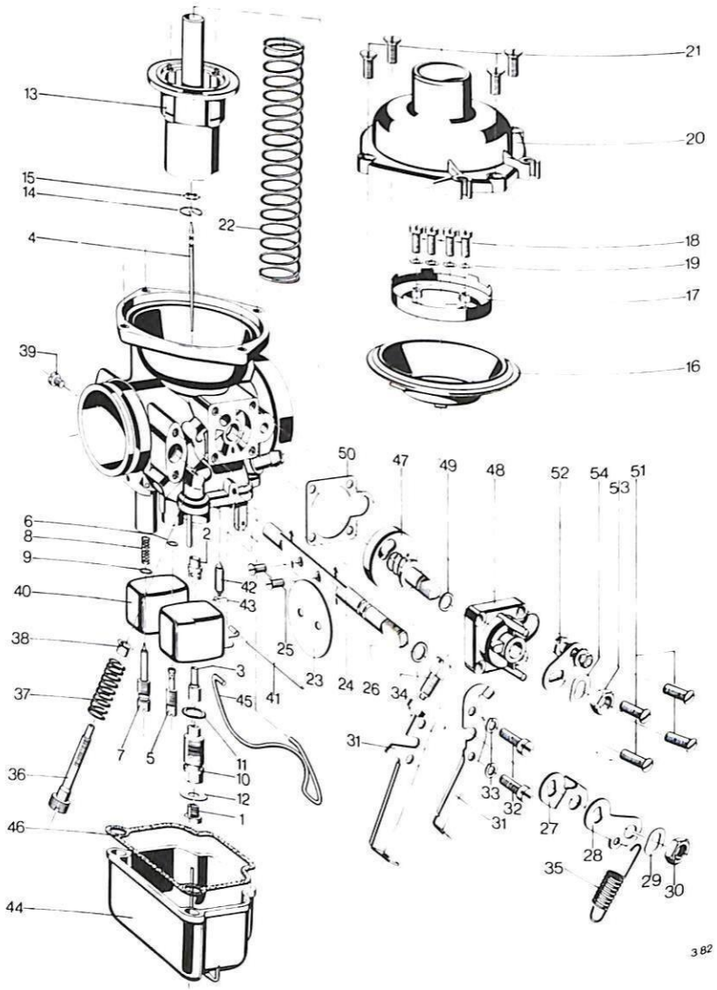






## Type 64 . . . 94 carburettors

| No. | Designation |
|---|---|
| 1 | Main jet |
| 2 | Atomizer |
| 3 | Needle jet |
| 4 | Jet needle |
| 5 | Idle jet |
| 6 | Sealing ring |
| 7 | Mixture regulating screw |
| 8 | Spring |
| 9 | Sealing ring |
| 10 | Jet block |
| 11 | Sealing ring |
| 12 | Washer |
| 13 | Plunger |
| 14 | Keeper |
| 15 | Washer |
| 16 | Diaphragm |
| 17 | Retaining ring |
| 18 | Screw |
| 19 | Lock washer |
| 20 | Cover |
| 21 | Screw |
| 22 | Spring |
| 23 | Throttle butterfly |
| 24 | Throttle pivot shaft |
| 25 | Screw |
| 26 | Sealing ring |
| 27 | Lever |

| No. | Designation |
|---|---|
| 28 | Lever |
| 29 | Lock washer |
| 30 | Nut |
| 31 | Retaining arm |
| 32 | Screw |
| 33 | Lock washer |
| 34/36 | Adjusting screw |
| 35 | Spring |
| 37 | Spring |
| 38 | Sleeve |
| 39 | Screw |
| 40 | Float |
| 41 | Peg |
| 42 | Float needle |
| 43 | Clamp spring |
| 44 | Float cap with starting jet |
| 45 | Spring clip |
| 46 | Gasket |
| 47 | Choke unit |
| 48 | Choke housing |
| 49 | Sealing ring |
| 50 | Gasket |
| 51 | Screw |
| 52 | Lever |
| 53 | Nut |
| 54 | Lock washer |

# Air cleaner (from 1981 models on)

1) Air cleaner housing, upper section
2) Air cleaner element
3) Air cleaner housing, lower section
4) Clip
5) Intake pipe
6) Hose clip
7) Rubber sleeve
8) Hex bolt
9) Washer
10) Hex nut
11) Machine screw

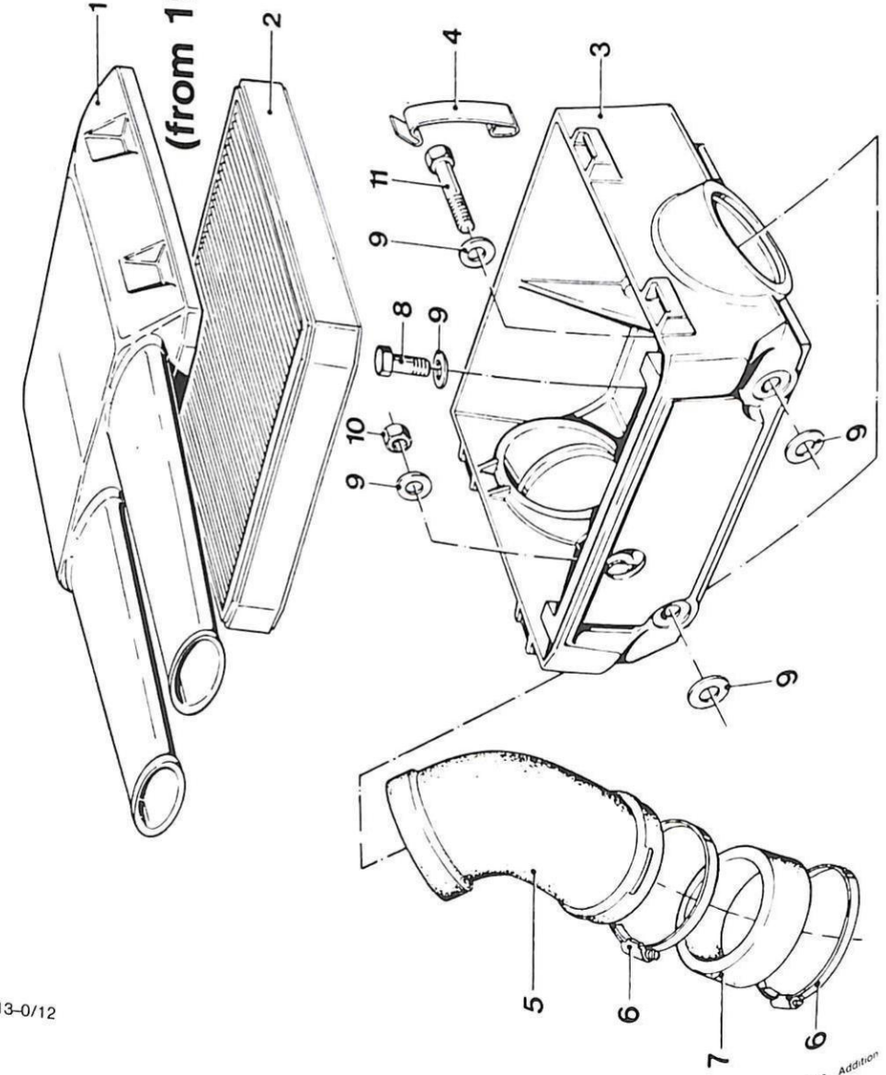




3.82 Addition

## 13 00 004 Engine idling – adjusting

Adjust engine idling with engine running at normal operating temperature and throttle twistgrip closed
For idle speed, see Technical Data
Adjust throttle cable free travel to 4 mm (0.16 in) initially, to prevent the throttle slides or butterflies from being suspended from the cables without any play

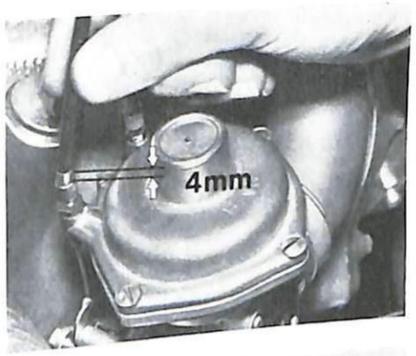


**Carburetor with throttle slide**
Pull off first one spark plug cap, then the other, to determine which cylinder departs the most from the normal idle speed of the engine. Increase idle speed at this cylinder to match the faster cylinder. This is done by turning throttle slide stop screw 2 clockwise (to speed up engine) or anticlockwise (to slow down engine).
To obtain the best possible mixture, carefully turn idle air regulating screw 1 in both directions and listen to the engine; if engine speed rises slightly, this is the more favorable setting.
**Note:**
Insert a suppressor cartridge or a suitable piece of metal at the detached spark plug cap to prevent sparks from jumping the gap to the protective seal and damaging it.

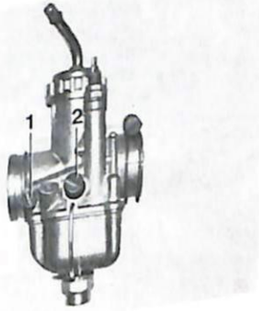


To synchronize the two carburetors, use 'Unitest' adjuster BMW No. 13 0 500 with the correct adapter caps.
Each time the throttle slide stop screw is moved, the idle air regulating screw must be reset as well. The carburetors are correctly synchronized when the needle on the tester is at zero. If the engine speed is then beyond the specified idle speed range of 800 – 1100 min⁻¹, turn throttle stop screws 2 on both sides to an equal extent either anti-clockwise or clockwise, to reduce or raise idle speed. Finally, reset mixture at idle air regulating screws 1.

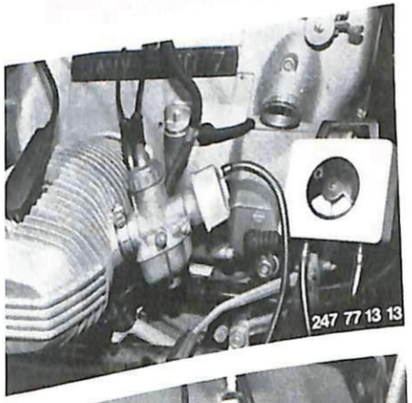


**Constant-depression carburetor**
Set the throttle cables to the basic position and adjust the cold-start (choke) cables so that when the choke is out of action the cold-start levers (arrow) are pressed down to their limit of travel.

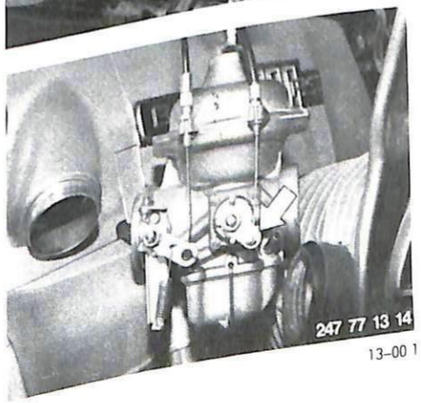


12.77 Alteration

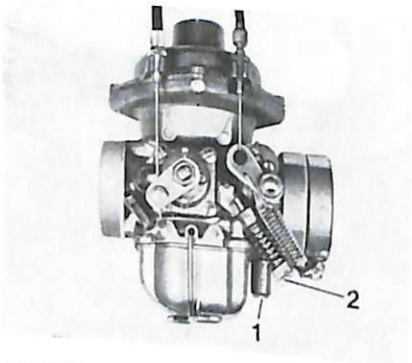


Set the idle mixture regulating screws 1 and throttle butterfly stop screws 2 on both carburetors to their basic positions.

This is done by screwing in the idle mixture regulating screw fully, then slackening off by a specific number of turns (see Technical Data). The throttle butterfly stop screw is tightened until it just touches the stop on the throttle butterfly lever, then slackened by one turn.

■

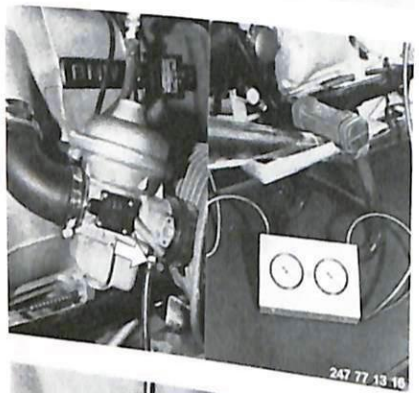


To synchronize the carburetors, use 'Duo-Test' unit, BMW No 13 0 700.

Remove the screw plug from the union for connecting the tester (arrow) and push on the rubber hose of the 'Duo-Test' unit.

Reset the throttle stop screws and idle mixture regulating screws on both sides of the engine alternately until the carburetors are synchronized.

If the engine idling speed is then beyond the specified range of 800 . 1100 min⁻¹, lower or raise it by turning both throttle butterfly stop screws clockwise or anti-clockwise by an equal amount.

Finally, reset the idle mixture regulating screws again.

■

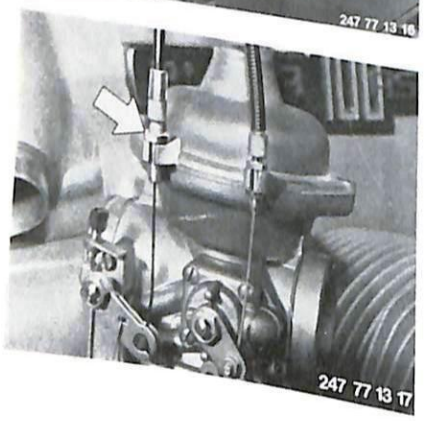


To adjust the throttle cables, raise engine speed slightly at the twistgrip and detach the two spark plug caps in turn to determine the speed at which each cylinder is operating. Adjust the throttle cables at the setscrew and lock with hex nut (arrow).

**Warning:** do not allow the engine to idle with the motorcycle at a standstill for more than 10 minutes.

■



## 13 10 004 Fuel level – checking and adjusting

Close the fuel tap and remove the float chamber from the carburettor.

Use the finger to push the float upwards and open the fuel tap – there should be no leakage of fuel. Let the float slowly return to its normal position – fuel should start to emerge when the base of the float is parallel with the lower edge of the carburettor housing, as illustrated.

If the fuel emerges too soon or too late, bend the tongue of the float as necessary.

■

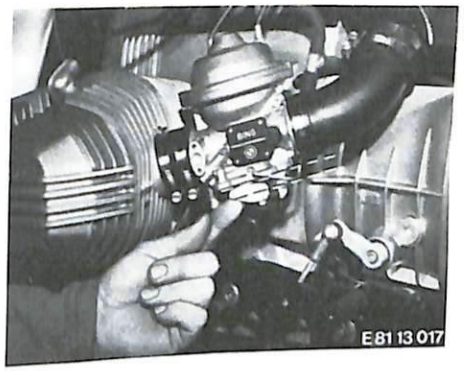


## 13 10 009 Carburettor – cleaning

Remove (install) left and right carburettors – 13 10 100.

Check and adjust fuel level – 13 10 004.

On **R 60/7 model,** take out the carburettor cover, throttle slide, idle jet, main jet, main jet carrier, accelerator pump, needle jet and atomizer. Wash these components in clean fuel and blow throught the jets and passages with compressed air.

■

Remove the dome cover, plunger with diaphragm, idle jet, main jet block, main jet, needle jet and atomizer. Wash all components in clean fuel and blow through jets and passages with compressed air.

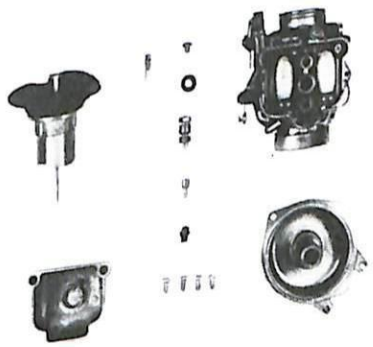

■

**Note:** on the carburettors for the R 60/7, the accelerator pump is in the main jet block (left picture). When the carburettor is in the idle position, the plunger (right picture) is pressed down by the jet needle.

During acceleration the plunger is released, pressed up by the spring under it and the volume of fuel above the plunger forced additionally through the needle jet into the inlet tract.

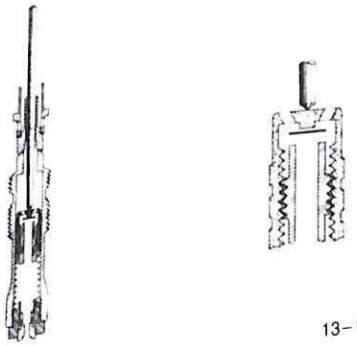

■

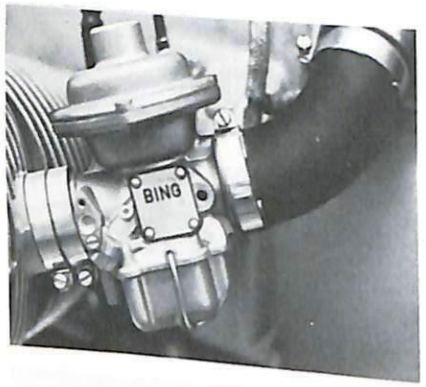


## 13 10 100 Left and right carburettors – removing and installing

On the R 60/7, unscrew the carburettor cover, pull the throttle slide out of the housing, release the choke fastening and pull it out with the choke slide.
On models with constant-depression carburettors, disconnect or detach the choke and throttle cables.

Loosen the hose clips or clamps and take off the carburettors.

■

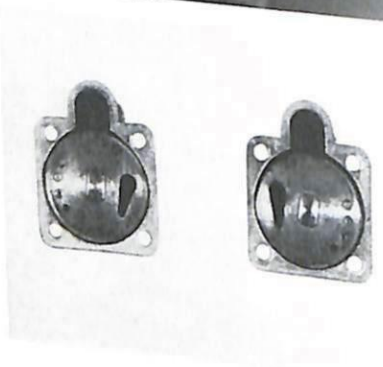

## 13 10 370 Cold-start (choke) housing – detaching and attaching

Remove (install) left and right carburettors – 13 10 100.

Loosen the 4 countersunk screws and take off the choke housing with rotary slide and gasket.

Make sure that the left and right choke housings are not accidentally confused.

Item 1 = left choke housing
Item 2 = right choke housing

■



## 13 23 080 Choke control lever – removing and installing (1981 models)

Press out the plastic cover with a small screwdriver. Unscrew and remove the retaining screw.

■

Take off the lever, guiding the cable through the slot in the housing.

**When installing:** the projections on the disc must locate in the slots on the housing (arrows).

■

Disconnect the cable from the lever.

**When installing:** make sure that the detent plate (arrow) is correctly located.

■

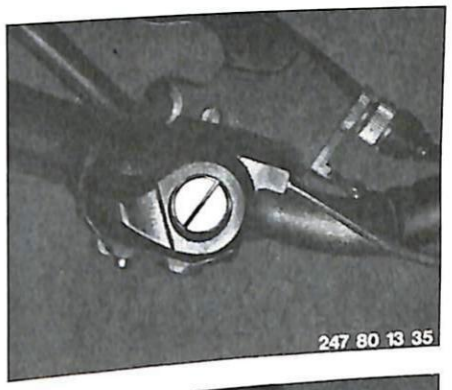


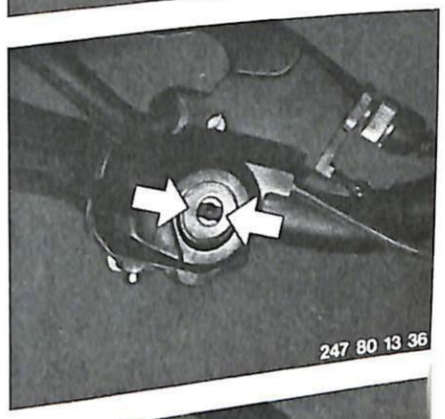


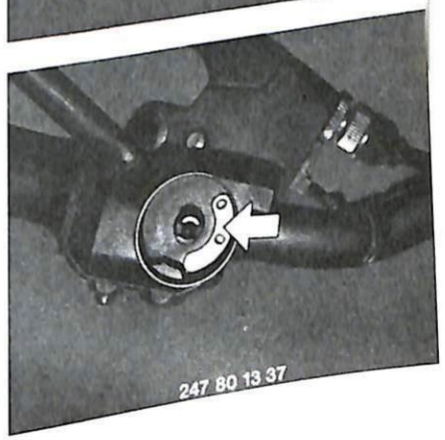

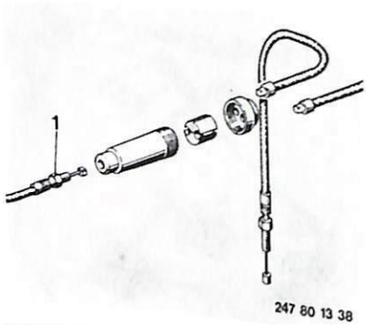


## 13 23 021 Choke cable – removing and installing (handlebar end)

Remove (install) choke control lever – 13 23 080.

Slacken the locknut (1) on the adjusting screw at the distribution block, and tighten the adjusting screw fully.

■

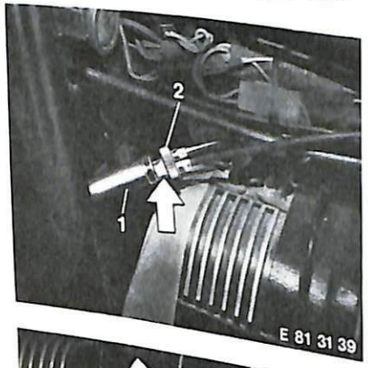


Turn the sleeve of the distribution block (1), holding the knurled section (2) at the same time.

Disconnect the cable from the distribution block (arrow).

**When installing:** adjust the cable so that the choke opens fully.

■

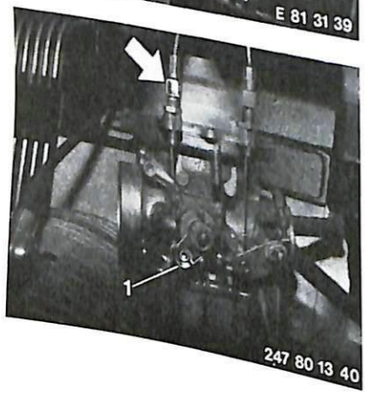


## 13 23 061 Choke cable – removing and installing (carburettor end)

**Note:** to make the illustration clearer, the carburettor has been detached from the cylinder head and turned round so that the opposite side is visible.

Loosen the locknut on the adjusting screw at the carburettor, and slacken off the screw (arrow) so that it emerges from the carburettor body.
Disconnect the cable from lever (1) on the choke assembly.

Disconnect the cable from the distributor block as described in 13 23 021.

■



## 13 72 000 Air filter element – removing and installing (single-sided breather)

Slacken the hose clip on the left air line and take off the air line after pushing back the rubber sleeve

■

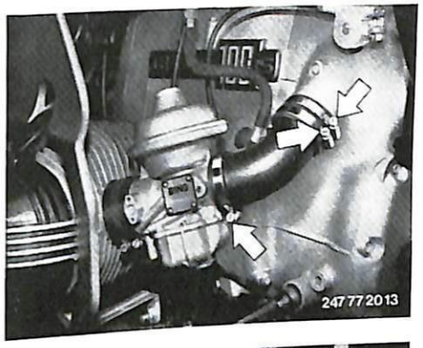


Remove the machine screw from the air filter chamber on the left and take off the chamber half shell

■

Take out the filter element

■

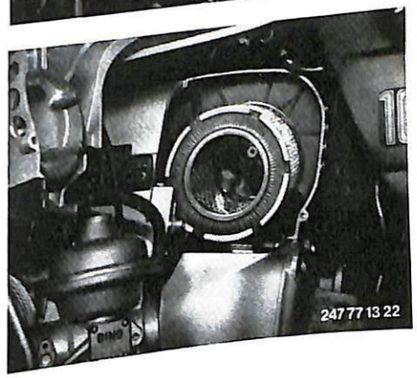

## 13 72 000 Air cleaner element – removing and installing (double-sided breather)

Remove (install) fuel tank 16 11 030

Remove the two Allen screws at left and right and take off the starter cover. Pull the engine breather hose out of the left half of the air cleaner housing

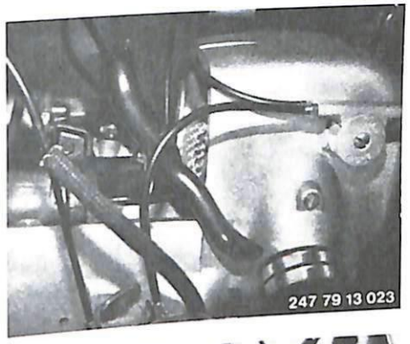


■

Slacken the hose clip screws for the left air hose, push back the the rubber sleeve and take off the air hose

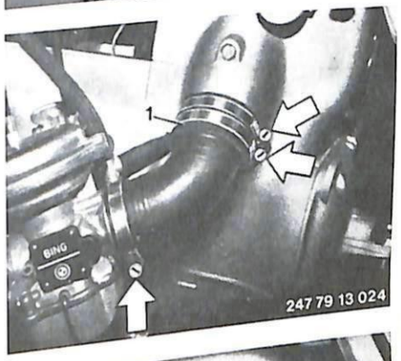


■

Remove the machine screw from the left of the air cleaner housing and pull off the housing shell

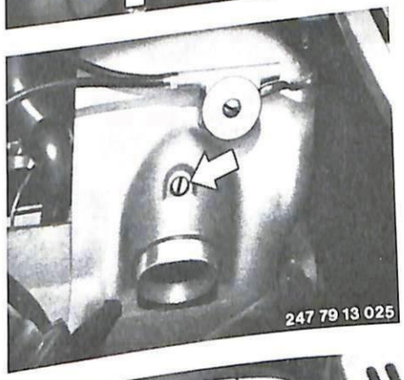


■

Pull out the air cleaner element

**Note:**

Push in the breather hose before installing the left housing shell

■

## 13 72 000 Air cleaner element – removing and installing (1981 models)

Using a screwdriver, lever off the retaining clips.

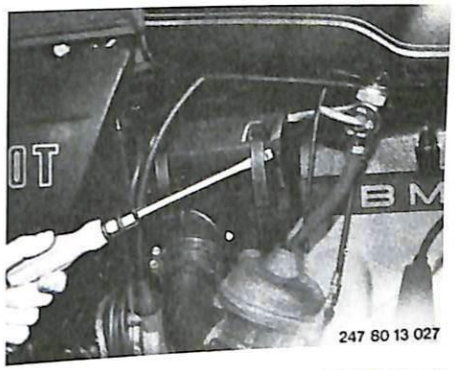


Pull out the plate-type filter element and slide in the new one. Secure the cover of the air cleaner housing with the clips, making sure that the element is properly located.

**When installing:** Note correct element position, with inscription at back and the arrow mark "TOP – OBEN" on top.

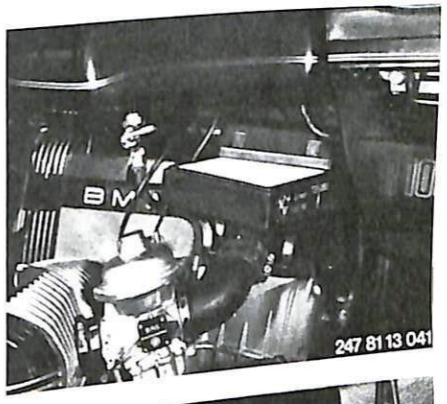


## 13 72 110 Intake venturi – removing and installing (1981 models)

Remove (install) the air cleaner – 13 72 000.

Loosen the hose clips at the air pipe and take off the pipe after pushing back the rubber sleeve.

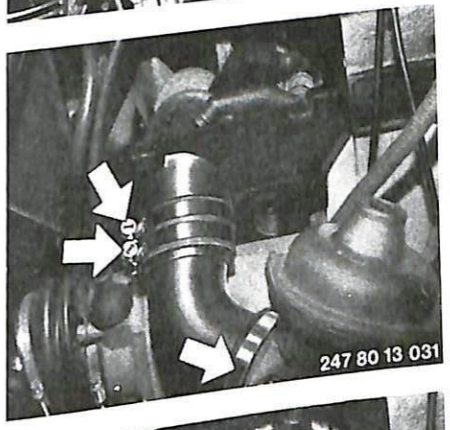


Force the stub pipe back from the inside with a screwdriver, then pull out the intake venturi.

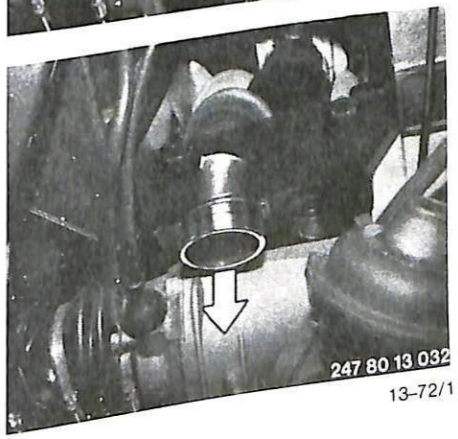

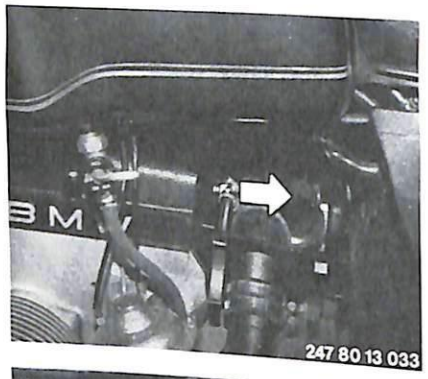


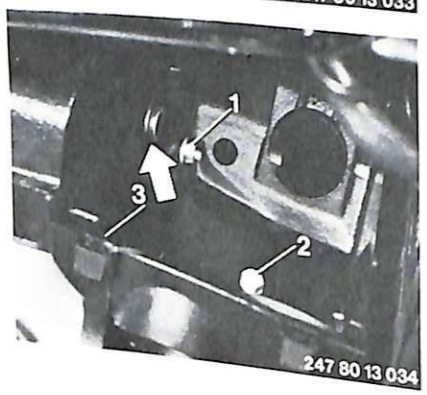


## 13 72 130 Air cleaner housing – removing and installing (1981 models)

Remove the air cleaner (13 72 000) and pull the housing out upwards.

Remove the battery (61 21 010)

Remove the battery carrier (61 21 100)

Pull the T-piece for the crankcase breather out of the air cleaner housing in the direction shown by the arrow.

■

Unscrew hex nut (1) and screws (2, 3) holding the housing. Press breather pipe (arrow) out of air cleaner housing.

Take off the housing

■



# 16 Fuel tank and lines

Specifications ..... Page 16– 0/3
Specifications (1979 models) ..... 16– 0/4
Specifications (1981 models) ..... 16– 0/5
16 11 030 Fuel tank – removing and installing ..... 16–11/1
16 12 190 Fuel tap – stripping down ..... 16–12/1

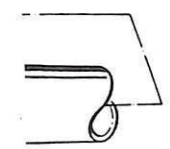

## Technical Data

| Model | R 60/7 | R 75/7 | R 80/7 | R 100/7 | R 100 S | R 100 RS |
|---|---|---|---|---|---|---|
| Tank capacity, l (Imp. gal.) | 24 (5.3/6.3) | | | | | |
| Including reserve, l (Imp. gal.) | 3 (0.6/0.8) | | | | | |



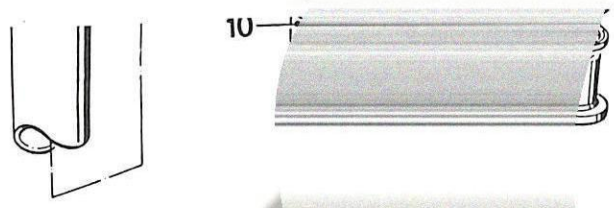

*Fuel tank and lines*

## *Specifications – '79 models*

| *Model* | *R 80/7* | *R 100 T* | *R 100 S* | *R 100 RT* | *R 100 RS* |
|---|---|---|---|---|---|
| *Tank capacity, l (Imp. gal./US gal.)* | | | *24 (5.3)* | | |
| *Including reserve, l (Imp. gal./US gal.)* | | | *3 (0.6)* | | |





Fuel tank and lines

## Specifications (1981 models)

| Model | | R 100 | R 100 CS | R 100 RT | R 100 RS |
|---|---|---|---|---|---|
| Tank capacity | liters (imp., US gal) | | | 24 (5.3,6.3) | |
| incl. reserve of | liters (Imp., US gal) | | | 3 (0.6,0.8) | |

# Fuel tap

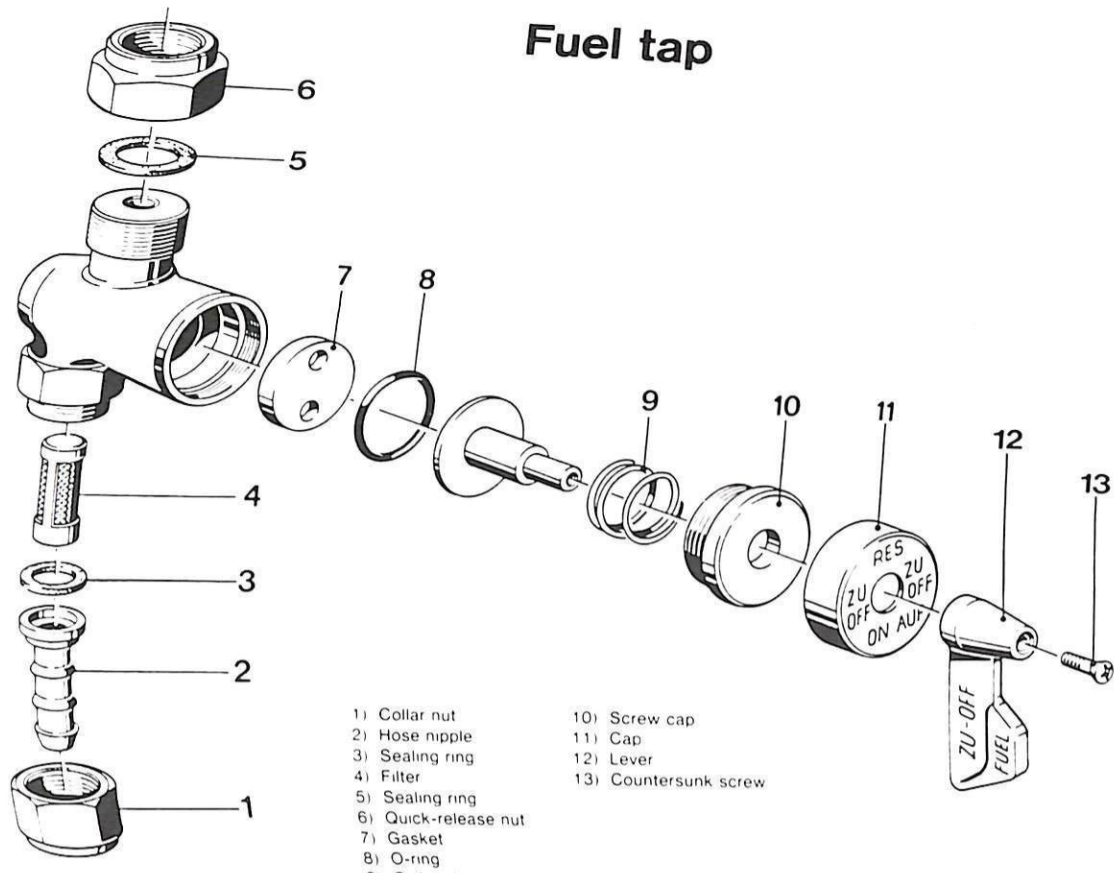


1) Collar nut
2) Hose nipple
3) Sealing ring
4) Filter
5) Sealing ring
6) Quick-release nut
7) Gasket
8) O-ring
9) Coil spring
10) Screw cap
11) Cap
12) Lever
13) Countersunk screw





# *Fuel tap*

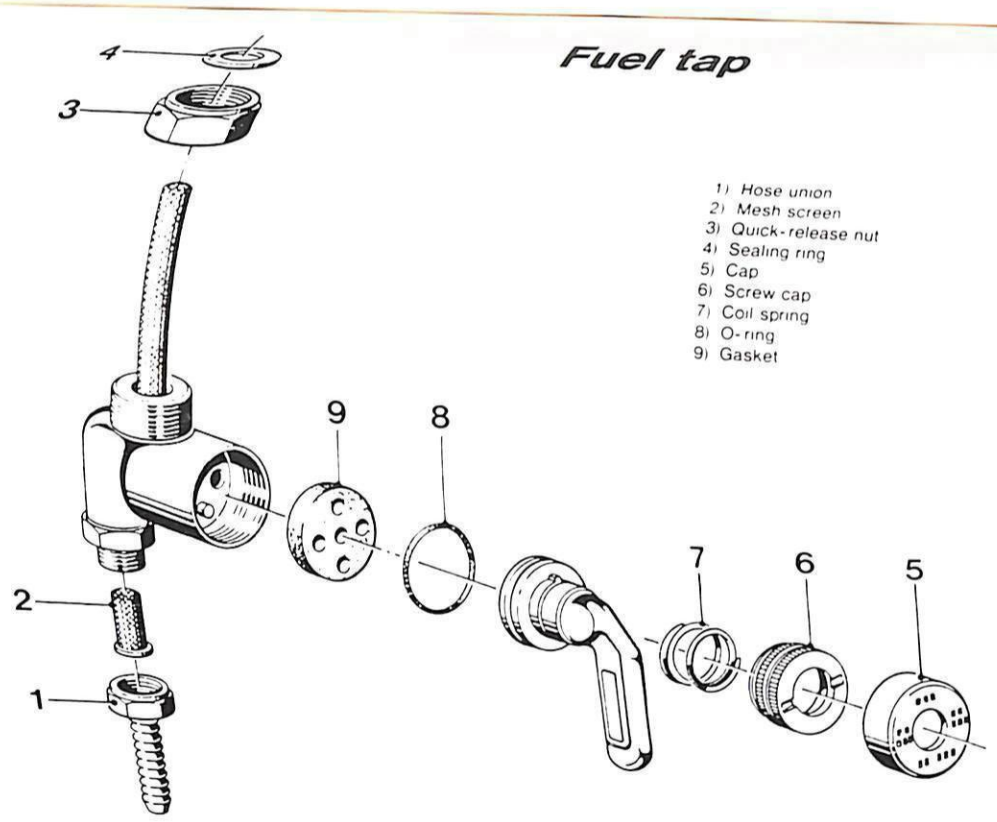


1) *Hose union*
2) *Mesh screen*
3) *Quick-release nut*
4) *Sealing ring*
5) Cap
6) Screw cap
7) Coil spring
8) O-ring
9) Gasket

## 16 11 030 Fuel Tank – Removing and Refitting

Close fuel taps (1) and take off hoses (2).

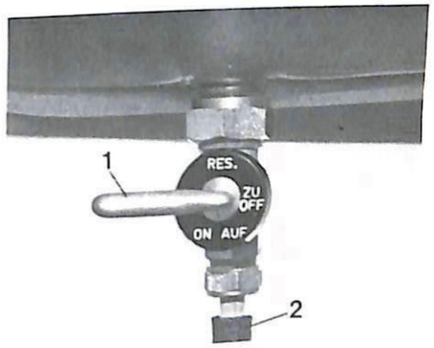


Lift the twin seat, unscrew the knurled knobs, raise the fuel tank slightly to the rear, lift at front and remove.

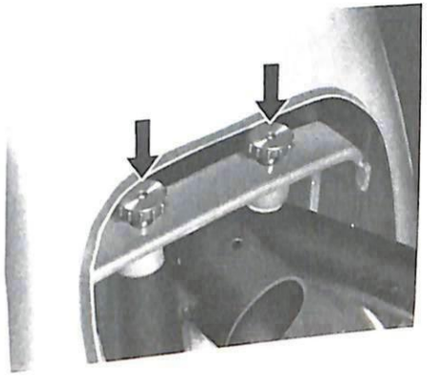

## 16 12 190 Fuel tap – stripping

Pull off the fuel hose turning slightly at the same time.
Detach the fuel tap from the fuel tank.

Unscrew the collar nut (1) and pull out the hose connection (2) with mesh strainer (3).
Take off cap (4). Unscrew threaded cap (5) and take off spring (6), slotted discs (7 and 8) and actuating lever (9).
Check cord ring seal (10) for damage and note gasket (11).

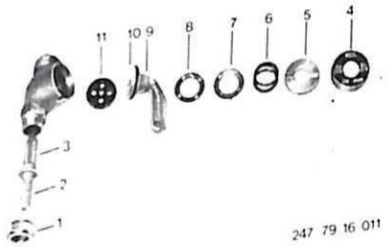

# 18 Exhaust system


Specifications ..... Page 18- 0/3
Specifications (1979 models) ..... 18- 0/4
Specifications (1981 models) ..... 18- 0/5
18 00 020 Exhaust system - detaching and attaching ..... 18-00/1
18 00 020 Exhaust system - detaching and attaching (1981 models) ..... 18-00/1
18 11 321 Muffler (silencer) - renewing ..... 18-00/2




31-0/9

*Exhaust system*

## Technical Data

| Model | R 60 7 | R 75 7 | R 80 7 | R 100 7 | R 100 S | R 100 RS |
|---|---|---|---|---|---|---|
| Silencer diameter, mm(in) | 87 (3.43) | | | | | |
| Exhaust pipe diameter, mm(in) | 38 × 1.5 (1.50 × 0.06) | | | | | 40 × 1.5 (1.57 × 0.06) |

**Tightening torques Nm (ft. lb)**

| | |
|---|---|
| Star nut for exhaust | 160 ± 20 (118 ± 15) |

All remaining bolts, screws and nuts are to be tightened in accordance with the normal values specified in the manufacturer's tables or in accordance with the latest BMW Standard Specification 60002.0.

**Exhaust system**

## Specifications — '79 models

| Model | R 80/7 | R 100 T | R 100 S | R 100 RT | R 100 RS |
|---|---|---|---|---|---|
| Silencer diameter, mm (in) | 87 (3.425) | | | | |
| Exhaust pipe diameter, mm (in) | 38 × 1.5 (1.496 × 0.06) | 40 × 1.5 (1.57 × 0.06) | | | |

**Tightening torques Nm (ft. lb)**

Star nut for exhaust 160 ± 20 (118 ± 15)

All remaining bolts, screws and nuts are to be tightened in accordance with the values specified in the manufacturer s tables or in accordance with the latest BMW Standard Spezification 60002.0

**Exhaust system**

## Specifications (1981 models)

| Model | R 100 | R 100 CS | R 100 RT | R 100 RS |
|---|---|---|---|---|
| Exhaust pipe dia. mm (in) | 38 x 1.5 (1.50 x 0.06) | | | |

**Tightening torques Nm (lb. ft)**

Spider nut for exhaust pipe 200 + 20 (147 + 15)

All other bolts and nuts are to be tightened to the customary values as shown in the manufacturers' tables or the latest BMW 60002.0 standards sheet.

## 18 00 020 Exhaust System – Removing and Refitting

Use the special BMW 18 0 600 exhaust spanner to detach detach the exhaust nut from each cylinder head.

■

Unscrew the hexagonal nuts on the footrests and unscrew the hexagonal socket head bolts from the frame (arrow)

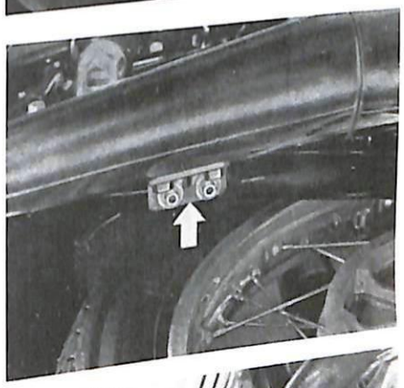

■

Slacken the hexagonal socket head bolts on the cross pipe and remove exhaust system

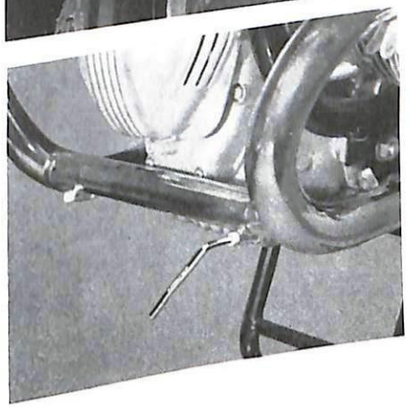

■

## 18 00 020 Exhaust system – removing and installing (1981 models)

Remove muffler (silencer) – 18 11 321.

Unscrew the exhaust port nuts at the cylinder heads with special wrench BMW No. 18 0 600.

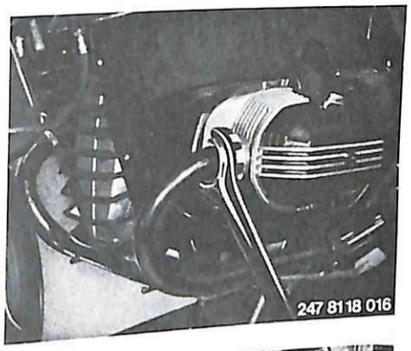


■

Slacken the Allen screws at the front balancing pipe (arrows).

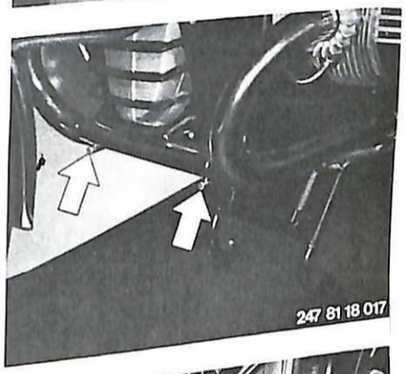


■

Unscrew the hex bolt at the rear engine mounting pin and take off the clip (arrow).
Loosen the clamp bolts (1) at the rear balancing pipe. Pull the exhaust pipes out of the cylinder heads and take off the complete exhaust system.

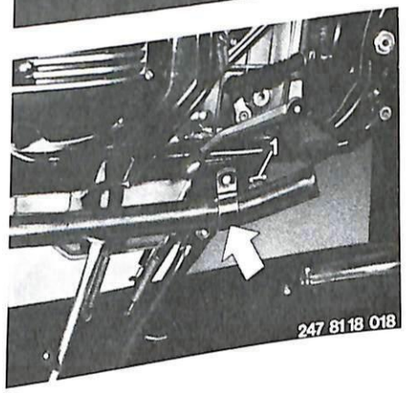


■

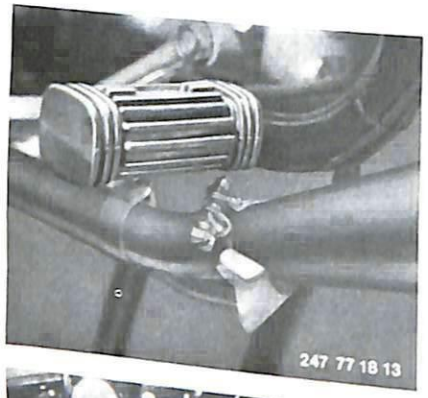


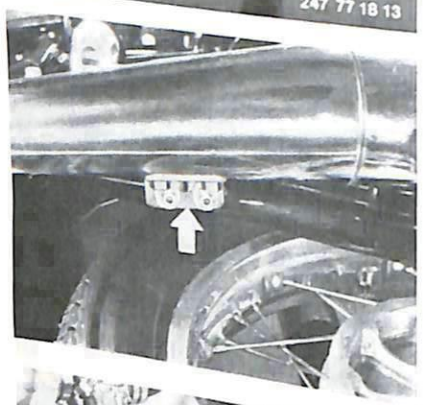

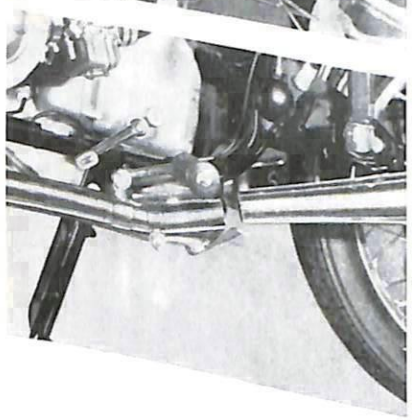

## 18 11 321 Silencer – Renewing

Slacken the hexagonal bolt on the pipe clamp and push back the pipe clamp.

■

Unscrew the hexagonal socket head bolts on the frame (arrow).

■

Pull off the silencer to the rear.

■



# 21 Clutch


| | | |
|---|---|---|
| | Specifications | Page 21– 0/3 |
| | Specifications (1979 models) | 21– 0/4 |
| | Specifications (1981 models) | 21– 0/5 |
| 21 00 004 | Clutch operating clearance – adjusting (1981 models) | 21–00/1 |
| 21 21 000 | Clutch – removing and installing | 21–21/1 |
| 21 21 000 | Clutch – removing and installing (1981 models) | 21–21/1 |
| 21 51 020 | Clutch withdrawal arm – removing and installing | 21–51/1 |
| 21 51 020 | Clutch withdrawal arm – removing and installing (1981 models) | 21–51/1 |
| | Troubleshooting – clutch (1981 models) | 21–51/3 |




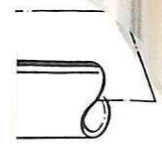

## Technical Data

| Model | R 60/7 | R 75/7 | R 80/7 | R 100/7 | R 100 S | R 100 RS |
|---|---|---|---|---|---|---|
| Type | Single plate dry type clutch with diaphragm spring | | | | | |
| Material thickness (diaphragm spring) mm(in) | 2.6 (0.102) | | | 2.8 (0.110) | | |
| Diaphragm spring pressure when fitted, kp | 180...220 (397...485) | | | 202...220 (445...485) | | |
| Height of diaphragm spring (relaxed) mm(in) | 19.0±0.5 (0.748±0.020) | | | 17.4±0.3 (0.685±0.012) | | |
| Diaphragm spring dia. (pressed flat) mm(in) | 183 (7.205) | | | | | |
| Test specification for diaphragm spring | When the edge of the disc is laid on the gauge plate the height differences in the spring tabs should be a maximum of 0.3 mm (0.011") or when the spring tabs are laid on the gauge plate the height deflection of the disc rim should be a maximum of 0.8 mm (0.031") | | | | | |
| Overall thickness of clutch plate mm(in) (segment and lining) | 6±0.25 (0.236±0.010) | | | | | |
| Minimum thickness of clutch plate, mm(in) | 4.5 (0.177) | | | | | |
| Clutch plate external diameter, mm(in) | 180 (7.087) | | | | | |
| Maximum lateral runout of clutch plate at outer diameter, mm(in) | 0.15 (0.006) | | | | | |
| Maximum vertical play of clutch plate, mm(in) | 0.3 (0.012) | | | | | |
| Maximum deflection of diaphragm driver plate, mm(in) | 0.1 (0.004) | | | | | |
| Maximum imbalance of clutch plate, cmg | 6 | | | | | |
| Clutch travel at throwout lever (cable), mm(in) | 2 (0.079) | | | | | |

**Tightening torques Nm (ft. lb)**

| | |
|---|---|
| Clutch lever adjusting screw locknut | 20...23 (14.7...17.0) |
| Clutch at flywheel | 23 (17.0) |

All other screws, bolts and nuts are to be tightened in accordance with the normal values indicated in the manufacturer's tables or in the latest BMW Standard Specification 60002.0.

# Clutch operating mechanism

(up to 1981 models)

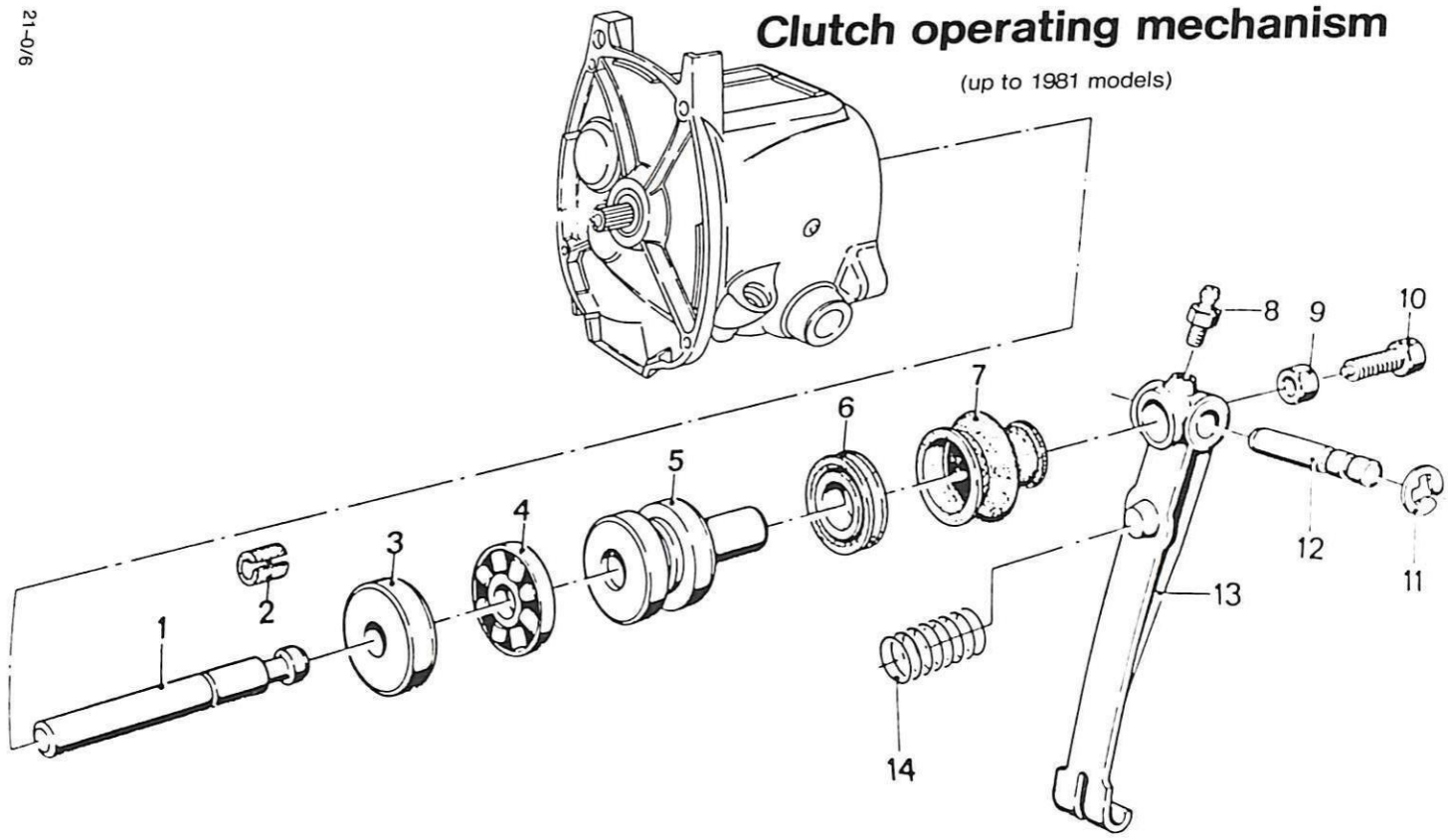


1) Pushrod
2) Felt ring
3) Thrust washer
4) Ball cage with balls
5) Piston
6) Sealing ring
7) Sealing sleeve
8) Grease nipple
9) Hex nut
10) Hex bolt
11) Circlip
12) Pivot pin
13) Clutch lever
14) Coil spring



# Clutch operating mechanism (from 1981 models on)

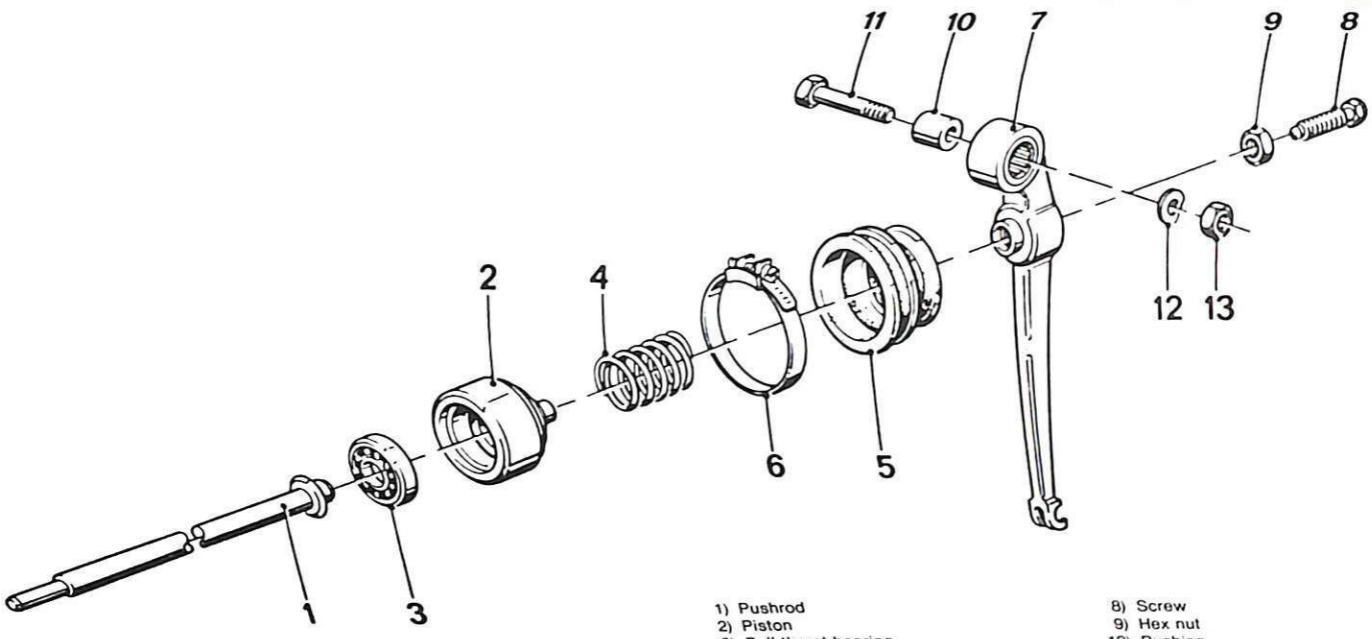


1) Pushrod
2) Piston
3) Ball thrust bearing
4) Spring
5) Sleeve
6) Clip
7) Clutch lever
8) Screw
9) Hex nut
10) Bushing
11) Hex bolt
12) Spring washer
13) Hex nut

# Clutch (up to 1981 models)

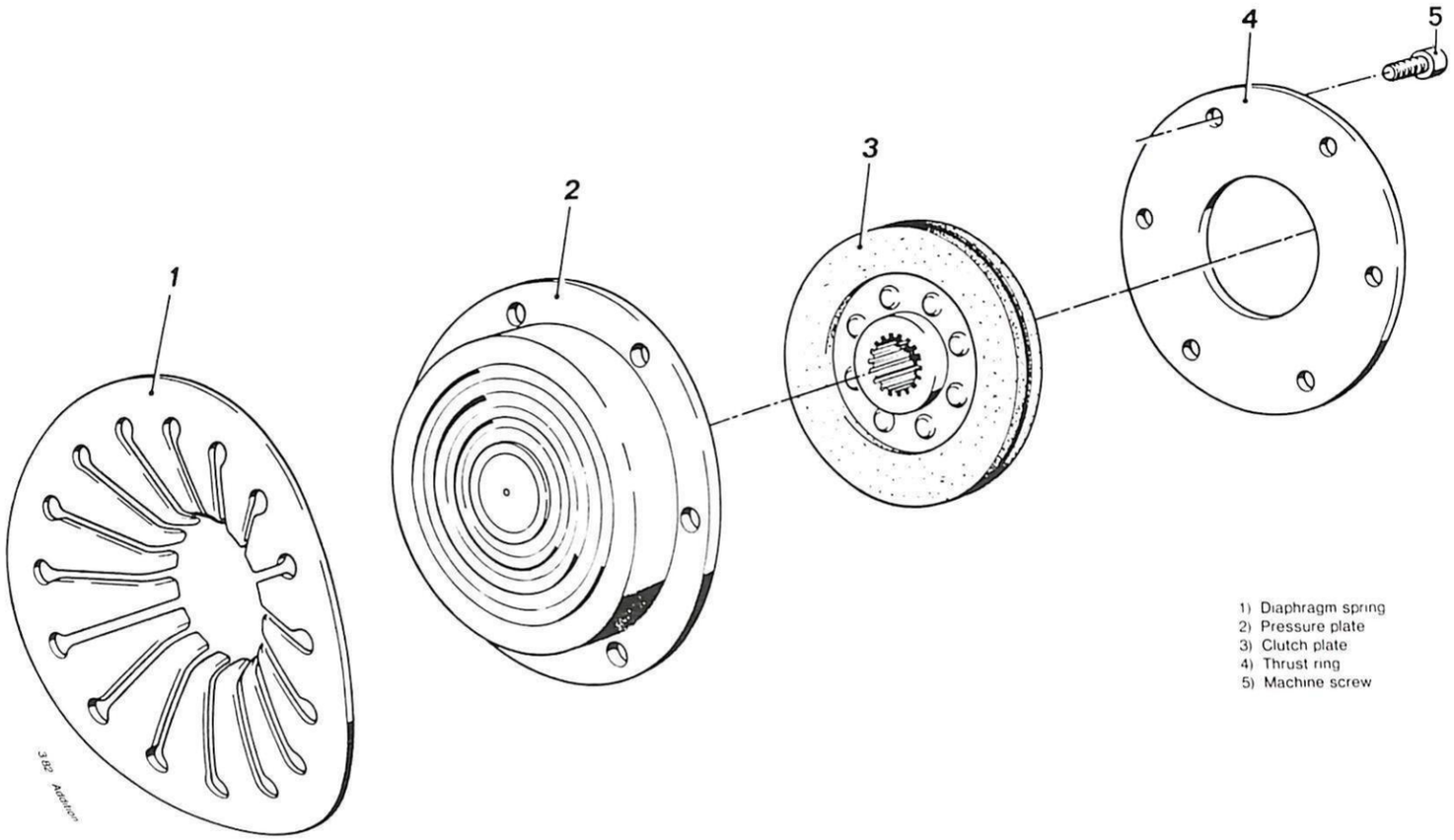


1) Diaphragm spring
2) Pressure plate
3) Clutch plate
4) Thrust ring
5) Machine screw



# Clutch (from 1981 models on)

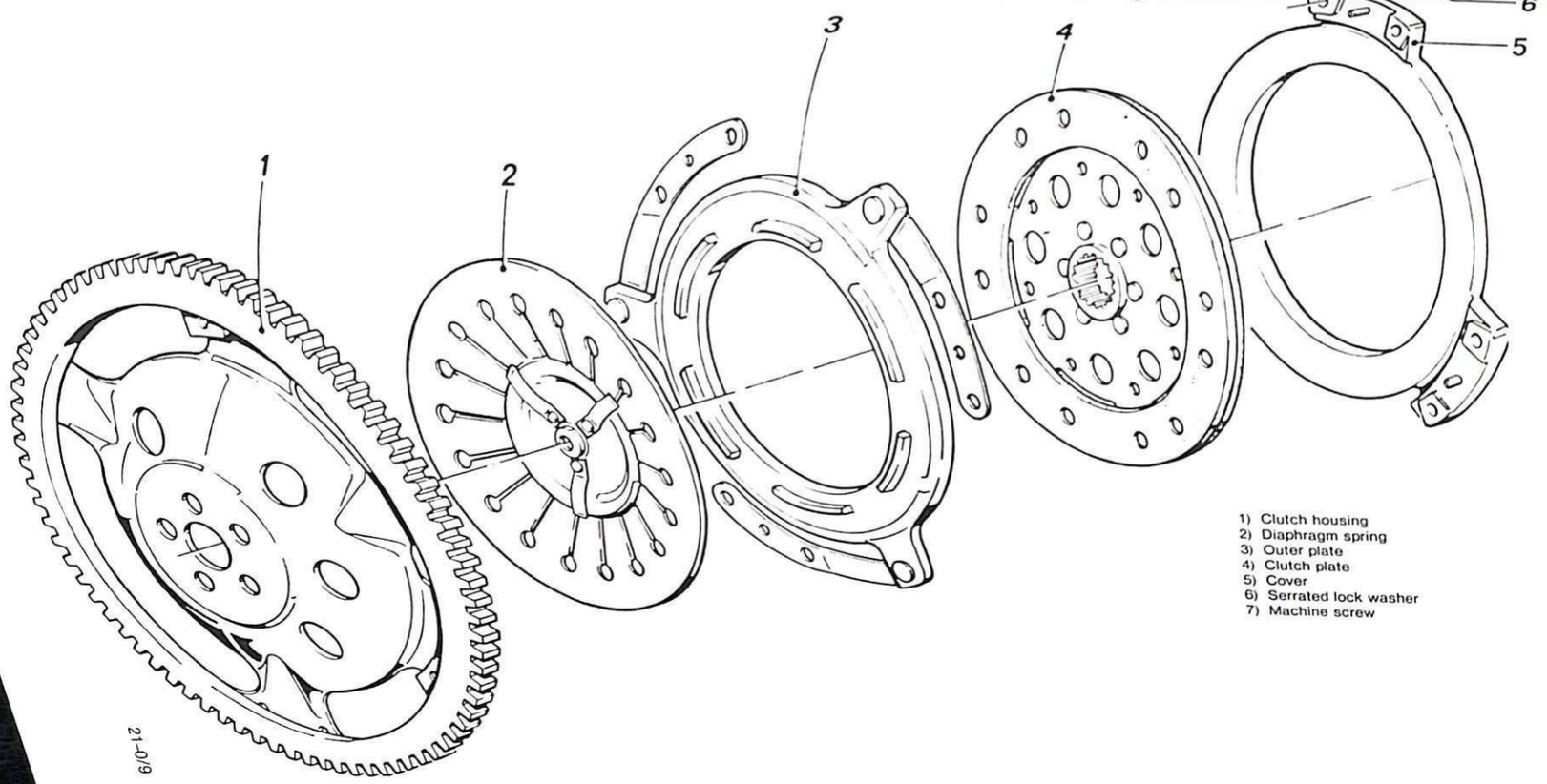


1) Clutch housing
2) Diaphragm spring
3) Outer plate
4) Clutch plate
5) Cover
6) Serrated lock washer
7) Machine screw

## 21 00 004 Clutch operating clearance – adjusting (1981 models)

Free travel at the clutch lever on the handlebar must be 2 + 0.5 mm (0.08 ± 0.02 in), adjust if necessary as follows:

- Unscrew locknut (1) on wire cable adjusting screw
- Turn adjusting screw (2)

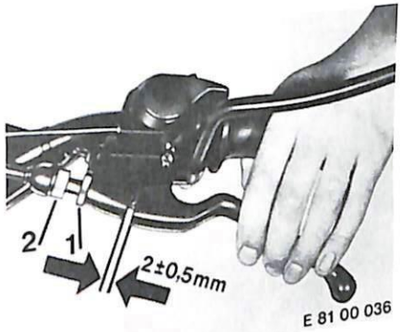


- Dimension "C" at the clutch lever on the gearbox must be 201 + 2 mm (7.91 + 0.08 in). The lever should be at an angle of 4° to the rear. Retighten locknut (1).
- Unscrew locknut "A" on the gearbox-end adjusting screw.
- Turn adjusting screw "B" until clutch lever free travel at the handlebar is 2 + 0.5 mm (0.08 + 0.02 in), then tighten locknut "A" again.

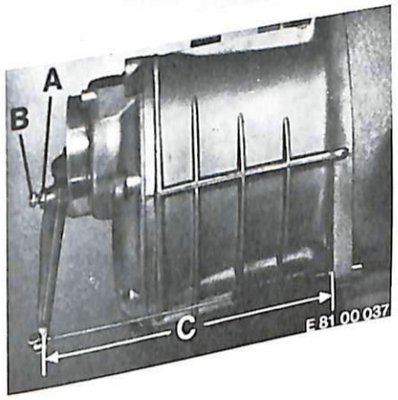

## 21 21 000 Clutch – removing and refitting

**First possibility:** Engine removed (11 00 050)
**Second possibility:** Gearbox removed (23 00 020) Engine remains in frame

Illustrations and text prepared after this preliminary work.
Use an Allen key to slacken six hexagonal socket head bolts, unscrew alternate fastening bolts, replace by three clamping bolts and screw down their nuts to contact the thrust ring.

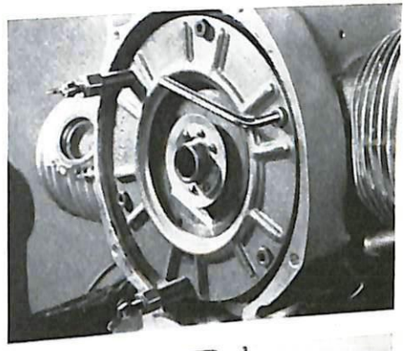

Remove the remaining three fastening bolts and turn back the clamping bolt nuts uniformly until the spring disc is fully relaxed.

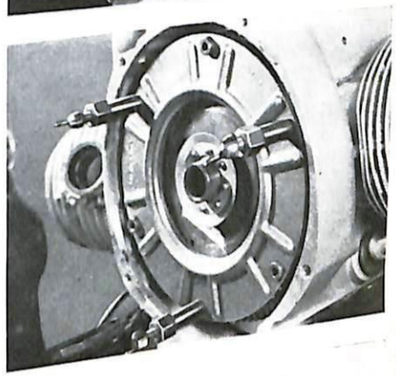

Remove the thrust ring, clutch plate, diaphragm and diaphragm spring.

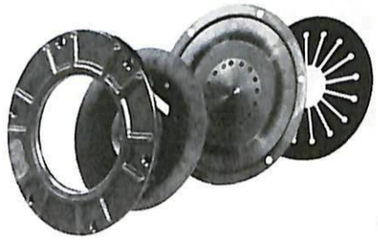

**Checking and repair**

Check the clutch plate for wear, the diaphragm for distortion and the spring for clamping force when fitted. Check the driven plate for lateral runout, wear tolerances and play; see Technical Data section.

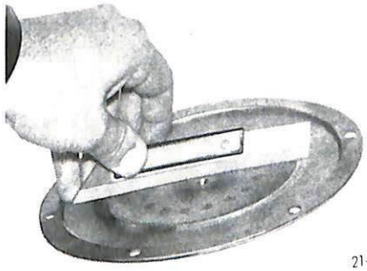

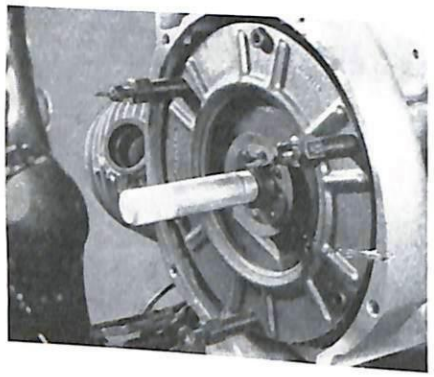

When re-assembling use the BMW 21 2 650 centering arbor to locate the clutch plate. See Technical Data for tightening torques.

Lightly coat inside splines of the clutch hub with "Molykote Longterm 2" lubricant.

■





## 21 21 000 Clutch – removing and installing (1981 models)

Remove (install) gearbox 23 00 020

The engine does not have to be removed.

Unscrew the six retaining bolts at the housing cover.

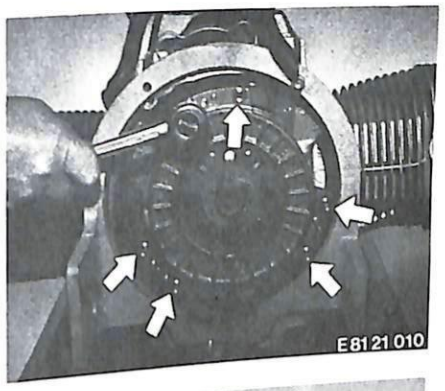


■

Take off the cover (1), clutch plate (2), outer plate (3) and diaphragm spring (4).

**Note:** when assembling, make sure that the colour marks for balancing are offset by 120° (at least 180°).

Grease with Molykote "U" inside splines of the clutch!

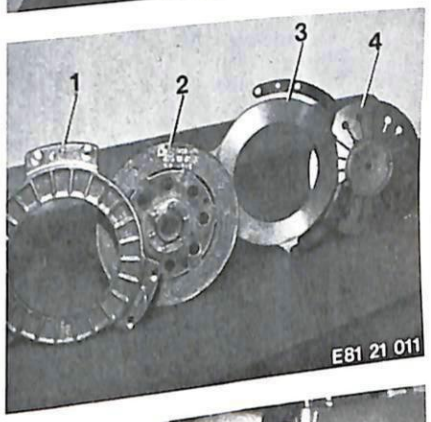


■

When installing, center the clutch plate with centering pin BMW No. 21 2 660.

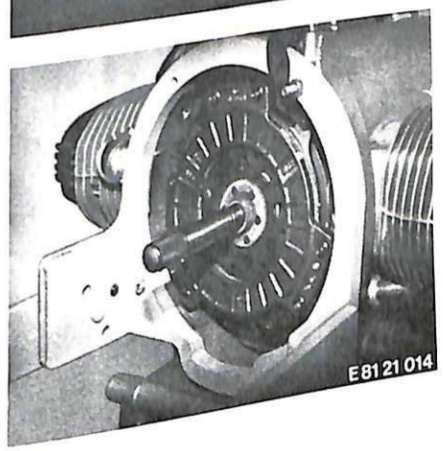


■

## 21 51 020 Clutch Throwout Lever – Removing and Refitting

Disconnect the clutch cable (1)

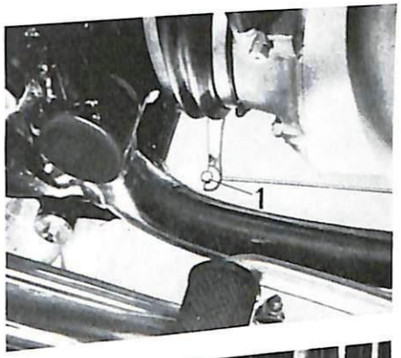


Extract cotter (2), take out pin (3) and lay the parts with thrust spring (4) to one side

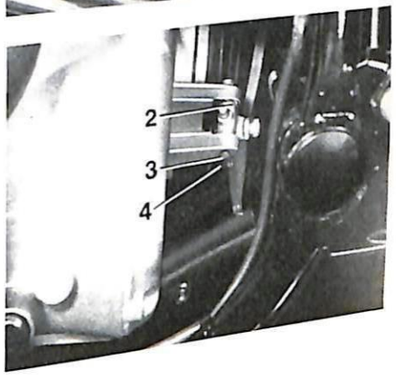

## 21 51 020 Clutch withdrawal arm – removing and installing (1981 models)

Disconnect the clutch cable from the withdrawal arm

Slacken the retaining nut (arrow) on the bearing mount, pull out the pin and take off the withdrawal arm

Adjust operating clearance – 21 00 004

**Note:** grease with Molykote "U" thrustbearings of the withdrawal arm!

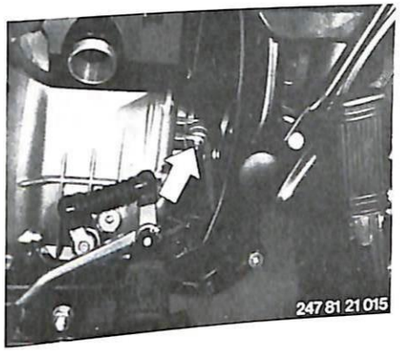

## Troubleshooting – clutch

| Fault | Cause | Remedy |
|---|---|---|
| Clutch judder | Input shaft incorrectly shimmed | Re-shim input shaft (see Pages 23–21/5 and 6) |
| Clutch is stiff to operate. clutch judder | Lack of grease on clutch plate/crankshaft splines | Clean and grease the splines |

# 23 Gearbox


| | | |
|---|---|---|
| | Specifications | Page 23- 0/3 |
| | Specifications (1979 models) | 23- 0/5 |
| | Specifications (1981 models) | 23- 0/7 |
| 23 00 020 | Gearbox - removing and installing | 23-00/1 |
| 23 00 020 | Gearbox - removing and installing (1981 models) | 23-00/1 |
| 23 11 040 | Gearbox cover - detaching and attaching/sealing | 23-12/1 |
| 23 22 001 | Complete gear cluster - renewing | 23-21/1 |
| 23 31 001 | Selector forks - renewing | 23-31/1 |
| 23 31 210 | Bearing mount for selector discs - removing and installing | 23-31/1 |
| 23 31 861 | Selector discs - renewing | 23-31/2 |
| 23 31 881 | Shift mechanism - renewing | 23-31/2 |
| 23 31 401 | Electric neutral indicator - renewing | 23-31/3 |
| 23 51 010 | Kick starter - removing and installing | 23-31/4 |
| | Troubleshooting - gearbox | 23-31/5 |

## Technical Data

| Model | R 60 7 | R 75 7 | R 80 7 | R 100 7 | R 100 S | R 100 RS |
|---|---|---|---|---|---|---|
| **Gearbox:** | 5-speed gearbox with dog clutch gear selection integral with engine, driving torque damped in all gears | | | | | |
| Gear shift system | Hooked lever shift | | | | | |
| Transmission ratios | | | | | | |
| 1st gear | 4.4 : 1 | | | | Competition ratios: 3.38 : 1 | |
| 2nd gear | 2.86 : 1 | | | | 2.43 : 1 | |
| 3rd gear | 2.07 : 1 | | | | 1.93 : 1 | |
| 4th gear | 1.67 : 1 | | | | 1.67 : 1 | |
| 5th gear | 1.50 : 1 | | | | 1.50 : 1 | |
| Type of oil above 5° C (41° F) | Brand-name hypoid gear oil SAE 90 | | | | | |
| Type of oil below 5° C (41° F) | Brand-name hypoid gear oil SAE 80 | | | | | |
| Filling capacity, litres (Imp. pints) | 0.8 (1.4/0.85) | | | | | |
| Drive shaft: Axial float, mm(in) | 0 . . . 0.1 (0 . . . 0.0039) (adjust with shims) | | | | | |
| Layshaft: Axial float, mm(in) | 0 . . . 0.1 (0 . . . 0.0039) (adjust with shims) | | | | | |
| Output shaft: Axial float, mm(in) | 0 . . . 0.1 (0 . . . 0.0039) (adjust with shims) | | | | | |
| Ball bearing seating in gearbox | Press fit (heat gearbox case to about 100° C (212° F) for assembly) | | | | | |
| Axial play of the free-running pinions in the shaft mm(in) | 0.15 . . . 0.30 (0.006 . . . 0.012) | | | | | |

**Gearbox**

## Technical Data

| Model | R 60/7 | R 75/7 | R 80/7 | R 100/7 | R 100 S | R 100 RS |
|---|---|---|---|---|---|---|
| Bushes on output shaft mm(in) | 0.005...0.035 (0.00019...0.00138) | | | | | |
| Driving flange radial play, mm(in)<br>Face runout, mm(in) | ±0.05 (±0.0020)<br>±0.05 (±0.0020) | | | | | |
| Power transmission from gearbox to rear wheel | Enclosed universal-joint shaft in right-hand swing arm tube, universal joint at gearbox end.<br>Curved spline coupling bell at axle drive end | | | | | |
| Axial float of foot-operated gear shift lever shaft, mm(in) | 0.1 (0.0039) | | | | | |
| Overshift clearance between ratchet and selector points on the cam selector plate 1st to 5th gear, mm(in) | approx. 0.5 (0.02) | | | | | |

**Tightening torques Nm (lb. ft)**

| | | | | | |
|---|---|---|---|---|---|
| Mounting on engine | 20...24 | (14.7...17.7) | Gearbox case gearbox cover | 7...8 | (5.2...5.9) |
| driver flange on gearbox output shaft | 200...220 | (147...162) | Kick starter lever nut | 20...23 | (14.7...17.0) |
| | | | Oil filler plug | 28...31 | (21...22.9) |
| | | | Oil drain plug | 23...26 | (14.7...19.2) |

All other bolts, screws and nuts are to be teghtened with the values recommended in the manufacturer's tables or the latest BMW Standard Specification 60002.0.

12/77 Alternator

**Gearbox**

## Specifications – '79 models

| Model | R 80/7 | R 100 T | R 100 S | R 100 RT | R 100 RS |
|---|---|---|---|---|---|
| **Gearbox:** | 5-speed gearbox with dog clutch gear selection integral with engine, driving torque damped in all gears | | | | |
| Gear shift system | Hooked lever shift | | | | |
| Transmission ratios | | | | Competition ratios | |
| 1st gear | 4.4 : 1 | | | 3.38 : 1 | |
| 2nd gear | 2.86 : 1 | | | 2.43 : 1 | |
| 3rd gear | 2.07 : 1 | | | 1.93 : 1 | |
| 4th gear | 1.67 : 1 | | | 1.67 : 1 | |
| 5th gear | 1.50 : 1 | | | 1.50 : 1 | |
| Type of oil above 5° C (41° F)<br>below 5° C (41° F) | Brand-name hypoid gear oil SAE 90<br>Brand-name hypoid gear oil SAE 80 | | | | |
| Filling capacity, litres (Imp. pints/US quarts) | 0.8 (1.4/0.85) | | | | |
| Drive shaft:<br>Axial float, mm (in) | 0...0.1 (0...0.0039) (adjust with shims) | | | | |
| Layshaft:<br>Axial float, mm (in) | 0...0.1 (0...0.0039) (adjust with shims) | | | | |
| Output shaft:<br>Axial float, mm (in) | 0...0.1 (0...0.0039) (adjust with shims) | | | | |
| Ball bearing seating in gearbox | Press fit (heat gearbox case to about 100° C [212° F] for assembly) | | | | |
| Axial play of the free-running pinions in the shaft mm (in) | 0.15...0.30 (0.006...0.018) | | | | |

Gearbox

## Specifications – '79 models

| Model | R 80/7 | R 100 T | R 100 S | R 100 RT | R 100 RS |
|---|---|---|---|---|---|
| Bushes on output shaft mm (in) | 0.005 . . . 0.035 (0.00019 . . . 0.0013) | | | | |
| Driving flange radial play, mm (in)<br>Face runout, mm (in) | ±0.05 (±0.0019)<br>±0.05 (±0.0019) | | | | |
| Power transmission from gearbox to rear wheel | Fully-enclosed drive shaft with torsional vibration damper in right swinging arm tube; universal joint at gearbox end, coupling with curved splines at final drive end. | | | | |
| Axial float of foot-operated gear shift lever shaft, mm (in) | 0.1 (0.0039) | | | | |
| Obershift clearance between ratchet and selector points on the cam selector plate 1st to 5th gear, mm (in) | approx. 0.5 (0.019) | | | | |

**Tightening torques Nm (lb. ft)**

| | | | |
|---|---|---|---|
| Mounting on engine | 20...24 (14.7...17.7) | Gearbox case/gearbox cover | 7...8 (5.2...5.9) |
| driver flange on gearbox output shaft | 200...220 (147...162) | Kick starter lever nut | 20...23 (14.7...17.0) |
| | | Oil filler plug | 28...31 (21...22.9) |
| | | Oil drain plug | 23...26 (14.7...19.2) |

All other bolts, screws and nuts are to be teghtened with the values recommended in thee manufacturer's tables or the latest BMW Standard Specification 60002.0.





Gearbox

## Specifications (1981 models)

| Model | R 100 | R 100 CS | R 100 RT | R 100 RS |
|---|---|---|---|---|
| Gearbox: | 5-speed, in unit with engine block, drive torque damped in all gears, claw-action shift | | | |
| Gear shift | Hook claw mechanism | | | |
| Gear ratios | | | | |
| 1st | 4.4 | | Sports gearbox | |
| 2nd | 2.86 | | 3.38 | |
| 3rd | 2.07 | | 2.43 | |
| 4th | 1.67 | | 1.93 | |
| 5th | 1.50 | | 1.67 | |
| | | | 1.50 | |
| Oil grade above 5° C (41° F) | Brand-name hypoid gear oil, SAE 90 | | | |
| below 5° C (41° F) | Brand-name hypoid gear oil, SAE 80 | | API class GL 5 | |
| Oil content liters (Imp. pints, US quarts) | 0.8 (1.4, 0.85) | | | |
| Input shaft endplay mm (in) | 0...0.1 (0...0.004) – adjust with shims | | | |
| Countershaft endplay mm (in) | 0...0.1 (0...0.004) – adjust with shims | | | |
| Output shaft endplay mm (in) | 0...0.1 (0...0.004) – adjust with shims | | | |
| Ball bearing seats in housing | press fit (heat housing to app. 100° C [212° F]) | | | |
| Endplay of free gears on shaft mm (in) | 0.15...0.30 (0.006...0.012) | | | |



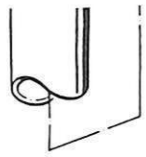

## Specifications (1981 models)

| Model | R 100 | R 100 CS | R 100 RT | R 100 RS |
|---|---|---|---|---|
| Bushings on output shaft mm (in) | 0.005 ... 0.035 (0.0002 ... 0.0014) | | | |
| Drive flange radial runout mm (in) | ≤ 0.05 (0.002) | | | |
| Face runout mm (in) | ≤ 0.05 (0.002) | | | |
| Transmission from gearbox to rear wheel | Propeller shaft with torsional vibration damper enclosed in right swinging arm tube, universal joint at gearbox and domed coupling with curved splines at rear wheel end | | | |
| Enplay at gear shift pedal shaft mm (in) | 0.1 (0.004) | | | |

### Tightening torques Nm (lb. ft)

| | | | |
|---|---|---|---|
| Attachment to engine | 33 (24) | Gearbox housing/cover | 8 (5.9) |
| Drive flange at gearbox output shaft | 221.5 (163) | Kick starter pedal nut | 22.5 (16.5) |
| Bearing mount | 19 (14) | Oil filler plug | 31 (23) |
| | | Oil drain plug | 26 (19) |

All other bolts and nuts are to be tightened to the customary values as shown in the manufacturers tables or the latest BMW 60002 0 standards sheet



3.82 Addition

# Gear shift mechanism

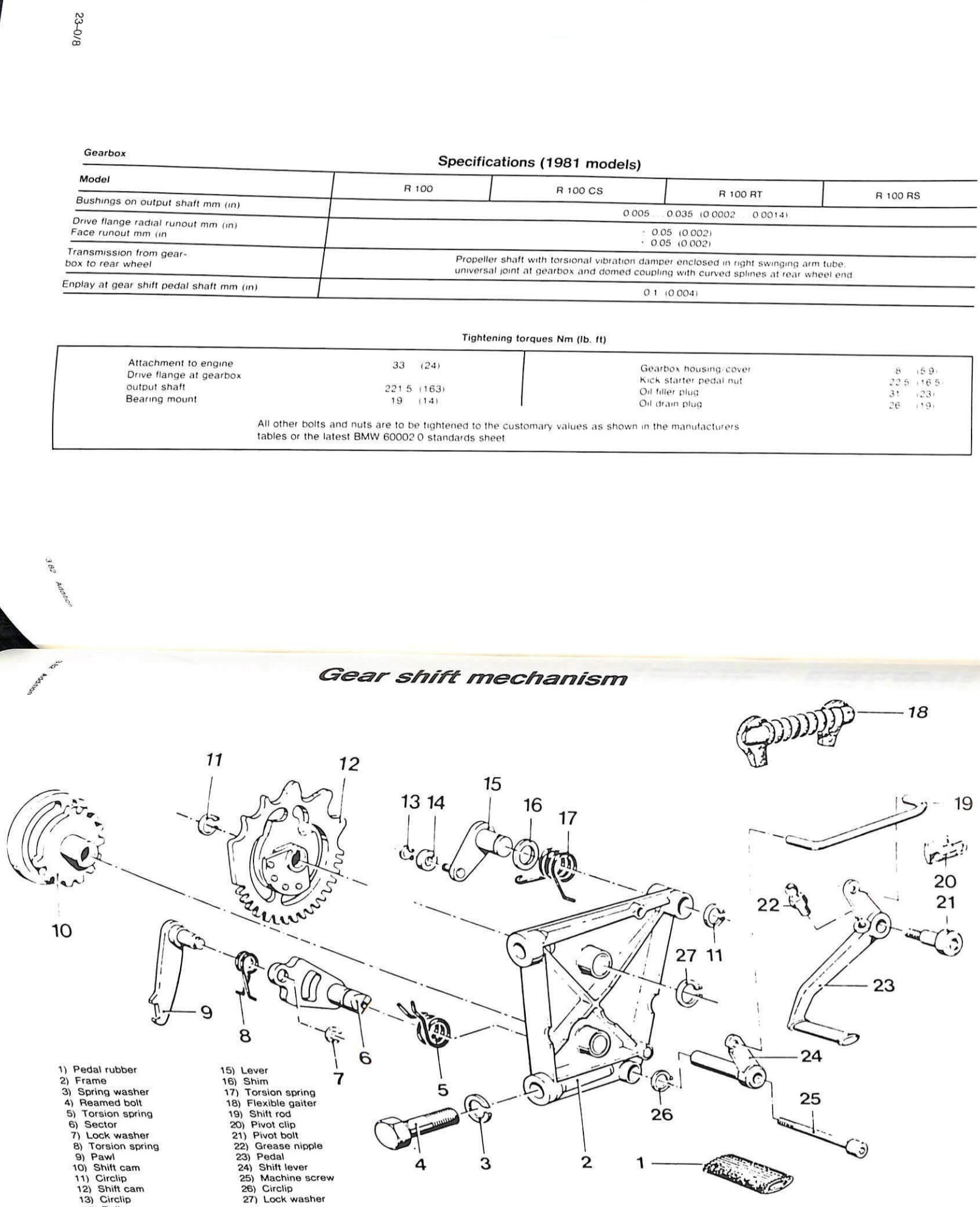

# Gearbox input, output and countershafts

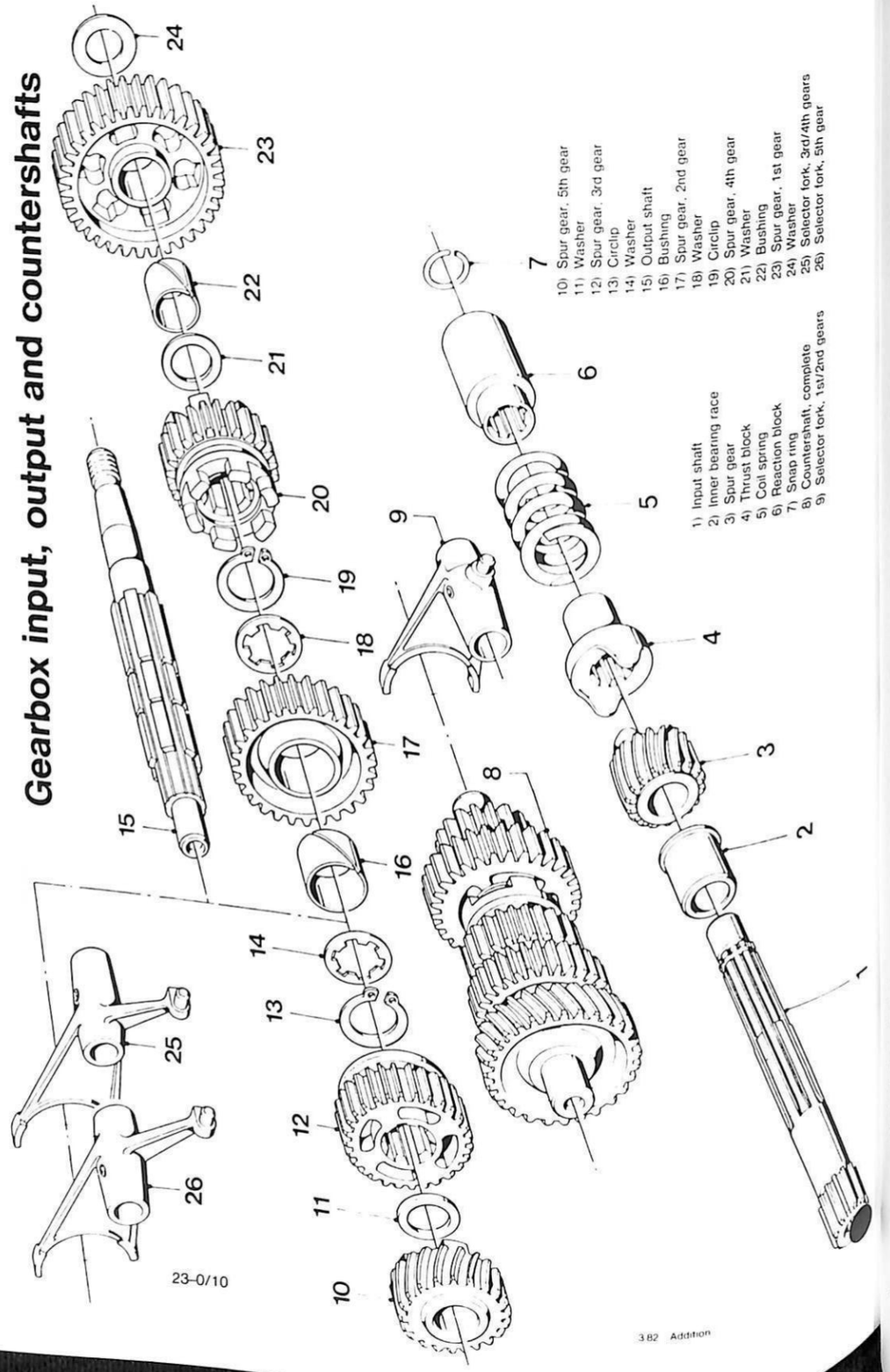


23-0/10



## 23 00 020 Gearbox – removing and refitting

Stand the motorcycle on its parking stand and on an additional support behind the parking stand.

Air filter – remove and refit (13 72 000).

Disconnect both choke cables at the carburetors and lay the left-hand half shell of the air filter housing with choke cables to one side.

Unscrew nut (1) with straight ring spanner. Slacken hexagonal bolt (2).

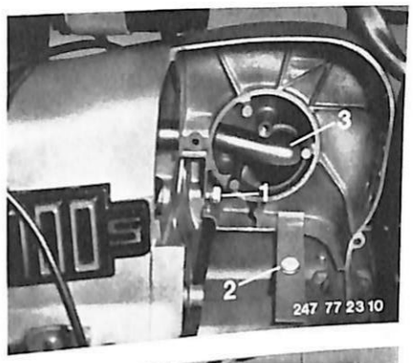


Take off the right-hand half shell of the air filter housing, at the same time pushing back breather hose (3).

Remove carburetor.

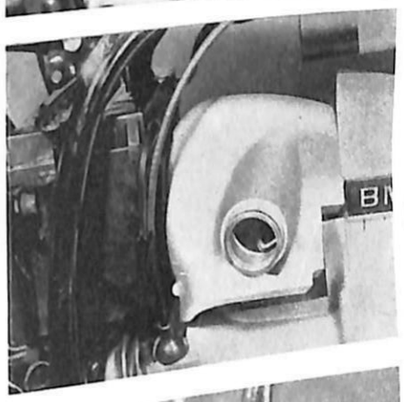

Push back the rubber protective cap on the speedometer drive end, after releasing the retaining screw and disconnecting the battery earth lead, withdraw together with the washer.

Battery – remove and refit 61 21 010

Battery bracket – remove and refit 61 21 100

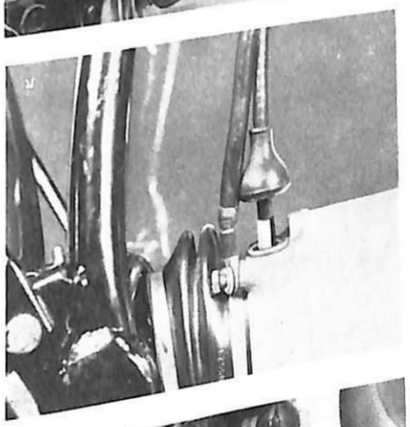

Slacken the rubber gaiter clamp on the gearbox and push back the gaiter as far as possible, not forgetting to place an oil drip tray in position.

Unscrew the four 12-sided bolts with a ring spanner and lay to one side with washers. Depress footbrake to hold the universal-joint shaft.

Tighten with BMW special tool 00 2 560. For torque, see Technical Data.

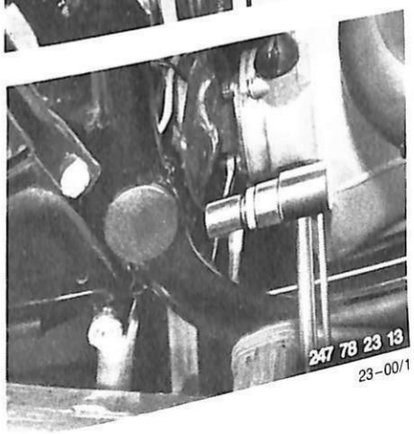

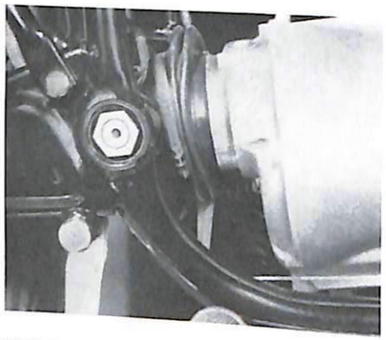

Take off the cap of the swinging arm mounting. Slacken the locknut on the bearing journals and unscrew both bearing journals.

When refitting the swinging ar. care must be taken to ensure that the two thrust collars do not project

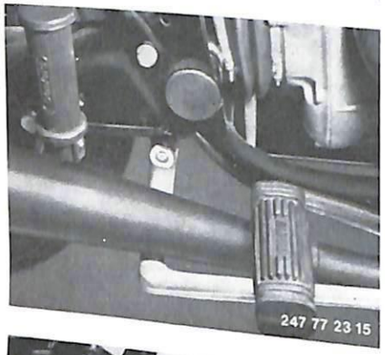


Remove footbrake lever, at the same time holding securely at the bearing bolt, and unscrew the locknut

On R 100 RS, with disc rear brake, detach brake linkage at brake cylinder (arrow) and disconnect tension spring

Clutch throwout lever – remove and refit 21 51 020

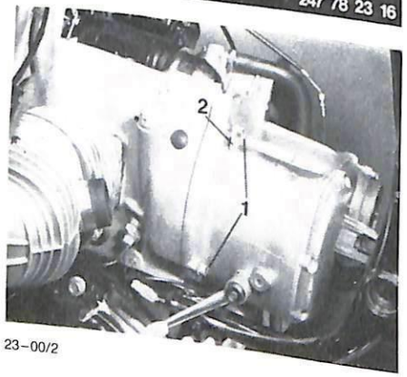


Unscrew the two hexagonal socket head bolts (1) and one hexagonal socket head thorugh bolt on the lower right of the gearbox.

When re-assembling, remember tab (2)





Disconnect gear shift linkage at pedal arm. Push back rubber gaiter, disengage spring and release pull rod from keeper with a screwdriver blade

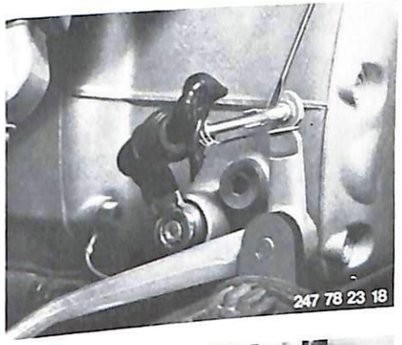


With the aid of a wooden wedge (approx. 20 mm², 400 mm [157 in] long) inserted between the tire and rear section of the frame, secure the swinging arm in its rearmost position.

Carefully remove the gearbox, place on footrest, disconnect lead for idling check

Take out gearbox completely.

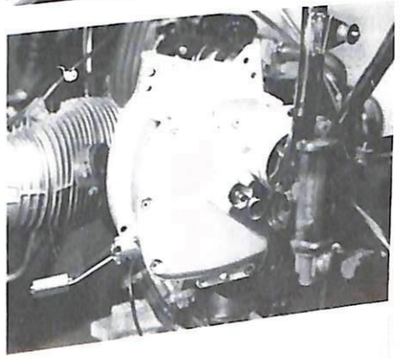

## 23 00 020 Gearbox – removing and installing (preparatory work for removing engine) (1981 models)

Remove the protective sheet from the lower frame tubes near the pushrod tubes.
Remove (install) air cleaner element – 13 72 000.
Remove (install) muffler (silencer) – 18 11 321.
Disconnect clutch operating cable at gearbox end.
Unscrew retaining nut (arrow) at bearing mount, pull out pin and take off withdrawal arm.

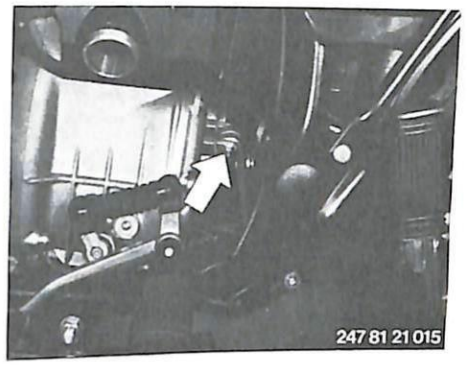


■

Pull back the rubber gaiter on the selector linkage and press the pullrod out of its keeper, using a screwdriver.

Detach footrest at frame.

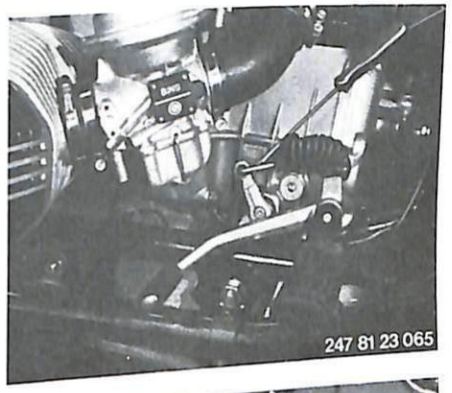


■

Loosen the hose clips at the left and right air pipes, push back the rubber sleeve and detach the pipes.

Detach the left carburettor from the cylinder head.

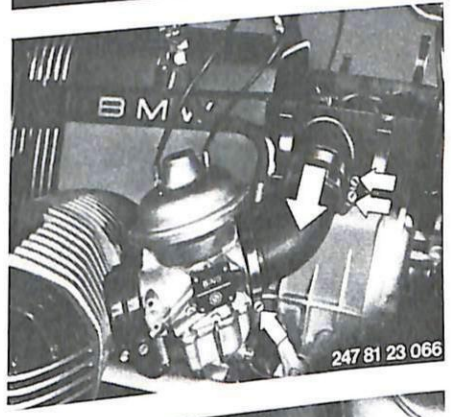


■

Pull the T-piece for the crankcase breather out of the air cleaner housing in the direction of the arrow.

■

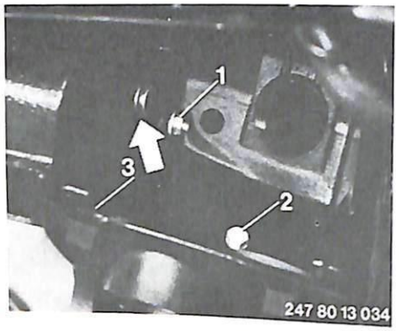


Press the breather pipe (arrow) out of the air cleaner housing. Unscrew hex nut (1) and hex bolts (2, 3) holding the housing.

■

Detach the rubber sleeve between the swinging fork and the gearbox at the gearbox end. Unscrew the twelve-sided bolts at the universal joint, preventing the rear wheel from turning by applying the brake. When installing, tighten the bolts with the special ring wrench BMW No. 00 2 560 and a torque wrench (for tightening torque, see Specifications).

Unscrew the hex bolt (arrow) and pull out the speedometer drive.

This will also release the battery earth (ground) cable.

■

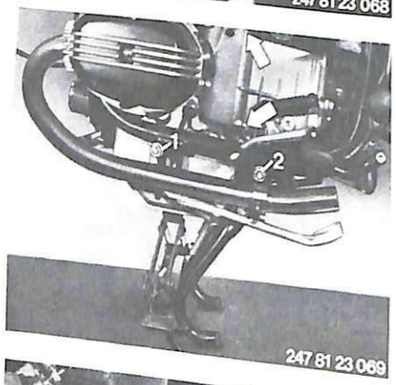


Unscrew the engine mounting pins (1, 2) and the bolts securing the gearbox to the engine (arrow) at left and right.

Support the engine with a scissors-pattern or hydraulic jack so that the mounting pins for the engine can just be pulled out.

Take off the front engine cover and pull the engine forwards as far as the lower frame tubes.

Take off the lower section of the air cleaner housing.

For tightening torques, see Specifications.

■

Detach the sleeve at the gearbox cover and remove it together with the spring. Push the gearbox back until the pushrod becomes visible. Using pliers, push the rod back through the gearbox until the gearbox can be lifted out. Catch the piston and thrust bearing with a cloth.

■





Turn the gearbox round on its side and pull the cable connecting shoes off the neutral indicating switch (arrow).

Remove the gearbox to the left and set it down carefully.

**Note:** before assembling grease with Molykote "U" splines of the input shaft!

■

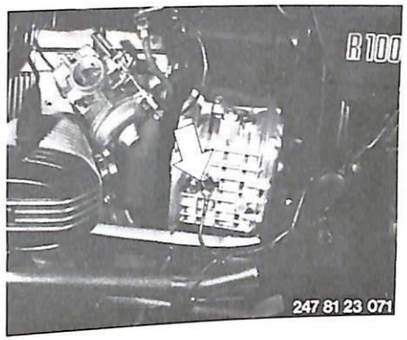

## 23 11 040 Gearbox cover – detaching and attaching/sealing

Remove (install) gearbox – 23 00 020

Place gearbox on assembly stand and secure with two bolts at opposite corners

Press the clutch withdrawal rod out of the gearbox

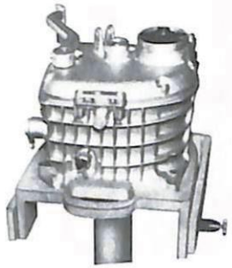

E 81 23 025

■

Remove the retaining screw, pull out the speedometer worm wheel guide sleeve and take out the worm wheel.

E 81 23 026

■

Attach counterholder BMW No. 23 1 700 without pressing-off spindle to the output shaft drive flange, using four bolts. Unscrew the retaining nut

For tightening torque, see Specifications

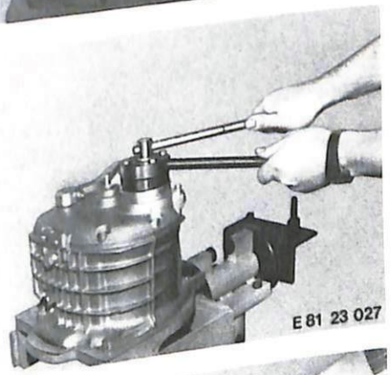

E 81 23 027

■

After bolting on counterholder BMW No. 23 1 700, force off the drive flange with the spindle. If necessary, strike the spindle lightly to loosen the taper seat.

**When installing:** the taper seats should be cleaned with a grease-free detergent and installed dry.

Oil the retaining nut with a high-viscosity oil.

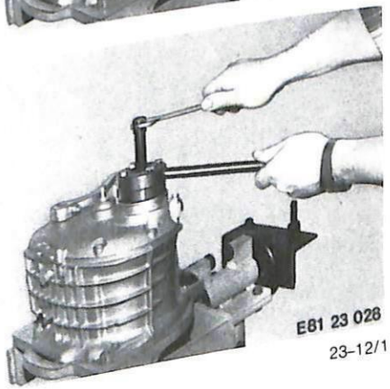

E81 23 028

■

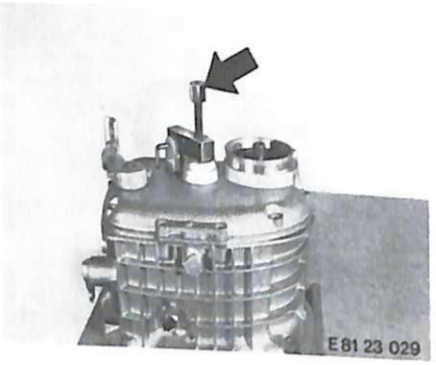


Unscrew the gearbox cover retaining bolts, heat the gearbox cover to app. 100° C (212° F) and force off with special tool BMW 23 1 630.

For tightening torques, see Specifications.

■

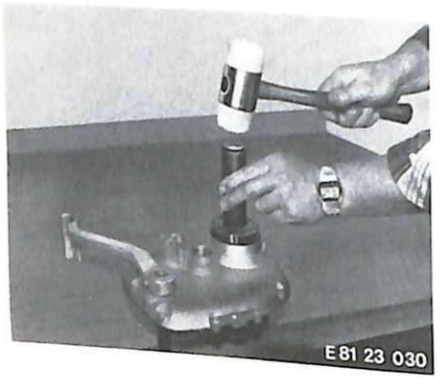


Remove the shim washers governing shaft endplay from the cover. Drive the sealing ring out of the cover with a suitable drift. Using special tool BMW No. 23 1 750, drive in a new sealing ring.

**When installing:** the open side of the sealing ring must face the output flange.

■



## 23 22 001 Complete gear cluster – removing and installing/stripping down

Remove (install) gearbox – 23 00 020.

Detach (attach/seal) gearbox cover – 23 11 040.

Strike the front end of the input shaft lightly with a plastic-faced hammer to dislodge the shaft, and pull it out of the housing.

■

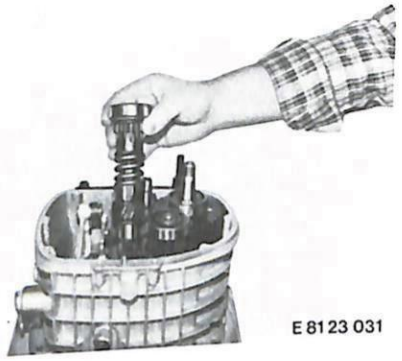


Using universal puller BMW No. 00 7 500, pull off the input shaft ball bearing with cover disc but without bearing bushing (use pressure head for crankshaft).

■

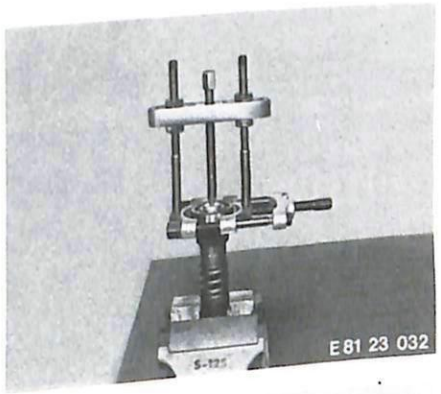


Lever out the small shaft sealing ring with a screwdriver.

■

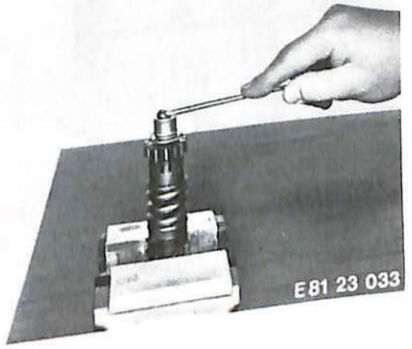


Using universal puller BMW No. 00 7 500 and the small pressure head, pull off the bearing bushing.

■

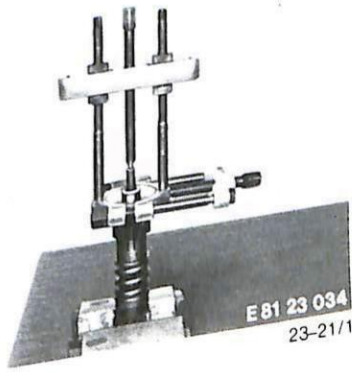

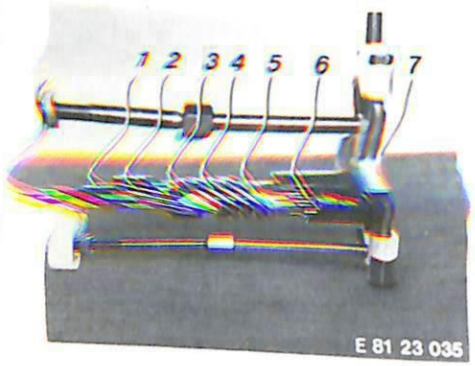

E 81 23 035

1 Input shaft
2 Spur gear
3 Thrust piece
4 Coil spring
5 Reaction piece
6 Snap ring
7 Universal puller, BMW No. 00 7 500

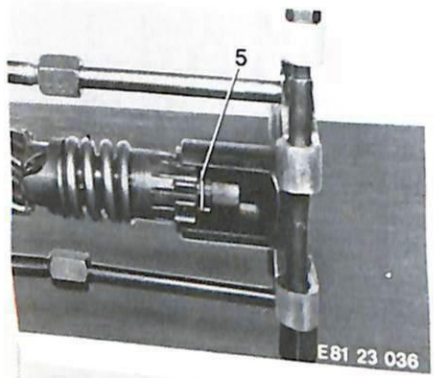

E81 23 036

Compress the coil spring with the universal puller in conjunction with assembly bushing 23 2 655. Press out the circlip (5) with a drift or screwdriver, and release the puller.

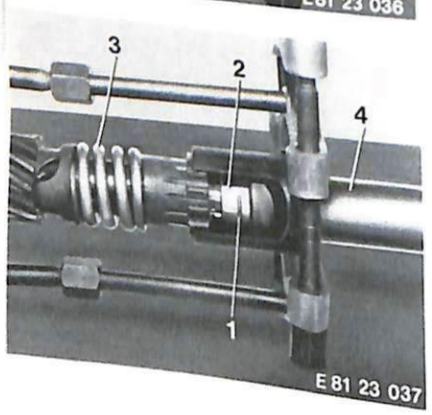

E 81 23 037

When assembling the input shaft, compress coil spring (3) with assembly bushing 23 2 655 and universal puller 00 7 500. Place circlip (1) on guide bushing (2) of special tool 23 2 650, and push on as far as the groove with sleeve (4).

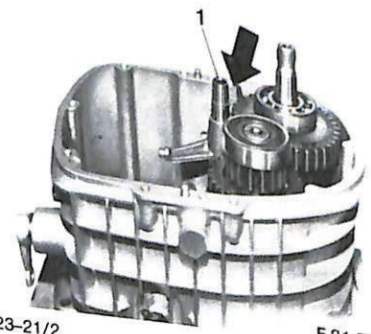

E 81 23 039

Remove (install) bearing mount for selector discs – 23 31 210.

Loosen and remove oil baffle plate (arrow). Pull out shaft for selector forks for 1st, 2nd and 5th gears (1). Remove the selector forks.

**When installing:** the short guide ends of the selector forks are placed together.





Heat the gearbox housing to 100° C (212° F) at the bearing seats for the output shaft and countershaft, and take out both shafts with the 3rd/4th gear selector fork (arrows).

**When installing:** the long guide end of the selector fork is towards the bottom of the housing.

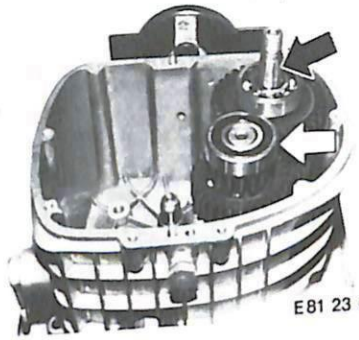
E81 23 038

Renew the input shaft radial seal.

Lever out the existing sealing ring with a screwdriver. Drive the new sealing ring into position with drift BMW No. 21 1 650 and handle BMW 00 5 500.

E81 23 040

Renew the input shaft roller bearing. Heat the gearbox housing to app. 100° C (212° F) and pull the bearing out (arrow) with a hook. Insert the new bearing while the housing is still warm.

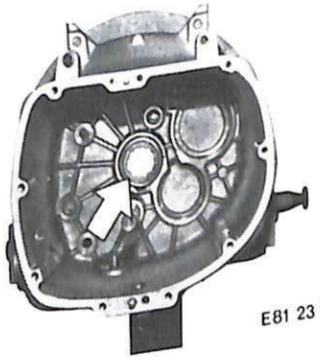
E81 23 042

Renew the radial seal for the shift lever.

Lever the sealing ring out with a screwdriver, push the new sealing ring (arrow) on to the shift lever and press into the housing by striking lightly.

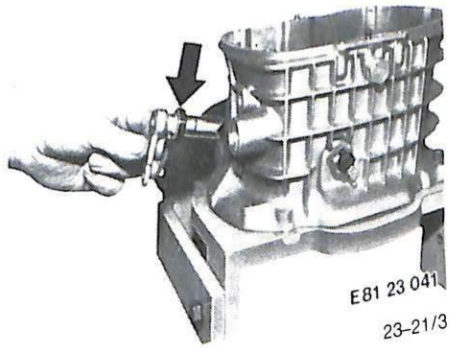
E81 23 041

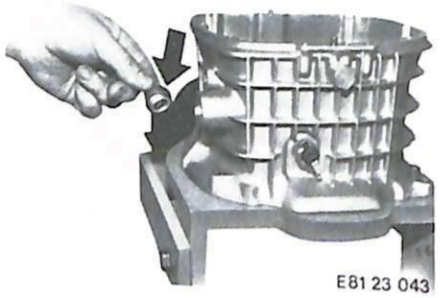

E81 23 043

Renew the pivot bearing for the shift lever.

Remove the radial sealing ring.

Pull the bearing out with the finger or with a hook. Oil the new bearing lightly and press it in.

■

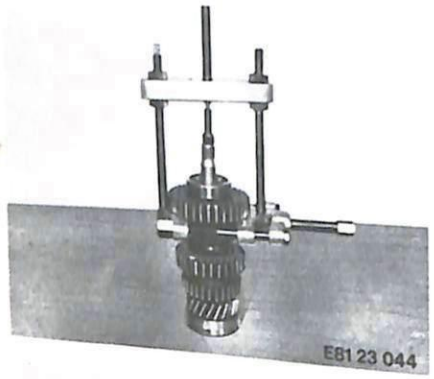

E81 23 044

Stripping down the output shaft:

Using universal puller BMW No. 00 7 500, pull off the 1st gear wheel with bearing. Take off the 4th gear wheel.

■

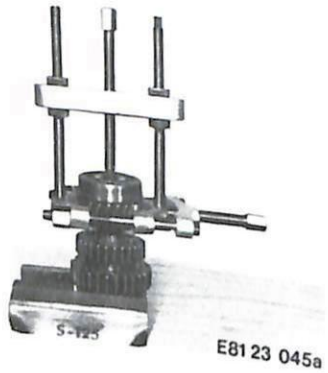

E81 23 045a

Clamp the output shaft into the vice with soft jaws. Remove the circlip from the bearing. Using universal puller BMW No. 00 7 500, pull off the 5th gear wheel with bearing. Take off the 3rd gear wheel.

■

E81 23 046a

Remove the Seeger circlip from the 2nd gear wheel. Pull the gear wheel with washer off the shaft.

**Note:** if the bushing pressed on to the shaft is defective, the output shaft must be renewed.





If defective, the countershaft must be renewed as a complete unit. Pull off the bearings (arrows) with Kukko puller BMW No. 00 7 500.

E81 23 045

■

Warm the gearbox casing to app. 80 – 100° C (176 – 212° F). Before the output shaft is installed, place the oil trap plate in the ball bearing bore of the housing. Insert the **output shaft and countershaft** (1, 2) together with the 3rd/4th gear selector fork (3) into the housing. Make sure that the shift fork does not jam. Next, insert the 1st/2nd/5th gear selector forks (4) with the small ends together, and secure with the shaft. Install shift block (5) in the neutral position, and insert the input shaft.

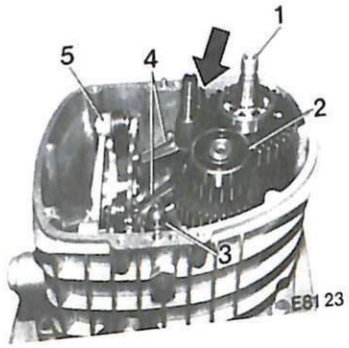


E81 23 050

■

To determine shaft location in the housing, attach measuring plate BMW No. 23 3 650 with two bolts (arrows) to hold it down firmly.

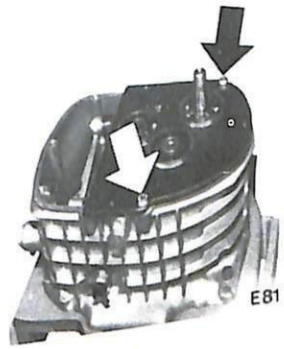

E81 23 047

■

To adjust endplay at the three gearbox shafts, use depth gauge BMW No. 00 2 550 to determine the distance between the ball bearing outer race and the measuring plate.

The measured distance plus the thickness of the material and the paper gasket (0.2 mm [0.008 in]) equals the actual distance.

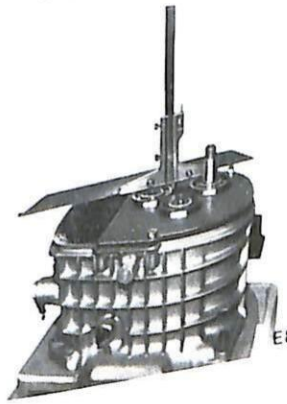

E81 23 048

■

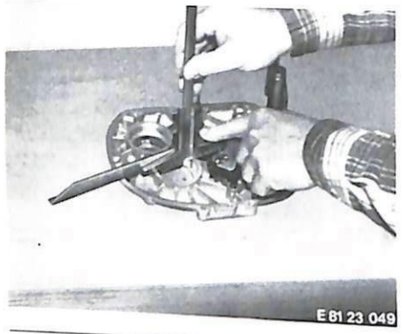


Measure the distance from the joint face on the cover to the base of the ball bearing seat in the cover.

It is advisable to draw up a table of measurements as in the example below.

For permissible endplay, see Specifications.

| Cover | | Input shaft | Countershaft | Output shaft |
|---|---|---|---|---|
| Dimension | mm (in) | 15.35 (0.604) | 15.75 (0.620) | 15.35 (0.604) |
| Housing | mm (in) | 7.25 (0.285) | 7.30 (0.287) | 7.30 (0.287) |
| + Measuring plate | mm (in) | 7.50 (0.295) | 7.50 (0.295) | 7.50 (0.295) |
| + Gasket | mm (in) | 0.20 (0.008) | 0.20 (0.008) | 0.20 (0.008) |
| Total dimension | mm (in) | 14.95 (0.589) | 15.00 (0.591) | 15.00 (0.591) |
| Difference | mm (in) | 0.40 (0.016) | 0.75 (0.030) | 0.35 (0.014) |
| Thickness of spacing shim including oil trap plate | mm (in) | 0.35 (0.014) | 0.70 (0.028) | 0.30 (0.012) |
| Shim difference – thickness = endplay | mm (in) | 0.05 (0.002) | 0.05 (0.002) | 0.05 (0.002) |



## 23 31 001 Selector forks – removing and installing

Remove (install) gearbox – 23 00 020.

Detach (attach/seal) gearbox cover – 23 11 040.

Remove (install) selector mount.

While the housing is still warm, pull the shaft for the 1st/2nd/5th gear selector forks out and place aside together with the selector forks.

To renew the 3rd/4th gear selector forks, the gear cluster must be removed – 23 22 001.

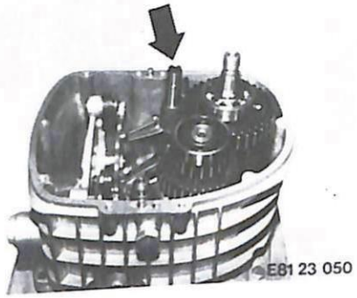


## 23 32 210 Bearing mount for selector discs – removing and installing

Remove (install) gearbox – 23 00 020.

Detach (attach/seal) the gearbox cover – 23 11 040.

Loosen Allen screw (arrow) and pull out the shift lever.

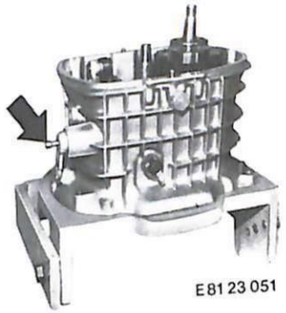


Loosen the two reamed bolts (arrows) holding the bearing mount.

For tightening torque, see Specifications.

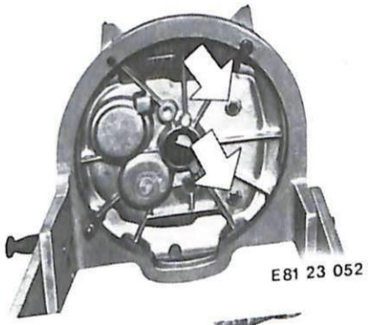


Tilt the bearing mount to free the selector forks.

Take out the bearing mount.

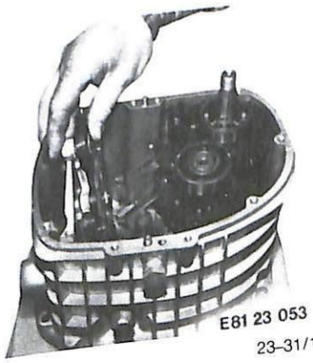

## 23 31 861 Selector discs – removing and installing

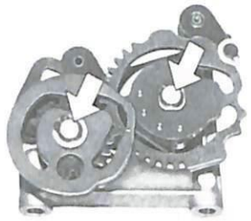

E 18 23 054

Remove (install) bearing mount – 23 31 210.

Take off the 2 Seeger circlips (arrows) holding the selector discs.

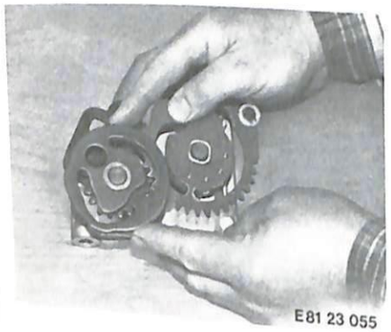

E81 23 055

**Note:** when assembling, make sure that the first teeth of the selector discs mesh together.

## 23 31 881 Shift mechanism – removing and installing

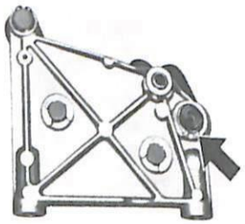

E81 23 056

Remove (install) the selector discs – 23 31 861.

Remove Seeger circlip (arrow) holding shift sector.

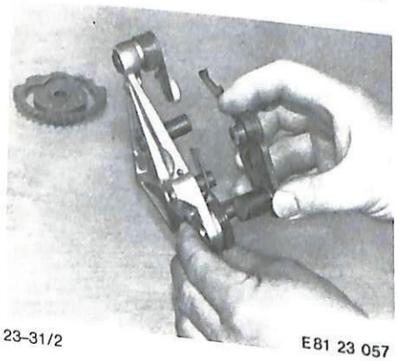

E81 23 057

Remove the complete shift sector. Leave the spring on the bearing mount.





Remove circlip (1) holding the pawl, and pull sector (2) away from pawl (3).

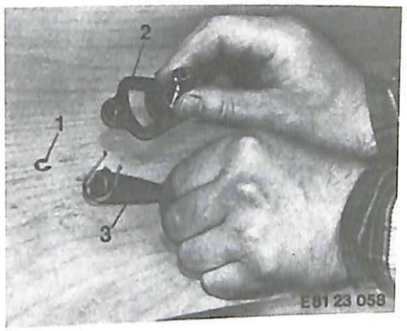


E81 23 058

Remove the Seeger circlip (arrow) for the gear locking element and pull the gear locking element out of the bearing mount.

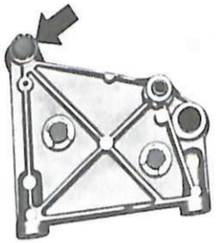

E81 23 059

## 23 31 401 Electric neutral indicator – removing and installing

The gearbox can ramain installed.

Unscrew the left and right nuts on the rear engine mounting rod and pull out the rod.

Drive the spacing tube (arrow) out of the engine block with a plastic-faced hammer.

Detach the electric cable. Unscrew and remove the neutral indicator.

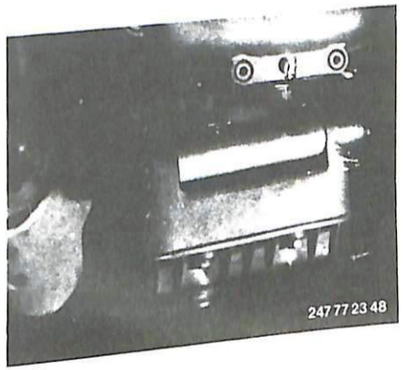

247 77 23 48

## 23 51 010 Kick starter – removing and installing

Detach (attach/seal) the gearbox cover – 23 11 040.

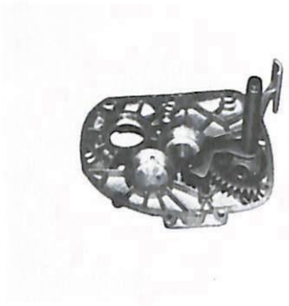

E 81 23 061

■

Remove the lock ring for the intermediate gear wheel and pull the gear wheel off the kick starter shaft.

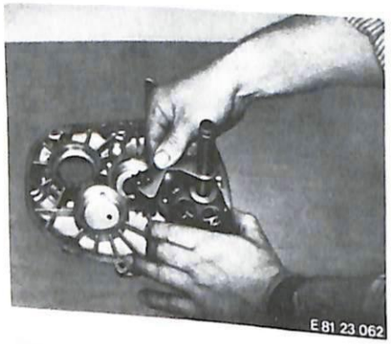

E 81 23 062

■

Loosen the wedge screw on the kick starter arm and drive it out with powerful hammer-blows. Pull off the arm.

Pull the kick starter shaft out of the gearbox cover.

For tightening torque, see Specifications.

E 81 23 063

■



## Troubleshooting – gearbox

| Malfunction | Cause | Remedy |
|---|---|---|
| Noise from gearbox | Defective bearing | Renew bearing |
| | Shift forks binding | Examine forks for rub marks, grind down or renew |
| | Gearbox shafts not shimmed correctly | Measure and determine new shim thicknesses |
| | Noise from gearwheels – incorrect endplay or radial play | Check endplay and radial play |
| Gear shift is stiff | Gearbox shaft shims not providing sufficient play | Measure and alter thickness of shims as necessary |
| | Pawl touching large shift disc (for 1st, 2nd and 5th gears) | Align pawl correctly |
| Gear shift is stiff when coasting (overrun) | Gearbox shafts wandering | Measure and alter thickness of shims as necessary |
| Gear shift sticking | Burr on shift cam or rough surface in journal guide | Re-machine or renew shift cam |
| | Shift fork sticking on output shaft, too much play | Check output shaft and fork, renew if necessary |
| Gear shift moves too far | Roller on locking device worn | Renew |
| | Too little spring tension on locking device | Check tension, renew spring if necessary |
| | Pawl is bent | Straighten pawl |
| Clutch judder | Input shaft not shimmed correctly | Measure and determine new shim thicknesses |

# 26 Drive shaft


Specifications ..... Page 26– 0/3
Specifications (1979 models) ..... 26– 0/4
Specifications (1981 models) ..... 26– 0/5
26 11 000 Drive shaft – removing and installing (model without torsional vibration damper) ..... 26–11/1
26 11 000 Drive shaft – removing and installing (model with torsional vibration damper) ..... 26–11/1

## Technical Data

| Model | R 60 7 | R 75/7 | R 80 7 | R 100 7 | R 100 S | R 100 RS |
|---|---|---|---|---|---|---|
| Arrangement | Enclosed drive shaft in the right-hand swinging arm, with needle bearing universal joint at the gearbox end and curved-spline coupling at the input end | | | | | |
| Type of oil, over 5° C (41° F)<br>below 5° C (41° F) | Brand-name hypoid gear oil SAE 90<br>Brand-name hypoid gear oil SAE 80 | | | | | |
| Filling capacity, ltr. (Imp. pints) | 0.15 (0.26/0.16) | | | | | |

**Tightening torques Nm (ft. lb)**

| | |
|---|---|
| Hexagonal nut on coupling bell housing | 200...220 (147...162) |
| Twelve-sided bolt | 38 + 4 (28+2.9) |

All other bolts, screws and nuts are to be tightened in accordance with the usual figures as recommended by the manufacturers or in accordance with the latest BMW Standard Specification 60002.0.

*Drive Shaft*

## *Specifications — '79 models*

| *Model* | | *R 80/7* | *R 100 T* | *R 100 S* | *R 100 RT* | *R 100 RS* |
|---|---|---|---|---|---|---|
| *Arrangement* | | *Fully-enclosed drive shaft with torsional vibration damper in right swinging arm tube; universal joint at gearbox end, coupling with curved splines at final drive end.* | | | | |
| *Type of oil,* | *over 5° C (41° F)* | Brand-name hypoid gear oil SAE 90 | | | | |
| | *below 5° C (41° F)* | Brand-name hypoid gear oil SAE 80 | | | | |
| *Filling capacity, ltr. (Imp. pints)* | | 0.15 (0.26) | | | | |

**Tightening torques Nm (ft. lb)**

| | |
|---|---|
| Twelve-sided bolt | 38 + 4 (28 + 2.9) |

All other bolts, screws and nuts are to be tightened in accordance with the usual figures as recommended by the manufacturers or in accordance with the latest BMW Standard Specification 60002.0

11.78 Addition

3.82 Addition

**Drive shaft**

## Specifications

| **Model** | | R 100 | R 100 CS | R 100 RT | R 100 RS |
|---|---|---|---|---|---|
| Layout | | Propeller shaft with torsional vibration damper enclosed in right swinging arm tube, universal joint running on needle roller bearing at gearbox end, domed coupling with curved splines at rear wheel end | | | |
| Oil grade | above 5° C (41° F) | Brand-name hypoid gear oil, SAE 90 | | | |
| | below 5° C (41° F) | Brand-name hypoid gear oil, SAE 80 | | | |
| Oil content liters (Imp. pints, US quarts) | | 0.15 (0.26, 0.16) | | | |

API class GL 5

**Tightening torques Nm (lb. ft.)**

| | |
|---|---|
| Twelve-sided bolt | 40 (29.5) |

All other bolts and nuts to be tightened to the customary values as shown in the manufacturers' tables or the latest BMW 60002.0 standards sheet.

# Drive shaft

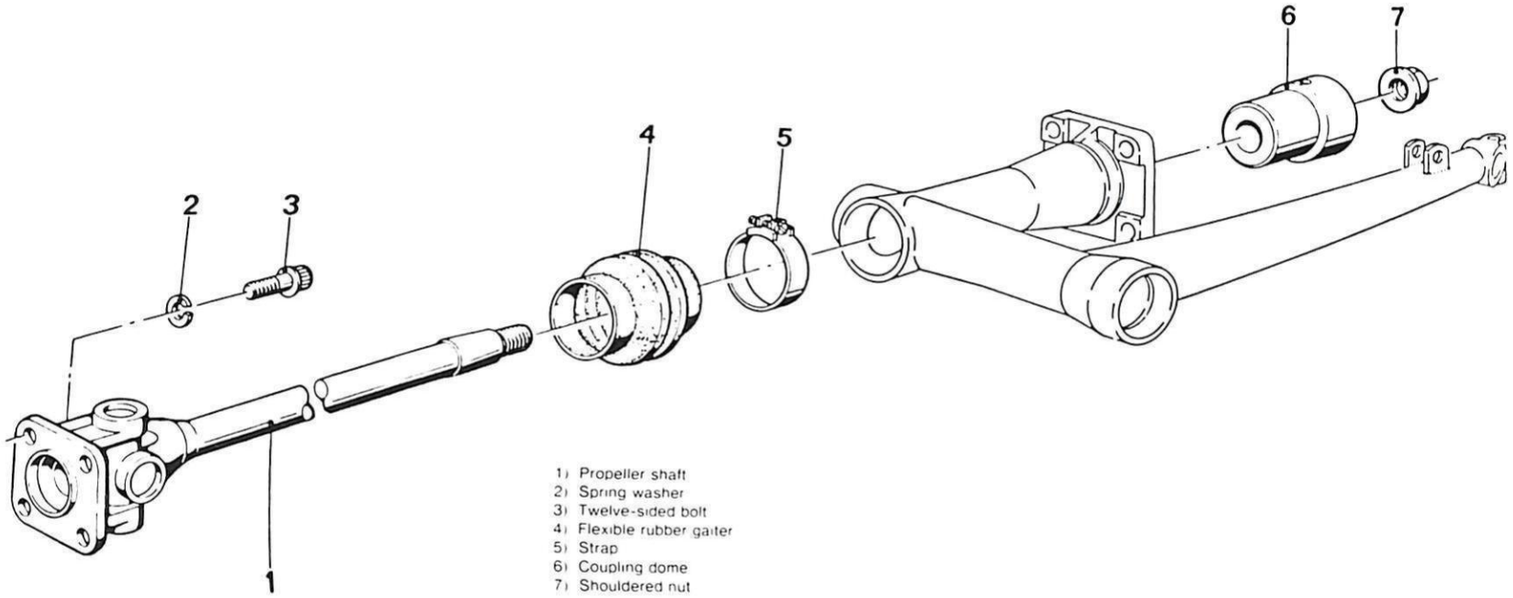


1) Propeller shaft
2) Spring washer
3) Twelve-sided bolt
4) Flexible rubber gaiter
5) Strap
6) Coupling dome
7) Shouldered nut

296





# *Drive shaft with torsional vibration damper (from 1979 models on)*

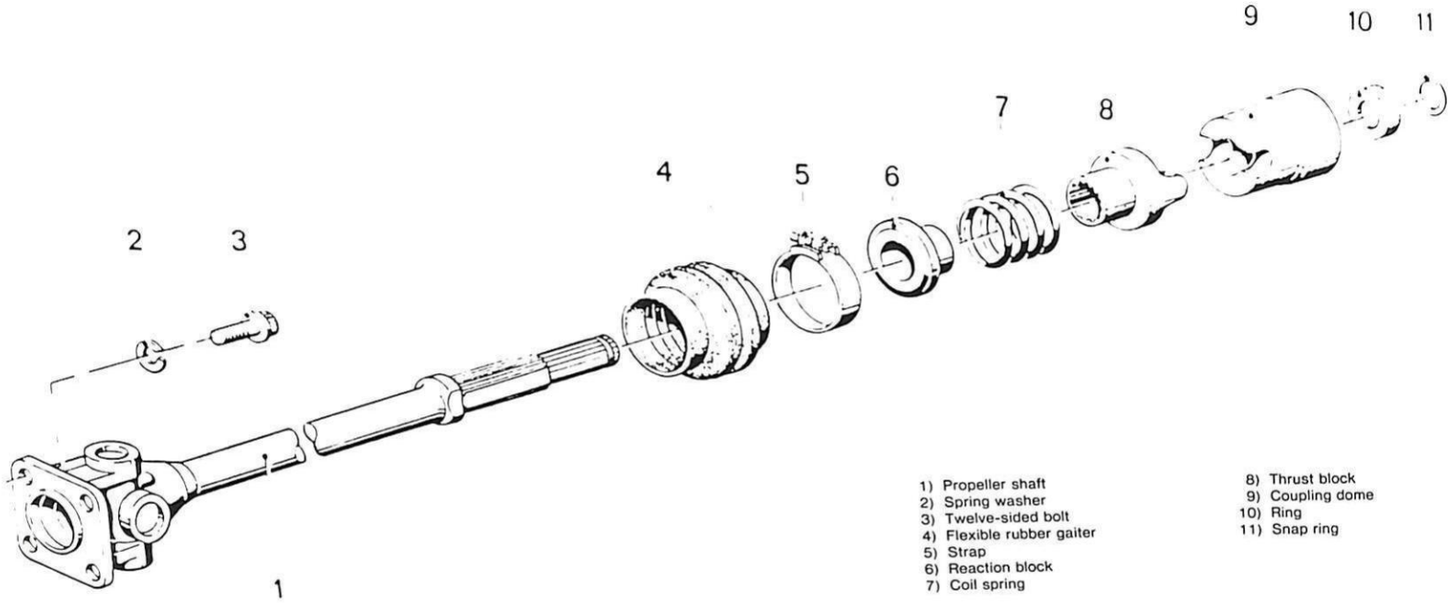


1) Propeller shaft
2) Spring washer
3) Twelve-sided bolt
4) Flexible rubber gaiter
5) Strap
6) Reaction block
7) Coil spring
8) Thrust block
9) Coupling dome
10) Ring
11) Snap ring

## 26 11 000 Drive shaft – removing and refitting (models without torsional vibration damper)

Rear wheel swinging arm – remove (33 17 350).

Clamp the rear wheel swinging arm in a bench vice fitted with jaw pads. Insert toothed back plate holder BMW No. 26 1 600 in the inside toothing of the coupling bell housing and unscrew the nut from the drive shaft with the aid of the appropriate socket wrench.

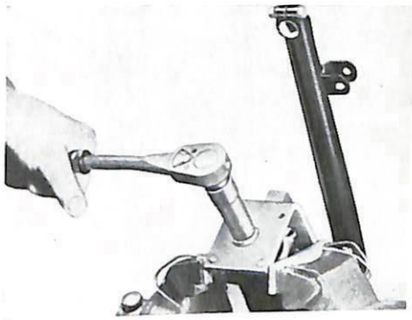

■

Using extractor 26 1 650, pull the coupling bell housing off the drive shaft.

If the housing is seated very securely, tighten the thrust spindle and give it a sharp blow. Remove drive shaft and housing.

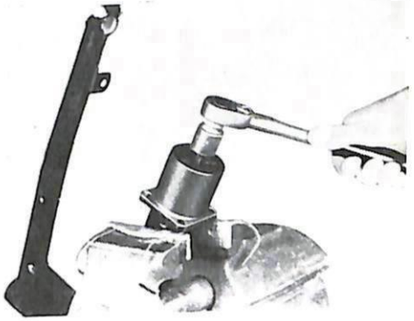

■

Check universal joint for wear. Test for radial play by turning to produce relative rotary movement between flange and shaft. Test for endplay (axial) by pushing along line of shaft.

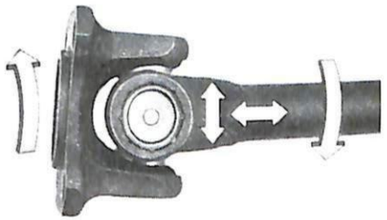

247 77 26 12

■

**Note when fitting:**

Before fitting the housing it is essential to clean the inside and outside cone with trichlorethylene (do not use petrol/gasoline). See Technical Data for tightening torque.

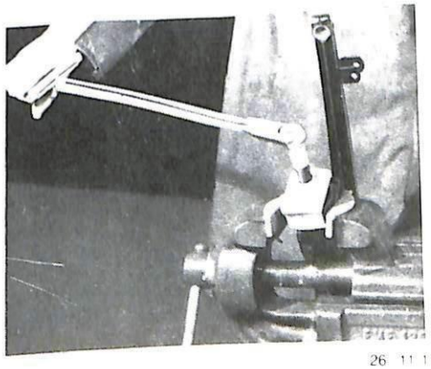

■

## 26 11 000 Drive shaft – removing and installing (models with torsional vibration damper)

Remove rear wheel swinging arm – 33 17 350.
Clamp BMW assembly fixture 26 1 700 into vise, and insert swinging arm into fixture

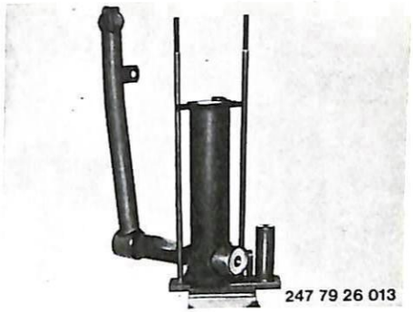

247 79 26 013

Attach upper plate of fixture and tension the fixture (use spacing sleeves (arrows) for short swinging arm)

247 79 26 014

Insert drift into slot and extract the snap ring.
Release the tension slowly from the fixture

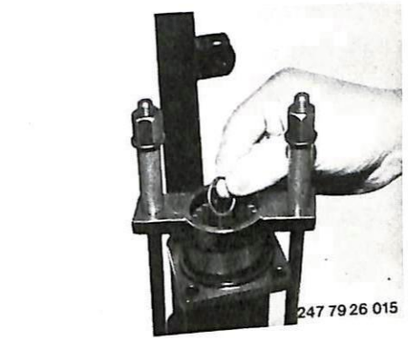

247 79 26 015

Remove the swinging arm from the fixture.
Pull the drive shaft and loose components out of the swinging arm.

1 Drive shaft
2 Thrust block
3 Spring
4 Reaction block
5 Coupling shell
6 Ring
7 Snap ring

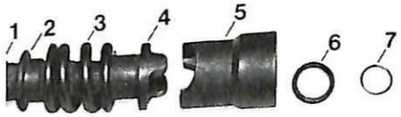


247 79 26 016

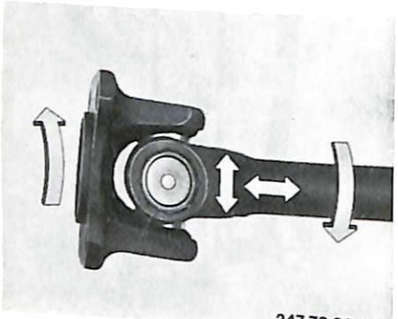

247 79 26 018

Check universal joint for wear: check radial play by turning flange and shaft in opposite directions, and determine endplay by pulling and pushing the two components along the axis of the shaft.
Renew drive shaft if necessary.

■

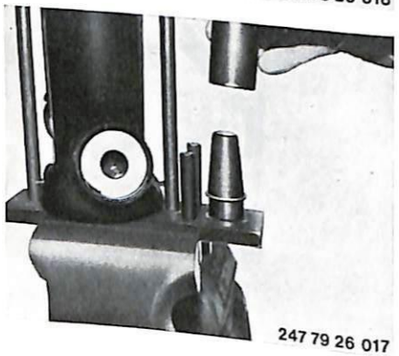

247 79 26 017

**When installing:**

Use slip-over and driving sleeves to install snap ring (7).
Press ring over taper of slip-over sleeve with driving sleeve. Mount the slip-over sleeve on the drive shaft and force the snap ring into its groove with a hammer and the driving sleeve.
After the fixture has been released, the snap ring must be correctly located in ring (6).

■



# 31 Front forks


| | | |
|---|---|---|
| | Specifications | Page 31– 0/3 |
| | Specifications (1979 models) | 31– 0/5 |
| | Specifications (1981 models) | 31– 0/7 |
| 31 42 009 | Measuring telescopic forks | 31–42/1 |
| 31 42 050 | Steering damper – removing and installing | 31–42/2 |
| 31 42 100 | Telescopic forks – removing and installing | 31–42/2 |
| 31 42 103 | Telescopic forks – stripping and assembling | 31–42/6 |
| 31 42 103 | Telescopic forks – stripping and assembling (1981 models) | 31–42/6 |
| 31 42 321 | Taper roller bearing for telescopic forks – removing and installing | 31–42/9 |
| | Troubleshooting – front forks | 31–42/11 |

*Front Forks*

## Technical Data

| Model | R 60/7 | R 75/7 | R 80/7 | R 100/7 | R 100 S | R 100 RS |
|---|---|---|---|---|---|---|
| Wheel bearing lubrication | Branded multipurpose lubricating grease with 180° C (355° F) drip point | | | | | |
| Front wheel castor, mm(in) | approx. 95 (3.74) – no provision for adjustment | | | | | |
| Steering lock | approx. 42° to either side | | | | | |
| Front fork lock angle | 42° | | | | | 35° |
| | | | | | | 35° |
| Spring travel (75 kg [165 lb] load) mm(in)<br>Upward mm(in)<br>Downward mm(in) | 200 (7.87)<br>120 (4.72)<br>80 (3.15) | | | | | |
| Test fitting length (measured from top of support tube to the machined surface on the lower fork mount) mm(in) | 160 (6.30) | | | | | |
| Fork stand tube | hard chromed | | | | | |
| Fork sliding tube | light metal casting | | | | | |
| Fork bridge, lower | light metal forging | | | | | |
| Oil capacity per fork column, litre (Imp. pint) | 0.25 (0.44, 0.26) | | | | | |
| Type of oil | Shock absorber oil, Shell 4001, Shell Aero Fluid 4, BP Aero Hydraulic 1, Castrol DB Hydraulic Fluid, Castrol Shock Absorber 1–318 | | | | | |
| Telescopic fork stand tube (hard chromed) Outer diameter mm(in) | $36^{-0.050}_{-0.075}$ $\left(1.417^{-0.002}_{-0.003}\right)$ | | | | | |
| Stand tube for telescopic fork (maximum permissible deflection in mm) (in) | 0.1 (0.004) | | | | | |
| Fork sliding tube inside diameter mm(in) | $36^{+0.025}_{0}$ $\left(1.417^{+0.001}_{0}\right)$ | | | | | |
| Running play of fork sliding tube on fork stand tube, maximum, mm(in) | 0.24 (0.0094) | | | | | |

**Front axle**

## Specifications (1979 models)

| Model | R 80/7 | R 100 T | R 100 S | R 100 RT | R 100 RS |
|---|---|---|---|---|---|
| Extl. dia. of piston on damper tube mm (in) | 27.7 ± 0.1 (1.091 ± 0.004) | | | | |
| Intl. dia. of fixed fork tube mm (in) | 28 ± 0.15 (1.102 ± 0.006) | | | | |
| Piston clearance in fixed fork tube mm (in) | 0.05 . . . 0.55 (0.002 . . . 0.022) | | | | |
| Relaxed length of fork spring mm (in) | 567 (22.32) | | | 543 (21.38) | |

**Tightening torques Nm (lb. ft)**

| | | | | | | |
|---|---|---|---|---|---|---|
| Telescopic fork centering nut | 120 . . . 130 | (88 . . . 96) | Base screw in slider tube | 80 . . . 100 | (59 . . . 74) |
| Clamp bolt at clamp ring | 10 . . . 12 | (7.4 . . . 8.8) | M 8 x 1 mm nut connecting damper, base screw and slider tube | 22 . . . 23 | (16.2 . . . 17.0) |
| Upper spring support for telescopic forks | 120 . . . 130 | (88 . . . 96) | Axle clamp bolt | 15 ± 2 | (11 ± 1.5) |
| Clamp bolts at lower fork bridge | 35 . . . 40 | (26 . . . 29) | Upper mudguard stirrup | 20 . . . 25 | (14.7 . . . 18.4) |
| End plug at damper tube (bottom) and piston (spring support) at top | 25 | (18.4) | | | |

All other bolts and nuts are to be tightened as shown in the manufacturers' tables or on the latest BMW 60002.0 standards sheet.

3.82 Addition

3.82 Addition

**Front axle**

## Specifications (1981 models)

| Model | R 100 | R 100 CS | R 100 RT | R 100 RS |
|---|---|---|---|---|
| Wheel bearing lubrication | Brand-name anti-friction bearing grease, usable temperature range –30 . . . + 140 °C (–22 . . . +284 °F), drip point 150 . . . 230 °C (302 . . . 446 °F), high corrosion protection, good water/oxidation resistance; e.g. Shell Retinax A | | | |
| Front wheel caster mm (in) | app. 95 (3.74); not variable | | | |
| Steering lock angle | app. 42° to each side | | 35° | |
| Front fork angle | 42° | | 35° | |
| Suspension travel (75 kg [165 lb] load) mm (in) | 200 (7.87) | | | |
| Test length when installed (measured from top of support tube to machined face on lower fork guide) mm (in) | app. 161 (6.34) | | | |
| Fixed fork tubes | hard chromium-plated | | | |
| Sliding fork tubes | cast light alloy | | | |
| Lower fork bridge | forged light alloy | | | |
| Oil content per fork leg (initially or when changing oil) liters (Imp. pints. US quarts) | 0.22 (0.39, 0.23) +0.1 (0.18, 0.1) | | | |
| Oil grade | Shell 4001; Shell Aero Fluid 4; Castrol DB Hydraulic Fluid; Castrol Shock Absorber Oil 1-318; Castrol Fork Oil Extra Light; Castrol LHM (preferred for below 0 °C / 32 °F); Aral P 3441 shock absorber oil; Aral 1010; Mobil Aero HFA; Mobil DTE 11; Esso Univis J 13; BP Aero Hydraulic; BP Olex HLP 2849 | | | |
| Telescopic fork fixed tube (hard chromium-plated) extl. dia. mm (in) | $36^{-0.050}_{-0.075}$ ($1.417^{-0.002}_{-0.003}$) | | | |
| Max. permissible runout of fixed fork tube mm (in) | 0.1 (0.004) | | | |
| Fork slider tube intl. dia. mm (in) | $36^{+0.025}_{0}$ ($1.417^{+0.001}_{0}$) | | | |
| Clearance between fork slider and fixed fork tubes, max. mm (in) | 0.05 . . . 0.1 (0.002 . . . 0.004) | | | |

**Front axle**

## Specifications (1981 models)

| Model | R 100 | R 100 CS | R 100 RT | R 100 RS |
|---|---|---|---|---|
| Extl. dia. of piston on damper tube mm (in) | 27.7 ± 0.17 (1.091 ± 0.007) | | | |
| Intl. dia. of fixed fork tube mm (in) | 28 + 0.15 (1.102 + 0.006) | | | |
| Piston clearance in fixed fork tube mm (in) | 0.15 . . . 0.62 (0.006 . . . 0.024) | | | |
| Relaxed length of fork spring mm (in) | $539^{+12}$ ($21.22^{+0.47}$) | | | |
| Wire diameter of fork spring mm (in) | 4.25 (0.167) | | | |

**Tightening torques Nm (lb. ft)**

| | | | | | |
|---|---|---|---|---|---|
| Cap nut | 120 | (88) | Retaining bolt for damper in slide tube | 35 | (26) |
| Slotted nut | zero play | | Axle clamp bolts | 17 | (12.5) |
| Fork bridge clamp bolts | 40 | (29) | Oil drain plugs | 8 | ( 5.9) |
| Upper spring mount | 120 | (88) | Oil filling plugs | 9 | ( 6.6) |

All other bolts and nuts are to be tightened as shown in the manufacturers' tables or on the latest BMW 60002.0 standards sheet.





# Fixed fork tube with damper (from 1981 models on)

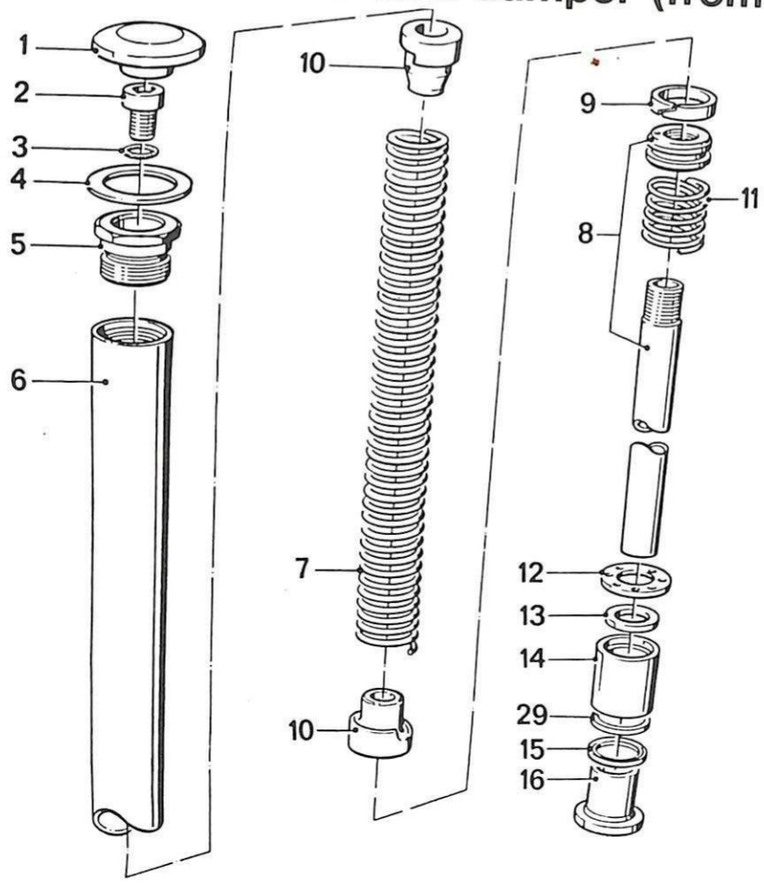


1) End cap
2) Machine screw
3) Sealing ring
4) Shim washer
5) Support bearing
6) Fixed tube
7) Coil spring
8) Damper
9) Guide ring
10) Spring support
11) Coil spring
12) Shim washer
13) Valve disc
14) Valve housing
15) Lock ring
16) Damper tube mount

# Fixed fork tube with damper

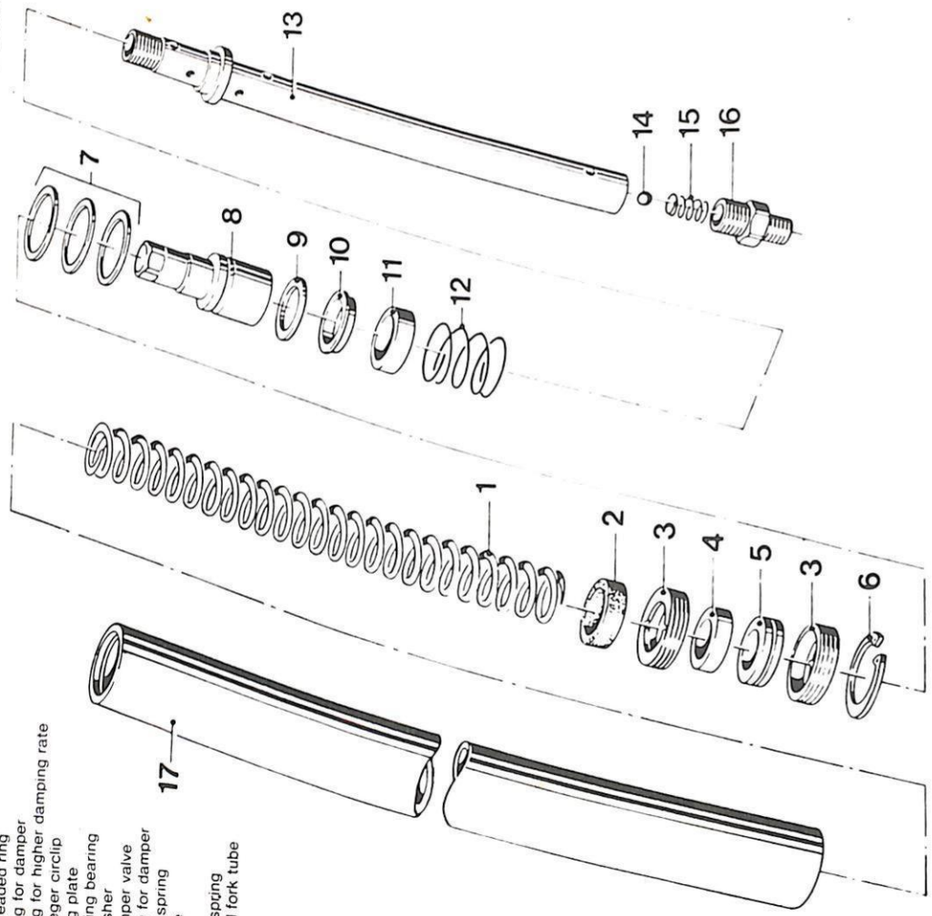


1) Fork spring
2) Stop bushing
3) Threaded ring
4) Ring for damper
5) Ring for higher damping rate
6) Seeger circlip
7) Ring plate
8) Spring bearing
9) Washer
10) Damper valve
11) Ring for damper
12) Coil spring
13) Tube
14) Ball
15) Coil spring
16) Fixed fork tube





## 31 42 009 Measuring telescopic forks

Remove (install) telescopic forks – 31 42 100.

Strip down telescopic forks – 31 42 103.

In particular when the forks have been damaged, it is important to examine the lower fork guide and the fixed and slider tubes carefully for possible cracks.

Lay both the ends of the removed fixed tubes in Vee guides or hold in a center cradle to test for straightness.

See Specifications for relevant measurements.

**Warning:** bent slider tubes **must not be re-aligned; there is a risk of fatigue fracture.**

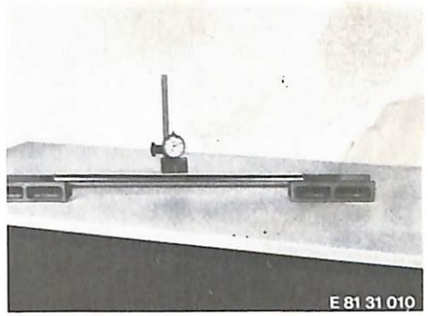


To check the lower fork guide, insert two new slider tubes (test length when installed measured from upper edge of support tube to machined face on lower fork guide=161 mm [6.34 in]).

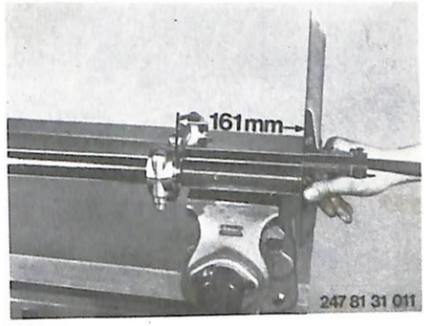


Lay two BMW No. 31 4 620 measuring rules over the ends of the slider tubes and check for straightness.

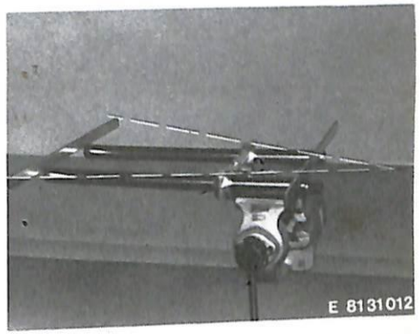


Test the slider tubes for parallelity with a slide gauge. Check that the fork guide tube is flush with the slider tubes, and mount the upper fork bridge. First, screw the spring mount (1) into the fork guide tube, then the cap nut (2). It should be easy to screw the centering collar into the fork bridge.

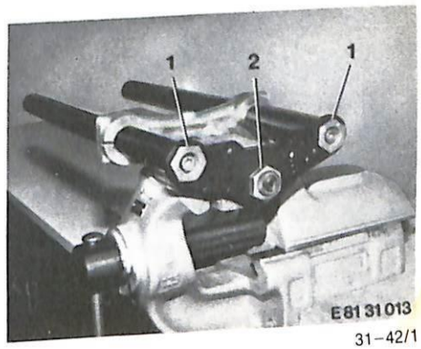

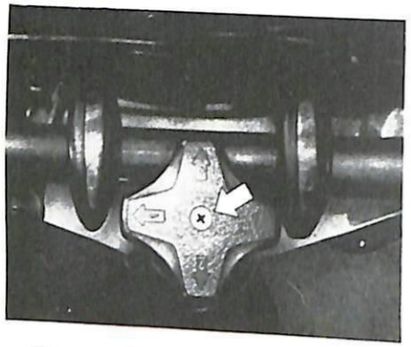

## 31 42 050 Steering damper – removing and installing

Remove the countersunk screw from the star handle. Pull off the star handle and the rubber.

On the R 100 RT/RS, detach the left and right engine fairings. Remove the screen panel and the center engine fairing. Take off the fuel tank.

■

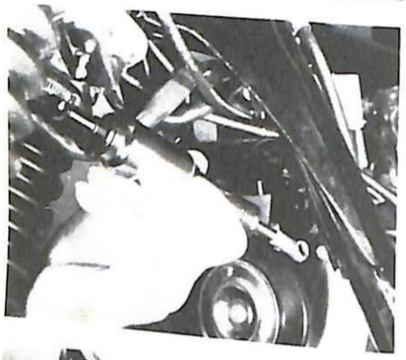

Pull off the safety hoop and press the damper out of the ball sockets.

■

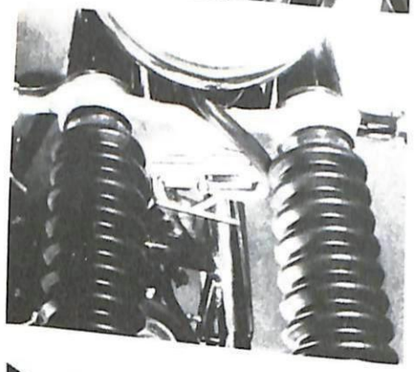

Remove the 2 machine screws on the plate. Detach the plate with slide and latch, and remove the gearwheel downwards.

■

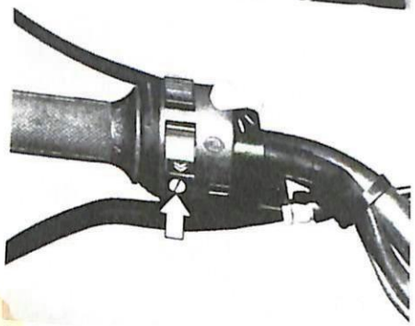

## 31 42 100 Telescopic forks – removing and installing

Remove (install) front wheel – 36 30 300.
Remove (install) front mudguard – 46 61 000.
Remove (install) steering damper – 31 42 050.

On R 100 RT/RS, detach left and right engine fairings. Detach screen panel and center engine fairing. On R 100 S/CS, detach cockpit fairing – 43 63 020.

Disconnect the earth (ground) cable at the battery. At the left handlebar grip, take out the closure screw (arrow) of the combined electric switch. Remove the plastic tape from the handlebar.

■





Remove the switch from the right steering handle in the same way. The screw is shown by an arrow.

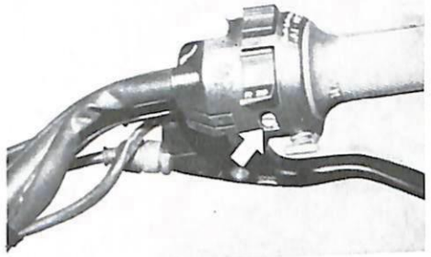

■

Detach star handle for steering damper and impact-absorbing pad (R 100 RS only).

Remove two nuts with spring washers from the clamp mountings for the handlebar. Lay aside the handlebar with fittings and attached cable controls.

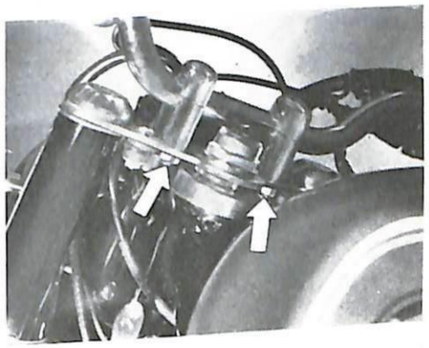

■

Remove one screw with washer, two rubber rings and rubber sleeve from the left and right of the headlamp; allow the headlamp to hang downward taking care to avoid damage.

**Note when fitting:** Align headlamp beam (63 10 004).

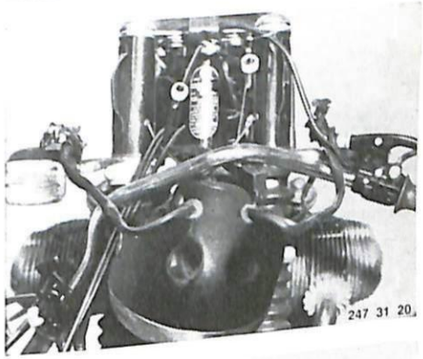


■

Unscrew the two light metal caps left and right with a socket wrench.

Remove centering nut (see Technical Data for tightening torque).

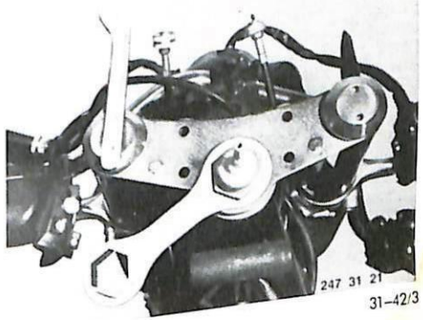


■

Unscrew the two upper spring seatings with their shims (see Technical Data for tightening torque) and take off the upper fork yoke.

■

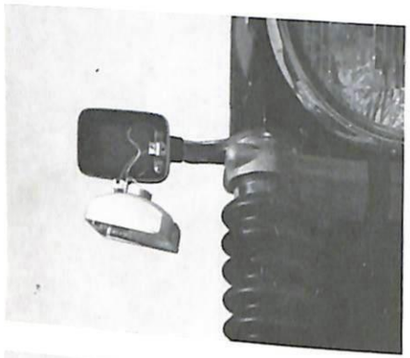

Unscrew the lenses from the left and right turn indicators and detach the leads from the reflectors.

■

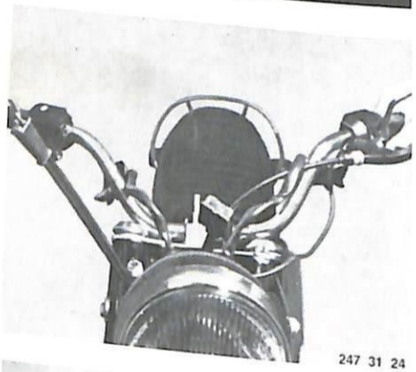

247 31 24

**Note when fitting:** Care must be taken to ensure accurate positioning of the control cables.

■

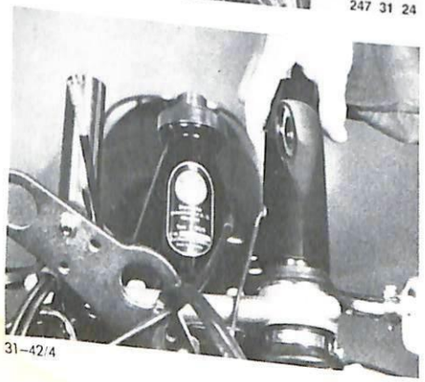

31–42/4

Remove left and right headlamp mounts with rubber rings and turn indicator leads (the bottom rubber rings are provided with bores for breather tubes in the fork yoke and for leads to the turn indicators).

Remove turn indicator housing with mount.

■



Unscrew the brake pipe holder from the left slider tube. If the motorcycle has a twin front disc brake, also detach the brake pipe holder from the right slider tube.

■

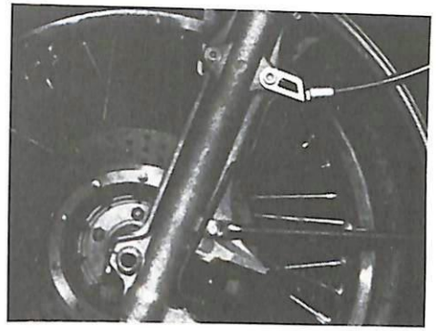

**When installing:** to avoid having to bleed the brakes, **do not** slacken off brake pipe screw (1).

Unscrew end cap (2) and remove complete with spring. Pull out the eccentric pin (see removal and installation of swing caliper – 34 11 020).

On the 100 RT/RS, remove the center engine fairing and the screen panel. Remove the steering damper – 31 42 050.

From 1981 models on, detach the brake caliper from the fork slider tube.

■

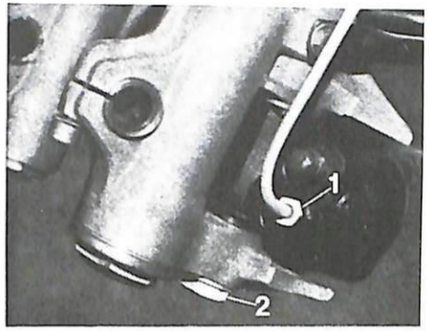


Unscrew the grooved nut. Remove the protective cap for the ring.

Pull the fork down out of the frame, striking lightly with a plastic-faced hammer if necessary on the fork guide tube to free it. Note the presence of the taper roller bearings. The outer races for the upper and lower taper roller bearings remain in the frame tube.

**When installing:** coat the bearing races and taper roller bearings with grease.

Install the upper taper roller bearing (1) and carefully insert the forks with the lower taper roller bearing (2) into the frame.

**Important:** note make of bearings.

■

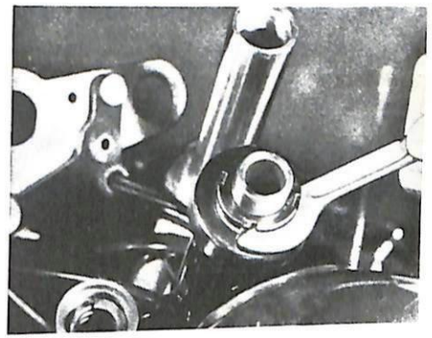

The wiring harness, speedometer drive shaft and revolution counter drive shaft must pass below the lower fork bridge.

Install the protective cap for the upper taper roller bearing and screw on the slotted nut. Tighten the nut until there is no play in the steering. Using a plastic-faced hammer, strike the upper and lower fork guide tubes lightly. When finally tightening the cap nut, note that the threads of the slotted nut penetrate deeper into the thread of the fork guide tube, so that the bearing is preloaded to a greater value. If necessary, slacken off the slotted nut by app. 1/2 turn and retighten the cap nut.

Adjust the steering – 32 00 054.

■

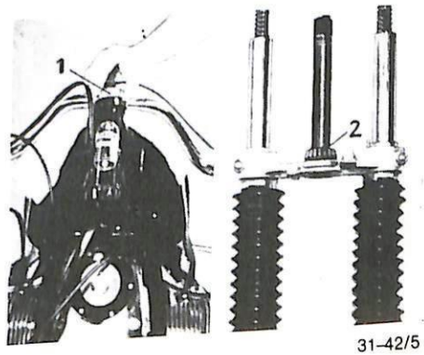


31–42/5

## 31 42 103 Telescopic fork – dismantling and assembling

Telescopic fork – remove and refit (31 42 100).
After removal, empty the fork by pumping motion at the sliding tubes.

Clamp the fork in a bench vice with the BMW 31 4 600 clamping block.

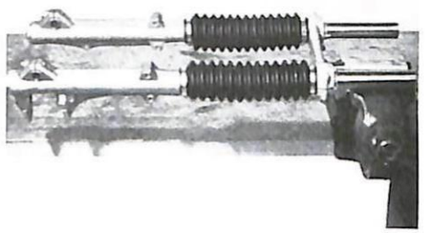

■

Loosen off two clamping straps each on the left and right of the rubber gaiter. Remove the rubber caps from the bottom screw couplings, unscrew the M 8 × 1 damper fastening nut (see Technical Data for tightening torque) at the same time holding firmly in place with an Allen key.

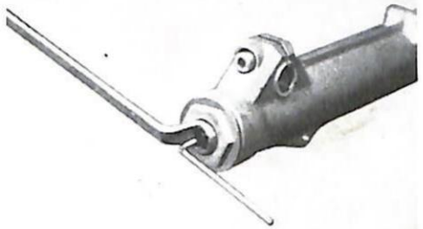

■

Draw off the sliding tubes, remove rubber gaiter.

**Note when fitting:** Use BMW tool 31 4 650 to tap in a new cap-type gasket.

■

When fitting the rubber gaiter, slide the appropriate vent aperture onto the clamping pin in the lower fork guide.

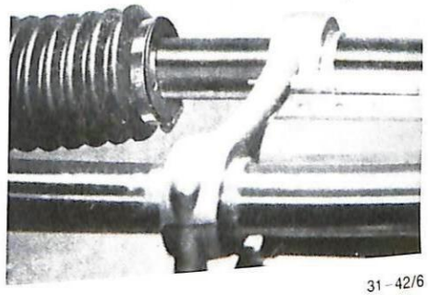

■

Remove the bottom screw plug.

**Note when fitting:** When assembling tighten the screw plug to the prescribed torque rating (see Technical Data).

Remove soft metal sealing washers from the end bolts of the damper.

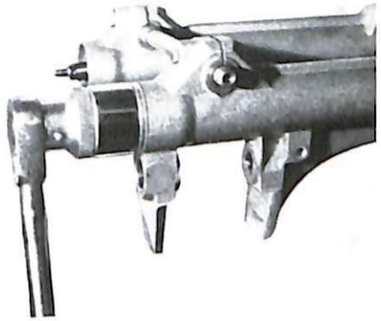

**Note when fitting:** Always use new sealing washers for re-assembly.

Lift out circlip on the damper nozzle.

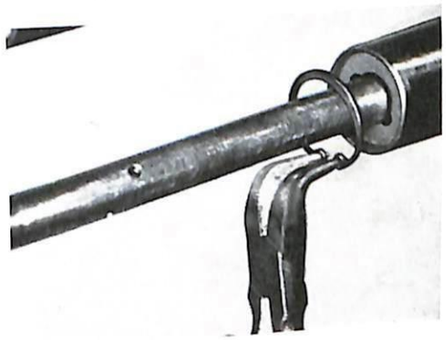

Remove the floating damper nozzle (consisting of two threaded rings and damper ring) with a suitable tool (Seeger circlip pliers).

Note tightening torque when fitting (see Technical Data).

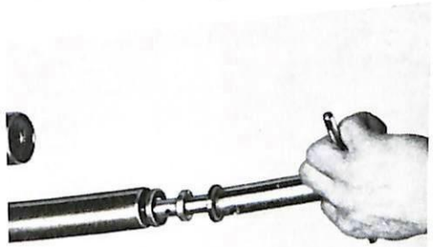

Withdraw the damper with plastic stop and carrier springs **downward.**

**Note when fitting:** When refitting the complete damper unit use the BMW 31 4 700 assembly sleeve to protect the plunger rings.

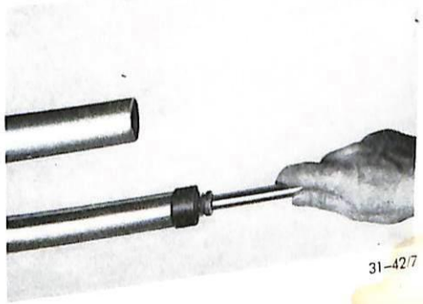

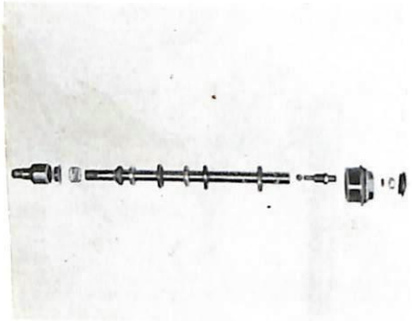

Check telescopic fork measurements – 31 42 009.

Clamp the complete damper at the hexagon of the end bolt and unscrew the spring seating on the top of the damper tube.

Remove in sequence: spring seating with plunger rings, damper valve and valve spring.

Remove ball valve: clamp the damper tube at the damper stop carefully between soft metal jaw pads and unscrew the end bolt. Take out the thrust spring and ball.

■

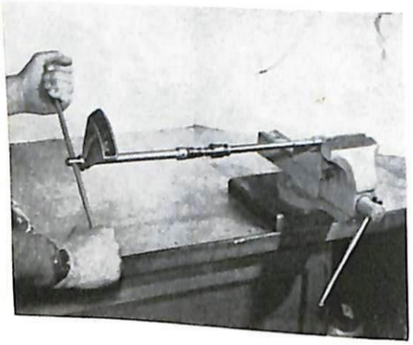

**Note when fitting:** Clamp the damper tube at the end bolt hexagon and use a torque wrench on the spring seating hexagon to tighten both screw couplings to the prescribed torque rating (see Technical Data).

Fill 280 cc. of the prescribed grade of oil (see Technical Data) in each fork column of the assembled fork unit and depress the fork strongly 4–5 times to allow any air to escape.

■

**Note when fitting:** If the lower fork yoke is to be renewed it is necessary for correct installation of the stand tube for the lower and upper fork yokes to be fitted in the frame complete together with preset steering bearings (with slotted nut and centering nut tightened). Only then are the fork stand tubes pushed through the lower fork yoke to come into full contact with the upper fork guide.

Tighten the clamping screws for fastening the stand tubes to the prescribed tightening torque (see Technical Data).

If only one single fork stand tube is renewed, the exact fitting height can be taken from the opposite stand tube.

■





## 31 42 103 Telescopic forks – stripping and assembling (1981 models)

Clamp the fixed fork tube into the vice, using wood block clamp BMW No. 31 4 600 (arrow).

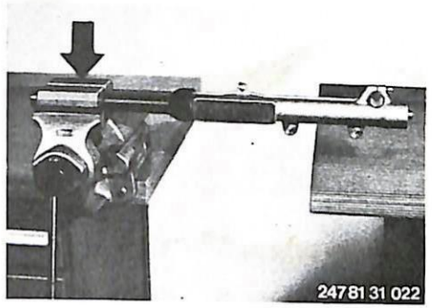


■

Unscrew the Allen screw holding the damper in the slider tube, and pull off the tube.

**Note:** hold with the quick-release axle while unscrewing.

For tightening torque, see Specifications.

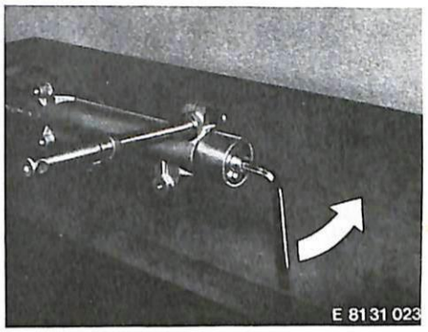


■

Pull damper guide (1) off damper (2).

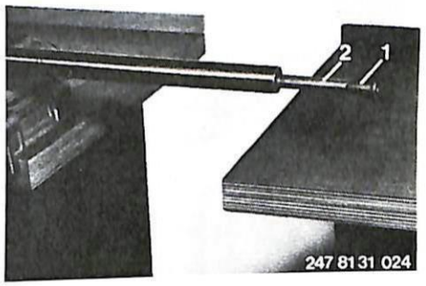


■

Remove the circlip with Seeger circlip pliers, and pull the complete damper out of the fixed fork tube.

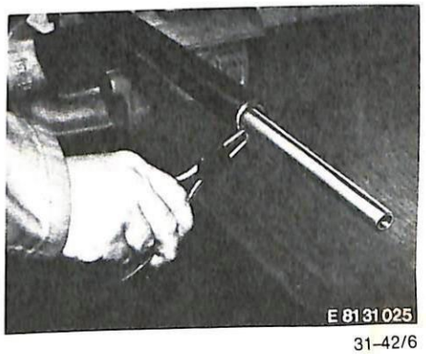


■

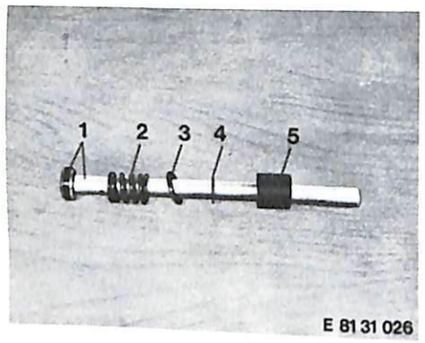


1 Piston with damper tube
2 Coil spring
3 Perforated disc
4 Distributor disc
5 Valve housing

■

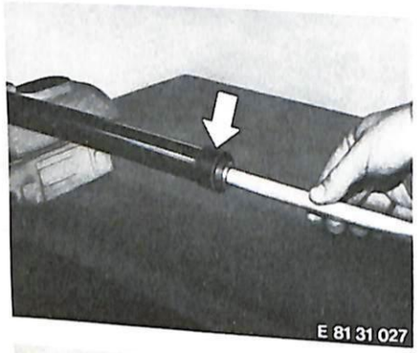


When installing the damper in the fixed tube, use guide sleeve BMW No. 31 4 720 (arrow) to compress the piston ring.

■

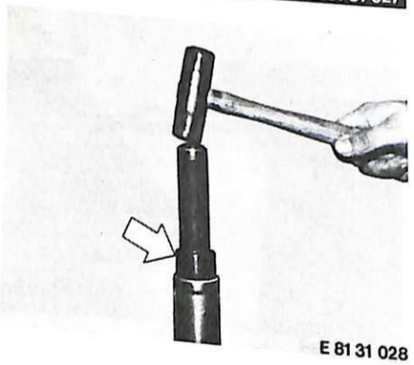


Carefully lever the sealing ring out of the slider tube with a screwdriver. Drive in the new sealing ring with hand grip BMW No. 00 5 500 and drift BMW No. 31 4 650 (arrow).

■





## 31 42 321 Taper roller bearings – removing and installing

Remove (install) telescopic fork – 31 42 100.

Take the upper taper roller bearing out of the steering head. Pull out the outer bearing races using Kukko puller BMW No. 00 5 560 and support ring BMW No. 31 4 800 (arrow).

■

Pull in the upper and lower outer taper roller bearing races with cup washer and Allen screw (3) one after the other using the spindle of the frame reference gauge (1) with spacer BMW No. 31 4 820 (2), a shim washer and hex nut (3).

■

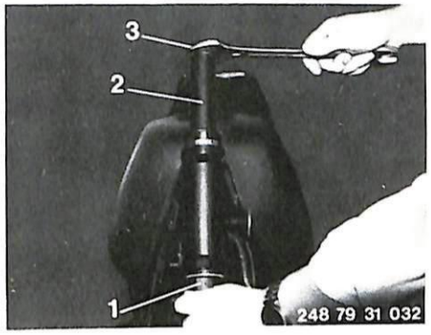


To renew the lower taper roller bearing, heat the lower fork guide to approx. 100° C (212° F), force through the guide tube downwards and insert again immediately.

**Note:** Mark (paint or punch mark) the guide tube and fork bridge – position of slot for thiefproofing lock.

Heat the bearings to approx. 80° C (176° F) for assembly.

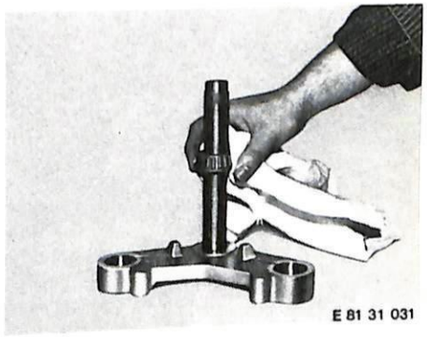

## Troubleshooting – telescopic forks

| Fault | Cause | Remedy |
|---|---|---|
| Response moment too high (stiction) | Trapped stresses in forks | Release axle clamp bolt and fully compress the forks a few times |
| Weak damping | Incorrect oil level (too high or too low) | Check and correct oil level |
| Rattling sound when a rapidly repeated series of shocks occurs | Excessive play at valve housing | Install a shim washer between the Seeger circlip and the valve housing |

# 32 Steering


| | | |
|---|---|---|
| Specifications | | Page 32- 0/3 |
| Specifications (1979 models) | | 32- 0/4 |
| Specifications (1981 models) | | 32- 0/5 |
| 32 00 454 | Steering – adjusting | 32-00/1 |
| 32 71 000 | Handlebar – removing and installing | 32-71/1 |
| 32 73 030 | Throttle cable – removing and installing | 32-73/1 |
| 32 73 030 | Throttle cable – removing and installing (1981 models) | 32-73/1 |

## Technical Data

| Model | R 60/7 | R 75/7 | R 80/7 | R 100/7 | R 100 S | R 100 RS |
|---|---|---|---|---|---|---|
| Steering lock | 42° to each side | | | | | 35° |
| Width of handlebar mm(in) | 600 (23.6) | | | | | 548 (21.6) |
| Width of US handlebar version mm(in) | 680 (26.8) | | | | | 548 (21.6) |
| Handlebar tube diameter mm(in) | 22 (0.87) | | | | | |
| Steering damper (R 100 RS) | hydraulic, adjustable in 2 stages | | | | | |

**Tightening torque Nm (lb. ft) + friction value Ncm**

| | | |
|---|---|---|
| Cap nut for telescopic fork | 120 . . . 130 Nm | (88 . . . 96 lb ft) |
| Steering bearing | | 350 ± 20 Ncm |

All remaining screws, bolts and nuts are to be tightened in accordance with the customary values recommended in the manufacturers' tables or in accordance with the latest BMW Standard Specification 60002.0

## Specifications – '79 models

| Model | R 80/7 | R 100 T | R 100 S | R 100 RT | R 100 RS |
|---|---|---|---|---|---|
| Steering lock | 42° to each side | | | 35 | |
| Width of handlebar mm (in) | 600 (23.6) | | | 690 (26.8) | 548 (21.6) |
| Width of US handlebar version mm (in) | 680 (26.8) | | | 690 (26.8) | 548 (21.6) |
| Handlebar tube diameter mm (in) | 22 (0.87) | | | | |
| Steering damper (R 100 RS) | hydraulic, adjustable in 2 stages | | | | |

### Tightening torque Nm (lb. ft) + friction value Ncm

| | |
|---|---|
| Cap nut for telescopic fork | 120 . . . 130 Nm (88 . . . 96 lb. ft) |
| Steering bearing | 350 ± 20 Ncm |

All remaining screws, bolts and nuts are to be tightened in accordance with the customary values recommended in the manufacturers' tables or in accordance with the latest BMW Standard Specification 60002.0







## Specifications (1981 models)

| Model | R 100 | R 100 CS | R 100 RT | R 100 RS |
|---|---|---|---|---|
| Steering lock angle | 42° to each side | | 35° | |
| Handlebar width mm (in) | 600 (23.6) | | 690 (27.2) | 548 (21.6) |
| Handlebar width, US models mm (in) | 680 (26.8) | | 690 (27.2) | 548 (21.6) |
| Handlebar tube diameter mm (in) | 22 (0.87) | | | |
| Steering damper | | | 2-stage hydraulic adjustment | |

### Tightening torques Nm (ft. lb)

| | |
|---|---|
| Cap nut for telescopic forks | 120 (88) |
| Steering bearings | zero play |

All other bolts and nuts are to be tightened as shown in the manufacturers' tables or on the latest BMW 60002.0 standards sheet.

# Left handlebar grip (1981 models)

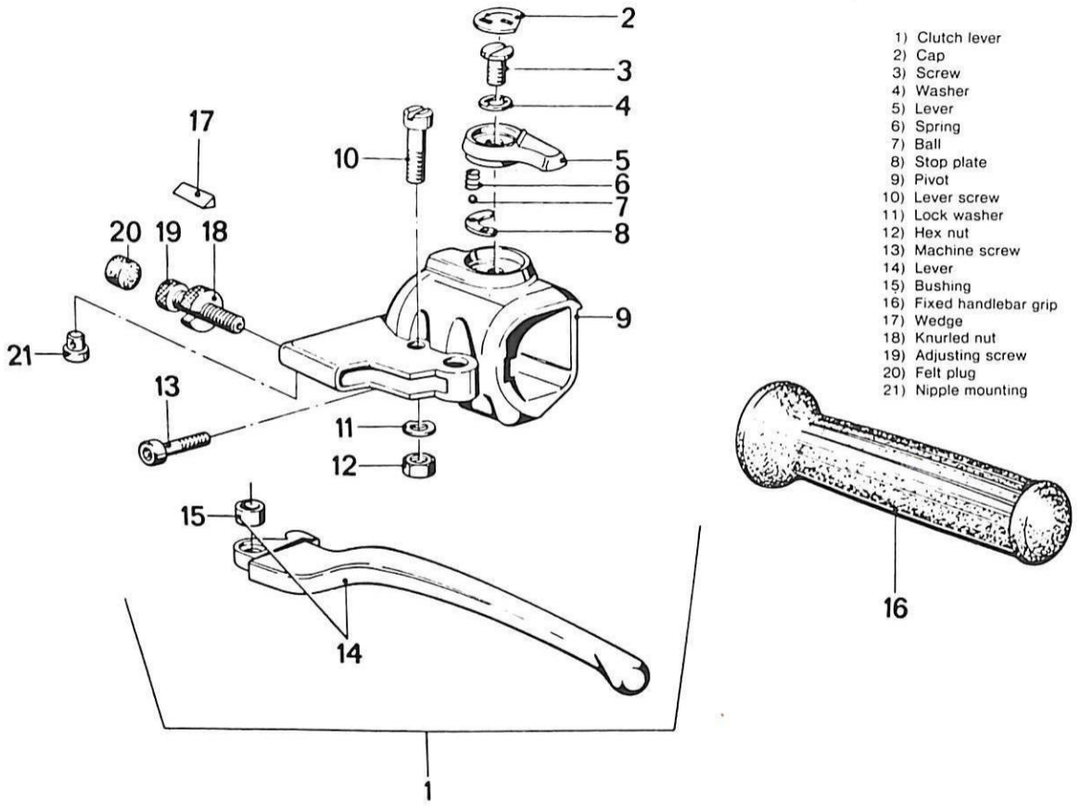


1) Clutch lever
2) Cap
3) Screw
4) Washer
5) Lever
6) Spring
7) Ball
8) Stop plate
9) Pivot
10) Lever screw
11) Lock washer
12) Hex nut
13) Machine screw
14) Lever
15) Bushing
16) Fixed handlebar grip
17) Wedge
18) Knurled nut
19) Adjusting screw
20) Felt plug
21) Nipple mounting

# Right handlebar grip (1981 models)

1) Hydraulic brake assembly
2) Lever
3) Hex nut
4) Washer
5) Screw
6) Twistgrip tube
7) Rubber grip
8) Screw
9) Cover
10) Cam
11) Housing
12) Plunger
13) Lock ring
14) Fluid tank
15) Flexible diaphragm
16) Washer
17) Cover
18) Hex bolt
19) Machine screw
20) Serrated washer
21) Plug
22) O-ring
23) Cylinder with tank
24) Screw
25) Wedge
26) Knurled screw
27) Plug
28) Sleeve

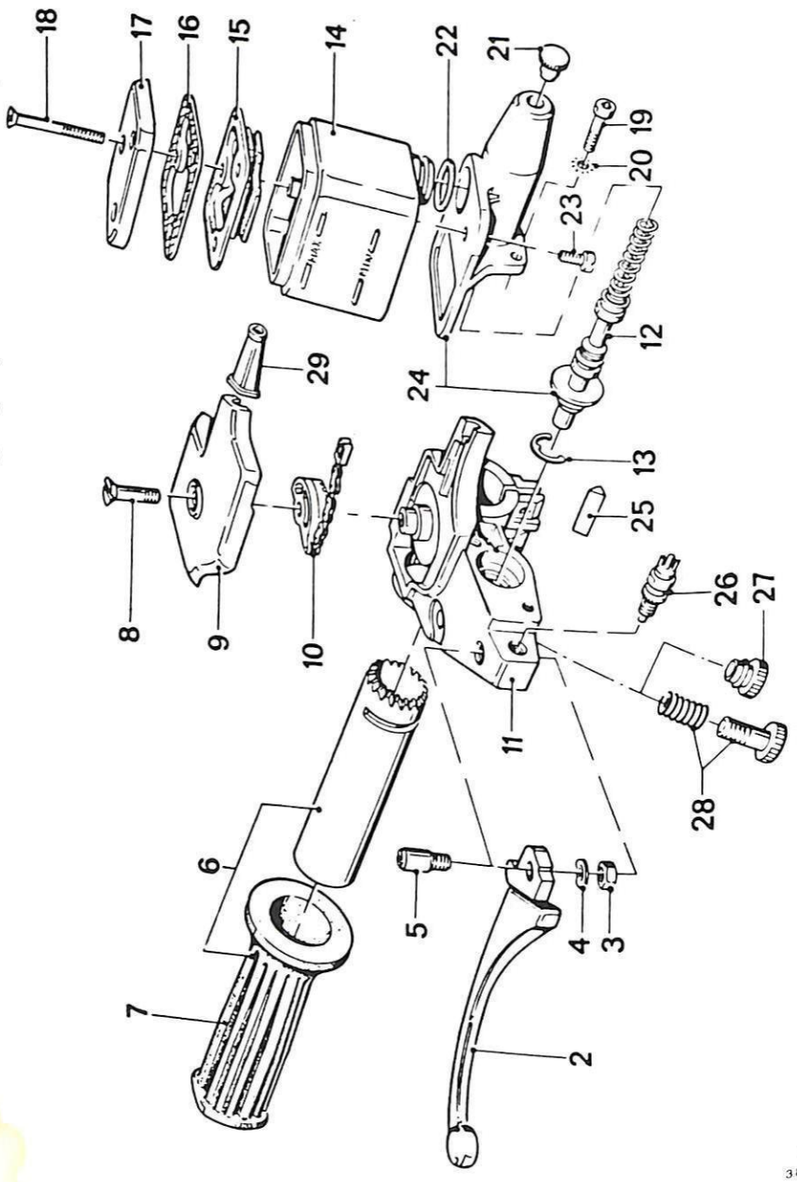




3.82 Addition

## 32 00 454 Steering – adjusting

Set the hydraulic steering damper to position "0". Slacken off the screw at the star handle, pull off the handle and detach the crash pad.

Push the sealing sleeves for the integral cockpit fairing down the forks.

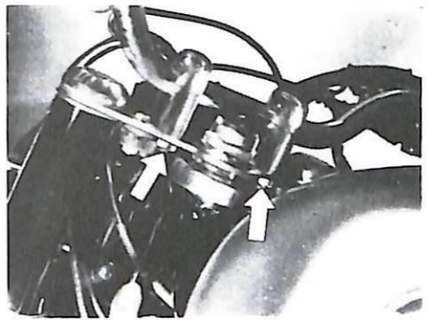

Slacken the centering nut and set the bearings to zero play by turning the slotted nut with hook wrench BMW No. 31 4 870. Relieve trapped stresses in the bearings by means of light blows on the centering nut.

When tightening the centering nut, prevent the slotted nut from turning.

**When installing:** tighten the centering nut with hex ring wrench BMW No. 31 4 850.

For tightening torque, see Specifications.

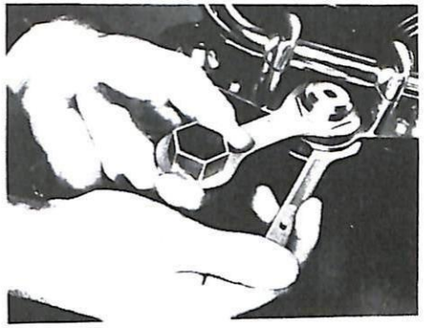

If the steering head bearings are correctly adjusted, the handlebars should just fall round to the full right lock position when the motorcycle is on its stand.

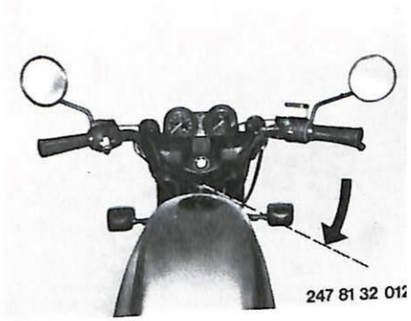


3.82 Alteration

## 32 71 000 Handlebars – removing and refitting

Disconnect the battery earth (ground) lead.

Remove the Phillips-head screw from the star grip and lift off the star grip and impact-absorbing pad.

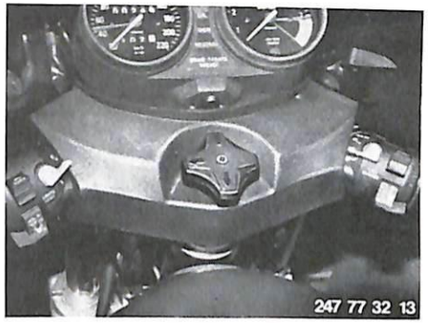


■

Remove two nuts each with spring washers from the handlebar clamp mounts (arrows).

Lay aside the handlebar with instruments and control cables on the tank on a suitable soft underlay.

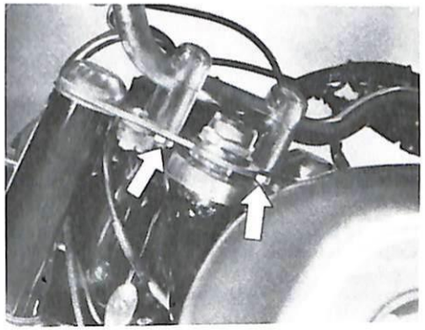

■

Unscrew the right-hand hexagonal socket head bolt (arrow) on the housing for throttle twist grip and brake lever and draw off the housing as a complete unit.

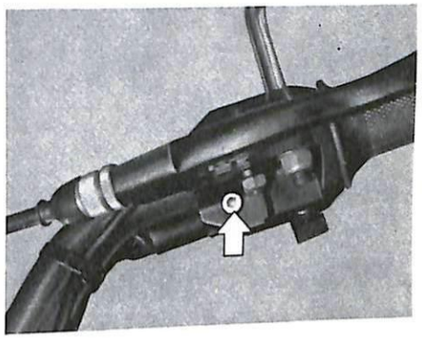

■

Remove left handlebar grip by blowing through handlebar tube from right with compressed air. Unscrew socket head bolt (arrow) from housing and withdraw assembly from handlebar tube.

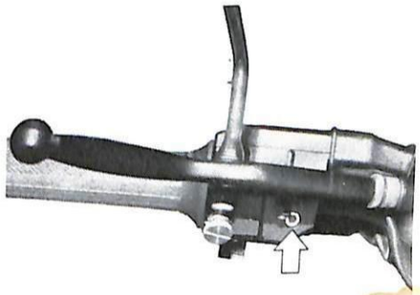

■

## 32 73 030 Throttle cable – removing and refitting

Push back the splash guard cap 1 and unscrew cover 2.

Disconnect the throttle cable.

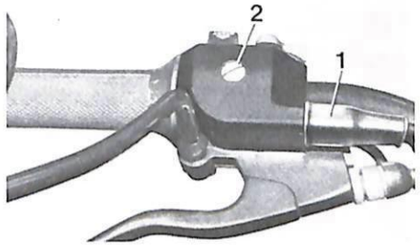


**Note when fitting:** Before assembly grease the adjusting cam and toothing on the throttle grip. When refitting care must be taken to ensure that slot end "a" in the throttle grip coincides with the rear end of recess "b" in the grip. Thread the lower control cable through the double nipple and fit, together with the tension chain and adjusting cam, in the grip so that the "c" and "d" markings are opposite each other on the cam and the grip. Fit the upper throttle cable in the double nipple. Replace cover and at the same time pull back the upper throttle cable sleeve sufficiently to allow the throttle cable end sleeve to engage in its seat in the cover recess. Screw down the cover and push on the splash guard cap. Only if this procedure is followed the full functional travel of the throttle cables is ensured.

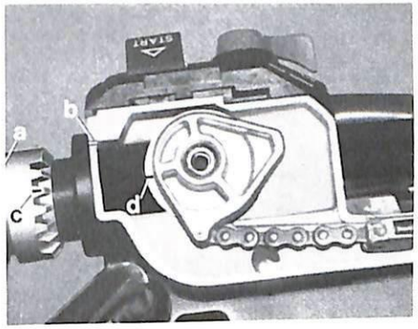


Fuel tank – remove and refit (16 11 030).

**R 60/7**

Unscrew the cover from the carburetor housing and remove with spring and throttle valve.

Disconnect the throttle cable.

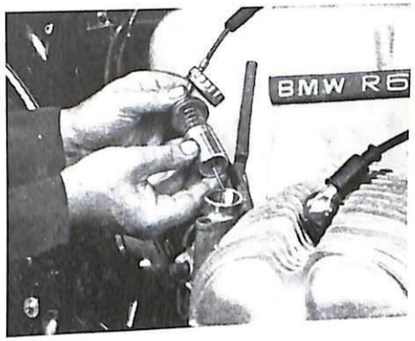


**R 75/7 – R 100 RS**

Unscrew Bowden cable adjusting screw (arrow) on the carburetor cover. Disconnect the control cable with nipple at the throttle flap lever

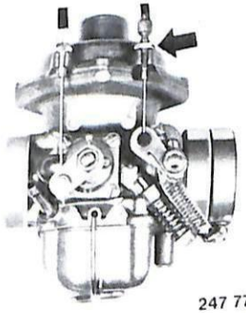

## 32 73 030 Throttle cable – removing and installing (1981 models)

Remove the fuel tank – 16 11 030.

Push back the moisture-seal cap on the cable, unscrew the throttle cable mechanism cover and disconnect the cable from the chain (arrow).

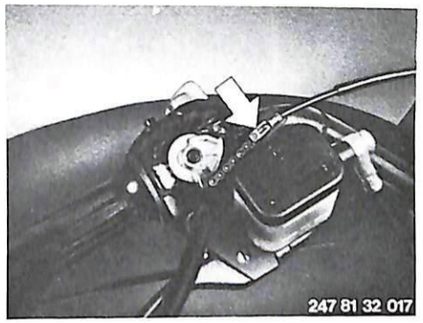


■

**When installing:** grease the teeth and the cam in the twistgrip before assembly. Make sure that the mark on the teeth at the twistgrip is aligned with the mark on the cam.

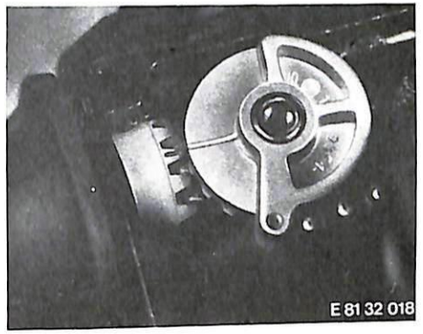


■

Slacken off the locknut (1) on the adjusting screw at the junction block, and tighten the adjusting screw fully.

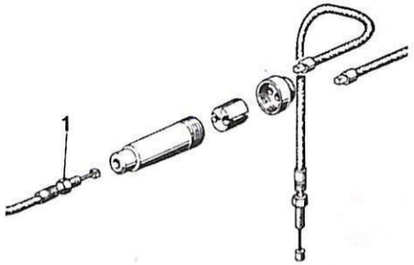


■

Turn the sleeve of the junction block (1), holding the knurled section (2) firmly.

Disconnect the cables from the junction block (arrow).

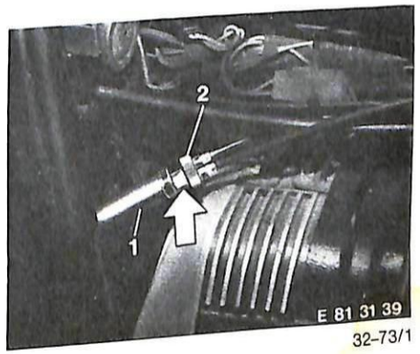


■

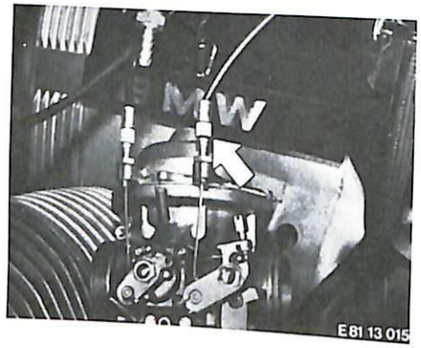


Slacken the locknut on the adjusting screw at the carburettor and remove the screw (arrow) from the carburettor body. Detach the cable from the throttle control.

**Note:** regulating engine idle speed and mixture – 13 00 004.

**Important:** to make the illustration clearer, the carburettor has been detached from the cylinder head and turned round so that the opposite side is visible.

■



# 33 Rear wheel drive and suspension


| | | |
|---|---|---|
| Specifications | | Page 33– 0/3 |
| Specifications (1979 models) | | 33– 0/5 |
| Specifications (1981 models) | | 33– 0/7 |
| 33 10 050 | Final drive – removing and installing | 33–10/1 |
| 33 10 113 | Final drive – stripping and assembling | 33–10/3 |
| 33 12 051 | Bevel drive pinion and crown wheel – removing and installing | 33–12/1 |
| 33 17 350 | Rear swinging fork – removing and installing | 33–17/1 |
| 33 17 381 | Taper roller bearings for rear swinging fork – renewing | 33–17/2 |
| 33 52 100 | Spring-damper strut – removing and installing | 33–52/1 |
| 33 52 021 | Damper – removing and installing | 33–52/1 |
| | Troubleshooting – rear wheel drive | 33–52/3 |

**Final Drive**

## Technical Data

| **Model** | R 60 7 | R 75 7 | R 80 7 | R 100 7 | R 100 S | R 100 RS |
|---|---|---|---|---|---|---|
| Toothing system | Klingelnberg (Palloid) helical | | | | | |
| Number of teeth | 11 : 37 * 9 : 32 | 10 : 32 | 10 : 32 ** 11 : 37 | 11 : 34 | 11 : 32 | 11 : 33 |
| Transmission ratio | 1 : 3.36 * 1 : 3.56 | 1 : 3.2 | 1 : 3.2 ** 1 : 3.36 | 1 : 3.09 | 1 : 2.91 | 1 : 3.0 |
| Special version: Number of teeth | | 11 : 37 | 11 : 37 | 10 : 32 | 11 : 33 | 11 : 32 |
| Special version: Transmission ratio | | 1 : 3.36 | 1 : 3.36 | 1 : 3.3 | 1 : 3.0 | 1 : 2.91* |
| Type of oil: initial filling | Brand-name running in hypoid gear oil SAE 90 | | | | | |
| After the first oil change, over 5° C (41° F) | Brand-name hypoid gear oil SAE 90 | | | | | |
| below 5° C (41° F) | Brand-name hypoid gear oil SAE 80 | | | | | |
| Filling quantity, ltr (Imp pints) | 0.25 (0.44/0.26) | | | | | |
| Tooth backlash, mm(in) | 0.15 . . . 0.20 (0.006 . . . 0.008) | | | | | |
| Lateral play in crown wheel | Zero play (without seal) | | | | | |
| **Rear wheel suspension** | Long swinging arm and spring struts with triple adjustment and double-acting hydraulic shock absorbers. | | | | | |
| Spring travel, mm(in) | 125 (4.92) | | | | | |
| Maximum length, mm(in) | 316±2 (12.44±0.08) | | | | | |
| Minimum length, mm | 216±2 (8.50±0.08) | | | | | |
| Shock absorber test | | | | | | |
| Test stroke, mm(in) | | 25 (0.98) | 75 (2.95) | 50 (1.97) | | |
| Test speed $min^{-1}$ | | 100 | 100 | 382 | | |
| Tension stage, kp (lb) | | 30±5 (66±11) | 58±5 (128±11) | 80±10 (176±22) | | |
| Compression stage, kp (lb) | | 5±3 (11±6.6) | 9±3 (19.8±6.6) | 28±5 (62±11) | | |

* 1978 model
** version with low-compression engine

**Rear Axle**

## Technical Data

| Model | R 60 7 | R 75 7 | R 80 7 | R 100 7 | R 100 S | R 100 RS |
|---|---|---|---|---|---|---|
| Bearing spring<br>Fitting length, mm(in) | 199.1 (7.84) | | | | | |
| Length relaxed, mm(in) | 251 (9.88) | | | | | |
| Spring outer diameter, mm(in) | 49.6 (1.953) | | | | | |
| Spring inner diameter, mm(in) | 41.8 + 0.3 (1.646 + 0.012) | | | | | |
| Wire thickness, mm(in) | 7.5 ± 0.04 (0.2953 ± 0.0016) | | | | | |
| Spring compression at 120.2 mm (4.732 in) spring travel, kp mm² | 105 | | | | | |
| **Long swinging arm**<br>Type of oil over 5 C (41 F)<br>below 5 C (41 F) | Brand-name hypoid gear oil SAE 90<br>Brand-name hypoid gear oil SAE 80 | | | | | |
| Filling capacity, ltr (Imp. pints) | 0.15 (0.26 0.16) | | | | | |

**Tightening torques Nm (ft.lb)**

| | | | |
|---|---|---|---|
| Nut on drive pinion | 150 ... 15 | (111 ... 11) | |
| Threaded ring on drive pinion | 100 ... 120 | (73.8 ... 88.5) | |
| Oil filler plug on rear wheel drive | 28 ... 31 | (20.6 ... 22.9) | |
| Bearing bolts on swing arm | 10 ... 12 | (7.4 ... 8.8) | |
| Shock absorber rod on spring strut eyelet, top | 34 ... 39 | (25.1 ... 28.8) | |
| Oil drain plug rear wheel drive | 23 ... 26 | (17.0 ... 19.2) | |
| Oil filler plug on swing arm | 14 | (10.3) | |
| Oil drain plug on swing arm | 14 ... 16 | (10.3 ... 11.8) | |
| Nuts on drive housing | 18 ... 21 | (13.3 ... 15.5) | |
| Locknut for swing arm bearing bolts | 100 ... 120 | (73.8 ... 88.5) | |
| Clamp screw for rear spindle | 14 ... 18 | (10.3 ... 13.3) | |

All other bolts, screws and nuts are to be tightened in accordance with the customary values indicated in the manufacturers' tables or according to the latest BMW Standard Specification 60002.0

12.77 Alterations

11.78 Addition

**Final Drive**

## Specifications – '79 models

| Model | | R 80/7 | R 100 T | R 100 S | R 100 RT | R 100 RS |
|---|---|---|---|---|---|---|
| Toothing system | | Klingelnberg (Palloid) helical | | | | |
| Number of teeth | | 10 : 32 **11 : 37 | 11 : 33 | 11 : 32 | 11 : 33 | |
| Transmission ratio | | 1 : 3,2 **1 : 3,36 | 1 : 3,0 | 1 : 2,91 | 1 : 30 | |
| Special version: | Number of teeth | 11 : 37 | 11 : 32 | 11 : 33 | 11 : 32 | |
| | Transmission ratio | 1 : 3,36 | 1 : 2,91 | 1 : 3,0 | 1 : 2,91 | |
| Type of oil:<br>initial filling | | Brand-name running in hypoid gear oil SAE 90 | | | | |
| After the first oil change, | over 5° C (41° F)<br>below 5° C (41° F) | Brand-name hypoid gear oil SAE 90<br>Brand-name hypoid gear oil SAE 80 | | | | |
| Filling quantity, ltr (Imp pints/US quants) | | 0.25 (0.44/0.26) | | | | |
| Tooth backlash, mm (in) | | 0.15 ... 0.20 (0.006 ... 0.008) | | | | |
| Lateral play in crown wheel | | Zero play (without seal) | | | | |
| **Rear wheel suspension** | | Long swinging arm and spring struts with triple adjustment and double-acting hydraulic shock absorbers. | | | | |
| Spring travel, mm (in) | | 125 (4.921) | | | | |
| Maximum length, mm (in) | | 316 ± 2 (12.44 ± 0.078) | | | | |
| Minimum length, mm (in) | | 216 ± 2 (8.50 ± 0.078) | | | | |
| Shock absorber test<br>Test stroke, mm (in)<br>Test speed min⁻¹<br>Tension stage, kp (lb)<br>Compression stage, kp (lb) | | | 25 (0.984)<br>100<br>30 ± 6 (66 ± 13.2)<br>5 ± 3 (11 ± 6.6) | 75 (2.925)<br>100<br>62 ± 7 (136.4 ± 15.4)<br>9 ± 3 (19.8 ± 6.6) | 50 (1.950)<br>382<br>88 ± 10 (176 ± 22)<br>28 ± 5 (62 ± 11) | |

** version with low-compression engine

**Rear Axle**

## Specifications – '79 models

| Model | R 80/7 | R 100 T | R 100 S | R 100 RT | R 100 RS |
|---|---|---|---|---|---|
| Bearing spring<br>Fitting length, mm (in) | 199.1 (7.838) | | | | |
| Length relaxed, mm (in) | 251 (9.881) | | | | |
| Spring outer diameter, mm (in) | 49.6 (1.952) | | | | |
| Spring inner diameter, mm (in) | 41.8+0.3 (1.645+0.0118) | | | | |
| Wire thickness, mm (in) | 7.5±0.04 (0.2952±0.0015) | | | | |
| Spring compression at 120.2 mm (4.732 in) spring travel, kp/mm² | 105 | | | | |
| **Long swinging arm**<br>Type of oil over 5° C (41° F)<br>below 5° C (41° F) | Brand-name hypoid gear oil SAE 90<br>Brand-name hypoid gear oil SAE 80 | | | | |
| Filling capacity ltr (Imp. pints/US quarts) | 0.15 (0.26/0.16) | | | | |

### Tightening torques Nm (ft. lb)

| | | | |
|---|---|---|---|
| Nut on drive pinion | 150+15 (111...11) | Oil drain plug rear wheel drive | 23...26 (17.0...19.2) |
| Threaded ring on drive pinion | 100...120 (73.8...88.5) | Oil filler plug on swing arm | 14 (10.3) |
| Oil filler plug on rear wheel drive | 28...31 (20.6...22.9) | Oil drain plug on swing arm | 14...16 (10.3...11.8) |
| Bearing bolts on swing arm | 10...12 (7.4...8.8) | Nuts on drive housing | 18...21 (13.3...15.5) |
| Shock absorber rod on spring strut eyelet top | 34...39 (25.1...28.8) | Locknut for swing arm bearing bolts | 100...120 (73.8...88.5) |
| | | Clamp screw for rear spindle | 14...18 (10.3...13.3) |

All other bolts, screws and nuts are to be tightened in accordance with the customary values indicated in the manufacturers tables or according to the latest BMW Standard Specification 60002.0.





**Rear wheel drive and suspension**

## Specifications (1981 models)

| Model | | R 100 | R 100 CS | R 100 RT | R 100 RS |
|---|---|---|---|---|---|
| Tooth contact pattern | | Klingelnberg (Palloid) spiral bevel | | | |
| Number of teeth | | 11:33 | 11:32 | 11:33 | |
| Ratio | | 1:3.0 | 1:2.91 | 1:3.0 | |
| Special version: | Number of teeth | 11:32 | 11:33 | 11:32 | |
| | Ratio | 1:2.91 | 1:3.0 | 1:2.91 | |
| Oil grade (initial filling) | | Brand-name running-in hypoid gear oil, SAE 90, API class GL 5 | | | |
| After first oil change | above 5° C (41° F)<br>below 5° C (41° F) | Brand-name hypoid gear oil, SAE 90<br>Brand-name hypoid gear oil, SAE 80 | API class GL 5 | | |
| Oil content l (Imp. pints, US quarts) | | 0.35 (0.62, 0.37) max., up to level check plug | | | |
| Tooth backlash mm (in) | | 0.08...0.14 (0.003...0.006) | | | |
| Crownwheel side play mm (in) | | 0.1 (0.004) | | | |
| **Rear suspension:** | | Long-arm swinging fork with 3-position spring struts incorporating double-acting hydraulic dampers | | | |
| Suspension travel mm (in) | | 125 (4.92) | | | |
| Max. length mm (in) | | 316 ± 2 (12.44 ± 0.08) | | | |
| Min. length mm (in) | | 216 ± 2 (8.50 ± 0.08) | | | |
| Damper test:<br>Test stroke mm (in)<br>Speed min⁻¹<br>Traction phase kp (lb.f)<br>Compression phase kp (lb.f) | | 25 (0.98)<br>100<br>30 ± 6 (66 ± 13)<br>5 ± 3 (11 ± 7) | 75 (2.95)<br>100<br>62 ± 7 (137 ± 15)<br>9 ± 3 (20 ± 7) | 50 (1.97)<br>382<br>88 ± 10 (194 ± 22)<br>28 ± 5 (62 ± 11) | |

## Specifications (1981 models)

| Model | R 100 | R 100 CS | R 100 RT | R 100 RS |
|---|---|---|---|---|
| Suspension springs – installed length mm (in) | 199.1 (7.84) | | | |
| Relaxed length mm (in) | 251 (9.88) | | | |
| Extl. dia. of spring mm (in) | 49.6 (1.95) | | | |
| Intl. dia. of spring mm (in) | 41.8 + 0.3 (1.65 + 0.01) | | | |
| Wire thickness mm (in) | 7.5 ± 0.04 (0.295 ± 0.002) | | | |
| Spring force at 120.2 mm (4.73 in) spring travel kp (lb.f)/mm² | 105 (231.5) | | | |
| **Long-arm swinging fork** | | | | |
| Oil grade – above 5 °C (41 °F) | Brand-name hypoid gear oil, SAE 90 | | | |
| – below 5 °C (41 °F) | Brand-name hypoid gear oil, SAE 80 | | | |
| | API class GL 5 | | | |
| Oil content l (Imp. pint, US quart) | 0.15 (0.26, 0.16) | | | |

### Tightening torques Nm (lb.ft)

| | | | |
|---|---|---|---|
| Final drive oil drain plug | 25.5 (18.8) | Nut on input pinion | 165 (122) |
| Swinging fork oil filler plug | screwed in but not over-tightened | Threaded ring in final drive casing | 118 (87) |
| Swinging fork oil drain plug | 15.7 (11.6) | Final drive oil level check screw | 10 (7.4) |
| Nut for final drive cover | 17.7 (13.1) | Swinging fork pivot pin | 10 + 2 (7.4 + 1.5) |
| Spring strut lug at piston rod | 38 + 2 (28.0 + 1.5) | Locknut for swinging fork pin | 100 + 20 (74 + 15) |
| Twelve-sided nut for final drive housing/swinging fork mounting | 47 (35) | Spring strut retaining bolts | 35 + 5 (26 + 3.7) |

All other bolts and nuts are to be tightened as shown in the manufacturers tabels or on the latest BMW 60002.0 standards sheet





# Rear wheel drive

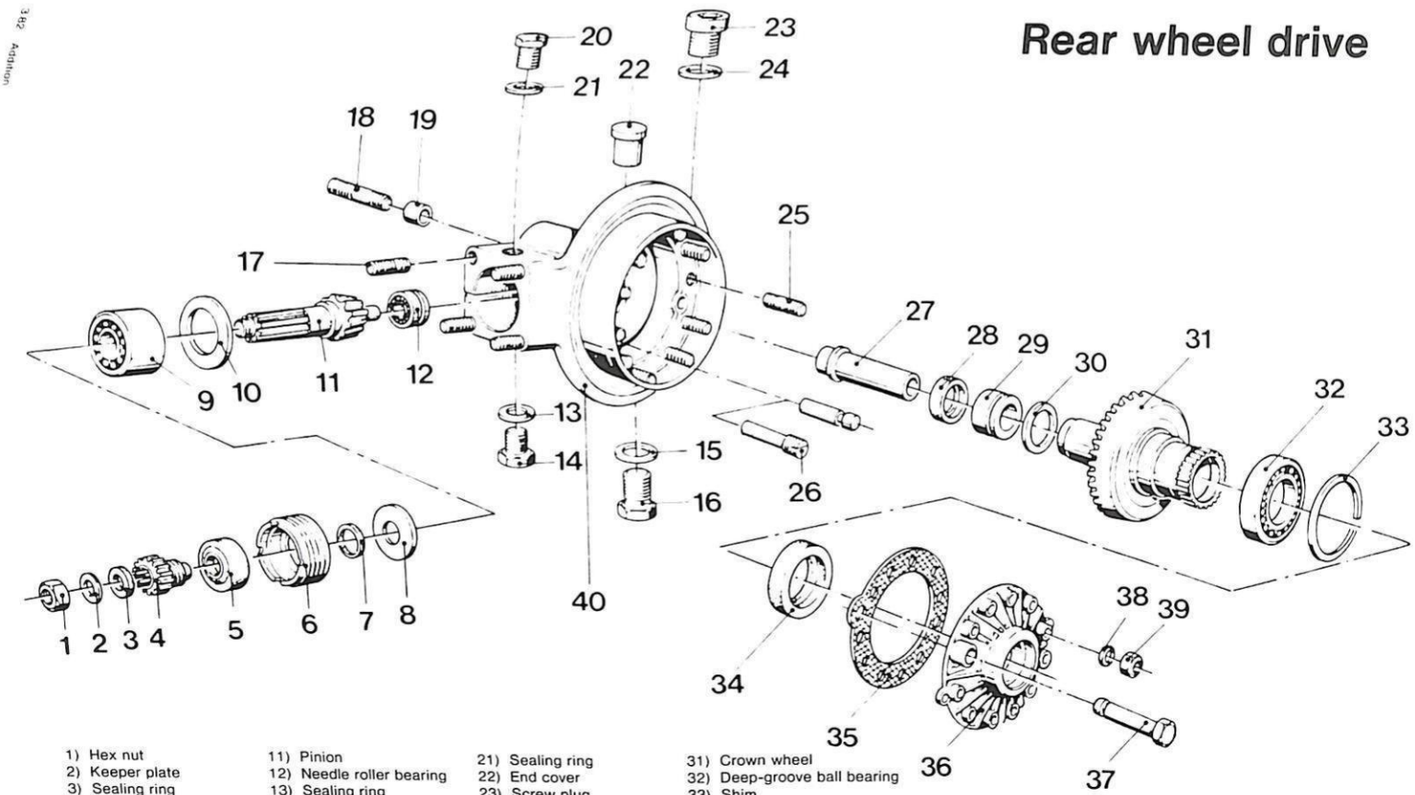


1) Hex nut
2) Keeper plate
3) Sealing ring
4) Coupling hub
5) Shaft sealing ring
6) Threaded ring
7) Spacer ring
8) Washer
9) Ball thrust bearing
10) Shim
11) Pinion
12) Needle roller bearing
13) Sealing ring
14) Screw plug
15) Sealing ring
16) Screw plug
17) Stud bolt
18) Stud bolt
19) Bushing
20) Screw plug
21) Sealing ring
22) End cover
23) Screw plug
24) Sealing ring
25) Stud bolt
26) Taper pin
27) Bushing
28) Shaft sealing ring
29) Needle roller bearing
30) Thrust ring
31) Crown wheel
32) Deep-groove ball bearing
33) Shim
34) Shaft sealing ring
35) Gasket
36) Housing cover
37) Pivot pin
38) Spring washer
39) Hex nut
40) Housing

## 33 10 050 Final drive – removing and installing

Remove (install) rear wheel – 36 30 320.

Place the motorcycle on its center stand and support it under the swinging fork pivots so that the rear wheel can revolve freely.

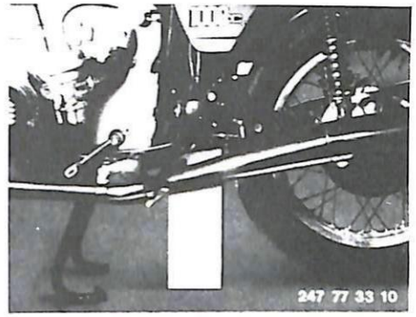


■

Unscrew and remove the right spring strut retaining bolt (arrow) and set aside carefully complete with the washer.

Remove screw (2) from the right swinging fork arm and allow the oil to drain out. Oil filter plug (1) should be unscrewed to permit the oil to drain out more quickly by venting the fork arm.

**When installing:** after re-assembling, add 0.25 liter (0.44 Imp. pint, 0.26 US quart) of oil (for correct grade of oil, see Specifications).

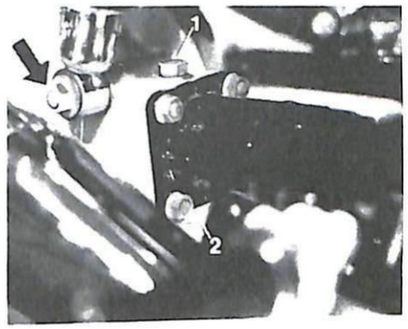


■

Unscrew the wing nut from the brake rod. Pull the brake rod off the pin on the lever. Remove the hollow pin from the lever, place it on the brake rod and secure with the wing nut.

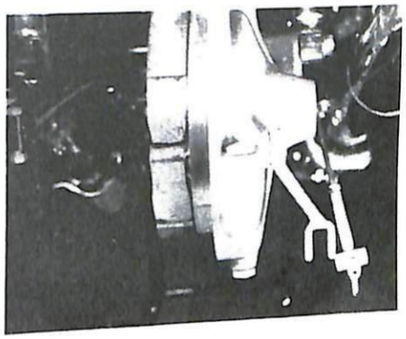

■

Loosen the upper spring strut retaining bolt and unscrew the 4 nuts with spring washers from the bolts securing the right swinging fork arm.

**When assembling,** only tighten these four nuts when the axle has been inserted through the final drive and the axle clamp.

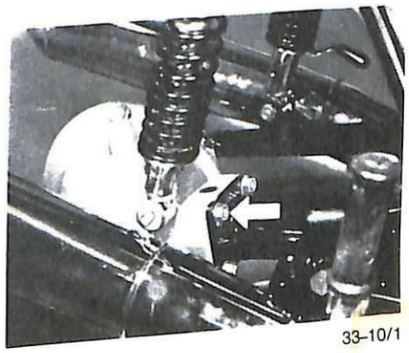

■

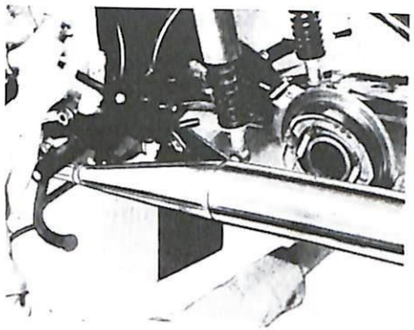

Pull the final drive away from the swinging fork and set it down carefully.

**When installing:** select a gear at the gearbox before attaching the final drive to the swinging fork and turn the propeller shaft until the splined coupling engages.

■



## 33 10 113 Final drive – stripping and assembling

Drain the oil from the final drive.

Remove (install) brake shoes – 34 21 150.

Remove brake lever and backplate.

(These two jobs are not needed if a disc brake is installed.)

Install the final drive in assembly stand BMW No. 33 1 600 (arrow).

■

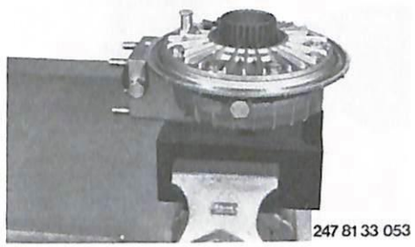

247 81 33 053

Unscrew the hex bolts from the cover. Heat the cover to app. 80° C (176° F) and force off with two M 5 x 30 mm bolts (arrows). Take out the oil trap plate.

**When installing:** Seal the cover with Loctite No. 573 or a paper gasket.

Push assembly sleeve BMW No. 33 1 000 through the shaft sealing ring in the housing cover, then place it on the input gear teeth of the crown wheel and press the cover on to the housing. Heat the cover to app. 80° C (176° F).

■

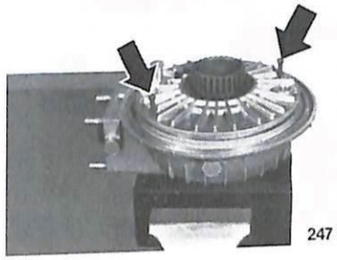

247 81 33 054

Drive out the shaft sealing ring with a drift from the cover. Force in the new sealing ring with drift BMW No. 33 1 850 and handle BMW No. 00 5 500.

**Note:** place the cover on the smooth side of the guide.

■

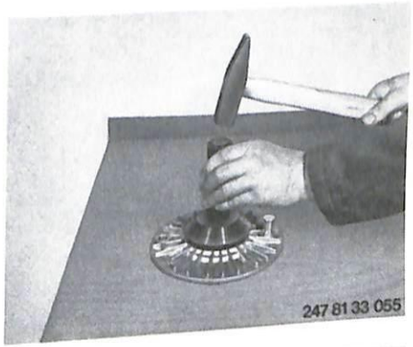

247 81 33 055

Separate the deep-groove ball bearing from the crown wheel by applying uniform blows of a soft metal drift through the holes provided in the crown wheel.

**When installing:** heat the deep-groove ball bearing to app. 100° C (212° F).

■

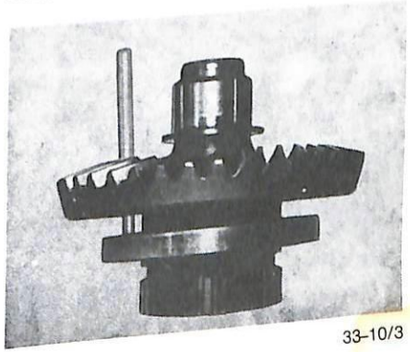

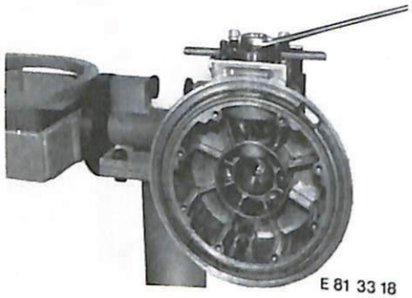

E 81 33 18

Position the assembly stand vertically. Unscrew the nut from the input pinion and pull off the washer with plastic ring and the pinion.

**When installing:** the nut is secured with Loctite 74; for tightening torque, see Specification.

■

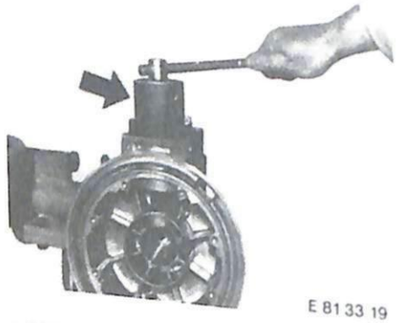

E 81 33 19

Unscrew and remove the threaded ring complete with shaft sealing ring, using pin wrench BMW No. 33 1 700 (arrow).

■

E 81 33 20

Drive the shaft sealing ring out of the threaded ring with a suitable drift.

Force in the new sealing ring with drift BMW No. 33 1 750 and handle BMW No. 00 5 500.

■

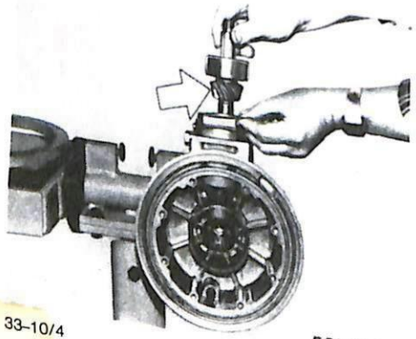

E 81 33 021

Heat the housing to app. 120° C (248° F), using a "Thermochrom" pin. Remove the input bevel pinion (arrow) with ball thrust bearing and shim.

■





Using Kukko 17 K puller, BMW No. 00 7 500, pull the ball thrust bearing off the input bevel pinion.

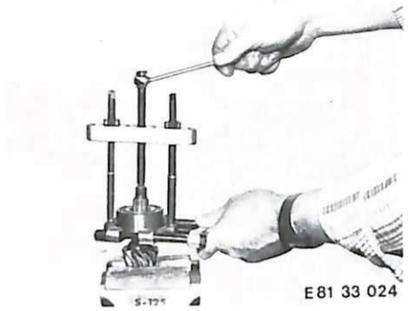

E 81 33 024

■

Renew the needle roller bearing for the pinion in the universal joint housing.

Unscrew and remove the screw (arrow) – on models up to 1979.

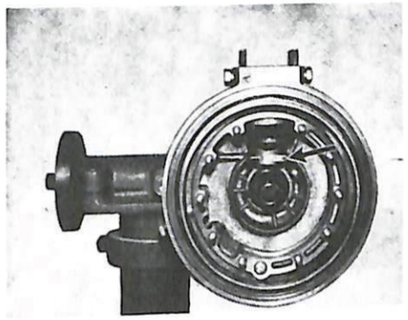

■

Heat the casing to app. 120° C (248° F). Pull out the needle roller bearing (from the input bevel pinion) with internal ball-bearing puller No. 400 151/T 2.

**When installing:** heat the casing to app. 120° C (248° F) and drive in the needle roller bearing for the pinion with a suitable drift.

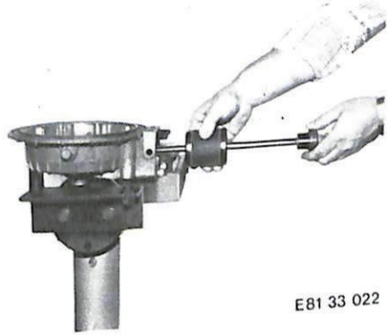

E 81 33 022

■

Alternatively, press the bearing in with Kukko internal puller No. 21/3 and support 22/1.

Do not damage the sealing face.

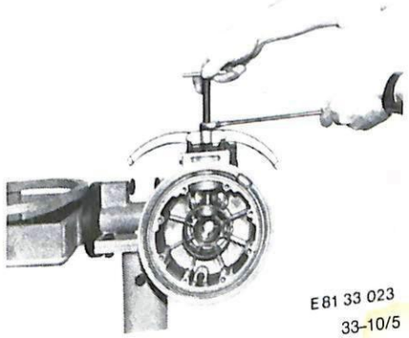

E 81 33 023

■

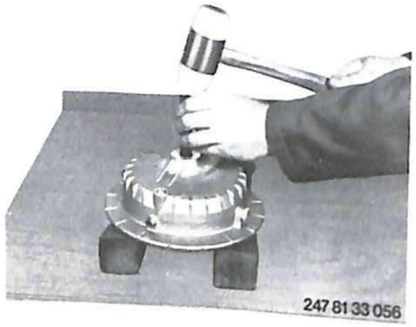
247 81 33 056

To renew the needle roller bearing for the crown wheel, heat the casing to app. 100° C (212° F). Place it on two wooden blocks with the cover side down and drive out the stub axle bushing with a 17.8 mm (0.7 in) drift.

■

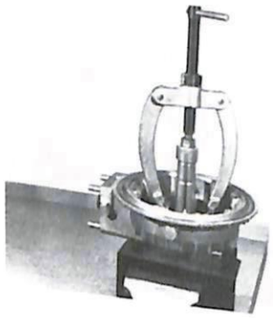
247 81 33 057

Pull out the needle roller bearing with Kukko puller BMW No. 00 8 560, holding the bearing at the lower edge.

**When installing:** always heat the casing to app. 100° C (212° F) before inserting the needle roller bearing and the stub axle bushing.

■

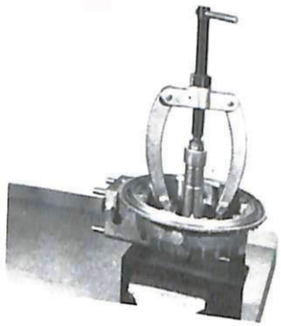
247 81 33 057

Pull out the radial sealing ring with Kukko puller BMW No. 00 8 551 and the support bridge from BMW No. 00 8 560.

■

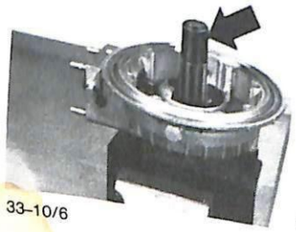
247 81 33 059

Press in the radial sealing ring with drift BMW No. 33 1 880 in conjunction with handle BMW No. 00 5 500; the open side of the sealing ring faces upwards.

■





Pull off the inner race of the needle roller bearing with the Kukko universal puller, BMW No. 00 7 500.

Use the 30 mm (1.18 in) spindle support (arrow).

Before assembling, heat the inner race to app. 120° C (248° F).

■

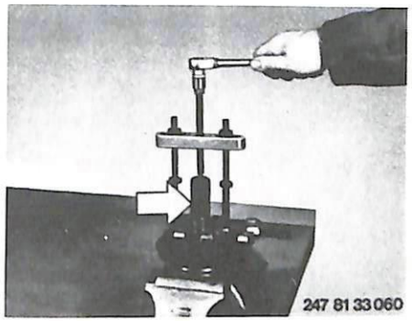
247 81 33 060

## 33 12 051 Drive (bevel) pinion and crown wheel – removing and installing

Strip (assemble) the final drive – 33 10 113.

Drive and crown wheels are matched together. Check to see that their numbers correspond (arrows).

During the assembly test procedure, tolerances are established which will result in smooth running and the correct tooth backlash, provided that numerically paired crown wheels and pinions are always used.

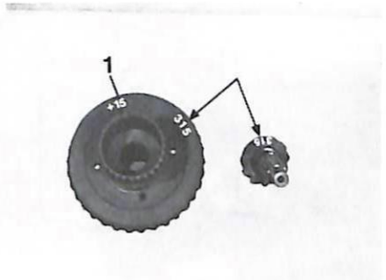


247 81 33 061

■

The basic size of the casing measured from the ball thrust bearing shoulder on the pinion to the center of the crown wheel shaft is 75.50 ± 0.05 mm (2.97 ± 0.002 in).

The basic size is not stamped on the casing. If the casing is of a different size, the two digits after the decimal point are marked on the inside as shown (arrow).

The basic size of the pinion is 77.50 mm (3.05 in). Any difference is marked on the crown wheel (see illustration above) with a + or – sign.

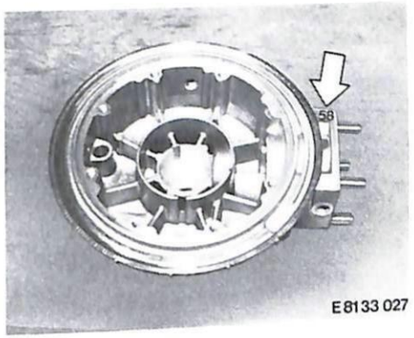


E 81 33 027

■

The thickness of the washer (arrow) between the ball thrust bearing shoulder and the seat in the casing is calculated by substracting the size of the casing from the basic size of the pinion (plus or minus the deviation marked on the crown wheel). If there is no deviation marked on the crown wheel and no measurement on the casing, then the basic sizes apply. In this case the size of the washer will be 77.50 – 75.50 mm = 2 mm (3.05 – 2.97 in = 0.080 in).
If a deviation of, for example, +15 is marked on the crown wheel the size of the washer will be 2.0 mm + 0.15 mm = 2.15 mm (0.080 + 0.006 in = 0.086 in).

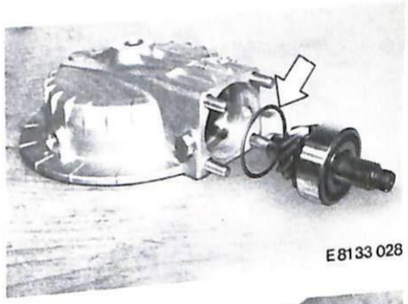

E 81 33 028

■

To obtain provisional tooth backlash, insert a bronze ring of sufficient thickness in the casing (arrow).

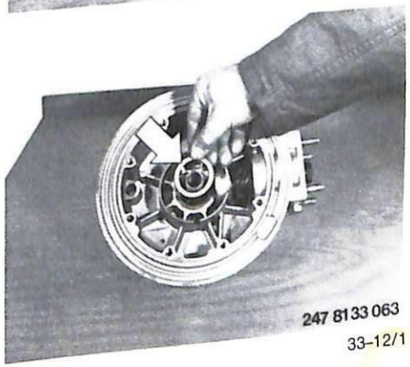

247 81 33 063

■

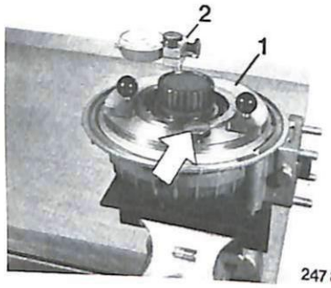

247 81 33 064

When adjusting tooth backlash use measuring device BMW No. 33 2 610.
With the crown wheel installed, place the measuring ring (1) and dial gauge holder (2) on the final drive casing and turn the knurled thumbscrew (arrow) to hold it in place.

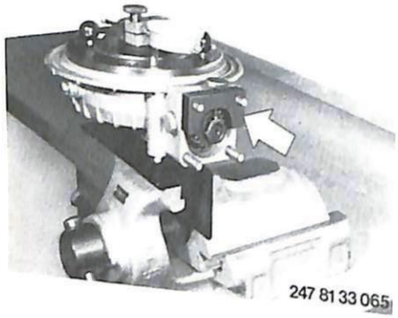
247 81 33 065

In order to measure tooth backlash with complete accuracy, the pinion drive must be held fast with locking device BMW No. 33 2 620 (arrow).

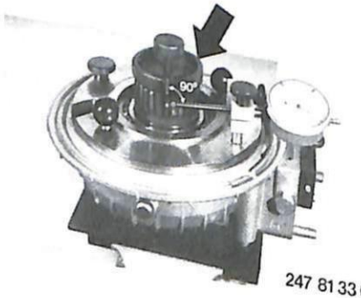

247 81 33 066

Clamp the measuring stop to the crown wheel in such a way that the gauge probe, when opposite marking (1), is at an angle of 90° to the stop. Turn the crown wheel lightly to and fro. Check tooth backlash at three points (at 120° intervals). Loosen the stopper and insert in turn into the segments between the studs.

See Specifications for tooth backlash.

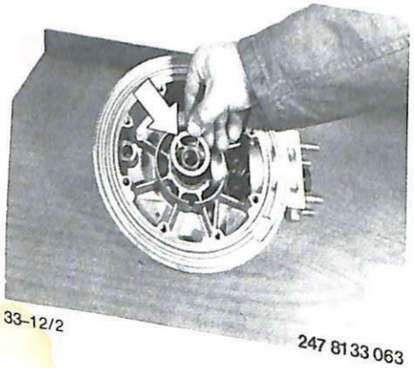
247 81 33 063

If tooth backlash is too small or too great, then a thicker or thinner bronze ring (arrow) must be inserted accordingly.





To check the tooth contact pattern, colour a few teeth of the drive wheel with engineer's blue or a light oil-bound paint. Install the crown wheel in the casing and turn it vigorously to and fro several times.

If the contact pattern looks like this (top picture), the drive wheel is too deep in the casing, and a wider spacer must be fitted.

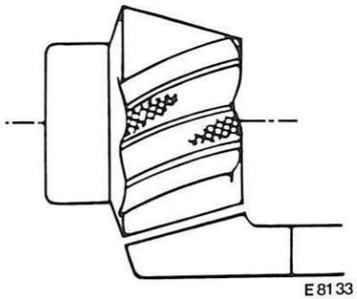
E 81 33 034

This contact pattern will then result.

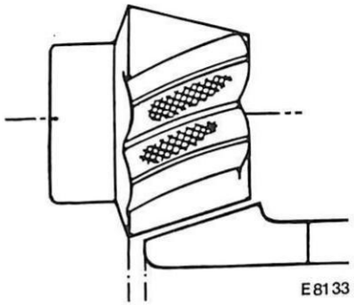
E 81 33 035

If the contact pattern looks like this, the drive wheel must penetrate deeper in the casing, so that a thinner spacer is necessary.

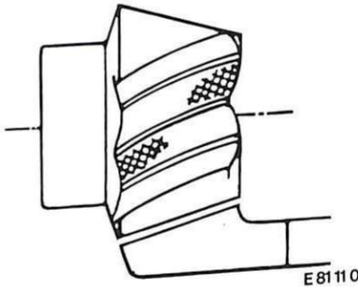
E 81 11 036

This contact pattern will then be obtained.

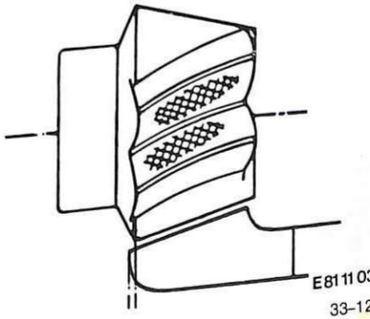
E 81 11 037

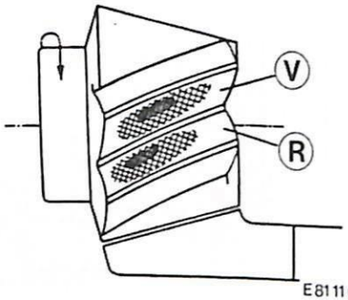


E 81 11 038

Correct contact pattern in off-load condition: The contact pattern is in the middle of the forward flank "V".

On the reverse flank "R", the contact pattern is nearer the wide end.

The teeth must NEVER touch at the narrow end!

■

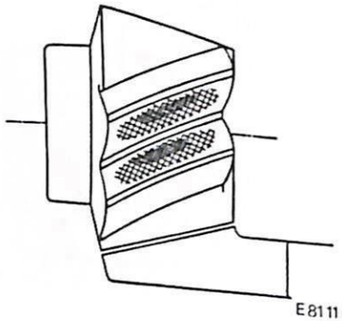

E 81 11 039

Under load the contact pattern then looks like this.

■

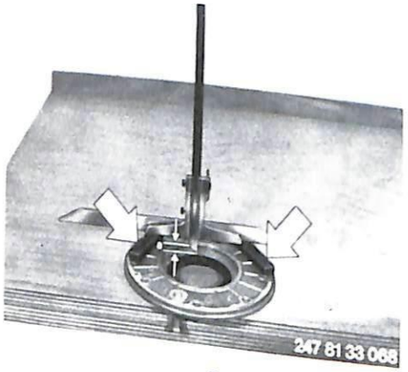


To adjust lateral play of the crown wheel, place the ring of the measuring device on the final drive casing. Measure distance "a" from the joint face of the cover to the ball bearing contact face, using depth gauge BMW No. 00 2 550 and the necessary intermediate spacers (arrows).

| | |
|---|---|
| Measured distance | = 20.0 mm (0.787 in) |
| – spacer thickness | 9.8 mm (0.386 in) |
| Dimension "a" | = 10.2 mm (0.401 in) |

■

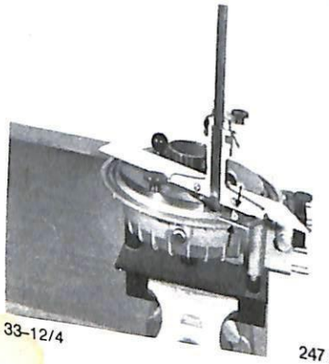

247 81 33 069

Using depth gauge BMW No. 00 2 550, determine distance "b".

Measurement 1: from measuring ring cutout to casing through joint face (distance I)

Measurement 2: from measuring ring to outer race of ball bearing (distance II)

Distance I – distance II = dimension "b".

■



Adjust side-play at crown wheel (up to 1979 models).

With a depth gauge and spacer if necessary, measure distance (a) from the bottom of the deep-groove ball bearing seat to the joint contact faces.

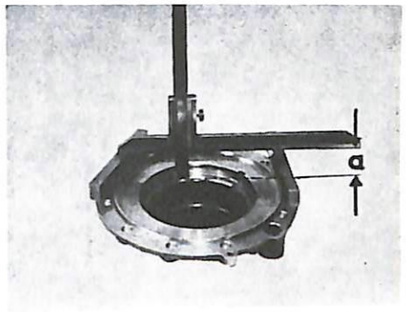


■

With no gasket on the universal joint housing joint face, measure distance (b) from the deep-groove ball bearing (at the crown wheel) to the joint face.

Insert suitable shims between the ball bearing and the seat base in the cover to eliminate play. The shim thickness needed is distance (a) minus distance (b), with an additional 0.1 mm (0.004 in) deducted.

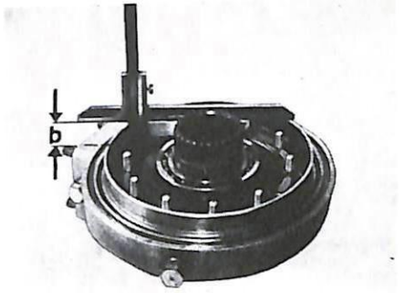


■

## 33 17 350 Rear swinging fork – removing and installing

Remove (install) rear wheel – 36 30 320.

Remove (install) final drive – 33 10 050.

Detach the spring strut at the lower left mounting.

Detach the rubber sleeve between gearbox and swinging fork at the gearbox end and push back as far as possible. At the universal joint, unscrew and remove the 4 connecting bolts with a ring wrench and set them aside together with the spring washers. When installing, tighten the bolts with special ring wrench BMW No. 00 2 560 and a torque wrench. See Specifications for tightening torques.

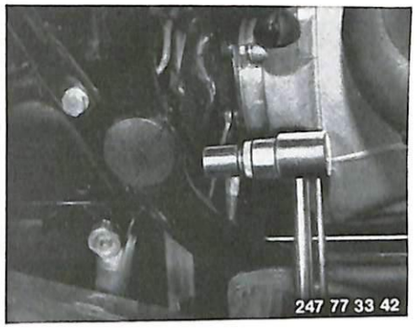


Remove the left and right swinging fork pivot bearings.

Take off the caps and slacken the locknut. Unscrew and remove the swinging fork bearing journals.

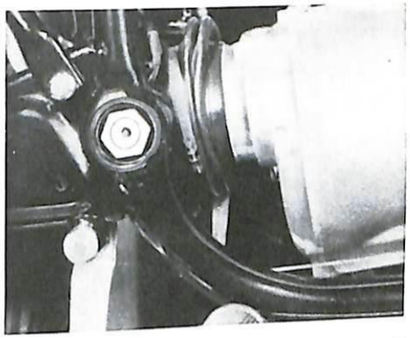

**When installing:** screw in the pivot journals so that distance (a) from the fork pivot hub to the frame is the same at both sides. The propeller shaft should be in the center of the fork tube so that it does not make contact when the suspension is at full bump or rebound. If necessary, distances (a) can be slightly different.

To obtain the necessary bearing preload, tighten both bearing pins to 20 Nm (14.7 lb.ft), then slacken off again and retighten to 10 Nm (7.4 lb.ft). Secure the pivot pins with the hex locknut. Note correct tightening torque (see Specifications).

Press in the caps.

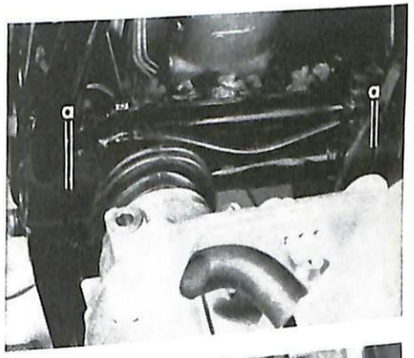


Detach the brake pedal by holding its pivot pin and unscrewing the stop nut.

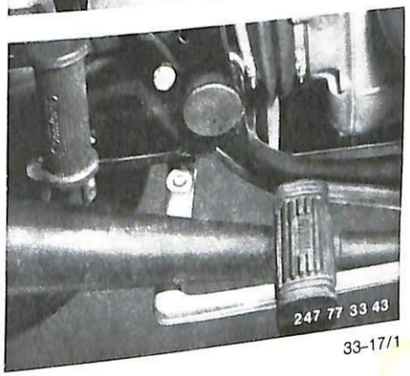

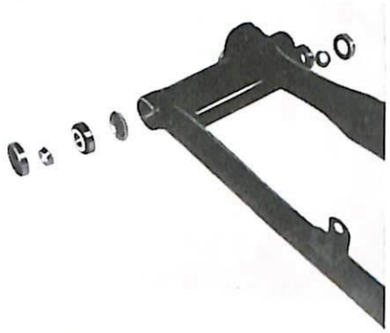

## 33 17 381 Taper roller bearings for rear swinging fork – renewing

Remove (install) rear swinging fork – 33 17 350.

Remove (install) propeller shaft – 26 11 000.

From 1981 models on, the taper roller bearings are not split.

■

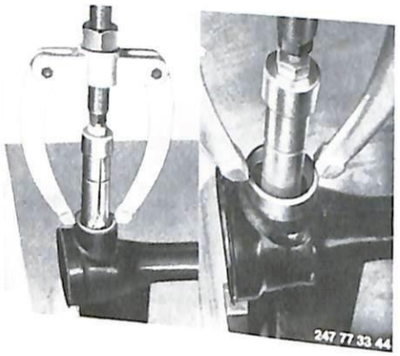


Remove the spacing bushing. Pull out the sealing ring with Kukko internal puller BMW No. 00 8 551. Pull the inner race of the taper roller bearing with the roller cage out of the swinging fork.

Pull out the outer bearing race with the same Kukko internal puller.

To drive in the bearing shell, use drift BMW No. 00 5 550.

**When installing:** clean the taper roller bearings before assembling, and grease well.

**Notes on 1981 models:** pull out the swinging fork bearings with Kukko internal puller No. 21/3 and support 22-1.

Drive in the new bearing with a piece of tube measuring 40 x 30 mm and 50 mm long (1.57 x 1.18 in and 1.97 in long).



## 33 52 100 Spring-damper strut – removing and installing

Unscrew the hex nuts with washer and take out the upper bolt. On the left damper, press the motorcycle down before removing the lower bolt.

For tightening torques, see Specifications.

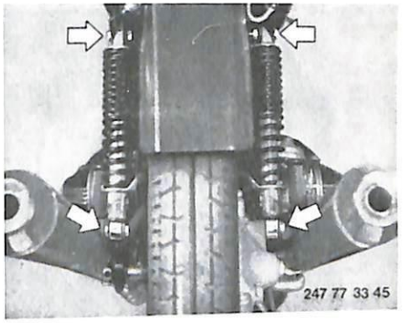


■

## 33 52 021 Damper – removing and installing

Remove (install) spring-damper strut – 33 52 100.

Secure clamping fixture BMW No. 33 5 600 in the vice. Clamp the lower spring strut mounting lug (arrow) into the fixture.

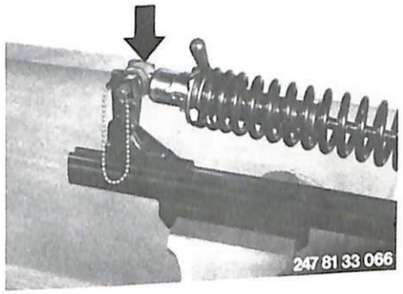


■

Insert clamp block BMW No. 33 5 605 (arrow) between the third and fourth turns of the spring.

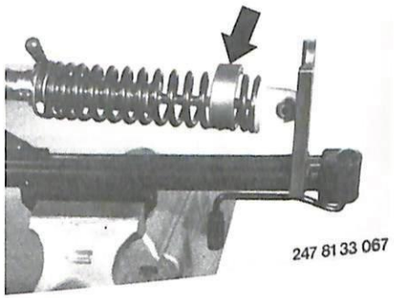


■

Push pressure block BMW No. 33 5 610 on to the spring strut until it touches the clamp block. The shoulder (arrow) must be at the same end as the clamp arm (1).

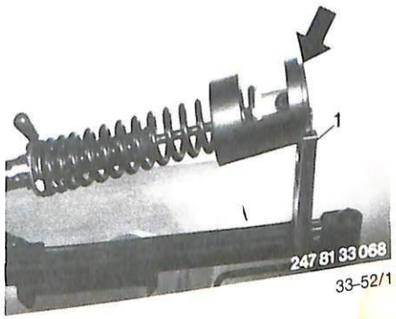


■

Move the pressure block against the clamp arm and preload the spring strut until the open-ended wrench can be applied to the flats on the piston rod. First push back the rubber buffer. Detach the spring strut lug from the piston rod with a suitable drift (arrow).

Release the tension in the spring strut.

On struts with a spring plate, the damper is removed in the same way as just described.

For tightening torques, see Specifications.

■





## Troubleshooting – final drive

| Fault | Cause | Remedy |
|---|---|---|
| Noise | Bearing defective | Renew bearing |
| | Excessive tooth backlash | Reset |
| | Too much play between coupling hub and shell | Renew |
| | Oil level in final drive or swinging arm too low | Check and add oil if necessary |

# 34 Brakes


| | | |
|---|---|---|
| | Specifications | Page 34– 0/3 |
| | Specifications (1979 models) | 34– 0/5 |
| | Specifications (1981 models) | 34– 0/7 |
| 34 00 046 | Front brake – bleeding | 34–00/1 |
| 34 00 047 | Rear brake – bleeding | 34–00/1 |
| 34 10 114 | Front brake – adjusting | 34–00/1 |
| 34 11 000 | Front brake pads – removing and installing | 34–11/1 |
| 34 11 000 | Front brake pads – removing and installing (1981 models) | 34–11/1 |
| 34 11 020 | Swing caliper – removing and installing | 34–11/1 |
| 34 21 200 | Rear brake pads – removing and installing | 34–21/1 |
| 34 21 220 | Rear brake caliper – removing and installing | 34–21/1 |
| 34 21 301 | Rear brake disc – removing and installing | 34–31/1 |
| 34 31 000 | Front master brake cylinder – removing and installing | 34–31/1 |
| 34 31 000 | Front master brake cylinder – removing and installing (1981 models) | 34–31/1 |
| 34 31 001 | Rear master brake cylinder – removing and installing | 34–31/1 |
| | Troubleshooting – brakes | 34–31/3 |

**Brakes**

## Technical Data

| Model. | R 60/7 | R 75/7 | R 80/7 | R 100/7 | R 100 S | R 100 RS |
|---|---|---|---|---|---|---|
| Front wheel | Single disc brake | | | Twin disc brake | | |
| Brake disc dia. mm (in) | 264 (10.39) | | | | | |
| Min. brake disc thickness mm (in) | 4.6 (0.181) | | | | | |
| Effective rubbed area per disc cm² (in²) | 40 (6.2) | | | | | |
| Min. brake pad thickness mm (in) | 1.5 (0.06) | | | | | |
| Max permissible brake surface runout in relation to wheel hub mm (in) | 0.03 (0.0012) | | | | | |
| Brake master cylinder piston dia. mm (in) | 17.46 (0.6874) | | | | | |
| Wheel brake cylinder piston dia. mm (in) | 40 (1.57) | | | | | |
| Brake fluid volume in system l (Imp. pint, US quart) | 0.06 (0.11, 0.06)<br>0.07 (0.12, 0.07) * | | | | | |
| Brake disc lateral runout mm (in) | 0.2 (0.008) | | | | | |
| Rear wheel | Leading and trailing shoe drum brake | | | | | |
| Brake drum diameter mm (in)<br>Max. brake drum oversize after wear mm (in) | 200 (7.87)<br>201.5 (7.93) | | | | | |
| Brake lining width mm (in) | 30 (1.18) | | | | | |
| Effective rubbed area cm² (in²) | 214 (33.17) | | | | | |
| Min. brake lining thickness mm (in) | 1.5 (0.06) | | | | | |
| Rear wheel | | | | | | * Disc brake |
| Brake disc dia. mm (in) | | | | | | 260 (10.24) |
| Min. brake disc thickness mm (in) | | | | | | 4.6 (0.181) |
| Effective rubbed area cm² (in²) | | | | | | 37.4 (5.8) |
| Min. brake pad thickness mm (in) | | | | | | 1.5 (0.06) |
| Max. braking surface runout in relation to wheel hub mm (in) | | | | | | 0.03 (0.0012) |

* on 1978 model

**Brakes**

## Technical Data

| Model | R 60/7 | R 75/7 | R 80/7 | R 100/7 | R 100 S | R 100 RS |
|---|---|---|---|---|---|---|
| Brake master cylinder piston dia. mm (in) | | | | | | 15.8 (0.622) |
| Wheel brake cylinder piston dia. mm (in) | | | | | | 38 (1.496) |
| Volume of brake fluid in system 1 (Imp. pint) | | | | | | 0.6 (1.0559) |
| Brake disc runout mm (in) | | | | | | 0.1 (0.004) |
| Clearance between piston (brake cyl.) and lever mm (in) | | | | | | 1.4...1.5 (0.055...0.059) |
| Brake fluid for front and rear disc brakes | DOT 3 | | | | | |

**Tightening torques Nm (lb.ft.)**

| | |
|---|---|
| End cap | 40...45 (29.5...33.2) |
| Brake pipe at master cylinder | 8 ± 3 (5.9 ± 2.2) |
| Brake pipe at brake caliper | 8 ± 3 (5.9 ± 2.2) |





**Brakes**

## Specifications – '79 models

| Model | R 80/7 | R 100 T | R 100 S | R 100 RT | R 100 RS |
|---|---|---|---|---|---|
| **Front wheel** | Twin disc brake | | | | |
| Brake disc dia. mm (in) | 264 (10.39) | | | | |
| Min. brake disc thickness mm (in) | 4.6 (0.181) | | | | |
| Effective rubbed area per disc cm² (in²) | 40 (6.2) | | | | |
| Min. brake pad thickness mm (in) | 1.5 (0.06) | | | | |
| Max permissible brake surface runout in relation to wheel hub mm (in) | 0.03 (0.0012) | | | | |
| Brake master cylinder piston dia. mm (in) | 17.46 (0.6874) | | | | |
| Wheel brake cylinder piston dia. mm (in) | 40 (1.57) | | | | |
| Brake fluid volume in system 1 (Imp. pint, US quart) | 0.07 (0.12, 0.07) | | | | |
| Brake disc lateral runout mm (in) | 0.1 (0.004) | | | | |
| **Rear wheel** | Leading and trailing shoe drum brake | | | | |
| Brake drum diameter mm (in)<br>Max. brake drum oversize after wear mm (in) | 200 (7.87)<br>201.5 (7.93) | | | | |
| Brake lining width mm (in) | 30 (1.18) | | | | |
| Effective rubbed area cm² (in²) | 214 (33.17) | | | | |
| Min. brake lining thickness mm (in) | 1.5 (0.06) | | | | |
| **Rear wheel** | Disc brake | | | | |
| Brake disc dia. mm (in) | 260 (10.24) | | | | |
| Min. brake disc thickness mm (in) | 4.6 (0.181) | | | | |
| Effective rubbed area cm² (in²) | 37.4 (5.8) | | | | |
| Min. brake pad thickness mm (in) | 1.5 (0.06) | | | | |
| Max. braking surface runout in relation to wheel hub mm (in) | 0.03 (0.0012) | | | | |

## Specifications – '79 models

| Model | R 80/7 | R 100 T | R 100 S | R 100 RT | R 100 RS |
|---|---|---|---|---|---|
| Brake master cylinder piston dia. mm (in) | 15.8 (0.622) | | | | |
| Wheel brake cylinder piston dia. mm (in) | 38 (1.496) | | | | |
| Volume of brake fluid in system 1 (Imp. pint) | 0.6 (1.0998) | | | | |
| Brake disc runout mm (in) | 0.1 (0.004) | | | | |
| Clearance between piston (brake cyl. and lever mm (in) | 1.4–1.5 (0.055...0.059) | | | | |
| Brake fluid for front and rear disc brakes | ATE "DOT 4 SL" brake fluid | | | | |

### Tightening torques Nm (lb. ft.)

| | |
|---|---|
| End cap | 40...45 (29.5...33.2) |
| Brake pipe at master cylinder | 8+3 (5.9+2.2) |
| Brake pipe at brake caliper | 8+3 (5.9+2.2) |



## Specifications (1981 models)

| Model | R 100 | R 100 CS | R 100 RT | R 100 RS |
|---|---|---|---|---|
| **Front wheel:** | Twin disc brakes | | | |
| Brake disc diameter mm (in) | 260 (10.24) | | | |
| Min. brake disc thickness mm (in) | 4.6 (0.18) | | | |
| Effective rubbed area per disc cm² (in²) | 37 (5.74) | | | |
| Min. brake pad thickness mm (in) | 1.5 (0.06) | | | |
| Max. permissible runout of braking surface in relation to wheel hub mm (in) | 0.03 (0.0012) | | | |
| Master cylinder piston dia. mm (in) | 15 (0.59) or 16 (0.63) | | | |
| Wheel cylinder piston dia. mm (in) | 38 (1.50) | | | |
| Max. brake fluid content (initial filling) l (Imp. pint, US quart) | app. 0.3 (0.53, 0.32) | | | |
| Brake disc lateral runout mm (in) | 0.1 (0.004) | | | |
| **Rear wheel:** | Leading and trailing shoe drum | | | |
| Brake drum diameter mm (in)<br>Brake drum max. wear limit mm (in) | 200 (7.87)<br>201.5 (7.93) | | | |
| Lining width mm (in) | 30 (1.18) | | | |
| Effective rubbed area cm² (in²) | 89 (13.8) | | | |
| Min. lining thickness mm (in) | 1.5 (0.06) | | | |
| **Rear wheel:** | | | Disc brake | |
| Disc diameter mm (in) | | | 260 (10.24) | |
| Min. disc thickness | | | 4.6 (0.18) | |
| Effective rubbed area cm² (in²) | | | 37 (5.74) | |
| Min. brake pad thickness mm (in) | | | 1.5 (0.06) | |
| Max. permissible runout of braking surface in relation to wheel hub mm (in) | | | 0.03 (0.0012) | |

## Specifications (1981 models)

| Model | R 100 | R 100 CS | R 100 RT | R 100 RS |
|---|---|---|---|---|
| Permissible wheel loads | | | | |
| - front kg (lb) | | 190 (419) | | |
| - rear kg (lb) | | 280 (617) | | |

**Tightening torques Nm (lb.ft) and friction values in Ncm**

| | | |
|---|---|---|
| Whell bearing friction at specified axle nut tightening torque | Ncm | 15 - 30 |
| Front and rear quick-release axle nuts | Nm (lb.ft) | 48 (35) |
| Axle clamp bolts | Nm (lb.ft) | 17 (12.5) |

All other bolts and nuts are to be tightened to the customary values as shown in the manufacturers' tables and on the latest BMW 60002.0 standards sheet





## Wheel bearings (front spoked wheel)

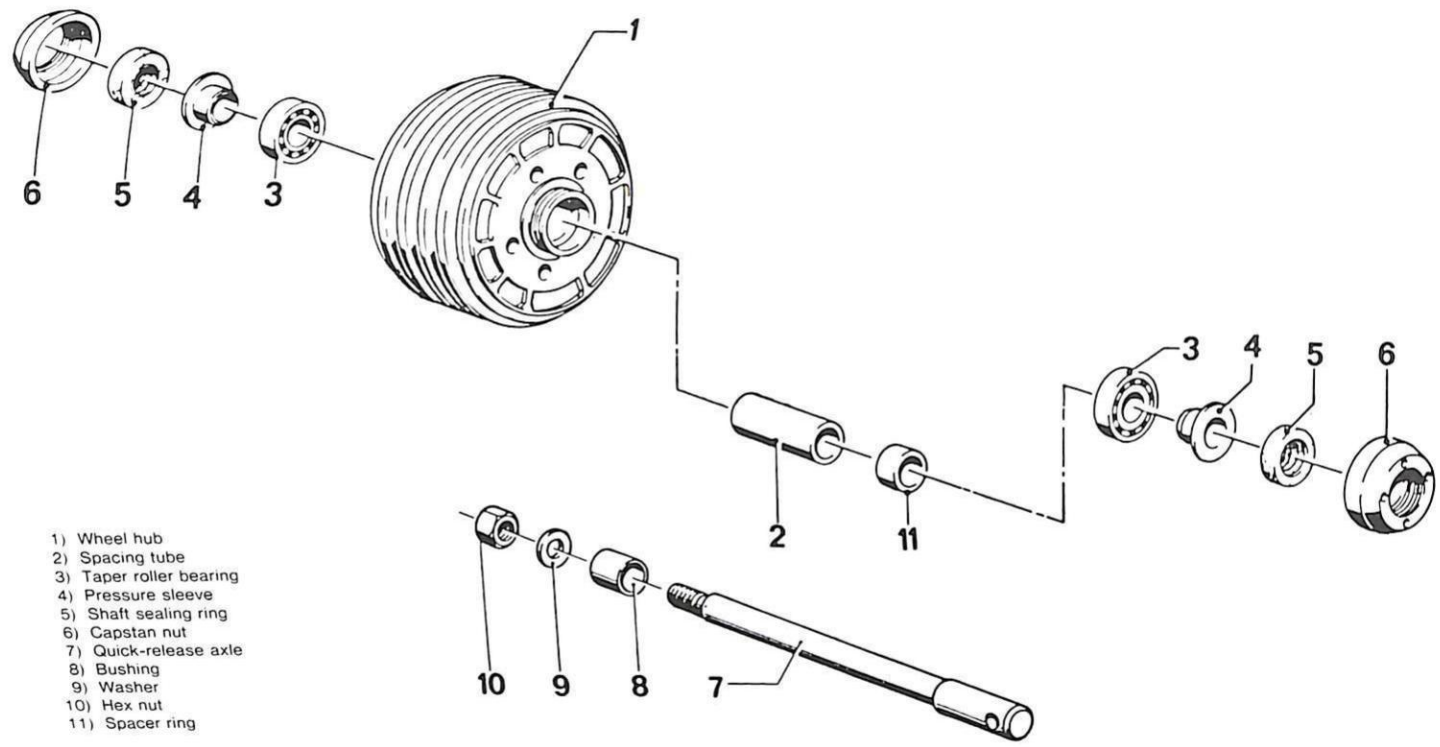


1) Wheel hub
2) Spacing tube
3) Taper roller bearing
4) Pressure sleeve
5) Shaft sealing ring
6) Capstan nut
7) Quick-release axle
8) Bushing
9) Washer
10) Hex nut
11) Spacer ring

# Wheel bearings (rear spoked wheel)

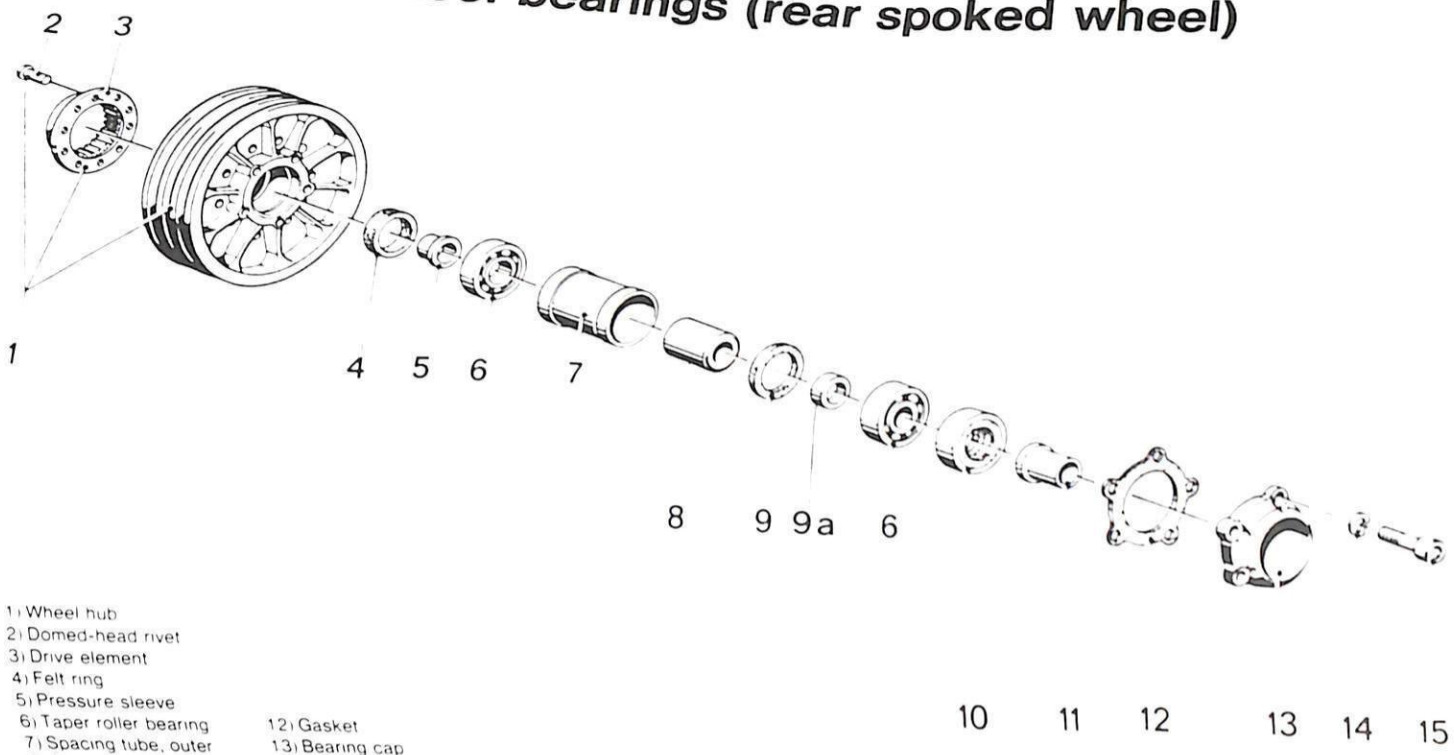


1) Wheel hub
2) Domed-head rivet
3) Drive element
4) Felt ring
5) Pressure sleeve
6) Taper roller bearing
7) Spacing tube, outer
8) Spacing tube, inner
9) Ring
9a) Spacing ring
10) Shaft sealing ring
11) Pressure sleeve
12) Gasket
13) Bearing cap
14) Spring washer
15) Machine screw



# Wheel bearings (front cast alloy wheel)

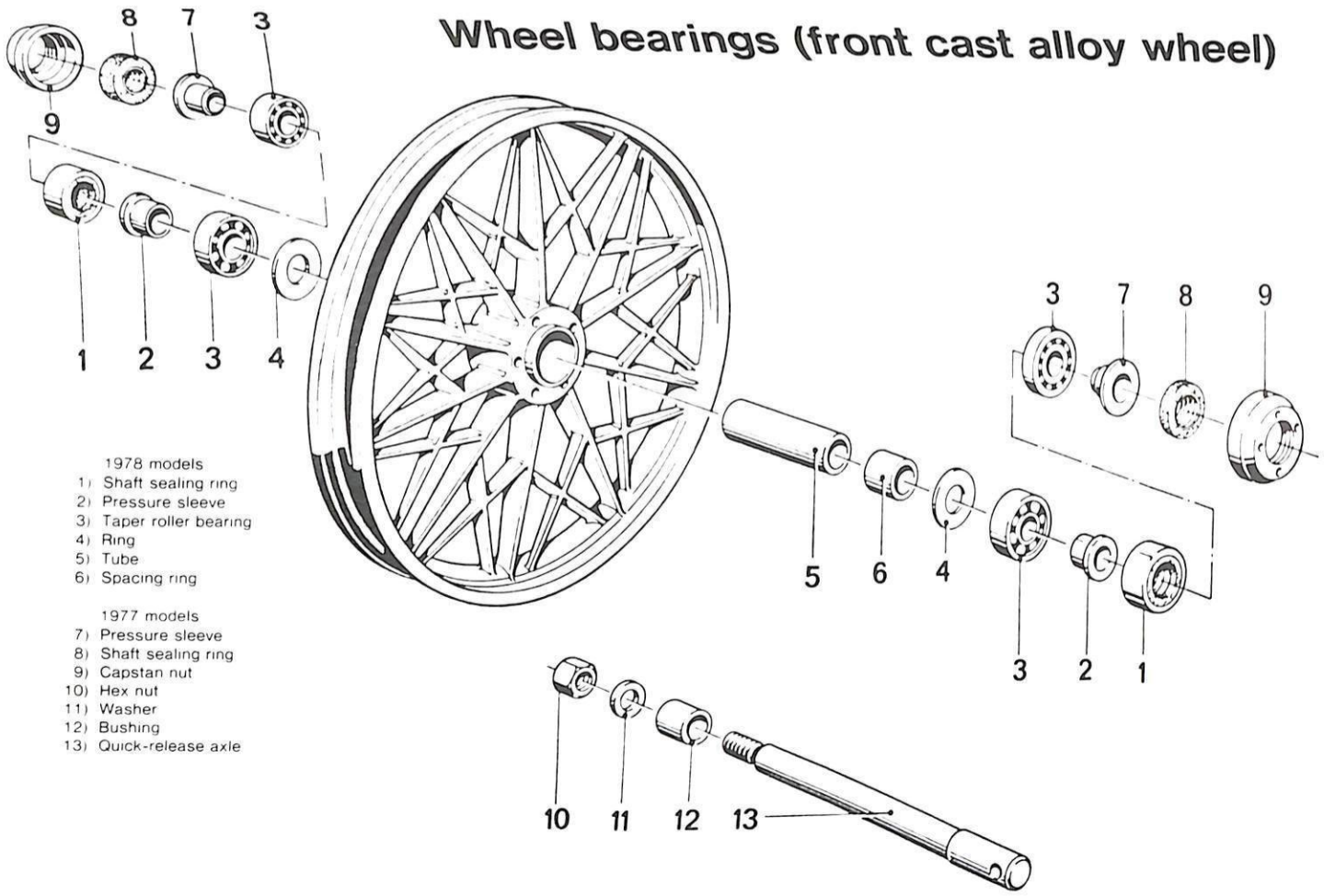


1978 models
1) Shaft sealing ring
2) Pressure sleeve
3) Taper roller bearing
4) Ring
5) Tube
6) Spacing ring

1977 models
7) Pressure sleeve
8) Shaft sealing ring
9) Capstan nut
10) Hex nut
11) Washer
12) Bushing
13) Quick-release axle

# Wheel bearings (rear cast alloy wheel)

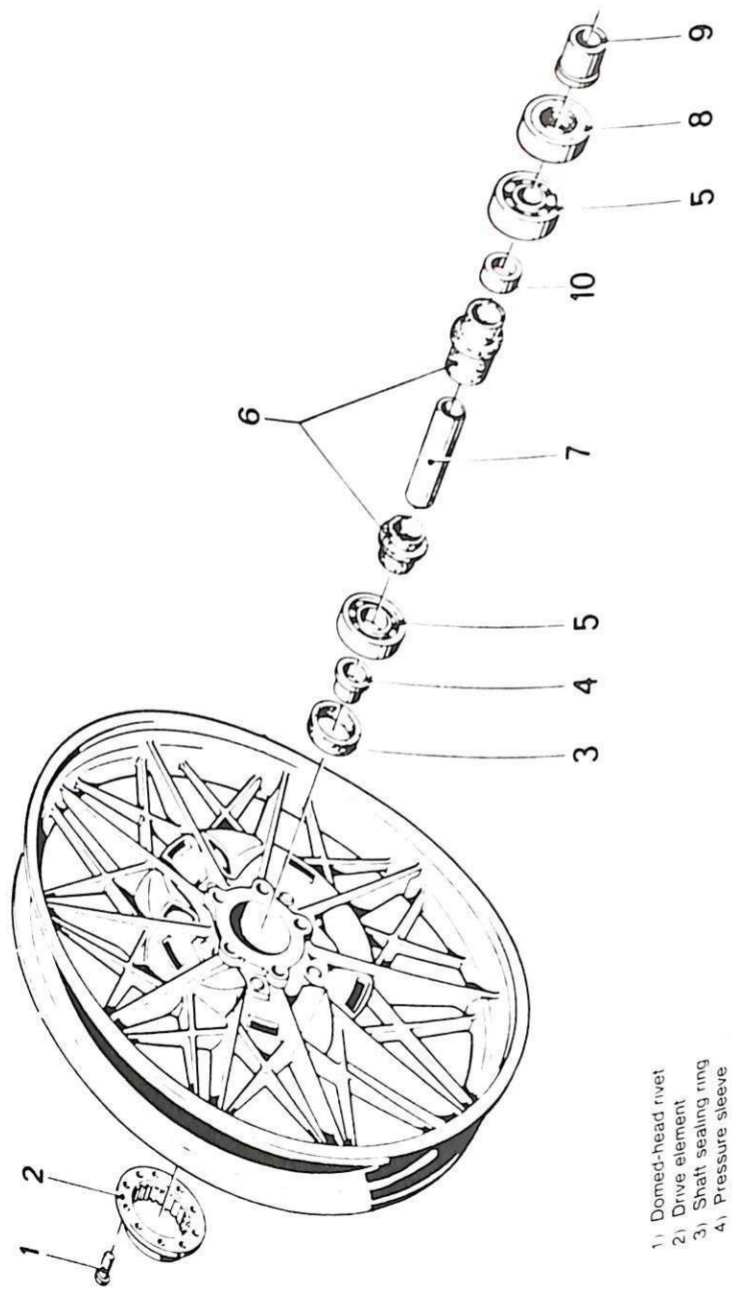


1) Domed-head rivet
2) Drive element
3) Shaft sealing ring
4) Pressure sleeve
5) Taper roller bearing
6) Ring
7) Spacing tube
8) Shaft sealing ring
9) Pressure sleeve
10) Spacing ring



## 36 30 028 Wheels – static balancing

Push the balancing shaft (1) through the wheel bearings and preload them slightly with knurled nut (2).

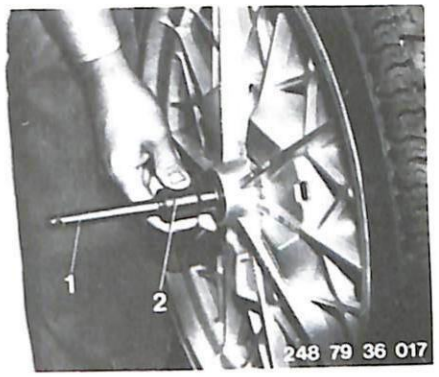


■

Mount the wheel on balancing device BMW No. 36 3 600 and allow it to spin freely to a standstill. Attach a weight (arrow) opposite the heaviest point.

**Note:** when correctly balanced, the wheel should stop in any position. In the case of spoked wheels, do not drive the weight on firmly on the balancing block.

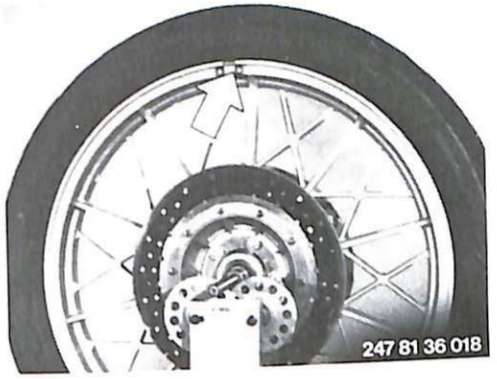


■

For cast alloy wheels, the weights are attached with the aid of assembly pliers BMW No. 36 3 830.

Bring the pliers as close to the rim as possible, press together and push on the weight retaining clip. The amount of weight needed must be divided equally between the left and right sides of the rim.

**Warning:** maximum balancing weight 60 g (2 oz).

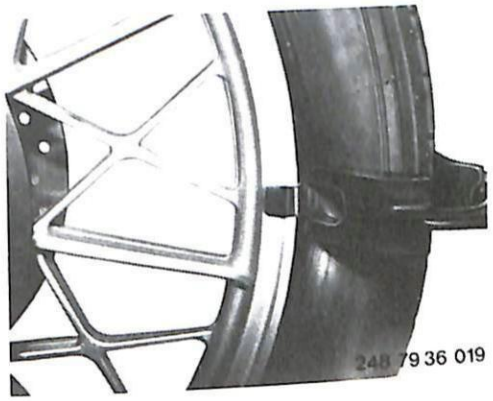


■

## 36 30 300 Front wheel – removing and installing

Place the motorcycle on its center stand and support it under the oil sump.

247 77 36 10

■

Unscrew axle nut (1) with washer. Loosen the clamp bolts (2) for the front axle (Allen screws with washers) and pull out front axle (3), using a drift.

**When installing:** grease the front axle lightly. First tighten the axle nut (insert a mandrel if necessary to prevent it from turning. Next compress the front forks strongly several times, then tighten the clamp bolts. This is a precaution to prevent stresses being trapped in the fork slider tubes.

To avoid having to reset the twin-disc brake swing calipers, make sure that the wheel revolves in the same direction as before it was removed.

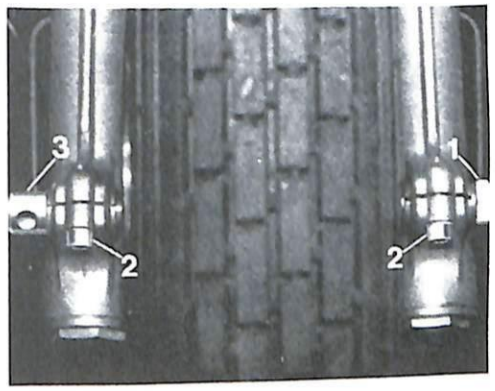


■

Take out the front wheel, swinging the brake caliper out to clear the wheel.

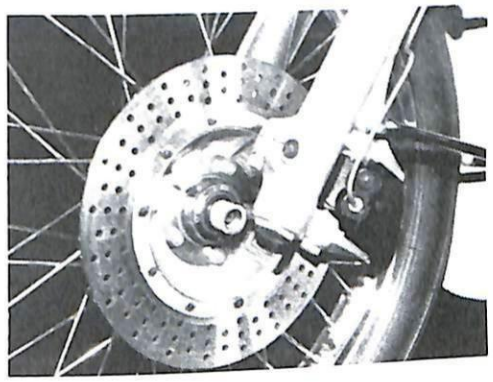

■

From 1981 models on, one of the brake calipers of the twin disc brake must be stripped down before the front wheel can be removed.

For tightening torques, see Specifications.

■

## 36 30 320 Rear wheel – removing and installing

Place the motorcycle on its center stand and prop it up on additional supports.

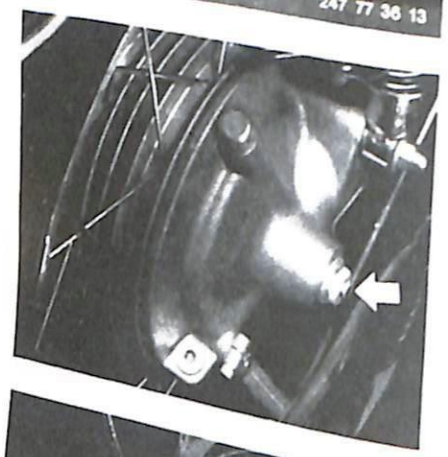

Unscrew the quick-release axle nut on the drive side and remove it with the washer.

If a rear disc brake is installed, detach the strut from the brake caliper support plate and fold it to the rear.

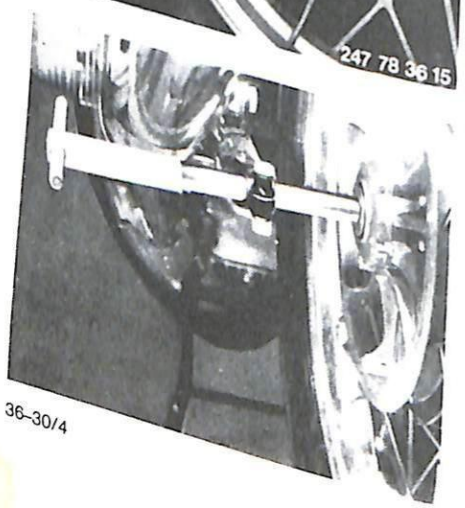

Unscrew the quick-release axle clamp screw nut at the left arm of the swinging fork, and remove it together with the hex bolt and spring washer. Pull the axle out with a mandrel.





If the motorcycle has a rear disc brake, press the brake hose out of the retaining clip on the swinging fork arm. Pull the brake caliper and its support plate away from the disc and place them on a soft cloth. Secure with wire.

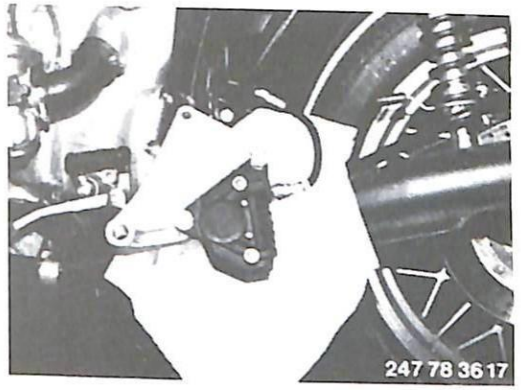


Pull the rear wheel away from the final drive and remove from the motorcycle, which should be tilted slightly to the right.

**When installing:** clean the axle and splines thoroughly and apply a high-viscosity grease.
Turn the quick-release axle as it is inserted. After tightening the quick-release axle nut (1), compress the motorcycle's suspension fully before tightening clamp screw (2). The cross-hole in the head of the axle shaft must point to the rear.

For tightening torques, see Specifications.

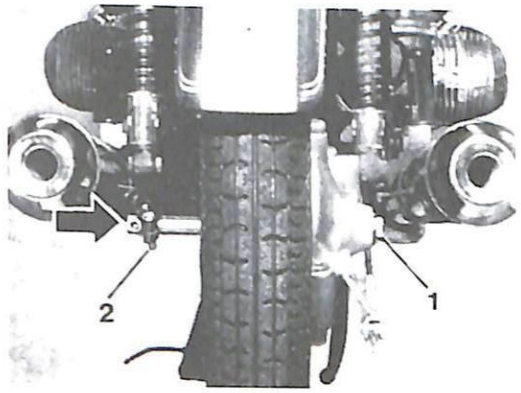

## 36 31 321 Spokes of one wheel (front or rear) – renewing

Remove (install) front wheel – 36 30 300
or
Remove (install) rear wheel – 36 30 320

The combined spoking gauge, BMW No. 36 3 850, is needed for the front or rear wheel. Wheel hubs obtained as spare parts have an oversize internal diameter which must be turned out to the nominal figure of 200 + 0.185 mm (7.874 + 0.0073 in) after spoking and centering. The hub must be mounted on the axle centerline and the surface skimmed to as fine a finish as possible. This will eliminate the distortion which is bound to occur in the wheel hub as a result of spoking. Maximum permissible runout of braking surface in relation to wheel hub is 0.02 mm (0.0008 in).

Place the wheel hub with bearing on the workbench with the brake drum side down. Push two spokes (crossing at the hub) with underlay washers through the hub; note that the spoke holes in the hub are at different heights.

■

Position the wheel rim so that the stamped mark on the inside of the rim shoulder is at the brake-drum side and the arrow points in the correct direction of forward travel. The pressed-in spoke nipple locating holes must point precisely in the direction of the spokes inserted into the hub. Note that the higher spoke must enter a higher hole on the rim, and the lower spoke a lower hole. Insert the remaining spokes similarly and install the nipples.

Tighten the nipples uniformly. Clamp wheel rim and hub with quick-release axle into special fixture BMW No. 36 3 600.

■

Check the distance from rim to hub with a spoking gauge offered up on the brake-drum side.

■

**When installing:** drive the spoke heads through fully with a suitable drift. Remove (install) rear wheel – 36 30 320.

■

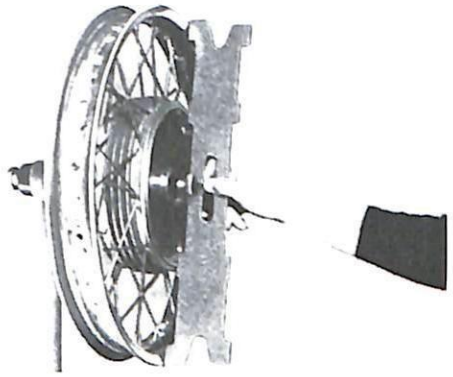

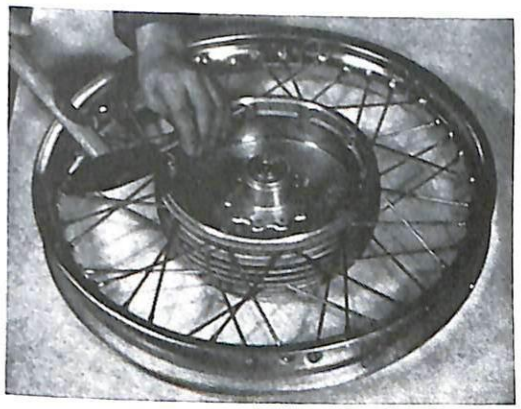

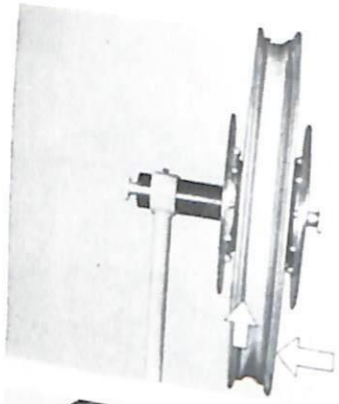

For maximum radial and lateral runout measured at the rim shoulder, see Specifications

**Grind away any spoke ends which project too far**, or else they will damage the inner tube.
Retension the spokes after the first 1000 km (600 miles). All wheels must be balanced after the tyre has been fitted.

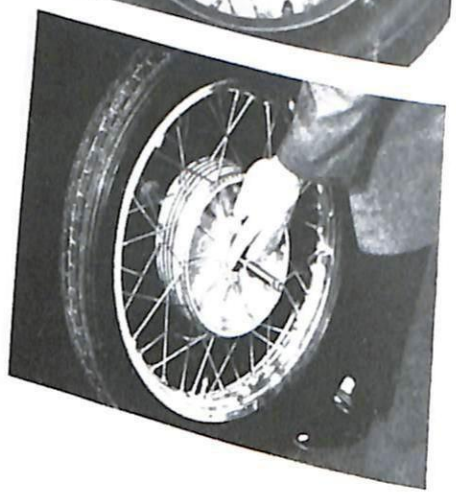

## 36 31 371 Wheel bearings of one wheel (front or rear) – renewing

**Rear spoked wheel**

Remove (install) rear wheel – 36 30 320.

Take out the Allen screws and set them aside together with the spring washers.

Remove the bearing cap with its lip-type seal and the pressure sleeve.

**When installing:** use the quick-release axle to center the bearing cap.

Heat the wheel hub. Insert the rear wheel quick-release axle with reducing bushing into the wheel bearings. Push hollow-drilled drift BMW No. 36 3 700 over the quick-release axle on the brake side.
Hold the hub on the left with one hand at the bearing cluster to prevent it from moving.
Knock the bearing out of the hub from the brake side.

Before installing the bearings in the hub again, check that they are free from play. To do this, clamp the rear wheel quick-release axle into the vice, using suitable jaws. Install the complete bearing cluster, consisting of the left pressure sleeve, the left taper roller bearing, the spacing ring, the inner spacing bushing, the cup, the spacing bushing, the right taper roller bearing and the right pressure sleeve. Install the spacing sleeve and preload with the quick-release axle nut.
The correct bearing setting is when the outer spacing sleeve can just be moved to and fro between the two taper roller bearing outer races, but tends to stick (a tight sliding fit). Failing this, remachine the spacing ring or install another ring of a different thickness.
For tightening torque of quick-release axle nut, see Specifications.





Take off the equalizing sleeve, clean the bearings and fill them with grease (see Specifications).
Heat the wheel hub to app. 100° C (212° F) and insert the complete bearing cluster including the pressure sleeves. Remove the quick-release axle and the left pressure sleeve. Screw on the bearing cap (with the lip-type seal in position) tightly, using the quick-release axle for centering purposes. Install the left pressure sleeve.

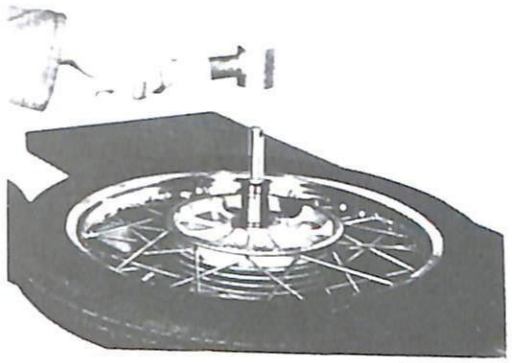

Check bearing adjustment with a torsiometer (friction tester). To do so, insert the quick-release axle into the wheel bearings and preload with the 85 mm (3.35 in) spacing sleeve and hex nut.
Place the friction tester with adapter and socket wrench insert on the quick-release axle nut.
For friction value and tightening torque, see Specifications.

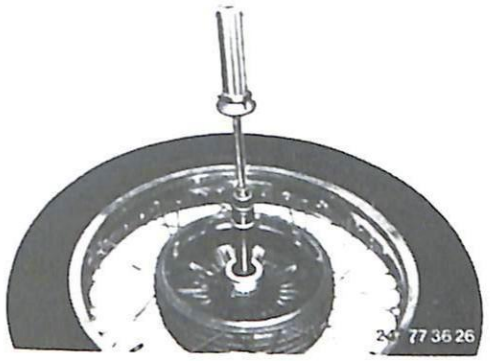


**Rear cast alloy wheel** (with disc brake)

Heat the wheel hub to app. 100° C (212° F). Remove the pressure sleeve on the brake disc side or the drive side, and pull out the lip-type seal with Kukko internal puller No. 21/4.
Take out the taper roller bearing.

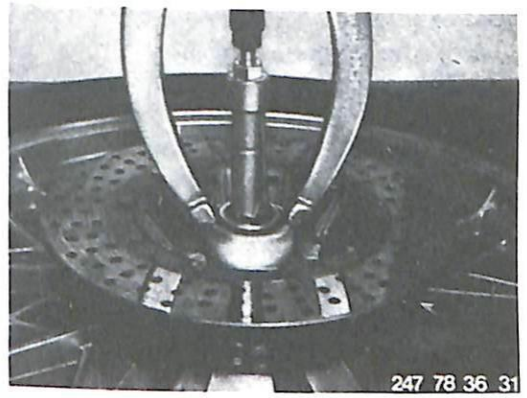


Using Kukko internal puller BMW No. 00 8 551, pull out the bearing shell and take out the spacing sleeve.

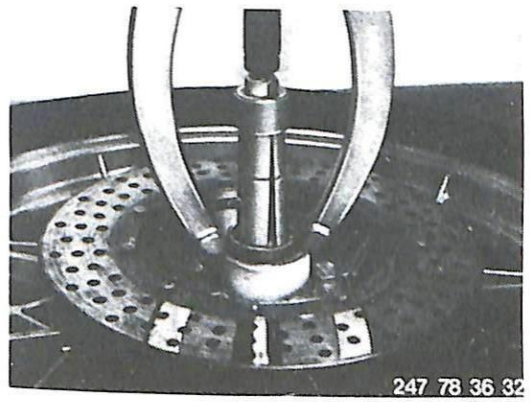

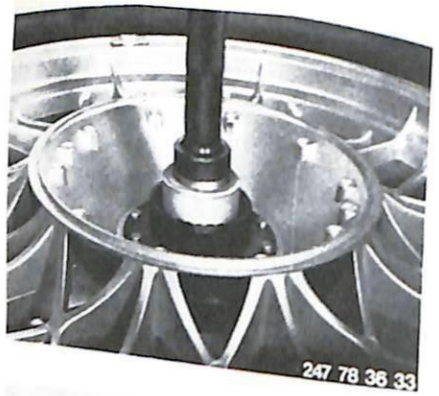


The bearing shells and sealing rins are pressed in with drift BMW No. 00 5 550, the hub must be heated to app. 100° C (212° F).

After pressing in, the sealing rings must be flush with the upper surface of the hub.

**When installing:** drive in the sealing rings before installing the pressure sleeves.

■

**Front spoked wheel**

Remove (install) front wheel – 36 30 300.

Unscrew end cap with pin wrench BMW No. 36 3 650.

■

Press the guide sleeve out of the end cap; force the bearing off the sleeve.

Heat the front wheel hub to app. 100° C (212° F) and knock out the bearing shells.

**When installing:** heat the bearing when pushing on to the guide sleeve.

■

Place the quick-release axle through the wheel hub and preload the bearings with the 50 mm (2 in) spacing sleeve and the axle nut.

Mount the friction tester with adapter and socket wrench insert on the axle nut, and check the bearing adjustment.

For friction value and tightening torque, see Specifications.



**Front cast alloy wheel**

Unscrew end cap (1) with the pin wrench and take out taper roller bearing (2). There is a spacing ring (3) on the left side (looking forwards).
Note pressure sleeve (4).

■

Remove bearing shells with Kukko internal puller BMW No. 00 8 551, after heating the hub to app. 100° C (212° F).

To press in the bearing shell, use drift BMW No. 00 5 550.

247 78 36 34

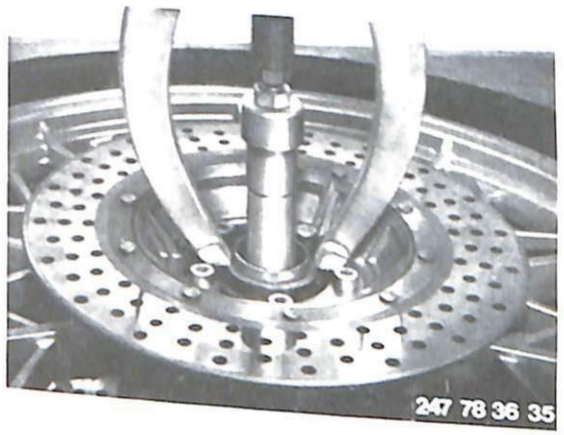


■

**Front cast alloy wheel (without end cap)**

Pull the pressure ring through the sealing ring to remove. Lever out the sealing ring with a screwdriver (arrow), and take out the taper roller bearing.

**When installing:** drive the sealing ring in until flush using drift BMW No. 00 8 550.

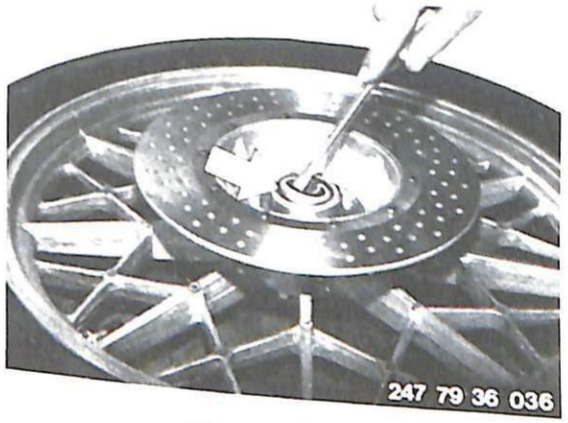


■

Pull the bearing shell out of the hub with Kukko puller BMW. No. 00 8 551.

**When installing:** heat the hub to app. 80° C (176° F) and drive in with drift BMW No. 00 8 550.

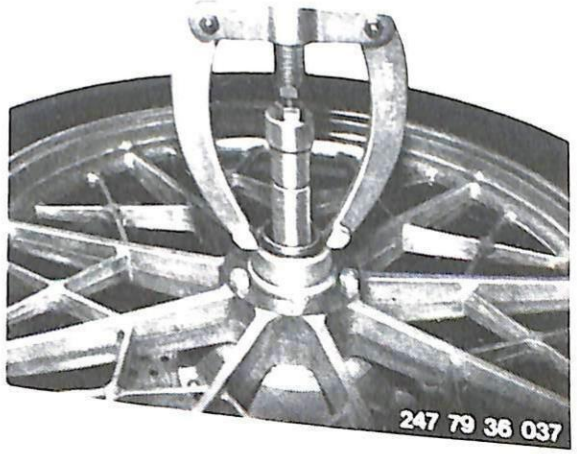


■

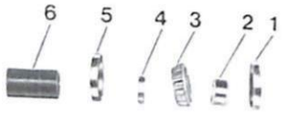


E 81 36 021

1 Sealing ring
2 Pressure element
3 Taper roller bearing
4 Spacing ring
5 Bearing shell
6 Spacer



# 46 Frame

| | | Page 46– 0/3 |
|---|---|---|
| Specifications | | 46– 0/5 |
| Specifications (1979 models) | | 46– 0/7 |
| Specifications (1981 models) | | 46–51/1 |
| 46 51 040 | Wheel track offset – measuring (with alignment gauge) | 46–51/3 |
| 46 51 509 | Front section of frame – checking | 46–52/1 |
| 46 52 000 | Center stand – removing and installing | 46–52/2 |
| 46 53 000 | Prop stand – removing and installing | 46–61/1 |
| 46 61 000 | Front mudguard – removing and installing | 46–62/1 |
| 46 62 000 | Rear mudguard – removing and installing | 46–63/1 |
| 46 63 020 | Cockpit fairing – removing and installing | 46–63/2 |
| 46 63 031 | Windshield for "Touring" integral fairing – removing and installing | 46–63/2 |
| 46 63 031 | Windshield for "Touring" integral fairing – removing and installing (1981 models) | 46–63/3 |
| 46 63 105 | Integral fairing – removing and installing | 46–63/5 |
| 46 63 106 | "Touring" integral fairing – removing and installing | 46–63/7 |
| 46 63 120 | Side section of integral or "Touring" integral fairing – removing and installing | 46–63/8 |
| 46 63 201 | Storage compartment – removing and installing | 46–63/8 |
| 46 63 231 | Ventilation outlet – removing and installing | 46–63/9 |
| | Troubleshooting – frame | |

*Frame*

## *Technical Data*

| ***Model*** | R 60 7 | R 75 7 | R 80 7 | R 100 7 | R 100 S | R 100 RS |
|---|---|---|---|---|---|---|
| Frame | Double-loop tubular steel frame welded from oval tubes with bolted on rear frame section – not suitable for sidecars – | | | | | |
| Position of factory plate | on steering head, right gusset plate | | | | | |
| Position of frame number | on steering head, right gusset plate | | | | | |
| **Motorcycle dimensions and weights** Maximum width (engine) mm(in) | 746 (29.37) | | | | | |
| Maximum height without mirror mm(in) (Motorcycle unladen) | 1080 (42.5) | | | | 1210 (47.6) | 1310 (51.6) |
| Saddle height, unladen mm(in) | 810 (31.9) | | | | 820 (32.3) | |
| Maximum length mm(in) | 2180 (85.8) | | | | | |
| Wheelbase mm(in) | 1465 (57.7) | | | | | |
| Max. permissible non-alignment of front and rear wheels mm(in) | 4 (0.16) | | | | | |
| Road clearance when loaded with 75 kg (165 lb) driver mm(in) | 165 (6.5) | | | | | |
| Empty weight plus lubricants, without fuel and tools kg(lb) | 195 (430) | | | | 200 (441) | 210 (463) |
| Empty weight plus lubricants, full tank and tools kg(lb) | 215 (474) | | | | 220 (485) | 230 (507) |
| Permissible gross weight = empty weight plus rider and passenger and luggage kg(lb) | 398 (877) | | | | | |
| Permissible wheel loadings<br>Solo front at 27 psi (1.9 bar) kg(lb)<br>rear at 28.5 psi (2.0 bar) kg(lb) | 160 (353)<br>245 (540) | | | | | |
| Permissible wheel loadings with pillion passenger<br>front at 28.5 psi (2.0 bar) kg(lb)<br>rear at 32 psi (2.25 bar) kg(lb) | 178 (392)<br>270 (595) | | | | | |
| Maximum capacity including rider | 2 persons | | | | | |

**Tightening torques in Nm (lb. ft)**

| | | | |
|---|---|---|---|
| Securing bolts for rear frame section | 25 (18.4) | Center stand securing bolts | 43 – 48 (32 – 35) |
| Securing nuts for upper front wheel mudgard bracket | 20 – 25 (14.7 – 18.4) | | |

All other nuts and bolts should be tighened to the values given in the tables issued by the manufacturers or the new BMW standards sheet 60002.0.

12 77 Alteration

*Frame*

## *Specifications – '79 models*

| **Model** | R 80/7 | R 100 T | R 100 S | R 100 RT | R 100 RS |
|---|---|---|---|---|---|
| Frame | Double-loop tubular steel frame welded from oval tubes with bolted on rear frame section – not suitable for sidecars – | | | | |
| Position of factory plate | on steering head, right gusset plate | | | | |
| Position of frame number | on steering head, right gusset plate | | | | |
| **Motorcycle dimensions and weights** Maximum width (engine) mm (in) | 746 (29.37) | | | | |
| Maximum height without mirror mm (in) (Motorcycle unladen) | 1080 (42.5) | | | 1210 (47.6) | 1310 (51.6) |
| Saddle height, unladen mm (in) | 810 (31.9) | | | 820 (32.3) | |
| Maximum length mm (in) | 2180 (85.8) | | | | |
| Wheelbase mm (in) | 1465 (57.7) | | | | |
| Max. permissible non-alignment of front and rear wheels mm (in) | 4 (0.16) | | | | |
| Road clearance when loaded with 75 kg (165 lb) driver mm (in) | 165 (6.5) | | | | |
| Empty weigt plus lubricants, without fuel and tools kg (lb) | 195 (430) | | | 200 (441) | 210 (463) |
| Empty weight plus lubricants, full tank and tools kg (lb) | 215 (474) | | | 220 (485) | 230 (507) |
| Permissible gross weight = empty weight plus rider and passenger and luggage kg (lb) | 398 (877) | | | | |
| Permissible wheel loadings Solo front at 27 psi (1.9 bar) kg (lb) rear at 28.5 psi (2.0 bar) kg (lb) | 160 (353)<br>245 (540) | | | | |
| Permissible wheel loadings with pillion passenger front at 28.5 psi (2.0 bar) kg (lb) rear at 32 psi (2.25 bar) kg (lb) | 178 (392)<br>270 (595) | | | | |
| Maximum capacity including rider | 2 persons | | | | |

11 78 Addition

## Specifications (1981 models)

| Model | R 100 | R 100 CS | R 100 RT | R 100 RS |
|---|---|---|---|---|
| Frame | Twin loop, oval-section welded steel tube, with bolted-on rear section (not suitable for sidecar use) | | | |
| Location of manufacturer's plate | on steering head, right gusset plate | | | |
| Location of frame number | on steering head, right gusset plate | | | |
| **Motorcycle dimensions and weights** Overall width of engine mm (in) | 746 (29.4) | | | |
| Max. height excl. mirror (motorcycle unladen) mm (in) | 1080 (42.5) | 1210 (47.6) | 1465 (57.7) | 1300 (51.2) |
| Height of seat, unladen mm (in) | 820 (32.3) | | | |
| Overall length mm (in) | 2210 (87.0) | | | |
| Wheelbase mm (in) | 1465 (57.7) | | | |
| Max. permissible track offset mm (in) | 4 (0.16) | | | |
| Ground clearance with 75 kg (165 lb) rider seated mm (in) – normal-load position | 115 (4.53) | | | |
| Unladen weight incl. lubricants, without fuel and tools kg (lb) | 198 (437) | 200 (441) | 217 (478) | 210 (463) |
| Unladen weight incl. lubricants, 24 l (5.3 Imp., 6.3 US gal) of fuel and tools kg (lb) | 218 (481) | 220 (485) | 237 (522) | 230 (507) |
| Permissible gross weight = unladen weight plus rider/pillion passenger and luggage kg (lb) | 440 (970) | | | |
| Max wheel loads with pillion passenger – front<br>– rear | 190 (419)<br>280 (617) | | | |
| Max. number of persons to be carried | 2 | | | |

## 46 51 040 Track offset – checking (with alignment gauge)

Position motorcycle in track alignment gauge BMW No. 36 3 900. The gauge should be on the floor or on a hoist. Fold away the stops (1), pull in the bars (2), push the motorcycle into the gauge and rest it on its stand.

| Stop No. | for: |
|---|---|
| 36 3 904 | Spoked rear wheel |
| 36 3 905 | Cast alloy wheel with drum brake |
| 36 3 906 | Cast alloy wheel with disc brake |
| 36 3 908 | Cast alloy wheel with drum brake, 1981 models |
| 36 3 909 | Cast alloy wheel with disc brake, 1981 models |

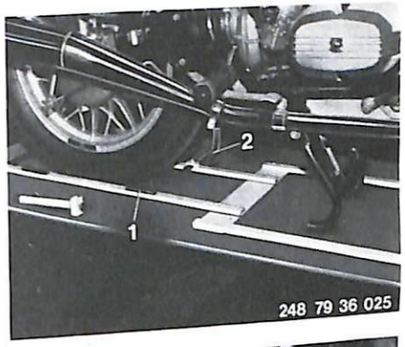


Raise the track aligning template on its legs to about axle or wheel-center height, with the adjustable legs to the rear. Unfold the stops and adjust the leg height so that the legs are touching only the wheel rims. To make this adjustment easier, raise the template slightly at the front. Release the bar lock, taking care not to let the assembly lurch forwards.

Force the template hard against the rear wheel from the right so that both stops are touching the rim.

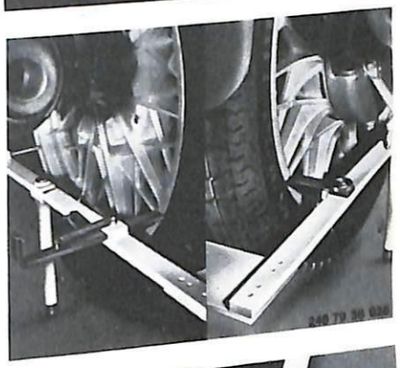

In order to measure track misalignment, the front wheel must be brought parallel to one of the two measuring rails. The distance between the front wheel rim and the measuring rail is measured at the front and back and from the right and left using a rule. The difference between the measurements, divided by two, gives the track alignment.

**Example:**

| | |
|---|---|
| Left, front and rear | = 66 mm (2.60 in) |
| Right, front and rear | = 62 mm (2.44 in) |

66 mm – 62 mm
(2.60 in – 2.44 in) =

$$\frac{4 \text{ mm } (0.16 \text{ in}) \text{ difference}}{2}$$

= 2 mm (0.08 in) track offset.

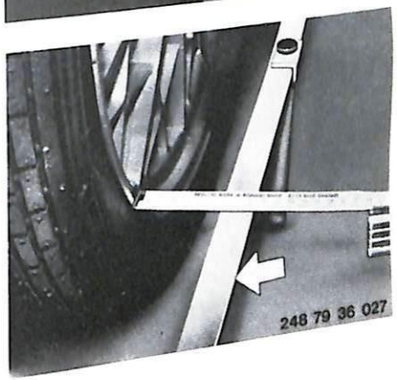

## 46 51 509 Front section of frame – checking

Remove (install) front forks 31 42 100.

The outer bearing races remain in the steering head. Remove (install) left and right carburettors.

■

Offer up frame alignment test gauge (arrow) BMW No. 46 5 600 to the steering head from below, and clamp the frame and gauge together with spindle (1) and nut (2).

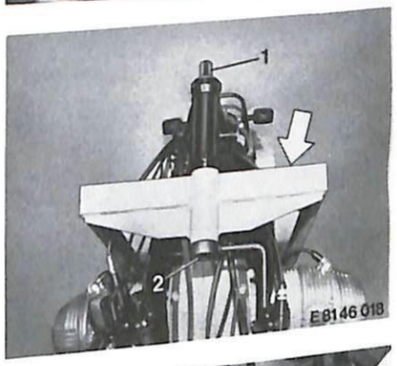


■

Insert the measuring arbors in the frame test gauge and align it so that the distance to the measuring disc is the same at left and right.

The frame is in good condition if the points of both measuring arbors are at approximately the same points within the tolerance circles at left and right (max. deviation 1 mm [0.04 in]).

## 46 52 000 Center stand – removing and refitting

Raise motorcycle under the oil sump so that the center stand hangs free.

247 77 46 10

■

Disconnect springs on the left and right of the center stand.

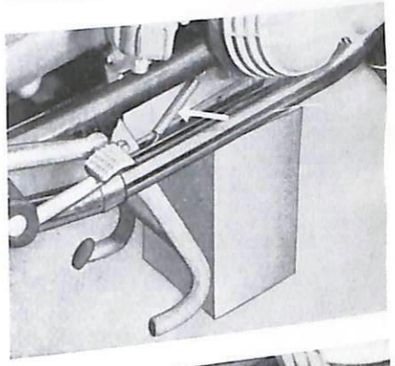

■

Unscrew hexagonal head bolt (arrow) on the left and right and withdraw center stand to the rear, paying attention to the spacer washers.

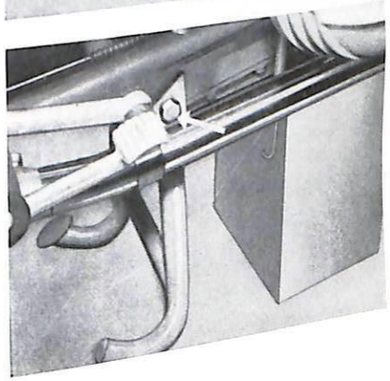

■

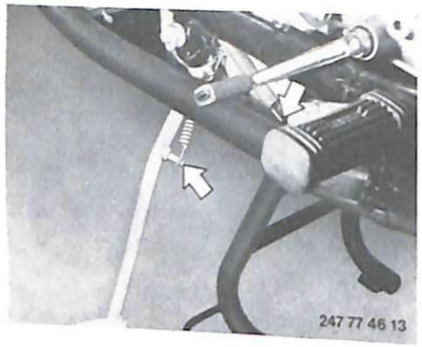


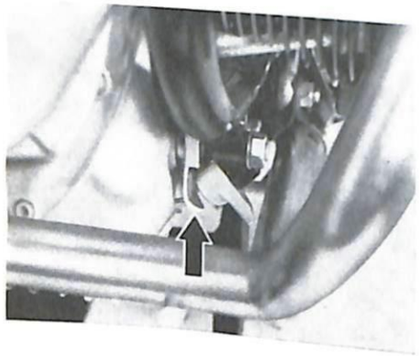

## 46 53 000 Side stand – removing and refitting

Disconnect springs for side stand and center stand.

On R 100 RS, detach left engine fairing.

■

Remove left hand hexagon nut of front engine mounting. Knock through the engine bolt so that the shackle (arrow) can be taken out.

**Note when fitting:** The shackle should be turned in such a way and secured so that the side stand automatically folds back into the normal position when the motorcycle is brought into the vertical position.

■





## 46 61 000 Front mudguard – removing and refitting

Front wheel – remove (36 30 300)

Remove the 2 hexagonal bolts on both sides of the metal section.

■

To renew mudguard without metal section, remove the 4 cap nuts at the mudguard.

**When installing:** do not forget rubber underlay washers.

■

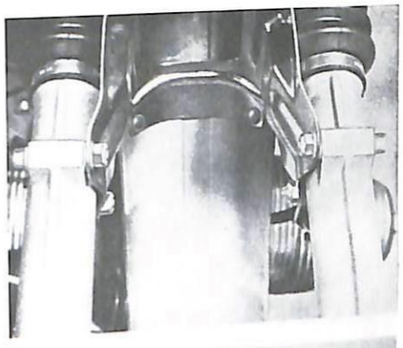

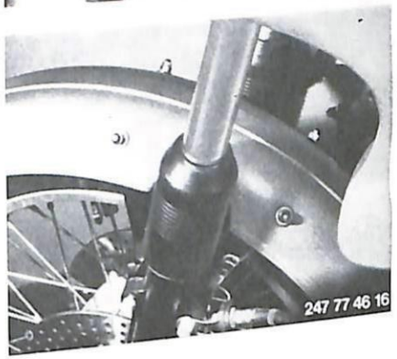

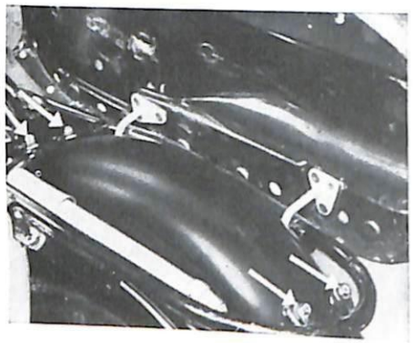

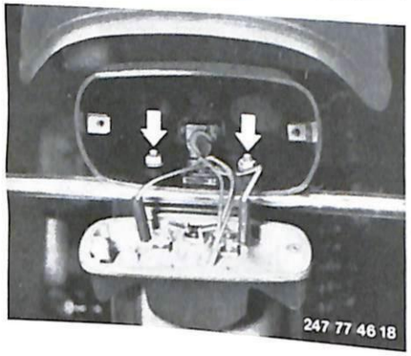


## 46 62 000 Rear mudguard – removing and refitting

Disconnect earth (ground) lead from the battery.

Fold up the dual seat, remove the 4 hexagonal bolts with washers, rubber washers and locknuts (arrows).

■

Remove the two Phillips screws of the rear light and remove the lens with reflector.

Unscrew securing bolts with washers and nuts (arrows) and take off rear light housing with the turn indicator carrier from mudguard.

■



## 46 63 020 Cockpit fairing – removing and attaching

Disconnect battery earth (ground) lead. Remove 1 hex bolt at each holder on upper fork bridge.

Remove front turn indicator – 62 23 170.

■

Tilt the fairing forwards so that headlamp is freed.
Remove right rubber sleeve, carefully pull the cockpit fairing over the right turn indicator and push away from left turn indicator.

**Warning:** Fairing can break easily if spread too far. Disconnect cables at instrument panel and remove cockpit fairing.

■

## 46 63 031 Windshield – removing and installing

Drive pin out of rivet inwards with a suitable drift.
Pull out the rivet and take off the windshield.

■

The windshield is attached with BMW rivet insertion tool 00 9 510. Start with the center rivet, then work outwards to left and right. Insert expanding rivet through windshield and force shank through with insertion tool.

**Note:**

Do not forget the sealing washer.

■

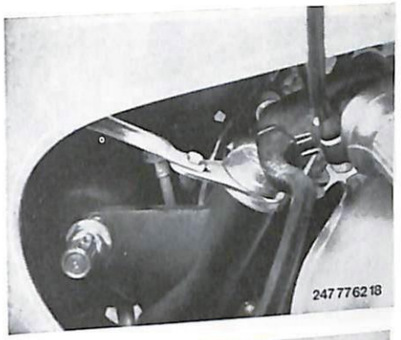


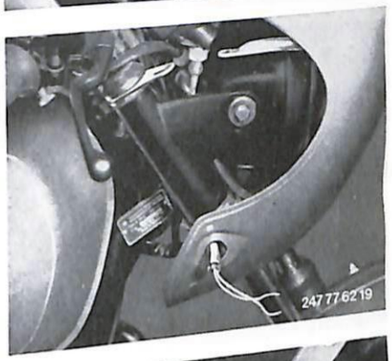

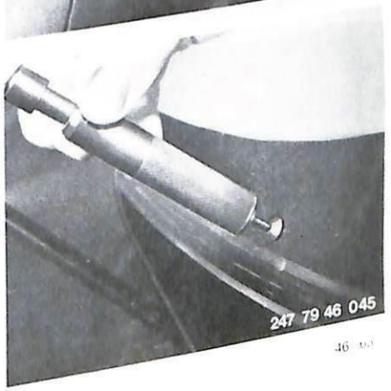

## 46 63 031 Windshield for 'Touring' integral fairing – removing and installing

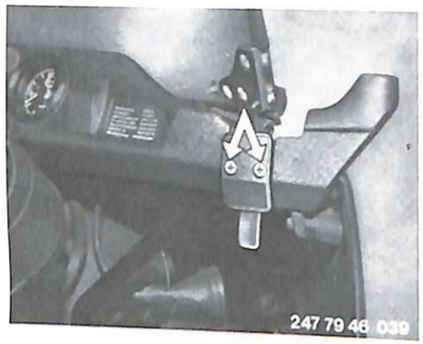


Use a Phillips-head screwdriver to unscrew and remove the left and right locking catches (arrows).

■

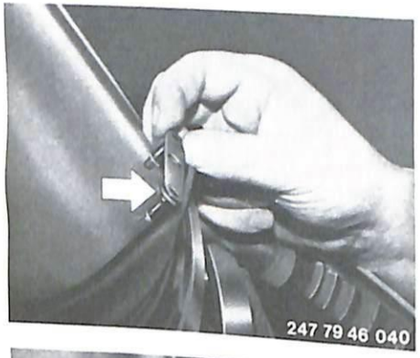


To remove the windshield holder first take off the parking (marker) light, then unscrew the two hex nuts from the inside, push back the rubber and pull out the windshield holder.

**When installing:**

Note O-rings (arrow) for windshield holder, do not overtighten the hex nuts.

■

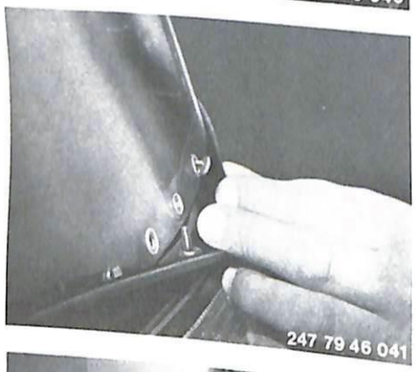


Detach rubber sealing strip from [illegible] windshield from panelling.

■

**When installing:**

Make sure that the plastic guide for the locating rod on the adjusting mechanism is correctly positioned. The thicker end (arrow) must face inwards.

■



## 46 63 031 Windshield for "Touring" integral fairing – removing and installing (1981 models)

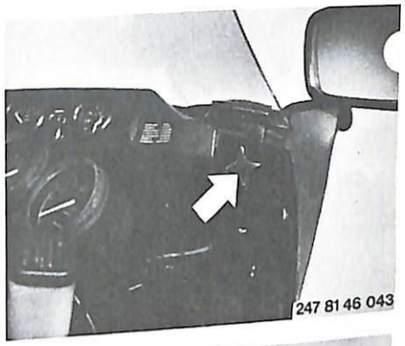


Unscrew star handle (arrow) and take off the underlay washer.

■

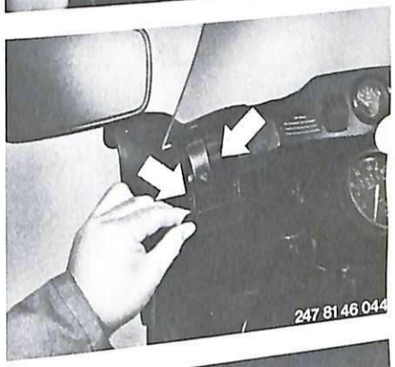


Unscrew the 2 hex bolts (arrows) and take off the baseplate.

■

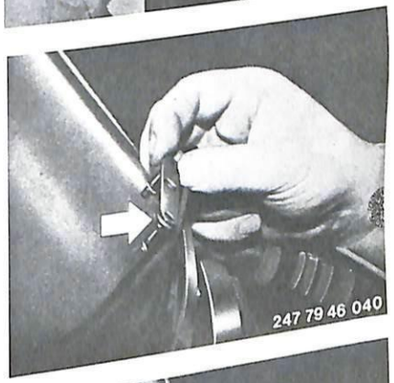


To release the glass holder, remove the marker light, then unscrew the two hex nuts from the inside, fold back the rubber and pull out the glass holder.

**When installing:** note the O-ring (arrow) when the glass holder is installed, do not overtighten the hex nuts.

■

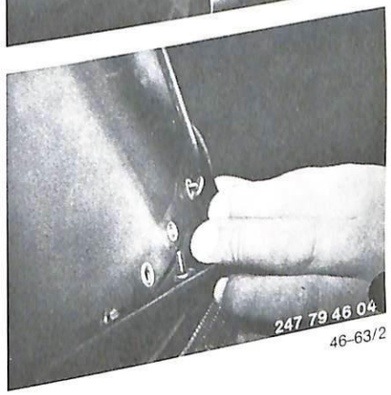


Detach the rubber sealing strip from the windshield and remove the windshield from the fairing.

## 46 63 105 Integral fairing – removing and installing

Detach the exhaust system 18 00 020
Remove the 9 Phillips-head screws from the center engine fairing, pull it down slightly, press to the rear at the top and remove.

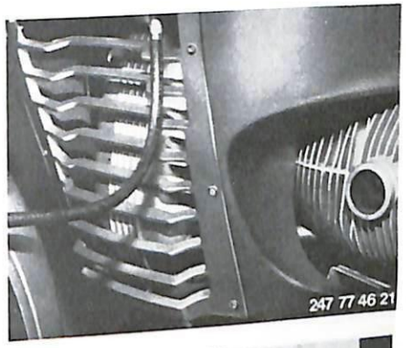


■

Remove one hex bolt (arrow) from engine fairing holder at left and right.

■

Remove one hex bolt (1) for cross-strut mounting and 5 self-tapping screws (5) from the upper fairing section, and take off the left and right engine fairings.

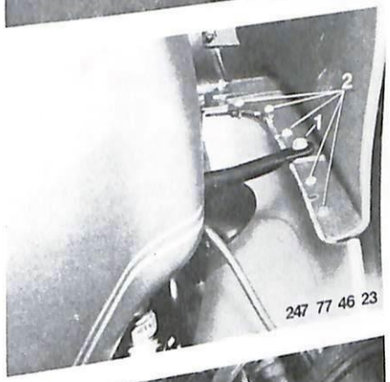


■

Pull sleeves out of screen panel, press down both brake lines with rubber sleeves, remove the 7 Phillips-head screws and take off the fairing section.

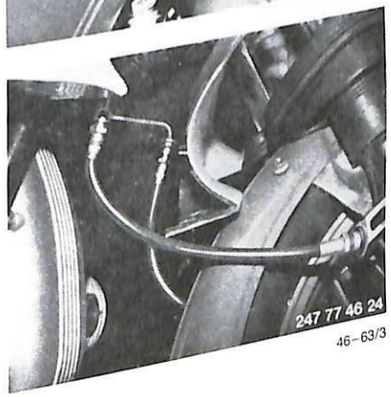


■

**When installing:** Secure sleeves with 'Sicomet 8200' adhesive. Apply one drop at isolated points (arrows).

■

Before removing the fairing, pull right hex bolt, disconnect the 6-pin plug and remove the ignition switch from the instrument panel.

■

Remove the 4 hex nuts from the rearmost mirror and fairing mounting.

■

Loosen one hex bolt at the left and right lower fairing mounts (arrow). Grasp the fairing at the front left and right, and pull away forwards.

**Note:**

When installing plastic sections, tighten bolts and nuts carefully, since the threaded bushings can easily be pulled out or sections broken off.

■





## 46 63 106 'Touring' integral fairing – removing and installing

Detach the exhaust system 18 00 020.
Remove the 9 Phillips-head screws from the center of the engine panelling, pull it down slightly, press to the rear at the top and detach.

■

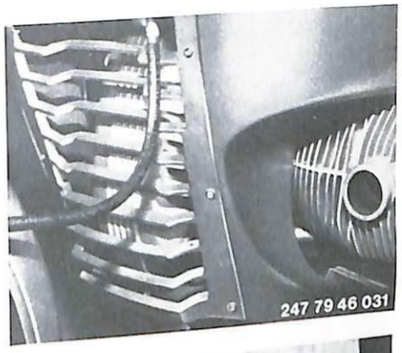


Remove left and right hex bolts (arrow) from engine panelling holders.

■

Remove hex bolt at each cross-strut fastening and the 3 screws in the air plenum chambers.
Detach the engine panelling at left and right.
To remove the hex bolts raise the plenum chambers slightly after removing the screws for the cover next to the plenum chamber (arrows).

■

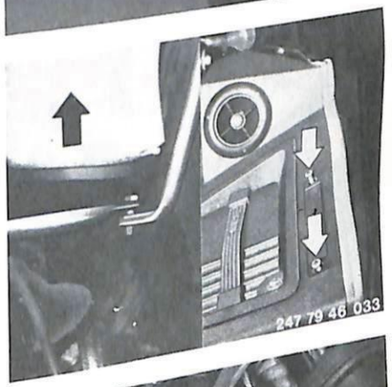


Pull sleeve out of screen panel and press out both brake lines with rubber grommets downwards. Remove the 7 Phillips-head screws and take off the panel.

■

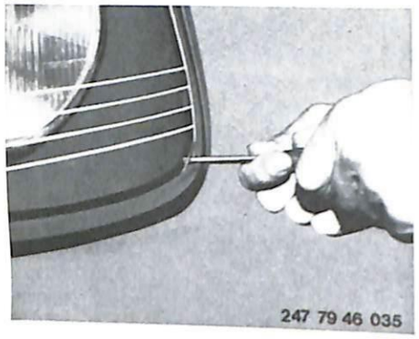


Press away the rubber surround at the corners of the front glass, and remove the Phillips-head screws

**Caution:** avoid damage to glass

Take off the glass and the light tunnel

■

Slacken the 2 hex bolts at the lower left and right of the central mount (arrow)

■

Separate the 6-pole connecting plug and detach the two cable straps (arrows)

■

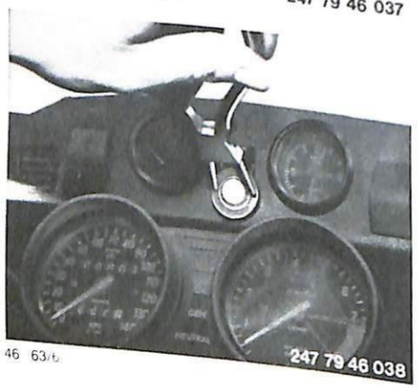


Unscrew circular nut at ignition switch with Seeger circlip pliers and press the ignition switch out of the instrument panel.

Slacken the two hex bolts at the top of the central mount
Pull the fairing away to the front

■



## 46 63 130 Side section of fairing – removing and installing

On RS:
Remove integral fairing – 46 63 105
Detach windshield – 46 63 031
Remove front flashing turn indicator – 63 13 150

On Touring model:
Remove Touring integral fairing – 46 63 106
Detach windshield – 46 63 140
Detach mirror – 52 16 042
Remove air plenum chamber – 46 63 201
Remove front flashing turn indicator – 63 13 150
Place fairing on bench
Drill out hollow rivets for the length of the section to be replaced, using a power drill. Remove side section retaining screw (arrows) and detach side section

■

**When installing:**

First screw side section to fairing, then rivet instrument panel to side section. Use BMW rivet insertion tool 00 9 500. Insert tubular rivet through panel from the inside, hold block against it and screw head former into block from the outside

■

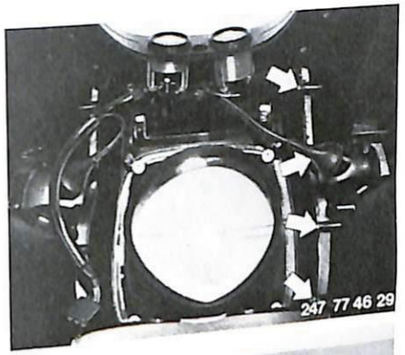


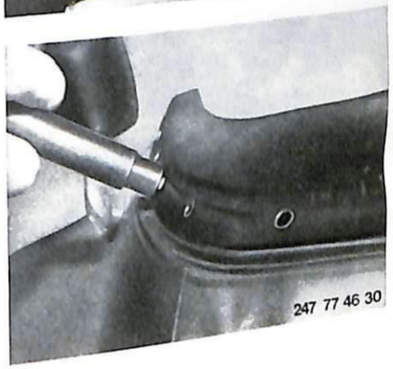

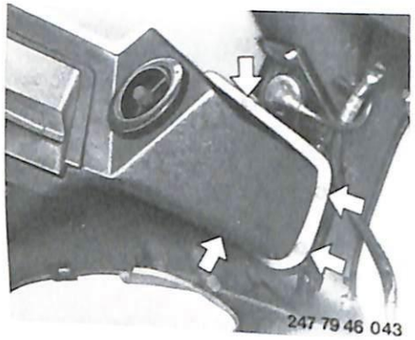


## 46 63 201 Air plenum chamber – removing and installing

Remove Touring integral fairing 46 63 106

Remove the hexagonal screws (arrows) and take off the plenum chamber

■

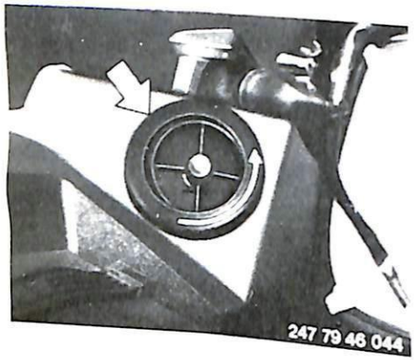


## 46 63 241 Air outlet – removing and installing

Remove the Touring integral fairing 46 63 106

Remove the plenum chamber 46 63 201

Remove the front ring (arrow) by hand and take out the air outlet.

■



### Trouble-shooting – frame and suspension

| Fault | Cause | Remedy |
|---|---|---|
| Telescopic forks sticking | Forks distorted | Unscrew quick-release axle and sheet metal pressing mount<br>Compress forks fully several times<br>Tighten bolts and nuts to correct torques |
| Unsteady straightline running | Defective steering head bearings | Renew |
| | Steering head bearings out of adjustment | Reset |
| | Tire or rim runout | Check vertical and lateral runout and renew affected items |
| | Defective wheel bearing | Renew or adjust |
| | Tire of wrong type or make | Renew (use only approved tire) |
| | Swinging arm bearing preload incorrect | Check setting, correct if necessary |
| | Defective swinging arm bearing | Renew and adjust |
| | One damper defective | Check dampers (install only dampers with approximately identical traction and compression stages) |
| | Track misalignment too great | Check and adjust if necessary (see Specifications) |

# 51 Equipment


| | | Page |
|---|---|---|
| 51 16 042 | Mirrors – removing and installing | 51-16/1 |
| 51 25 030 | Steering lock – removing and installing | 51-25/1 |
| 51 25 050 | Dualseat lock – removing and installing | 51-25/1 |
| 51 25 060 | Lock barrel for dualseat lock – removing and installing | 51-25/2 |

## 51 16 042 Mirror – removing and installing

Unscrew hex nut at base of mirror and pull mirror out upwards.

**When installing:**

Do not forget the spring when assembling the mirror.

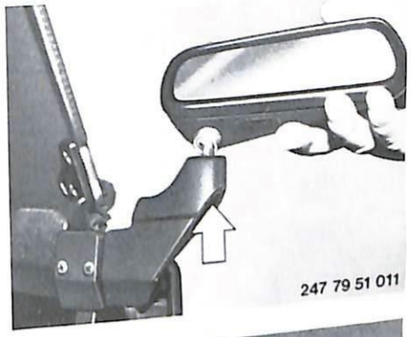


To remove the mirror base unscrew the hex bolt (arrow) and take off the base.

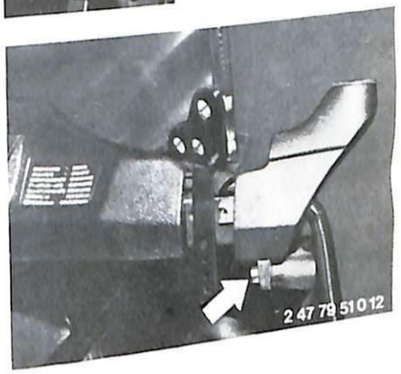

## 51 25 030 Steering lock – removing and installing

Lever off the cover plate (arrow) with a screwdriver.

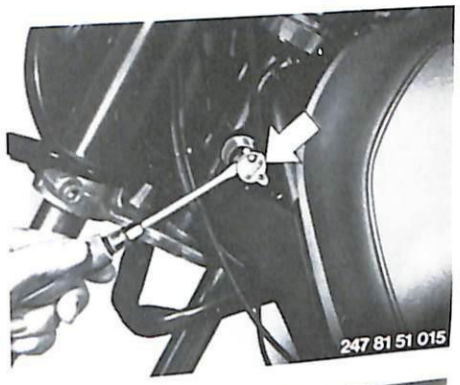


■

Insert key in lock and turn fully counterclockwise (to left).
Pull out the lock barrel.

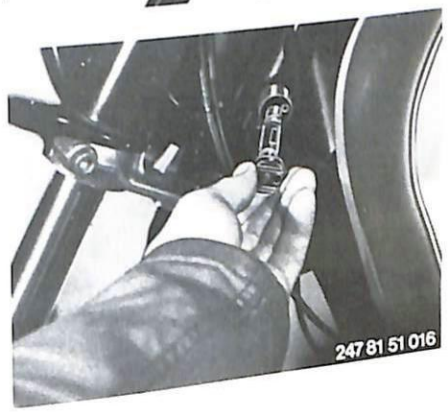


■

## 51 25 050 Dualseat lock – removing and installing

Take out both Phillips-head screws (arrows) and detach cover and lock housing.

**When installing:** insert the back screw loosely first, then the front screw. Make sure that the spring is correctly located.

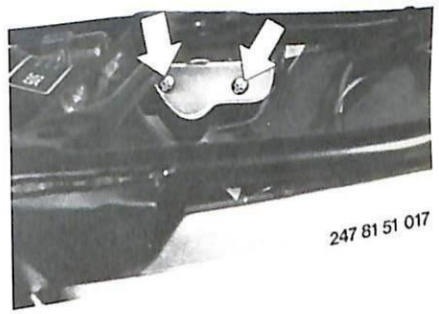


■

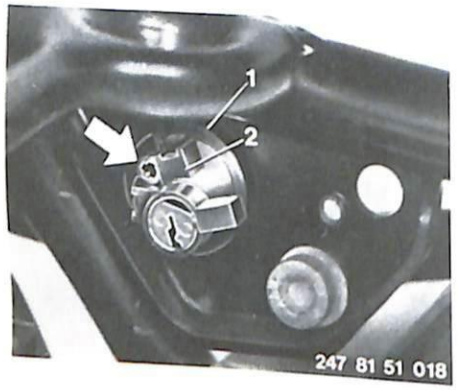

### 51 25 060 Lock barrel for dualseat lock – removing and installing

Remove (install) dualseat lock – 51 25 050.

Take out the Phillips-head screw (arrow). Pull the circlip (1) and the lock barrel (2) apart.

■

**When installing:** the lock barrel projection must locate in the groove on the lock plate (arrow).

■



# 52 Seats

52 53 000 Dualseat – removing and installing . . . . . Page 52-53.1

## 52 53 000 Dualseat – detaching and attaching

Remove keeper at rear hinge. Remove [illegible] the dual seat. Pull to the rear and [illegible]

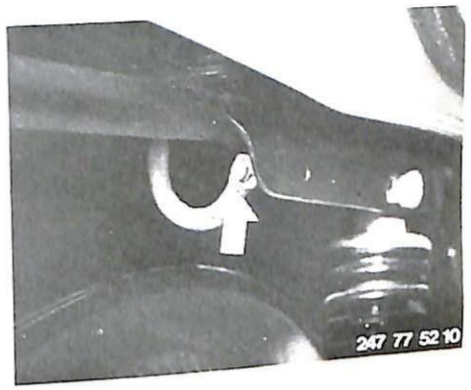

# 61 General electrical system


| | | Page |
|---|---|---|
| | Specifications | 61- 0/3 |
| | Specifications (1979 models) and circuit diagrams | 61- 0/9 |
| | Specifications (1981 models) and circuit diagrams | 61-0/13 |
| 61 21 010 | Battery – removing and installing | 61-21/1 |
| 61 21 100 | Battery holder – removing and installing | 61-21/2 |
| 61 31 350 | Flasher unit – removing and installing | 61-21/2 |
| 61 31 367 | Buzzer – removing and installing | 61-21/2 |
| 61 31 400 | Starter repeat lock relay/horn relay – removing and installing | 61-31/1 |
| 61 33 000 | Horn – removing and installing | 61-33/1 |

## Technical Data

**General Vehicle Electrics**

| **Model** | R 60/7 | R 75/7 | R 80/7 | R 100/7 | R 100 S | R 100 RS |
|---|---|---|---|---|---|---|
| **Horn** | Fiamm 410 Hz | | | | | 410 Hz<br>510 Hz |
| **Battery** (VARTA)<br>Voltage | 12 | | | | | |
| Capacity Amp/h | 28 | | | | | |
| Polarity | negative earth (ground) | | | | | |
| **Flasher unit** (Hella) | T BB 21 1 — 4 21 W — 12 V | | | | | |
| **Fuses** (2) | 8 Amp | | | | | |

## *Key to wiring diagram – R 60/7 – R 100 S*

**Cable coding**

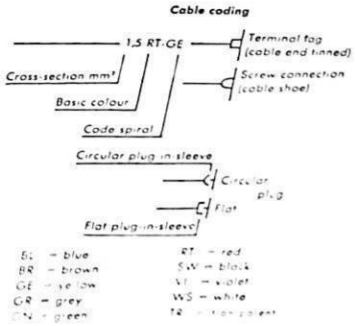


1 Turn indicator switch with starter button and emergency cutout
2 Headlight
  a) Flasher unit
  b) High beam
  c) Low beam
  d) Parking light
  e) Light relay
  f) Ignition – light switch
  g) Contact plate with fuses
3 Dimmer switch with headlight flasher and horn button
4
5 Front right turn indicator
6 Clutch operated switch
7 Front left turn indicator
8 Horn
9 Hydraulic hand brake switch
10 Combined instrument
  a) Speedometer illumination
  b) Revolution counter illumination
  c) Brake fluid level telltale (red)
  d) Neutral indicator (green)
  e) Charge indicator (red)
  f) Oil pressure telltale (orange)
  g) Turn indicator repeater (orange)
  h) Headlight high beam indicator (blue)
11 Starter relay
12 Coils
13 Spark plugs with caps
14 Condenser
15 Contact breaker
16 Oil pressure switch
17 Ground (earth)
18 Brake pedal stoplight switch
19 2 pin connection
20 Neutral indicator switch
21 Brake fluid level switch
22 4 pin connection
23 1 pin connection
24 Diode carrier
25 Battery
26 Starter
27 Alternator
28 Voltage regulator
29 Rear right turn indicator
30 Rear light
  a) Rear and license plate light
  b) Stop light
31 Rear left turn indicator
32 Voltmeter (R 100 S only)
33 Clock (R 100 S only)

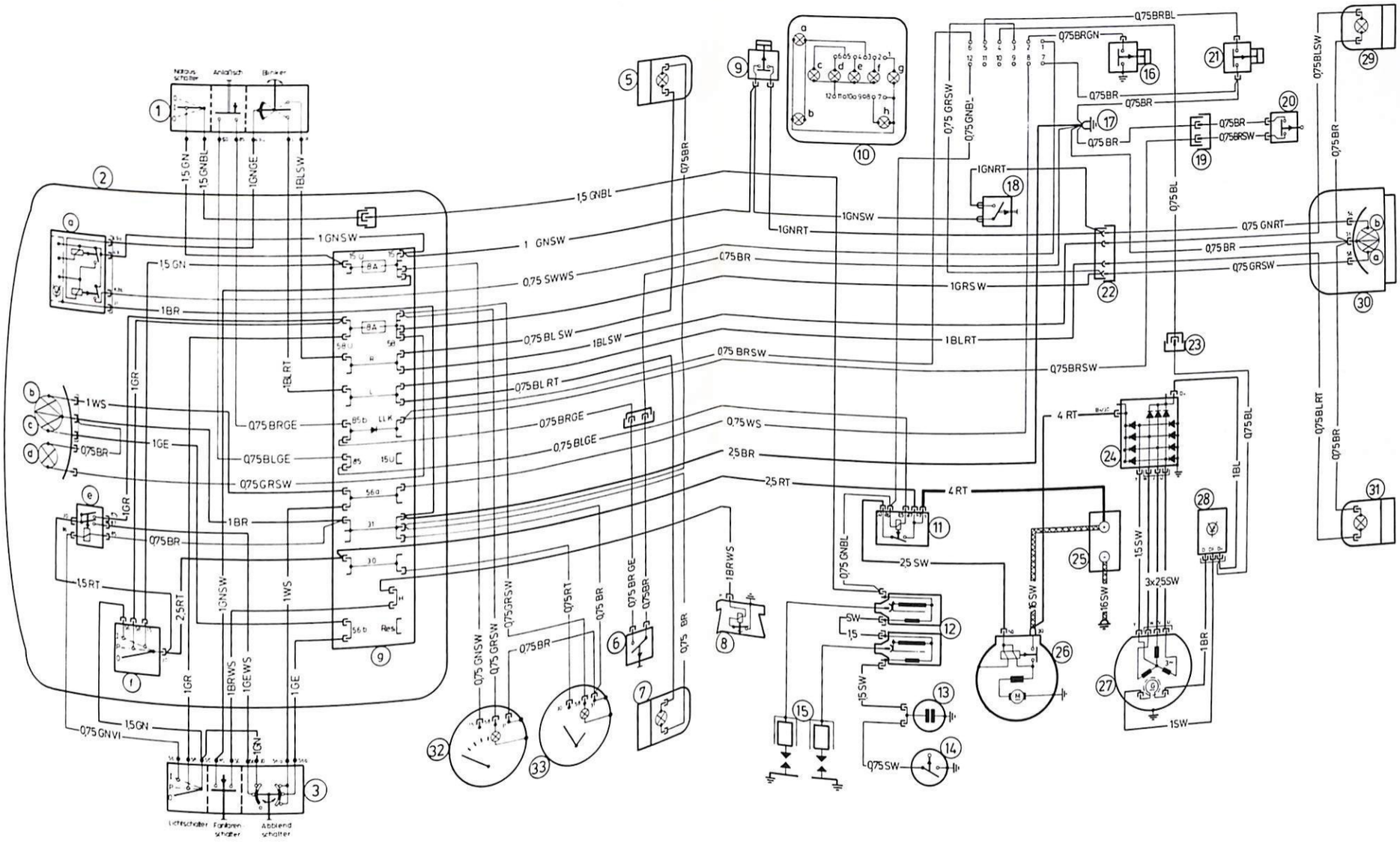
Notaus schalter
Anlaßtisch
Blinker
Lichtschalter
Fernlampen schalter
Abblend schalter
1,5 GN
1,5 GNBL
1GNGE
1BLSW
1 GNSW
1 GNSW
1,5 GN
0,75 SWWS
1BR
0,75 BL SW
1BLSW
1BLRT
0,75 BL RT
1WS
1GR
0,75 BRGE
1GE
0,75 BLGE
0,75 BR
0,75 GRSW
1BR
0,75 BR
1,5 RT
2,5 RT
1GNSW
1WS
1GR
1BRWS
1GEWS
1GE
1,5 GN
0,75 GNVI
0,75 BR
0,75 GNSW
0,75 GRSW
0,75 GRSW
0,75 RT
0,75 BR
0,75 BR GE
0,75 BR
0,75 BR
1BRWS
0,75 GNBL
1,5 GNBL
1GNRT
1GNSW
0,75 BR
1GRS W
1BLRT
0,75 BRSW
0,75 WS
2,5 BR
2,5 RT
4 RT
25 SW
1,5 SW
1,5 SW
0,75 SW
0,75 BRBL
0,75 BRGN
0,75 BR
0,75 BR
0,75 GRSW
0,75 GNBL
1GNRT
0,75 BR
0,75 BRSW
0,75 BL
4 RT
1,5 SW
3x2,5 SW
16 SW
16 SW
1BL
1BR
1SW
0,75 BLSW
0,75 BR
0,75 BLRT
0,75 BR
0,75 GNRT
0,75 BR
0,75 GRSW

## Key to electrical wiring diagram – R 100 RS

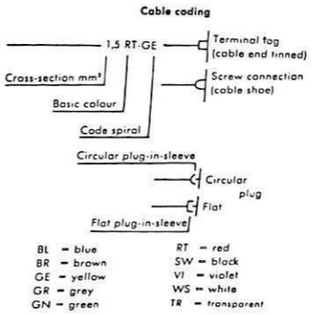


1 Turn indicator switch with starter button and emergency cutout
2 Headlight
  a) Flasher relay
  b) High beam
  c) Low beam
  e) Light relay
  g) Contact board with fuses
3 Low beam (dip) switch with headlight flasher and horn push
4 Ignition and light switch
5 Front right turn indicator
6 Clutch-operated switch
7 Front left turn indicator
8 Left horn
9 Hydraulic hand brake lever switch
10 Combined instrument
  a) Speedometer dial lighting
  b) Revolution counter dial lighting
  c) Brake fluid level telltale (red)
  d) Neutral telltale (green)
  e) Battery charge telltale (red)
  f) Oil pressure telltale (orange)
  g) Turn indicator repeater (orange)
  h) Headlight high beam telltale (blue)
11 Starter relay
12 Coils
13 Condenser
14 Ignition contact breaker
15 Spark plugs and caps
16 Oil pressure contact switch
17 Earth (ground)
18 Brake pedal (stop light) switch
19 2-pin connector
20 Neutral contact switch
21 Brake fluid level sensing switch
22 4-pin connector
23 1-pin connector
24 Diode carrier
25 Battery
26 Starter
27 Alternator
28 Voltage regulator
29 Rear right turn indicator
30 Rear light
  a) Rear and license plate light
  b) Brake light
31 Left rear turn indicator
32 Voltmeter
33 Clock
34 Horn relay
35 6-pin plug connector
36 Right horn
37 Front parking/marker light

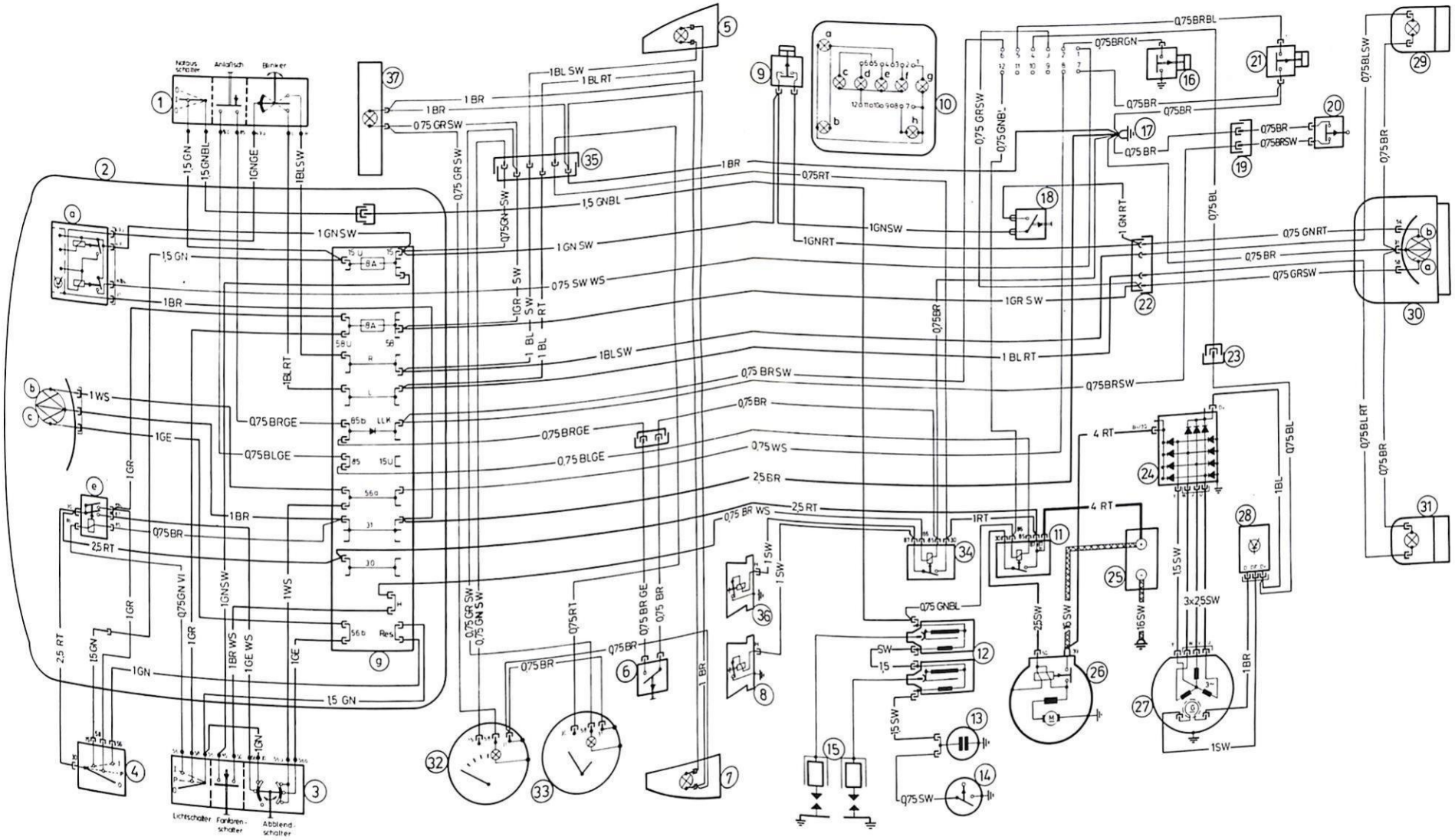
Notaus schalter
Anlaßsch
Blinker
Lichtschalter
Fanfaren-schalter
Abblend-schalter
1,5 GN
1,5 GNBL
1GNGE
1BLSW
1 BR
0,75 GRSW
1BL SW
1 BL RT
1GNSW
1 GN SW
0,75 SW WS
1GR SW
1 BL SW
1 BL RT
0,75 BRSW
0,75 BR
0,75 BRGE
0,75 BLGE
25 BR
25 RT
0,75 BR WS
1 WS
1GE
1GR
0,75 BR
25 RT
1 GN
1,5 GN
0,75 GNRT
0,75 GRSW
0,75 BLSW
0,75 BLRT
0,75 BL
1 BL
4 RT
1 RT
0,75 GNBL
1,5
1,5 SW
0,75 SW
25SW
16SW
3x25SW
1SW
0,75 BRBL
0,75 BRGN
0,75 BRSW
0,75 GRSW
0,75 GNBL
0,75 BR
0,75 RT
0,75 BR GE
0,75 GR SW
0,75 GN SW
0,75 RT
0,75 BR
1 GR SW
1 GN RT
1 BR
1 BL
1 GR
1 BL
1 GR
1 GN
1 GN
1 GR
1 BR WS
1 GE WS
1 GE
0,75 GN VI
1 GNSW
1 WS
2,5 RT
1,5 GN
1 GN
1,5 GN

## Key to electrical circuit diagram
## R 60/7 – R 100 S – model 78

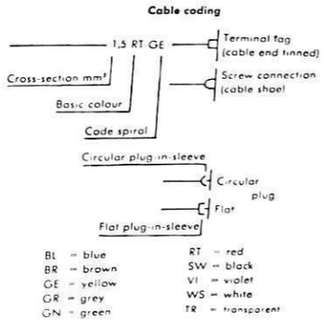


1 Turn indicator switch with starter contact and emergency cutout
2 Headlight
  a) Flasher unit
  b) High beam
  c) Low beam
  d) Parking light
  e) Lighting relay
  f) Ignition and light switch
  g) Contact board with fuses
3 Low beam (dip) switch with headlight flasher and horn switch
4 Front right flashing turn indicator
5 2-pin plug
6 Clutch-operated switch
7 Voltmeter (R 100 S only)
8 Clock (R 100 S only)
9 Front left flashing turn indicator
10 Horn
11 Hydraulic handbrake lever switch
12 Instrument cluster
  a) Speedometer dial illumination
  b) Revolution counter dial illumination
  c) Brake fluid telltale (red)
  d) Neutral indicator (green)
  e) Battery charge telltale (red)
  f) Oil pressure telltale (orange)
  g) Turn indicator repeater (green)
  h) Headlight high beam telltale (blue)
13 Foot brake light switch
14 Starter relay
15 Relay
16 Coils
17 Spark plugs with caps
18 Condenser
19 Contact breaker
20 Starter
21 Battery
22 Alternator
23 Regulator
24 Diode board
25 Single-pole connector
26 2-pole connector
27 Buzzer
28 6-pole connector
29 Neutral telltale switch
30 2-pole connector
31 Brake fluid level telltale switch
32 Oil pressure sensing switch
33 Rear right flashing turn indicator
34 Rear light cluster
  a) Brake light
  b) Rear and license plate light
35 Rear left flashing turn indicator

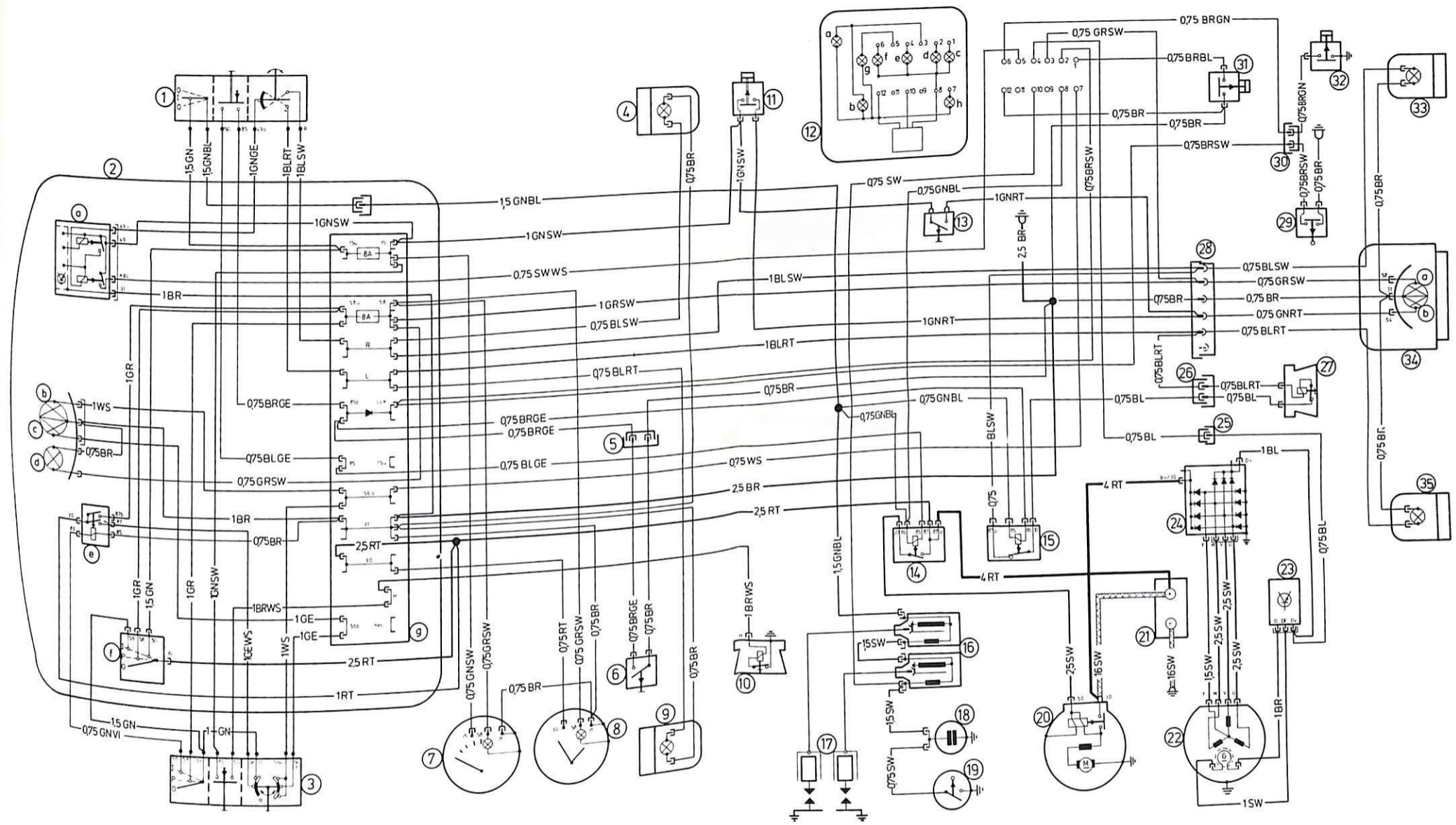
1,5 GN
1,5 GNBL
1GNGE
1BLRT
1BLSW
1,5 GNBL
1GNSW
1GN SW
0,75 SWWS
1BR
1GRSW
0,75 BLSW
1BLRT
0,75 BLRT
0,75 BRGE
0,75 BRGE
0,75 BLGE
0,75 BLGE
0,75 GRSW
1BR
0,75 BR
2,5 RT
1GR
1,5 GN
1GR
1GNSW
1BRWS
1GE
1GE
1GEWS
1WS
2,5 RT
1RT
1,5 GN
0,75 GNVI
1 GN
1WS
0,75 BR
0,75 BR
1GNSW
0,75 SW
0,75 GNBL
1GNRT
2,5 BR
0,75 GNBL
0,75 GNBL
1,5 GNBL
1BLSW
0,75 WS
2,5 BR
2,5 RT
1BRWS
0,75 GNSW
0,75 GRSW
0,75 RT
0,75 GRSW
0,75 BR
0,75 BRGE
0,75 BR
0,75 BR
1,5 SW
1,5 SW
0,75 SW
0,75 BRGN
0,75 GRSW
0,75 BRBL
0,75 BR
0,75 BR
0,75 BRSW
0,75 BRSW
0,75 BLSW
0,75 GRSW
0,75 BR
0,75 GNRT
0,75 BLRT
0,75 BLRT
0,75 BLRT
0,75 BL
0,75 BL
0,75 BL
0,75 BL
4 RT
4 RT
1BL
0,75 BL
2,5 SW
2,5 SW
2,5 SW
2,5 SW
1,5 SW
1BR
1SW
0,75 BRGN
0,75 BRSW
0,75 BR
0,75 BR
0,75 BR

# Key to electrical circuit diagram
# R 100 RS – model 78

**Cable coding**

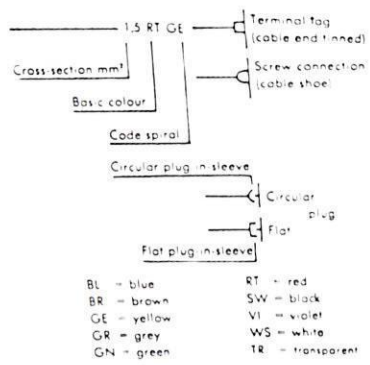


1 Turn indicator switch with starter contact and emergency cutout
2 Headlight
  a) Turn indicator relay
  b) High beam
  c) Low beam
  d) Lighting relay
  e) Contact board with fuses
3 Ignition and lighting switch
4 Low beam (dip) switch with headlight flasher and horn switch
5 Front marker light
6 6-pin connector
7 Front right flashing turn indicator
8 2-pin connector
9 Voltmeter
10 Clock
11 Clutch operated switch
12 Front left flashing turn indicator
13 Left horn
14 Horn relay
15 Right horn
16 Hydraulic handbrake light switch
17 Instrument cluster
  a) Speedometer dial illumination
  b) Revolution counter illumination
  c) Brake fluid level telltale (red)
  d) Oil pressure telltale (orange)
  e) Battery charge telltale (red)
  f) Neutral indicator (green)
  g) Turn indicator repeater (green)
  h) Headlight high beam telltale (blue)
18 Brake pedal light switch
19 Starter relay
20 Coils
21 Spark plugs with caps
22 Condenser
23 Contact breaker
24 Relay
25 Starter
26 Battery
27 Alternator
28 Regulator
29 Diode board
30 1-pin plug
21 2-pin plug
32 6-pin plug
33 Brake fluid level sensing switch
34 2-pin connector
35 Neutral indicating switch
36 Oil pressure sensing switch
37 Rear right flashing turn indicator
38 Rear light cluster
  a) Rear and license plate light
  b) Brake light
39 Buzzer
40 Rear left flashing turn indicator

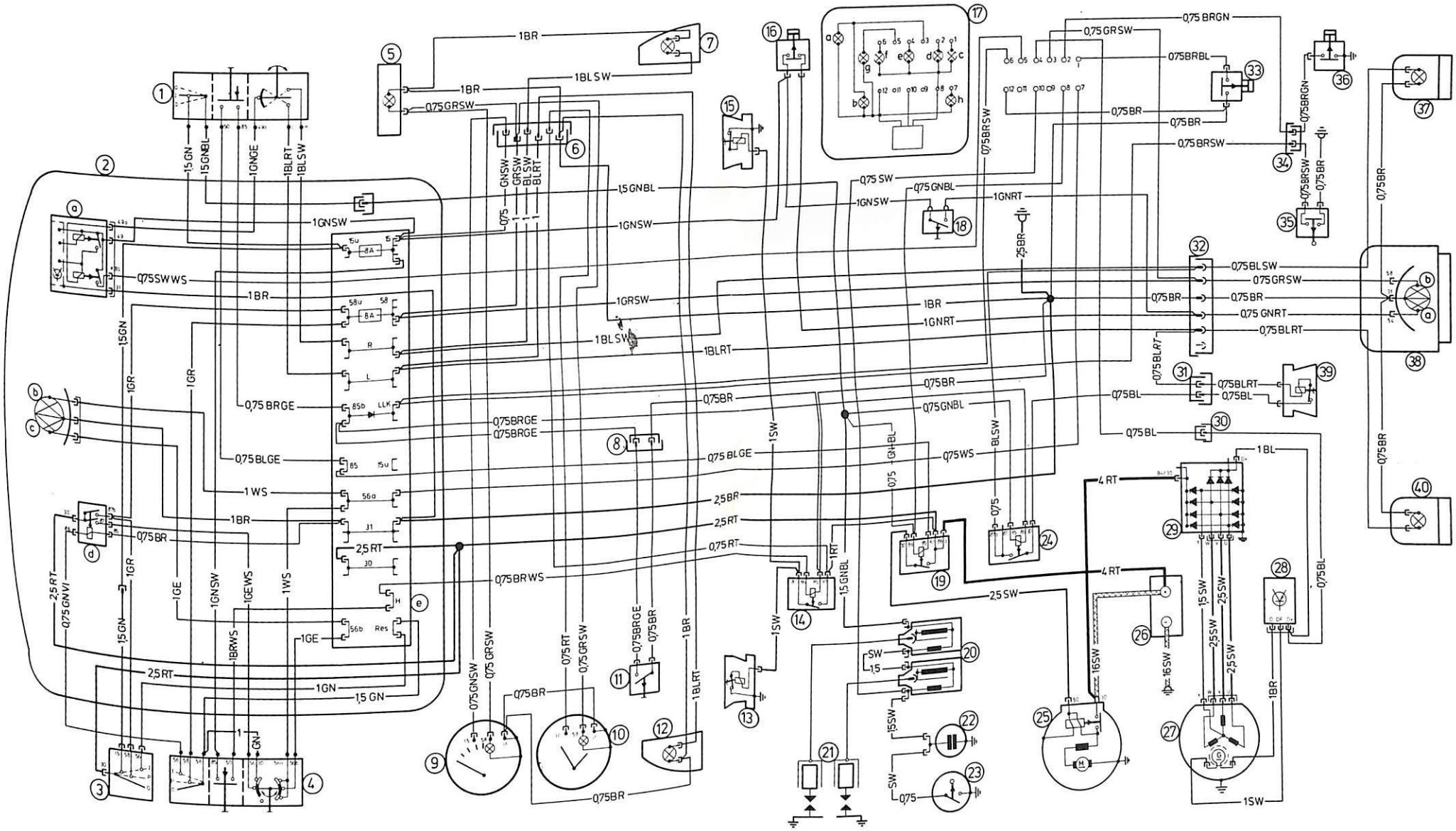
1BR
1BLSW
0,75GRSW
1,5GN
1,5GNBL
1GNGE
1BLRT
1GNSW
0,75SWWS
1GRSW
1GNRT
0,75BRGE
0,75BLGE
1WS
2,5RT
0,75BRWS
0,75GNSW
0,75GRSW
0,75RT
0,75BR
1BLRT
1SW
1GN
1,5GN
0,75GNBL
0,75SW
0,75BRSW
0,75BRGN
0,75BRBL
0,75BLSW
0,75GNRT
0,75BLRT
0,75BL
0,75WS
2,5BR
4RT
2,5SW
16SW
1,5SW
2,5SW
1BL

## Specifications (1979 models)

| Model | R 80/7 | R 100 T | R 100 S | R 100 RT | R 100 RS |
|---|---|---|---|---|---|
| Horn | Fiamm 410 Hz | 410 HZ<br>510 HZ | | | |
| Battery<br>Voltage V | VARTA<br>12 | | | | |
| Capacity Amp/h | 28 | | | | |
| Earth (ground) polarity | negative | | | | |
| Flashing turn indicator unit | HELLA TBB 26 1 – 4 x 21 W – 12 V | | | | |
| Fuses | 2 x 8 Amp | | | | |

## Key to electrical circuit diagram R 80/7 – R 100 S (1979 models)

**Circuit identification:**

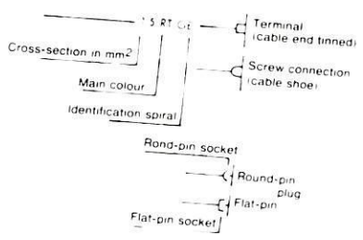


BL = blue
BR = brown
GE = yellow
GR = grey
GN = green
RT = red
SW = black
VI = violet
WS = white
TR = transparent

1 Starter contact and emergency cutout ("kill") switch
2 Headlight
  a) Flasher unit
  b) High beam
  c) Low beam
  d) Parking light
  e) Light relay
  f) Ignition/light switch
  g) Contact board with fuses
3 Dip switch with headlight flasher, horn and turn indicator switches
4 Front right flashing turn indicator
5 2-pin plug connector
6 Clutch-operated switch
7 Voltmeter (R 100 T and R 100 S only)
8 Clock (R 100 T and R 100 S only)
9 Front left flashing turn indicator
10 Horn
11 1-pin plug connector (US models only)
12 Hand brake light switch, hydraulic
13 Instrument cluster
  a) Speedometer dial light
  b) Revolution counter dial light
  c) Brake fluid telltale
  d) Neutral indicator (green)
  e) Charge telltale (red)
  f) Oil pressure telltale (orange)
  g) Turn indicator repeater (green)
  h) High beam telltale (blue)
14 Starter relay
15 Relay for buzzer
16 1-pin plug connector
17 Coils
18 Spark plugs with caps
19 Contact breaker with condenser
20 Starter motor
21 Socket (R 100 T only)
23 Battery
24 Alternator
25 Regulator
26 Diode board
27 1-pin plug connector
28 Diode (US models only)
29 Foot brake light switch
30 2-pin plug connector
31 1-pin plug connector (US models only)
32 Brake fluid level switch
33 Oil pressure sensing switch
34 2-pin plug connector
35 Neutral indicating switch
36 6-pin connector
37 2-pin connector
38 Buzzer
39 Left rear flashing turn indicator
40 Rear light
  a) Brake light
  b) Rear and licence plate light
41 Right rear flashing turn indicator

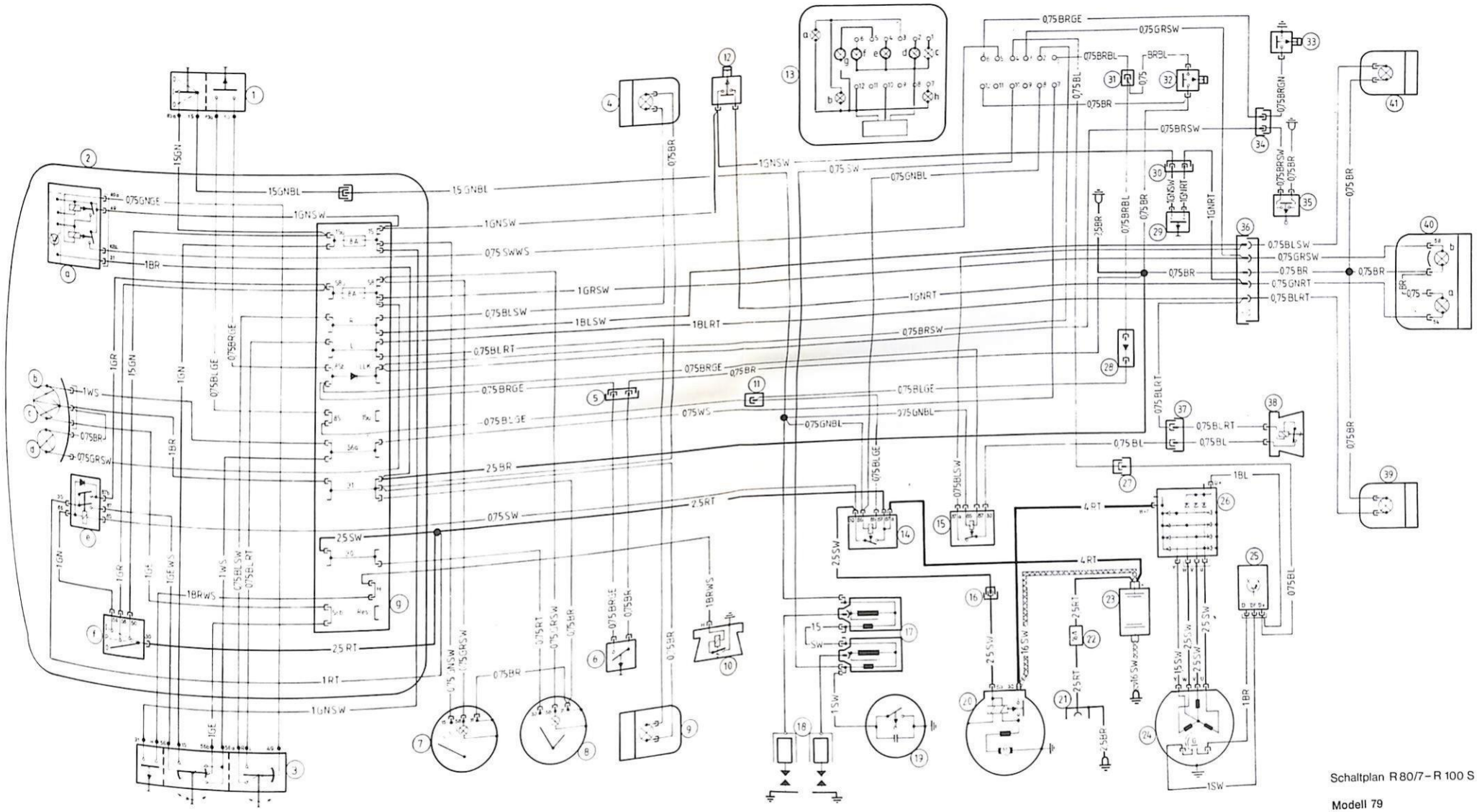

Schaltplan R 80/7 – R 100 S

Modell 79

# Key to electrical circuit diagram R 100 RT and R 100 RS (1979 models)

**Circuit identification:**

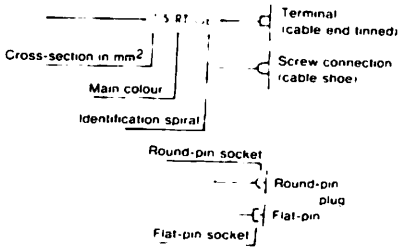


| | |
|---|---|
| BL = blue | RT = red |
| BR = brown | SW = black |
| GE = yellow | VI = violet |
| GR = grey | WS = white |
| GN = green | TR = transparent |

1 Switch with starter contact and emergency cutout ("kill") switch
2 Headlight
  a) Flasher unit
  b) High beam
  c) Low beam
  d) Light relay
  e) Contact board with fuses
  f) Relay for fog light
  g) Relay for auxiliary driving light
3 Ignition/light switch
4 Combined switch, with headlight flasher, horn and flashing turn indicator switches
5 Front marker light
6 6-pin plug connector
7 Front right flashing turn indicator
8 2-pin plug connector
9 Voltmeter
10 Clock
11 Clutch-operated switch
12 Front left flashing turn indicator
13 Left horn
14 Right horn
15 Hand brake light switch, hydraulic
16 Instrument cluster
  a) Speedometer dial light
  b) Revolution counter dial light
  c) Brake fluid telltale (red)
  d) Neutral indicator (green)
  e) Charge telltale (red)
  f) Oil pressure telltale (orange)
  g) Turn indicator repeater (green)
  h) High beam telltale (blue)
17 Foot brake light switch
18 Starter relay
19 Coils
20 Spark plugs with caps
22 Contact breaker
23 Relay for buzzer
24 Starter motor
25 Battery
26 Alternator
27 Regulator
28 Diode board
29 1-pin plug connector
30 2-pin plug connector
31 6-pin plug connector
32 Brake fluid level switch
33 2-pin plug connector
34 Neutral indicating switch
35 Oil pressure sensing switch
36 Right rear flashing turn indicator
37 Rear light
  a) Rear and licence plate light
  b) Brake light
38 Buzzer
39 Left rear flashing turn indicator
40 3-pin plug connector (R 100 RT only)
41 Fog light (option)
42 Limit switch (not on US models)
43 Fog light switch (R 100 RT only)
44 3-pin plug connector (R 100 RT only)
46 Auxiliary driving light (option)
47 Limit switch (not on US models)
48 3-pin plug connector (R 100 RT only)
49 Rear brake fluid level switch
50 Line fuse (R 100 RT only)
51 Socket (R 100 RT only)
52 2-pin plug connector
53 1-pin plug connector (US models only)
54 Diode (US models only)
55 1-pin plug connector (US models only)

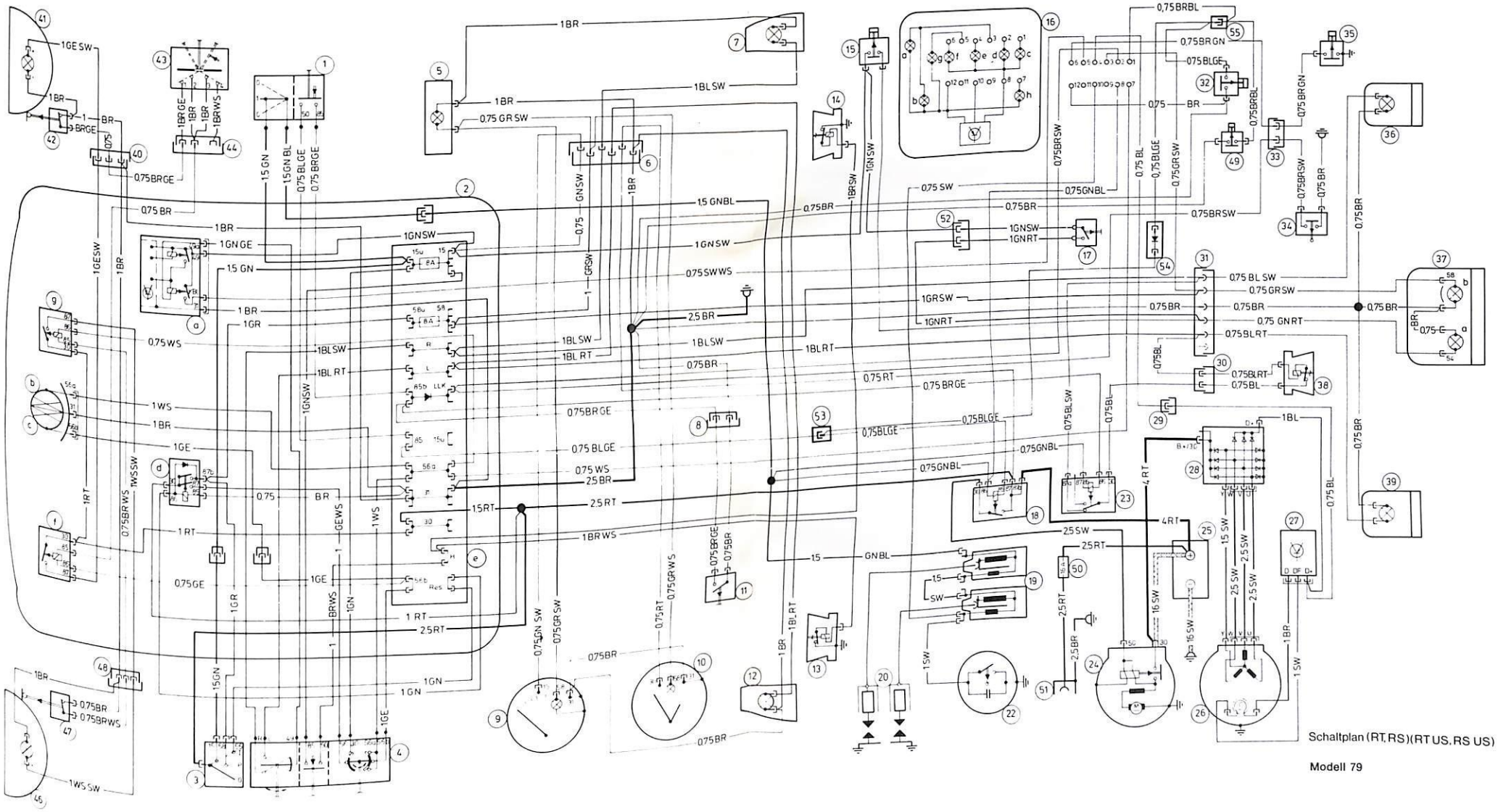

Schaltplan (RT, RS) (RT US, RS US)

Modell 79

General electrical system

## Specifications (1981 models)

| Model | R 100 | R 100 CS | R 100 RT | R 100 RS |
|---|---|---|---|---|
| Horn | Fiamm 410 Hz | Fiamm 410 Hz<br>510 Hz | | |
| **Battery**<br>Voltage V | BMW Mareg<br>12 | | | |
| Capacity Amp/h | 28 | | | |
| Earth (ground) polarity | negative | | | |
| **Flashing turn indicator unit** | HELLA TBB 53 DOT 2 (4) x 21 W + 0.5 W 12 V | | | |
| **Fuses** | 2 x 8 Amp | | | |

## Key to electrical circuit diagram
## BMW R 100 RT, R 100 S (1981 models)

1 Starter contact and emergency cutout ("kill") switch
2 Headlight
  a) Flasher unit
  b) High beam
  c) Low beam
  d)
  e) Light relay
  f)
  g) Contact board with fuses
3 Ignition/light switch
4 Dip switch with headlight flasher, horn and turn indicator switches
5 Front marker light
6 6-pin plug connector
7 Front right flashing turn indicator
8 Voltmeter
9 Clock
10 Clutch-operated switch
11 Front left flashing turn indicator
12 Left horn
13 Right horn
14 Hand brake light switch
15 Instrument cluster
  a) Speedometer dial light
  b) Revolution counter dial light
  c) High beam telltale (blue)
  d) Neutral indicator (green)
  e) Charge telltale (red)
  f) Oil pressure telltale red)
  g) Flasher repeater (green)
16 Foot brake light switch
17 Starter relay
18 Coils
19 Spark plugs with caps
20 Ignition trigger (Hall-effect transmitter)
21 Starter motor
22 Battery
23 Alternator
24 Regulator
25 Diode board
26 6-pin plug connector
27 Oil pressure sensing switch
28 Neutral indicating switch
29 Right rear flashing turn indicator
30 Rear light
  a) Rear and licence plate light
  b) Brake light
31 Rear left flashing turn indicator
32 Control unit for transistorized ignition system

R 100 RS
R 100 RT/81

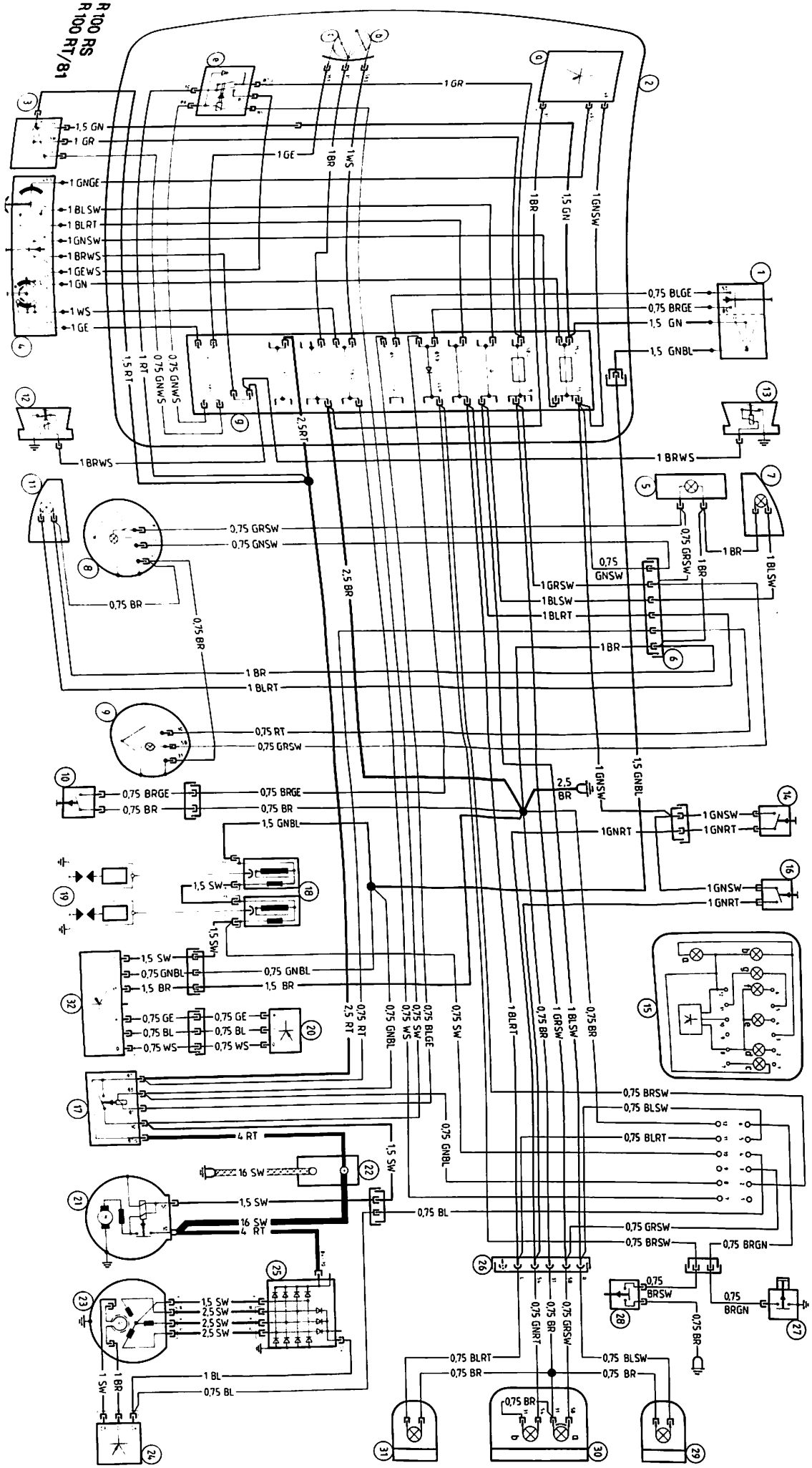

# Key to electrical circuit diagram BMW R 100, R 100 CS (1981 models)

1 Starter contact and emergency cutout ("kill") switch
2 Headlight
  a) Flasher unit
  b) High beam
  c) Low beam
  d) Parking light
  e) Light relay
  f) Ignition/light switch
  g) Contact board with fuses
3
4 Dip switch with headlight flasher, horn and turn indicator switches
5
6
7 Front right flashing turn indicator
8 Voltmeter (R 100 CS only)
9 Clock (R 100 CS only)
10 Clutch-operated switch
11 Front left flashing turn indicator
12 Horn
13
14 Hand brake light switch
15 Instrument cluster
  a) Speedometer dial light
  b) Revolution counter dial light
  c) High beam telltale (blue)
  d) Neutral indicator (green)
  e) Charge telltale (red)
  f) Oil pressure telltale (red)
  g) Flasher repeater (green)
16 Foot brake light switch
17 Starter relay
18 Coils
19 Spark plugs with caps
20 Ignition trigger (Hall-effect transmitter)
21 Starter motor
22 Battery
23 Alternator
24 Regulator
25 Diode board
26 6-pin plug connector
27 Oil pressure sensing switch
28 Neutral indicating switch
29 Right rear flashing turn indicator
30 Rear light
  a) Rear and licence plate light
  b) Brake light
31 Rear left flashing turn indicator
32 Control unit for transistorized ignition system

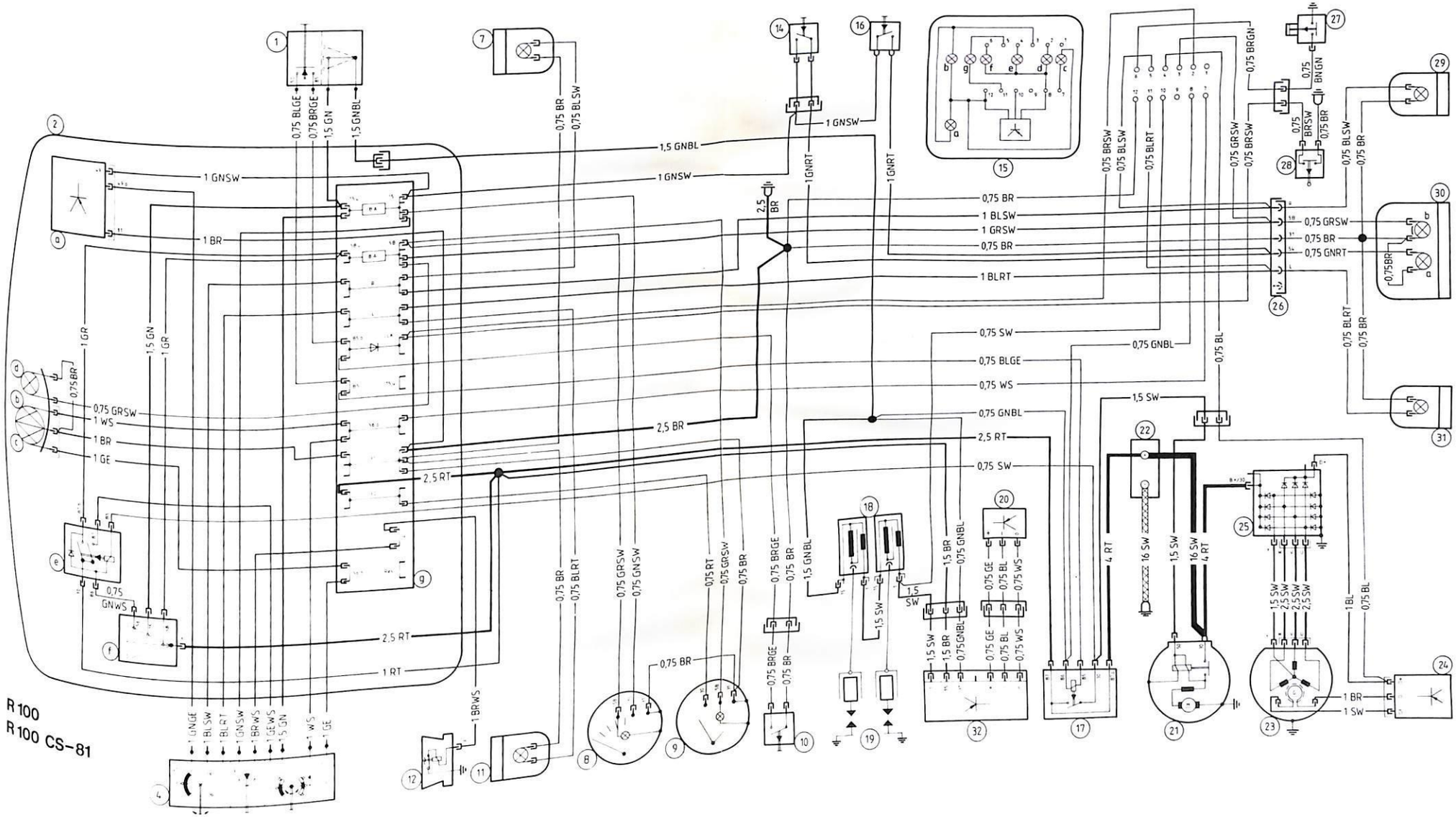


R 100
R 100 CS-81

## 61 21 010 Battery – removing and installing

Remove the left and right battery covers by slackening off the handle at the lock plate with an Allen key, taking out the front hex bolt, swinging up the handle, loosening the knurled nuts (arrows) at the battery holder, lifting up the battery post covers and disconnecting the cables at the battery.

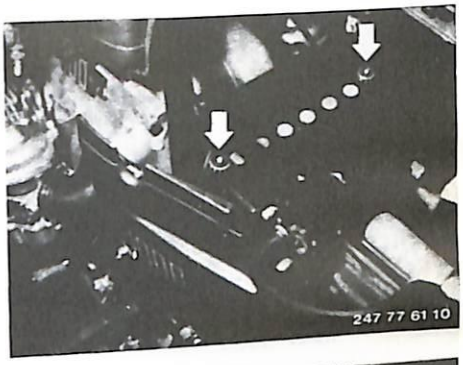


■

Unscrew the hex nuts at the top left and right of the battery holder, and tilt the battery with holder to the rear, against the rear mudguard. Press the threaded rods for the retaining stirrup past the rubber dampers.

■

Remove the right retaining bolt for the rear section of the frame. Pull off the battery vent pipe and lift out the battery.

**Note:** on 1981 models, the rear section of the frame does not have to be unbolted.

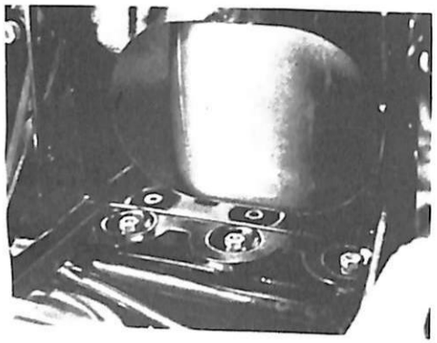

## 61 21 100 Battery holder – removing and installing

Remove (install) battery – 61 21 010

Unscrew the three hex nuts at the base and the hex nuts at the top right and left of the holder.

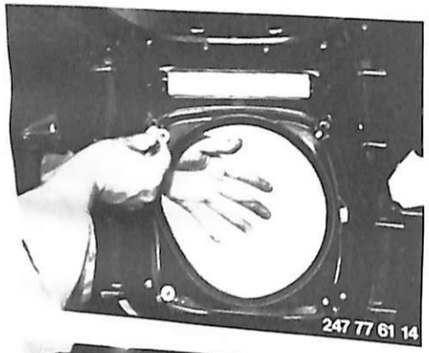


## 61 31 350 Flasher unit – removing and installing

On the R 100 RT and R 100 RS, detach the headlight beam tunnel mountings and remove the tunnel together with the moulded glass.

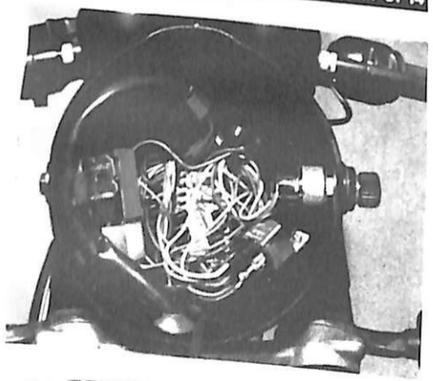

Disconnect the earth (ground) cable from the battery. Loosen the Phillips-head screw at the bottom of the headlight bezel ring, and pull the ring off by hand. Detach the flasher relay from its mount and separate the plug connector.

## 61 31 367 Buzzer – removing and installing

Take off the left battery cover. Separate the 2-pin plug connector and pull the buzzer down, away from the retaining plate.





## 61 31 400 Starter relay – removing and refitting

Disconnect the battery.

Fuel tank – remove and refit (16 11 030).

Pull relay out of plug base.

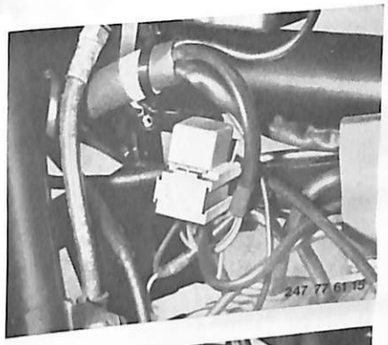


Leads on plug base

| | |
|---|---|
| Flat pin connection 87 | red lead |
| Flat pin connection 87a | red lead |
| Flat pin connection 86 | 2 leads, green blue |
| Flat pin connection 85 | blue yellow lead |
| Flat pin connection 30 | black lead |

### Removing and installing horn relay

Disconnect the battery.
Remove the fuel tank – 16 11 030.
Release the cable strap above the relay and pull the horn relay (arrow) out of the plug mounting. Lever out with screwdriver blade if necessary.

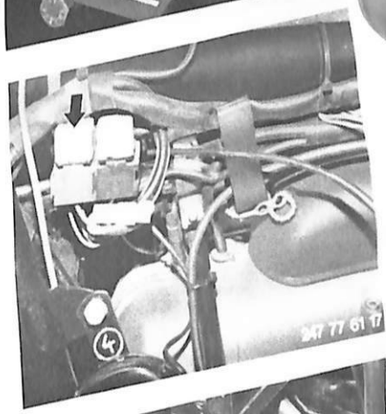


Cable connections on plug mounting

| | |
|---|---|
| Flat pin connection 87 | 2 black leads |
| Flat pin connection 86 | 1 brown white lead |
| Flat pin connection 85 | 2 brown leads |
| Flat pin connection 30 | 2 red leads |

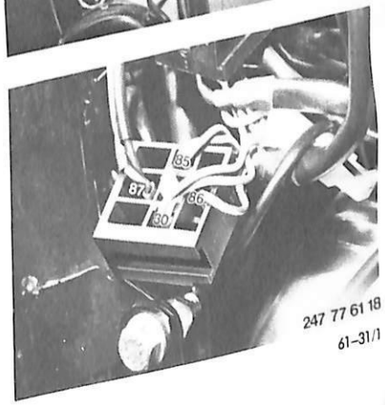

## 61 33 000 Horn – removing and refitting

Disconnect earth lead from battery. Unscrew hex nut from the horn.

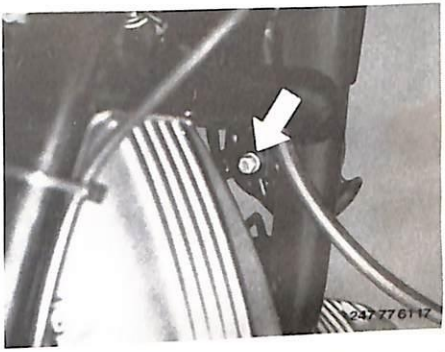


Disconnect lead from horn.

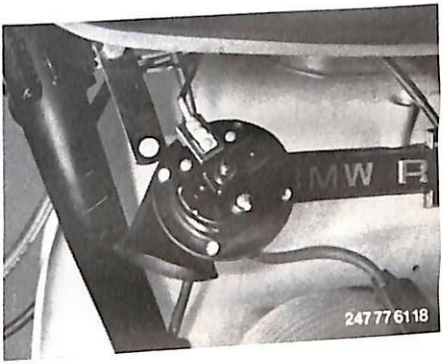

# 62 Instruments


| | | Page |
|---|---|---|
| | Specifications | 62– 0/3 |
| | Specifications (1979 models) | 62– 0/4 |
| | Specifications (1981 models) | 62– 0/5 |
| 62 11 000 | Instrument cluster – removing and installing | 62–11/1 |
| 62 12 020 | Speedometer drive shaft – removing and installing | 62–12/1 |
| 62 13 020 | Revolution counter drive shaft -removing and installing | 62–12/1 |
| 62 13 050 | Instruments in cockpit fairing – renewing | 62–13/1 |

## Technical Data

| Model | R 60/7 | R 75/7 | R 80/7 | R 100/7 | R 100 S | R 100 RS |
|---|---|---|---|---|---|---|
| Revolutions per unit distance, km indicator | 0.773 | 0.737 | 0.737 0.773* | 0.711 | 0.67 | 0.691 |
| Revolutions per unit distance, mile indicator | 1.244 | 1.186 | 1.186 1.244* | 1.144 | 1.078 | 1.112 |
| Measuring range, km/h | 20 . . . 220 | | | | | |
| Measuring range, mile/h | 10 . . . 130 | | | | | |
| Revolution counter $min^{-1}$ | 1000 . . . 8000 | | | | | |

* version for regular fuel

**Instruments**

## Specifications – '79 models

| Model | R 80/7 | | R 100 T | R 100 S | R 100 RT | R 100 RS |
|---|---|---|---|---|---|---|
| Revolutions per unit distance, km indicator | 0,737 | 0,773* | 0,691 | 0,67 | 0,691 | |
| Revolutions per unit distance, mile indicator | 1,186 | 1,244* | 1,112 | 1,078 | 1,112 | |
| Measuring range, km/h | 20 . . . 220 | | | | | |
| Measuring range, mile/h | 10 . . . 130 | | | | | |
| Revolution counter min $^{-1}$ | 1000 . . . 8000 | | | | | |

* versionb for regular fuel

11 78 Addition

3 82 Addition

**Instruments**

## Specifications (1981 models)

| Model | R 100 | R 100 CS | R 100 RT | R 100 RS |
|---|---|---|---|---|
| Distance factor, km reading | 0.691 | 0.67 | 0.691 | |
| Distance factor, mile reading | 1.112 | 1.078 | 1.112 | |
| Scale range km/h | 20 . . . 220 | | | |
| Revolution counter min$^{-1}$ | 1000 . . . 8000 | | | |

# Instrument cluster

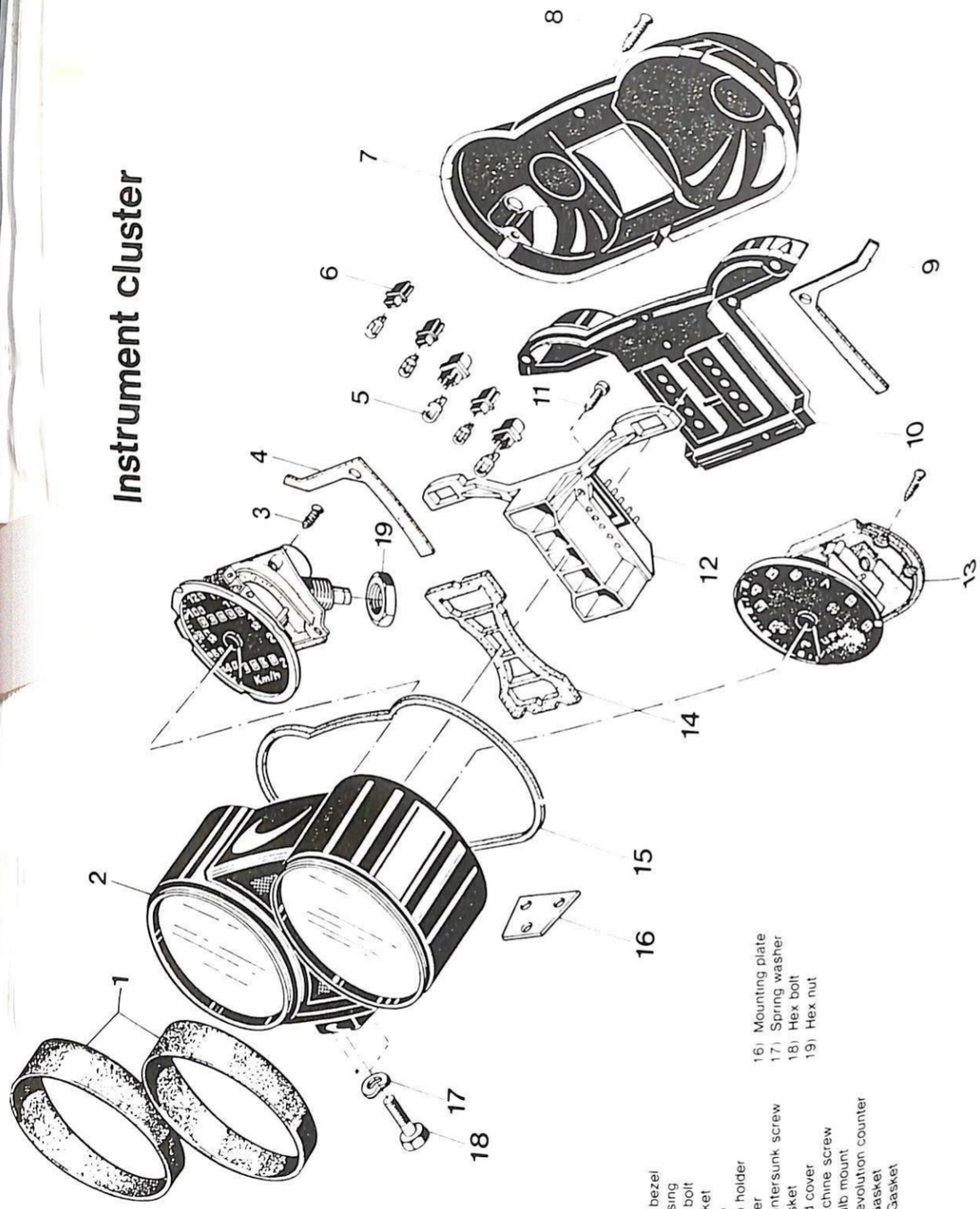


1) Dial bezel
2) Housing
3) Hex bolt
4) Gasket
5) Bulb
6) Bulb holder
7) Cover
8) Countersunk screw
9) Gasket
10) End cover
11) Machine screw
12) Bulb mount
13) Revolution counter
14) Gasket
15) Gasket
16) Mounting plate
17) Spring washer
18) Hex bolt
19) Hex nut





## 62 11 000 Combined Instrument – Removing and Refitting

Slacken the locknuts on the speedometer and revolution counter drive shafts (22 mm wrench) and loosen the knurled nuts

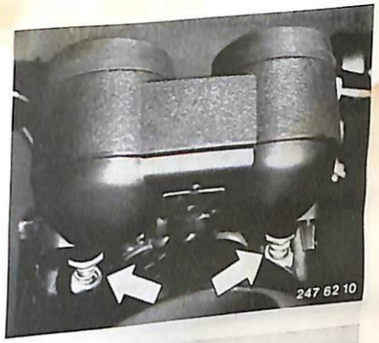


■

Slacken the three fastening screws and withdraw the combined instrument from its support

■

Unscrew the Phillips screw of the central plug and pull off the plug

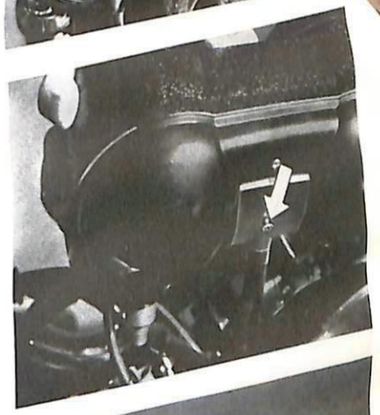

■

Remove combined instrument

■

## 62 12 020 Speedometer Drive Shaft – Removing and Refitting

Loosen locknut (22 mm wrench), then unscrew knurled nut.

Push back protective rubber cap for speedometer drive on the gearbox. Pull out and remove speedometer drive after releasing the retaining bolt and removing the battery earth lead including washer.

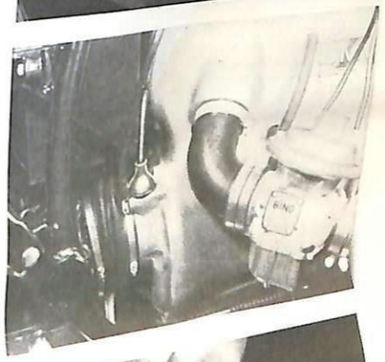

**Note when fitting:** Make sure that the drive shaft is run correctly along the frame.

## 62 13 020 Revolution Counter Drive Shaft – Removing and Refitting (models with mechanical revolution counter drive)

Loosen locknut (22 mm wrench), then unscrew knurled nut.

Remove engine cover.

Unscrew fastening screw (arrow) for revolution counter shaft and withdraw the shaft.

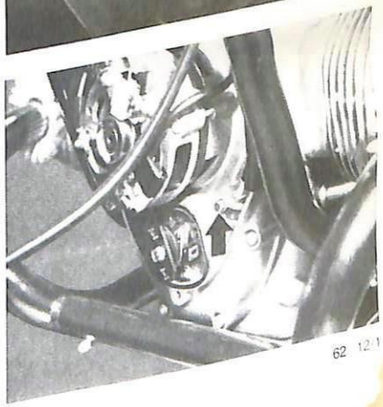

## 62 13 050 Instruments in cockpit fairing – renewing

Take off the cockpit fairing – 46 63 020.

Separate the cable connectors.

Unscrew the 2 knurled nuts on the bracket. Take off the holder and press the instrument(s) up out of the fairing.

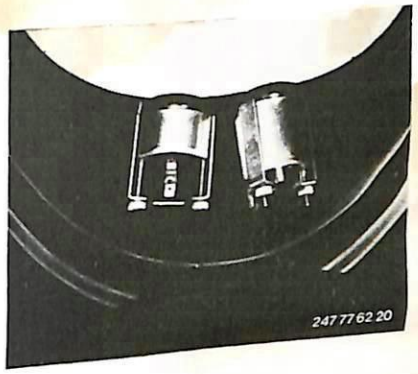

# 63 Lights


| | | Page |
|---|---|---|
| Specifications | | 63– 0/3 |
| Specifications (1979 models) | | 63– 0/4 |
| Specifications (1981 models) | | 63– 0/5 |
| 63 10 004 | Headlight – adjusting | 63–10/1 |
| 63 21 380 | Complete rear light cluster – detaching and attaching | 63–10/2 |
| 63 23 170 | Both flashing turn indicators (front or rear) – removing and installing | 63–23/1 |
| 63 99 241 | Headlight bulb – renewing | 63–99/1 |
| 63 99 271 | Bulb for flashing turn indicator (front or rear) – renewing | 63–99/3 |
| 63 99 381 | Rear light bulb – renewing | 63–99/3 |

**Lights**

## Technical Data

| Model | R 60/7 | R 75/7 | R 80/7 | R 100/7 | R 100 S | R 100 RS |
|---|---|---|---|---|---|---|
| Headlamp (Type) | Bosch 0 303 850 100 | | | | | |
| High and low beams | 12 V / 60 / 55 W H4 quartz-iodine bulb | | | | | |
| Parking light | 12 V / 4 W parking light bulb | | | | | |
| Idle telltale lamp (green) | 12 V / 1.2 W indicator bulb | | | | | |
| Oil pressure telltale (orange) | 12 V / 3 W indicator bulb | | | | | |
| Charge telltale (red) | 12 V / 1.2 W indicator bulb | | | | | |
| High beam telltale (blue) | 12 V / 1.2 W indicator bulb | | | | | |
| Turn indicator telltale (orange) | 12 V / 3 W indicator bulb | | | | | |
| Instrument lighting | 12 V / 1.2 W indicator bulb | | | | | |
| Tail and license plate light | 12 V / 5 W<br>12 V / 21 W } two-filament bulb | | | | | |
| Brake light | 12 V / 21 W bulb | | | | | |
| Turn indicators (2 yellow front and rear) | 12 V / 1.2 W indicator bulb | | | | | |
| Brake telltale (red) | | | | | | |

Lights

## Specifications – '79 models

| Model | R 80/7 | R 100 T | R 100 S | R 100 RT | R 100 RS |
|---|---|---|---|---|---|
| Headlamp (Type) | Bosch 0 303 850 100 | | | | |
| High and low beams | 12 V / 60/55 W H4 quartz-iodine bulb | | | | |
| Parking light | 12 V / 4 W parking light bulb | | | | |
| Idle telltale lamp (green) | 12 V / 1.2 W indictor bulb | | | | |
| Oil pressure telltale (orange) | 12 V / 3 W indicator bulb | | | | |
| Charge telltale (red) | 12 V / 1.2 W indicator bulb | | | | |
| High beam telltale (blue) | 12 V / 1.2 W indicator bulb | | | | |
| Turn indicator telltale (orange) | 12 V / 3 W indicator bulb | | | | |
| Instrument lighting | 12 V / 1.2 W indicator bulb | | | | |
| Tail and license plate light | 12 V / 5 W bulb | | | | |
| Brake light | 12 / 21 W bulb | | | | |
| Turn indicators (2 yellow front and rear) | 12 V / 21 W bulb | | | | |
| Brake telltale (red) | 12 V / 1.2 W indicator bulb | | | | |





Lights

## Specifications (1981 models)

| Model | R 100 | R 100 CS | R 100 RT | R 100 RS |
|---|---|---|---|---|
| Headlight type | Bosch Typ 0 303 850 100 | | | |
| High and low beams | 12 V / 60/55 W H4 halogen bulb | | | |
| Parking light | 12 V / 4 W Parking light bulb | | | |
| Neutral indicator (green) | 12 V / 1.2 W Indicator light bulb | | | |
| Charge indicator (red) | 12 V / 3 W Indicator light bulb | | | |
| Oil pressure warning (red) | 12 V / 1.2 W Indicator light bulb | | | |
| High beam telltale (blue) | 12 V / 1.2 W Indicator light bulb | | | |
| Turn indicator repeater (green) | 12 V / 3 W Indicator light bulb | | | |
| Instrument lighting | 12 V / 3 W Indicator light bulb | | | |
| Additional instrument lighting | 12 V / 2 W Indicator light bulb | | | |
| Rear/licence plate light | 12 V / 5 W Standard bulb | | | |
| Brake light | 12 V / 21 W Standard bulb | | | |
| Turn indicators (2 each, yellow, front and rear) | 12 V / 21 W Standard bulb | | | |
| Fuses | 8 A (2) | | | |

## 63 10 004 Headlight – adjusting

Whenever any work is carried out on the headlight, the beam setting must afterwards be checked. If a setting device is not available, the following procedure should be carried out. Check tyre pressures and correct as necessary. Set spring struts for solo riding and Nivomat units to operating position.

The machine must rest on its wheels, with the rider seated, at a distance of 5 meters (16 ft 5 in) from a light-coloured wall. The height from the floor to the center of the headlight is marked on the wall with a cross, and a second cross marked 5 cm (2 in) below the first.

The low (dipped) headlight beam is then switched on and repositioned until the light-dark transition is on the center of the lower cross, rising to the height of the center cross at the right, then dropping away again. (Note: this applies to motorcycles used in countries which drive on the right.)

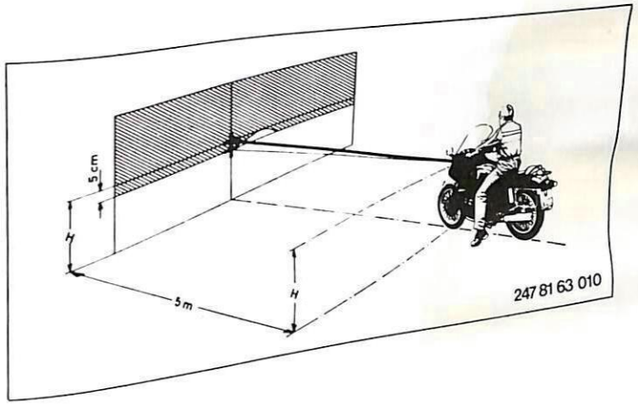

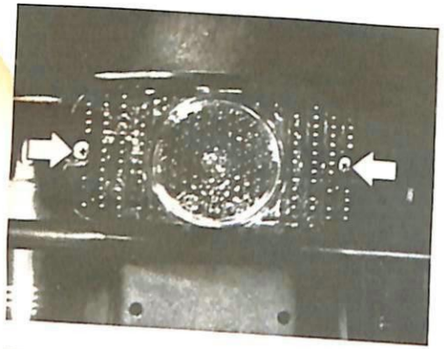

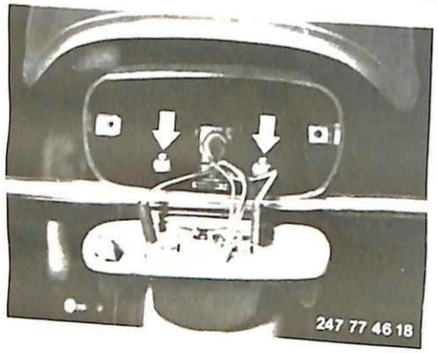


## 63 21 380 Complete rear light cluster – detaching and attaching

Disconnect the battery earth (ground) strap.

Remove both Phillips-head screws and take off the glass.

■

Detach the cable from the back of the reflector, make a note of the connections if necessary.

Remove the retaining bolts with washers and nuts from the housing, and take it off.

**When installing:** as the glass is offered up, make sure that the clear panel for licence plate lighting is at the bottom.

■



## 63 23 170 Both turn indicators (front or rear) – removing and refitting (R 60/7 – R 100 S)

Disconnect earth (ground) lead from the battery.
Unscrew both Phillips screws and remove the lens.

**Note when fitting:** When fitting the lens make sure that the marking "Top" is at the top.

■

Disconnect leads at the rear of the holder.

■

Slacken the 2 clamp screws and remove the turn indicator housing.

■

Removing and installing front turn indicators – R 100 RS:
Remove water shield from turn indicator housing and pull off flat pin plug. Remove the 2 Phillips screw for the lens and pull the turn indicator housing out forwards.

■

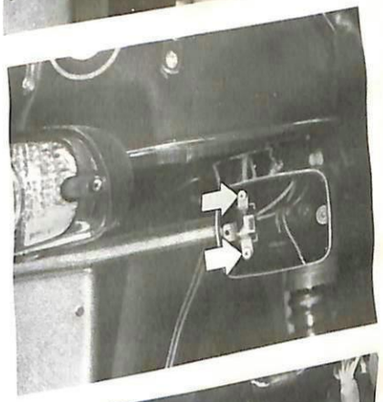

63-23/1

## 63 99 241 Headlight bulb – renewing

R 100 RS:

Unscrew the 4 knurled nuts holding the headlight beam tunnel, and take off the tunnel with the moulded glass.

■

R 100 RT:

Press away the rubber cover at the corners of the moulded glass, and unscrew the Phillips-head screws.

Take off the tunnel with moulded glass.

**Warning:** do not damage the glass with the screwdriver.

■

Loosen the Phillips-head screw (arrow) at the bottom of the headlight bezel ring, and pull the ring away from the headlight housing.

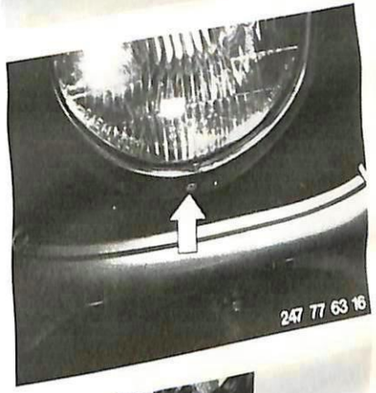


■

Release the wire clip, separate the halogen bulb from the reflector and pull it out of the spring-catch plug.

**When installing:** make sure that the lug designed to prevent the bulb from turning engages in the reflector.

Do not handle the bulb with the bare fingers; always use a clean cloth.

■

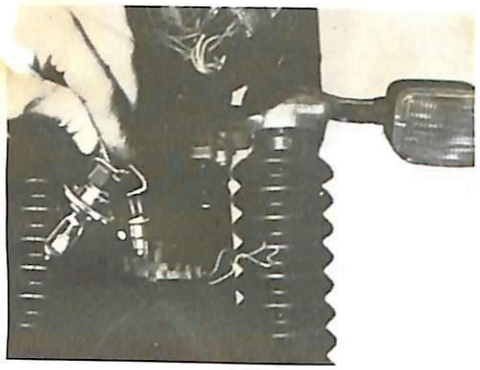

The parking light bulb is pressed out of the reflector from the inside, working through the hole for the main halogen bulb

■





## 63 99 271 Bulb for flashing turn indicator (front or rear) – renewing

Disconnect the earth (ground) strap at the battery.

Remove both Phillips-head screws and take off the glass.

■

Press the bulb into its holder and turn to the left to remove.

**When installing:** make sure that the "Top" marking on the glass is uppermost.

■

## 63 99 381 Rear light bulb – renewing

Disconnect the earth (ground) strap at the battery.

Remove both Phillips-head screws and take off the glass.

■

Press the bulb into its holder and turn to the left to remove.

**When installing:** make sure that the clear panel for licence plate illumination is at the bottom.

■

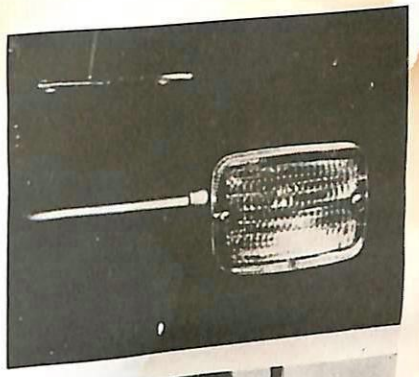

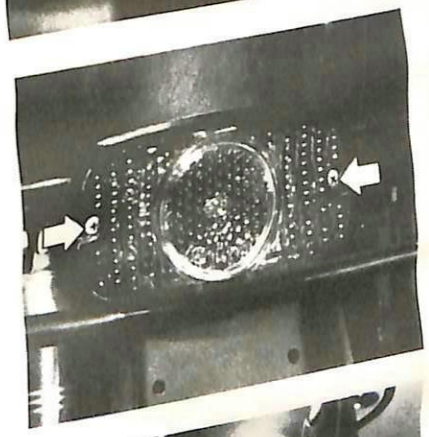

63-99/3

# 72 Special equipment


| | Page |
|---|---|
| Circuit diagram for additional instruments | 72–0/3 |
| Circuit diagram for additional headlights | 72–0/4 |
| Circuit diagram for hazard warning flashers | 72–0/5 |
| Circuit diagram for full interference suppression | 72–0/6 |

## Key to electrical circuit diagram – additional instruments

Cable codes

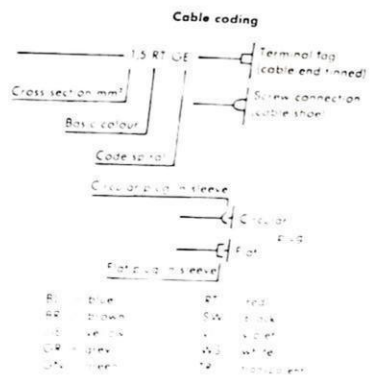


1 Headlight
2 Contact board with fuses
3 Earth (ground) at frame (near coils)
4 Ignition light switch
5 Voltmeter
6 Clock
7 Battery

New components

Existing components

# CIRCUIT DIAGRAM

## for additional instruments

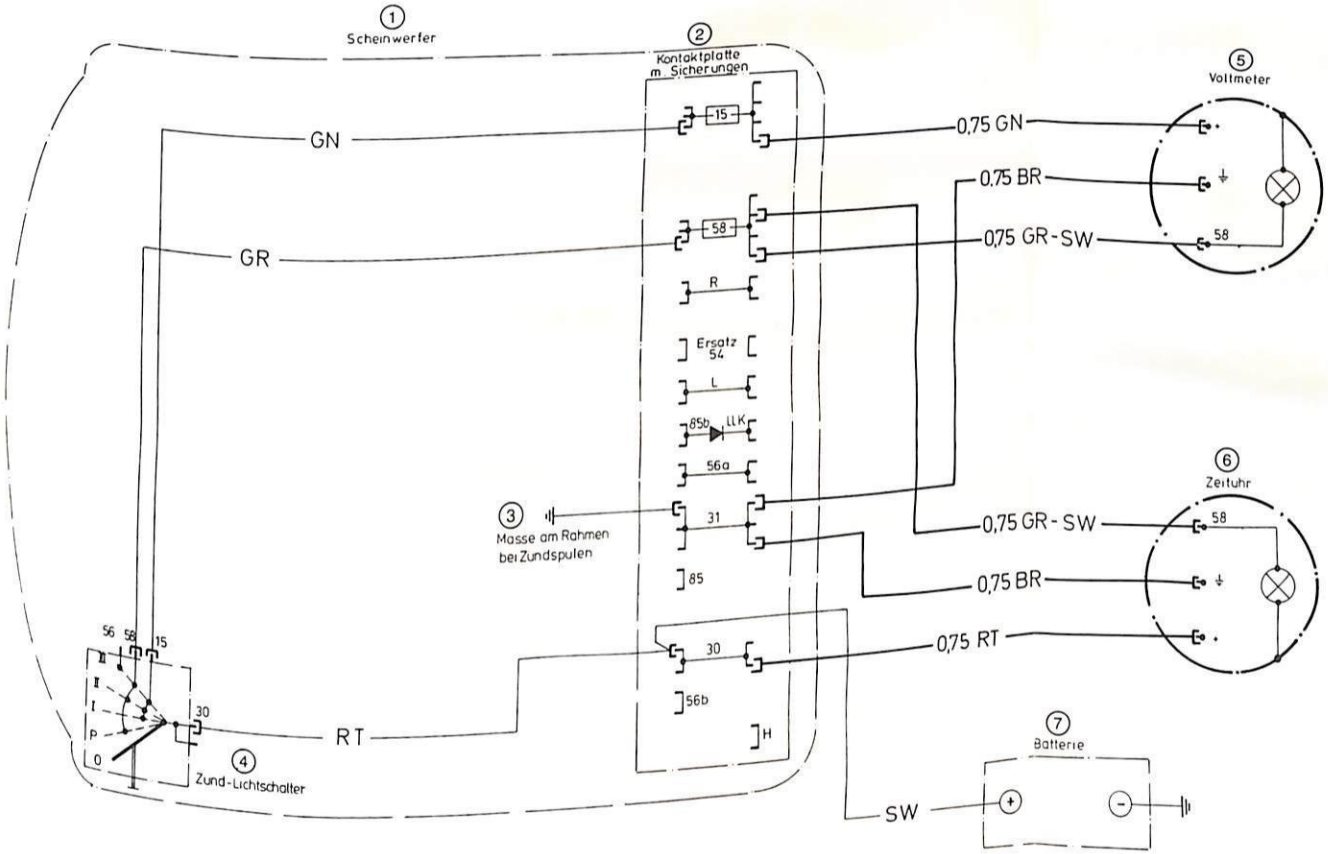


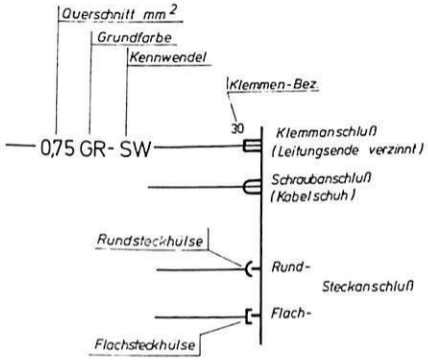


### Kennzeichnung

BL = blau
BR = braun
GE = gelb
GN = grün
GR = grau
RT = rot
SW = schwarz
VI = violett
WS = weiß

hinzukommende Teile

vorhandene Teile

## Key to electrical circuit diagram – additional headlights

Cable codes

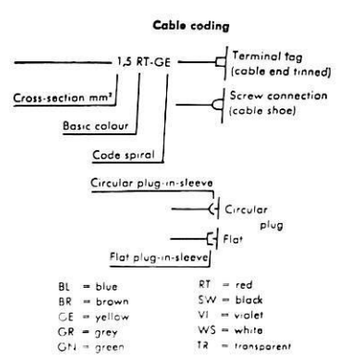


1 Headlight
2 Earth (ground) point
3 Lighting relay
4 ignition switch
5 Low beam (dip) switch
6 Relay I
7 Relay II
8 Contact board
9 to headlight high beam
10 to headlight low beam
11 to battery
12 Additional switch
13 Fog light
14 Additional driving light

New components

Existing components

# CIRCUIT DIAGRAM

## for additional driving lights

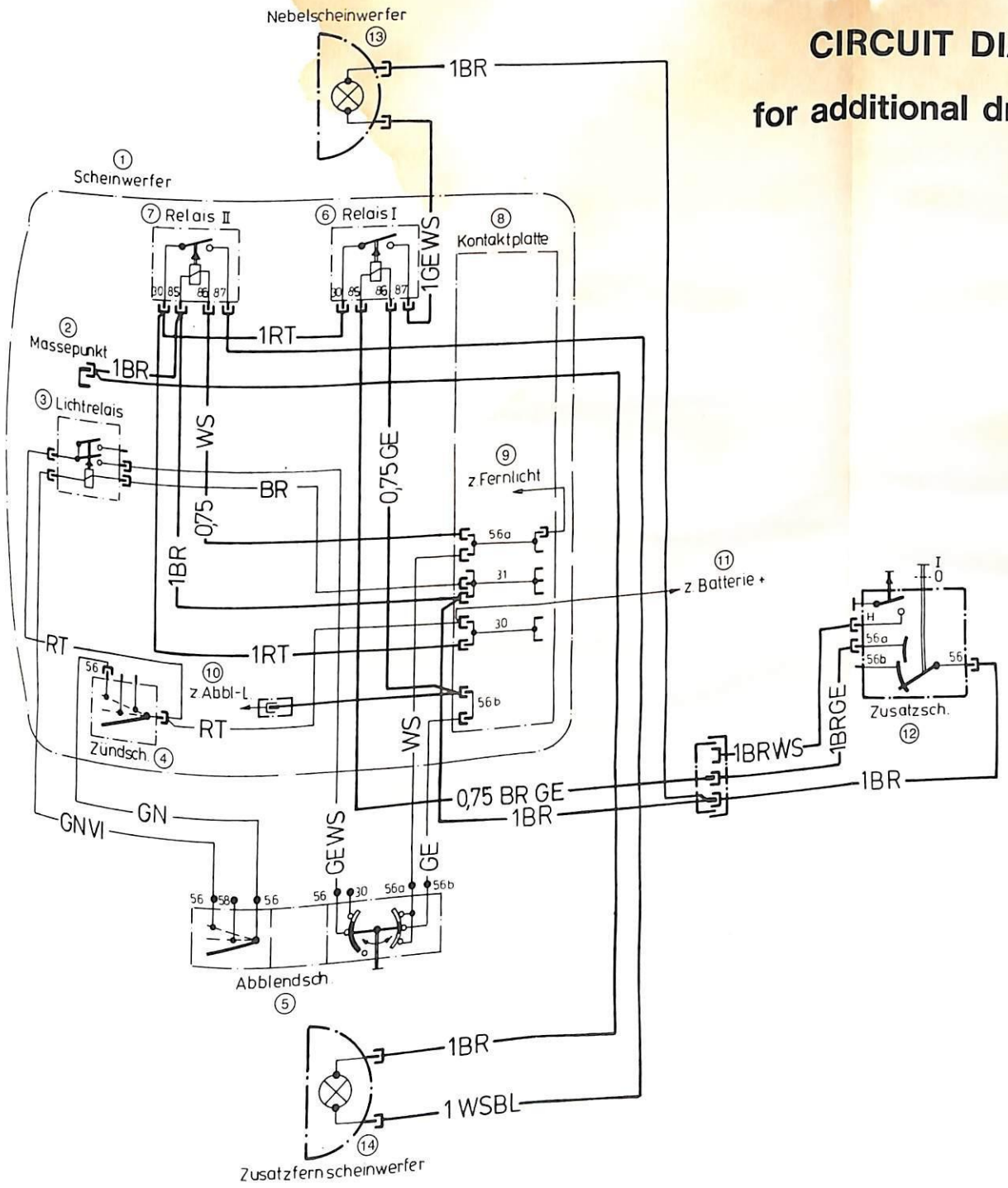


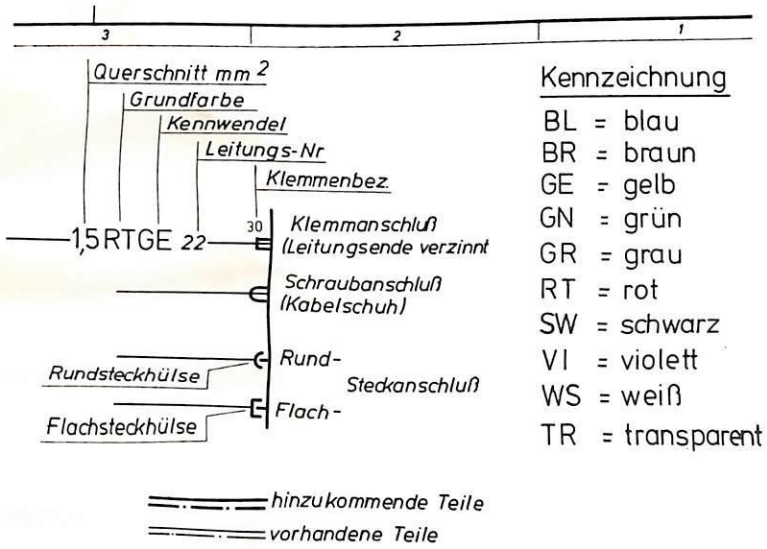


Kennzeichnung

BL = blau
BR = braun
GE = gelb
GN = grün
GR = grau
RT = rot
SW = schwarz
VI = violett
WS = weiß
TR = transparent

## Key to electrical circuit diagram – hazard warning flashers

Cable codes

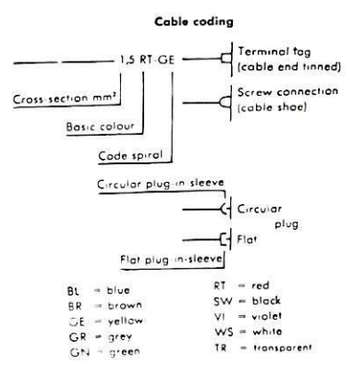


1 Headlight
2 Contact board
3 Hazard warning flasher relay
4 Diode
5 to turn indicator switch
6 Turn indicator repeater
7 Hazard warning flasher switch
8 Relay
9 Battery

New components

Existing components

# CIRCUIT DIAGRAM

## for hazard warning flashers

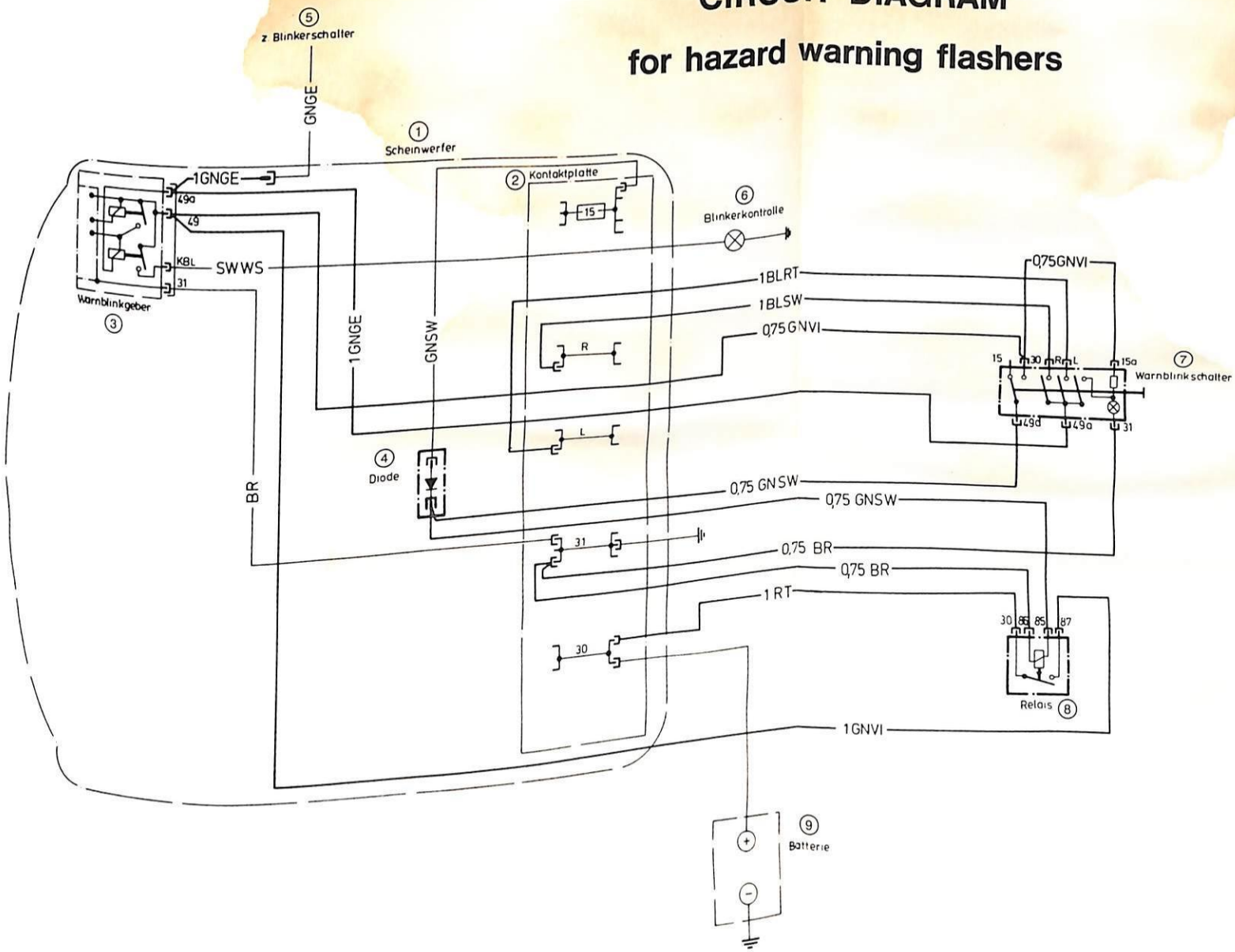


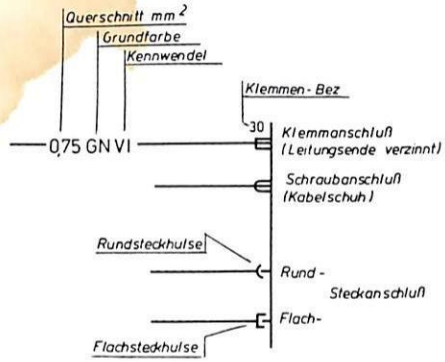


Kennzeichnung

BL = blau
BR = braun
GE = gelb
GN = grun
GR = grau
RT = rot
SW = schwarz
VI = violett
WS = weiß

hinzukommende Teile

vorhandene Teile

## Key to electrical circuit diagram – full interference suppression

Cable codes

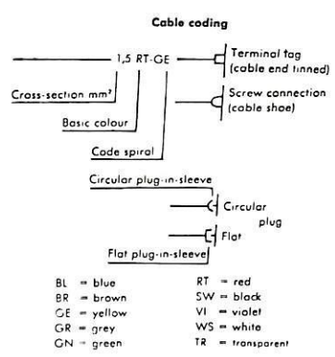


New components

Existing components

1 Ignition light switch
2 Condenser
3 Contact plate
4 Condenser
5 Foot brake light switch
6 to brake light
7 Starter
8 Condenser
9 Battery
10 Condenser
11 to wiring harness
12 Condenser
13 Starter relay
14 Condenser
15 Diode board
17 Horn, left
17 Horn, right
18 Coils
19 Condenser
20 Condenser
21 Suppressor filter
22 Spark plugs with caps
23 Condenser
24 to emergency engine cutout
25 Condenser

# CIRCUIT DIAGRAM

## for full interference suppression

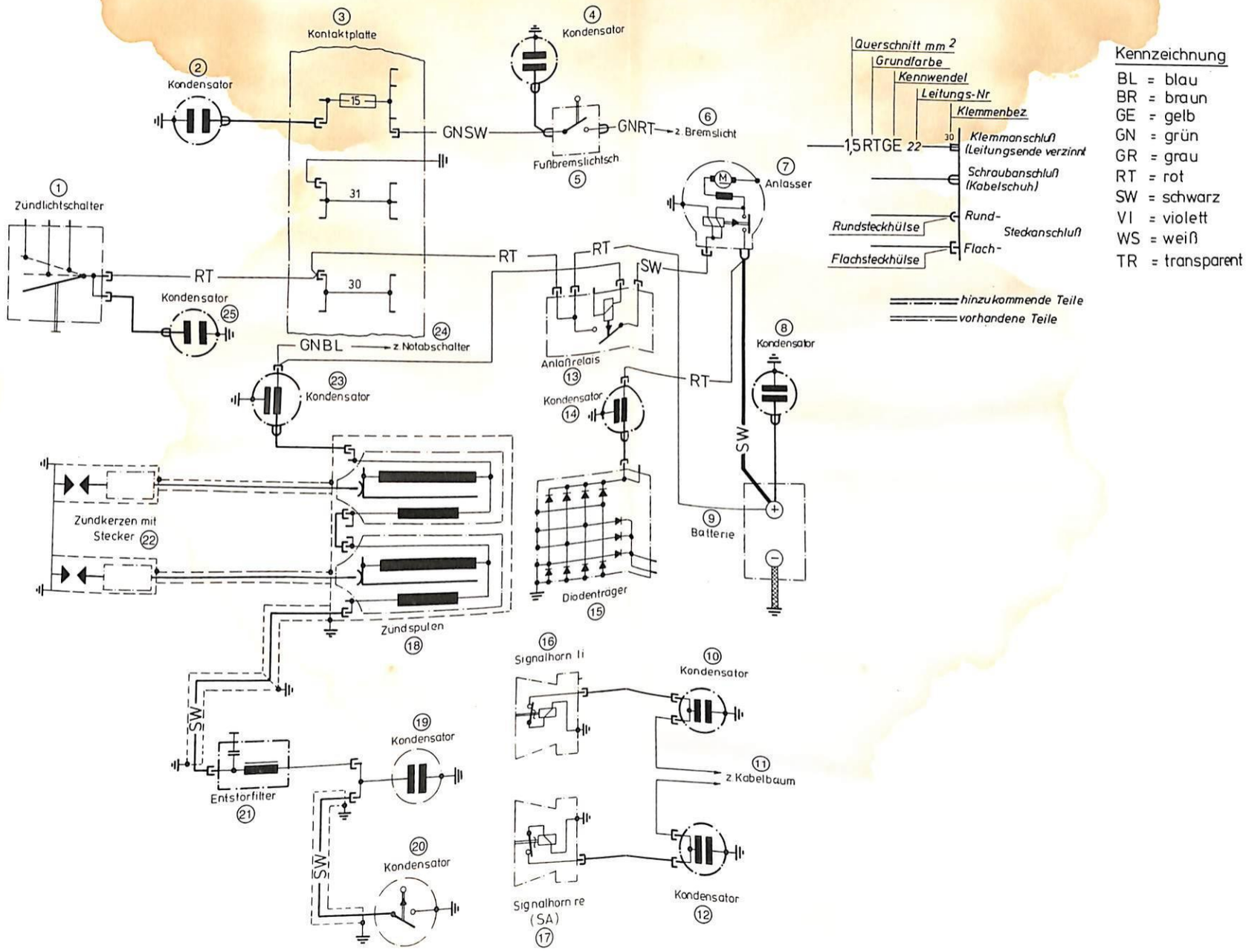

Bestell-Nr. 01 51 9 798 461 8.84 Printed in West Germany
© BMW AG, Sparte Motorrad After Sales

MOTO-BINS Ltd
16 Surfleet Road, Surfleet,
Spalding, Lincs., PE11 4AG UK
Tel: 01775 680881 / 680580
Fax: 01775 680860
Email: sales@motobins.co.uk