BMW Motorcycles

R 25 · R 25/2

BMW AG

WORKSHOP REPAIR MANUAL

BAYERISCHE MOTOREN WERKE AKTIENGESELLSCHAFT MÜNCHEN 13

MW 132

Introduction

The purpose of this workshop repair manual and its numerous illustrations is to describe the operations required for disassembly, repair and reassembly of the R 25 and R 25/2 motor cycle models, as far as such tasks can be performed in well organized repair shops with personnel trained by our BMW Service Department.

At the end of this book there is a list showing all special tools needed for these operations as well as a list and technical drawings concerning tools to be made in the dealers' own workshops (shop-made tools).

This workshop repair manual is to be above all a source of information for foremen and mechanics who are in charge of maintenance jobs on above motorcycle models and it therefore ought to be always at hand within the workshop.

Though this repair manual goes much into the details of the job, it is not expected to replace a thorough training on the models, in the instruction school of our service department.

For mechanics, however, who have participated in the training course it will be a very useful guide for special maintenance jobs and adjustment data.

This book does not replace the circular-letters regularly issued by our Service Department, which should be observed as usual. To publish alterations of technical data, fits and tolerances, etc. no particular amendment service is intended for this repair manual, but only circular-letters.

Therefore we may ask you to kindly insert whatever alterations we might publish, so that this workshop repair manual will always be up-to-date and in conformity with the latest technical developments.

BAYERISCHE MOTOREN WERKE AKTIENGESELLSCHAFT

Service Department

BMW AG

Table of contents

Introduction

Group: Removal and Fitting:

Special Tools
Shop-made Tools
Removal and fitting

Group: Engine

Technical Data
Fits and Tolerances
Special Tools
Shop-made Tools
Dismantling Engine
Crankshaft and Cylinder Maintenance
Assembling Engine
Carburettor

Group: Transmission

Technical Data
Fits and Tolerances
Special Tools
Shop-made Tools
Transmission, dismantling
Transmission, maintenance
Transmission, assembling

Group: Rear Wheel Drive

Technical Data
Fits and Tolerances
Special Tools
Shop-made Tools
Rear Wheel Bevel Drive, dismantling
Rear Wheel Bevel Drive, assembling

Group: Chassis

Technical Data
Fits and Tolerances
Special Tools
Front Forks, removing and dismantling
Front Forks, assembling

Group: Side Car

Attaching the Side Car

Group: Electrical Equipment

Technical Data
Description
Maintenance
Locating and rectifying of possible troubles

Lubrication Chart

Tools:

Special Tools for BMW Motorcycles
List of Shop-made Tools and Translation of the German text on drawings
Technical Drawings for Shop-made Tools

BMW AG

Removal and Fitting Group

BMW AG

Special Tools

1 ea hook spanner 49 mm ∅ for exhaust pipe coupling nut . . . . Matra No. 338/1

Shop-made Tools

1 ea drift punch for rear suspension plunger carrier column . . . . . W 5015
1 ea assembly stand . . . . . V 5043

BMW AG

Removal of Main Assemblies

Put motorcycle on the assembly stand V 5043 (shop-made requisite)

Removal of rear drive:

Disconnect battery and remove it.
Take off battery carrier.
Loosen mudguard stay end bolts and raise end of rear mudguard.

Unscrew wheel spindle nut (1) on drive side and remove it together with washer (2).

Slacken pinch bolt (3), take it off with locking bush and withdraw wheel spindle (4) by means of Tommy Bar (5).

Remove wheel.

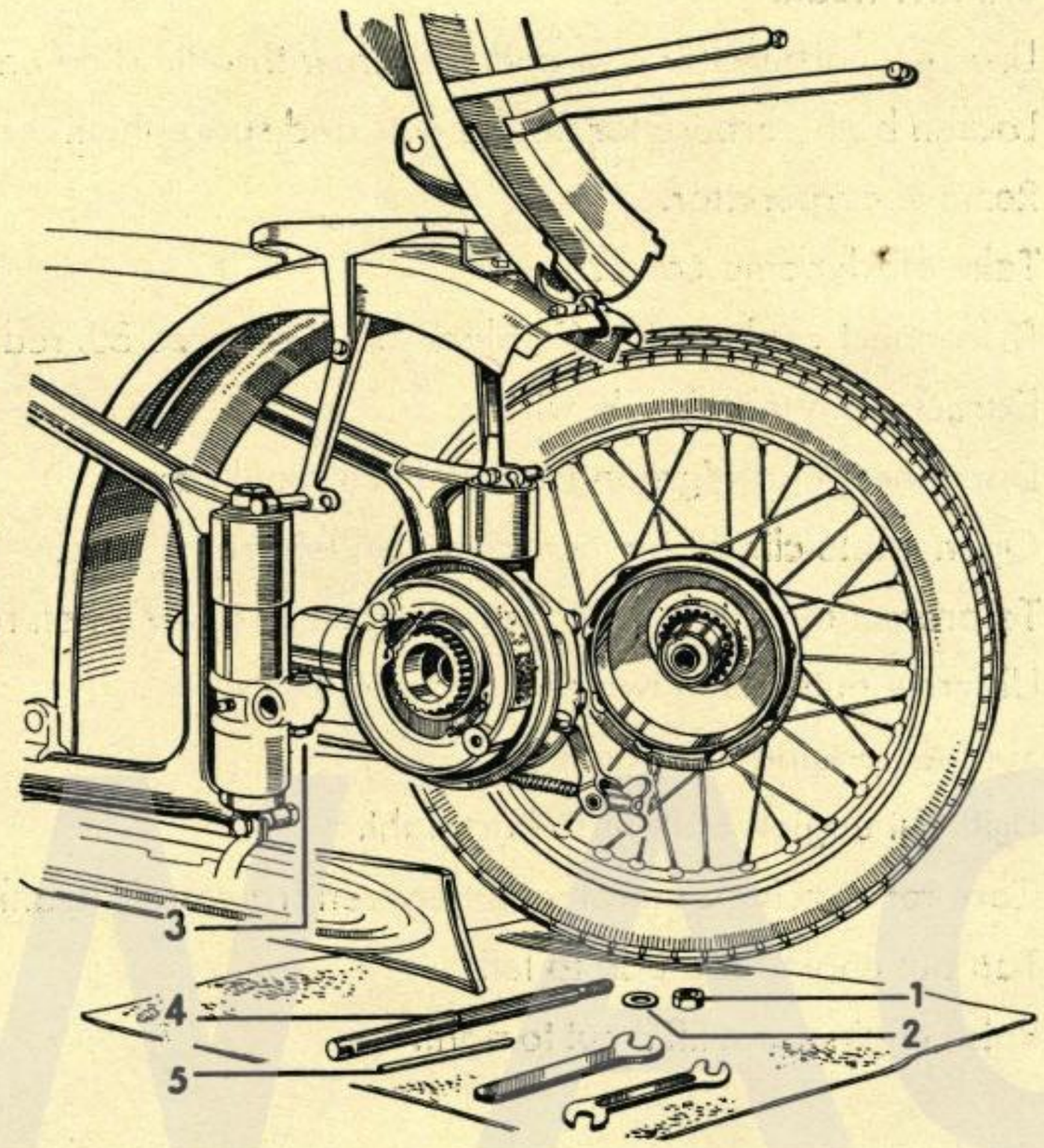

Unscrew butterfly nut from rear of brake operating rod.
Depress brake pedal, so that brake rod slides off the brake operating lever.
Press joint pin out of brake cam lever and place it with the butterfly nut on the brake rod, so that these two items are not lost.
On R 25/2 models, unscrew cap nuts from spring top retainers.
Loosen upper pinch bolt on right rear spring top shroud.
Remove lower pinch bolt, together with nut and washer.
Use drift punch (shop-made tool) to drive right plunger carrier column (bearer rod) of rear suspension assembly carefully upwards.
Press rear drive assembly to left down and remove it from flexible rubber joint at gear-box end.

Removal of gear box:

Withdraw speedometer shaft from drive take-off assembly after loosening its set screw.
On R 25/2 models, remove rubber plug on gearbox rear end cover and undo cable clamp screw. Withdraw cable for neutral indicator.
Undo split pin for bolt of clutch release lever bracket and remove bolt.
Remove bracket together with clutch release lever and thrust spring.

Unscrew leaf spring for centre stand from gearbox housing (superseded on R 25/2 models).
Undo nuts from gearbox fixing bolts and spare them together with washers.
Remove clutch thrust unit and withdraw gearbox.

Removal of engine:

Loosen fixing screws of fuel tank and remove fuel tank.

Use hook spanner 49 mm ∅, Matra No. 338/2, to slacken exhaust pipe coupling nut on cylinder head.

Unscrew carburettor cap and withdraw throttle slide unit from carburettor.

Loosen both carburettor flange nuts and spare them together with washers.

Remove carburettor.

Take off dynamo cover.

Disconnect cables (blue 61, black 51, chequered 30, red 15).

Extract main motorcycle wiring.

Disconnect earth (ground) cable from crankcase.

Open cable clip of ignition cable on left frame tube.

To protect dynamo (generator) replace its cover when removing engine.

Unscrew nuts of the two engine fixing bolts.

Support engine from beneath.

Drift out engine bottom bolt to right.

Care for spacing shim placed between frame and crankcase.

Tap out engine top bolt to left.

Raise engine and lift it out to right.

BMW AG

Reassembly

Refitting of engine to frame:

Lift engine (dynamo cover placed) into frame.

Slide in place engine top bolt jamming-in at a time support for clutch cable between crankcase and frame.

Enter engine bottom bolt from left into frame, insert spacing shim between crankcase and frame, then push bolt in place thoroughly.

Attach exhaust pipe with union nut and joint onto cylinder head, install pipe clip on engine bottom bolt and tighten union nut by means of hook spanner Matra No. 338/1.

Tighten both engine fixing bolts with lock washers placed under nuts.

Fitting transmission:

Install transmission assembly with clutch push rod in frame.

Enter square head of push rod by means of pliers in quadrangular passage of clutch spring plate.

Engage transmission and rotate coupling flange to make sure that splined end of mainshaft engages in splineways of clutch friction plate.

Place gear box on engine attaching surface and fix it with 4 nuts and washers.

Locate clutch pressure plate, ball cage with balls and thrust unit with oil seal for clutch actuation slightly greased in gearbox cover.

Secure bracket including clutch throw-out lever with bolt and split pin on gearbox cover.

Install thrust spring between clutch throw-out lever and gearbox housing and fit cable in clutch throw-out lever.

Bolt leaf spring for central stand onto gearbox cover (not used on R 25/2 models).

On R 25/2 models, enter cable for neutral indicator, fasten it and replace rubber plug.

Fitting rear drive:

Install flexible rubber joint on coupling flange at transmission rear end. Position suspension bottom shroud on rear drive housing cover and care to screw-in the rear spring so that its end is seated at the bore on bottom shroud. Select a spacing shim of such a thickness that the spring end protrudes through the drilled hole of covering tube being thus accessible for later removal.

Insert rubber pad of smaller diameter in spring, screw upper spring retainer on rear suspension spring and locate top shroud.

Place suspension bottom shroud, if needed, with washers to obtain tight fit of covering and the larger rubber pad on bottom of spring plunger integrally cast with the rear drive housing cover.

To permit the coupling flange drive pegs to enter easily in holes of flexible rubber joint, treat them with talcum powder (no oil or grease must be used) and then connect the complete rear drive assembly with coupling flange in rubber joint to the transmission.

Enter bevel drive casing with rear springing in frame and push or tap the bearer rod (central column), smeared with oil, right home from top downwards (recess for bottom pinch bolt on rear).

Slide in position top and bottom pinch bolts, but do not yet tighten them.

On R 25/2 models install spring top retainer into the upper end of the rear frame member, by screwing the retaining piece in the cap nut. Then tighten top and bottom pinch bolts.

Fitting rear spindle left-hand bracket with rear springing:

Fit springs, rubber pads and shrouds on wheel spindle holding bracket at nearside in an order similar to that indicated for rear drive housing cover, and install the complete assembly on frame.

Tap greased bearer rod home (recess for bottom pinch bolt on rear) from top downwards.

Locate top and bottom pinch bolts, but do not yet tighten them.

On R 25/2 models fit spring top retainer into upper end of rear frame member by screwing the retainer piece in cap nut and tighten upper pinch bolt.

Installing rear wheel:

Enter rear wheel, slide home greased wheel spindle and secure with nut and washer. Fit pinch bolt and locking bush in wheel spindle nearside bracket and tighten, so that this end is also secured.

Move down rear end of mudguard, install mudguard stays on frame and tighten.

Replace rear wheel brake rod and adjust brake by means of butterfly nut.

Connecting dynamo (generator) cables:

Slide dynamo cable through bore in dynamo frame and fit rubber grommet in annular groove.

Connect blue wire to terminal 61, black wire to terminal 51, chequered wire to terminal 30 and the red wire to terminal 15 of dynamo.

Check whether brushes and springs bear correctly.

Connect earth (ground) cable to crankcase timing cover fixing bolt.

Replace dynamo cover.

BMW AG

Fitting speedometer shaft:

Enter speedometer shaft end in drive take-off assembly on gear box, turning at a time coupling flange to allow squareheaded shaft end to slip in place.

Tighten lock screw slightly and fit rubber grommet.

Fitting carburettor:

Bolt carburettor with the gasket placed upon cylinder head.

Locate previously cleaned and oiled air filter and secure with screw.

Enter throttle slide unit together with attached cable in carburettor mixing chamber top plate and secure with lock ring.

Fitting battery:

Bolt battery carrier with four screws into the frame.

Place rubber mounting and locate battery.

Hook lower and upper part of holding strap in battery carrier, connect them with strap screw and secure battery by means of lock nut.

Connect the negative lead to battery and crankcase timing cover, the positive lead of wiring to the battery.

Fitting fuel tank:

Position petrol tank upon frame and secure with screws, lock washers and nuts. Fuel tanks on R 25/2 models have rubber supports.

Connect fuel hose onto petrol tap.

Locking rear wheel springs: (does not concern R 25/2 models)

Withdraw central stand, charge rear wheel and in this position lock both spring retainers on frame by tightening top pinch bolts to the effect that the suspension top shrouds are also secured.

Adjusting head lamp:

Upon installing, the head lamp is to be readjusted in accordance with the instructions outlined in the Electrical Equipment Group of this manual or in the rider's manual R 25/2.

BMW AG

Engine Group

BMW AG

Technical Data

Model	R 25	R 25/2
Year of construction	1950/51	1951/52
Engine numbers starting with	220 001 to 243 410	245 001
Type of engine	four stroke, inclined, with overhead valves	
Number of cylinders	one (vertical)	
Bore	68 mm	
Stroke	68 mm	
Capacity	245 c. c.	
Compression ratio	6.4 – 6.5 to 1	
Rated continuous power	R 25: 12 HP, 5600 r. p. m. R 25/2: 12 HP, 5800 r. p. m.	
Top speed, Solo, sitting upright	60 m. p. h.	
Valve timing (measured at 2 mm = .08")	Intake opens 6° after t. d. c. Intake closes 34° after b. d. c. Exhaust opens 34° before b. d. c. Exhaust closes 6° before t. d. c.	± 5°
Operating valve clearance (measured on cold engine)	Intake 0.10 – 0.15 mm (.004 – .006") Exhaust 0.15 – 0.20 mm (.006 – .008")	
Spark retard	5° before t. d. c.	
Maximum spark advance	38.5° – 41.5° before t. d. c. = 10.5 mm (.41") of piston stroke	
Ignition and Lighting system:	R 25: Battery-ignition Noris 6 volts ZLZ 45/60 R 25/2: Battery-ignition Noris 6 volts ZLZ 45/60/2 L with horizontal regulator coil	
Gap between contact breaker points	0.4 mm (.016")	
Spark plug	Bosch W 240 T 1	
Plug points gap	0.6 mm (.024")	

Carburettor:		R 25	R 25/2	
Type		Bing 1/22/28	Bing 1/22/44	or SAWE K22
Main jet		100	110	115
Idling jet		45	35	35
Needle jet		1208	1708	127
Jet needle		Standard	Standard	054
Needle adjustment	Solo	1	3	I
	Side car	2	3	I
Mixing chamber top plate		5	5/1	–
Pilot air screw opened		1¼—1¾ turns	1 – 2	2 ± ¼
Weight of float		11 grams	11 grams	8 grams

BMW AG

Lubricants and filling quantities	See Lubrication Chart Group
Lubricating oil consumption	Approx. 0.2 Imp. pints per 100 miles
Fuel	Gasoline with at least 70 octane
Fuel consumption (depending on speed)	See fuel consumption figures shown below
Clutch	Single-disc dry clutch

Fuel consumption

Speed in Miles per hour	Miles per Imp. gallon approx.	
	R 25/2 Solo	R 25/2 with Side Car
25	149	111
30	142	101
35	123	86
40	107	71
50	79	48

Speed in Miles per hour	Miles per U. S. gallon approx.	
	R 25/2 Solo	R 25/2 with Side Car
25	124	92
30	118	84
35	102	71
40	89	59
50	65	40

BMW AG

Fits and Tolerances

Cylinder:

Piston size	Cylinder bore	Piston diameter	
		Solo	Side Car
Normal	68.00 mm diam.	67.94 mm	67.93 mm
Next oversize	68.50 mm „	68.44 mm	68.43 mm
Second next oversize	69.00 mm „	68.94 mm	68.93 mm

Tolerances on ground cylinder bores	0.03 mm max. tapered (top diameter smaller) ± 0.01 max. out of round
Piston clearance in cylinder bore: Solo motorcycles	0.06 mm
Sidecar motorcycles and machines for public authorities	0.07 mm
Permissible total wear of cylinder bore and piston	0.12 mm beyond piston assembly clearance

Piston:

Piston ring end gap	0.2 – 0.4 mm
Piston ring side clearance:	
at first compression ring	0.04 mm
at second and third compression rings	0.03 mm
at scraper ring	0.02 mm

Valves:

Valve stem diameter	Intake and exhaust $7\ ^{-0.050}_{-0.065}$ mm
Valve head diameter	Intake 34 mm = 1.34", exhaust 32 mm = 1.26"
Permissible excentricity on valve head	0.03 mm = .0012"
Thickness of valve head brim	1 mm = .04" minimum
Angle of valve seat	45 degrees
Outer correction angle on valve seat	15 degrees
Width of valve seat	2 mm = .08"
Valve stem clearance	0.05 – 0.085 mm = .002 – .0034"
Permissible wear	0.10 mm = .004" beyond valve clearance

BMW AG

Valve springs:	Inner	Outer
Assembly length	30.50 mm = 1.2"	34.50 mm = 1.36"
Unloaded length	37.50 mm = 1.48"	46.00 mm = 1.81"
Wire gage diameter	2.80 mm = .11"	3.50 mm = .14"
Coil outer diameter	23.80 mm = .94"	32.70 mm = 1.29"

Crankshaft rod journals:

Crankpin diameter	32 mm h 6
Permissible wear of crankpin	0.03 mm = .0012"
Diametrical clearance of big end bearing rollers in roller cage	0.05 – 0.15 mm = .002 – .006" (important when fitting oversize rollers)
End play (thrust) of rollers	0.10 – 0.20 = .004 – .008"
Big end bearing rollers	7 mm diameter, 10 mm long
Oversize rollers	7.01 – 7.02 – 7.03 – 7.04 – 7.05 – 7.06 mm diam.
Width of roller cage	15 mm (.59") = 0.2 mm (.008") less than width of connecting rod
Fit of connecting rod	No clearance, but must turn freely
Side clearance	0.07 – 0.10 mm = .0028 – .004"

Timing mechanism:

Clearance of valve tappets in guiding pieces	0.02 – 0.04 mm = .0008 – .0016"
Camshaft end play (thrust)	0.07 mm = .0028"

Oil pump:

Backlash of oil pump gears	0.03 – 0.05 mm = .0012 – .002"
End play of oil pump gears	0.01 – 0.04 mm = .0004 – .0016"

Camshaft breather rotary valve:

Clearance in bearing bore	0.08 – 0.18 mm = .0032 – .0072"

BMW AG

Special Tools for Engine Group

1 ea drift punch for crankshaft assembly	Matra No. 293/5
1 ea degree plate for adjustment of ignition timing	" 298
1 ea puller for ball bearing and sprocket	" 299
1 ea puller for flywheel	" 311
1 ea device for centering of crankshaft	" 353 A
2 ea gauge supports with stands for centering of crankshaft	" 353 B
1 ea puller for camshaft	" 355
3 ea clamping screws for clutch assembly	" 357
1 ea wooden plate for valve removal and reinstallation	" 361
1 ea valve holder for valve grinding, 7 mm ϕ	" 368
1 ea valve seat cutter shank	" 431
1 ea valve guide reamer, 7 mm ϕ	" 442
1 ea puller for front bearing cover	" 467
1 ea support for press operations on crankshaft	" 493/1
1 ea support plate for pressing apart crankshaft halves	" 493/3
1 ea locking tool for dismantling of crankshaft	" 493/4
1 ea drift punch for dismantling of crankshaft	" 495
1 ea locking fixture for flywheel	" 498
1 ea valve seat cutter, 45 degrees, 36 mm diameter	" 294
1 ea valve reseating cutter, 15 degrees, 36 mm diameter	" 295

BMW AG

Shop-made Tools

1 ea drift punch, gudgeon pin	W 5002
1 ea compressor, piston ring	W 5003
1 ea feeler gauge for checking clearance between Woodruff key and flywheel	L 5008
1 ea adjustable assembly cradle for engine and transmission	V 5014
2 ea praying forks for aligning connecting rods	W 5021
1 ea cranked screw driver for plug covering oil pump drive spindle	W 5022
1 ea degree plate with indicator for adjustment of ignition timing (these degree plates can be purchased from BMW Service Department at DM 5.– per unit)	V 5029
1 ea puller screw for dynamo (generator) armature	V 5030
1 ea valve spring lifter	V 5034
1 ea wood guard for connecting rod	V 5035
2 ea parallel bars for straightening of connecting rods	L 5036

Dismantling Engine

Cylinder and piston:

Remove rocker cover clamp from cylinder head.

Detach rocker cover.

Remove rocker bracket securing nuts, respectively cylinder head fixing bolts on R 25/2 models.

Remove rocker brackets and rockers.

Withdraw push rods.

Unscrew cylinder head fixing studs with spacer washers and sleeves.

Remove cylinder head.

Check ignition point and contact breaker clearance (see „Assembling Engine", paragraph „Adjustment of ignition timing").

Undo cylinder nuts, remove cylinder.

In order to prevent piston and connecting rod from being injured, use wood guard V 5035 (shop-made tool).

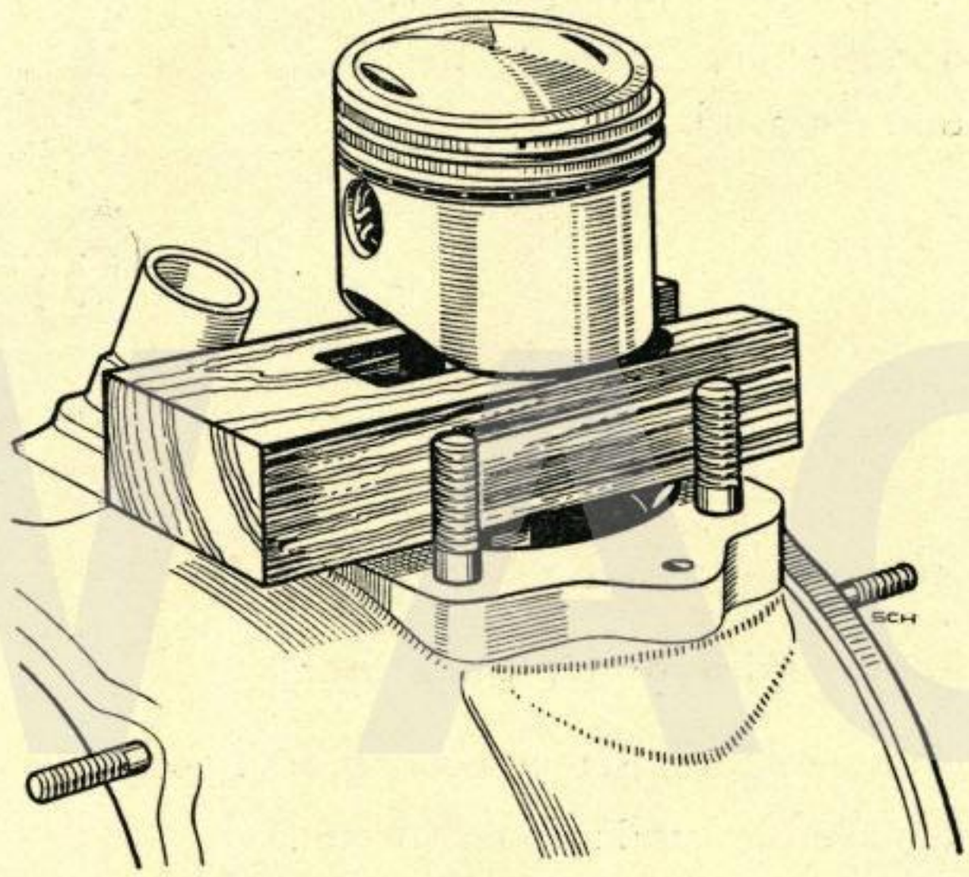

In as far as this has not yet been done, mark the piston, so that it may be replaced into its original position.

To remove the piston, first extract the gudgeon pin retaining circlips and heat the piston slightly.

Tap gudgeon pin by using eventually a standard type of drift punch.

Withdraw rocker tappets from their guides.

Dismantling clutch unit:

Successively slacken three clutch pressure plate securing screws.

Remove outer pressure plate, friction plate, spring pressure plate as well as the three clutch springs.

With locking fixture Matra No. 498 fasten flywheel to crankcase, in order to keep it from turning.

This will enable the flywheel hexagonal clamp screw to be freed and removed.

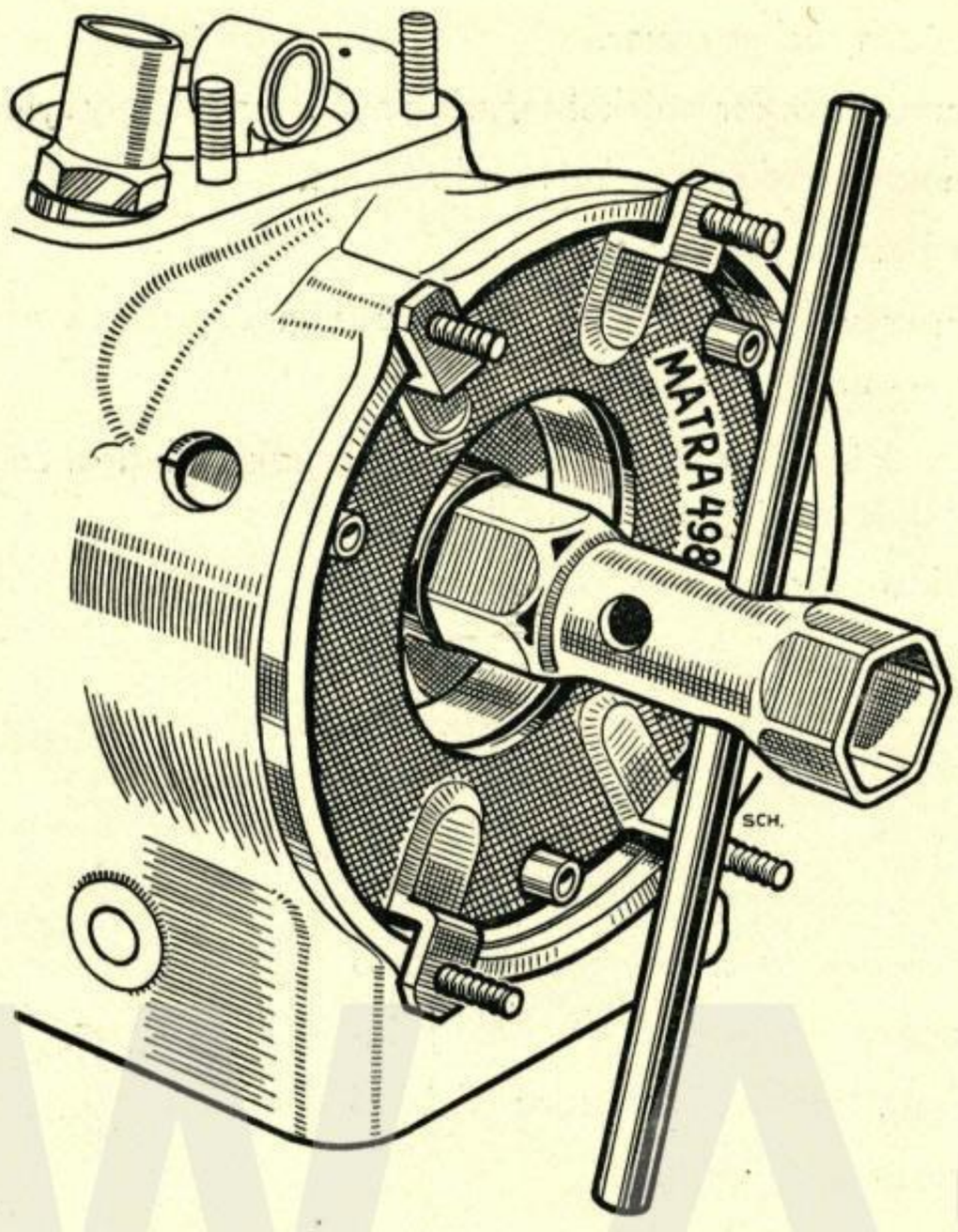

BMW AG

Removing dynamo (generator):

Unscrew central screw securing both automatic timing control and armature.

Remove automatic timing control.

Withdraw brushes until their springs jam them sidewards, to prevent deterioration on replacement.

Slacken three fixing screws in dynamo frame by means of a screw driver.

Remove dynamo frame carefully.

Use puller screw V 5030 (shop-made tool) to extract armature.

Removing timing chain, camshaft breather and camshaft:

Undo screws and nuts securing crankcase timing cover.

Tap off timing cover, using a soft mallet.

Unscrew camshaft breather screw, remove breather with thrust spring.

Turn crankshaft until lock of timing chain stands underneath the camshaft sprocket (deepest cavity in crankcase casting).

Remove split pin securing chain lock and push lock through.

Remove timing chain.

Undo the two cheese-headed screws securing camshaft front bearing bush, through the drilled holes of camshaft sprocket.

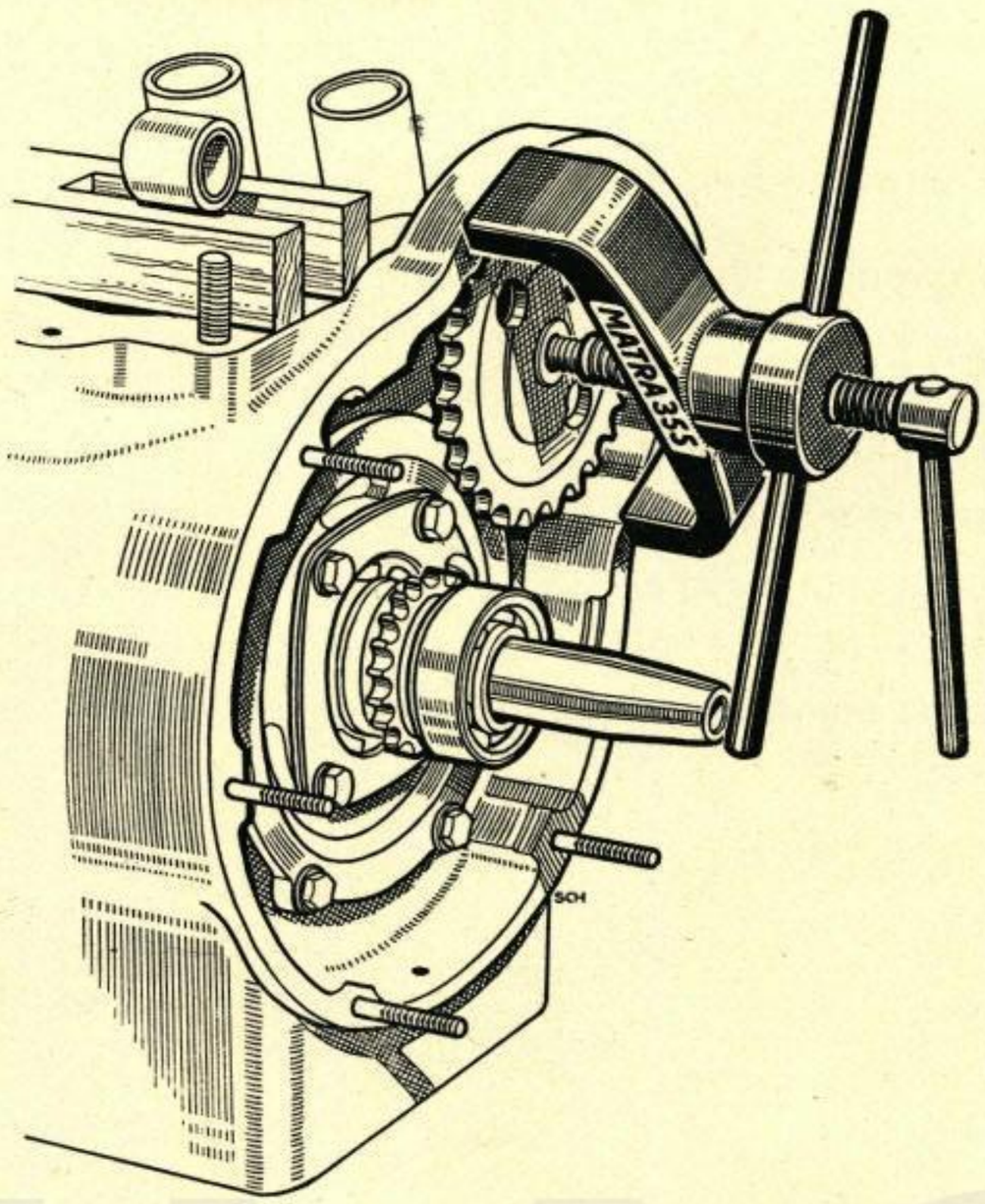

Pull out camshaft with the aid of device Matra No. 355.

BMW AG

Removing ball bearing and sprocket from crankshaft:

Use device Matra No. 299 to withdraw front ball bearing 6204 first about 8 mm. Push spring washer pulled away with ball bearing back towards the sprocket, grasp ball bearing alone without spring washer and remove it from the shaft.

Take off spring washer and withdraw outer circlip.

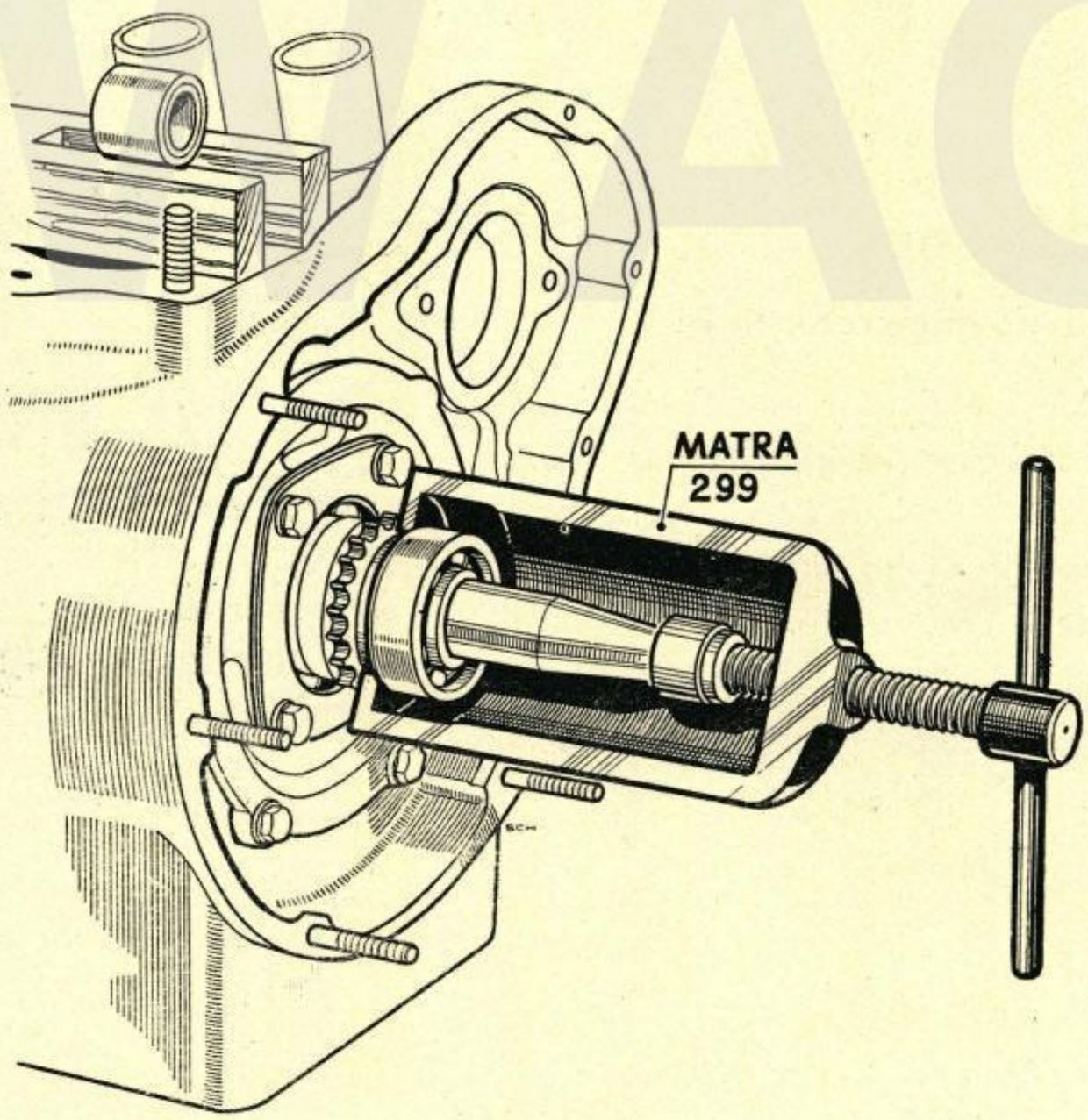

Slacken four screws holding in position flange of crankshaft front bearing bush.
Withdraw crankshaft sprocket by means of device Matra No. 299.
Remove large spacer washer and bearing flange from shaft end.

Removing flywheel:

To remove the hexagon central screw which locates flywheel in position, it is merely the case of straightening ears of tab washer and of slackening the screw.

Draw out flywheel using Matra device No. 311, taking care at the same time not to damage spring washer.

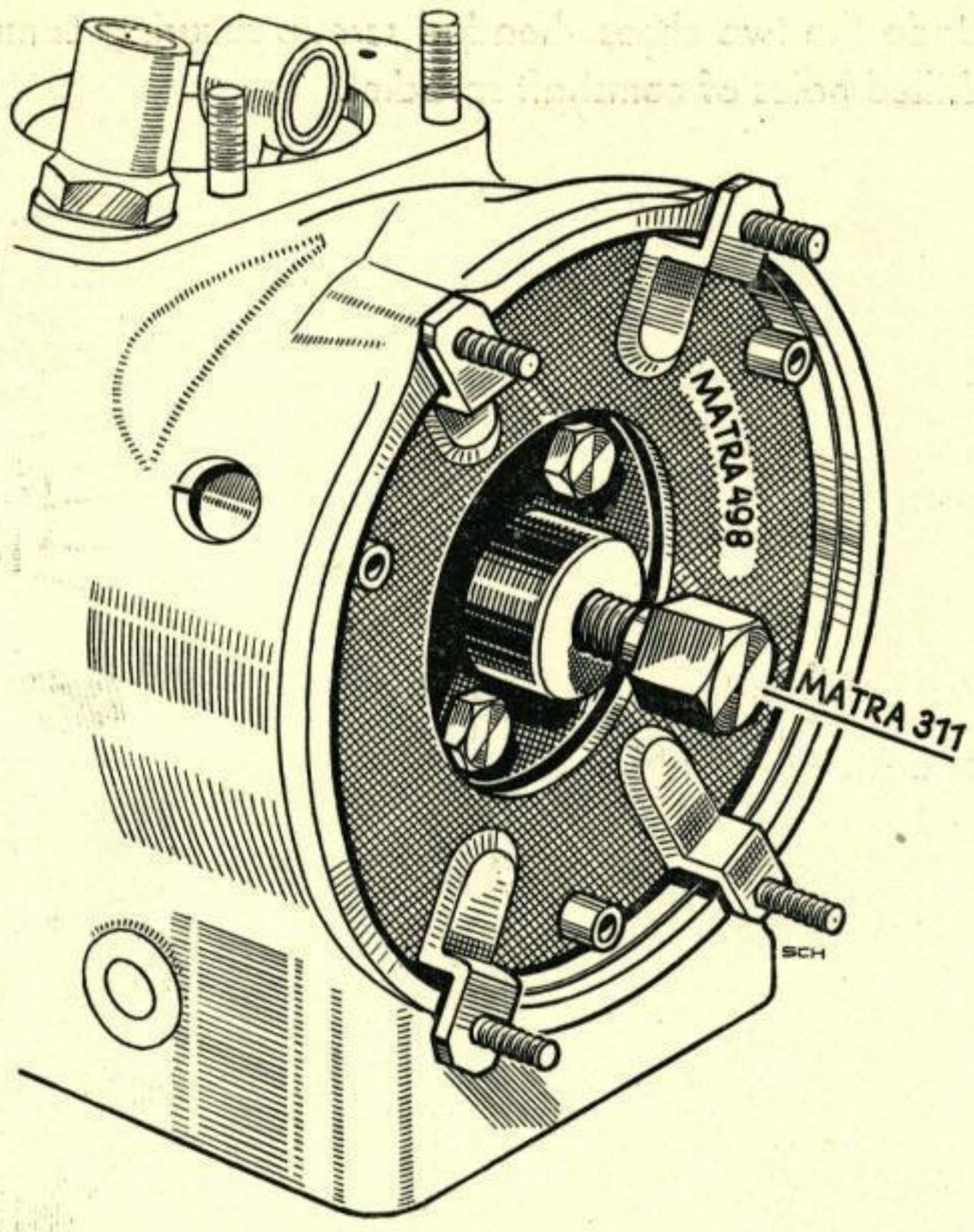

BMW AG

Removing crankshaft:

Remove five screws fixing front crankcase bearing cover plate (shown in place on figure) and withdraw the latter by means of device Matra No. 467.

On R 25 models, press bearing bush off bearing cover plate, if this is required.

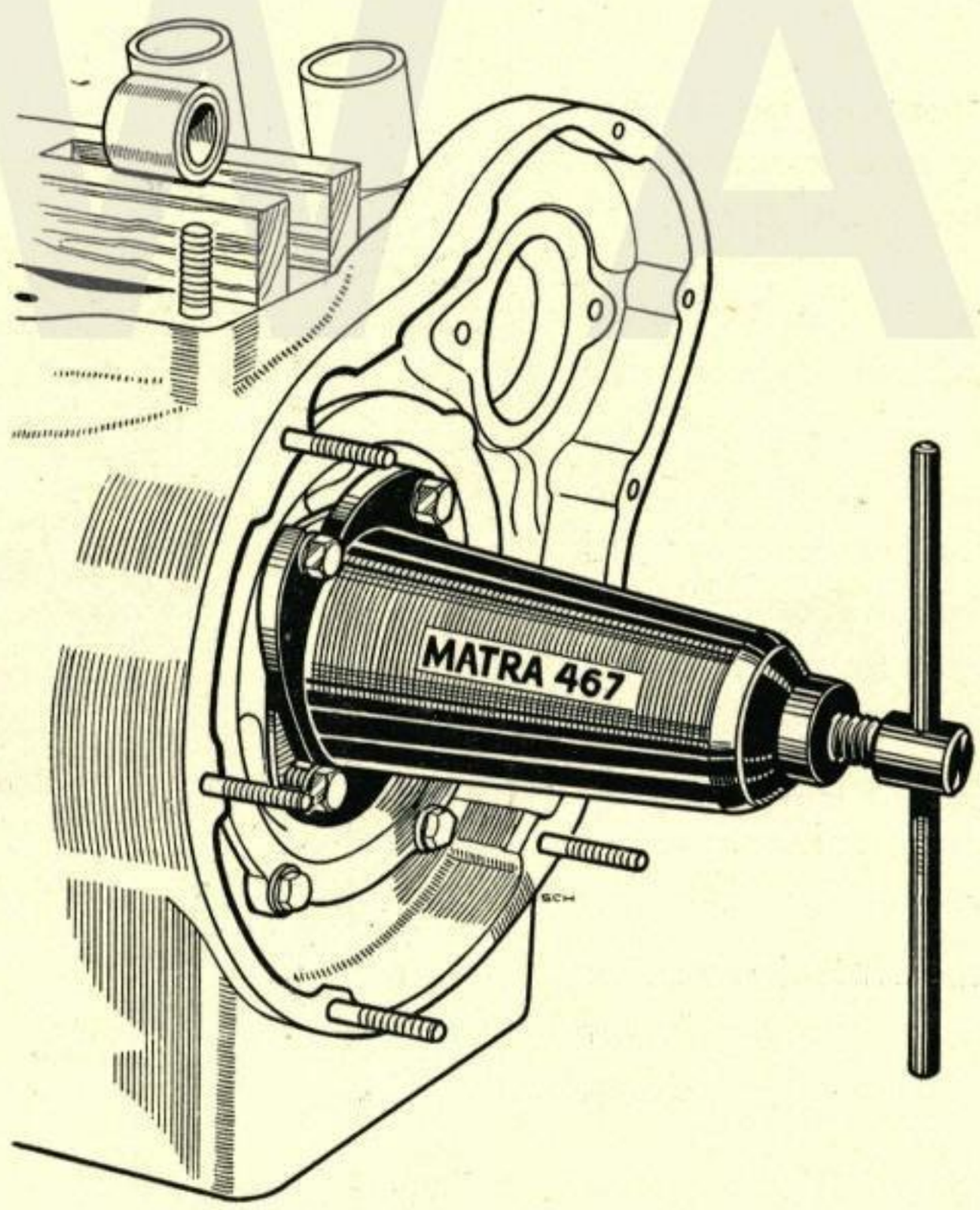

Remove the small spacer washer.

Heat crankcase to about 80 deg C = 175 deg F, pull crankshaft carefully forwards taking care not to damage oil seal.

Draw out crankshaft in a way that the connecting rod big end clears the recess at bearing plate seating and from this position tilt crankshaft assembly out of crankcase mouth.

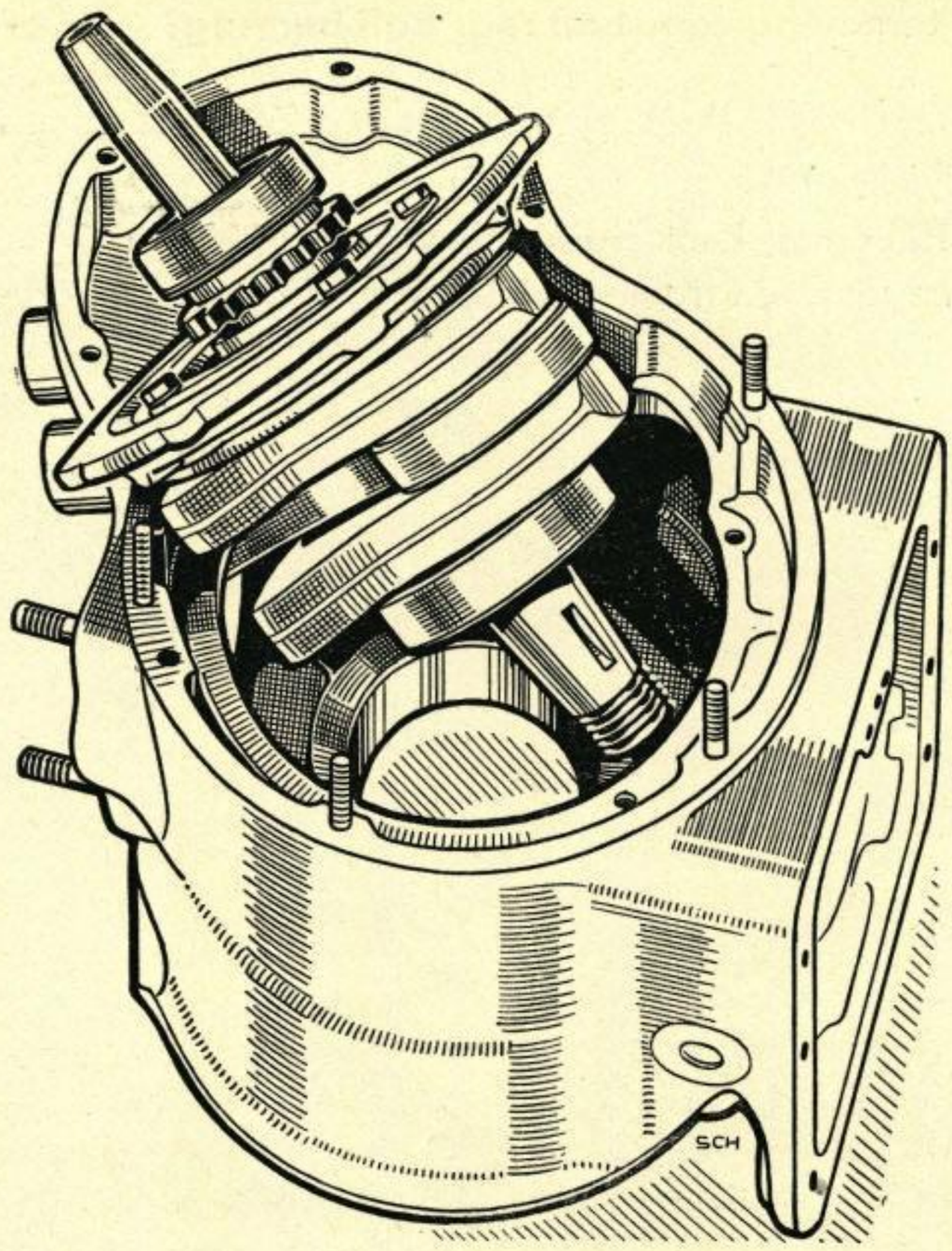

Removing oil pump and drive shaft:

Remove dipstick.

Unscrew inspection plug covering oil pump driving shaft by means of cranked screw driver (shop-made tool W 5022), lift drive shaft and remove it.

Loosen and remove ten screws securing oil sump plate, and take off the latter.

Loosen and remove screws fixing oil strainer and detach this item.

Finally undo screws which locate oil pump in position and remove pump assembly.

Dismantling oil pump:

Loosen and undo three oil-pump-body and plate studs.

Remove oil pump idler gear.

If necessary, withdraw connection sleeve from oil pump spindle gear.

Clean all parts and blow out drilled oil ways with compressed air.

Starting with engine No. 220076 the width of oil pump gears is 10 mm (.4") instead of 8 mm (.3"), with engine No. 221511 the oil strainer is fitted with a finer gauze and with engine No. 223811 the diameter of oil jet in front crankcase ball bearing bush, of 1.5 mm, has been brought to 1.8 mm.

These three modifications will best be carried out on thorough overhauls. The 1.5 mm oil jet cannot be bored to 1.8 mm unless the larger type of oil pump has been installed.

Removing camshaft rear ball bearing:

To remove the rear ball bearing (6203) of camshaft, if required, first unscrew guide of inlet tappet.

Thereafter heat crankcase to about 100 deg C = 211 deg F. Then the ball bearing may be removed from the housing by dropping the crankcase on a wooden block.

BMW AG

Crankshaft Overhaul

Dismantling crankshaft:

Slacken countersunk screw in oil thrower ring and remove this disc.

Remove rear ball bearing 6206.

Use a square to scratch a neat straight line across the centre of the two crank cheeks in order to facilitate reassembly operations.

Support crankshaft on big end with plate Matra No. 493/3 in crankshaft press stand Matra No. 493/1, in a way that the crankshaft front end points upwards, swing locking tool Matra No. 493/4 of named device between the crank cheeks, apply drift punch Matra No. 495 on crankpin and press crankpin out with the aid of a hydraulic press.

Remove connecting rod and roller cage.

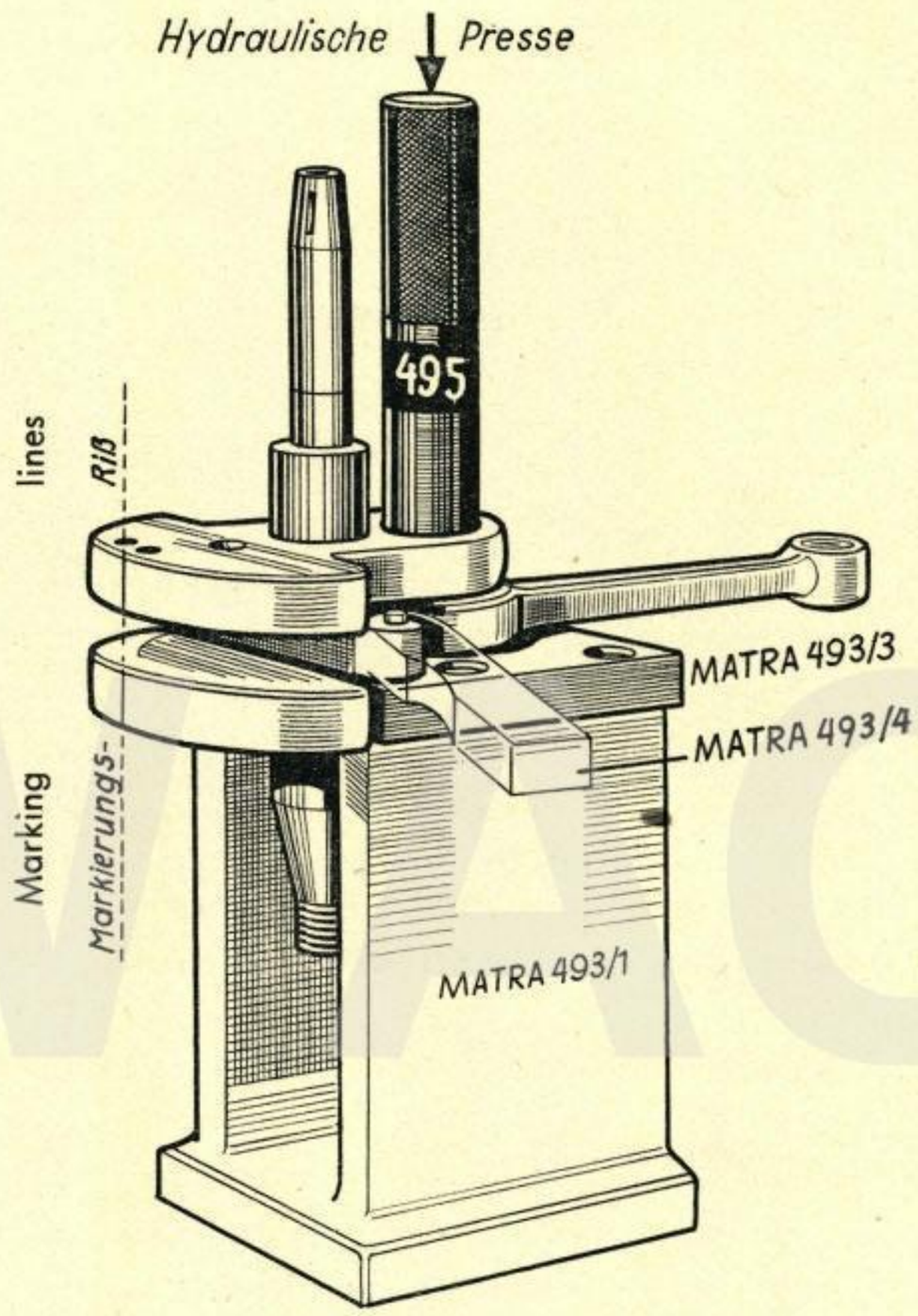

Replacing crankpins:

In case the crankshaft connecting rod journal is not found in correct condition or the wear exceeds an amount of 0.03 mm (.0012"), the crankpin must be discarded.

To press in place a new crankpin use device Matra No. 493/1 with support plate No. 493/3.

Care should be taken that the two drilled oil ways in the crankpin remain free outside and continue pressing until the crankpin flushes with the rear face of rear crank cheek.

Readjustment of connecting-rod big-end bearings:

The connecting rod must be fitted snugly but remain easy to rotate (select suitable oversize rollers 7.01, 7.02, 7.03, 7.04, 7.05, 7.06 mm diameter) so that the connecting rod may be smoothly slided on the crankpin with roller cage and rollers inserted.

Eventual slight differences of size between two oversize roller types will be compensated by lapping and polishing connecting rod big end journal surface with a lapping arbour.

Lapping with emery cloth grading 90 – 120 and polishing with polish cloth MO 3.

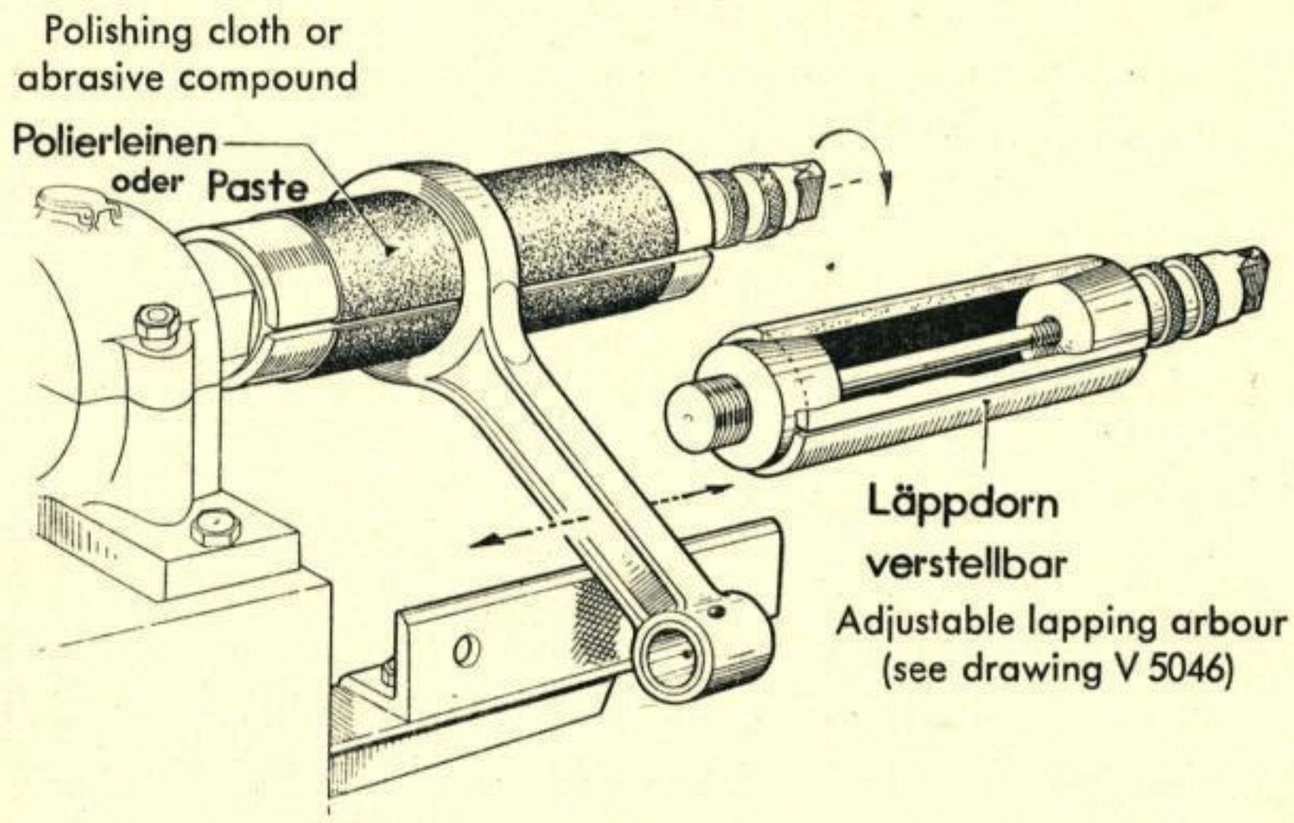

The new rollers in cage should have 0.05 to 0.15 mm (.002 – .006") diametrical clearance and 0.1 to 0.2 mm (.004 – .008") side clearance.

BMW AG

Assembling crankshaft with hydraulic press:

Support rear half of crankshaft with connecting rod oiled (the oil groove machined in face of connecting rod big end should be at the side of rear crank cheek) in plate Matra No. 493/3, placed upon stand Matra No. 493/1, position front half of crankshaft on crankpin, in a way that the marking lines on both counterweights are aligning. With the aid of drift punch Matra No. 293/5 press on about 3 mm, then check alignment of scratched lines and readjust if required. Now press together the two halves of crankshaft until a 0.07 – 0.10 mm (.0028 – .004") clearance between crankshaft and connecting rod is obtained on both circumferences of big end.

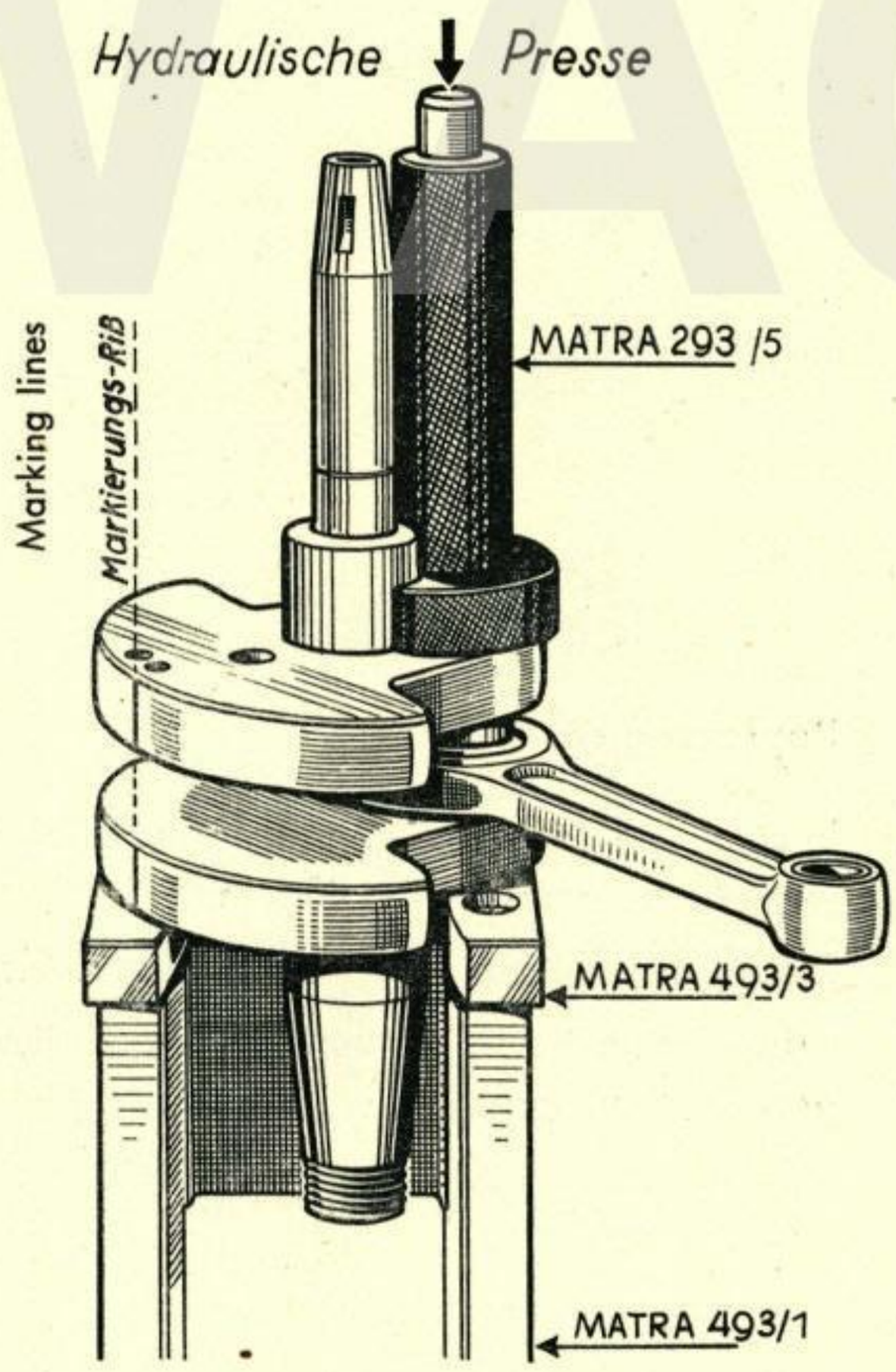

Recentralising the crankshaft:

Set crankshaft upon prismatic supports of crankshaft centering device Matra No. 353 A and check both shaft ends for correct central position by means of stand Matra No. 353 B and dial gauge Matra No. 353 C.

If the front crank cheek is found offset from its original position on crankpin, correct location following undermentioned procedure:

When "a" is ascertained as being the lowest spot on crankshaft front end, and being the highest spot found on rear shaft end, rectify cheek position by applying a blow at "b".

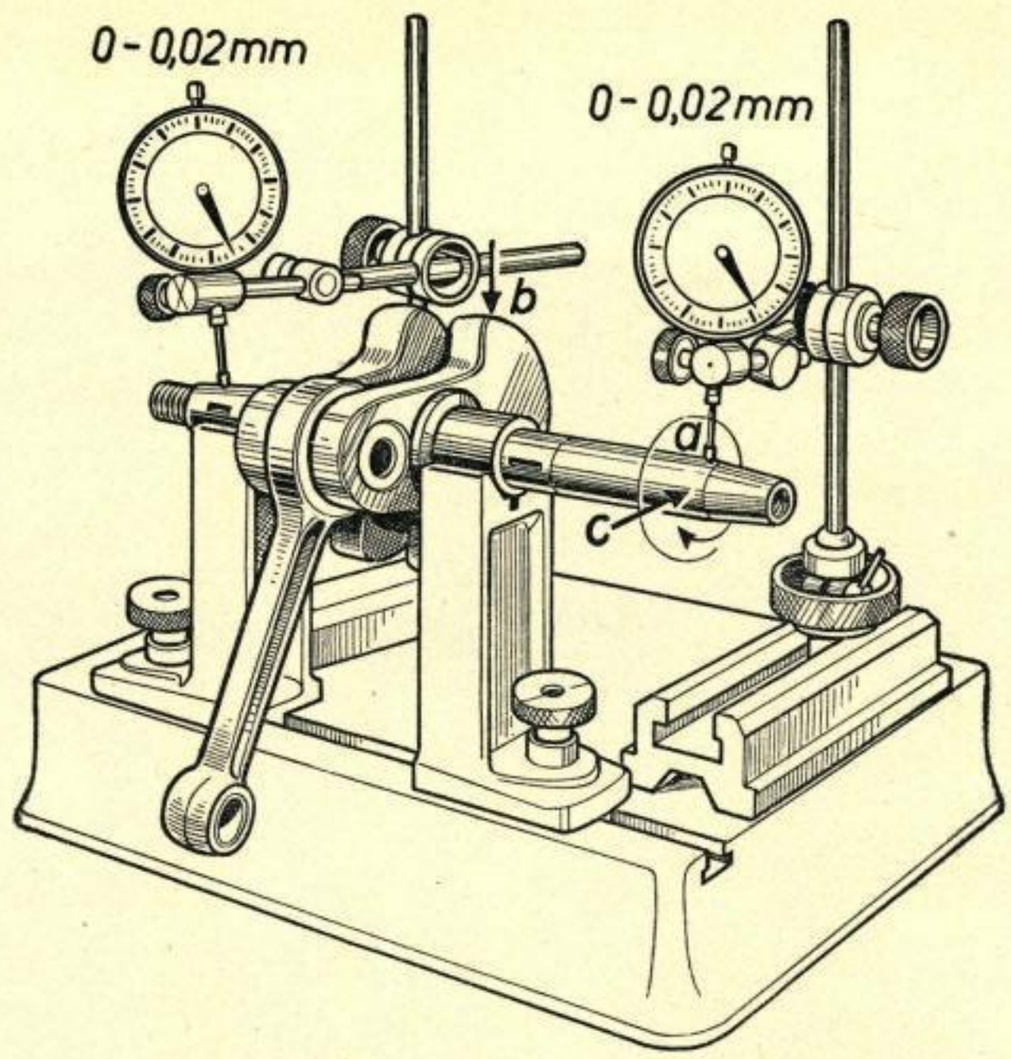

When "a" is ascertained being the lowest spot on front shaft end, but with the rear main journal end running truly, the crank cheek planes are not parallel.

In this case the counterweights must be pressed together slightly at "b".

When the lowest spot is found being offset by 180°, proceed reversely.

If the two crank cheeks are not parallel in their longitudinal axis, their position must be rectified as follows:

When on measuring, "c" results as being the lowest spot on crankshaft front end, the two crank cheeks must be slightly forced away by applying pressure at the centre of counterweights.

If the lowest spot on shaft is offset from "c" by 180°, rectify the two counterweights by driving them together with a hammer blow.

For readjustment of all other possible positions, proceed logically with proper alteration of above directions.

Out-of-true limit on shaft ends is 0.02 mm = .0008".

Check side clearance between connecting-rod big end and crankshaft, eventually correct and recentralize again.

After recentralizing of crankshaft, fit oil thrower ring steadily into crankpin bore, fix it with countersunk screw and secure the latter with a notch impact.

Remember that the oil thrower ring is a snug fit to the crank cheek.

BMW AG

Measuring the Cylinder

The cylinder bore (desired value) is 68 mm ∅ (standard bore).

The manufacturing deviation from the desired value is hewn into the cylinder base, e. g. 005 means that the cylinder in question has an "effective bore" of 68.005 mm or 02 says the "effective bore" of the corresponding cylinder is 68.02 mm.

The limit of tolerance may amount to 0.03 mm on either + or – side. Values hewn in cylinder base, without signs, must always be added.

Using dial gauge check cylinder bores at the top, centre, and bottom of piston travel, performing two measurements on each measure level, each one in longitudinal and traverse direction of gudgeon pin, so that six measurements must be made at all in order to ascertain wear, out-of-roundness, and tapering of cylinder.

Caution:

For all measurements the prescribed measure temperature of + 20 deg C = 66 deg F should be observed under all circumstances.

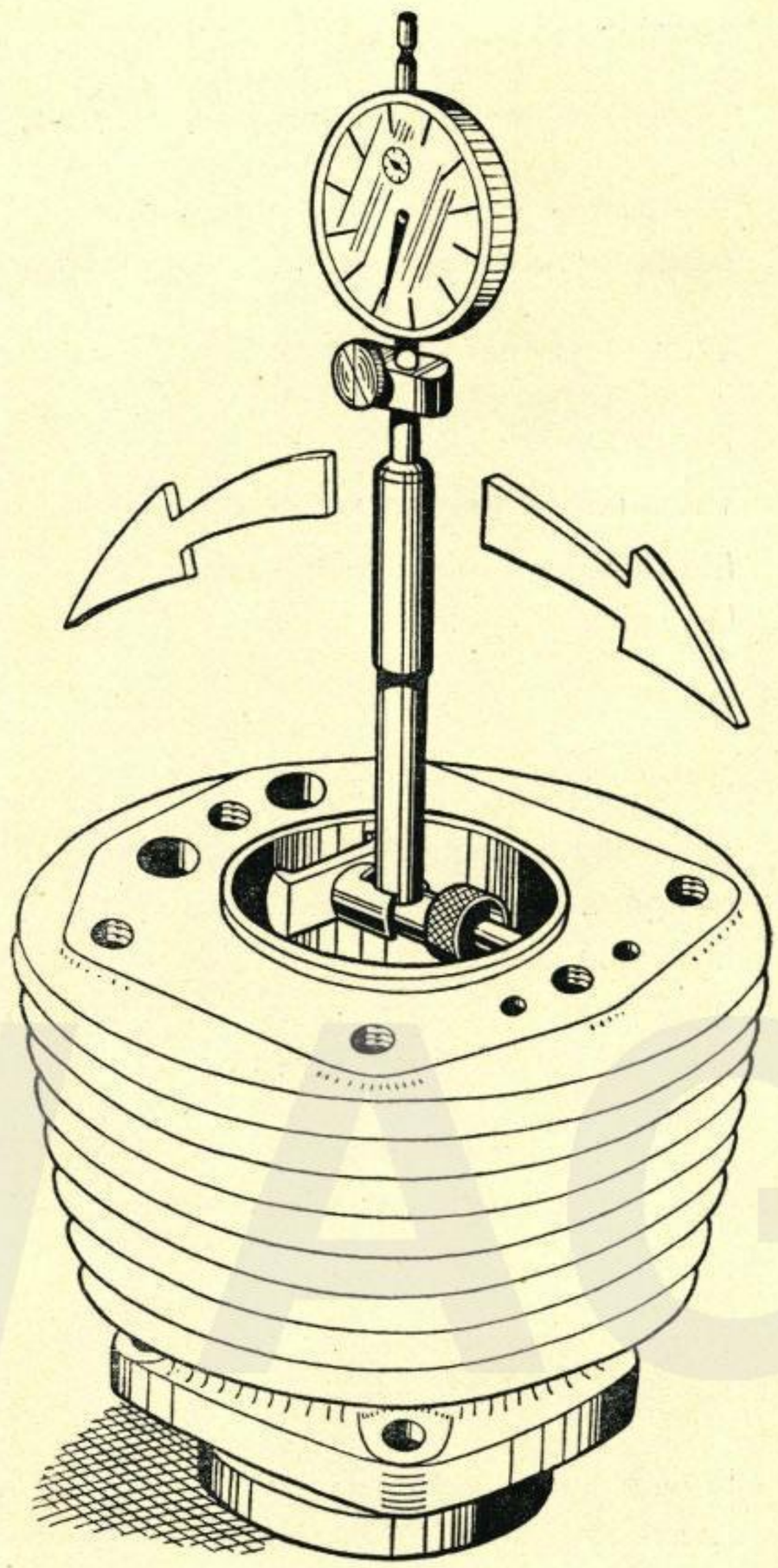

Register figures obtained from measuring as shown in the following index (Cylinder base stamp 005):

Cylinder bore Measure spot	In longitudinal direction of the gudgeon pin	In traverse direction of the gudgeon pin
Top:	68.025 mm	68.050 mm max. value
Centre:	68.015 mm	68.030 mm
Bottom:	68.005 mm min. value	68.010 mm

Total wear = maximum value minus minimum value makes 0.045 mm = .0018" in this case.

Measuring the Piston

The piston is to be measured only at its skirt-end across the gudgeon pin, by means of a micrometer.

The piston diameter, measured on piston skirt-end, is always hewn into the piston crown.

The piston assembly clearance is 0.06 mm (.0024") on solo machines, and 0.07 mm (.0028") on motorcycles destined for public authorities and side-car service.

With a cylinder bore of 68.02 e. g. a piston with a 67.96 diameter must be fitted in.

For instance:

The number hewn in the piston head is	67.94 mm	
Measurement taken on the piston (effective diameter)	67.89 mm	
=	0.05 mm	piston wear.

When ascertaining the piston wear, please hold in mind that new pistons are oval generally at their skirt-end by 0.14 to 0.16 mm, the minor diameter in direction of the gudgeon pin. If the value measured on piston skirt-end in gudgeon pin direction exceeds the value hewn into piston head minus 0.14 = .0056", a piston deformation at skirt-end is given, which, though of minor importance, might induce you to presume an excessive wear when being measured across the gudgeon pin.

Cylinder wear amounts to (see example cylinder measurement)	0.045 mm = .0018"	
Piston wear amounts to	0.050 mm = .0020"	
This makes a total wear on cylinder and piston of	0.095 mm = .0038"	beyond the piston assembly clearance.

If, with a total wear up to 0.12 mm = .0048" oil consumption data are still kept within a reasonable limit, we dissuade from grinding the cylinder and replacing the piston.

BMW AG

Replacement of Piston Rings

When installing new piston rings care for proper ring end gap and side clearance.

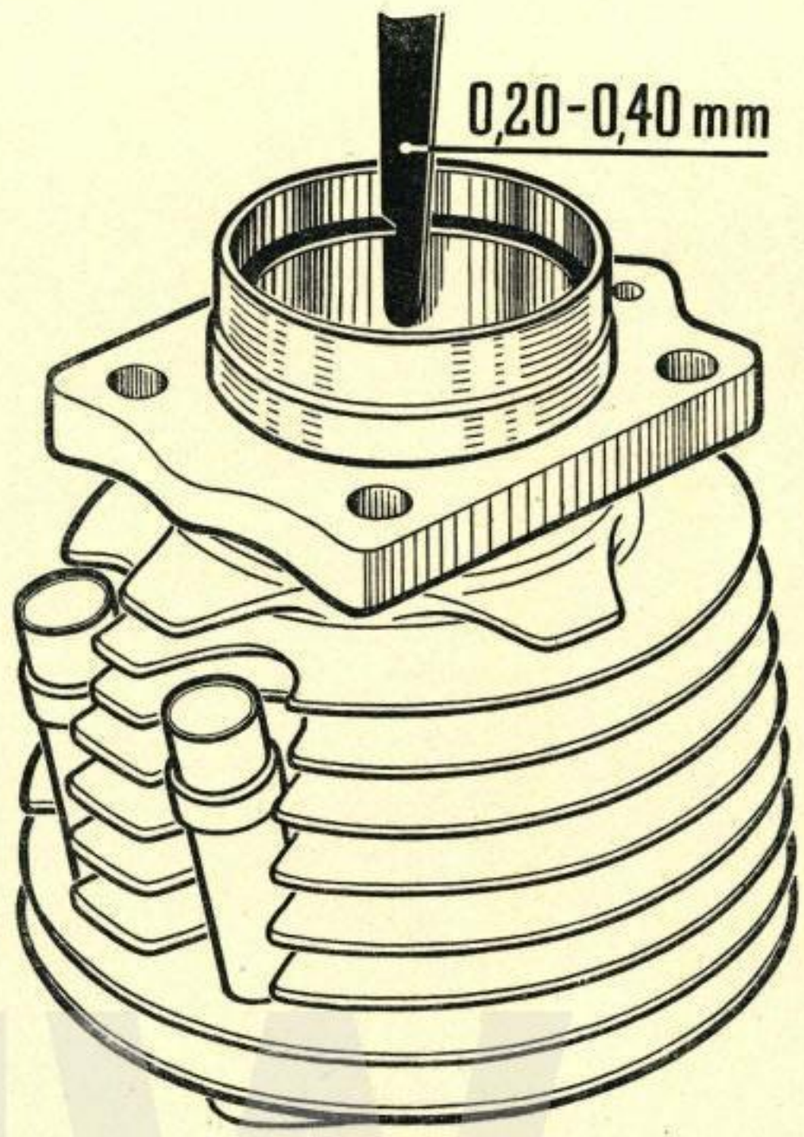

BMW AG

Piston ring end gap	= 0.20 – 0.40 mm (.008 – .016″)
Piston ring side clearance on top compression ring	= 0.04 mm (.0016″)
Piston ring side clearance on second compression ring	= 0.03 mm (.0012″)
Piston ring side clearance on third compression ring	= 0.03 mm (.0012″)
Piston ring side clearance on oil scraper ring	= 0.02 mm (.0008″)

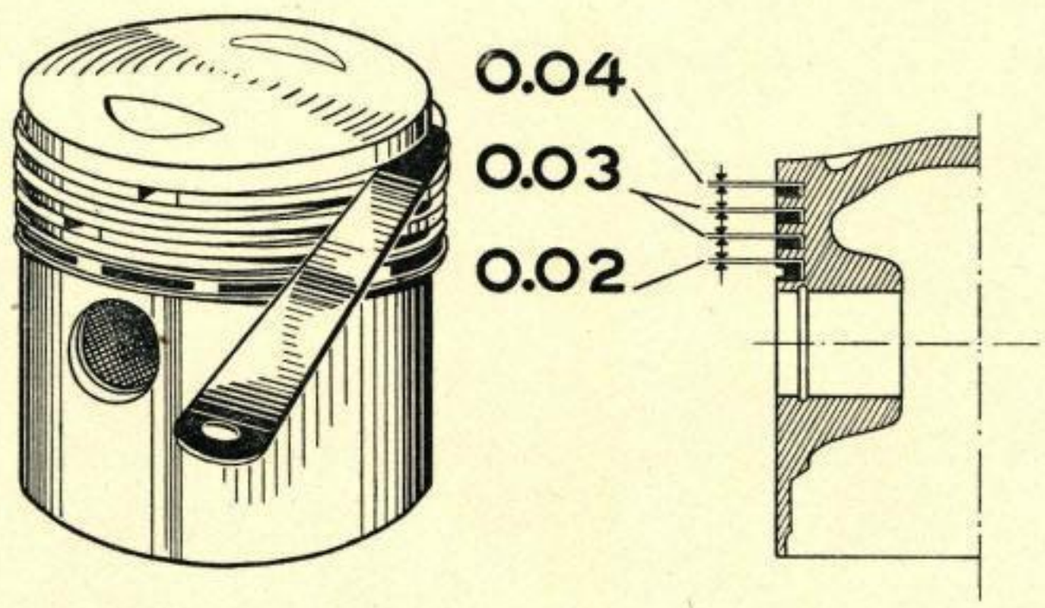

Repair of Cylinder head

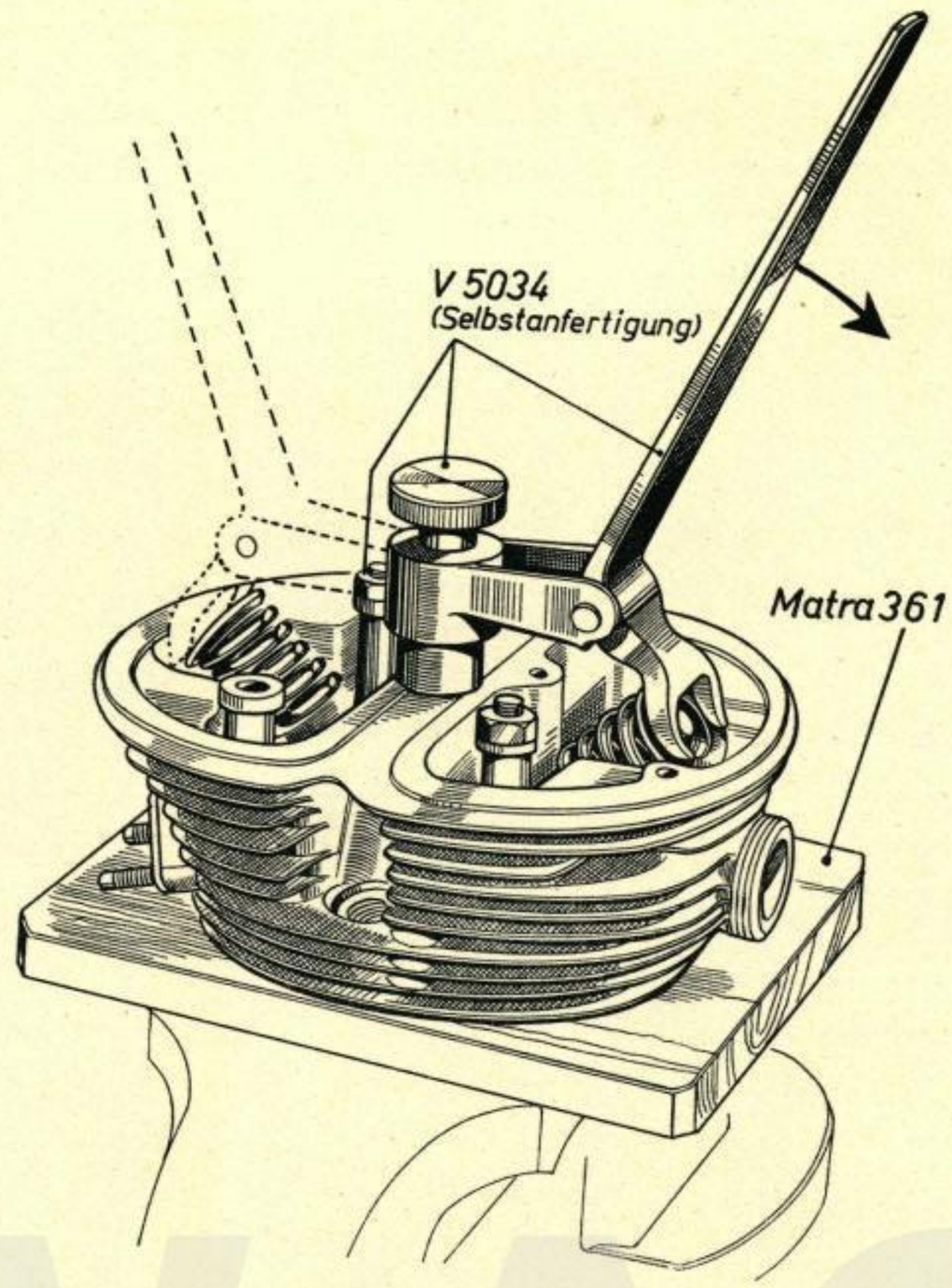

Dismantling cylinder head:

Lay cylinder head on wooden plate Matra No. 361, depress valve springs with valve lifter V 5034 (shop-made tool), and remove valve cotters (split collets).

Detach spring retaining collars, springs, lower collars and valves.

Replacing valve guides:

Heat cylinder head up to about 100 – 150 deg C (212 – 300 deg F) and drive out valve guides by means of a suitable punch. New valve guides are being supplied with an oversize of 0.1 mm. Therefore rectify cylinder head bore or valve guide diameter for a press fit of 0.03 – 0.05 mm (.0012 – .002") at about 20 deg C (66 deg F).

Drive the prepared new guides (lock ring pushed over) into heated cylinder head (100 – 150 deg C = 212 – 300 deg F).

After the head has cooled down, ream valve guides with valve guide reamer Matra No. 442 and true-in valve seatings with valve reseating cutters.

Re-cutting valve seatings:

When the valves do not fit tightly (low compression, insufficient performance, inert idle running, high fuel consumption, excessive temperature, back-firing and popping in the carburettor), re-cut seatings with cutting tool 45 deg, 36 diam., Matra No. 294. Then re-cut with valve reseating cutter 15 deg, 36 diam., Matra No. 295 until the required seat width (normal 2 mm = .08") is obtained.

Valve seat inserts on valve seatings which prove to be too small owing to repeated re-cutting operations must be replaced.

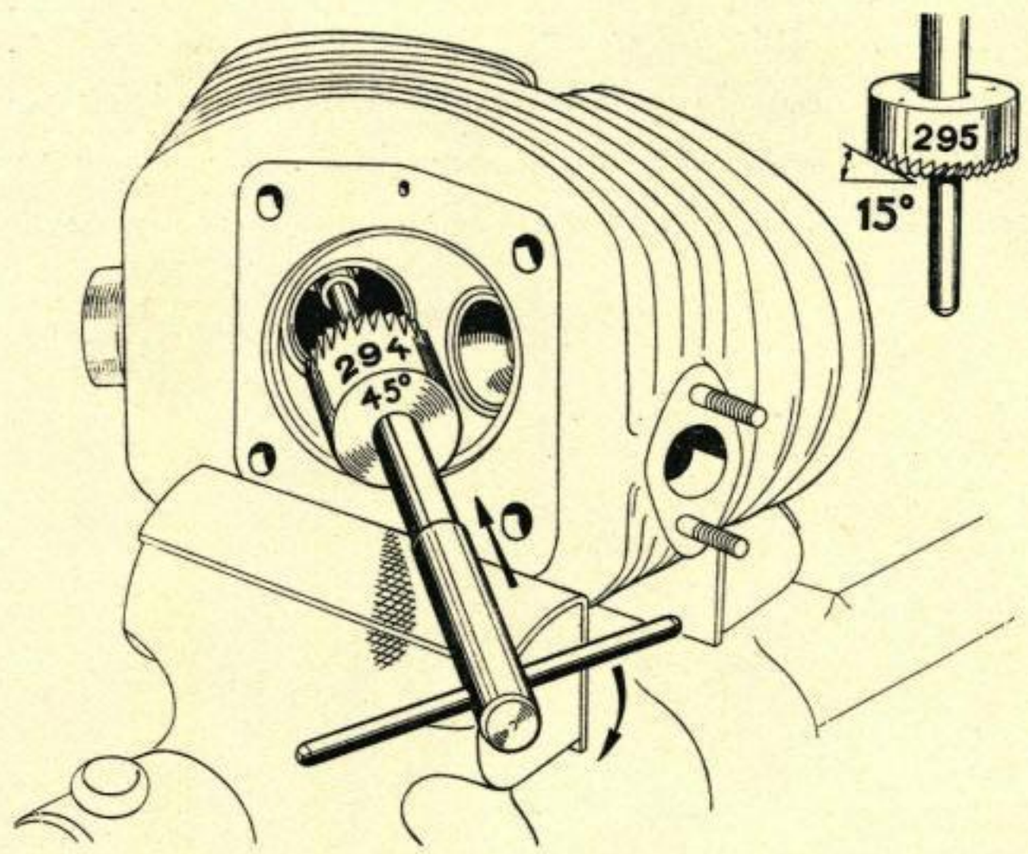

BMW AG

For this purpose tap some threads into the worn valve seat insert with set of taps pertaining to valve seat insert extractor Matra No. 287, heat cylinder head up to about 200 deg C = 390 deg F, screw extractor device with gag into the worn valve seat insert, hold the gag and withdraw valve seat insert from cylinder head by turning hexagon nut with a spanner. Drive the new valve seat ring (snug fit 0.125 – 0.175 mm = .005 – .007" at about 20 deg C = 68 deg F) with inserter punch centrically in cylinder head heated up to 220 deg C = 425 deg F. Then re-cut and re-grind the valve seat insert.

In case the necessary means for cylinder head heating and valve seat ring withdrawing are not available, the cylinder head may be sent into the factory.

Insert the valves in cylinder head, lock valve stem in holding tool Matra No. 368 and grind with fine grinding compound.

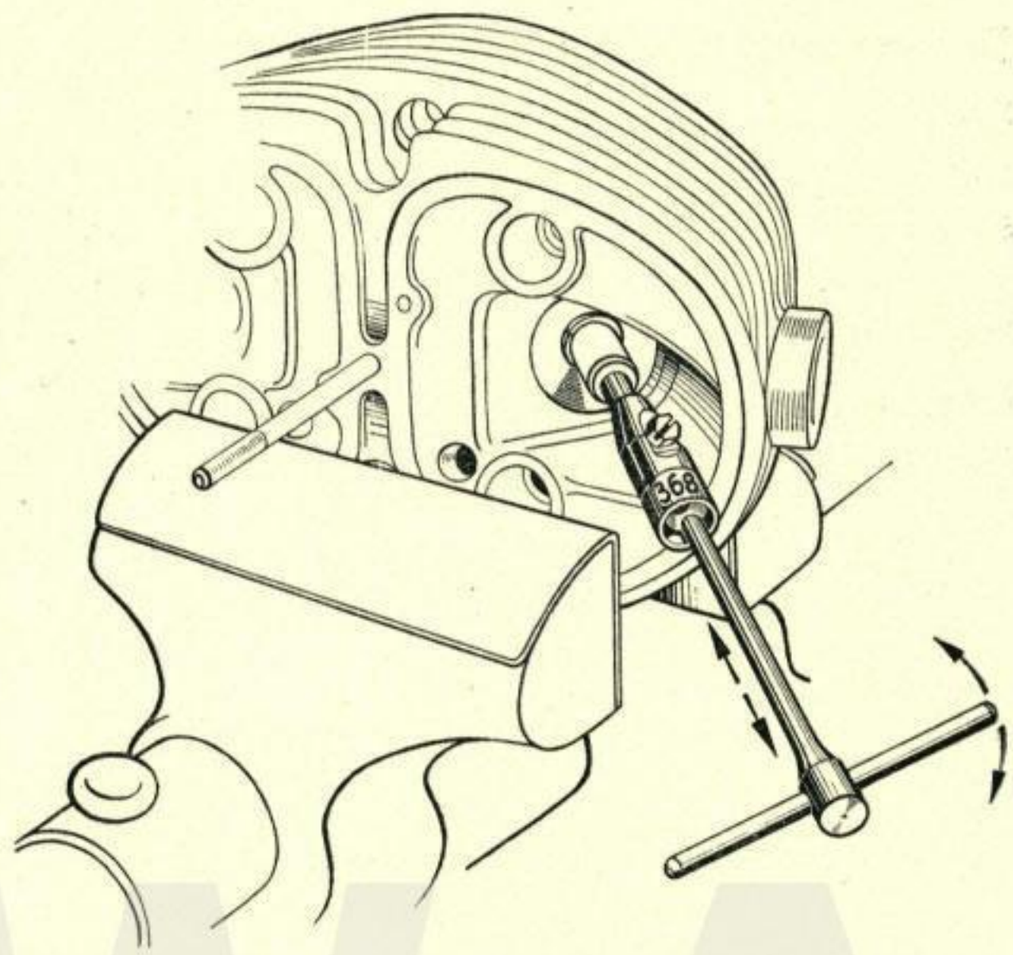

BMW AG

If possible, it would even be advantageous to grind valve seatings in cylinder head with the aid of the special grinder "Centropunkt" made by Matra (grinding accuracy up to 0.03 mm = .0012") and to finish grind the valves on the valve grinder. No grinding with fine grade of grinding compound must be done in this event.

Test each valve for a tight seat by replenishing the valve pockets with petrol.

Check valve springs for equal length in unloaded state.

Max. minus tolerance for data indicated on page 4 = 3 mm (.12").

Clean cylinder head with petrol, blow out with compressed air, and lay the head upon wooden assembly plate Matra No. 361. Fit spring bottom collars, place the springs, the ends with smaller coil distances in front, on cylinder head and install top collars including split collets with the aid of valve spring compressor V 5034 (shop-made tool).

Assembly of Engine

Fitting crankshaft:

Slide spring washer on crankshaft rear end, press ball bearing 6206 into position and insert Woodruff key for flywheel location.

Push the small spacing shim with its facet side showing to the oil thrower ring on the crankshaft.

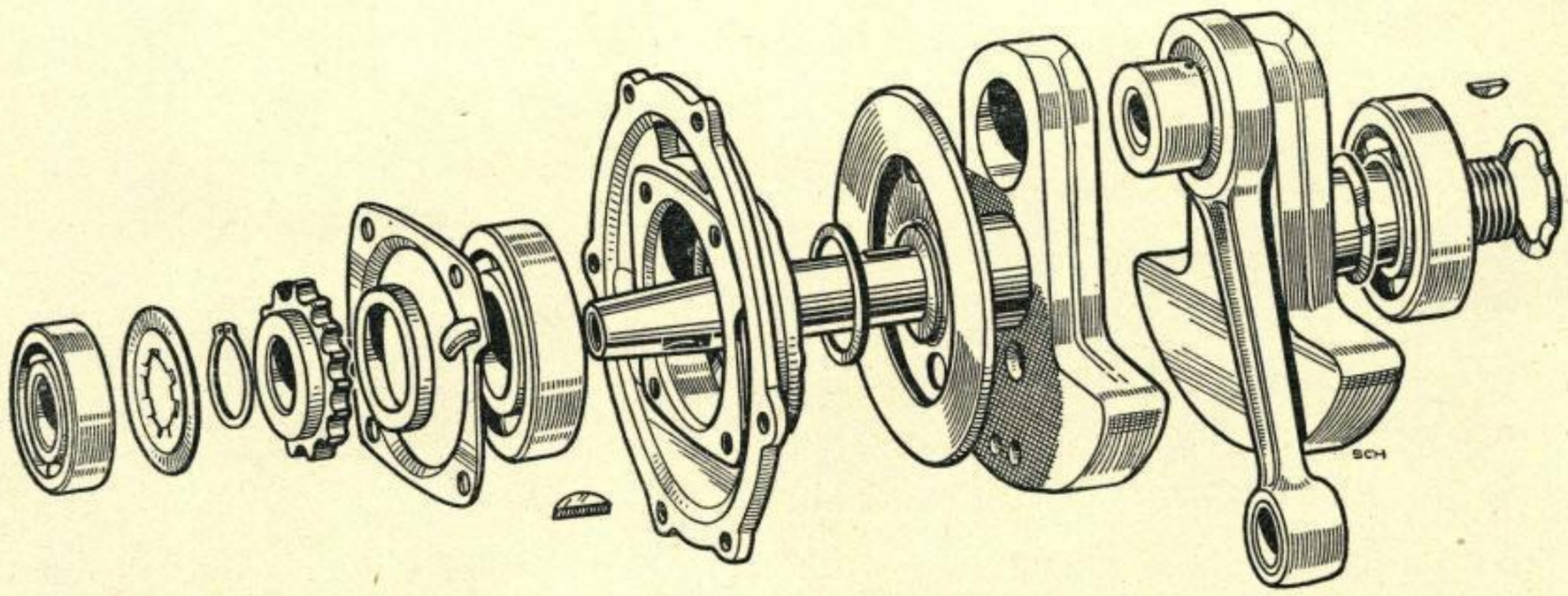

Press ball bearing 6206 in bearing bush (On R 25/2 models this bearing bush is abolished, the ball race seats directly upon bearing cover plate).

Press bearing bush with ball race in front bearing cover (attention to oil bores).

(Machines supplied on and before Engine No. 223810 have a 1.5 mm (.06") diameter oil jet bore in the bearing bush. The jet diameter on these machines cannot be brought to 1.8 mm (.072"), unless the new oil pump with the 10 mm gears has been fitted).

Bolt flange securing bearing bush with hexagon screws and washers onto the front bearing cover plate.

Press ball bearing together with front bearing cover plate on crankshaft.

Slide front spacing shim into position.

Heat sprocket to about 150 deg C = 300 deg F, fit it with the Woodruff key on the crankshaft and insert circlip on shaft groove.

Place front spring washer with its noses showing towards the circlip.

Press ball bearing 6204 on crankshaft front journal (ball bearing outer race must have side clearance towards the spring washer).

Insert front Woodruff key securing dynamo (generator) armature.

Heat crankcase to about 80 deg C = 175 deg F.

Enter complete crankshaft in a way that the connecting rod points to the cylinder hole and big end in machined recess of bearing cover seating.

To enter crankshaft rear end hold bearing cover plate over camshaft hole.

Tilt crankshaft downwards, enter crankshaft with big end through the mentioned recess, moving the shaft slightly to and fro, and slide it home in the bearing.

Take care that the drilled oil way in bearing cover plate coincides with oil bore in crankcase and that the holes for fixing screws are in alignment.

Place and tighten the five fixing screws with lock washers.

Fitting camshaft:

Install camshaft with ball bearings, bush and sprocket pressed upon, in still warm engine crankcase.

Take care that the drilled holes in bearing bush flange coincide with those of engine crankcase.

Screw tightly down the two fixing bolts, provided with lock washers, through machined holes in camshaft sprocket plate.

Fitting flywheel:

Ensure that the oil seal packing is in proper condition.

For its replacement, hold in mind that a worn seal is best removed before fitting crankshaft, on thorough overhauls, and from fitted crankshaft, on repairs.

Fit a new oil seal, so that it protrudes on crankcase rear end by 0.5 – 1 mm = .02 – .04", all around its circumference.

Slide spring washer over crankshaft and fit flywheel with Woodruff key on cone.

Check with feeler gauge L 5008 (shop-made tool) whether there exists between Woodruff key and bottom of flywheel groove a clearance of 0.15 mm = .006" to ensure trouble-free mounting of flywheel on crankshaft cone.

Place tab washer in position and tighten nut slightly.

Use fixture Matra No. 498 to keep flywheel from turning, tighten flywheel nut and secure by bending tab washer ear.

BMW AG

Fitting oil pump and drive shaft:

Insert oil pump drive shaft through hole on top of engine crankcase.

Screw in threaded plug covering oil pump drive (Check oil pump drive shaft for an end float of 0.3 – 0.4 mm = .012 – .016").

Attach oil pump and gasket with two screws and lock plate to the engine crankcase, but do not yet tighten.

(As to machines supplied on and before Engine No. 220075 fit best a new oil pump equipped with 10 mm = .4" gears).

Now tighten oil pump checking at a time the camshaft which must remain easy to rotate. – Secure the screws.

Fit oil strainer, gasket and lock plate with two screws and secure.

(On machines supplied on and before Engine No. 221510 use best a new oil strainer of the fine-mesh type).

Fit oil sump plate and gasket by means of ten fixing screws and lock washers.

Check drain plug on oil sump for tightness.

Screw in oil metering dipstick with seal ring.

(On engines as of No. 222510 and preceding numbers check dip stick for correct oil level mark of 1.25 liters. New mark must stand 55 mm = 2.2" from beneath. Undo the old mark).

Fitting piston and cylinder:

Before fitting the piston, check gudgeon pin for square position to the connecting rod.

For this end, slide gudgeon pin through small end bore and lay two parallel bars L 5036 (shop-made tool) upon cylinder attaching face of crankcase.

Then check, in the vicinity of the bottom dead centre, whether the gudgeon pin rests on both parallel bars.

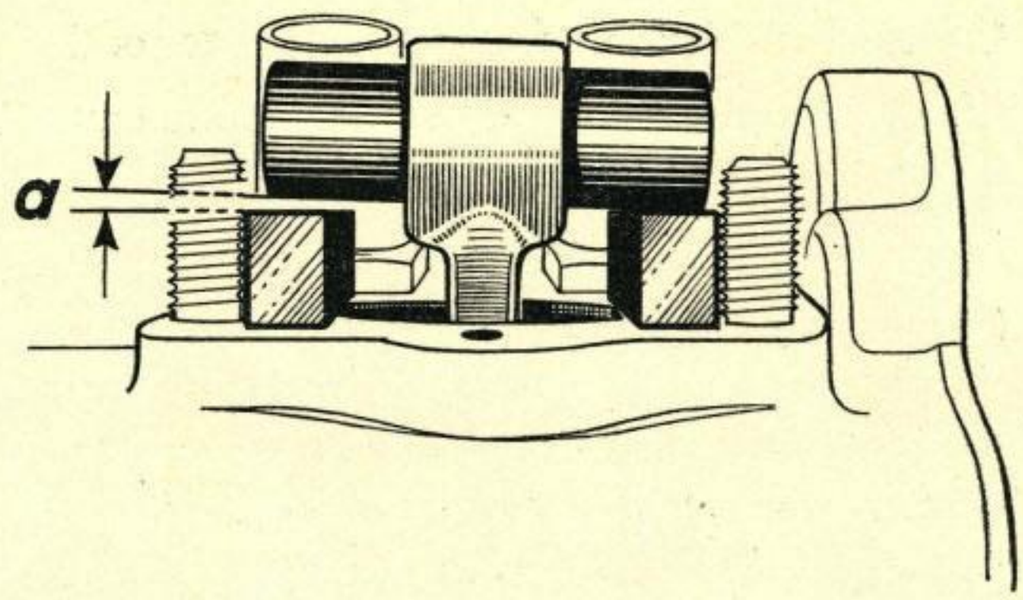

If needed, straighten connecting rod with two rod straightening tools W 5021 (shop-made tool) applying them in opposite position on the rod.

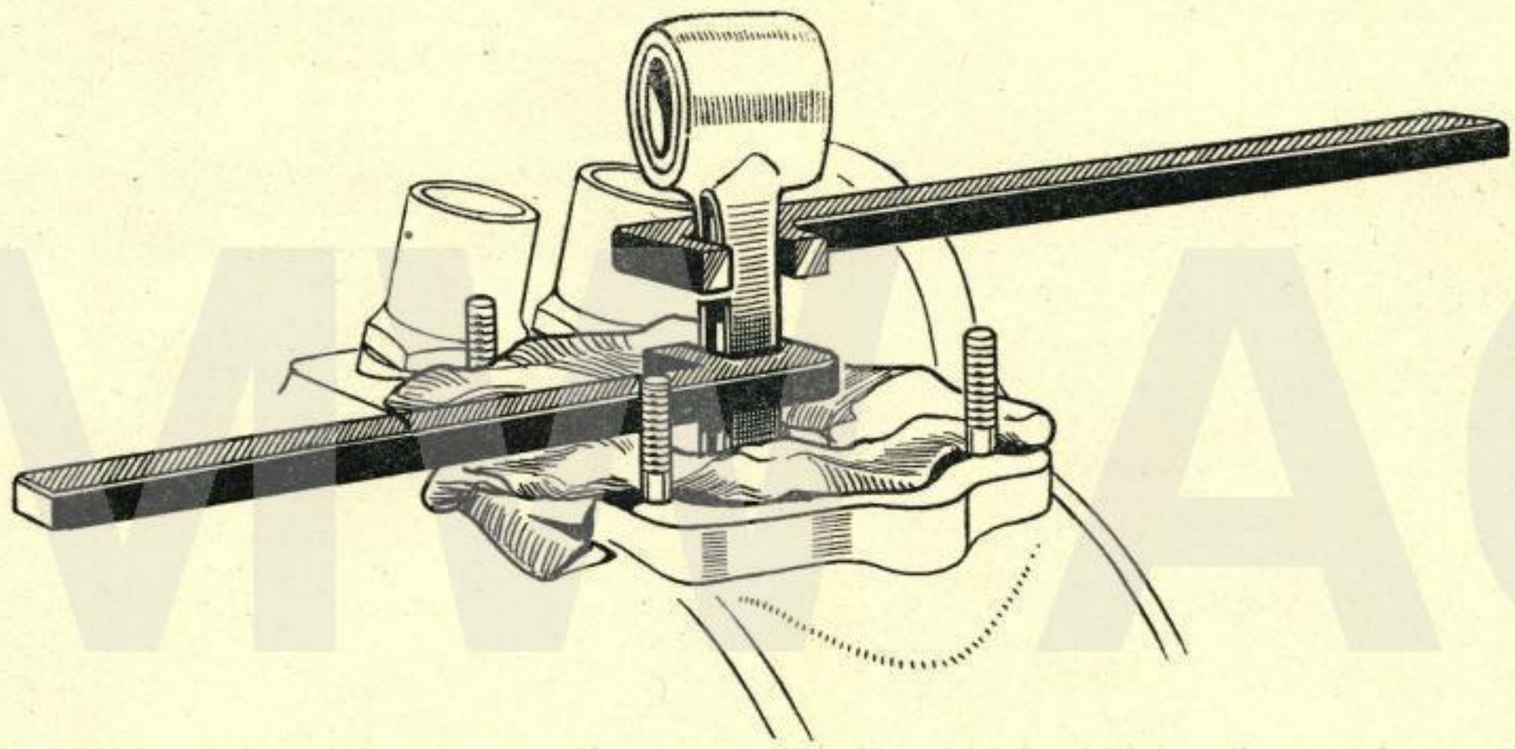

BMW AG

Fit one gudgeon pin retaining circlip in piston groove.

Heat piston to about 80 – 100 deg C = 174 – 211 deg F.

Push gudgeon pin through piston bore at one side only, position piston over connecting rod in a way that the arrow ➤—vorne→, meaning "front", points in driving direction.

Now drive gudgeon pin further until it is right home and secure with second gudgeon pin circlip.

Place gasket upon cylinder base, insert rod wooden guard under piston, lubricate piston rings and space the ring gaps 120° apart from each other.

Fit rocker tappets in their guides.

Push rubber grommets over cover tubes on cylinder.

Grasp oiled piston with piston ring compressor W 5003 (shop-made tool), place oiled cylinder over and tighten evenly with the four nuts.

In case the rubber grommets are not a slight press fit, tap the cover tubes further down from top using a suitable inserter punch.

Installing clutch assembly:

Check whether spring pressure plate slides easily on driving pegs.

Check each driving peg for correct fit and equal length in flywheel (15.8 mm = .632" free length).

Use only springs of the same length and colour.

(As of Engine No. 225511, the three spring holes drilled in flywheel are 15.5 mm = .62" deep (instead of 17 mm) in order to obtain a greater amount of spring pressure. On machines preceding above engine number, this task can be achieved easily by inserting washers with a thickness of 1.5 mm = .06".

Insert springs, flared coils ahead, in respective flywheel holes. Place spring pressure plate upon the springs and move plate slightly to and fro until the springs are all right home. Next put into position clutch centre plate and outer driving plate.

Compress clutch with three clutch clamping screws Matra No. 357, taking care at a time that driving pegs enter in holes of spring pressure plate.

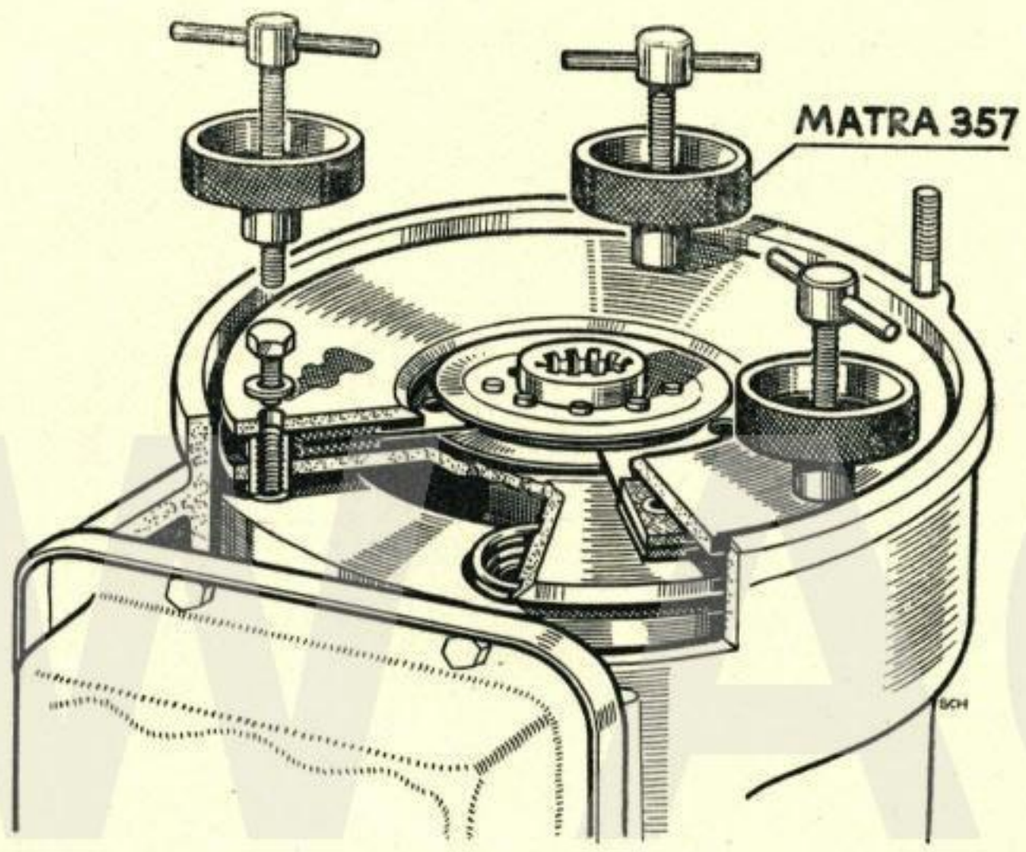

Centralise clutch center (friction) plate, tighten clamping screws entirely and replace them progressively by hexagon bolts provided with spring washers.

BMW AG

Valve Timing:

Turn engine until the piston is at the top dead centre (see also mark "O. T." = top dead centre, on flywheel, through inspection hole machined in engine crankcase).

Insert push rods through cover tubes of cylinder barrel and turn camshaft to overlap dead centre position. For this purpose put a straightedge upon both push rod ends and rotate camshaft at overlap dead centre slightly to and fro until the straightedge between inlet and exhaust lift of cams is exactly parallel with the cylinder attaching face. In this position mark one of the camshaft sprocket teeth together with the crankcase and place chain in position.

Turn engine carefully with the camshaft until both chain ends are beneath the camshaft sprocket at the deepest recess machined in engine crankcase.

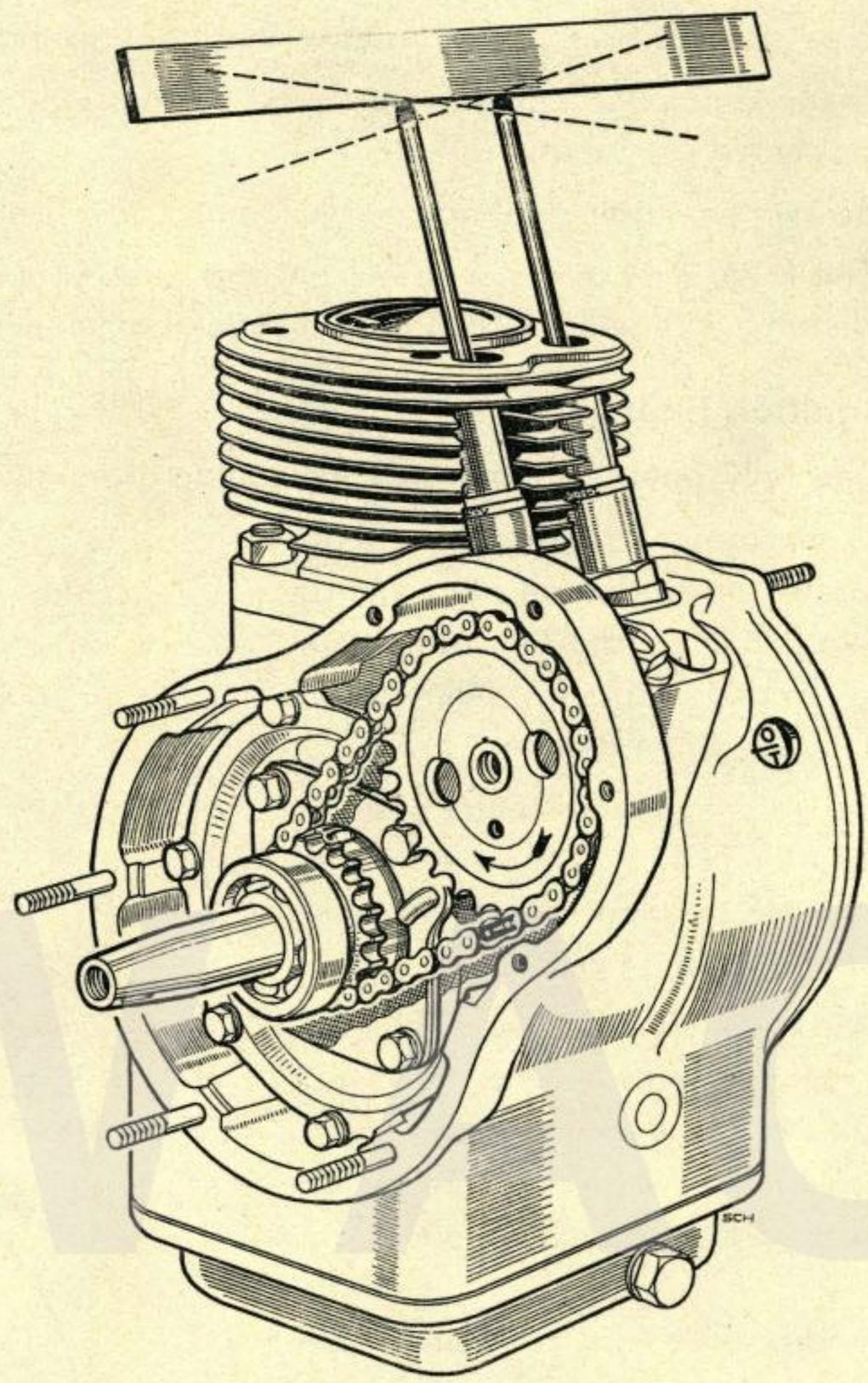

Fit chain lock and secure.

Caution: The closed portion of chain lock securing split pin, shown in direction of chain rotation, must be at front.

The amount of pressed slack of the chain should be about 3 mm = .12".

To compensate chain tension there are provided three lengths:

Short = blue, middle = red, and long = green coloured for identification purposes.

Check valve timing again following procedure indicated above.

Fit rotary breather valve with cone spring and collet screw on the camshaft.

Oil breather valve and chain, place gasket for crankcase timing cover. Heat crankcase timing cover to about 80 deg C = 174 deg F, locate it upon crankcase and tighten.

Fitting dynamo (generator) unit:

Slide cleaned dynamo armature over cleaned tapered end of crankshaft, place Woodruff key and tap armature into position, with the aid of a soft mallet.

Slide dynamo frame (stator) on armature ensuring brushes being drawn upwards.

Secure dynamo frame by means of three screws and spring washers.

Free jammed brushes and reset springs upon spring ends.

Clean automatic advance unit and fit it in a way that its bore nose engages in groove machined on armature shaft end.

Screw home bolt securing both automatic advance unit and armature.

The R 25/2 machines supplied on and after Engine No. 251 157 have a ZLZ 45/60/2 L dynamo with voltage regulator in vertical arrangement.

Ignition Timing:

The fully open gap between the contact breaker points should be 0.4 mm.

Turn crankshaft to ignition dead centre, insert degree plate Matra No. 298 in clutch hub and tighten, or fit degree plate V 5029 (shop-made tool) on dynamo.

Set engine at dead centre position as indicated by flywheel mark and register position at zero degrees with a dash on crankcase.

As a rule, the resetting of ignition timing is performed by means of an electrical timing tester or a battery working in conjunction with a test lamp by connecting negative lead to earth (ground) and positive lead to terminal 15 of generator.

Set engine at the retarded spark position = 5° before TDC, the governor weights of the automatic advance mechanism being at their stationary position without any manual interference whatsoever.

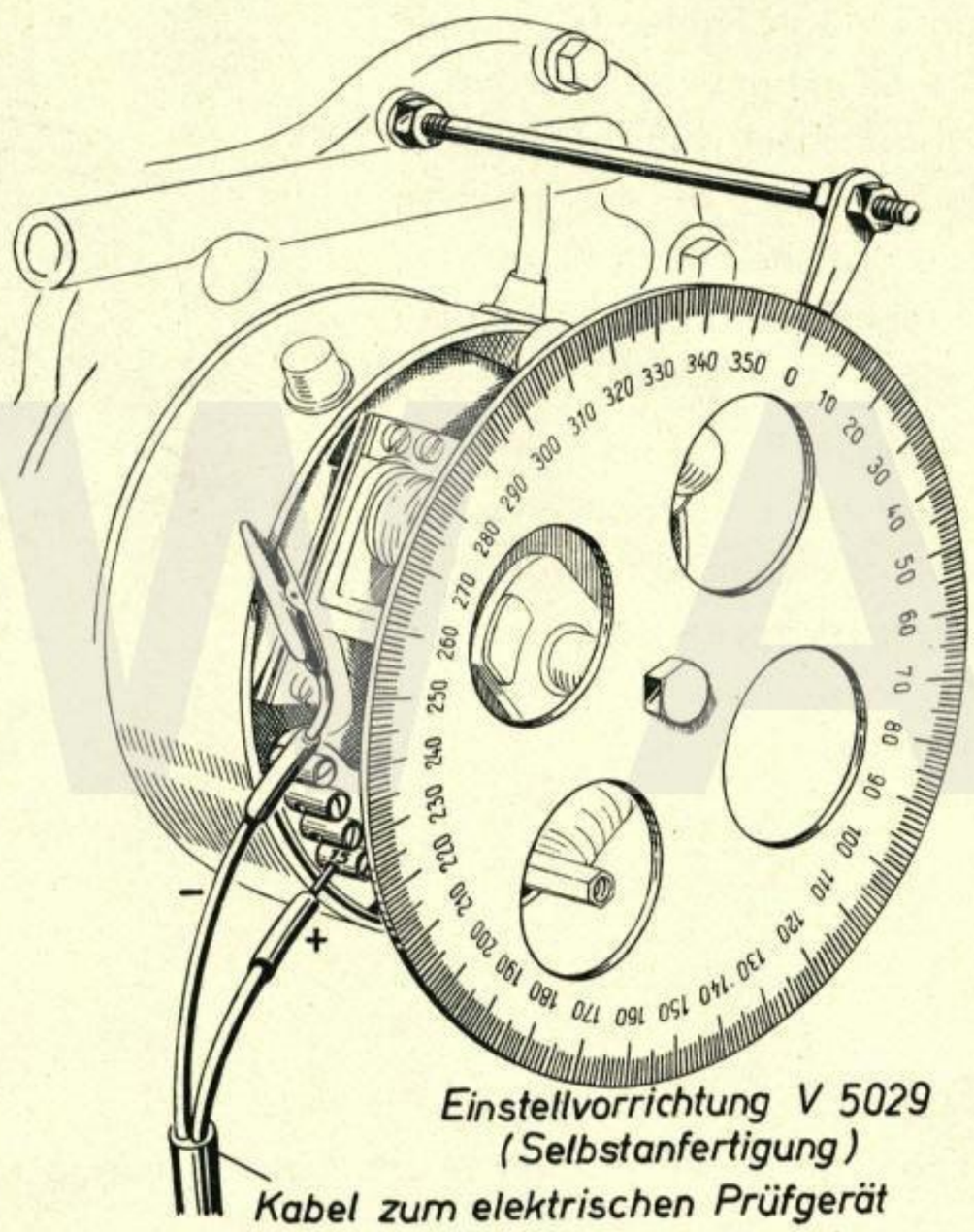

Timing device V 502
(shop-made tool)

Cable of electrical timing tester

When turning engine carefully the firing point is indicated on the degree plate by lighting or extinguishing test lamp.

Eventual adjustments are achieved by loosening the two fixing screws on oblong holes of contact breaker plate and turning the whole breaker unit on the base plate.

Turning contact breaker in direction of engine rotation will decrease, contrary rotation will increase ignition advancing.

Since the range of the automatic advance mechanism comprises 35 ± 1.5 crankshaft angle degrees, the instant of the retarded ignition comes automatically at 38.5 to 41.5° before top dead centre.

Locate dynamo front cover and secure by means of two countersunk screws. (The front cover of ZLZ 45/60 cannot be used on the ZLZ 45/60/2 L unit, since this would require the front cover moulding to be altered according to varied position of voltage regulator).

Fitting cylinder head:

Make sure that all dirt is wiped off the gasket face of cylinder barrel and head.

Put gasket in place and slightly tighten cylinder head with four bolts, distance pieces and steel washers (washers on top).

On R 25/2 machines insert push rods, fit rockers with spindle, brackets and holding bolts, and tighten rocker assembly.

Tighten with torque wrench 3 to 3.5 mkg (1 mkg = 7.22 ft. lb.) in diagonal order.

On R 25 models insert push rods and fit rocker arms with spindle and brackets.

Adjusting valve clearances:

Move piston to ignition dead centre.

Valve clearances **with engine cold:** Intake 0.10 – 0.15 mm (.004 – .006")
Exhaust 0.15 – 0.20 mm (.006 – .008").

Place rocker covers and gaskets, tighten with rocker cover clamp, spring washers and clamp nut.

Caution: After having refitted the engine unit to frame make a short road test, let engine cool down, give cylinder head fixing bolts a final torque wrench up to 3 – 3.5 mkg and readjust valve clearances.

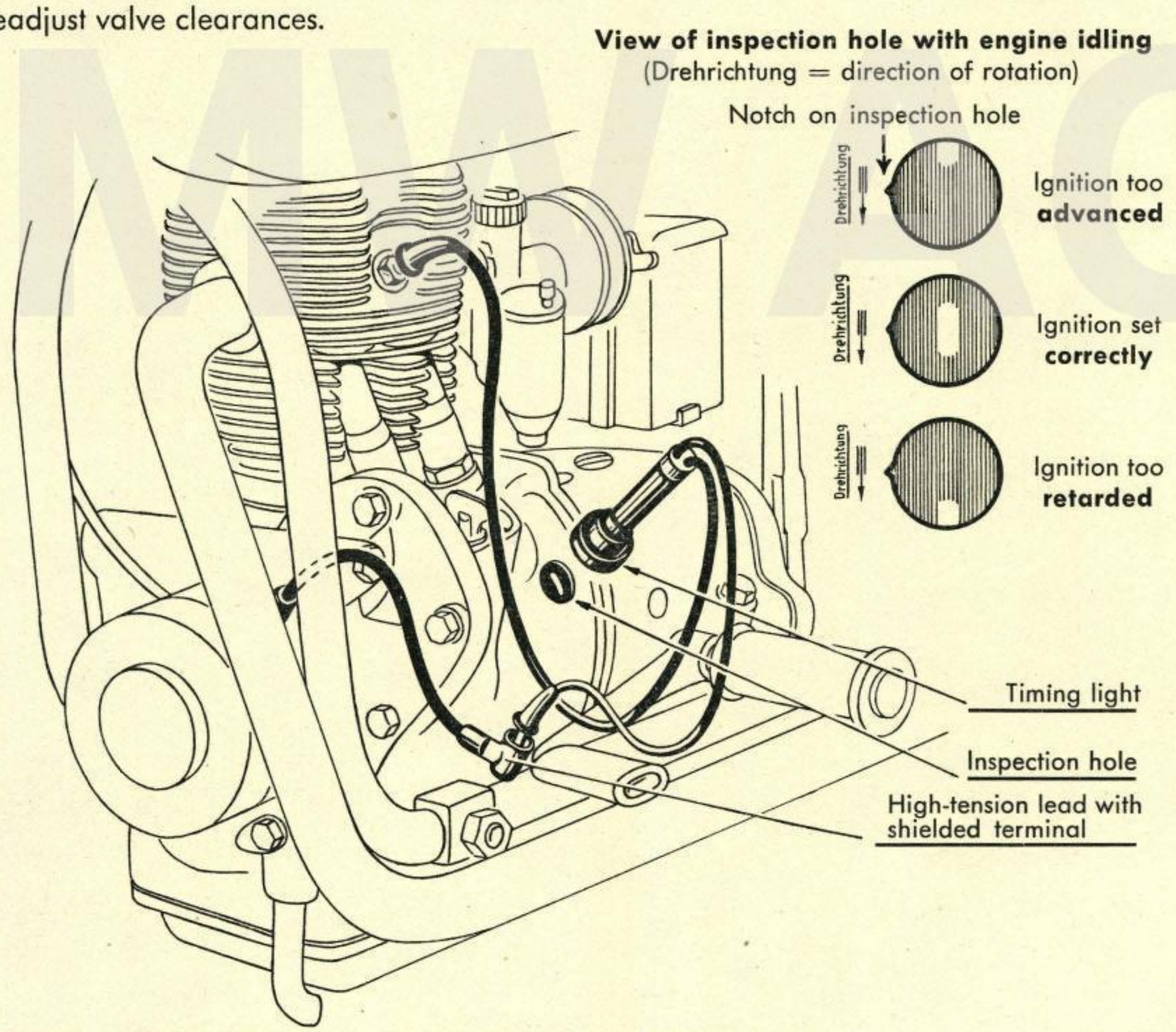

Checking ignition by means of timing light with engine idling

BMW AG

Carburettor

The carburettor cannot achieve its task unless ignition timing and valve clearances have been adjusted to their prescribed values. Moreover, only use BMW service proven types and sizes of sparking plugs and carburettor jets which must be in excellent condition.

	R 25	R 25 2	
Type of carburettor	Bing 1/22/28	Bing 1/22/44 or	SAWE K 22
Main jet	100	110	115
Idling jet	45	35	35
Needle jet	1208	1708	127
Jet needle	Standard	Standard	054
Needle adjustment	solo 1	3	I
	with side car 2	3	I
Mixing chamber cap	5	5/1	–
Weight of float	11 grams	11 grams	8 grams

Before adjusting the carburettor, clean it with petrol.

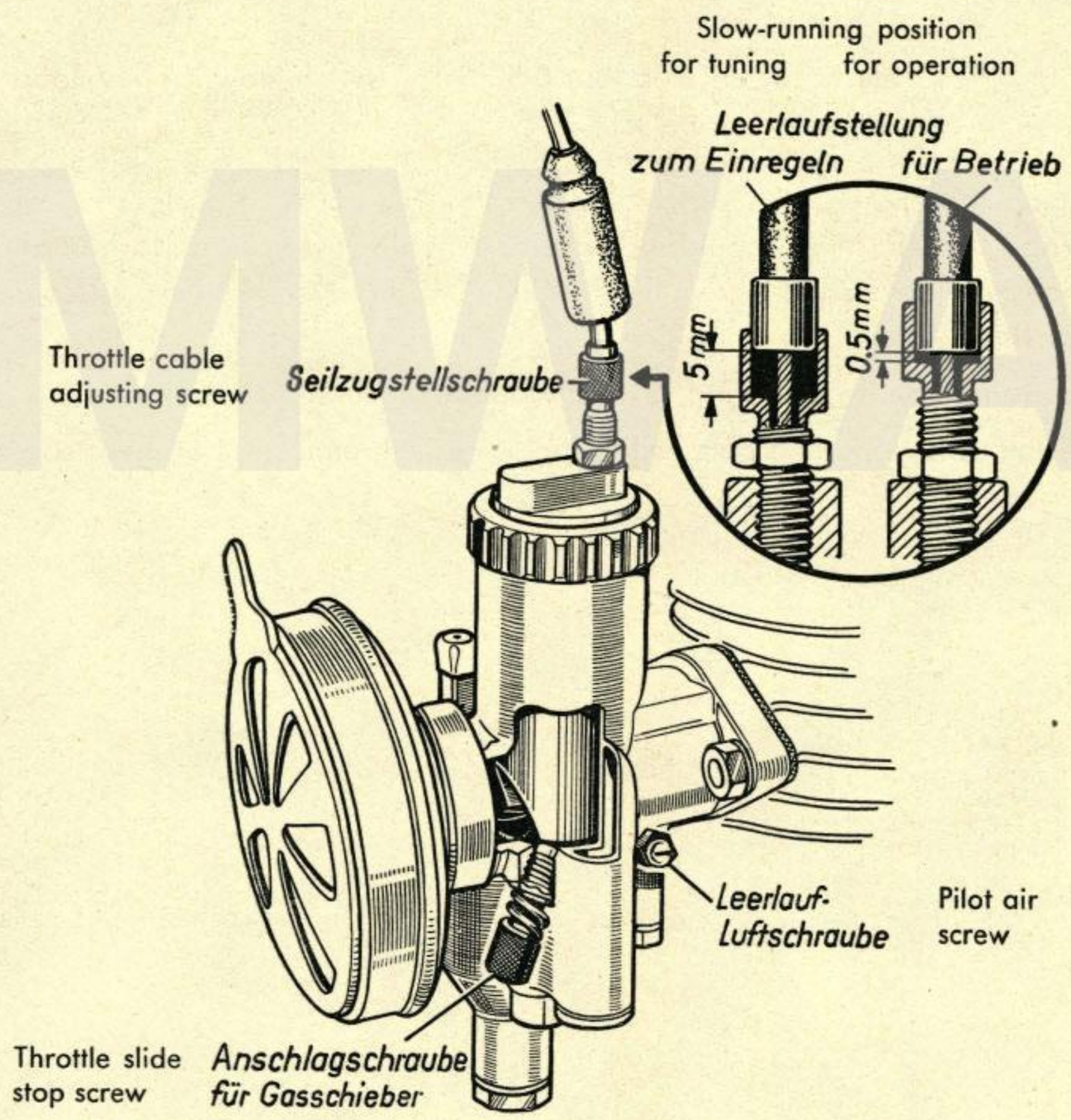

Wash also air filter with petrol or kerosene and re-oil metal screen after cleaning. To prevent disturbing irregular air suction, make certain that suitable gaskets are inserted between the attaching flanges and also care to tighten clamp nuts evenly.

Make it a rule to regulate idling only with the engine brought up to normal operating temperature. Adjustment is to be done as outlined below:

1. Turn throttle cable adjusting screw on mixing chamber top plate completely inwards (free travel of throttle slide about 5 mm = .2").

2. Turn down throttle stop screw until throttle slide rests no longer on the screw, but upon mixing chamber bottom.

3. Turn throttle stop screw clockwise until it just touches the throttle slide. With the air cleaner detached this position can be clearly seen. Now rotate stop screw two more turns, so that the throttle slide will be lifted thereby.

4. Turn pilot air screw clockwise fully in, tighten slightly and unscrew it again 1 to 2 turns.

5. Crank the engine and let it run.

6. Tune slow running with throttle stop screw so that cylinder operates evenly.

7. In case there are still some discrepancies in engine operation, clear them by cautiously turning the pilot air screw. Turning the pilot air screw inwards enrichens the mixture, and unscrewing weakens it.

8. Adjust for a throttle cable backlash of about 0.5 mm = .02" in slow-running position by means of the throttle cable adjusting screw.

After correct tuning the engine idles slowly and with the regularity of a clock. By gently opening the throttle, acceleration should increase continually. Even with a large handful of grip the engine has to respond in regular flexibility and tickover must remain constant at any throttle position.

Too high fuel consumption, when found, is mostly due to worn jet needles or needle jets. Replacement of both above named parts will bring remedy in almost all of these cases.

EMWAG

Transmission Group

BMW AG

Technical Data

Transmission	Four-speed, constant-mesh pinion type with dog clutch engagement, in unit with the engine. Shock absorption by spring-loaded top gear on mainshaft.
Shifting mechanism	Ratchet-type positive foot control with auxiliary hand shift lever. The R 25/2 models are fitted with an electrical neutral indicator in headlamp.
Reduction ratios:	Bottom 6.1 : 1 Second 3.0 : 1 Third 2.04 : 1 Top 1.54 : 1
Power transmission from gear box to rear wheel	Fully enclosed propeller shaft with elastic coupling and spiral bevel gears.
Speed reduction between transmission and rear wheel	Solo driving 4.5 : 1 = No. of teeth 6/27 Side car driving 5.14 : 1 = No. of teeth 7/36
Lubrication and quantity of oil required	See lubrication chart

BMW AG

Fits and Tolerances

End float of mainshaft:	0.2 mm = .008"
End float of intermediary shaft:	0.2 to 0.4 mm = .008 to .016"
End float of layshaft:	0.2 mm = .008".

Special Tools

1 ea set of replacer bushings for oil seal on mainshaft and the mainshaft itself	Matra No. 297/1/2
1 ea set assembly tools for mainshaft:	
Replacer bushing, circlip	" " 319/1
Remover bushing, circlip	" " 319/2
Replacer cone, circlip	" " 319/3
1 ea replacer bushing, retaining circlip on layshaft	" " 360/1
1 ea replacer bushing, retaining circlip on layshaft	" " 360/2
1 ea remover (puller), speedometer drive take-off bushing	" " 359
1 ea puller, coupling flange	" " 422 A
1 ea holding fixture with key to tighten layshaft nut	" " 494

BMW AG

Shop-made Tools

1 ea fixture for transmission	V 5017
1 ea drift tool (bushing), layshaft oil seal	W 5025
1 ea drift tool (bushing), mainshaft oil seal	W 5023

Dismantling Transmission

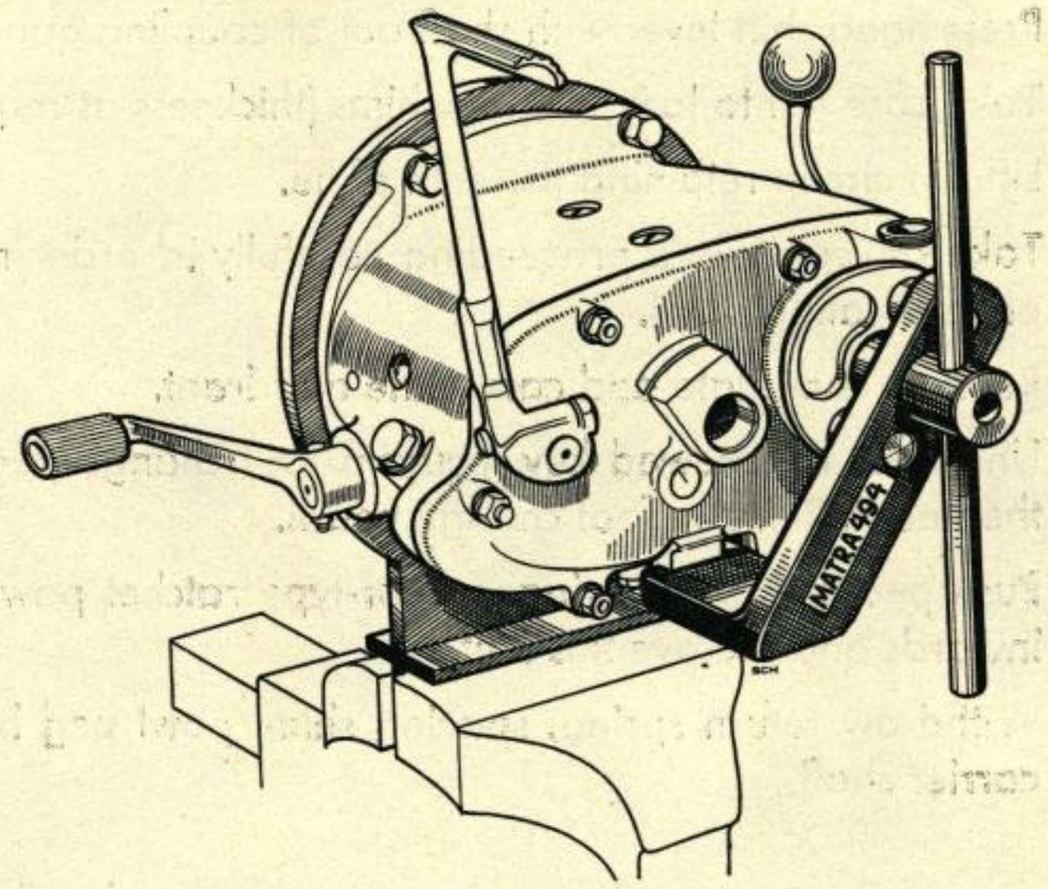

Fasten transmission on fixture V 5017 (shop-made tool).

Drain transmission lubricant.

Slide push rod through.

Use fixture Matra No. 494 to unscrew round nut locking coupling flange.

Remove nut and lock washer.

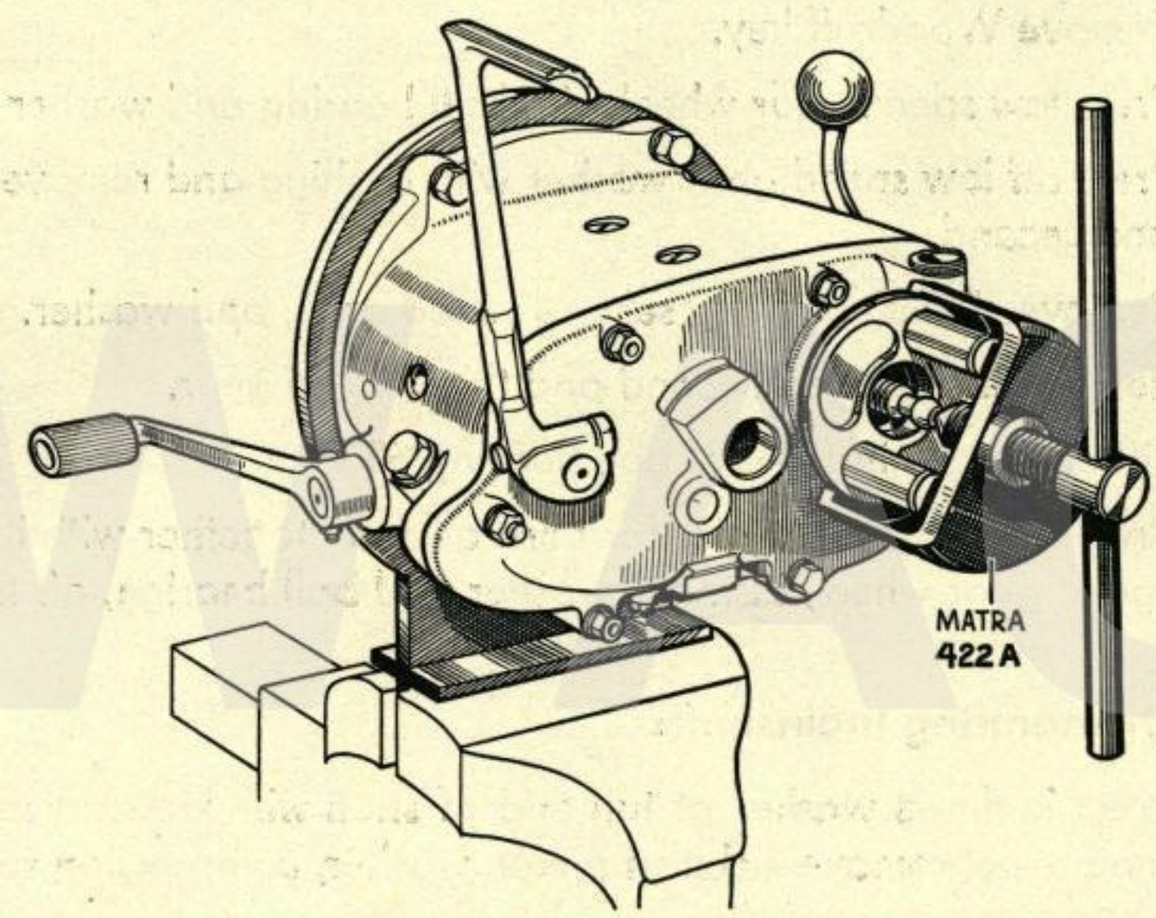

Withdraw coupling flange by means of puller Matra No. 422A.

When removing flange, proceed carefully in order to avoid felt ring from being damaged.

Remove seven nuts and washers securing transmission rear end cover.

Heat cover slightly, depress kickstart crank a trifle and drive off cover with soft hammer blows applied against overhanging points on cover. To obviate selector (striker) forks being distorted during this operation, set a drift tool against the layshaft bearing and drive it backwards.

Remove mainshaft washer from ball bearing in cover.

Take care not to lose eventual spacing shims on main axle and layshaft.

Remove gasket from cover.

Both rear and front striker forks are marked together with their fulcrum pin bushings.

With a screw driver remove fulcrum pins securing the striker forks.

Disengage striker forks from cam plate grooves.

Heat gearbox housing, grasp layshaft tail end and with a soft mallet tap against casing and mainshaft end to drift out the three-axle gear cluster.

Removing combined hand shift and foot control mechanism:

Remove split pin from selector shaft (hand shift lever shaft).

Press hand shift lever with shaft out of coupling quadrant and withdraw.

Take care not to lose spacing shims (thickness as required).

Lift out circlip retaining the cam plate.

Take off cam plate proceeding carefully in order not to deteriorate thrust spring of cam plate locating pawl.

Remove cam plate and cam plate quadrant.

Undo nut of screwed key securing foot change pedal and tap the screwed key through the pedal. Remove foot change pedal.

Push pedal shaft carrying anchor-type ratchet pawl with holding arms and return spring inwards and remove this unit.

Withdraw return spring, spacing shim, pawl peg holding arms and bushing from pawl carrier shaft.

Dismantling layshaft:

Remove Woodruff key.

Press low speed gear wheel with ball bearing and washer off shaft.

Press off low speed gear washer with bushing and remove sliding selector disc for bottom and second.

Remove circlip retaining second speed gear, and washer.

Remove the layshaft second and third speed gear.

Lift out circlip in front of ball bearing 6303.

Press sliding selector disc for third and top together with its washer, top gear bushing, top speed gear wheel, distance washer and ball bearing, off the shaft.

BMW AG

Dismantling mainshaft:

Press jammed washer at tail end of shaft with kickstart ratchet pinion off position on the main axle, remove kickstart pinion washer, compression spring and the pinion itself.

Compress main axle shock absorber spring with Matra device No. 319/2 in vice and remove circlip between ratchet pinion and coupling sleeve.

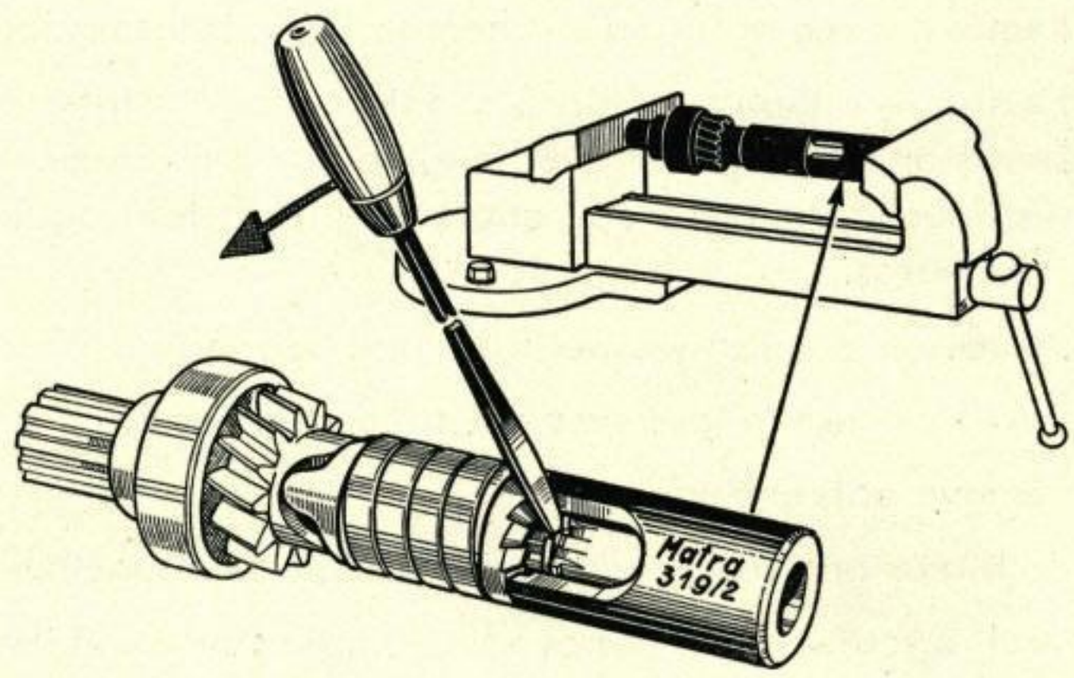

Remove kickstart coupling sleeve, shock absorber compression spring and two-lobe thrust piece as well as the driving pinion from the shaft.

The mainshaft front bushing and bearing may be drifted away, if necessary.
Take care not to damage this bushing, as the front oil seal reposes on it.

Dismantling transmission cover:

Unscrew nut of screwed key securing the kickstart crank and drive out key.
Remove kickstart crank and damping washer.
Push inwards the kickstart quadrant spindle together with the return spring.
Use puller Matra No. 359 to withdraw bushing from speedometer drive take-off gear.
Lift out helical drive gear.

BMW AG

Repair of Transmission

Clean all transmission components thoroughly and inspect the parts if they are still useful, particularly check seal rings for clean and smooth surfaces and make a test, whether ball bearings operate easily.

Gearbox housing:

In order to improve oil return from mainshaft ball bearing, on machines supplied on and after Engine No. 227981 a groove has been milled on the ball bearing seat in gearbox cover and a washer with a 30 mm (1.2") bore has been inserted between gearbox cover and ball bearing. It is recommended to carry out this alteration during thorough overhauls (see Circular-Letter No. 2 Transmission, dated 27th November, 1950).

Assembling layshaft:

Slide third gear wheel and second gear wheel over bushing.
Place the corresponding washer and secure with circlip. Fit circlip on cone of replacer Matra No. 360/1 and push it into position on shaft by means of bushing Matra No. 360/2.
Push sliding selector disc for top and third, and washer, on the layshaft.

BMW AG

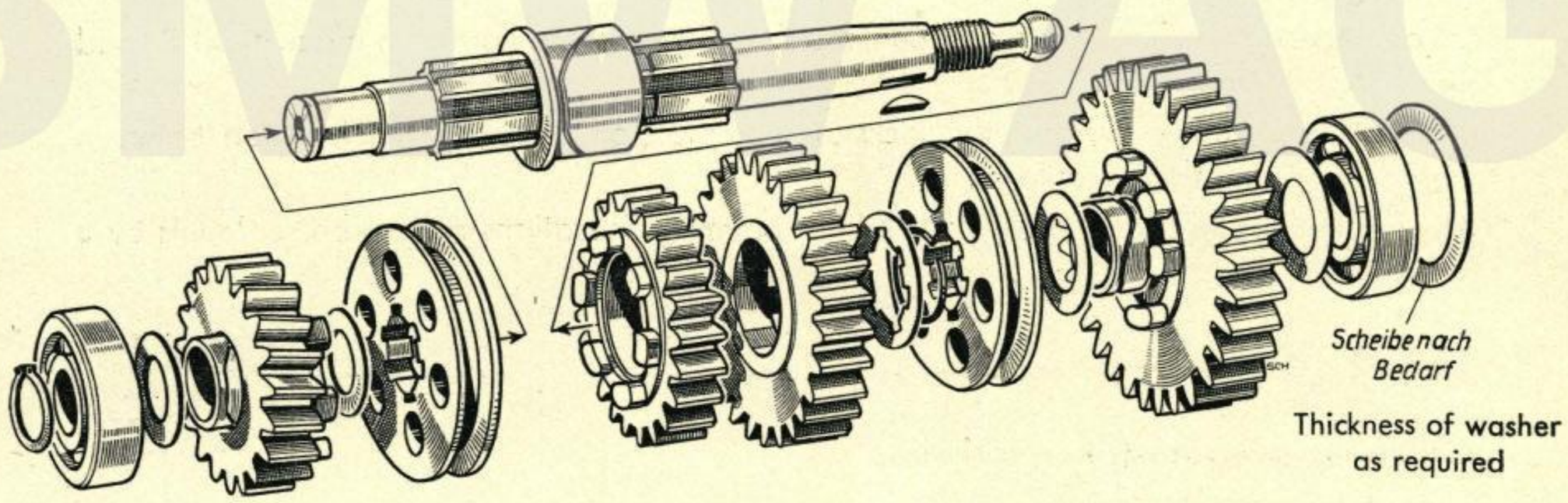

Slide top gear bushing in place.
Fit top gear wheel and washer.
Press ball bearing 6303 home and secure with its circlip.
Locate sliding selector disc for second and bottom, and the spacing washer.
Press low gear bushing into position.
Slide low speed gear wheel and washer on the layshaft.
Press home ball bearing 6204.
Insert Woodruff key in groove milled in shaft end.

Assembling mainshaft:

Slide top speed helical driving pinion, shock absorber two-lobe thrust piece, compression spring and kickstart coupling sleeve on the shaft.

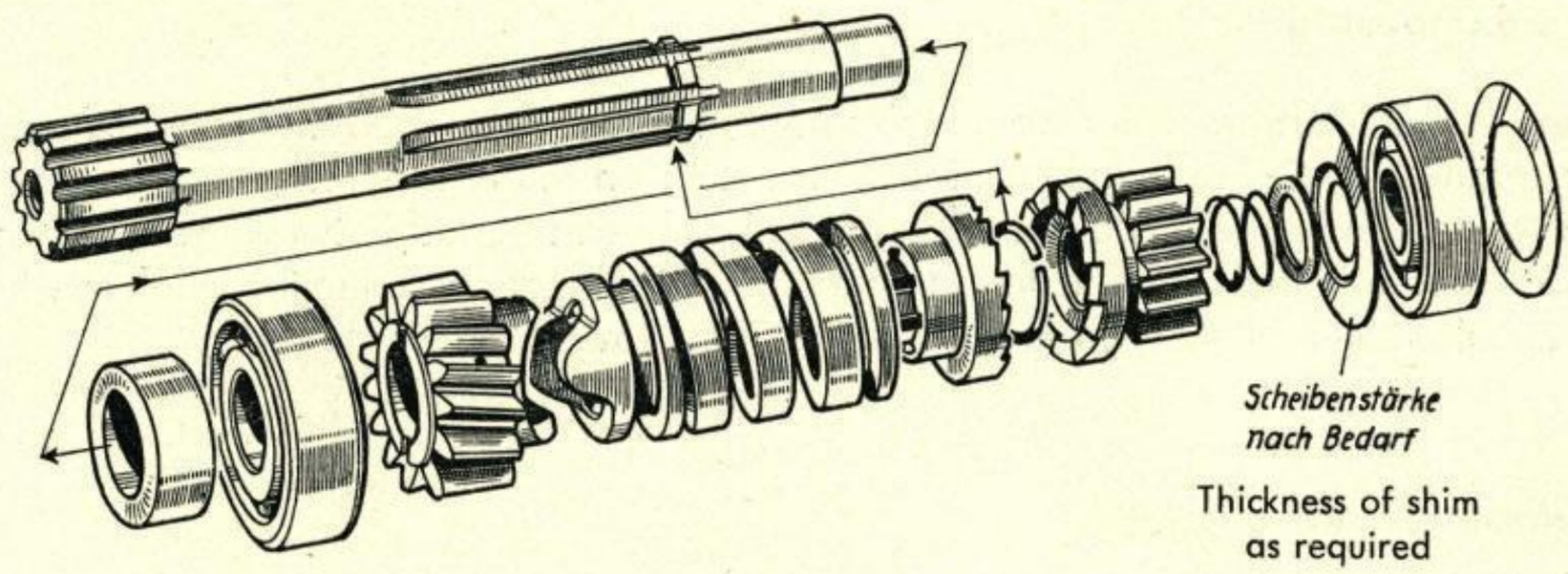

Push circlip over cone of tool Matra No. 319/3.

Place tool (cylindrical end in front) with circlip on shaft end.

With bushing Matra No. 319/1 in vice push circlip further by compression until the lock ring engages in circular groove of mainshaft.

Locate kickstart ratchet pinion and compression spring, press washer in place (tight fit) and jam it slightly on its seat.

(Make certain, however, that the kickstart compression spring is not jammed between washer and mainshaft shoulder).

Any washer found damaged by preceding jamming operations should be replaced by a new one.

Adjusting selector (striker) forks:

In case the transmission gear change mechanism was found working incorrectly already before disassembly and when either layshaft, sliding selector discs, striker forks or striker fork fulcrum bushings have been replaced during overhauls, the readjustment of striker forks becomes a necessity.

Insert assembled layshaft into heated gear box and drift it home in its bearing.

Fit striker forks with bushings in sliding selector discs and cam plate slots and secure with the two fulcrum screws.

Bolt inspection cover (made of a defect gear box cover) onto transmission casing, so that the layshaft (driven shaft) is properly supported for the measurement of gear change backlash.

Set the gears with the hand shift lever at the neutral between first and second.

With a suitable inspection mirror check distances between sliding selector discs and gear engagement dogs on spur wheels. Each sliding selector disc must be equidistant from the confronting gear engagement dogs on either side of the disc (holding in mind for this occasion the lowering of sliding selector disc with its axis in vertical direction at this neutral position). If this is not the case, eventually either turn fulcrum bushings of striker forks 180° or rebend ends of striker forks gently, as correctly as above.

In case the sliding selector disc should jam during the gear changing operation, check the visible striker fork arm for easier operation by pushing or pulling it with the fingers. The right position having been detected, readjust the operating striker fork arm in the direction found suitable for easier working.

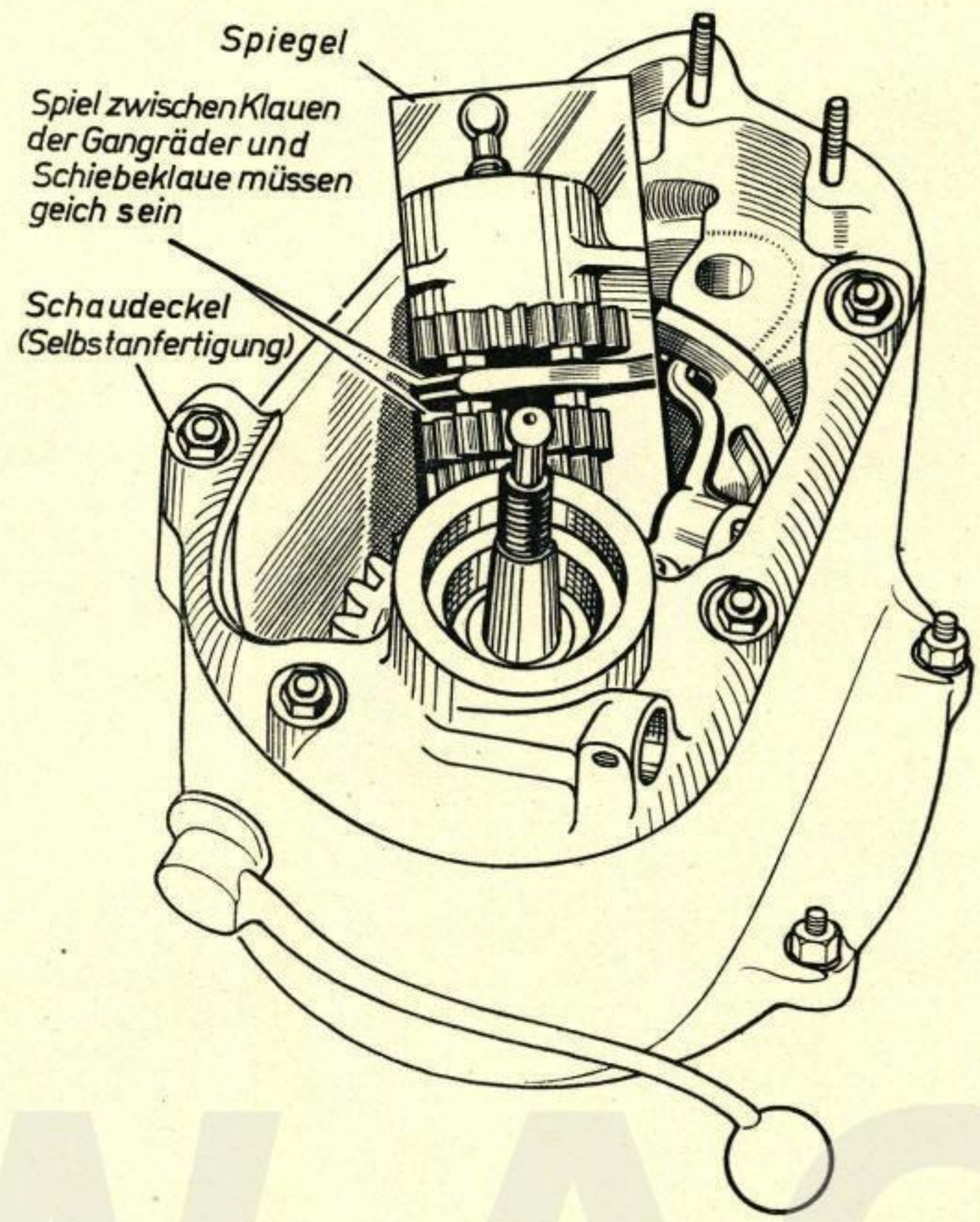

BMW AG

After rectification of striker forks make a test whether the sliding selector discs are easy to handle.

Furthermore, having adjusted new striker forks and fulcrum bushings, mark these items together for identification purposes.

Assembling gear box cover:

Insert helical gear of speedometer drive take-off assembly.

Push speedometer shaft connecting bushing home in a way that the milled lateral aperture for the lock screw shows rearwards. Secure with hexagon screw.

Enter kickstart spindle with quadrant and pedal return spring in gearbox cover, simultaneously fitting spring end in cover the spring being given an initial tension.

Locate damping washer and kickstart crank on outer end of kickstart quadrant spindle and secure with screwed key.

Assembly of Transmission

Assembling device holding in position pegs of anchor-type pawl:

Insert holding arms in pen steel ring and fit the assembly, with the bent ends against anchor-type pawl, upon distance piece of gear change pedal shaft.

Slide spacing shim upon the distance piece.

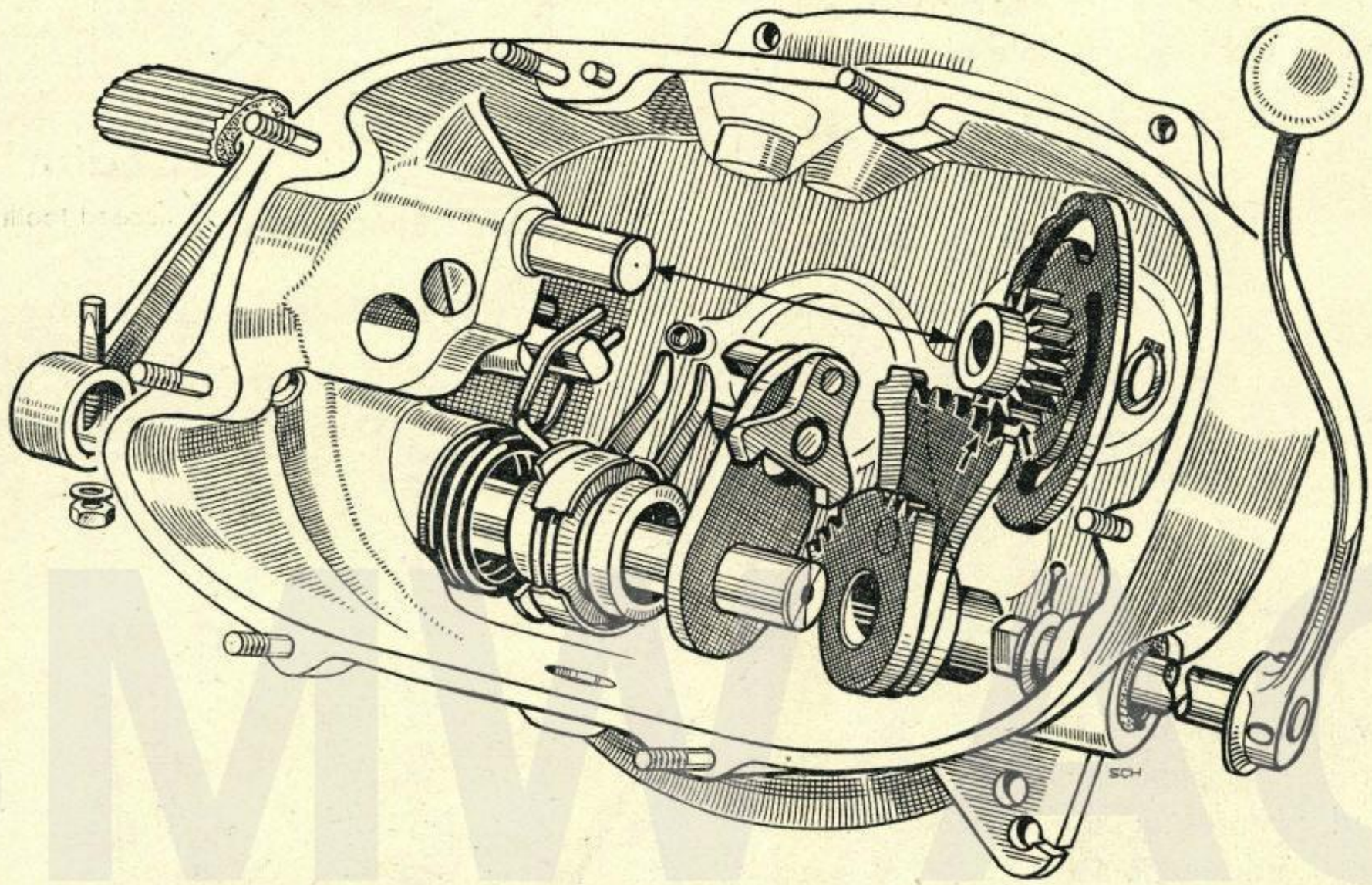

Fitting in position anchor-type pawl and holding arms:

Locate return spring (with three coils) on bearing collar cast integrally with the gearbox casing, in a manner that the bent spring ends point into transmission room.

Cross spring ends and jam them over holder pin fixed on gearbox wall.

Enter anchor-type pawl together with assembled holding device in a way that the holding pin on gearbox wall fits in the space between the two pegs of anchor-type pawl.

Slide cam plate quadrant with connected ratchet plate on the pawl carrier (pedal) shaft. Make sure that the two anchor points of anchor-type pawl are equidistant from ratchet teeth centre.

Rebend ends of return spring accordingly, if required.

The spring ends, in assembled state, must stand parallel.

Next fit gear change pedal and secure with its screwed key.

Insert compression spring between cam plate pawl and correponding pin on gearbox housing.

Put cam plate with connected pinion in place so that the second tooth of coupling quadrant (seen from top) engages into the marked teeth notch of cam plate pinion.

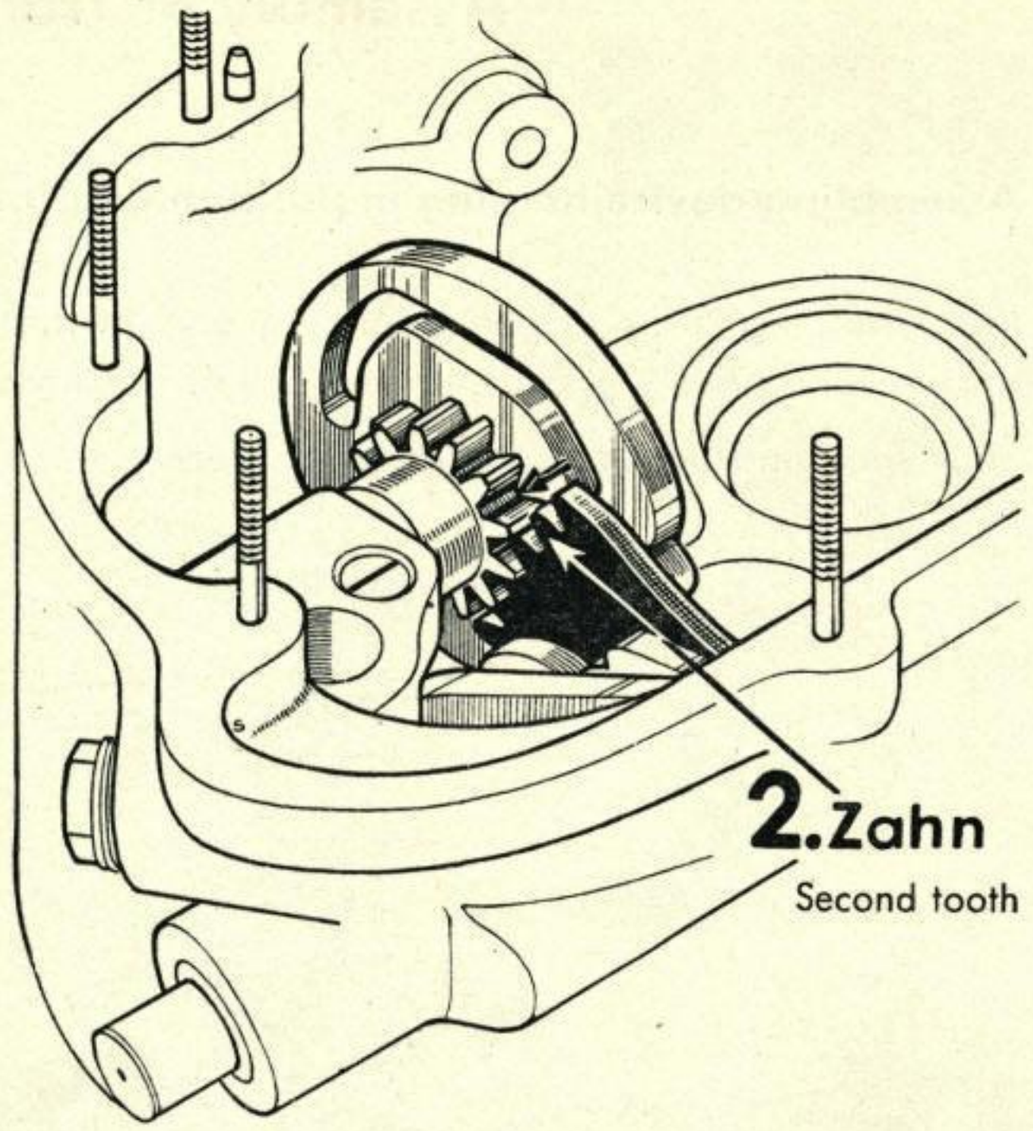

By means of a screwdriver, depress cam-plate indexing pawl and compression spring and engage indexing pawl into one of the notches machined in the periphery of the cam plate. Then secure cam plate by means of the cam plate retaining circlip.

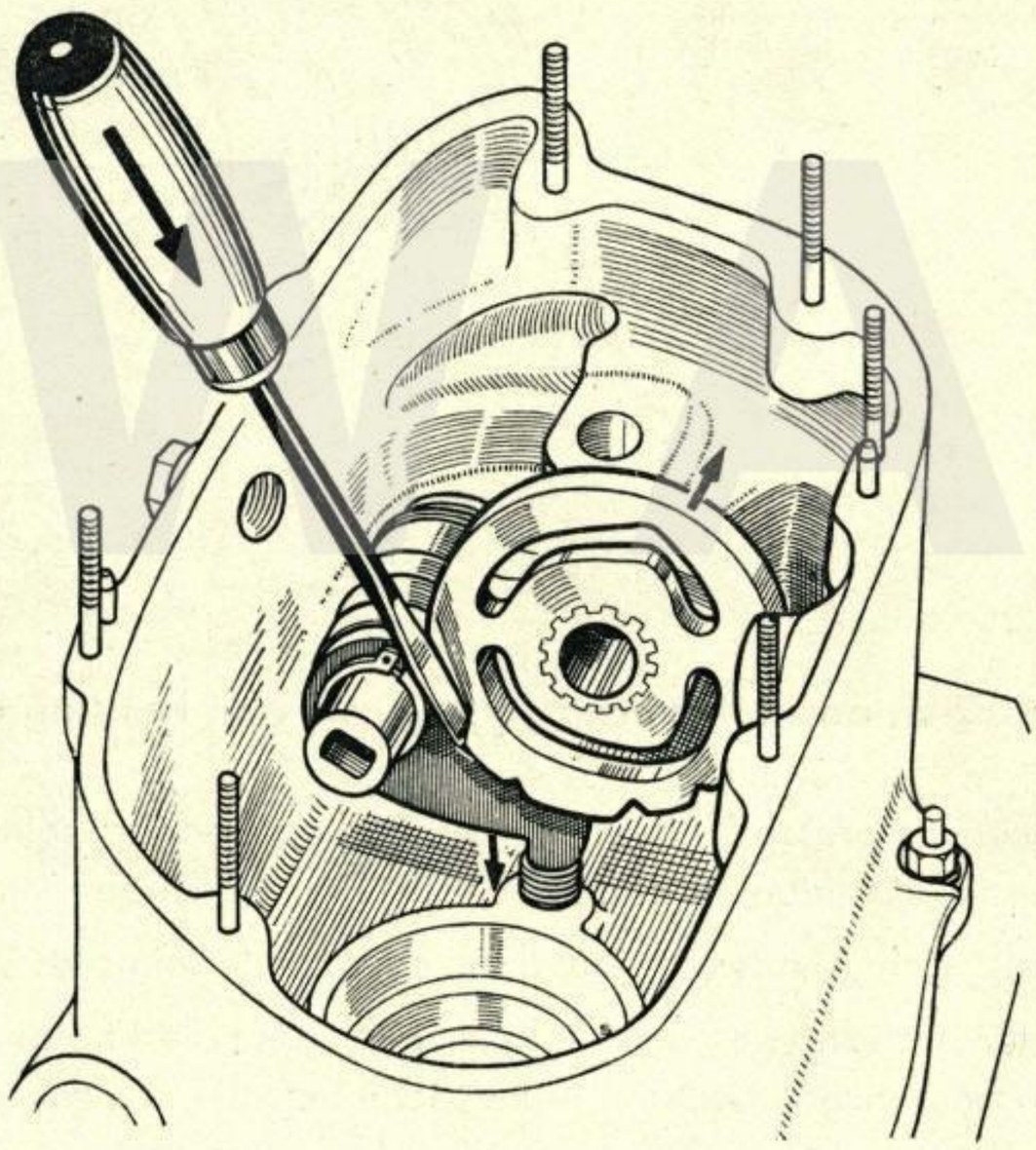

Slide in place hand shift lever shaft with connected lever.

Locate spacing shims and drive square-headed shaft end into the corresponding quadrangular recess of coupling quadrant; secure with split pin.

Check shift backlash between anchor pawl carrier shaft and the two stop screws on housing with the cam plate in first and top position. The cam plate should be able to be shifted about a third to half the tooth of locating pawl beyond the stationary position in cam plate notch.

Rectify the stop screws, if required.

Refitting three-axle gear cluster:

Drift new mainshaft oil seal, if required, into gearbox housing with the aid of device Matra No. 297/1 and 2. Heat casing to about 80 deg C = 175 deg F.

To protect oil seal push device Matra No. 297/1 over mainshaft. Apply drift bushing against ball bearing and tap mainshaft right home in casing.

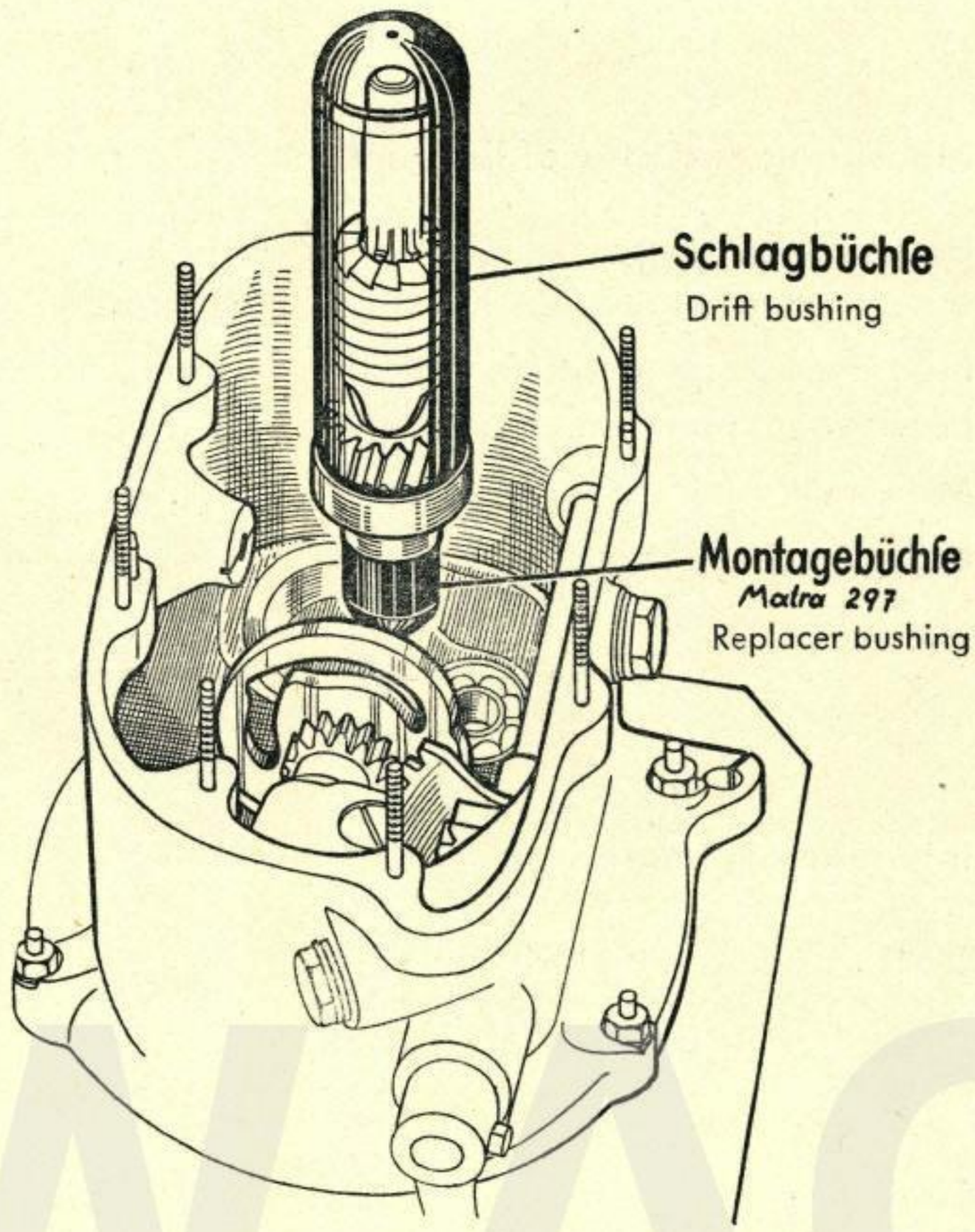

BMW AG

Put intermediary shaft in gearbox housing.

Slide layshaft with the striker forks in the casing.

Re-mesh the two shafts and drift them jointly home in their bearing seats. (Take care not to jam the striker forks). Use a drift tool to install the layshaft.

Fit the pegs on the striking forks into the cam plate slots.

Secure striker fork fulcrum bushings with the holding screws.

Checking end float of mainshaft and layshaft in gearbox housing:

It cannot be emphasized too strongly that the prescribed shaft end play of 0.2 mm = .008" should be observed under all circumstances in order to prevent damages resulting from axial thrusts.

Measuring end play of mainshaft:

Use depth gauge to measure distance from washer of compression spring on mainshaft to cover attaching face of gearbox housing with the gasket being in place = measure I.

Next measure distance (with depth gauge) from ball bearing inner race in gearbox cover to housing attaching face of gearbox cover = measure II.

Measure II minus measure I gives measure III.

Measure III minus 0.2 mm (.008") end play gives the required thickness of spacing shim to be fitted on ball bearing inner race.

Measuring end play of layshaft:

Use depth gauge to measure distance from outer race of layshaft ball bearing to cover attaching face of gearbox housing with the gasket being in place = measure I.

Next measure distance from housing attaching face of gearbox cover to bottom of ball bearing seat bore = measure II.

Measure II minus measure I gives measure III.

Measure III minus 0.2 mm (.008") end play gives the required thickness of spacing shim to be inserted between ball bearing outer race and gearbox cover.

Intermediary shaft:

When fitting the intermediary shaft, check it for an end play of 0.2 to 0.4 mm = .008 to .016". No spacing shims are required in most cases.

BMW AG

Fitting the gearbox cover:

Warm up cover to hand temperature.

Place gasket upon housing attaching face.

Smear spacing shim for mainshaft with grease and fit it on ball bearing (Pressed-in inner collar against ball bearing in gearbox cover).

Smear spacing shim for layshaft also with grease to fit it into gearbox cover.

Give the kickstart spindle an initial tension, place cover upon gear box and tap it carefully right home.

Tighten securing nuts evenly in diagonal order.

Inserting clutch operating rod:

Enter push rod with felt ring, steel ball and thrust pad from front into hollow centre of mainshaft.

(On machines supplied on and before Engine No. 227 980 the clutch operating rod is a one-piece unit. It is recommended to fit during thorough overhauls the two-piece push rod with the longer felt packing. In this case, the new thrust piece with the improved oil seal is to be used, too.)

Rear Wheel Drive Group

BMW AG

Rear Wheel
Drive Group

Technical Data

Power transmission from gears to rear wheel	fully enclosed propeller shaft with elastic coupling and helical bevel gears
Speed reduction between transmission and rear wheel:	
Solo driving	4.5 : 1 (6/27 teeth, Klingelnberg toothing)
Side car driving	5.14 : 1 (7/36 teeth, Gleason toothing) or 5.2 : 1 (5/26 teeth, Klingelnberg toothing).
Type and quantity of oil required	see Lubrication Chart
Wire gage of rear suspension springs	7.4 mm = .296" ∅
Unloaded length of springs	112 mm = 4.48"

Fits and Tolerances

Backlash disc gear to pinion:	
Klingelnberg toothing	0.15 – 0.20 mm = .006 – .008"
Gleason toothing	0.10 – 0.20 mm = .004 – .008"
Basic adjustment value in bevel drive housing	59 ± 0.10 mm
Manufacture tolerance of bevel gears	± 0.30 mm A pair of two correlative bevel gears has always the same number hewn in disc gear and pinion, manufacture tolerances are stamped in disc gears as ± numbers in hundredths of mm.
Distance between transmission shock absorber flange and shock absorber flange mounted on propeller shaft (shaft in horizontal position).	31 ± 1 mm = 1.22 ± .04"

Special Tools

1 ea ratchet wrench, round nut	Matra No. 296
1 ea puller, ball bearing 6206	" " 356
1 ea pin spanner, universal joint cover and spring covering tubes	" " 284
1 ea pin spanner, threaded ring on front end of bevel drive housing	" " 283
1 ea replacer, oil seal on disc gear	" " 290
1 ea remover, coupling flange	" " 281/1
1 ea replacer, coupling flange	" " 281/2
1 ea support bushing, coupling flange	" " 281/4
1 ea steel bushing for fitting of coupling flange	" " 331/1
1 ea cover plate, slotted, for fitting of coupling flange	" " 331/2
1 ea bushing, split, for pressing coupling flange off propeller shaft	" " 331/7 A

BMW AG

Shop-made Tools

1 ea drift punch, central column (rear suspension)	W 5015
1 ea drift tool, oil seal	W 5016
1 ea backlash metering device	V 5042

Dismantling Rear Wheel Drive

Drain oil from housing.

Mark brake shoes and remove.

Unscrew bell-shaped cover of shaft drive universal joint by means of pin spanner Matra No. 284.

Remove split pin of castellated nut. Unscrew nut with spanner Matra No. 296.

Take off nut and washer.

Withdraw propeller shaft taking care not to lose the spacing shims.

Remove gasket of universal joint cover.

Use pin spanner Matra No. 283 to slacken the threaded ring which will come away together with the oil seal.

Remove nut and toothed washer holding in position the brake operating lever.

With a soft mallet drift brake cam through and spare it with its washer.

Remove six nuts and washers securing bevel drive housing cover.

Still with soft mallet tap off housing cover, giving attention to the spacing shims.

Remove housing gasket.

Heat up bevel drive housing and withdraw driving pinion together with its bearing, always taking care not to lose eventual spacing shims.

Drift crown wheel (disc gear) with bearing inwards, paying attention to the spacing shims.

BMW AG

Dismantling driving pinion and bearing:

Drift pinion out of ball bearing and bearing carrier bushing.

Tacke off packing shim and distance piece.

If the necessity arises, draw ball bearing out of the bearing carrier bushing and withdraw roller bearing from driving pinion.

Removing ball bearing from crown wheel (disc gear):

Drift off ball bearing 16 012.

Withdraw ball bearing 6206 with the aid of puller Matra No. 356 and support washer 29 mm diam., 5 mm thickness (shop-made tool).

Removing rear suspension spring from housing cover:

Through drilled hole of spring covering tube catch spring end by means of pin spanner Matra No. 284 and turn spring off the bearing plunger cast integrally with the housing cover plate.

Assembly of Rear Wheel Drive

When the bearing surface of the spring-loaded oil seal on brake side shows any deformations, the oil seal must be pressed further inwards with drift tool W 5016 (shop-made tool) until its spring-loaded side will be deeper by 1.5 mm (.06") than the ball bearing attaching shoulder in bevel drive housing.

Press ball bearings 16012 and 6206 upon crown wheel hubs.

Insert new felt ring in crownwheel bore.

Press spacing shim, if any, and inner race of roller bearing together with complete roller cage over pinion axle.

Fit distance piece and packing shim.

Drive double-raw ball bearing in carrier bushing and press the assembly over pinion splined stem.

Before fitting the bevel gear set in housing, this is to be heated to about 120 deg C = 250 deg F.

Spiral bevel gear sets for solo and side-car service:

The "Solo" motorcycle has a bevel gear set with Klingelnberg toothing.

For the purpose of attaching a side-car, in accordance with the varied load conditions, the "Solo" type of bevel gear set in rear drive must be replaced by another spiral bevel gear set suitable for side-car service, with either a Gleason toothing (7/36 teeth) or a Klingelnberg toothing (5/26 teeth). Only run-in bevel gear sets can be delivered for replacements. Moreover, on that occasion it is neccessary to change and, or to replace the following parts.

	Former pinion bearing for "solo" service	New pinion bearing for "solo" service	New pinion bearing for side-car service
Pinion	225 1 66 036 03 (6 teeth)	225 1 66 036 13	225 1 66 040 13 (7 teeth) or 225 1 66 038 23 (5 teeth)
Disc gear (crown wheel)	225 1 66 640 04 (27 teeth)	225 1 66 640 04	225 1 66 642 04 (36 teeth) or 225 1 66 641 14 (26 teeth)
Bevel gear set	**225 1 66 680 19**	**225 1 66 680 29**	**225 1 66 682 09 or 225 1 66 681 19**
Distance piece	225 1 66 008 14	–	–
Distance sleeve	–	225 1 66 049 04	225 1 66 049 04
Packing shim	–	225 1 66 048 04/14	225 1 66 048 04/14

Former pinion bearing for "solo" service (upper scheme)

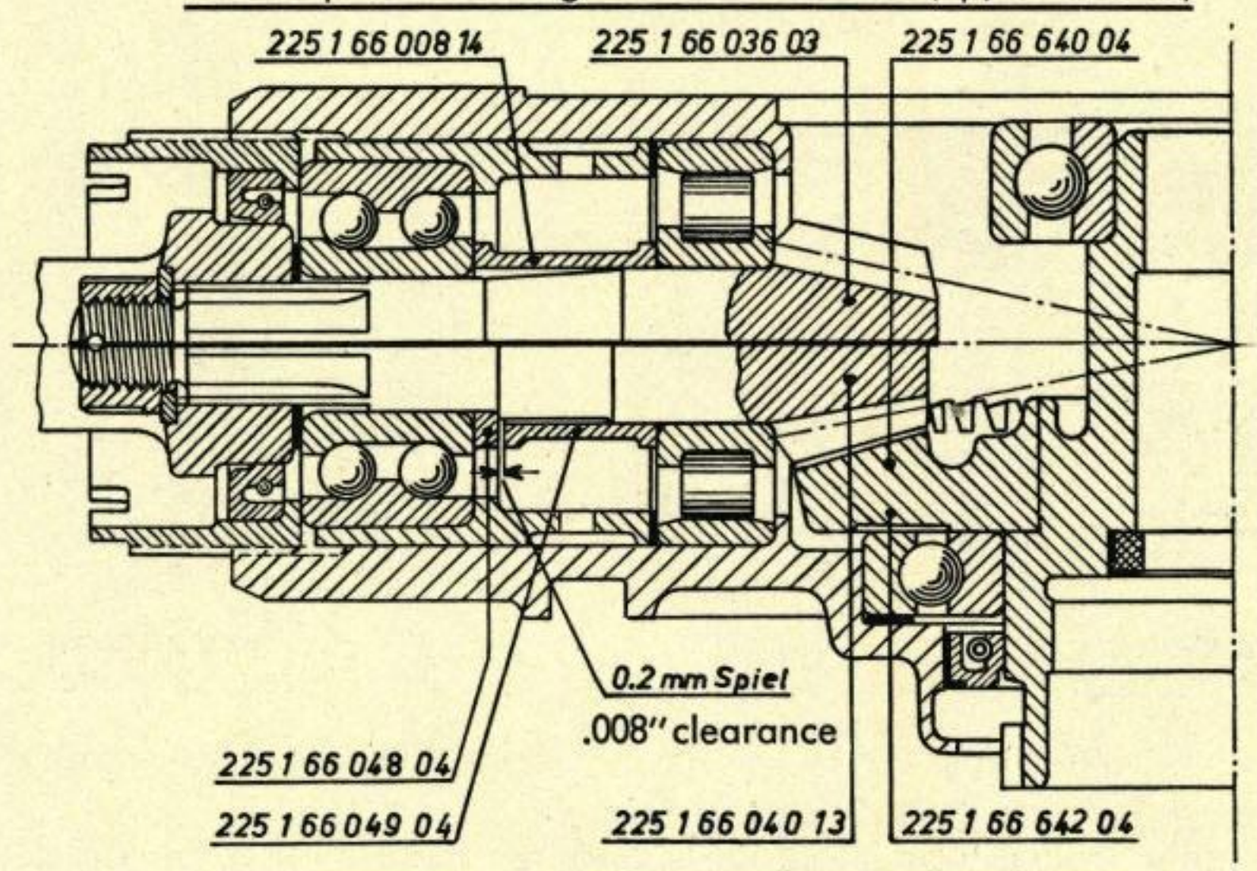

New pinion bearing (lower scheme)

Whereas, when tightening the castellated nut on a pinion supported by the former system, the driving end of universal joint, washer, ball bearing, distance piece and roller bearing with support are pressed together against the pinion toothing shoulder, the roller bearing used with the new system must be free against the pinion shoulder. The new type of pinion therefore has a stepped stem and a spacer washer supported by the step to sustain the pressure exercised by castellated nut, driving end of universal joint, washer and ball bearing.

Before final assembly therefore make certain that with inner race of roller bearing and spacing shim pressed upon pinion stem, the distance sleeve still turns freely, but with an axial float not exceeding 0.2 mm = .008". Reface distance sleeve or insert a shim as required.

When fitting the new type of bearing upon the pinion stem, the roller bearing to be pressed upon must have either a bronze or a "Z" sheet metal cage. Roller bearings with "Z" sheet metal cages will be fitted in a way that the smaller cage diameter points to the pinion.

The checking for proper mesh of bevel gears for side car use has to be carried out following the "General rules for installation of Gleason spiral bevel gears".

Furthermore, after having installed the new gear set for side-car driving, remember to change speedometer adjustment according to the varied gearing ratio by fitting a speedometer with the ratio number 1,92 (speedometer mile-calibrated).

Adjusting pinion and ring gear:

The basic adjustment value from rear of ball bearing seat of pinion in housing neck to centre of ring gear is 59 ± 0.1 mm.

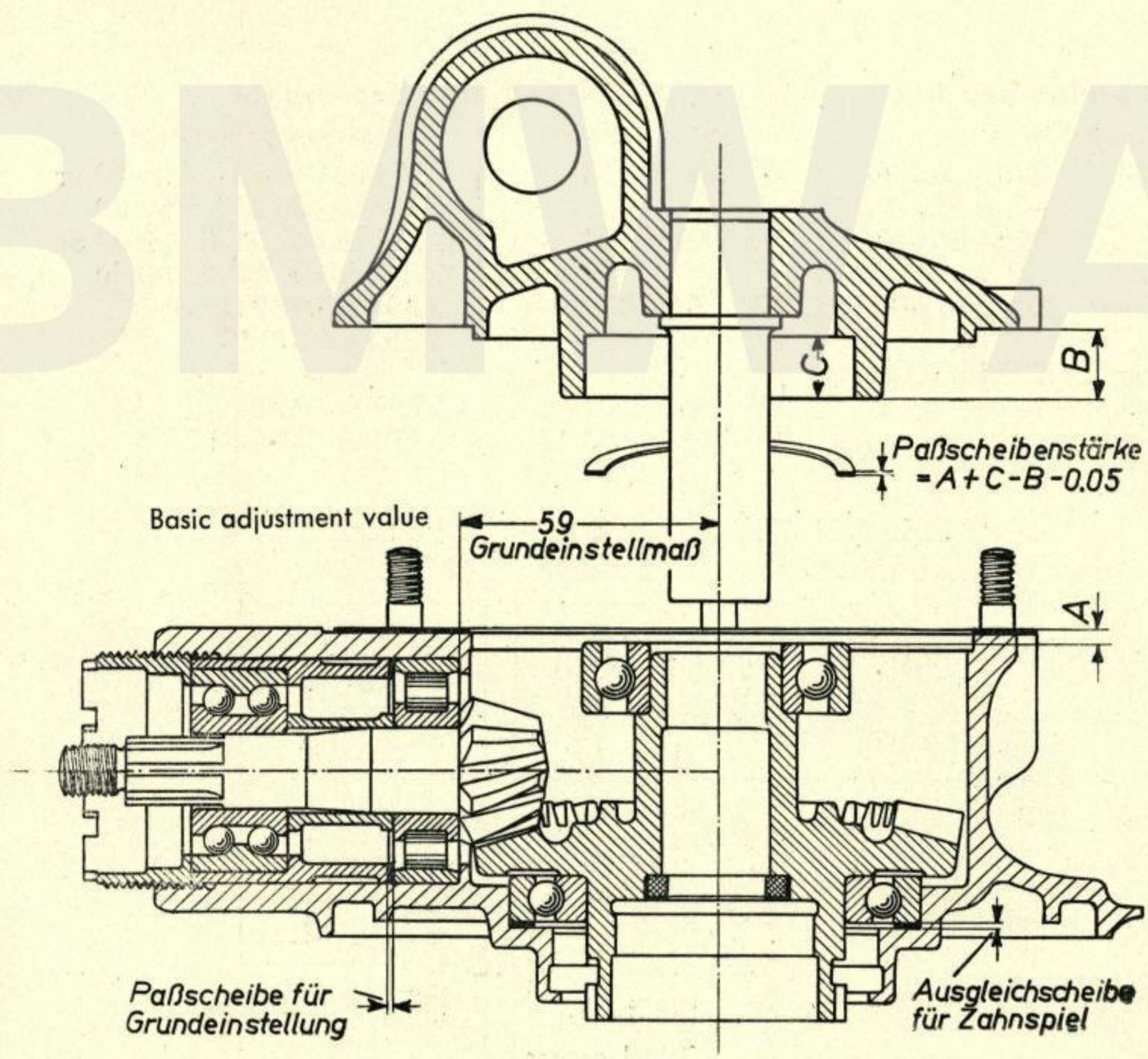

Spacing shim for basic adjustment

Spacing shim for backlash adjustment

The respective value from pinion shoulder to ring gear centre experienced slight alterations owing to the running-in of gears.

These deviations have been stamped electrically upon ring gear, besides identification number for gear set as + or – numbers, e. g. 634 – 20. In this case – 20 means that on assembling the driving pinion has to be set 0.20 mm more inwards, i. e. at 58.8 mm distance to the ring gear centre.

Compensate minus differences by inserting a shim of correspondingly smaller thickness, and plus differences by placing a thicker shim between outer race of roller bearing and bearing carrier bushing.

In order to obtain the prescribed backlash of 0.15 to 0.20 mm (.006 to .008"), select a shim of convenient thickness for location between rear of ball bearing seat and ball bearing 16012 in ring gear housing.

Use replacer Matra No. 290 to fit spacing shim and ring gear with both ball bearings pressed upon in warmed carrier housing.

Next press driving pinion with bearing assembled and eventual spacing shim between bearing bush and outer race of roller bearing firmly in housing neck until the pinion assembly abuts; then secure by screwing-in the threaded ring with the gasket placed upon.

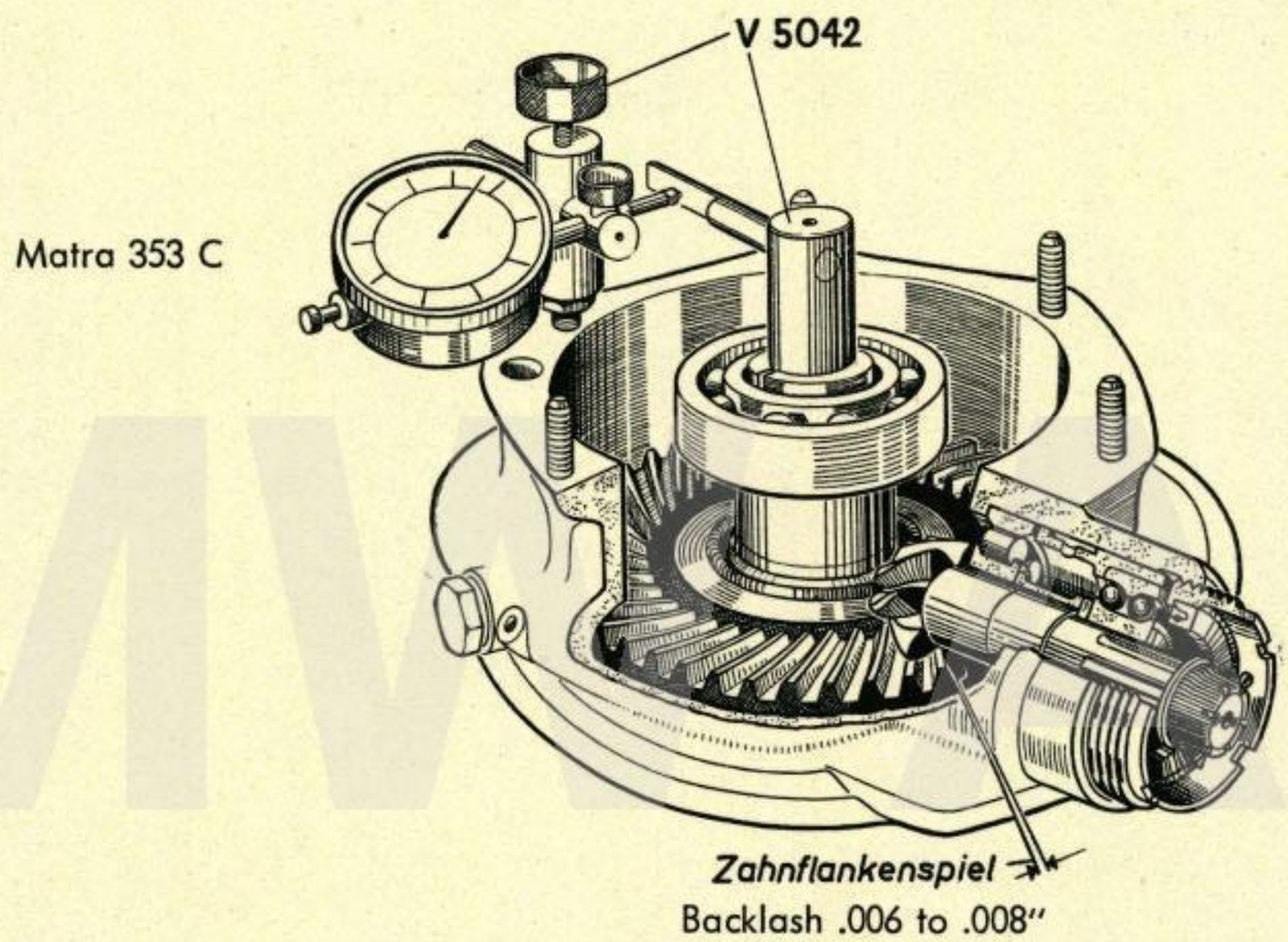

Measuring backlash with device V 5042 (shop-made tool):

The backlash is best measured in height of ring gear tooth width centre using an arbour with radial stop arm, pressed in ring gear bore, and a dial gauge device clamped on a casing stud, so as to enable tangential measurement.

To measure backlash, hold pinion stem sturdily, turn ring gear slightly to and fro and take reading of backlash on dial gauge stopped at the arbour arm.

The backlash being too great, insert a thicker shim, the backlash being too small, put a smaller shim between casing and ball bearing 16012. On Gleason gears for side-car service adjust backlash at the opportunity of checking the bearing surface.

Checking bearing surface on spiral bevel gear sets:

On "solo" bevel gear sets (6/27 teeth) as well as on "side-car" bevel gear sets (5/26) check and adjust bearing surface following "General rules for installation of Klingelnberg spiral bevel gears", on "side-car" bevel gear sets (7/36 teeth) perform this check in accordance with "General rules for installation of Gleason spiral bevel gears". Then check backlash values once more.

Fitting bevel drive cover plate:

Before fitting cover to housing, ascertain with a depth gauge and housing gasket placed, the thickness of spacing shim to be inserted between ball bearing 6206 and rear of ball bearing seat in cover plate, in order to prevent axial float of ring gear.

For this end measure pursuant to scheme on page 8:

Value A = distance from ball bearing front face to housing joint face with gasket placed upon.
Value B = distance from cover joint face to front face of ball bearing carrier in cover plate.
Value C = distance from bearing carrier front face to carrier inner shoulder in cover plate.

With an additional value of 0.05 mm (.002") compensating gasket compression the required thickness of spacing shim therefore results as follows:

Value B minus C = value D
Value A minus D = value E
Value E minus 0.05 mm gives the thickness of spacing shim.

The cover plate when fitted to the housing must not thrust upon ring gear hub, the max. end play of the latter being 0.05 mm (.002").

After having inserted the correct spacing shim, position cover plate and secure with seven nuts and washers.

Fitting propeller shaft:

Push oil seal over threaded ring in housing neck, slide spacing shim on pinion stem and carefully enter universal joint end of propeller shaft on pinion stem and in oil seal.

Screw castellated nut and washer upon pinion stem, then tighten with special wrench Matra No. 296.

Secure nut with a split pin.

Screw home universal joint bell-shaped cover and tighten slightly with the aid of pin spanner Matra No. 284.

Fit brake shoes watching assembly marks.

Notice: In case a new propeller shaft has been fitted or a new coupling flange has been pressed on the original propeller shaft, care should be taken that the distance between propeller shaft flange and the counter flange on gearbox end, with propeller shaft in horizontal position, amounts to 31 ± 1 mm (1.22 ± .04"). It is important to check this value after assembly of rear drive again, for otherwise damages might occur on rear drive owing to the up-and-down travel of springing mechanism. To obtain correct distance, press coupling flange on propeller shaft for or aft as required.

In order to press coupling flange off propeller shaft, support flange on split bushing Matra No. 331/7 A and slotted cover plate Matra No. 331/2 upon press tool Matra No. 331/1, and press out propeller shaft by means of drift tool Matra No. 281/1.

To press coupling flange on place, support propeller shaft on its shoulder with split bushing Matra No. 281/4, slotted cover plate Matra No. 331/2 upon press tool Matra No. 331/1, and use replacer Matra No. 281/2 to press the flange upon propeller shaft.

General rules for installation of Klingelnberg spiral bevel gears

Proper assembly adjustment of Klingelnberg spiral bevel gears is very important in order to ensure smooth action and long service life.

To obtain proper meshing:

1) a backlash of 0.15 – 0.20 mm (.006 to .008") is to be observed with checking after assembly

2) the tooth bearing in longitudinal direction of teeth by ascertaining with paint the bearing surface **on pinion** rotating clock- and counterclockwise.

Adjustments are made by altering position of pinion and ring gear at a rate of almost tenths of millimeters only. Every adjustment will influence backlash and bearing surface. After each adjustment check backlash and bearing surface again until the most suitable value is obtained.

Front side of tooth	Description and adjustment	Rear side of tooth
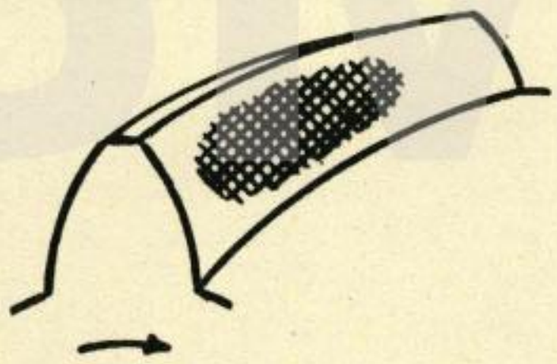	**Proper mesh:** Bearing surface on front and rear side of tooth is a trifle nearer to thick end of tooth, in the centre of tooth side. Under load and actuation conditions the bearing surface travels a little to the small end of tooth.	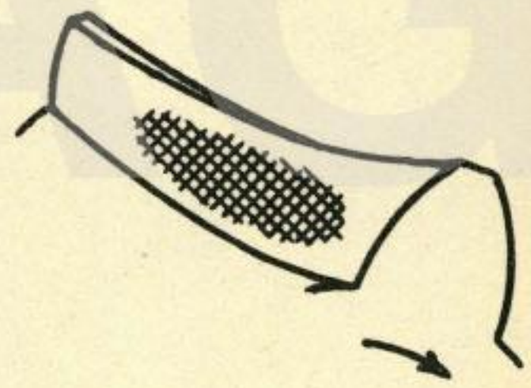
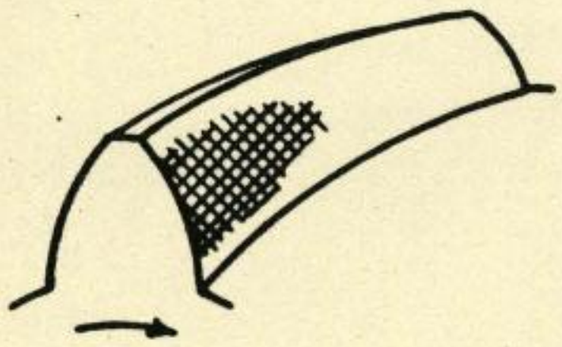	**Bias tooth bearing on front side at thick end of tooth:** Increase distance from pinion to ring gear centre and adjust backlash by reducing the distance from ring gear to pinion centre.	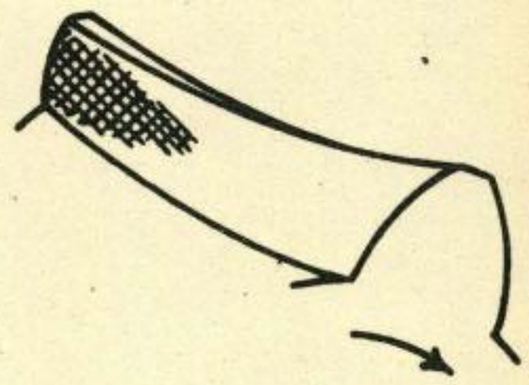
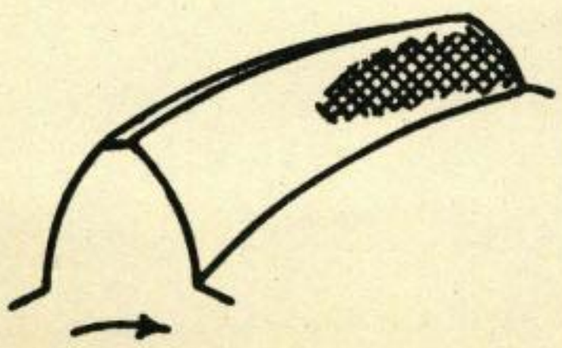	**Bias tooth bearing on front side at small end of tooth:** Reduce distance from pinion to ring gear centre and adjust backlash by increasing the distance from ring gear to pinion centre.	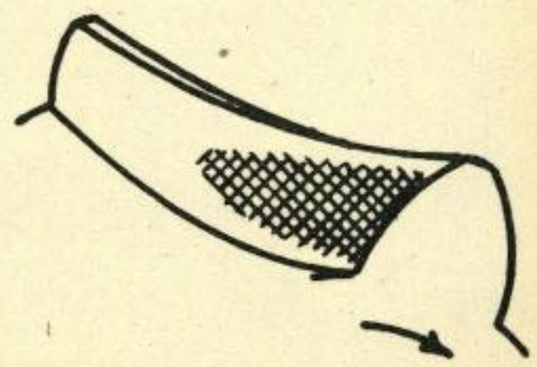

General rules for installation of Gleason spiral bevel gears

Proper assembly adjustment of Gleason spiral bevel gears is very important in order to ensure smooth action and long service life.

To obtain proper meshing:

1) a backlash of 0.10 – 0.20 mm (.004 to .008″) is to be observed with checking after assembly,
2) the tooth bearing in longitudinal direction of teeth,
3) the tooth bearing in direction of profile by ascertaining with paint the contact area **on ring gear teeth** rotating clock-and anticlockwise.

Adjustments are made by altering position of pinion and ring gear at a rate of almost tenths of millimeters only. Every adjustment influences backlash and contact area in both directions. After each adjustment check backlash and bearing surface again until the most suitable value is obtained.

Front side of tooth	Description and adjustment	Rear side of tooth
	Proper meshing: Bearing surface on front and rear side of tooth is a trifle nearer to small end of tooth, in the centre of tooth side. Under load and actuation conditions, the contact area travels a little to the thick end of tooth.	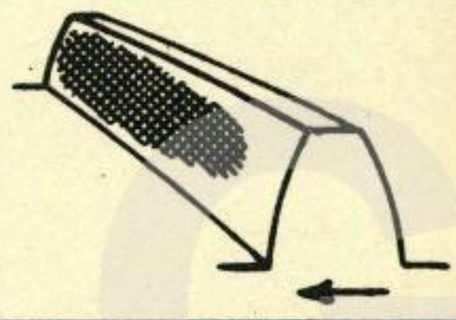
	Bias tooth bearing (see figure): Gears are serviceable when contact area on front side extends from small end of tooth over 5/8 of tooth length. **Contrary bias tooth bearing:** Gears are no longer serviceable.	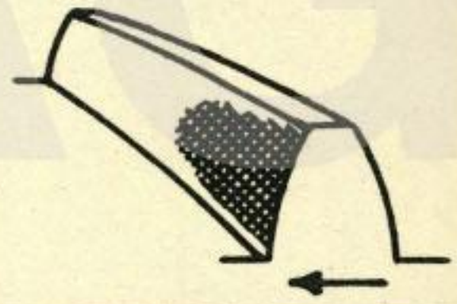
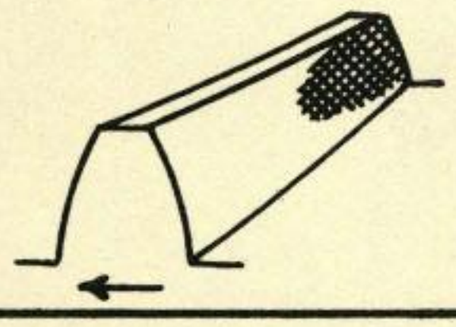	**Collateral tooth bearing on extreme area of small end of tooth:** Increase slightly distance from ring gear to pinion, rectify backlash with pinion.	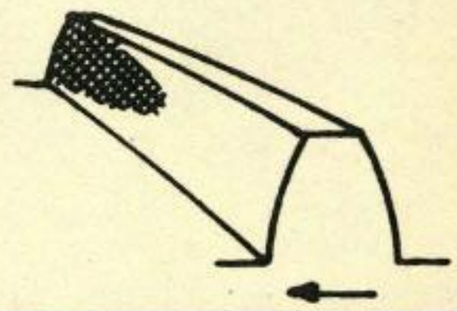
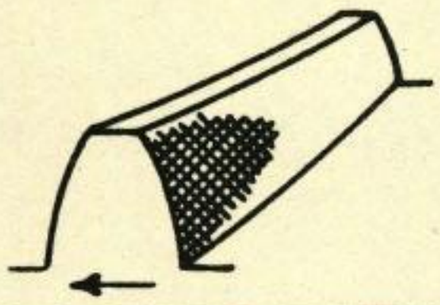	**Collateral tooth bearing on extreme area of thick end of tooth:** Reduce slightly distance from ring gear to pinion, rectify backlash with pinion.	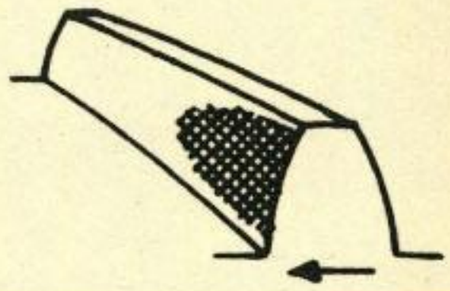
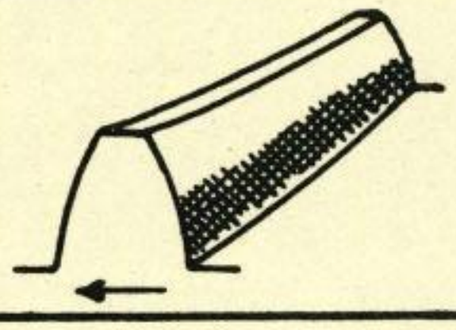	**Tooth bearing on dedendum:** Set pinion a little outwards from ring gear centre, rectify backlash with ring gear.	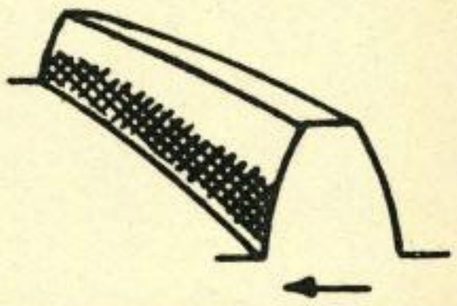
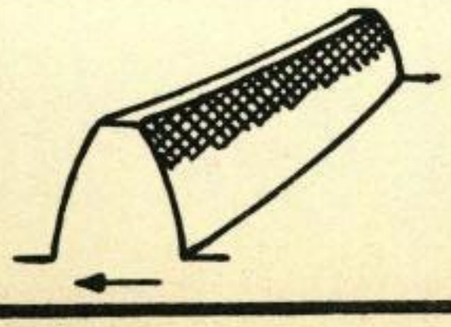	**Tooth bearing on addendum:** Set pinion a trifle towards ring gear centre, rectify backlash with ring gear.	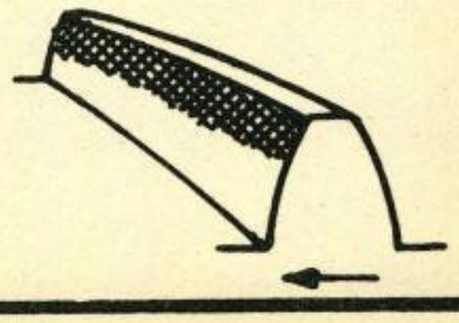

Chassis Group

BMW AG

Chassis Group

Technical Data

Chassis	closed duplex cradle steel tube frame
Front wheel suspension	telescopic forks with double-acting hydraulic shock absorbers
Rear wheel suspension	dust-proof collapsible telescope-type rear suspension
Brakes	internal shoe brake, drum diam. 6.4"
Rims	3 x 19", drop-centre safety rims
Tyres	3.25 x 19"
Overall width of motorcycle	790 mm = approx. 31"
Overall length of motorcycle	2020 mm = approx. 80"
Overall height of motorcycle	946 mm = approx. 37.2"
Wheel base	1353 mm = approx. 53.3"
Height from saddle to ground	730 mm = approx. 28.7"
Ground clearance	92 mm = approx. 3.6"
Net weight ready for operation	313 lbs.
Permissible total weight:	
Motorcycle without side car	660 lbs.
Motorcycle with side car	825 lbs.
Capacity of fuel tank	12 litres = 3.15 U. S. gall. = 2.65 Imp. gall.
Reserve fuel tank	1.5 litres = 3.2 U. S. pints = 2.6 Imp. pints
Lubrication of chassis	See lubrication chart
Quantity of oil required for each fork leg	See lubrication chart

Tyre pressure:	Front wheel	rear wheel	side-car wheel
Rider alone	21 psi	23 psi	–
Rider and passenger	21 psi	27 psi	–
Rider with occupied side car	24 psi	27 psi	24 psi

BMW AG

Fits and Tolerances

Steering bearing	2 x 24 balls diam. 5.5 mm
Permissible non-trust of fork main tubes	0.2 mm = .008"
Assembly play of fork end sliding tubes in guiding bushes	0.08 – 0.11 mm = .0032 – .0044"
Fork springs:	
Wire diameter	4.4 mm = approx. .175"
Unloaded length	282 ± 2 mm = approx. 11.3 ± .08"
Brake drum diameter	160 mm = approx. 6.3"
Permissible runout of brake drum, running	0.1 mm = approx. .004"

Special Tools

1 ea spanner for adjustment of fork steering column . . .	Matra No. 316
1 ea spanner, steering stem lock nut	Matra No. 316/A
1 ea hook spanner, exhaust coupling nut 49 mm diam. . .	Matra No. 338/1
1 set of wooden clamping blocks for dismantling and re-assembly of front forks	Matra No. 362

Shop-made Tools

1 ea drift tool, rear suspension plunger carrier column	W 5015
1 ea drift rod, main tube bearing bushes	W 5018

Front Forks

Removal:

Place the motorcycle on its centre stand.

Turn brake adjusting screw fully in and place it in a way that its slit coincides with the slit of the carrying screw.

Raise brake operating lever and take off cable.

Unscrew wheel spindle nut, loosen pinch bolt on left-hand fork end and slide out wheel spindle.

(On motorcycles on and before Engine No. 227 407, the wheel spindle is screwed with left-hand thread in off-side fork end.)

Remove front wheel with brake anchorage plate.

Unscrew front mudguard and drift its centre stay out of the fork ends with the aid of a punch.

Remove headlamp dip switch on left handlebar.

(On R 25 models disconnect cable leading to electric horn from horn button.)

Undo screws holding headlamp and put headlamp cautiously on prong of fork watching headlamp mounting rubber.

Detach brake cable from holding clip.

Remove oil filler caps from top of fork legs.

With a socket spanner unscrew nuts (14 mm) securing upper spring retainer units in top of fork legs.

Turn hexagon-ended lock rings out of fork top ends.

Withdraw split pin from lower end of steering damper wing rod.

Unscrew wing rod and remove it together with dust cover, lock washer and damper bottom plate.

Detach damper anchor plate from its support on frame.

Unscrew steering column locking nut (36 mm).

Cover fuel tank with rags and carefully place handlebar with fork top yoke upon it.

Remove head race adjusting nut (36 mm) together with head race cover and cone carefully pressing forks upwards to avoid losing of any head race balls. Each of the two steering races contains 24 balls.

Remove forks.

BMW AG

Dismantling fork legs:

Clamp forks in vise using wooden blocks Matra No. 362.

Withdraw main tube top covers (with headlamp brackets) and rubber rings by hand upwards.

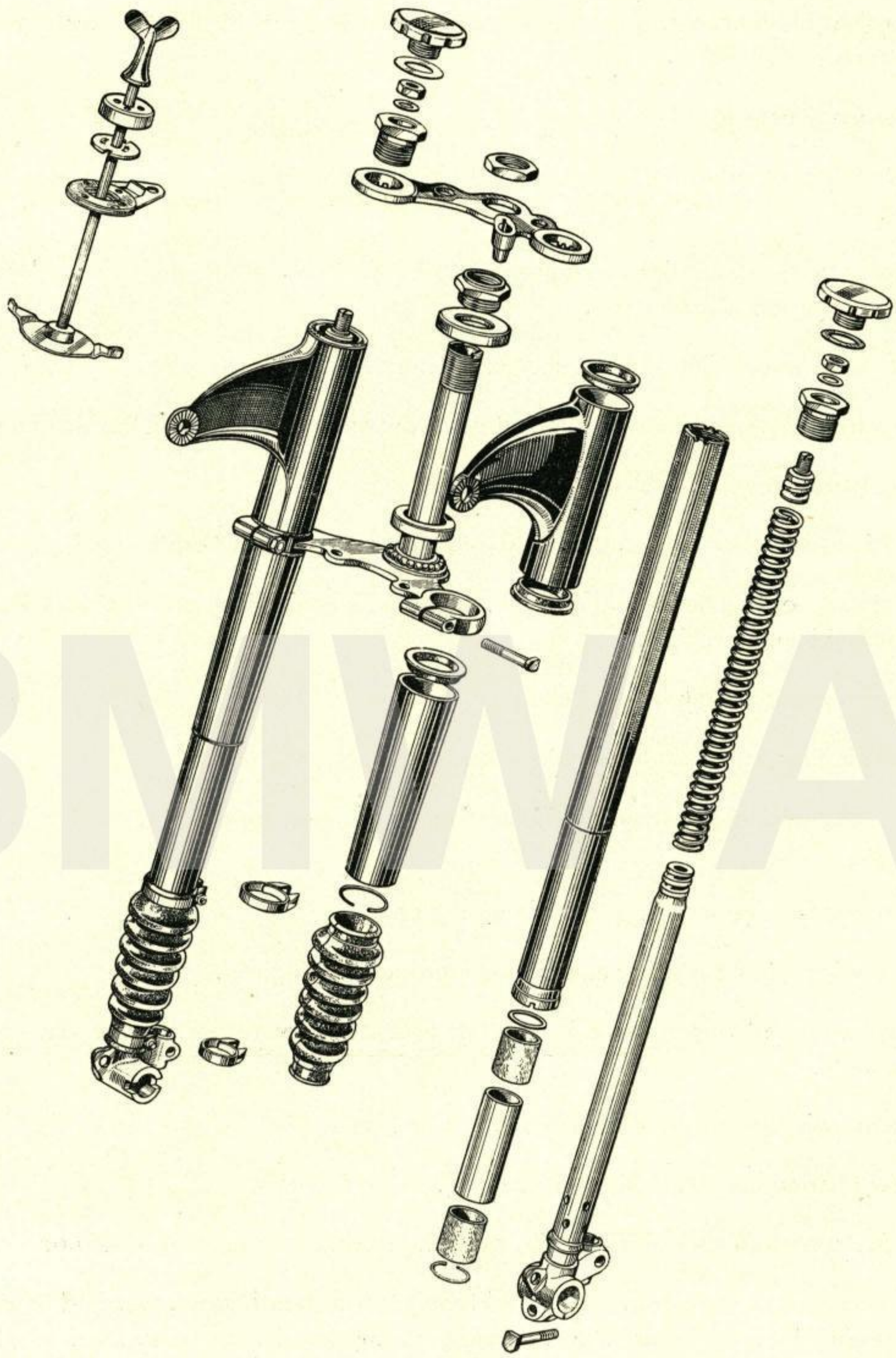

BMW AG

Loosen clips holding rubber gaiters and remove gaiters.

Draw out downwards fork ends with suspension springs.

Damaged fork main tubes must be removed and rectified.

For this end slacken pinch bolts, draw out fork main tubes and remove cover tubes (shrouds) with rubber rings.

Remove circlip from main tube and with drift rod W 5018 (shop-made tool) push out the two guiding bushes with distance piece and support ring from top downwards.

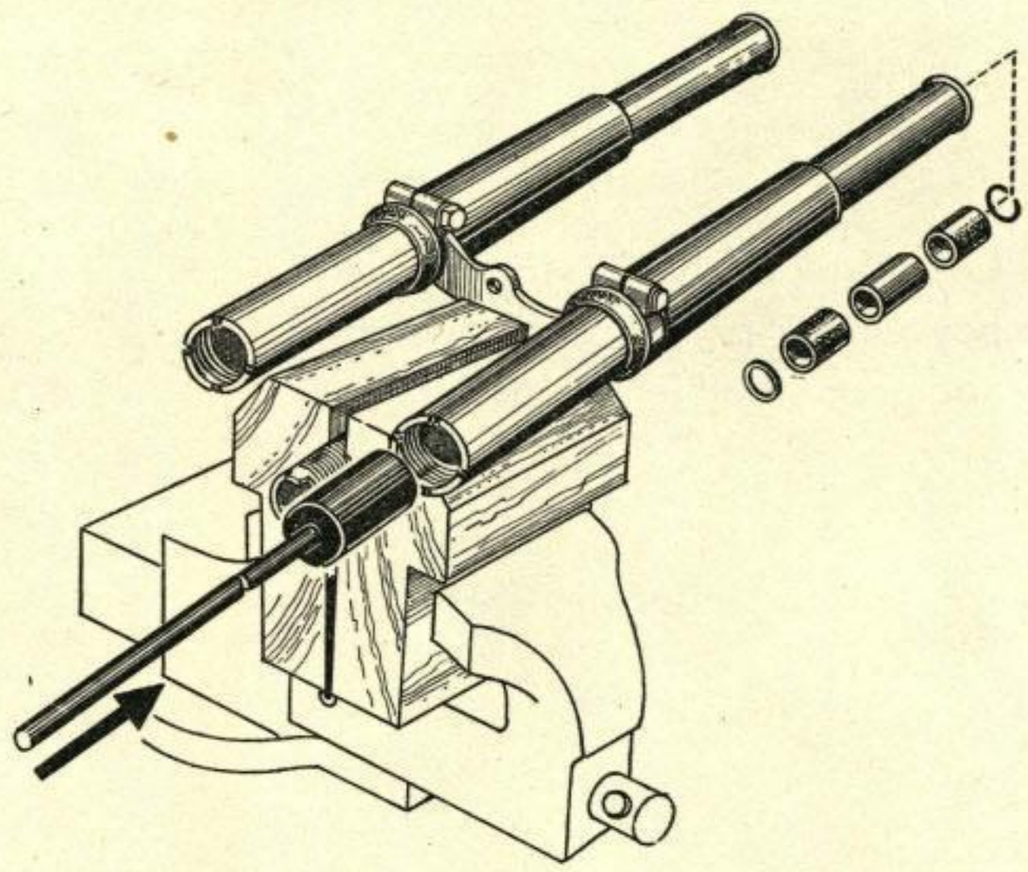

Check fork main tubes for trueness, rectify if need be.

Max non-trust 0.2 mm = .008".

On forks found damaged check carefully top and bottom yokes for hair-cracks.

Assembling front forks:

Re-bush rectified fork main tubes and ream to ensure easy working of fork end sliding pieces (fork end play in main tube = 0.08 – 0.11 mm = .0032 – .0044").

Next fit main tubes with lower shrouds and rubber rings in botton yoke and turn the tubes in a manner that the teeth machined on its upper end engage with the notches of the top yoke to be screwed upon by means of hexagon-ended lock rings.

Both fork main tubes must equally project 165.5 mm = approx. 6.62" over top ends of bottom yoke main tube holding lugs.

Check whether steering column stands centrically in bore of fork top yoke.

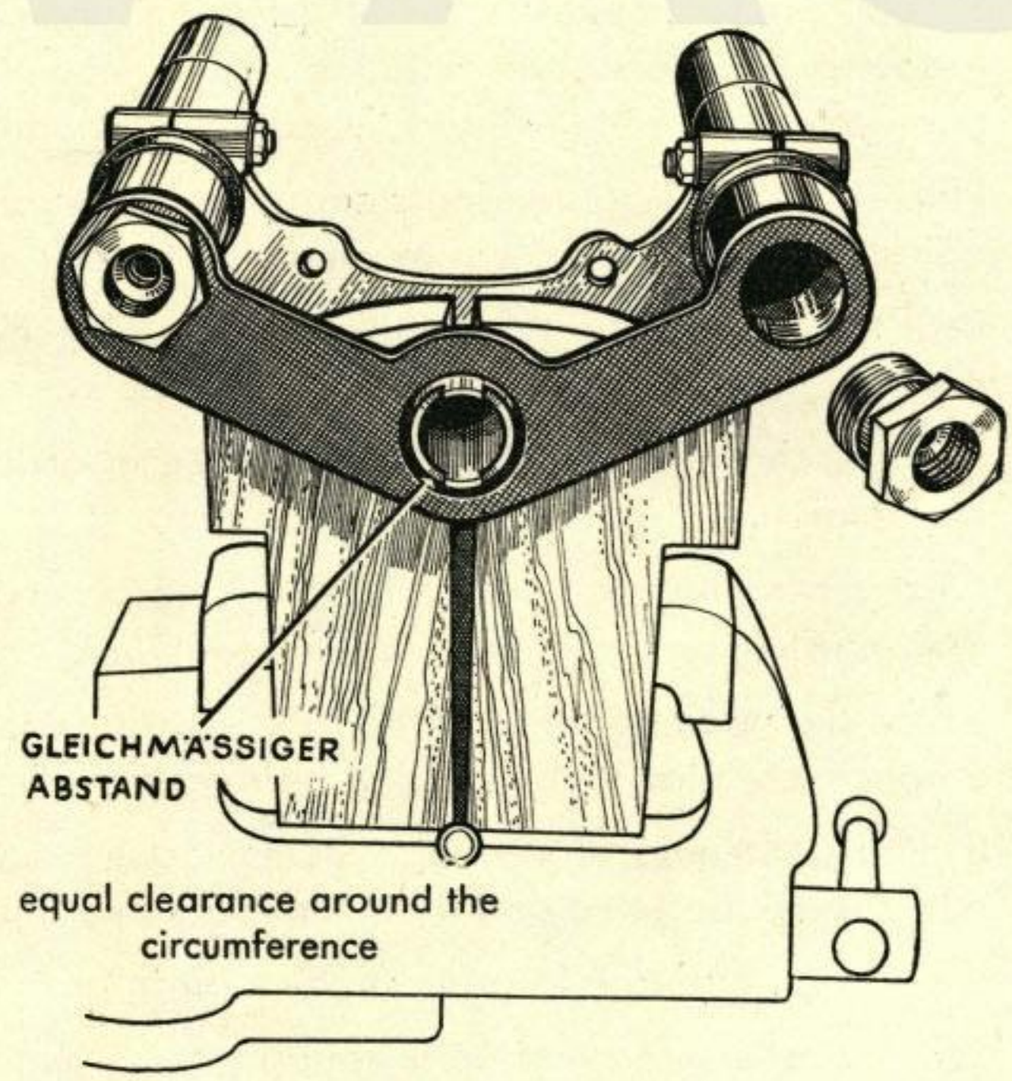

Check fork main tubes for parallel position by putting each straight edge upon both ends and aiming over.

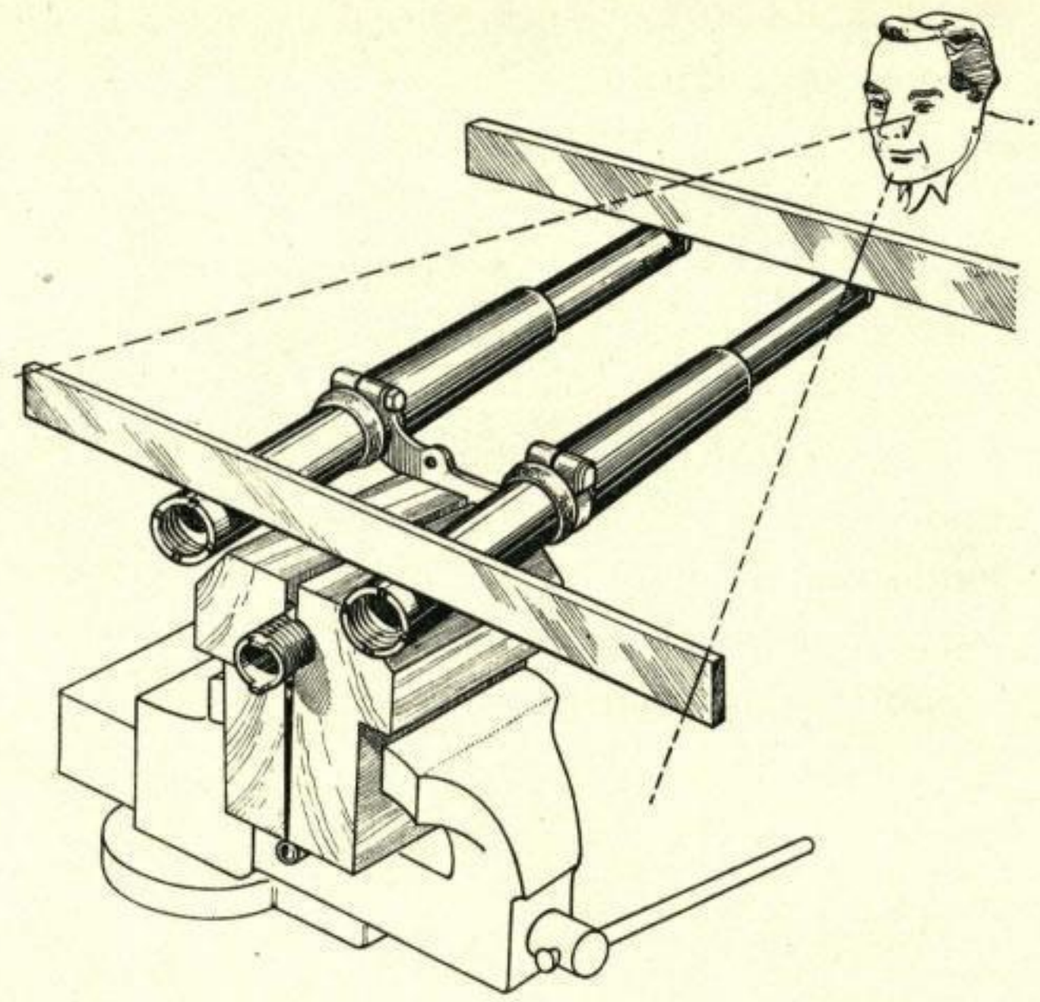

For this purpose clamp fork main tubes to bottom yoke by tightening the pinch bolts. Next check again whether steering column stands centrically in top yoke bore.

Push rubber gaiters with holding clips over fork ends.

Screw suspension springs, together with spring top retainers, home on fork ends, slide the assembly in fork main tubes and secure rubber gaiters with the holding clips. The "Ferrozell" sliding bushes 225 1 62 080 04 preventing spring clattering can be fitted later on. This requires making round the spring ends on fitting side in order to permit the sliding bushes to be screwed up to the spring centre.

BMW AG

Fitting of forks to the frame :

Place headlamp brackets and rubber rings in position.

Fit ballrace with inner shoulder (steering stem cone) upon fork bottom yoke, liberally grease proper races of frame and steering column, place 24 balls 5.5 mm diam. in position into each and carefully insert the column through the frame.

Place the top race (steering stem upper cone) and dust cover in position and screw the adjusting nut slightly down by means of special spanner Matra No. 316.

Refit the top yoke in a way that it rests correctly upon both main tubes making certain control cables are drawn in front of the top yoke.

Now loosen pinch bolts on bottom yoke in order to ensure steering adjustment without any tension.

Next screw hexagon-ended locking rings in main tubes and column locking nut upon steering stem and tighten sturdily.

At the slightest engagement the forks must turn to both sides, by their own weight without a noticeable play in the steering bearings.

If after tightening of steering column locking nut the steering results too stiff, the locking nut must be loosened and the headrace adjusting nut slackened correspondingly.

If steering bearing is in order, tighten pinch bolts on fork bottom yoke.

Screw washers and nuts upon spring retainer units turning at a time fork end sliding tubes equally about 20 deg. before correct final position in order to give the springs an initial tension with the wheel spindle being inserted.

Fill 150 to 170 c. c. = .3 to .35 U. S. pints of engine oil in each prong of fork as per lubrication chart and screw on filler caps and rubber washers.

Fit assembled handlebar in rubber supports, moderately tighten castellated nuts and secure.

Fit handlebar with rubber mountings.

Bolt dip switch to left handlebar.

(On R 25 models connect horn cable to horn button.)

Fitting steering damper mechanism:

Place lock washer and dust cap on top of steering column and engage these parts into their final position.

Slide adjuster rod (thread oiled) through, place steering damper anchorage plate and bottom plate in position, the rear stop arms of the latter being attached to fork bottom yoke, screw wing-ended adjuster rod in and secure its lower end with a split pin.

Fitting mudguard:

Place mudguard in position and temporarily insert wheel spindle, being well cleaned and greased.

Push centre stays in fork end lugs until the stay fork end bolts can be slid through, then insert front stay fork end bolts, screw home nut with lock washer and secure.

Lubricating wheel hubs:

Since the wheel lubricators have been abolished because of excessive lubrication and subsequent oiling of brake, the wheel hubs must be dismantled every 3000 miles.

On R 25 models, remove for this purpose circlips, outer hub covers, thrust collars, felt rings, inner hub covers from either side of hub and one spacer ring from left side of the hubshell.

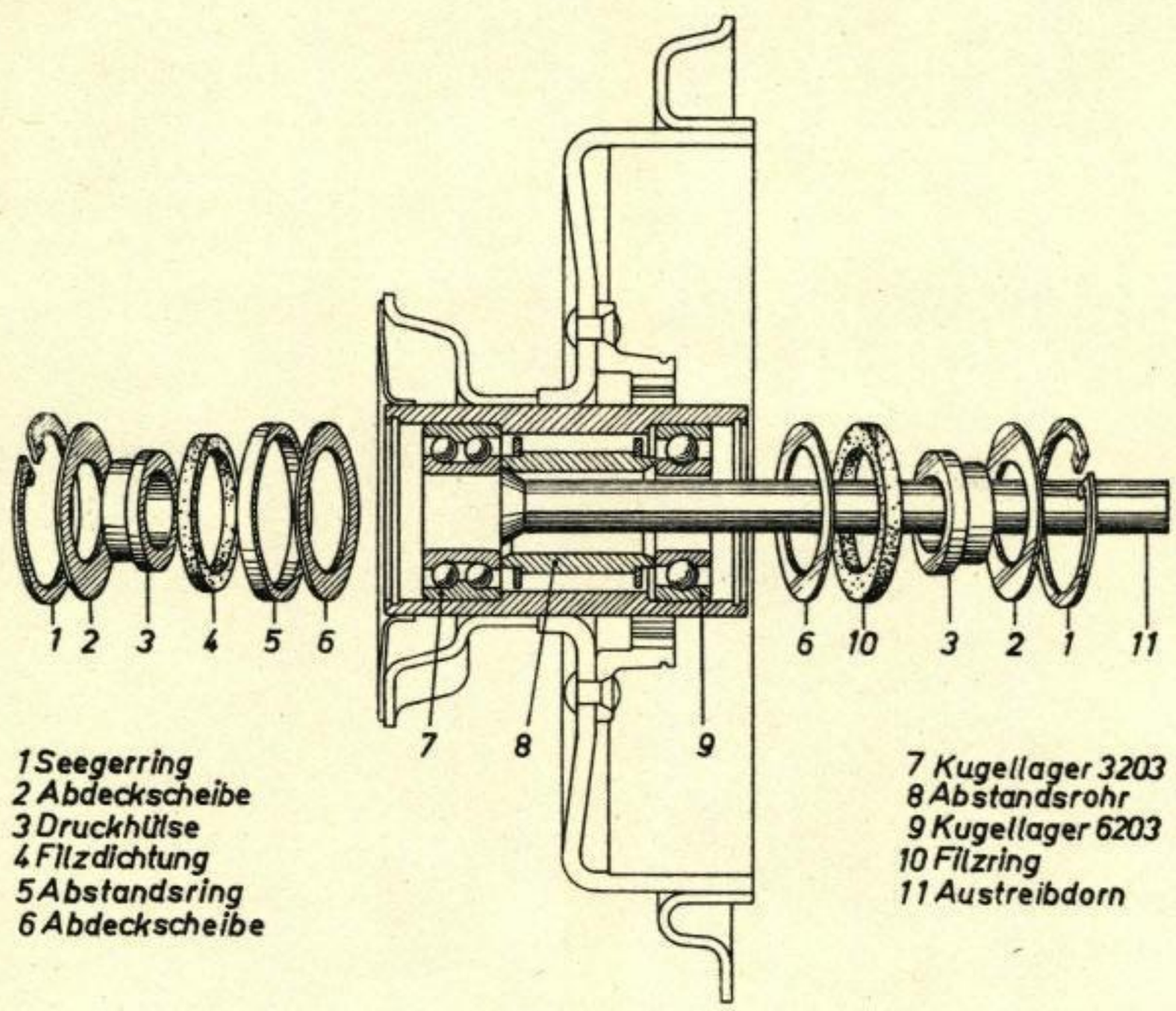

1 circlip	*1 Seegerring*	*7 Kugellager 3203*	7 ball bearing
2 hub cover	*2 Abdeckscheibe*	*8 Abstandsrohr*	8 distance piece
3 thrust collar	*3 Druckhülse*	*9 Kugellager 6203*	9 ball bearing
4 felt ring	*4 Filzdichtung*	*10 Filzring*	10 felt ring
5 spacer ring	*5 Abstandsring*	*11 Austreibdorn*	11 drift punch
6 hub cover	*6 Abdeckscheibe*		

Drift out left double raw ball bearing 3203 with a sharp-ended punch applied on round inside end of inner ballrace from opposite side of hub.

Next drift out ball bearing 6203 and distance piece.

Wash ball bearings, hub bore and felt rings (replace worn felt packings) with petrol.

On R 25/2 models, the hubs are closed by screwed-in lock rings incorporating felt packings.

Replenish hub and bearings with new grease, oil felt washers slightly and reassemble front hub.

Make certain that brake side of hub is particularly cleaned from oil and grease.

Fitting front wheel:

Fit brake plate on the drum and enter front wheel in forks to the effect that the nose on brake plate fits in the guide on off-side fork end and brake operating lever points down frontwards.

Insert greased wheel spindle, tighten and secure by screwing home pinch bolt on near side fork end.

Fit brake cable on cam lever, push cable cover with ferrule backwards and insert cable in slot of cable adjuster.

Re-adjust brake and headlamp.

BMW AG

Side Car Group

BMW AG

Side Car Group

Attaching the BMW "Standard" Side Car

For the purpose of fitting a side car, some alterations must be performed on the motorcycle as indicated hereunder:

1. Change spiral bevel gear set in rear wheel drive from 6 : 27 teeth (solo) to 7 : 36 teeth (side car).

2. Change speedometer adjustment for the different gear ratio from 1.68 (solo) to 1.92 (side car). (Speedometer is mile-calibrated.)

3. Fit transverse reinforcement member between frame tubes on linking point for upper front brace.

The side car must be fitted with four braces. The frame is already equipped with a connecting mechanism according to German Engineering Standard DIN 74031. Toe-in, camber and advance, which are of great importance for the good riding quality, safety and useful life of motorcycle and tires must be complied with in conformity with the schemes concerned.

Adjust motorcycle camber on the centre brace, and at last connect front brace without any tension.

The camber of side car "Standard" has already been adjusted and set.

BMW AG

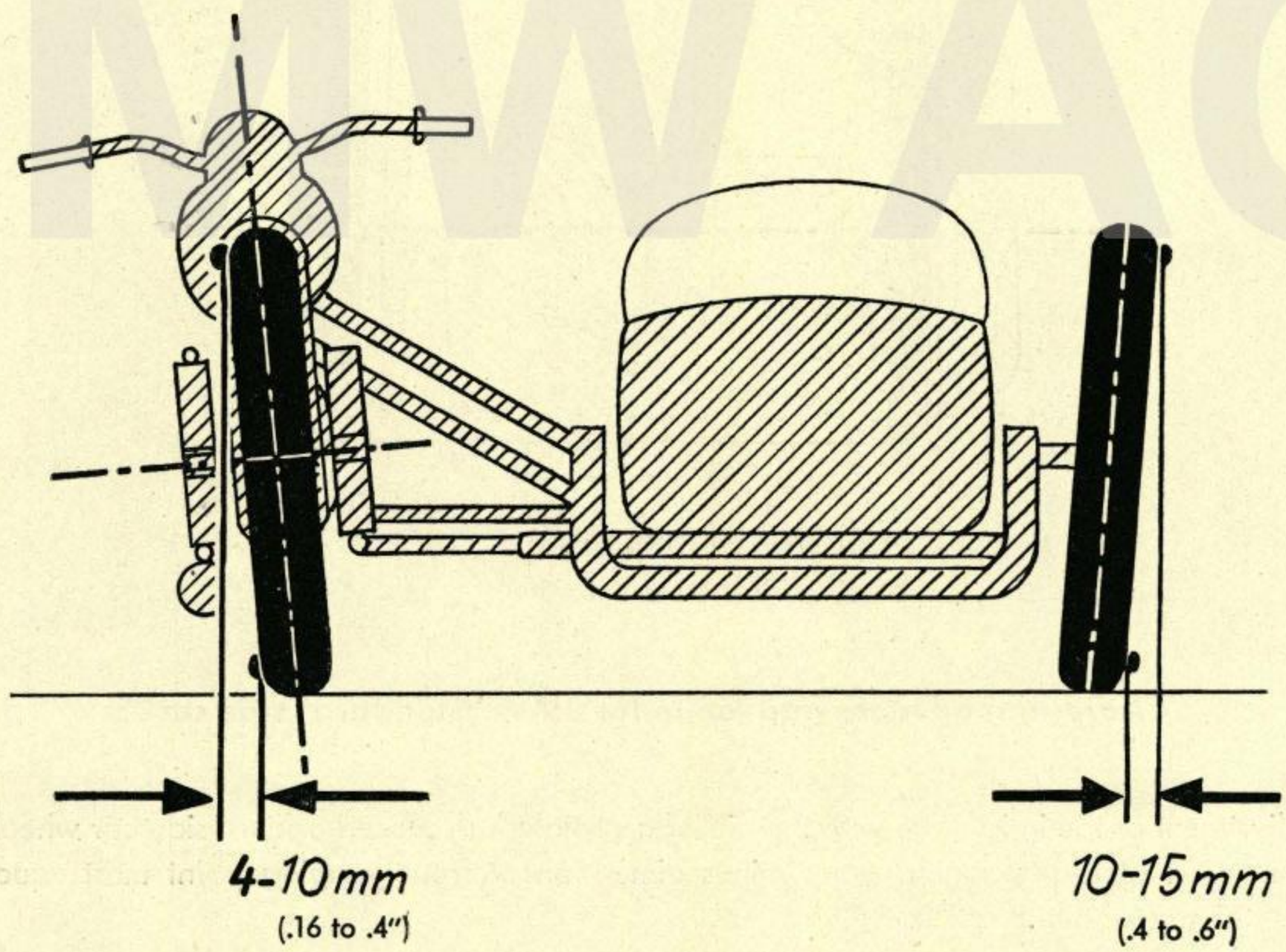

Adjusting camber when connecting a side car.

Situated below the motorcycle seat is a switch-plug box, serving to connect the two side car lamps as well as a search lamp, in case of need.

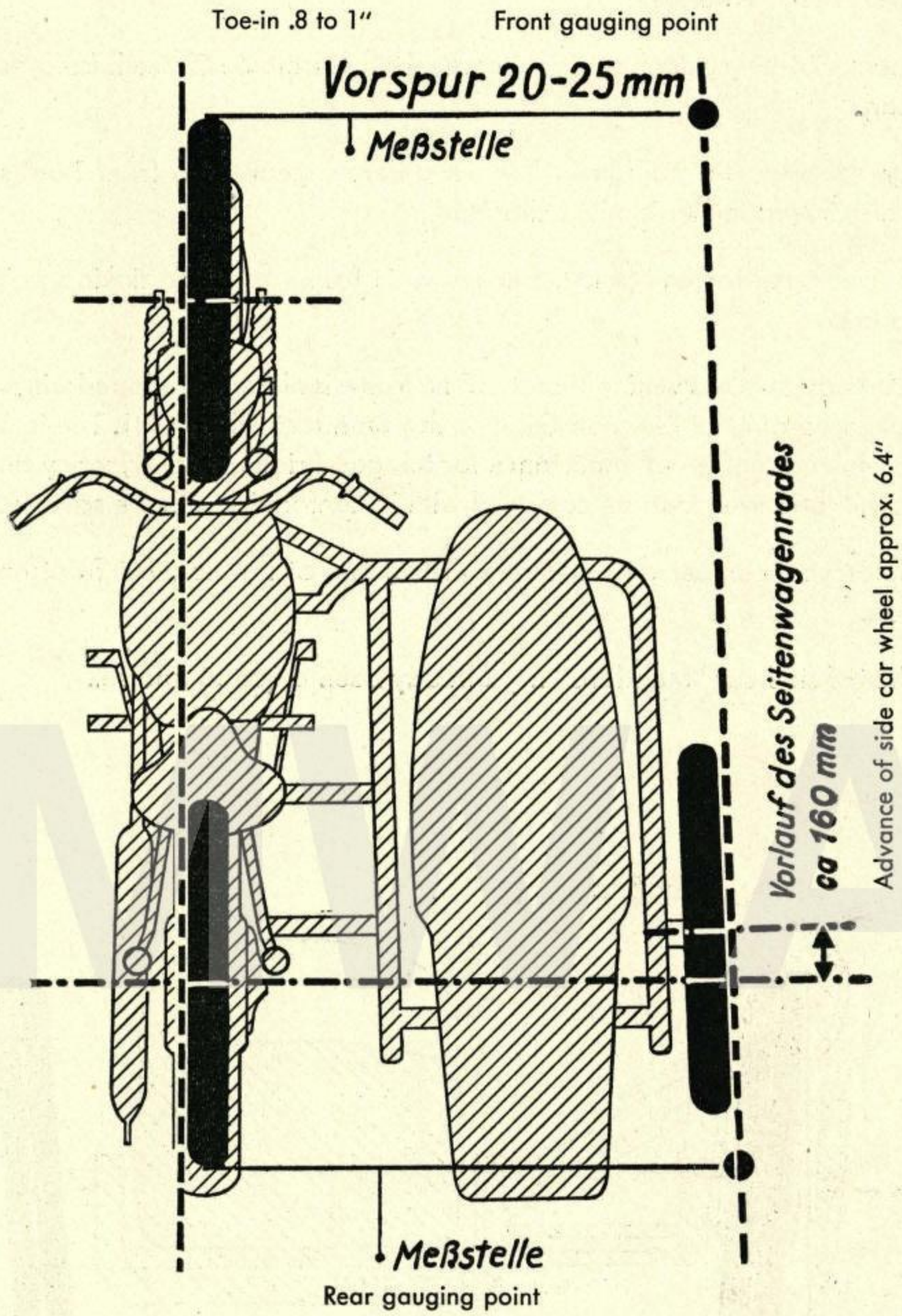

Adjusting advance and toe-in for BMW "Standard" side car

Adjustment of toe-in is made with the aid of a straight lath placed against side car wheel. Dimension at rear gauging point minus dimension at front gauging point must equal 20 – 25 mm (about .8 to 1").

Electrical Equipment Group

BMW AG

Electrical
Equipment Group

Technical Data

Dynamo (Generator):	Noris ZLZ 45/60 2 L
Type	shunt dynamo with voltage regulator, adjacent ignition coil, contact breaker and condenser unit.
Driven	directly by crankshaft
Rated voltage	6 volts
Rated hot output	45 watts, 1800 r. p. m.
Maximum hot output	60 watts, 2200 r. p. m.
Automatic timing control	by centrifugal advance mechanism
Range of adjustment	35 crankshaft angle degrees
Retarded sparking point	5^0 before TDC
Contact breaker gap	.4 mm
Sparking plug:	Bosch W 240 T 1
Electrode gap of spark plug	.6 mm = .024"
Battery:	6 volts, 7 ampere hours
Electrolyte	specific gravity 1.280 (in the tropics 1.230)*
Charging from an independent source of electricity	12 to 14 hours using current of .7 amperes, battery fully charged with 3 x 2.7 volts = 8.1 volts.
Lighting equipment:	
Headlamp	Bosch LE/MTA 160x2/13 with Bilux lamp, parking light, battery charge control light, neutral light and built-in speedometer with concealed illumination for dial
Bilux lamp	6 volts, 35/35 watts with dip switch
Parking lamp	6 volts, 1.5 watts
Battery charge control lamp	6 volts, 1.5 watts
Neutral lamp	6 volts, 1.5 watts
Speedometer lamp	6 volts, .6 or 1.2 watts
Tail lamp	tubular bulb, 6 volts, 5 watts
Electric horn	Bosch HO/FCF 6/8

BMW AG

I. Description

The electrical equipment comprises a dynamo, battery, lighting set, electric horn and neutral indication.

1. The **"Noris ZLZ 45/60 2 L" shunt dynamo** is of the compensated voltage control type and operates in conjunction with an adjacent voltage regulator for a rated tension of 6 volts. The dynamo is so mounted as to be driven by crankshaft, directly. The unit produces a rated output of 45 watts at 1800 r.p.m. and a maximum of 60 watts at 2200 r.p.m. The rated output therefore is obtained at:

Motion gear	Speed	
	Rear wheel drive for solo riding m.p.h.	Rear wheel drive for side care use m.p.h.
Top	19.3	16.8
Third	14.3	12.5
Second	10	8.75
First	5	4.4

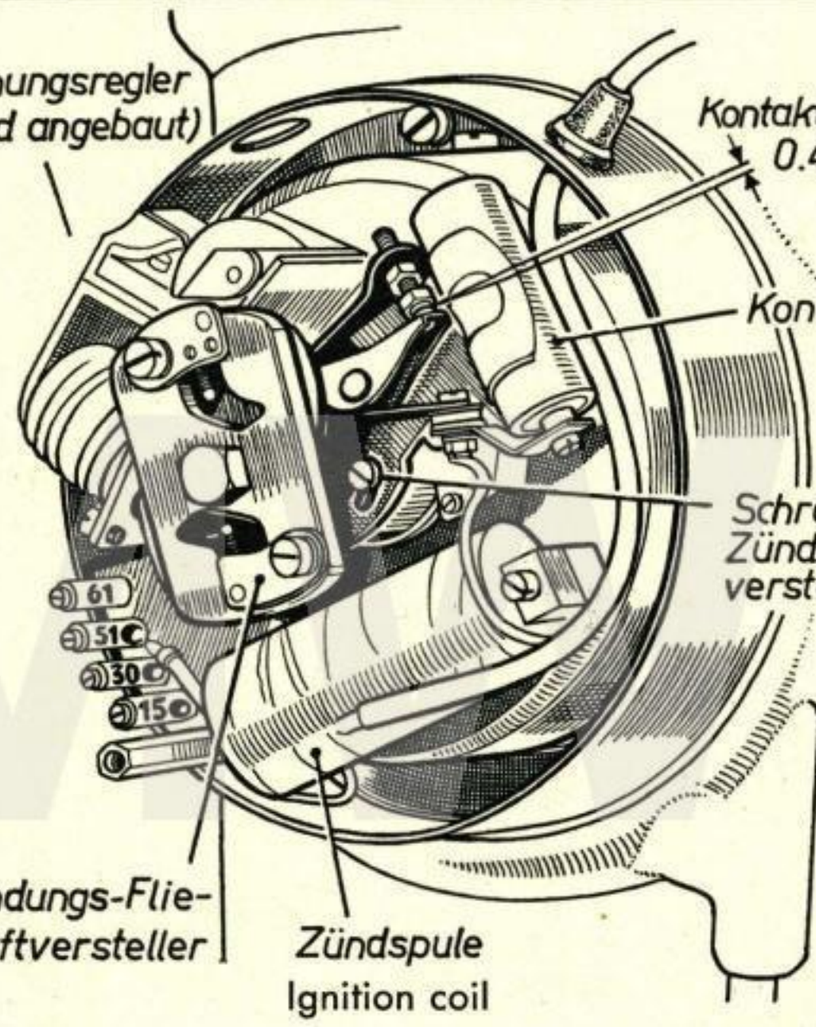

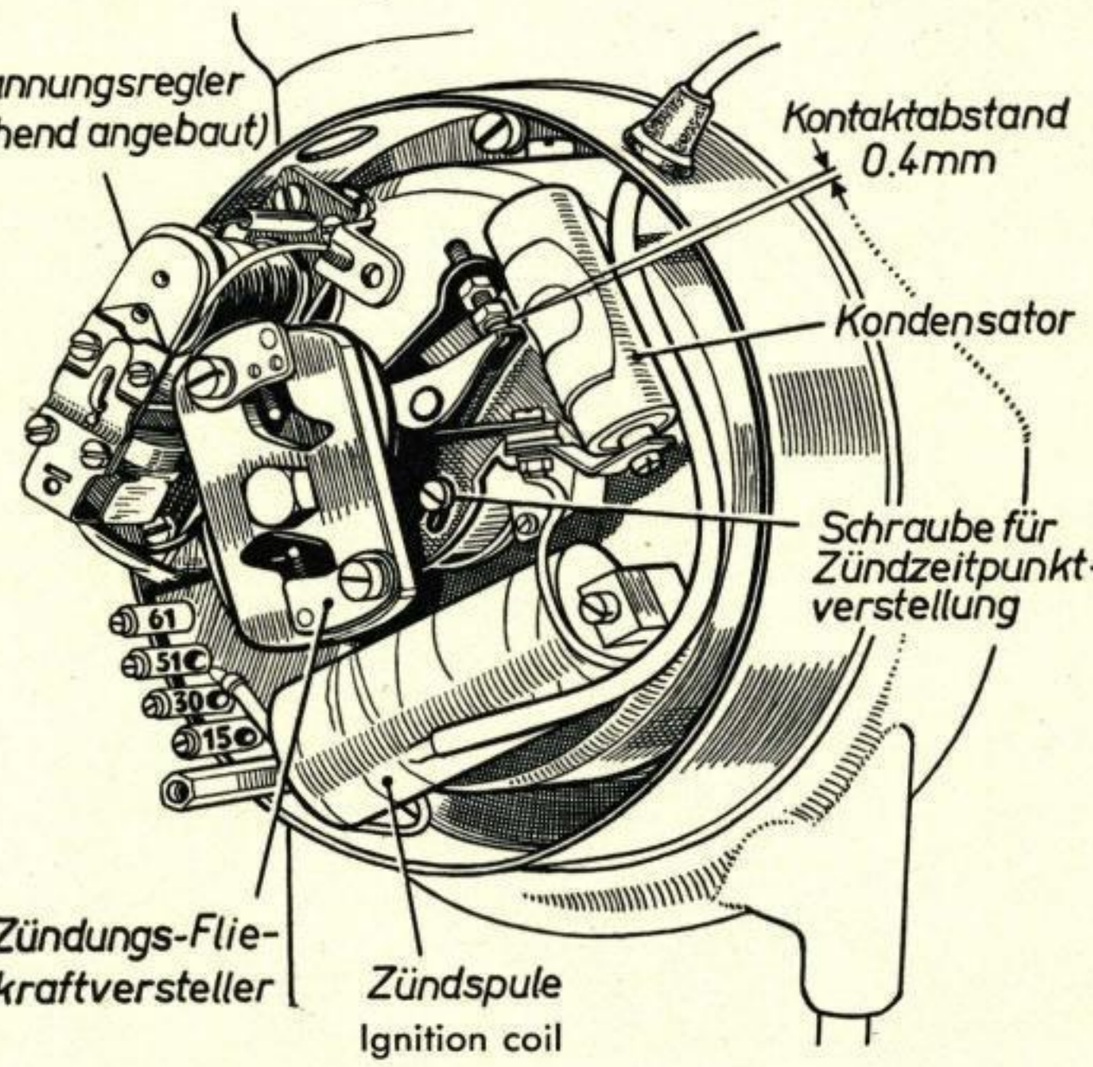

BMW AG

The generator assembly contains the ignition set consisting of ignition coil, contact breaker, condenser and centrifugal advance mechanism with contact breaker operating cam, the timing control unit being carried by the armature shaft. The ignition coil is fed with primary current, controlled by contact breaker, and supplied either by battery or generator as soon as the latter has obtained its rating speed. In case of battery failure the ignition can be started by pulling on the motorcycle with the gear box in second or first, after having disconnected the battery previously.

2) The **battery** serves as tension source while the vehicle is parked or driven at low speeds. When the motorcycle is running at normal speeds, the battery is charged by the dynamo being converted thus into a consumer. The rated tension of the battery is 6 volts and its capacity 7 ampere hours with a discharging current of 1 ampere. An increased current rate lowers the capacity of the storage battery, and a decreasing one raises it.

3) The **lighting system** includes
   a) the Bosch headlamp with Bilux lamp (main and dipped beam filament), parking lamp, charge indicating lamp, neutral lamp and speedometer illumination,
   b) tail lamp and plug socket connection for the two side-car lamps (tubular bulbs). This switch-plug box also serves to connect a search lamp for repair purposes etc.

4) **Sparking plug** "Bosch W 240 T 1".

5) **Electric horn** "Bosch HO/FCF 6/8.

6) **Neutral contact** with contact spring in gear box and headlamp indicator which glows green when the gears are in neutral.

BMW AG

7) **Switches and leads**

The main switching point for the electric system takes the form of a switchbox housed in the headlamp and being operated by a detachable lighting and ignition key, which can be turned to either side and be withdrawn for safe keeping. Besides a combined horn button and anti-dazzle switch is mounted on the left handlebar, the dip switch having a four-stranded wire connection with the headlamp.

Connection from headlamp switchbox to the different terminals is provided by the main motorcycle wiring with wires of 1.5 sq.mm., respectively 2 x 0.75 sq.mm. (corresponding American cable numbers 16 and 19), as follows:

Lead	Colour of lead	sq. mm.	from		to	
			Terminal	on	Terminal	on
a)	black	1.5	30	dynamo	+	battery
b)	black	1.5	–	battery	earth	gearbox
c)	black	1.5	earth	engine crankcase	31	switch box
d)	red	1.5	51	dynamo	30/51	switch box
e)	blue	1.5	61	dynamo	61	switch box
f)	black	1.5	15/54	switch box	1st	electric horn
g)	black	1.5	HO	switch box	2nd	electric horn
h)	black-red	1.5	15/54	switch box	15	dynamo
i)	black	1.5	1st	neutral lamp in headlamp		neutral contact in gearbox
k)	rubber cable	2 x 0.75				
	black strand		58	switch box	insulated	tail lamp (through socket)
	white strand		31	switch box	earth	tail lamp (through socket)
l)	rubber cable	4 x 0.75				
	strands:					
	white		56	switch box	56	anti-dazzle switch
	blue		HO	switch box	H	anti-dazzle switch
	red		56 a	anti-dazzle switch	56 a	normal driving light
	black		56 b	anti-dazzle switch	56 b	dipped beam light
m)	black	0.75	31	switch box	31	lamp holder (earth)
n)	black	0.75	57	switch box	57	parking lamp
o)	white	0.75	56	switch box		speedometer lamp
p)	black	0.75	15/54	switch box	2nd	neutral lamp

BMW AG

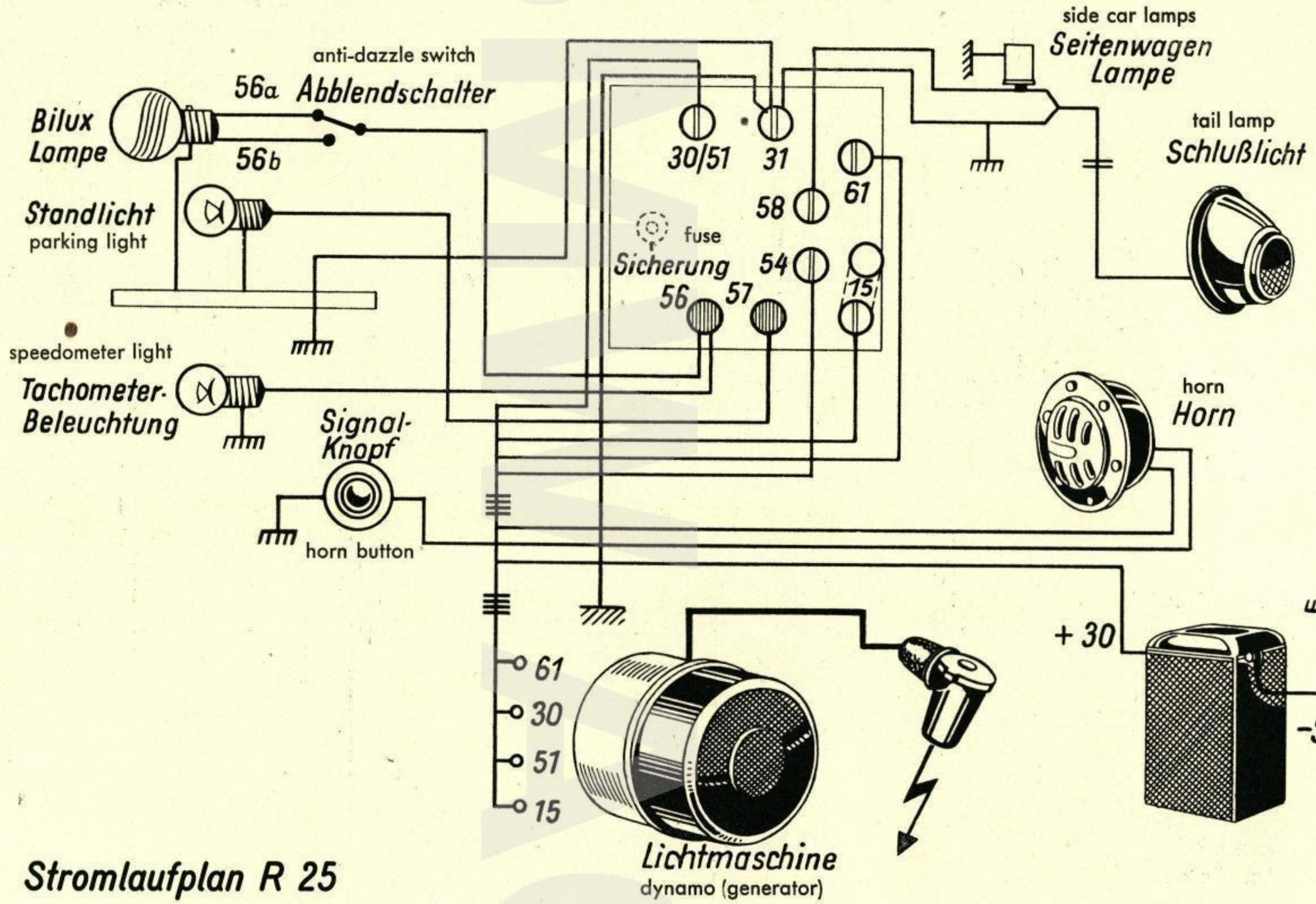

Stromlaufplan R 25

Wiring diagram R 25

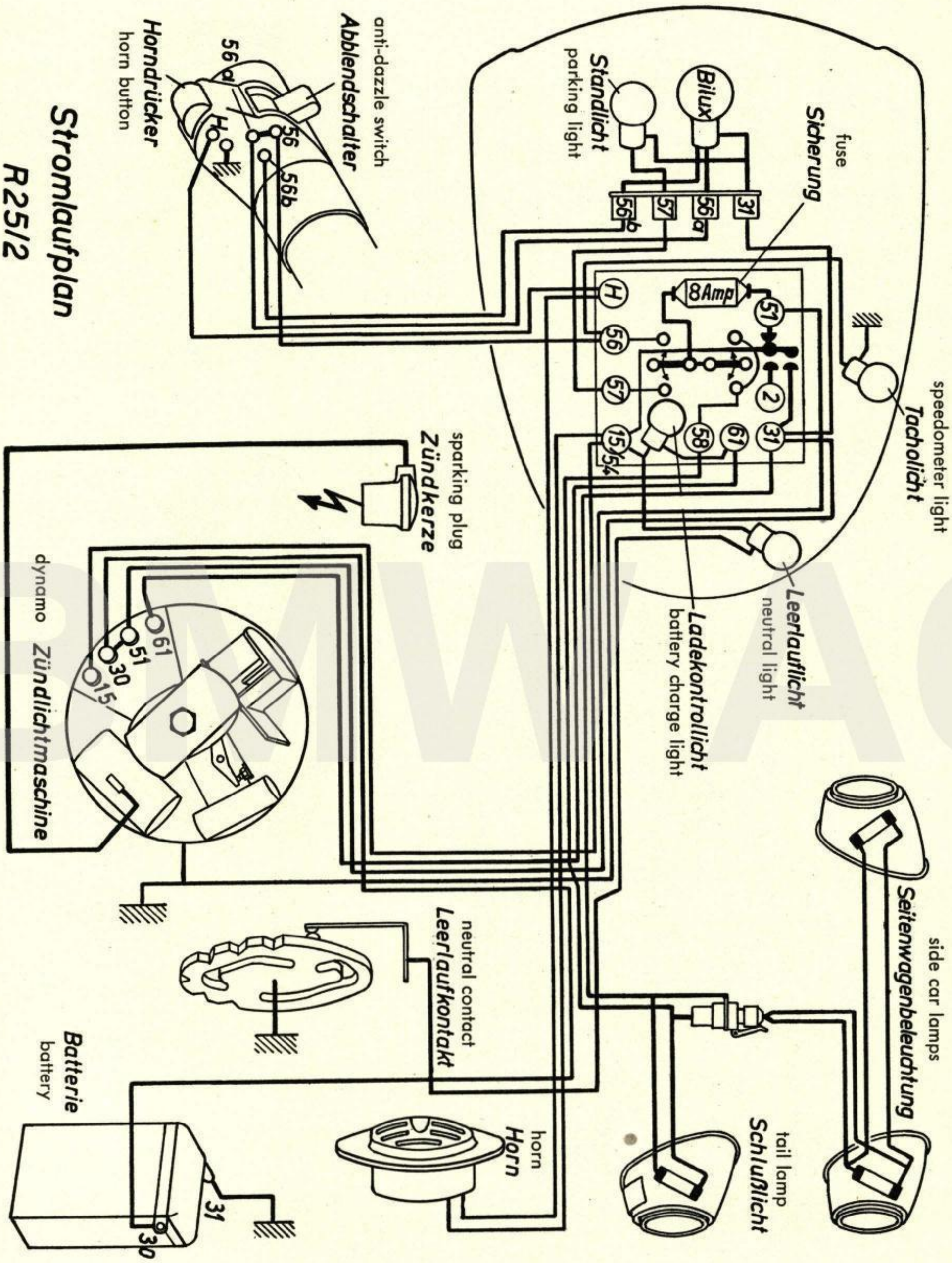

Stromlaufplan
R 25/2
Wiring diagram
R 25/2

BMW AG

Switch positions of ignition key in headlamp

(see wiring diagram)

Ignition key inserted in middle position „Day-time driving"

(position as indicated on wiring diagram)

Ignition is switched on, i. e. ignition is no longer short circuited. The movable contact spring in switchbox is raised from earth (ground) terminal and set on terminal 30/51. This connection enables all accessories being in contact with terminal 15/54 to be supplied with current. They are: Ignition coil (lead h), charge indicating light and electric horn (lead f).

When after starting with engine running at increasing speeds the red warning light goes out this being a sign that dynamo is in order and will charge battery when speeding-up further, thus the generator being from this moment the only current supply for the entire electric system. With dynamo cold and low current consumption this change will take place sooner than under reversed conditions.

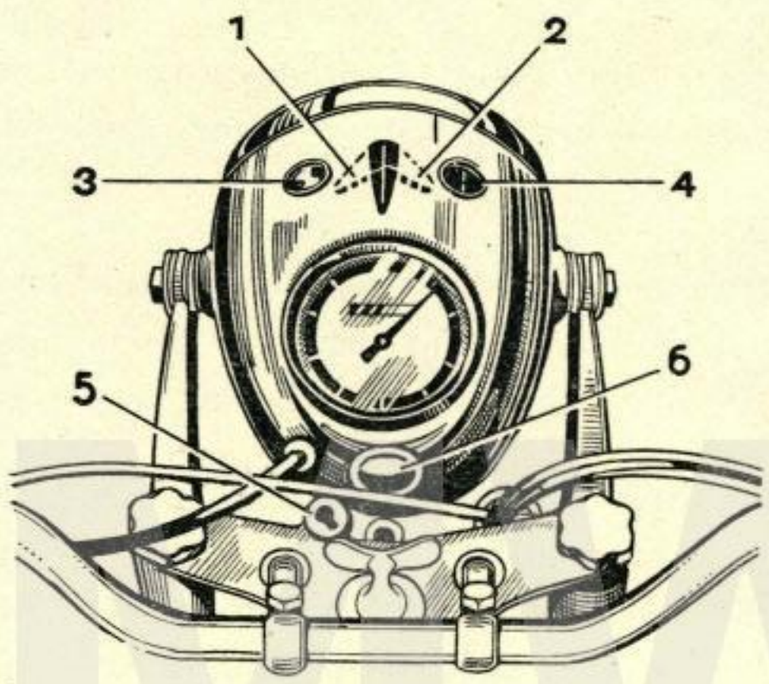

1 = ignition key on left "city light"

2 = ignition key on right "night-time driving"

3 = charge indicating light

4 = screw plug for fuse

5 = steering lock of motorcycle

6 = neutral lamp

Ignition key turned to right "night-time driving"

Ignition, contact spring and connected leads as indicated under "day-time driving". Furthermore, through fuse and terminal 56, current is carried by the following leads: 1) white for Bilux lamp and herewith 1) red for normal driving light or 1) black for dipped beam light as required by anti-dazzle switch position, and o) for speedometer light. At the same time voltage is delivered to lead k) black to tail lamp and side car through rubbing contact block and terminal 58 whilst earth backleads k) white and m) rest always on terminal 31 and herewith on earth.

Ignition key turned to left "city light"

Ignition, contact spring and connected leads as indicated under "day-time driving". Moreover current is carried by lead n) to parking light through fuse and terminal 57, and lead k) black to tail lamp and socket connection for the two side car lamps.

Ignition key turned to left and withdrawn "parking light"

Ignition is switched off by interruption of circuit leading to terminal 51 and by short circuit, moreover there are cut out all accessories connected to terminal 15/54 in switchbox. Movable contact spring rests on contact 31. Lighting as described under "city light".

Ignition key in middle position and withdrawn "cut out"

Movable spring rests on contact 31. Ignition and all other electrical accessories are cut out.

II. Maintenance

It must be emphasized that without regular attention the electrical equipment cannot be expected to function correctly. All non-soldered connections on terminals, battery, dynamo, ignition magneto and switch-box should therefore be kept in clean condition. Prevent battery terminals from corrosion by coating them slightly with grease. All switch-box contacts, breaker contacts and contact surfaces on bulb holders must be exempt of dirt and moisture. Besides, all terminal screws should by tightened from time to time. Moreover, with respect to the different units the following instructions should be kept in mind:

1. Battery

In order to prevent undue draining of the battery when driving over a long distance during night-time, the rider should in any case make certain that the dynamo has as high a momentum as to provide the wiring circuit with a sufficient output. This requires changing down to a lower gear at the right moment and eventually to abstain from fitting additional electrical accessories.

Inspect battery every 4 weeks (in the tropics at shorter intervals); if liquid level is too low, top-up with distilled water. Electrolyte must not be added to the battery, unless some has been spilled accidentally.

If the motorcycle is to be out of use for a considerable period, its battery must be removed and given a refreshing charge at intervals of about 6 weeks, after having been discharged previously with the help of a 6-volt/5-watt lamp.

Before being used, a new battery is to be filled with chemically pure electrolyte (specific gravity 1.280, in the tropics 1.230) making certain that its level stands inside the built-in splash protection box (on batteries of other makes top-up to about 6 mm = .24" above the top of the plates). Thereupon leave battery for 5 hours without moving it, and if level has dropped, top-up to the aforementioned value.

Electrolyte can be obtained by mixing 1 part chemically pure sulphuric acid with 2 parts of distilled water. When doing so, the acid must in any case be cautiously poured into distilled water, never proceed in the reverse order. The exact specific gravity of electrolyte is obtained by carefully adding acid or distilled water after liquid has cooled down, and has been checked with a hydrometer available through every accessory dealer. The solution gained by this procedure must not be filled into the battery unless it has cooled down completely and since pouring-in will heat it again, the battery should be let alone during the aforementioned 5 hours, whereupon its charging may begin.

Be sure that the vent plugs are removed while charging with an independent equipment.

Then connect battery (+ to + and − to −) with the charging equipment and charge for about 12 to 14 hours (the 7 ampere-hour battery with 0.7 amperes). The battery is fully charged when tension of each cell amounts to 2.7 volts so that the 6-volt battery has a total of 3 x 2.7 volts = 8.1 volts. With this voltage cells must have uniform gas development and specific gravity of electrolyte should be again 1.280 (1.230).

After having performed this charging, proceed to discharge battery with the help of a 6-volt/5-watt lamp, until bulb lights only slightly. Thereupon battery is to be recharged in a manner similar to that already described. Before screwing in the vent plugs, dip rubber

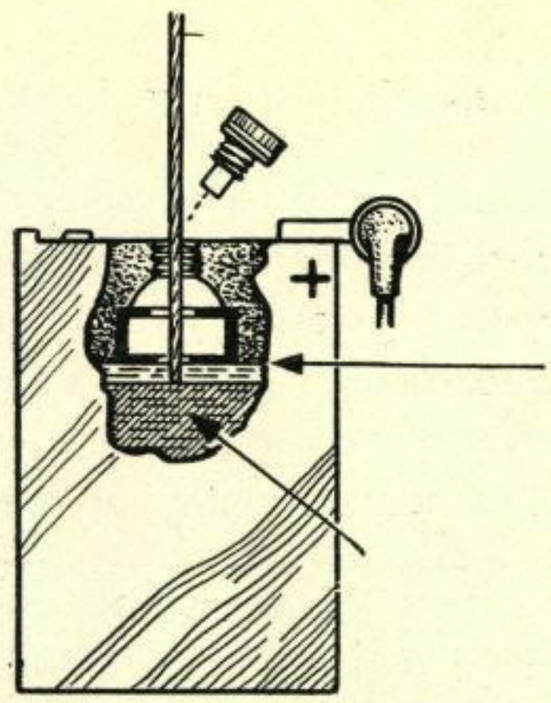

hose of hydrometer as far as possible into each battery cell until resistance is felt, so that rubber hose abuts against bottom of splash protection box, and remove electrolyte from bottom by suction. (On batteries of other makes electrolyte level must be brought to about 6 mm = .24" above the top of plates). To make certain that the last traces of electrolyte have been sucked from bottom of splash protection box, the above procedure should be repeated several times. After this thorough treatment has been carried out, the battery may be installed on the vehicle.

2) **Dynamo**

At intervals of about 6000 miles any deposits of carbon dust should be wiped off the dynamo. The commutator is to be cleaned only with a clean, petrol-moistened cloth. Brushes which are worn down have to be discarded (only use correct, genuine Noris brushes). The brushes must move freely in their holders and brush springs must provide a pressure of 300 to 400 grams = 10 to 14 oz. to press the brushes against the commutator.

After workshop repairs special care should be taken in cleaning off all foreign particles, particularly chips which might have found their way into the air gap (c) between regulator armature and winding core as well as in the air gap (d). If such intruders have collected, wipe them out with a stiff paper strip.

The voltage regulator should not be adjusted by turning the adjusting screws.

BMW AG

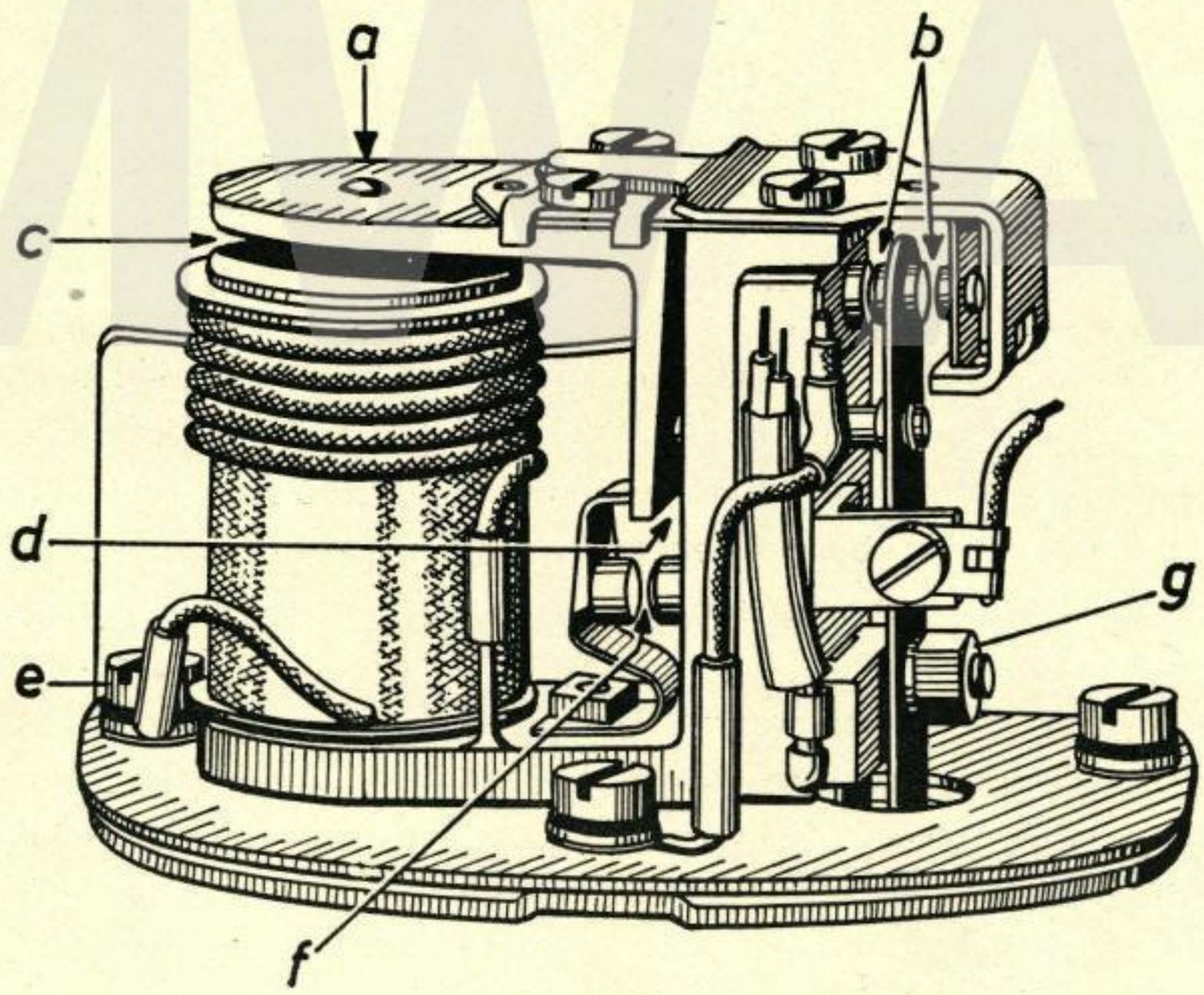

Voltage regulator for the dynamo

a Regulator armature (to be depressed to ensure proper poling)

b Regulator contacts (to be cleaned with steel strip)

c Air gap } to be cleaned with stiff paper
d Air gap } strip

e Earth terminal of regulator

f Switch contact points (to be cleaned with steel strip)

g Nut for adjustment of charging current

3. Ignition equipment

The ignition coil does not need any attention. If this unit is defective, it must be replaced.

Make sure breaker contacts are clean and dry. For this end best insert a clean, smooth and grease-free steel strip, approximately as thick as a postcard, between the contacts, and move it to and fro for several times. Contacts which are pitted, excessively rough or burned, must be cleaned with a flat, fine-cut contact file, or be replaced. Furthermore the cam lubricating felt wick should be regreased from time to time by rubbing a trace of grease (Bosch FA 1 V 4) into the felt (using only a trace to avoid getting lubricant on contact points).

The advance weights must turn freely on their fulcrum pins. To check this, draw both advance weights with breaker contacts closed, with 2 fingers to their most extreme (full advance) position and leave them when this position is reached. Now the weights must return easily to their stationary position owing to the restraining force of the springs.

The opening of breaker contacts should not exceed 0.4 mm = .015". Check this distance from time to time. Also, the contact breaker lever must work freely on its fulcrum pin.

4. Headlamp

First of all components of this unit inspect switch box and its contacts at regular intervals and remove carefully all signs of corrosion. Hold in mind to avoid getting grease on contacts and lamps. Check all leads in headlamp for chafing marks and other defects. The ignition lock, however, should be given a grease coating to prevent the ingress of water.

BMW AG

Fuse in headlamp

For technical reasons the 8-ampere fuse in headlamp only applies to lighting circuits 56, 57 and 58. If the fuse has blown, this may rather be caused by a defect in lead to tail lamp than by one of the headlamp bulbs.

An 8-ampere fuse only blows when the passing current exceeds a limit of 15 amperes. If for example a short circuit takes place in the vicinity of the tail lamp, owing to cable resistance and low 6-volt tension the current cannot assume such values that the fuse will blow. Though owing to their liberal size wires sustain currents exceeding 15 amperes without being damaged, such amperage would require an extremely high output from the dynamo and endanger the entire current supply. Therefore the spring of contact (f) in figure page 9 is bimetallic so that with excessively high amperage the spring becomes hot and bends, thus causing contact to open and cut out dynamo current. As the contact closes again, this interruption lasts only for short moments. This manoeuvre becomes perceptible through periodical lighting of charge indicating lamp in headlamp while driving.

Moreover, as the switch plug box mounted beneath the saddle carries current together with the tail lamp and side car lamps are eventually connected, the respective leads must also be checked for faults of this kind.

Headlamp adjustment

In order to guarantee the rider's own security and to eliminate hazards to other drivers, it is very important to check headlamp adjustment at regular intervals.

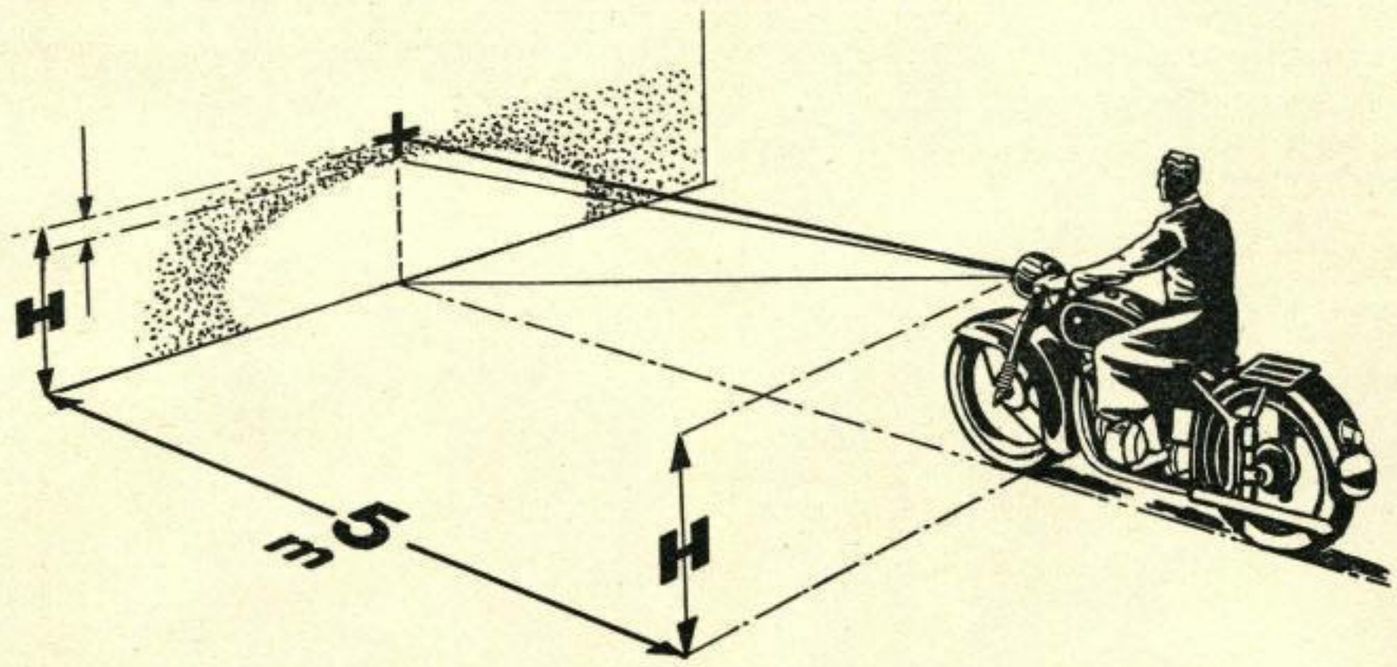

Headlamp adjustment (correctly focussed dipped beam)

Testing procedure:

Make a cross on a light-coloured wall at a height corresponding to the centre of headlamp. The height of headlamp is marked with an "H" and amounts to 840 mm = 33 in. (solo machines). The motorcycle stands on its wheels 5.45 yds. from the wall and is loaded with the driver.

Adjusting the main driving beam:

After switching on the main driving beam, adjust headlamp, so that the centre of the bright spot on the wall coincides with the marking.

Checking the dipped beam:

After switching to the dipped beam check if the border line between light and dark areas, i. e. the upper border of the brighter illuminated wall is 2" or more below the mark. If this distance is less than 2", headlamp must be readjusted by tilting it on its two fixing bolts.

With side car:

When a side car is attached to the motorcycle, the headlamp must be readjusted. This is done in accordance with the above directions but with motorcycle loaded with the rider and one person in the side car.

5) Main motorcycle wiring (cable harness)

Check from time to time the various leads of cable harness for proper insulation and inspect their connections on terminals of all units. Tighten terminals making certain that all strands are truly connected. Covering hoses and rubber sleevings must be in correct condition. If chafing marks are detected, the wire in question must be replaced by a new one. No insulating tap should be used except for short periods, in cases of emergency.

6) Sparking plug

The engine in delivered trim is fitted with a Bosch W 240 T 1 sparking plug. When installing a replacement sparking plug of another make, extreme care must be taken in selecting types with identic heat ratings.

The top of the plug must be kept clean and dry at all times. The electrode gap should never exceed 0.8 mm = .032". Check it from time to time and, if adjustment is necessary, tap or prise earth point (side electrode) on body to give the required gap of 0.5 – 0.6mm(.02 – .024").

Dirty sparking plugs must not only be slightly cleaned with petrol, but in a way that also the mouth of body and the insulator foot will be freed of any sooty deposits. This is best done by applying a sand blasting procedure or by scraping clean internally with a small, hard wire brush. Never use brass brushes or soft metal objects because they leave traces of metal on insulator, which might cause tension leakage to earth with ensuing inter-mittent sparking.

7) Spark plug cable

As this cable is carrying high-tension current, particular care must be taken to keep its insulation in correct condition. In cases of emergency defective spots may be protected by means of a rubber hose with a thickness of at least 2 mm = .08". Make certain that rubber sleeving has been pulled over spark plug cable to provide watertight joint with the spark plug cable terminal.

BMW AG

III. Locating and rectifying of possible troubles

Before beginning repair or maintenance operations on the electrical equipment, disconnect battery, except in cases where it will be absolutely needed for certain tests.

1. Ignition system

If engine fails to start or suddenly stops though it is fuelled and carburettor as well as sparking plug function properly, the cause of the failure is likely to be in the ignition system. To locate the trouble, examine ignition system as follows:

Unscrew sparking plug, withdraw high-tension cable from sparking plug terminal, and hold cable in about 5 mm = .2" distance from a cylinder rib whilst revolving engine. Sparks must jump now from cable to cylinder rib.

If there is no spark, the trouble may be due to some of the following causes:

Probable faults	Remedy
a) Ignition key does not work correctly. The movable contact spring in switch-box fails to come away from earth (ground) contact.	In case of emergency when attempts of rectifying this trouble in situ have failed, either disconnect the black & red lead from terminal 15/54 in headlamp and connect it to terminal 30, or arrange a provisional connection between one of the horn terminals (lead f) and the positive (+) post of the battery. In both cases, however, engine cannot be turned off with the ignition key.
b) Ignition cable is defective or earthed (tension leakage to ground).	Install new ignition cable.
c) Breaker contacts are dirty, oxidized or charred.	Remove dynamo front cover and clean both contacts with contact file. Check for proper breaker gap (0.4 mm = .016").
d) Heavy contact firing, i. e. excessively burned contacts owing to defective condenser.	Replace condenser (this unit cannot be repaired) and clean contacts with contact file or replace them. Adjust breaker gap as indicated under (c).
e) Breaker lever jams.	Clean bearing bush and fulcrum pin of breaker lever and apply a trace of engine oil.
f) Cam fails to lift breaker lever. Rubbing blocks on lever are worn down.	Replace breaker lever and readjust breaker gap as indicated under (c).
g) Tension leakage from ignition coil to some outer metal part.	Insulate ignition coil by brushing it with shellac. In this way also treat engine parts surrounding ignition coil to prevent spark jumping to them.

BMW AG

Probable faults	Remedy
h) Defective ignition coil.	Replace it (unit cannot be repaired).
i) Automatic ignition timer (centrifugal advance mechanism) not functioning.	Clean rotor shaft and cam bore and apply a trace of oil.
k) If intermittent sparking occurs at high speeds only, this may be due to one of the following causes:	
Lead deposits on spark plug insulator;	Continual use of leaded fuel may produce a lead deposit on sparking plug insulator. With sparking plug cold such deposits are not likely to cause tension leakage to earth, but this occurs with sparking plug hot (above 500° C = 930° F). Best remedy: Replace plug.
Contact breaker spring is slightly distorted so that breaker lever rubs with its bushing on support or lock washer and thus cannot function properly.	Bring contact breaker spring in parallel position with engine.

2. Dynamo troubles

As adjustments on lacquer-sealed nut (g in figure page 9) and contact springs of regulator-cutout would invalidate guarantee claims, such jobs should only be done in a "Noris" workshop or in cases of emergency a specialist for electrical equipment ought to be entrusted with them.

Checking of dynamo:

Switch on full lighting, actuate electric horn.

With horn in action, lighting may only drop slightly. Otherwise battery must be given a refreshing charge from an independent electrical supply.

Install fully charged battery, let engine run up to 2500 r. p. m., cut in full lighting and disconnect lead from battery (–) post. With cable removed lighting should increase slightly, and lower a bit when cable is replaced on battery (–) post.

If lighting reacts contrarily, dynamo output is insufficient and hexagon adjusting nut (g) on lower end of voltage regulator spring must be tightened slightly not more than one twelfth of a turn (see figure page 9).

Testing of lighting equipment with ammeter:

Use ammeter of the centre zero type. Install fully charged motorcycle battery. Interpolate ammeter in lead between battery (–) post and earth (see wiring diagram). Thereupon cut in main driving light for a moment and ascertain direction of indication. The noted direction means "discharge", whereas contrary direction would indicate "charge".

Testing procedure:

1. First allow engine to warm up on centre stand and with transmission on top gear speed up to about 3000 r. p. m. which rate is obtained with the following speedometer indications: solo = 32.5 m. p. h. with side car = 28.1 m. p. h.

2. Cut in main driving light and hold engine speed for a short period at above named value. Ammeter must show **charge reading** within a 0 to 0.5 ampere range. If ammeter does not show charge reading,

3. first switch off main driving light, then turn off engine. If current output was too high, loosen hexagon nut (g) on lower end of voltage regulator spring (see figure page 9) slightly, not more than one twelfth of a turn *).

   If current output was too low, tighten hexagon nut (g) on lower end of voltage regulator spring slightly, not more than one twelfth of a turn *).

   After this readjustment, repeat the test in a manner similar to that indicated above.

   If the prescribed charge reading is not reached after all, switch off lighting again, turn off engine and readjust setting of voltage regulator by means of hexagon nut (g) *).

   These adjustments should be repeated until the correct amperage (charging current of 0 to 0.5 ampere) has been obtained.

*) Have regulator-cutout adjusted in a "Noris" workshop only.

Troubles and their remedies

BMW AG

Probable faults	Remedy
a) Charge indicating lamp does not extinguish.	
Brushes not bearing upon commutator or sticking in their holders,	Adjust brush springs, replace worn brushes. If a brush is inclined to stick, remove it from its holder and clean its sides to get it working.
Commutator fouled or oily,	Clean commutator with a petrol-moistened cloth. If dirt has accumulated in slots between commutator segments, wipe it out with a wooden stick.
Regulator contacts dirty,	Clean contacts (b, see figure page 9) by inserting a proper, thin steel strip between them and moving it back and forth. Under no circumstances file these contacts.
Field winding earthed (field winding damaged by pole-shoe edges),	If the field insulation is chafed so that the windings are exposed, insulate such spots with shellac and replace coils in same position as originally.
Defective armature winding.	Replace armature.

Probable faults	Remedy
b) Charge indicating lamp burns dimly during operation (a very slight glowing, specially with lighting cut-in is unimportant and will disappear with battery given full recharge).	
Battery discharged or defective,	Give battery a refreshing charge from an independent electrical supply or replace it.
Loose cable connections,	Tighten cable terminal screws on engine, headlamp and battery, clean earth connection on battery.
Dirty or rough contact points of voltage regulator,	Disconnect battery, clean contacts (b and f on figure page 9) by inserting a proper, thin steel strip between them and moving it back and forth. Under no circumstances file these contacts.
c) Charge indicating lamp glows brightly and burns out or electrolyte boils over (battery overheated), so bulbs burn out frequently:	
Voltage regulator not functioning due to foreign matters, particularly chips collected in air gap (c) between armature and winding core or between armature and body (see figure page 9),	Wipe out foreign matters with a stiff, smooth cartoon strip.
Voltage regulator not functioning due to loose earth connection (e),	Loosen earth terminal fixings screw (e) (see figure page 9) of voltage regulator slightly and retighten it.
Regulator contact points excessively charred, S-shaped contact spring not functioning, battery connected incorrectly (+ post to earth, dynamo poling has changed).	Connect battery correctly, (–) post to earth, depress regulator armature (a) for an instant slightly to ensure proper poling of dynamo. If voltage regulator has been replaced, also depress armature (a) of the new regulator slightly for a moment (see figure page 9). These operations must be carried out with dynamo stationary.
d) Charge indicating lamp lighting at regular intervals. Probable cause: Some of the electric leads are shorted.	First cut out lighting with ignition key inserted in middle position. If the trouble still exists, check if any of the following leads are shorted: Dynamo 51 to headlamp 51, headlamp 15/54 to neutral light and electric horn. If no fault was found there, first inspect leads to tail lamp and side car, then leads to parking lamp and headlamp. If, after having examined these leads, the cause of the trouble cannot yet be detected, switch on headlamp and inspect leads to Bilux lamp and lamp itself.

BMW AG

Probable faults	Remedy
e) Headlamp light flickering or extinguishing temporarily.	
Cable is broken or some terminal has become loose, Bilux lamp defective, dip switch defective.	Locate source of trouble by shaking or slightly pulling the various cables. Check Bilux lamp and dip switch. Replace defective parts, tighten loose terminals.
Battery is damaged.	Breakage of plates can easily be ascertained by slightly pulling and pressing battery posts. Replace battery.

Testing of armature (removed from dynamo frame)

1. Insulation against earth. For testing procedure either use direct (continuous) or alternating current of 100 to 500 volts. Insert incandescent lamps (do not use semi-incandescent lamps) of corresponding voltage capacity in charging circuit.

Check with test lamps and test points from the commutator to the armature lamination (one test point is placed upon commutator, the other one upon lamination). Correct insulation against earth (ground) is indicated **by failure** of the incandescent lamps to light.

2. Shorted armature coil. A shorted coil can only be ascertained by means of highly developed testing devices (growler, etc.) or of a sound detector. No armature coil is shorted if detector remains silent.

3. Open-circuited armature. An open-circuited armature is easily detectable, since this condition produces badly burned commutator bars.

Testing of fields in dynamo frame (armature is removed)

Connect (+) post of a 6-volt battery through inserted ammeter to terminal 61 on dynamo frame and battery (–) post with crankcase earth point. Field coils are in order if ammeter shows charge reading 1.6 amperes and if a piece of soft iron (screwdriver) used for touching the various poles is attracted to each of the 4 pole shoes with the same grade of efficiency.

1. Resistance coil (field coil with 4 cable ends) is in order if slightly depressed regulator armature causes ammeter to lower charge reading a bit. It is defect when ammeter does not show any reading.

2. Tension leakage to ground. Ammeter reading exceeds 1.6 amperes by far or ammeter indication increases greatly with regulator armature depressed.

3. Shorted coil. Ammeter reading exceeds 1.6 amperes slightly.

4. Open-circuited field coil. Ammeter shows charge reading only with regulator armature depressed in as far as resistance coil is not defective, too.

Before removing the used field coils to change them for new ones, mark pole shoes to make certain that they are replaced in same position as originally.

Lubrication Chart

BMW AG

Lubrication Chart

Lubrication Chart

BMW AG

Lubrication Chart for BMW R 25 and R 25/2

Servicing jobs (The numberals correspond to the lubrication points in the illustrations.)	Miles 300	600	1 200	2 000	3 000	4 000	5 000	6 000	7 000	thereafter every ..... miles
(1) Change oil in engine – quantity required 1.25 litres = 2.6 U. S. pints = 2.2 Imp. pints . Oil should reach to top mark on dip stick	x	x	x	x	x	x	x	x	x	1,000
(2) Check oil level in transmission and replenish oil in transmission until oil level reaches the lower threads of level plug hole	x		x	x	x	x	x		x	1,000
Change oil in transmission, filling quantity approx. 0.65 litres = 1.3 U. S. pints = 1.1 Imp. pints		x						x		6,000
[3] Grease right and left rear wheel suspension		x		x		x		x		1,000
[4] Clean hubs of disassembled wheels and fill with new grease					x			x		3,000
△5 Check oil level in rear wheel drive and replenish until oil level reaches the lower threads of level plug hole	x		x	x	x	x	x		x	1,000
Change oil in rear wheel drive, filling quantity approx. 125 c. c. = 0.25 U. S. pint = 0.2 Imp. pint		x						x		6,000
(6) After repairing refill 150 to 170 c. c. = 0.3 – 0.35 U. S. pint = 0.25 – 0.3 Imp. pint engine oil in each prong of front forks						x				6,000
(7) Oil all joints of braking mechanism . . .	x	x	x	x	x	x	x	x	x	1,000
[8] Grease universal joint of propeller shaft . .		x	x	x	x	x	x	x	x	1,000
(9) Oil clutch operating lever on gear box . .		x	x	x	x	x	x	x	x	1,000
[10] Grease twist grip throttle		x	x	x	x	x	x	x	x	1,000
[11] Grease brake pedal		x	x	x	x	x	x	x	x	1,000
[12] Grease saddle bearing		x	x	x	x	x	x	x	x	1,000
Grease side car	x	x	x	x	x	x	x	x	x	1,000

Remarks:

Legend of different above symbols:

○ **Engine oil *)** engine, transmission and front forks: summer SAE 40, winter SAE 20

△ **Rear wheel drive lubricating oil *)** SAE 90

□ **Lubricating grease *)**

***) Only use service-proven lubricants, they preserve the useful life of the motorcycle considerably.**

Our BMW agents will gladly recommend job-tested lubricants.

Lubrication Chart Group

2

BMW AG

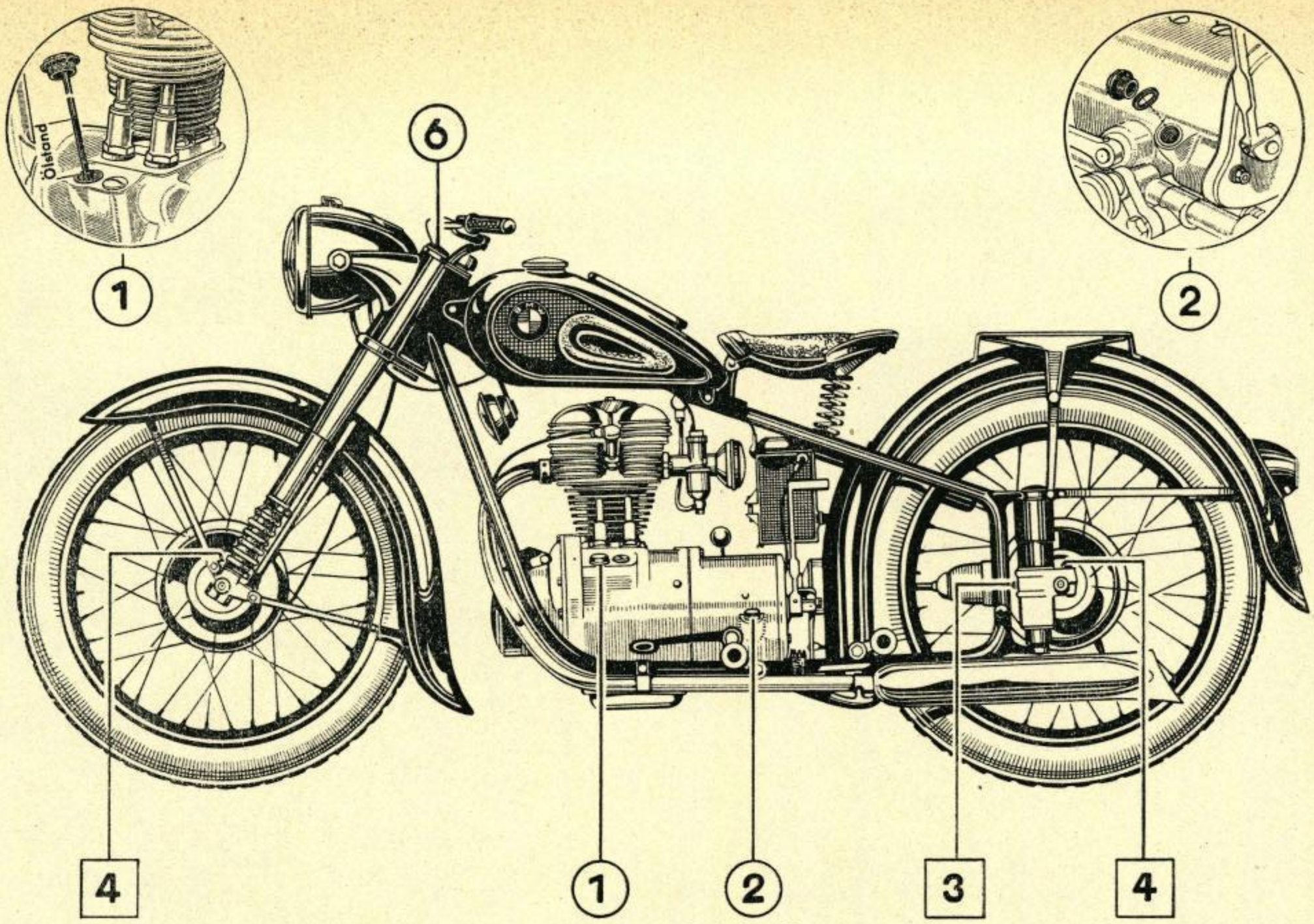

Lubrication Chart for left side of motorcycle

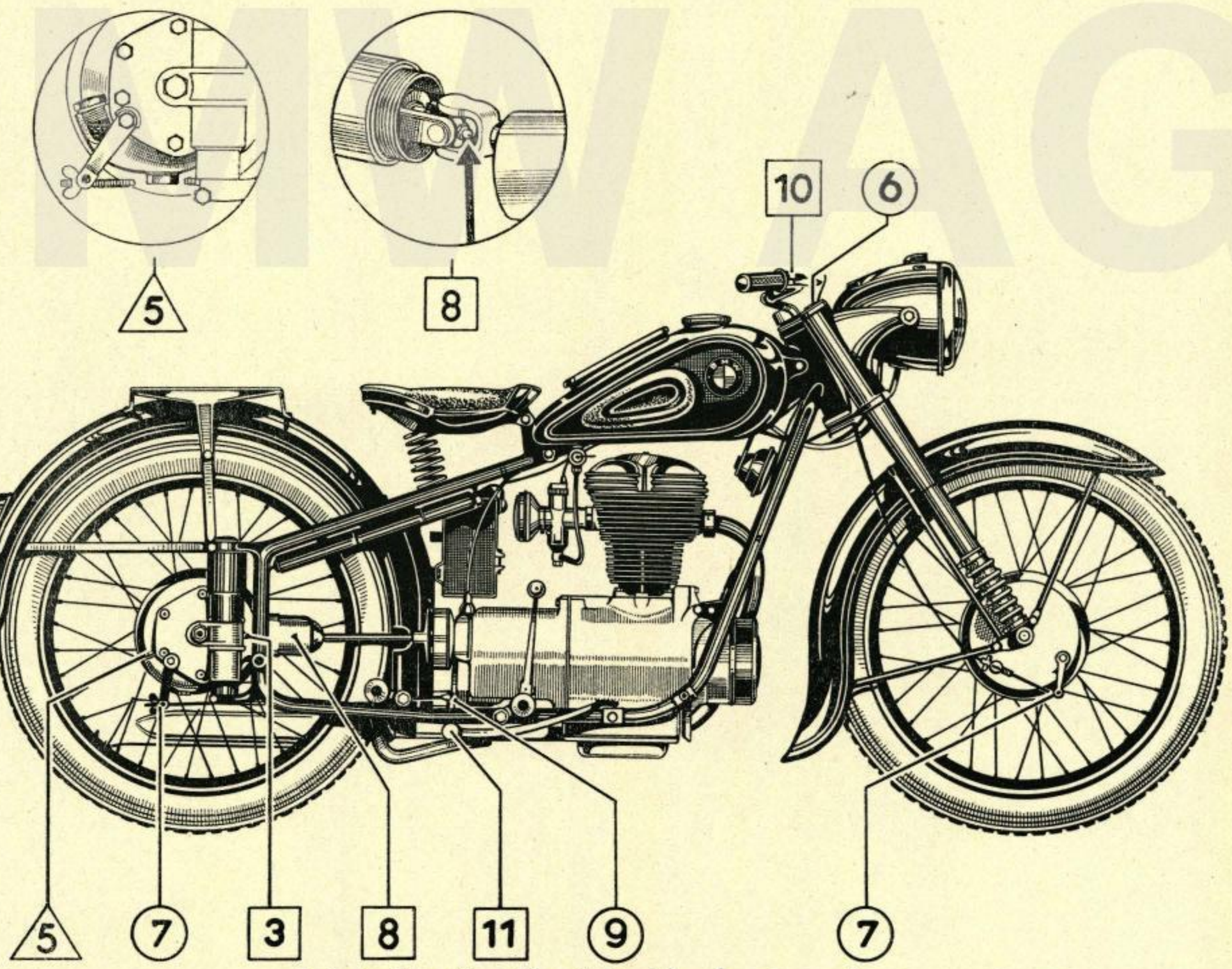

Lubrication Chart for right side of motorcycle

Tools

BMW AG

Tools

SPECIAL TOOLS

FOR

BMW MOTORCYCLES

BMW AG

BAYERISCHE MOTOREN WERKE A.-G., MÜNCHEN 13, LERCHENAUERSTR. 76

M 141 e 1,4 3.52 T & F

Special Tools for BMW Motorcycles

Our Service Department has carefully developed the BMW special tools in order to guarantee dependable repair operations on BMW motorcycles. Efforts have been made to provide a great number of multi-purpose tools ensuring wide scope of application at relatively limited costs.

Messrs.

MATRA-Werke G. m. b. H., Frankfurt/Main-Ost, Dieselstr. 30

are by arrangement responsible for the manufacture and distribution of these special tools.

Every well-organized workshop should be equipped with these special tools as they are indispensable for carrying out correct dismantling and reassembly-operations on motorcycles.

All persons of your staff working on BMW motorcycles should know how to use these tools which should be conveniently arranged on easy-to-reach tool boards, being kept in good condition.

Your efforts in observing these rules will be repaid by

good quality of work,
saving of time,
increased all-round workshop efficiency,
satisfied customers, and
further improvement of your firm's reputation.

The compulsory minimum set of special tools absolutely necessary for every BMW agent is listed on the last inner page of this booklet.

Symbols used on the following pages:

E = Engine Group
T = Transmission Group
R = Rear Wheel Drive Group
C = Chassis Group

Bayerische Motoren Werke
Aktiengesellschaft

Special Tools for BMW Motorcycles

Matra Order No. and Illustration	Description	Items	Model / Group								Price DM
			R 24	R 25	R 51/2	R 51/3	R 67				
281 (see 281/1 – 281/4)	Press tools, for removing and replacing shock absorber flange on propeller shaft, consisting of 281/1, 281/2, 281/3 and 281/4.	4									50.15
281/1 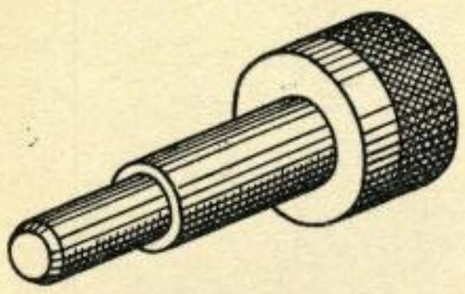	Remover, shock absorber flange on propeller shaft. Support flange hub in 331/1 using 331/7A and 331/2, insert remover 281/1 in bore of propeller shaft, press out shaft.	1	R	R	R	R	R				5.85
281/2 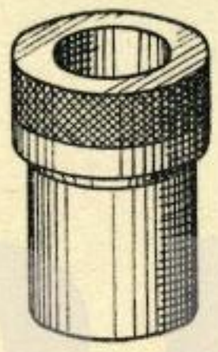	Replacer, shock absorber flange on propeller shaft. Support shaft collar on 281/3 and 281/4 in 331/2 and 331/1, and press on flange using replacer and press. Observe correct flange distance: 31±1 mm.	1	R	R	R	R	R				4.60
281/3 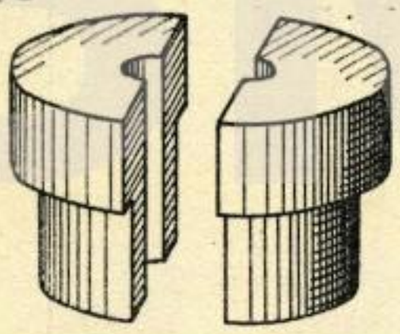	Support Bushing, split, 15 mm bore, R=5 mm, for replacing shock absorber flange. Application see 281/2.	2/2			R	R	R				20.90
281/4 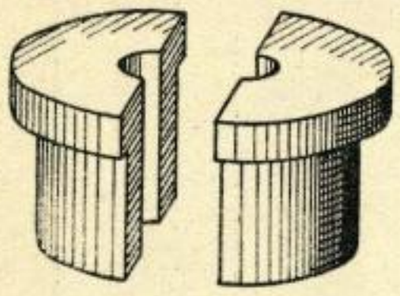	Support Bushing, split, 14 mm bore, R=3 mm, for replacing shock absorber flange. Application see 281/2.	2/2		R							18.80
282 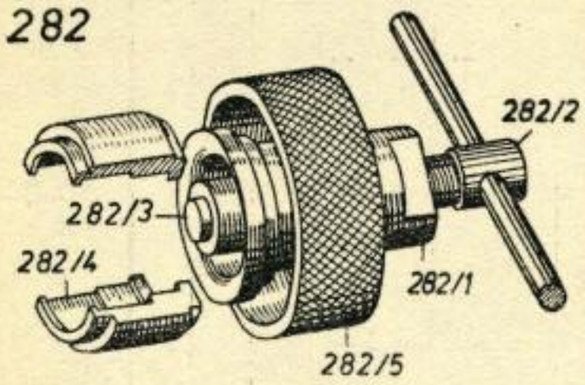	Puller, rear ball bearing of crankshaft. Apply 282/1 with 282/3 on crankshaft journal, grasp ball bearing and collar of 282/1 with 282/4, slide 282/5 over 282/4 and pull off ball bearing with 282/2.	1			E	E	E				59.40
283	Pin Spanner, 52/55 mm dia., for threaded ring on rear wheel drive housing.	1		R	R	R	R				1.75

Special Tools for BMW Motorcycles

Matra Order No. and Illustration	Description	Items	Model / Group								Price DM
			R 24	R 25	R 51/2	R 51/3	R 67				
284 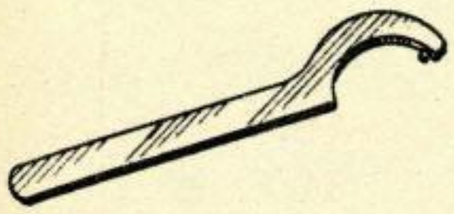	Pin Spanner, 58/62 dia., round pin 5 mm for bell-shaped cover on propeller shaft.	1		R	R	R	R				4.05
285	Pin Spanner, 54 mm dia., round pin 5 mm, for spigot nut on fork end pieces. Oppose with 286.	1			C	C	C				3.30
286	Pin Spanner, 45 mm dia., round pin 5 mm, for spring retainer on front wheel fork. Oppose with 285.	1			C	C	C				3.30
287 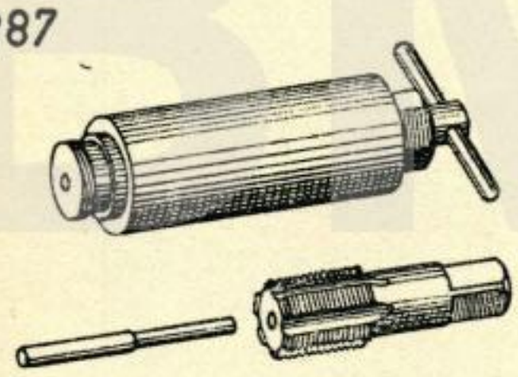	Valve Insert Extractor. Use set of taps (3 items) and guide to cut thread in valve insert. Heat cylinder head to approx. 390 deg F. Turn spindle and guide into valve insert and withdraw insert.	1	E	E	E	E	E				63.50
288/1 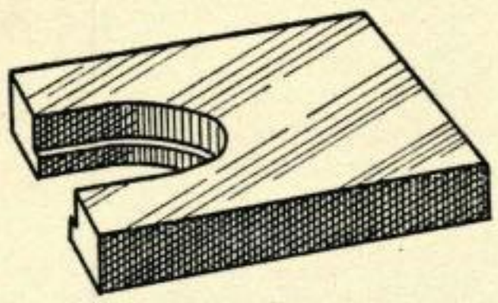	Fixture for removing drive shaft ball bearing. Support drive shaft (snap ring removed) on top speed gear in 288/1 and 331/1, press out shaft, using 288/3.	1			T	T	T				15.85
288/2 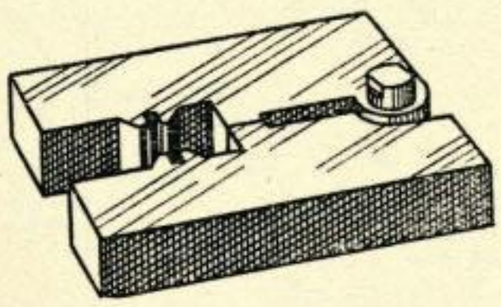	Fixture for removing drive shaft roller bearing inner race. Close 282/2 on low speed gear placed in tooth notches, support on 331/1 and press out shaft with 288/3.	1			T	T	T				35.65
288/3 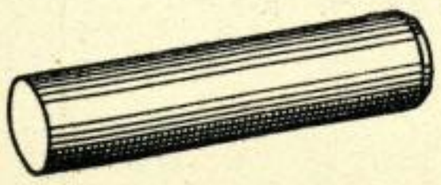	Drift Punch, for drive shaft. Application see 288/1 and 288/2.	1			E	E	E				1.40

Special Tools for BMW Motorcycles

Matra Order No. and Illustration	Description	Items	Model / Group								Price DM
			R 24	R 25	R 51/2	R 51/3	R 67				
289 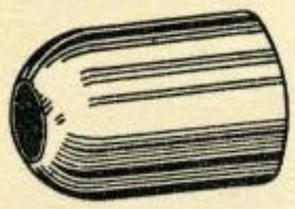	Replacer, for seal ring in rear wheel drive. To insert seal ring slide 289 over splined portion of final coupling flange.	1			R	R	R				3.30
290 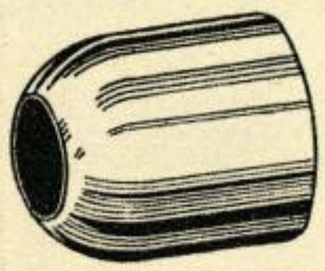	Replacer, for seal ring in rear wheel drive. To install ring gear slide 290 over splined portion of final coupling flange.	1		R							3.75
292 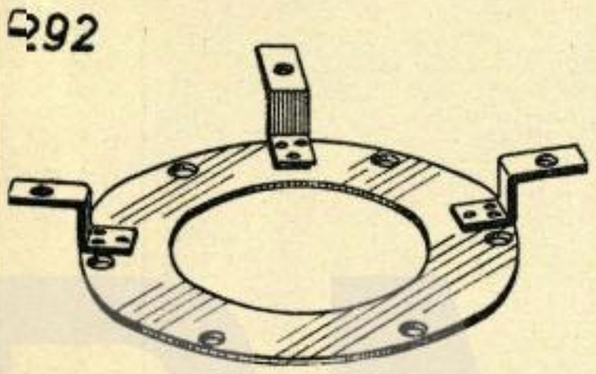	Locking Fixture, for flywheel. To loosen and tighten crankshaft nut lock clutch bolts and casing screws with 292. Same fixture with 3 screwed-on holder bushings V 5032 (shop-made tool).	1			E	E	E				19.35
293/1 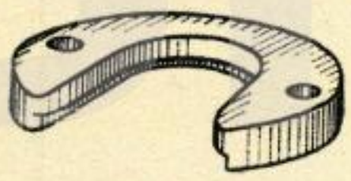	Crank Web Support for horse-shoe plate, for crankshaft disassembly. Screw 293/1 upon 293/2. Support crankshaft with 331/1 in 293/2/1, press out crankpin, together with centre web, using 293/5 and press.	1				E					20.70
293/2/3 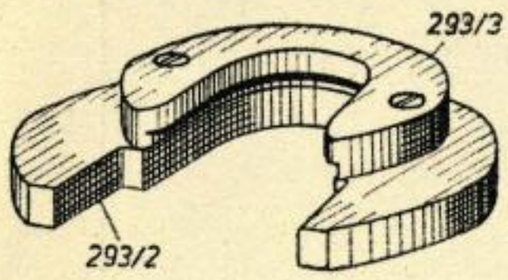	Horse-shoe Plate 293/2 with crank web support 293/3 for crankshaft disassembly. Support crankshaft with 331/1 in 293/2/3, press out crankpin with centre web using 293/5 and press.	1			E		E				47.45
293/4 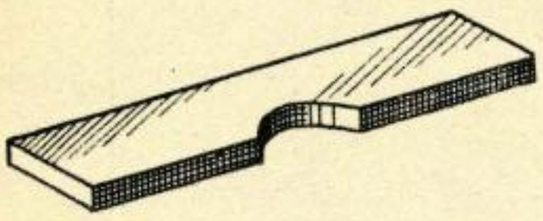	Intermediate Plate for crankshaft assembly. Support crankpin with 331/1 on 293/4, press outer crank web on crankpin, using plate of 293/5 and press.	1			E	E	E				16.95
293/5 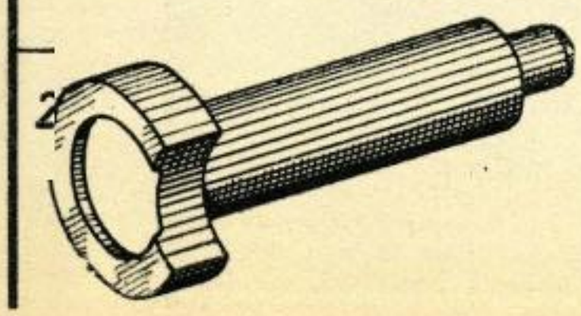	Drift Punch for crankshaft. Application see 293/1/2/3 and 293/4.	1		E	E	E	E				10.10

Special Tools for BMW Motorcycles

Matra Order No. and Illustration	Description	Items	Model / Group								Price DM
			R 24	R 25	R 51/2	R 51/3	R 67				
294 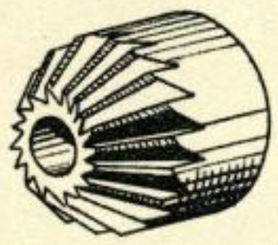	Valve Seat Cutter, 45 deg., 36 mm dia. For cutting fit on cutter guide shank 431.	1	E	E	E	E	E				12.70
295 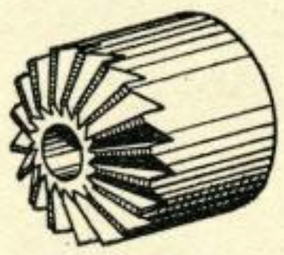	Valve reseating cutter, 15 deg., 36 mm dia. For refacing seats to valve head diameter. Fit on cutter guide shank 431.	1	E	E	E	E	E				12.70
296 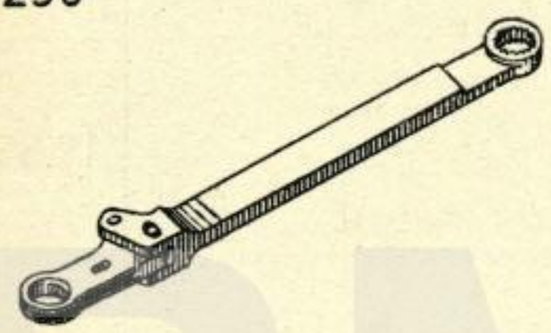	Ratchet Wrench, for loosening and tightening nut on rear wheel drive pinion.	1		R							5 28.95
297 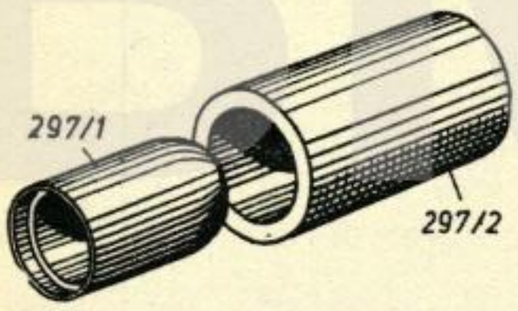	ReplacerBushings for oil seal of driving shaft. Slide 297/1 over splines to install shaft with drift bushing W 5023 (shop-made tool). 297/2 serves to remove and replace the oil seal (Simmerring).	2	T	T							9.–
298 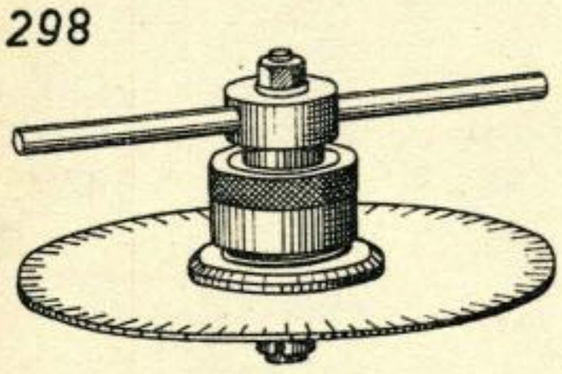	Graduated Dial, for adjustment of ignition timing. Insert 298 in bore of centered clutch plate and clamp with upper nut. Reset dial after spigot nut has been loosened.	1	E	E	E	E	E				64.90
299 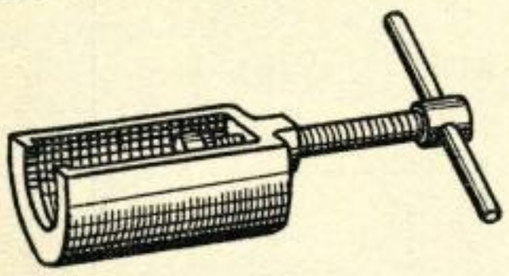	Puller, for ball bearing 6204 and sprocket; for sprocket R 51/2 with extension arbour, shop-made tool W 5001.	1	E	E							23.55
311 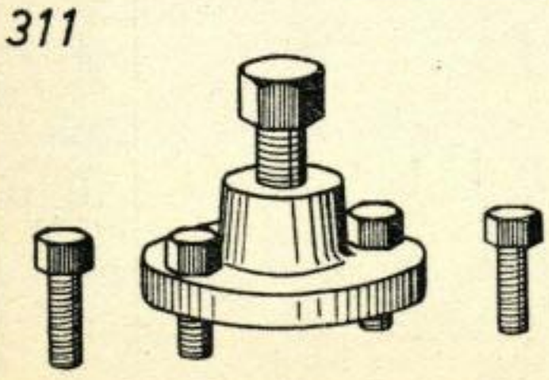	Puller, for flywheel with 2 sets of screws Flange of 311 with 2 screws 24 mm long, or with 2 screws 20 mm long is screwed on flywheel. Press off flywheel.	1	E	E	E	E	E				19.2

Special Tools for BMW Motorcycles

Matra Order No. and Illustration	Description	Items	Model / Group R 24	R 25	R 51/2	R 51/3	R 67				Price DM
316 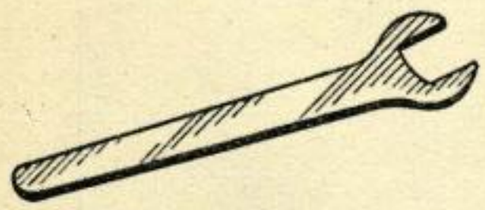	Spanner, open end 41 mm for adjustment of fork steering column.	1	C	C	C						5.85
316A 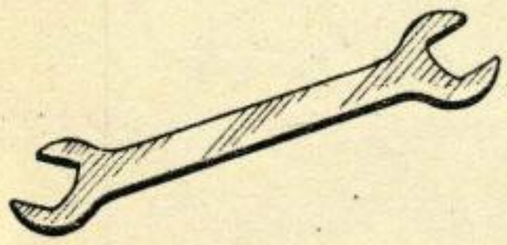	Spanner, double open end 41mm for adjustment of fork steering column.	1	C	C	C	C	C				6.55
319 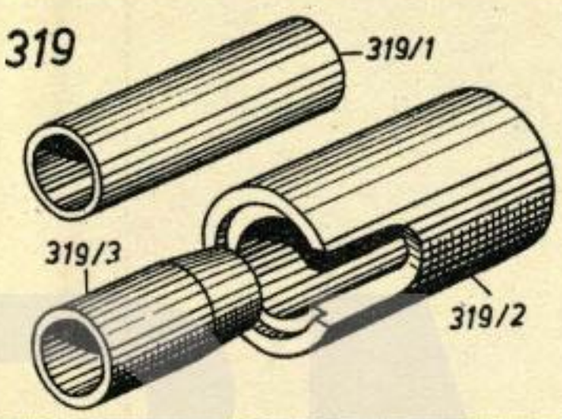	Assembly Tool, transmission drive shaft. Slide 319/2 on shaft without kickstarter gear, press on in vice and remove circlip. Press circlip with 319/2 over cone 319/3 on shaft. Use 319/1 to press on ball bearing 6204.	3	T	T							16.95
326 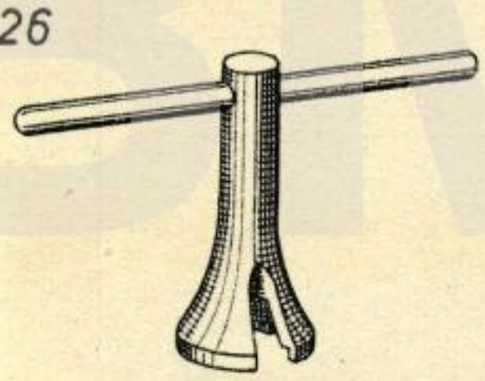	Tensioner, for kickstarter Spring. Grasp cover for starter shaft with 326. Give spring initial tension by turning 180° – 270° anticlockwise and insert 2 countersunk screws.	1			T	T	T				9.70
331/1 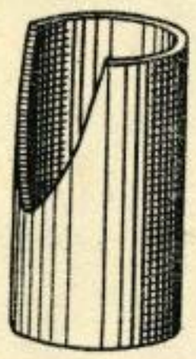	Steel Bushing for press operations under hydraulic press; see 281/1/2/3/4, 288/1/2, 293/1/2/3/4 and 385/5.	1	E T R	E T R	E T R	E T R	E T R				40.90
331/2 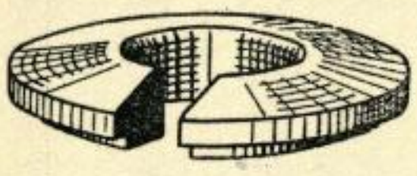	Cover for 331/1 with slit and bore. Application see 331/7 A, 385/5, 281/3, 281/4, 385/5.	1	T R	T R	T R	T R	T R				20.45
331/3 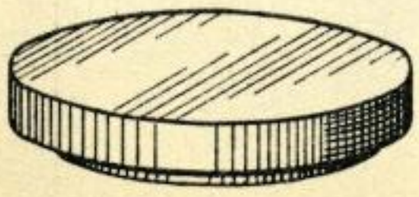	Cover for 331/1 to be used as flat press plate.	1									22.20

Special Tools for BMW Motorcycles

Matra Order No. and Illustration	Description	Items	Model / Group								Price DM
			R 24	R 25	R 51/2	R 51/3	R 67				
331/7A 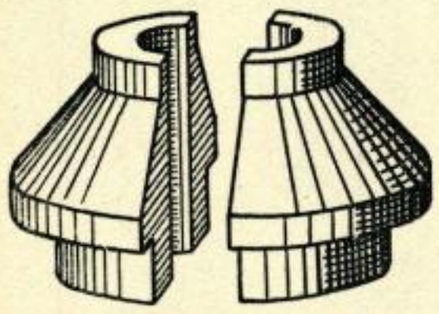	Bushing, split, for pressing shock absorber flange off propeller shaft. Support shock absorber hub on 331/7 A and 331/2. Use arbour 281/1 to press out propeller shaft in 331/1.	2/2	R	R	R	R	R				12.85
338/1 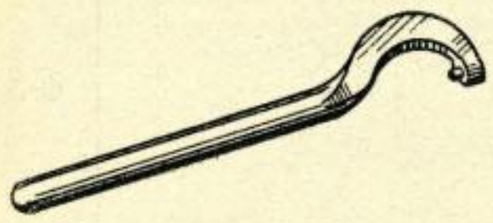	Hook Spanner, 49 mm dia. for exhaust nut.	1	E	E	E	E	E				6.80
353A 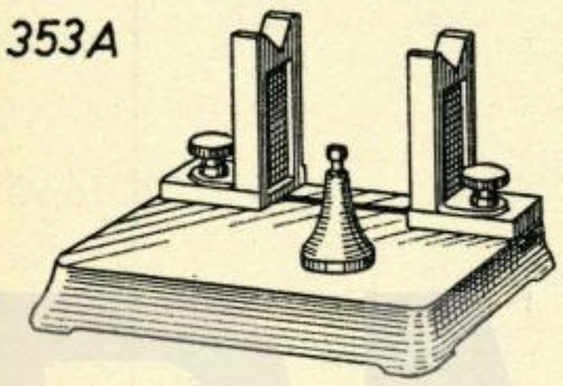	Device, for centering of crankshaft, consisting of one base plate, 2 longitudinally slideable prismatic supports, and adjustable support for rotation test.	1	E	E	E	E	E				153.90
353B 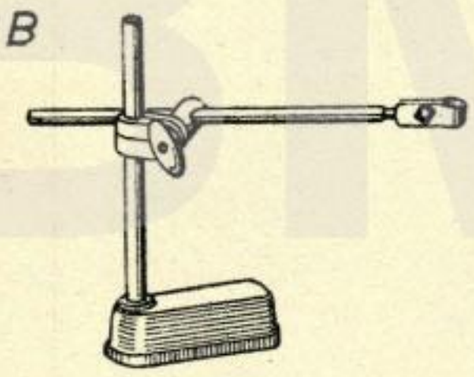	Gauge Support with stand; used with 353 A for dial gauge adjustment in all directions.	2	E	E	E	E	E				84.90
353C	Dial Gauge with .01 mm scale for 353 B.	2	E	E	E	E	E				50.60
355 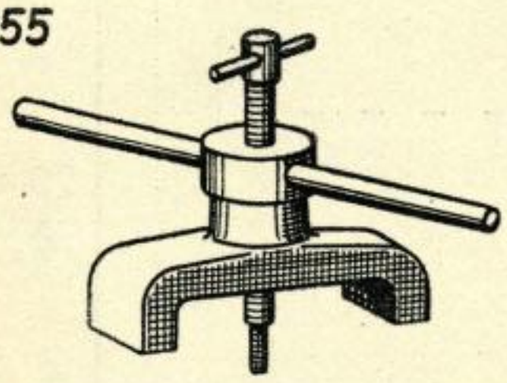	Puller for camshaft. Loosen bearing screws behind camshaft gear, screw spindle into camshaft and withdraw shaft by means of puller clamp V 5033 (shop-made tool).	1	E	E		E	E				21.05

Special Tools for BMW Motorcycles

Matra Order No. and Illustration	Description	Items	Model / Group								Price DM
			R 24	R 25	R 51/2	R 51/3	R 67				
356 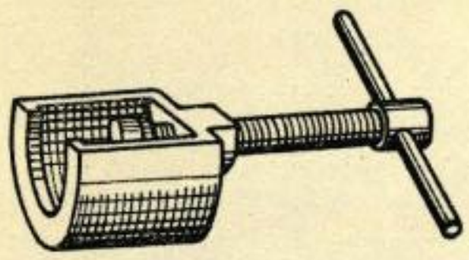	Puller, for ball bearing in rear wheel drive. For ball bearing 6205, with pressure plate 29 mm dia., 3 mm thickness (shop-made) for ball bearing 6206.	1		R R							19.35
357 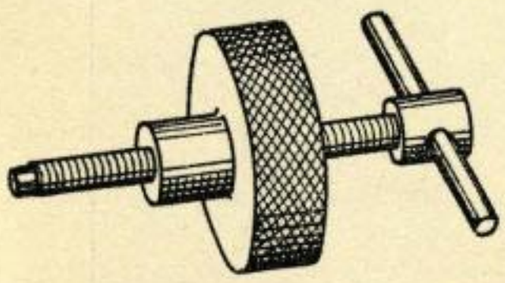	Clamping screws for clutch assembly. Compress clutch evenly with 3 items 357, then replace them progressively by clutch screws.	3	E	E		E	E				20.45
359 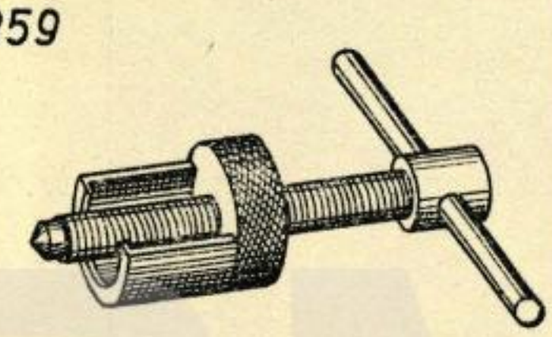	Remover for Speedometer Bushing. Apply 359 on bushing collar and withdraw bushing.	1	T	T	T	T	T				9.80
360 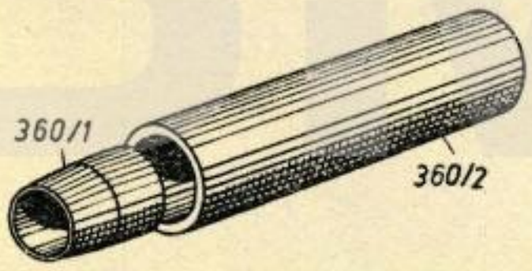	Replacer Bushings for lock ring on driven shaft. Slide lock ring over cone 360/1 and press it in seat on shaft by means of 360/2.	2	T	T							10.10
361 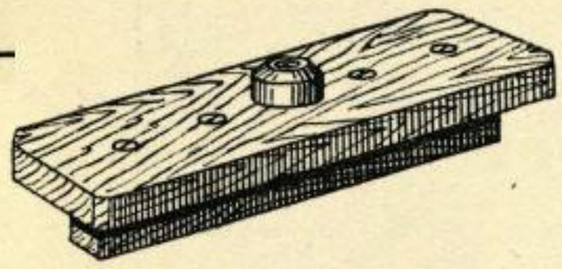	Wooden Plate for valve removal and re-installation; used to retain valves when tensioning valve springs. Use with valve spring lifter V 5034 (shop-made tool).	1	E	E	E	E	E				17.15
362 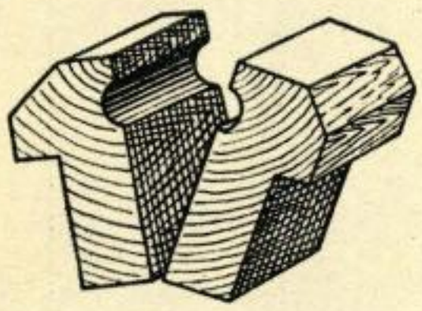	Wooden Clamping Blocks for front wheel fork, (one set) used to clamp fork in Vice.	1	C	C	C	C	C				32.80
365 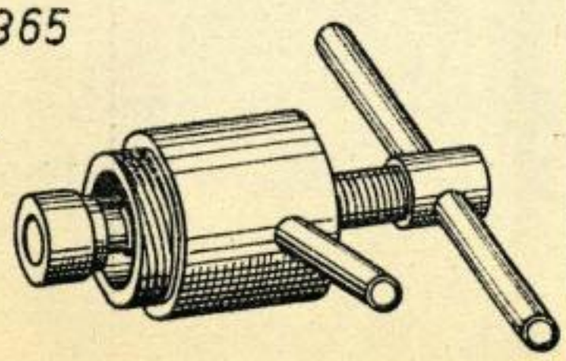	Puller for cover of rear wheel drive casing	1	R								21.55

Special Tools for BMW Motorcycles

Matra Order No. and Illustration	Description	Items	Model / Group								Price DM
			R 24	R 25	R 51/2	R 51/3	R 67				
368 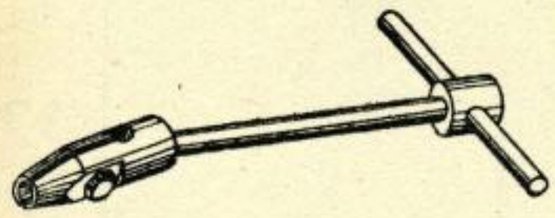	Holder, used for grinding-in valves with 7 mm stem dia.	1	E	E	E	E	E				13.55
385/5 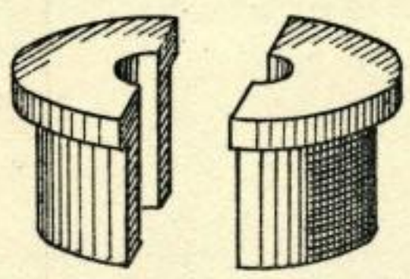	Bushing, split, for pressing on final coupling flange; to be applied on propeller shaft together with 331 / 2 and 331 / 1.	2/2	R								17.45
422A 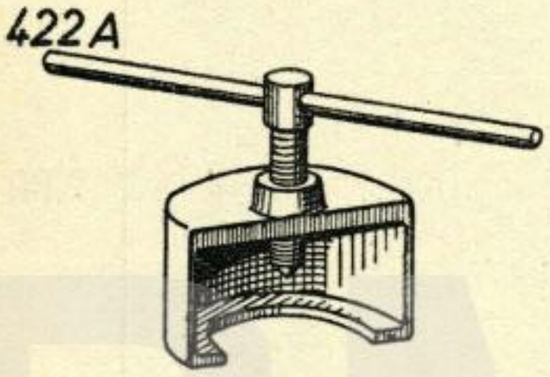	Puller, for coupling flange on transmission.	1	T	T	T	T	T				39.60
431 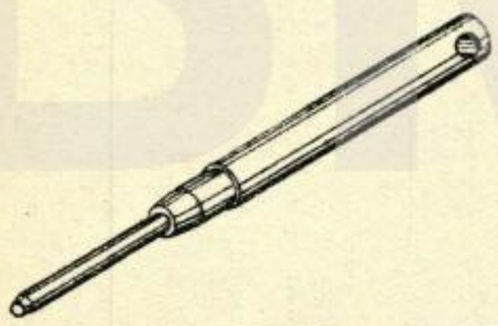	Cutter Shank 7 mm dia. for cutters 294 and 295.	1	E	E	E	E	E				7.60
442 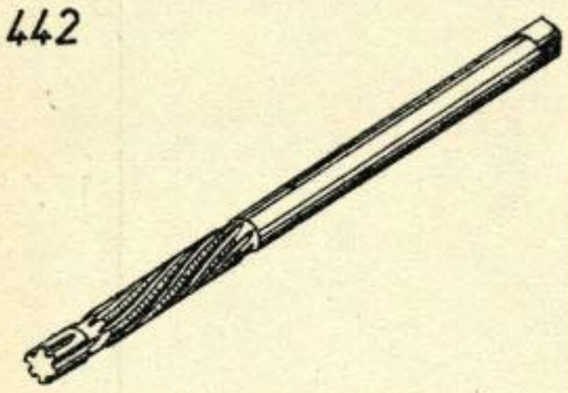	Valve Guide Reamer, 7 mm dia.	1	E	E	E	E	E				9.25
451 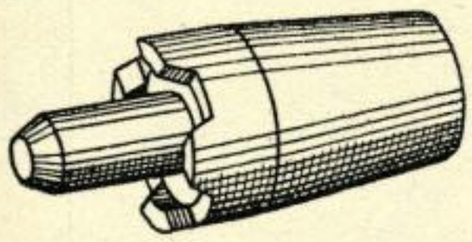	Replacer tool, for leather seal in rear wheel drive casing. When installing final coupling flange, place 451 upon flange.	1	R								10.95
467 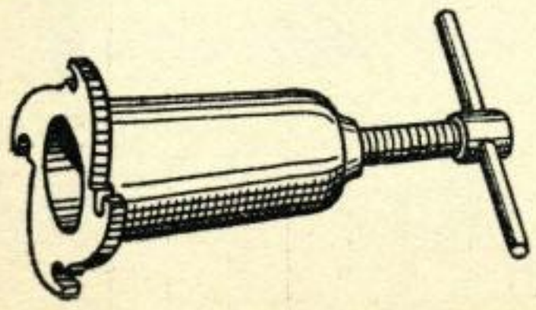	Puller, for bearing cover of crank shaft front bearing. Clamp 467 with set screws, and remove cover with bearing.	1	E	E							19.35

BMW ARCHIVE

Special Tools for BMW Motorcycles

Matra Order No. and Illustration	Description	Items	Model / Group								Price DM
			R 24	R 25	R 51/2	R 51/3	R 67				
493 (see 493/1 – 493/5)	Press Tools for disassembly and assembly of crankshaft R 24 and R 25 consisting of 493 / 1 – 493 / 4.	4									76.45
493/1 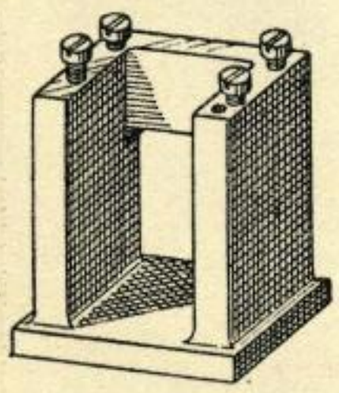	Support for press operations on crankshaft	1	E	E							31.35
493/2 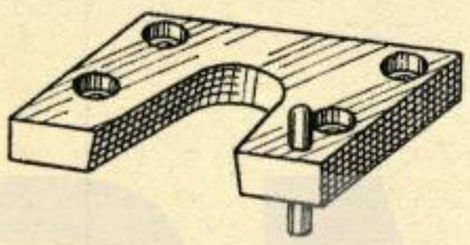	Support Plate for R 24. Support crankshaft at connecting rod with 493 / 1 in 493 / 2, secure with 493 / 4 and use 293 / 5 to press out crankpin together with rear web.	1	E								15.95
493/3 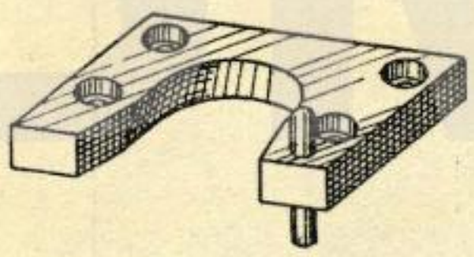	Support Plate for R 25 Support crankshaft at connecting rod with 493 / 1 in 493 / 3, secure with 493 / 4 and use 293 / 5 to press out crankpin together with rear web.	1		E							15.95
493/4 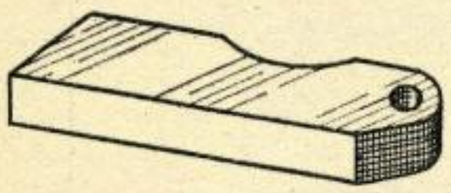	Locking Tool for support plates 493 / 2 and 493 / 3 used to secure crankshaft in support.	1	E	E							7.25
494 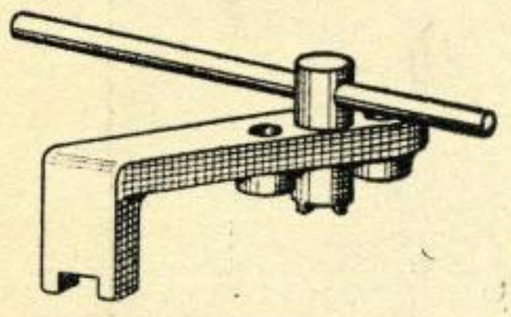	Holding Fixture with key for nut of transmission driven shaft. Apply 494 in pins of shock absorber flange, resp. against nose on transmission housing.	1	T	T	T	T	T				16.70
495 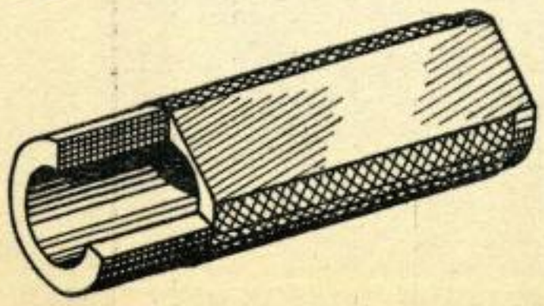	Drift Punch for crankshaft, used for assembly of crankshaft halves.	1	E	E							11.65

Special Tools for BMW Motorcycles

Matra Order No. and Illustration	Description	Items	Model / Group								Price DM
			R 24	R 25	R 51/2	R 51/3	R 67				
498 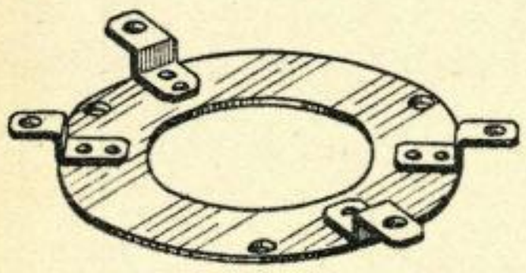	Locking Fixture for Flywheel to loosen and tighten crankshaft nut, lock clutch bolts and casing screws with 498.	1	E	E							17.50
499 (see 499/1 – 6)	Multi-Purpose Puller Device for engines R 51 / 3 and R 67.	11									74.80
499/1/2 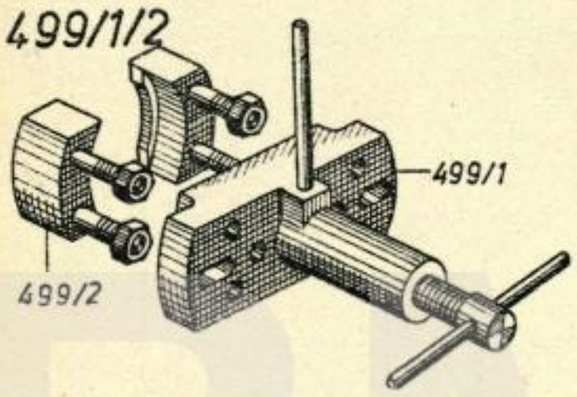	Grasp gear on crankshaft with 2 puller jaws 499 / 2, bolt jaws to puller and spindle assembly 499/1 and pull gear.	2 1				E	E				55.65
499/3-6	Use Puller 499 / 1 with screwed-in hook screws 499 / 3 for oil pump drive gear, collar screws 499 / 4 for gearcase cover, 499 / 5 screws 8 x 72 mm for front bearing cover, 499 / 6 screws 8 x 33 mm for camshaft gear.	 2 2 2 2				E E E E	E E E E				 8.80 3.50 3.75 3.10
348747-10 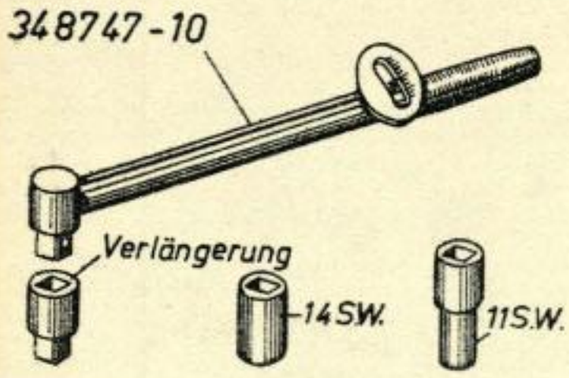	Torque Wrench 0 - 6 mkg with square extension for tightening cylinder head screws with a torque of 3 – 3.5 mkg using 14 mm double hexagon sockets and magneto rotor screw with torque of 2 mkg using 11 mm socket. (1 mkg = 7.22 ft. lb.)	 4	 E	 E	 E	 E E	 E E				43.45 1.55 1.25 1.25

This illustrated list shows the minimum number of indispensable tools that a responsible agent should have in his workshop.

Total DM 250.—

283

296

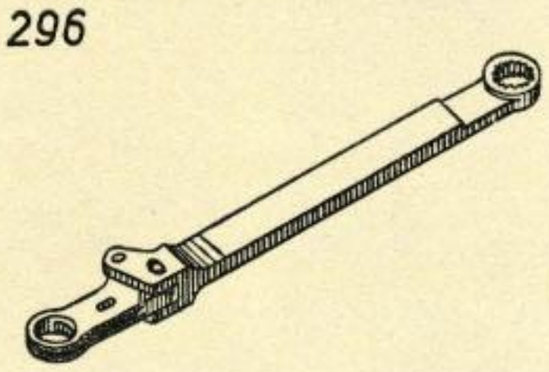

338/1

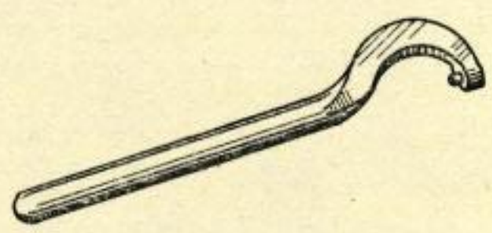

284

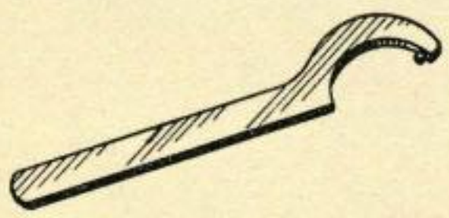

297

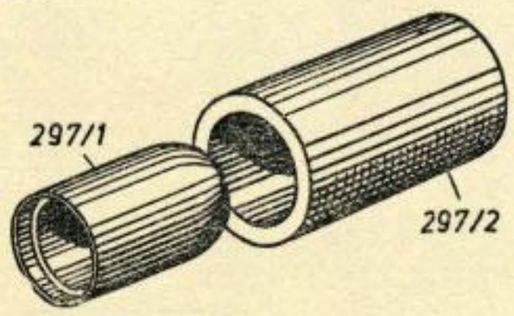

355

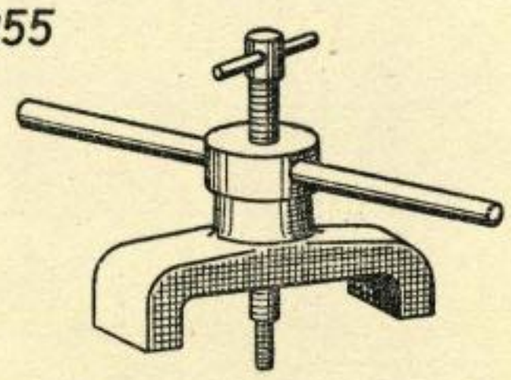

285

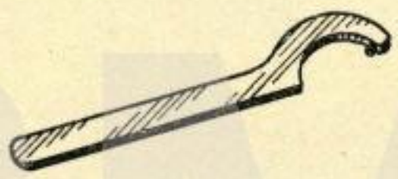

299

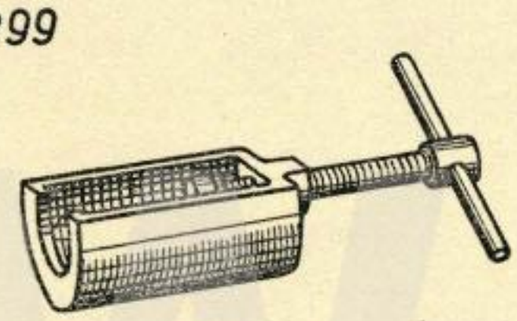

357

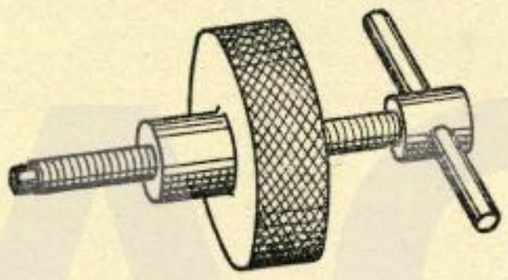

286

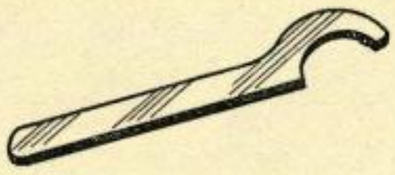

311

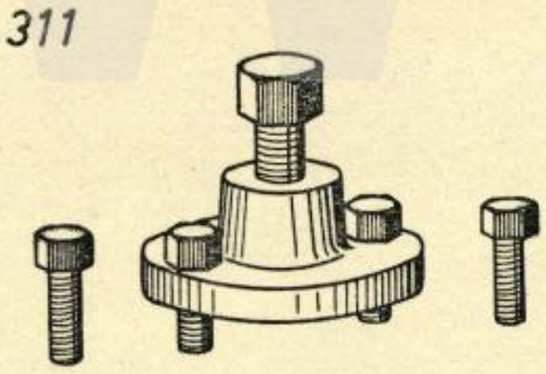

422A

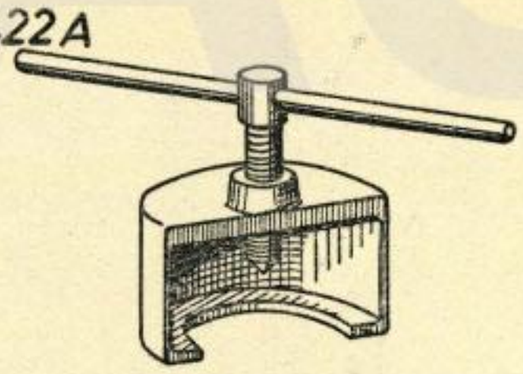

289

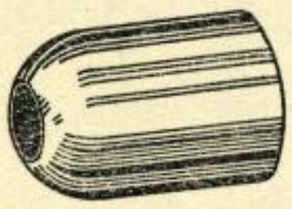

319

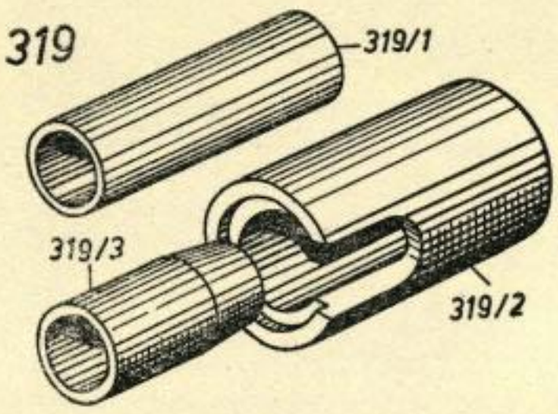

467

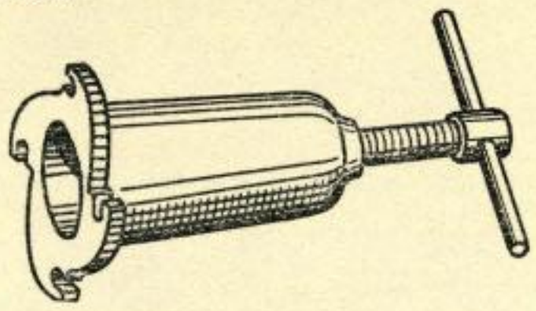

290

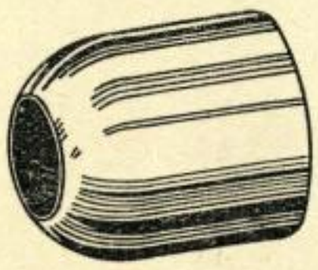

326

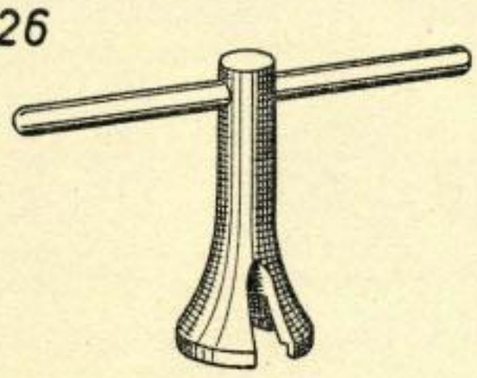

494

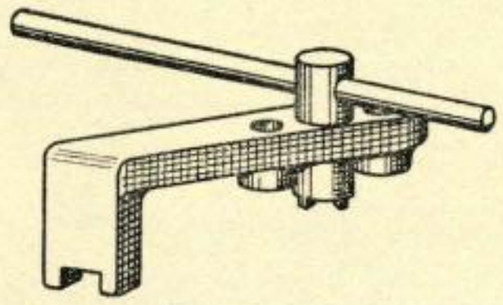

BMW AG

List of shop-made tools and translation of the German text on drawings

(All measures on the technical drawings are in millimeters)

No. of Drawing	Designation	Items	Part	Material
W 5002	1 ea drift punch, gudgeon pin R 24, R 25, R 51, R 67	1 punch		st. SAE 1034
W 5003	1 ea piston ring compressor R 24, R 25, R 51, R 67 Text on drawing: "gestreckte Länge" = stretched length	8 rivets 2 reinforcements 1 applier	3 2 1	alu 3 x 5 mm alu SAE 25 alu SAE 25
L 5008	1 ea feeler gauge for checking clearance between Woodruff key and flywheel R 25, R 51, R 67	1 gauge		st. SAE 1006
V 5014 sheet 1	1 ea adjustable assembly cradle for engine and transmission R 24, R 25, R 51, R 67 Text on drawings: Rohr = tube Lagerung für Gabelstück = bearing fork piece Haken zum Einhängen der Zwischenplatte = hook for installation of intermediate plate Zwischenplatte zum Aufspannen von Motor und Getriebe = intermediate plate for fixation of engine and transmission vernieten = to rivet	3 studs 1 intermediate plate 1 set screw 1 stand of welded tubes	4 3 2 1	st. SAE 1042 st. SAE 1010 st. SAE 1020 steel
V 5014 sheet 2	1 ea adjustable assembly cradle for engine and transmission R 24, R 25, R 51, R 67 Text on drawings: Federdraht = spring wire Windungen = coils Außen ∅ = outer diameter Lochkreis = diameter between bore centres	2 knurl nuts 2 nuts M 12 2 bolts 1 fixing ring 2 springs 2 pins 2 knurl nuts 2 bolts 1 fork piece	9 8 7 6 5 4 3 2 1	st. SAE 1020 st. SAE 1020 st. SAE 1020 st. SAE 1020 spring steel spring steel st. SAE 1020 st. SAE 1020 steel

No. of Drawing	Designation	Items	Part	Material
W 5015	1 ea drift punch, plunger carrier column R 25	1 punch		st. SAE 1034
W 5016	1 ea drift tool, oil seal of rear drive housing R 25	1 drift head 1 tube	2 1	st. SAE 1034 st. SAE 1034
V 5017	1 ea fixture, transmission R 24, R 25, R 51			
	assembly welded	1 plate	8	st. SAE 1006
		2 bearing plates	7	st. SAE 1006
		1 fixture ring	6	st. SAE 1006
		1 fixture, R 24, R 25	5	consisting of parts 6, 7, 8
		3 studs	4	st. SAE 1034
	assembly welded	1 bearing plate	3	st. SAE 1006
		1 fixture plate	2	st. SAE 1006
		1 fixture, R 51	1	consisting of parts 2 and 3
W 5018	1 ea drift rod, fork main tube bearing bushes R 24, R 25	1 head piece 1 rod	2 1	st. SAE 1034 st. SAE 1034
W 5021	2 ea straightening tools, connecting rod R 24, R 25, R 51, R 67	1 tool cranked 1 tool straight	2 1	st. SAE 1010 st. SAE 1010
W 5022	1 ea cranked screw driver, plug covering oil pump drive spindle R 25, R 51/2	1 screw driver	1	st. SAE 1045 heat treated
W 5023	1 ea drift tool, felt ring and capsule of oil seal of main-shaft R 24, R 25 Text on drawings: Kordel = knurl, ballig = ball-shaped, fest eingepaßt = tightly fitted, Luftloch = air hole, in Tl. 2 gleitend eingepaßt = slideably fitted in part 2	1 drift head 1 outer bush 1 inner bush	3 2 1	st. SAE 1060 st. SAE 1015 case hardened st. SAE 1060 heat treated
W 5025	1 ea drift tool, felt ring and capsule of layshaft R 24, R 25, R 51/2	1 drift head 1 bushing	2 1	st. SAE 1060 hardened st. SAE 1015 case hardened

BMWARS

No. of Drawing	Designation	Items	Part	Material
V 5029	1 ea ignition timing device R 24, R 25, R 51/3, R 67	1 washer	9	st. SAE 1006
		4 nuts	8	st. SAE 1006
		1 indicator bolt	7	st. SAE 1040
		1 indicator, R 24, R 25	6	alu sheet metal
		1 indicator, R 51/3, R 67	5	st. SAE 1040
		1 circlip, inner diam. 8 mm (.32")	4	1 mm spring wire
		1 hexagon-headed screw	3	st. SAE 1006
		1 distance piece	2	st. SAE 1040
		1 degree plate	1	alu sheet metal available from BMW's
V 5030	1 ea puller screw, dynamo armature and magneto rotor, R 25, R 51, R 67	1 bolt	1	st. SAE 1045 hardened
V 5034	1 ea valve spring lifter with wooden plate Matra 361, R 25, R 51, R 67 Text on drawing: Montageholz = wooden plate	2 lock bolts M 10x120	5	st. SAE 1006
		1 hexagon-headed bolt M 6x45	4	st. SAE 1006
		1 knurl nut	3	st. SAE 1020
		1 lever bearing	2	st. SAE 1020
		1 lever	1	st. SAE 1020
V 5035	2 ea wooden guards, connecting rod R 24, R 25, R 51, R 67	2 wooden guards	1	beech-tree wood
L 5036	2 ea parallel bars for straightening connecting rods, R 25, R 51, R 67 Text on drawing: Stirnkanten brechen = chamfer edges Beide Prismen zusammen auf genau gleiche Maße rechtwinkelig und seitenparallel schleifen = grind both parallel bars to exactly the same values of squareness and parallelism.	2 parallel bars	1	st. SAE 1015 hardened

BMW AG

No. of Drawing	Designation	Items	Part	Material
V 5042	1 ea backlash metering device, rear drive bevel gear set R 25, R 51, R 67 Text on drawing: rändeln = to knurl Kegel = taper Meßuhr = dial gauge	1 fixing screw	8	st. SAE 1034
		1 stand for gauge holder	7	st. SAE 1034
		1 clamp screw	6	st. SAE 1034
		1 dial gauge holder	5	st. SAE 1034
		1 bushing, R 25	4	st. SAE 1034
		1 bushing, R 51, R 67	3	st. SAE 1034
		1 stop arm	2	st. SAE 1034
		1 arbour	1	st. SAE 1034
V 5043	1 ea assembly stand for motorcycles Text on drawing: versenkte Holzschrauben = countersunk wood-screws Querhölzer in Füße einzapfen = fit cross members in legs	1 wooden stand	1	fir-tree wood
V 5044	1 ea pin wrench, wheel hub cover R 25/2 Text on drawing: einpressen = press in	4 pins	2	spring steel hardened
		1 tool	1	st. SAE 1034 hardened
V 5046	1 ea adjustable lapping arbour R 24, R 25, R 51, R 67	1 tension bush 38 mm diam. R 24	5	st. SAE 1034
		1 tension bush 45 mm diam. R 25, R 51/3	4	st. SAE 1034
		1 tension bush 48 mm diam. R 51/2, R 67	3	st. SAE 1034
		1 tapered nut	2	st. SAE 1034
		1 lapping arbour	1	st.SAE 1034

BMW AG

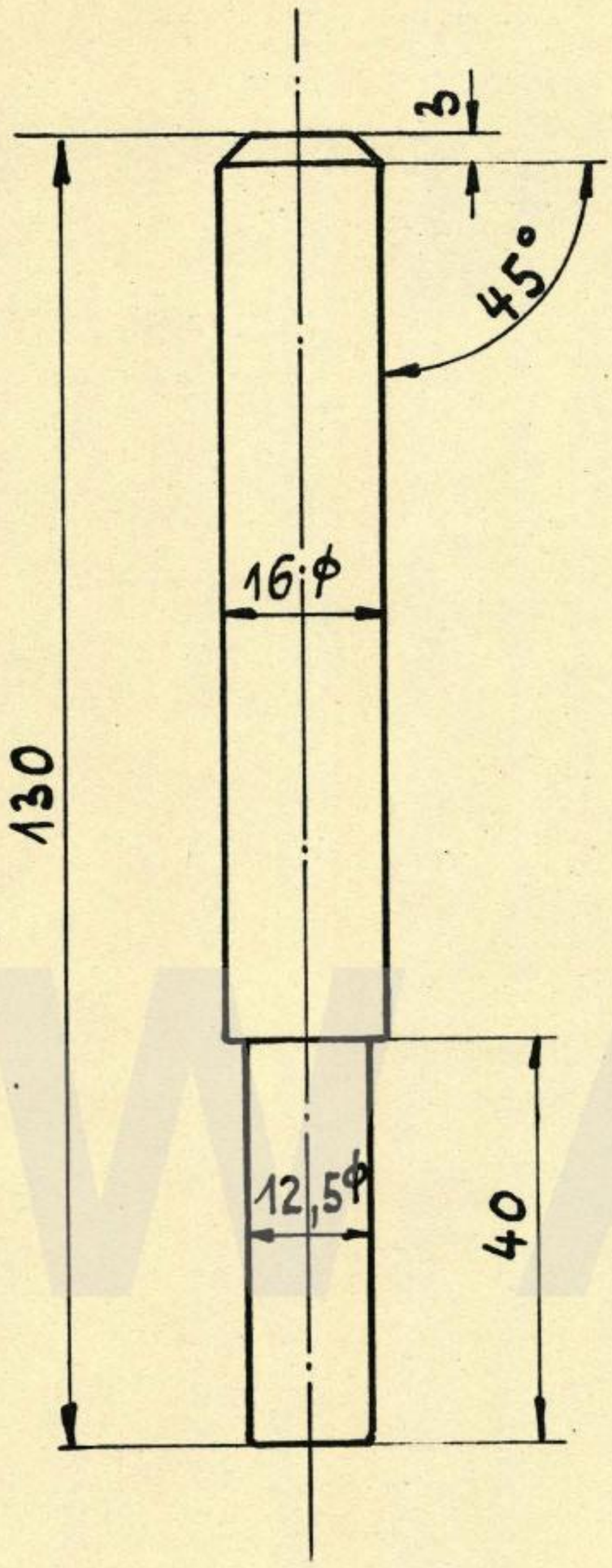

Stückzahl	Benennung und Bemerkung	Teil	Zeichng. Nr.	Werkstoff		
		3				
		2				
1	Treibdorn	1		St. 50.11		

	Datum	Name
Gezeichnet:	4.10.51	Ba
Geprüft		
Normgepr:		

BMW Kundendienstschule

Maßstab: 1:1

Treibdorn für Kolbenbolzen R 24 R25 R51 R67

Zeichnungs Nr: W 5002

Ersatz für

Ersetzt durch

BMW AG

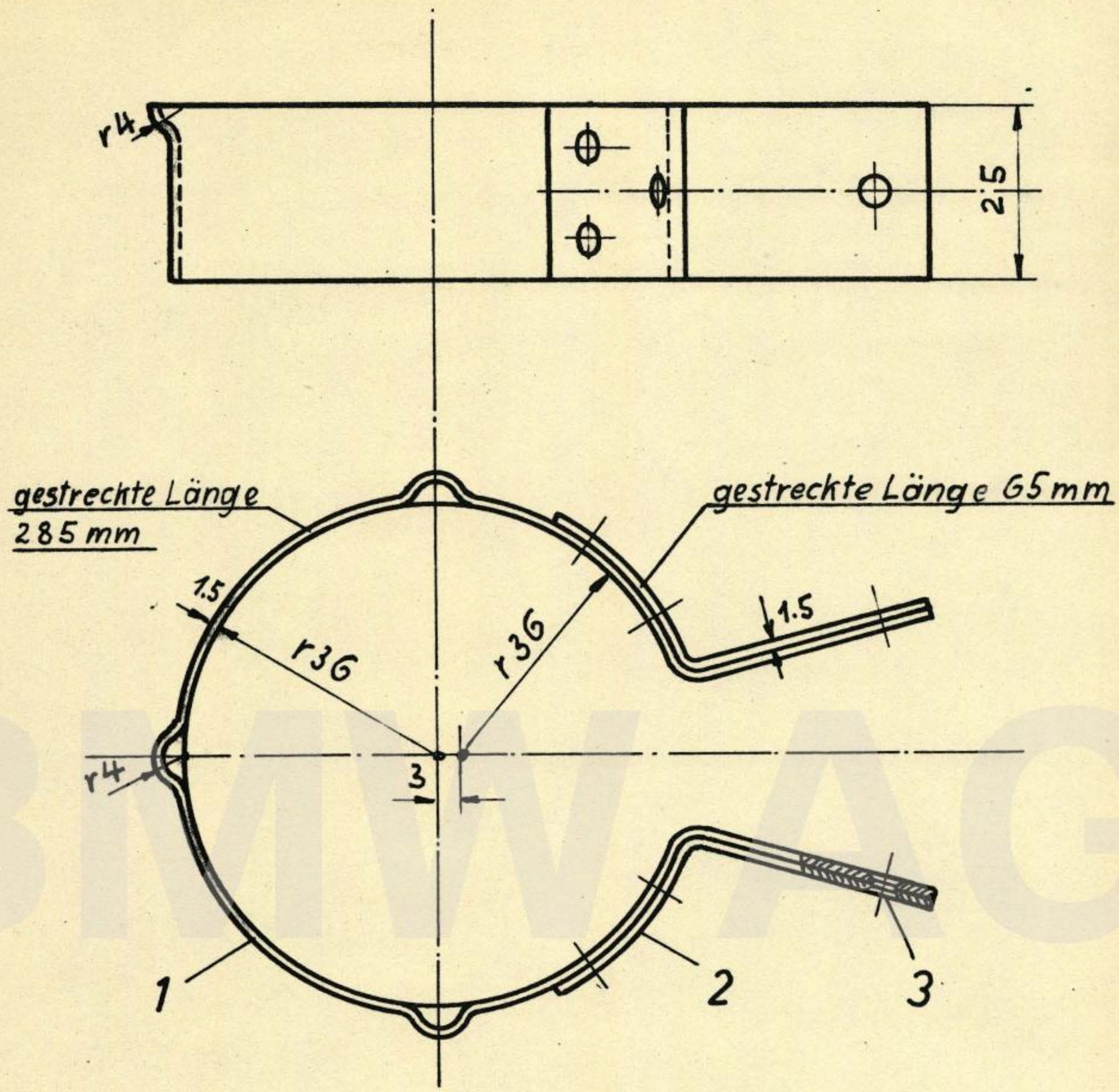

Stückzahl	Benennung und Bemerkung	Teil	Zeichng. Nr.	Werkstoff		
8	Niet	3	DIN 661	Al. 3x5		
2	Verstärkungslasche	2		Al. 99.5		
1	Manschette	1		Al. 99.5		

	Datum	Name
Gezeichnet:	2.10.51	Pza
Geprüft:		
Normgepr.		

BMW Kundendienstschule

Maßstab: 1:1

Kolbenringmanschette
R25 R25 R51 R67

Zeichnungs Nr: W 5003

Ersatz für

Ersetzt durch

BMW AG

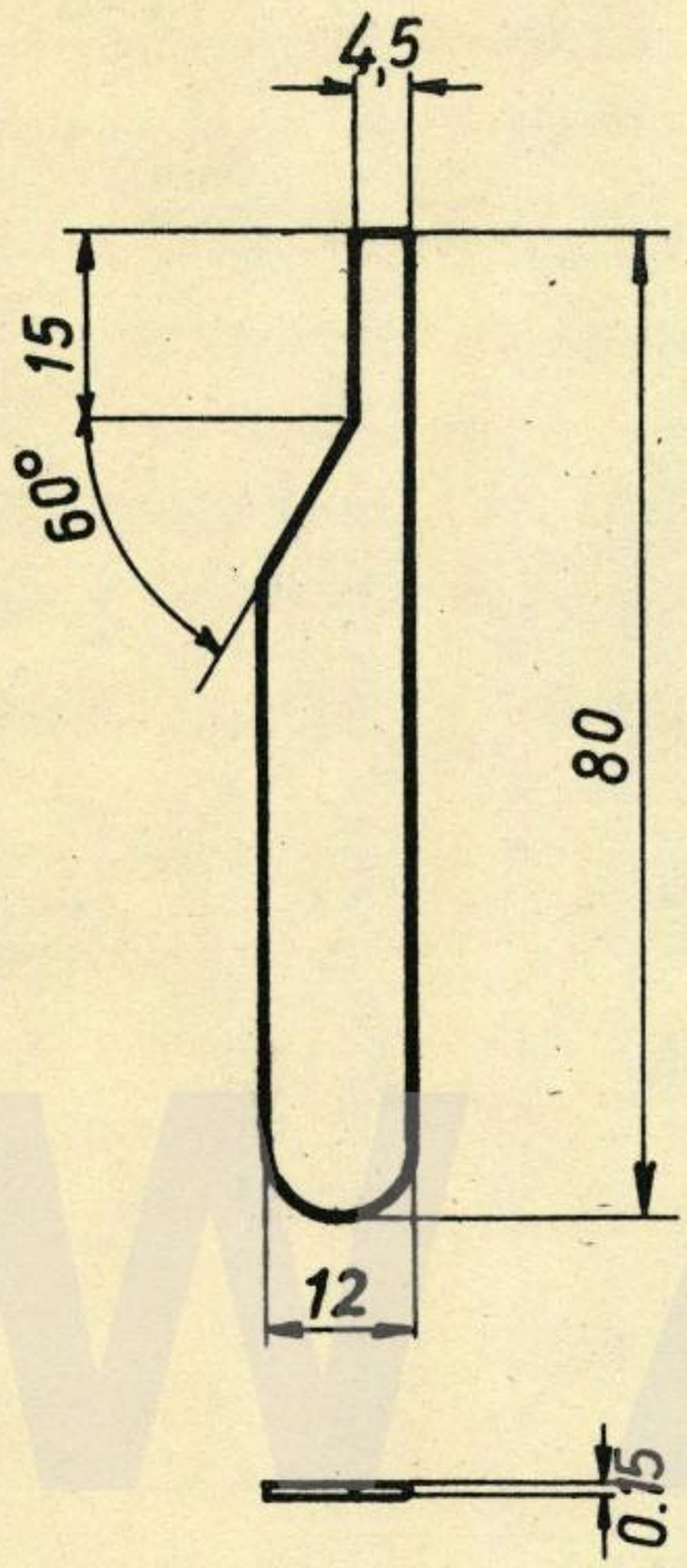

		3				
		2				
1	Lehre	1		St. V.23		
Stück-zahl	Benennung und Bemerkung	Teil	Zeichng. Nr.	Werkstoff		

	Datum	Name
Gezeichnet:	27.9.50	Pa
Geprüft:	"	Mea.
Normgepr.		

BMW Kundendienstschule

Maßstab: 1:1

Fühlerlehre zum Prüfen der Scheibenfeder f. Schwungscheibe R 25/51/67

Zeichnungs-Nr. L 5008

Ersatz für

Ersetzt durch

BMW AG

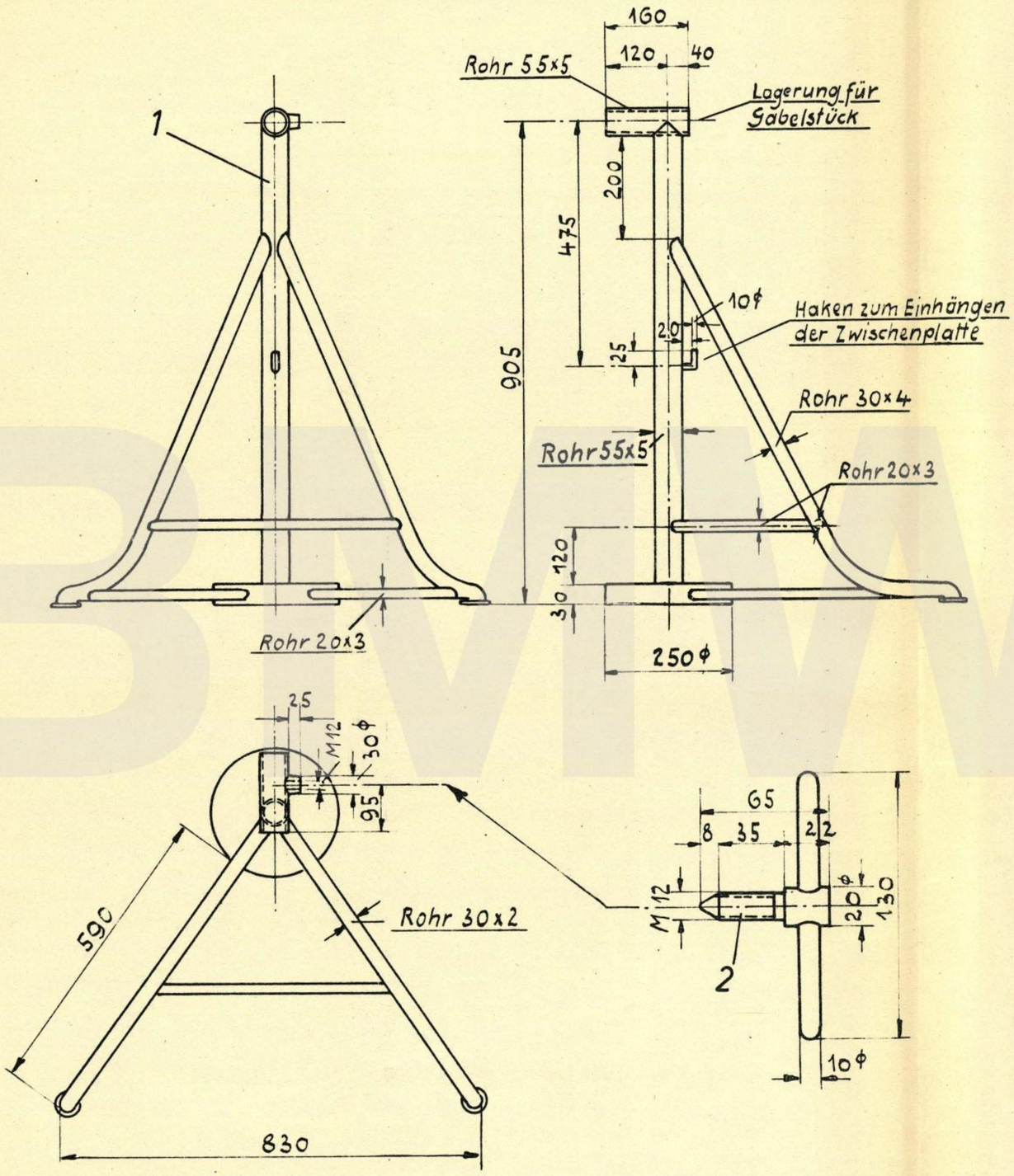

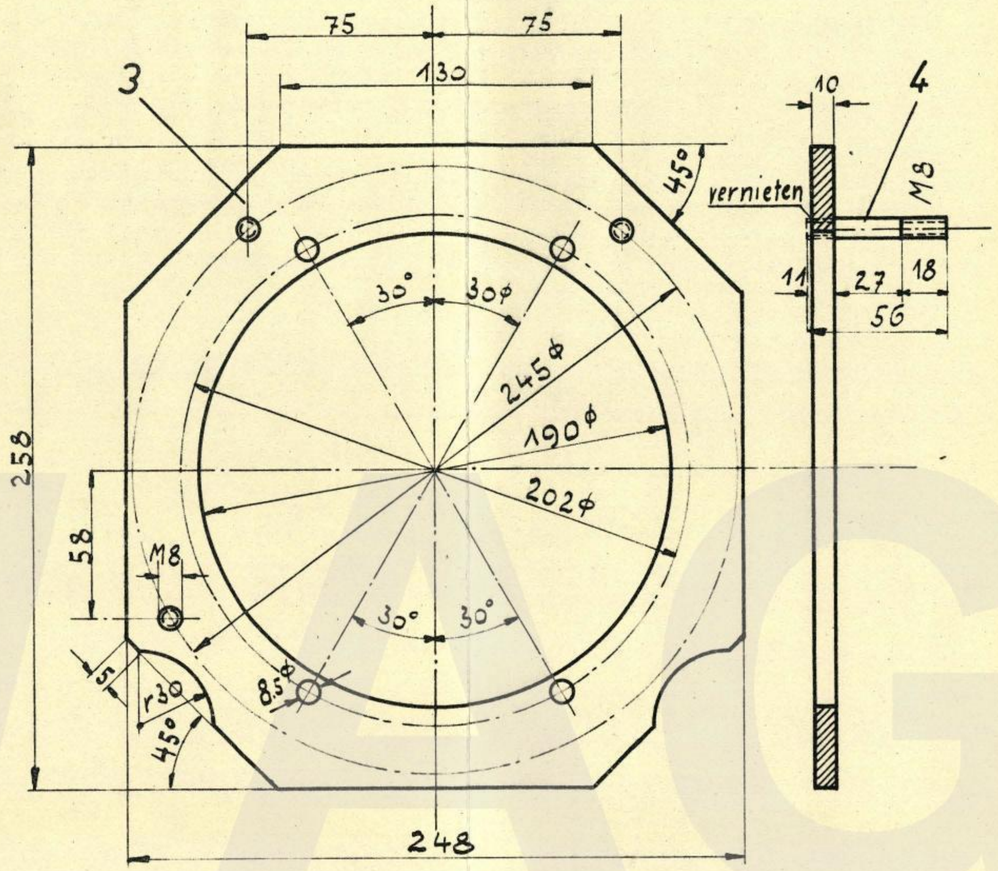

Zwischenplatte zum Aufspannen von Motor und Getriebe R24 R25

Stückzahl	Benennung und Bemerkung	Teil	Zeichng Nr.	Werkstoff		
3	Stiftschrauben	4		St. 60 11		
1	Zwischenplatte	3		St. 37 21		
1	Feststellschraube	2		St. 42.12		
1	Ständer aus Rohren geschweißt	1		Stahl		

	Datum	Name
Gezeichnet:	28.9.51	Ba
Geprüft:		
Normgepr:		

BMW Kundendienstschule

Maßstab: 1:10 1:2,5

Wende-Montagebock für Motor und Getriebe R24 R25 R51 R67

V 5014 Blatt 1

Ersatz für

Ersetzt durch

BMW AG

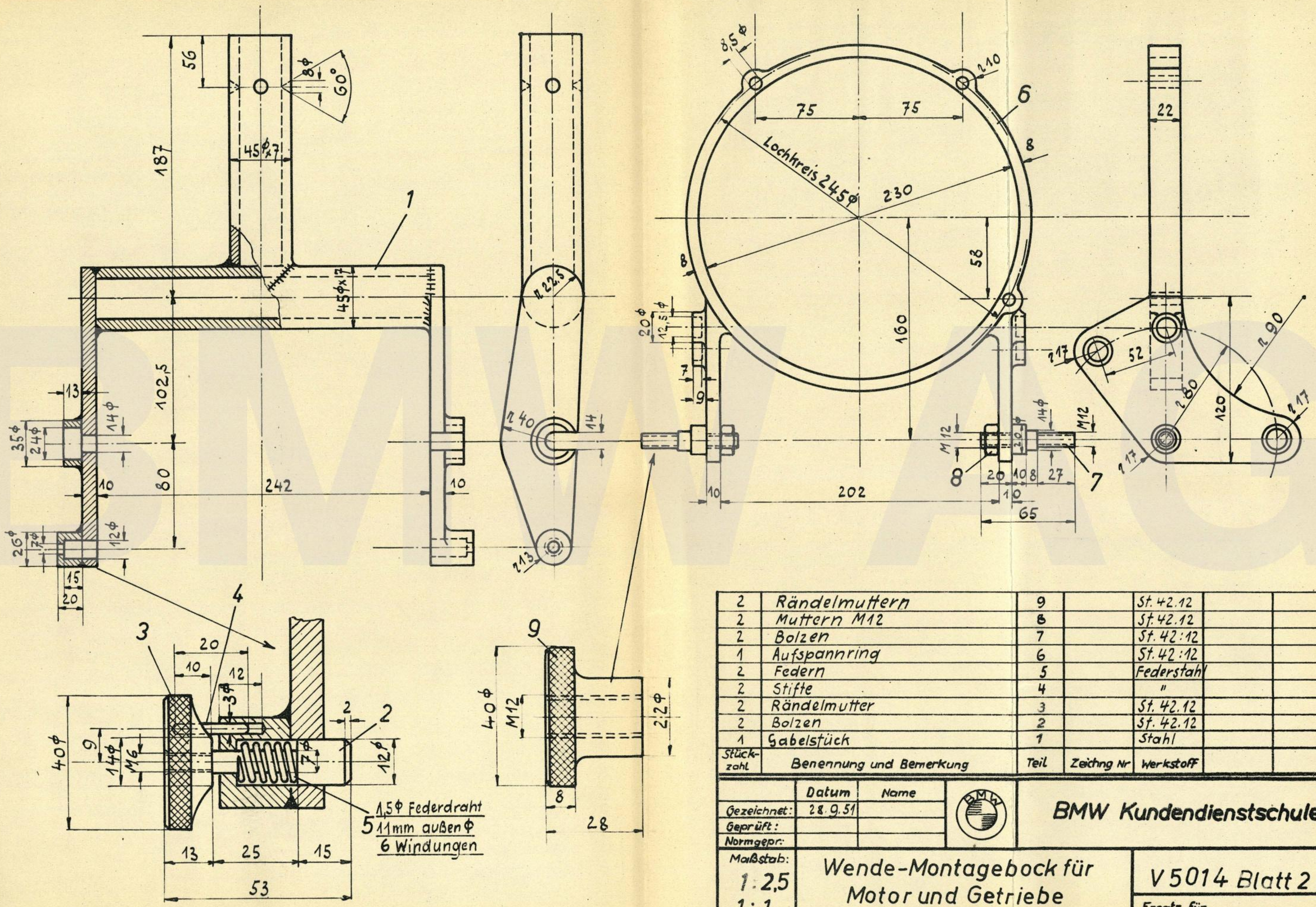

Stückzahl	Benennung und Bemerkung	Teil	Zeichng Nr	Werkstoff		
2	Rändelmuttern	9		St. 42.12		
2	Muttern M12	8		St. 42.12		
2	Bolzen	7		St. 42:12		
1	Aufspannring	6		St. 42:12		
2	Federn	5		Federstahl		
2	Stifte	4		"		
2	Rändelmutter	3		St. 42.12		
2	Bolzen	2		St. 42.12		
1	Gabelstück	1		Stahl		

	Datum	Name
Gezeichnet:	28.9.51	
Geprüft:		
Normgepr:		

BMW Kundendienstschule

Maßstab: 1:2,5 1:1

Wende-Montagebock für Motor und Getriebe R24 R25 R51 R 67

V 5014 Blatt 2

Ersatz für

Ersetzt durch

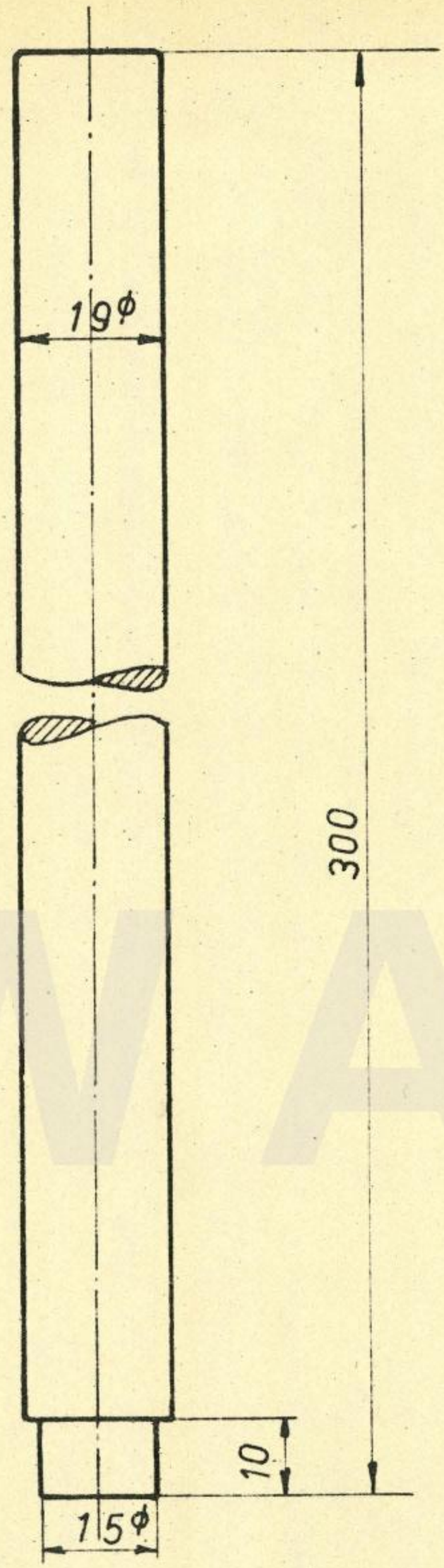

		3				
		2				
1	Gleitrohr	1		St. 50.11		
Stück-zahl	Benennung und Bemerkung	Teil	Zeichng. Nr	Werkstoff		

	Datum	Name
Gezeichnet:	27.9.50	Bza.
Geprüft:	"	Mba.
Normgepr.		

BMW Kundendienstschule

Maßstab: 1:1

Schlagdorn für Gleitrohr R 25

Zeichnungs-Nr. W5015

Ersatz für

Ersetzt durch

BMW AG

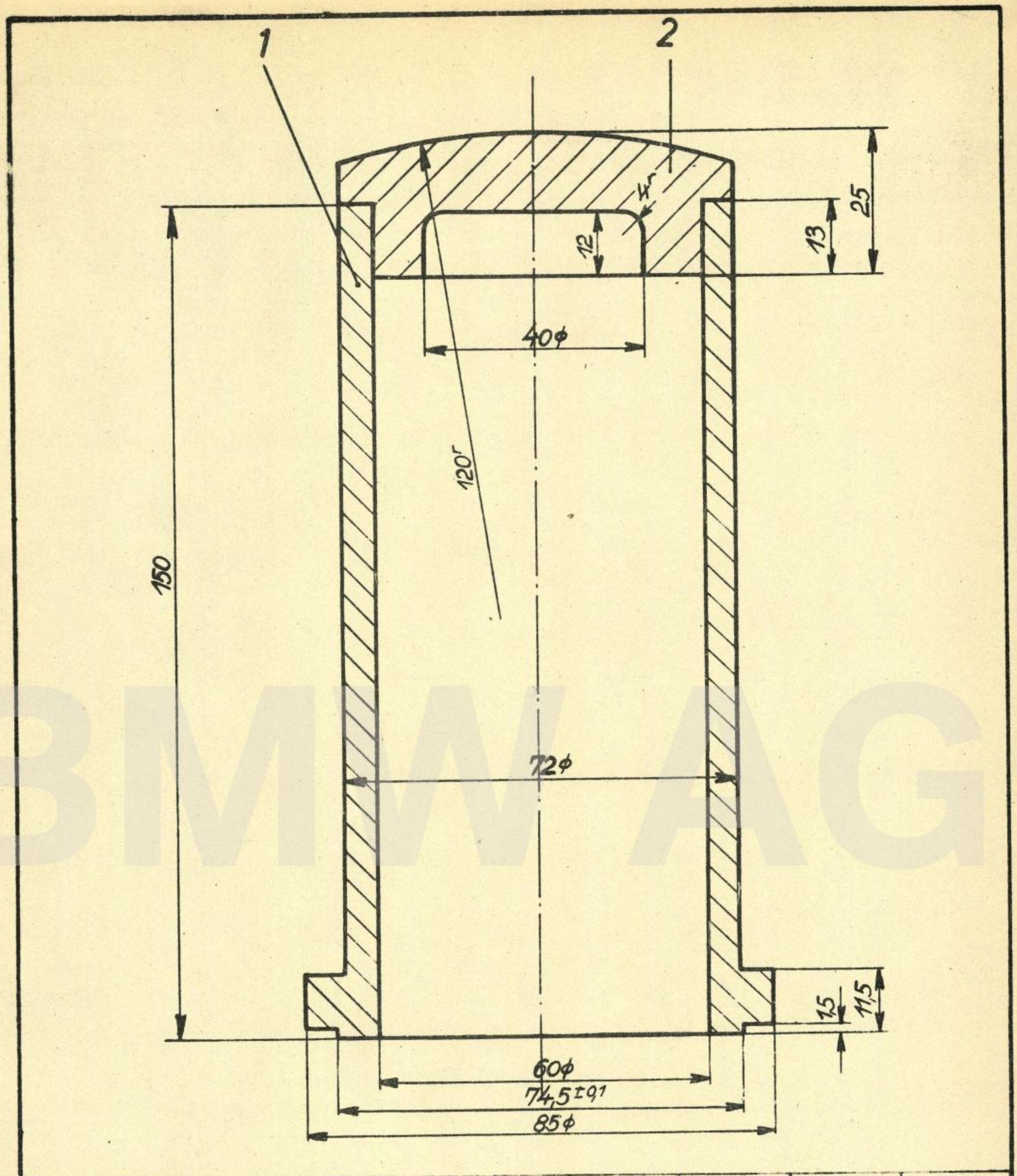

Stückzahl	Benennung und Bemerkung	Teil	Zeichng. Nr.	Werkstoff		
		3				
1	Pilz	2		St 50.11		
1	Rohr	1		St 50.11		

	Datum	Name
Gezeichnet:	13.9.50	Pa
Geprüft:		
Normgepr.		

BMW Kundendienstschule

Maßstab: 1:1

Schlagrohr für Simmerring des Hinterradantriebsgehäuses R 25

Zeichnungs-Nr. W 5016

Ersatz für

Ersetzt durch

BMW AG

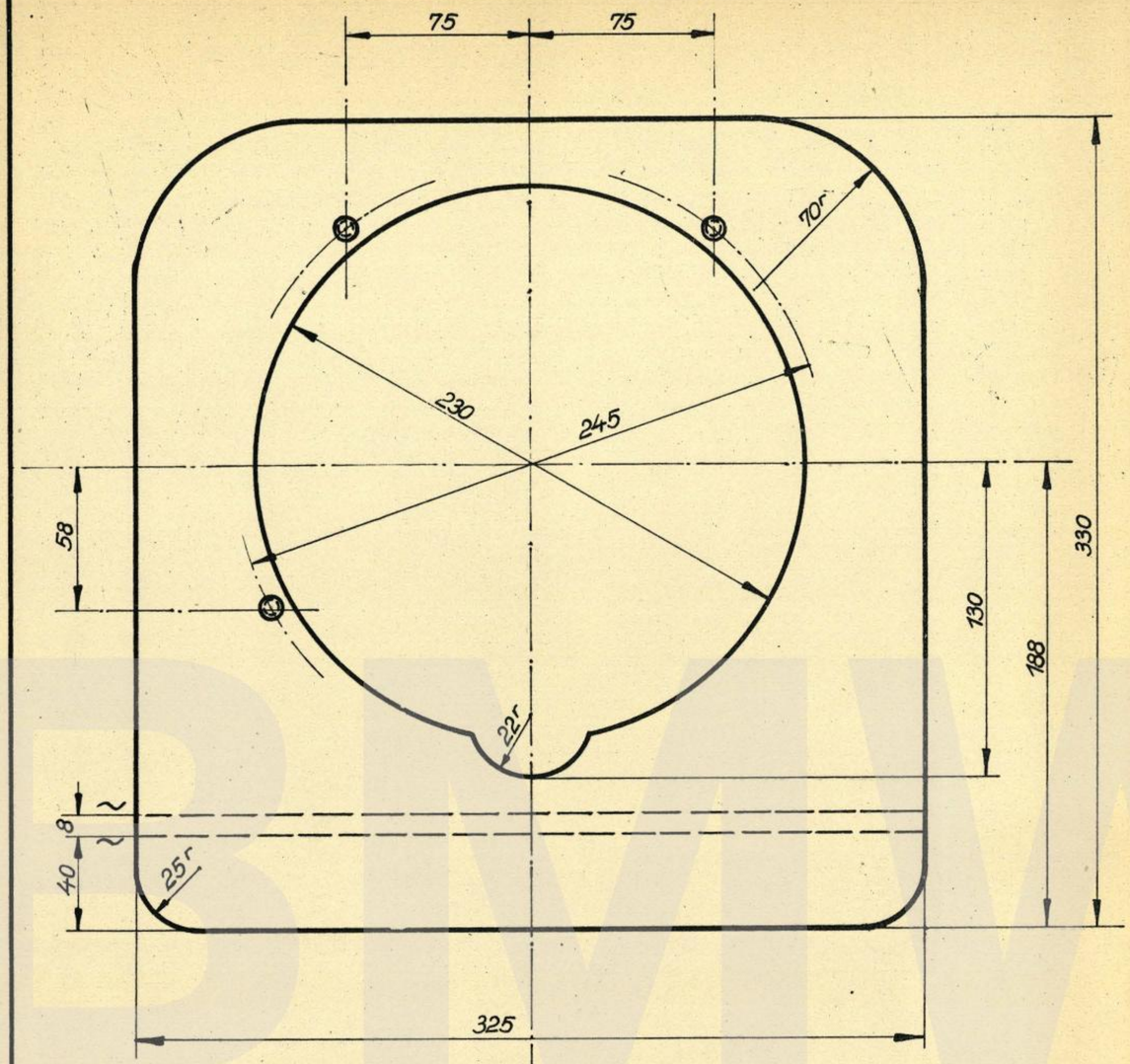

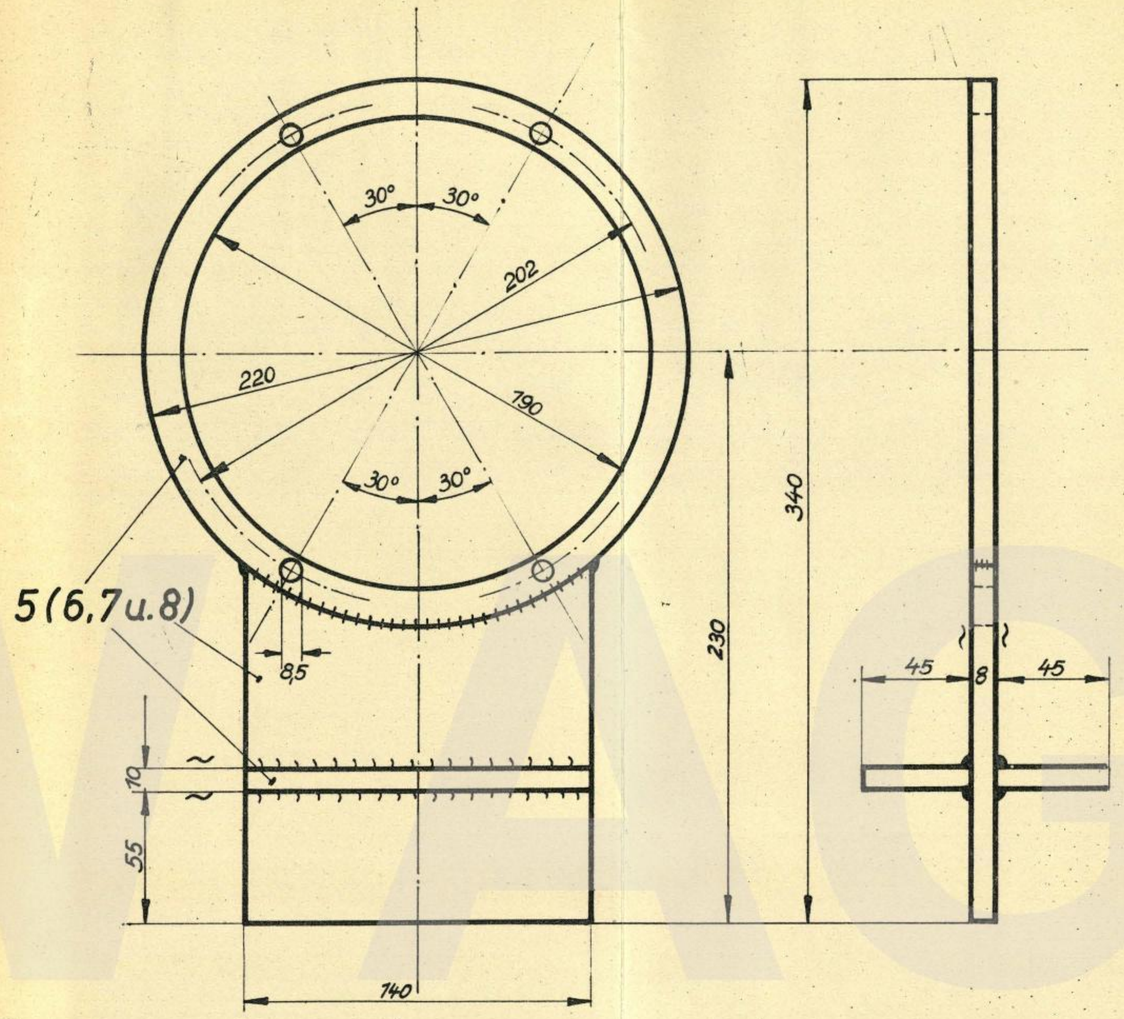

R 24 u R25

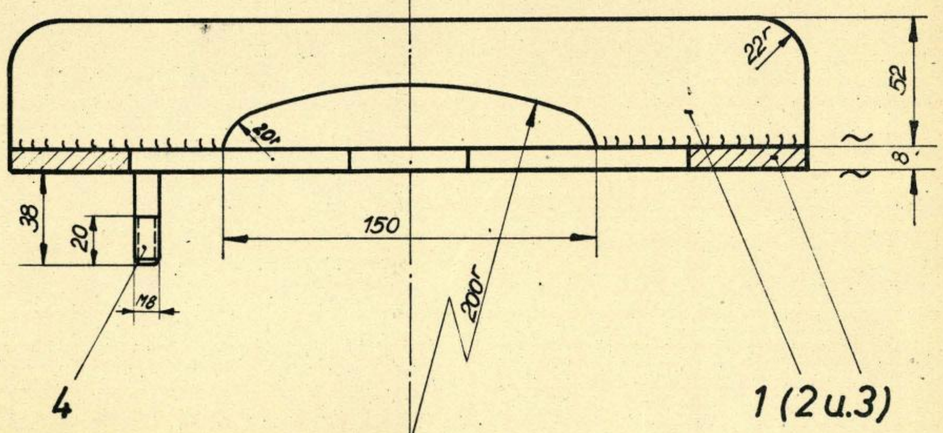

R 51/2

Stückzahl	Benennung und Bemerkung	Teil	Zeichng. Nr.	Werkstoff		
1	Platte	8		St. 00.21		
2	Halteplatte	7		St. 00.21		
1	Aufnahmering	6		St. 00.21		
1	Aufnahme für Baumuster R24 u. R25 (Schweißteil)	5	besteht aus	Tl. 6, 7 u. 8		
3	Stiftschraube	4		St. 50.11		
1	Halteplatte	3		St. 00.21		
1	Aufnahmeplatte	2		St. 00.21		
1	Aufnahme für Baumuster R 51 (Schweißteil)	1	besteht aus	Tl. 2 u. 3		

	Datum	Name
Gezeichnet	3. 10. 50	Me.
Geprüft:		
Normgepr.		

BMW Kundendienstschule

Maßstab: 1:1

Aufnahme
für Getriebe R 24, R25 u. R51

V 5017

Ersatz für

Ersetzt durch

BMW AG

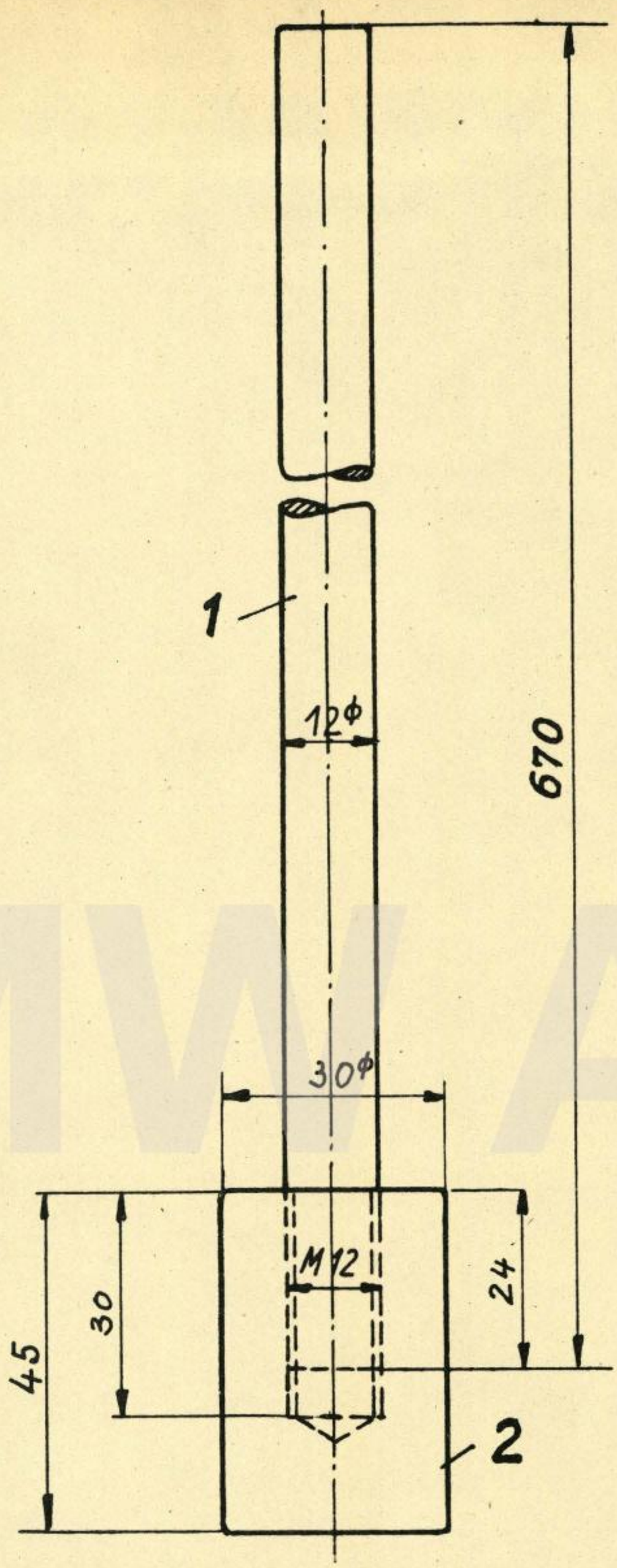

Stückzahl	Benennung und Bemerkung	Teil	Zeichng. Nr.	Werkstoff		
		3				
1	Fußstück	2		St. 50.11		
1	Bolzen	1		St. 50.11		

	Datum	Name
Gezeichnet:	1.2.51	Pa
Geprüft:		
Normgepr.		

BMW Kundendienstschule

Maßstab: 1:1

Ausstoßstange für Gabelbüchsen R 24/25

Zeichnungs-Nr. W 5018

Ersatz für

Ersetzt durch

BMW AG

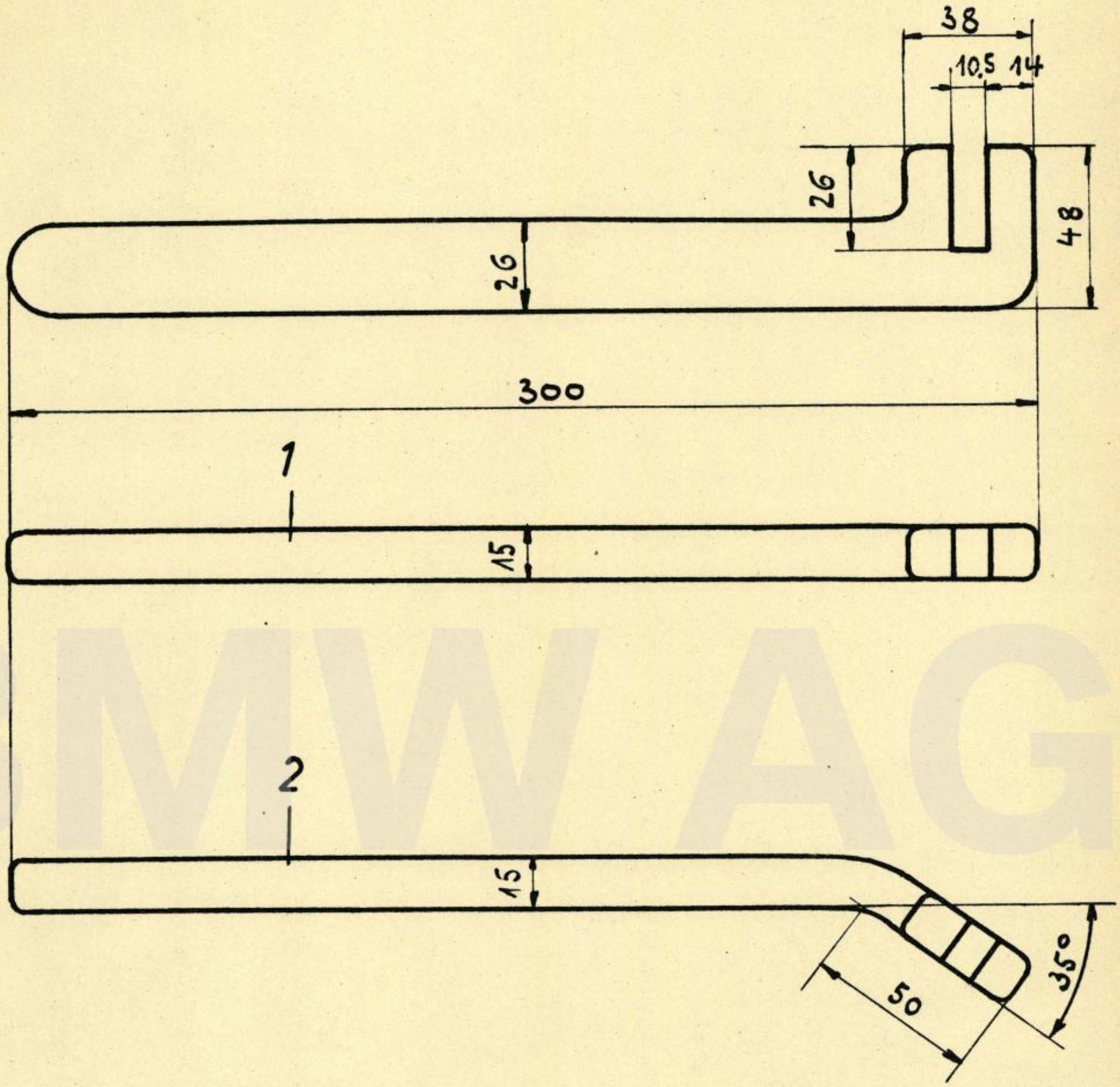

Stückzahl	Benennung und Bemerkung	Teil	Zeichng Nr	Werkstoff		
		3				
1	Sprengeisen gekröpft	2		St. 37.21		
1	Sprengeisen gerade	1		St. 37.21		

	Datum	Name
Gezeichnet:	1.10.51	Sza
Geprüft:		
Normgepr:		

BMW Kundendienstschule

Maßstab: 1:2

Sprengeisen zum Auswinkeln der Pleuel R24/R25/R51/R67

Zeichnungs Nr: W 5021

Ersatz für

Ersetzt durch

BMW AG

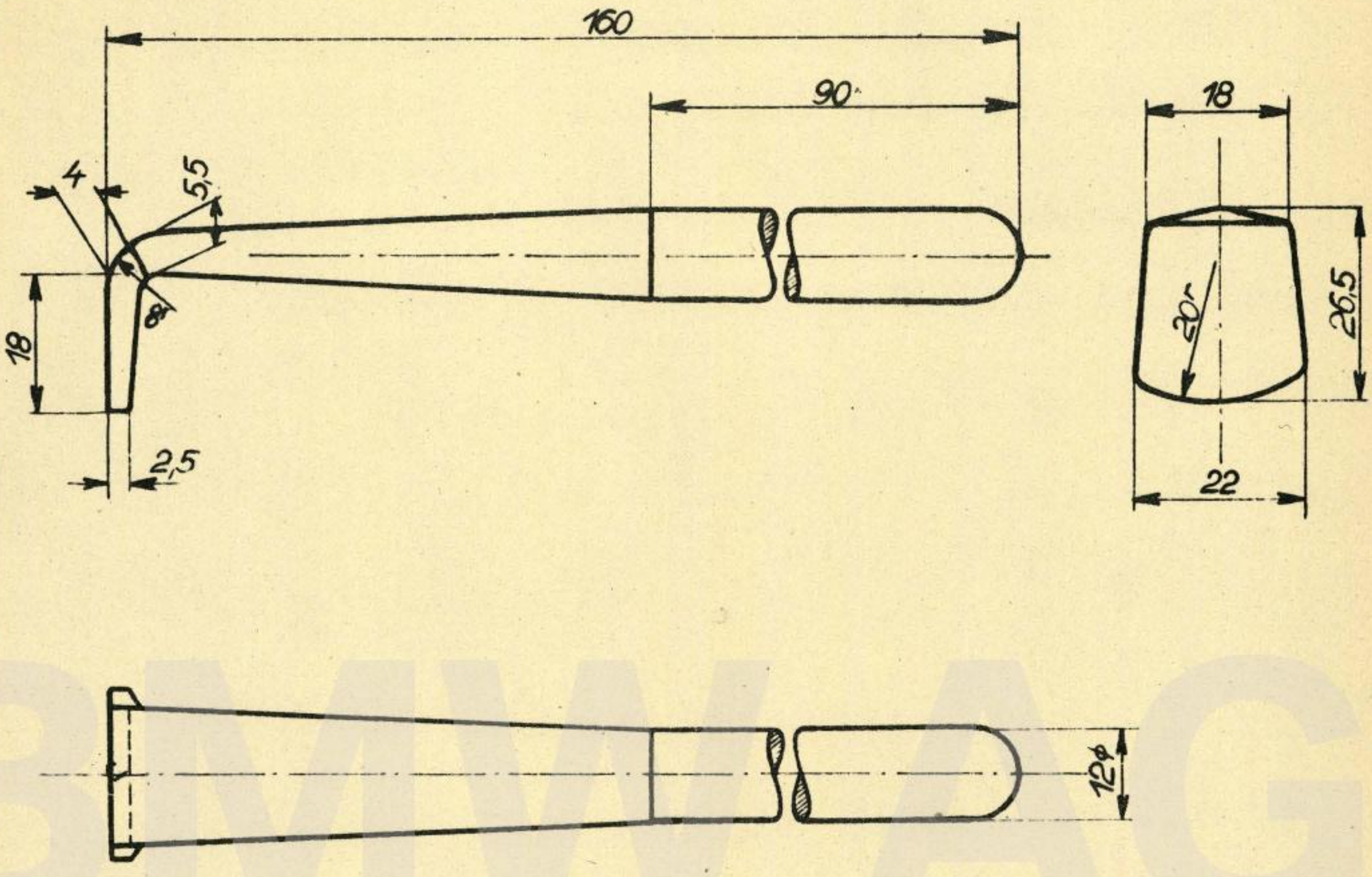

		3				
		2				
	Schraubenzieher	1		St.C 45.61		verg.
Stück-zahl	Benennung und Bemerkung	Teil	Zeichng. Nr.	Werkstoff		

	Datum	Name
Gezeichnet:	5.2.51	Pa
Geprüft:		
Normgepr.		

BMW Kundendienstschule

Maßstab: 1:1

Schraubenzieher für Verschlußschraube der Antriebswelle zur Ölpumpe R 25 R 51/2

Zeichnungs-Nr. W 5022

Ersatz für

Ersetzt durch

BMW AG

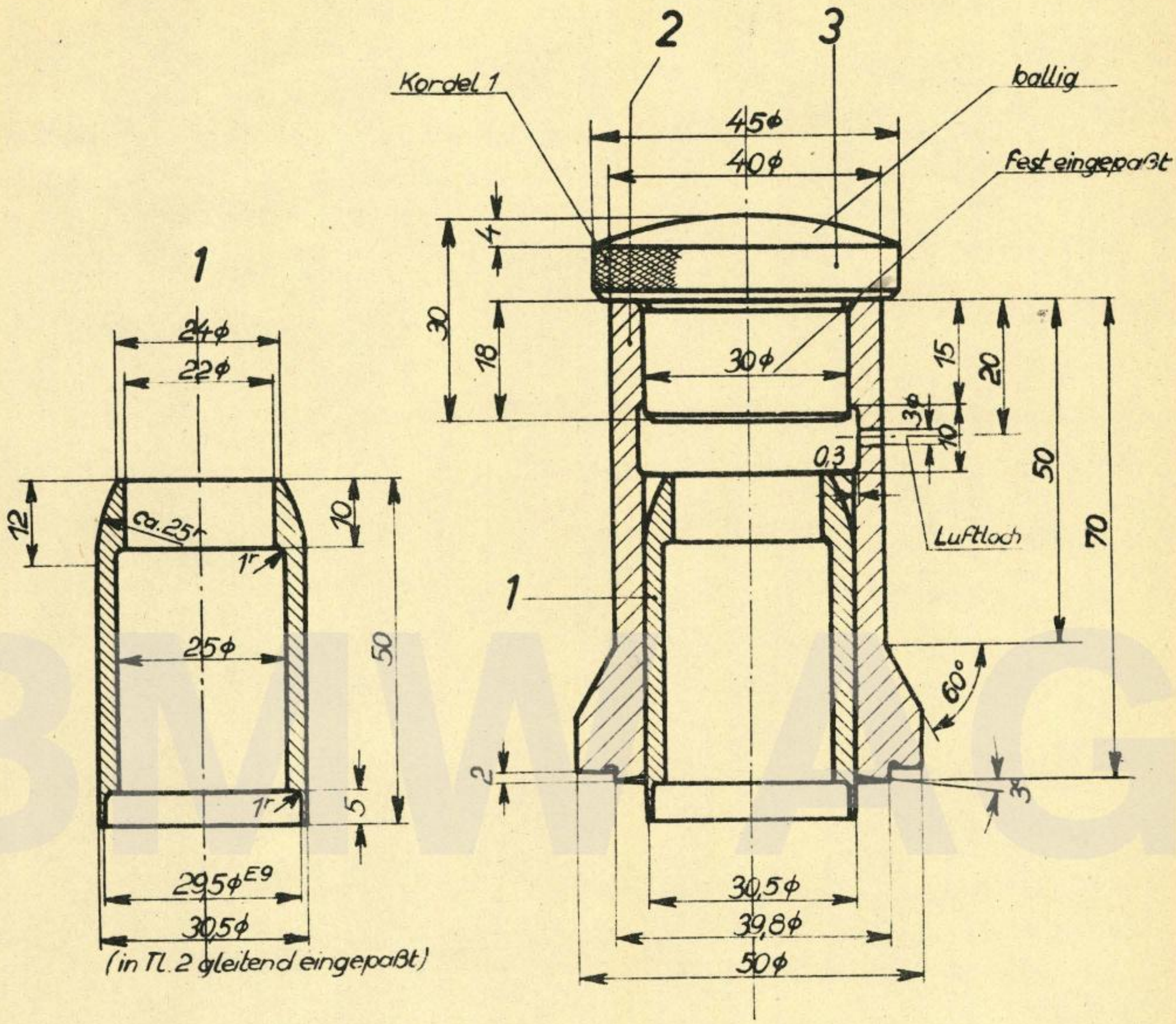

Stückzahl	Benennung und Bemerkung	Teil	Zeichng. Nr.	Werkstoff		
1	Pilz	3		St C 60.61		geh.
1	Büchse	2		St C 16.61		i.Eins.geh.
1	Büchse	1		St C 60.61		verg.

	Datum	Name
Gezeichnet:	6.2.51	Ba
Geprüft:		
Normgepr.		

BMW Kundendienstschule

Maßstab: 1:1

Schlagbüchse für Filzring und Kapsel, oder Simmerring der Antriebswelle R 24/25

Zeichnungs-Nr. W 5023

Ersatz für

Ersetzt durch

BMW

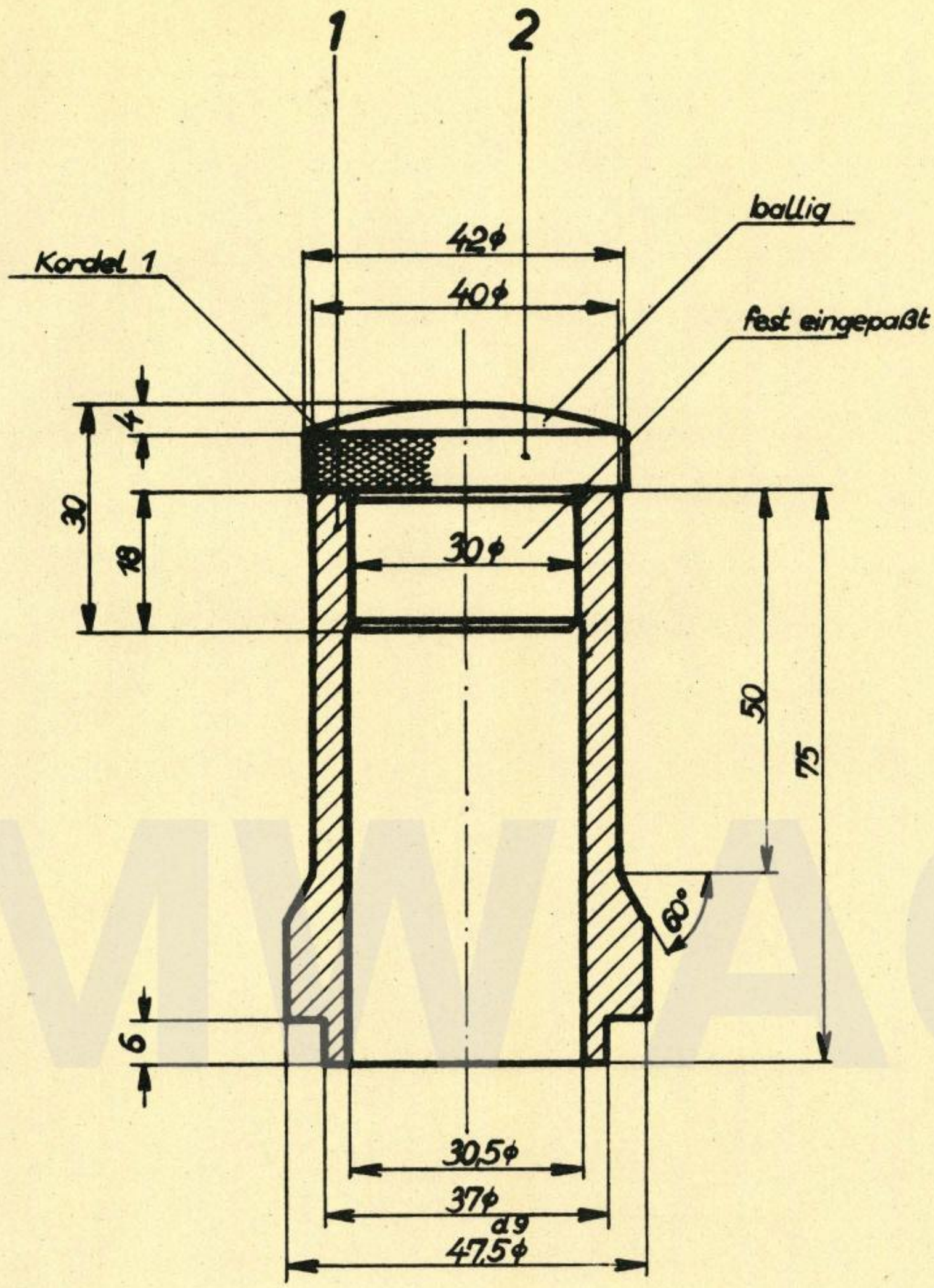

		3				
1	Pilz	2		St C 60.61		geh
1	Büchse	1		St C 16.61		i.Eins.geh.
Stück-zahl	Benennung und Bemerkung	Teil	Zeichng. Nr	Werkstoff		

	Datum	Name
Gezeichnet:	7.2.51.	Pe
Geprüft:		
Normgepr.		

BMW Kundendienstschule

Maßstab: 1:1

Schlagbüchse für Filzring und Kapsel der Abtriebswelle R24/25 R51/2

Zeichnungs-Nr. W 5025

Ersatz für

Ersetzt durch

BMW AG

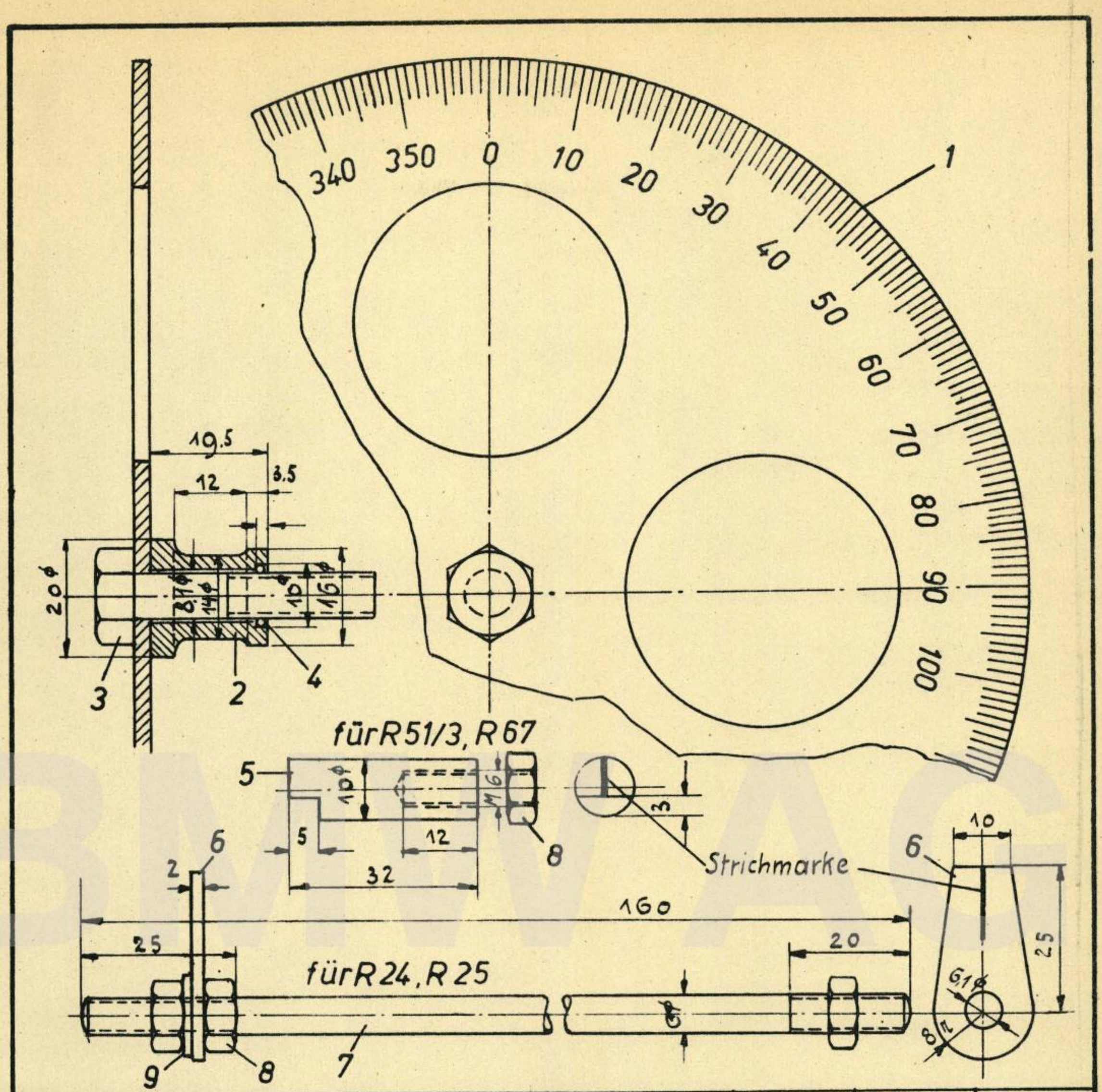

Stückzahl	Benennung und Bemerkung	Teil	Zeichng. Nr.	Werkstoff		
1	Unterlegscheibe	9		St. 34.13		
4	Muttern	8		St. 34.13		
1	Stehbolzen	7		St. 35.61		
1	Zeiger für R24, R25	6		Alu. Blech		
1	Zeiger für R51/3, R67	5		St. 35.61		
1	Federdrahtring innen 8ϕ x 1	4		1mm Federdraht		
1	Kopfschraube M8x40 DIN 931	3		St 34.13		
1	Abstandsbüchse	2		St. 35.61		
1	Gradscheibe	1		Alu. Blech	von BMW	zu beziehen

	Datum	Name
Gezeichnet:	15.8.51	Rau
Geprüft:		
Normgepr.		

BMW Kundendienstschule

Maßstab: 1:1

Zündzeitpunkt-Einstellvorrichtung R24/25, R51/3, R67

V 5029

Ersatz für

Ersetzt durch

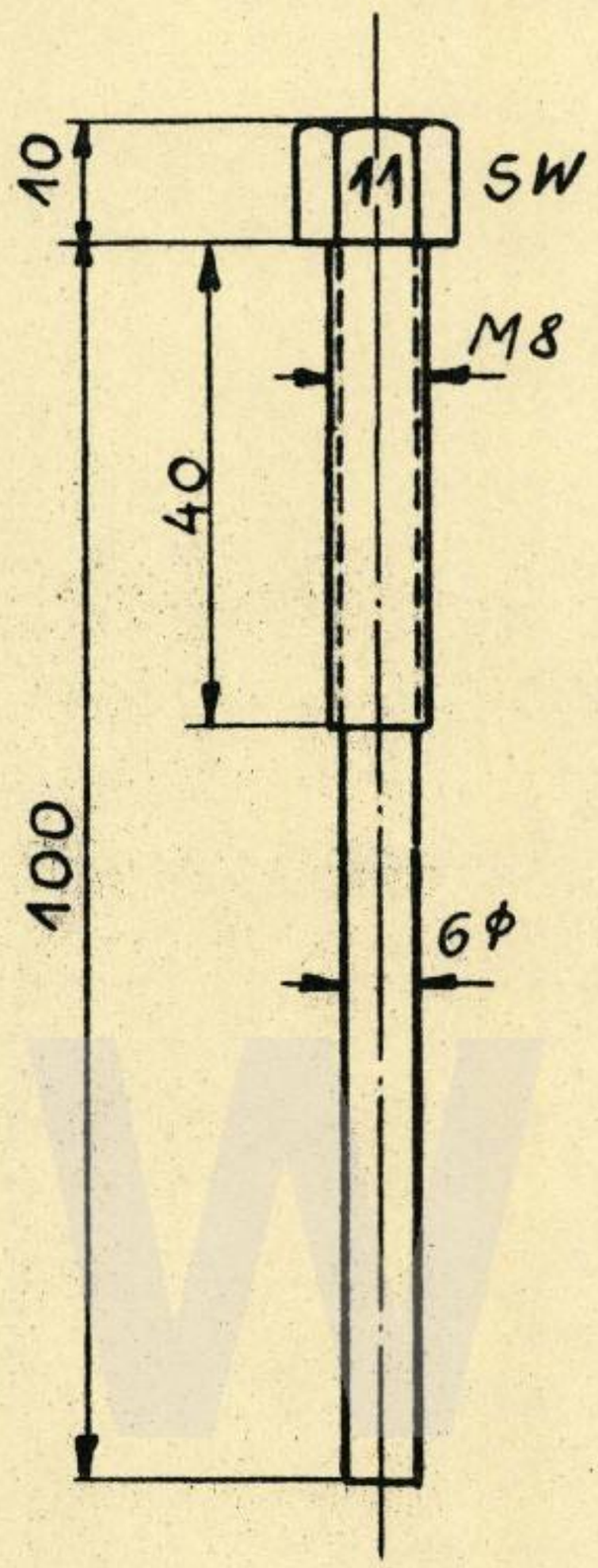

Stückzahl	Benennung und Bemerkung	Teil	Zeichng. Nr.	Werkstoff		
		3				
		2				
1	Abdrückbolzen	1		St C 45.61	gehärtet	

	Datum	Name
Gezeichnet:	30.8.51	Ba
Geprüft:		
Normgepr.		

BMW Kundendienstschule

Maßstab: 1:1

Abdrückschraube für Lichtmaschinenanker u. Magnetläufer R25 R51 R67

V 5030

Ersatz für

Ersetzt durch

BMW AG

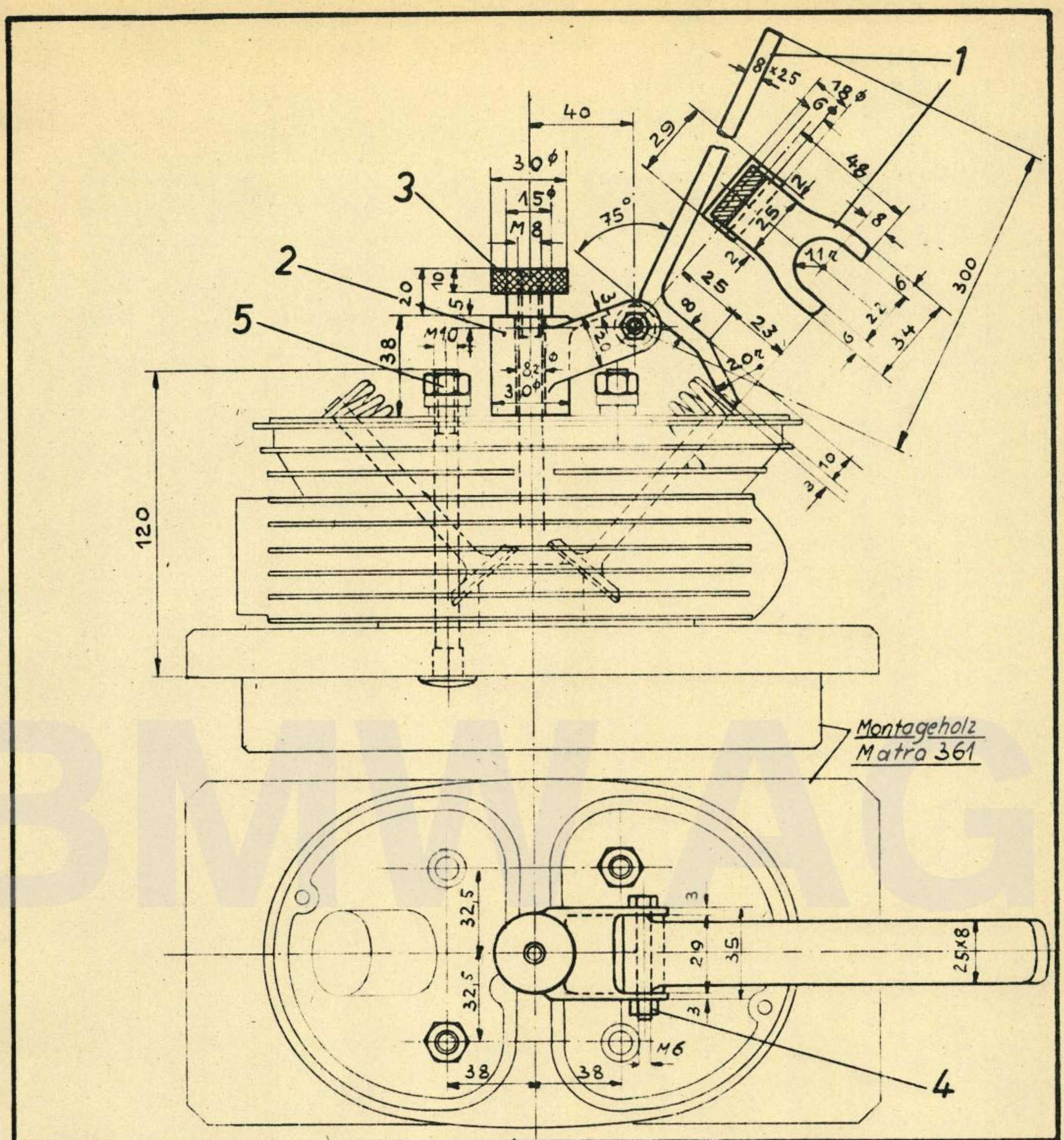

Stückzahl	Benennung und Bemerkung	Teil	Zeichng. Nr.	Werkstoff		
		6				
2	Schloßschraube M10×120	5		St. 34.11		
1	Kopfschraube M6×45	4		St. 34.11		
1	Rändelmutter	3		St 42.12		
1	Hebellager	2		St. 42.12		
1	Hebel	1		St. 42.12		

	Datum	Name
Gezeichnet:	7.9.51.	Pa
Geprüft:		
Normgepr.		

BMW Kundendienstschule

Maßstab: 1:1

Ventilfederhebevorrichtung mit Montageholz Matra 361 R25 R51 R67

V 5034

Ersatz für

Ersetzt durch

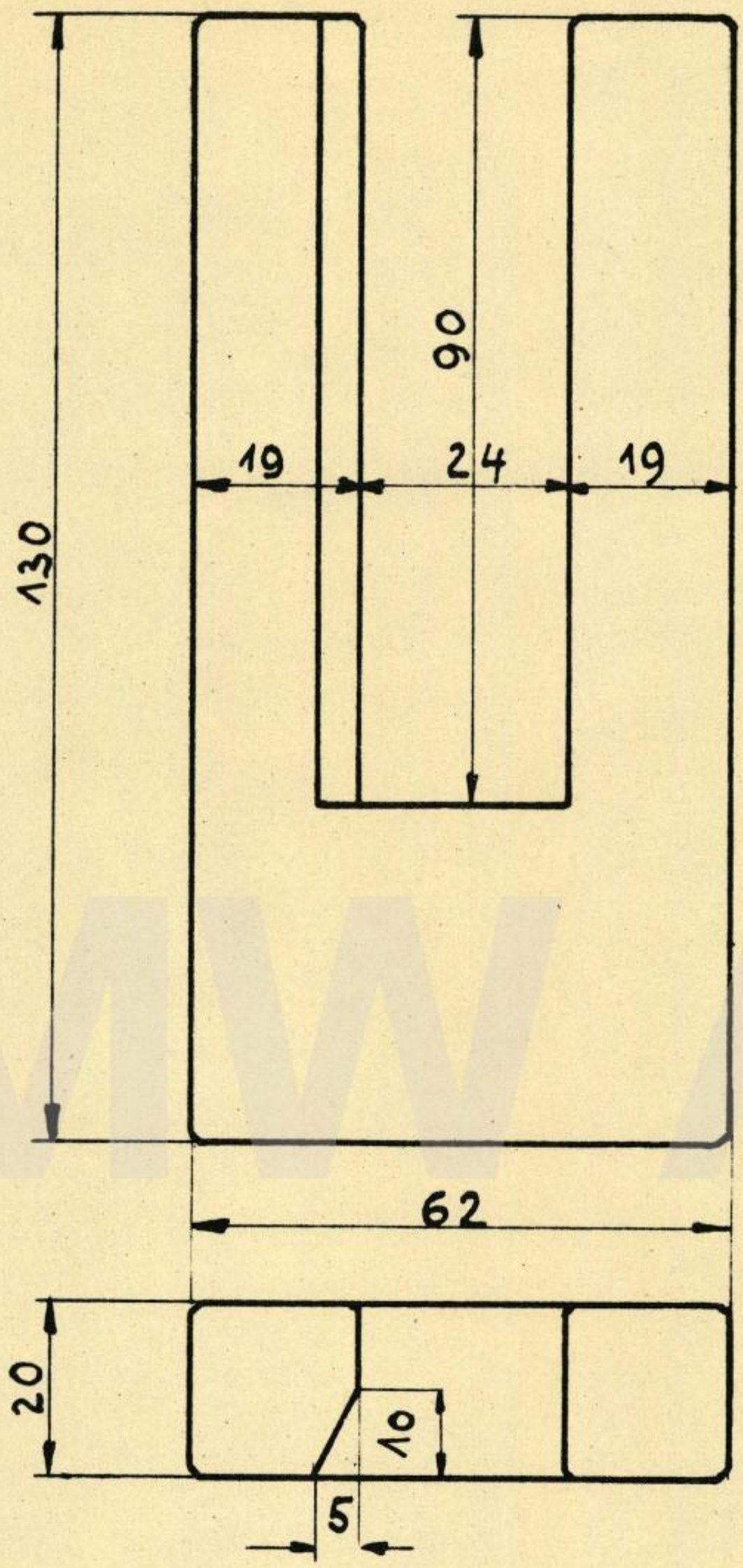

		3				
		2				
2	Schutzholz	1		Buchenholz		
Stück-zahl	Benennung und Bemerkung	Teil	Zeichng. Nr.	Werkstoff		

	Datum	Name
Gezeichnet:	4.9.51.	Pa
Geprüft:		
Normgepr.		

BMW Kundendienstschule

Maßstab: 1:1

Montage-Pleuelschutzholz
R 24, 25, 51, 67

V 5035

Ersatz für

Ersetzt durch

BMW AG

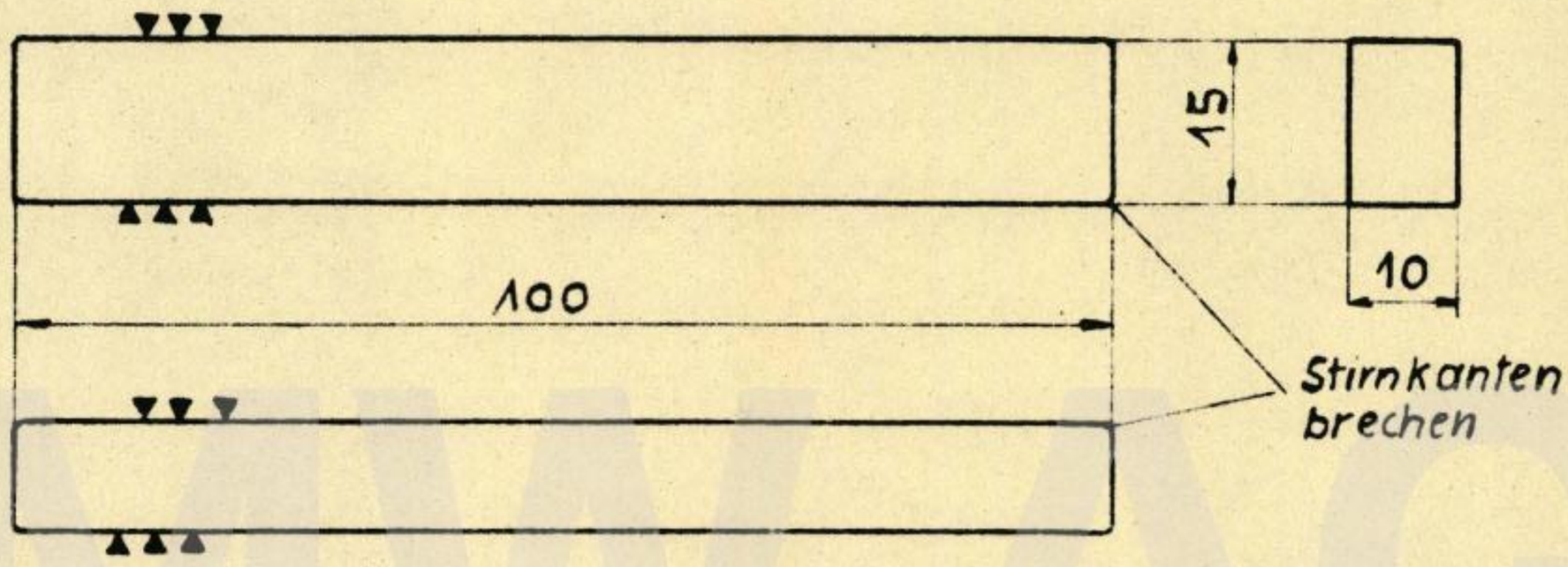

Beide Prismen zusammen auf genau gleiche Maße rechtwinkelig und seitenparallel schleifen.

		3				
		2				
2	Prismen	1		St. 16.61	härten	
Stück-zahl	Benennung und Bemerkung	Teil	Zeichng. Nr.	Werkstoff		

	Datum	Name
Gezeichnet:	7.9.51	Pfa
Geprüft:		
Normgepr.		

BMW Kundendienstschule

Maßstab: 1:1

Prismen zum Auswinkeln der Pleuel R25 R51 R67

L 5036

Ersatz für

Ersetzt durch

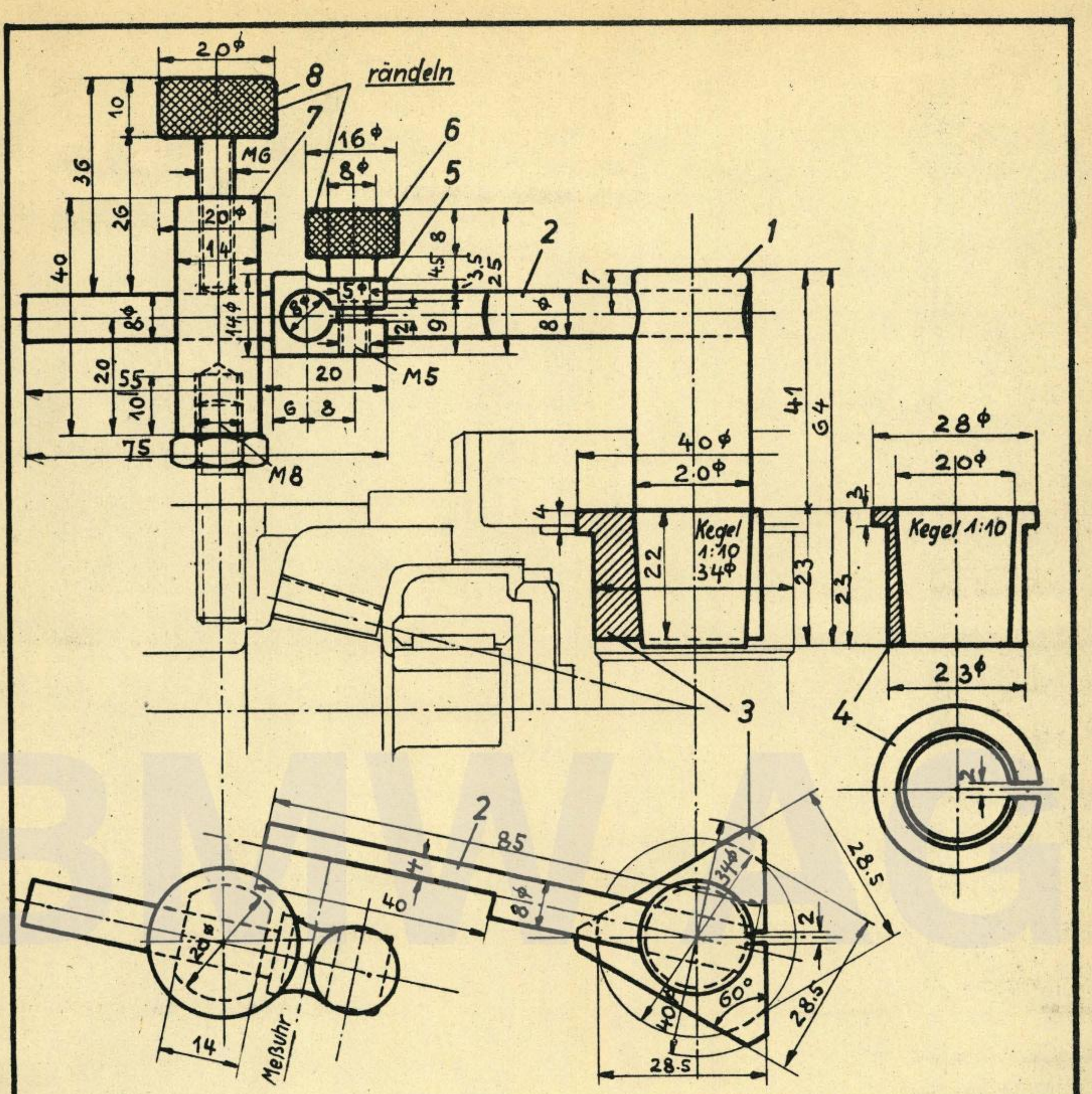

Stückzahl	Benennung und Bemerkung	Teil	Zeichng. Nr.	Werkstoff		
1	Fixierschraube	8		St. 50.11		
1	Ständer für Meßuhrhalter	7		St. 50.11		
1	Klemmschraube	6		St. 50.11		
1	Messuhrhalter	5		St. 50.11		
1	Büchse für R25	4		St. 50.11		
1	Büchse für R51, R67	3		St. 50.11		
1	Anschlagstift	2		St. 50.11		
1	Mitnehmerbolzen	1		St. 50.11		

	Datum	Name
Gezeichnet:	18.9.51	Ba
Geprüft:		
Normgepr.		

BMW Kundendienstschule

Maßstab: 1:1

Zahnspielmeßvorrichtung für Hinterradantrieb R25, R51, R67

V 5042

Ersatz für

Ersetzt durch

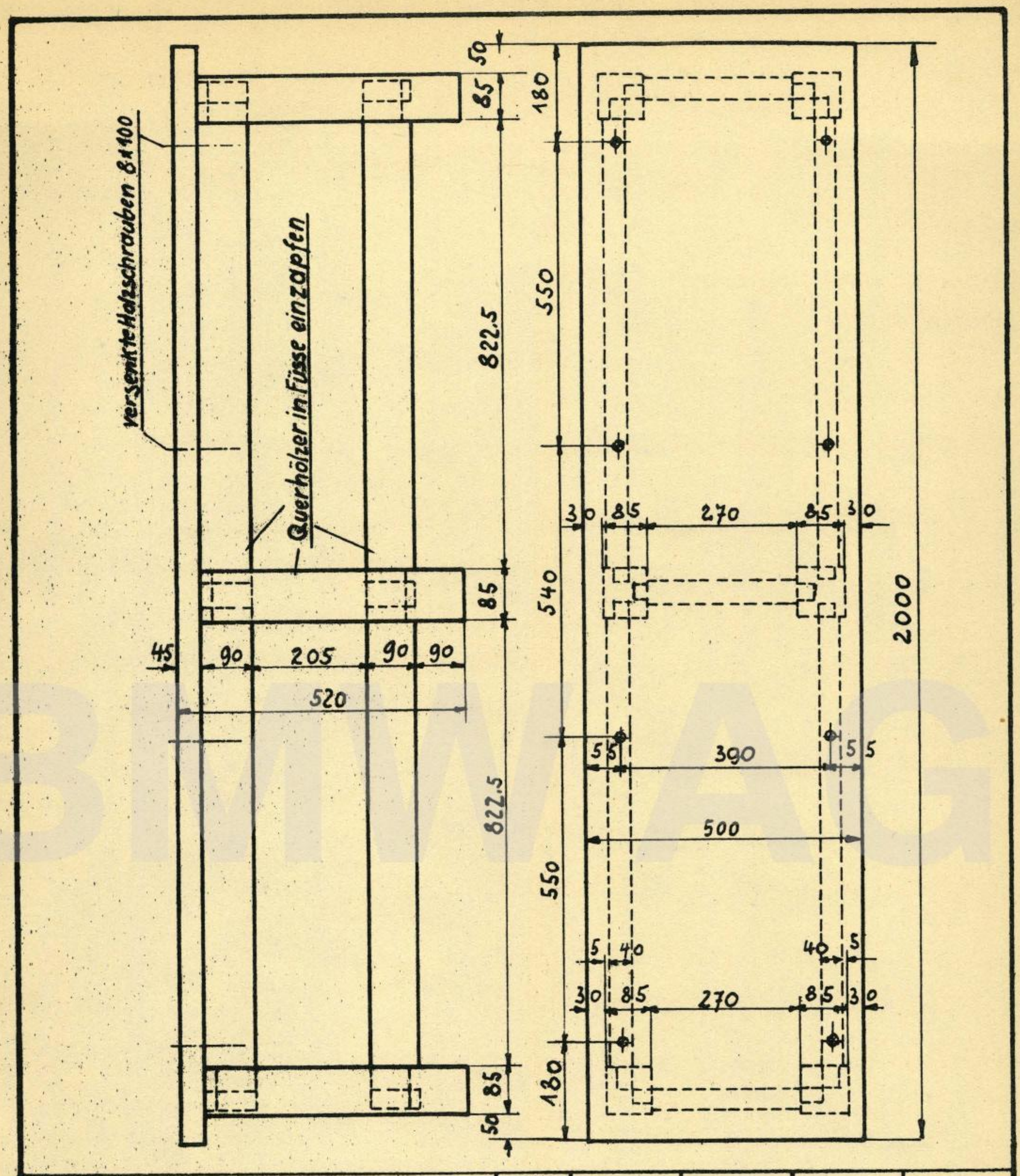

		3				
		2				
1	Montagetisch	1		Fichtenholz		
Stück-zahl	Benennung und Bemerkung	Teil	Zeichng. Nr.	Werkstoff		

	Datum	Name
Gezeichnet:	18.9.51	Pa
Geprüft:		
Normgepr.		

BMW Kundendienstschule

Maßstab: 1:10

Montagetisch für Motorräder

V 5043

Ersatz für

Ersetzt durch

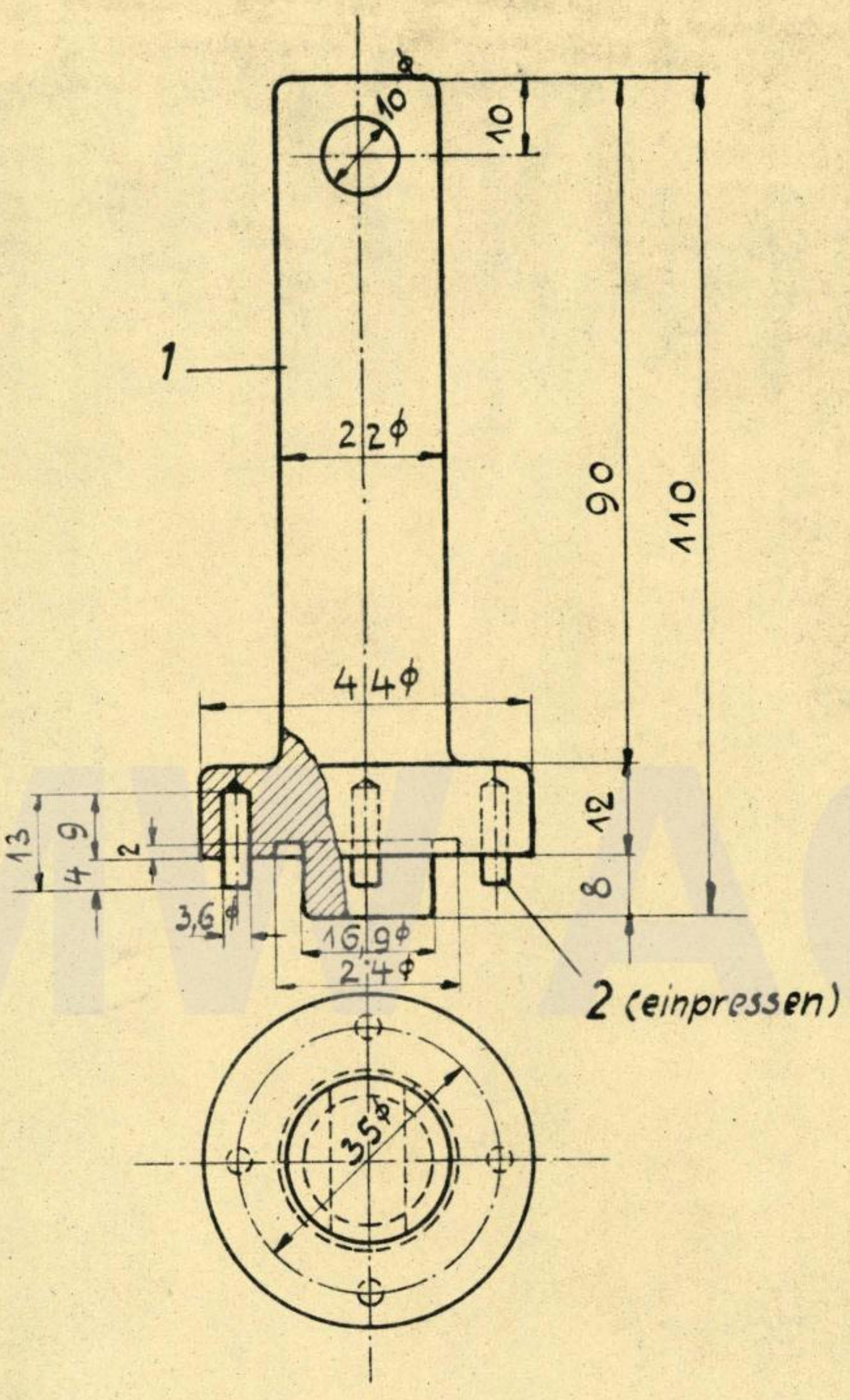

Stückzahl	Benennung u. Bemerkung	Teil	Zeichng. Nr.	Werkstoff		
		3				
4	Zapfen	2		Federstahl	gehärtet	
1	Schlüsselkörper	1		St. 50.11	härten	

	Datum	Name
Gezeichnet:	20.3.52	Fa
Geprüft:		
Normgepr.		

BMW Kundendienstschule

Maßstab: 1:1

Zapfenschlüssel für Verschlußdeckel zur Radnabe R 25/2

V 5044

Ersatz für

Ersetzt durch

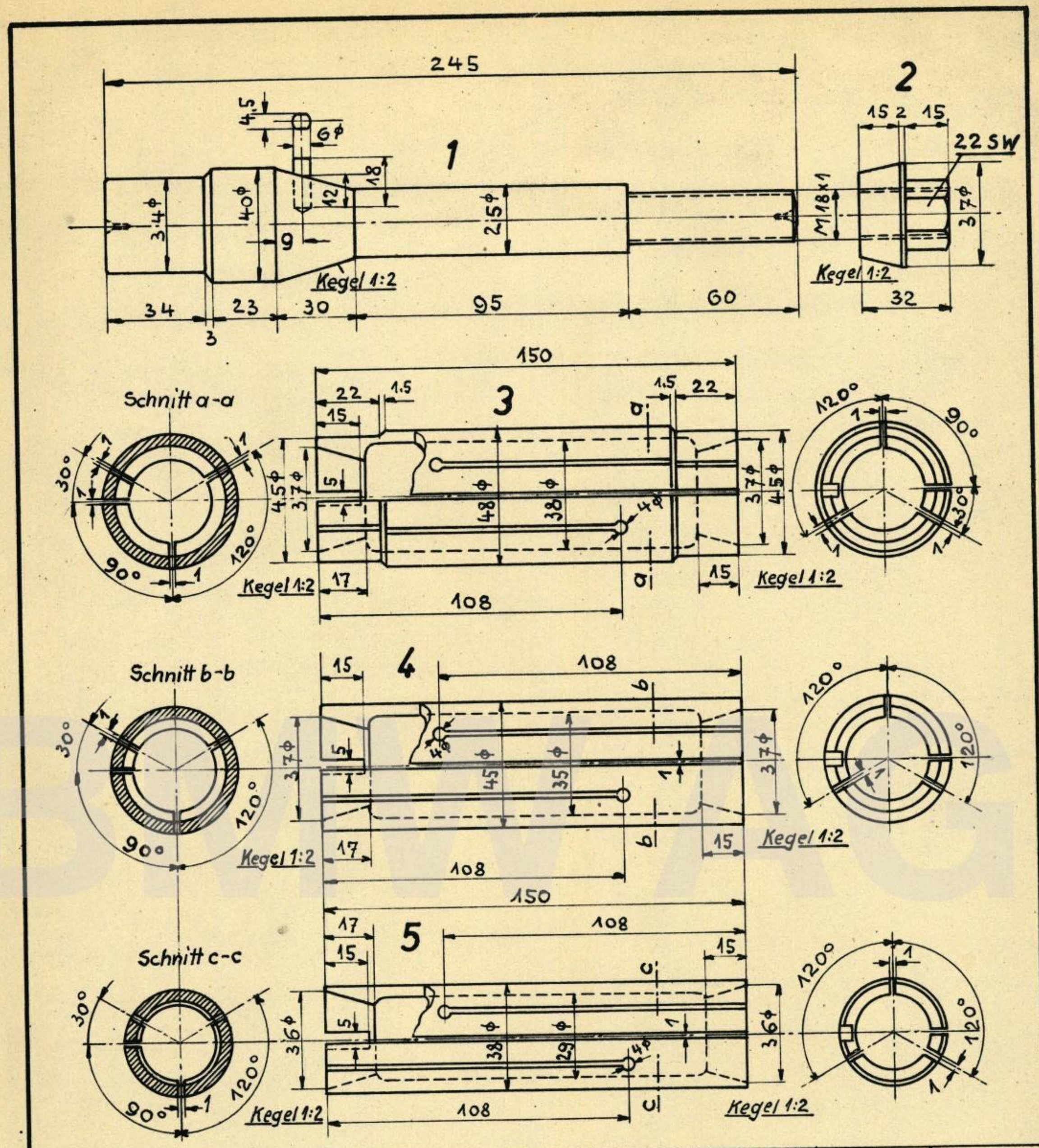

Stückzahl	Benennung und Bemerkung	Teil	Zeichng Nr	Werkstoff		
1	Spannhülse 38mmΦ für R 24	5		St. 50.11		
1	Spannhülse 45mmΦ für R51/3 u. R25	4		St. 50.11		
1	Spannhülse 48mmΦ für R51/2 u. R67	3		St. 50.11		
1	Kegelmutter	2		St. 50.11		
1	Läppdorn	1		St. 50.11		

	Datum	Name
Gezeichnet:	13.11.51	Pza
Geprüft:		
Normgepr:		

BMW Kundendienstschule

Maßstab: 1:2

Läppvorrichtung für Pleuel R24 R25 R51 R67

Zeichnungs Nr. V 5046

Ersatz für

Ersetzt durch

BMW AG