BSA

SPARES

"A" MODELS
TWIN CYLINDER
500c.c and 650c.c.

1954 to 1957
Models

A7	500 c.c.	O.H.V.	(Plunger Frame)
A7	500 c.c.	"	(Swinging Arm)
Star Twin	500 c.c.	"	(Plunger Frame)
Shooting Star	500 c.c.	"	(Swinging Arm)
A10	650 c.c	"	(Plunger Frame)
A10	650 c.c	"	(Swinging Arm)
A10	650 c.c.	"	(Road Roacket)

CS-1870

CATALOGUE OF

GENUINE BSA SPARES

ISSUED BY

BSA MOTOR CYCLES LTD.

Service Department
WAVERLEY WORKS
BIRMINGHAM 10

TELEPHONE . . . . . BIRMINGHAM, VICTORIA 3711
TELEGRAMS . . . . . "SELSERV," BIRMINGHAM

All communications relating to Spare Parts or Repairs to B.S.A. Motor Cycles should be addressed to the above.

B.S.A. MOTOR CYCLES LTD.

Registered Offices and Works - - - ARMOURY ROAD, BIRMINGHAM, 11

Telephones: BIRMINGHAM VICTORIA 2381 (30 lines) *Telegrams and Cables*: "SELMOTO, BIRMINGHAM"

MC 1009-2-2-3

Copyright B.S.A. Co. Ltd.

Printed in England
Reprinted Sept. 1960

'A' GROUP GENERAL INDEX

	pages
Air Cleaners	35, 36, 37
Battery Carrier	57
B.S.A. Service, Spares and Repairs	4
Carburetters and Settings	87
Carrier	72
Carrier and Pannier Bags	75
Central Stand	33, 38
Chainguards	53—55, 59—62, 65
Clutch and Chaincase	29—31, 65
Colour Finishes	3
Dual Seat and Fittings	55, 57
Engine and Frame Markings	88
Engine (General)	10—23
Equipment (Electrical)	84—86
Equipment (Speedometers)	3, 86
Exhaust Pipes	10, 19
Footrests	31, 38
Frame and Fittings	31—39
Front Fork and Fittings	40—43
Front Hub and Wheel Fittings	44—48
Front Stand	52, 59, 63
Gearbox and Control Parts	23—29
Guarantee	4
Handlebars and Controls	55—57, 62—63
Handrail	72
Legshields	67, 72
Legshields and Safety Bars	70, 75, 76
Mudguards and Fittings (Front)	53—55, 57—61, 63
Mudguards and Fittings (Rear)	54, 61, 62
Oil Tank and Fittings	53—55, 61
Petrol Tank and Fittings	55—59, 62—65
Pillion Footrests	33, 36
Pistons	87
Prop Stand	33, 36
Rear Brake Control	59, 62, 65
Rear Hub and Wheel Fittings	50—52
Rear Suspension	35, 38
Safety Bars (Front)	67, 72
Safety Bars (Rear)	67, 72
Sidecar Chassis	80—83
Silencer and Fittings	55, 61
Stockists	5—9
Toolbox and Fittings	53—55, 62
Tools and Sundries	78

SUFFIX NUMBERS TO BE USED TO IDENTIFY VARYING FINISHES
'A' GROUP MOTOR CYCLES

/001	Cadmium
/003	Bright Chrome
/007	Black Enamel
/017	Chrome Plate, Black Lined Gold
/019	Chrome Plate, Matt Silver Lined Red
/021	Polished Aluminium
/024	Polychromatic Silver Beige
/026	Chrome Plate and Silver Beige Lined Red
/036	Maroon and Chrome Lined Gold
/037	Maroon only
/038	Metallic Green and Chrome Plate Lined Dark Green
/039	Metallic Green
/040	Dark Green
/041	Chrome Rim and Maroon Hub
/042	Chrome Rim and Dark Green Hub
/043	Chrome Rim and Beige Hub
/044	Chrome Rim and Black Hub
/078	Brilliant Red and Chrome

When ordering components with varying finishes, i.e., Petrol Tanks, Wheels, Rims, Brake Rods, Front Fork Oil Seal Holder — please state finish required by adding the appropriate suffix number to part number.

EXAMPLE. Petrol Tank

Metallic Green and Chrome Plate Lined Dark Green — 67 - 8104/038

SPARKING PLUGS

Champion Sparking Plugs Ltd., Feltham, Middlesex

ELECTRICAL EQUIPMENT

J. Lucas Ltd., Great King Street, Birmingham

SPEEDOMETERS

Smith's Motor Accessories, Cricklewood Works, London

COPY OF B.S.A. MOTOR CYCLE SPARE PARTS GUARANTEE

We give the following guarantee with B.S.A. Motor Cycle Spare Parts, instead of the guarantee implied by statute or otherwise, as to the quality or fitness of such parts for the purpose for which they are intended, any such implied guarantee being in all cases excluded, nor can any claim for consequential damages be entertained.

WE GUARANTEE, subject to the conditions mentioned below, that all precautions which are usual and reasonable have been taken by us to secure excellence of materials and workmanship, but this guarantee is to extend and be in force for three months only from the date of purchase, and the damages for which we make ourselves responsible under this guarantee are limited to the replacement of any part which may have proved defective.

WE UNDERTAKE, subject to the conditions mentioned below, to make good at any time within three months any defects in these respects. As motor cycles are easily liable to derangement by neglect or misuse, this guarantee does not apply to defects caused by wear and tear, misuse, or neglect. The term "misuse" shall include among others the following acts: The attaching of a sidecar to the motor cycle in such a manner as to cause damage or calculated to render the latter unsafe when ridden; the use of a motor cycle or a motor cycle and sidecar combined when carrying more persons or a greater weight than they were designed to bear. (The 350 c.c. and the 500 c.c. in the "B" group of machines are not designed for sidecar work).

REPAIRS AND RENOVATIONS GUARANTEE

Any B.S.A. motor cycle sent to us to be replated, re-enamelled, or repaired will be treated upon the same conditions as if it were a new motor cycle, i.e., we guarantee that all precautions which are usual and reasonable have been taken by us to secure excellence of material and workmanship, such guarantee to extend and be in force for three months only from the time such work shall have been executed, and this guarantee is in lieu and in exclusion of any Common Law or statute warranty, and the damages recoverable are limited to the cost of any further work which may be necessary to amend and make good the work found to be defective.

CONDITIONS OF GUARANTEE

If a defective part should be found in our motor cycles it must be sent to our Service Department, carriage paid, and be accompanied by an intimation from the sender that he desires it repaired free of charge under our guarantee, and he must also furnish us at the same time with the number of the frame and engine, which will be found stamped on the seat or head tube lug and crankcase respectively, the name of the Dealer from whom he purchased, and the date of the purchase.

Failing compliance with the above no notice will be taken of anything which may arrive but such articles will lie here at the risk of the sender, and this guarantee or any implied guarantee shall not be enforceable.

We do not guarantee the specialities of other firms, such as tyres, electrical equipment, saddles, etc., or of any component part supplied to the order of the purchaser differing from our standard specification, whether supplied with our motor cycles or otherwise.

THE TERM "AGENT"

We do not appoint agents for the sale of our Motor Cycles or other goods. We assign to Motor Cycle Dealers (styled "Regional" Dealers), who carry on business on their own account, areas in which they have the exclusive or other right to sell goods purchased from us. A Regional Dealer purchasing from us, or a Sub-Dealer purchasing from him, may, on our behalf (as our agent for the purpose only) give the guarantee printed above. Any such dealer is not authorised to advertise, incur any debts, or transact any business whatsoever on our account, nor is he authorised, so as to bind us to give any warranty or make any representation on our behalf or to sell subject to or with any conditions other than those contained in such guarantee.

B.S.A. SERVICE

When you purchase a B.S.A. machine you become the owner of a product which is backed by the most comprehensive motor cycle service in the world. The following notes are intended to give a guide to the facilities available to the B.S.A. owner. Detailed information on any aspect of B.S.A. service may be obtained by discussion with your B.S.A. dealer or on application to the factory Service Department.

REPLACEMENT PARTS

The moderate price at which B.S.A. replacement parts are available, has been maintained by making full use of trade distribution channels, with the consequent advantages of large consignments delivered from the works with lower handling, packing and transport costs. For this reason, we do not normally supply spares direct to individual owners, and all requests for replacement parts should be made to your local dealer or spare parts stockists. All B.S.A. dealers carry stocks of B.S.A. replacement parts, but the officially appointed spare parts stockists, whose names and addresses are quoted in the following pages, maintain an extensive and comprehensive range. B.S.A. owners are strongly advised to fit genuine B.S.A. replacement parts only. Risks are incurred in not a ways insisting on the genuine component, and these risks are eliminated if parts are purchased only from our recognised dealers.

B.S.A. EXCHANGE REPLACEMENT SERVICE

The B.S.A. Exchange Replacement Service is of great value to all B.S.A. owners. It is particularly useful to those who rely on their machines for daily transport, and who cannot afford to have them off the road for more than a few hours at a time. Under this scheme the owner can exchange any worn or otherwise unserviceable unit, such as engine, gearbox, forks or wheels, for a fully-guaranteed factory-assembled replacement unit. These units are ready for immediate use, and are supplied at the fixed prices quoted at the back of this catalogue on the understanding that the old units which they replace are not damaged to a degree where they are not capable of being reconditioned.

All genuine B.S.A. Exchange Replacement units carry the full three months warranty. Most B.S.A. Dealers and officially appointed spare parts Stockists are able to supply genuine exchange units from stock. If this cannot be done, they can obtain the unit for you quickly from the works, and make arrangements for it to be fitted to your machine, afterwards returning the old unit to us. In this way the machine need only be off the road long enough for the conversion to be made. Full details of this scheme can be obtained from your B.S.A. Dealer and an explanatory leaflet and price list will be sent upon request to B.S.A. Service Department.

CORRESPONDENCE

We maintain a skilled staff to help you with any query, technical or otherwise which you may have concerning your B.S.A. machine. We are always anxious to help, and all correspondence should be addressed to us at:—

B.S.A. Motor Cycles Limited
Service Department,
Waverley Works,
Birmingham 10.

REPAIRS

(1). All motor cycles, engines, sidecars or components for repair should be consigned to the factory Service Department at the following address:—

B.S.A. Motor Cycles Limited,
Service Department,
Waverley Works,
Birmingham 10.

Full instructions must accompany all items sent to us for repair. If we are simply asked to overhaul a machine, all component parts will be completely dismantled and inspected, all worn parts will be renewed and the machine re-assembled and tested to original inspection standards.

(2). When sending complete motor cycles, accessories such as windscreens, panniers, Club badges, tools and inflators, should be removed as they are liable to be damaged or lost in transit.

(3). It frequently happens that parts are forwarded to us which do not bear the senders name and address. Care in this respect will prevent delay and annoyance.

(4). All goods consigned to us must be sent carriage paid.

(5). Immediately we receive a part for repair, an acknowledgement and confirmation of your instructions is posted to you. If you have occasion to enquire by letter or telephone about the progress of the repairs, please follow the instructions printed on your form of acknowledgement.

SERVICE LITERATURE

An Instruction Book is supplied free of charge with each machine and contains all the information required for routine maintenance, and top overhaul. For the normal owner this book will cover all the work that he is likely to undertake. Further copies of Instruction Books to cover all post-war and most pre-war models are available from the Service Department.

For the guidance of Dealers and other skilled mechanics, the Service Department also issues Service Manuals to cover each model. These manuals contain detailed instructions for complete dismantling and overhaul, and describe the special tools and jigs which are necessary for this purpose. The B.S.A. owner who has considerable mechanical experience, and feels that he is competent to carry out this more skilled type of work may obtain a copy of the Service Manual for his machine from the Service Department.

Additional Instruction Books are priced 3/- plus 3d. postage, and Service Manuals are 7/- plus 6d. postage, for each model. Full details of the machine should always be quoted.

HOURS OF BUSINESS

Our Service Department is open from 8.30 a.m. to 5.30 p.m. Monday to Friday, excepting holiday periods, and we are pleased to see B.S.A. owners, and if necessary, to inspect and advise on the condition of their machines.

We cannot guarantee, however, to be able to service any machine if a call is made without an appointment, and even when calling by appointment, an owner should be prepared to leave his machine with us, in case the work cannot be completed on the same day.

A commissionaire is always on duty to receive machines brought to the Service Department by appointment, at any time of the day or night, on any day of the week, and similar arrangements are made for collection. Any machine delivered to us after hours should, however, be accompanied by full instructions in writing, together with the owner's name and address.

LIST OF B.S.A. STOCKISTS

Save time and postage by contacting your nearest B.S.A. Stockist for B.S.A. Spare Parts, Spare Part Catalogues, Instruction Books, Transfers, etc. All B.S.A. Dealers carry stocks of B.S.A. Spare Parts but the following appointed Stockists maintain a comprehensive range.

Town	*Name of Stockist.*	*Address.*	*Telephone No.*	*Telegraphic Address.*
Aberdeen	J. Dawson	24-26, Thistle Street	25556	
,,	George Cheyne (Cycles) Ltd.	147-149, Holburn Street	50341/2	Motobike, Aberdeen.
Aberystwyth	Gwalia Motor Co.	North Parade	525	
Accrington	Bill Snape Ltd.	379, Blackburn Road	4724	
Aldershot	Phillips Bros. (Aldershot) Ltd.	Birchett Road	1111/2	Phillips Cycles, Aldershot.
Alloa	J. G. Robertson	55-57, High Street	193	
Andover	Corbett & Ellis (Andover) Ltd.	Weyhill Road	2991	
Ashington	Mains of Ashington	Laburnam Terrace	3204	
Aylesbury	Eborn's Garage	44, Walton Street, Aylesbury	3150	Eborn's, Aylesbury.
Banbury	Trinder Bros.	2A, Broad Street	2546	
,,	Taylor Dow Ltd.	Southam Road, Oxon		
Barnsley	T. Garner & Son	Sheffield Road	2866	
Barnstaple, North Devon	Bob Ray Ltd.	43 High Street	4266	
Basingstoke	Fred Slade	May Place, London Road, Hants.		
Bath	R. U. Holoway & Son	32-33-34 St. John's Rd.	Bathwick 5084	
Bedford	The Imperial Cycle Co.	58, St. Loyes	2374	
Belfast	W. J. Chambers & Co.	106 and 108, Donegall Pass	27253/4	Fastmote, Belfast.
Biggleswade	Bryants	25, 27, 72 and 74, Shortmead Street	3108	
Birkenhead	Bob Simister Ltd.	540, New Chester Road, Rock Ferry	Rock Ferry 1452	
Birmingham	County Cycle & Motor Co Ltd.	266, Broad Street 104, Bath Row (Repairs) (*Closed Saturday, 1 p.m.*)	Midland 2671 Midland 2817	
,,	C. E. Cope & Sons Ltd.	481-487, Hagley Road, Edgbaston 17	Bearwood 2246/7	
,,	Shovelbottom's Ltd.	376, Ladypool Road, Sparkbrook 12	South 2212-3247	
,,	Aston Auto Motors	177 Aston Road, 6	Ast. Cross 3201/2	
Blackburn	Shuttleworth & Geldart	15-17, Great Bolton Street	6678	
Blackpool	J. Hall & Son	102/6, Devonshire Road (*Opposite School*)	22130	
Blandford	Badger Garages Ltd	Salisbury Road	615	
Bolton	Charlie Robinson	119 and 121, Higher Bridge Street	3931	
Boscombe	Craze Bros.	473 and 475, Christchurch Road	Boscombe 33231/2	
Bradford	C. Sidney Ltd.	107, Manningham Lane	29889	
,,	J. K. Hirst	41 Wakefield Road	22543	
Bridgwater	Anderson & Wall	18, St. Mary Street	2416	Anderson & Wall, Bridgwater.
Brighton	Redhill Motors (Brighton) Ltd.	104, North Road	25281	
Bristol	S. J. Fair Motors Ltd.	201/3, Cheltenham Road	4-6238, 4-1015	
Bromsgrove	Harold Tozer (Bromsgrove) Ltd.	110, Birmingham Road	3228	
Bury St. Edmunds	Barclay Motors	Kings Road Corner	2345/9	
Cambridge	King & Harper Ltd.	Milton Road Corner	3201	Motors, Cambridge.
Canterbury	Hallet of Canterbury	St. Dunstan's Street	2275/6	
Cardiff	Car Distributors (Cardiff) Ltd	134-140, City Road	30022	
,,	Robert Bevan & Son	29/35, Castle Street	27477/8	

Town	*Name of Stockist.*	*Address.*	*Telephone No.*	*Telegraphic Address.*
Carlisle	W. T. Tiffen & Son	Irishgate Brow	25024	Tiffen, Irishgate, Carlisle.
Carmarthen	Eddie Stephens (Motors)	22-23 Water Street	C'then 6233	
Castleford	Barrett's Motor Cycles (Castleford Ltd.)	27-35, Aire Street	2983	
Chapel-en-le-Frith	E. W. Bowers	129, Town End	144	
Chatham	Grays of Chatham Ltd	11-19, High Street	4005	
Chelmsford	Hadlers Garage Ltd.	New Street	4844/5	Hadler, Chelmsford.
Cheltenham	Leslie Paynter	Bath Street	2887	
Chester	Davies Bros.	34, Bridge Street	25510	
Chesterfield	Walter Wragg Ltd.	95 Lordsmill Street, Derbyshire		
Chichester	W. Goodridge & Co. Ltd.	East Street	2033	
Clydebank	John A. Weddell	72/114, Dumbarton Road	1429	
Colchester	G.B.R. Motors Ltd.	1-2, East Hill	6131/2	
Colne	C. H. Schofield (Motors) Ltd.	Market Place	859	
Coventry	Coventry Motor Mart Ltd.	86, London Road	2146/7	Coventry Motor Mart.
Crawley	Lewis Thirkell Ltd.	60-62 The Boulevard	Crawley 25507	
Crewe	Cooke's Garages (Crewe Ltd.)	10-20 Nantwich Road,	2011	Cookes Motors, Crewe.
Croydon	Godfreys Ltd.	228/234, London Road	Croydon 3641/2	Gofrabike, Croydon.
Dagenham	Reginald Smith (Motor Cycles) Ltd.	Imperial House, New Road	Rainham 3284/2786	
Dalton-in-Furness	H. Holme	24-26, Ulverston Road	25	
Darlington	The Duplex Motor & Cycle Co. Ltd.	10-16, Grange Road	Darlington 2071	Duplex, Darlington.
,,	White Bros.	201/205/9, Northgate	67757	
Dartford, Kent	Schweizo Bros.	177 Lowfield Street	4279	
Derby	Ingle's Provincial Garages Ltd.	Walbrook Road	45289	
Doncaster	W. Cusworth (Doncaster) Ltd.	7, Hall Gate	4594	
Douglas, I.O.M.	Gilbert Harding	18, Duke Street & 5 Market Street	Douglas 170	
Dudley	Chas. E. Cope & Sons Ltd.	98 & 193, High Street	Dudley 53464	
Dundee	George McLean Ltd.	Ward Road, Riverside Drive	5087	Vehicles, Dundee.
Dunstable	B. G. England (Dunstable) Ltd.	Halfmoon Hill, London Road	843/4	
Eastbourne	Jempsons Ltd.	118-120, Seaside	756	Jempsons, Eastbourne.
Edinburgh	J. R. Alexander & Co. Ltd.	10/14, Lothian Road	4455	Motorcycles Edinburgh.
Elgin	Farquharsons	55-57 High Street	7188	Elgin 7188.
Enfield	D. J. Shepherd & Co. (Enfield) Ltd.	434/6, Hertford Road, Enfield Highway	Howard 1631	
Exeter	P. Pike & Co. Ltd.	Alphington Street	58241	Piko, Exeter.
Frome	J. Difazio	25, Catherine Street	2913	
Gateshead, 8	O. Carmichael & Son	75, High Street West	71815	
Glasgow, C3	Bell Bros (H.P.) Ltd.	233, St. George Road	Douglas 6414	Douglas 6414 Glasgow.
,, C4	J. R. Alexander & Co. Ltd.	240-286, Great Western Road	Douglas 7516	Alex Moto, Glasgow.
Gloucester	Harpers Garage	23a, Worcester Street	23187	Gloucester 23187.
Grimsby	H. J. Gresswell & Sons Ltd.	13-15-19, Osborne Street	2202	
Guernsey	Millard & Co. Ltd.	Victoria Road	777	Millard Motors, Guernsey.
Guildford	E. Pascall (Guildford) Ltd.	11/12, Woodbridge Road	Guildford 2274/5/6	
Harrogate	H. Aclam (Prop. H. Baynes)	11, Bower Road	5125	
Harrow	E. T. Pink (Harrow) Ltd.	Station Road	0044/5 Spares 3328	Pink, Harrow.
Hatfield	W. Waters & Sons Ltd.	32 Great North Road	3255	
Hereford	A. Kear & Co.	52b, Commercial Street	2239	Kear, Hereford.

Town	Name of Stockist.	Address	Telephone No.	Telegraphic Address
Holbeach	G. Woodman Ltd.	34, Fleet Street	3221	
Hornchurch	T. W. Kirby	10, Ronco Corner	8785	
Hounslow	Stanley's Motors	46-8, Lampton Road	Hounslow 1949	Stanley's, Hounslow.
Huddersfield	Earnshaw	Manchester Road	1232	
Hull	Browns (Witham) Ltd.	47/49, Witham	33990	
"	Jordan & Co. (Hull) Ltd.	Storey Street	16131	Gumption, Hull.
Ilford	J. J. Double	1, 2, 3, 4, Mildmay Parade, Cranbrook Road	Valentine 0191, 0192, 7723	
Ilkeston	Ray Gamble	Pelham Street (off Bath Street)	873	
Ipswich	Revetts Ltd.	Clarkson Street	5372617	
Jersey	Colebrooks (J. D. Poingdestre)	1, New Street	Central 20531	Colebrooks, Jersey.
Keighley	Dick Ratcliffe	Coldshaw Garage, Haworth	Haworth 3133	
Kendal	Tom O'Loughlin	66, Stricklandgate	315	
Kings Lynn	Peter Guest Ltd.	Wooton Road	4129	
Kirkcaldy	County Motors (Kirkcaldy) Ltd.	Junction Road	Dysart 5631	
Lancaster	Pye Motors Ltd.	Parliament Street	3553	
Launceston	J. Wooldridge & Son	Western Road	21	Wooldridge, Launceston.
Leeds, 1	Watson-Cairns & Co. Ltd.	157-8 Lower Briggate	3302415	Watson-Cairns, Briggate, Leeds.
Leicester	E. W. Campion & Son Ltd.	Welford Place	58054	
Lincoln	Wests (Lincoln) Ltd.	116, High Street	21262	
Liverpool, 3	Cundles (Liverpool) Ltd.	41 and 61, Byrom Street	Central 4148	Cundles, Central 4148.
Llawhaden	James Bowen & Sons	Llawhaden, near Narberth, Pem.	Llawhaden 6	
London, W.1	Godfreys Ltd.	208/10 Great Portland Street	Euston 4632/4	Gofrabike, London.
" N.W.1	J. Grose Ltd.	379-381, Euston Road	Euston 5231	
" S.E.18	Cleare & Co. Ltd.	1, Woolwich High Street	Woolwich 0174	
" W.5	Kays of Ealing Ltd.	8-10, Bond Street	Ealing 2387	Sparesokay, Ealux, London.
" S.E.13	F. Parks & Son Ltd.	404, Lewisham High Street	Lee 9474	
" E.8	Eleanor Motors	265/79, Mare Street	Amherst 5134-3923	
" E.7	Godfreys Ltd.	418, Romford Road, Forest Gate	Grangewood 1234-5	Gofrabike, Forgate.
" E.6	Godfreys Ltd.	220 Barking Road, East Ham	Grangewood 8088	Gofrabike, Forgate.
" N.12	George Grose Ltd.	834, High Road, Finchley	Hillside 2149	
" N.12	Glanfield Lawrence Ltd.	407 High Road, Finchley	Finchley 0091	Glanfin, Norphone, London.
" N.15	Godfreys Ltd.	94 & 96, 104, High Road, South Tottenham	Sta 9960	Gofrabike, London.
" S.E.11	Writers Ltd.	161/5, Kennington Lane	Reliance 1362	
" S.W.11	Owen Bros.	19, Battersea Rise, Clapham Junction	Battersea 7816	
" S.W.6	Claude Rye Ltd.	897/921, Fulham Road, Fulham	Renown 6174	Ryebikes, Walgreen, London.
" S.W.9	Pride & Clarke Ltd.	158 Stockwell Road,	Brixton 6251	
" W.12	Turners Stores	81-83, Goldhawk Road, Shepherd's Bush	Shepherd's Bush 2436	
" W.3	Whitby's of Acton Ltd.	273, The Vale, Acton	Shepherd's Bush 5355/6	
" N.5	Glanfield Lawrence (Highbury) Ltd.	28-32 Highbury Corner	North 2791	
" E.18	E. S. Longstaff Ltd.	88, High Road, Woodford	Buckhurst 6369-6757	

Town.	*Name of Stockist.*	*Address.*	*Telephone No.*	*Telegraphic Address*
London, S.E.15 ..	West End Motors Ltd.	171, High Street, Peckham	Newcross 2589	
,, N.W.10	Slocombes Ltd.	251-253, Neasden Lane, Neasden		Gladstone 3355.
,, S.W.17 ..	Elite Motors (Tooting Ltd.) ..	951-961 Garrat Lane, Tooting Broadway		Balham 1200.
Lowestoft ..	R. Wright	67-69, London Road South ..	645	
Macclesfield ..	A. Watling	49, Buxton Road	3592	
Maidstone ..	Redhill Motors (Maidstone) Ltd.	The Broadway	3096	
Manchester, 3 ..	Tom Davies (Motors) Ltd ..	233, Deansgate ..	Blackfriars 0681	
,, 22 ..	Alex Parker	31/33 Palatine Road Northenden ..	Wythenshaw 2062	
,, 4 ..	Fred Fearnley Ltd.	692-4, Ashton Old Road	East 1445/6	Fernbike, Manchester.
Mansfield ..	Henstocks..	128, Chesterfield Road North ..	329	Henstock 329, Mansfield.
Middlesbrough ..	J. T. Dickinson (Middlesbrough) Ltd.	160-162, Lindthorpe Road ..	3861	Payacob, Middlesbrough.
Neath	Fred Rist	16, 17, Windsor Road .	Neath 780	
Newcastle-on-Tyne	Dene (Newcastle) Motor Co. Ltd.	Haymarket	2-9165/6	Fned, Newcastle-on-Tyne.
Newton Abbot ..	J. E. Green & Co.	87, Queen Street	653	
Newport, Mon ..	R. J. Ware & Sons	69, Commercial Street	66206	
Northampton ..	Glanfield Lawrence (Northampton) Ltd.	40-44 Wellingborough Road ..	1272	
Norwich	Chapmans (Norwich) Ltd. ..	38-42, Duke Street	24727	
Nottingham ..	E. W. Campion & Son Ltd. ..	Arkwright St. and Queen's Road	83444	
Oldbury	Bromford Garage	Bromford Road, Worcs. ..	Bro 2225	
Oldham	Alan Taylor	192 Manchester Street	Main 4456	
Oswestry	Roy Evans	Willow Street	1144	
Oxford	H. F. Temple	69, St. Thomas Street ..	47496/7	
,, ...	Messrs. Faulkner & Son ..	12, Cardigan Street ..	57279	
,, ...	John Avery	228/230, 240 Banbury Road ..	57362/3	
Parkstone	Bob Foster	472/4, Ashley Road	3500/1	
Perth	M. Shaw & Sons	143, High Street	483	
Peterborough ..	Burrows Bros.	55-57, Westgate	2154	
Plymouth	P. Pike & Co. Ltd.	Millbay Road	Plymouth 63018	Piko, Plymouth.
Pontardulais ..	T. Griffiths	Forest Garage	Pontardulais 323	
Portsmouth ..	Jenkins & Purser Ltd.	277-281, Copnor Road	2339	
,, ...	Glanfield Lawrence	147/157, Fratton Road	74331	
,, ..	Percy Kiln	65-67 Elm Grove ..	Portsmouth 23734	
Preston	Loxham's Garages Ltd. ..	Central Garage, Churnley Street, Fishergate	Sales Dept. 4242 Service Dept. 4243	Loxhams, Preston.
Pulborough ..	Gray & Rowsell (Bury) Ltd. ..	Bury Gate	Bury 4	
Radcliffe	Will Lord (Motor Cycles) Ltd.	115, Blackburn Street	2002	
Reading	Phillips & Bloomfield Motors Ltd.	10-24 South Street	2635	
,, ...	Stocker & Shepherd Ltd. ..	129-133, Oxford Road ..	53938-52212	
Redhill	The Redhill Motor & Cycle Works Ltd.	50-54, Brighton Road	327	
Ripon (Yorks.) ..	T. Ellis	2, High Skellgate	Ripon 1079	
Rotherham ..	Ernest Cross	55-59, Drummond Street	Rotherham 3987	
Salisbury	Pankhurst (Weymoth) Ltd ..	78, 79, Exeter Street	Salisbury 5222/3	
Scarborough ..	E. Andrew	149, Victoria Road	Scarborough 1857	
Sevenoaks ..	Angus Motor Cycles	Station Parade	3338	
Sheffield, 1 ..	Walter Wragg Ltd.	Stanley Works, Wellington Street	26098	26098 Sheffield.
Shrewsbury ..	J. R. Meredith	Coleham Head	6529	
Sittingbourne ..	Scoones' Garage	9, West Street	66	Scoones Sittingbourne.

Town.	*Name of Stockist.*	*Address.*	*Telephone No.*	*Telegraphic Address.*
Slough	Sid Moram	Weaham Road Corner, High Street	Slough 23767	
Southampton ..	Alec Bennett Ltd.	152, Portswood Road ..	54081-2-3	
Southport ..	H. F. Brockbank..	62, King Street	5054	
St. Albans ..	Clarkes Ltd.	164, London Road	53153	
St. Helens ..	Geoff Duke Ltd.	Greenfield Road Garage	3918	
St. Ives	Hallens (Hunts.) Ltd.	8/10 The Broadway ..	St. Ives 3071	Hallens, St. Ives.
Stockport ..	Theobold & Coppack	6, Chestergate	2843	Theobald Coppack, Stockport.
Stockton-on-Tees	T. Cowie Ltd.	Norton Road	65361	
Stoke-on-Trent ..	J. & N. Bassett	Howards Place, Shelton	2890	
Stourbridge ..	Pearson's Cycle Depot	31, Market Street	5677	
Sunderland ..	Dunns Garage (Sunderland) Ltd.	Wheatsheaf Corner, North Bridge Street	57666/7	
Swansea	Glanfield Lawrence (Swansea) Ltd.	13/14 Fisher Street	50311	
Taunton	W. P. Edwards (Motors) Ltd. ..	Station Road	2943	Edwards, Motor Cycles, Taunton.
Thames Ditton ..	Comerfords Ltd.	Oxford House, Portsmouth Road	Emerbrook 5531	
Torquay	P. H. Sharam Ltd.	244/6, Union Street ..	4184 and 7255	
Troon	Cooper Bros.	117/129, Templehill	925	
Truro ..	W. H. Collins	Kenwyn Mews	Truro 2168	
Tunbridge Wells ..	C. E. Tunbridge	21, London Road	416	Motors, Tunbridge Wells.
Twickenham ..	Blays of Twickenham	192-9, Heath Road	Popesgrove 2103 and 1435	
Uxbridge	Miles Motors	60, High Street ..	Uxbridge 6000	
Wakefield	Parkinsons (Wakefield) Ltd. ..	38, Ings Road	2087	
Walsall	The Motor Cycle Mart (Walsall) Ltd.	12, Ablewell Street	3363	
Warrington ..	Jack Frodsham Ltd.	60, Winnick Street	34713	
Watford	Lloyd Cooper & Co.	61, Queen's Road	2125	Lloyd Cooper, Watford.
Wellington (Salop)	Bill Doran & Matt Wright ..	Park Street Garage	Wellington 138	
Westcliff-on-Sea ..	J. Costin & Sons	233-241, London Road	Southend 42215	
Weston-super-Mare	Wyvern's of Weston Ltd. ..	3, Locking Road	524	Wyvern's, Weston-super Mare.
Weybridge ..	W. L. Lewis & Sons	51, Church Street	2210	
Weymouth ..	Tilleys (Dorset) Ltd.	9, Frederick Place, St. Thomas Street	72	
Whitehaven, Cumberland	Mark Taylor	21, King's Street	252	
Wolverhampton ..	C. E. Cope & Sons Ltd. ..	169, Stafford Street	24605/6	
Worcester	W. J. Bladder & Son	52, Sidbury..	2438	Bladder, Sidbury, Worcester.
Worksop	Ezra Sugden Ltd.	109 Gateford Road, ..	3053	
Yeovil	The Yeovil Motor Mart ..	Hendford	267	Motor Mart, Yeovil.
York	C. S. Russell (York) Ltd. ..	Lawrence Street	23793	Russell, Lawrence Street, York.

Plate 1

ENGINE—'A' GROUP
(PLUNGER AND SWINGING ARM FRAMES)

Plate Ref. Number	Model	Part No.	Description	Number per set.
1	'A' Group	29-410	Valve spring cotter (split) (halves)	8
2	'A' Group	67-34	Valve spring collar (top)	4
3	'A' Group	67-440	Valve spring (inner)	4
4	'A' Group	67-439	Valve spring (outer)	4
5	'A' Group	67-31	Valve guide (inlet and exhaust)	4
5	Shooting Star only	67-1110	Valve guide (inlet and exhaust)	4
6	'A' Group	67-33	Valve spring cup (inlet and exhaust)	4
7	A7	67-394	Valve (inlet)	2
7	A10	67-323	Valve (inlet)	2
7	Star Twin and Shooting Star	67-531	Valve (inlet)	2
—	'A' Group	36-382	Rocker Box Stud Washer	4
8	'A' Group	67-279	Rocker box inspection cover joint washer	2
9	'A' Group	65-2153	Rocker box inspection cover stud nut	8
10	'A' Group	24-978	Rocker box inspection cover nut washer	8
11	'A' Group	67-263	Rocker box inspection cover	2
12	'A' Group	65-317	Rocker oil feed pipe banjo screw	2
13	'A' Group (Swinging Arm)	42-48	Rocker oil feed pipe complete	1
13	'A' Group (Plunger type)	67-450	Rocker oil feed pipe complete	1
14	'A' Group	15-203	Rocker oil feed pipe union washer (top)	2
15	'A' Group (Plunger type)	67-259	Rocker box with studs	1
16	'A' Group	24-8784	Rocker box bolt washer	4
17	'A' Group (Plunger Type)	67-261	Rocker box bolt (long)	4
18	'A' Group	67-277	Rocker box joint washer (small)	2
19	A7	67-395	Valve (Exhaust)	2
19	A10	67-324	Valve (exhaust)	2
19	Star Twin and Shooting Star	67-532	Valve (exhaust)	2
20	'A' Group	67-64	Valve rocker spindle	2
21	'A' Group	67-60	Valve rocker thrust washer	6
22	'A' Group	67-62	Valve rocker spindle washer (spring)	4
23	'A' Group	67-266	Exhaust valve rocker (N/S)	1
24	'A' Group	67-56	Rocker adjusting screw	4
25	'A' Group	24-563	Valve rocker adjusting nut	4
26	'A' Group	67-267	Exhaust valve rocker (O/S)	1
27	'A' Group	65-311	Valve rocker spindle nut	2
28	'A' Group	36-481	Valve rocker spindle washer	2
29	'A' Group	67-61	Valve rocker thrust washer	2
30	A7 and Star Twin (Plunger)	67-2675	Exhaust pipe (O/S)	1
30	A10 (Plunger)	67-2720	Exhaust pipe (O/S)	1
30	A7 and Shooting Star (Swinging Arm)	42-2761	Exhaust pipe (O/S)	1
30	A10 Swinging Arm	42-2766	Exhaust pipe (O/S)	1
31	'A' Group	67-265	Valve rocker (inlet) (O/S)	1
32	A7 and Star Twin (Plunger)	67-2679	Exhaust pipe (N/S)	1
32	A10 (Plunger)	67-2722	Exhaust pipe (N/S)	1
32	A7 and Shooting Star (Swinging Arm)	42-2763	Exhaust pipe (N/S)	1
32	A10 (Swinging Arm)	42-2768	Exhaust pipe (N/S)	1
33	'A' Group	67-264	Valve rocker (inlet) (N/S)	1
34	'A' Group (Plunger)	67-347	Rocker box and steady stay stud	2
35	'A' Group (Plunger)	67-346	Engine steady stay	2
36	'A' Group (Plunger)	24-6040	Rocker box steady stay stud nut	2
37	'A' Group (Plunger)	36-382	Rocker box steady stay nut washer	6
38	'A' Group (Plunger)	2-49	Rocker box stud nut	2
39	'A' Group (Shooting Star exc.)	67-254	Cylinder and head bolt	4
39	Shooting Star	67-1115	Cylinder head bolt (medium)	4
39	Shooting Star	67-1116	Cylinder head bolt (long)	2
40	'A' Group (Shooting Star exc.)	67-258	Cylinder head bolt (medium)	2
41	A7 (Plunger and Swinging Arm)	67-1061	Cylinder head with fixed fittings	1
41	A10 (Plunger and Swinging Arm)	67-1065	Cylinder head with fixed fittings	1
41	Star Twin	67-1063	Cylinder head with fixed fittings	1
42	'A' Group	21-5102	Exhaust pipe finned collar nut	2
43	'A' Group	29-541	Exhaust pipe finned collar nut washer	2
44	'A' Group	67-2694	Exhaust pipe finned collar	2
45	'A' Group	21-6187	Exhaust pipe finned collar screw	2
46	'A' Group	67-985	Sparking plug cover	2
47	'A' Group	67-529	Sparking Plug (when high compression pistons are fitted)	1
47	A7 and A10	65-114	Sparking plug	2

Engine—Shooting Star details described on pages 10 to 17 are up to 1955 only.

Plate 1 ENGINE 'A' GROUP (PLUNGER AND SWINGING ARM FRAMES)

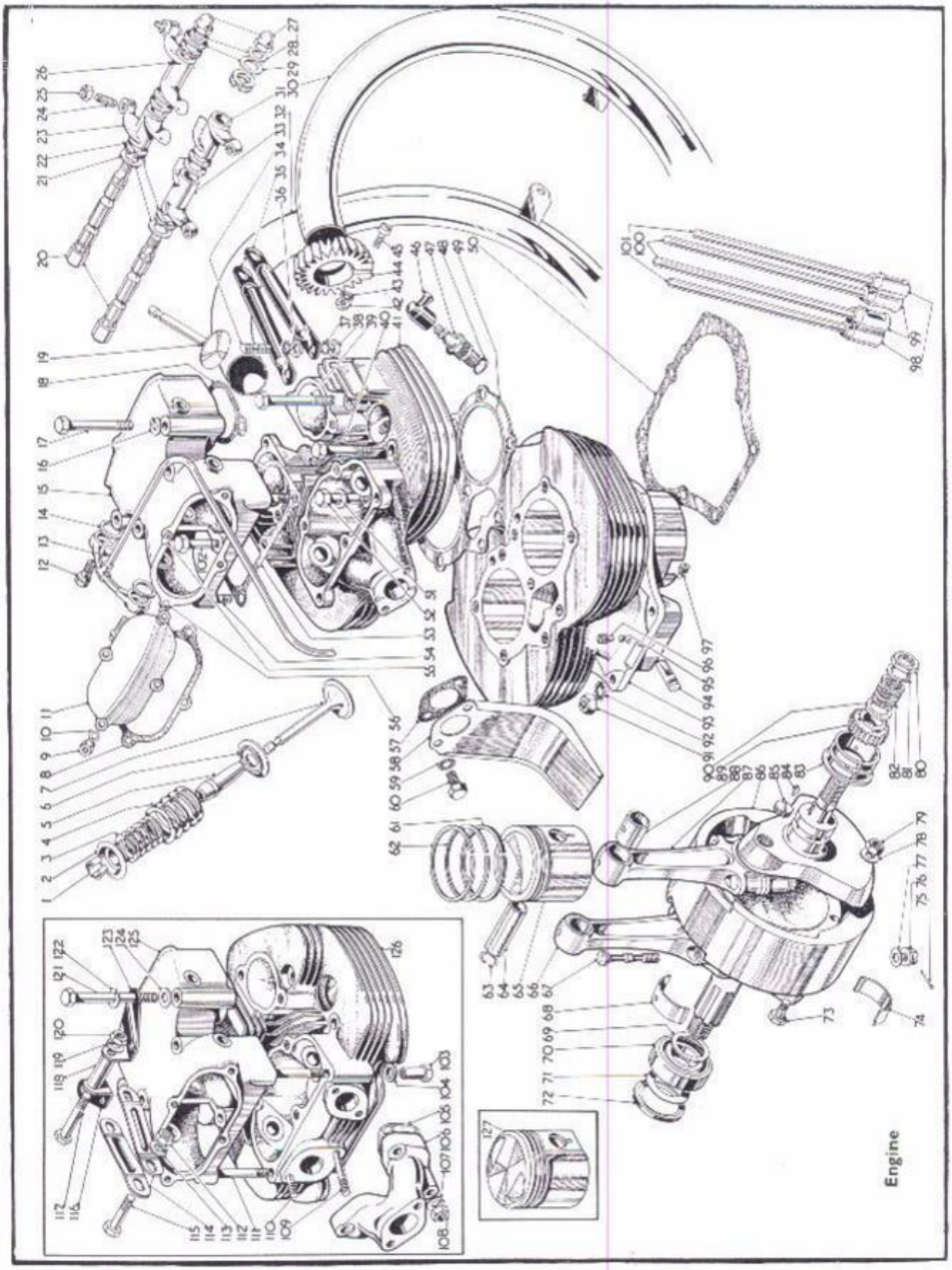

ENGINE—'A' GROUP
(PLUNGER AND SWINGING ARM FRAMES)

Plate Ref. Number.	Model	Part No.	Description	Number per set.
47	A7 Star Twin	67-529	Sparking plug	2
47	Shooting Star	65-1340	Sparking plug	2
48	'A' Group	66-102	Sparking plug washer	2
49	'A' Group	67-255	Cylinder head joint washer	1
50	'A' Group	67-256	Cylinder barrel base washer	1
51	'A' Group	2-2138	Cylinder head bolt washer	9
52	A7, A10 and Star Twin (Plunger)	67-283	Cylinder head bolt (short)	3
52	A7, A10 (Swinging Arm)	67-283	Cylinder head bolt (short)	3
52	Shooting Star	67 1114	Cylinder head bolt (short)	3
53	'A' Group	67-278	Rocker box joint washer	1
54	'A' Group (Plunger)	67-1245	Rocker box stud	2
54	A7, A10 (Swinging Arm)	67-1245	Rocker box stud	4
55	'A' Group	67-343	Rocker box cover stud	1
56	'A' Group	67 280	Rocker box inspection cover stud	7
57	A7	65-1162	Carburetter joint washer	3
57	A10, Star Twin (Plunger)	65-1232	Carburetter joint washer	3
57	A10, Shooting Star (Swinging Arm).	65-1232	Carburetter joint washer	3
58	A7 and A10	67-120	Carburetter drip shield	1
58	Star Twin and Shooting Star	67 527	Carburetter drip shield	1
59	'A' Group	36 382	Carburetter drip shield fixing bolt washer	2
60	'A' Group (Shooting Star excepted)	2-129	Carburetter fixing bolt	2
61	A7 and Star Twin (Plunger)	67-410	Scraper ring	2
61	A7 and Shooting Star (Swinging Arm).	67-410	Scraper ring	2
61	A10	67-314	Scraper ring	2
62	A7 and Star Twin (Plunger)	67-407	Compression ring	4
62	A7 and Shooting Star (Swinging Arm).	67-407	Compression ring	4
62	A10	67-311	Compression ring	4
63	A7 and Star Twin (Plunger)	67-101	Gudgeon pin circlip	4
63	A7 and Shooting Star (Swing-Arm).	67-101	Gudgeon pin circlip	4
63	A10	66 954	Gudgeon pin circlip	4
64	A7 and Star Twin (Plunger)	67-392	Gudgeon pin	2
64	A7 and Shooting Star (Swinging Arm).	67-392	Gudgeon pin	2
64	A10	65-440	Gudgeon pin	2
65	A7	67-460	Piston complete	2
65	A10	67-423	Piston complete	2
65	Star Twin and Shooting Star	67-533	Piston complete (7.25 to 1 C.R.)	2
66	A7, Star Twin and Shooting Star	67-1201	Connecting rod with gudgeon pin bush, bolts and nuts (Drive side)	1
66	A10	67-1203	Connecting rod with gudgeon pin bush, bolts and nuts (Drive side)	1
67	'A' Group	67-1059	Connecting rod bolt	4
68	'A' Group	67-320	Connecting rod big end bush (halves)	2
69	'A' Group	67-671	Crankshaft shim (.005")	As reqd
69	'A' Group	67-672	Crankshaft shim (.010")	As reqd.
70	'A' Group	67-670	Crankcase roller bearing	1
71	'A' Group	67-2056	Engine sprocket alignment shim (.005")	As reqd.
71	'A' Group	67-2057	Engine sprocket alignment shim (.010")	As reqd.
71	'A' Group	67-2058	Engine sprocket alignment shim (.030")	As reqd.
72	'A' Group	67-674	Crankshaft oil seal	1
73	'A' Group	67-301	Flywheel bolt	6
74	'A' Group	67-320	Big end bush (halves)	2
75	'A' Group	35-702	Connecting rod bolt split pin	4
76	'A' Group	67-1034	Connecting rod bolt nut	4
77	'A' Group	67-297	Connecting rod bolt washer (plain)	4
78	'A' Group	15-5155	Flywheel bolt nut washer	6
79	'A' Group	67-302	Flywheel bolt nut	6
80	'A' Group	67-643	Crankshaft nut	1
81	'A' Group	67-644	Crankshaft nut locking washer	1
82	'A' Group	67-642	Crankshaft pump gear	1
83	'A' Group	67-648	Crankshaft bush (Gear side)	1
84	'A' Group	15-40	Crankshaft pinion gear key	1
85	'A' Group	65-615	Crankshaft oil hole grub screw	2
86	A7, Star Twin and Shooting Star	67-383	Crankshaft flywheel and connecting rod assy	1
86	A10	67-663	Crankshaft flywheel and connecting rod assy	1

Plate 1—*continued*

ENGINE—'A' GROUP
(PLUNGER AND SWINGING ARM FRAMES)

Plate Ref. Number	Model	Part No.	Description	Number per set
87	A7, Star Twin and Shooting Star	67-1202	Connecting rod with gudgeon pin bush, bolts and nuts (Gear side)	1
87	A10	67-1204	Connecting rod with gudgeon pin bush, bolts and nuts (Gear side)	1
88	A7, Star Twin and Shooting Star	67-393	Gudgeon pin bush	2
88	A10	67-298	Gudgeon pin bush	2
89	'A' Group	67-339	Crankshaft pinion	1
90	'A' Group	67-645	Crankshaft pump gear washer	1
91	'A' Group	24-5160	Crankcase and cylinder barrel stud nut	9
92	'A' Group	36-382	Crankcase and cylinder barrel stud washer	9
93	A7, Star Twin and Shooting Star	67-1070	Cylinder barrel	1
93	A10	67-1074	Cylinder barrel	1
94	'A' Group	67-331	Tappet locating pin (Exhaust)	1
95	'A' Group	1-4676	Tappet locating pin ball	1
96	'A' Group	67-276	Tappet securing screw	1
97	'A' Group	67-299	Tappet retaining screw	2
98	'A' Group	67-332	Inlet tappet	2
99	'A' Group	67-333	Exhaust tappet	2
100	A7, Star Twin and Shooting Star	67-398	Exhaust valve push rod	2
100	A10	67-362	Exhaust valve push rod	2
101	A7, Star Twin and Shooting Star	67-396	Inlet valve push rod	2
101	A10	67-360	Inlet valve push rod	2
102	'A' Group	15-1355	Rocker box bolt	1
103	Shooting Star	67-1118	Rocker box and cylinder head stud nut (Rear)	2
104	Shooting Star	29-7796	Rocker box stud washer	4
105	Shooting Star	67-1120	Induction pipe joint washer	2
106	Shooting Star	67-1112	Induction pipe	1
107	Shooting Star	24-8784	Induction pipe stud washer	4
108	Shooting Star	2-49	Induction pipe stud nut	4
109	Shooting Star	67-1119	Induction pipe stud (bottom)	2
110	Shooting Star	67-1245	Induction pipe stud (top)	2
111	Shooting Star	67-1117	Rocker box stud	4
112	'A' Group Swinging Arm	24-6040	Engine steady bracket and frame bolt nut	1
113	'A' Group Swinging Arm	24-8784	Engine steady bracket and frame bolt washer	1
114	'A' Group Swinging Arm	42-55	Engine steady stay	2
115	'A' Group Swinging Arm	15-1355	Engine steady bracket and frame bolt	1
116	'A' Group Swinging Arm	42-52	Engine steady bracket (L/H)	1
117	'A' Group Swinging Arm	42-56	Engine steady bracket bolt	1
118	'A' Group Swinging Arm	42-54	Engine steady bracket distance piece	1
119	'A' Group Swinging Arm	24-8784	Engine steady bracket bolt washer	1
120	'A' Group Swinging Arm	24-6040	Engine steady bracket bolt nut	1
121	'A' Group Swinging Arm	42-62	Rocker box bolt (long)	4
122	'A' Group Swinging Arm	24-8784	Rocker box bolt washer	5
123	'A' Group Swinging Arm	42-53	Engine steady bracket (R/H)	1
124	'A' Group Swinging Arm	2-923	Engine steady bracket and rocker box washer	4
125	'A' Group Swinging Arm	42-63	Rocker box with studs	1
126	Shooting Star	67-1101	Cylinder head with fixed fittings	1
127	Shooting Star	67-566	Piston complete (8 to 1 C.R.)	2

Plate 2

ENGINE—'A' GROUP
(PLUNGER AND SWINGING ARM FRAMES)

Plate Ref. Number.	Model	Part No.	Description	Number per set.
1	'A' Group	35-709	Cush drive bearing nut split pin	1
2	'A' Group Swinging Arm	67-1098	Cush drive nut (1954 models)	1
2	'A' Group Swinging Arm	42-71	Cush drive nut (1956)	1
2	'A' Group Swinging Arm	67-1137	Cush drive nut (1955 models)	1
—	'A' Group Swinging Arm	65-2521	Cush drive nut locking washer	1

Plate 2 ENGINE 'A' GROUP (PLUNGER AND SWINGING ARM FRAMES)

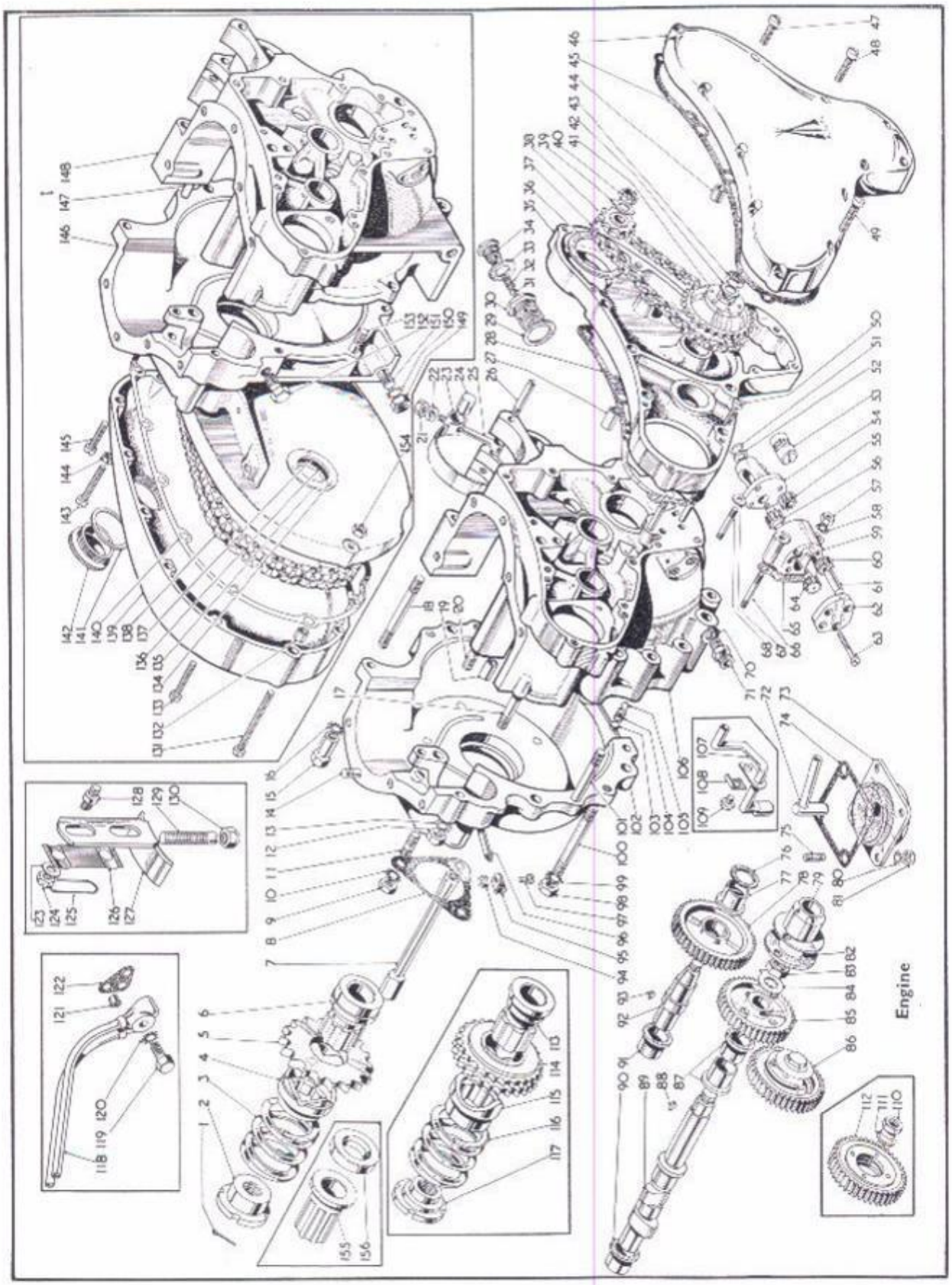

Plate 2—*continued*

ENGINE—'A' GROUP
(PLUNGER AND SWINGING ARM FRAMES)

Plate Ref. Number	Model	Part No.	Description	Number per set
3	'A' Group Swinging Arm	67-2062	Cush drive spring (1954 models)	1
3	A10 (Plunger)	67-2062	Cush drive spring (1956)	1
3	'A' Group Swinging Arm	67-1136	Cush drive spring (1955/6 models)	1
4	'A' Group Swinging Arm	15-1555	Cush drive sleeve (1954 models)	1
4	'A' Group Swinging Arm	42-70	Cush drive sleeve (1956)	1
4	'A' Group Swinging Arm	67-1135	Cush drive sleeve (1955 models)	1
5	A7 and Shooting Star Swinging Arm	15-1566	Engine sprocket (18T) (1954 Models)	1
5	A7 and Shooting Star Swinging Arm.	67-1132	Engine sprocket (18T) (1955/6 models)	1
5	A10 Swinging Arm	15-1560	Engine sprocket (21T) (1954 models)	1
5	A10 Swinging Arm	67-1133	Engine sprocket (21T) (1955/6 solo)	1
5	A10 Swinging Arm	67-1132	Engine Sprocket (18T) (sidecar)	1
6	'A' Group Swinging Arm	67-1097	Cush drive bearing (1954/5 models)	1
6	'A' Group Swinging Arm	42-69	Cush drive bearing (1956)	1
7	'A' Group	67-1259	Magneto fixing nut (long)	1
8	'A' Group	67-1258	Magneto joint washer	1
9	'A' Group	24-5160	Magneto fixing nut	2
10	'A' Group	36-382	Magneto fixing nut washer (shakeproof)	3
11	'A' Group	67-1245	Magneto fixing stud	3
12	'A' Group	2-2395	Crankcase connecting stud nut (top), (rear)	1
13	'A' Group	29-541	Crankcase connecting stud washer (shakeproof)	1
14	'A' Group	67-74	Cylinder barrel fixing stud	9
15	'A' Group	67-1292	Crankcase connecting bolt nut (top)	1
16	'A' Group	36-382	Crankcase connecting bolt washer (top)	1
17	'A' Group	67-355	Crankcase connecting stud (top) (rear)	1
18	'A' Group	67-350	Crankcase engine plate connecting stud	3
19	'A' Group	67-1236	Crankcase dowel	1
20	'A' Group	67-74	Crankcase connecting stud	1
21	'A' Group	2-833	Dynamo strap eye bolt nut	1
22	'A' Group	29-4662	Dynamo strap eye bolt saddle washer	1
23	'A' Group	67-1876	Dynamo strap	1
24	'A' Group	65-2352	Dynamo strap plug	1
25	'A' Group	29-2203	Dynamo strap eye bolt	1
26	'A' Group	67-353	Dynamo strap stud	2
27	'A' Group	27-1589	Crankcase and inner timing cover dowel	2
28	'A' Group	67-281	Inner timing cover joint washer	1
29	'A' Group	67-1499	Oil release valve washer (fibre)	1
—	'A' Group	67-1502	Oil release valve assembly	1
30	'A' Group	67-1503	Oil release valve body complete	1
31	'A' Group	90-241	Oil release valve ball	1
32	'A' Group	67-1496	Oil release valve spring	1
33	'A' Group	67-1498	Oil release valve body plug washer	1
34	'A' Group	67-1505	Oil release valve body plug	1
35	'A' Group	67-284	Inner timing cover complete	1
36	'A' Group	19-1429	Dynamo packing washer	1
37	'A' Group	67-296	Dynamo driving chain	1
38	'A' Group	67-727	Dynamo driven sprocket (11T)	1
39	'A' Group	67-729	Dynamo sprocket lock washer	1
40	'A' Group	19-1473	Dynamo sprocket nut	1
41	'A' Group	67-721	Dynamo driving sprocket	1
42	'A' Group	35-4224	Dynamo driving sprocket lock washer	1
43	'A' Group	2-449	Dynamo driving sprocket nut	2
44	'A' Group	66-3074	Outer timing cover dowel	1
45	'A' Group	67-282	Outer timing cover joint washer	1
46	'A' Group	67-287	Outer timing cover	3
47	'A' Group	67-133	Outer timing cover screw	4
48	'A' Group	67-132	Outer timing cover screw (long)	5
49	'A' Group	65-3063	Outer timing cover screw	4
50	'A' Group	67-133	Inner timing cover screw	1
—	'A' Group	67-1381	Oil pump complete (1954/5)	1
—	'A' Group	67-1402	Oil pump complete (1956)	1
51	'A' Group	67-1390	Oil pump driving spindle spring ring	1
52	'A' Group	2-3525	Oil pump driving spindle washer	1
53	'A' Group	67-1389	Oil pump driving spindle	1
54	'A' Group	67-1388	Oil pump driving spindle housing	1
55	'A' Group	*67-1384	Oil pump feed gear (driven)	1
56	'A' Group	*67-1383	Oil pump feed gear (driver)	1

* 67-1384 replaced by 67-1404. 67-1383 replaced by 67-1403.

For replacement purposes the above gears are supplied only in sets of four.

ENGINE—'A' GROUP
(PLUNGER AND SWINGING ARM FRAMES)

Plate Ref. Number	Model	Part No.	Description	Number per set
57	'A' Group	2-51	Oil pump fixing nut	3
58	'A' Group	29-541	Oil pump fixing nut washer (shakeproof)	3
59	'A' Group	67-1382	Oil pump body	1
60	'A' Group	*67-1386	Oil pump scavenge gear (driven)	1
61	'A' Group	67-1387	Oil pump scavenge gear spindle (driven)	1
62	'A' Group	67-1391	Oil pump end plate	1
63	'A' Group	67-1392	Oil pump end plate screw	4
64	'A' Group	*67-1385	Oil pump scavenge gear (driver)	1
65	'A' Group	67-1393	Oil pump body joint washer	1
66	'A' Group	67-1395	Oil pump fixing stud (long)	2
67	'A' Group	67-1394	Oil pump body joint washer (small)	1
68	'A' Group	67-1396	Oil pump fixing stud (short)	1
70	'A' Group Swinging Arm	66-1683	Oil pipe crankcase pipe washer (fibre)	2
71	'A' Group Swinging Arm	65-2252	Oil pipe crankcase pipe adaptor	2
72	'A' Group Swinging Arm	67-1093	Crankcase scavenge pipe complete	1
73	'A' Group	67-1285	Scavenge cover complete	1
74	'A' Group	67-1288	Scavenge cover joint washer	1
75	'A' Group	31-222	Scavenge cover fixing stud	4
76	'A' Group	67-708	Idler pinion spindle oil seal	1
77	'A' Group	67-286	Idler pinion spindle bush	1
78	'A' Group	67-335	Idler pinion complete	1
79	'A' Group	67-987	Crankcase breather	1
80	'A' Group	29-541	Scavenge cover fixing nut washer	4
81	'A' Group	2-51	Scavenge cover fixing stud nut	4
82	'A' Group	67-134	Crankcase breather outer seal (1/4")	1
82	'A' Group	67-135	Crankcase breather outer seal (5/16")	As reqd.
82	'A' Group	67-136	Crankcase breather outer seal (3/8")	As reqd.
82	'A' Group	67-137	Crankcase breather outer seal (7/16")	As reqd.
83	'A' Group	2-124	Camshaft pinion nut	1
84	'A' Group	67-685	Camshaft pinion nut lock washer	1
85	'A' Group	67-337	Camshaft driving pinion complete	1
86	A7, A10, Plunger and Swinging Arm	67-1882	Auto advance with gear (Lucas)	1
87	'A' Group	67-686	Camshaft bush	2
88	'A' Group	35-1896	Camshaft pinion key	1
89	A7, A10, Plunger frame and Swinging Arm.	67-334	Camshaft	1
89	Star Twin and Shooting Star	67-356	Camshaft	1
90	'A' Group	67-686	Camshaft bush	1
91	'A' Group	67-686	Idler pinion bush	1
92	'A' Group	67-707	Idler pinion spindle	1
93	'A' Group	27-1386	Idler pinion key	1
94	'A' Group	25-7151	Breather pipe clip bolt nut	1
95	'A' Group	67-923	Breather pipe clip	1
96	'A' Group	67 922	Breather pipe	1
97	'A' Group	1-4606	Breather pipe clip bolt	1
98	'A' Group Plunger	2 49	Crankcase stud nut	13
98	'A' Group Swinging Arm	2-49	Crankcase stud nut	9
99	'A' Group Plunger	36-382	Crankcase stud nut washer	13
99	'A' Group Swinging Arm	36-382	Crankcase bolt and stud nut washer	9
100	'A' Group Plunger	29-4101	Crankcase connecting stud (bottom) (rear)	1
100	'A' Group Swinging Arm	29-4101	Crankcase connecting stud (bottom)	2
101	'A' Group Swinging Arm	67-352	Crankcase connecting stud	4
101	'A' Group Plunger	67-352	Crankcase connecting stud	2
102	'A' Group Swinging Arm	†67-1085	Crankcase with fixed fittings (drive side)	1
103	'A' Group	67-1401	Oil retaining ball grub screw	1
104	'A' Group	67-1400	Oil retaining ball spring	1
105	'A' Group	1-4675	Oil retaining ball	1
106	'A' Group Swinging Arm	†67-1087	Crankcase with fixed fittings (gear side)	1
107	'A' Group Plunger	67-340	Scavenge pipe complete	1
108	'A' Group Plunger	67-1281	Scavenge pipefixing bolt lock washer	1
109	'A' Group Plunger	67-1280	Scavenge pipefixing bolt	1
110	Star Twin and Shooting Star	24-195	Magneto driving pinion nut	1
111	Star Twin and Shooting Star	2-2903	Magneto driving pinion washer	1
112	Star Twin and Shooting Star	67-540	Magneto driving pinion, assembled	1
113	'A' Group Plunger	67-2071	Cush drive bearing	1
114	'A' Group Plunger	67-2050	Engine sprocket with sleeve and key	1

* 67-1386 replaced by 67-1406. 67-1385 replaced by 67-1405.

For replacement purposes the above gears are supplied only in sets of four.

† Supplied only as	67-1089	Crankcase drive side and gear side assembled	1

Plate 2—*continued* ENGINE—'A' GROUP (PLUNGER AND SWINGING ARM FRAMES)

Plate Ref. Number	Model	Part No.	Description	Number per set
115	'A' Group Plunger	67–2055	Cush drive sliding sleeve	1
116	'A' Group Plunger	67–2062	Cush drive spring	1
117	'A' Group Plunger	67–2054	Cush drive bearing nut	1
118	'A' Group Plunger	67–1461	Oil pipe union with pipes	1
119	'A' Group Plunger	67–1467	Oil pipe union fixing bolt	1
120	'A' Group Plunger	66–4707	Oil pipe union fixing bolt washer (shakeproof)	1
121	'A' Group Plunger	67–1463	Oil pipe union locating bush	1
122	'A' Group Plunger	67–1466	Oil pipe union joint washer	1
123	'A' Group Plunger	2–923	Primary chain tensioner stud washer	2
124	'A' Group Plunger	67–1264	Primary chain tensioner stud nut	2
125	'A' Group Plunger	65–8038	Primary chain tensioner stud nut locking wire	1
126	'A' Group Plunger	67–1263	Primary chain tensioner spring plate	1
127	'A' Group Plunger	67–1261	Primary chain tensioner	1
128	'A' Group Plunger	67–1262	Primary chain tensioner stud	2
129	'A' Group Plunger	67–1268	Primary chain tensioner adjuster screw	1
130	'A' Group Plunger	67–1266	Primary chain tensioner adjuster nut	1
131	'A' Group Plunger	67–1704	Primary chain cover screw (long)	1
132	'A' Group Plunger	66–3074	Crankcase and primary chain cover dowel	2
133	'A' Group Plunger	67–1706	Primary chain cover screw (medium)	7
134	'A' Group Plunger	67–1244	Crankcase oil flinger rivet	3
135	'A' Group Plunger	67–1243	Crankcase oil seal washer	1
136	'A' Group Plunger	67–1241	Crankcase oil flinger	1
137	'A' Group Plunger	67–1242	Crankcase oil seal	1
138	'A' Group Plunger	67–1703	Primary chain	1
139	'A' Group Plunger	67–1701	Primary chain cover	1
140	'A' Group Plunger	67–1702	Primary chain cover joint washer	1
141	'A' Group Plunger	67–42	Primary chain cover oil filler plug washer (fibre)	1
142	'A' Group Plunger	65–3364	Primary chain oil filler plug	1
143	'A' Group Plunger	67–1711	Primary chain cover oil level screw	1
144	'A' Group Plunger	67–1709	Primary chain oil level screw washer	1
145	'A' Group Plunger	67–1705	Primary chain cover screw (short)	3
146	'A' Group Plunger	†67–453	Crankcase with fixed fittings (drive side)	1
147	'A' Group Plunger	67–352	Crankcase connecting stud (front)	2
148	'A' Group Plunger	†67–455	Crankcase with fixed fittings (gear side)	1
149	'A' Group Plunger	21–5104	Crankcase and gearbox stud nut	2
150	'A' Group Plunger	66–4707	Crankcase and gearbox stud nut washer (shakeproof)	4
151	'A' Group Plunger	35–4005	Gearbox fixing stud (crankcase bottom fixing)	1
152	'A' Group Plunger	67–1467	Gearbox fixing bolt (crankcase top fixing)	1
153	'A' Group Plunger	67–1235	Crankcase connecting stud (gearbox housing)	2
154	'A' Group Plunger	67–1710	Primary chain cover and bottom chainguard screw nut	1
155	'A' Group Swinging Arm	67–1134	Cush drive bearing (1955 models)	1
156	'A' Group Swinging Arm	67–1138	Cush drive distance piece	1
	†Supplied only as	67–452	Crankcase drive side and gear side assembled	1

Plate 3 ENGINE A7 SHOOTING STAR, A10 ROAD ROCKET (SWINGING ARM) (1956/7)

Plate Ref. Number	Model	Part No.	Description	Number per set
1	Shooting Star	67–531	Valve (inlet)	2
1	Road Rocket	67–968	Valve (inlet)	2
2	Shooting Star	67–439	Valve spring (outer)	4
2	Road Rocket	67–884	Valve spring (outer)	4
3	Shooting Star	67–440	Valve spring (inner)	4
3	Road Rocket	67–883	Valve spring (inner)	4
4	Shooting Star	67–34	Valve spring collar (top)	4
4	Road Rocket	67–960	Valve spring collar (top)	4
5	Shooting Star	29–410	Valve spring cotter (halves)	8
5	Road Rocket	65–1624	Valve spring cotter (halves)	8
6	Shooting Star and Road Rocket	65–2153	Rocker box inspection cover stud nut	8
7	Shooting Star and Road Rocket	24–978	Rocker box inspection cover nut washer	8
8	Shooting Star and Road Rocket	67–263	Rocker box inspection cover	2
9	Shooting Star and Road Rocket	67–279	Rocker box inspection cover joint washer	2

Plate 3

ENGINE A7 SHOOTING STAR, A10 ROAD ROCKET (SWINGING ARM) (1956/7)

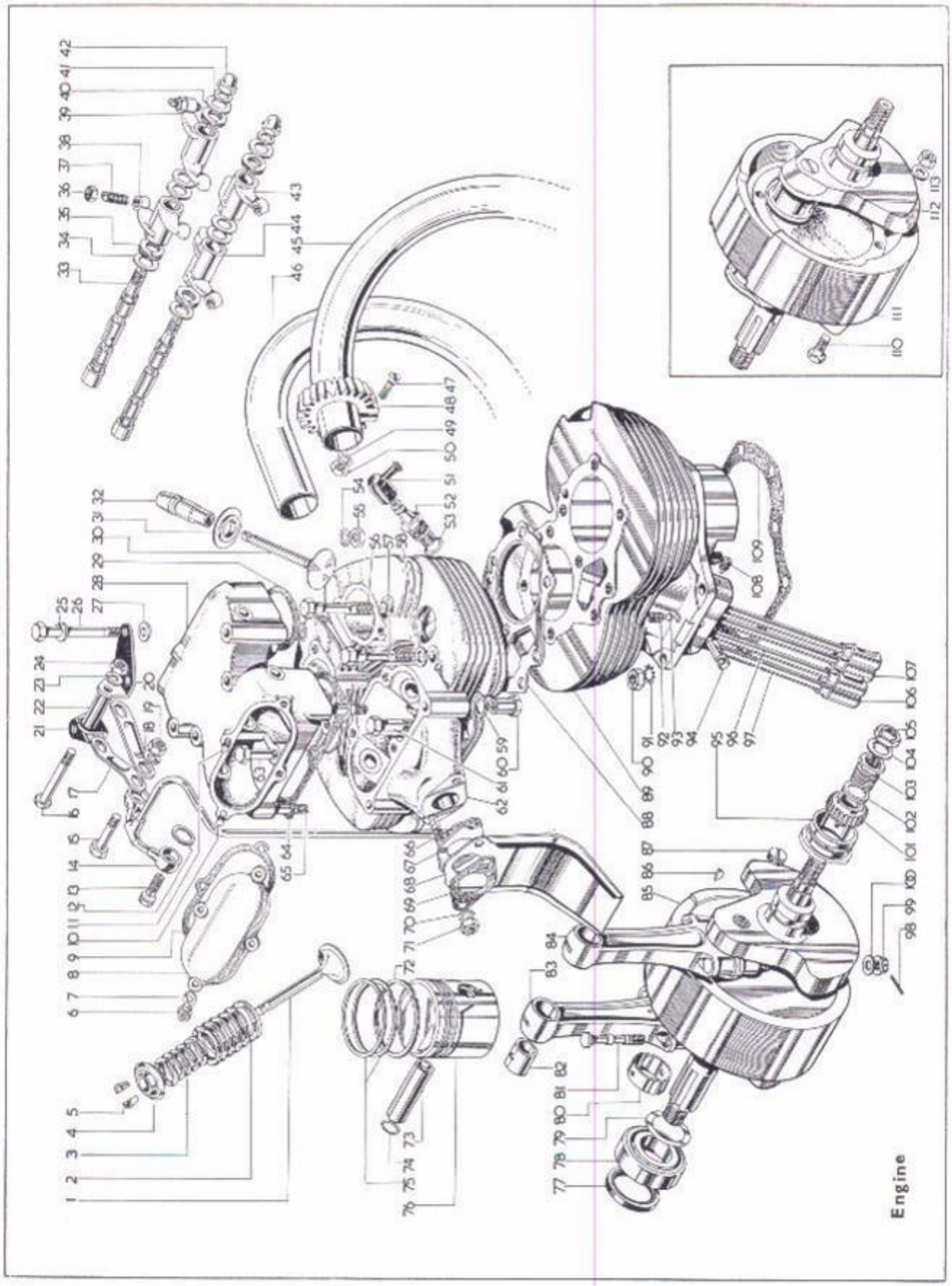

Plate 3 *continued* ENGINE A7 SHOOTING STAR, A10 ROAD ROCKET (SWINGING ARM) (1956-7)

Plate Ref. Number	Model	Part No.	Description	Number per set
10	Shooting Star and Road Rocket	67-280	Rocker box inspection cover stud	7
11	Shooting Star and Rocket Road	67-343	Rocker box inspection cover stud	1
12	Shooting Star and Road Rocket	15-203	Rocker oil feed pipe union washer (fibre)	2
13	Shooting Star and Road Rocket	65-317	Rocker oil feed pipe union screw	2
14	Shooting Star and Road Rocket	42-48	Rocker oil feed pipe complete	1
15	Shooting Star and Road Rocket	15-1355	Engine steady and frame bolt	1
16	Shooting Star and Road Rocket	42-56	Engine steady bolt	1
17	Shooting Star and Road Rocket	42-55	Engine steady stay	2
18	Shooting Star and Road Rocket	24-8784	Engine steady and frame bolt washer	1
19	Shooting Star and Road Rocket	24-6040	Engine steady and frame bolt nut	1
20	Shooting Star and Road Rocket	42-53	Engine steady bracket (R/H)	1
21	Shooting Star and Road Rocket	42-52	Engine steady bracket (L/H)	1
22	Shooting Star and Road Rocket	42-54	Engine steady bracket distance piece	1
23	Shooting Star and Road Rocket	24-8784	Engine steady bolt washer (spring)	1
24	Shooting Star and Road Rocket	24-6040	Engine steady bolt nut	5
25	Shooting Star and Road Rocket	24-8784	Rocker box bolt washer (spring)	4
26	Shooting Star and Road Rocket	42-62	Rocker box bolt (long)	4
27	Shooting Star and Road Rocket	2-923	Engine steady bracket and rocker box washer	1
28	Shooting Star	67-1143	Rocker box with studs	1
28	Road Rocket	67-1141	Rocker box with studs	2
29	Shooting Star and Road Rocket	67-277	Rocker box joint washer	2
30	Shooting Star	67-532	Valve (exhaust)	2
30	Road Rocket	67-967	Valve (exhaust)	4
31	Road Rocket	67-886	Valve spring bottom cup	4
32	Shooting Star and Road Rocket	67-1140	Valve Guide (inlet and exhaust)	2
33	Shooting Star and Road Rocket	67-64	Valve rocker spindle	6
34	Shooting Star and Road Rocket	67-60	Valve rocker thrust washer	4
35	Shooting Star and Road Rocket	67-62	Valve rocker spindle washer (spring)	4
36	Shooting Star and Road Rocket	24-563	Valve rocker adjusting screw nut	4
37	Shooting Star and Road Rocket	67-56	Valve rocker adjusting screw	1
38	Shooting Star and Road Rocket	67-266	Valve rocker (exhaust) (nearside)	1
39	Shooting Star and Road Rocket	67-267	Valve rocker (exhaust) (offside)	2
40	Shooting Star and Road Rocket	67-61	Valve rocker thrust washer	2
41	Shooting Star and Road Rocket	36-481	Valve rocker spindle washer	2
42	Shooting Star and Road Rocket	65-311	Valve rocker spindle nut	1
43	Shooting Star and Road Rocket	67-265	Valve rocker (inlet) (offside)	1
44	Shooting Star and Road Rocket	67-264	Valve rocker (inlet) (nearside)	1
45	Shooting Star	42-2761	Exhaust pipe (O/S)	1
45	Road Rocket	42-2766	Exhaust pipe (O/S)	1
46	Shooting Star	42-2763	Exhaust pipe (N/S)	1
46	Road Rocket	42-2768	Exhaust pipe (N/S)	2
47	Shooting Star and Road Rocket	21-6187	Exhaust pipe finned collar screw	2
48	Shooting Star and Road Rocket	67-2694	Exhaust pipe finned collar	2
49	Shooting Star and Road Rocket	29-541	Exhaust pipe finned collar washer	2
50	Shooting Star and Road Rocket	21-5102	Exhaust pipe finned collar screw nut	2
51	Shooting Star and Road Rocket	67-985	Sparking plug cover (suppressed)	2
52	Shooting Star and Road Rocket	65-1340	Sparking plug	2
53	Shooting Star and Road Rocket	66-102	Sparking plug washer	4
54	Shooting Star and Road Rocket	36-382	Rocker box stud washer (shakeproof)	2
55	Shooting Star and Road Rocket	2-49	Rocker box stud nut	2
56	Shooting Star and Road Rocket	67-1116	Cylinder head holding down bolt (long)	4
57	Shooting Star and Road Rocket	67-1115	Cylinder head holding down bolt (medium)	9
58	Shooting Star and Road Rocket	2-2138	Cylinder and head bolt washer	4
59	Shooting Star and Road Rocket	29-7796	Rocker box stud washer	2
60	Shooting Star and Road Rocket	67-1118	Rocker box cylinder head stud nut (rear)	3
61	Shooting Star and Road Rocket	67-1114	Cylinder head holding down bolt (short)	1
62	Shooting Star	67-1121	Cylinder head with fixed fittings	1
62	Road Rocket	67-1125	Cylinder head with fixed fittings	1
63	Shooting Star and Road Rocket	15-1355	Rocker box bolt	1
64	Shooting Star and Road Rocket	67-278	Rocker box joint washer	4
65	Shooting Star and Road Rocket	67-1117	Rocker box cylinder head stud	2
66	Shooting Star	29-565	Carburetter fixing stud	2
66	Road Rocket	67-347	Carburetter fixing stud	1
67	Road Rocket	65-1419	Carburetter flange distance washer	1
68	Shooting Star	67-527	Carburetter drip shield	1
68	Road Rocket	67-120	Carburetter drip shield	3
69	Shooting Star and Road Rocket	65-1232	Carburetter joint washer	2
70	Shooting Star and Road Rocket	36-382	Carburetter fixing bolt washer	2
71	Shooting Star and Road Rocket	2-49	Carburetter fixing stud nut	1
72	Shooting Star	67-410	Scraper ring	1
72	Road Rocket	67-314	Scraper ring	2
73	Shooting Star	67-392	Gudgeon pin	

Plate 3—*continued* ENGINE A7 SHOOTING STAR, A10 ROAD ROCKET (SWINGING ARM) (1956/7)

Plate Ref. Number	Model	Part No.	Description	Number per set
73	Road Rocket	65–440	Gudgeon pin	2
74	Shooting Star	67–101	Gudgeon pin circlip	4
74	Road Rocket	66–954	Gudgeon pin circlip	4
75	Shooting Star	67–407	Compression ring	4
75	Road Rocket	67–311	Compression ring	4
76	Shooting Star	67–533	Piston complete with rings, gudgeon pin and circlips	2
76	Road Rocket	67–572	Piston complete with rings, gudgeon pin and circlips	2
77	Shooting Star and Road Rocket	67–674	Crankshaft oil seal	1
78	Shooting Star and Road Rocket	67–670	Crankcase roller bearing	1
79	Shooting Star and Road Rocket	67–671	Crankshaft shim (Drive side) (.005")	As reqd.
79	Shooting Star and Road Rocket	67–672	Camshaft shim (Drive side) (.010")	As reqd.
80	Shooting Star	67–320	Connecting rod big end split bush (halves)	4
80	Road Rocket	67–1176	Connecting rod big end split bush (halves)	4
81	Shooting Star	67–1059	Connecting rod big end bolt	4
81	Road Rocket	67–1181	Connecting rod big end bolt	4
82	Shooting Star	67–393	Gudgeon pin bush	2
82	Road Rocket	67–298	Gudgeon pin bush	2
83	Shooting Star	67–1201	Connecting rod complete with gudgeon pin, bush, bolts, nuts (Drive side)	1
83	Road Rocket	67–1205	Connecting rod complete with gudgeon pin, bush, bolts, nuts, etc. (Drive side)	1
84	Shooting Star	67–1202	Connecting rod complete with gudgeon pin, bush, bolts, nuts (Gear side)	1
84	Road Rocket	67–1206	Connecting rod complete with gudgeon pin, bush, bolts, nuts, etc.	1
85	Road Rocket	67–1216	Crankshaft, and flywheel assembly	1
86	Shooting Star and Road Rocket	15–40	Crankshaft pinion gear key	1
87	Shooting Star and Road Rocket	65–615	Crankshaft oil hole plug	2
88	Shooting Star	67–382	Cylinder head joint washer	1
88	Road Rocket	67–255	Cylinder head joint washer	1
89	Shooting Star	67–1070	Cylinder barrel	1
89	Road Rocket	67–1210	Cylinder barrel	1
90	Shooting Star and Road Rocket	24–5160	Crankcase and cylinder barrel stud nut	9
91	Shooting Star and Road Rocket	36–382	Crankcase and cylinder barrel stud washer	9
92	Shooting Star	67–276	Tappet securing screw	1
92	Road Rocket	67–949	Tappet securing screw	1
93	Shooting Star and Road Rocket	1–4676	Tappet locating pin ball	1
94	Shooting Star and Road Rocket	67–331	Exhaust tappet locating pin	1
95	Shooting Star and Road Rocket	67–648	Crankshaft bush (Gearside)	1
96	Shooting Star and Road Rocket	67–979	Exhaust valve push rod	2
97	Shooting Star and Road Rocket	67–977	Inlet valve push rod	2
98	Shooting Star and Road Rocket	35–702	Connecting Rod bolt split pin	4
99	Shooting Star and Road Rocket	67–1034	Connecting Rod bolt nut	4
100	Shooting Star and Road Rocket	67–297	Connecting Rod bolt washer	4
101	Shooting Star and Road Rocket	67–339	Crankshaft pinion	1
102	Shooting Star and Road Rocket	67–645	Crankshaft pump gear washer	1
103	Shooting Star and Road Rocket	67–642	Crankshaft pump gear	1
104	Shooting Star and Road Rocket	67–644	Crankshaft nut locking washer	1
105	Shooting Star and Road Rocket	67–643	Crankshaft nut	1
106	Shooting Star and Road Rocket	67–332	Inlet tappet	2
107	Shooting Star and Road Rocket	67–333	Exhaust tappet	2
108	Shooting Star and Road Rocket	67–949	Tappet retaining screw	2
109	Shooting Star and Road Rocket	67–256	Cylinder barrel base washer	1
110	Shooting Star	67–301	Flywheel bolt	6
110	Road Rocket	67–1213	Flywheel bolt	3
111	Shooting Star	67–384	Crankshaft and flywheel assembly	1
112	Shooting Star	15–5155	Flywheel bolt washer	6
113	Shooting Star	67–302	Flywheel bolt nut	6

Plate 4 ENGINE A7 SHOOTING STAR, A10 ROAD ROCKET (SWINGING ARM) (1956/7)

Plate Ref. Number	Model	Part No.	Description	Number per set
1	Shooting Star and Road Rocket	42–71	Cush drive nut	1
2	Shooting Star and Road Rocket	35–709	Cush drive bearing nut split pin	1
3	Shooting Star and Road Rocket	65–2521	Cush drive nut locking washer	1
4	Shooting Star and Road Rocket	67–1136	Cush drive spring	1

Plate 4—*continued* ENGINE A7 SHOOTING STAR, A10 ROAD ROCKET (SWINGING ARM) (1956/7)

Plate Ref. Number	Model	Part No.	Description	Number per set
5	Shooting Star and Road Rocket	42-70	Cush drive sleeve	1
6	Shooting Star	67-1132	Engine sprocket (18T)	1
6	Road Rocket	67-1133	Engine sprocket (21T) (solo)	1
6	Road Rocket	67-1132	Engine sprocket (18T) (sidecar)	1
7	Shooting Star and Road Rocket	42-69	Cush drive bearing	1
8	Shooting Star and Road Rocket	67-2056	Engine sprocket alignment shim (.005")	As reqd.
8	Shooting Star and Road Rocket	67-2057	Engine sprocket alignment shim (.010")	As reqd.
8	Shooting Star and Road Rocket	67-2058	Engine sprocket alignment shim (.030")	As reqd.
9	Shooting Star and Road Rocket	67-1138	Cush drive distance piece	1
10	Shooting Star and Road Rocket	2-2395	Crankcase connecting stud nut (Top, Rear)	1
11	Shooting Star and Road Rocket	29-541	Crankcase connecting stud washer (Top, Rear)	1
12	Shooting Star	†67-1085	Crankcase with fixed fittings (Drive side)	1
12	Road Rocket	†67-1079	Crankcase with fixed fittings (Drive side)	1
13	Shooting Star and Road Rocket	67-1292	Crankcase connecting bolt nut (top)	1
14	Shooting Star and Road Rocket	36-382	Crankcase connecting bolt washer (top)	1
15	Road Rocket	67-1214	Cylinder barrel stud	9
16	Shooting Star and Road Rocket	67-355	Crankcase connecting stud (top Rear)	1
17	Shooting Star and Road Rocket	67-1236	Crankcase dowel	1
18	Shooting Star and Road Rocket	67-74	Crankcase connecting stud	1
19	Shooting Star and Road Rocket	67-350	Front engine plate and crankcase stud	3
20	Shooting Star	†67-1087	Crankcase with fixed fittings (Gear side)	1
20	Road Rocket	†67-1080	Crankcase with fixed fittings (Gear side)	1
21	Shooting Star and Road Rocket	29-2203	Dynamo strap eyebolt	1
22	Shooting Star and Road Rocket	67-1876	Dynamo strap	1
23	Shooting Star and Road Rocket	29-4662	Dynamo strap eyebolt washer	1
24	Shooting Star and Road Rocket	2-833	Dynamo strap eyebolt nut	1
25	Shooting Star and Road Rocket	65-2352	Dynamo strap plug	1
26	Shooting Star and Road Rocket	67-353	Dynamo strap stud	1
27	Shooting Star and Road Rocket	67-1499	Oil release valve washer (fibre)	1
—	Shooting Star and Road Rocket	67-1502	Oil release valve assembly	1
28	Shooting Star and Road Rocket	67-1503	Oil release valve body	1
29	Shooting Star and Road Rocket	90-241	Oil release valve ball	1
30	Shooting Star and Road Rocket	67-1496	Oil release valve spring	1
31	Shooting Star and Road Rocket	67-1498	Oil release valve body plug washer	1
32	Shooting Star and Road Rocket	67-1505	Oil release valve body plug	3
33	Shooting Star and Road Rocket	67-133	Outer tining cover screw	1
34	Shooting Star	67-287	Outer timing cover	1
34	Road Rocket	67-712	Outer timing cover	1
35	Shooting Star and Road Rocket	67-282	Outer Timing cover washer	2
36	Shooting Star and Road Rocket	66-3074	Outer timing cover dowel	1
37	Shooting Star and Road Rocket	2-449	Dynamo driven sprocket nut	1
38	Shooting Star and Road Rocket	35-4224	Dynamo driving sprocket lockwasher	1
39	Shooting Star and Road Rocket	67-721	Dynamo driving sprocket	1
40	Shooting Star and Road Rocket	67-296	Dynamo driving chain	1
41	Shooting Star and Road Rocket	19-1473	Dynamo driving sprocket nut	1
42	Shooting Star and Road Rocket	67-729	Dynamo driven sprocket lockwasher	1
43	Shooting Star and Road Rocket	19-1949	Dynamo packing washer	1
44	Shooting Star and Road Rocket	67-727	Dynamo driven sprocket (11T)	1
45	Shooting Star and Road Rocket	67-284	Inner timing cover	1
46	Shooting Star and Road Rocket	67-281	Inner timing cover joint washer	2
47	Shooting Star and Road Rocket	27-1589	Crankcase and inner cover dowel	4
48	Shooting Star and Road Rocket	67-133	Inner timing cover screw	9
49	Shooting Star and Road Rocket	36-382	Crankcase bolt and stud washer	9
50	Shooting Star and Road Rocket	2-49	Crankcase bolt and stud nut	1
51	Shooting Star and Road Rocket	67-1394	Oil pump body joint washer (small)	1
52	Shooting Star and Road Rocket	67-1396	Oil pump fixing stud (short)	2
53	Shooting Star and Road Rocket	67-1395	Oil pump fixing stud (long)	2
54	Shooting Star and Road Rocket	66-1683	Oil pipe crankcase pipe washer	2
55	Shooting Star and Road Rocket	65-2252	Oil pipe crankcase pipe adaptor	1
56	Shooting Star and Road Rocket	67-1285	Scavenge cover with oil filter	1
57	Shooting Star and Road Rocket	67-1093	Crankcase scavenge pipe complete	1
58	Shooting Star and Road Rocket	67-1288	Scavenge cover joint washer	2
59	Shooting Star and Road Rocket	31-222	Scavenge cover fixing stud	1
60	Shooting Star and Road Rocket	1-4675	Oil retaining ball	1
61	Shooting Star and Road Rocket	67-1400	Oil retaining ball spring	1
62	Shooting Star and Road Rocket	67-1401	Oil Retaining ball grub screw	2
63	Shooting Star and Road Rocket	29-4101	Crankcase, connecting stud (bottom)	4
64	Shooting Star and Road Rocket	67-352	Crankcase connecting stud	

†Shooting Star — Supplied only as 67-1089 crankcase drive side and gear side assembled.
†Road Rocket — Supplied only as 67-1077 crankcase drive side and gear side assembled.

Plate 4

ENGINE A7 SHOOTING STAR A10 ROAD ROCKET (SWINGING ARM) (1956/7)

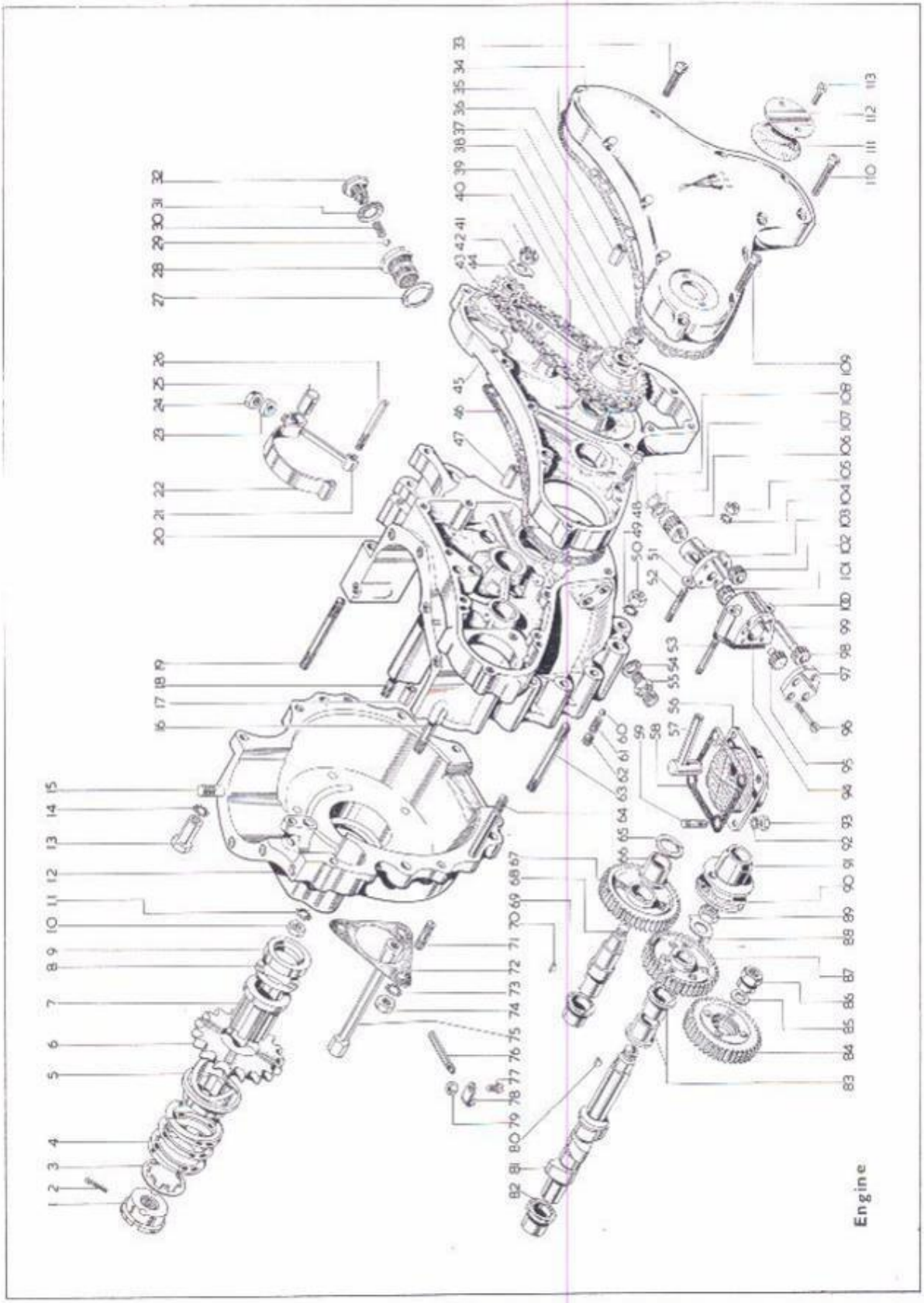

Plate 4—*continued* ENGINE A7 SHOOTING STAR, A10 ROAD ROCKET (SWINGING ARM) (1956/7)

Plate Ref. Number	Model	Part No.	Description	Number per set
65	Shooting Star and Road Rocket	67-708	Idler pinion spindle oil seal	1
66	Shooting Star and Road Rocket	67-286	Idler pinion spindle bush	1
—	Shooting Star and Road Rocket	67-335	Idler pinion with spindle and key	1
67	Shooting Star and Road Rocket	67-336	Idler pinion only	1
68	Shooting Star and Road Rocket	67-707	Idler pinion spindle	1
69	Shooting Star and Road Rocket	67-686	Idler pinion bush	1
70	Shooting Star and Road Rocket	27-1386	Idler pinion key	3
71	Shooting Star and Road Rocket	67-1245	Magneto fixing stud	1
72	Shooting Star and Road Rocket	67-1258	Magneto joint washer	3
73	Shooting Star and Road Rocket	36-382	Magneto fixing nut washer	2
74	Shooting Star and Road Rocket	24-5160	Magneto fixing nut	1
75	Shooting Star and Road Rocket	67-1259	Magneto fixing nut (long)	1
76	Shooting Star and Road Rocket	67-922	Breather pipe	1
77	Shooting Star and Road Rocket	1-4606	Breather pipe clip bolt	1
78	Shooting Star and Road Rocket	67-923	Breather pipe clip	1
79	Shooting Star and Road Rocket	25-7151	Breather pipe clip bolt nut	1
80	Shooting Star and Road Rocket	35-1896	Camshaft pinion key	1
81	Shooting Star and Road Rocket	67-356	Camshaft	1
82	Shooting Star and Road Rocket	67-686	Camshaft bush	2
83	Shooting Star and Road Rocket	67-686	Camshaft bush	1
84	Shooting Star and Road Rocket	67-540	Magneto driving pinion	1
85	Shooting Star and Road Rocket	2-2903	Magneto driving pinion washer	1
86	Shooting Star and Road Rocket	24-195	Magneto driving pinion nut	1
87	Shooting Star and Road Rocket	67-337	Camshaft driving pinion	1
88	Shooting Star and Road Rocket	67-685	Camshaft pinion nut lockwasher	1
89	Shooting Star and Road Rocket	2-124	Camshaft pinion nut	As reqd.
90	Shooting Star and Road Rocket	67-134	Crankcase breather outer seal	As reqd.
90	Shooting Star and Road Rocket	67-135	Crankcase breather outer seal	As reqd.
90	Shooting Star and Road Rocket	67-136	Crankcase breather outer seal	As reqd.
90	Shooting Star and Road Rocket	67-137	Crankcase breather outer seal	1
91	Shooting Star and Road Rocket	67-987	Crankcase breather	4
92	Shooting Star and Road Rocket	29-541	Scavenge cover fixing washer	4
93	Shooting Star and Road Rocket	2-51	Scavenge cover fixing nut	1
94	Shooting Star and Road Rocket	67-1393	Oil pump body joint washer	1
95	Shooting Star and Road Rocket	67-1405	Oil pump scavenge gear (Driver)	4
96	Shooting Star and Road Rocket	67-1392	Oil pump end screw	1
97	Shooting Star and Road Rocket	67-1391	Oil pump end plate	1
98	Shooting Star and Road Rocket	67-1406	Oil pump scavenge gear (Driven)	1
99	Shooting Star and Road Rocket	67-1387	Oil pump scavenge driven gear spindle	1
100	Shooting Star and Road Rocket	67-1382	Oil pump body	1
101	Shooting Star and Road Rocket	67-1403	Oil pump feed gear (Driver)	1
102	Shooting Star and Road Rocket	67-1404	Oil pump feed gear (Driven)	1
103	Shooting Star and Road Rocket	67-1388	Oil pump driving spindle housing	3
104	Shooting Star and Road Rocket	29-541	Oil pump fixing nut washer	3
105	Shooting Star and Road Rocket	2-51	Oil pump fixing nut	1
106	Shooting Star and Road Rocket	67-1389	Oil pump driving spindle	1
107	Shooting Star and Road Rocket	2-3525	Oil pump driving spindle washer	1
108	Shooting Star and Road Rocket	67-1390	Oil pump driving spindle spring ring	5
109	Shooting Star and Road Rocket	65-3063	Outer timing cover screw	4
110	Shooting Star and Road Rocket	67-132	Outer timing cover screw (long)	1
111	Road Rocket	67-715	Timing cover sealing plate joint washer	1
112	Road Rocket	67-714	Outer timing cover sealing plate	2
113	Road Rocket	65-9165	Outer timing cover sealing plate bolt	

Plate 5 GEARBOX—'A' GROUP (PLUNGER FRAME)

Plate Ref. Number	Model	Part No.	Description	Number per set
1	'A' Group	67-3014	Gearbox casing with fixed fittings	1
2	'A' Group	67-3031	Gearbox inner cover joint washer	1
3	'A' Group	67-3027	Gearbox inspection hole plug	2
4	'A' Group	67-3112	Selector cam plate bearing washer	1
5	'A' Group	67-3137	Selector cam plate bearing	1
6	'A' Group	29-541	Selector cam plate bearing washer	2
7	'A' Group	21-5842	Selector cam plate bearing screw	2
8	'A' Group	67-3266	Clutch cover bolt nut	12

Plate 5 GEARBOX—'A' GROUP (PLUNGER FRAME)

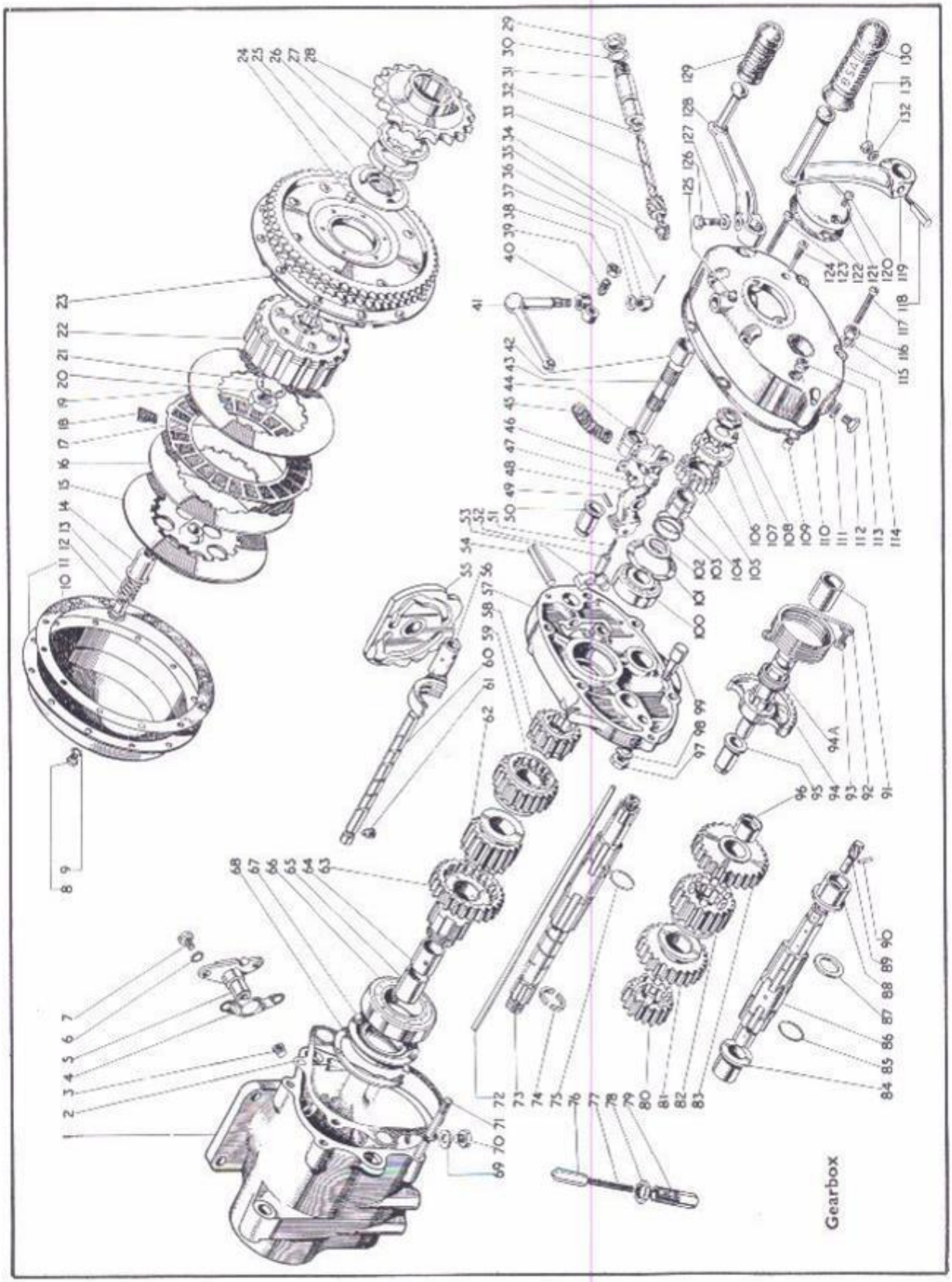

Plate 5—*continued* GEARBOX—'A' GROUP (PLUNGER FRAME)

Plate Ref. Number	Model	Part No.	Description	Number per set
9	'A' Group	29-3319	Clutch cover bolt nut washer	12
10	'A' Group	67-3264	Clutch cover washer	1
11	'A' Group	67-3263	Clutch cover	1
12	'A' Group	67-3249	Clutch spring adjusting nut	6
13	'A' Group	67-3247	Clutch spring	6
14	'A' Group	67-3248	Clutch spring cup	6
15	'A' Group	67-3245	Clutch spring plate	1
16	'A' Group	67-3241	Clutch driven plate	5
17	'A' Group	67-3242	Clutch driving plate	5
18	'A' Group	67-3244	Clutch driving plate insert	120
19	'A' Group	67-3240	Clutch driven plate (rear)	1
20	'A' Group	67-3257	Clutch centre and mainshaft nut	1
21	'A' Group	67-3253	Clutch centre and mainshaft nut washer	1
22	'A' Group	67-3237	Clutch centre complete	1
23	'A' Group	67-3271	Clutch chainwheel complete	1
24	'A' Group	26-650	Clutch chainwheel rollers	18
25	'A' Group	67-3276	Clutch thrust washer (.122"-.126")	As reqd.
25	'A' Group	67-3277	Clutch thrust washer (.138"-.140")	As reqd.
25	'A' Group	67-3278	Clutch thrust washer (.148"-.150")	As reqd.
26	'A' Group	67-3053	Gearbox sprocket nut	1
27	'A' Group	24-4263	Gearbox sprocket locking washer	1
28	'A' Group	67-3064	Gearbox sprocket (18T) (Standard)	1
28	'A' Group	67-3065	Gearbox sprocket (19T)	As reqd.
29	'A' Group	65-3391	Speedometer driven gear bush nut	1
30	'A' Group	65-3392	Speedometer driven gear bush washer	1
31	'A' Group	65-3390	Speedometer driven gear bush	1
32	'A' Group	65-3375	Speedometer driven gear thrust washer	1
33	'A' Group	67-3175	Speedometer driven gear	1
34	'A' Group	65-3377	Speedometer gear bush	1
35	'A' Group	35-702	Clutch push rod lever nut split pin	1
36	'A' Group	15-1485	Clutch push rod lever nut	1
37	'A' Group	2-525	Clutch push rod lever washer	1
38	'A' Group	2-452	Clutch push rod lever adjusting screw nut	1
39	'A' Group	65-3403	Clutch push rod adjustment screw	1
40	'A' Group	65-3360	Clutch push rod lever	1
41	'A' Group	67-3180	Clutch operating lever	1
42	'A' Group	67-3140	Gearchange lever spindle bush	1
43	'A' Group	67-3147	Gear selector lever spindle	1
44	'A' Group	67-3143	Gear selector lever	2
45	'A' Group	67-3146	Selector lever return spring	1
46	'A' Group	67-3145	Selector lever screw lockwasher	1
47	'A' Group	67-3144	Selector lever screw	1
—	'A' Group	67-3130	Gearchange selector arm complete	1
48	'A' Group	67-3131	Gearchange selector arm only	1
49	'A' Group	67-3133	Gearchange selector arm claw pivot	1
50	'A' Group	67-3170	Footchange lever spindle bush	1
51	'A' Group	67-3135	Gearchange selector arm plunger spring	1
52	'A' Group	67-3134	Gearchange selector arm plunger	1
53	'A' Group	67-3132	Gearchange selector arm claw	1
54	'A' Group	67-3136	Gearchange selector arm pivot pin	1
55	'A' Group	67-3113	Gear control cam plate	2
56	'A' Group	67-3204	Gear shifter fork	1
57	'A' Group	67-3017	Gearbox inner cover with fixed fittings	1
58	'A' Group	67-3191	Mainshaft gear (16T)	1
59	'A' Group	67-3202	Mainshaft sliding gear (24T)	1
60	'A' Group	67-3116	Gear shifter fork shaft	1
61	'A' Group	67-3117	Gear shifter fork shaft grub screw	1
62	'A' Group	67-3201	Mainshaft sliding gear (20T)	1
62	'A' Group	67-3209	Mainshaft sliding gear (18T) (wide ratio)	1
62	'A' Group	67-3210	Mainshaft sliding gear (22T) (wide ratio)	1
63	'A' Group	67-3192	Constant mesh gear complete with bushes (26T)	1
63	'A' Group	67-3207	Constant mesh gear complete (26T) (wide ratio)	1
64	'A' Group	67-3073	Constant mesh gear bush (drilled)	1
65	'A' Group	67-3073	Constant mesh gear bush (plain)	1
66	'A' Group	24-4065	Constant mesh gear ball bearing	1
67	'A' Group	67-3067	Gearbox sprocket oil seal	1
68	'A' Group	67-3026	Ball bearing spring ring	1
69	'A' Group	2-4553	Gearbox drain plug washer	1
70	'A' Group	28-243	Gearbox drain plug	4
71	'A' Group	67-3023	Gearbox outer cover stud	1
72	'A' Group	67-3183	Clutch push rod	

GEARBOX—'A' GROUP (PLUNGER FRAME)

Plate Ref. Number	Model	Part No.	Description	Number per set
73	'A' Group	67-3061	Gearbox mainshaft only	1
73	'A' Group	67-3206	Gearbox mainshaft (wide ratio)	1
—	'A' Group	67-3190	Gearbox mainshaft complete with gear (close ratio)	1
74	'A' Group	67-3251	Clutch thrust washer abutment ring	1
75	'A' Group	67-3101	Mainshaft gear locating ring (wide ratio)	1
76	'A' Group	67-3119	Gear control cam plate plunger	1
77	'A' Group	67-3121	Gear control cam plate plunger spring	1
78	'A' Group	67-3122	Gear control cam plate plunger housing nut	1
79	'A' Group	67-3120	Gear control cam plate plunger housing	1
80	'A' Group	67-3196	Layshaft gear (17T)	1
81	'A' Group	67-3197	Layshaft sliding gear (23T)	1
82	'A' Group	67-3198	Layshaft sliding gear (19T)	1
82	'A' Group	67-3211	Layshaft sliding gear (25T) (wide ratio)	1
82	'A' Group	67-3212	Layshaft sliding gear (21T) (wide ratio)	1
83	'A' Group	67-3199	Layshaft gear complete (27T)	1
83	'A' Group	67-3213	Layshaft gear complete (29T) (wide ratio)	1
84	'A' Group	65-3337	Layshaft bush	1
85	'A' Group	67-3101	Layshaft gear locating ring	1
86	'A' Group	67-3195	Layshaft only	1
—	'A' Group	67-3194	Layshaft complete with gears	1
87	'A' Group	67-3203	Layshaft thrust washer	1
88	'A' Group	67-3099	Layshaft bush	1
89	'A' Group	67-3088	Speedometer driving gear (6T)	1
90	'A' Group	67-3128	Speedometer driving gear peg	1
91	'A' Group	67-3153	Kickstart lever spindle bush	1
92	'A' Group	67-3174	Kickstarter spring	1
93	'A' Group	2-3718	Kickstarter spring screw	1
94	'A' Group	42-3160	Kickstart spindle and quadrant	1
94A	'A' Group	67-3173	Kickstart spindle sleeve	1
95	'A' Group	67-3151	Kickstart spindle bush	1
96	'A' Group	67-3093	Layshaft gear bush	1
97	'A' Group	2-49	Kickstarter quadrant stop nut	1
98	'A' Group	24-8784	Kickstarter quadrant stop washer	1
99	'A' Group	67-3152	Kickstart quadrant stop	1
100	'A' Group	24-4217	Mainshaft bearing	1
101	'A' Group	67-3028	Mainshaft bearing spring ring	1
102	'A' Group	67-3161	Kickstart ratchet pinion sleeve washer	1
103	'A' Group	67-3162	Kickstart ratchet spring	1
104	'A' Group	67-3169	Kickstart ratchet pinion bush	1
105	'A' Group	67-3376	Kickstart ratchet pinion	1
106	'A' Group	67-3167	Kickstart ratchet	1
107	'A' Group	67-3164	Kickstart ratchet and mainshaft lockwasher	1
108	'A' Group	67-3163	Kickstart ratchet and mainshaft nut	1
109	'A' Group	66-3074	Gearbox cover dowel	2
110	'A' Group	67-3032	Gearbox outer cover joint washer	1
111	'A' Group	2-4553	Oil level plug washer	1
112	'A' Group	28-243	Oil level plug	1
113	'A' Group	27-4401	Kickstarter spring screw locknut	1
114	'A' Group	67-3021	Gearbox outer cover with fixed fittings	1
115	'A' Group	2-923	Gearbox outer cover fixing washer	4
116	'A' Group	67-3034	Gearbox outer cover fixing nut	4
117	'A' Group	67-1705	Gearbox outer cover fixing screw (short)	1
118	'A' Group	2-2579	Kickstarter crank cotter	1
119	'A' Group	65-3381	Kickstarter crank	1
120	'A' Group	24-7178	Gearbox inspection cover screw	2
121	'A' Group	67-3024	Gearbox inspection cover	1
122	'A' Group	67-3033	Gearbox inspection cover joint washer	1
123	'A' Group	67-1706	Gearbox outer cover fixing screw (long)	2
124	'A' Group	67-3176	Speedometer driven gear retaining pin	1
125	'A' Group	28-2080	Gearbox outer cover grease nipple	1
126	'A' Group	65-3361	Selector lever foot operating screw	1
127	'A' Group	2-525	Foot operating lever screw washer	1
128	'A' Group	67-3171	Gear change operating lever	1
129	'A' Group	29-3250	Footchange operating lever rubber	1
130	'A' Group	65-3397	Kickstart crank rubber	1
131	'A' Group	2-2578	Kickstart crank cotter nut	1
132	'A' Group	15-5155	Kickstart crank cotter washer	1

Plate 6

GEARBOX 'A' GROUP (SWINGING ARM)

Plate Ref. Number	Model	Part No.	Description	Number per set
1	'A' Group	67-3026	Ball bearing spring ring	1
2	'A' Group	67-3067	Gearbox sprocket oil seal	1
3	'A' Group	24-4065	Constant mesh gear ball bearing	1
4	'A' Group	67-3073	Constant mesh gear bush	1
5	'A' Group	67-3192	Constant mesh gear complete (26T)	1
6	'A' Group	67-3073	Constant mesh gear bush (drilled)	1
7	'A' Group	67-3201	Mainshaft sliding gear (20T)	1
8	'A' Group	67-3202	Mainshaft sliding gear (24T)	1
9	'A' Group	67-3329	Gearbox mainshaft with gear	1
—	'A' Group	67-3330	Gearbox mainshaft only	1
10	'A' Group	2-433	Gearbox mainshaft key	1
11	'A' Group	42-3108	Clutch push rod	1
12	'A' Group	67-3101	Mainshaft gear locating ring	1
13	'A' Group	67-3191	Gearbox mainshaft gear (16T)	1
14	'A' Group	24-4217	Mainshaft bearing	1
15	'A' Group	67-3028	Mainshaft bearing spring ring	1
16	'A' Group	67-3161	Kickstarter ratchet pinion sleeve washer	1
17	'A' Group	67-3169	Kickstarter ratchet pinion bush	1
18	'A' Group	67-3162	Kickstarter ratchet spring	1
19	'A' Group	67-3376	Kickstarter ratchet pinion	1
20	'A' Group	67-3167	Kickstarter ratchet	1
21	'A' Group	67-3164	Kickstarter ratchet and mainshaft lock washer	1
22	'A' Group	67-3163	Kickstarter ratchet and mainshaft nut	1
23	'A' Group	42-3017	Gearchange operating lever	1
24	'A' Group	29-3250	Foot operating lever rubber	1
25	'A' Group	2-525	Foot operating lever screw washer	1
26	'A' Group	65-3361	Selector lever foot operating screw	1
27	'A' Group	65-3061	Outer cover fixing screw (long)	2
28	'A' Group	35-702	Clutch push rod lever nut split pin	1
29	'A' Group	2-452	Clutch push rod lever adjusting screw nut	1
30	'A' Group	65-3403	Clutch push rod adjusting screw complete	1
31	'A' Group	65-3360	Clutch push rod lever	1
32	'A' Group	67-3180	Clutch operating lever complete	1
33	'A' Group	2-525	Clutch push rod lever washer	1
34	'A' Group	15-1485	Clutch push rod lever nut	1
35	'A' Group	67-3353	Gearchange lever spindle bush	1
36	'A' Group	67-3340	Footchange stop plate return spring	1
37	'A' Group	35-709	Gear selector plate spring washer split pin	1
38	'A' Group	67-3335	Selector spindle complete	1
39	'A' Group	67-3341	Gear selector plate	1
40	'A' Group	67-3342	Gear selector plate spring	1
41	'A' Group	24-868	Gear selector plate spring washer	1
42	'A' Group	67-3170	Footchange lever spindle bush	1
43	'A' Group	65-2157	Gearbox inner cover retaining screw	1
44	'A' Group	67-3344	Gearbox inner cover complete	1
45	'A' Group	67-3350	Gearchange quadrant pivot pin	1
46	'A' Group	67-3346	Gearbox inner cover joint washer (paper)	1
47	'A' Group	67-3347	Gearchange quadrant complete	1
48	'A' Group	67-3332	Gear control cam plate complete	1
49	'A' Group	67-3116	Gear shifter fork shaft	1
50	'A' Group	42-3006	Gearbox case with fixed fittings	1
51	'A' Group	67-3328	Gear cam plate pivot pin washer	1
52	'A' Group	2-124	Gear cam plate pivot pin nut	1
53	'A' Group	67-3117	Gear shifter fork grub screw	1
54	'A' Group	67-3065	Gearbox sprocket (19T)	1
55	'A' Group	24-4263	Gearbox sprocket locking washer	1
56	'A' Group	67-3053	Gearbox sprocket nut	1
57	'A' Group	29-3449	Gearbox inspection cover washer	1
58	'A' Group	29-3448	Gearbox inspection cover	1
59	'A' Group	2-498	Gearbox inspection cover screw	3
60	'A' Group	27-4258	Gearbox inspection cover screw	4
61	'A' Group	67-3023	Gearbox outer cover stud	1
62	'A' Group	2-4553	Gearbox drain plug washer (fibre)	1
63	'A' Group	28-243	Gearbox drain plug	1
64	'A' Group	67-3119	Gearbox cam plate plunger	1
65	'A' Group	67-3121	Gear control cam plate plunger spring	1
66	'A' Group	67-3122	Gear control cam plate plunger housing nut	1
67	'A' Group	67-3120	Gear control cam plate plunger housing	1
68	'A' Group	67-3327	Gear cam plate pivot pin	2
69	'A' Group	67-3204	Gear shifter fork	1
70	'A' Group	65-3337	Layshaft bush	1
71	'A' Group	67-3101	Layshaft gear locating ring	1

Plate 6

GEARBOX 'A' GROUP (SWINGING ARM)

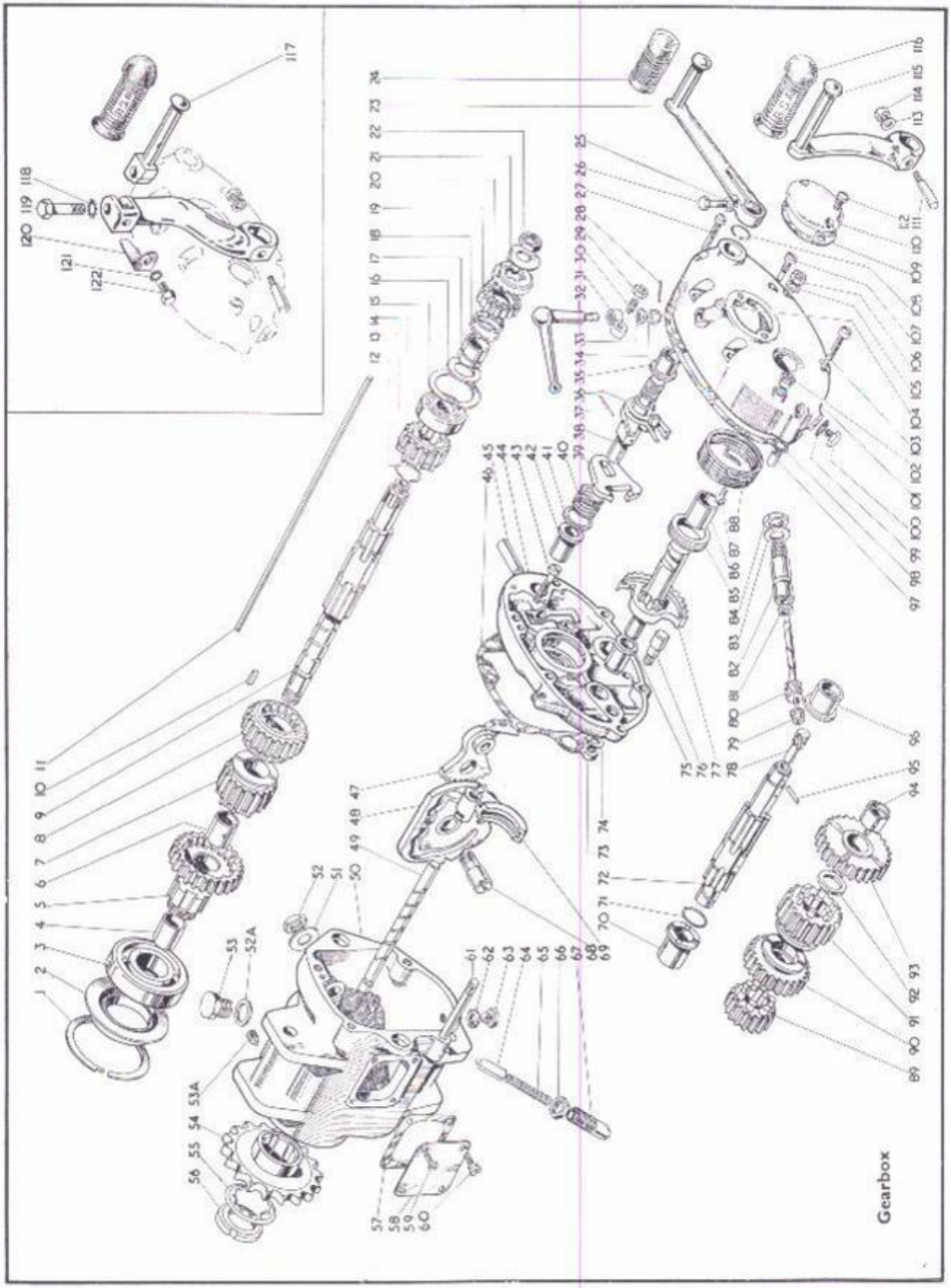

Plate 6—*continued*

GEARBOX—'A' GROUP (SWINGING ARM)

Plate Ref. Number	Model	Part No.	Description	Number per set
72	'A' Group	42-3018	Layshaft complete with gear (17T)	1
—	'A' Group	42-3019	Layshaft only	1
73	'A' Group	2-49	Kickstarter quadrant stop nut	1
74	'A' Group	24-8784	Kickstarter quadrant stop washer	1
75	'A' Group	67-3151	Kickstarter spindle bush	1
76	'A' Group	67-3152	Kickstarter quadrant stop	1
77	'A' Group	42-3160	Kickstarter crank spindle assembly	1
78	'A' Group	67-3088	Speedometer driving gear (6T)	1
79	'A' Group	65-3377	Speedometer gear bush	1
80	'A' Group	67-3175	Speedometer driven gear (11T)	1
81	'A' Group	65-3375	Speedometer driven gear thrust washer	1
82	'A' Group	65-3390	Speedometer driven gear bush	1
83	'A' Group	65-3392	Speedometer driven gear bush washer (fibre)	1
84	'A' Group	65-3391	Speedometer driven gear bush nut	1
85	'A' Group	67-3173	Kickstarter spindle sleeve	1
86	'A' Group	67-3153	Kickstarter lever spindle bush	1
87	'A' Group	2-3718	Kickstarter spring screw	1
88	'A' Group	67-3174	Kickstarter spring	1
89	'A' Group	42-3020	Layshaft gear (17T)	1
90	'A' Group	42-3023	Layshaft sliding gear (23T)	1
91	'A' Group	67-3198	Layshaft sliding gear (19T)	1
92	'A' Group	67-3203	Layshaft thrust washer	1
93	'A' Group	67-3199	Layshaft gear complete (27T)	1
94	'A' Group	67-3093	Layshaft gear bush	1
95	'A' Group	67-3128	Speedometer gear layshaft peg	1
96	'A' Group	67-3099	Layshaft bush	2
97	'A' Group	66-3074	Dowel	1
98	'A' Group	67-3354	Gearbox outer cover joint washer (paper)	1
99	'A' Group	2-4553	Oil level plug washer (fibre)	1
100	'A' Group	28-243	Oil level plug	1
101	'A' Group	67-3351	Gearbox outer cover complete	1
102	'A' Group	27-4401	Kickstarter spring screw locknut	1
103	'A' Group	67-1705	Outer cover fixing screw (short)	1
104	'A' Group	28-2080	Grease nipple	4
105	'A' Group	2-923	Outer cover fixing nut washer	4
106	'A' Group	67-3034	Outer cover fixing nut	1
107	'A' Group	67-3176	Speedometer driven gear retaining pin	1
—	'A' Group	67-1709	Speedometer driven gear retaining pin washer	1
108	'A' Group	15-4240	Gearchange operating spindle circlip	1
109	'A' Group	67-3033	Inspection cover joint washer (fibre)	1
110	'A' Group	67-3024	Inspection cover	1
111	'A' Group	2-2579	Kickstarter crank cotter	2
112	'A' Group	24-7178	Inspection cover fixing screw	1
113	'A' Group	15-5155	Kickstarter crank cotter washer (plain)	1
114	'A' Group	2-2578	Kickstarter crank cotter nut	1
115	'A' Group	65-3381	Kickstarter pedal	1
116	'A' Group	65-3397	Kickstarter pedal rubber	1
—	Road Rocket	42-3037	Kickstarter Crank complete (folding type)	1
117	Road Rocket	65-3427	Kickstarter crank pedal	1
118	Road Rocket	66-4707	Kickstarter pedal bolt washer	1
119	Road Rocket	29-5156	Kickstarter pedal bolt	1
120	Road Rocket	65-3428	Kickstarter crank pedal spring	1
121	Road Rocket	29-541	Kickstarter crank spring bolt washer	1
122	Road Rocket	2-220	Kickstarter crank spring bolt	1

Plate 7

CLUTCH AND FRONT CHAINCASE—'A' GROUP (SWINGING ARM)

Plate Ref. Number	Model	Part No.	Description	Number per set
—	A7, A10	42-3114	Clutch complete (1956/7)	1
—	'A' Group	42-3052	Clutch complete (up to 1955)	1
1	'A' Group	67-1706	Primary chaincase front fixing screw	3
1	'A' Group	67-1711	Primary chaincase front fixing oil level and drain screw	2
2	'A' Group	67-1709	Primary chaincase oil level and drain washer (fibre)	2
3	'A' Group	65-3063	Primary chaincase front fixing screw	7
4	'A' Group	2-2395	Clutch spring retaining stud nut	12
5	'A' Group	66-3800	Clutch spring	6
6	'A' Group	66-3781	Clutch spring cup	6
7	'A' Group	42-3056	Clutch actuating cap complete	1
8	'A' Group	65-3858	Clutch plate ferodo inserts	120

Plate 7 CLUTCH AND FRONT CHAINCASE 'A' GROUP (SWINGING ARM)

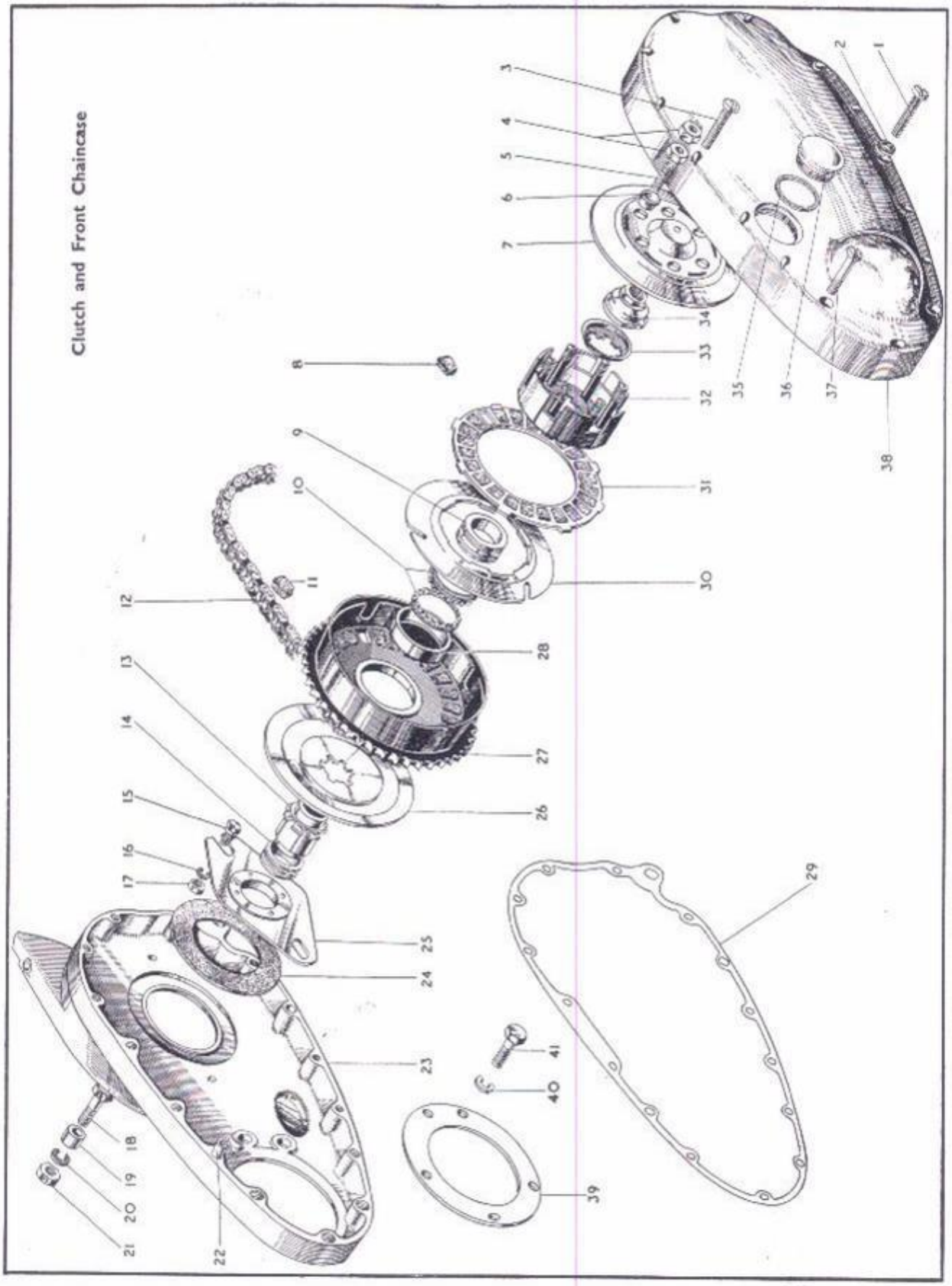

Plate 7—*continued* CLUTCH AND FRONT CHAINCASE 'A' GROUP (SWINGING ARM)

Plate Ref. Number	Model	Part No.	Description	Number per set
—	'A' Group	65-3911	Clutch ballrace inner ring	1
9	'A' Group	65-3910	Clutch ball race ring with balls ($\frac{3}{16}$" diam.)	2
10	'A' Group	66-3891	Clutch chainwheel ferodo inserts	24
11	'A' Group	24-8930	Primary chain	1
12	A7	24-8931	Primary chain	1
12	A10	42-3107	Clutch sleeve	1
13	'A' Group	65-3833	Clutch sleeve collar	1
14	'A' Group	42-7520	Primary chaincase sliding plate bolt	2
15	'A' Group	2-1462	Primary chaincase sliding plate bolt washer	2
16	'A' Group	2-2395	Primary chaincase sliding plate bolt nut	2
17	'A' Group	2-6026	Primary chaincase back fixing bolt	1
18	'A' Group	42-4792	Primary chaincase back fixing bolt distance collar	1
19	'A' Group	35-33	Primary chaincase back fixing bolt washer (spring)	1
20	'A' Group	2-923	Primary chaincase back fixing bolt washer (plain)	1
—	'A' Group	2-49	Primary chaincase back fixing bolt nut	1
21	'A' Group	66-3074	Primary chaincase dowel	2
22	'A' Group	42-7515	Primary chaincase (back)	1
23	'A' Group	42-7504	Primary chaincase back washer (felt)	1
24	'A' Group	66-7520	Primary chaincase sliding plate complete	1
25	'A' Group	65-3872	Clutch plate	1
26	'A' Group	42-3054	Clutch chainwheel	1
27	'A' Group	65-3912	Clutch ballrace ring	1
28	'A' Group	42-7507	Primary chaincase joint washer	4
29	'A' Group	65-3824	Clutch driven plate	1
30	'A' Group	29-3832	Clutch driven plate	5
—	'A' Group	65-3857	Clutch driving plate with inserts	1
31	'A' Group	66-3903	Clutch driving plate centre with studs	1
32	'A' Group	65-3822	Mainshaft locking washer nut	1
33	'A' Group	66-3787	Mainshaft nut	1
34	'A' Group	67-42	Primary chaincase inspection cap washer	1
35	'A' Group	65-3364	Primary chaincase inspection cap	3
36	'A' Group	42-7517	Primary chaincase front fixing screw	1
37	'A' Group	42-7506	Primary chaincase (front)	1
38	'A' Group	42-7509	Primary chaincase and crankcase joint washer	2
39	'A' Group	24-8784	Primary chaincase back securing bolt washer (spring)	2
40	'A' Group	42-7516	Primary chaincase back securing bolt	1
41	'A' Group	42-7518	Chaincase and crankcase flange washer	

Plate 8 FRAME AND FITTINGS—'A' GROUP (PLUNGER FRAME)

Plate Ref. Number	Model	Part No.	Description	Number per set
1	'A' Group	67-4038	Gearbox foot set screw locking wire (4in.)	1
2	'A' Group	67-4028	Gearbox foot set screw	2
3	'A' Group	36-382	Gearbox foot set screw washer (shakeproof)	2
4	'A' Group	67-4848	Central stand pin	2
5	'A' Group	28-2080	Central stand pin grease nipple	2
6	'A' Group	35-698	Central stand split pin	1
7	'A' Group	67-4029	Footrest stud (offside)	1
7	'A' Group	67-4041	Footrest stud (nearside)	2
8	'A' Group	67-4851	Footrest bracket	1
9	'A' Group	67-4852	Footrest bracket nut complete (offside)	1
9	'A' Group	67-4856	Footrest bracket nut complete (nearside)	2
10	'A' Group	29-7551	Footrest rubber	2
11	'A' Group	2-46	Crankcase and exhaust pipe lug stud nut	2
12	'A' Group	66-4707	Crankcase and exhaust pipe lug stud washer (shakeproof)	1
13	'A' Group	67-1251	Crankcase and exhaust pipe lug stud (solo machines)	1
14	'A' Group	27-6275	Crankcase and exhaust pipe lug stud (when sidecar fitted)	1
15	'A' Group	67-4173	Front engine plate complete (offside)	1
15A	'A' Group	67-354	Front engine support bolt	1
16	'A' Group	24-5160	Engine steady stay bolt nut	1
16A	'A' Group	36-382	Engine steady stay bolt washer (shakeproof)	1
17	'A' Group	2-923	Engine steady stay bolt washer (plain)	1
17A	'A' Group	28-2080	Ball head grease nipple	1
18	'A' Group	67-4189	Frame front complete	1
18A	'A' Group	32-194	Engine steady stay bolt	1
19	'A' Group	67-4036	Engine plate insert complete	1
20	'A' Group	67-4171	Front engine plate complete (nearside)	1
21	'A' Group	66-4708	Front engine support bolt washer (shakeproof)	1
22	'A' Group	2-440	Front engine support bolt nut	1
23	'A' Group	2-46	Saddle front pivot bolt nut	1

Plate 8 FRAME AND FITTINGS 'A' GROUP (PLUNGER FRAME)

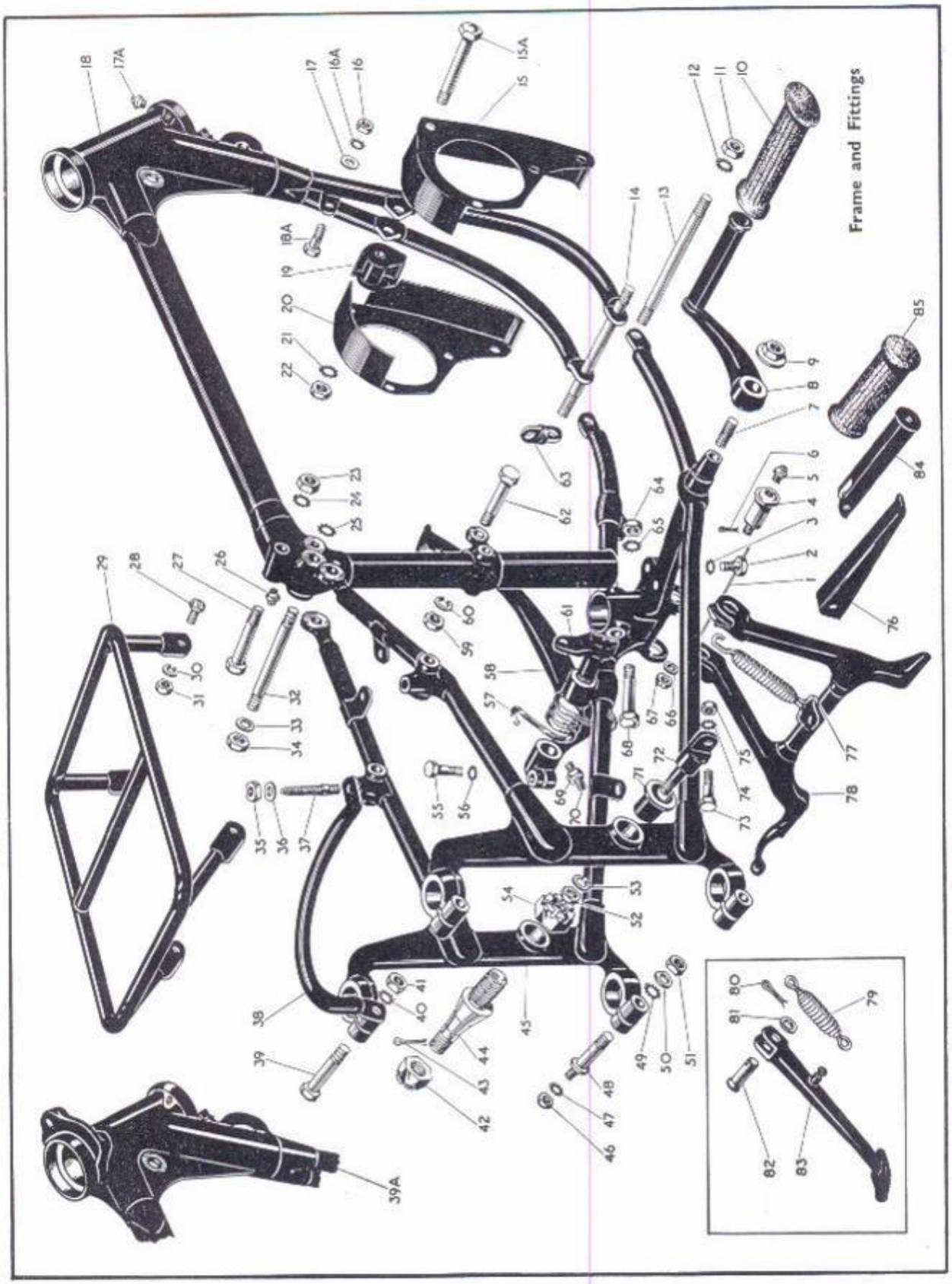

FRAME AND FITTINGS
'A' GROUP (PLUNGER FRAME)

Plate Ref. Number	Model	Part No.	Description	Number per set
24	'A' Group	66–4707	Saddle front pivot bolt washer (shakeproof)	1
25	'A' Group	66–4708	Backstay and seat lug washer (shakeproof)	1
26	'A' Group	28–2080	Saddle pivot grease nipple	1
27	'A' Group	67–4030	Saddle front pivot bolt	4
28	'A' Group	15–7161	Carrier fixing screw	1
29	'A' Group	67–6921	Carrier complete	4
30	'A' Group	2–1462	Carrier fixing screw washer (spring)	4
31	'A' Group	2–2395	Carrier fixing screw nut	1
32	'A' Group	66–4175	Backstay and seat lug stud	2
33	'A' Group	2–1945	Backstay and seat lug stud washer	2
34	'A' Group	15–541	Backstay and seat lug stud nut	4
35	'A' Group	2–49	Saddle rear fixing stud nut	4
36	'A' Group	2–923	Saddle rear fixing stud washer	2
37	'A' Group	67–4040	Saddle rear fixing stud	1
38	'A' Group	66–4205	Lifting handle	2
39	'A' Group	31–68	Plunger column bolt (top)	1
39A	'A' Group	67–4189	Frame front (1955/6)	2
40	'A' Group	66–4707	Plunger column bolt washer (top) (shakeproof)	2
41	'A' Group	2–46	Plunger column bolt nut (top)	1
42	'A' Group	2–1946	Sidecar chainstay lug stud nut	2
43	'A' Group	35–722	Sidecar chainstay lug stud split pin	1
44	'A' Group	67–4120	Sidecar chainstay lug stud (up to 1955)	1
44	A10	67–4181	Sidecar connecting stud (1956)	1
—	A10	67–4182	Sidecar connecting stud locknut (1956)	1
45	'A' Group	67–4094	Chainstay and backstay complete	2
46	'A' Group	2–49	Plunger carrier bottom clip and silencer support bolt nut	
47	'A' Group	36–382	Plunger carrier bottom clip and silencer support bolt washer (shakeproof)	2
48	'A' Group	67–4128	Plunger carrier bottom clip and silencer support bolt	2
49	'A' Group	66–4707	Plunger carrier bottom clip bolt washer (shakeproof)	2
50	'A' Group	67–4129	Plunger carrier bottom clip and silencer support bolt distance washer	2
51	'A' Group	2–46	Plunger carrier and bottom clip bolt nut	2
52	'A' Group	2–46	Pillion footrest anchor bolt nut	2
53	'A' Group	2–2903	Pillion footrest anchor bolt washer (spring)	2
54	'A' Group	67–4122	Sidecar chainstay lug stud locknut (up to 1955)	1
55	'A' Group	15–518	Rear brake pedal pinch bolt	1
56	'A' Group	36–382	Rear brake pedal pinch bolt washer (shakeproof)	1
57	'A' Group	67–7032	Rear brake pedal return spring	1
58	'A' Group	67–7026	Rear brake pedal complete	1
59	'A' Group	2–440	Gearbox top fixing bolt nut	1
60	'A' Group	3–110	Gearbox top fixing bolt washer (spring)	1
61	'A' Group	67–7027	Rear brake pedal operating lever	1
62	'A' Group	67–4027	Gearbox top fixing bolt	1
63	'A' Group	3–1718	Front bottom connecting link (when sidecar fitted)	1
64	'A' Group	2–440	Chainstay bridge clamp bolt nut	1
65	'A' Group	66–4708	Chainstay bridge clamp bolt washer (shakeproof)	2
66	'A' Group	30–733	Central stand pin washer	2
67	'A' Group	21–5304	Central stand pin nut	1
68	'A' Group	67–4027	Chainstay bridge clamp bolt	1
69	'A' Group	2–2395	Rear brake pedal adjusting screw nut	1
70	'A' Group	67–7037	Rear brake pedal adjusting screw	2
71	'A' Group	67–4183	Pillion footrest adaptor (solo)	1
71	'A' Group	67–4183	Pillion footrest adaptor (sidecar)	2
72	'A' Group	29–7560	Pillion footrest anchor bolt	2
73	'A' Group	29–7564	Pillion footrest swivel bolt	2
74	'A' Group	36–382	Pillion footrest swivel bolt washer (shakeproof)	2
75	'A' Group	24–6040	Pillion footrest swivel bolt nut	2
76	'A' Group	*29–7561	Pillion footrest complete (up to 1955)	1
77	'A' Group	67–4847	Central stand spring	1
78	'A' Group	67–4816	Central stand complete	1
79	'A' Group	65–4742	Prop stand spring	1
80	'A' Group	35–710	Prop stand split pin	1
81	'A' Group	2–1945	Prop stand pivot pin washer	1
82	'A' Group	67–4907	Prop stand pivot pin	1
83	'A' Group	67–4903	Prop stand leg	1
—	'A' Group	67–4902	Prop stand assembly	2
84	'A' Group	29–7581	Pillion footrest (less rubber) (1955/6)	2
85	'A' Group	29–7583	Pillion footrest rubber (1955/6)	2
—	'A' Group	66–4149	Steering head ball cup	
—	'A' Group	67–4187	Frame complete with engine plates, central stand, chainstays and backstays	1

* Replaced by 29–7581 Pillion footrest complete.

ront Fork
d Fittings
Wheel and
Hub Fittings
Mudguar
Oil Tan
Tool Bo
Chaingua
Dual Seat
Petrol Tan
Handlebar
etc.
Mudguar
Petrol T
Brake R
Mudguard
Oil tank
Rear
Chainguar
Handleba
Petrol Tan
Toolbox, et
Chaingua
Chaincas
Rear Bra
Control
Legshiel
Safety
Bars
Carrier an
Pannier
Bags
Tools and
Sundries
Sidecar
Chassis
ectrical
uipment

Plate 9 REAR SUSPENSION—'A' GROUP (PLUNGER FRAME)

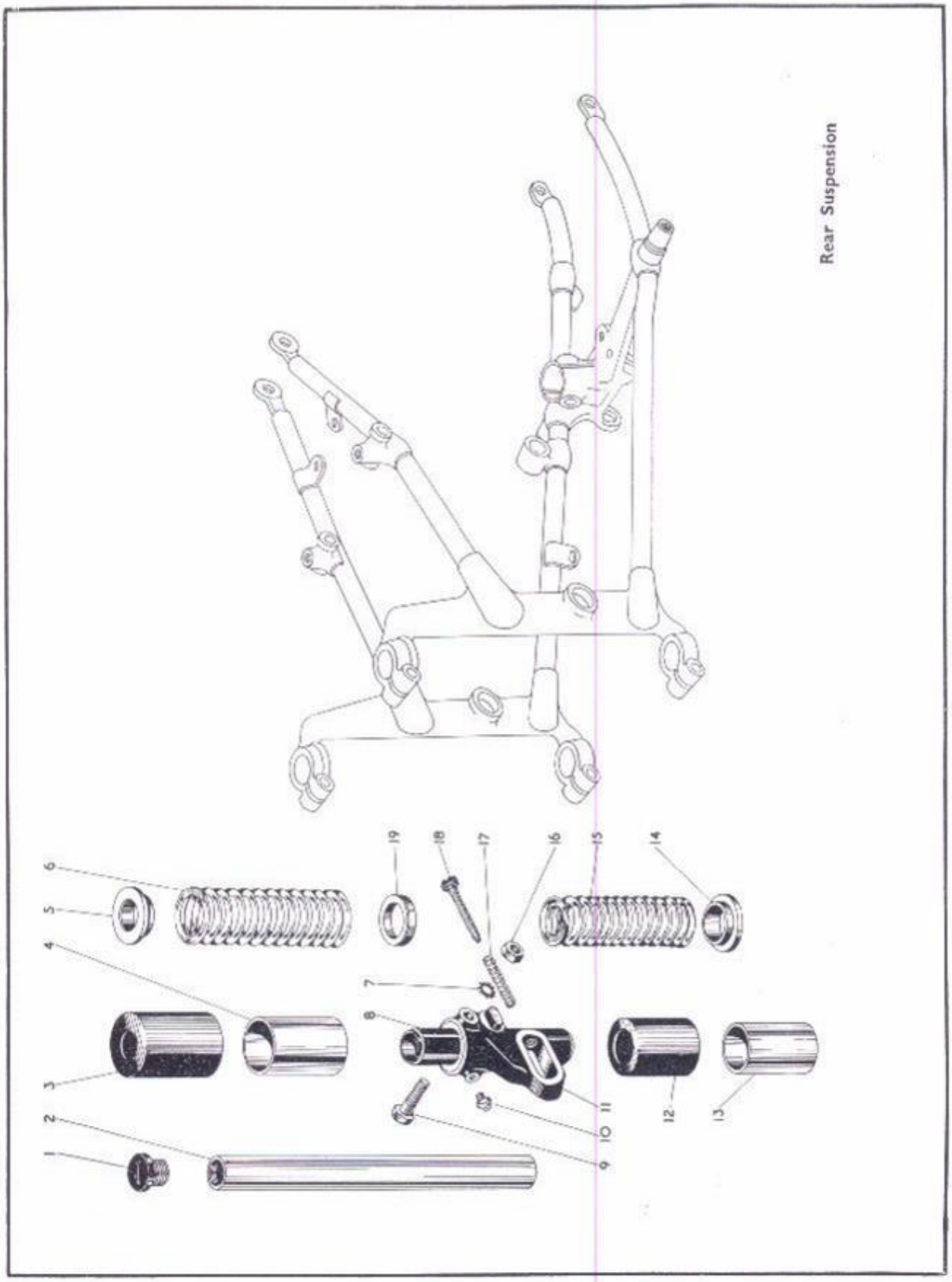

Plate 9 REAR SUSPENSION—'A' GROUP (PLUNGER FRAME)

Plate Ref. Number	Model	Part No.	Description	Number per set
1	'A' Group	67-4166	Plunger carrier column screw plug	2
2	'A' Group	89-4041	Plunger carrier column assembly	2
3	'A' Group	89-4248	Plunger spring outer shroud	2
4	'A' Group	89-4249	Plunger spring inner shroud	2
5	'A' Group	89-4257	Plunger spring top collar	2
6	'A' Group	67-4132	Plunger spring (top)	2
7	'A' Group	66-4707	Clamp lug bolt washer (shakeproof)	2
8	'A' Group	89-4046	Plunger tube with bushes	2
9	'A' Group	3-1399	Clamp lug bolt	2
10	'A' Group	28-2080	Rear spindle clamp lug grease nipple	1
11	'A' Group	67-4125	Rear spindle clamp lug (nearside)	1
11	'A' Group	67-4126	Rear spindle clamp lug (offside)	2
12	'A' Group	89-4240	Rebound spring shroud (outer)	2
13	'A' Group	89-4241	Rebound spring shroud (inner)	2
14	'A' Group	89-4258	Rebound spring bottom collar	2
15	'A' Group	89-4259	Rebound spring (bottom)	2
16	'A' Group	2-46	Clamp lug bolt nut	2
17	'A' Group	15-1312	Rear wheel adjusting screw spring	2
18	'A' Group	66-4603	Rear wheel adjusting screw	2
19	'A' Group	67-4127	Rebound spring top collar	2

Plate 10 FRAME AND FITTINGS 'A' GROUP (SWINGING ARM)

Plate Ref. Number	Model	Part No.	Description	Number per set
1	'A' Group	65-4182	Rear engine and gearbox plate to frame stud (bottom rear)	1
2	'A' Group	2-522	Rear engine and gearbox plate to frame stud washer (spring) (bottom rear)	2
3	'A' Group	2-46	Rear engine and gearbox plate to frame stud nut (bottom rear)	2
4	'A' Group	2-1945	Gearbox pivot stud washer (plain)	2
5	'A' Group	2-1967	Gearbox pivot stud washer (spring)	2
6	'A' Group	2-1925	Gearbox pivot stud nut	1
7	'A' Group	42-4077	Gearbox pivot stud	1
8	'A' Group	27-5683	Rear engine and gearbox plate stud (bottom front)	2
9	'A' Group	2-522	Rear engine and gearbox plate stud washer (spring) (bottom front)	2
10	'A' Group	2-46	Rear engine and gearbox plate stud nut (bottom front)	2
11	'A' Group	2-522	Rear engine plate and crankcase stud washer (spring) (bottom)	2
12	'A' Group	2-46	Rear engine plate and crankcase stud nut (bottom)	1
13	'A' Group	65-4182	Rear engine plate and crankcase stud (bottom)	1
14	'A' Group	42-4277	Front engine plate (offside)	1
15	'A' Group	42-4283	Front engine plate complete (nearside)	2
16	'A' Group	66-4149	Ball head cup	1
17	'A' Group	42-4307	Frame complete with fixed fittings (up to 1955)	1
18	'A' Group	28-2080	Ball head grease nipple	1
19	A7 Shooting Star	67-9126	Air cleaner	1
19	A7 Shooting Star	65-9271	Air cleaner (1955 models)	1
20	'A' Group	42-4078	Petrol tank fixing bolt socket	1
21	'A' Group	29-8740	Petrol tank fixing bolt socket tab washer	1
22	'A' Group	66-4707	Saddle front fixing bolt washer (shakeproof	1
23	'A' Group	2-46	Saddle front fixing bolt nut	2
24	'A' Group	29-3319	Air cleaner fixing screw washer (shakeproof)	2
25	'A' Group	42-4574	Air cleaner fixing screw	2
26	'A' Group	2-1096	Air cleaner fixing screw washer (plain)	1
27	'A' Group	42-4587	Air cleaner rubber connection spring clip	1
28	'A' Group	42-4573	Air cleaner rubber connection (up to 1955)	1
—	A7, A10 Swinging Arm	42-4585	Air cleaner rubber connection (1955/6)	1
—	'A' Group	42-4593	Air cleaner element sealing ring (rubber)	1
—	'A' Group	42-4594	Air cleaner element retaining clip	1
29	'A' Group	27-5690	Front engine plate and frame stud (top)	4
30	'A' Group	2-522	Front engine plate and frame stud washer (spring)	4
31	'A' Group	2-46	Front engine plate and frame stud nut	1
32	'A' Group	67-1292	Front engine plate and crankcase stud nut	6
33	'A' Group	24-8784	Front engine plate and crankcase stud washer	3
34	'A' Group	67-350	Front engine plate and crankcase stud	

FRAME AND FITTINGS
'A' GROUP (SWINGING ARM)

Plate Ref. Number	Model	Part No.	Description	Number per set
35	'A' Group	27–6276	Front engine plate, exhaust pipe and horn stud	1
36	'A' Group	42–4278	Rear engine and gearbox plate top) offside)	1
36	'A' Group	42–4279	Rear engine and gearbox plate (top) (nearside)	1
37	'A' Group	42–4280	Rear engine and gearbox plate (bottom), (offside)	1
37	'A' Group	42–4281	Rear engine and gearbox plate (bottom) (nearside)	1
38	'A' Group	66–4163	Rear engine plate and crankcase stud (top)	1
39	'A' Group	42–4071	Front engine plate and frame distance collar	2
40	'A' Group	2–49	Front engine plate and crankcase stud nut	5
41	'A' Group	2–46	Rear engine plate and crankcase stud nut (top)	2
42	'A' Group	2–522	Rear engine plate and crankcase stud washer (spring) (top)	2
43	'A' Group	2–1925	Gearbox locking stud nut	1
44	'A' Group	2–1967	Gearbox locking stud washer (spring)	1
45	'A' Group	42–4076	Gearbox adjusting screw	1
46	'A' Group	2–1616	Gearbox adjusting screw locknut	1
47	'A' Group	15–5664	Gearbox adjusting screw nut	1
48	'A' Group	27–5705	Gearbox adjusting screw stop	1
49	'A' Group	†42–4134	Gearbox locking stud washer (serrated)	1
50	'A' Group	42–4074	Gearbox locking stud complete	1
51	'A' Group	42–4132	Rear engine and gearbox plate frame bolt (top)	1
52	'A' Group	2–1462	Gearbox adjusting screw stop washer (spring)	1
53	'A' Group	2–2395	Gearbox adjusting screw stop nut	1
54	'A' Group	2–522	Rear engine and gearbox plate frame bolt washer (spring) (top)	1
54A	'A' Group	2–46	Rear engine and gearbox plate frame bolt nut (top)	1
55	'A' Group	24–6770	Battery base plate bolt	4
56	'A' Group	2–923	Battery base plate bolt washer	2
57	'A' Group	15–6524	Battery base plate bolt nut	2
58	'A' Group	36–382	Battery base plate bolt washer (shakeproof)	4
59	'A' Group	42–4515	Battery base plate	1
60	'A' Group	42–4272	Rear engine plate cover complete	1
61	A7, A10 Swinging Arm	42–4582	Air cleaner complete	1
62	'A' Group	28–2080	Saddle front bolt grease nipple	1
63	'A' Group	67–4030	Saddle front fixing bolt	1
—	'A' Group	42–4514	Battery carrier complete	1
64	A7, A10 Swinging Arm	42–4516	Battery strap (side) complete	1
—	A7 Shooting Star, A10 Road Rocket	42–4503	Battery strap (side)	1
65	'A' Group	42–4502	Battery strap (top)	1
66	'A' Group	24–7343	Battery strap bolt	2
67	'A' Group	42–9032	Saddle (as required)	1
67A	'A' Group	2–6537	Battery strap bolt washer	2
68	'A' Group	42–4505	Swivel pin (plain hole)	2
69	'A' Group	42–4506	Swivel pin (tapped hole)	2
70	'A' Group	42–4503	Battery strap (side)	1
71	'A' Group	2–49	Saddle rear fixing stud nut	4
72	'A' Group	2–923	Saddle rear fixing stud washer (plain)	4
73	'A' Group	67–4040	Saddle rear fixing stud	2
73A	'A' Group	42–4335	Frame complete with central stand (1956)	1
74	'A' Group	*29–7561	Pillion footrest complete (up to 1955)	2
75	'A' Group	29–7564	Pillion footrest swivel bolt	2
76	'A' Group	29–7560	Pillion footrest anchor bolt	2
77	'A' Group	36–382	Pillion footrest swivel bolt washer (shakeproof)	2
78	'A' Group	24–6040	Pillion footrest swivel bolt nut	2
79	'A' Group	2–522	Pillion footrest anchor bolt washer (spring)	2
80	'A' Group	2–46	Pillion footrest anchor bolt nut	2
—	'A' Group	42–4769	Prop stand assembly (fitted after Frame No. CA7-2735)	1
81	'A' Group	67–4907	Prop stand pivot pin (up to 1955)	1
82	'A' Group	42–4796	Prop stand lug clip bolt	2
—	'A' Group	42–4797	Prop stand lug clip bolt locknut	2
83	'A' Group	42–4772	Prop stand leg only	1
84	'A' Group	36–382	Prop stand lug clip bolt washer (shakeproof)	2
85	'A' Group	42–4776	Prop stand lug body complete	1
86	'A' Group	2–1945	Prop stand pivot pin washer (plain) (up to 1955)	1
87	'A' Group	35–710	Prop stand pivot pin split pin (up to 1955)	1
88	'A' Group	65–4742	Prop stand spring	1
—	'A' Group	42–4793	Prop stand bolt	1
—	'A' Group	15–734	Prop stand bolt nut	1
89	'A' Group	29–7581	Pillion footrest (less rubber) (1955/6)	2
90	'A' Group	29–7583	Pillion footrest rubber (1955/6)	2

* Replaced by 29–7581 Pillion footrest complete

† Comprising part of 42–4074 Gearbox locking stud complete.

Plate 10

FRAME AND FITTINGS 'A' GROUP (SWINGING ARM)

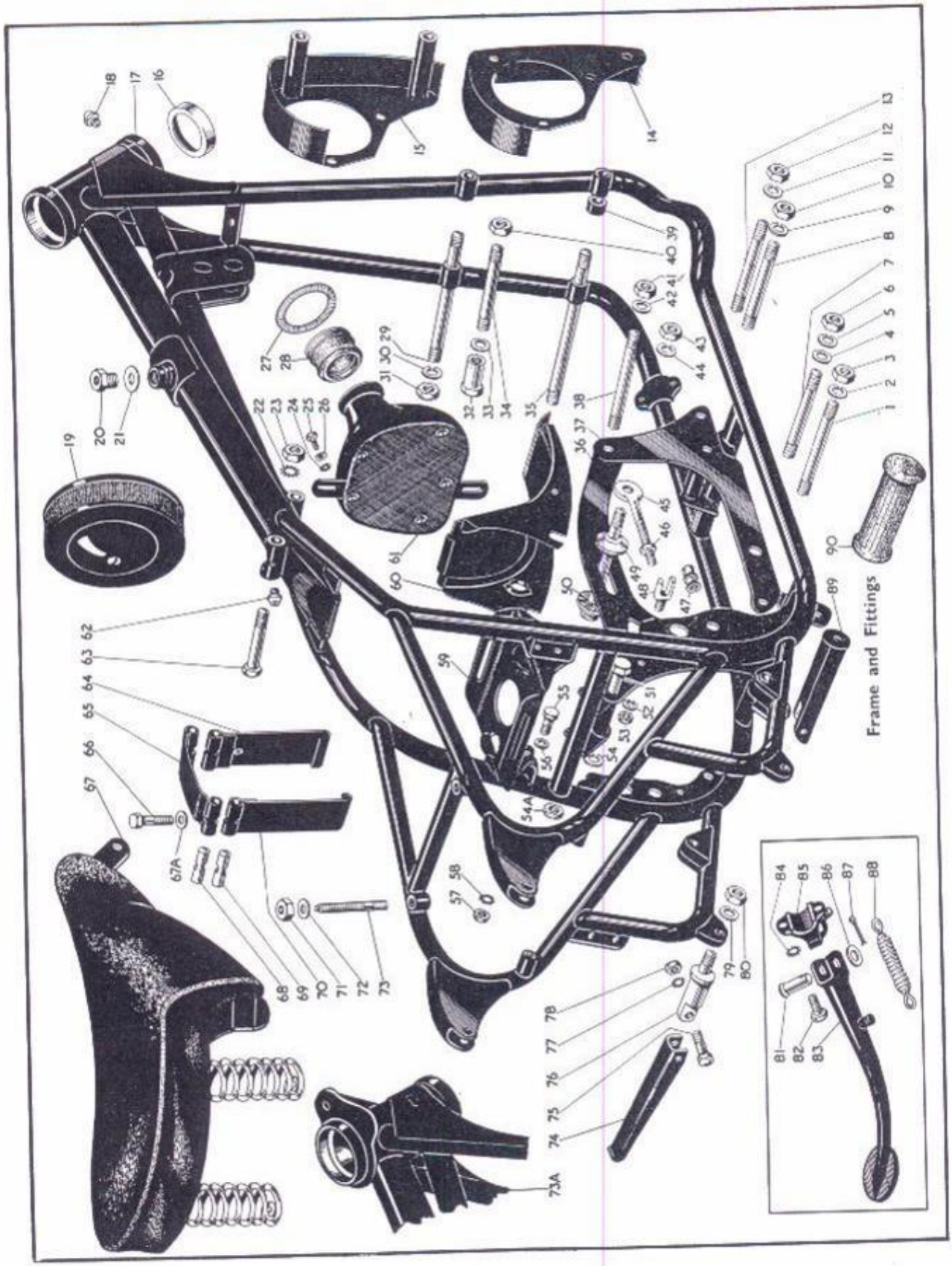

Plate 11

REAR SUSPENSION
'A' GROUP (SWINGING ARM)

Plate Ref. Number	Model	Part No.	Description	Number per set
1	'A' Group	42–4725	Central stand complete	1
2	'A' Group	28–2080	Central stand grease nipple	1
3	'A' Group	42–4730	Central stand spring	1
4	'A' Group	42–4713	Central stand distance tube	1
5	'A' Group	42–4714	Central stand pivot stud	1
6	'A' Group	2–1945	Central stand pivot stud washer (plain)	1
7	'A' Group	2–1967	Central stand pivot stud washer (spring)	1
8	'A' Group	24–5860	Central stand pivot stud nut	2
9	'A' Group	42–4806	Footrest distance tube complete (offside)	1
10	'A' Group	42–4804	Footrest bracket (offside)	1
11	'A' Group	42–4808	Footrest stud complete	1
12	'A' Group	29–7551	Footrest rubber	2
13	'A' Group	42–4343	Swinging arm fork spindle locknut	1
14	'A' Group	42–4364	Swinging arm fork spindle washer	1
15	'A' Group	2–46	Rear mudguard bracket and damper top fixing bolt nut	2
16	'A' Group	2–522	Rear mudguard bracket and damper top fixing bolt washer (spring)	2
17	'A' Group	42–6763	Rear mudguard bracket and damper spacing collar	2
18	'A' Group	2–1733	Rear mudguard bracket and damper top fixing bolt washer (plain)	2
19	'A' Group	65–4185	Rear mudguard bracket and damper top fixing bolt	2
20	'A' Group	42–4299	Rear suspension damper spring (110 lbs. rate) (1955/6)	2
20	'A' Group	42–4302	Rear suspension damper spring (130 lbs. rate) (1955/6)	3
21	'A' Group	42–4289	Rear suspension split ring retainer (retaining outer shroud) (2 halves)	2
22	'A' Group	42–4291	Rear suspension outer shroud	2
23	'A' Group	66–2010	Swinging arm fork spindle securing bolt	1
24	'A' Group	36–382	Swinging arm fork spindle securing bolt washer (shakeproof)	1
25	'A' Group	42–4297	Rear suspension damper complete (110 lbs. rate) (1955/6)	2
25	'A' Group	42–4300	Rear suspension damper complete (130 lbs. rate) (1955/6)	2
26	'A' Group	42–4340	Swinging arm fork spindle complete (1956)	1
26	'A' Group	42–4112	Swinging Arm fork spindle (1955)	1
27	'A' Group	42–4362	Swinging Arm housing 'silent bloc' (1956)	2
27	'A' Group	42–4115	Swinging Arm housing silent bloc (1955)	1
28	'A' Group	42–4292	Rear suspension inner shroud	2
29	'A' Group	3–1399	Rear suspension damper bottom fixing bolt	2
30	'A' Group	2–1733	Rear suspension damper bottom fixing bolt washer (plain)	2
31	'A' Group	42–4155	Rear suspension mounting bush (rubber)	4
32	'A' Group	42–4316	Swinging arm complete with bushess (1956)	1
32	'A' Group	42–4102	Swinging arm complete (1955)	1
33	'A' Group	67–4129	Rear suspension damper bottom fixing bolt washer	2
34	'A' Group	66–4707	Rear suspension damper bottom fixing bolt washer (shakeproof)	2
35	'A' Group	2–46	Rear suspension damper bottom fixing bolt nut	2
36	'A' Group	24–563	Rear wheel adjusting screw locknut	2
37	'A' Group	42–6040	Rear wheel adjusting screw	2
38	'A' Group	42–4841	Footrest stud securing nut	1
39	'A' Group	42–4842	Footrest stud washer	1
40	'A' Group	66–5524	Footrest stud washer	1
41	'A' Group	42–4840	Footrest bracket (nearside)	1
42	'A' Group	65–4811	Footrest distance tube complete (nearside)	1

Plate 12

FRONT FORKS AND FITTINGS
'A' GROUP (PLUNGER AND SWINGING ARM FRAMES)

Plate Ref. Number	Model	Part No.	Description	Number per set
—	'A' Group Plunger Frame	67–5103	Front forks assembled complete (1955/6)	1
—	'A' Group Swinging Arm	42–5005	Front forks assembled complete (up to 1955)	1
—	'A' Group Swinging Arm	42–5033	Front forks assembled complete (1955 models)	1
—	'A' Group Swinging Arm	42–5048	Front forks assembled complete (1956)	1
—	A7 Shooting Star	42–5047	Front forks assembled complete (1956)	1

REAR SUSPENSION 'A' GROUP (SWINGING ARM)

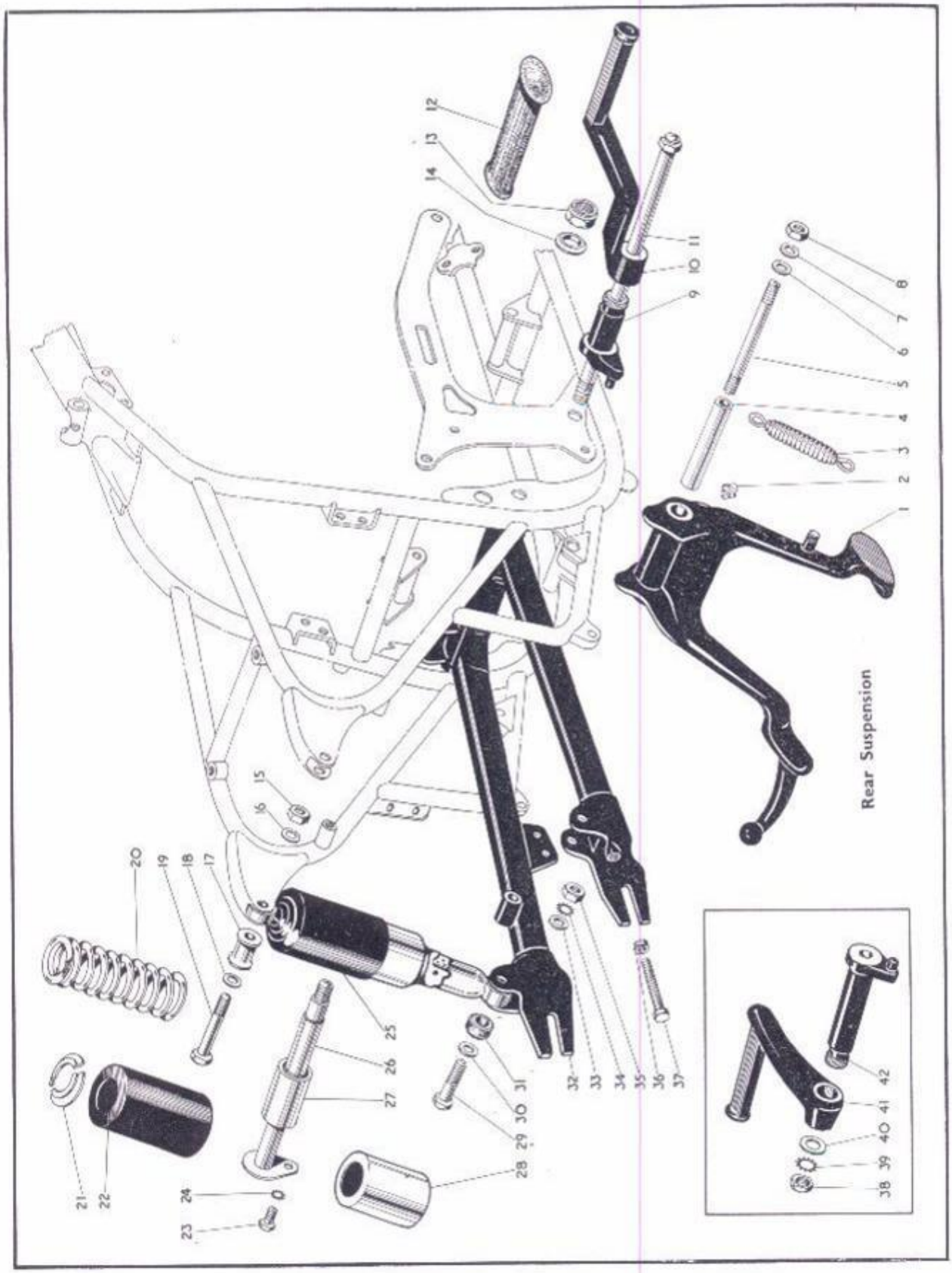

ront Fork
d Fittings

Wheel and
Iub Fitting

Mudgua
Oil Ta
Tool B
Chaingu

Dual Sea
Petrol Ta
Handleba
etc.

Mudgu
Petrol
Brake

Mudguar
Oil tank
Rear
Chaingua

Handleb
Petrol T
Toolbox,

Chaingu
Chainca
Rear Br
Contr

Legshie
Safet
Bars

Carrier a
Pannier
Bags

Tools a
Sundrie

Sidecar
Chassis

ectrical

Plate 12—*continued* FRONT FORKS AND FITTINGS

'A' GROUP (PLUNGER AND SWINGING ARM FRAMES)

Plate Ref. Number	Model	Part No.	Description	Number per set
1	'A' Group	67-5087	Headlamp cowl rubber extrusion	1
2	'A' Group	67-5080	Headlamp cowl fixing support washer	2
3	'A' Group	67-5088	Speedometer mounting rubber	1
4	'A' Group	67-5084	Headlamp cowl	1
5	'A' Group Plunger	65-5448	Front fork top yoke	1
5	'A' Group Swinging Arm	42-5035	Front fork top yoke	1
6	'A' Group	65-5331	Front fork tube nut	2
7	'A' Group	65-5332	Front fork tube nut washer	2
8	A10 Plunger	66-5097	Front fork top yoke clip bolt nut	1
8	A7 and Star Twin Plunger 'A' Group Swinging Arm	29-5315	Front fork top yoke clip bolt nut	1
9	'A' Group	67-5024	Steering stem adjusting sleeve cap	1
10	'A' Group	67-5023	Steering stem adjusting sleeve	1
11	'A' Group	65-5334	Handlebar and yoke clip bolt	4
12	'A' Group	15-5155	Handlebar and yoke clip bolt washer	4
13	'A' Group	65-5333	Handlebar clip	2
14	'A' Group	27-5135	Front fork top yoke clip bolt	1
15	'A' Group	66-5204	Steering head dust cap	1
16	'A' Group	65-5126	Steering head ballrace cone (top)	1
17	'A' Group	1-4675	Steering head balls	40
18	'A' Group	65-5127	Steering head ballrace cone (bottom)	1
19	'A' Group Plunger	66-5089	Front fork bottom yoke	1
19	A7, A10 Swinging Arm	42-5012	Front fork bottom yoke	1
19	A7 Shooting Star	42-5015	Front fork bottom yoke	1
20	'A' Group	67-5021	Steering damper adjuster rod	1
21	'A' Group	24-6035	Steering damper knob washer (spring)	1
22	'A' Group	65-5380	Steering damper friction washer	1
23	'A' Group Swinging Arm	42-5014	Steering damper anchor plate	1
24	'A' Group	25-5247	Steering damper star washer	1
25	'A' Group	65-5328	Steering damper centre	1
26	'A' Group Swinging Arm	28-2338	Steering damper anchor plate bolt	1
27	'A' Group	2-923	Steering damper anchor plate bolt washer (plain)	1
28	'A' Group	36-382	Steering damper anchor plate bolt lockwasher	1
29	'A' Group	2-49	Steering damper anchor plate bolt nut	1
30	A7 Shooting Star	2-204	Steering stop lock bolt	2
31	'A' Group	24-5160	Bottom yoke bolt nut	2
32	'A' Group	36-382	Bottom yoke bolt washer	2
33	'A' Group	65-5435	Bottom yoke bolt	2
34	'A' Group	89-5061	Front fork shaft	2
35	'A' Group	29-5338	Front fork shaft plug washer	2
36	'A' Group	29-5283	Front fork shaft plug	2
37	'A' Group	67-5009	Front fork outer sleeve	2
38	'A' Group	89-5036	Front fork spring (solo)	2
—	'A' Group Swinging Arm	2-46	Fork end bolt nut (N/S) (1956)	1
38	'A' Group	65-5391	Front fork spring (sidecar)	2
39	'A' Group	65-5424	Front fork top bearing	2
40	'A' Group	29-5310/3	Front fork oil seal holder complete	2
41	'A' Group	29-5313	Front fork oil seal	2
42	'A' Group	29-5320	Front fork top bearing circlip	2
43	'A' Group	29-5347	Front fork bottom bearing	2
44	'A' Group Plunger	67-5050	Front fork sliding tube complete (O/S)	1
44	'A' Group Swinging Arm	42-5050	Front fork sliding tube complete (O/S) (1956)	1
44	'A' Group Swinging Arm	65-5420	Front fork sliding tube (O/S) (1955)	1
45	'A' Group Plunger	65-5295	Fork end bolt (N/S)	1
45	'A' Group Swinging Arm	2-803	Fork end bolt (N/S) (1956)	1
—	'A' Group Swinging Arm	2-46	Fork end bolt nut (N/S) (1956)	1
46	'A' Group	2-2903	Fork end bolt washer (spring)	1
47	'A' Group Plunger	67-5057	Fork sliding tube complete (N/S) (1956)	1
47	'A' Group Swinging Arm	42-5051	Fork sliding tube complete (N/S) (1956)	1
—	'A' Group Swinging Arm	67-5057	Fork sliding tube (N/S) (1955)	1
48	'A' Group	2-292	Fork end drain plug washer (fibre)	1
49	'A' Group	2-1309	Fork end drain plug	1
50	A7 Shooting Star	2-2395	Steering lock stop bolt nut	2
51	'A' Group Plunger	65-5327	Steering damper anchor plate stud	1
52	'A' Group Plunger	27-5152	Steering damper anchor plate	1
53	'A' Group Plunger	25-5241	Steering damper bottom plate	1
—	'A' Group	65-5445	Steering head lock	1
—	'A' Group	65-5446	Steering head lock grub screew	1

Plate 12

FRONT FORK AND FITTINGS
'A' GROUP (PLUNGER AND SWINGING ARM FRAMES)

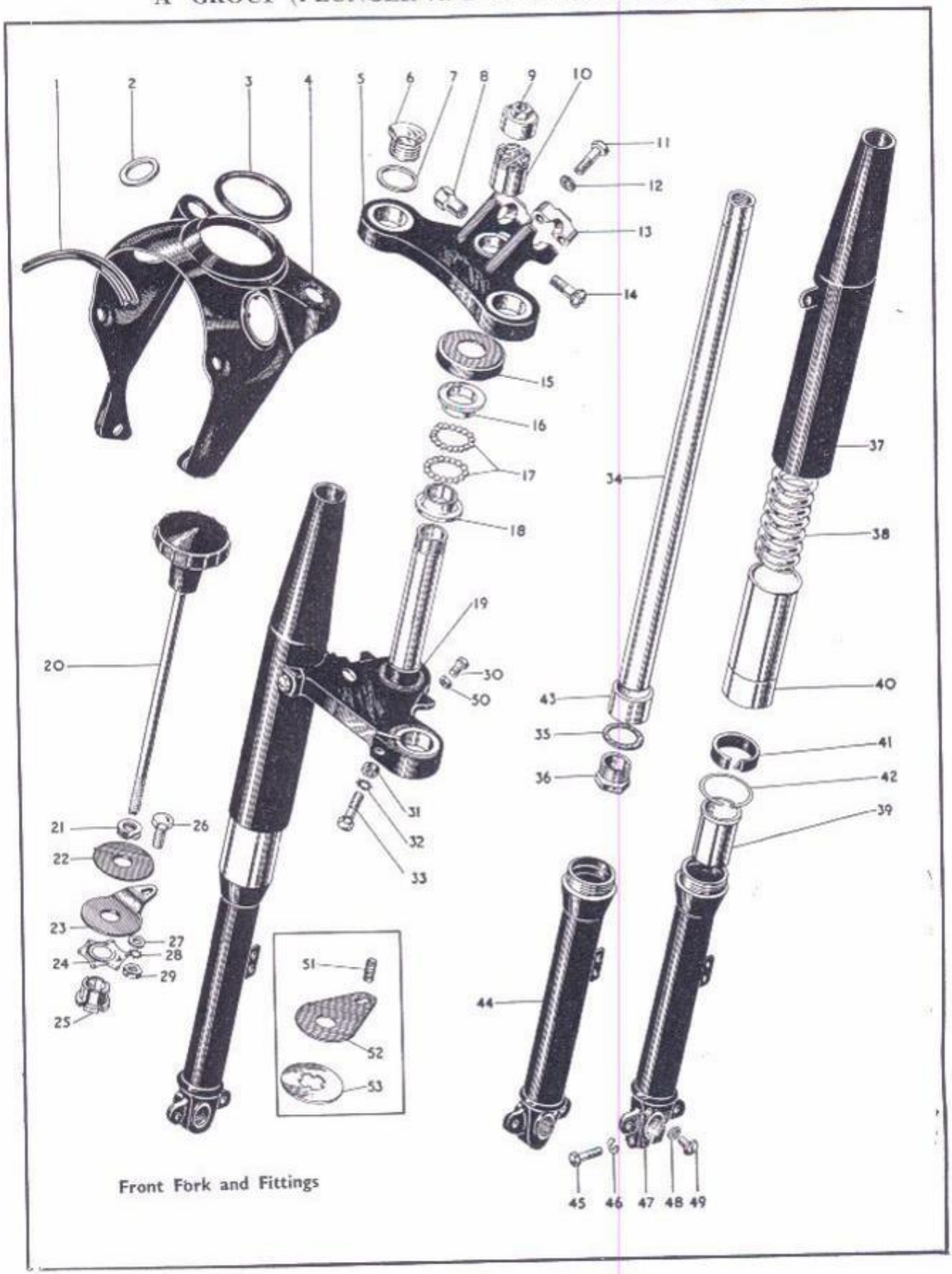

Front Fork and Fittings

Front Fork and Fittings
Wheel and Hub Fittings
Mudguard Oil Tank Tool Box Chainguard
Dual Seat Petrol Tank Handlebars etc.
Mudguard Petrol Brake
Mudguard Oil tank Rear Chainguard
Handlebar Petrol Tank Toolbox,
Chainguard Chainc Rear B Contr
Legshi Safe Bar
Carrier Pannie Bags
Tools a Sundri
Sidecar Chassi
ectrical

Plate 13

FRONT FORK AND FITTINGS
A10 ROAD ROCKET

Plate Ref. Number	Model	Part No.	Description	Number per set
—	A10 Road Rocket	42-5049	Front forks assembled complete	1
1	A10 Road Rocket	65-5446	Steering head lock grub screw	1
2	A10 Road Rocket	42-5036	Front fork top yoke	1
3	A10 Road Rocket	65-5332	Front fork tube nut washer	2
4	A10 Road Rocket	65-5331	Front fork tube nut	2
5	A10 Road Rocket	29-5315	Front fork top yoke clip bolt nut	1
6	A10 Road Rocket	65-5445	Steering head lock	1
7	A10 Road Rocket	67-5023	Steering stem adjusting sleeve	1
8	A10 Road Rocket	67-5024	Steering stem adjusting sleeve cap	1
9	A10 Road Rocket	65-5426	Steering damper knob securing plate	1
10	A10 Road Rocket	65-5334	Handlebar and yoke clip bolt	2
11	A10 Road Rocket	2-6026	Handlebar clip and damper knob securing bolt	2
12	A10 Road Rocket	15-5155	Handlebar and yoke clip bolt washer (plain)	3
13	A10 Road Rocket	2-370	Handlebar clip and damper knob securing bolt distance piece	2
14	A10 Road Rocket	65-5333	Handlebar clip	2
15	A10 Road Rocket	27-5135	Front fork top yoke clip bolt	1
16	A10 Road Rocket	67-5021	Steering damper adjusting Rod	1
17	A10 Road Rocket	24-6035	Steering damper knob washer (spring)	1
18	A10 Road Rocket	65-5380	Steering damper friction washer	1
19	A10 Road Rocket	42-5014	Steering damper anchor plate	1
20	A10 Road Rocket	25-5247	Steering damper star washer	1
21	A10 Road Rocket	65-5328	Steering damper centre	1
22	A10 Road Rocket	66-5204	Steering head dust cap	1
23	A10 Road Rocket	65-5126	Steering head ballrace cone (top)	1
24	A10 Road Rocket	1-4675	Steering head balls	40
25	A10 Road Rocket	65-5127	Steering head ballrace cone (bottom)	1
26	A10 Road Rocket	36-382	Steering damper anchor plate bolt lock washer (shakeproof)	1
27	A10 Road Rocket	2-49	Steering damper anchor plate bolt nut	1
28	A10 Road Rocket	2-923	Steering damper anchor plate bolt washer (plain)	As reqd.
29	A10 Road Rocket	28-2338	Steering damper anchor plate bolt	1
30	A10 Road Rocket	89-5061	Front fork shaft	2
31	A10 Road Rocket	67-5044	Front fork outer sleeve (O/S)	1
32	A10 Road Rocket	67-5042	Front fork outer sleeve (N/S)	1
33	A10 Road Rocket	89-5036	Front fork spring	2
34	A10 Road Rocket	29-5310/3	Front fork oil seal holder	2
35	A10 Road Rocket	29-5313	Front fork oil seal	2
36	A10 Road Rocket	29-5320	Front fork top bearing circlip	2
37	A10 Road Rocket	65-5424	Front fork top bearing	2
38	A10 Road Rocket	29-5347	Front fork bottom bearing	2
39	A10 Road Rocket	29-5338	Front fork shaft plug washer	2
40	A10 Road Rocket	29-5283	Front fork shaft plug	2
41	A10 Road Rocket	2-1309	Fork end drain plug	2
42	A10 Road Rocket	2-292	Fork end drain plug washer	2
43	A10 Road Rocket	2-46	Fork end bolt nut	1
44	A10 Road Rocket	42-5051	Front fork sliding tube (N/S)	1
45	A10 Road Rocket	2-2903	Front fork end bolt washer spring	1
46	A10 Road Rocket	2-803	Fork end bolt (N/S)	1
47	A10 Road Rocket	42-5050	Front fork sliding tube (O/S)	1
48	A10 Road Rocket	2-204	Steering lock stop bolt	2
49	A10 Road Rocket	2-2395	Steering lock stop bolt nut	2
50	A10 Road Rocket	24-5160	Bottom yoke bolt nut	2
51	A10 Road Rocket	42-5015	Front fork bottom yoke	1
52	A10 Road Rocket	36-382	Front fork bottom yoke bolt washer (spring)	2
53	A10 Road Rocket	29-5289	Front fork bottom yoke bolt	2

Plate 13

FRONT FORK AND FITTINGS
A10 ROAD ROCKET

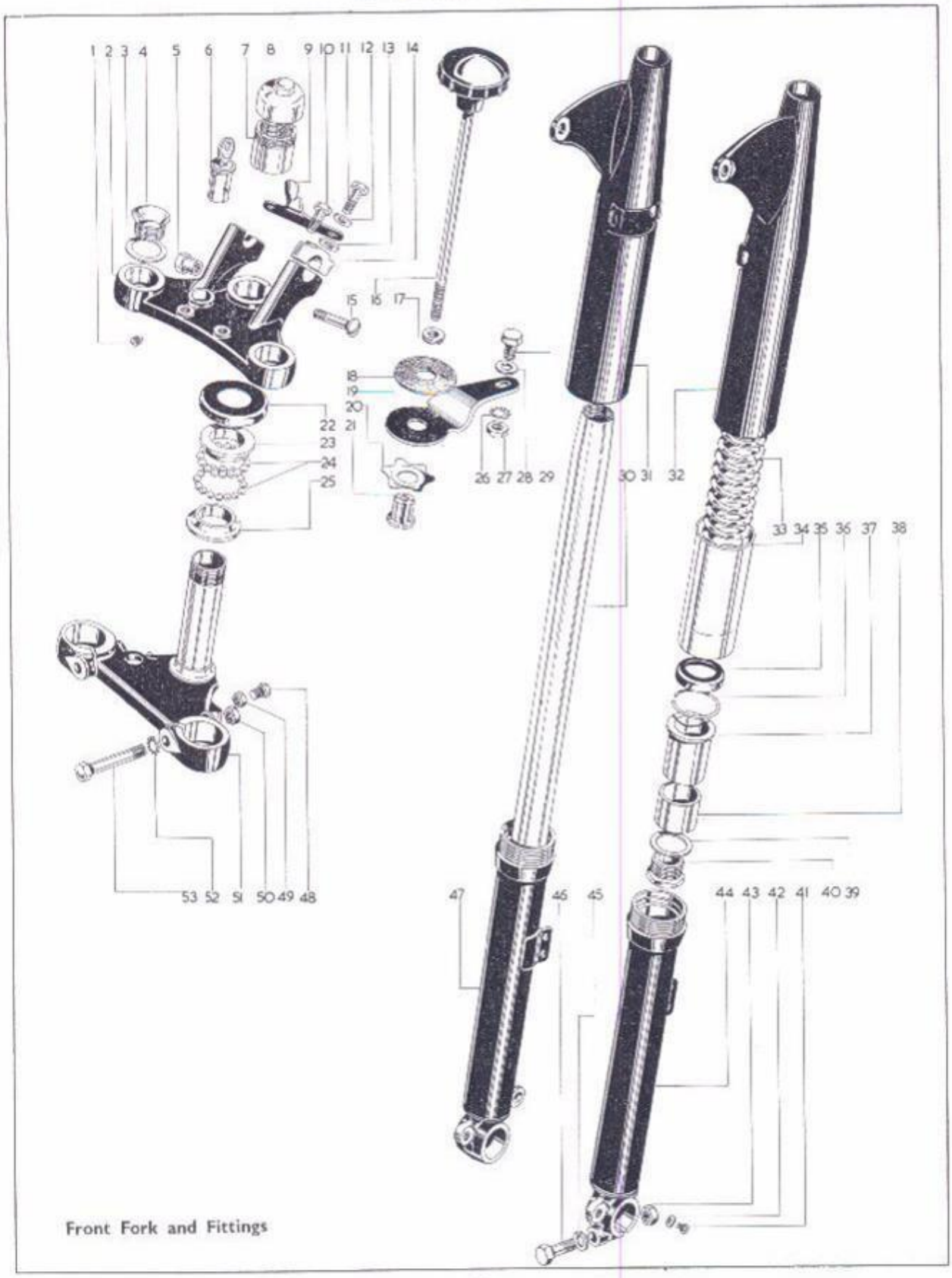

Front Fork and Fittings

Wheel and Hub Fitting

Mudgua Oil Ta Tool B Chaingu

Dual Sea Petrol Ta Handleba etc.

Mudgu Petrol T Brake

Mudguar Oil tank Rear Chaingua

Handleb Petrol T Toolbox,

Chaingu Chainca Rear Br Contr

Legshi Safet Bars

Carrier a Pannie Bags

Tools a Sundri

Sidecar Chassis

Electrical

Plate 14

FRONT HUB AND WHEEL FITTINGS
'A' GROUP (PLUNGER FRAME)

Plate Ref. Number	Model	Part No.	Description	Number per set
—	A10	67-5605	Front wheel complete (less brake and tyre) (1956)	1
—	'A' Group	67-5542	Front wheel complete (less brake and tyre) (up to 1955)	1
1	'A' Group	65-5883	Front hub ball journal	1
2	'A' Group	67-5565	Front hub spindle sleeve	1
3	'A' Group	66-5556	Front hub complete with spindle, sleeve and bearings (less brake)	1
4	'A' Group	67-5606	Front wheel spoke (long)	20
5	'A' Group	27-6813	Front wheel spoke nipple	40
6	'A' Group	65-5883	Front hub ball journal	1
7	'A' Group	67-5563	Hub bearing oil retaining washer (nearside)	1
8	'A' Group	67-5561	Hub bearing locking ring (nearside)	1
9	'A' Group	67-5566	Front hub spindle	1
10	'A' Group	35-701	Hub bearing locking ring retaining pin	1
11	'A' Group	28-2080	Front hub grease nipple	1
12	'A' Group	66-5561	Front wheel spoke (short)	20
13	'A' Group	35-701	Hub bearing locking ring retaining pin	1
14	'A' Group	67-5562	Hub bearing locking ring (offside)	1
15	'A' Group	67-5575	Brake shoe lining rivet	14
16	'A' Group	67-5576	Front brake fulcrum and adjusting pin	1
17	'A' Group	67-5571	Front brake shoe lining	2
18	'A' Group	67-5555	Front brake cover plate with fixed fittings	1
19	'A' Group	2-49	Front brake anchor strap bolt nut (up to 1955)	2
20	'A' Group	36-382	Front brake anchor strap bolt washer (shakeproof) (up to 1955)	2
21	'A' Group	67-5578	Front brake anchor strap	1
22	'A' Group	32-194	Front brake anchor strap bolt	2
23	'A' Group	15-716	Front brake cover plate and anchor strap washer	1
24	'A' Group	15-541	Front brake cover plate and anchor strap nut	1
25	'A' Group	2-2527	Front brake fulcrum and adjusting pin nut	1
26	'A' Group	35-37	Front brake fulcrum and adjusting pin washer (shakeproof)	1
27	'A' Group	25-6014	Front brake fulcrum and adjusting pin washer (plain)	1
28	'A' Group	2-440	Front brake shoe cam nut	1
29	'A' Group	66-4708	Front brake shoe cam washer (shakeproof)	1
30	'A' Group	65-5907	Front brake operating lever	1
30A	'A' Group	15-431	Front brake shoe cam washer (plain)	1
31	'A' Group	28-2080	Front brake fulcrum pin grease nipple	1
32	'A' Group	67-5572	Front brake shoe cam	1
33	'A' Group	65-5904	Front brake shoe spring	2
34	'A' Group	67-5558	Front brake shoe complete	2
35	'A' Group	67-5564	Hub bearing oil retaining washer (offside)	1
36	'A' Group	67-5543	Front wheel rim	1
—	'A' Group	29-5871	Front brake cable toggle end	1
—	'A' Group	2-510	Front brake cable toggle end screw	1
—	'A' Group	2-1462	Front brake cable toggle end washer (spring)	1
—	'A' Group	2-443	Front brake cable toggle end nut	1

Plate 15

REAR HUB AND WHEEL FITTINGS
'A' GROUP (PLUNGER FRAME)

Plate Ref. Number	Model	Part No.	Description	Number per set
—	A7	67-6012/41	Rear wheel complete (less brake and tyre)	1
—	A10	67-6012/43	Rear wheel complete (less brake and tyre)	1
—	A7 Star Twin	67-6012/42	Rear wheel complete (less brake and tyre)	1
1	'A' Group	2-440	Rear brake operating lever nut	1
2	'A' Group	66-4708	Rear brake operating lever washer	1
3	'A' Group	15-431	Rear brake operating lever washer (plain)	1
4	'A' Group	67-6053	Rear brake operating lever	1
5	'A' Group	67-6081	Brake lever steady strap	1
6	'A' Group	65-5674	Cam bearing oil hole clip	1
7	'A' Group	67-6180	Rear brake cover plate	1
8	'A' Group	65-5905	Rear brake cam	1
9	'A' Group	65-5901	Rear brake shoe complete	2
10	'A' Group	35-6436	Shoe lining rivet	14
11	'A' Group	65-5903	Brake shoe lining	2
12	'A' Group	67-6078	Hub collar (L/H)	1

Plate 14

FRONT AND REAR HUB AND WHEEL FITTINGS
'A' GROUP (PLUNGER FRAME)

Plate 15

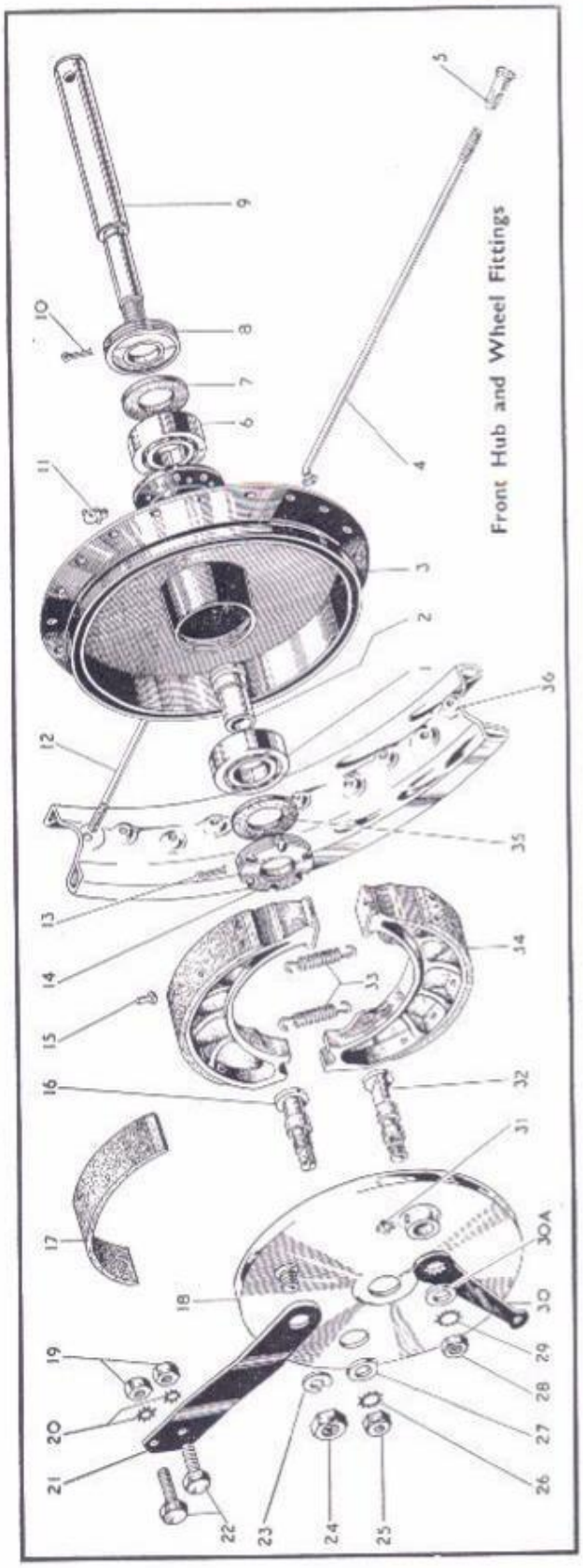

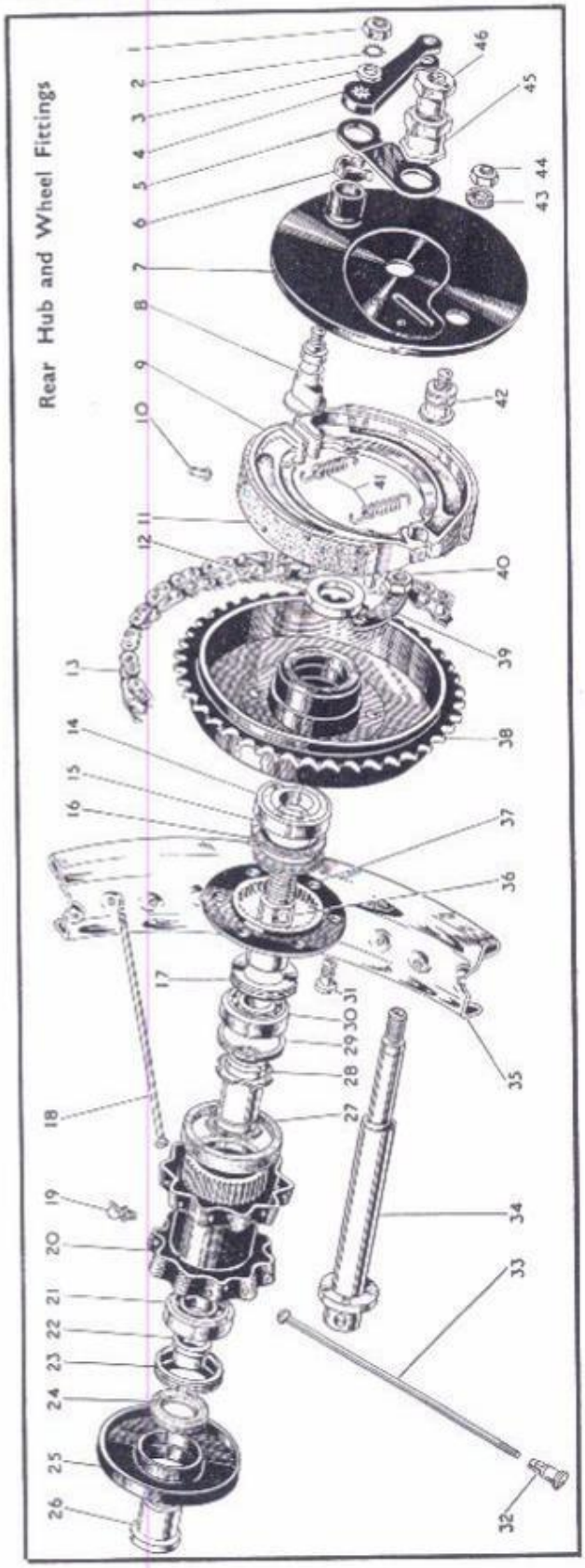

Wheel and Hub Fittin

Mudgua Oil Ta Tool B Chaingu

Dual Se Petrol Ta Handleb etc.

Mudgu Petrol Brake

Mudguar Oil tan Rear Chaingua

Handle Petrol T Toolbox,

Chaingu Chainca Rear B Contr

Legshi Safet Bars

Carrier Pannie Bags

Tools a Sundri

Sidecar Chassi

tetrical uipment

Plate 15—*continued*

REAR HUB AND WHEEL FITTINGS
'A' GROUP (PLUNGER FRAME)

Plate Ref. Number	Model	Part No.	Description	Number per set
13	'A' Group	67-9045	Rear driving chain (sidecar)	1
13	A7 and Star Twin	67-9041	Rear driving chain (solo)	1
13	A10	67-9046	Rear driving chain (solo)	1
14	'A' Group	89-3022	Brake drum and chainwheel bearing	1
15	'A' Group	67-6072	Ball bearing shim	1
16	'A' Group	67-6067	Ball bearing retaining ring	1
17	'A' Group	67-6076	Bearing locking ring	1
18	'A' Group	67-6017	Wheel spooke (N/S)	20
19	'A' Group	28-2080	Hub grease nipple	1
20	'A' Group	67-6126	Hub shell complete with bearing	1
21	'A' Group	65-5883	Rear hub ball bearing	1
22	'A' Group	67-6077	Hub collar (R/H)	1
23	'A' Group	67-6076	Bearing locking ring	1
24	'A' Group	67-6075	Rear hub washer (felt)	1
25	'A' Group	67-6128	Rear hub shell cover	1
26	'A' Group	67-6066	Rear hub distance piece (R/H)	1
27	'A' Group	67-6051	Rear hub shell washer (rubber)	1
28	'A' Group	67-6061	Bearing distance tube and retainers	1
29	'A' Group	65-5884	Hub bearing thrust washer	1
30	'A' Group	65-5883	Rear hub ball bearing	1
31	'A' Group	67-6038	Brake drum securing bolt	6
32	'A' Group	27-6813	Rear wheel spoke nipple	40
33	'A' Group	67-6016	Wheel spoke (O/S)	20
34	'A' Group	67-6164	Rear hub spindle	1
35	A7	67-6005/3	Rear wheel rim	1
35	A10	67-6005/3	Rear wheel rim	1
35	A7 and Star Twin	67-6005/3	Rear wheel rim	1
36	'A' Group	67-6060	Rear hub bearing sleeve	1
37	'A' Group	67-6101	Driving flange	1
38	Star Twin	67-6154	Brake drum and chainwheel (solo)	1
38	'A' Group	67-6124	Brake drum and chainwheel (sidecar)	1
38	A7	67-6123	Brake drum and chainwheel (solo)	1
38	A10	67-6150	Brake drum and chainwheel (solo) (42T)	1
39	'A' Group	67-6039	Brake drum securing bolt lock strip	3
40	'A' Group	2-452	Brake drum securing bolt nut	6
41	'A' Group	65-5904	Rear brake spring	2
42	'A' Group	65-5899	Rear brake fulcrum pin	1
43	'A' Group	24-8045	Rear brake fulcrum washer (serrated)	1
44	'A' Group	24-5860	Rear brake fulcrum pin nut	1
45	'A' Group	67-6074	Rear hub bearing sleeve nut	1
46	'A' Group	67-6073	Rear hub spindle nut	1

Plate 16

FRONT HUB AND WHEEL FITTINGS
'A' GROUP (SWINGING ARM) (1954/5)

Plate Ref. Number	Model	Part No.	Description	Number per set
—	'A' Group	67-5542	Front wheel complete (less brake and tyre)	1
1	'A' Group	67-5544	Front wheel spoke (short)	20
2	'A' Group	27-6813	Front wheel spoke nipple	40
3	'A' Group	67-5566	Front hub spindle	1
4	'A' Group	67-5561	Front hub bearing locking ring (nearside)	1
5	'A' Group	35-701	Front hub bearing locking ring retaining pin	1
6	'A' Group	67-5563	Front hub bearing oil retaining washer (nearside)	1
7	'A' Group	65-5883	Front hub ball journal	1
8	'A' Group	15-5290	Front hub grease nipple	1
9	'A' Group	67-5547	Front hub shell complete (with spindle, sleeve and bearings) (less brake)	1
10	'A' Group	67-5543	Front wheel rim	1
11	'A' Group	67-5545	Front wheel spoke (long)	20
12	'A' Group	67-5565	Front hub spindle sleeve	1
13	'A' Group	65-5883	Front hub ball journal	1
14	'A' Group	67-5564	Front hub bearing oil retaining washer (offside)	1
15	'A' Group	35-701	Front hub bearing locking ring retaining pin	1
16	'A' Group	67-5562	Front hub bearing locking ring (offside)	1
17	'A' Group	67-5575	Front brake shoe lining rivet	14

Plate 16

FRONT HUB AND WHEEL FITTINGS
'A' GROUP (SWINGING ARM) (1954/5)

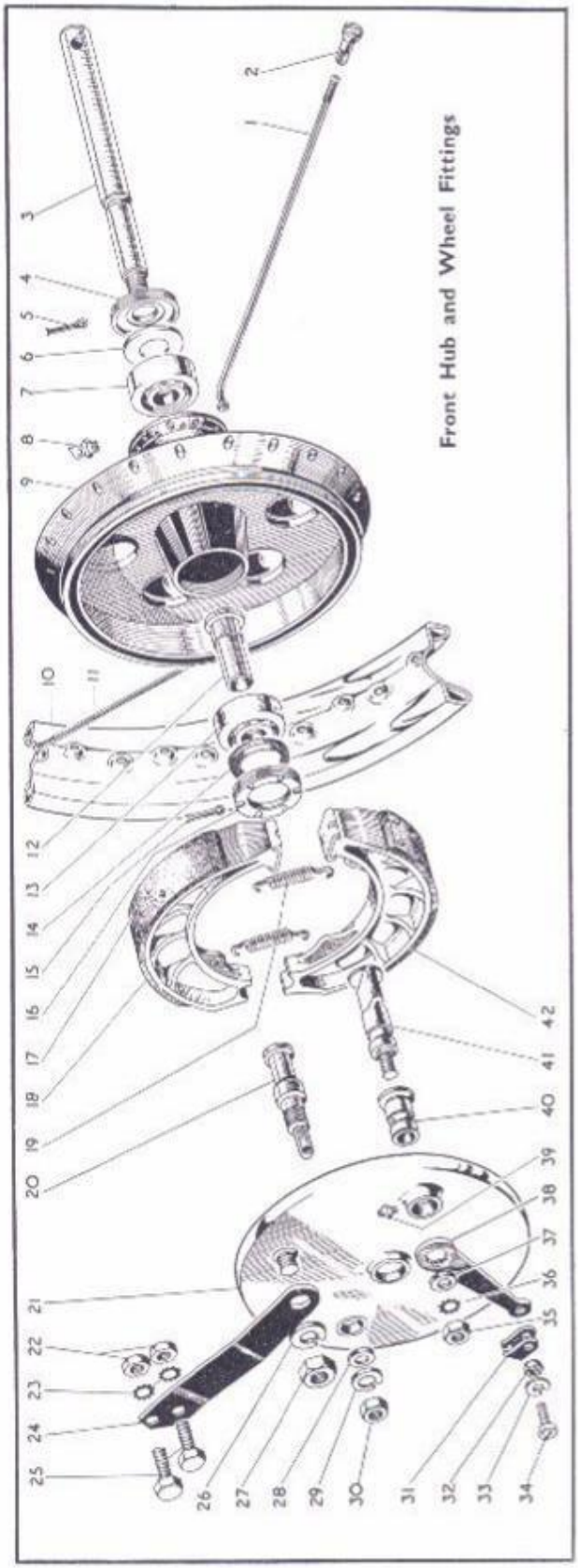

WHEN ORDERING WHEELS, HUBS OR WHEEL RIMS — PLEASE STATE FINISH REQUIRED BY ADDING THE APPROPRIATE SUFFIX NUMBER TO PART NUMBER

Example:

FRONT WHEEL COMPLETE, CHROME RIM AND BEIGE HUB—67-8818/043

Mudgua
Oil Ta
Tool B
Chaingu

Dual Sea
Petrol Ta
Handleba
etc.

Mudgua
Petrol T
Brake I

Mudguar
Oil tank
Rear
Chainguar

Handleb
Petrol Ta
Toolbox, (

Chaingu
Chaincas
Rear Br
Contro

Legshie
Safet
Bars

Carrier a
Pannier
Bags

Tools a
Sundri

Sidecar
Chassis

ectrical

Plate 16—*continued*

FRONT HUB AND WHEEL FITTINGS
'A' GROUP (SWINGING ARM) (1954/5)

Plate Ref. Number	Model	Part No.	Description	Number per set
18	'A' Group	67-5571	Front brake shoe lining	2
19	'A' Group	65-5904	Front brake shoe spring	2
20	'A' Group	67-5576	Front brake fulcrum and adjusting pin	1
21	'A' Group	67-5555	Front brake cover plate with fixed fittings	2
22	'A' Group	2-49	Front brake anchor strap nut	2
23	'A' Group	36-382	Front brake anchor strap nut washer	1
24	'A' Group	67-5578	Front brake anchor strap	2
25	'A' Group	32-194	Front brake anchor strap bolt	1
26	'A' Group	15-716	Front brake cover plate and anchor strap washer (spring)	1
27	'A' Group	15-541	Front brake cover plate and anchor strap nut	1
28	'A' Group	25-6014	Front brake fulcrum and adjusting pin washer (plain)	1
29	'A' Group	35-37	Front brake fulcrum and adjusting pin washer (spring)	1
30	'A' Group	2-2527	Front brake fulcrum and adjusting pin nut	1
31	'A' Group	29-5871	Front brake lever toggle	1
32	'A' Group	2-443	Front brake lever toggle nut	1
33	'A' Group	2-1462	Front brake lever toggle washer	1
34	'A' Group	2-510	Front brake lever toggle screw	1
35	'A' Group	2-440	Front brake shoe cam nut	1
36	'A' Group	66-4708	Front brake shoe cam washer (shakeproof)	1
37	'A' Group	15-431	Front brake shoe cam washer (plain)	1
38	'A' Group	65-5907	Front brake operating lever	1
39	'A' Group	28-2080	Front brake fulcrum pin grease nipple	1
40	'A' Group	67-5567	Front brake cam bearing	1
41	'A' Group	67-5572	Front brake shoe cam complete	1
42	'A' Group	67-5558	Front brake shoe with lining	2

Plate 17

FRONT HUB & WHEEL FITTINGS
A7, A10 (SWINGING ARM) (1956/7)

Plate Ref. Number	Model	Part No.	Description	Number per set
—	A7, A10 Swinging Arm	42-5634	Front wheel complete (less tyre)	1
—	A10 Road Rocket	42-5648	Front wheel complete (less tyre)	1
1	A7, A10 Swinging Arm	42-5590	Front hub spindle	1
2	A7, A10 Swinging Arm	42-5637	Front wheel rim	1
2	A10 Road Rocket	42-5649	Front wheel rim	1
3	A7, A10 Swinging Arm	42-5580	Wheel bearing nut (N/S)	1
4	A7, A10 Swinging Arm	89-3022	Hub bearing	1
5	A7, A10 Swinging Arm	42-5646	Hub bearing circlip	1
6	A7, A10 Swinging Arm	27-6813	Front wheel spoke nipple	40
7	A7, A10 Swinging Arm	42-5635	Front wheel spoke	40
8	A7, A10 Swinging Arm	42-5600	Front hub complete with bearings	1
9	A7, A10 Swinging Arm	42-5646	Hub bearing circlip	1
10	A7, A10 Swinging Arm	42-5606	Bearing sleeve (O/S)	1
11	A7, A10 Swinging Arm	89-3022	Hub bearing	1
12	A7, A10 Swinging Arm	42-5618	Brake shoe complete with linings	2
13	A7, A10 Swinging Arm	42-5620	Brake shoe lining	2
14	A7, A10 Swinging Arm	42-5638	Brake shoe lining rivets	16
15	A7, A10 Swinging Arm	42-5583	Wheel bearing nut (O/S)	1
16	A7, A10 Swinging Arm	42-5573	Brake cam complete	1
17	A7, A10 Swinging Arm	42-5577	Brake stop plate	1
18	A7, A10 Swinging Arm	42-5623	Brake shoe wedge assembly	2
19	A7, A10 Swinging Arm	42-5617	Brake shoe adjuster	1
20	A7, A10 Swinging Arm	42-5614	Brake plate	1
21	A7, A10 Swinging Arm	42-5593	Front brake anchor strap	1
22	A7, A10 Swinging Arm	42-6083	Anchor strap, brake plate bolt nut	1
23	A7, A10 Swinging Arm	42-5630	Brake cam spindle washer (felt)	1
24	A7, A10 Swinging Arm	42-5576	Brake lever	1
25	A7, A10 Swinging Arm	42-5621	Front hub spindle nut	1
26	A7, A10 Swinging Arm	65-311	Brake cam lever nut	1
27	A7, A10 Swinging Arm	2-522	Brake cam lever washer (spring)	1
28	A7, A10 Swinging Arm	28-2080	Grease nipple	1
29	A7, A10 Swinging Arm	42-5592	Front brake cable abutment	1
30	A7, A10 Swinging Arm	36-382	Front brake cable abutment washer (shakeproof)	1
31	A7, A10 Swinging Arm	2-49	Front brake cable abutment nut	1
32	A7, A10 Swinging Arm	42-5631	Brake plate return spring	1
33	A7, A10 Swinging Arm	35-702	Wheel bearing nut split pin (O/S)	1
34	A7, A10 Swinging Arm	42-5622	Brake shoe spring	2

Plate 17 FRONT HUB AND WHEEL FITTINGS
A7, A10 (SWINGING ARM) (1956/7)

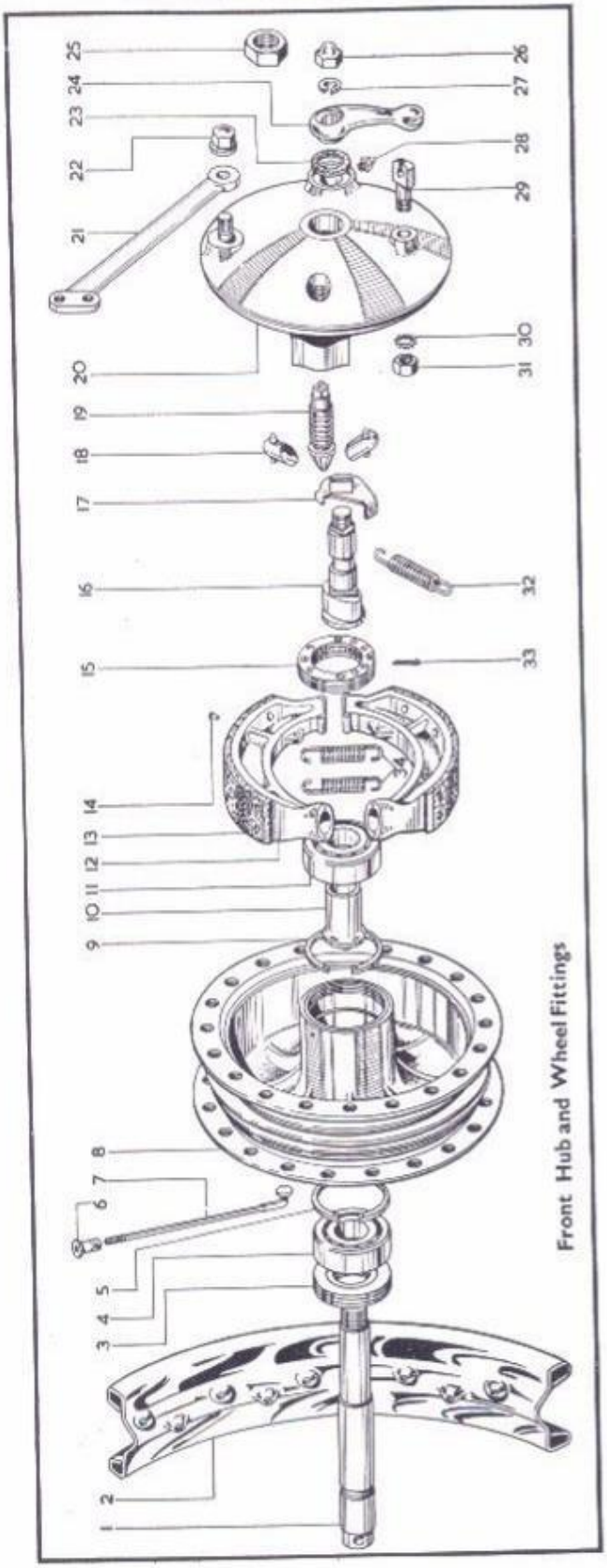

REAR HUB AND WHEEL FITTINGS
A7, A10 (SWINGING ARM) (1956/7)

Plate 18

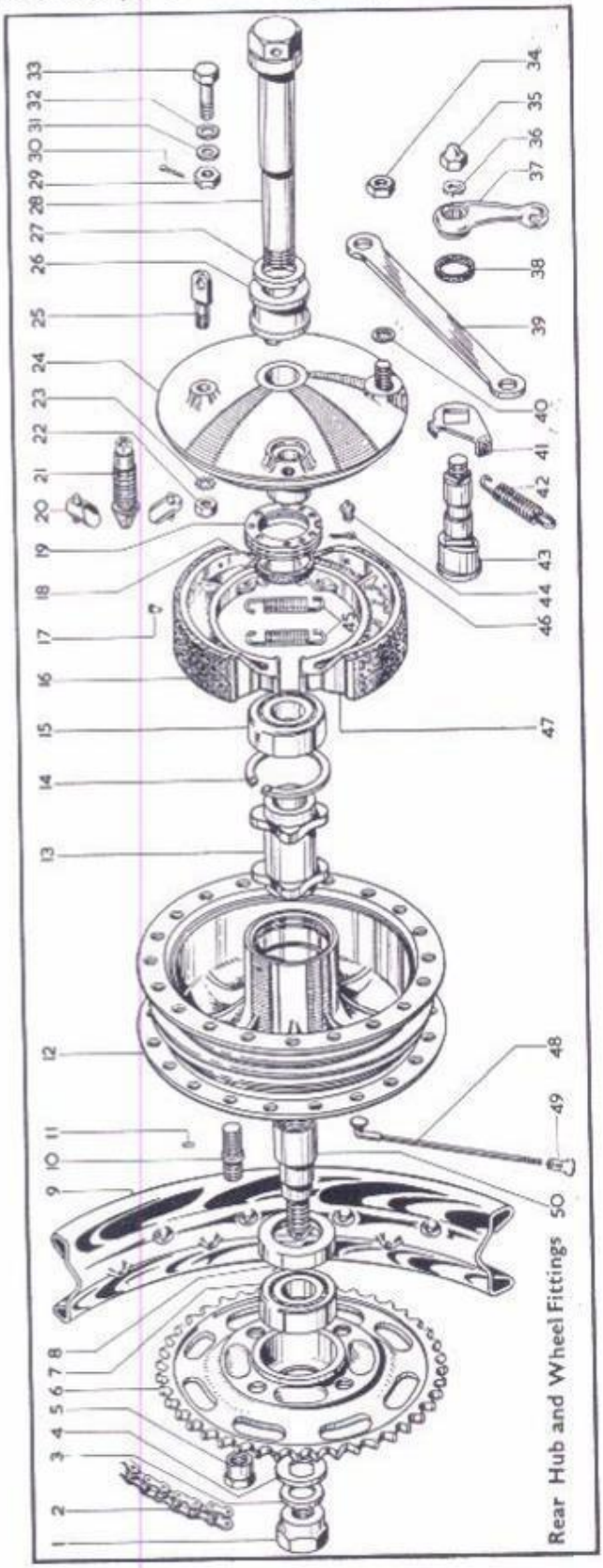

Mudgu
Oil Ta
Tool B
Chaingu

Dual Se
Petrol Ta
Handleb
etc.

Mudgu
Petrol
Brake

Mudgua
Oil tan
Rear
Chaingua

Handle
Petrol T
Toolbox,

Chaing
Chainc
Rear B
Contr

Legshi
Safe
Bar

Carrier
Pannic
Bags

Tools a
Sundri

Sidea
Chassi

ectrical

Plate 18

REAR HUB & WHEEL FITTINGS
A7 & A10 (SWINGING ARM) (1956/7)

Plate Ref. Number	Model	Part No.	Description	Number per set
—	A7 and A10	42-6106	Rear wheel complete (less tyre)	1
—	A10 Road Rocket	42-6107	Rear wheel complete (less tyre)	1
1	A7 and A10	42-6077	Fixed spindle nut	1
2	A7 and A10	42-9033	Transmission chain (rear)	1
3	A7 and A10	42-6078	Fixed spindle washer (small)	1
4	A7 and A10	42-6091	Fixed spindle washer (large)	1
5	A7 and A10	42-6095	Rear hub sprocket spherical nut	4
6	A7 and A10	42-6069	Rear hub sprocket (42T)	1
7	A7 and A10	89-3022	Hub bearing	1
8	A7 and A10	42-6105	Grease retainer	2
9	A7 and A10	42-5637	Rear wheel rim	1
9	A10 Road Rocket	42-5644	Rear wheel rim	1
10	A7 and A10	42-6082	Rear hub sprocket stud	4
11	A7 and A10	42-5645	Sprocket stud locking peg	4
12	A7 and A10	42-6088	Rear hub assembly with studs, pegs, bearing	1
13	A7 and A10	42-6085	Spindle distance piece	1
14	A7 and A10	42-5646	Hub bearing circlip	1
15	A7 and A10	89-3022	Hub bearing	1
16	A7 and A10	42-5620	Brake shoe lining	2
17	A7 and A10	42-5638	Brake shoe lining rivet	16
18	A7 and A10	42-5609	Felt packing (large)	1
19	A7 and A10	42-5583	Wheel bearing nut	1
20	A7 and A10	42-5623	Brake shoe wedge assembly	2
21	A7 and A10	42-5617	Brake shoe adjuster	1
22	A7 and A10	2-49	Brake cable abutment nut	1
23	A7 and A10	36-382	Brake cable abutment washer (shakeproof)	1
24	A7 and A10	42-5614	Brake plate	1
25	A7 and A10	42-5592	Brake cable abutment	1
26	A7 and A10	42-6075	Rear hub slip collar	1
27	A7 and A10	42-6074	Rear hub spindle washer	1
28	A7 and A10	42-6071	Rear hub spindle assemble	1
29	A7 and A10	24-5860	Anchor strap swinging arm bolt nut	1
30	A7 and A10	35-705	Anchor strap swinging arm bolt split pin	1
31	A7 and A10	15-431	Anchor strap swinging arm bolt washer (plain)	1
32	A7 and A10	66-4708	Anchor strap swinging arm bolt washer (shakeproof)	1
33	A7 and A10	3-855	Anchor strap swinging arm bolt	1
34	A7 and A10	21-5105	Rear brake anchor strap bolt nut	1
35	A7 and A10	65-311	Brake cam lever nut	1
36	A7 and A10	2-522	Brake cam lever washer (spring)	1
37	A7 and A10	42-5576	Brake lever	1
38	A7 and A10	42-5630	Brake cam spindle washer (felt)	1
39	A7 and A10	42-6084	Rear brake anchor strap	1
40	A7 and A10	66-4708	Rear brake anchor strap washer (shakeproof)	1
41	A7 and A10	42-5577	Brake stop plate	1
42	A7 and A10	42-5631	Brake return spring	1
43	A7 and A10	42-5573	Brake cam complete	1
44	A7 and A10	28-2080	Brake plate nipple	1
45	A7 and A10	42-5622	Brake shoe spring	1
46	A7 and A10	35-702	Wheel bearing nut split pit (O/S)	1
47	A7 and A10	42-5618	Brake shoe with lining	2
48	A7 and A10	42-5635	Rear wheel spoke	40
49	A7 and A10	27-6810	Rear wheel spoke nipple	40
50	A7 and A10	42-6076	Fixed spindle	1

Plate 19

REAR HUB AND WHEEL FITTINGS
'A' GROUP (SWINGING ARM) (1954/5)

Plate Ref. Number	Model	Part No.	Description	Number per set
—	'A' Group	42-6011	Rear wheel complete (less brake and tyre)	1
1	'A' Group	2-440	Rear brake operating lever nut	1
2	'A' Group	66-4708	Rear brake operating lever washer (shakeproof)	1
3	'A' Group	15-431	Rear brake operating lever washer (plain)	1
4	'A' Group	65-5674	Cam bearing oil hole clip	1

late 19 REAR HUB AND WHEEL FITTINGS—'A' GROUP (SWINGING ARM) (1954/5)

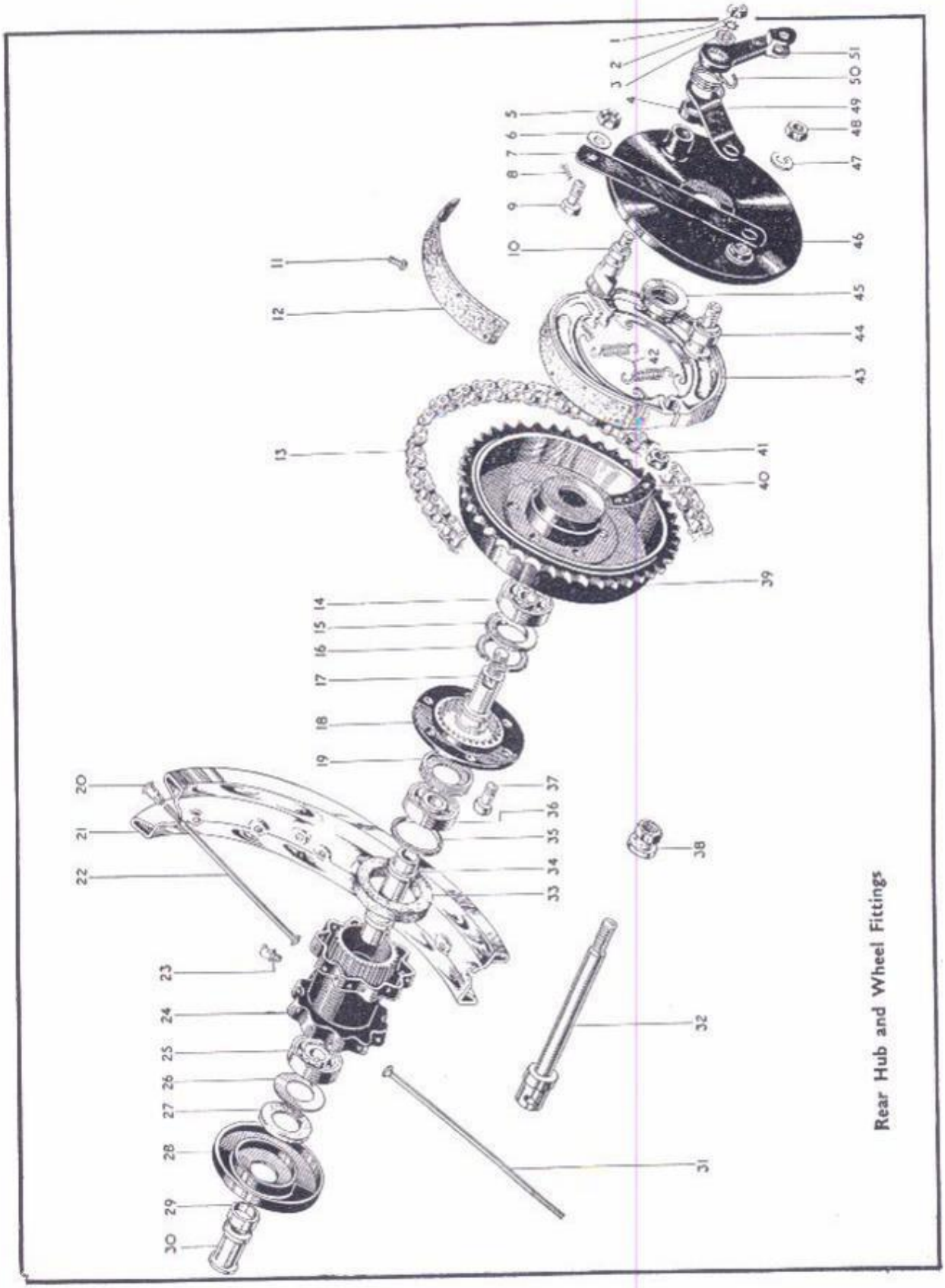

Rear Hub and Wheel Fittings

Mudguar
Oil Tan
Tool Bo
Chaingua

Dual Seat
Petrol Tan
Handlebar
etc.

Mudguar
Petrol T
Brake R

Mudguard
Oil tank
Rear
Chainguar

Handleba
Petrol Ta
Toolbox, e

Chaingu
Chaincas
Rear Br
Contro

Legshie
Safety
Bars

Carrier a
Pannier
Bags

Tools ar
Sundrie

Sidecar
Chassis

ectrical
ipment

Plate 19—*continued* REAR HUB AND WHEEL FITTINGS

'A' GROUP (SWINGING ARM) (1954/5)

Plate Ref. Number	Model	Part No.	Description	Number per set
5	'A' Group	21-431	Anchor strap bolt nut	1
6	'A' Group	2-130	Anchor strap bolt washer (plain)	1
7	'A' Group	42-6036	Rear brake anchor strap	1
8	'A' Group	35-698	Anchor strap bolt split pin	1
9	'A' Group	42-6037	Rear brake anchor strap bolt	1
10	'A' Group	42-6034	Rear brake cam	1
11	'A' Group	35-6436	Brake shoe lining rivet	14
12	'A' Group	65-5903	Brake shoe lining	2
13	'A' Group	42-9033	Transmission chain (rear)	1
14	'A' Group	65-5883	Rear hub ball bearing	1
15	'A' Group	67-6033	Hub ball journal shim	1
16	A' Group	67-6034	Retaining spring ring	1
17	'A' Group	67-6030	Rear brake drum bearing sleeve	1
18	'A' Group	67-6101	Driving flange	1
19	'A' Group	65-5885	Hub ballrace retaining ring	1
20	'A' Group	27-6813	Spoke nipples	40
21	'A' Group	67-6005/3	Rear wheel rim	1
22	A' Group	67-6017	Rear wheel spoke (nearside)	20
23	'A' Group	15-5290	Rear hub grease nipple	1
24	'A' Group	67-6136	Rear hub shell complete with bearings	1
25	'A' Group	65-5883	Rear hub ball bearing	1
26	'A' Group	65-5887	Felt washer retaining ring	1
27	'A' Group	65-5886	Rear hub felt washer	1
28	'A' Group	67-6133	End cover	1
29	'A' Group	65-5890	Hub spindle distance collar	1
30	'A' Group	67-6028	Hub spindle distance sleeve	1
31	'A' Group	67-6016	Rear wheel spoke (offside)	20
32	'A' Group	67-6161	Rear hub spindle	1
33	'A' Group	67-6051	Hub shell washer (rubber)	1
34	'A' Group	67-6027	Hub spindle sleeve	1
35	'A' Group	65-5884	Hub bearing thrust washer	1
36	'A' Group	65-5883	Rear hub ball bearing	1
37	'A' Group	67-6038	Brake drum securing bolt	6
38	'A' Group	67-6031	Rear hub spindle nut	1
39	'A' Group	67-6149	Rear brake drum and chainwheel (42T)	1
40	'A' Group	67-6039	Brake drum bolt locking strip	3
41	'A' Group	2-452	Rear wheel securing bolt nut	6
42	'A' Group	65-5904	Rear brake spring	2
43	'A' Group	65-5901	Rear brake shoe complete	2
44	'A' Group	42-6033	Rear brake fulcrum pin	1
45	'A' Group	67-6032	Rear hub collar	1
46	'A' Group	42-6030	Rear brake cover plate complete with fixed fittings	1
47	'A' Group	65-5111	Rear brake fulcrum pin washer (spring)	1
48	'A' Group	2-124	Rear brake fulcrum pin nut	1
49	'A' Group	67-6046	Rear brake outrigger strap	1
50	'A' Group	42-6046	Rear brake pedal return spring	1
51	'A' Group	42-6045	Rear brake operating lever	1

Plate 20 MUDGUARDS, OIL TANK, TOOL BOX AND CHAINGUARD

'A' GROUP (PLUNGER FRAME)

Plate Ref. Number	Model	Part No.	Description	Number per set
1	'A' Group	24-8784	Chainguard to crankcase fixing bolt washer (spring)	1
2	'A' Group	21-2880	Chainguard to crankcase fixing bolt	1
3	'A' Group	65-8422	Oil return pipe connection ferrule	1
4	'A' Group	65-2060	Oil return pipe connection (rubber)	1
5	'A' Group	65-8422	Oil return pipe connection ferrule	1
6	'A' Group	65-8420	Oil return pipe connection	1
7	'A' Group	65-8424	Oil return pipe nut	1
8	'A' Group	65-8421	Oil return pipe nut washer (fibre)	1
9	'A' Group	15-447	Front stand fixing bolt nut	2
10	A7 and A10	67-6530	Front stand complete	1
11	'A' Group	2-1934	Front stand fork end fixing bolt	2
12	'A' Group	24-8784	Front stand fork end fixing bolt washer (spring)	2
13	'A' Group	2-1616	Front stand fork end fixing bolt nut	2

Plate 20

MUDGUARDS, OIL TANK, TOOLBOX AND CHAINGUARD
'A' GROUP (PLUNGER FRAME)

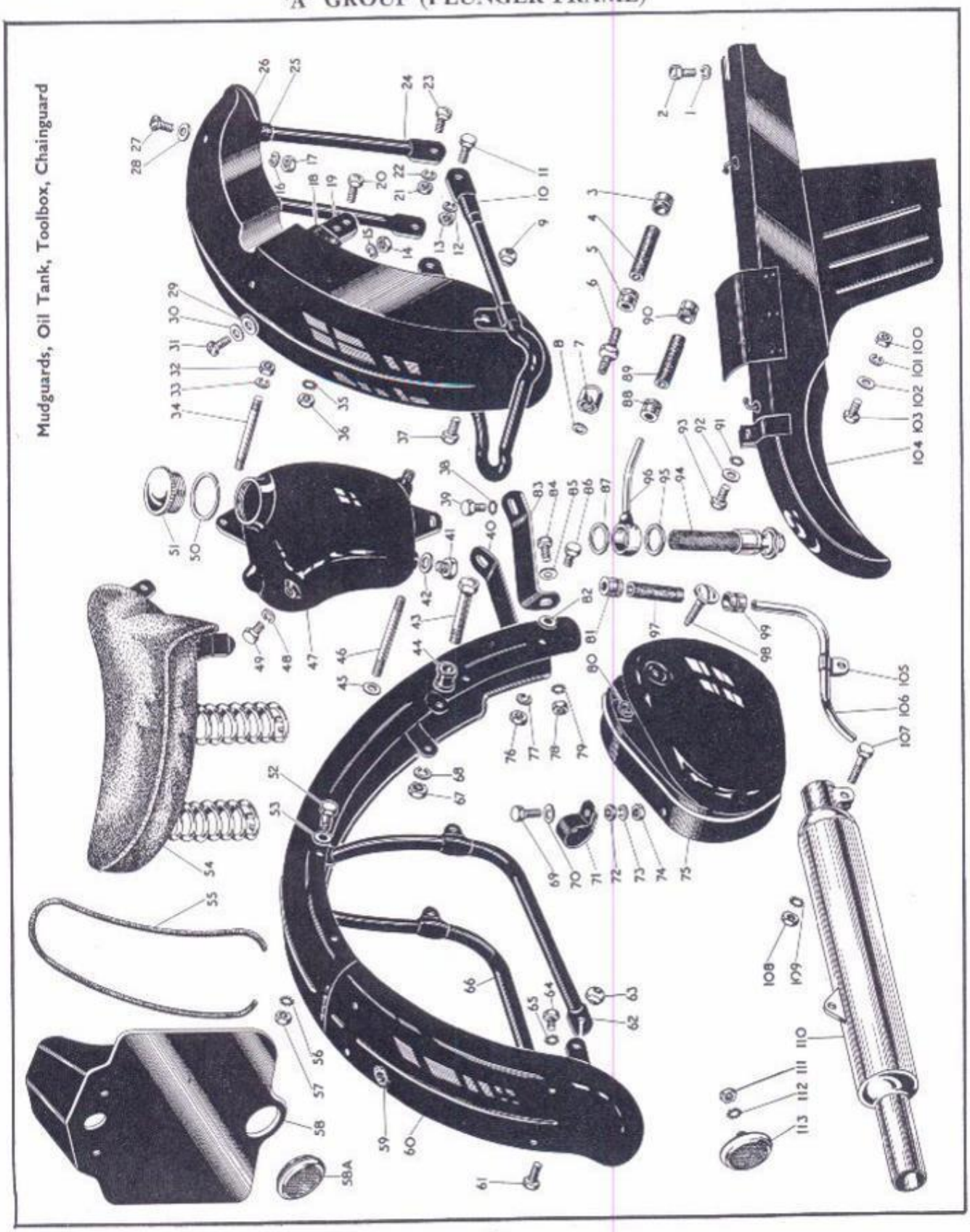

MUDGUARDS, OIL TANK, TOOL BOX AND CHAINGUARD—'A' GROUP (PLUNGER FRAME)

Plate Ref. Number	Model	Part No.	Description	Number per set
14	'A' Group	2-2395	Front mudguard support bridge fixing bolt nut	2
15	'A' Group	2-1462	Front mudguard support bridge fixing bolt washer (spring)	2
16	'A' Group	2-1462	Front mudguard stay fixing bolt washer (spring)	2
17	'A' Group	2-2395	Front mudguard stay fixing bolt nut	2
18	A7, A10	67-6548	Front mudguard bridge stay insulator	2
19	'A' Group	65-6623	Front mudguard support bridge	1
20	'A' Group	28-2338	Support bridge bottom fixing bolt	2
21	'A' Group	2-1616	Front mudguard stay fork end fixing bolt nut	2
22	'A' Group	24-8784	Front mudguard stay fork end fixing bolt washer (spring)	2
23	'A' Group	15-7354	Front mudguard stay fork end fixing bolt	2
24	A7 and A10	67-6544	Front mudguard stay	1
25	A7 and A10	67-6547	Front mudguard stay insulator	2
26	A7 and A10	67-6543	Front mudguard with fixed fittings	1
27	'A' Group	2-204	Front mudguard stay fixing bolt	2
28	'A' Group	27-8560	Front mudguard fixing bolt washer (plain)	2
29	'A' Group	66-7518	Front mudguard support bridge fixing bolt washer (fibre)	2
30	'A' Group	27-8560	Front mudguard support bridge fixing bolt washer	2
31	'A' Group	2-204	Front mudguard support bridge fixing bolt	2
32	'A' Group	2-49	Oil tank and air cleaner fixing stud nut	4
33	'A' Group	24-8784	Oil tank and air cleaner fixing stud washer (spring)	4
34	'A' Group	29-4100	Oil tank and air cleaner fixing stud (top)	1
35	'A' Group	36-382	Support bridge bottom fixing bolt washer (shakeproof)	4
36	'A' Group	2-49	Support bridge bottom fixing bolt nut	4
37	'A' Group	2-1354	Front stand fixing bolt	2
38	'A' Group	36-382	Mudguard chainstay bridge bolt washer (shakeproof)	2
39	'A' Group	67-8313	Mudguard chainstay bridge bolt	2
40	'A' Group	67-6766	Mudguard front bracket (nearside)	1
41	'A' Group	2-84	Oil tank drain plug	1
42	'A' Group	2-100	Oil tank drain plug washer	1
43	'A' Group	67-4030	Mudguard fixing bolt (seatstay)	2
44	'A' Group	67-6761	Mudguard fixing bolt (seatstay) spacing washer	2
45	'A' Group	2-923	Oil tank and air cleaner fixing stud washer	2
46	'A' Group	29-7670	Oil tank and air cleaner fixing stud (bottom)	1
47	'A' Group	67-8334	Oil tank with fixed fittings	1
48	'A' Group	24-8784	Oil tank fixing bolt washer (spring)	1
49	'A' Group	67-8313	Oil tank fixing bolt	1
50	'A' Group	67-42	Oil tank filler cap washer (fibre)	1
51	'A' Group	65-8500	Oil tank filler cap	1
52	'A' Group	24-6770	Mudguard support bracket stay bolt	2
53	'A' Group	2-923	Mudguard support bracket stay bolt washer	2
54	'A' Group	67-9054	Saddle	1
55	'A' Group	67-6851	Rear number plate rubber extrusion	1
56	'A' Group	36-382	Mudguard support bracket stay bolt washer (shakeproof)	2
57	'A' Group	2-49	Mudguard support bracket stay bolt nut	2
58	'A' Group	67-6885	Rear number plate complete	1
58A	'A' Group	67-9067	Rear reflector (up to 1955)	1
59	'A' Group	67-6839	Rear mudguard tail lamp wiring grommet	2
60	'A' Group	67-6841	Rear mudguard with fixed fittings	1
61	'A' Group	2-1354	Mudguard support bolt (bottom)	2
62	'A' Group	67-6772	Mudguard support complete (offside)	1
63	'A' Group	15-447	Mudguard support bolt nut (bottom)	2
64	'A' Group	2-220	Rear number plate fixing bolt	4
65	'A' Group	2-1462	Rear number plate fixing bolt washer (spring)	4
—	'A' Group	27-8560	Rear number plate fixing bolt washer (plain)	4
66	'A' Group	67-6774	Mudguard support complete (nearside)	1
67	'A' Group	2-449	Mudguard fixing bolt (seatstay) nut	2
68	'A' Group	2-522	Mudguard fixing bolt (seatstay) washer (spring)	2
69	'A' Group	15-4207	Toolbox fixing clip bolt	1
70	'A' Group	27-8560	Toolbox fixing clip bolt washer	1
71	'A' Group	24-8927	Toolbox fixing clip	1
72	'A' Group	2-6537	Toolbox fixing clip distance washer	1
73	'A' Group	2-1462	Toolbox fixing clip bolt washer (spring)	1
74	'A' Group	2-2395	Toolbox fixing clip bolt nut	1
75	'A' Group	67-9002	Toolbox complete	1
76	'A' Group	2-2395	Toolbox to mudguard fixing bolt nut	2
77	'A' Group	2-1462	Toolbox to mudguard fixing bolt washer (spring)	2
78	'A' Group	2-49	Mudguard front bracket fixing bolt nut	2
79	'A' Group	36-382	Mudguard front bracket fixing bolt washer (shakeproof)	2
80	'A' Group	2-1027	Toolbox lid fixing screw nut	1

Plate 20—*continued* MUDGUARDS, OIL TANK, TOOL BOX AND CHAINGUARD—'A' GROUP (PLUNGER FRAME)

Plate Ref. Number	Model	Part No.	Description	Number per set
81	'A' Group	65-8422	Oil breather pipe connection ferrule	1
82	'A' Group	27-8560	Toolbox to mudguard fixing bolt washer	2
83	'A' Group	67-6767	Mudguard front bracket (offside)	1
84	'A' Group	1-5069	Mudguard front bracket fixing bolt	2
85	'A' Group	2-923	Mudguard front bracket fixing bolt washer	2
86	'A' Group	2-204	Toolbox to mudguard fixing bolt	2
87	'A' Group	29-7971	Oil feed banjo washer (fibre)	1
88	'A' Group	65-8422	Oil feed pipe connection ferrule	1
89	'A' Group	65-2060	Oil feed pipe connection (rubber)	1
90	'A' Group	65-8422	Oil feed pipe connection ferrule	1
91	'A' Group	36-382	Chainguard rear fixing bolt washer (shakeproof)	1
92	'A' Group	2-923	Chainguard rear fixing bolt washer (plain)	1
93	'A' Group	1-5069	Chainguard rear fixing bolt	1
94	'A' Group	29-7962	Oil tank filter complete	1
95	'A' Group	29-7971	Oil feed banjo washer (fibre)	1
96	'A' Group	67-8309	Oil feed pipe complete	1
97	'A' Group	65-2060	Oil breather pipe connection (rubber)	1
98	'A' Group	29-9132	Toolbox lid fixing screw complete	1
99	'A' Group	65-8422	Oil breather pipe connection ferrule	1
100	'A' Group	2-2395	Chainguard bottom clip bolt nut	1
101	'A' Group	2-1462	Chainguard bottom clip bolt washer (spring)	1
102	'A' Group	27-8560	Chainguard bottom clip bolt washer (plain)	1
103	'A' Group	2-204	Chainguard bottom clip bolt	1
104	'A' Group	67-7778	Rear chainguard with fixed fittings	1
105	'A' Group	67-8326	Oil tank breather pipe support clip	1
106	'A' Group	67-8324	Oil tank breather pipe extension	1
107	'A' Group	24-7343	Silencer inlet tube clip bolt	2
108	'A' Group	2-2395	Silencer inlet tube clip bolt nut	2
109	'A' Group	29-541	Silencer inlet tube clip bolt washer (shakeproof)	2
110	'A' Group	67-2711	Silencer complete	2
111	'A' Group	21-5102	Rear number plate reflector nut (1955 models)	1
112	'A' Group	29-541	Rear number plate reflector washer (shakeproof) (1955 models)	1
113	'A' Group	67-9069	Rear reflector (1955 models)	1

Plate 21 DUAL SEAT, PETROL TANK, HANDLEBAR AND BATTERY CARRIER—'A' GROUP (PLUNGER FRAME)

Plate Ref. Number	Model	Part No.	Description	Number per set
1	'A' Group	67-9104	Dual seat complete with fittings	1
2	A7	67-8126	Petrol tank	1
2	Star Twin	67-8104	Petrol tank	1
3	'A' Group	67-8108	Petrol tank front mounting tube bush (rubber)	2
4	'A' Group	67-8109	Petrol tank front mounting tube	2
5	'A' Group	27-5676	Petrol tank front fixing bolt washer	2
6	A7 and Star Twin	65-8326	Petrol tank front fixing bolt	1
7	'A' Group	29-7898	Petrol tank filler cap	1
8	'A' Group	29-8810	Front brake control complete (less cable and cover) (up to 1955)	1
—	A10	42-8655	Combined front brake and air control (1956)	1
9	'A' Group	65-8501	Throttle twist grip	1
10	'A' Group	66-8896	Air control complete (less cable and cover) (up to 1955)	1
11	A7 and Star Twin	67-8521	Throttle cable and cover complete	1
11	A10	67-8595	Throttle cable and cover complete	1
12	A7 Star Twin, A10	67-8555	Air control cable and cover complete	1
12	A10	67-8592	Air control cable and cover complete (up to 1955)	1
13	Star Twin	65-8714	Ignition control cable and cover complete (for use with manual control magneto)	1
14	Star Twin	66-8810	Ignition control lever complete (for use with manual control magneto)	1
15	'A' Group	65-8502	Dummy grip (left hand)	1
16	'A' Group	29-8820	Clutch control complete (less cable and cover)	1
17	'A' Group	67-8681	Clutch control cable and cover complete	1
18	'A' Group	65-4960	Handlebar complete (less controls)	1
19	A7 and Star Twin	65-8675	Front brake cable and cover complete	1
19	A10	67-8610	Front brake cable and cover complete	1
20	'A' Group	66-4707	Petrol tank front fixing bolt washer (shakeproof)	2
21	'A' Group	2-46	Petrol tank front fixing bolt nut	1
22	A7 and A10	65-8317	Petrol tank badge screw	4

Plate 22

FRONT MUDGUARD, PETROL TANK AND BRAKE ROD 'A' GROUP (PLUNGER FRAME)

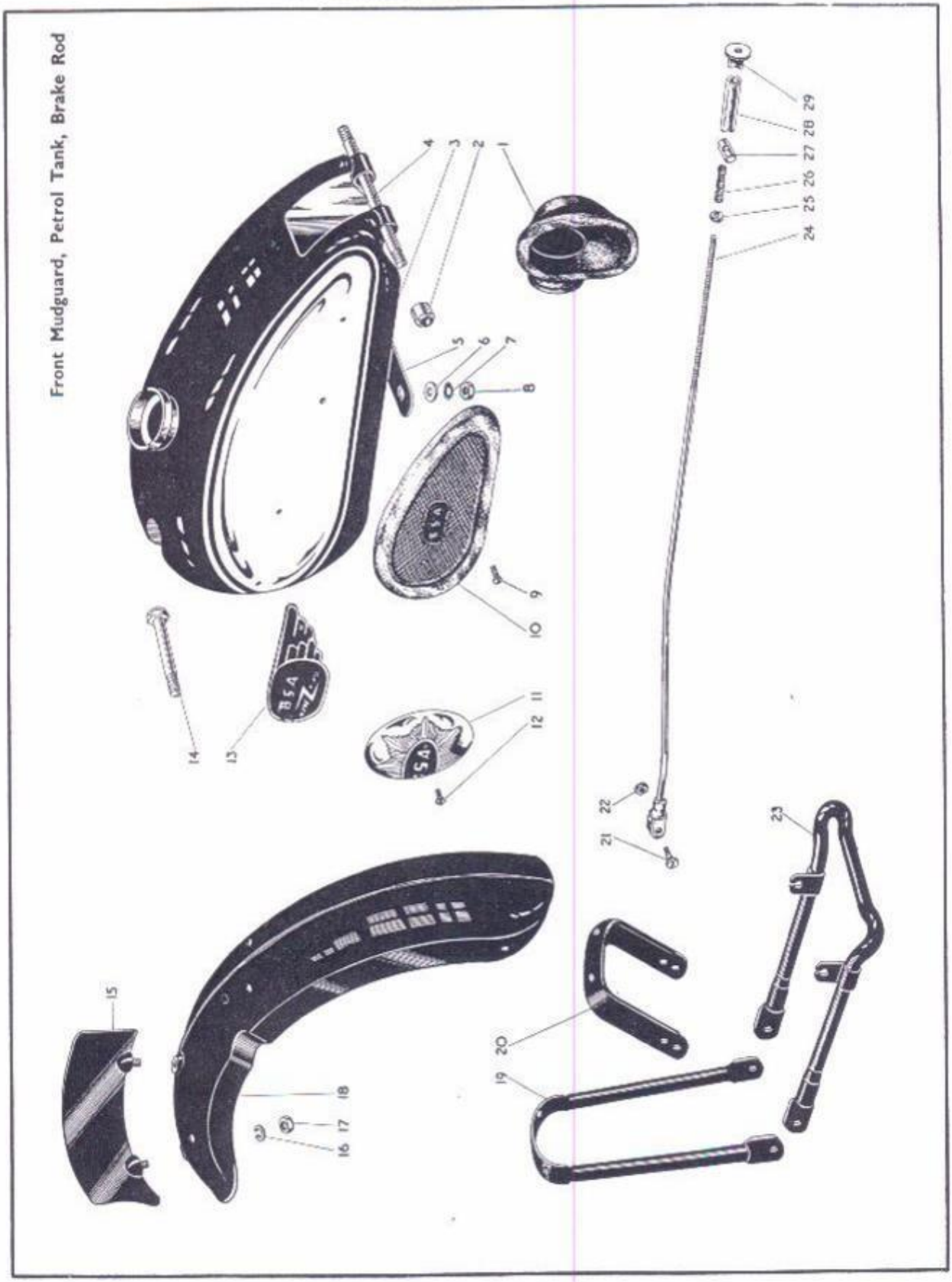

Plate 22—*continued* FRONT MUDGUARD, PETROL TANK AND BRAKE ROD 'A' GROUP (PLUNGER FRAME)

Plate Ref. Number	Model	Part No.	Description	Number per set
13	A10	67-8071	Petrol tank badge (nearside)	1
13	A10	67-8070	Petrol tank badge (offside)	1
—	A10	67-8076	Petrol tank front fixing bolt	1
15	Star Twin	65-6576	Front number plate complete	1
16	Star Twin	2-1462	Front number plate stud washer (spring)	2
17	Star Twin	2-2395	Front number plate stud nut	2
18	Star Twin	65-6605	Front mudguard with fixed fittings	1
19	Star Twin	65-6607	Front mudguard stay	1
20	Star Twin	65-6623	Front mudguard support bridge	1
21	'A' Group	2-510	Rear brake rod toggle end screw	1
22	'A' Group	2-443	Rear brake rod toggle end screw nut	1
23	Star Twin	65-6608	Front stand complete	1
24	'A' Group	67-7033	Rear brake rod complete	1
25	'A' Group	2-2395	Rear brake rod abutment nut	1
26	'A' Group	15-1312	Rear brake rod spring	1
27	'A' Group	65-6274	Rear brake rod swivel pin	1
28	'A' Group	67-7031	Rear brake rod adjusting nut extension tube	1
29	'A' Group	29-7368	Rear brake rod adjusting nut	1

Plate 23 MUDGUARDS, OIL TANK AND REAR CHAINGUARD—'A' GROUP (SWINGING ARM)

Plate Ref. Number	Model	Part No.	Description	Number per set
1	'A' Group	42-7701	Rear chainguard complete (up to 1955)	1
2	'A' Group	65-292	Rear chainguard fixing bolt (up to 1955)	1
3	'A' Group	2-923	Rear chainguard fixing bolt washer (plain) (up to 1955)	1
4	'A' Group	30-1194	Rear chainguard distance piece (up to 1955)	1
5	'A' Group	2-49	Rear chainguard fixing bolt nut (up to 1955)	1
6	'A' Group	24-8784	Rear chainguard fixing bolt washer (spring) (up to 1955)	1
7	'A' Group	2-49	Rear chainguard long fixing bolt nut (up to 1955)	1
8	'A' Group	24-8784	Rear chainguard long fixing bolt washer (spring) (up to 1955)	1
—	'A' Group	29-541	Rear chainguard securing bolt washer (shakeproof) (1956)	4
9	'A' Group	2-353	Rear chainguard fixing bolt (short) (up to 1955)	2
10	'A' Group	24-8784	Rear chainguard short fixing bolt washer (spring) (up to 1955)	2
11	A7 Shooting Star, A10 Road Rocket	2-204	Front mudguard stiffener screw	2
12	A7 Shooting Star A10 Road Rocket	2-2580	Front mudguard stiffener screw washer (plain)	2
13	A7 Shooting Star A10 Road Rocket	67-6560	Front mudguard stiffener	1
14	A7 Shooting Star A10 Road Rocket	2-1462	Front mudguard stiffener screw washer (spring)	4
15	A7 Shooting Star A10 Road Rocket	2-2395	Front mudguard stiffener screw nut	2
16	A7 Shooting Star A10 Road Rocket	67-6558	Front stand complete	1
17	'A' Group	2-49	Front mudguard stay fork end fixing bolt nut	2
18	'A' Group	24-8784	Front mudguard stay fork end fixing bolt washer (spring)	2
19	A7 Shooting Star A10 Road Rocket	67-6557	Front mudguard stay	1
20	'A' Group	2-923	Front mudguard stay fork end fixing bolt washer (plain)	2
21	'A' Group	2-923	Front stand fork end fixing bolt washer (plain)	2
22	'A' Group	24-6770	Front mudguard stay fork end fixing bolt	2
23	'A' Group	3-1156	Front stand fork end fixing bolt	2
24	A7 Shooting Star A10 Road Rocket	32-194	Support bridge bottom fixing bolt (offside)	2
25	'A' Group	24-8784	Front stand fork end fixing bolt washer (spring)	2
26	'A' Group	2-49	Front stand fork end fixing bolt nut	2
27	A7 Shooting Star A10 Road Rocket	2-2580	Front stand release bolt washer (thin)	1
28	A7 Shooting Star A10 Road Rocket	2-14	Front stand release bolt	1
29	'A' Group	2-1462	Front mudguard support bridge fixing screw washer (spring)	2

Plate 23

MUDGUARDS, OIL TANK AND REAR CHAINGUARD
'A' GROUP (SWINGING ARM)

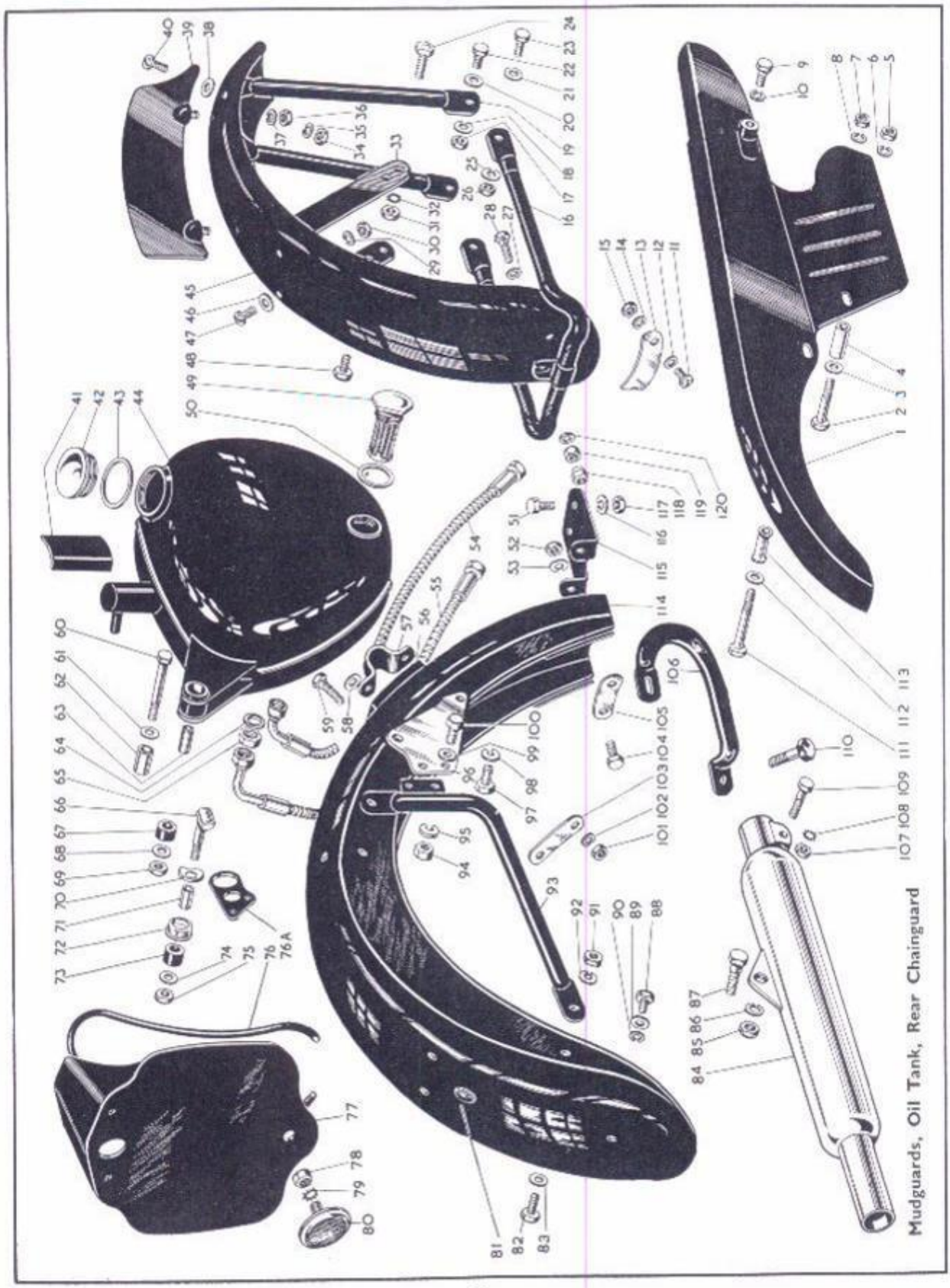

Plate 23—*continued* MUDGUARDS, OIL TANK AND REAR CHAINGUARD—'A' GROUP (SWINGING ARM)

Plate Ref. Number	Model	Part No.	Description	Number per set
30	'A' Group	2-2395	Front mudguard support bridge fixing screw nut	2
31	'A' Group	2-49	Support bridge bottom fixing bolt nut	4
32	'A' Group	36-382	Support bridge bottom fixing bolt washer (shakeproof)	3
33	A7 Shooting Star A10 Road Rocket	67-6565	Front mudguard support bridge	1
—	A7, A10 Swinging Arm	15-480	Support bridge bottom fixing and brake anchor strap bolt	2
34	'A' Group	2-2395	Front mudguard stay fixing screw nut	2
35	'A' Group	2-1462	Front mudguard stay fixing screw washer (spring)	2
36	A7 Shooting Star A10 Road Rocket	2-2395	Front number plate fixing stud nut	2
37	A7 Shooting Star A10 Road Rocket	2-1462	Front number plate fixing stud washer (spring)	2
38	'A' Group	27-8560	Front mudguard stay fixing screw washer (plain)	2
39	A7 Shooting Star A10 Road Rocket	65-6576	Front number plate complete	1
40	'A' Group	2-204	Front mudguard stay fixing screw	2
41	'A' Group	42-8342	Oil Tank mounting strip (rubber)	4
42	'A' Group	65-8500	Oil tank filler cap	1
43	'A' Group	67-42	Oil tank filler cap washer (fibre)	1
44	'A' Group	42-8367	Oil tank with fixed fittings	1
45	A7 Shooting Star A10 Road Rocket	67-6556	Front mudguard with fixed fittings	1
46	'A' Group	27-8560	Front mudguard support bridge fixing screw washer (plain)	2
47	A7, A10 Swinging Arm	2-204	Front mudguard support bridge fixing screw	2
—	A7, A10 Swinging Arm	66-7518	Front mudguard support bridge washer (fibre)	2
48	A7, A10 Swinging Arm	28-2338	Support bridge bottom fixing bolt	2
48	A7 Shooting Star A10 Road Rocket	28-2338	Support bridge bottom fixing bolt (nearside)	2
49	'A' Group	42-8334	Oil tank filter assembly	1
50	'A' Group	42-8343	Oil tank filter plug washer (fibre)	1
51	'A' Group	15-7354	Rear mudguard bottom bracket frame bolt (up to 1955)	2
52	'A' Group	2-49	Rear mudguard bottom bracket fixing bolt nut (up to 1955)	2
53	'A' Group	24-8784	Rear mudguard bottom bracket fixing bolt washer (spring) (up to 1955)	2
54	'A' Group	42-8346	Oil feed pipe (armoured)	1
55	'A' Group	42-8347	Oil return pipe (armoured)	1
56	'A' Group	42-6853	Rear mudguard distance piece (rubber)	2
57	'A' Group	42-6759	Rear mudguard fixing clip	2
58	'A' Group	2-525	Rear mudguard fixing clip bolt washer (plain)	4
59	'A' Group	24-8328	Rear mudguard fixing clip bolt	4
60	'A' Group	29-5289	Oil tank top fixing bolt	1
61	'A' Group	2-537	Oil tank top fixing bolt washer (plain)	1
62	'A' Group	42-8339	Oil tank top fixing bolt distance tube	1
63	'A' Group	42-8331	Oil tank top fixing bolt spacing tube	1
64	'A' Group	15-203	Rocker feed pipe banjo washer (fibre)	1
65	'A' Group	42-8340	Rocker oil feed pipe banjo locknut	1
66	'A' Group	42-8385	Oil tank fixing bolt	1
67	'A' Group	42-8341	Oil tank top fixing bolt mounting pad (rubber)	2
68	'A' Group	2-537	Oil Tank top fixing bolt washer (plain)	1
69	'A' Group	2-49	Oil tank top fixing bolt nut	1
70	'A' Group	42-8329	Oil tank front fixing bolt saddle washer	1
71	'A' Group	42-8331	Oil tank front fixing bolt spacing tube	1
72	'A' Group	42-8330	Oil tank front fixing bolt bracket cup	1
73	'A' Group	42-8341	Oil tank front fixing bolt mounting pad (rubber)	1
74	'A' Group	2-537	Oil tank front fixing bolt washer (plain)	1
75	'A' Group	2-49	Oil tank front fixing bolt nut	1
76	'A' Group	67-6851	Rear number plate rubber extrusion	1
76A	'A' Group	42-8351	Oil tank fixing bracket	1
77	'A' Group	67-6830	Rear number plate (1955) (with hole to suit screw on type reflector)	1
77	'A' Group	67-6885	Rear number plate (1956)	1
78	'A' Group	67-9067	Rear reflector (1955)	1
79	'A' Group	29-541	Rear number plate reflector washer (shakeproof) (1955)	1
80	'A' Group	67-9069	Reflector (1955)	1
81	'A' Group	67-6839	Rear mudguard tail lamp wiring grommet	1
82	'A' Group	28-2338	Rear mudguard stay bolt	2
83	'A' Group	2-923	Rear mudguard stay bolt washer (plain)	4
84	'A' Group	42-2774	Silencer complete (offside)	1
84	'A' Group	42-2775	Silencer complete (nearside)	1
85	'A' Group	2-449	Silencer bracket fixing bolt nut (when pillion footrests are not fitted	2

Plate 23—*continued* MUDGUARDS, OIL TANK AND REAR CHAINGUARD 'A' GROUP (SWINGING ARM)

Plate Ref. Number	Model	Part No.	Description	Number per set
86	'A' Group	2–522	Silencer bracket fixing bolt washer (spring) (when pillion footrests are not fitted)	2
87	'A' Group	2–803	Silencer bracket fixing bolt (when pillion footrests are not fitted)	2
88	'A' Group	2–220	Rear number plate fixing bolt	4
89	'A' Group	27–8560	Rear number plate fixing bolt washer (plain)	4
90	'A' Group	2–1462	Rear number plate fixing bolt washer (spring)	4
91	'A' Group	2–49	Rear mudguard stay bolt nut	4
92	'A' Group	24–8784	Rear mudguard stay bolt washer (spring)	4
93	'A' Group	42–6824	Rear mudguard stay complete (offside) (1955)	1
93	'A' Group	42–6822	Rear mudguard stay complete (nearside) (1955)	1
93	'A' Group	42–6858	Rear mudguard stay complete (nearside) (1956)	1
93	'A' Group	42–6860	Rear mudguard stay complete (offside) (1956)	1
94	'A' Group	2–49	Rear mudguard stay frame bracket bolt nut	4
95	'A' Group	24–8784	Rear mudguard stay frame bracket bolt washer (spring)	4
96	'A' Group	42–6761	Rear mudguard stay frame bracket (offside)	1
96	'A' Group	42–6762	Rear mudguard stay frame bracket (nearside)	1
97	'A' Group	67–8313	Rear mudguard stay frame bracket bolt	2
98	'A' Group	24–8784	Rear mudguard stay frame bracket bolt washer (spring)	2
99	'A' Group	2–923	Rear mudguard stay frame bracket bolt washer (plain)	4
100	'A' Group	28–2338	Rear mudguard stay frame bracket bolt	4
101	'A' Group	2–2395	Rear mudguard fixing clip bolt nut	4
102	'A' Group	2–1462	Rear mudguard fixing clip bolt nut washer (spring)	4
103	'A' Group	42–6782	Rear mudguard clip stiffening plate	2
104	'A' Group	24–7148	Rear mudguard bottom bracket fixing bolt (1955)	2
105	'A' Group	42–6783	Rear mudguard bottom bracket stiffening plate (1955)	1
106	'A' Group	42–6865	Lifting handle	1
107	'A' Group	2–2395	Silencer inlet tube clip bolt nut	2
108	'A' Group	29–541	Silencer inlet tube clip bolt washer (shakeproof)	2
109	'A' Group	24–7343	Silencer inlet tube clip bolt	2
110	'A' Group	27–6037	Mudguard stay and lifting handle bolt	2
111	'A' Group	33–4089	Rear chainguard fixing bolt (long) (1955)	1
112	'A' Group	2–923	Rear chainguard fixing bolt washer (plain) (1955)	1
113	'A' Group	42–7703	Rear chainguard fixing bolt distance tube (short) (1955)	1
114	'A' Group	42–6841	Rear mudguard with fixed fittings (1955)	1
114	'A' Group	42–6856	Rear mudguard with fixed fittings (1956)	1
115	'A' Group	42–6820	Rear mudguard bottom bracket (1955)	1
116	'A' Group	24–8784	Rear mudguard bottom bracket frame bolt washer (spring) (1955)	2
117	'A' Group	2–49	Rear mudguard bottom bracket frame bolt nut (1955)	2
118	A7 Shooting Star A10 Road Rocket	15–447	Front stand release bolt nut	1
119	A7 Shooting Star A10 Road Rocket	27–410	Front stand release bolt locknut	1
120	A7 Shooting Star A10 Road Rocket	2–6537	Front stand release bolt washer (thick)	1

Plate 24 PETROL TANK, HANDLEBAR, FRONT MUDGUARD, TOOL BOX AND REAR BRAKE CONTROL — 'A' GROUP (SWINGING ARM FRAME)

Plate Ref. Number	Model	Part No.	Description	Number per set
1	'A' Group	29–7368	Rear brake rod adjuster ferrule (up to 1955)	1
2	'A' Group	65–6274	Rear brake lever swivel pin (up to 1955)	1
3	'A' Group	15–1312	Rear brake rod spring (up to 1955)	1
4	'A' Group	2–2395	Rear brake rod spring nut (up to 1955)	1
5	'A' Group	42–7007	Rear brake rod complete (up to 1955)	1
6	'A' Group	42–9038	Toolbox complete with fixed fittings	1
7	'A' Group	29–4329	Toolbox top fixing bolt	1
8	'A' Group	24–8784	Toolbox top fixing bolt washer (spring)	1
9	'A' Group	65–5368	Toolbox fixing stud	2
10	'A' Group	2–49	Toolbox fixing stud nut	2
11	'A' Group	35–33	Toolbox fixing stud washer (spring)	2
12	'A' Group	42–8339	Toolbox top fixing bolt distance tube	1
13	'A' Group	2–49	Toolbox top fixing bolt nut	1
14	'A' Group	27–5676	Toolbox top fixing bolt washer (plain)	1
15	'A' Group	42–9061	Dual seat rear fixing bolt	2

Plate 24—*continued* PETROL TANK, HANDLEBAR, FRONT MUDGUARD, TOOL BOX AND REAR BRAKE CONTROL —'A' GROUP (SWINGING ARM)

Plate Ref. Number	Model	Part No.	Description	Number per set
16	'A' Group	2-923	Dual seat rear fixing bolt washer (plain)	2
17	'A' Group	35-33	Dual seat rear fixing bolt washer (spring)	2
18	'A' Group	42-6799	Dual seat rear support bridge	1
19	'A' Group	42-9072	Dual seat complete with brackets	1
—	'A' Group	42-9073	Dual seat loose fittings (sets)	1
20	'A' Group	2-49	Dual seat rear support bridge bolt nut	2
21	'A' Group	24-8784	Dual seat rear support bridge bolt washer (spring)	2
22	'A' Group	2-923	Dual seat rear support bridge bolt washer (plain)	2
23	'A' Group	28-2338	Dual seat rear support bridge bolt	2
24	'A' Group	65-8503	Twist grip rubber grip	1
25	'A' Group	65-8504	Twist grip rotor and rotor sleeve complete	1
26	'A' Group	24-9570	Twist grip friction spring screw	1
27	'A' Group	24-9571	Twist grip friction spring screw locknut	1
28	'A' Group	24-9569	Twist grip friction spring	1
29	'A' Group	24-9573	Twist grip body screw	2
30	'A' Group	65-8505	Twist grip body (top half)	1
31	'A' Group	65-8506	Twist grip body (bottom half)	1
32	'A' Group	24-9572	Twist grip cable stop	1
33	'A' Group	65-8501	Throttle twist grip complete (less cable and cover)	1
34	'A' Group	29-8810	Front brake control complete (less cable and cover) (up to 1955)	1
34	'A' Group	42-8655	Combined front brake and air control (1956)	1
35	'A' Group	42-8010	Petrol tank rubber grommet	1
36	'A' Group	42-8011	Petrol tank fixing bolt	1
37	'A' Group	2-1945	Petrol tank fixing bolt washer (plain)	1
38	'A' Group	42-8012	Petrol tank mounting rubber (top)	1
39	A7 Swinging Arm, A10 Road Rocket	42-8046	Petrol tank (4 gallon)	1
39	A7 Shooting Star	42-8047	Petrol tank (4 gallon)	1
39	A10 Swinging Arm	42-8048	Petrol tank (4 gallon)	1
39	A7 Swinging Arm, A10 Road Rocket	42-8043	Petrol tank (2 gallon)	1
39	A7 Shooting Star	42-8044	Petrol tank (2 gallon)	1
39	A10 Swinging Arm	42-8045	Petrol tank (2 gallon)	1
40	'A' Group	29-7898	Petrol tank filler cap	1
41	'A' Group	67-8610	Front brake cable and cover complete (up to 1955)	1
41	'A' Group	42-8670	Front brake cable and cover complete (1956)	1
42	'A' Group	65-4960	Handlebar (less controls)	1
43	A7 Swinging Arm, A10 Road Rocket	42-8700	Air control cable and cover complete	1
43	A7 Shooting Star	67-8555	Air control cable and cover complete	1
43	A10 Swinging Arm	67-8592	Air control cable and cover complete (up to 1955)	1
43	A10 Swinging Arm	42-8689	Air control cable and cover complete (1956)	1
44	A7 Shooting Star	67-8521	Throttle control cable and cover complete	1
44	A10 Swinging Arm	67-8595	Throttle control cable and cover complete	1
44	A10 Road Rocket	42-8703	Throttle control cable and cover complete	1
45	'A' Group	66-8896	Air control complete (less cable and cover) (up to 1955)	1
46	A7 Shooting Star, A10 Road Rocket	65-8714	Ignition control cable and cover complete	1
47	A7 Shooting Star, A10 Road Rocket	66-8810	Ignition control complete (less cable and cover)	1
48	'A' Group	65-8502	Dummy grip (left-hand bar)	1
49	'A' Group	29-8820	Clutch control complete (less cable and cover)	1
50	A7 Shooting Star	67-8116	Petrol tank badge	2
51	'A' Group	67-8681	Clutch control cable and cover complete	1
52	A10 Swinging Arm	67-8071	Petrol tank badge (nearside)	1
52	A10 Swinging Arm	67-8070	Petrol tank badge (offside)	1
53	A7 Swinging Arm	42-8034	Petrol tank badge clip screw nut	4
54	'A' Group	42-8020	Petrol tank badge clip	2
55	'A' Group	2-79	Knee grip fixing screw	4
56	A7 Swinging Arm, A10 Road Rocket	65-8220	Petrol tank badge	2
57	'A' Group	65-8317	Petrol tank badge clip screw	4
58	A7, A10 Swinging Arm	67-6547	Front mudguard stay insulator	2
59	A7, A10 Swinging Arm	67-6544	Front mudguard stay	1
—	A7, A10 Swinging Arm	2-923	Front Mudguard stay spacing washer (O/S)	1
60	A7, A10 Swinging Arm	67-6548	Front mudguard bridge stay insulator	2
61	A7, A10 Swinging Arm	65-6623	Front mudguard support bridge	1
62	A7, A10 Swinging Arm	2-1354	Front stand mudguard fixing bolt	2
63	A7, A10 Swinging Arm	67-6530	Front stand complete	1
64	A7, A10 Swinging Arm	15-447	Front stand mudguard fixing bolt nut	2
65	A7, A10 Swinging Arm	67-6543	Front mudguard complete with fixed fittings	1

Plate 24 PETROL TANK, HANDLEBAR, FRONT MUDGUARD, TOOLBOX AND REAR BRAKE CONTROL—'A' GROUP (SWINGING ARM)

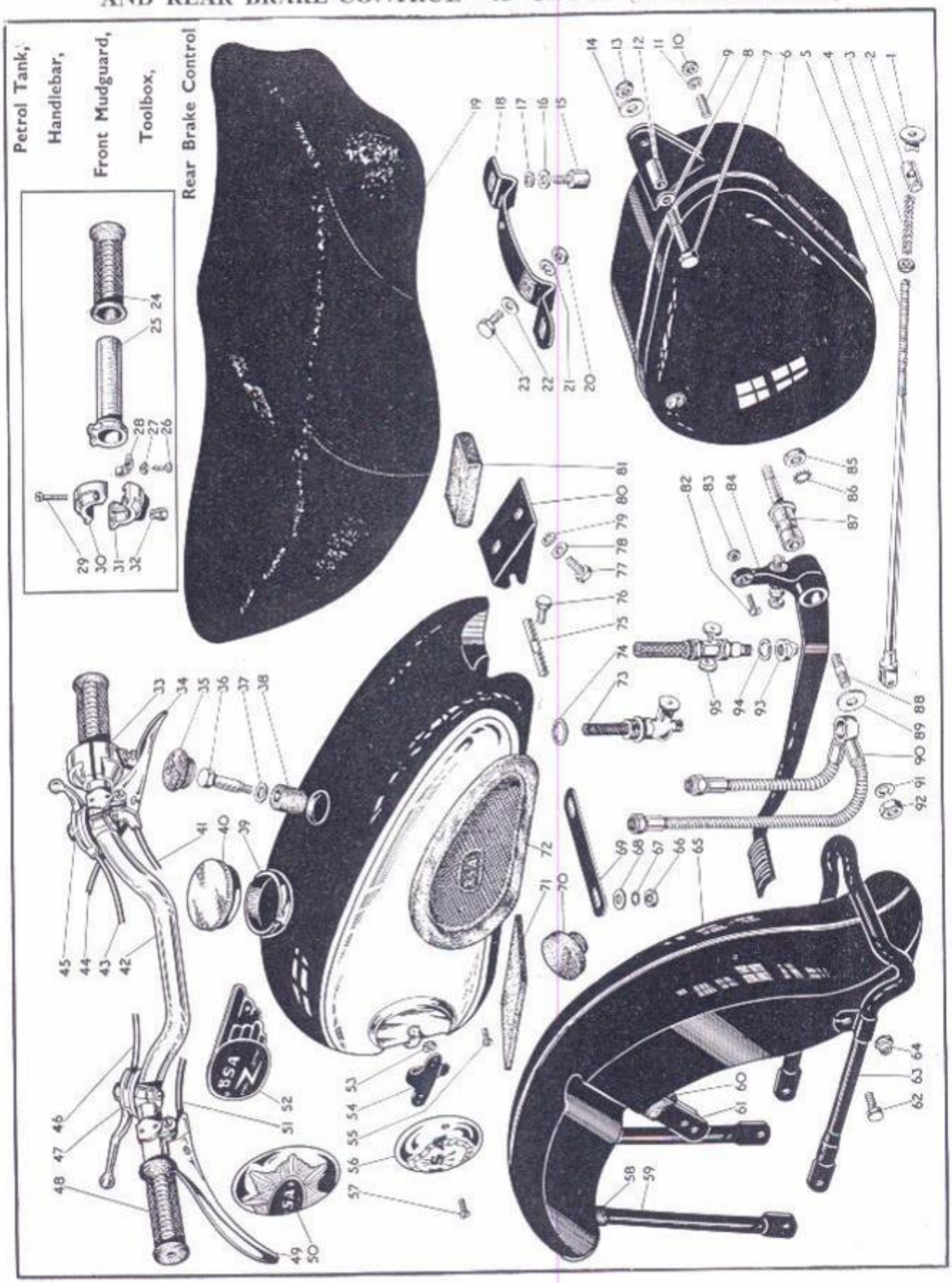

Plate 24—*continued* PETROL TANK, HANDLEBAR, FRONT MUDGUARD, TOOL BOX AND REAR BRAKE CONTROL—'A' GROUP (SWINGING ARM)

Plate Ref. Number	Model	Part No.	Description	Number per set
66	'A' Group	2-49	Petrol tank stiffening plate stud nut	2
67	'A' Group	36-382	Petrol tank stiffening plate stud washer (shakeproof)	2
68	'A' Group	2-923	Petrol tank stiffening plate stud washer (plain)	2
69	'A' Group	42-8058	Petrol tank stiffening plate	1
70	'A' Group	42-8052	Petrol tank anti-roll rubber	2
71	'A' Group	42-8051	Petrol tank mounting rubber (top tube)	2
72	'A' Group	65-8206	Knee grip (nearside)	1
72	'A' Group	65-8205	Knee grip (offside)	1
73	'A' Group	67-8092	Petrol tap (up to 1955)	2
74	'A' Group	24-8504	Petrol tap washer (fibre)	2
75	'A' Group	42-9060	Dual seat front support pin	1
76	'A' Group	15-645	Dual seat front support pin securing bolt	1
77	'A' Group	28-2338	Dual seat front fixing bolt	2
78	'A' Group	2-923	Dual seat front fixing bolt washer (plain)	2
79	'A' Group	35-33	Dual seat front fixing bolt washer (spring)	2
80	'A' Group	42-9058	Dual seat front support bracket	1
81	'A' Group	42-9057	Dual seat support rubber (1955/6)	2
82	'A' Group	2-510	Rear brake rod toggle end screw (up to 1955)	1
83	'A' Group	2-443	Rear brake rod toggle end screw nut (up to 1955)	1
84	'A' Group	42-7003	Rear brake pedal complete (up to 1955)	1
85	'A' Group	2-46	Rear brake pedal fulcrum pin nut (up to 1955)	1
86	'A' Group	66-4707	Rear brake pedal fulcrum pin washer (shakeproof) (up to 1955)	1
87	'A' Group	42-7012	Rear brake pedal fulcrum pin (up to 1955)	1
88	'A' Group	67-4032	Rear brake pedal fulcrum stud (up to 1955)	1
89	'A' Group	30-196	Rear brake pedal fulcrum stud washer (plain) (up to 1955)	1
90	'A' Group	67-8087	Flexible petrol pipe complete (armoured) (up to 1955)	1
90	A7, A10 Swinging Arm	42-8070	Flexible petrol pipe complete (plastic) (1955/6)	1
91	'A' Group	2-525	Rear brake pedal fulcrum stud washer (spring) (up to 1955)	1
92	'A' Group	2-46	Rear brake pedal fulcrum stud nut (up to 1955)	2
93	A7, A10, Swinging Arm	67-8060	Petrol tap domed nut	2
94	A7, A10, Swinging Arm	67-8059	Petrol tap washer (plain)	2
94	A10 Road Rocket	2-930	Petrol tap washer (fibre)	2
95	A10 Road Rocket	65-8171	Petrol tap	2
95	A7, A10, Swinging Arm	42-8075	Petol tap (1955/6)	2
—	A10 Road Rocket	27-8443	Petrol tank filter complete	2
—	A10 Road Rocket	24-8504	Petrol tank filter washer (fibre)	1
—	A10 Road Rocket	65-8173	Petrol pipe (flexible) (short)	1
—	A10 Road Rocket	42-8022	Petrol pipe (flexible) (long)	1

Plate 25 CHAINGUARD, CHAINCASE AND REAR BRAKE CONTROL 'A' GROUP (SWINGING ARM)

Plate Ref. Number	Model	Part No.	Description	Number per set
1	'A' Group	24-7343	Rear brake pedal bolt	1
2	'A' Group	24-978	Rear brake pedal bolt washer (spring)	1
3	'A' Group	42-4347	Rear brake pedal	1
4	'A' Group	42-4355	Rear brake pedal return spring	1
5	'A' Group	42-4349	Rear brake cross shaft	1
6	'A' Group	42-7030	Rear brake cable complete	1
7	'A' Group	42-7031	Rear brake cross shaft lever bolt	1
8	'A' Group	24-978	Rear brake cross shaft lever washer (spring)	1
9	'A' Group	42-4350	Rear brake cross shaft lever	2
10	'A' Group	42-8010	Chaincase rubber grommet	6
11	'A' group	29-541	Chaincase securing bolt washer (S/Proof.)	4
12	'A' Group	24-7343	Chaincase securing bolt (top and bottom)	1
13	'A' Group	42-7715	Rear chaincase top section	2
14	'A' Group	2-525	Chaincase securing bolt washer	2
15	'A' group	2-204	Chaincase securing bolt (rear)	2
16	'A' Group	29-541	Chaincase securing bolt washer (S/Proof.)	1
17	'A' Group	42-7730	Chainguard	1
18	'A' Group	42-7722	Rear chaincase rear section	1
19	'A' Group	42-7719	Rear chaincase bottom section	1
20	'A' Group	42-7727	Rear chaincase and footrest rubber sleeve	1
21	'A' Group	42-7710	Rear chaincase front section	1
22	'A' Group	29-541	Chaincase fixing bolt washer (S/Proof.)	1
23	'A' Group	2-1354	Chaincase fixing bolt	1

Plate 25 CHAINGUARD, CHAINCASE AND REAR BRAKE CONTROL
'A' GROUP (SWINGING ARM)

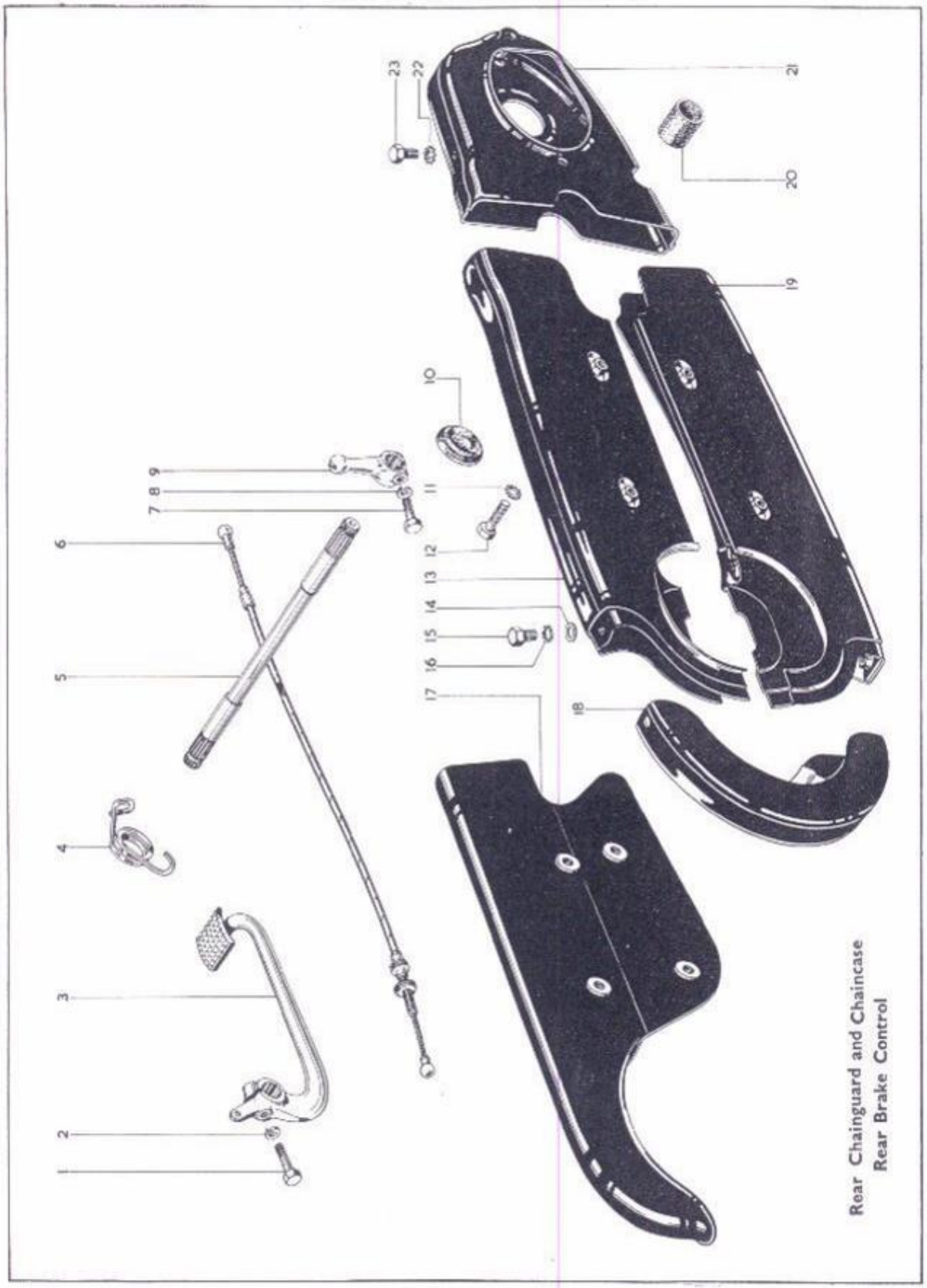

Plate 26

LEGSHIELDS

'A' GROUP (PLUNGER FRAME)

Plate Ref. Number	Model	Part No.	Description	Number per set
	'A' Group	67-7201	Legshields assembled complete	1
1	'A' Group	66-7353	Legshield support tube clip	8
2	'A' Group	27-8560	Legshield support tube clip washer	8
3	'A' Group	67-7205	Legshield top cross tube adaptor	1
4	'A' Group	67-7204	Legshield top cross tube spacing sleeve	1
5	'A' Group	67-7205	Legshield top cross tube adaptor	1
6	'A' Group	2-46	Cross tube adaptor stud nut	2
7	'A' Group	2-522	Cross tube adaptor stud washer	2
8	'A' Group	67-7203	Legshield top cross tube clamp	1
9	'A' Group	27-5683	Legshield top cross tube adaptor stud	2
10	'A' Group	67-7202	Legshield only	2
11	'A' Group	15-7161	Legshield support tube clip screw	8
12	'A' Group	2-2395	Legshield support tube clip nut	8
13	'A' Group	29-7670	Crankcase and legshield bottom fixing plate stud	2
14	'A' Group	36-382	Crankcase and legshield bottom fixing plate stud washer	4
15	'A' Group	2-49	Crankcase and legshield bottom fixing plate stud nut	4
16	'A' Group	66-7351	Legshield support tube complete	4
17	'A' Group	67-7208	Bottom cross tube fixing complete	2

Plate 27

FRONT AND REAR SAFETY BARS

'A' GROUP (PLUNGER FRAME)

Plate Ref. Number	Model	Part No.	Description	Number per set
—	'A' Group	67-4919	Front safety bar assembly complete with fittings	1
1	'A' Group	3-110	Front safety bar bolt washer (spring)	1
2	'A' Group	2-1925	Front safety bar bolt nut	1
3	'A' Group	24-5658	Front safety bar bolt	1
4	'A' Group	67-4925	Front safety bar bush	1
5	'A' Group	67-4920	Front safety bar assembly	1
6	'A' Group	27-6275	Frame, crankcase and exhaust pipe lug stud	1
7	'A' Group	67-4932	Rear safety bar complete (nearside) (when pillion footrests are fitted)	1
7	'A' Group	67-4926	Rear safety bar complete (offside) (when pillion footrests are fitted)	1
8	'A' Group	67-4928	Rear safety bar adaptor (top)	2
9	'A' Group	29-6110	Rear safety bar and pillion footrest bolt (when pillion footrests are fitted)	2
10	'A' Group	2-2138	Rear safety bar and pillion footrests bolt washer (when pillion footrests are fitted)	2
11	'A' Group	66-7363	Pillion footrest rubber	2
12	'A' Group	29-905	Rear safety bar adaptor nut (when pillion footrests are fitted)	2
13	'A' Group	24-5914	Rear safety bar adaptor washer (when pillion footrests are fitted)	2
14	'A' Group	67-4873	Pillion footrest	2
15	'A' Group	67-4875	Pillion footrest adaptor (bottom)	2
16	'A' Group	30-659	Rear safety bar and pillion footrest washer (large) (when pillion footrests are fitted)	2
17	'A' Group	66-4708	Rear safety bar and pillion footrest washer (shakeproof) (when pillion footrests are fitted)	2
18	'A' Group	31-7275	Rear safety bar and pillion footrest bolt (when pillion footrests are fitted)	2
19	'A' Group	3-1271	Rear safety bar bolt (when pillion footrests not fitted)	2
20	'A' Group	66-4708	Rear safety bar bolt washer (shakeproof) (when pillion footrests not fitted)	2
21	'A' Group	30-659	Rear safety bar bolt washer (large) (when pillion footrests not fitted)	2
22	'A' Group	66-4822	Rear safety bar (offside) (when pillion footrests not fitted)	1
22	'A' Group	66-4823	Rear safety bar (nearside) (when pillion footrests not fitted)	1

Plate 26

LEGSHIELDS
'A' GROUP (PLUNGER FRAME)

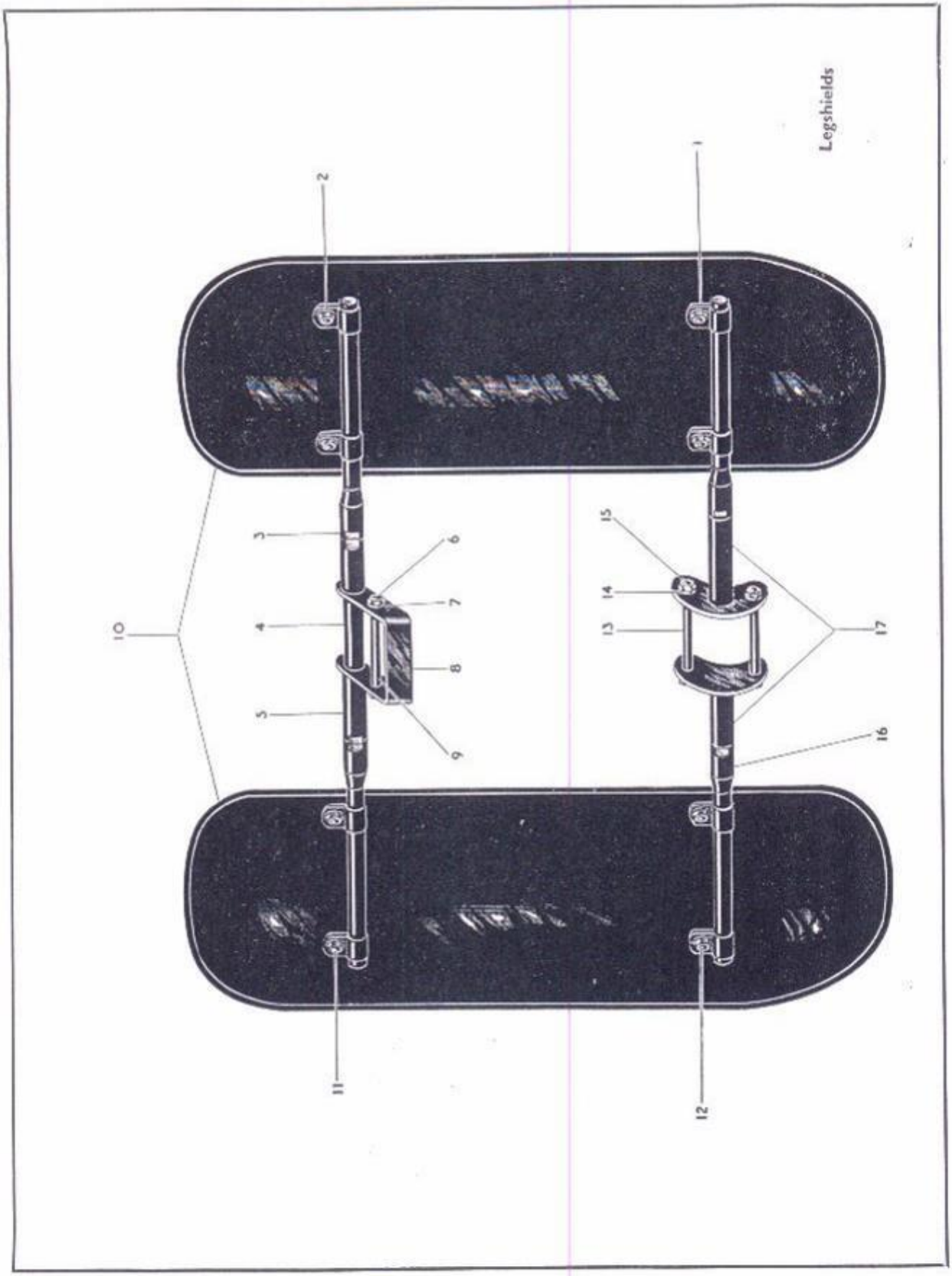

Plate 27

FRONT AND REAR SAFETY BARS
'A' GROUP (PLUNGER FRAME)

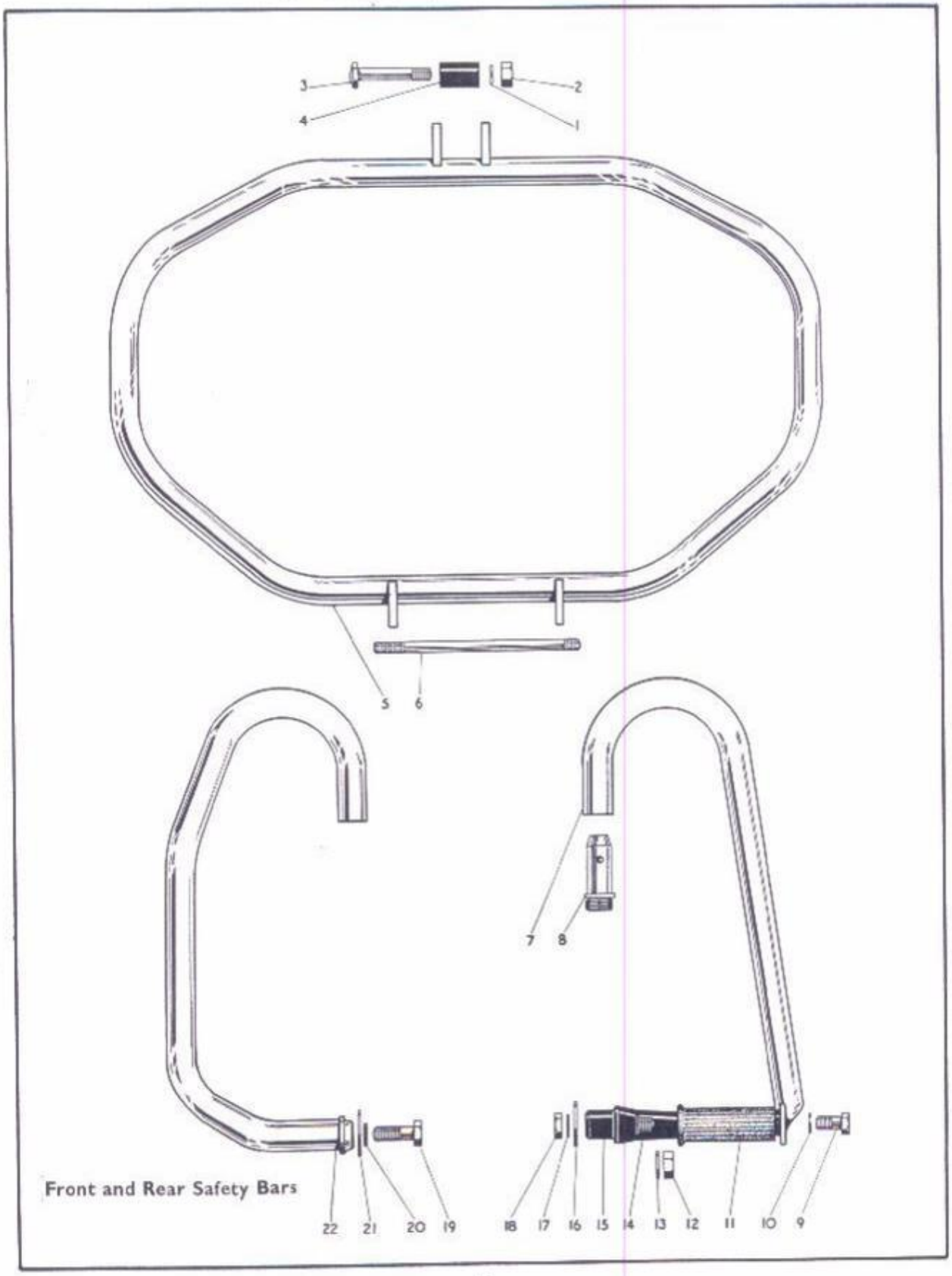

Carrier
Pannic
Bags
Tools
Sundr
Sidec
Chass
ectrica
uipme

Plate 28

LEGSHIELDS AND FRONT SAFETY BARS
A10 PLUNGER FRAME

Plate Ref. Number	Model	Part No.	Description	Number per set
—	A10 Plunger	67-4941	Legshield and front bumper bar assembly	1
1	A10 Plunger	67-7216	Legshield (offside)	1
2	A10 Plunger	2-204	Legshield fixing bolt	6
3	A10 Plunger	2-2899	Legshield fixing bolt washer (plain)	6
4	A10 Plunger	67-4940	Front bumper bar	1
5	A10 Plunger	67-7215	Legshield (nearside)	1

TO MAINTAIN THE ORIGINAL RELIABILITY AND PERFORMANCE OF YOUR B.S.A. MOTOR CYCLE FIT ONLY SPARES MADE BY B.S.A.

ALWAYS USE

GENUINE BSA SPARES

Plate 28

LEGSHIELDS AND FRONT SAFETY BARS
'A' 10 (PLUNGER FRAME)

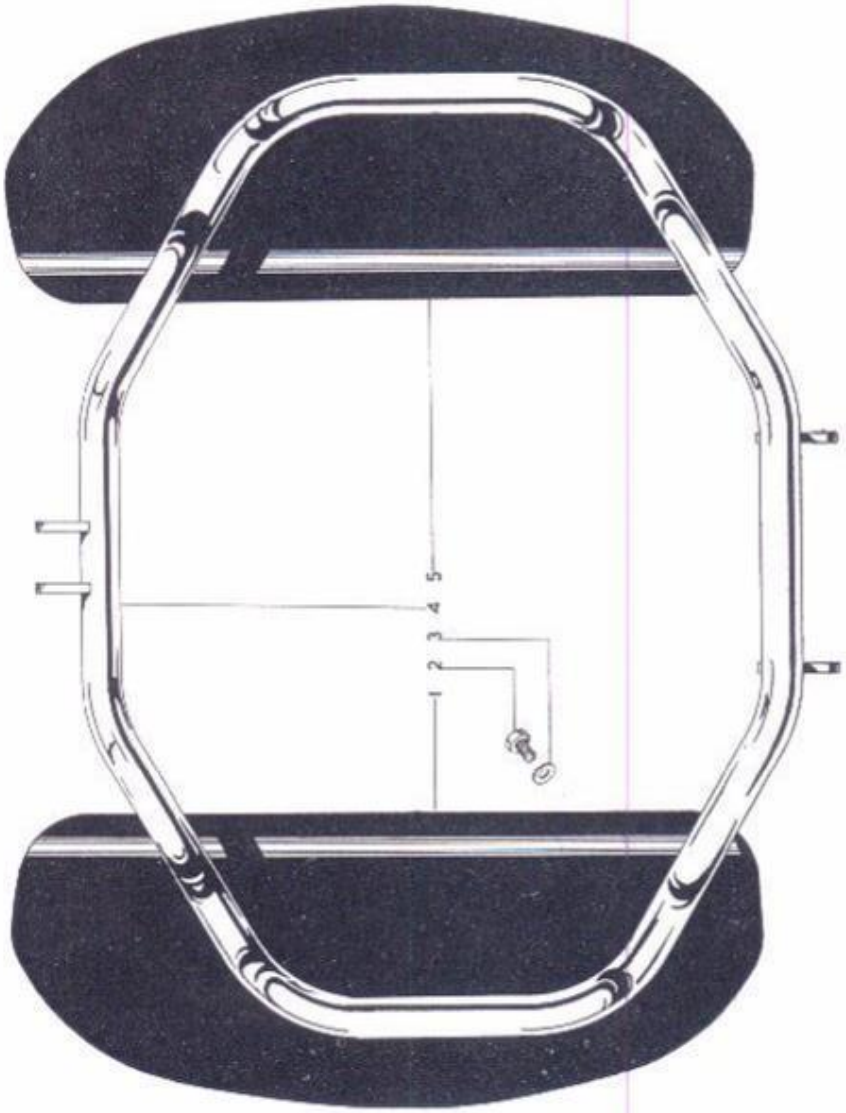

Legshields and Safety Bars

Carrier
Panni
Bags

Tools
Sund

Sidec
Chas

ectric
uiome

Plate 30

FRONT AND REAR SAFETY BARS, CARRIER AND HANDRAIL 'A' GROUP (SWINGING ARM)

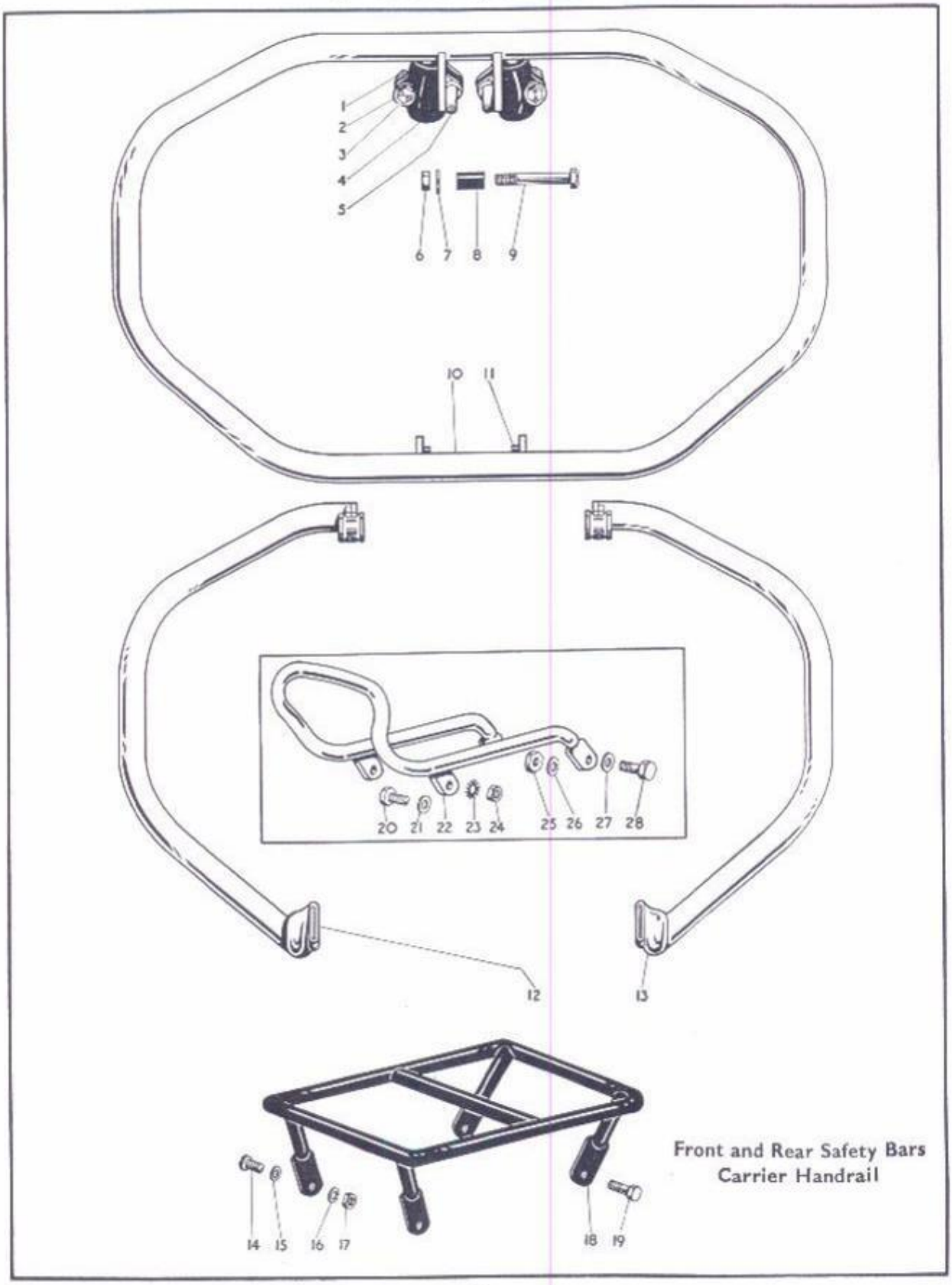

Plate 31

LEGSHIELDS AND FRONT SAFETY BARS
'A' GROUP (SWINGING ARM)

Plate Ref. Number	Model	Part No.	Description	Number per set
—	'A' Group Swinging Arm	42-7214	Legshield and front safety bar assembly	1
1	'A' Group Swinging Arm	42-7211	Legshield top cross tube adaptor stud	1
2	'A' Group Swinging Arm	42-7210	Legshield top spacing sleeve	1
3	'A' Group Swinging Arm	67-7205	Legshield top cross tube adaptor	2
4	'A' Group Swinging Arm	66-7351	Legshield support tube (top) complete	2
5	'A' Group Swinging Arm	2-2395	Legshield support tube clip nut	8
6	'A' Group Swinging Arm	27-8560	Legshield support tube clip washer (plain)	8
7	'A' Group Swinging Arm	2-522	Legshield front down tube split clamp eye bolt washer (spring)	2
8	'A' Group Swinging Arm	2-522	Front safety bar eye bolt washer (spring)	2
9	'A' Group Swinging Arm	2-46	Front safety bar eye bolt nut	2
10	'A' Group Swinging Arm	42-7212	Legshield front down tube clip clamp eye bolt	2
11	'A' Group Swinging Arm	2-46	Front safety bar top fixing bolt nut	2
12	'A' Group Swinging Arm	2-46	Front safety bar top fixing bolt nut	1
13	'A' Group Swinging Arm	2-522	Front safety bar top fixing bolt washer (spring)	1
14	'A' Group Swinging Arm	42-4905	Front safety bar eye bolt spacing tube	1
15	'A' Group Swinging Arm	42-4904	Front safety bar eye bolt	2
16	'A' Group Swinging Arm	65-4185	Front safety bar top fixing bolt	1
17	'A' Group Swinging Arm	66-7353	Legshield support tube clip	8
18	'A' Group Swinging Arm	42-4906	Legshield front support tube split clamp	2
19	'A' Group Swinging Arm	66-7351	Legshield support tube complete (top)	2
20	'A' Group Swinging Arm	67-7208	Legshield support tube complete (bottom)	2
21	'A' Group Swinging Arm	15-7161	Legshield support tube clip screw	8
22	'A' Group Swinging Arm	42-7206	Legshield (offside)	1
23	'A' Group Swinging Arm	42-4900	Front safety bar assembly	1
24	'A' Group Swinging Arm	42-4907	Front safety bar engine plate distance collar	2
25	'A' Group Swinging Arm	42-7207	Legshield (nearside)	1
—	'A' Group Swinging Arm	29-7670	Crankcase and legshield bottom fixing plate stud	2

Plate 32

CARRIER AND PANNIER BAGS
'A' GROUP (SWINGING ARM)

Plate Ref. Number	Model	Part No.	Description	Number per set
1	'A' Group Swinging Arm	66-6919	Pannier strap (short) with buckle	1
2	'A' Group Swinging Arm	66-6916	Pannier bag with buckle	1
3	'A' Group Swinging Arm	1-5069	Carrier fixing bolt	2
4	A' Group Swinging Arm	24-8784	Carrier fixing bolt washer (spring)	2
5	'A' Group Swinging Arm	2-923	Carrier fixing bolt washer (plain)	2
6	'A' Group Swinging Arm	65-6794	Carrier and mudguard support stud	2
7	'A' Group Swinging Arm	2-923	Carrier and mudguard stud washer (plain)	2
8	'A' Group Swinging Arm	24-8784	Carrier and mudguard stud washer (spring)	2
9	'A' Group Swinging Arm	2-49	Carrier and mudguard stud nut	2
10	'A' Group Swinging Arm	42-6925	Carrier complete	1
11	'A' Group Swinging Arm	66-6918	Pannier bag strap (long) less buckle	1
12	'A' Group Swinging Arm	66-6917	Pannier bag less buckle	1
13	'A' Group Swinging Arm	24-225	Carrier and clip fixing bolt	4
14	'A' Group Swinging Arm	2-525	Carrier and clip fixing bolt washer (plain)	4
15	'A' Group Swinging Arm	66-6763	Carrier clip	2
16	'A' Group Swinging Arm	42-6929	Carrier clip plate	2
17	'A' Group Swinging Arm	42-6928	Pannier support bracket	2
18	'A' Group Swinging Arm	2-1462	Carrier and clip fixing bolt washer (spring)	4
19	'A' Group Swinging Arm	2-2395	Carrier and clip fixing bolt nut	4
20	'A' Group Swinging Arm	66-6938	Pannier carrier steady stay locking screw wing nut	4
21	'A' Group Swinging Arm	2-2395	Pannier fixing bolt nut	6
22	A' Group Swinging Arm	29-541	Pannier fixing bolt washer (shakeproof)	6
23	'A' Group Swinging Arm	66-6915	Pannier carrier	2
24	'A' Group Swinging Arm	2-204	Pannier fixing bolt	6
—	'A' Group Swinging Arm	1-5069	Carrier fixing bolt (front) (required when dual seat is fitted)	2
—	'A' Group Swinging Arm	2-923	Carrier fixing bolt washer (front) (required when dual seat is fitted)	2
—	'A' Group Swinging Arm	24-8784	Carrier fixing bolt washer (front) (spring) (required when dual seat is fitted)	2

Plate 31

LEGSHIELDS AND FRONT SAFETY BARS
'A' GROUP (SWINGING ARM)

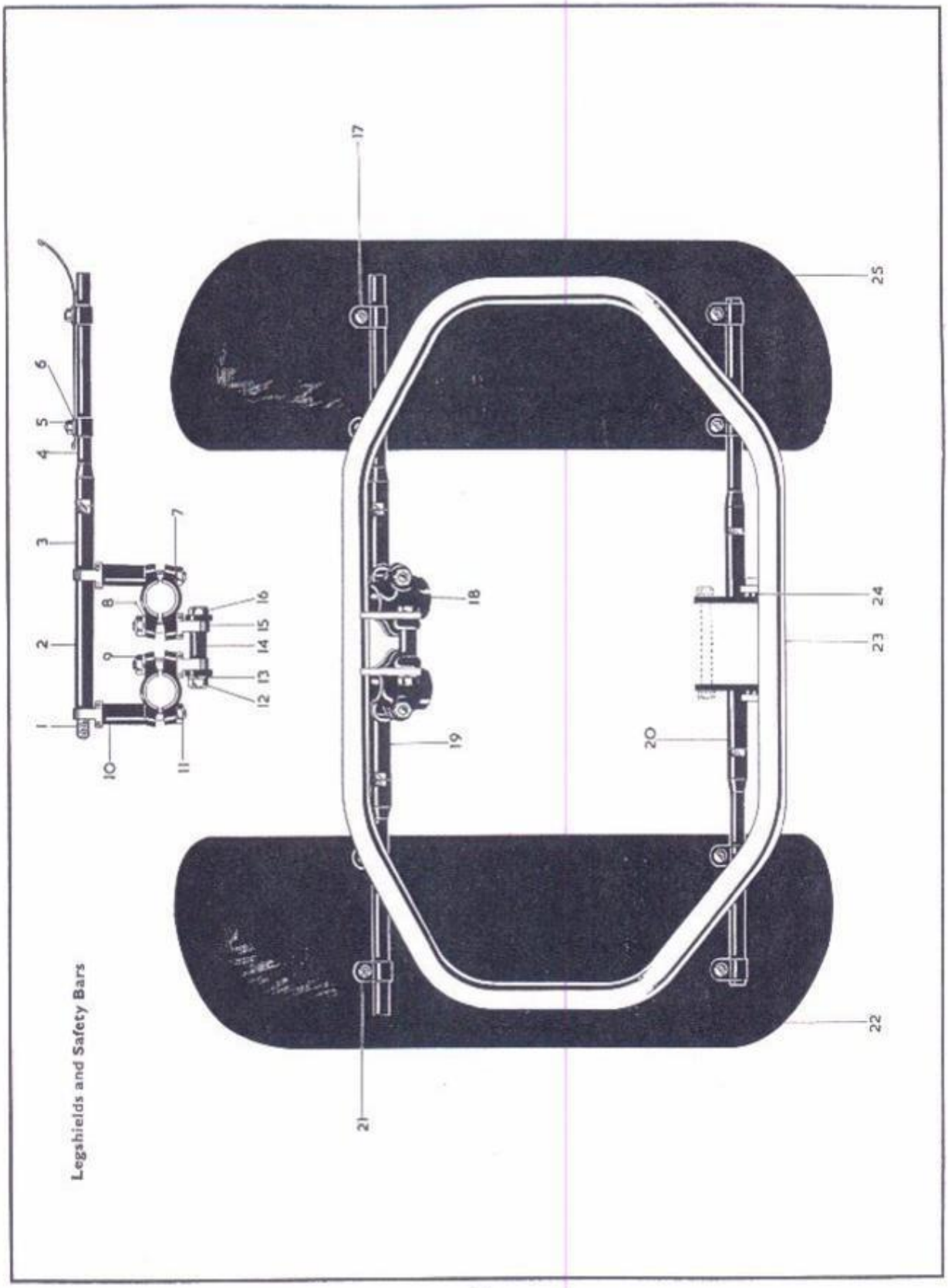

Plate 32

CARRIER AND PANNIER BAGS
'A' GROUP (SWINGING ARM)

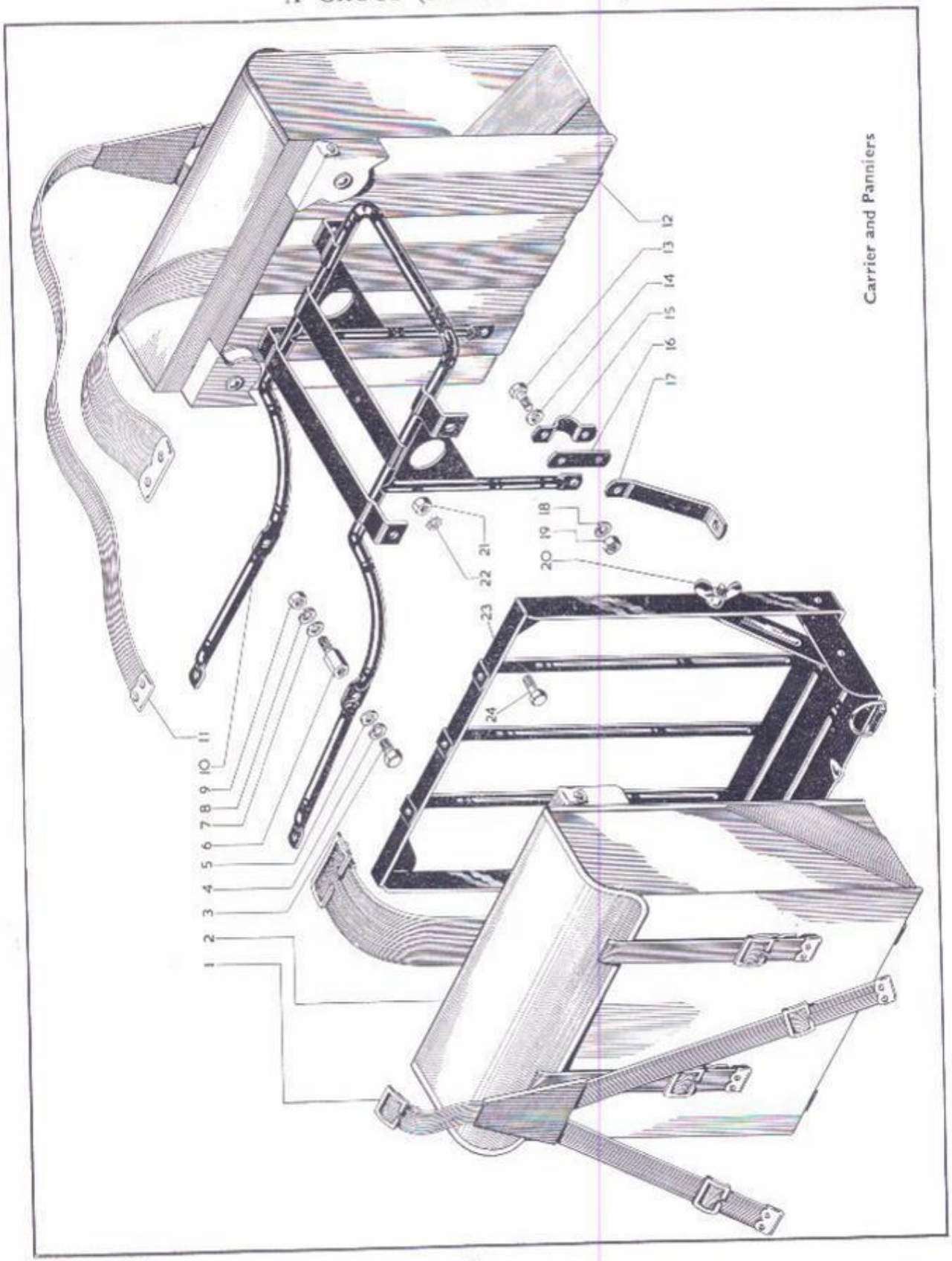

Plate 33

TOOLS AND SUNDRIES

'A' GROUP (PLUNGER AND SWINGING ARM FRAME)

Part Ref. Number	Model	Part No.	Description	Number per set
—	'A' Group Swinging Arm	42-9107	Toolbag complete with tools	1
—	'A' Group Plunger	67-9022	Toolbag complete with tools	1
1	'A' Group Swinging Arm	65-9266	Rear spindle nut spanner	1
1	'A' Group Swinging Arm	42-9118	Front wheel box spanner	1
2	'A' Group Plunger	29-9257	Box Spanner	1
3	'A' Group	67-9122	Magdyno Spanner	1
4	'A' Group	29-9253	Tommy Bar	1
5	'A' Group	67-9114	Push rod assembly tool	1
6	'A' Group Swinging Arm	65-9205	Toolbag only	1
6	'A' Group Plunger	65-9282	Toolbag only	1
7	'A' Group	42-9026	Inflator	1
8	'A' Group Plunger	65-9245	Box Spanner	1
9	'A' Group	65-9246	Combined Spanner	1
10	'A' Group Swinging Arm	42-9080	Damper unit adjusting spanner	1
11	'A' Group	67-9026	Box spanner	1
12	'A' Group	65-9243	Combined spanner	1
13	'A' Group	29-9252	Tyre lever	1
14	'A' Group Swinging Arm	42-9031	Petrol tank fixing bolt spanner	1
15	'A' Group	65-9125	Feeler gauge (.010')	1
15	'A' Group	67-9047	Feeler gauge (.015')	1
16	'A' Group	24-8957	Tommy Bar	1
17	'A' Group	67-9023	Box Spanner	1
18	'A' Group	67-9028	Double ended spanner	1
19	'A' Group	67-9121	Sparking plug spanner	1
20	'A' Group Swinging Arm	15-832	Box Spanner	1

THERE'S OVER 90 YEARS' REPUTATION FOR QUALITY BEHIND THE B.S.A. TRADE MARKS, WHICH ARE YOUR SAFEGUARD

Plate 33

TOOLS AND SUNDRIES
'A' GROUP (PLUNGER AND SWINGING ARM FRAME)

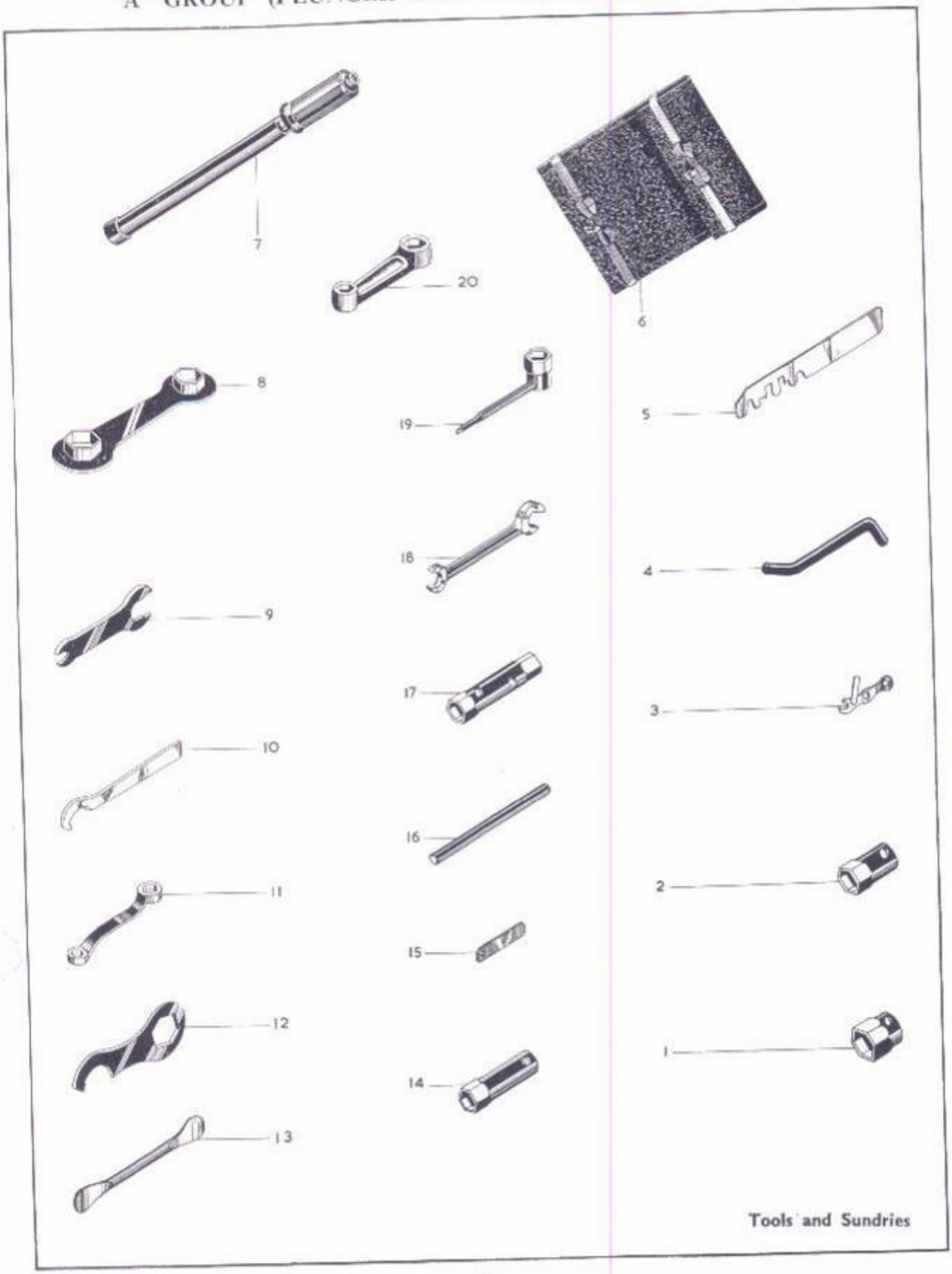

SIDECAR CHASSIS

No. 22 and No. 23

Plate Ref. Number	Model	Part No.	Description	Number per set
1	22 and 23	2-47	Reflector fixing screw nut	1
2	22 and 23	29-3319	Reflector fixing screw washer (shakeproof)	1
3	22 and 23	2-1096	Reflector fixing screw washer (plain)	1
4	22 and 23	1-4606	Reflector fixing screw	1
5	22 and 23	66-6825	Reflector	1
6	22 and 23	3-1826	Sidecar lamp rubber mounting	1
7	22 and 23	19-1117	Sidecar lamp (red to rear, clear to front)	1
8	22 and 23	2-2395	Reflector mounting bracket nut (not required for 'A' Group)	2
9	22 and 23	2-1462	Reflector mounting bracket washer (spring) (not required for 'A' group)	0
10	22 and 23	27-8560	Reflector mounting bracket washer (plain) (not required for 'A' group)	2
11	22 and 23	15-7161	Reflector mounting bracket screw (not required for 'A' group)	2
12	22 and 23	3-1820	Reflector mounting bracket (not required for 'A' group)	1
13	22 and 23	3-1828	Mudguard	1
14	22 and 23	1-5945	Mudguard upright rear and front stay screw	6
15	22 and 23	27-8560	Mudguard upright rear and front stay washer (plain)	6
16	22 and 23	2-1462	Mudguard upright rear and front stay washer (spring)	6
17	22 and 23	2-2395	Mudguard upright rear and front stay nut	6
18	22 and 23	2-2899	Mudguard upright stay bolt washer (plain)	2
19	22 and 23	3-101	Mudguard stay fixing packing washer (plain)	2
20	22 and 23	28-2388	Mudguard rear stay bolt	2
21	22 and 23	24-8784	Mudguard upright stay bolt washer (spring)	2
22	22 and 23	2-49	Mudguard upright stay bolt nut	2
23	22 and 23	3-1731	Mudguard stays complete	1
24	22 and 23	3-1795	Mudguard support and spindle nut	1
25	22 and 23	24-4237	Mudguard support and spindle nut washer	1
26	22 and 23	3-1816	Wheel spindle securing nut	1
27	22 and 23	27-8039	Hub spindle bracket washer (plain)	1
28	22 and 23	3-1702	Hub spindle	1
29	22 and 23	3-1241	Hub spindle cone (fixed)	1
30	22 and 23	3-34	Hub spindle cone (adjusting)	1
31	22 and 23	35-705	Hub spindle cone castle nut split pin	1
32	22 and 23	3-103	Hub spindle cone washer (plain)	1
33	22 and 23	3-62	Hub spindle cone castle nut	1
34	22 and 23	3-1685	Hub shell cap	1
35	22 and 23	1-4675	Hub ball bearings (for hub cup small)	14
36	22 and 23	3-37	Hub cup (small)	1
37	22 and 23	3-9077	Hub shell complete with cups	1
38	22 and 23	3-36	Hub cup (large)	1
39	22 and 23	1-4675	Hub ball bearings (for hub cup large)	17
40	22 and 23	28-2080	Hub shell grease nipple	1
41	22 and 23	3-1509	Rear bearer bar castle nut	2
42	22 and 23	35-708	Rear bearer bar castle nut split pin	2
43	22	2-46	Rear bearer bar connecting bolt nut (for use with No. 48 commercial box body)	2
44	22	3-111	Rear bearer bar connecting bolt washer (spring)	2
45	22	3-1712	Rear bearer bar connecting bolt (for use with No. 48 commercial box body)	2
46	22	65-4185	Rear bearer bar connecting bolt (No. 47 & 51 commercial box body, not used with metal floor)	2
46	22	67-4030	Rear bearer bar connecting bolt (replaces 66-4185 on No. 51 & 54 bodies with metal floor)	2
47	22 and 23	3-1703	Rear bearer bar	1
48	22 and 23	28-2080	Rear spring shackle grease nipple (bottom)	2
49	22 and 23	3-1704	Rear spring shackle complete with bush	2

SIDECAR CHASSIS

No. 22 and No. 23

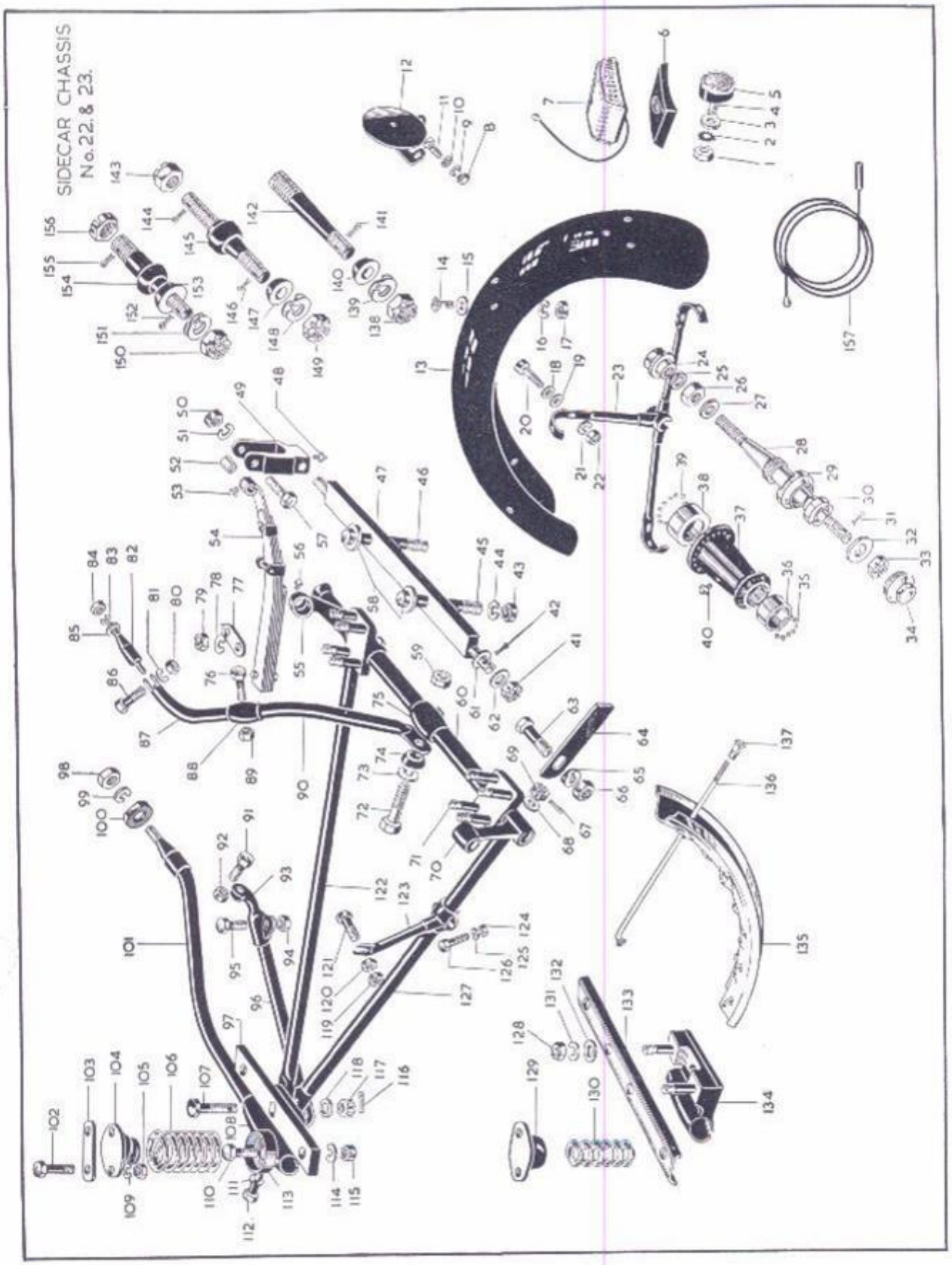

SIDECAR CHASSIS

No. 22 and No. 23

Plate Ref. Number	Model	Part No.	Description	Number per set
50	22 and 23	15-5753	Rear spring shackle bolt nut	2
51	22 and 23	3-107	Rear spring shackle bolt washer (spring)	2
52	22 and 23	3-1706	Rear spring shackle bush	2
53	22 and 23	28-2080	Rear spring shackle grease nipple	1
54	22 and 23	3-1746	Rear spring complete with bush	2
55	22 and 23	3-1700	Main rear connection	1
56	22 and 23	28-2080	Main rear connection grease nipple	1
57	22 and 23	3-1383	Rear spring shackle bolt	2
58	22 and 23	30-650	Rear bearer bar connecting bolt clamp washer (plain)	2
59	22 and 23	2-1925	Saddle pillar telescopic lug bolt nut	1
60	22 and 23	3-1709	Axle tube complete	1
61	22 and 23	24-875	Rear bearer bar thrust washer	2
62	22 and 23	2-1945	Rear bearer bar washer (plain)	2
63	22 and 23	2-803	Sidecar stand bolt	1
64	22 and 23	3-1379	Sidecar stand	1
65	22 and 23	2-995	Sidecar stand bolt washer (double spring)	1
66	22 and 23	2-1813	Sidecar stand bolt nut	1
67	22 and 23	35-713	Tube end spindle castle nut split pin	2
68	22 and 23	24-5914	Tube end spindle washer (plain)	2
69	22 and 23	3-953	Tube end spindle castle nut	2
70	22 and 23	3-1701	Wheel bracket	1
71	22 and 23	3-1715	Rear spring plate clamp stud	8
72	22 and 23	3-1289	Saddle pillar telescopic tube lug bolt	1
73	22 and 23	15-716	Saddle pillar telescopic tube bottom lug bolt washer (spring)	1
74	22 and 23	3-1290	Saddle pillar telescopic bottom washer (spherical)	1
75	22 and 23	3-1252	Saddle pillar telescopic tube bottom lug	1
76	22 and 23	3-1271	Saddle pillar tube lug bolt	1
77	22 and 23	3-1714	Rear spring plate	4
78	22 and 23	3-33	Rear spring plate clamp stud washer (spring)	8
79	22 and 23	2-49	Rear spring plate clamp stud nut	8
80	22 and 23	3-111	Saddle pillar tube lug bolt nut	1
81	22 and 23	15-716	Saddle pillar tube lug bolt washer (spring)	1
82	22 and 23	3-1393	Saddle pillar tube lug	1
83	22 and 23	3-107	Saddle pillar connecting bolt washer (spring)	1
84	22 and 23	3-1137	Saddle pillar connecting bolt nut	1
85	22 and 23	30-729	Saddle pillar connecting bolt washer (plain)	1
86	22 and 23	3-619	Saddle pillar tube lug bolt	1
87	22 and 23	3-1724	Saddle pillar tube complete	1
88	22 and 23	3-1258	Saddle pillar telescopic tube lug	1
89	22 and 23	2-1925	Saddle pillar tube lug bolt nut	1
90	22 and 23	3-1603	Saddle pillar telescopic tube complete	1
91	22 and 23	3-619	Front support tube bolt (motor cycle end)	1
92	22 and 23	2-46	Front bottom tube bolt nut (motor cycle end)	1
93	22 and 23	3-1259	Front bottom connection	1
94	22 and 23	2-1925	Front bottom connection bolt nut	1
95	22 and 23	3-1271	Front bottom connection bolt	1
96	22 and 23	3-1728	Front support tube (not required for 'A' group)	1
96	22 and 23	3-1716	Front support tube	1
97	22 and 23	3-1369	Front spring bearer bar	1
98	22 and 23	3-345	Front stay cone nut	1
99	22 and 23	3-108	Front stay cone nut washer (spring)	1
100	22 and 23	3-1792	Front stay cone collar (A models 1951)	1
101	22 and 23	3-1720	Front stay complete	1
101	22 and 23	3-9274	Front stay complete (not required for 'A' group)	1
102	22	30-1605	Front spring bracket bolt (replaces 30-1215 on 51 and 54 bodies with metal floor)	4

SIDECAR CHASSIS

No. 22 and No. 23

Plate Ref. Number	Model	Part No.	Description	Number per set
102	22	30-1215	Front spring bracket bolt (not used with metal floor)	4
103	22 and 23	3-641	Front spring clamp plate	2
104	22 and 23	3-603	Front spring bracket	2
105	22 and 23	2-49	Front spring connecting bolt nut	4
106	22 and 23	3-861	Front spring	2
107	22 and 23	3-1372	Front connecting lug bolt	1
108	22 and 23	3-1373	Front connecting lug	1
109	22 and 23	35-33	Front spring bracket bolt washer (spring)	4
110	22 and 23	2-803	Front spring connecting bolt	2
111	22 and 23	3-110	Front connecting lug clip bolt washer (spring)	1
112	22 and 23	3-1271	Front connecting lug clip bolt	1
113	22 and 23	3-839	Front spring cup	2
114	22 and 23	3-111	Front spring connecting bolt washer (spring)	2
115	22 and 23	2-49	Front spring and bearer bar connecting nut	2
116	22 and 23	35-713	Front connecting lug bolt split pin	1
117	22 and 23	3-953	Front connecting lug bolt castle nut	1
118	22 and 23	24-5914	Front connecting lug bolt packing washer (plain)	1
119	22 and 23	27-6974	Mu guard support tube bolt nut	1
120	22 and 23	24-5860	Mudguard support bolt distance nut	1
121	22 and 23	31-7275	Mudguard support tube bolt	1
122	22 and 23	3-9263	Inside strut complete	1
123	22 and 23	3-1741	Mudguard stay support tube complete	1
124	22 and 23	2-49	Support tube lug bolt nut	2
125	22 and 23	35-33	Support tube lug bolt washer (spring)	2
126	22 and 23	3-12	Support tube lug bolt	2
127	22 and 23	3-9264	Outside tie complete	1
128	22 and 23	2-46	Front spring connecting lug stud nut	2
129	23	3-1021	Front spring bracket	2
130	23	3-1080	Front spring (Inner)	2
131	23	3-111	Front connecting lug clip bolt washer (spring)	2
132	23	2-833	Front connecting lug stud washer (plain)	2
133	23	3-1750	Front spring bearer bar	1
134	23	3-1748	Front connecting lug	1
135	22 and 23	67-6005	Wheel rim (WM2-19)	1
136	22 and 23	67-5545	Wheel spoke	40
137	22 and 23	27-6813	Wheel spoke nipple	40
138	22 and 23	2-1946	Sidecar connecting lug stud nut (A rigid)	1
139	22 and 23	3-664	Sidecar connecting lug stud washer (double spring)	1
140	22 and 23	3-663	Connecting lug stud spherical washer	1
141	22 and 23	35-722	Sidecar connecting lug stud nut split pin	1
142	22 and 23	33-4160	Connecting lug stud (A rigid)	1
143	22 and 23	67-4122	Sidecar connecting lug stud nut (Inside)	1
144	22 and 23	35-722	Sidecar connecting lug stud nut split pin	1
145	22 and 23	67-1120	Sidecar connecting lug stud (lug frame threaded)	1
146	22 and 23	35-722	Sidecar connecting lug stud nut split pin	1
147	22 and 23	3-663	Connecting lug stud spherical washer	1
148	22 and 23	3-664	Sidecar connecting lug stud washer (double spring)	1
149	22 and 23	2-1946	Sidecar connecting lug stud nut	1
150	22 and 23	2-1946	Sidecar connecting lug stud nut	1
151	22 and 23	3-664	Sidecar connecting stud washer (double spring)	1
152	22 and 23	35-722	Sidecar connecting stud split pin	1
153	22 and 23	3-663	Connecting lug stud spherical washer	1
154	22 and 23	67-4181	Sidecar connecting lug stud (lug frame plain)	1
155	22 and 23	35-722	Sidecar connecting stud split pin	1
156	22 and 23	67-4182	Sidecar connecting lug stud nut	1
157	22 and 23	19-1118	Sidecar lamp cable (6 feet)	1

ELECTRICAL EQUIPMENT

'A' GROUP (PLUNGER AND SWINGING ARM FRAMES)

Plate Ref. Number	Model	Part No.	Description	Number per set
1	'A' Group	19-706	Horn push and dipper switch (1956)	1
2	'A' 10 Road Rocket	65-9171	Speedo and rev counter mounting plate	1
3	'A' Group Swinging Arm	19-716	Cable and harness assembly	1
4	'A' 10 Road Rocket	67-713	Rev counter driving member	1
5	A10 Plunger	67-9039	Speedo cable clip	1
6	'A' Group	29-9221	Licence holder	1
7	'A' Group	19-706	Horn push and dipper switch	1
8	'A' Group	19-1600	Grommet (high tension)	1
8	'A' Group	19-1601	Grommet (low tension)	1
9	A10 Plunger	90-9024	Cable clip (small) (rubber)	4
10	A10 Plunger	19-2012	Magneto cut out switch	1
10	A10 Swinging Arm	19-1472	Magneto cut out switch	1
11	'A' Group Swinging Arm	66-9049	Cable clip (large) (rubber)	15
11	'A' Group Plunger	66-9049	Cable clip (large) (rubber)	7
12	'A' Group	19-1621	Headlamp switch (1956)	1
13	'A' Group	19-526	Headlamp (underslung pilot light (up to 1955)	1
13	A10 Plunger 'A' Group Swinging Arm	19-535	Headlamp (R/H dip) (1956)	1
14	A10 Road Rocket	65-9167	Rev counter fixing bracket (when rev counter only is fitted)	1
15	'A' Group	19-1011	Stop tail lamp (1956)	1
16	A10 Road Rocket	15-7383	Rev counter mounting rubber	4
16	A10 Road Rocket	15-7383	Speedo and rev counter mounting rubber	8
17	A10 Road Rocket	27-8560	Speedo and rev counter mounting washer	8
18	A10 Road Rocket	24-8328	Rev counter bracket fixing bolt	2
18	A10 Road Rocket	65-9179	Speedo and rev counter fixing bracket bolt	4
19	A10 Road Rocket	65-9111	Speedo and rev counter mounting bracket	2
20	'A' Group Plunger	2-14	Voltage control support bolt (mudguard fixing)	2
21	'A' Group Plunger	2-1374	Voltage control bolt washer (mudguard fixing)	2
22	'A' Group Plunger	2-1462	Voltage control bolt washer (spring) (mudguard fixing)	2
23	'A' Group Plunger	2-2395	Voltage control support bolt nut (mudguard fixing)	2
24	'A' Group Plunger	27-8560	Voltage control support bolt washer (bottom) (mudguard fixing)	1
25	'A' Group Plunger	15-7383	Voltage control support rubber (up to 1955)	2
26	'A' Group Plunger	27-8560	Voltage control support bolt washer (top) (mudguard fixing)	2
27	'A' Group Plunger	2-2395	Voltage control support bolt nut (top) (mudguard fixing)	2
28	'A' Group Plunger	2-443	Voltage control support bolt locknut (up to 1955)	2
29	A10 Road Rocket	19-544	Headlamp complete	1
30	'A' Group Swinging Arm	42-9012	Voltage control toolbox buffer ring	1
31	'A' Group Swinging Arm	2-1354	Voltage control securing bolt (toolbox fixing)	2
32	'A' Group Swinging Arm	25-7180	Voltage control securing washer (toolbox fixing)	2
33	'A' Group Swinging Arm	2-2395	Voltage control securing nut (toolbox fixing)	2
34	'A' Group	19-1515	Voltage control	1
35	'A' Group Swinging Arm	42-9012	Voltage control toolbox buffer ring	1
36	A10 Road Rocket	65-9164	Rev counter gearbox	1
37	A7, A10 Plunger and Swinging Arm	19-1210	Magneto (auto)	1
37	A10 Road Rocket, Shooting Star, Star Twin	19-1203	Magneto (manual)	1

ELECTRICAL EQUIPMENT
'A' GROUP (PLUNGER AND SWINGING ARM FRAMES)

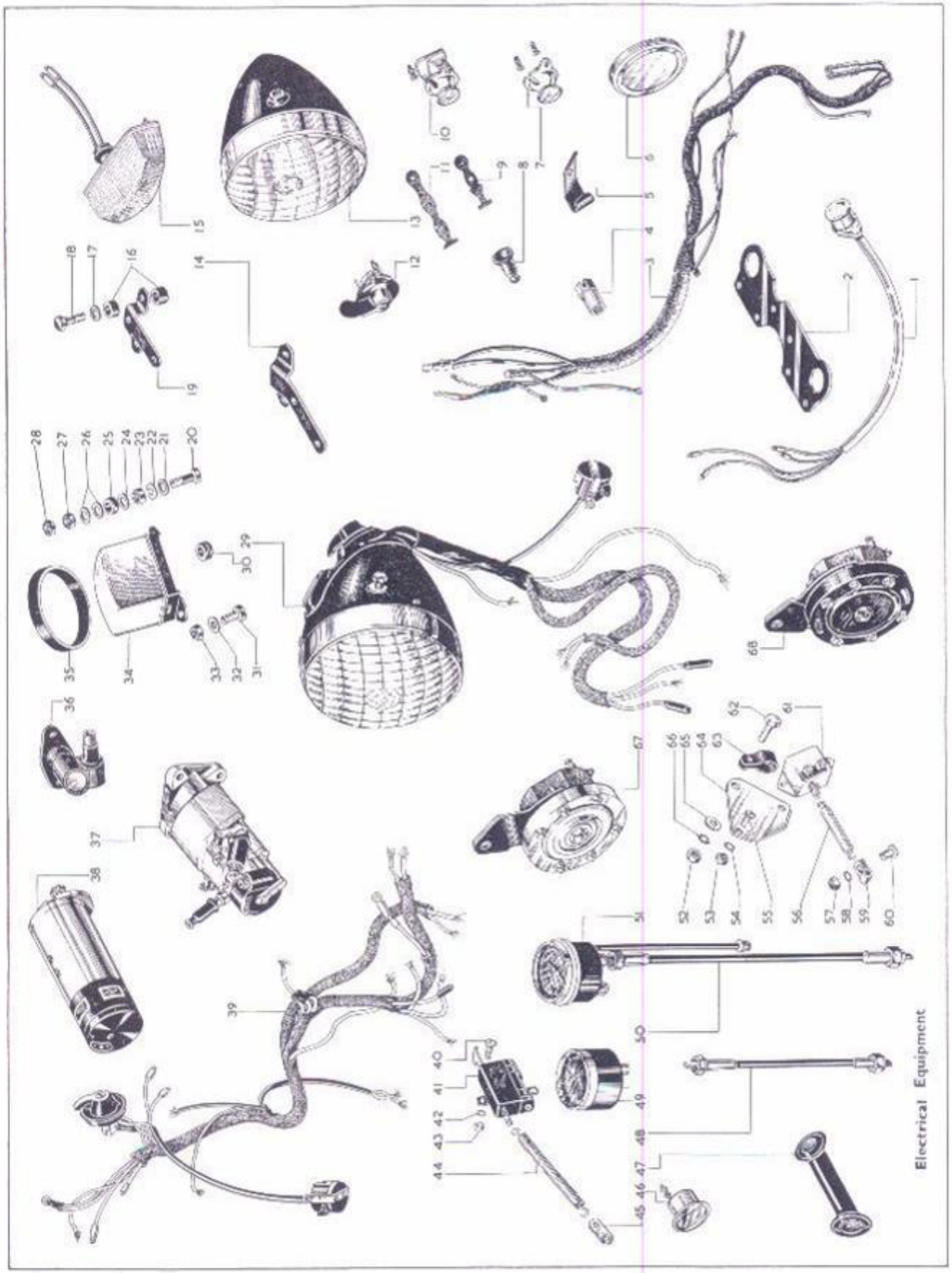

ELECTRICAL EQUIPMENT

'A' GROUP (PLUNGER AND SWINGING ARM FRAMES)

Plate Ref. Number	Model	Part No.	Description	Number per set
38	'A' Group	19-1207	Dynamo (up to 1955)	1
38	'A' Group	19-1213	Dynamo (1956)	1
39	'A' Group Plunger	19-657	Cable harness with dipper switch (up to 1955)	1
39	'A' Group Swinging Arm	19-690	Cable harness with dipper switch (up to 1955)	1
40	'A' Group Swinging Arm	2-1309	Stop lamp switch screw	2
41	'A' Group Swinging Arm	19-1114	Stop lamp switch	1
42	'A' Group Swinging Arm	29-3319	Stop light switch screw washer (shakeproof)	2
43	'A' Group Swinging Arm	2-47	Stop light switch screw nut	2
44	'A' Group Swinging Arm	42-9129	Stop light switch tension spring	1
45	'A' Group Swinging Arm	42-9027	Stop light switch operating link (up to 1955)	1
46	'A' Group	19-649	Ammeter	1
47	'A' Group	19-2126	Speedo cable rubber grommet (up to 1955)	1
48	A10 Road Rocket	65-9172	Rev counter cable	1
49	A10 Road Rocket	65-9166	Rev counter head	1
50	A10 Plunger	67-9063	Speedometer cable	1
50	A7, A10 Swinging Arm	65-9267	Speedometer cable	1
50	A10 Road Rocket	67-9057	Speedometer cable	1
51	A10 Road Rocket	19-2107	Speedometer	1
51	A7 Plunger	19-2112	Speedometer (solo and sidecar) (120 m.p.h.)	1
51	A7 Plunger	19-2123	Speedometer (solo and sidecar) (180 k.p.h.)	1
51	Star Twin	19-2109	Speedometer (solo) (120 m.p.h.)	1
51	Star Twin	19-2121	Speedometer (solo) (180 k.p.h.)	1
51	Star Twin and A10 Plunger	19-2112	Speedometer (120 m.p.h.) (sidecar)	1
51	Star Twin and A10 Plunger	19-2123	Speedometer (180 k.p.h.) (sidecar)	1
51	A10 Plunger, A7, A10 Swinging Arm	19-2111	Speedometer (120 m.p.h.) (solo)	1
51	A10 Plunger, A7, A10 Swinging Arm	19-2122	Speedometer (180 k.p.h.) (solo)	1
52	'A' Group Plunger	2-49	Stop lamp switch plate clip bolt nut	1
53	'A' Group Plunger	2-47	Stop lamp switch to plate screw nut	2
54	'A' Group Plunger	29-3319	Stop lamp switch to plate screw washer (shakeproof)	2
55	'A' Group Plunger	2-1309	Stop lamp switch to plate screw	2
56	'A' Group Plunger	65-9231	Stop lamp switch spring	1
57	'A' Group Plunger	2-1588	Brake rod clip screw nut	1
58	'A' Group Plunger	29-3319	Brake rod clip screw washer (shakeproof)	1
59	'A' Group Plunger	65-9228	Brake rod clip	1
60	'A' Group Plunger	65-5912	Brake rod clip screw	1
61	'A' Group Plunger	19-1106	Stop lamp switch	1
62	'A' Group Plunger	28-2338	Stop lamp switch plate clip bolt	1
63	'A' Group Plunger	24-8927	Stop lamp switch plate clip	1
64	'A' Group Plunger	29-9342	Stop lamp switch plate	1
65	'A' Group Plunger	2-923	Stop lamp switch plate clip bolt washer (plain)	1
66	'A' Group Plunger	36-382	Stop lamp switch plate clip washer (shakeproof)	1
67	'A' Group Swinging Arm	42-9045	Electric horn	1
68	'A' Group Plunger	67-9068	Electric horn	1

PISTON CHART 1954 AND 1955

MODEL	Compression ratio	PISTON COMPLETE (2)			COMPRESSION RING (4)			PISTON SCRAPER RING (2)		
		Standard	¼ mm. O.S.	1 mm. O.S.	Standard	½ mm. O.S.	1 mm. O.S.	Standard	½ mm. O.S.	1 mm. O.S.
A7 500 c.c. O.H.V.	6.7	67-460	67-462	67-464	67-407	67-408	67-409	67-410	67-411	67-412
Star Twin and Shooting Star 500 c.c. O.H.V.	7.25	67-533	67-535	67-537	67-407	67-408	67-409	67-410	67-411	67-412
	8.0	67-566	67-568	67-570	67-407	67-408	67-409	67-410	67-411	67-412
A10 650 c.c. Twin O.H.V.	6.5	67-423	67-425	67-427	67-311	67-312	67-313	67-314	67-315	67-316

PISTON CHART 1956 AND 1957

MODEL	Compression ratio	PISTON COMPLETE (2)			COMPRESSION RING (4)			PISTON SCRAPER RING (2)		
		Stantard	½ mm. O.S.	1 mm. O.S.	Standard	½ m.m. O.S.	1 m.m. O.S.	Standard	½ m.m. O.S.	1 m.m. O.S.
A7 and Shooting Star	6.7	67-460	67-462	67-464	67-407	67-408	67-409	67-410	67-411	67-412
	7.25	67-533	67-535	67-537	67-407	67-408	67-409	67-410	67-411	67-412
	8.0	67-566	67-658	67-570	67-407	67-408	67-409	67-410	67-411	67-412
A10 and Road Rocket	6.5	67-423	67-425	67-427	67-311	67-312	67-313	67-314	67-315	67-316
	7.25	67-429	67-431	67-433	67-311	67-312	67-313	67-314	67-315	67-316
	8.0	67-572	67-574	67-576	67-311	67-312	67-313	67-314	67-315	67-316
	8.5	67-594	67-596	67-598	67-311	67-312	67-312	67-314	67-315	67-316
	9.0	67-545	67-547	67-549	67-311	67-312	67-313	67-314	67-315	67-316
	14.0	67-551	67-553	67-555	67-311	67-312	67-313	67-314	67-315	67-316

CARBURETTERS AND SETTINGS 1954 AND 1955

MESSRS AMALGAMATED CARBURETTERS LTD., PERRY BARR, BIRMINGHAM

Models	Type	Choke Size (Inches)	Main Jet	Throttle Valve	Needle Position	Needle Jet	Engine End Size (Inches)	Year
A7 Plunger and Swinging Arm	276EU/1DB	15/16	140	6/4	4	.107	15/16	1954
A7 Star Twin Plunger and Swinging Arm	276FD/1DB	1	160	6/4	3	.107	1 1/16	1954
A10 Plunger and Swinging Arm	276GG/1DB	1 1/16	170	6/4	2	.107	1 1/16	1954
A7 Shooting Star	276GK/1BS	1	160	6/4	3	.107	1 1/16	1954
A10 Plunger	276GG/1DB	1 1/16	170	6/4	2	.107	1 1/16	1955
A7 Swinging Arm	376/4	15/16	210	376/3½	2	.107	15/16	1955
A7 Shooting Star	376/15	1	260	376/3½	3	.107	1 1/16	1955
A10 Swinging Arm	376/1	1 1/16	240	376/4	3	.1065	1 1/16	1955

CARBURETTERS AND SETTINGS 1956 AND 1957

MESSRS AMALGAMATED CARBURETTERS LTD., PERRY BARR BIRMINGHAM

Models	Type	Choke Size (Inches)	Main Jet	Pilot Jet	Throttle Valve	Needle Position	Needle Jet	Engine (inches)
A7	Monobloc 376/4	5/16	210	25	376/3½	2	.1065	15/16
A7 Shooting Star	Monobloc 376/15	1	270	30	376/3½	3	.1065	1 1/16
A10 Plunger	276GG/1DB	1 1/16	170	—	6/4	2	.107	1 1/16
A10 Swinging Arm	Monobloc 376/1	1 1/16	240	25	376/4	3	.1065	1 1/16
A10 Road Rocket	—	1 3/16	340	—	6	4	.109	1 1/16

ENGINE AND FRAME MARKINGS

1954/6 PLUNGER FRAME MODELS

Model	Type	Engine	Frame
A7	500 c.c. O.H.V. Twin	BA7 upwards	BA7S upwards
A7	500 c.c. O.H.V. Star Twin	BA7S upwards	
A10	650 c.c. O.H.V. Twin	BA10 upwards	

1954/5 SWINGING ARM MODELS

Model	Type	Engine	Frame
A7	500 c.c. O.H.V. Twin	CA7 upwards	CA7 upwards
A7	500 c.c. O.H.V. Star Twin	CA7S upwards	
A7	500 c.c. O.H.V. Shooting Star	CA7SS upwards	
A10	650 c.c. O.H.V. Twin	CA10 upwards	

1956/7 SWINGING ARM MODELS

Model	Type	Engine	Frame
A7	500 c.c. O.H.V. Twin	CA7 upwards	BA7 upwards
A7	500 c.c. O.H.V. Twin Shooting Star	CA7SS upwards	EA7 upwards
A10	650 c.c. O.H.V. Twin	CA10 upwards	EA7 upwards
A10	650 c.c. O.H.V. Twin Road Rocket	CA10R upwards	EA7 upwards

TO MAINTAIN THE ORIGINAL RELIABILITY AND PERFORMANCE OF YOUR B.S.A. MOTOR CYCLE FIT ONLY SPARES MADE BY B.S.A.