YAMAHA

YZF1000RJ
YZF1000RJC

SERVICE MANUAL

LIT-11616-10-60

YZF1000RJ/YZF1000RJC
SERVICE MANUAL
©1996 by Yamaha Motor Corporation, U.S.A.
First edition, November 1996
All rights reserved.
Any reproduction or unauthorized use
without the written permission of
Yamaha Motor Corporation, U.S.A.
is expressly prohibited.
Printed in U.S.A.
P/N LIT-11616-10-60

NOTICE

This manual was produced by the Yamaha Motor Company primarily for use by Yamaha dealers and their qualified mechanics. It is not possible to include all the knowledge of a mechanic in one manual, so it is assumed that anyone who uses this book to perform maintenance and repairs on Yamaha motorcycles has a basic understanding of the mechanical ideas and the procedures of motorcycle repair. Repairs attempted by anyone without this knowledge are likely to render the motorcycle unsafe and unfit for use.

This model has been designed and manufactured to perform within certain specifications in regard to performance and emissions. Proper service with the correct tools in necessary to ensure that the motorcycle will operate as designed. If there is any question about a service procedure, it is imperative that you contact a Yamaha dealer for any service information changes that apply to this model. This policy is intended to provide the customer with the most satisfaction from his motorcycle and to conform with federal environmental quality objectives.

Yamaha Motor Company, Ltd. is continually striving to improve all its models. Modifications and significant changes in specifications or procedures will be forwarded to all authorized Yamaha dealers and will appear in future editions of this manual where applicable.

NOTE:

- This Service Manual contains information regarding periodic maintenance to the emission control system. Please read this material carefully.
- Designs and specifications are subject to change without notice.

IMPORTANT INFORMATION

Particularly important information is distinguished in this manual by the following notations.

⚠	The Safety Alert Symbol means ATTENTION! BECOME ALERT! YOUR SAFETY IS INVOLVED!
⚠ WARNING	Failure to follow WARNING instructions could result in severe injury or death to the motorcycle operator, a bystander or a person inspecting or repairing the motorcycle.
CAUTION:	A CAUTION indicates special precautions that must be taken to avoid damage to the motorcycle.
NOTE:	A NOTE provides key information to make procedures easier or clearer.

EB002000

HOW TO USE THIS MANUAL

MANUAL ORGANIZATION

This manual is intended as a handy, easy-to-read reference book for the mechanic. It is divided into chapters, sections and sub-sections. Comprehensive explanations of all installation, removal, disassembly, assembly, repair and inspection procedures are laid out with the individual steps in sequential order.

PAGE FEATURES

The circled numbers below refer to the features indicated in the sample page.

① : An abbreviation and symbol in the upper right corner of each page indicates the current chapter.

② : The current section title is shown at the top of each page.†

③ : Sub-section titles appear in smaller print than the section title.†

④ : Lines of asterisks (*) mark the beginning and end of a particularly important procedure. The steps of such procedures are marked with bullets (•).

⑤ : Important information such as fluids, special tools and torques are framed and marked with a corresponding symbol.

⑥ : A circled number refers to an illustrated part.

⑦ : A circled lower case letter refers to an illustrated dimension or alignment mark.

⑧ : An upper case letter in a box refers to other illustrated details.

⑨ : An arrow mark after a given defect suggests the recommended course of action.

† : In Chapter 3, "Periodic Inspection and Adjustment", it is usually the current sub-section title that appears at the top of each page, instead of the current section title.

EXPLODED DIAGRAMS

To help identify parts and clarify procedure steps, there are exploded diagrams at the start of each disassembly section.

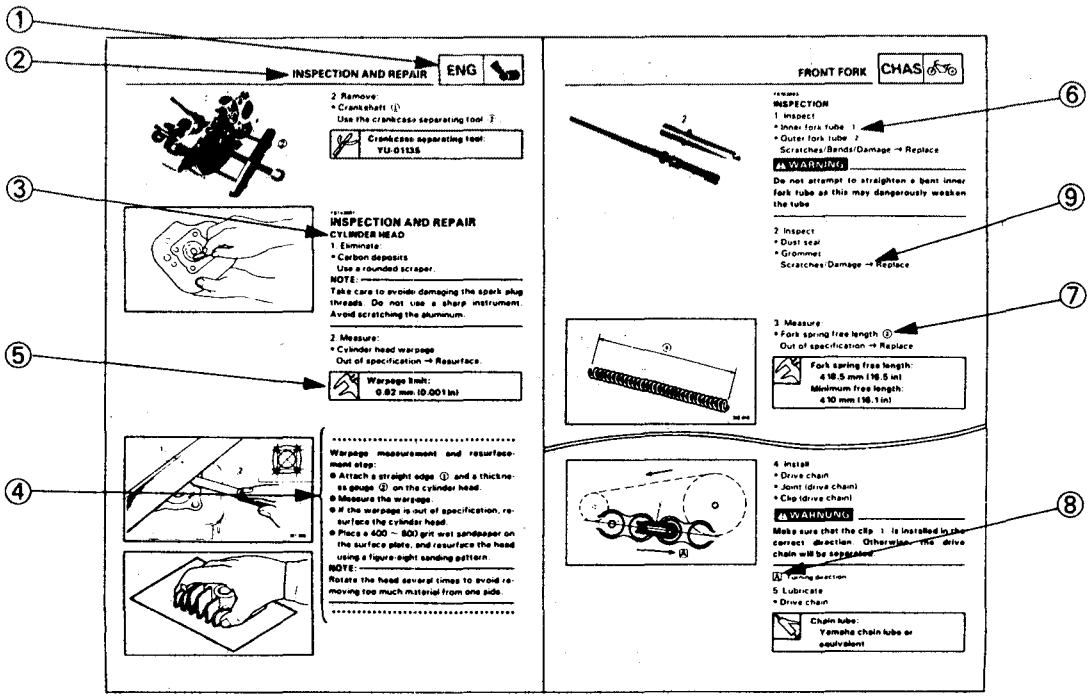

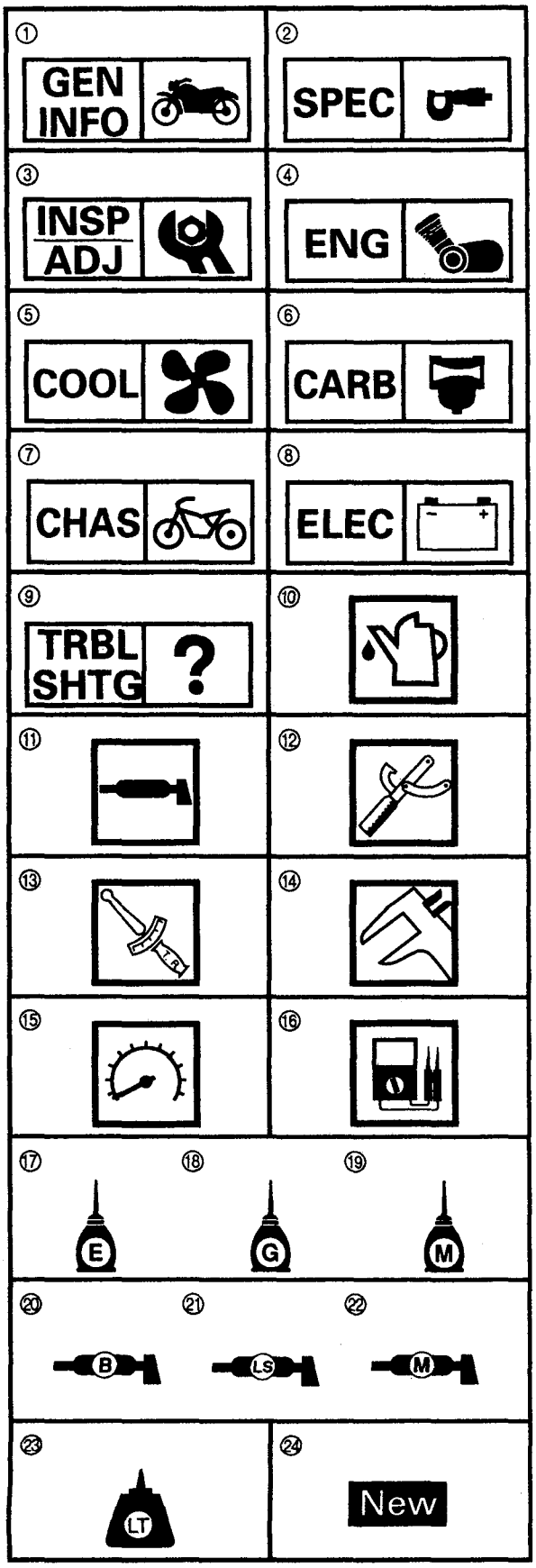

E8003000

ILLUSTRATED SYMBOLS

Illustrated symbols ① to ⑨ are printed on the top right of each page and indicate the subject of each chapter.

① General information
② Specifications
③ Periodic inspections and adjustments
④ Engine
⑤ Cooling system
⑥ Carburetion
⑦ Chassis
⑧ Electrical
⑨ Troubleshooting

Illustrated symbols ⑩ to ⑯ are used to identify the specifications appearing in the text.

⑩ Filling fluid
⑪ Lubricant
⑫ Special tool
⑬ Torque
⑭ Wear limit, clearance
⑮ Engine speed
⑯ Ω, V, A

Illustrated symbols ⑰ to ㉒ in the exploded diagrams indicate the types of lubricants and lubrication points.

⑰ Apply engine oil
⑱ Apply gear oil
⑲ Apply molybdenum disulfide oil
⑳ Apply wheel bearing grease
㉑ Apply lightweight lithium-soap base grease
㉒ Apply molybdenum disulfide grease

Illustrated symbols ㉓ to ㉔ in the exploded diagrams indicate where to apply a locking agent ㉓ and when to install a new part ㉔.

㉓ Apply the locking agent (LOCTITE®)
㉔ Replace

CHAPTER TITLES

GENERAL INFORMATION	GEN INFO 1
SPECIFICATIONS	SPEC 2
PERIODIC INSPECTION AND ADJUSTMENT	INSP/ADJ 3
ENGINE	ENG 4
COOLING	COOL 5
CARBURETION	CARB 6
CHASSIS	CHAS 7
ELECTRICAL	ELEC 8
TROUBLESHOOTING	TRBL SHTG 9

CONTENTS

CHAPTER 1.
GENERAL INFORMATION

MOTORCYCLE IDENTIFICATION 1-1
- VEHICLE IDENTIFICATION NUMBER 1-1
- ENGINE SERIAL NUMBER 1-1
- MODEL LABEL 1-1

IMPORTANT INFORMATION 1-2
- PREPARATION FOR REMOVAL PROCEDURES 1-2
- REPLACEMENT PARTS 1-2
- GASKETS, OIL SEALS AND O-RINGS 1-2
- LOCK WASHERS/PLATES AND COTTER PINS 1-3
- BEARINGS AND OIL SEALS 1-3
- CIRCLIPS 1-3

SPECIAL TOOLS 1-4
- FOR TUNE-UP 1-4
- FOR ENGINE SERVICE 1-5
- FOR CHASSIS SERVICE 1-7
- FOR ELECTRICAL COMPONENTS 1-7

CHAPTER 2.
SPECIFICATIONS

GENERAL SPECIFICATIONS 2-1

MAINTENANCE SPECIFICATIONS 2-4
- ENGINE 2-4
- CHASSIS 2-13
- ELECTRICAL 2-17

HOW TO USE THE CONVERSION TABLE 2-19

GENERAL TORQUE SPECIFICATIONS 2-19

LUBRICATION POINTS AND LUBRICANT TYPES 2-20
- ENGINE 2-20
- CHASSIS 2-21

COOLING SYSTEM DIAGRAMS 2-22

LUBRICATION DIAGRAMS 2-25

CABLE ROUTING 2-29

EMISSION HOSE ROUTING (california only) 2-36

CHAPTER 3.
PERIODIC INSPECTIONS AND ADJUSTMENTS

INTRODUCTION 3-1

PERIODIC MAINTENANCE/EMISSION CONTROL SYSTEM 3-1

GENERAL MAINTENANCE/LUBRICATION 3-2

COWLINGS 3-4
- REMOVAL 3-6
- INSTALLATION 3-7

SEATS 3-8
- REMOVAL 3-8
- INSTALLATION 3-8

FUEL TANK 3-9
- REMOVAL 3-9
- INSTALLATION 3-10

ENGINE 3-11
- VALVE CLEARANCE ADJUSTMENT 3-11
- CARBURETOR SYNCHRONIZATION 3-19
- IDLING SPEED ADJUSTMENT 3-21
- THROTTLE CABLE ADJUSTMENT 3-22
- SPARK PLUG INSPECTION 3-24
- IGNITION TIMING CHECK 3-25
- COMPRESSION PRESSURE MEASUREMENT 3-27
- ENGINE OIL LEVEL INSPECTION 3-29
- ENGINE OIL REPLACEMENT 3-30
- ENGINE OIL PRESSURE INSPECTION 3-32
- CLUTCH ADJUSTMENT 3-33
- CLUTCH FLUID LEVEL INSPECTION 3-34
- AIR BLEEDING (HYDRAULIC CLUTCH SYSTEM) 3-35
- AIR FILTER CLEANING 3-36
- CARBURETOR JOINT INSPECTION 3-37
- FUEL LINE INSPECTION 3-38
- CRANKCASE BREATHER HOSE INSPECTION 3-38
- EXUP CABLE ADJUSTMENT 3-39
- EXHAUST SYSTEM INSPECTION 3-41
- COOLANT LEVEL INSPECTION 3-42

COOLANT REPLACEMENT 3-42
COOLING SYSTEM INSPECTION 3-46

CHASSIS 3-47
FRONT BRAKE ADJUSTMENT 3-47
REAR BRAKE ADJUSTMENT 3-47
BRAKE FLUID LEVEL INSPECTION 3-49
BRAKE PAD INSPECTION 3-50
BRAKE LIGHT SWITCH ADJUSTMENT 3-50
BRAKE HOSE INSPECTION 3-51
AIR BLEEDING (HYDRAULIC BRAKE SYSTEM) 3-51
SHIFT PEDAL ADJUSTMENT 3-52
DRIVE CHAIN SLACK ADJUSTMENT 3-53
DRIVE CHAIN LUBRICATION 3-55
STEERING HEAD INSPECTION 3-55
FRONT FORK INSPECTION 3-58
FRONT FORK ADJUSTMENT 3-58
REAR SHOCK ABSORBER ADJUSTMENT 3-60
TIRE INSPECTION 3-62
WHEEL INSPECTION 3-65
CABLE INSPECTION AND LUBRICATION 3-65
LEVER AND PEDAL LUBRICATION 3-66
SIDESTAND LUBRICATION 3-66
REAR SUSPENSION LUBRICATION 3-66

ELECTRICAL 3-67
BATTERY INSPECTION 3-67
FUSE INSPECTION 3-72
HEADLIGHT BEAM ADJUSTMENT 3-74
HEADLIGHT BULB REPLACEMENT 3-75

CHAPTER 4.
ENGINE

ENGINE REMOVAL 4-1
FUEL TANK AND COWLINGS 4-1
ENGINE OIL AND COOLANT 4-1
BATTERY LEADS 4-2
AIR FILTER CASE 4-2
CARBURETORS 4-2
RADIATOR 4-2
HOSES AND LEADS 4-3
DRIVE SPROCKET 4-3
WATER JACKET JOINTS AND WATER PUMP 4-4
AC GENERATOR AND STARTER MOTOR 4-5
MUFFLER ASSEMBLY 4-6
ENGINE REMOVAL 4-7

ENGINE DISASSEMBLY 4-9
OIL FILTER AND OIL COOLER 4-9
CYLINDER HEAD COVER, CYLINDER HEAD AND CAMSHAFTS 4-10
CYLINDERS AND PISTONS 4-14
CLUTCH 4-15
OIL PAN AND OIL STRAINER 4-17
OIL PUMP AND SHIFT SHAFT 4-19
CRANKCASE DISASSEMBLY 4-20
SHIFT FORKS AND SHIFT CAM 4-21
TRANSMISSION 4-22
STARTER CLUTCH AND CRANKSHAFT 4-22
VALVES AND CAMSHAFT CASE 4-23
CONNECTING RODS 4-25
OIL PUMP 4-25

INSPECTION AND REPAIR 4-26
CYLINDER HEAD 4-26
VALVES AND VALVE GUIDES 4-27
VALVE SEATS 4-28
VALVE SPRINGS 4-30
CAMSHAFT CASE 4-31
VALVE LIFTERS 4-31
CAMSHAFTS 4-31
TIMING CHAIN, HY-VO CHAIN, CAMSHAFT SPROCKETS AND CHAIN GUIDES 4-33
TIMING CHAIN TENSIONER 4-33
CYLINDERS AND PISTONS 4-33
PISTON RINGS 4-35
PISTON PINS 4-36
CRANKSHAFT AND CONNECTING RODS 4-36
OIL PUMP 4-41
PRIMARY DRIVE 4-42
STARTER DRIVES 4-42
AC GENERATOR SHAFT 4-43
CLUTCH 4-43
TRANSMISSION AND SHIFTER 4-45
SHIFT SHAFT AND STOPPER LEVER 4-47
OIL-JET NOZZLE 4-47
RELIEF VALVE, OIL PIPE AND STRAINER 4-48
OIL COOLER 4-49
CRANKCASE 4-49
BEARINGS AND OIL SEALS 4-49
CIRCLIPS AND WASHERS 4-49

ENGINE ASSEMBLY AND ADJUSTMENT 4-50
OIL PUMP 4-50
CONNECTING RODS 4-52
CAMSHAFT CASE AND VALVES 4-54

CRANKSHAFT AND STARTER CLUTCH 4-57
TRANSMISSION 4-60
SHIFT CAM AND SHIFT FORKS 4-60
CRANKCASE ASSEMBLY 4-61
SHIFT SHAFT AND OIL PUMP 4-64
OIL PAN AND OIL STRAINER 4-65
CLUTCH 4-67
PISTONS AND CYLINDERS 4-72
CYLINDER HEAD AND CAMSHAFTS 4-76
TIMING CHAIN TENSIONER 4-79
OIL COOLER AND OIL FILTER 4-81
ENGINE REMOUNTING 4-82

CHAPTER 5.
COOLING

RADIATOR/OIL COOLER 5-1

RADIATOR 5-2
REMOVAL 5-2
INSPECTION 5-4
INSTALLATION 5-5

OIL COOLER 5-6
REMOVAL 5-6
INSPECTION 5-6
INSTALLATION 5-7

THERMOSTATIC VALVE/WATER PUMP 5-8

THERMOSTATIC VALVE 5-9
REMOVAL 5-9
INSPECTION 5-10
INSTALLATION 5-11

WATER PUMP 5-13
REMOVAL 5-13
INSPECTION 5-14
INSTALLATION 5-17

CHAPTER 6.
CARBURETION

CARBURETORS 6-1
REMOVAL 6-3
DISASSEMBLY 6-5
INSPECTION 6-7
ASSEMBLY 6-9
INSTALLATION 6-11
FUEL LEVEL ADJUSTMENT 6-12
THROTTLE POSITION SENSOR (TPS) ADJUSTMENT AND INSPECTION 6-13

CHAPTER 7.
CHASSIS

FRONT WHEEL 7-1
REMOVAL 7-2
INSPECTION 7-3
INSTALLATION 7-4
FRONT WHEEL STATIC BALANCE ADJUSTMENT 7-5

REAR WHEEL 7-7
REMOVAL 7-8
INSPECTION 7-9
INSTALLATION 7-9
REAR WHEEL STATIC BALANCE ADJUSTMENT 7-9

FRONT AND REAR BRAKES 7-10
FRONT BRAKE 7-10
REAR BRAKE 7-11
BRAKE PAD REPLACEMENT 7-12
BRAKE CALIPER DISASSEMBLY 7-16
MASTER CYLINDER DISASSEMBLY 7-18
INSPECTION AND REPAIR 7-20
BRAKE CALIPER ASSEMBLY 7-24
MASTER CYLINDER ASSEMBLY 7-28

HYDRAULIC CLUTCH 7-33
DISASSEMBLY 7-34
INSPECTION AND REPAIR 7-36
ASSEMBLY 7-37

FRONT FORK 7-41
REMOVAL 7-42
DISASSEMBLY 7-43
INSPECTION 7-45
ASSEMBLY 7-46
INSTALLATION 7-51

STEERING HEAD AND HANDLEBARS 7-53
REMOVAL 7-54
INSPECTION 7-57
INSTALLATION 7-58

REAR SHOCK ABSORBER AND SWINGARM 7-61
HANDLING NOTES 7-62
NOTES ON DISPOSAL 7-62
REMOVAL 7-62
INSPECTION 7-67
INSTALLATION 7-68

DRIVE CHAIN AND SPROCKETS 7-71
REMOVAL 7-72
INSPECTION 7-73
INSTALLATION 7-75

CHAPTER 8.
ELECTRICAL

ELECTRICAL COMPONENTS 8-1

CHECKING OF CONNECTIONS 8-3

IGNITION SYSTEM 8-4
CIRCUIT DIAGRAM 8-4
TROUBLESHOOTING 8-5

ELECTRIC STARTING SYSTEM 8-11
CIRCUIT DIAGRAM 8-11
STARTING CIRCUIT OPERATION 8-12
TROUBLESHOOTING 8-13
STARTER MOTOR 8-20

CHARGING SYSTEM 8-25
CIRCUIT DIAGRAM 8-25
TROUBLESHOOTING 8-26

LIGHTING SYSTEM 8-30
CIRCUIT DIAGRAM 8-30
TROUBLESHOOTING 8-31
LIGHTING SYSTEM CHECK 8-33

SIGNAL SYSTEM 8-36
CIRCUIT DIAGRAM 8-36
TROUBLESHOOTING 8-38
SIGNAL SYSTEM CHECK 8-40

COOLING SYSTEM 8-49
CIRCUIT DIAGRAM 8-49
TROUBLESHOOTING 8-50

FUEL PUMP SYSTEM 8-54
CIRCUIT DIAGRAM 8-54
FUEL PUMP CIRCUIT OPERATION 8-55
TROUBLESHOOTING 8-56
FUEL PUMP TEST 8-61

EXUP SYSTEM 8-62
CIRCUIT DIAGRAM 8-62
TROUBLESHOOTING 8-63

SELF-DIAGNOSIS 8-68
TROUBLESHOOTING 8-69

CHAPTER 9.
TROUBLESHOOTING

STARTING FAILURE/HARD STARTING 9-1
FUEL SYSTEM 9-1
ELECTRICAL SYSTEM 9-1
COMPRESSION SYSTEM 9-2

POOR IDLE SPEED PERFORMANCE 9-2
POOR IDLE SPEED PERFORMANCE 9-2

POOR MEDIUM-AND HIGH-SPEED PERFORMANCE 9-2
POOR MEDIUM-AND HIGH-SPEED PERFORMANCE 9-2

FAULTY GEAR SHIFTING 9-3
HARD SHIFTING 9-3
SHIFT PEDAL DOES NOT MOVE 9-3
JUMPS-OUT-OF GEAR 9-3

CLUTCH SLIPPING/DRAGGING 9-3
CLUTCH SLIPPING 9-3
CLUTCH DRAGGING 9-3

OVERHEATING 9-4
OVERHEATING 9-4

FAULTY BRAKE 9-4
POOR BRAKING EFFECT 9-4

FRONT FORK OIL LEAKAGE AND FRONT FORK MALFUNCTION 9-4
MALFUNCTION 9-4
OIL LEAKAGE 9-4

UNSTABLE HANDLING 9-5
UNSTABLE HANDLING 9-5

FAULTY LIGHTING AND SIGNAL SYSTEMS 9-5
HEADLIGHT DOES NOT LIGHT 9-5
BULB BURNT OUT 9-5
FLASHER DOES NOT LIGHT 9-5
FLASHER BLINKS SLOWLY 9-5
FLASHER REMAINS LIT 9-5
FLASHER BLINKS QUICKLY 9-5
HORN DOES NOT SOUND 9-5

YZF1000R WIRNING DIAGRAM

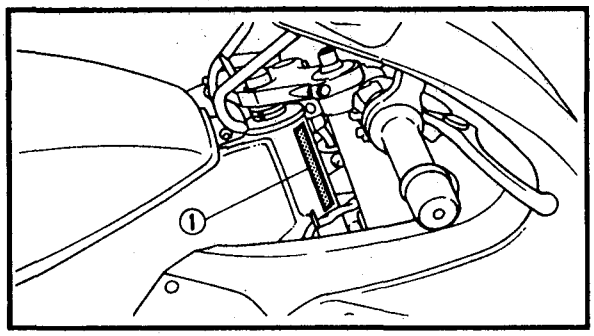

EB100000

GENERAL INFORMATION

MOTORCYCLE IDENTIFICATION

VEHICLE IDENTIFICATION NUMBER

The vehicle identification number ① is stamped into the right side of the steering head.

NOTE:

The vehicle identification number is used to identify the motorcycle and may be used to register the motorcycle with a licensing authority.

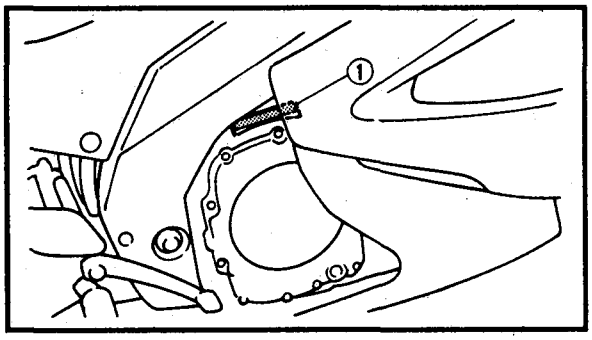

EB100030

ENGINE SERIAL NUMBER

The engine serial number ① is stamped into the crankcase.

NOTE:

The first three digits of the engine serial number indicate the model type; the remaining digits are the unit production number.

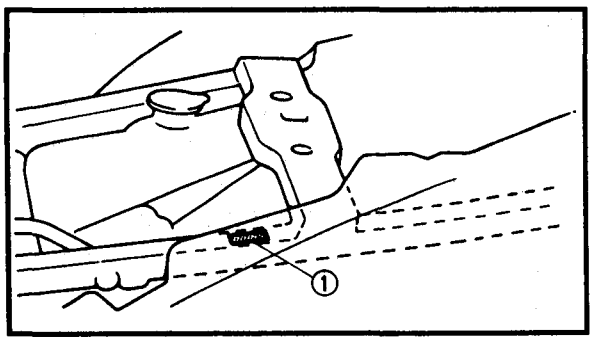

MODEL LABEL

The model label ① is affixed to the frame. This information will be needed to order spare parts.

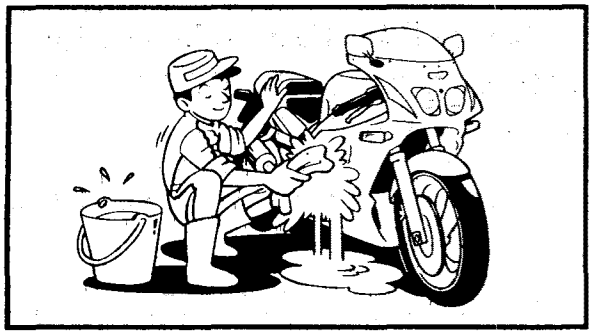

EB101000

IMPORTANT INFORMATION

PREPARATION FOR REMOVAL PROCEDURES

1. Before removal and disassembly remove all dirt, mud, dust and foreign material.

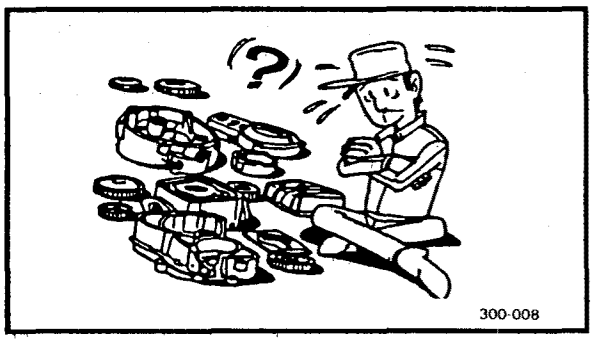

2. Use proper tools and cleaning equipment. Refer to "SPECIAL TOOLS".
3. When disassembling the motorcycle, always keep mated parts together. This includes gears, cylinders, pistons and other parts that have been "mated" through normal wear. Mated parts must always be reused or replaced as an assembly.
4. During motorcycle disassembly, clean all parts and place them in trays in the order of disassembly. This will speed up assembly and allow for the correct installation of all parts.
5. Keep all parts away from any source of fire.

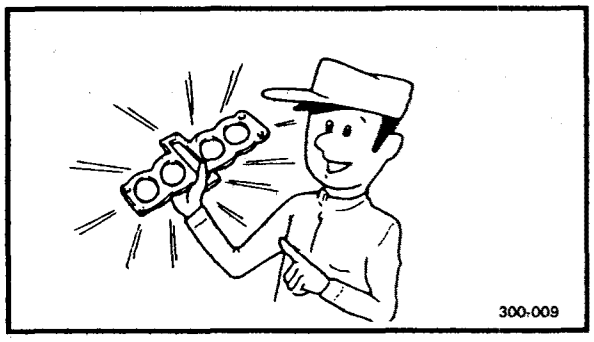

EB101010

REPLACEMENT PARTS

1. Use only genuine Yamaha parts for all replacements. Use oil and grease recommended by Yamaha for all lubrication jobs. Other brands may be similar in function and appearance, but inferior in quality.

EB101020

GASKETS, OIL SEALS AND O-RINGS

1. When overhauling the engine replace all gaskets, seals and O-rings. All gasket surfaces, oil seal lips and O-rings must be cleaned.
2. During reassembly properly oil all mating parts and bearings. Apply grease to the oil seal lips.

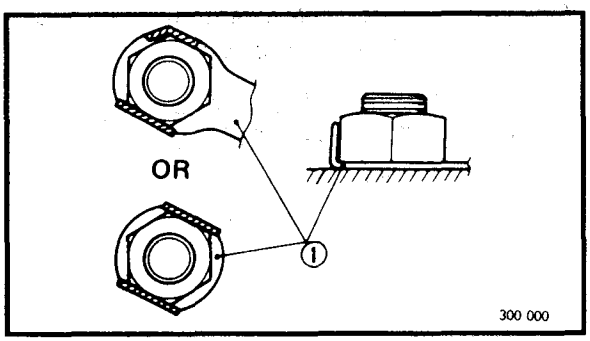

EB101030
LOCK WASHERS/PLATES AND COTTER PINS

1. After removal replace all lock washers/plates ① and cotter pins. After the bolt or nut has been tightened to specification bend the lock tab(s) along a flat side of the bolt or nut.

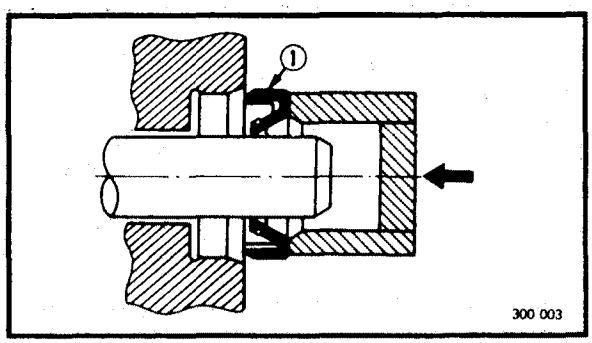

EB101040
BEARINGS AND OIL SEALS

1. Install bearings and oil seals so that the manufacturer's marks or numbers are visible. When installing oil seals, apply a light coating of lightweight lithium base grease to the seal lips. When installing bearings oil them liberally, if appropriate.

① Oil seal

CAUTION:

Do not use compressed air to spin the bearings dry. This will damage the bearing surfaces.

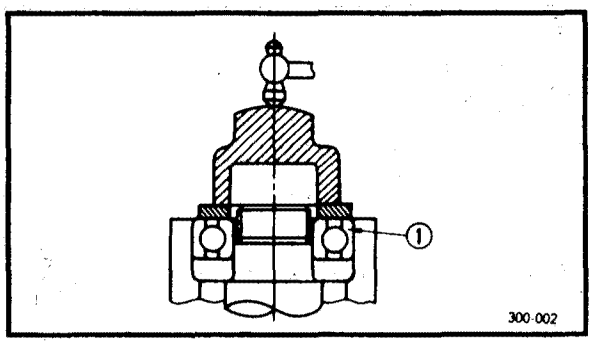

① Bearing

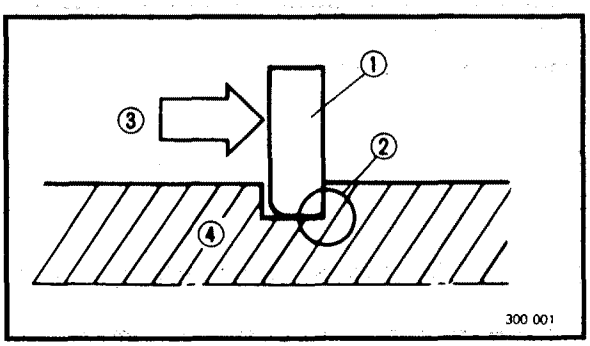

EB101050
CIRCLIPS

1. Before reassembly, check all circlips carefully. Always replace piston pin clips after one use. Replace distorted circlips. When installing a circlip ①, make sure that the sharp-edged corner ② is positioned opposite the thrust ③ it receives. See sectional view.

④ Shaft

EB102000

SPECIAL TOOLS

The following special tools are necessary for complete and accurate tune-up and assembly. Use only the appropriate special tools; this will help prevent damage caused by the use of inappropriate tools or improvised techniques. Special tools may differ in shape and part number from country to country. In such a case, two types are provided.

When placing an order, refer to the following list to avoid any mistakes.

P/N. YM- □□□□□, YU-□□□□□
YS- □□□□□, YK-□□□□□ — For CDN
ACC-□□□□□

P/N.90890- □□□□□ — Except for CDN

EB102010

FOR TUNE-UP

1

Engine tachometer
YU-8036-A
90890-03113

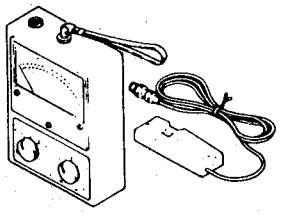

This tool is needed for detecting engine rpm.

2-A

Vacuum gauge
YU-08030

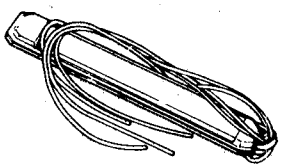

This gauge is needed for carburetor synchronization.

2-B

Vacuum gauge
90890-03094

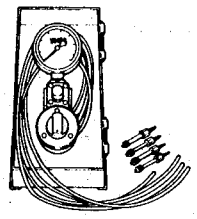

This gauge is needed for carburetor synchronization.

3

Carburetor angle driver
90890-03158

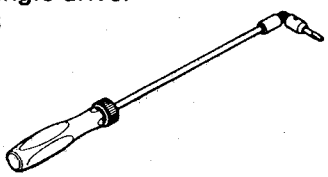

This tool is used to adjust the pilot screw.

4-A

Inductive timing light
YM-33277-A

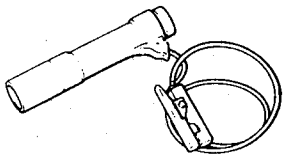

This tool is necessary for checking ignition timing.

4-B

Inductive timing light
90890-03141

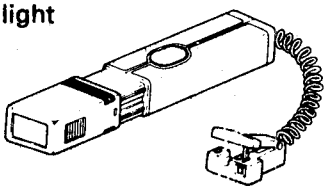

This tool is necessary for checking ignition timing.

5-A

Compression gauge
YU-33223

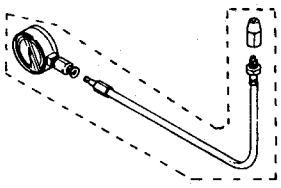

This gauge is used to measure the engine compression.

5-B
Compression gauge
90890-03081

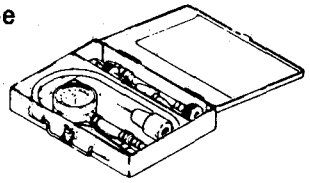

This gauge is used to measure the engine compression.

6
Oil pressure gauge
90890-03153
Adapter
90890-03139

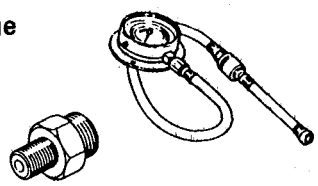

This gauge is used to measure engine oil pressure.

7
Fuel level gauge
YM-01312-A
90890-01312

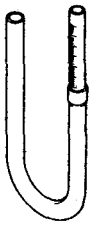

This gauge is used to measure the fuel level in the float chamber.

EB102020

FOR ENGINE SERVICE

1
Cam chain cutter
YM-01112
90890-01112

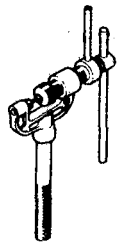

This tool is used when cutting the cam chain.

2
Piston pin puller
YU-01304
90890-01304

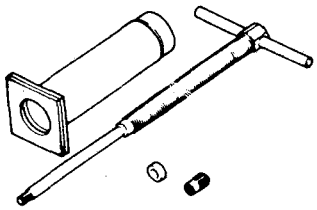

This tool is used to remove the piston pin.

3-A
Universal clutch holder
YM-91042

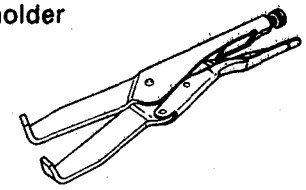

This tool is used to hold the clutch when removing or installing the clutch boss locknut.

3-B
Universal clutch holder
90890-04086

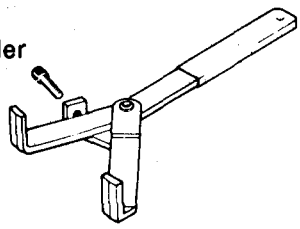

This tool is used to hold the clutch when removing or installing the clutch boss locknut.

4
Armature shock puller
YU-1047-3
90890-01290
Weight
YU-1047-4
90890-01291

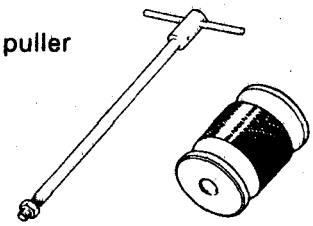

These tools are used to remove the starter clutch shaft.

5-A

Valve spring compressor
YM-04019
90890-04019

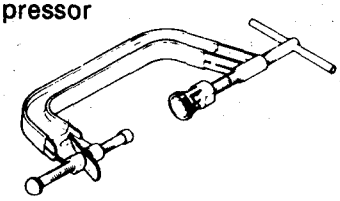

This tool is needed to remove and install the valve assemblies.

5-B

Attachment
(For exhaust valve)
YM-4108
(For intake valve)
YM-4114
90890-04114

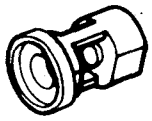

These tools are needed to remove and install the valve assemblies.

6

Valve guide remover (4.5 mm)
YM-4116
90890-04116

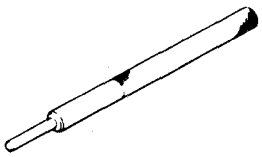

This tool is used to remove the valve guides.

7

Valve guide installer (4.5 mm)
YM-4117
90890-04117

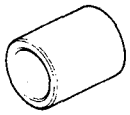

This tool is needed to install the valve guides properly.

8

Valve guide reamer (4.5 mm)
YM-4118
90890-04118

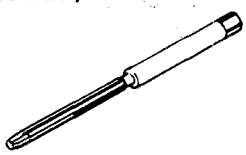

This tool is used to rebore the new valve guide.

9

Quick gasket®
ACC-11001-15-01
YAMAHA Bond No. 1215
90890-85505

This sealant (Bond) is used for crankcase mating surfaces, etc.

10

Piston ring compressor
YM-01066
90890-01066

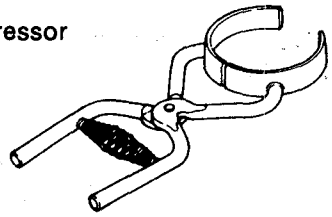

This tool is used to compress piston rings when installing the cylinder.

11

Piston base
YM-01067
90890-01067

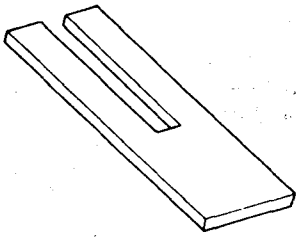

Use four pieces of these to hold the pistons during cylinder installation.

12

Radiator cap tester
YU-24460-01
90890-01325
Adaptor
YU-33984
90890-01352

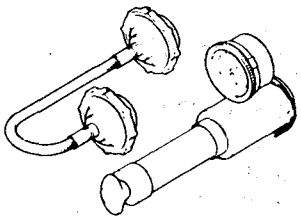

This tester is needed for checking the cooling system.

13

Oil filter wrench
YU-38411
90890-01426

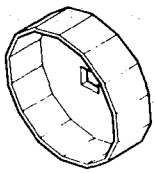

This tool is used to remove and install the oil filter.

EB102040

FOR CHASSIS SERVICE

1
Damper rod holder
90890-01447

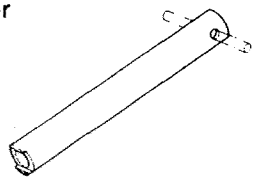

This tool is used to loosen and tighten the front fork damper rod holding bolt.

2
Fork seal driver
YM-01442
90890-01442

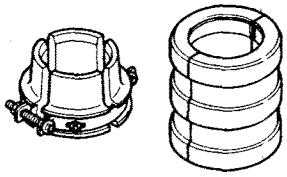

This tool is used when installing the fork seal.

3
Ring nut wrench
YU-33975
90890-01403

This tool is used to loosen and tighten the steering ring nut.

EB102050

FOR ELECTRICAL COMPONENTS

1-A
Dynamic spark tester
YM-34487

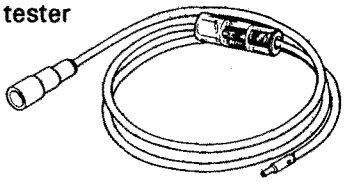

This instrument is necessary for checking the ignition system components.

1-B
Ignition checker
90890-06754

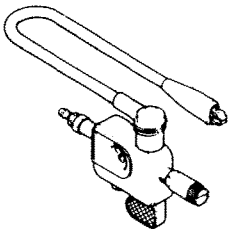

This instrument is necessary for checking the ignition system components.

2
Pocket tester
YU-03112
90890-03112

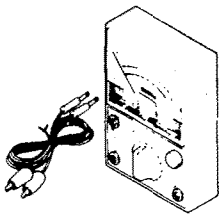

This instrument is invaluable for checking the electrical system.

SPECIFICATIONS

GENERAL SPECIFICATIONS

Model	YZF1000RJ/YZF1000RJC
Model code:	4YW1 (YZF1000RJ) 4YW2 (YZF1000RJC)
Dimensions:	
Overall length	2,085 mm (82.1 in)
Overall width	740 mm (29.1 in)
Overall height	1,175 mm (46.3 in)
Seat height	790 mm (31.1 in)
Wheelbase	1,430 mm (56.3 in)
Minimum ground clearance	140 mm (5.51 in)
Minimum turning radius	3,100 mm (122.0 in)
Basic weight:	
With oil and full fuel tank	224 kg (494 lb) (YZF1000RJ) 225 kg (496 lb) (YZF1000RJC)
Engine:	
Engine type	Liquid-cooled 4-stroke, DOHC
Cylinder arrangement	Forward-inclined parallel 4-cylinder
Displacement	1,002 cm^3
Bore × stroke	75.5 × 56.0 mm (2.97 × 2.20 in)
Compression ratio	11.5:1
Compression pressure (STD)	1,422 kPa (14.22 kg/cm^2, 202 psi) at 400 r/min
Starting system	Electric starter
Lubrication system:	Wet sump
Oil type or grade:	
Engine oil	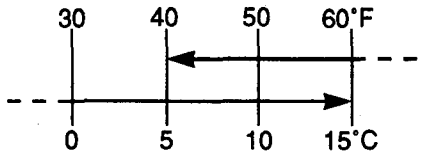 Yamalube 4 or SAE10W30 type SE motor oil, or SAE20W40 type SE motor oil
Oil capacity:	
Engine oil	
Periodic oil change	3 L (2.6 Imp qt, 3.2 US qt)
With oil filter replacement	3.2 L (2.8 Imp qt, 3.4 US qt)
Total amount	3.5 L (3.1 Imp qt, 3.7 US qt)
Radiator capacity (including all routes):	2.7 L (2.38 Imp qt, 2.85 US qt)

Model		YZF1000RJ/YZF1000RJC
Air filter:		Dry type element
Fuel:		
Type		UNLEADED FUEL
Fuel tank capacity		20 L (4.40 Imp gal, 5.28 US gal)
Fuel reserve amount		4.5 L (0.99 Imp gal, 1.19 US gal)
Carburetor:		
Type / quantity		BDSR38/4
Manufacturer		MIKUNI
Spark plug:		
Type		DR8EA/X24ESR-U
Manufacturer		NGK/NIPPONDENSO
Spark plug gap		0.6 ~ 0.7 mm (0.024 ~ 0.028 in)
Clutch type:		Wet, multiple-disc
Transmission:		
Primary reduction system		Spur gear
Primary reduction ratio		68/41 (1.659)
Secondary reduction system		Chain drive
Secondary reduction ratio		46/17 (2.706)
Transmission type		Constant mesh 5-speed
Operation		Left foot operation
Gear ratio	1st	36/14 (2.571)
	2nd	32/18 (1.778)
	3rd	29/21 (1.381)
	4th	27/23 (1.174)
	5th	28/27 (1.037)
Chassis:		
Frame type		Diamond
Caster angle		24°
Trail		97 mm (3.82 in)
Tire:		
Type		Tubeless
Size	front	120/70 ZR17
	rear	180/55 ZR17
Manufacturer	front	BRIDGESTONE/DUNLOP
	rear	BRIDGESTONE/DUNLOP
Type	front	BT50F/D204FN
	rear	BT50R/D204M
Tire pressure (cold tire):		
Maximum load-except motorcycle		196 kg (432 lb) (YZF1000RJ) 195 kg (430 lb) (YZF1000RJC)

Model		YZF1000RJ/YZF1000RJC
0 ~ 90 kg (0 ~ 198 lb) load *		
	front	250 kPa (2.5 kg/cm², 36 psi)
	rear	250 kPa (2.5 kg/cm², 36 psi)
90 kg (198 lb) ~ Maximum load *		
	front	290 kPa (2.9 kg/cm², 41 psi)
	rear	290 kPa (2.9 kg/cm², 41 psi)
High-speed riding		
	front	290 kPa (2.9 kg/cm², 41 psi)
	rear	290 kPa (2.9 kg/cm², 41 psi)
		* Load is the total weight of the cargo, rider, passenger and accessories.
Brake:		
Front brake	type	Dual disc brake
	operation	Right hand operation
Rear brake	type	Single disc brake
	operation	Right foot operation
Suspension:		
Front suspension		Telescopic fork
Rear suspension		Swingarm (link suspension)
Shock absorber:		
Front shock absorber		Coil spring / Oil damper
Rear shock absorber		Coil spring / Gas-oil damper
Wheel travel:		
Front wheel travel		120 mm (4.7 in)
Rear wheel travel		120 mm (4.7 in)
Electrical:		
Ignition system		T.C.I. (Digital)
Generator system		A.C. generator
Battery type		YTX14-BS
Battery capacity		12 V 12 AH
Headlight type:		Quartz bulb (Halogen)
Bulb wattage × quantity:		
Headlight		12 V 35 W / 35 W × 2
Auxiliary light		12 V 5 W × 1
Tail / brake light		12 V 5 W / 21 W × 2
Flasher light		12 V 27 W × 2
Front flasher light		12 V 27 W / 8 W × 2
Licence light		12 V 5 W × 2
Meter light		12 V 1.7 W × 4
Indicator light		
Neutral indicator light		12 V 3.4 W × 1
Turn indicator light		12 V 3.4 W × 1
Oil level indicator light		12 V 3.4 W × 1
High beam indicator light		12 V 3.4 W × 1
Fuel indicator light		12 V 3.4 W × 1

MAINTENANCE SPECIFICATIONS
ENGINE

Model	YZF1000RJ/YZF1000RJC
Cylinder head:	
Warp limit	0.10 mm (0.0039 in)
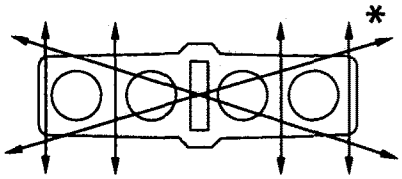	
Cylinder:	
Bore size	75.500 ~ 75.505 mm (2.9724 ~ 2.9726 in)
Taper limit	0.05 mm (0.002 in)
Out of round limit	0.05 mm (0.0020 in)
Camshaft:	
Drive method	Chain drive (Center)
Cam cap inside diameter	24.470 ~ 24.491 mm (0.9634 ~ 0.9642 in)
Camshaft outside diameter	24.437 ~ 24.450 mm (0.9621 ~ 0.9626 in)
Shaft-to-cap clearance	0.020 ~ 0.054 mm (0.0008 ~ 0.0021 in)
Cam cap inside diameter	24.500 ~ 24.521 mm (0.9646 ~ 0.9654 in)
Shaft-to-cap clearance	0.050 ~ 0.084 mm (0.0020 ~ 0.0033 in)
Cam dimensions	
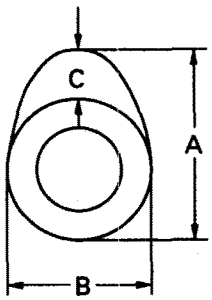	
Intake "A"	32.5 ~ 32.6 mm (1.280 ~ 1.283 in)
<limit>	<32.4mm (1.276 in)>
"B"	24.95 ~ 25.05 mm (0.982 ~ 0.986 in)
<limit>	<24.85 mm (0.978 in)>
"C"	7.45 ~ 7.65 mm (0.293 ~ 0.301 in)
Exhaust "A"	32.95 ~ 33.05 mm (1.297 ~ 1.301 in)
<limit>	<32.85 mm (1.293 in)>
"B"	24.95 ~ 25.05 mm (0.982 ~ 0.986 in)
<limit>	<24.85 mm (0.978 in)>
"C"	7.75 ~ 7.95 mm (0.305 ~ 0.313 in)

Model		YZF1000RJ/YZF1000RJC
Camshaft runout limit		0.03 mm (0.0012 in)
Cam chain:		
Cam chain type / No. of links		219FTS/108
Cam chain adjustment method		Automatic
Valve, valve seat, valve guide:		
Valve clearance (cold)	IN	0.11 ~ 0.20 mm (0.004 ~ 0.008 in)
	EX	0.21 ~ 0.30 mm (0.008 ~ 0.012 in)
Valve dimensions:		
"A" head diameter	IN	23.4 ~ 23.6 mm (0.921 ~ 0.929 in)
	EX	24.9 ~ 25.1 mm (0.980 ~ 0.988 in)
"B" face width	IN	1.63 ~ 2.90 mm (0.064 ~ 0.114 in)
	EX	1.63 ~ 2.90 mm (0.064 ~ 0.114 in)
"C" seat width	IN	0.9 ~ 1.1 mm (0.035 ~ 0.043 in)
	EX	0.9 ~ 1.1 mm (0.035 ~ 0.043 in)
"D" margin thickness	IN	0.45 ~ 0.95 mm (0.018 ~ 0.037 in)
	EX	0.75 ~ 1.25 mm (0.030 ~ 0.049 in)
Stem outside diameter	IN	4.475 ~ 4.490 mm (0.1762 ~ 0.1768 in)
	EX	4.460 ~ 4.475 mm (0.1756 ~ 0.1762 in)
<Limit>	IN	<4.445 mm (0.175 in)>
	EX	<4.43 mm (0.174 in)>
Guide inside diameter	IN	4.500 ~ 4.512 mm (0.1772 ~ 0.1776 in)
	EX	4.500 ~ 4.512 mm (0.1772 ~ 0.1776 in)
<Limit>	IN	<4.55 mm (0.179 in)>
	EX	<4.55 mm (0.179 in)>
Stem-to-guide clearance	IN	0.010 ~ 0.037 mm (0.0004 ~ 0.0015 in)
	EX	0.025 ~ 0.052 mm (0.0010 ~ 0.0020 in)
<Limit>	IN	<0.08 mm (0.003 in)>
	EX	<0.1 mm (0.004 in)>

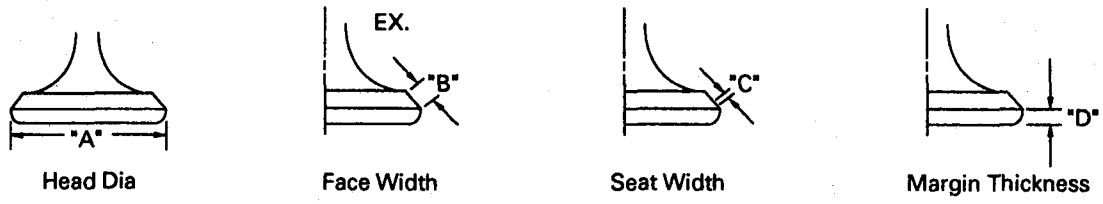

Model		YZF1000RJ/YZF1000RJC
Stem runout limit		0.01 mm (0.0004 in)
Valve seat width	IN	0.9 ~ 1.1 mm (0.035 ~ 0.043 in)
	EX	0.9 ~ 1.1 mm (0.035 ~ 0.043 in)
Valve spring:		
Free length	IN	40.73 mm (1.60 in)
	EX	44.01 mm (1.73 in)
Set length (valve closed)	IN	35 mm (1.4 in)
	EX	35 mm (1.4 in)
Compressed pressure (installed)	IN	12.20 ~ 13.19 kg (26.90 ~ 29.09 lb)
	EX	21 ~ 23 kg (46.30 ~ 50.71 lb)
Tilt limit	IN	2.5°/1.7 mm (2.5°/0.067 in)
	EX	2.5°/1.7 mm (2.5°/0.067 in)
Direction of winding (top view)	IN	Clockwise
	EX	Clockwise
Piston:		
Piston to cylinder clearance		0.06 ~ 0.08 mm (0.0024 ~ 0.0031 in)
<Limit>		<0.1 mm (0.0039 in)>
Piston size "D"		75.425 ~ 75.440 mm (2.969 ~ 2.970 in)
Measuring point "H"		3 mm (0.118 in)

Model	YZF1000RJ/YZF1000RJC
Piston off-set	0.5 mm (0.02 in)
Piston off-set direction	IN side
Piston pin bore inside diameter	19.004 ~ 19.015 mm (0.7482 ~ 0.7486 in)
Piston pin outside diameter	18.991 ~ 19.000 mm (0.7477 ~ 0.7480 in)
Piston rings:	
Top ring:	
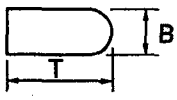	
Type	Barrel
Dimensions (B × T)	0.8 × 2.8 mm (0.031 × 0.110 in)
End gap (installed)	0.3 ~ 0.5 mm (0.012 ~ 0.020 in)
Side clearance (installed)	0.03 ~ 0.07 mm (0.001 ~ 0.003 in)
2nd ring:	
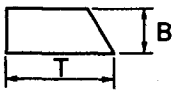	
Type	Taper
Dimensions (B × T)	0.8 × 2.8 mm (0.031 × 0.110 in)
End gap (installed)	0.3 ~ 0.5 mm (0.012 ~ 0.020 in)
Side clearance	0.02 ~ 0.06 mm (0.001 ~ 0.002 in)
Oil ring:	
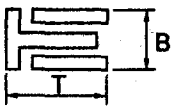	
Dimensions (B × T)	1.5 × 2.5 mm (0.059 × 0.098 in)
End gap (installed)	0.2 ~ 0.8 mm (0.008 ~ 0.031 in)
Connecting rod:	
Oil clearance	0.032 ~ 0.056 mm (0.001 ~ 0.002 in)
Color code (corresponding size)	① Blue ② Black ③ Brown ④ Green
Crankshaft:	
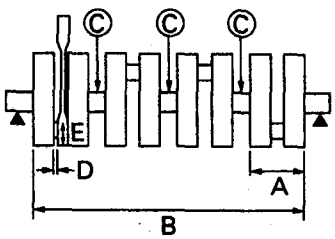	
Crank width "A"	55.7 ~ 59.5 mm (2.193 ~ 2.343 in)
Assembly width "B"	339.8 ~ 340.2 mm (13.378 ~ 13.394 in)
Runout limit "C"	0.03 mm (0.0012 in)
Big end side clearance "D"	0.160 ~ 0.262 mm (0.006 ~ 0.010 in)

Model		YZF1000RJ/YZF1000RJC
Journal oil clearance "E"		0.020 ~ 0.044 mm (0.0008 ~ 0.0017 in)
Color code (corresponding size)		① Blue ② Black ③ Brown ④ Green ⑤ Yellow
Clutch:		
Friction plate thickness		2.9 ~ 3.1 mm (0.114 ~ 0.122 in)
Quantity		9
Friction plate wear limit		2.8 mm (0.11 in)
Clutch plate thickness		1.9 ~ 2.1 mm (0.075 ~ 0.083 in)
Quantity		8
Warp limit		0.1 mm (0.004 in)
Clutch spring free length		50 mm (1.97 in)
Quantity		6
Minimum length		48 mm (1.89 in)
Clutch release method		Hydraulic inner push
Transmission:		
Main axle deflection limit		0.08 mm (0.003 in)
Drive axle deflection limit		0.08 mm (0.003 in)
Shifter:		
Shifter type		Guide bar
Guide bar bending limit		0.1 mm (0.004 in)
Carburetor:		
I. D. mark		4YW 00 (YZF1000RJ) 4YW 10 (YZF1000RJC)
Main jet	(M.J)	#1,4:#127.5:#2,3:#125
Main air jet	(M.A.J)	#1,4:#60:#2,3:#45
Jet needle	(J.N)	6DJP15-53
Needle jet	(N.J)	P-0
Pilot air jet	(P.A.J.1)	#122.5
Pilot outlet	(P.O)	1.0
Pilot jet	(P.J)	#17.5
Bypass 1	(B.P.1)	0.8
Bypass 2	(B.P.2)	0.8
Bypass 3	(B.P.3)	0.8
Valve seat size	(V.S)	1.5
Starter jet	(G.S.1)	#30
Starter jet	(G.S.2)	0.8
Throttle valve size	(Th.V)	#105
Fuel level		4.1 ~ 5.1 mm (0.16 ~ 0.20 in)
IDLING CONDITION:		
Engine idle speed		1,050 ~ 1,150 r/min
Intake vacuum		20.3 ~ 30.7 (190 ~ 230 mm Hg, 7.48 ~ 9.055 in Hg)

Model	YZF1000RJ/YZF1000RJC
CO%	3.0 ~ 4.0%
Water temperature	80 ~ 85°C (176 ~ 185°F)
Oil temperature	65 ~ 70°C (149 ~ 158°F)
Fuel pump:	
Type	Electrical type
Model / manufacturer	4SV/MITSUBISHI
Consumption amperage <max>	1.2 A
Output pressure	20 kPa (0.2 kg/cm², 2.8 psi)
Lubrication system:	
Oil filter type	Paper type
Oil pump type	Trochoid type
Tip clearance "A" or "B"	0.09 ~ 0.15 mm (0.004 ~ 0.006 in)
Side clearance	0.03 ~ 0.08 mm (0.001 ~ 0.003 in)
Bypass valve setting pressure	181 ~ 220 kPa (1.81 ~ 2.20 kg/cm², 25.74 ~ 31.29 psi)
Relief valve operating pressure	370 ~ 460 kPa (3.70 ~ 4.60 kg/cm², 52.63 ~ 65.43 psi)
Oil pressure (hot)	88 kPa (0.88 kg/cm², 12.25 psi) at 1,100 r/min
Cooling system:	
Radiator core size	
Width	318 mm (12.52 in)
Height	380 mm (14.96 in)
Thickness	24 mm (0.94 in)
Radiator cap opening pressure	95 ~ 125 kPa (0.95 ~ 1.25 kg/cm², 13.51 ~ 17.78 psi)
Reservoir tank capacity	0.23 L (0.20 Imp qt, 0.24 US qt)
Water pump	
Type	Single suction centrifugal pump
Reduction ratio	68/41 × 41/43 (1.581)

Model	YZF1000RJ/YZF1000RJC

Lubrication chart:

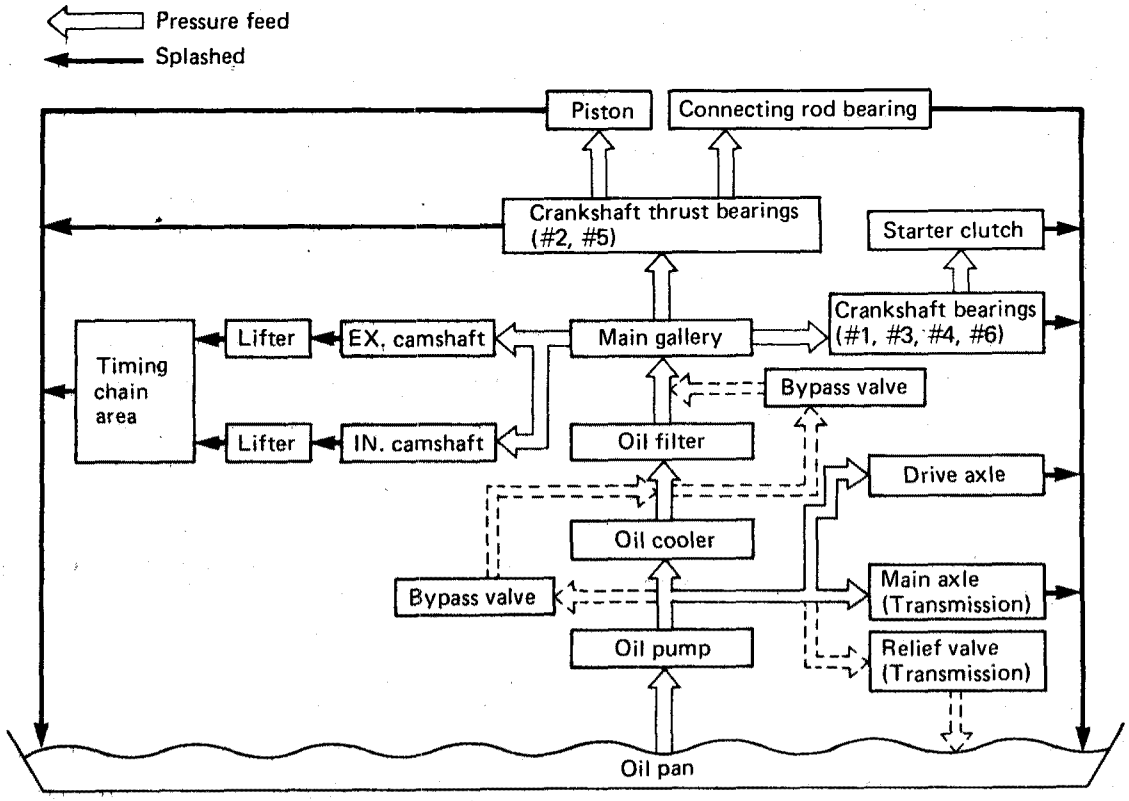

Crankcase tightening sequence:

Crankcase (Upper)

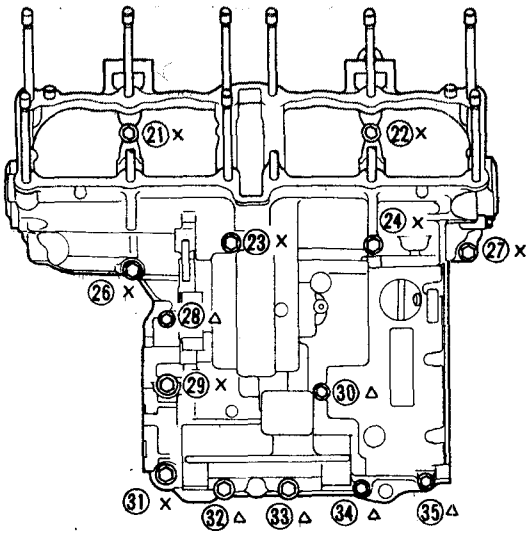

Crankcase (Lower)

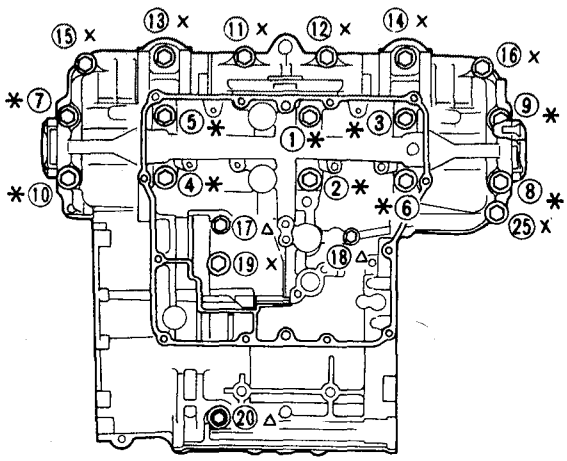

∗ : 9 mm Bolt: 32 Nm (3.2 m • kg, 23 ft • lb)
× : 8 mm Bolt: 24 Nm (2.4 m • kg, 17 ft • lb)
△: 6 mm Bolt: 12 Nm (1.2 m • kg, 8.7 ft • lb)

Tightening torques

Part to be tightened	Part name	Thread size	Q'ty	Tightening torque			Remarks
				Nm	m·kg	ft·lb	
Spark plug	–	M12	4	18	1.8	13	
Cylinder head	Nut	M10	12	41	4.1	30	E
Camshaft cap	Bolt	M6	40	10	1.0	7.2	
Cylinder head cover	Bolt	M6	8	10	1.0	7.2	
Cylinder head (exhaust pipe)	Stud bolt	M8	8	15	1.5	11	E
Connecting rod	Nut	M8	36	36	3.6	25	M
Timing chain tensioner end	Cap bolt	M11	1	20	2.0	14	
Camshaft sprocket	Bolt	M7	4	24	2.4	17	
Timing chain guide	Bolt	M6	2	10	1.0	7.2	
Water pump inlet pipe	Bolt	M6	1	10	1.0	7.2	
Radiator stay	Bolt	M6	2	10	1.0	7.2	
Oil cooler	Bolt	M20	1	63	6.3	45	E
Engine oil drain bolt	–	M14	1	43	4.3	31	
Oil plug plate (spray nozzle)	Bolt	M6	1	10	1.0	7.2	
Baffle plate (lower crankcase)	Bolt	M6	10	10	1.0	7.2	
Baffle plate (oil pan)	Bolt	M6	4	10	1.0	7.2	
Oil filter	–	M20	1	17	1.7	12	E
Exhaust pipe	Nut	M8	1	20	2.0	14	
Exhaust pipe and muffler	Bolt	M8	3	20	2.0	14	
Exup cover	Bolt	M6	3	10	1.0	7.2	
Exup cable holder	Bolt	M6	3	10	1.0	7.2	
Exhaust pipe and stay	Bolt	M8	1	20	2.0	14	
Crankcase (cylinder head)	Stud bolt	M10	12	10	1.0	7.2	E
Crankcase	Bolt	M9	11	32	3.2	23	E
Crankcase	Bolt	M8	17	24	2.4	17	E
Crankcase	Bolt	M6	7	12	1.2	8.7	E
Crankshaft end cover	Bolt	M6	6	7	0.7	5.1	LT
Bearing retainer (main axle)	Bolt	M6	3	10	1.0	7.2	
Breather cover (clutch cover)	Bolt	M6	4	7	0.7	5.1	
Breather cover (clutch cover)	Bolt	M6	2	7	0.7	5.1	LT
Timing plug	–	M14	1	7	0.7	5.1	
Main gallery plug	–	M20	2	12	1.2	8.7	
HY-VO chain guide	Bolt	M6	2	10	1.0	7.2	
Starter clutch	Bolt	M8	3	25	2.5	18	
Clutch boss	Nut	M20	1	70	7.0	50	Use lock washer
Clutch spring	Bolt	M6	6	8	0.8	5.8	
Drive sprocket	Nut	M18	1	80	8.0	58	Use lock washer
Stopper plate	Bolt	M6	2	10	1.0	7.2	
Shift pedal adjuster	Nut	M6	2	10	1.0	7.2	1 of 2 has LH thread
Shift cam stopper bolt	–	M5	1	4	0.4	2.9	
AC generator	Bolt	M8	3	25	2.5	18	
Ignitor unit	Bolt	M6	1	10	1.0	7.2	

Part to be tightened	Part name	Thread size	Q'ty	Tightening torque			Remarks
				Nm	m·kg	ft·lb	
GPS (gear position switch)	Bolt	M6	2	4	0.4	2.9	
Thermo unit	–	–	1	15	1.5	11	
Thermo switch		M16	1	23	2.3	17	
Servo motor	Bolt	M6	2	10	1.0	7.2	

CHASSIS

Model		YZF1000RJ/YZF1000RJC
Steering system:		
Steering bearing type		Ball bearing
Front suspension:		
Front fork travel		120 mm (4.72 in)
Fork spring free length		297 mm (11.7 in)
Fitting length		270 mm (10.63 in)
Spring rate	(K1)	80.0 N/mm (8 kg/mm 448.0 lb/in)
Stroke	(K1)	0 ~ 120 mm (0.00 ~ 4.72 in)
Optional spring		No
Oil capacity		590 cm^3 (20.8 Imp oz, 19.9 US oz)
Oil level		123 mm (4.84 in)
Oil grade		Suspension oil "01" or equivalent
Rear suspension:		
Shock absorber travel		65 mm (2.56 in)
Spring free length		196 mm (7.72 in)
Fitting length		184 mm (7.24 in)
Spring rate	(K1)	88.3 N/mm (8.83 kg/mm 494 lb/in)
Stroke	(K1)	0 ~ 65 mm (0.00 ~ 2.56 in)
Optional spring		No
Enclosed gas / air pressure (STD)		1,200 kPa (12 kg/cm^2, 170 psi)
Swingarm:		
Free play limit	end	1 mm (0.04 in)
	side	1 mm (0.04 in)
Front wheel:		
Type		Cast wheel
Rim size		17 × MT3.50
Rim material		Aluminum
Rim runout limit	radial	1 mm (0.04 in)
	lateral	0.5 mm (0.02 in)
Rear wheel:		
Type		Cast wheel
Rim size		17 × MT5.50
Rim material		Aluminum
Rim runout limit	radial	1 mm (0.04 in)
	lateral	0.5 mm (0.02 in)
Drive chain:		
Type / manufacturer		532ZLV KAI/DAIDO
No. of links		110
Chain free play		20 ~ 35 mm (0.8 ~ 1.4 in)
Front disc brake:		
Type		Dual
Disc outside diameter × thickness		298 × 5 mm (11.7 × 0.20 in)

Model	YZF1000RJ/YZF1000RJC
Disc deflection limit	0.1 mm (0.004 in)
Pad thickness inner	5 mm (0.20 in)
<Limit>	<0.5 mm (0.02 in)>
Pad thickness outer	5 mm (0.20 in)
<Limit>	<0.5 mm (0.02 in)>
Master cylinder inside diameter	14 mm (0.55 in)
Caliper cylinder inside diameter	30.2 mm (1.19 in)
Caliper cylinder inside diameter	27 mm (1.06 in)
Brake fluid type	DOT 4
Rear disc brake:	
Type	Single
Disc outside diameter × thickness	245 × 5 mm (9.6 × 0.20 in)
Disc deflection limit	0.15 mm (0.01 in)
Pad thickness inner	5.5 mm (0.22 in)
<Limit>	<0.5 mm (0.02 in)>
Pad thickness outer	5.5 mm (0.22 in)
<Limit>	<0.5 mm (0.02 in)>
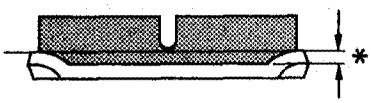	
Master cylinder inside diameter	14 mm (0.55 in)
Caliper cylinder inside diameter	42.8 mm (1.69 in)
Brake fluid type	DOT 4
Clutch:	
Master cylinder inside diameter	15.87 mm (0.62 in)
Release cylinder inside diameter	38.1 mm (1.50 in)
Brake fluid type	DOT 4
Brake lever & brake pedal:	
Brake pedal position	50 mm (1.97 in)
Clutch lever free play (at lever end)	10 ~ 15 mm (0.39 ~ 0.59 in)
Throttle cable free play	3 ~ 7 mm (0.12 ~ 0.28 in)

Tightening torques

Part to be tightened	Thread size	Tightening torque			Remarks
		Nm	m·kg	ft·lb	
Upper bracket and inner tube	M8	26	2.6	19	
Upper bracket and steering shaft	M22	110	11.0	80	
Handlebar boss and inner tube	M8	17	1.7	12	
Ring nut (steering shaft)	M25	16	1.6	11	See NOTE
Inner tube and lower bracket	M8	23	2.3	17	
Union bolt (brake hose)	M10	30	3.0	22	
Master cylinder (front brake)	M6	13	1.3	9.4	
Union bolt (clutch hose)	M10	30	3.0	22	
Engine mounting:					
Mounting bolt (front)	M10	40	4.0	29	
Mounting bolt (rear upper)	M10	50	5.0	36	
Mounting bolt (rear lower)	M10	50	5.0	36	
Pinch bolt (front)	M8	22	2.2	16	
Pinch bolt (rear upper)	M8	15	1.5	11	
Exhaust pipe bracket	M10	36	3.6	25	
Swingarm pivot shaft nut	M18	125	12.5	90	
Relay arm and frame	M10	48	4.8	35	
Relay arm and connecting rod	M10	48	4.8	35	
Connecting rod and swingarm	M10	48	4.8	35	
Rear shock absorber and relay arm	M10	40	4.0	29	
Rear shock absorber and frame	M10	40	4.0	29	
Fuel cock and fuel tank	M6	7	0.7	5.1	
Fuel sender and fuel tank	M6	7	0.7	5.1	
Fuel tank (front)	M6	10	1.0	7.2	
Fuel tank (rear)	M6	10	1.0	7.2	
Rider footrest bracket and frame	M8	28	2.8	20	
Passenger footrest and frame	M8	28	2.8	20	
Sidestand bracket and frame	M8	43	4.3	31	
Front wheel axle	M18	70	7.0	50	
Rear wheel axle	M24	150	15.0	110	
Front brake caliper and front fork	M10	40	4.0	29	
Rear brake caliper and bracket	M10	40	4.0	29	
Brake disc and wheel	M8	23	2.3	17	
Driven sprocket and clutch hub	M10	60	6.0	43	
Tension bar	M8	30	3.0	22	
Brake caliper and bleed screw	M8	6	0.6	43	
Pinch bolt (front wheel axle)	M8	23	2.3	17	

NOTE:

1. First, tighten the ring nut approximately 48 Nm (4.8 m • kg, 35 ft • lb) with a torque wrench, then loosen the ring nut completely.
2. Retighten the ring nut to specification.

ELECTRICAL

Model	YZF1000RJ/YZF1000RJC
Voltage:	12 V
Ignition system:	
Ignition timing (B.T.D.C.)	5° at 1,100 r/min
T.C.I.:	
Pickup coil resistance / color	135 ~ 165 Ω at 20°C (68°F) / Gray – Orange
T.C.I. unit model / manufacturer	TNDF39/NIPPONDENSO
Ignition coil:	
Model / manufacturer	J0313/NIPPONDENSO
Minimum spark gap	6 mm (0.24 in)
Primary winding resistance	1.9 ~ 2.5 Ω at 20°C (68°F)
Secondary winding resistance	12 ~ 18 kΩ at 20°C (68°F)
Spark plug cap:	
Type	Resin type
Resistance	10 kΩ
Charging system:	
Type	A.C. generator
Model / manufacturer	B3G/NIPPONDENSO
Nominal output	12 V 28 A at 5,000 r/min
Field coil resistance	2.8 ~ 3.0 Ω at 20°C (68°F)
Armature coil resistance	0.19 ~ 0.21 Ω at 20°C (68°F)
Brush overall length	13.7 mm (0.54 in)
<Wear limit>	<4.7 mm (0.19 in)>
Spring force	5.10 ~ 5.69 g (0.2 ~ 0.2 oz)
Voltage regulator:	
Type	Semi-conductor, field control type
No load regulated voltage	14.2 ~ 14.8 V
Electric starter system:	
Type	Constant mesh type
Starter motor:	
Model / manufacturer	SM-13/MITSUBA
Output	0.7 kW
Brush overall length	12.5 mm (0.49 in)
<Limit>	<4 mm (0.16 in)>
Spring force	6.67 ~ 9.02 g (0.2 ~ 0.3 oz)
Commutator diameter	28 mm (1.10 in)
<Wear limit>	<27 mm (1.06 in)>
Mica undercut	0.7 mm (0.03 in)
Starter relay:	
Model / manufacturer	MS5F/JIDECO
Amperage rating	100 A

Model	YZF1000RJ/YZF1000RJC
Horn:	
Type	Plane type
Quantity	1
Model / manufacturer	YF-12/NIKKO
Maximum amperage	2.5 A
Flasher relay:	
Type	Full transistor type
Model / manufacturer	FE246BH/NIPPONDENSO
Self cancelling device	No
Flasher frequency	75 ~ 95 cycle/min
Wattage	21 W × 2 + 3.4 W
Oil level switch:	
Model / manufacturer	3GM/NIPPONDENSO
Fuel pump relay:	
Model / manufacturer	3EN-00/OMRON
Thermostatic switch:	
Model / manufacturer	2EL/NIHON THERMOSTAT
Thermo unit:	
Model / manufacturer	11H/NIPPON SEIKI
Circuit breaker:	
Type	Fuse
Amperage for individual circuit	
MAIN	30 A × 1
HEAD	20 A × 1
SIGNAL	15 A × 1
IGNITION	15 A × 1
FAN	7.5 A × 2
Reserve	30 A × 1
Reserve	20 A × 1
Reserve	15 A × 1
Reserve	7.5 A × 1

EB201000

HOW TO USE THE CONVERSION TABLE

All specification data in this manual are listed in SI and METRIC UNITS.
Use this table to convert METRIC unit data to IMPERIAL unit data.

Ex.

METRIC		MULTIPLIER		IMPERIAL
** mm	×	0.03937	=	** in
2 mm	×	0.03937	=	0.08 in

CONVERSION TABLE

METRIC TO IMPERIAL			
	Metric unit	Multiplier	Imperial unit
Torque	m·kg	7.233	ft·lb
	m·kg	86.794	in·lb
	cm·kg	0.0723	ft·lb
	cm·kg	0.8679	in·lb
Weight	kg	2.205	lb
	g	0.03527	oz
Speed	km/hr	0.6214	mph
Distance	km	0.6214	mi
	m	3.281	ft
	m	1.094	yd
	cm	0.3937	in
	mm	0.03937	in
Volume/ Capacity	cc (cm^3)	0.03527	oz (IMP liq.)
	cc (cm^3)	0.06102	cu·in
	lt (liter)	0.8799	qt (IMP liq.)
	lt (liter)	0.2199	gal (IMP liq.)
Misc.	kg/mm	55.997	lb/in
	kg/cm^2	14.2234	psi (lb/in^2)
	Centigrade (°C)	9/5+32	Fahrenheit (°F)

EB202001

GENERAL TORQUE SPECIFICATIONS

This chart specifies torque for standard fasteners with standard I.S.O. pitch threads. Torque specifications for special components or assemblies are provided for each chapter of this manual. To avoid warpage, tighten multi-fastener assemblies in a criss-cross fashion, in progressive stages, until the specified torque is reached. Unless otherwise specified, torque specifications require clean, dry threads. Components should be at room temperature.

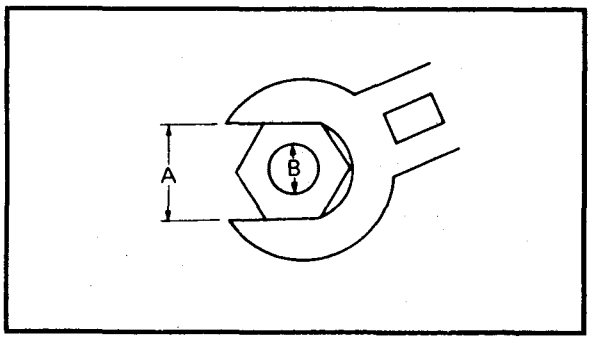

A: Distance between flats
B: Outside thread diameter

A (nut)	B (bolt)	General torque specifications		
		Nm	m•kg	ft•lb
10 mm	6 mm	6	0.6	4.3
12 mm	8 mm	15	1.5	11
14 mm	10 mm	30	3.0	22
17 mm	12 mm	55	5.5	40
19 mm	14 mm	85	8.5	61
22 mm	16 mm	130	13.0	94

EB203000

LUBRICATION POINTS AND LUBRICANT TYPES

ENGINE

Lubrication Point	Symbol
Oil seal lips	LS
O-ring	LS
Bearing	E
Piston surface	E
Piston pin	E
Connecting rod bearings	E
Crankshaft journal	E
Connecting rod bolt/nut	M
Camshaft cam lobe	M
Valve stem (IN, EX)	M
Valve stem end (IN, EX)	E
Water pump impeller shaft	E
Oil pump rotor (inner/outer), housing	E
Oil strainer assembly	E
Idle gear inner surface	E
Starter clutch outer assembly	E
Primary driven gear	E
Starter clutch ball	E
Transmission gear (wheel/pinion)	M
Axle (main/drive)	M
Shift cam	E
Shift fork/guide bar	E
Shift shaft assembly	E
Shift pedal	LS

EB203010
CHASSIS

Lubrication Point	Symbol
Steering bearing and bearing race (upper/lower)	LS
Front wheel oil seal (right/left)	LS
Rear wheel oil seal	LS
Clutch hub oil seal	LS
Clutch hub fitting area	LS
Rear brake pedal shaft	LS
Shift pedal	LS
Sidestand sliding surface	LS
Tube guide (throttle grip) inner surface	LS
Brake lever pivot bolt, contact surface	LS
Clutch lever pivot bolt, contact surface	LS
Rear shock absorber (upper/lower)	M
Pivot shaft	M
Connecting rod bearing (on the swingarm)	M
Thrust cover (inner)	M
Relay arm bearing (inner)	M
Relay arm oil seal	M
Rear footrest pivot	LS
Luggage strap holder pivot	LS

EB204000

COOLING SYSTEM DIAGRAMS

① Radiator
② Fan
③ Thermostatic valve housing
④ Coolant reservoir
⑤ Water pump
⑥ Drain bolt (water pump)

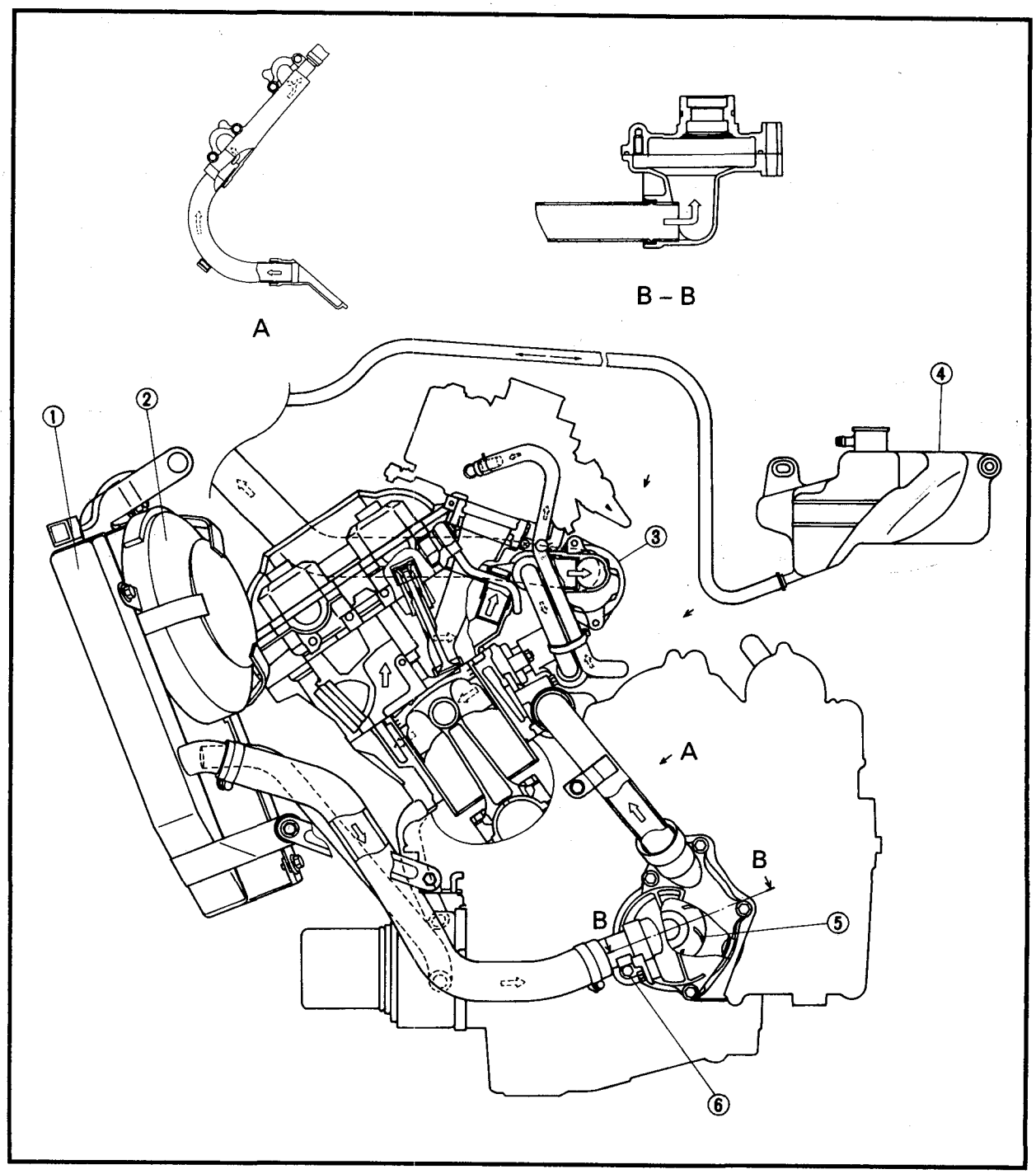

① Radiator cap
② Radiator
③ Fan
④ Thermostatic valve housing

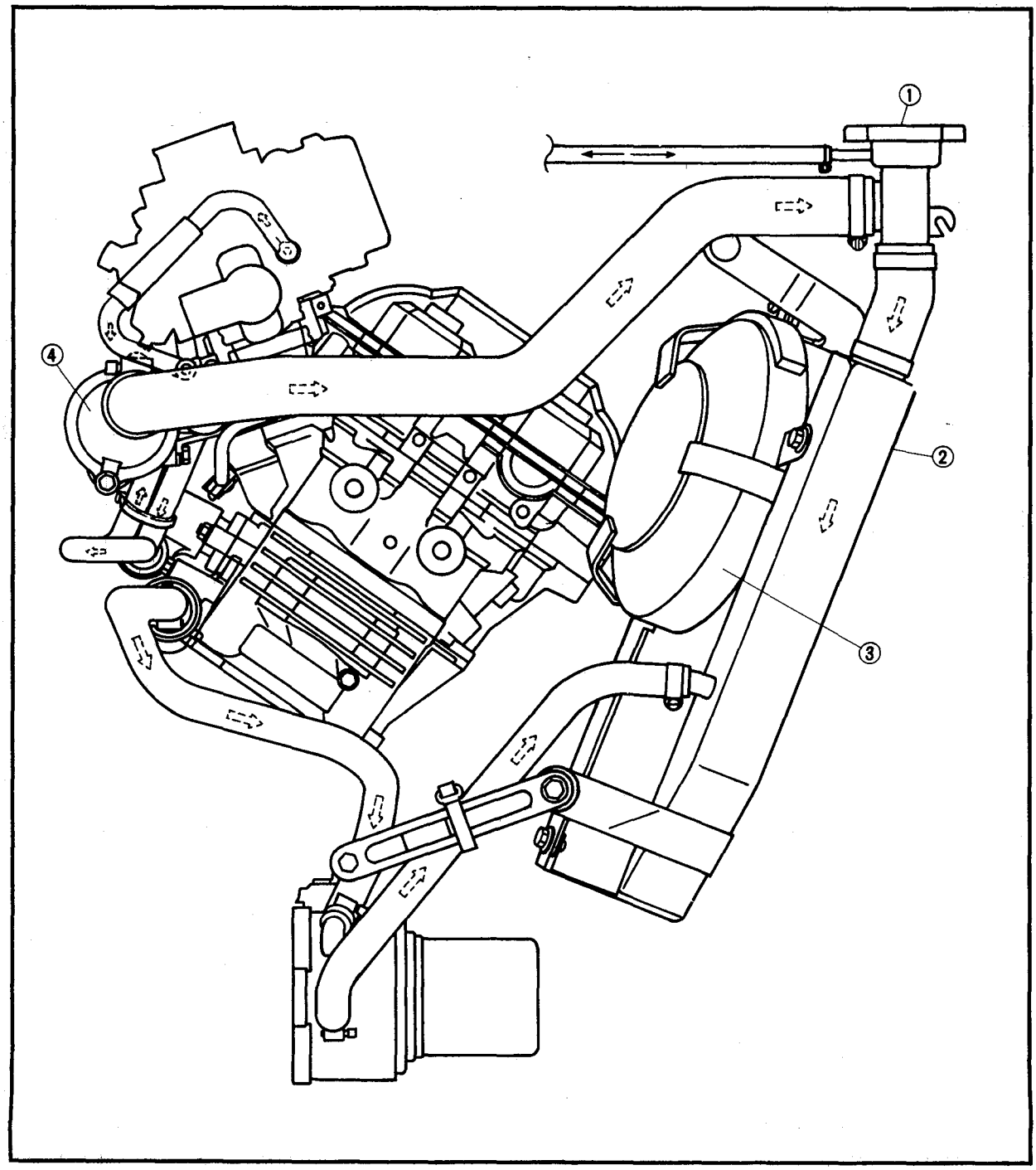

① Thermostatic valve housing
② Thermostatic valve
③ Radiator cap

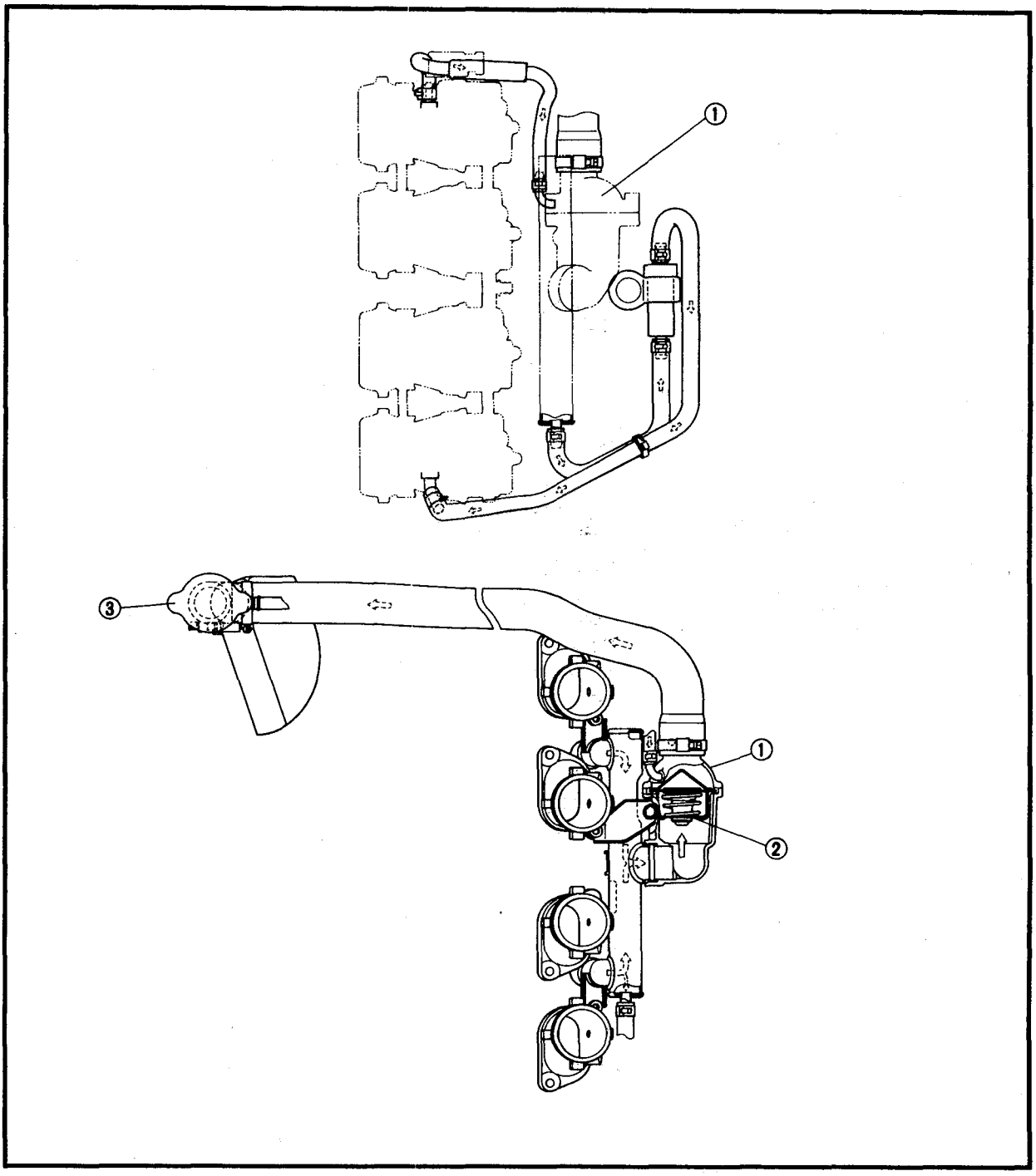

EB205000

LUBRICATION DIAGRAMS

① Oil delivery pipe
② Intake camshaft
③ Exhaust camshaft
④ Oil filter
⑤ Relief valve
⑥ Oil strainer
⑦ Oil pump

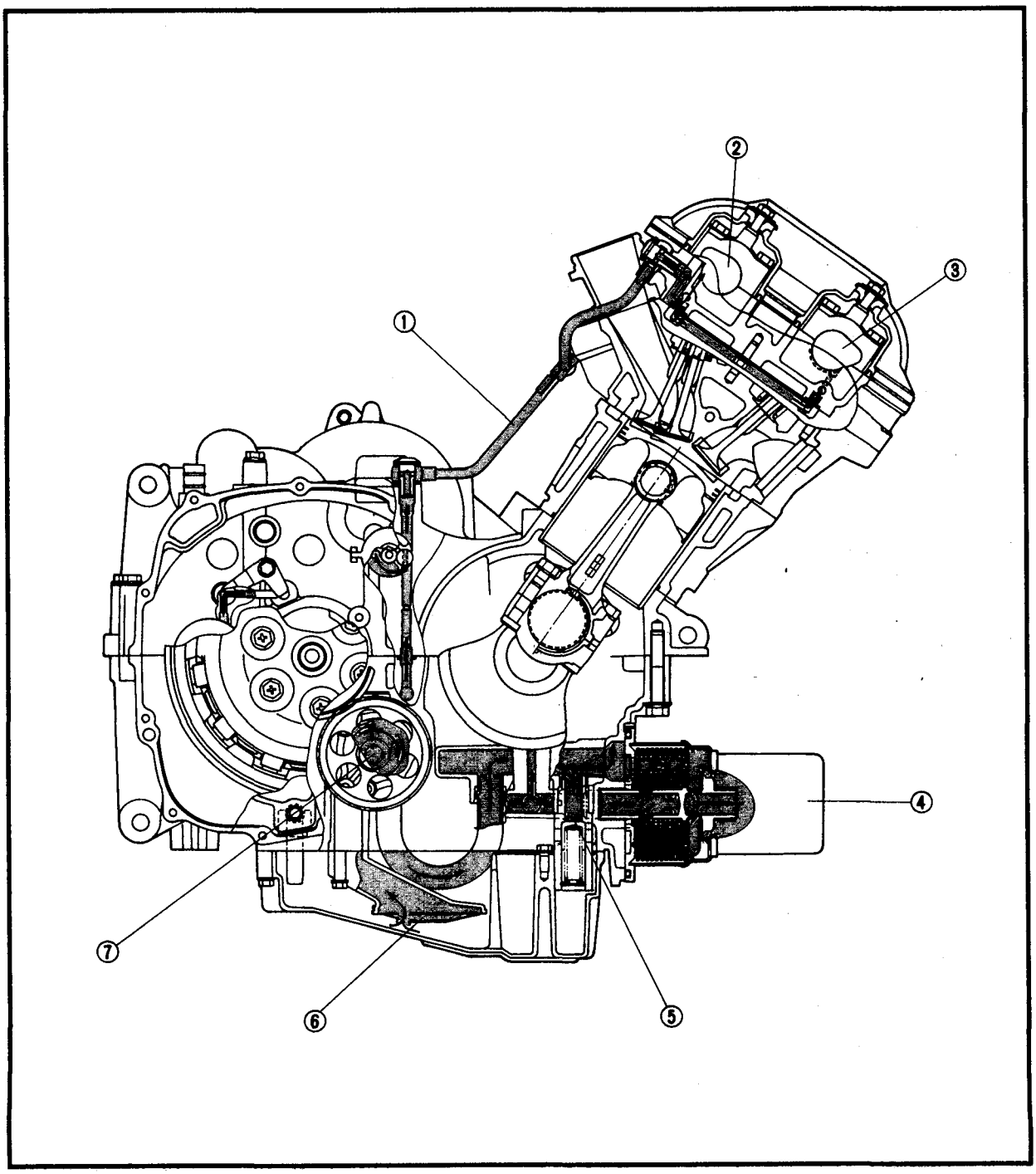

① Timing chain guide (upper)
② Timing chain
③ Timing chain guide (intake side)
④ Timing chain tensioner
⑤ Main axle
⑥ Oil delivery pipe #1
⑦ Timing chain guide (exhaust side)

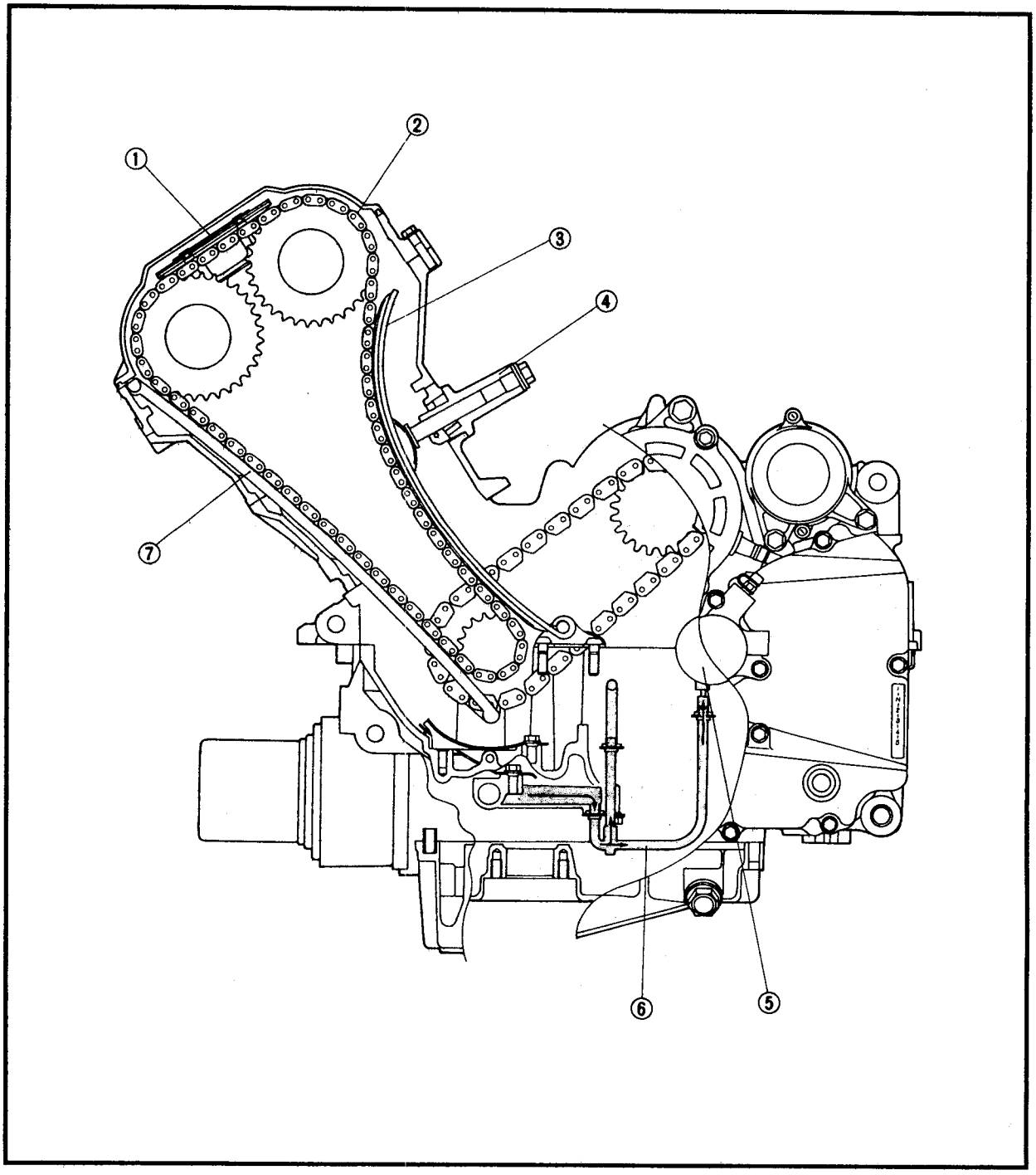

① Timing plug
② Crankshaft end cover (left)
③ Crankshaft
④ Crankshaft end cover (right)
⑤ Main axle
⑥ Oil delivery pipe #5
⑦ Drive axle

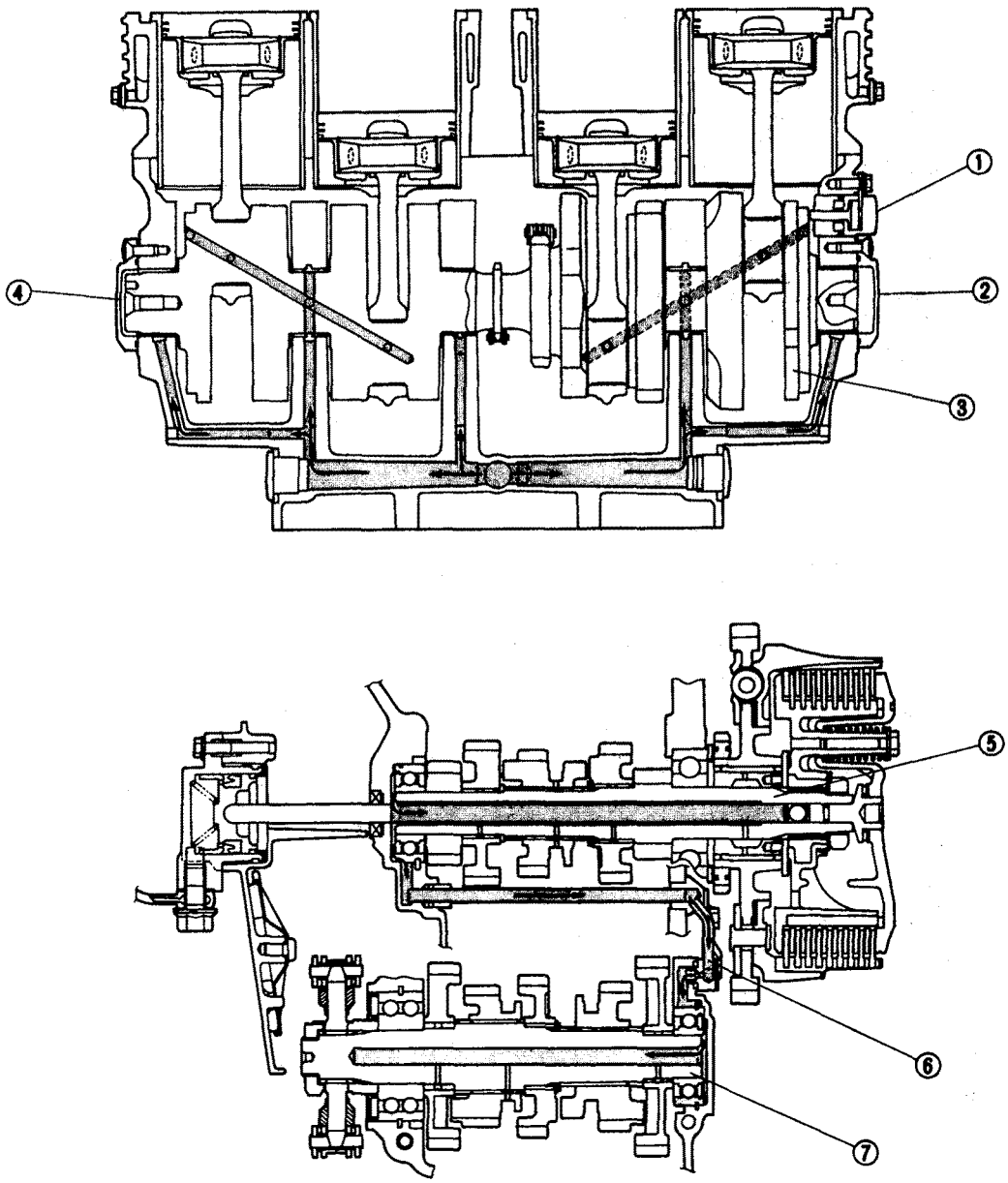

① Oil delivery pipe
② Oil delivery pipe #3
③ Oil jet nozzle
④ Main journal bearing (upper crankcase)
⑤ Oil delivery pipe #2
⑥ Oil delivery pipe #1
⑦ Starter clutch shaft
⑧ Oil spray nozzle

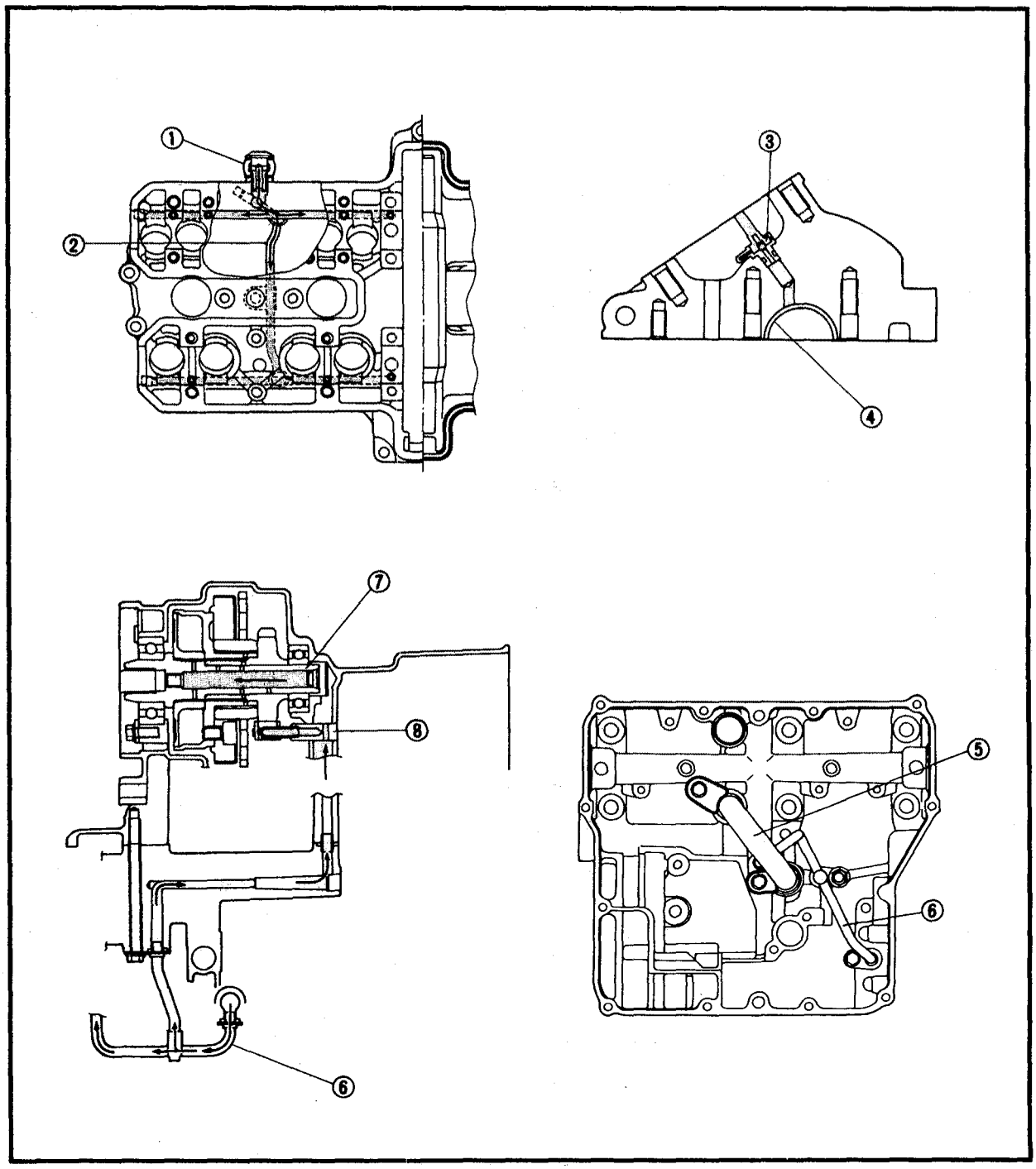

EB206000

CABLE ROUTING

① Throttle cable
② Clutch switch lead
③ Handlebar switch lead (left)
④ Clutch hose
⑤ Horn
⑥ Front brake hose
⑦ Handlebar switch lead (right)
⑧ Fan motor lead

[A] Pass the throttle cables through the wire guide.
[B] Use a plastic band to fasten the handlebar switch lead (left) to the left front fork inner tube.
[C] Use a plastic band to fasten the handlebar switch lead (right) to the right front fork inner tube.
[D] Connect the right handlebar switch lead coupler to the wire harness and pull the rubber cover over the connectors.
[E] Pass the throttle cables between the frame and the ignition coil plate.
[G] 70 ~ 90 mm

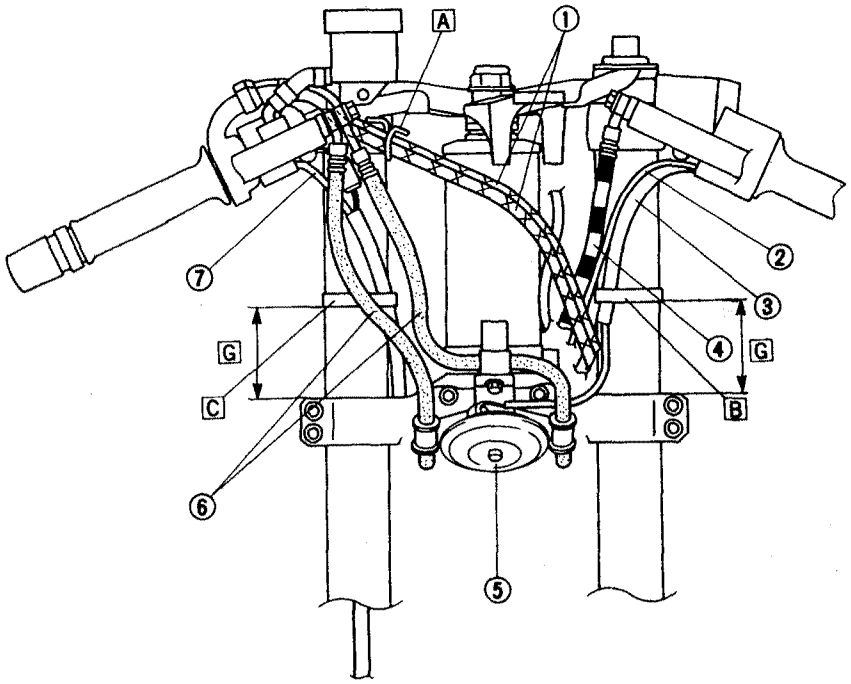

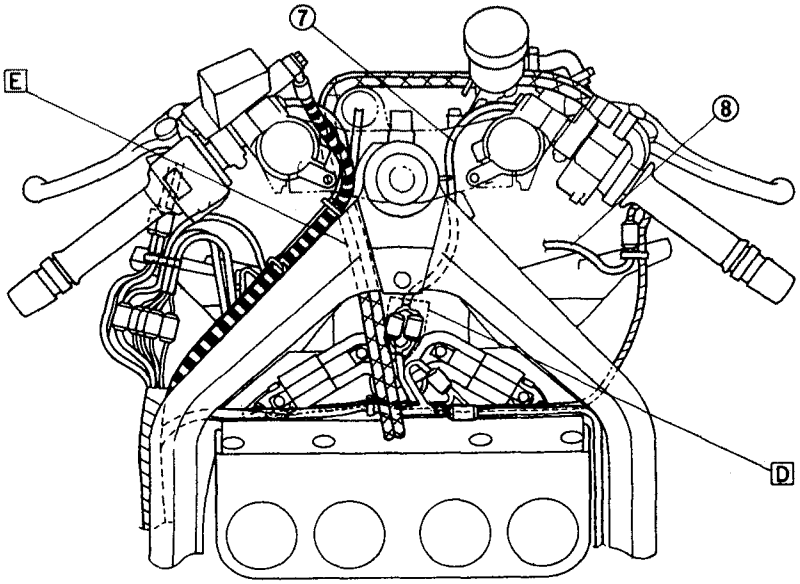

① Coolant reservoir
② Coolant reservoir breather hose
③ Fuel tank overflow hose
④ Air filter case breather hose
⑤ Handlebar switch lead (right)
⑥ Thermo switch
⑦ Thermo unit
⑧ Ground lead
⑨ EXUP motor
⑩ Ground lead (battery)
⑪ Coolant reservoir hose
⑫ Rollover hose (for D)

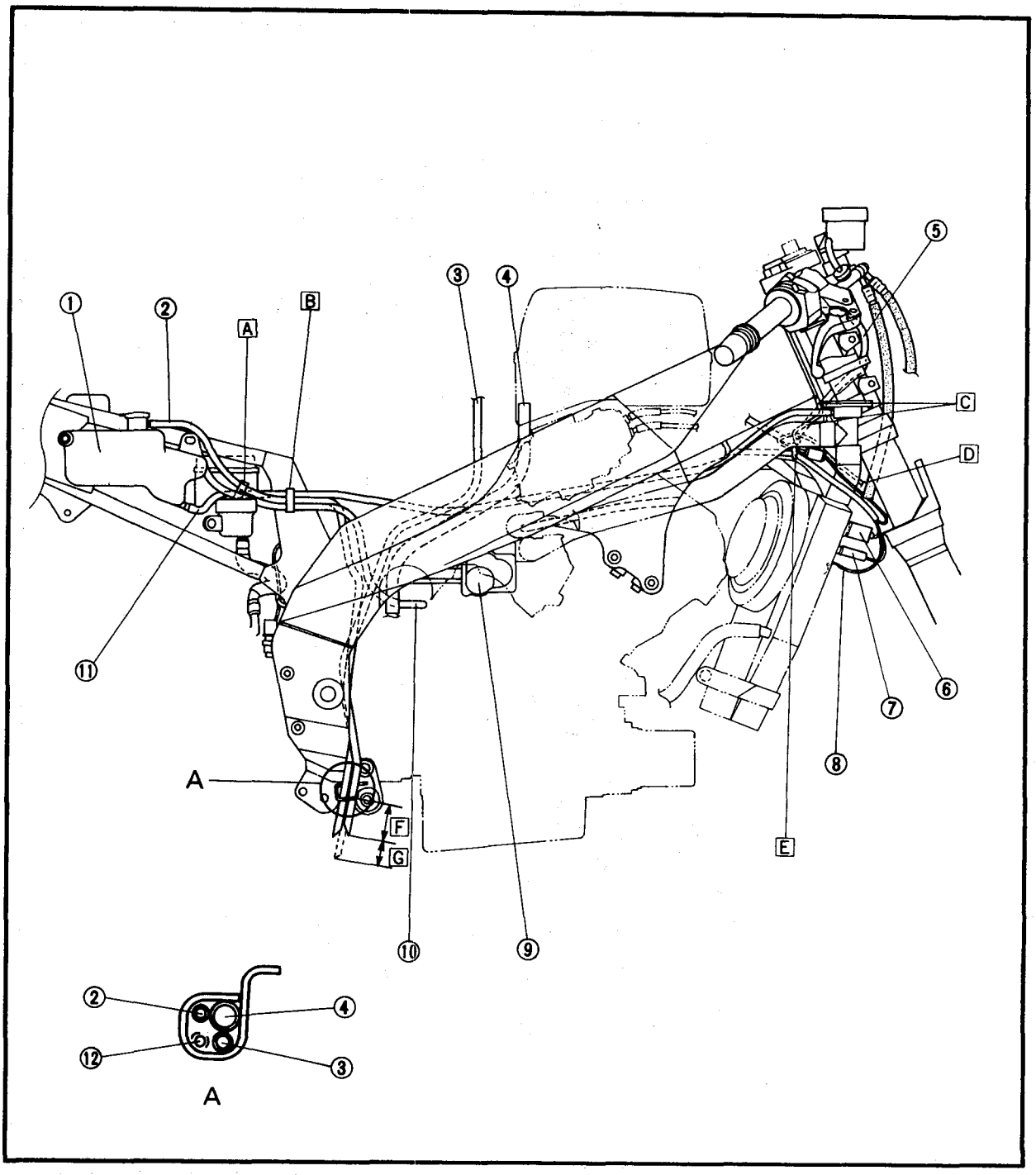

[A] Use a plastic guide to fasten the coolant reservoir hose and coolant reservoir breather hose on the brake reservoir.
[B] Pass the coolant reservoir hose, coolant reservoir breather hose and battery ground lead through the plastic clamp.
[C] Use a metal guide to fasten the right handlebar switch lead.
[D] Be sure there is no slack in the fan motor lead in front of the radiator.
[E] Use a plastic band to fasten the radiator sub lead and wire harness, then insert the projection on the plastic band into the hole in the ignition coil plate. Be sure the end of the plastic band faces outward.
[F] Coolant reservoir breather hose: 40 ~ 60 mm
[G] Other hose(s): max. 30 mm

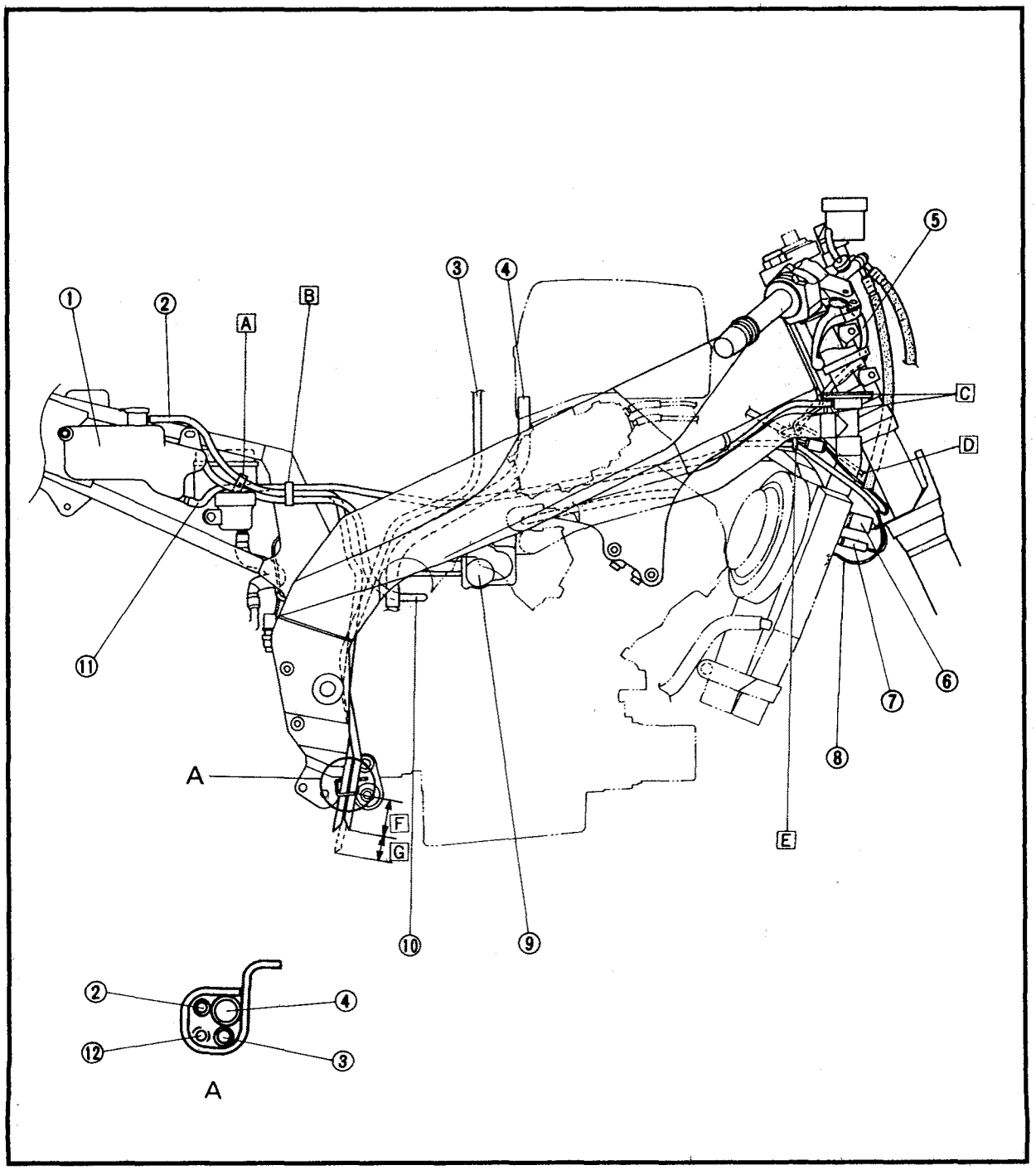

① Main fuse
② Starter relay
③ Sidestand switch
④ GPS (gear position switch) lead
⑤ Pickup coil lead
⑥ Oil level switch relay
⑦ Ignitor unit
⑧ Flasher relay
⑨ Relay assembly
⑩ Air filter case breather hose
⑪ Fuel tank overflow hose
⑫ Coolant reservoir breather hose
⑬ Rollover hose (for D)
⑭ EXUP cable

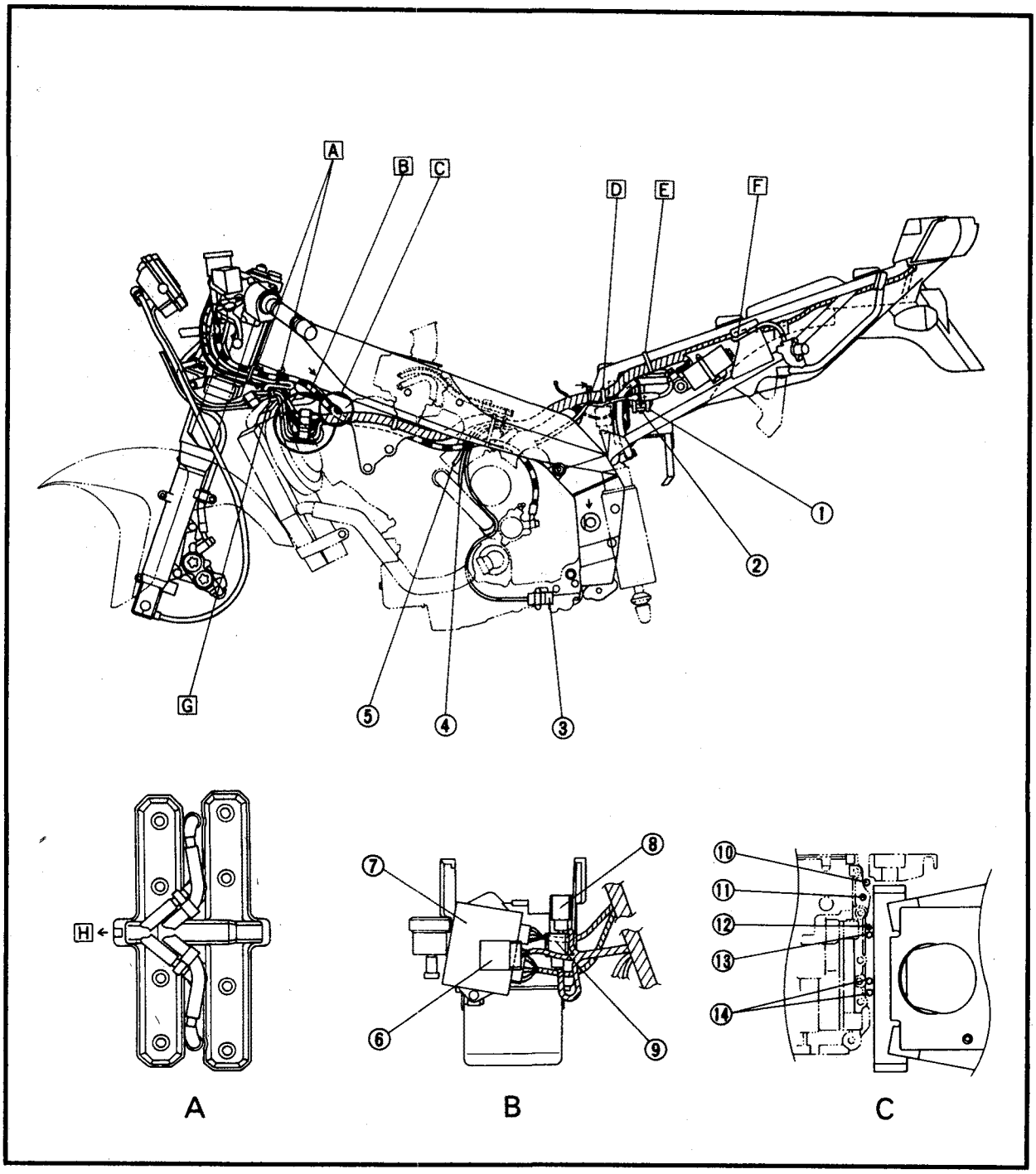

[A] Fasten the clutch hose, starter cable, left handlebar switch lead and main switch lead with the metal guides; the items should be installed in the order listed with the first item on top.
[B] Place the couplers on top of the ignition coil plate.
[C] Install the wire harness, starter cable and clutch cable in the order listed with the first item on top.
[D] Use a plastic clamp to fasten the wire harness at the position marked with white tape.
[E] Pass the seat lock cable under the wire harness.
[G] Use a plastic band to fasten the meter lead, headlight sub lead, fan motor lead, main switch lead and left handlebar switch lead, then insert the hook on the plastic band into the hole in the ignition coil plate.
[H] Front

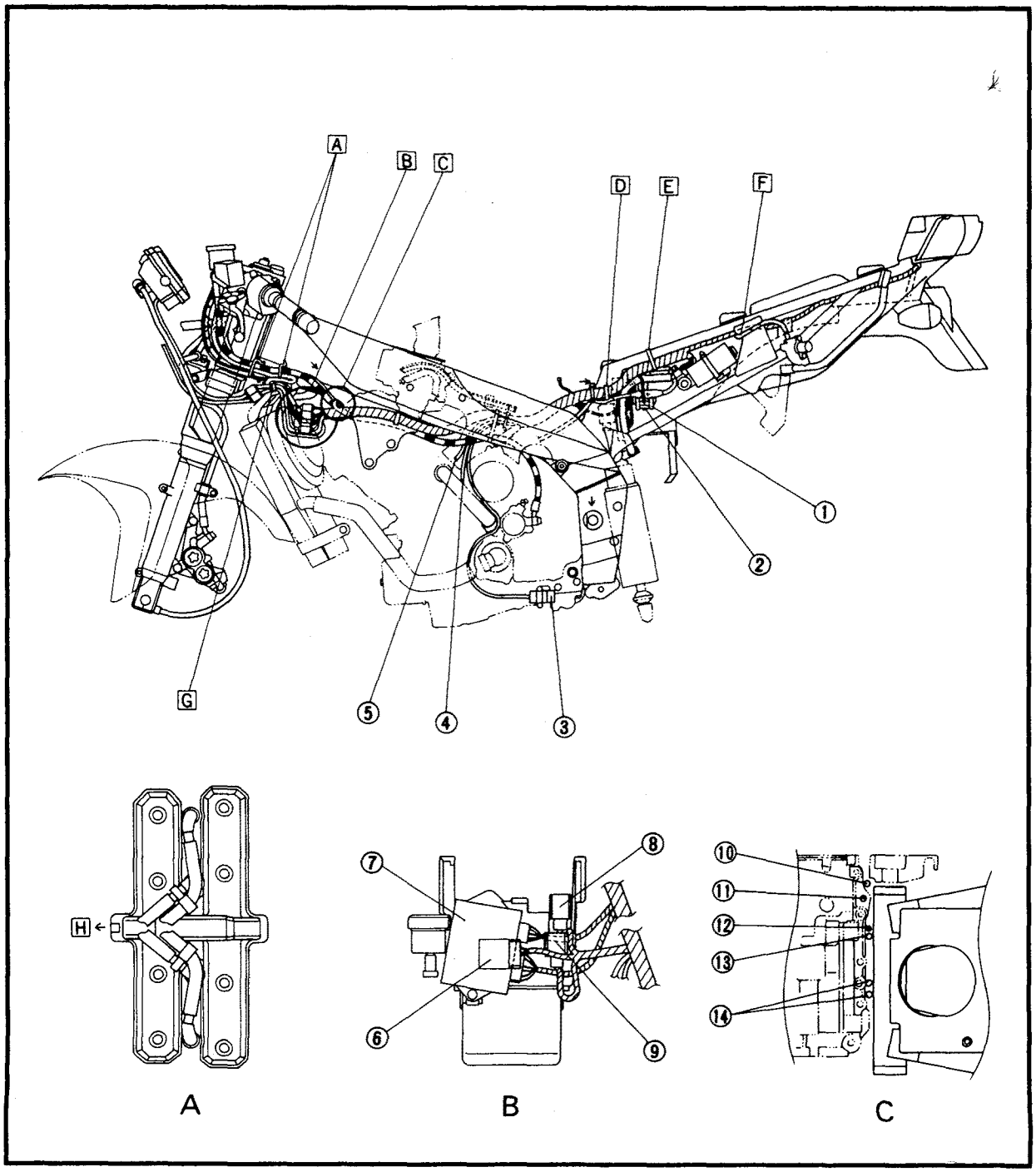

① Rear brake switch lead
② Battery ⊖ lead
③ Battery ⊕ lead
④ Sidestand switch lead

[A] Use a plastic band to fasten the starter motor lead, AC generator lead, GPS (gear position switch) lead, sidestand switch lead and pickup coil lead. Fold the AC generator lead so that there is no slack in it.
[B] Be sure the wire harness does not contact the EXUP servo motor.
[C] Pass the EXUP cables over the ground lead and then pass the other leads and hose over the EXUP cables.
[D] Pull the rubber covers over the EXUP servo motor coupler, rear brake switch coupler, GPS (gear position switch) coupler and pickup coil coupler, then insert them between the EXUP cables and the starter motor.

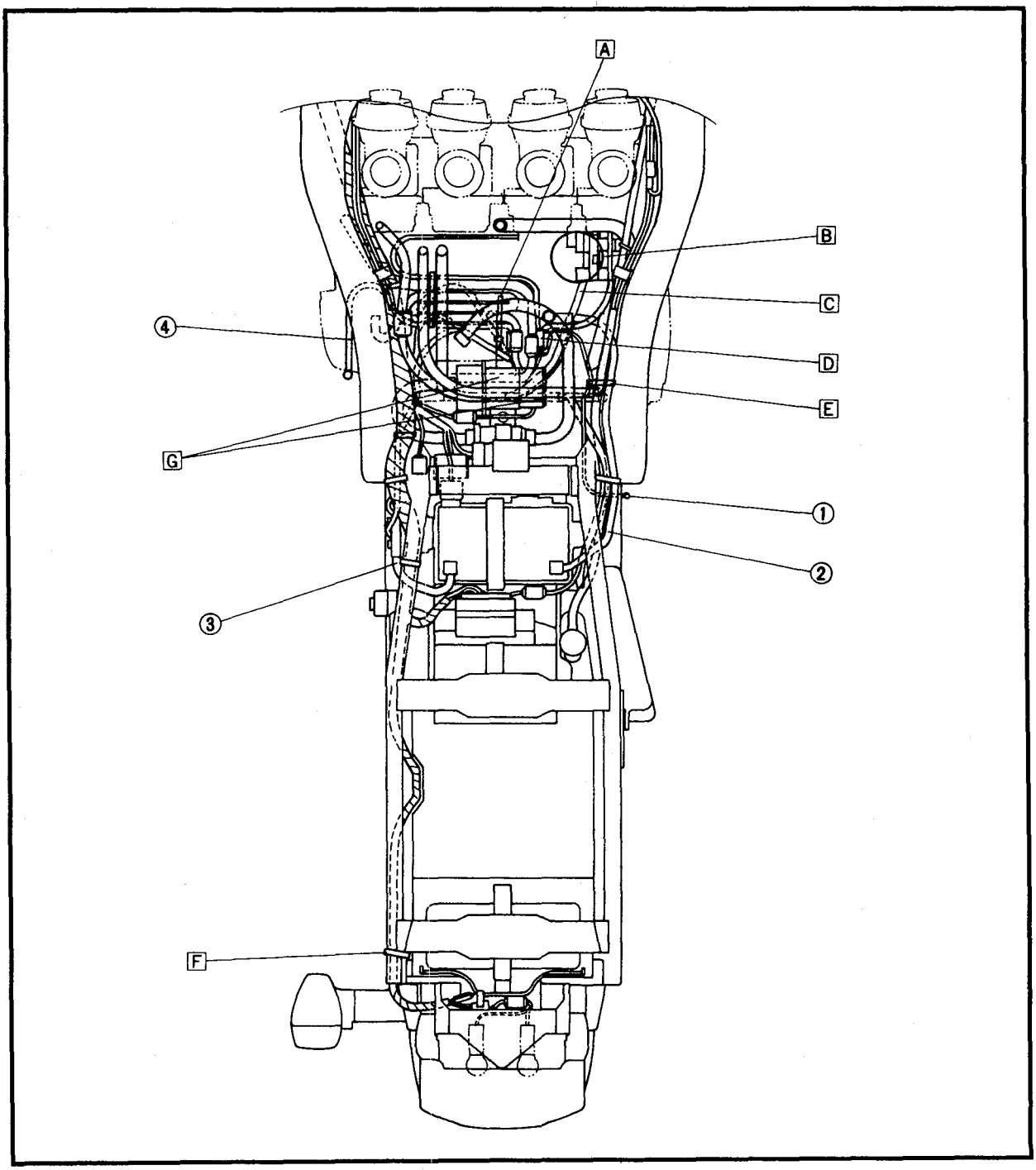

[E] Use a plastic band to fasten the ground lead, coolant reservoir hose and rear brake switch lead.
[F] Use a plastic locking tie to fasten the wire harness to the frame, then cut off the excess locking tie.
[G] Pass the air filter case breather hose and fuel tank overflow hose over the fuel pump, then pass the wire harness under the fuel pump.

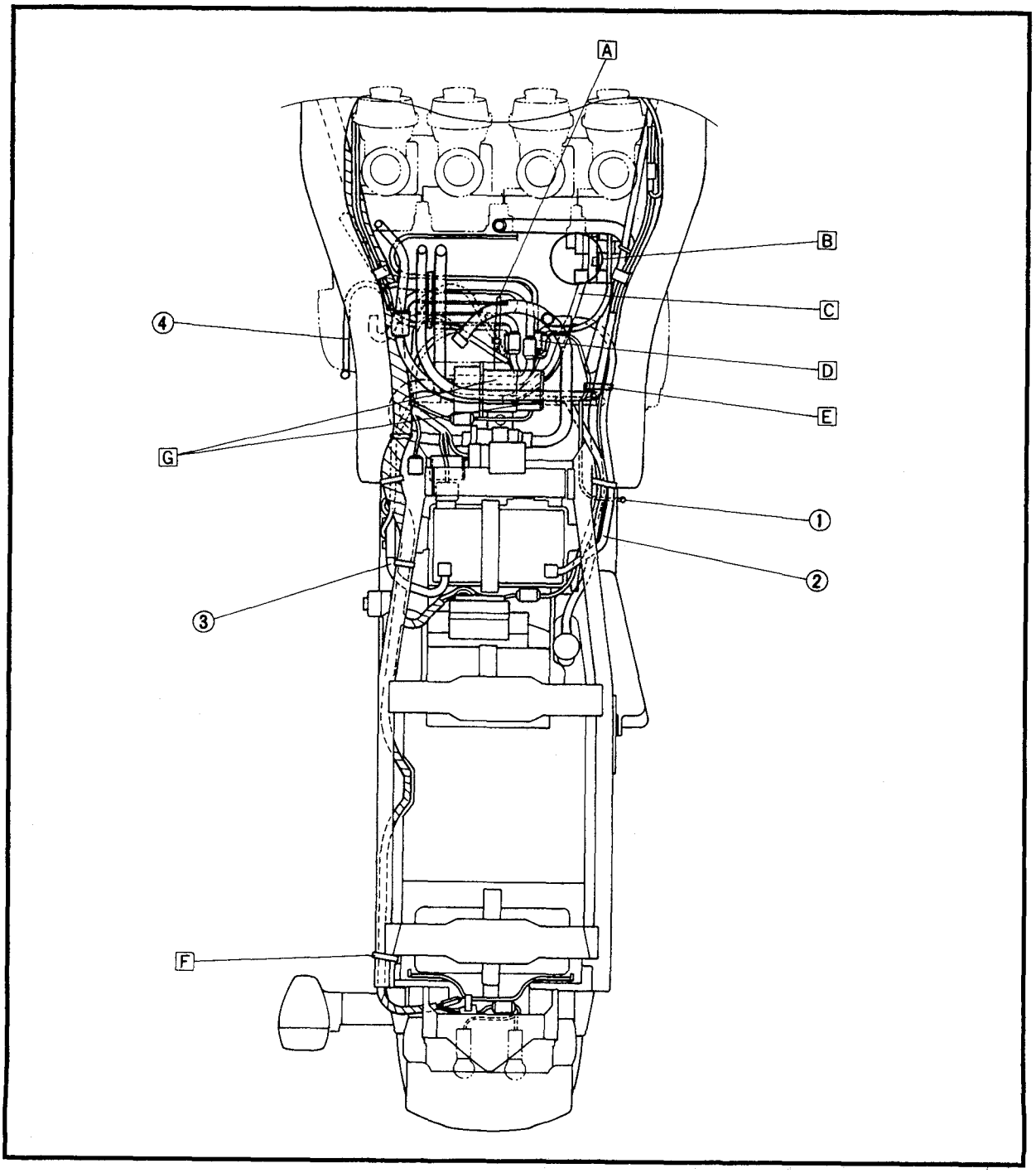

EMISSION HOSE ROUTING (California only)

① Canister ass'y
② Fuel tank
③ Roll over valve assembly
④ Hose (canister-roll over valve)
⑤ Clip
⑥ Hose (Roll over valve-fuel tank)
⑦ Hose (Canister-joint)
⑧ Joint
⑨ Hose (joint-carburetor)
⑩ Hose (Canister-atmosphere)

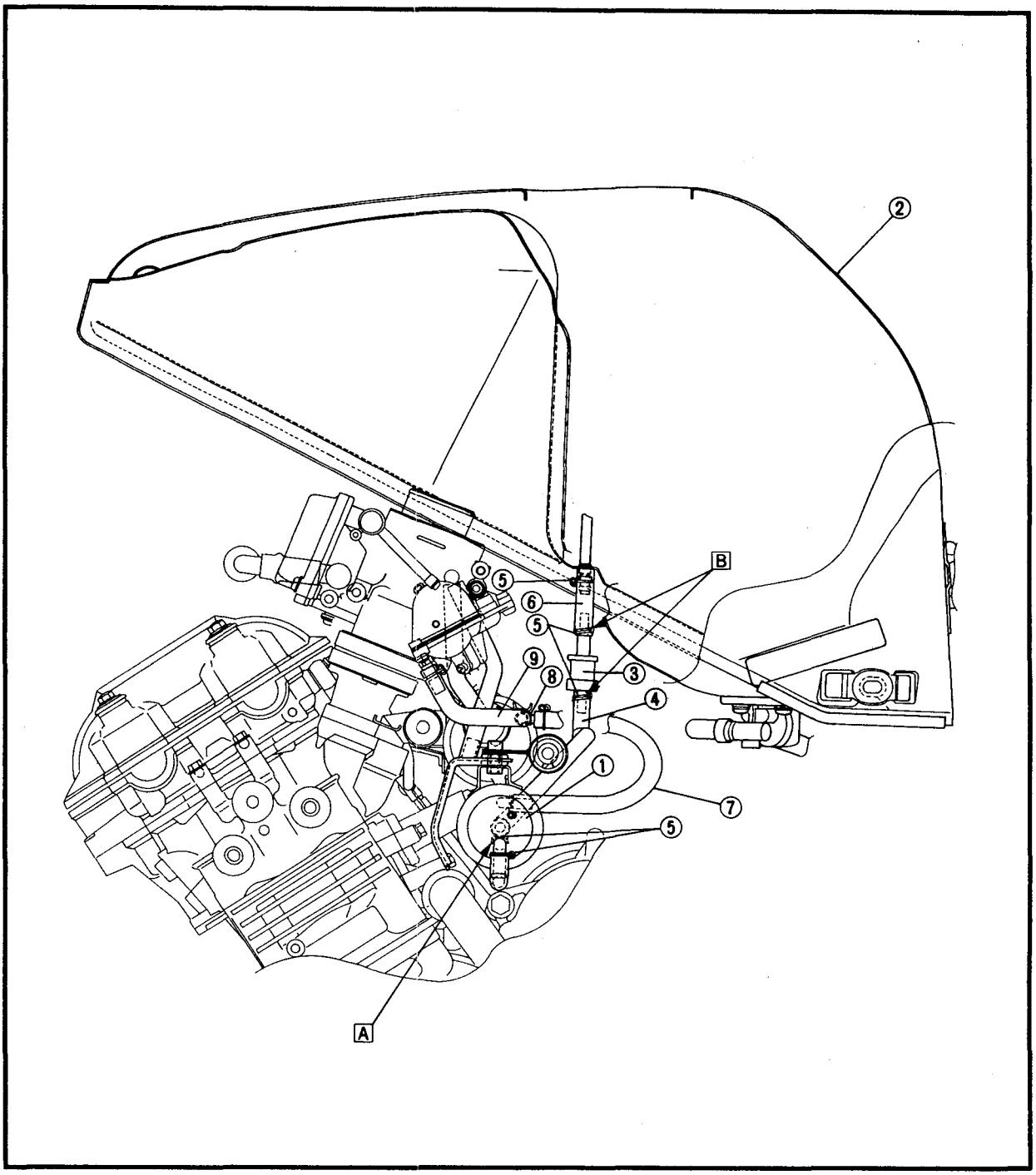

[A] The ends of the metal clip should face down.
[B] The ends of the metal clip should face in.
[C] Pass the hose (canister-atmosphere) under oil delivery pipe #2
[D] Attach the hose (Canister-roll over valve) to the lower pipe on the canister. The white paint mark on the hose should face up.

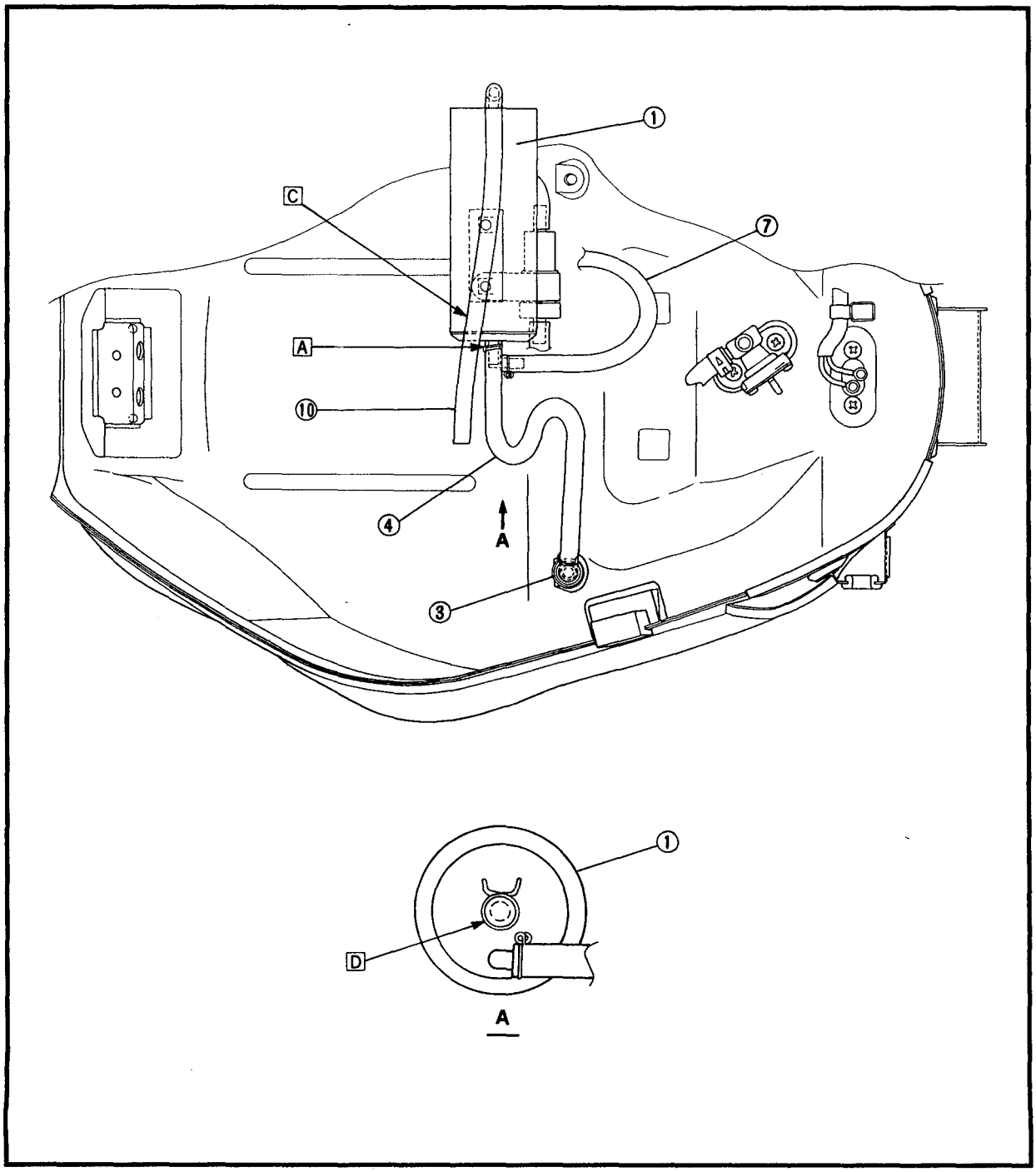

EB300000

PERIODIC INSPECTIONS AND ADJUSTMENTS

INTRODUCTION

This chapter includes all information necessary to perform recommended inspections and adjustments. These preventive maintenance procedures, if followed, will ensure more reliable vehicle operation and a longer service life. The need for costly overhaul work will be greatly reduced. This information applies to vehicles already in service as well as to new vehicles that are being prepared for sale. All service technicians should be familiar with this entire chapter.

EB301000

PERIODIC MAINTENANCE/EMISSION CONTROL SYSTEM

NO.		ITEM	REMARKS	INITIAL	ODOMETER READINGS				
				1,000 km (600 mi) or 1 month	7,000 km (4,400 mi) or 7 months	13,000 km (8,200 mi) or 13 months	19,000 km (12,000 mi) or 19 months	25,000 km (15,800 mi) or 25 months	31,000 km (19,600 mi) or 31 months
1	*	**Valve clearance**	• Check and adjust valve clearance when engine is cold.	Every 42,000 km (26,600 mi)					
2		**Spark plugs**	• Check condition. • Adjust gap and clean. • Replace at 13,000 km (or 13 months) and thereafter every 12,000 km (or 12 months).		○	Replace	○	Replace	○
3	*	**Crankcase ventilation system**	• Check ventilation hose for cracks or damage. • Replace if necessary.		○	○	○	○	○
4	*	**Fuel line**	• Check fuel hose for cracks or damage. • Replace if necessary.		○	○	○	○	○
5	*	**Fuel filter**	• Replace initial 31,000 km (19,600 mi) and thereafter every 30,000 km (19,000 mi).						Replace
6	*	**Exhaust system**	• Check for leakage. • Retighten if necessary. • Replace gasket(s) if necessary.		○	○	○	○	○
7	*	**Carburetor Synchronization**	• Adjust synchronization of carburetors.	○	○	○	○	○	○
8	*	**Idle speed**	• Check and adjust engine idle speed. • Adjust cable free play.		○	○	○	○	○
9	*	**Evaporative emission control system (For California only)**	• Check control system for damage. • Replace if necessary.				○		○

Items marked with an asterisk (*) require special tools, data and technical skills for servicing.

NOTE:

For odometer readings or time periods higher than 31,000 km (19,600 mi) or 31 months repeat the same maintenance as listed in the table from the 7,000 km (4,400 mi) or 7 months every 6,000 km (3,800 mi) or 6 month interval.

GENERAL MAINTENANCE/LUBRICATION

NO.		ITEM	REMARKS	INITIAL	ODOMETER READINGS				
				1,000 km (600 mi) or 1 month	7,000 km (4,400 mi) or 7 months	13,000 km (8,200 mi) or 13 months	19,000 km (12,000 mi) or 19 months	25,000 km (15,800 mi) or 25 months	31,000 km (19,600 mi) or 31 months
1		**Engine oil**	• Replace (Warm engine before draining). (See NOTE)	○	○	○	○	○	○
2	*	**Engine oil filter**	• Replace at 1,000 km (600 mi) or 1 month, and thereafter every 12,000 km (7,600 mi) or 12 months.	○		○		○	
3	*	**Air filter**	• Clean with compressed air. • Replace if necessary.		○	○	○	○	○
4	*	**Cooling system**	• Check hose for cracks or damage. • Replace if necessary.		○	○	○	○	○
			• Replace coolant every 24 months.					Replace	
5	*	**Brake system**	• Check operation, pad wear, and fluid leakage. (See NOTE) • Correct if necessary.	○	○	○	○	○	○
6	*	**Clutch**	• Check operation and fluid leakage (See NOTE) • Correct if necessary.	○	○	○	○	○	○
7	*	**Control and meter cable**	• Apply chain lube thoroughly.	○	○	○	○	○	○
8	*	**Swing arm pivot bearing**	• Check bearing assembly for looseness. • Moderately repack every 24,000 km (15,200 mi) or 24 months.			○		○ Repack	
9	*	**Rear suspension link pivots**	• Check operation. • Apply grease lightly every 24,000 km (15,200 mi) or 24 months.			○		○	
10	*	**Rear shock absorber**	• Check operation and oil leakage. • Replace if necessary.		○	○	○	○	○
11	*	**Front fork**	• Check operation and leakage. • Replace if necessary.		○	○	○	○	○
12	*	**Steering bearings**	• Check bearing assembly for looseness. • Moderately repack every 24,000 km (15,200 mi).		○	○	○	○ Repack	○
13		**Brake/Clutch lever pivot shaft**	• Apply chain lube lightly.		○	○	○	○	○
14		**Brake pedal and shift pedal shafts**	• Apply chain lube lightly.		○	○	○	○	○
15	*	**Drive chain**	• Check chain slack/alignment condition. • Adjust and lubricate chain thoroughly.	Every 1,000 km (600 mi)					
16	*	**Wheel bearings**	• Check bearing for smooth rotation.		○	○	○	○	○
17	*	**Sidestand pivot**	• Check operation and lubricate. • Apply chain lube lightly.		○	○	○	○	○
18	*	**Sidestand switch**	• Check and clean or replace if necessary.	○	○	○	○	○	○
19	*	**Chassis fasteners**	• Check all chassis fittings and fasteners. • Correct if necessary.		○	○	○	○	○

Items marked with an asterisk (*) require special tools, data and technical skills for servicing.

NOTE:

- The air filter needs more frequent service if you are riding in unusually wet or dusty areas.
- For odometer readings or time periods higher than 31,000 km (19,600 mi) or 31 months repeat the same maintenance as listed in the table from the 7,000 km (4,400 mi) or 7 months every 6,000 km (3,800 mi) or 6 month interval.
- Brake fluid replacement:

1. When disassembling the master cylinder or caliper cylinder, replace the brake fluid. Normally check the brake fluid level and add the fluid as required.
2. On the inner parts of the master cylinder and caliper cylinder, replace the oil seals every two years.
3. Replace the brake hoses every four years, or if cracked or damaged.

- Engine oil type:

  YAMALUBE 4 (20W40) or SAE 20W40 type "SE" motor oil for temperatures 5°C (40°F) or above.

  YAMALUBE 4 (10W30) or SAE 10W30 type "SE" motor oil for temperatures 15°C (60°F) or below.

EB302003

COWLINGS

① Windshield
② Rear view mirror
③ Upper cowling
④ Cowling stay (upper)
⑤ Cowling stay (lower)
⑥ Side panel (right)
⑦ Side panel (left)

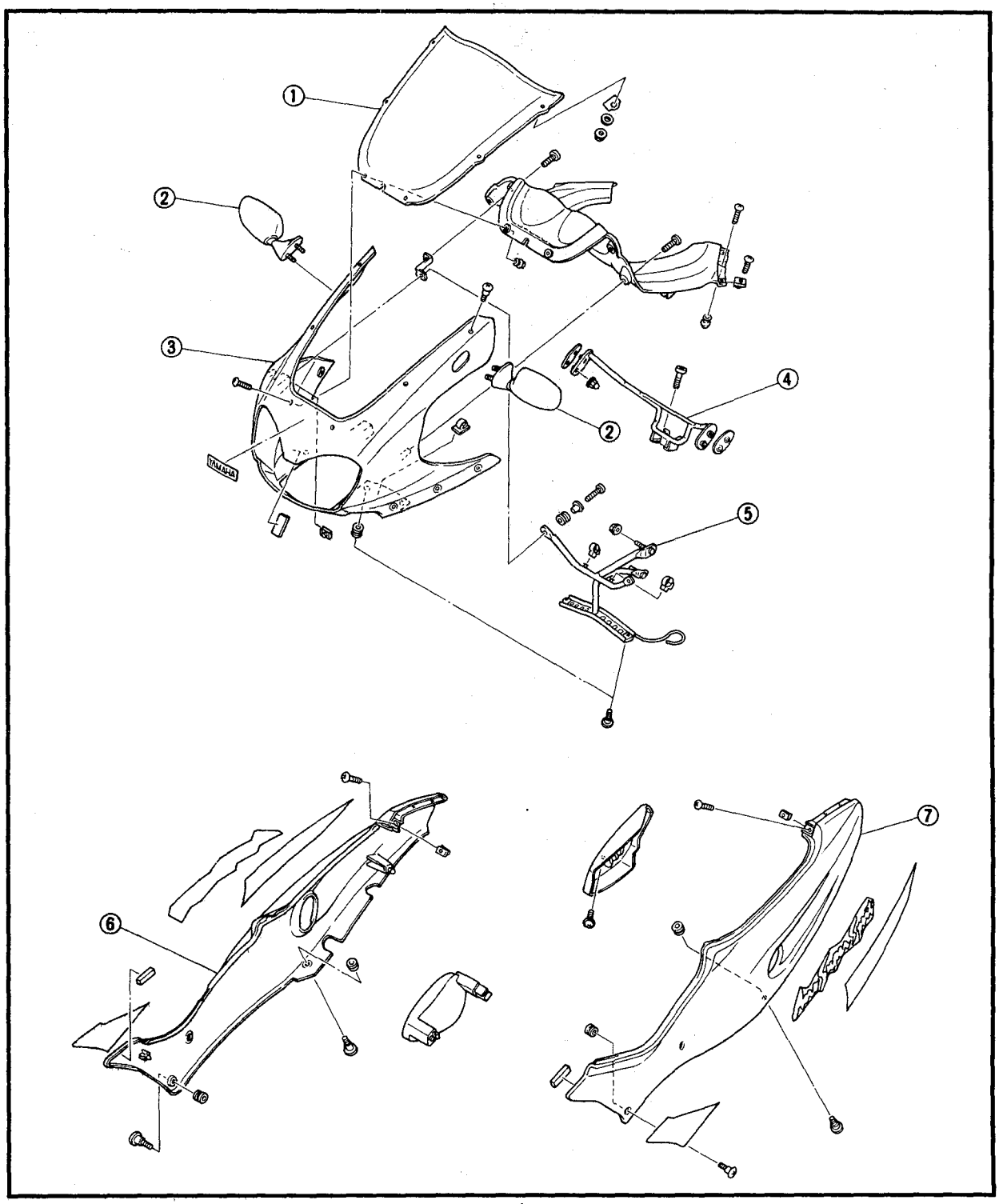

① Side cowling (right)
② Side cowling (left)
③ Bottom cowling
④ Bottom cowling (front)

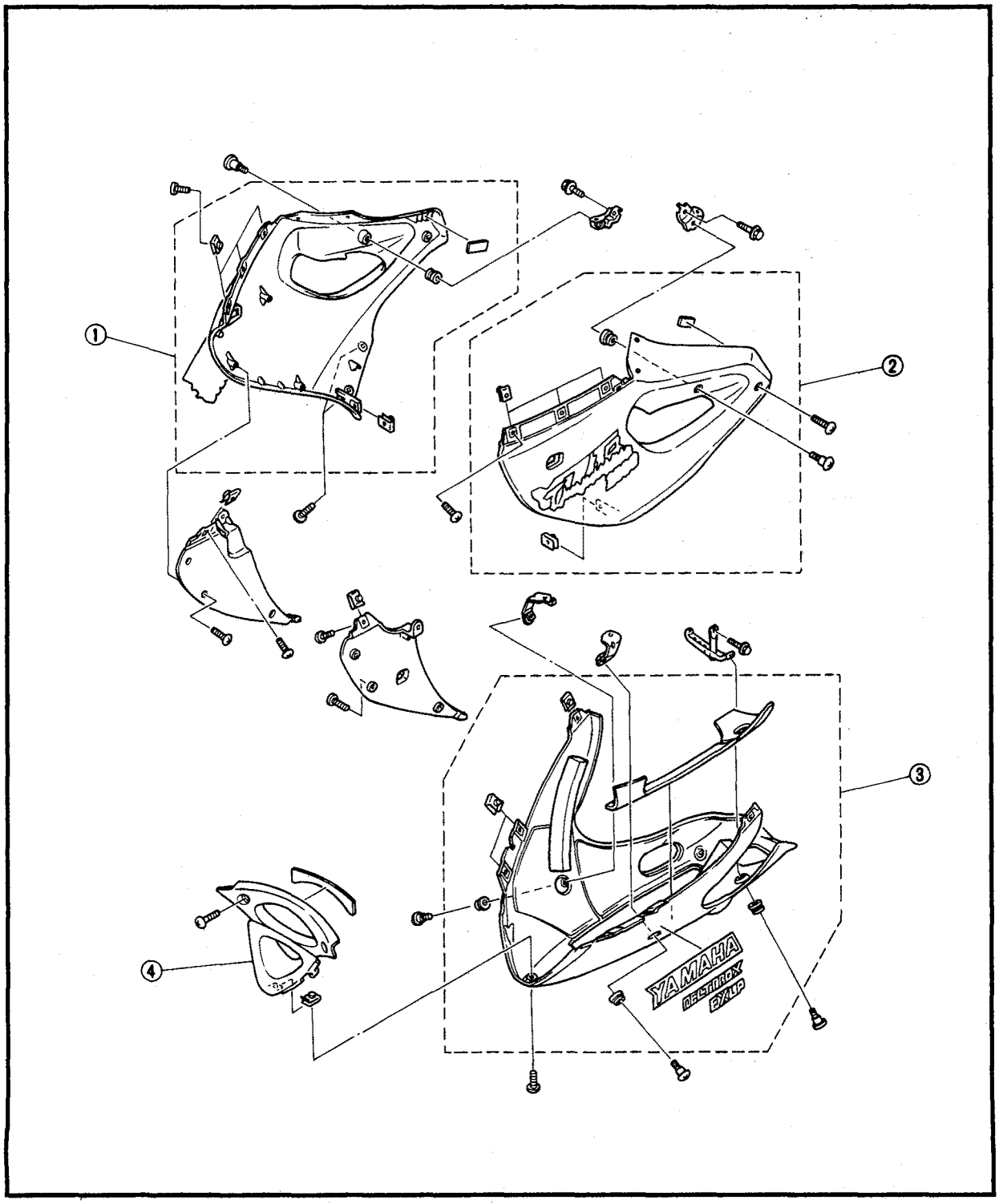

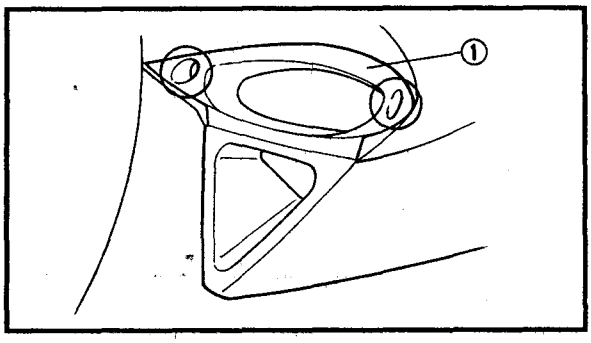

REMOVAL

1.Remove:
- Bottom cowling (front) ①

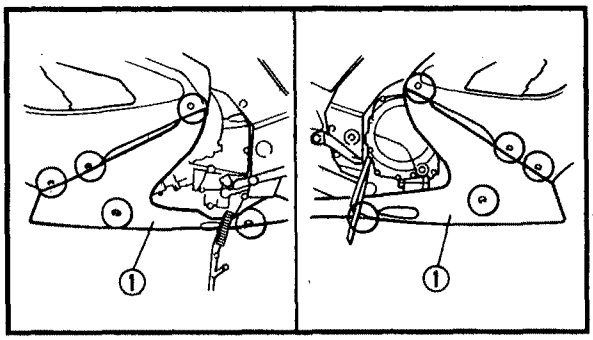

2.Remove:
- Bottom cowling ①

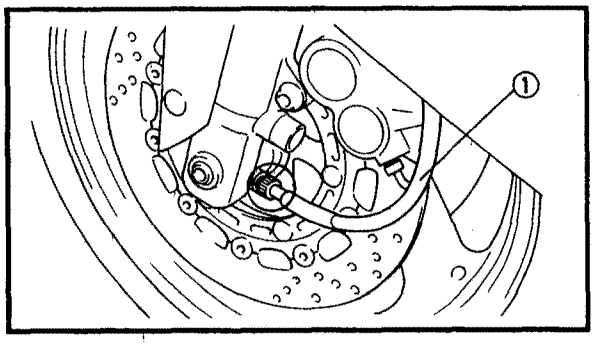

3.Remove:
- Speedometer cable ①

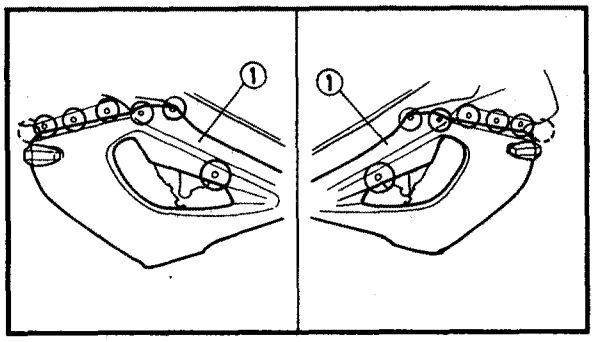

4.Disconnect:
- Side cowlings (left and right) ①

5.Disconnect:
- Front flasher light leads (left and right)

NOTE:
Remove the speedometer cable from the guide on the inside of the left cowling.

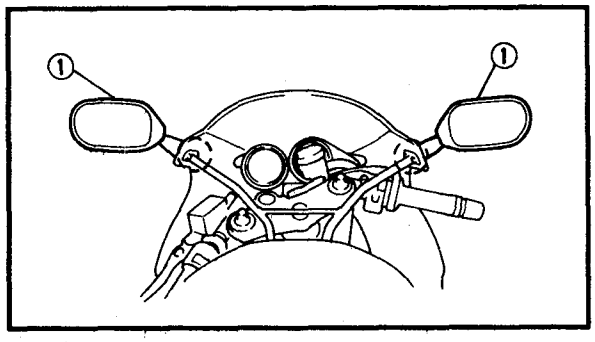

6.Remove:
- Rear view mirrors (left and right) ①

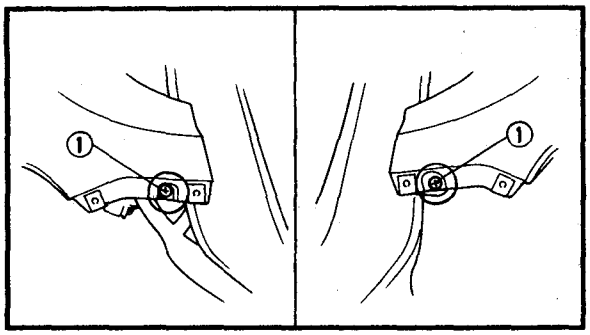

7.Remove:
- Screws (left and right) ①
  (on the instrument panel cover)

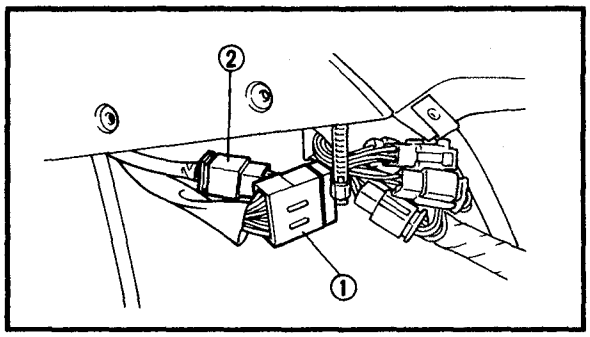

8.Disconnect:
- Meter assembly coupler ①
- Headlight/front flasher lights coupler ②

NOTE:
The arrow on the rubber dampers face towards the front of the motorcycle.

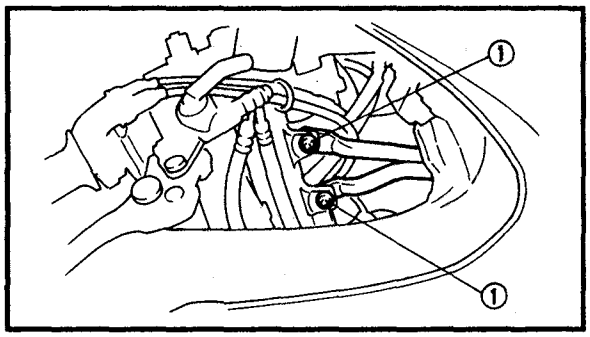

9.Remove:
- Nuts (front cowling stay) ①

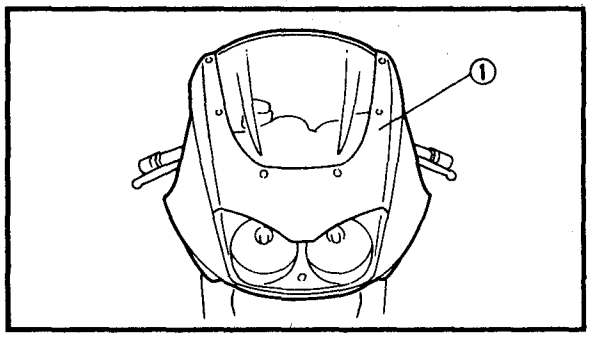

10.Remove:
- Front cowling assembly ①

INSTALLATION
Reverse the "REMOVAL" procedure.

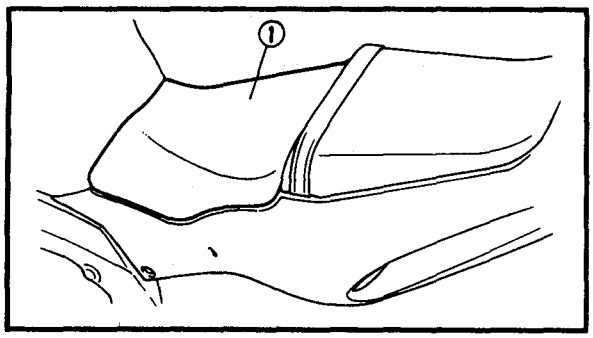

EB302001
SEATS

REMOVAL

1.Remove:
- Rider seat ①

NOTE:
Insert the key into the helmet lock and turn the key to the left.

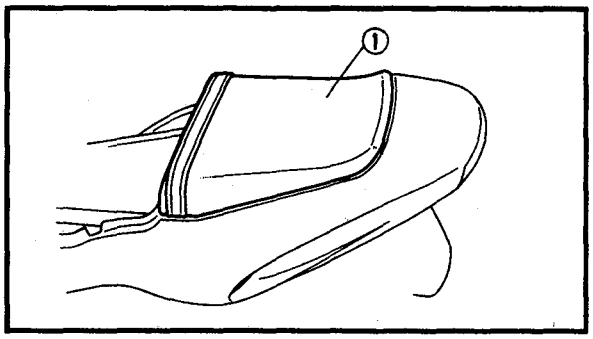

2.Remove:
- Passenger seat ①

NOTE:
Lift up the passenger seat and pull it forward.

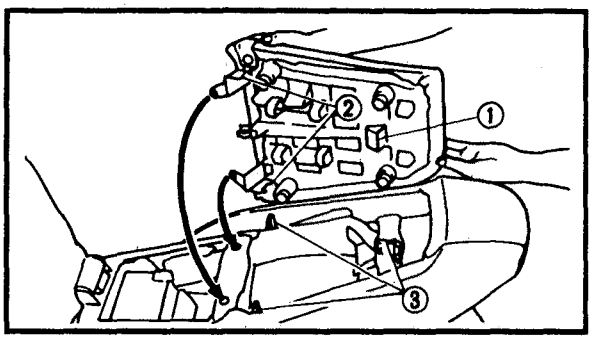

INSTALLATION

Reverse the "REMOVAL" procedure.
Note the following points.

1.Install:
- Passenger seat

NOTE:
When installing the passenger seat, insert the projection ① on the back of the seat into the receptacle ③ on the frame. Then slide the projections ② on the front of the seat into the receptacles ③ on the frame and push down the front of the seat.

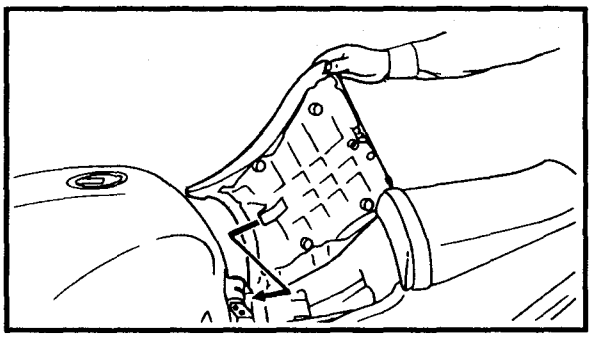

2.Install:
- Rider seat

NOTE:
When installing the rider seat, insert the projection on the front of the seat into the receptacle on the frame and then push down the seat end.

EB302002
FUEL TANK

REMOVAL

1.Remove:
- Rider seat
- Passenger seat

Refer to "SEATS".

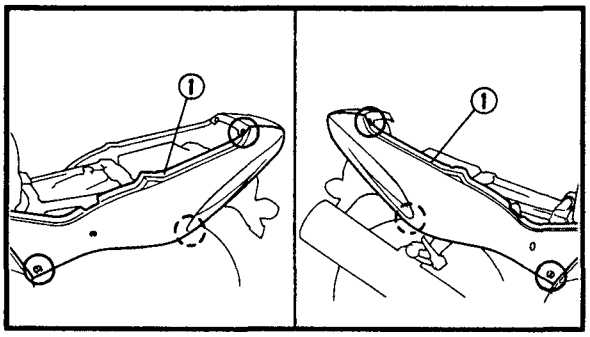

2.Remove:
- Side panels (left and right) ①

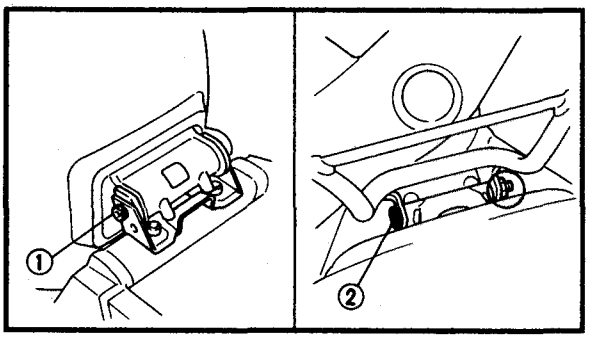

3.Remove:
- Bolt ①
- Bolt ②

4.Turn the fuel cock to "OFF".

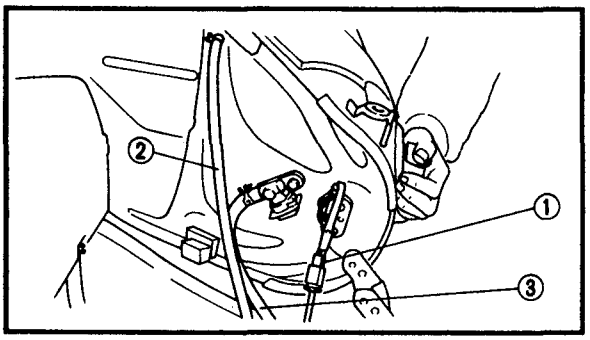

5.Disconnect:
- Fuel sender coupler ①
- Drain hose (fuel tank) ②
- Fuel hose ③

NOTE:
Place a rag under the fuel line to absorb any fuel that might spill.

⚠ WARNING
Gasoline is highly flammable.
Avoid spilling fuel onto a hot engine.

6.Remove:
- Fuel tank

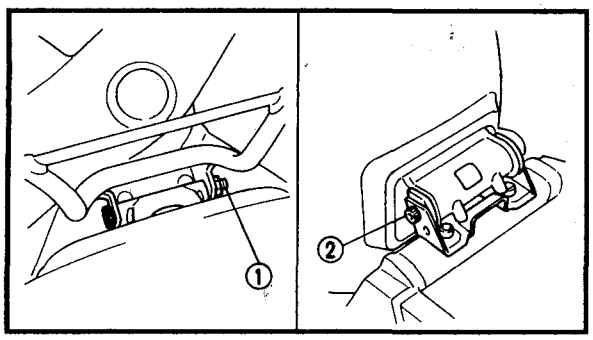

INSTALLATION

Reverse the "REMOVAL" procedure.
Note the following points.

1.Install:

- Fuel tank

Nut ①:
10 Nm (1.0 m • kg, 7.2 ft • lb)
Bolt ②:
10 Nm (1.0 m • kg, 7.2 ft • lb)

EB303001

ENGINE

VALVE CLEARANCE ADJUSTMENT

NOTE:

- Valve clearance adjustment should be made with the engine cool, at room temperature.
- When the valve clearance is to be measured or adjusted, the piston must be at Top Dead Center (T.D.C.) on the compression stroke.

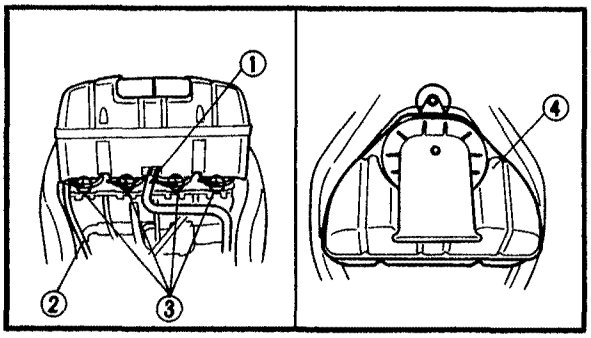

1. Remove:
- Rider seat
- Passenger seat
- Side panels (left and right)
- Fuel tank
- Bottom cowling (front)
- Bottom cowling
- Side cowlings (left and right)

Refer to "SEATS", "FUEL TANK" and "COWLINGS".

2. Disconnect:
- Breather hose (crankcase) ①
- Drain hose (air filter case) ②

3. Loosen:
- Clamp screws (carburetor joints) ③

4. Remove:
- Air filter case ④

5. Remove:
- Radiator assembly

Refer to "RADIATOR" in CHAPTER 5.

6. Remove:
- Carburetor assembly

Refer to "CARBURETORS" in CHAPTER 6.

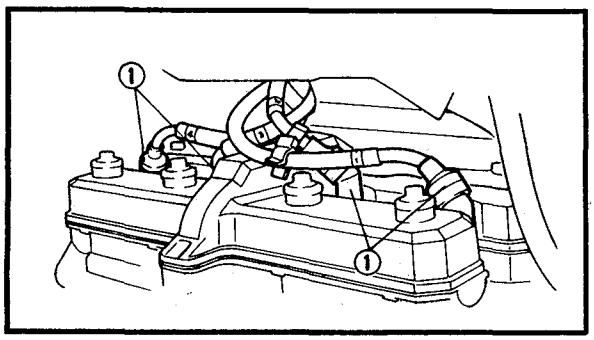

7. Disconnect:
- Spark plug caps ①

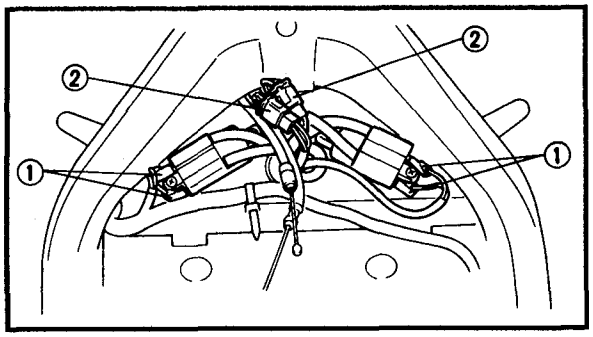

8.Disconnect:
- Leads (ignition coils) ①
- Couplers (right handlebar switch) ②

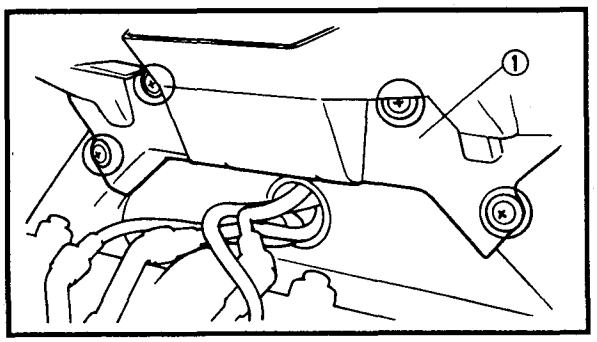

9.Remove:
- Ignition coil plate ①
  (with the ignition coils)

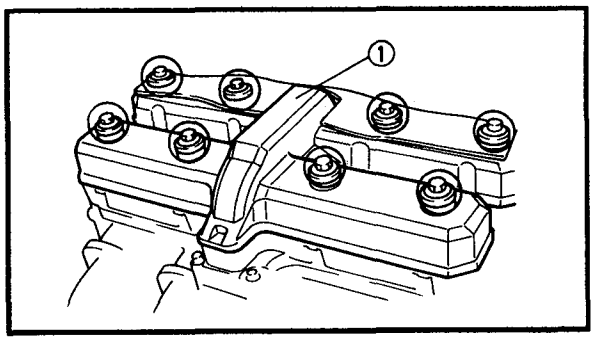

10.Loosen:
- Spark plugs

11.Remove:
- Cylinder head cover ①
- Gasket (cylinder head cover)

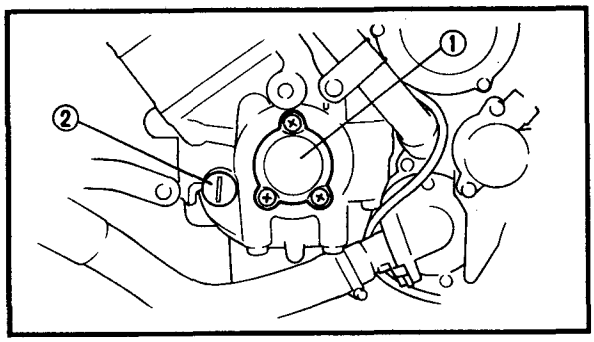

12.Remove:
- Crankshaft end cover (left) ①
  (with the O-ring)
- Timing plug ②
  (with the O-ring)

13.Measure:
- Valve clearance
  Out of specification → Adjust.

Valve clearance (cold):
Intake valve:
0.11 ~ 0.20 mm (0.004 ~ 0.008 in)
Exhaust valve:
0.21 ~ 0.30 mm (0.008 ~ 0.012 in)

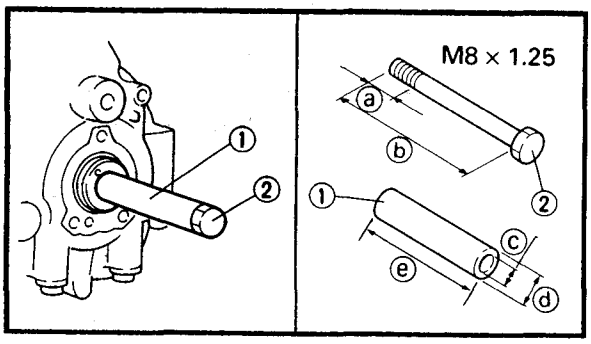

****

Measuring steps:

Procedure 1.

- Install a suitable collar ① and a bolt ② and then tighten the bolt.

ⓐ 15 mm (0.6 in) ⓓ 12 mm (0.5 in)
ⓑ 75 mm (3.0 in) ⓔ 60 mm (2.4 in)
ⓒ 8 mm (0.3 in)

- Turn the crankshaft counterclockwise.

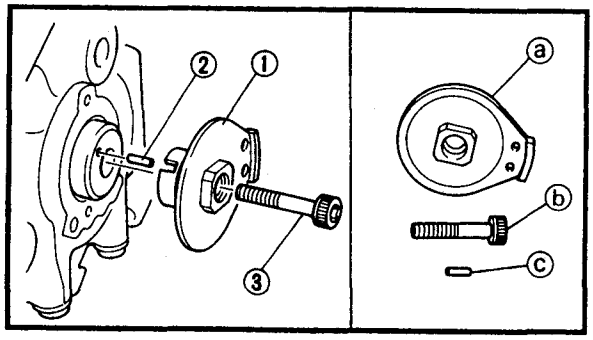

Procedure 2.

- Insert the pin ②, use it to position the pick-up rotor ①, then install the bolt ③.

Part no. ⓐ 4U8-81673-10 or 33M-81673-10
ⓑ 91317-08030
ⓒ 93604-08071

- Turn the crankshaft counterclockwise.

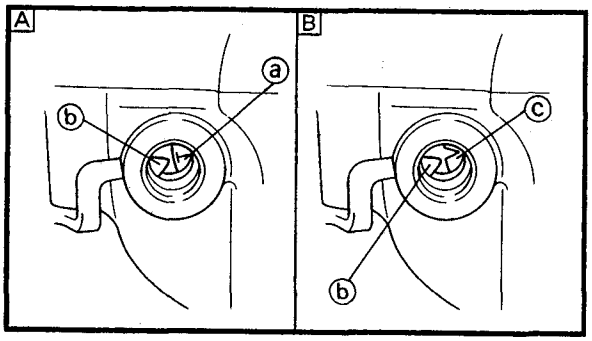

A For #1 and #4 cylinders.

- Align the TDC mark ⓐ with the stationary pointer ⓑ.

B For #2 and #3 cylinders.

- Align the TDC mark ⓒ with the stationary pointer ⓑ.

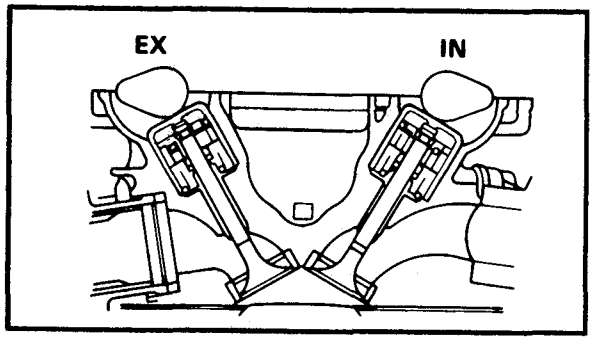

NOTE:
TDC on the compression stroke can be found when the cam lobes are facing opposite one another.

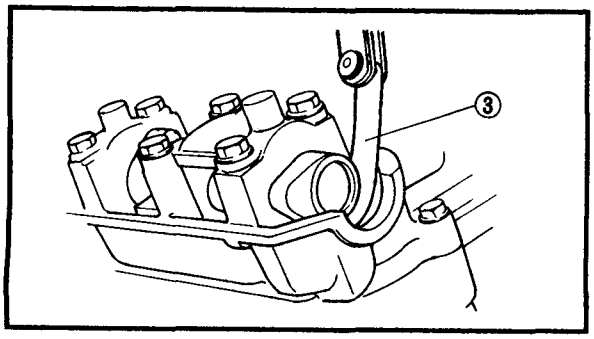

- Use a feeler gauge ③ to measure the valve clearance.

NOTE:

- If the valve clearance is incorrect record the measured reading.
- Measure the valve clearance in the following sequence.

Measuring sequence:
#1 → #2 → #4 → #3

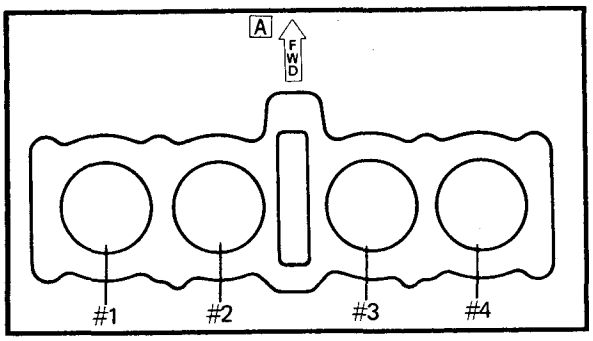

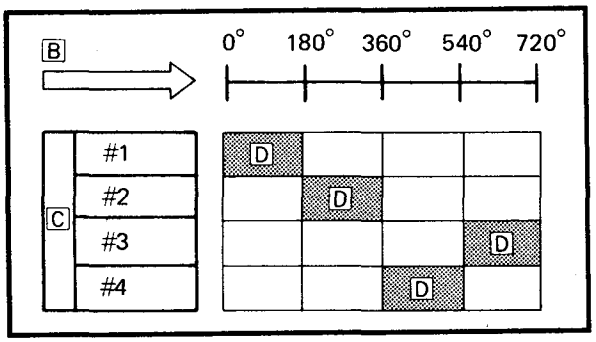

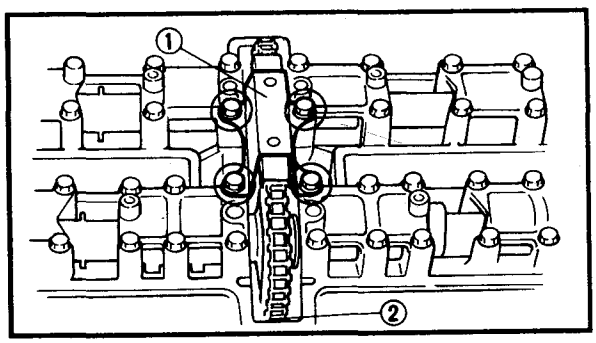

A Front

- Starting from the #1 cylinder when it is at TDC turn the crankshaft counterclockwise the specified amount of degrees for each cylinder. Refer to the chart below.

B The degrees that the crankshaft is turned counterclockwise

C Cylinder number

D Combustion

#2 Cylinder	**180 degrees**
#4 Cylinder	**360 degrees**
#3 Cylinder	**540 degrees**

****

14.Remove:

- Timing chain tensioner
- Timing chain guide (upper) ①
- Timing chain guide (exhaust side) ②
- Camshaft caps (intake and exhaust)
- Timing chain
- Camshafts (intake and exhaust)

NOTE:

- Refer to "ENGINE DISASSEMBLY – CYLINDER HEAD COVER, CYLINDER HEAD AND CAMSHAFTS" in CHAPTER 4.
- When removing the timing chain or camshafts, fasten a wire to the timing chain to retrieve it if it falls into the crankcase.

15.Adjust:

- Valve clearance

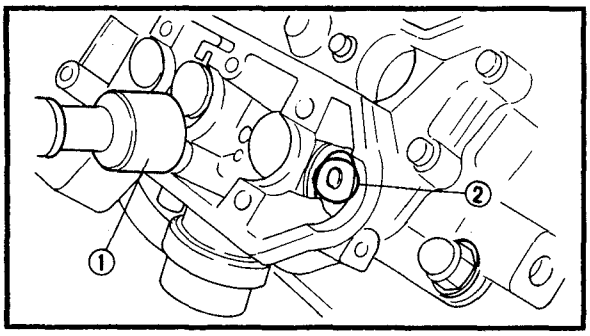

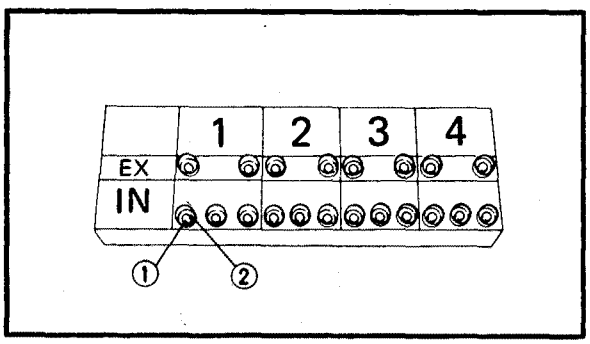

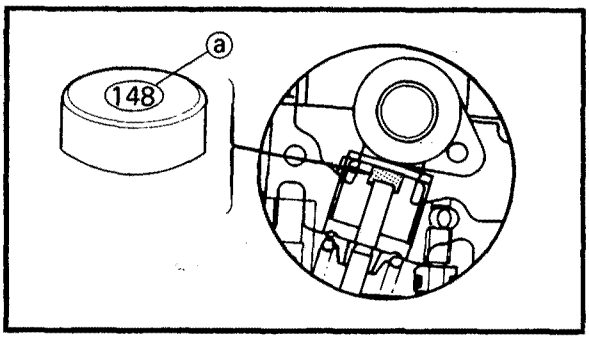

****

Adjustment steps:

- Remove the valve lifters ① and the pads ②.

NOTE:

- To prevent the pads from falling into the crankcase, cover the timing chain opening with a rag.
- Make a note of the position of each valve lifter ① and pad ② so that they can be reinstalled in their original place.

- Select the proper pad from the following chart:

Pad range		Pad sizes: 25 thicknesses
No.120 ~ No.240	1.20 mm (0.047 in) ~ 2.40 mm (0.094 in)	Thickness increases in 0.05 mm (0.02 in) increments

NOTE:

The thickness ⓐ of each pad is indicated in hundreths of millimeters on the pad's upper surface.

- Round off the last digit of the installed pad number to the nearest increment.

Last digit of the pad number	Rounded value
0 or 2	0
5	DO NOT ROUND OFF
8	10

EXAMPLE:

Installed pad number = 148 (1.48 mm)
Rounded off value = 150

NOTE:

Pads can only be selected in 0.05 mm (0.002 in) increments.

- Locate the rounded value and the measured valve clearance in the pad selection table. The point where the column and row intersect is the new pad number.

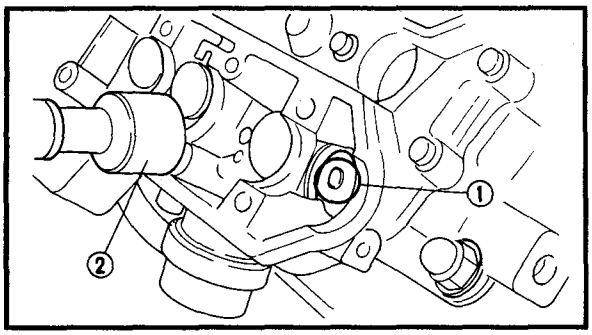

NOTE:
When verifying the valve clearance adjustment use the new pad number only as an approximation. It will be necessary to measure the valve clearance again and if necessary, repeat the above steps.

- Install the new pads ① and the valve lifters ②.

NOTE:
- Apply molybdenum disulfide grease to the pads.
- Lubricate the valve lifters with molybdenum disulfide oil.
- The valve lifters must turn smoothly when rotated by hand.
- Be careful to reinstall the valve lifters and the old pads in their original position.

- Install the camshafts (exhaust and intake), the timing chain and the camshaft caps.

	Bolt (camshaft cap): **10 Nm (1,0 m • kg, 7,2 ft • lb)**

INTAKE

B MEASURED CLEARANCE	A INSTALLED PAD NUMBER																								
	120	125	130	135	140	145	150	155	160	165	170	175	180	185	190	195	200	205	210	215	220	225	230	235	240
0.00 ~ 0.02				120	125	130	135	140	145	150	155	160	165	170	175	180	185	190	195	200	205	210	215	220	225
0.03 ~ 0.07			120	125	130	135	140	145	150	155	160	165	170	175	180	185	190	195	200	205	210	215	220	225	230
0.08 ~ 0.10		120	125	130	135	140	145	150	155	160	165	170	175	180	185	190	195	200	205	210	215	220	225	230	235
0.11 ~ 0.20	C STANDARD CLEARANCE																								
0.21 ~ 0.22	125	130	135	140	145	150	155	160	165	170	175	180	185	190	195	200	205	210	215	220	225	230	235	240	
0.23 ~ 0.27	130	135	140	145	150	155	160	165	170	175	180	185	190	195	200	205	210	215	220	225	230	235	240		
0.28 ~ 0.32	135	140	145	150	155	160	165	170	175	180	185	190	195	200	205	210	215	220	225	230	235	240			
0.33 ~ 0.37	140	145	150	155	160	165	170	175	180	185	190	195	200	205	210	215	220	225	230	235	240				
0.38 ~ 0.42	145	150	155	160	165	170	175	180	185	190	195	200	205	210	215	220	225	230	235	240					
0.43 ~ 0.47	150	155	160	165	170	175	180	185	190	195	200	205	210	215	220	225	230	235	240						
0.48 ~ 0.52	155	160	165	170	175	180	185	190	195	200	205	210	215	220	225	230	235	240							
0.53 ~ 0.57	160	165	170	175	180	185	190	195	200	205	210	215	220	225	230	235	240								
0.58 ~ 0.62	165	170	175	180	185	190	195	200	205	210	215	220	225	230	235	240									
0.63 ~ 0.67	170	175	180	185	190	195	200	205	210	215	220	225	230	235	240										
0.68 ~ 0.72	175	180	185	190	195	200	205	210	215	220	225	230	235	240											
0.73 ~ 0.77	180	185	190	195	200	205	210	215	220	225	230	235	240												
0.78 ~ 0.82	185	190	195	200	205	210	215	220	225	230	235	240													
0.83 ~ 0.87	190	195	200	205	210	215	220	225	230	235	240														
0.88 ~ 0.92	195	200	205	210	215	220	225	230	235	240															
0.93 ~ 0.97	200	205	210	215	220	225	230	235	240																
0.98 ~ 1.02	205	210	215	220	225	230	235	240																	
1.03 ~ 1.07	210	215	220	225	230	235	240																		
1.08 ~ 1.12	215	220	225	230	235	240																			
1.13 ~ 1.17	220	225	230	235	240																				
1.18 ~ 1.22	225	230	235	240																					
1.23 ~ 1.27	230	235	240																						
1.28 ~ 1.32	235	240																							
1.33 ~ 1.37	240																								

VALVE CLEARANCE (cold):
0.11 ~ 0.20 mm (0.004 ~ 0.008 in)
Example: Installed is pad 150
Measured clearance is 0.24 mm (0.009 in)
Replace pad 150 with pad 160
Pad number: (example)
Pad No. 150 = 1.50 mm (0.059 in)
Pad No. 160 = 1.60 mm (0.063 in)
Always install the pad with the number facing down.

EXHAUST

B MEASURED CLEARANCE	A INSTALLED PAD NUMBER																								
	120	125	130	135	140	145	150	155	160	165	170	175	180	185	190	195	200	205	210	215	220	225	230	235	240
0.00 ~ 0.02						120	125	130	135	140	145	150	155	160	165	170	175	180	185	190	195	200	205	210	215
0.03 ~ 0.07					120	125	130	135	140	145	150	155	160	165	170	175	180	185	190	195	200	205	210	215	220
0.08 ~ 0.12				120	125	130	135	140	145	150	155	160	165	170	175	180	185	190	195	200	205	210	215	220	225
0.13 ~ 0.17			120	125	130	135	140	145	150	155	160	165	170	175	180	185	190	195	200	205	210	215	220	225	230
0.18 ~ 0.20		120	125	130	135	140	145	150	155	160	165	170	175	180	185	190	195	200	205	210	215	220	225	230	235
0.21 ~ 0.30	C STANDARD CLEARANCE																								
0.31 ~ 0.32	125	130	135	140	145	150	155	160	165	170	175	180	185	190	195	200	205	210	215	220	225	230	235	240	
0.33 ~ 0.37	130	135	140	145	150	155	160	165	170	175	180	185	190	195	200	205	210	215	220	225	230	235	240		
0.38 ~ 0.42	135	140	145	150	155	160	165	170	175	180	185	190	195	200	205	210	215	220	225	230	235	240			
0.43 ~ 0.47	140	145	150	155	160	165	170	175	180	185	190	195	200	205	210	215	220	225	230	235	240				
0.48 ~ 0.52	145	150	155	160	165	170	175	180	185	190	195	200	205	210	215	220	225	230	235	240					
0.53 ~ 0.57	150	155	160	165	170	175	180	185	190	195	200	205	210	215	220	225	230	235	240						
0.58 ~ 0.62	155	160	165	170	175	180	185	190	195	200	205	210	215	220	225	230	235	240							
0.63 ~ 0.67	160	165	170	175	180	185	190	195	200	205	210	215	220	225	230	235	240								
0.68 ~ 0.72	165	170	175	180	185	190	195	200	205	210	215	220	225	230	235	240									
0.73 ~ 0.77	170	175	180	185	190	195	200	205	210	215	220	225	230	235	240										
0.78 ~ 0.82	175	180	185	190	195	200	205	210	215	220	225	230	235	240											
0.83 ~ 0.87	180	185	190	195	200	205	210	215	220	225	230	235	240												
0.88 ~ 0.92	185	190	195	200	205	210	215	220	225	230	235	240													
0.93 ~ 0.97	190	195	200	205	210	215	220	225	230	235	240														
0.98 ~ 1.02	195	200	205	210	215	220	225	230	235	240															
1.03 ~ 1.07	200	205	210	215	220	225	230	235	240																
1.08 ~ 1.12	205	210	215	220	225	230	235	240																	
1.13 ~ 1.17	210	215	220	225	230	235	240																		
1.18 ~ 1.22	215	220	225	230	235	240																			
1.23 ~ 1.27	220	225	230	235	240																				
1.28 ~ 1.32	225	230	235	240																					
1.33 ~ 1.37	230	235	240																						
1.38 ~ 1.42	235	240																							
1.43 ~ 1.47	240																								

VALVE CLEARANCE (cold):
0.21 ~ 0.30 mm (0.008 ~ 0.012 in)
Example: Installed is pad 175
Measured clearance is 0.35 mm (0.014 in)
Replace pad 150 with pad 185
Pad number: (example)
Pad No. 175 = 1.75 mm (0.069 in)
Pad No. 185 = 1.85 mm (0.073 in)
Always install the pad with the number facing down.

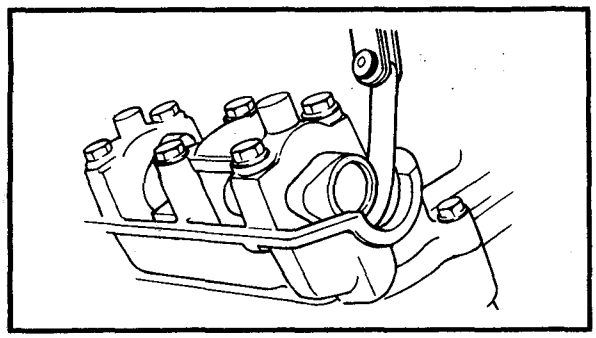

NOTE:
- Refer to "ENGINE ASSEMBLY AND ADJUSTMENT – CYLINDER HEAD AND CAMSHAFTS" in CHAPTER 4.
- Lubricate the camshaft bearings, cam lobes and camshaft journals.
- First, install the exhaust camshaft.
- Align the matching marks.
- Rotate the crankshaft counterclockwise several turns so that the installed parts settle into the correct position.

- Measure the valve clearance again.
- If the clearance is still incorrect, repeat all the clearance adjustment steps until the specified clearance is obtained.

****

16.Install:
- All removed parts

NOTE:
Install all the parts in the reverse order of their removal. Note the following points.

17.Install:
- Timing chain guide (exhaust side)
- Timing chain guide (upper)
- Timing chain tensioner
  Refer to "ENGINE ASSEMBLY AND ADJUSTMENT" in CHAPTER 4.

18.Install:
- Timing plug
- Crankshaft end cover (left)

Screw (crankshaft end cover):
7 Nm (0.7 m • kg, 5.1 ft • lb)
LOCTITE®

19.Install:
- Cylinder head cover
- Spark plugs

	Bolt (cylinder head cover): **10 Nm (1.0 m • kg, 7.2 ft • lb)** **Spark plug:** **18 Nm (1.8 m • kg, 13 ft • lb)**

20.Install:
- Ignition coil plate
- Ignition coil

EB303010
CARBURETOR SYNCHRONIZATION

NOTE:
Prior to synchronizing the carburetors, the valve clearance and the idling speed should be properly adjusted and the ignition timing should be checked.

1.Stand the motorcycle on a level surface.

NOTE:
Place the motorcycle on a suitable stand.

2.Remove:
- Rider seat
- Passenger seat
- Side panels (left and right)
- Fuel tank

Refer to "SEATS" and "FUEL TANK".

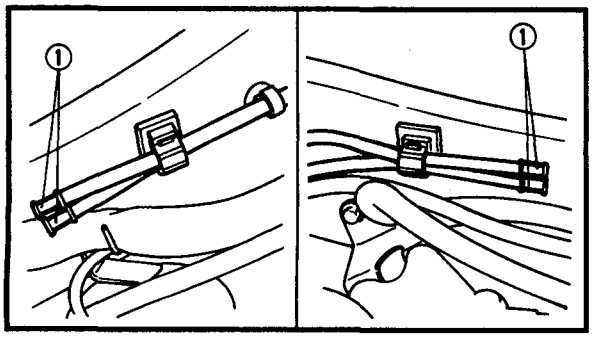

3.Remove:
- Plugs (vacuum hoses) ①

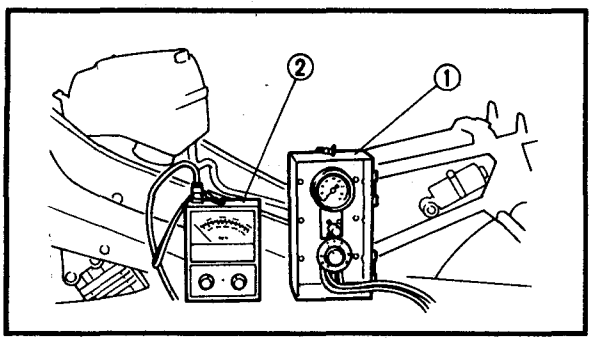

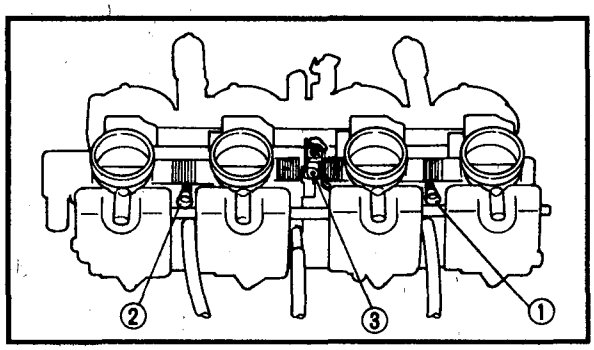

4.Attach:
- Adapters
- Vacuum gauge ①
- Engine tachometer ②
  (to the #1 spark plug lead)

Vacuum gauge:
YU-08030/90890-03094
Engine tachometer:
YU-8036-A/90890-03113

5.Start the engine and let it warm up for several minutes.
6.Check:
- Engine idling speed
  Out of specification → Adjust.
  Refer to "IDLING SPEED ADJUSTMENT".

Engine idling speed:
1,050 ~ 1,150 r/min

7.Adjust:
- Carburetor synchronization

****

Adjustment steps:
- Synchronize carburetor #1 to carburetor #2 by turning the synchronizing screw ① until both gauges read the same.
- Rev the engine two or three times, each time for less than a second, and check the synchronization again.
- Repeat the above steps and synchronize carburetor #4 to carburetor #3 by turning the synchronizing screw ② until both gauges read the same.
- Repeat the same steps and synchronize carburetor #2 to carburetor #3 by turning the synchronizing screw ③ until both gauges read the same.

Vacuum pressure at idle speed:
20,3 ~ 30,7 kPa (190 ~ 230 mm Hg, 7.48 ~ 9.055 in Hg)

NOTE:
The difference between the two carburetors should not exceed 1.33 kPa (10 mm Hg, 0.4 in Hg).

****

8.Check:
- Engine idling speed
  Out of specification → Adjust.

9.Stop the engine and detach the measuring equipment.

10.Adjust:
- Throttle cable free play
  Refer to "THROTTLE CABLE ADJUSTMENT".

Free play:
3 ~ 7 mm (0.12 ~ 0.28 in)
(at the throttle grip flange)

11.Install:
- Fuel tank
- Side panels (left and right)
- Passenger seat
- Rider seat
- Refer to "FUEL TANK" and "SEATS".

EB303021
IDLING SPEED ADJUSTMENT

NOTE:
Prior to adjusting the idling speed, the carburetor synchronization should be adjusted properly, the air filter should be clean and the engine should have adequate compression.

1.Start the engine and let it warm up for several minutes.

2.Attach:
- Engine tachometer
  (to the #1 spark plug lead)

Engine tachometer:
YU-8036-A/90890-03113

3.Check:
- Engine idling speed
  Out of specification → Adjust.

Engine idling speed:
1,050 ~ 1,150 r/min

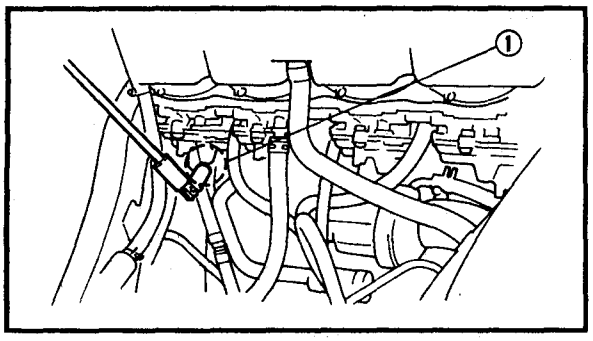

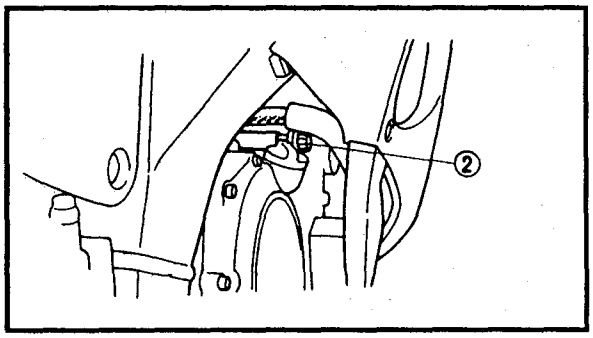

4.Adjust:
- Engine idling speed

****

Adjustment steps:
- Turn the throttle stop screw ② in or out until the specified idling speed is obtained.

Turning in:	**Idling speed is increased.**
Turning out:	**Idling speed is decreased.**

****

5.Adjust:
- Throttle cable free play
  Refer to "THROTTLE CABLE ADJUSTMENT".

Free play:
3 ~ 7 mm (0.12 ~ 0.28 in)
(at the throttle grip flange)

EB303030
THROTTLE CABLE ADJUSTMENT

NOTE:
Prior to adjusting the throttle cable free play, the engine idling speed and carburetor synchronization should be adjusted properly.

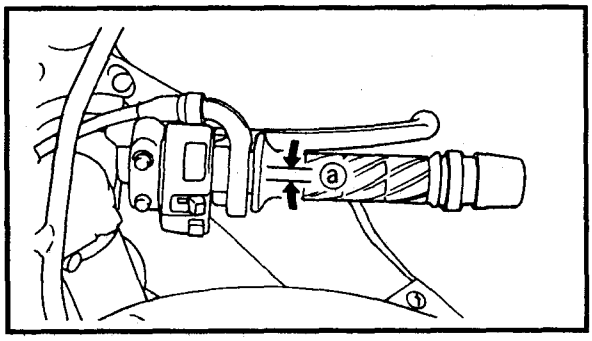

1.Check:
- Throttle cable free play ⓐ
  Out of specification → Adjust.

Free play (throttle cable):
3 ~ 7 mm (0.12 ~ 0.28 in)
(at the throttle grip flange)

2.Remove:
- Rider seat
- Passenger seat
- Side panels (left and right)
- Fuel tank
- Air filter case
  Refer to "SEATS", "FUEL TANK" and "VALVE CLEARANCE ADJUSTMENT".

3.Fold back the baffle cover on the carburetor assembly.

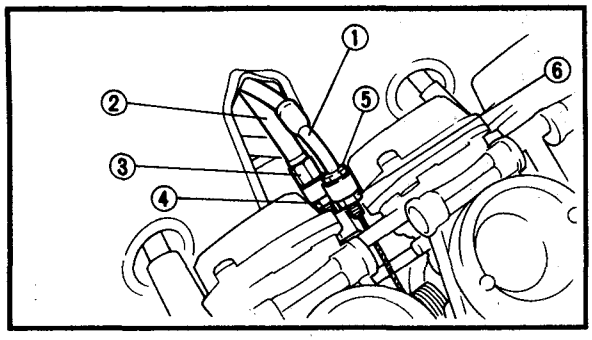

4.Adjust:
- Throttle cable free play

****

Adjustment steps:

NOTE:
When the motorcycle is accelerating, throttle cable #1 ① is pulled and throttle cable #2 ② is pushed.

1st step:
- Loosen the locknut ③ on throttle cable #2.
- Turn the adjuster ④ in or out to take up any slack on throttle cable #2.

2nd step:
- Loosen the locknut ⑤ on throttle cable #1.
- Turn the adjuster ⑥ in or out until the specified free play is obtained.

Turning in:	**Free play is increased.**
Turning out:	**Free play is decreased.**

- Tighten the locknuts.

NOTE:
If the specified free play cannot be obtained on the carburetor end of the cable, use the adjuster on the handlebar end.

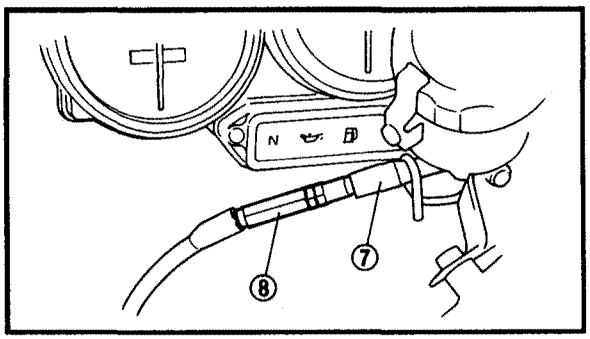

Additional step:
- Pull back the rubber covers on the adjuster.
- Loosen the locknut ⑦.
- Turn the adjuster ⑧ in or out until the specified free play is obtained.

Turning in:	**Free play is increased.**
Turning out:	**Free play is decreased.**

- Tighten the locknut.

⚠ WARNING

After adjusting, turn the handlebars to the right and to the left to ensure that this does not cause the engine idling speed to change.

****

5. Place the baffle cover over the carburetor assembly.
6. Install:
- Air filter case
- Fuel tank
- Side panels (left and right)
- Passenger seat
- Rider seat

Refer to "VALVE CLEARANCE ADJUSTMENT", "FUEL TANK" and "SEATS".

SPARK PLUG INSPECTION

1. Remove:
- Spark plug caps
- Spark plugs

CAUTION:

Before removing the spark plugs, use compressed air to blow away any dirt accumulated in the spark plug wells, to prevent the dirt from falling into the cylinders.

2. Check:
- Spark plug type
  Incorrect → Replace.

Standard spark plug: **DR8EA (NGK)** **X24ESR-U (NIPPONDENSO)**

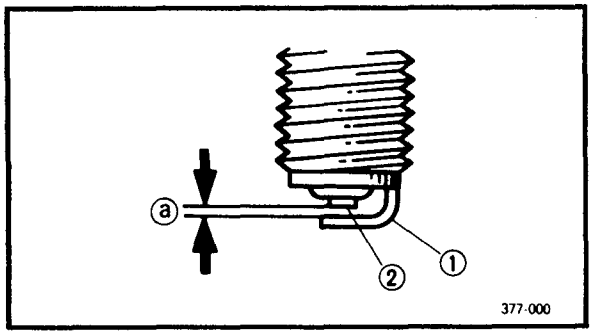

3.Inspect:
- Electrode ①
  Wear/damage → Replace.
- Insulator ②
  Abnormal color → Replace.
  Normal color is a medium-to-light tan color.

4.Clean:
- Spark plug
  (with a spark plug cleaner or wire brush)

5.Measure:
- Spark plug gap ⓐ
  (with a wire gauge)
  Out of specification → Adjust gap.

	Spark plug gap: **0.6 ~ 0.7 mm (0.24 ~ 0.28 in)**

6.Install:
- Spark plug

	Spark plug: **18 Nm (1.8 m • kg, 13 ft • lb)**

NOTE:
Before installing a spark plug, clean the gasket surface and the plug surface.

EB303051
IGNITION TIMING CHECK

NOTE:
Prior to checking the ignition timing, check all electrical connections related to the ignition system. Make sure that all connections are tight and free of corrosion and that all ground connections are tight.

1.Remove:
- Bottom cowling (front)
- Bottom cowling
  Refer to "COWLINGS".

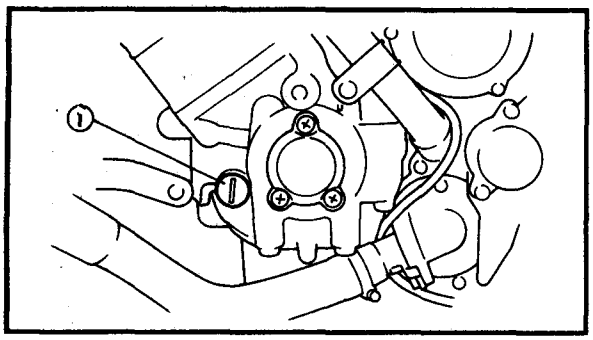

2.Remove:
- Timing plug ①

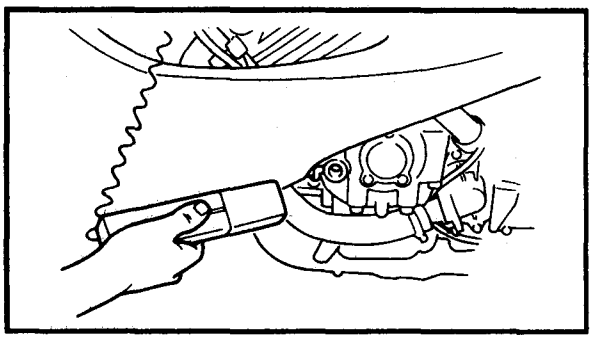

3.Attach:
- Timing light
- Engine tachometer
  (to the #1 spark plug lead)

Timing light:
YM-33277-A/90890-03141
Engine tachometer:
YU-8036-A/90890-03113

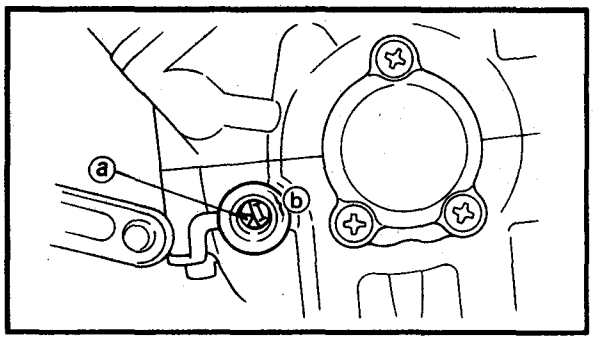

4.Check:
- Ignition timing

****

Checking steps:

- Start the engine and let it warm up for several minutes. Let the engine run at the specified speed.

Engine idling speed:
1,050 ~ 1,150 r/min

- Check that the stationary pointer ⓐ is within the firing range ⓑ on the crankshaft web.
  Incorrect firing range → Check the ignition system.

****

NOTE:
Ignition timing is not adjustable.

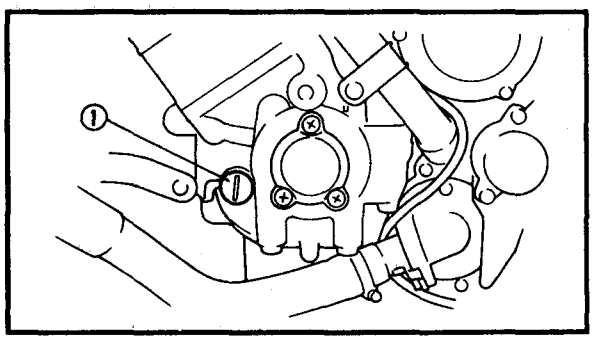

5.Install:
- Timing plug ①

EB303060

COMPRESSION PRESSURE MEASUREMENT

NOTE:
Insufficient compression pressure will result in a loss of performance.

1. Check:
- Valve clearance
  Out of specification → Adjust.
  Refer to "VALVE CLEARANCE ADJUSTMENT".
2. Start the engine and let it warm up for several minutes.
3. Stop the engine.

4. Remove:
- Spark plug caps
- Spark plugs

CAUTION:
Before removing the spark plugs, use compressed air to blow away any dirt accumulated in the spark plug wells to prevent the dirt from falling into the cylinders.

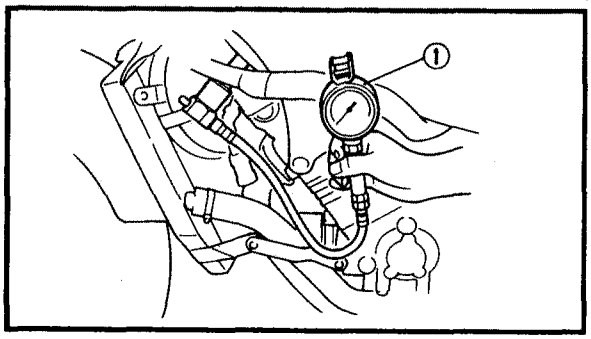

5. Attach:
- Compression gauge ①

	Compression gauge: **YU-33223/90890-03081**

6. Measure:
- Compression pressure

If it exceeds the maximum pressure allowed → Inspect the cylinder head, valve surfaces and piston crown for carbon deposits.
If it is below the minimum pressure → Squirt a few drops of oil into the affected cylinder and measure again.
- Refer to the table below.

Compression pressure (with oil applied in the cylinder)	
Reading	**Diagnosis**
Higher than without oil	**Worn or damaged pistons → Repair.**
Same as without oil	**Possible defective ring(s), valves, cylinder head gasket or piston → Repair.**

Compression pressure (at sea level)
Standard:
1,422 kPa (14.22 kg/cm², 202 psi)
Minimum:
1,334 kPa (13.34 kg/cm², 190 psi)
Maximum:
1,500 kPa (15.00 kg/cm², 213 psi)

****

Measurement steps:

- With the throttle wide open crank the engine until the reading on the compression gauge stabilizes.

⚠ WARNING

To prevent sparking, ground all of the spark plug leads before cranking the engine.

- Repeat the previous steps for the other cylinders.

NOTE:
The difference in compression pressure between the highest and lowest cylinder compression readings should not exceed 100 kPa (1 kg/cm², 14 psi).

****

7.Install:
- Spark plugs
- Spark plug caps

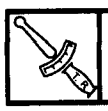

Spark plug:
18 Nm (1.8 m • kg, 13 ft • lb)

EB303071
ENGINE OIL LEVEL INSPECTION

1.Stand the motorcycle on a level surface.

NOTE:
- When checking the oil level make sure that the motorcycle is upright.
- Place the motorcycle on a suitable stand.

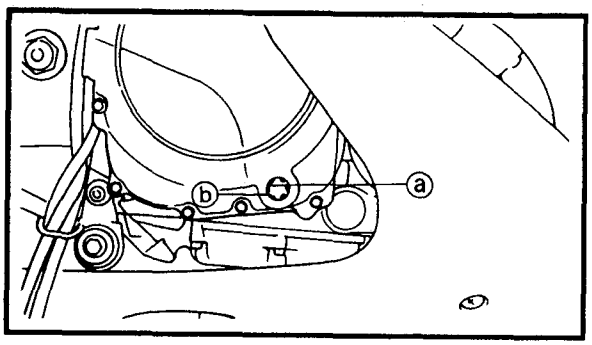

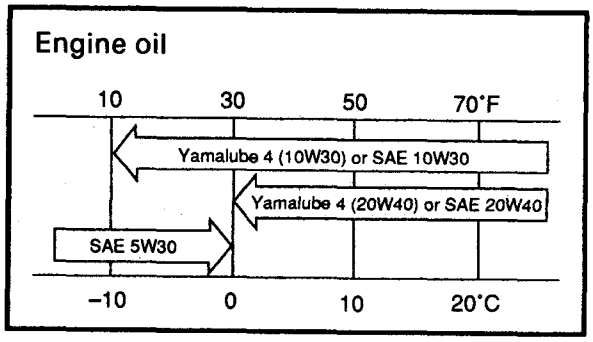

2.Inspect:
- Oil level
  Oil level should be between the maximum ⓐ and minimum ⓑ marks.
  Oil level is below the minimum mark → Add oil up to the proper level.

Recommended oil:
Yamalube 4 or SAE 10W30 type SE motor oil, or SAE20W40 type SE motor oil

CAUTION:
- **Do not add any chemical additives Engine oil also lubricates the clutch and additives could cause clutch slippage.**
- **Do not allow foreign material to enter the crankcase.**

NOTE:
Recommended engine oil classification; API Service "SE", "SF" type or equivalent (e.g. "SF-SE", "SF-SE-CC", "SF-SE-SD" etc.).

3.Start the engine and let it warm up for several minutes.
4.Turn off the engine and check the oil level again.

NOTE:
Before checking the oil level, wait a few minutes until the oil settles.

EB303081
ENGINE OIL REPLACEMENT

1.Remove:
- Bottom cowling (front)
- Bottom cowling
- Side cowlings (left and right)
  Refer to "COWLINGS".

2.Start the engine and let it warm up for several minutes.

3.Turn off the engine and place a container under the drain bolt.

4.Remove:
- Oil filler cap ①
- Drain bolt ②
  (with the gasket)
  Drain the crankcase of its oil.

5.If the oil filter is to be replaced during this procedure, remove the following parts and reinstall them afterwards.

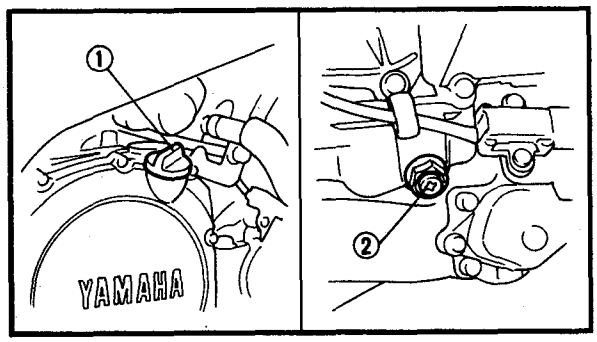

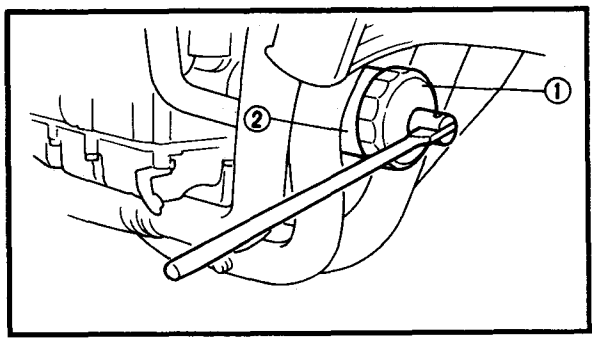

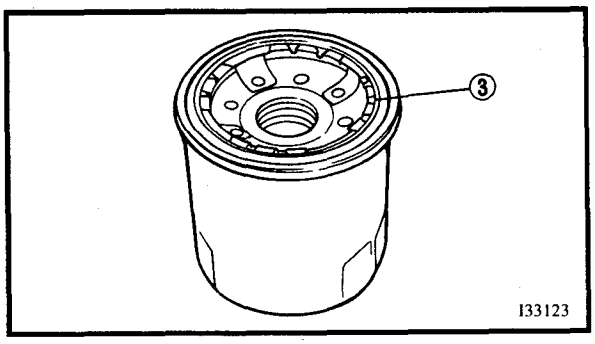

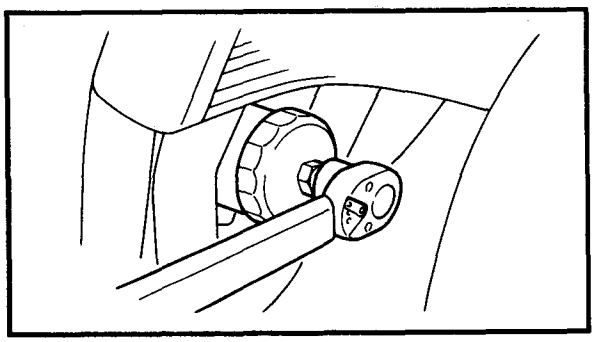

****

Replacement steps:

- Use an oil filter wrench ① to remove the oil filter ②.

	Oil filter wrench: **YU-38411/90890-01426**

- Apply engine oil to the O-ring ③ of the new oil filter.

CAUTION:

Make sure that the O-ring ③ is positioned correctly.

- Use an oil filter wrench to tighten the new oil filter.

	Oil filter: **17 Nm (1.7 m • kg, 12 ft • lb)**

****

6.Install:
- Drain bolt

Drain bolt:
43 Nm (4.3 m • kg, 31 ft • lb)

NOTE:
Check the drain bolt gasket. If it is damaged, replace it.

7.Fill:
- Crankcase
  Refer to "ENGINE OIL LEVEL INSPECTION".

Oil quantity:
Total amount:
3.5 L (3.2 Imp qt, 3.4 US qt)
Periodic oil change:
3 L (2.6 Imp qt, 3.1 US qt)
With oil filter replacement:
3.2 L (2.8 Imp qt, 3.3 US qt)

8.Install:
- Oil filler cap

9.Warm up the engine for a few minutes, then turn it off.

10.Check:
- Engine
  (for oil leaks)
- Oil level

11.Install:
- Side cowlings (left and right)
- Bottom cowling
- Bottom cowling (front)
  Refer to "COWLINGS".

ENGINE OIL PRESSURE INSPECTION

1.Check:
- Oil level
  Oil level low → Add oil to the proper level.

2.Remove:
- Bottom cowling (front)
- Bottom cowling
- Side cowling (right)
  Refer to "COWLINGS".

3.Start the engine and let it warm up. Then, stop the engine.

CAUTION:

Be sure to measure the oil pressure after warming-up the engine. When the engine is cold, the oil will have a higher viscosity, causing the oil pressure to increase.

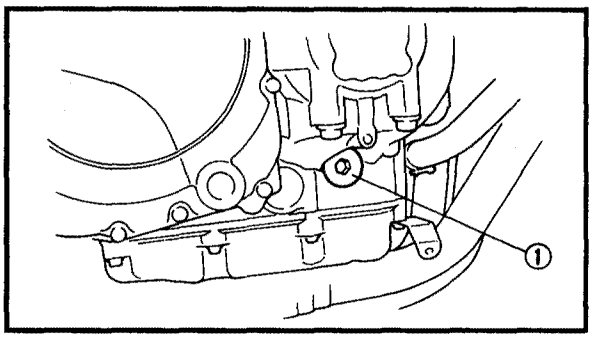

4.Remove:
- Main gallery bolt ①

⚠ WARNING

The engine, muffler or engine oil may be extremely hot.

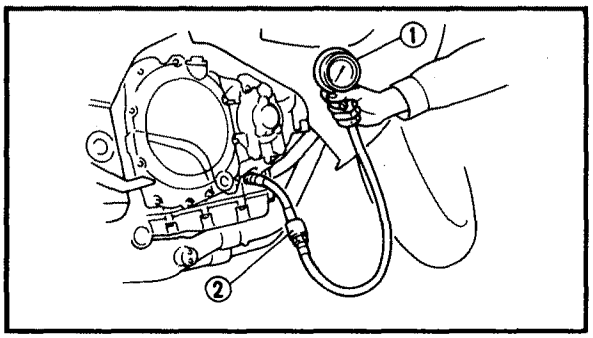

5.Attach:
- Oil pressure gauge ①
- Adapter ②

Oil pressure gauge:
90890-03153
Adapter:
90890-03139

6.Measure:
- The oil pressure at the following conditions:

Engine oil pressure:
350 ~ 450 kPa (3.5 ~ 4.5 kg/cm², 50 ~ 64 psi)
Engine speed:
Approx. 4,000 r/min
Oil temp:
Approx. 70°C (158°F)

Out of specification → Check the following.

Oil pressure	Possible causes
When the oil pressure is less than the specification.	• Faulty oil pump • Clogged oil filter • Leaking oil passage • Broken or damaged oil seal
When the oil pressure is greater than the specification.	• Leaking oil passage • Faulty oil filter • Very viscous engine oil

7.Install:
- Main gallery bolt

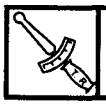	**Bolt (main gallery): 12 Nm (1.2 m • kg, 8.7 ft • lb)**

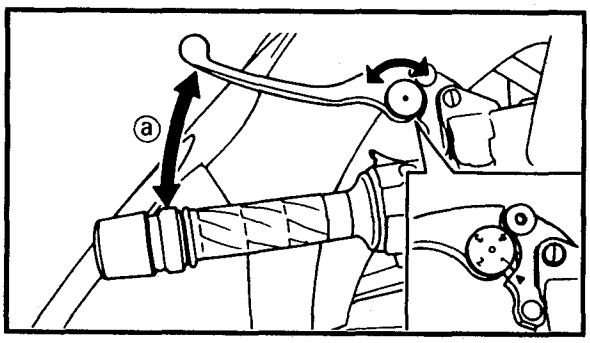

EB303091
CLUTCH ADJUSTMENT

1.Adjust:
- Clutch lever position
  (distance ⓐ from the handlebar grip to the clutch lever)

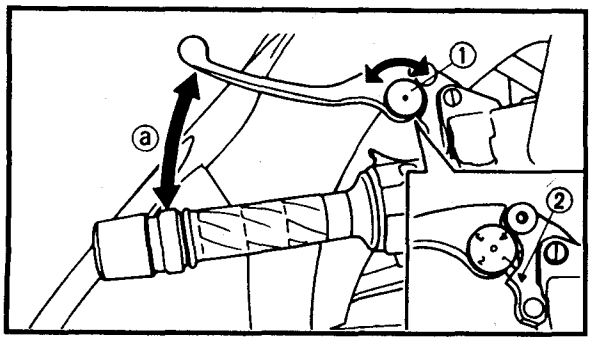

****

Adjustment steps:
- Turn the adjuster ① while pushing the clutch lever forward until the clutch lever is in the desired position.
- Align the setting on the adjuster with the arrow mark ②.

Turning in:	Clutch lever distance ⓐ is the largest.
Turning out:	Clutch lever distance ⓐ is the smallest.

⚠ WARNING

After adjusting the clutch lever position (distance), make sure that the pin on the clutch lever holder is firmly inserted into the hole in the adjuster.

****

CLUTCH FLUID LEVEL INSPECTION

1.Stand the motorcycle on a level surface.

NOTE:
Place the motorcycle on a suitable stand.

2.Inspect:
- Clutch fluid level
  Clutch fluid level is below the "LOWER" level line ⓐ → Fill to the proper level.

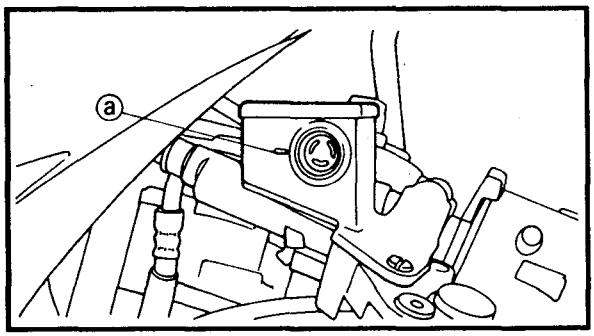

	Recommended fluid: DOT 4

NOTE:
In order to ensure a correct reading of the clutch fluid level, make sure that the top of the clutch reservoir (handlebar) is horizontal.

CAUTION:

Clutch fluid may damage painted surfaces or plastic parts. Always clean up any spilt fluid immediately.

⚠ WARNING

- **Use only the designated clutch fluid. Other clutch fluids may cause the rubber seals to deteriorate, causing leakage and poor clutch performance.**
- **Refill with the same type of clutch fluid. Mixing clutch fluids may result in a harmful chemical reaction leading to poor clutch performance.**
- **When refilling, be careful that water does not enter the clutch reservoir. Water will significantly lower the boiling point of the clutch fluid and could cause vapor lock.**

AIR BLEEDING (HYDRAULIC CLUTCH SYSTEM)

⚠ WARNING

Bleed the clutch system whenever:
- **The system is disassembled.**
- **A clutch hose is loosened or removed.**
- **The clutch fluid level is very low.**
- **Clutch operation is faulty.**

1.Remove:
- Bottom cowling (front)
- Bottom cowling

2.Bleed:
- Clutch system

****

Air bleeding steps:

a. Fill the clutch reservoir with the proper clutch fluid.

b. Install the diaphragm. Be careful not to spill any fluid or allow the clutch reservoir to overflow.

c. Connect a clear plastic hose ① tightly to the bleed screw ②.

d. Place the other end of the hose into a container.

e. Slowly apply the clutch lever several times.

f. Pull the lever in and hold the position.

g. Loosen the bleed screw and allow the lever to travel slowly towards the handlebar.

h. Tighten the bleed screw when the lever is touching the handlebar grip, then release the lever.

i. Repeat steps (e) to (h) until all of the air bubbles have disappeared from the clutch fluid.

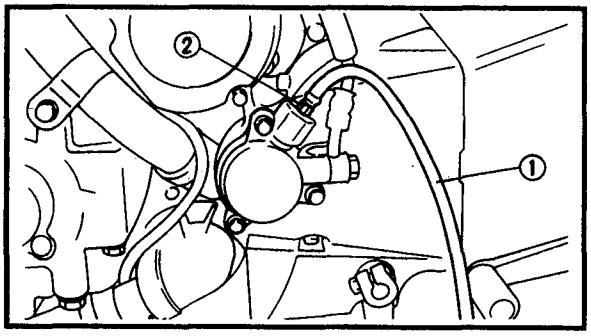

NOTE:

When bleeding the clutch system, make sure that there is always enough clutch fluid before applying the clutch lever. Ignoring this precaution could allow air to enter the clutch system, considerably lengthening the bleeding procedure.

j. Tighten the bleed screw.

	Bleed screw: **6 Nm (0.6 m • kg, 4.3 ft • lb)**

NOTE:
If bleeding is difficult, it may be necessary to let the clutch fluid settle for a few hours. Repeat the bleeding procedure when the tiny bubbles in the clutch system have disappeared.

k. Fill the clutch reservoir up to the proper level.
Refer to "CLUTCH FLUID LEVEL INSPECTION".

⚠ WARNING
After bleeding the clutch system, check clutch operation.

****

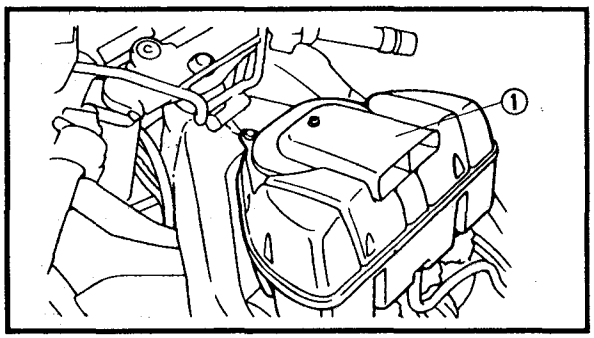

EB303121
AIR FILTER CLEANING

1.Remove:
- Rider seat
- Passenger seat
- Side panels (left and right)
- Fuel tank
  Refer to "SEATS" and "FUEL TANK".
- Air filter case cover ①

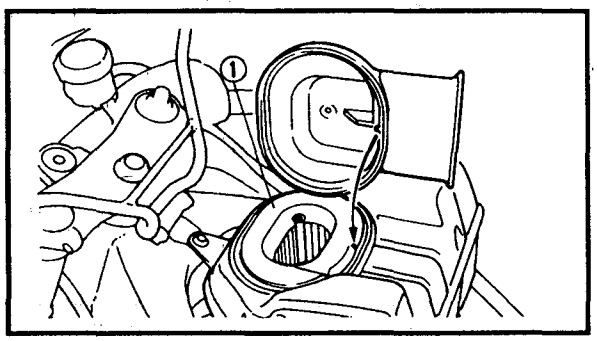

2.Remove:
- Air filter element ①

3.Inspect:
- Air filter element
  Damage → Replace.

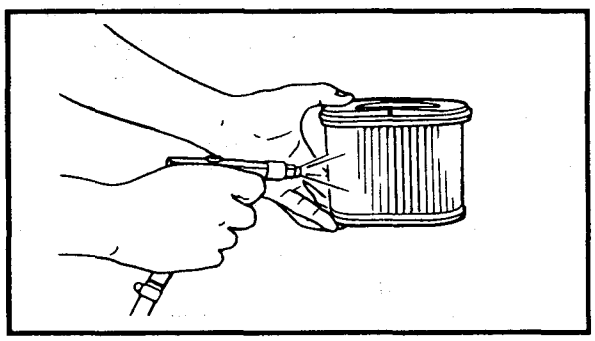

4.Clean:
- Air filter element
  Use compressed air to blow off dust from the outer surface of the element.

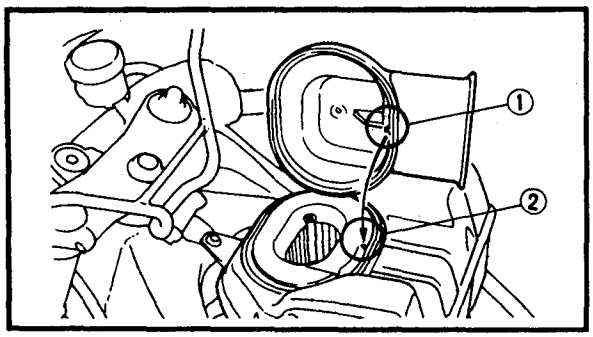

5.Install:
- Air filter element
- Air filter case cover
  (with the gasket)

CAUTION:

Make sure that the projection ① on the air filter case cover is securely installed into the slot ② in the air filter case.

NOTE:

Make sure that the element is properly installed in the filter case.

CAUTION:

Never operate the engine without the air filter element installed. Unfiltered air will cause rapid wear of engine parts and may damage the engine. Operating the engine without the filter element will also affect the carburetor tuning, leading to poor engine performance and possible overheating.

6.Install:
- Fuel tank
- Side panels (left and right)
- Passenger seat
- Rider seat
  Refer to "FUEL TANK" and "SEATS".

EB303130

CARBURETOR JOINT INSPECTION

1.Remove:
- Rider seat
- Passenger seat
- Side panels (left and right)
- Fuel tank
  Refer to "SEATS" and "FUEL TANK".

2.Inspect:
- Carburetor joints
  Cracks/damage → Replace.
  Refer to "CARBURETORS" in CHAPTER 6.

3.Install:
- Fuel tank
- Side panels (left and right)
- Passenger seat
- Rider seat

Refer to "FUEL TANK" and "SEATS".

EB303140
FUEL LINE INSPECTION

1.Remove:
- Rider seat
- Passenger seat
- Side panels (left and right)
- Fuel tank

Refer to "SEATS" and "FUEL TANK".

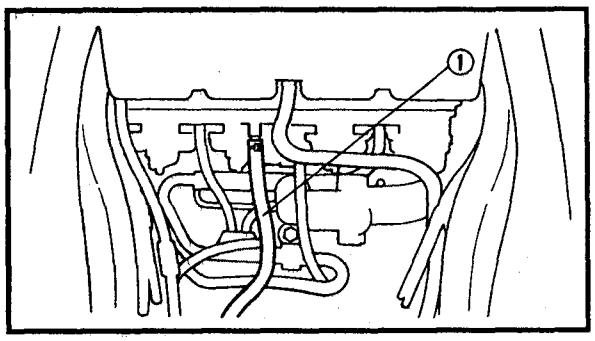

2.Inspect:
- Fuel hoses ①

Cracks/damage → Replace.

3.Install:
- Fuel tank
- Side panels (left and right)
- Passenger seat
- Rider seat

Refer to "FUEL TANK" and "SEATS".

EB303150
CRANKCASE BREATHER HOSE INSPECTION

1.Remove:
- Rider seat
- Passenger seat
- Side panels (left and right)
- Fuel tank

Refer to "SEATS" and "FUEL TANK".

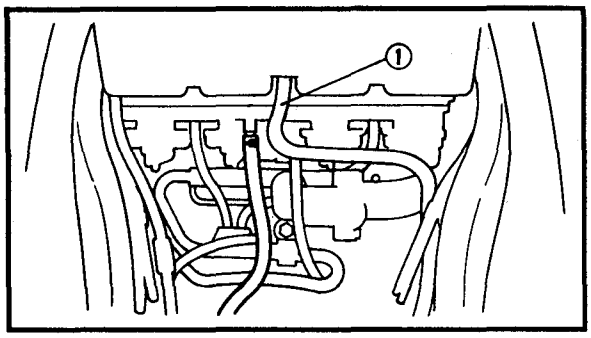

2.Inspect:
- Crankcase breather hose ①
  Cracks/damage → Replace.
  Loose connection → Connect properly.

CAUTION:

Make sure that the crankcase breather hose is routed correctly.

3.Install:
- Fuel tank
- Side panels (left and right)
- Passenger seat
- Rider seat
  Refer to "FUEL TANK" and "SEATS".

EXUP CABLE ADJUSTMENT

1.Remove:
- Bottom cowling (front)
- Bottom cowling
- Rider seat
- Passenger seat
- Side panels (left and right)
- Fuel tank
  Refer to "COWLINGS", "SEATS" and "FUEL TANK".

2.Remove:
- EXUP valve cover ①

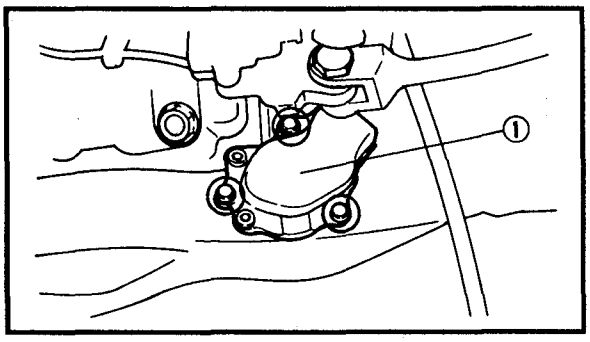

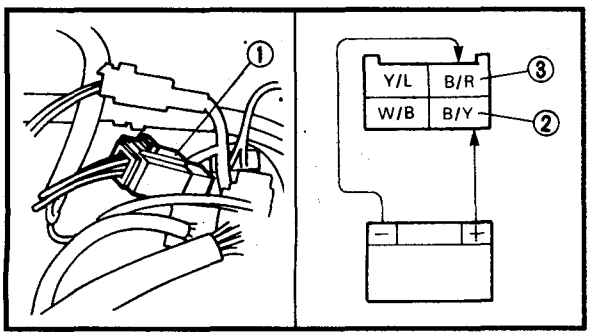

3.Check:
- EXUP operation

****

- Disconnect the servo motor coupler ①.
- Connect the battery to the servo motor coupler.

Battery (+) lead → Black/yellow terminal ②
Battery (–) lead → Black/red terminal ③

CAUTION:

Perform this test immediately so that the servo motor is not damaged.

- Check the EXUP valve.
- Connect the servo motor coupler.

****

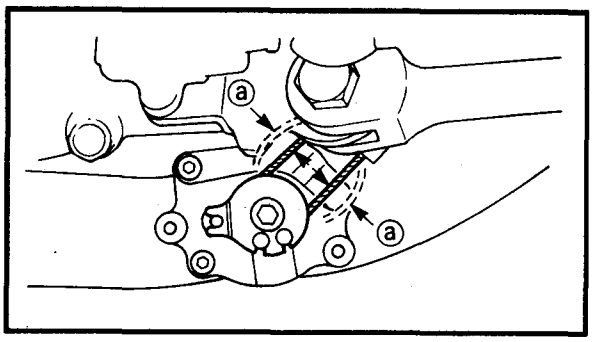

4.Check:
- EXUP cable free play ⓐ

	EXUP cable free play: **1.5 mm (0.059 in) or less**

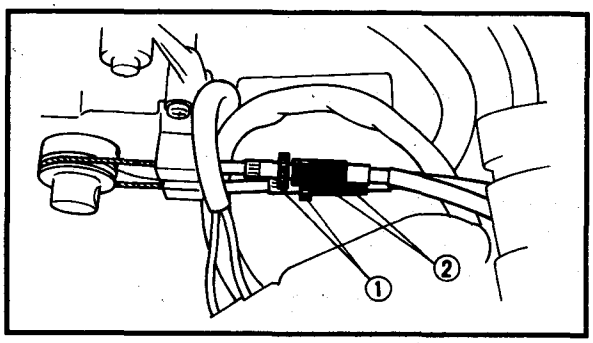

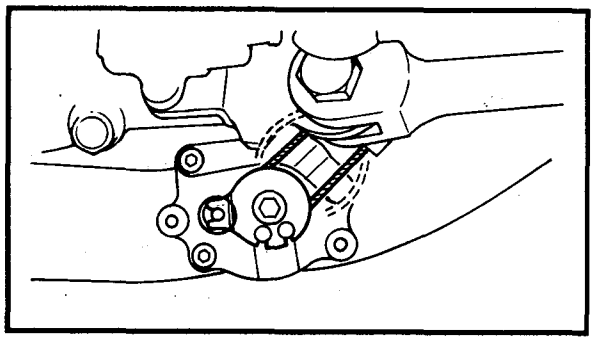

5.Adjust:
- EXUP cable free play

****

Adjusting steps:
- Loosen both locknuts ①.
- Insert a 4 mm (1.57 in) pin through the notch of the pulley and into the hole.
- Turn both adjusters ② counterclockwise until there is no cable free play.
- Turn both adjusters 1/2 of a turn clockwise.
- Tighten both locknuts and then remove the pin.

****

6.Install:
- EXUP valve cover

	Bolt (EXUP valve cover): **10 Nm (1.0 m • kg, 7.2 ft • lb)**

7.Install:
- Fuel tank
- Side panels (left and right)
- Passenger seat
- Rider seat
- Bottom cowling
- Bottom cowling (front)

  Refer to "FUEL TANK", "SEATS" and "COWLINGS".

EB303160
EXHAUST SYSTEM INSPECTION

1.Remove:
- Bottom cowling (front)
- Bottom cowling
- Side cowlings (left and right)

  Refer to "COWLINGS".

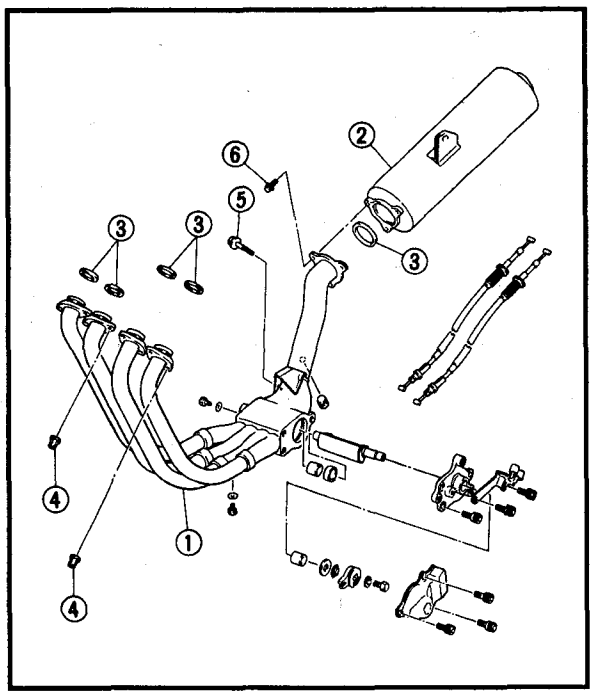

2.Inspect:
- Exhaust pipes ①
- Muffler ②

  Cracks/damage → Replace.
- Gaskets ③

  Exhaust gas leaks → Replace.

3.Check:
- Tightening torque

Nut (exhaust pipe) ④:
20 Nm (2.0 m • kg, 14 ft • lb)
Bolt (muffler and stay) ⑤:
38 Nm (3.8 m • kg, 27 ft • lb)
Bolt (exhaust pipe and stay) ⑥:
20 Nm (2.0 m • kg, 14 ft • lb)
Bolt (exhaust pipe and muffler) ⑦:
20 Nm (2.0 m • kg, 14 ft • lb)

4.Install:
- Side cowlings (left and right)
- Bottom cowling
- Bottom cowling (front)

  Refer to "COWLINGS".

EB303170
COOLANT LEVEL INSPECTION

1.Stand the motorcycle on a level surface.

NOTE:
- When checking the coolant level make sure that the motorcycle is upright.
- Place the motorcycle on a suitable stand.

2.Remove:
- Rider seat
  Refer to "SEATS".

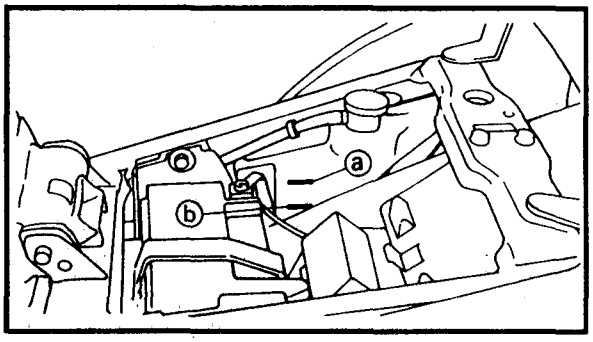

3.Inspect:
- Coolant level
  Coolant level should be between the maximum ⓐ and minimum ⓑ marks.
  Coolant level is below the "LOWER" level line → Add soft water (tap water) up to the proper level.

CAUTION:
- **Hard water or salt water is harmful to engine parts. If soft water is not available use only distilled water.**
- **If you use tap water, make sure that it is soft water.**

4.Start the engine and let it warm up for several minutes.
5.Turn off the engine and check the coolant level again.

NOTE:
Before checking the coolant level, wait a few minutes until the coolant settles.

EB303180
COOLANT REPLACEMENT

1.Remove:
- Rider seat
- Passenger seat
- Side panel (right)
  Refer to "SEATS" and "FUEL TANK".

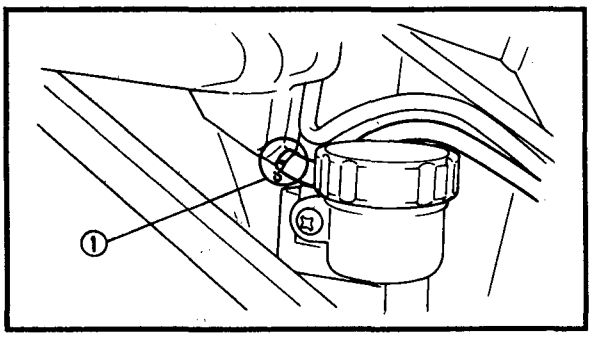

2.Disconnect:
- Hose (coolant reservoir) ①
  Drain the coolant reservoir.

3.Remove:
- Bottom cowling (front)
- Bottom cowling
- Rear view mirrors (left and right)
- Front cowling assembly
  Refer to "COWLINGS".

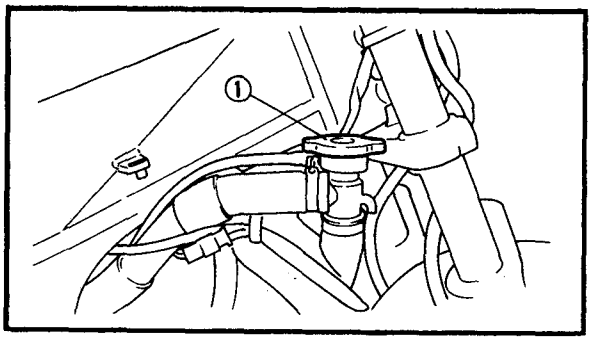

4.Remove:
- Radiator cap

⚠ WARNING

Do not remove the radiator cap when the engine and radiator are hot. Scalding hot fluid and steam may be blown out under pressure, which could cause serious injury. When the engine has cooled, open the radiator cap as follows:
Place a thick rag or a towel over the radiator cap. Slowly rotate the cap counterclockwise toward the detent. This allows any residual pressure to escape. When the hissing sound has stopped, press down on the cap while turning counterclockwise and remove it.

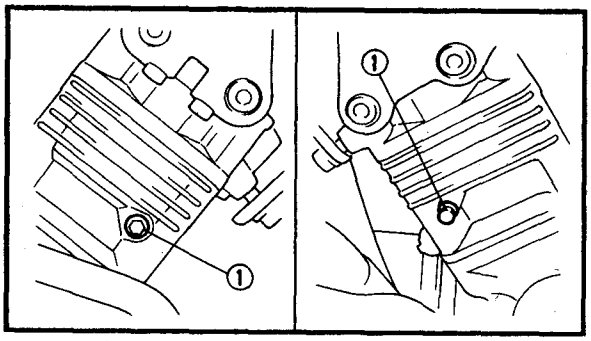

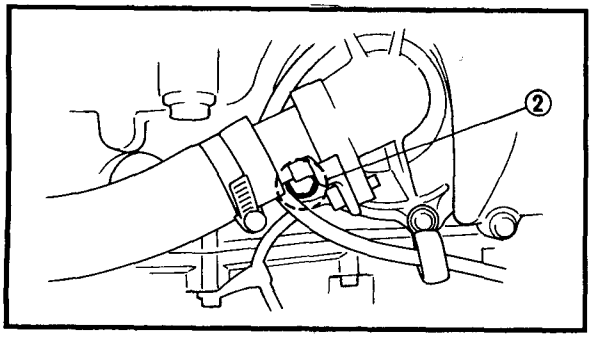

5.Remove:
- Drain bolts (cylinder ① and water pump ②)
  (with the copper washers)
  Drain the engine and radiator of its coolant.

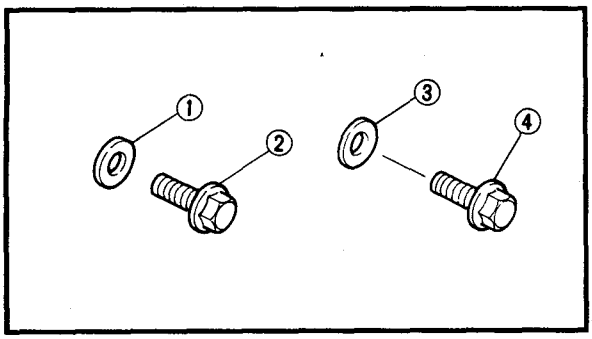

6.Inspect:
- Copper washer ① (cylinder drain bolt ②)
- Copper washer ③ (water pump drain bolt ④)
  Damage → Replace.

7.Install:
- Drain bolts

Drain bolt:
10 Nm (1.0 m • kg, 7.2 ft • lb)

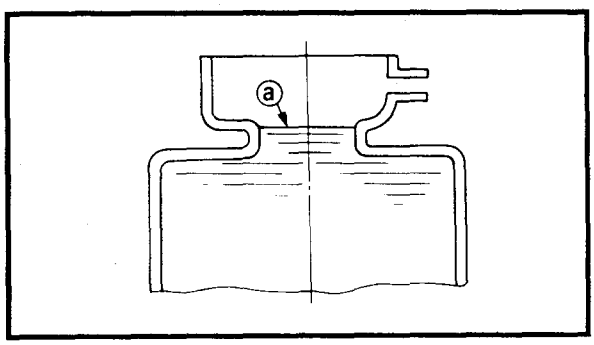

8.Connect:
- Coolant reservoir hose

9.Fill:
- Cooling system (radiator and engine)
  (to the specified level ⓐ)

Recommended coolant:
High quality ethylene glycol anti-freeze containing corrosion inhibitors for aluminum engines
Coolant and water mix ratio:
50% - 50%
Cooling system total capacity:
2.7 L (2.38 Imp qt, 2.85 US qt)
Coolant reservoir capacity:
0.23 L (0.20 Imp qt, 0.24 US qt)
From lower to upper level:
0.16 L (0.14 Imp qt, 0.17 US qt)

****

Handling notes for coolant:
Coolant is potentially harmful and should be handled with special care.

⚠ WARNING

- **If coolant splashes in your eyes: thoroughly wash your eyes with water and consult a doctor.**
- **If coolant splashes on your clothes: quickly wash it away with water and then with both soap and water.**
- **If coolant is swallowed: induce vomiting and get immediate medical attention.**

****

CAUTION:

- **Hard water or salt water is harmful to engine parts. If soft water is not available use only distilled water.**
- **If you use tap water, make sure that it is soft water.**
- **Do not use water containing impurities or oil.**
- **If coolant comes into contact with painted surfaces, immediately wash them with water.**
- **Do not mix different types of ethylene glycol antifreeze containing corrosion inhibitors for aluminium engines.**

10.Install:
- Radiator cap

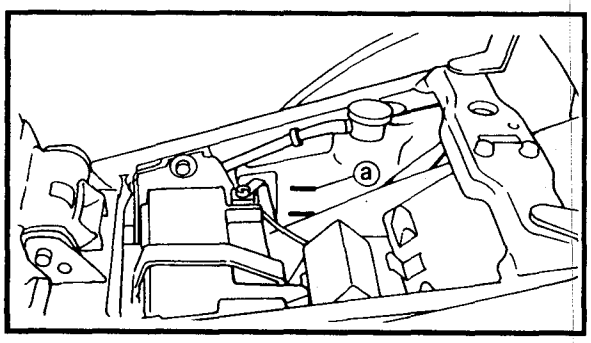

11.Fill:
- Coolant reservoir
  (to the upper level mark ⓐ)

12.Install:
- Coolant reservoir cap

13.Start the engine and let it warm up for several minutes.

14.Turn off the engine and inspect the coolant level.
Refer to "COOLANT LEVEL INSPECTION".

NOTE:
Before checking the coolant level wait a few minutes until the coolant settles.

15.Install:
- Front cowling assembly
- Rear view mirrors (left and right)
- Side cowlings (left and right)
- Bottom cowling
- Bottom cowling (front)
- Side panel (right)
- Passenger seat
- Rider seat

Refer to "COWLINGS", "FUEL TANK" and "SEATS".

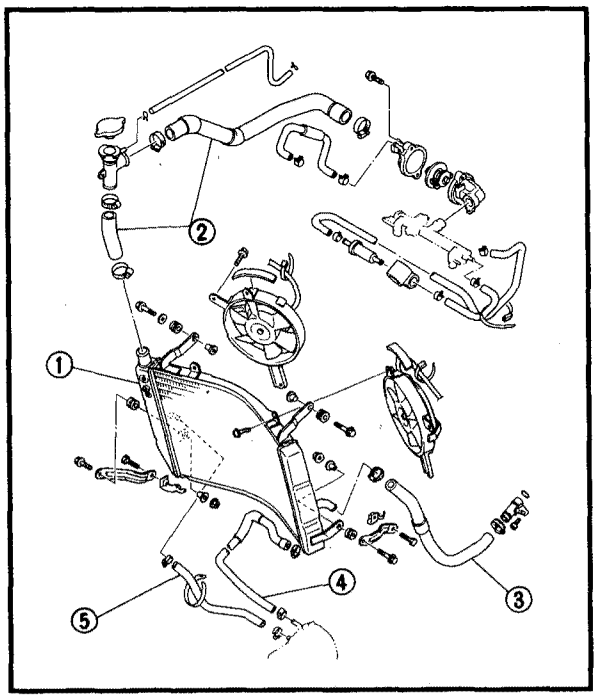

EB303190

COOLING SYSTEM INSPECTION

1.Remove:
- Rider seat
- Passenger seat
- Side panels (left and right)
- Fuel tank
- Bottom cowling (front)
- Bottom cowling
- Side cowlings (left and right)
- Front cowling assembly

Refer to "SEATS", "FUEL TANK" and "COWLINGS".

2.Inspect:
- Radiator ①
- Radiator hose (inlet) ②
- Radiator hose (outlet) ③
- Oil cooler hose (inlet) ④
- Oil cooler hose (outlet) ⑤
- Water jacket joint (outlet)
- Water jacket joint (inlet)

Cracks/damage → Replace.
Refer to "COOLING SYSTEM" in CHAPTER 5.

3.Install:
- Front cowling assembly
- Side cowlings (left and right)
- Bottom cowling
- Bottom cowling (front)
- Fuel tank
- Side panels (left and right)
- Passenger seat
- Rider seat

Refer to "COWLINGS", "FUEL TANK" and "SEATS".

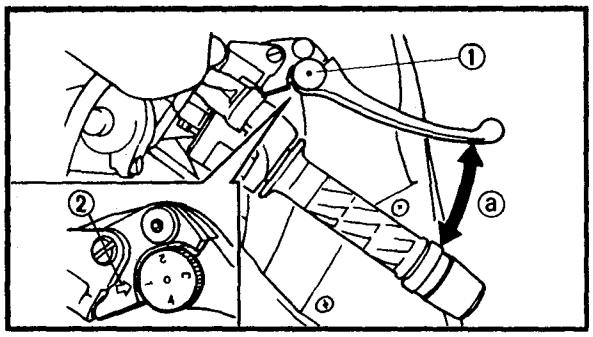

EB304001
CHASSIS
FRONT BRAKE ADJUSTMENT

1.Adjust:
- Brake lever position
  (distance ⓐ from the handlebar grip to the front brake lever)

****

Adjustment steps:
- Turn the adjuster ① while pushing the front brake lever forward until the lever is in the desired position.
- Align the setting on the adjuster with the arrow mark ②.

Adjuster position #1:	**Brake lever distance ⓐ is the largest.**
Adjuster position #4:	**Brake lever distance ⓐ is the smallest.**

⚠ WARNING

After adjusting the front brake lever position (distance), make sure that the pin on the brake lever holder is firmly inserted into the hole in the adjuster.

****

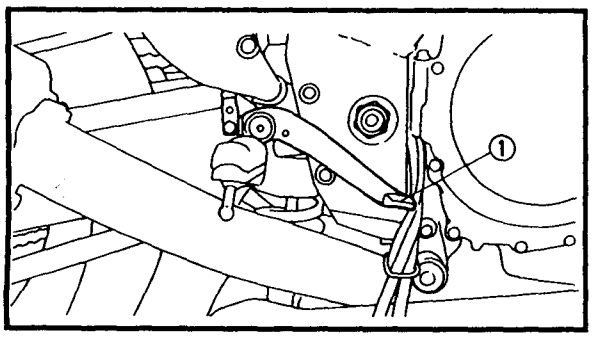

EB304010
REAR BRAKE ADJUSTMENT

1.Check:
- Brake pedal height ⓐ
  Out of specification → Adjust.

Brake pedal height:
50 mm (1.97 in)
(below the top of the footrest)

2.Adjust:
- Brake pedal height

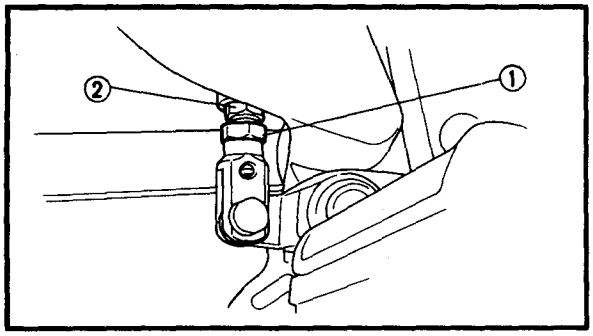

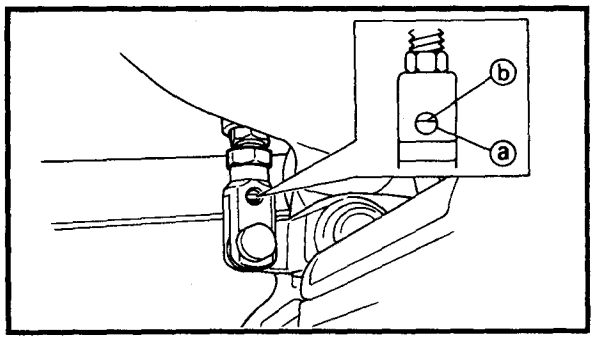

****

Adjustment steps:

- Loosen the locknut ①.
- Turn the adjuster ② in or out until the specified pedal height is obtained.

Turning in:	**Brake pedal height is decreased.**
Turning out:	**Brake pedal height is increased.**

⚠ WARNING

After adjusting the brake pedal height, check that the adjuster end ⓑ is visible through the hole ⓐ.

- Tighten the locknut ①.

	Locknut: **26 Nm (2.6 m • kg, 19 ft • lb)**

CAUTION:

After adjusting the brake pedal height make sure that there is no brake drag.

⚠ WARNING

A soft or spongy feeling in the brake pedal can indicate the presence of air in the brake system. This air must be removed by bleeding the brake system before the motorcycle is operated. Air in the brake system will considerably reduce braking performance and can result in loss of control and possibly an accident. Inspect and if necessary bleed the brake system.

****

3.Adjust:

- Brake light switch
  Refer to "BRAKE LIGHT SWITCH ADJUSTMENT".

Kodak ds digital science DEMO

EB304020

BRAKE FLUID LEVEL INSPECTION

1.Stand the motorcycle on a level surface.

NOTE:
- When checking the brake fluid level make sure that the motorcycle is upright.
- Place the motorcycle on a suitable stand.

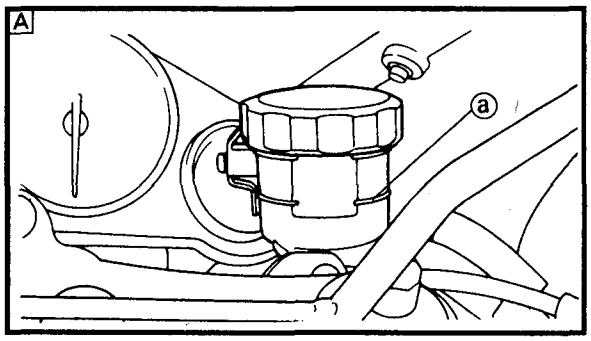

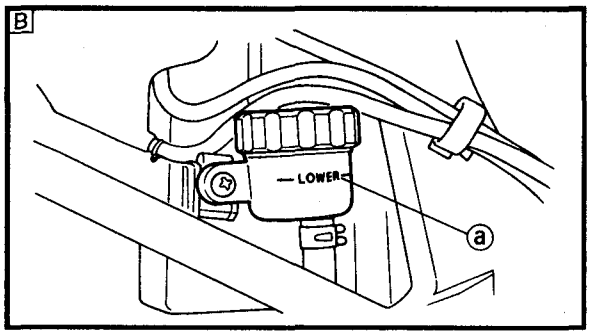

2.Remove:
- Rider seat
- Passenger seat
- Side panel (right)

Refer to "SEATS" and "FUEL TANK".

3.Inspect:
- Brake fluid level

Brake fluid level is below the "LOWER" level line ⓐ → Fill to the proper level.

Recommended brake fluid:
DOT 4

A Front brake
B Rear brake

NOTE:
For a correct reading of the brake fluid level, make sure that the top of the handlebar brake reservoir is horizontal.

CAUTION:
Brake fluid may damage painted surfaces or plastic parts. Always clean up any spilt fluid immediately.

⚠ WARNING
- **Use only the designated brake fluid. Other fluids may deteriorate the rubber seals, causing leakage and poor brake performance.**
- **Refill with the same type of fluid. Mixing fluids may result in a harmful chemical reaction leading to poor brake performance.**
- **When refilling be careful that water does not enter the brake reservoir. Water will significantly lower the boiling point of the fluid and may cause vapor lock.**

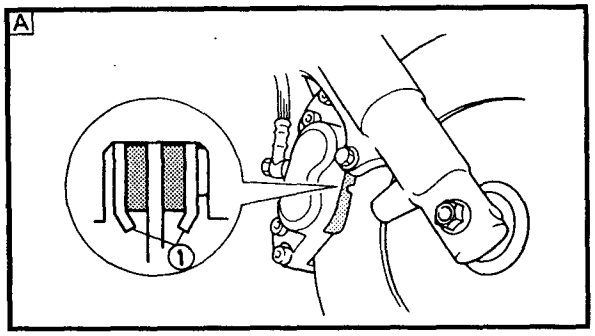

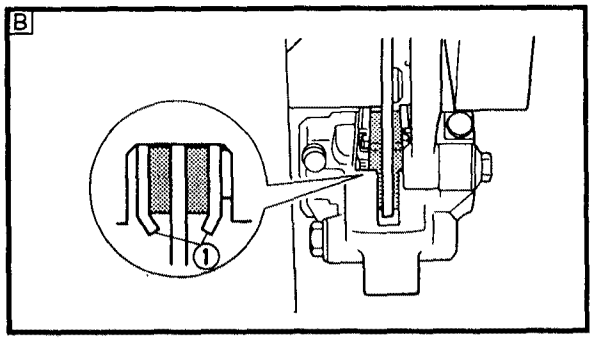

EB304030
BRAKE PAD INSPECTION

1. Operate the brake lever or brake pedal.
2. Inspect:
- Brake pad (front)
- Brake pad (rear)

  Wear indicators ① almost touch the brake disc → Replace the brake pads as a set. Refer to "FRONT AND REAR BRAKES" in CHAPTER 7.

A Front
B Rear

EB304050
BRAKE LIGHT SWITCH ADJUSTMENT

NOTE:
- The brake light switch is operated by movement of the brake pedal.
- Adjustment is correct when the brake light comes on just before the braking effect actually starts.

1. Check:
- Brake light operation timing

  Incorrect → Adjust.
2. Adjust:
- Brake light operation timing

****

Adjustment steps:
- Hold the main body ① of the switch so that it does not rotate, and turn the adjuster ② in or out until the proper operation timing is obtained.

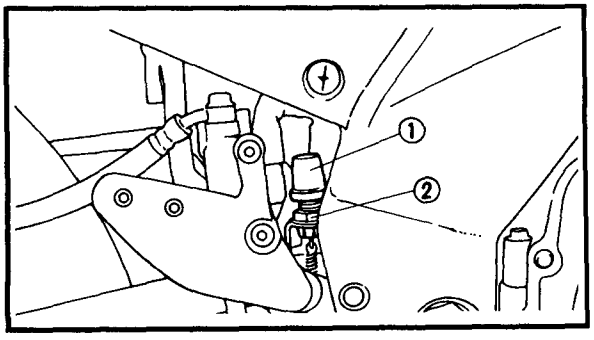

Turning in:	**Brake light comes on sooner.**
Turning out:	**Brake light comes on later.**

****

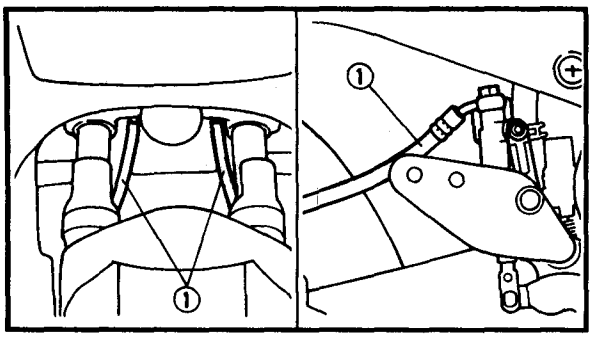

EB304060
BRAKE HOSE INSPECTION

1. Inspect:
- Brake hoses ①
  Cracks/wear/damage → Replace.
2. Check:
- Brake hose clamp
  Loose → Tighten.

3. Hold the motorcycle upright and apply the front or rear brake.
4. Check:
- Brake hoses
  Activate the brake lever or pedal several times.
  Brake fluid leakage → Replace the faulty hose.

EB304070
AIR BLEEDING (HYDRAULIC BRAKE SYSTEM)

⚠ WARNING

Bleed the brake system whenever:
- **The system is disassembled.**
- **A brake hose is loosened or removed.**
- **The brake fluid level is very low.**
- **Brake operation is faulty.**

If the brake system is not properly bled, a loss of braking performance may occur.

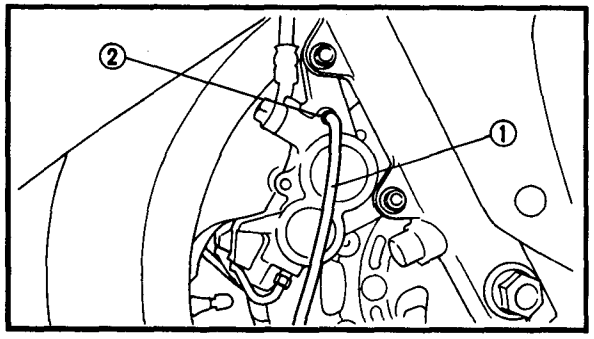

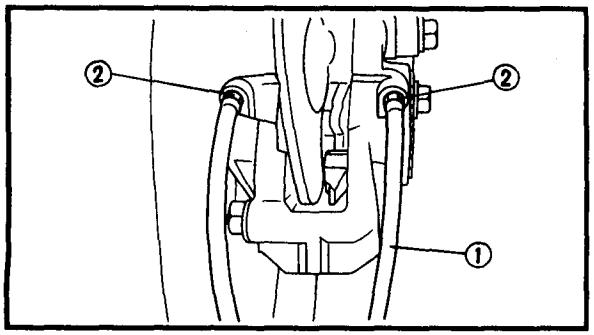

1. Bleed:
- Brake system

****

Air bleeding steps:

a. Fill the brake reservoir with the proper brake fluid.
b. Install the diaphragm. Be careful not to spill any fluid or allow the brake reservoir to overflow.
c. Connect a clear plastic hose ① tightly to the caliper bleed screw ②.
   [A] Front [B] Rear
d. Place the other end of the hose into a container.
e. Slowly apply the brake lever or pedal several times.

f. Pull the lever in or push down on the pedal. Hold the lever or pedal in position.
g. Loosen the bleed screw and allow the lever or pedal to travel towards its limit.
h. Tighten the bleed screw when the lever or pedal limit has been reached; then release the lever or pedal.
i. Repeat steps (e) to (h) until all the air bubbles have disappeared from the brake fluid.

NOTE:
When bleeding the brake system, make sure that there is always enough brake fluid in the brake reservoir before applying the brake lever or pedal. Ignoring this precaution could allow air to enter the brake system, lengthening the bleeding procedure, considerably.

j. Tighten the bleed screw.

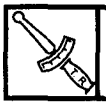	**Bleed screw:** **6 Nm (0.6 m • kg, 4.3 ft • lb)**

NOTE:
If bleeding is difficult, it may be necessary to let the brake fluid settle for a few hours. Repeat the bleeding procedure when the tiny bubbles in the brake system have disappeared.

k. Fill the brake reservoir to the proper level. Refer to "BRAKE FLUID LEVEL INSPECTION".

⚠ WARNING
After bleeding the brake system check the brake operation.

****

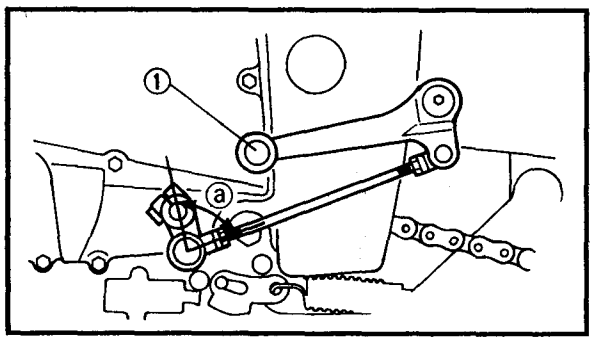

EB304080
SHIFT PEDAL ADJUSTMENT

1. Check:
- Shift pedal position
  Check that the end ① of the shift pedal is above the shift pedal link. (Angle ⓐ should be approximately 90°.)
  Incorrect position → Adjust.

2. Adjust:
- Shift pedal position

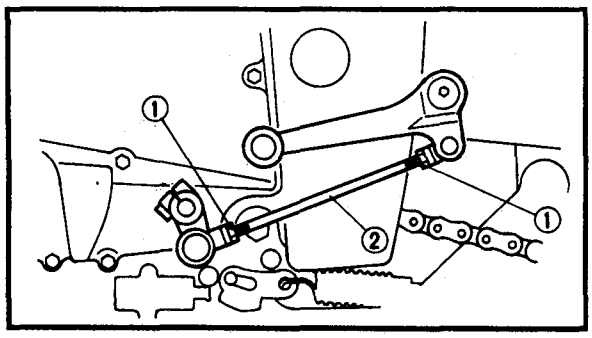

****

Adjustment steps:

- Loosen both locknuts ①.
- Turn the shift pedal link ② in or out to obtain the correct pedal position.

Turning in:	**Shift pedal is raised.**
Turning out:	**Shift pedal is lowered.**

- Tighten both locknuts.

****

EB304090

DRIVE CHAIN SLACK ADJUSTMENT

NOTE:

Before checking and adjusting the drive chain slack rotate the rear wheel several revolutions. Check the slack at several points to find the tightest point. At the tightest position check the drive chain slack and if necessary, adjust it.

CAUTION:

Too little chain slack will overload the engine and other vital parts; keep the slack within the specified limits.

⚠ WARNING

Securely support the motorcycle so that there is no danger of it falling over.

1. Place the motorcycle on a suitable stand.

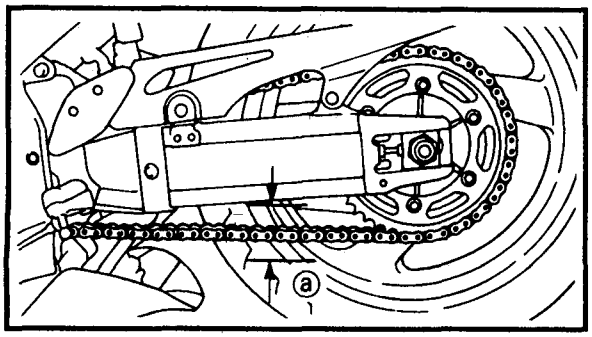

2. Check:
   - Drive chain slack ⓐ
     Out of specification → Adjust.

	Drive chain slack: **20 ~ 35 mm (0.8 ~ 1.4 in)**

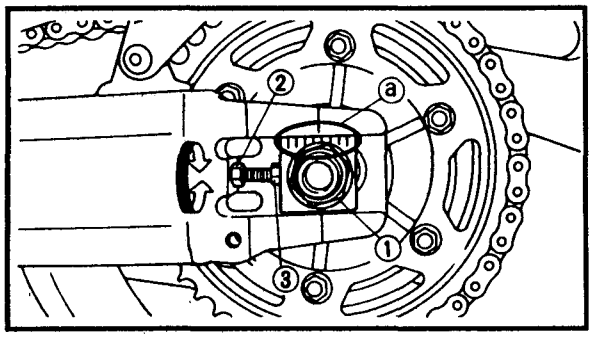

3.Loosen:
- Axle nut ①

4.Adjust:
- Drive chain slack

****

Adjustment steps:
- Loosen both locknuts ②.
- Turn the adjuster ③ in or out until the specified drive chain slack is obtained.

Turning in:	**Drive chain slack is increased.**
Turning out:	**Drive chain slack is decreased.**

NOTE:
- To maintain the correct axle alignment turn each adjuster exactly the same amount. (There are marks ⓐ on each side of the swingarm. When adjusting the slack for the proper alignment use these marks as reference points.)
- Before tightening the axle nut to specification, make sure that there is no clearance at the adjuster or the swingarm end on both sides. Push the wheel forward to check for any clearances.

	Axle nut: **150 Nm (15.0 m • kg, 110 ft • lb)**

- Tighten the locknuts.

****

EB304100
DRIVE CHAIN LUBRICATION

The drive chain consists of many interacting parts. If the chain is not maintained properly, it will wear out rapidly. Therefore, the drive chain should be serviced periodically. This service is necessary especially when the motorcycle is used in dusty areas. This motorcycle has a drive chain with small rubber O-rings between each chain plate. Steam cleaning, high-pressure washing, and certain solvents can damage these O-rings. Use only kerosene to clean the drive chain. Wipe it dry and thoroughly lubricate it with SAE 30 ~ 50W motor oil. Do not use any other lubricants on the drive chain. They may contain solvents that could damage the O-rings.

Recommended lubricant:
SAE 30 ~ 50W motor oil or chain lubricant suitable for O-ring chains.

EB304130
STEERING HEAD INSPECTION

⚠ WARNING

Securely support the motorcycle so that there is no danger of it falling over.

1. Stand the motorcycle on a level surface.
2. Remove:
- Bottom cowling (front)
- Bottom cowling
  Refer to "COWLINGS".

NOTE:
Place the motorcycle on a suitable stand so that the front wheel is elevated.

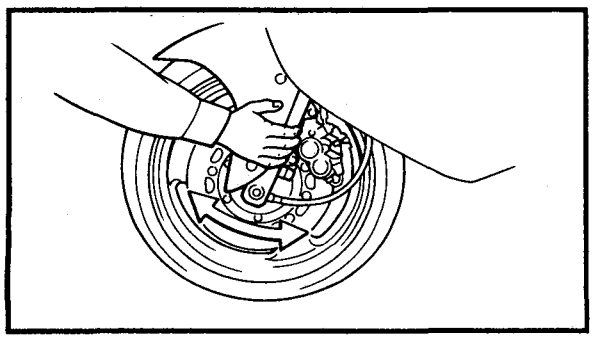

3. Check:
- Steering assembly bearings
  Grasp the bottom of the lower front fork tubes and gently rock the fork assembly.
  Looseness → Adjust the steering head.

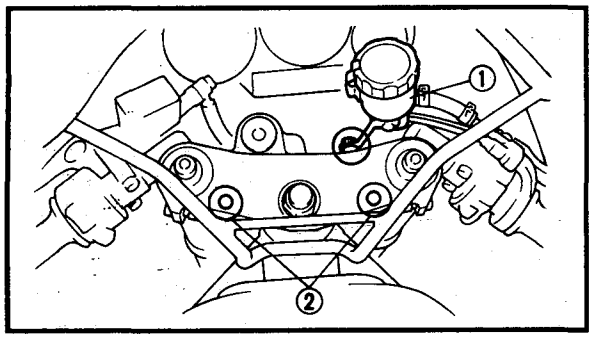

4.Remove:
- Brake reservoir ①
- Blind plugs ②

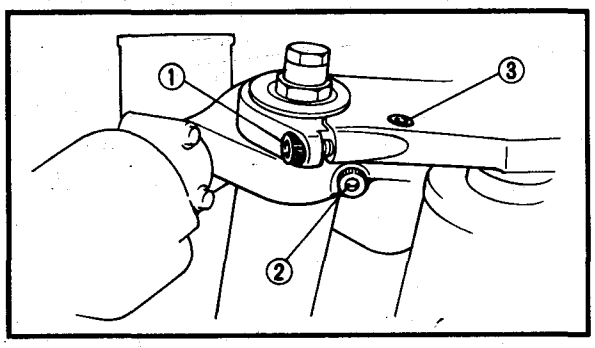

5.Loosen:
- Pinch bolts (upper bracket) ①
- Pinch bolts (handlebar boss) ②

6.Remove:
- Bolts (handlebar) ③
- Handlebar bosses (from the upper bracket)

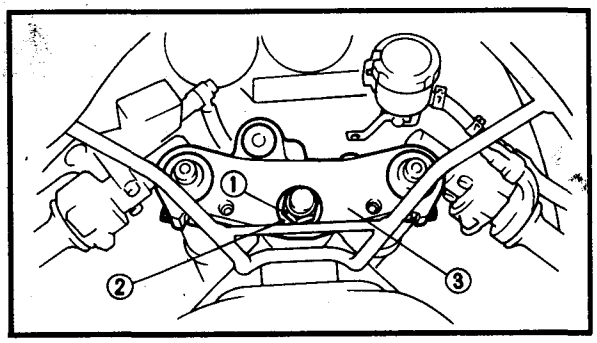

7.Remove:
- Nut (upper bracket) ①
- Washer ②
- Upper bracket ③

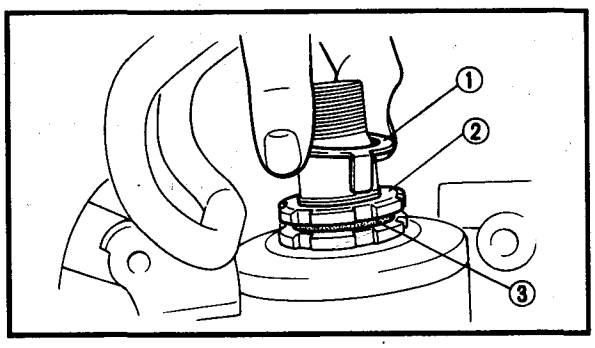

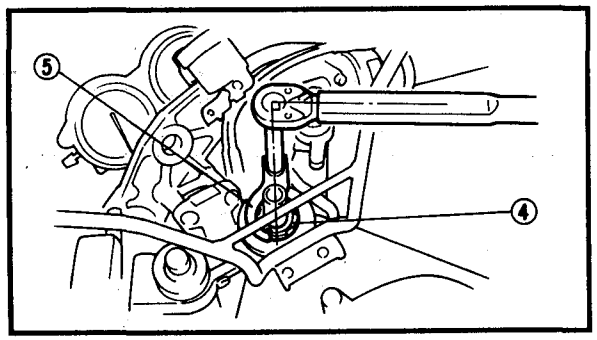

8.Adjust:
- Steering head

****

Adjustment steps:
- Remove the special washer ①, the upper ring nut ② and the rubber washer ③.
- Loosen the lower ring nut ④.
- Use a ring nut wrench ⑤ to tighten the lower ring nut.

NOTE:
Set the torque wrench at a right angle to the ring nut wrench.

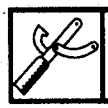	**Ring nut wrench:** **YU-33975/90890-01403**

Lower ring nut:
(initial tightening):
48 Nm (4.8 m • kg, 35 ft • lb)

- Loosen the lower ring nut ④ completely, then tighten it to specification.

⚠ WARNING

Do not overtighten the ring nut.

Lower ring nut:
(final tightening):
16 Nm (1.6 m • kg, 11 ft • lb)

- Check the steering head for looseness or binding by turning it all the way, in both directions. If it binds, remove the steering stem assembly and inspect the steering bearings.
  Refer to "STEERING HEAD AND HANDLEBARS" in CHAPTER 7.
- Install the rubber washer ③.
- Install the upper ring nut ②.
- Finger tighten the upper ring nut ②, then align the slots of both ring nuts. If necessary, hold the lower ring nut and tighten the upper ring nut until their slots are aligned.
- Install the special washer ①.

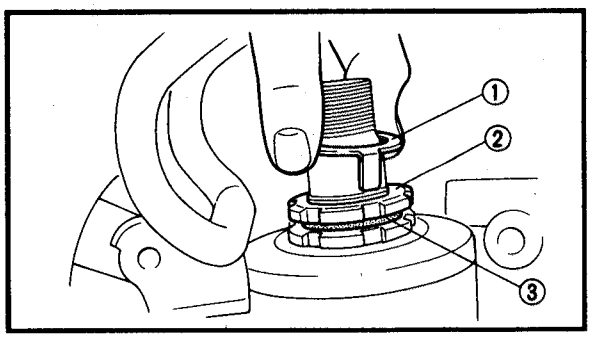

NOTE:
Make sure that the special washer tabs sit correctly in the ring nut slots.

****

9.Install:
- Upper bracket

Nut (steering stem):
110 Nm (11.0 m • kg, 80 ft • lb)
Bolt (handlebar boss and upper bracket):
13 Nm (1.3 m • kg, 9.4 ft • lb)
Pinch bolt (upper):
26 Nm (2.6 m • kg, 19 ft • lb)
Pinch bolt (handlebar boss):
17 Nm (1.7 m • kg, 12 ft • lb)

10.Install:
- Brake reservoir
- Bottom cowling
- Bottom cowling (front)

Refer to "COWLINGS".

FRONT FORK INSPECTION

WARNING

Securely support the motorcycle so there is no danger of it falling over.

1.Place the motorcycle on a level surface.

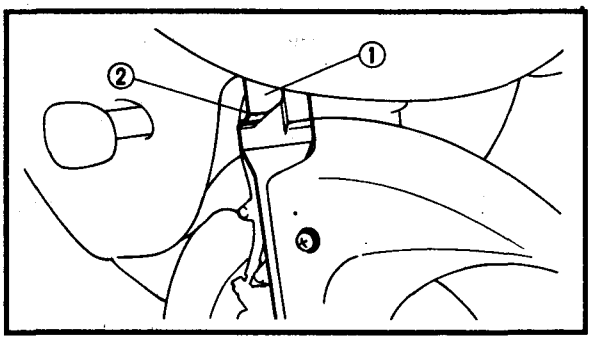

2.Check:
- Inner tube ①
  Bends/scratches/damage → Replace.
- Oil seal ②
  Excessive oil leakage → Replace.

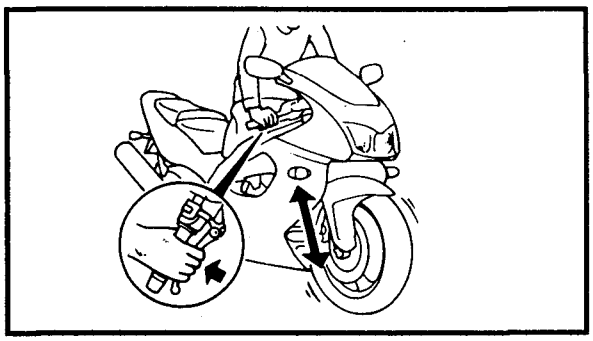

3.Hold the motorcycle in an upright position and apply the front brake.
4.Check:
- Operation
  Pump the front fork up and down several times.
  Unsmooth → Repair.
  Refer to "FRONT FORKS" in CHAPTER 7.

EB304150
FRONT FORK ADJUSTMENT

WARNING

- **Always apply the same adjustment to each fork leg. Uneven adjustment can result in poor handling and a loss of stability.**
- **Securely support the motorcycle so that there is no danger of it falling over.**

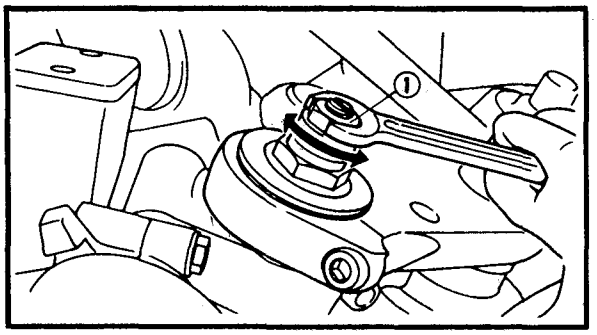

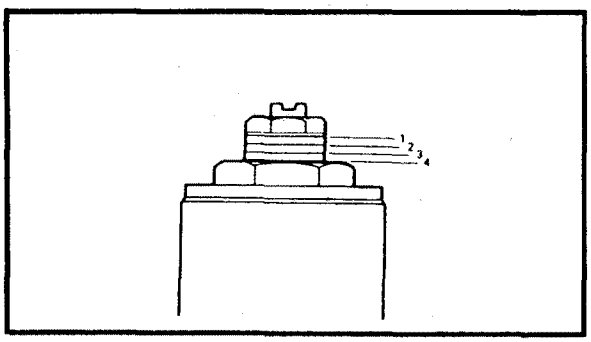

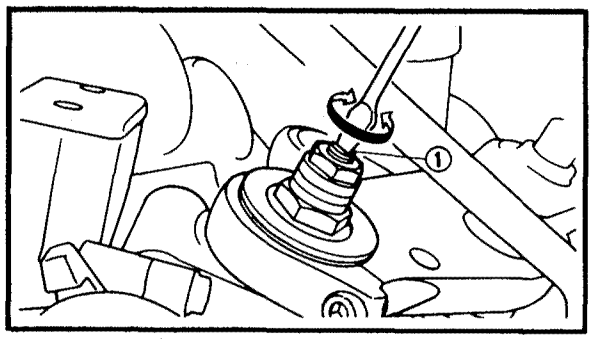

Spring preload

1.Adjust:

- Spring preload
  Turn the spring preload adjuster ① in or out.

Turning in:	**Spring preload is increased.**
Turning out:	**Spring preload is decreased.**

Adjuster position:
Standard: 3
Minimum: 4
Maximum: 1

CAUTION:

- **Grooves are provided to indicate the adjustment position.**
- **Make sure that each fork leg is adjusted to the same position.**
- **Never turn the spring preload adjuster beyond the maximum or minimum adjustment positions.**

Rebound damping

1.Adjust:

- Rebound damping
  Turn the rebound damping force adjusting screw ① in or out.

Turning in:	**Rebound damping is increased.**
Turning out:	**Rebound damping is decreased.**

Adjuster position:
Standard: 9 clicks out *
Minimum: 17 clicks out *
Maximum: 0 clicks out *

* : From the fully turned in position.

CAUTION:

- **Make sure that each fork leg is adjusted to the same position.**
- **Never turn the rebound damping force adjusting screw beyond the maximum or minimum adjustment positions.**

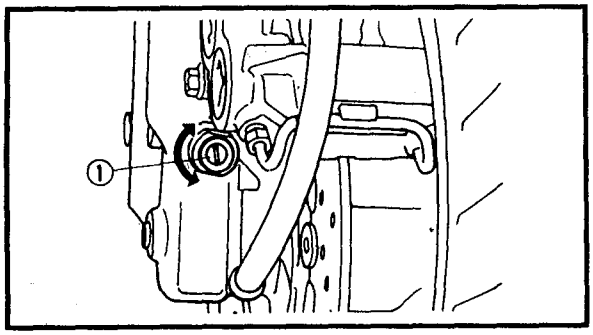

Compression damping

1.Adjust:

- Compression damping
  Turn the compression damping force adjusting screw ① in or out.

Turning in:	**Compression damping is increased.**
Turning out:	**Compression damping is decreased.**

Adjuster position:
Standard: 12 clicks out *
Minimum: 21 clicks out *
Maximum: 0 click out *

* : From the fully turned in position.

CAUTION:

- **Make sure that each fork leg is adjusted to the same position.**
- **Never turn the compression damping force adjusting screw beyond the maximum or minimum adjustment positions.**

EB304161

REAR SHOCK ABSORBER ADJUSTMENT

⚠ WARNING

Securely support the motorcycle so there is no danger of it falling over.

Spring preload

1.Adjust:

- Spring preload

NOTE:
To adjust the spring preload use the special wrench and extension bar included in the owner's tool kit.

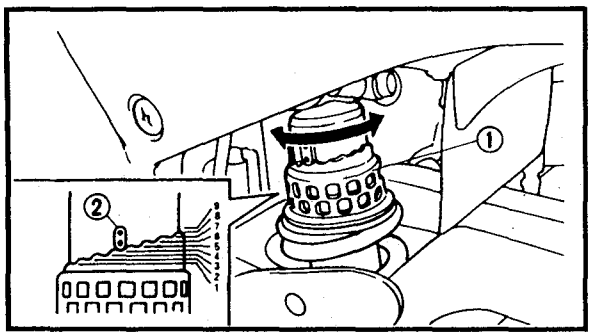

Turn the spring preload adjusting ring ① in or out.
Align the stopper ② with the spring preload adjusting ring.

Turning in:	**Spring preload is decreased.**
Turning out:	**Spring preload is increased.**

Adjuster position:
Standard: 4
Minimum: 1
Maximum: 9

CAUTION:
Never turn the spring preload adjusting ring beyond the maximum or minimum adjustment positions.

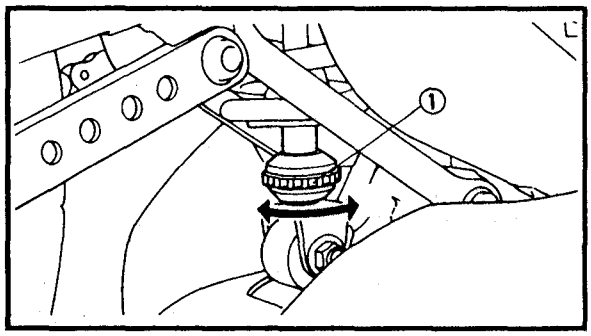

Rebound damping
1.Adjust:
- Rebound damping
  Turn the rebound damping force adjuster ① in or out.

Turning in:	**Rebound damping is increased.**
Turning out:	**Rebound damping is decreased.**

Adjuster position:
Standard: 10 clicks out *
Minimum: 20 clicks out *
Maximum: 0 clicks out *

* : From the fully turned in position.

CAUTION:
Never turn the rebound damping force adjuster beyond the maximum or minimum adjustment positions.

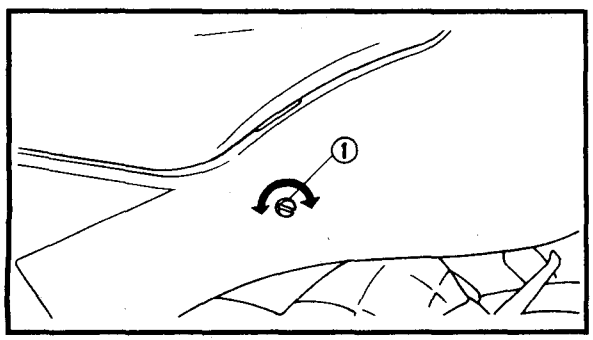

Compression damping
1.Adjust:
- Compression damping
  Turn the compression damping force adjusting screw ① in or out.

Turning in:	**Compression damping is increased.**
Turning out:	**Compression damping is decreased.**

Adjuster position:
Standard: 10 clicks out *
Minimum: 0 clicks out *
Maximum: 24 clicks out *

* : From the fully turned in position.

CAUTION:

Never turn the compression damping force adjusting screw beyond the maximum or minimum adjustment positions.

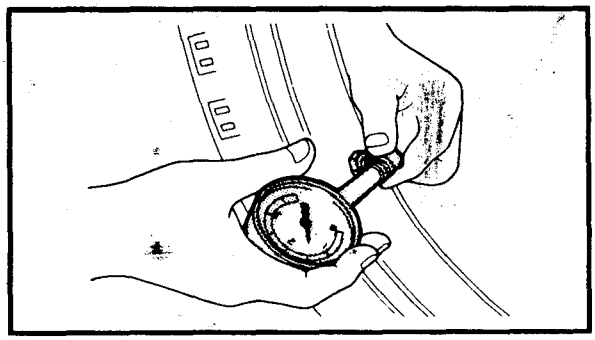

EB304170

TIRE INSPECTION

1. Measure:
- Tire inflation pressure
  Out of specification → Adjust.

⚠ WARNING

- **Tire inflation pressure should only be checked and adjusted when the tire temperature equals the ambient air temperature. Tire inflation pressure and suspension must be adjusted according to the total weight of the cargo, rider, passenger and accessories (fairing, saddlebags, etc. if approved for this model), and according to whether the motorcycle will be operated at high speed or not.**

NEVER OVERLOAD THE MOTORCYCLE.

- **Operation of an overloaded motorcycle could cause tire damage, accident or injury.**

Basic weight: With oil and full fuel tank	224 kg (494 lb) (YZF1000RJ) 225 kg (496 lb) (YZF1000RJC)	
Maximum load*:	196 kg (432 lb) (YZF1000RJ) 195 kg (430 lb) (YZF1000RJC)	
Cold tire pressure:	Front	Rear
Up to 90 kg load*	250 kPa (2.5 kg/cm², 36 psi)	250 kPa (2.5 kg/cm², 36 psi)
90 kg ~ maximum load*	290 kPa (2.9 kg/cm², 41 psi)	290 kPa (2.9 kg/cm², 41 psi)
High speed riding	290 kPa (2.9 kg/cm², 41 psi)	290 kPa (2.9 kg/cm², 41 psi)

* Load is the total weight of the cargo, rider, passenger and accessories.

2.Inspect:

- Tire surfaces
  Wear/damage → Replace.

Minimum tire tread depth: (front and rear): 1.6 mm (0.06 in)

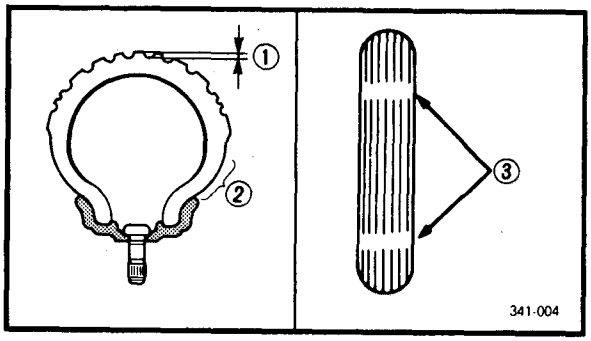

① Tread depth
② Side wall
③ Wear indicator

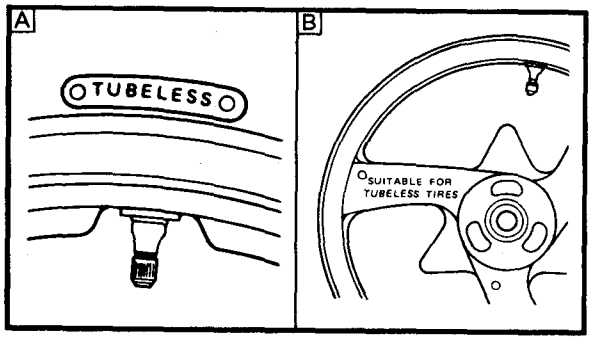

⚠ WARNING

- **It is dangerous to ride with a worn-out tire. When the tire tread begins to show signs of wear, replace the tire immediately.**
- **Do not use tubeless tires on a wheel designed for tube type tires only. Tire failure and personal injury may result from sudden deflation.**

A Tire B Wheel

Tube type wheel:	Tube type tire only.
Tubeless type wheel:	Tube type or tubeless tire.

- **When using tube type tires be sure to install the correct tube.**

- After extensive tests, the tires listed below have been approved by Yamaha Motor Co., Ltd. for this model. No guarantee concerning handling characteristics can be given if a tire combination other than one approved by Yamaha is used on this motorcycle. The front and rear tires should always be by the same manufacturer and of the same design.

FRONT TIRE:

Manufacturer	Size	Type
BRIDGESTONE	120/70 ZR17	BT50F
DUNLOP	120/70 ZR17	D204FN

REAR TIRE:

Manufacturer	Size	Type
BRIDGESTONE	180/55 ZR17	BT50R
DUNLOP	180/55 ZR17	D204M

⚠ WARNING

After mounting a tire, ride conservatively for a while to give the tire time to seat itself properly in the rim. Failure to do so could lead to an accident with possible injury to the rider or damage to the motorcycle.

EB304180
WHEEL INSPECTION

1.Inspect:
- Wheels
  Bends/damage → Replace.

NOTE:
After a tire or wheel has been changed or replaced always balance the wheel.

⚠ WARNING
Never attempt to make any repairs to the wheels.

EB304200
CABLE INSPECTION AND LUBRICATION

⚠ WARNING
Damaged cable sheaths may cause corrosion and interfere with cable movements. Replace damaged cable sheaths and cables as soon as possible.

1.Inspect:
- Cable sheaths
  Damage → Replace.

2.Check:
- Cable operation
  Unsmooth operation → Lubricate.

	Recommended lubricant: **Engine oil**

NOTE:
Hold the cable end upright and pour a few drops of lubricant into the cable sheath.

EB304210

LEVER AND PEDAL LUBRICATION

Lubricate the pivoting points on the levers and pedals.

	Recommended lubricant: Engine oil

EB304220

SIDESTAND LUBRICATION

Lubricate the pivoting point and the contact surfaces on the sidestand.

	Recommended lubricant: Engine oil

EB304240

REAR SUSPENSION LUBRICATION

Lubricate the pivoting points on the rear suspension.

	Recommended lubricant: Molybdenum disulfide grease

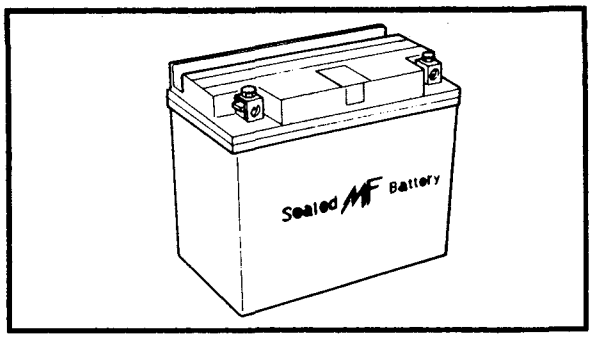

EB305000

ELECTRICAL

BATTERY INSPECTION

NOTE:

Since the MF battery is a sealed type battery, it is not possible to measure the specific gravity of the electrolyte in order to check the charge state of the battery. Therefore the charge of the battery has to be checked by measuring the voltage at the battery terminals.

CAUTION:

- **This is a sealed type battery. Never remove the sealing caps. If the sealing caps have been removed, the balance will not be maintained and battery performance will deteriorate.**
- **Charging time, charging current and charging voltage for the MF battery are different from those of general type batteries. The MF battery should be charged as explained in "CHARGING METHOD". If the battery is overcharged, the electrolyte level will drop considerably. Therefore, take special care when charging the battery.**

⚠ WARNING

Battery electrolyte is dangerous; it contains sulfuric acid which is poisonous and highly caustic.

Always follow these preventive measures:

- **Avoid bodily contact with electrolyte as it can cause severe burns or permanent eye injury.**
- **Wear protective eye gear when handling or working near batteries.**

Antidote (EXTERNAL):

- **SKIN - Wash with water.**
- **EYES - Flush with water for 15 minutes and get immediate medical attention.**

Antidote (INTERNAL):

- **Drink large quantities of water or milk followed with milk of magnesia, beaten egg or vegetable oil. Get immediate medical attention.**

Batteries generate explosive hydrogen gas.

Always follow the following preventive measures:

- **Charge batteries in a well-ventilated area.**
- **Keep batteries away from fire, sparks or open flames (e.g., welding equipment, lighted cigarettes, etc.)**
- **DO NOT SMOKE when charging or handling batteries.**

KEEP BATTERIES AND ELECTROLYTE OUT OF REACH OF CHILDREN.

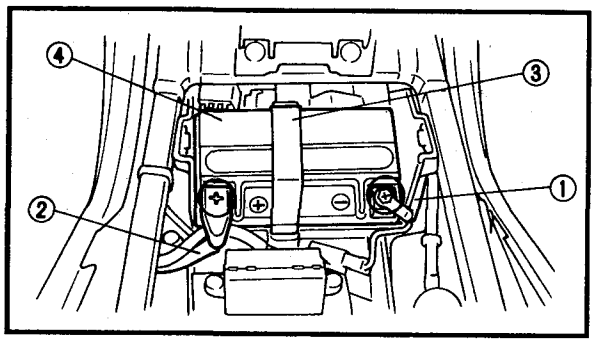

1.Remove:
- Rider seat
- Passenger seat

Refer to "SEATS".

2.Disconnect:
- Battery leads

CAUTION:

First, disconnect the negative lead ①, then disconnect the positive lead ②.

3.Remove:
- Battery band ③
- Battery

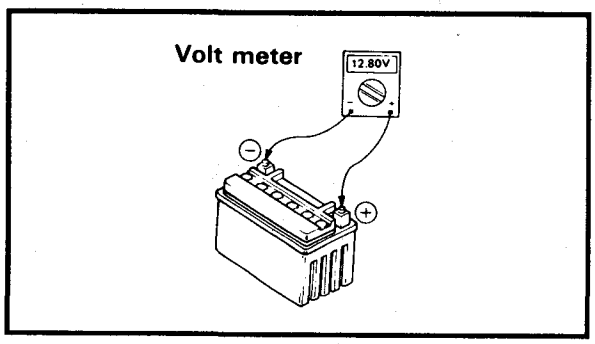

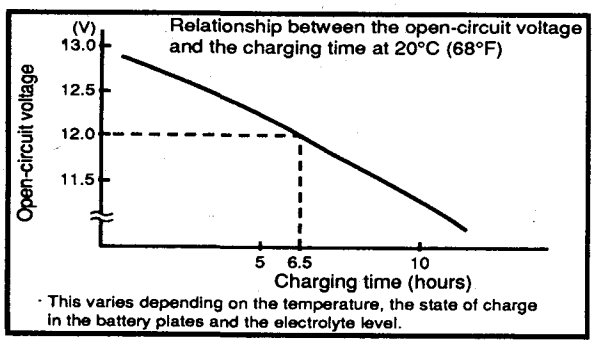

4.Check:
- Battery condition

****

Battery condition checking steps:

- Connect a digital voltmeter to the battery terminals.

Tester (+) lead → battery (+) terminal **Tester (–) lead → battery (–) terminal**

NOTE:

The charge state of an MF battery can be checked by measuring the open-circuit voltage (i.e. the voltage when the positive terminal is disconnected).

Open-circuit voltage	Charging time
12.8V or higher	No charging is necessary.

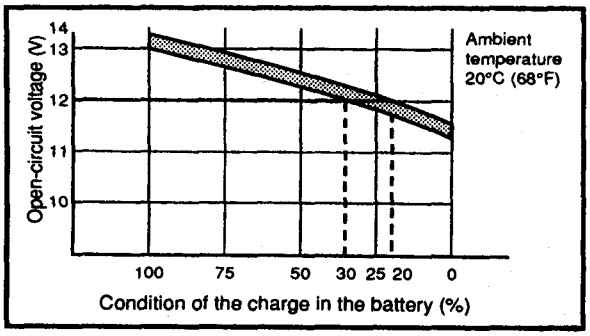

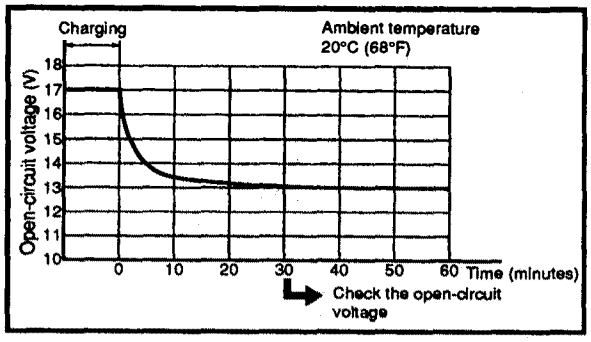

- Check the condition of the battery using the following charts.

Example:

- Open-circuit voltage = 12.0V
- Charging time = 6.5 hours
- Charge condition of the battery = 20 ~ 30%
- Charging method for MF batteries

Charging method

CAUTION:

- **If it is impossible to set the standard charging current, be careful not to overcharge.**
- **When charging the battery, be sure to remove it from the motorcycle. (If charging has to be done with the battery mounted on the motorcycle, be sure to disconnect the wire at the negative terminal.)**
- **Never remove the sealing caps of an MF battery.**
- **Make sure that the charging clips are in full contact with the terminal and that they are not shorted together. (A corroded clip on the charger may cause the battery to generate heat in the contact area. A weak clip spring may cause sparks.)**
- **Before removing the clips from the battery terminals, be sure to turn off the charger's power switch.**
- **The open-circuit voltage variation for the MF battery after charging is shown below. As shown in the figure, the open-circuit voltage stabilizes about 30 minutes after charging has been completed. Therefore, wait 30 minutes after charging is completed before measuring the open-circuit voltage.**

****

Charging method using a variable-current (voltage) type charger

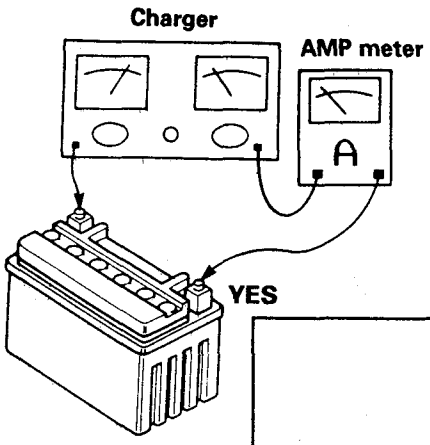

Measure the open-circuit voltage prior to charging.

NOTE: Voltage should be measured 30 minutes after the machine is stopped.

Connect a charger and AMP meter to the battery and start charging.

NOTE: Set the charging voltage at 16 ~ 17 V. (If the setting is lower, charging will be insufficient. If too high, the battery will be over-charged.)

Make sure that the current is higher than the standard charging current written on the battery.

YES → Adjust the voltage so that the current is at the standard charging level.

NO → By turning the charging voltage adjust dial, set the charging voltage at 20 ~ 25 V.

Monitor the amperage for 3 ~ 5 minutes to check if the standard charging current is reached.

YES → Adjust the voltage so that the current is at the standard charging level.

NO → If the current does not exceed the standard charging current after 5 minutes, replace the battery.

Set the timer according to the charging time suitable for the open-circuit voltage.
Refer to "Battery condition checking steps."

If charging requires more than 5 hours, it is advisable to check the charging current after a lapse of 5 hours. If there is any change in the amperage, readjust the voltage to obtain the standard charging current.

Measure the battery open-circuit voltage after leaving the battery unused for more than 30 minutes.
12.8 V or more --- Charging is complete.
12.7 V or less --- Recharging is required.
Under 12.0 V --- Replace the battery.

Charging method using a constant-voltage type charger

Measure the open-circuit voltage prior to charging.

NOTE:
Voltage should be measured 30 minutes after the machine is stopped.

Connect a charger and AMP meter to the battery and start charging.

Make sure that the current is higher than the standard charging current written on the battery.

YES

Charge the battery until the battery's charging voltage is 15 V.

NOTE:
Set the charging time at 20 hours (maximum).

Measure the battery open-circuit voltage after leaving the battery unused for more than 30 minutes.
12.8 V or more --- Charging is complete.
12.7 V or less --- Recharging is required.
Under 12.0 V --- Replace the battery.

NO

This type of battery charger cannot charge the MF battery. A variable voltage charger is recommended.

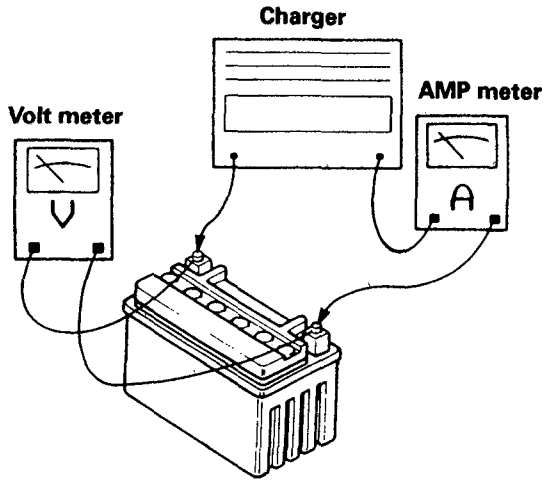

Charging method using a constant-current type charger

This type of battery charger cannot charge the MF battery.

5.Inspect:
- Battery terminals
  Dirty → Clean with a wire brush.
  Poor connection → Correct.

NOTE:
After cleaning the terminals, apply a light coat of grease.

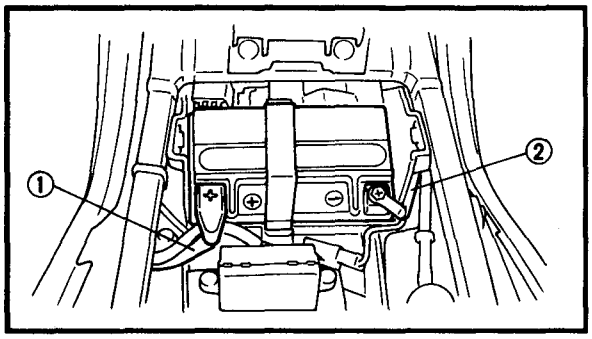

6.Install:
- Battery
- Battery band

7.Connect:
- Battery leads

CAUTION:
First, connect the positive lead ① then connect the negative lead ②.

8.Install:
- Passenger seat
- Rider seat
  Refer to "SEATS".

EB305010
FUSE INSPECTION

CAUTION:
When checking or replacing the fuse always turn off the main switch. Otherwise, a short circuit may occur.

1.Remove:
- Rider seat
- Passenger seat
- Side panel (left)
  Refer to "SEATS" and "FUEL TANK".

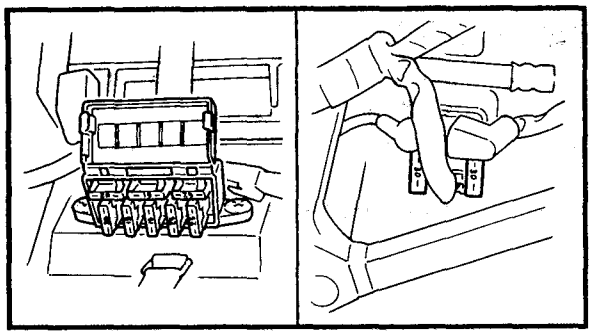

2.Inspect:
- Fuses

****

Inspection steps:
- Connect the pocket tester to the fuse and check it for continuity.

NOTE:
Set the tester selector to "Ω × 1".

	Pocket tester: YU-03112/90890-03112

- If the tester indicates ∞, replace the fuse.

****

3.Replace:
- Blown fuse

****

Replacement steps:
- Turn off the main switch.
- Install a new fuse with the proper current rating.
- Turn on the switches to verify operation of related electrical devices.
- If the fuse blows again, immediately check the electrical circuit.

****

Description	Current rating	Quantity
Main fuse	30A	1
Headlight fuse	20A	1
Signal fuse	15A	1
Ignition fuse	15A	1
Fan fuse	7.5A	2
Reserve fuse	30A	1
Reserve fuse	20A	1
Reserve fuse	15A	1
Reserve fuse	7.5A	1

⚠ WARNING

Never use a fuse with a rating other than that specified. Never use other materials in place of a fuse. An improper fuse may cause extensive damage to the electrical system, a malfunction of the lighting and ignition systems and could possibly cause a fire.

4.Install:
- Side panel (left)
- Passenger seat
- Rider seat

Refer to "FUEL TANK" and "SEATS".

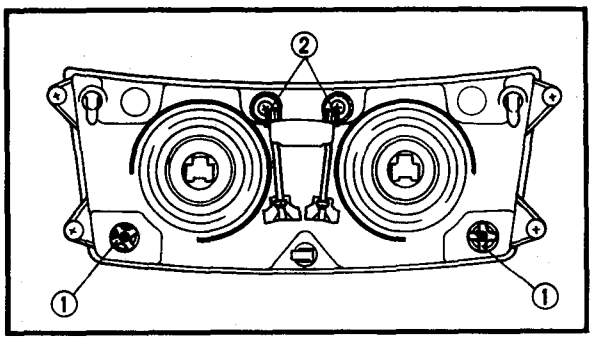

EB305021
HEADLIGHT BEAM ADJUSTMENT

1.Adjust:
- Headlight beam (vertically)
  Turn the adjuster ① in or out.

Turning in:	**Headlight beam is lowered.**
Turning out:	**Headlight beam is raised.**

2.Adjust:
- Headlight beam (horizontally)
  Turn the adjuster ② in or out.

Left headlight:

Turning in:	**Headlight beam moves to the right.**
Turning out:	**Headlight beam moves to the left.**

Right headlight:

Turning in:	**Headlight beam moves to the left.**
Turning out:	**Headlight beam moves to the right.**

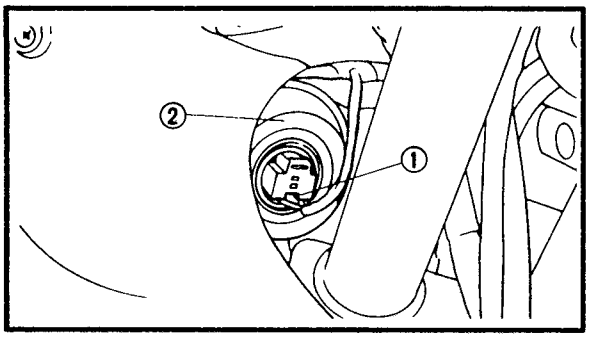

EB305030

HEADLIGHT BULB REPLACEMENT

1.Disconnect:
- Headlight lead ①

2.Remove:
- Cover ②

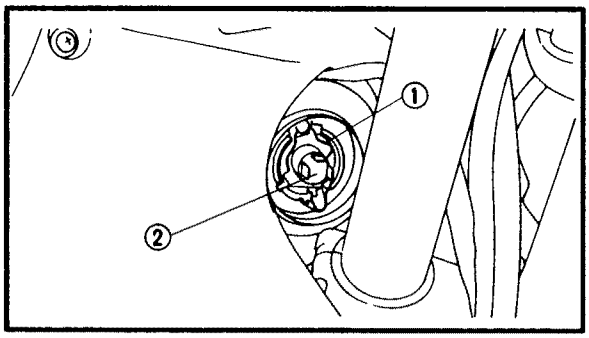

3.Unhook:
- Bulb holder ①

4.Remove:
- Bulb ②

⚠ WARNING

Since the bulb may be hot, keep flammable products and your hands away from it. Do not touch the bulb until it has cooled down.

5.Install:
- Bulb (new)

  Secure the new bulb with the bulb holder.

CAUTION:

Avoid touching the glass part of the bulb. Keep it free from oil, otherwise the transparency of the glass, life of the bulb and luminous flux will be adversely affected. If oil gets on the bulb, thoroughly clean it with a cloth moistened with alcohol or lacquer thinner.

6.Hook up:
- Bulb holder

7.Install:
- Cover

8.Connect:
- Headlight lead

EB400000

ENGINE

ENGINE REMOVAL

⚠ WARNING

Securely support the motorcycle so that there is no danger of it falling over.

NOTE:

It is not necessary to remove the engine in order to remove the following components:

- Cylinder head
- Cylinders
- Pistons
- Clutch
- Oil cooler
- Starter motor
- AC generator
- Oil pan

FUEL TANK AND COWLINGS

1.Remove:

- Rider seat
- Passenger seat
- Side panels (left and right)
- Fuel tank
- Bottom cowling (front)
- Bottom cowling
- Side cowlings (left and right)
- Front cowling assembly

Refer to "SEAT", "FUEL TANK" and "COWLINGS" in CHAPTER 3.

ENGINE OIL AND COOLANT

1.Drain:

- Engine oil
- Coolant

Refer to "ENGINE OIL REPLACEMENT" and "COOLANT REPLACEMENT" in CHAPTER 3.

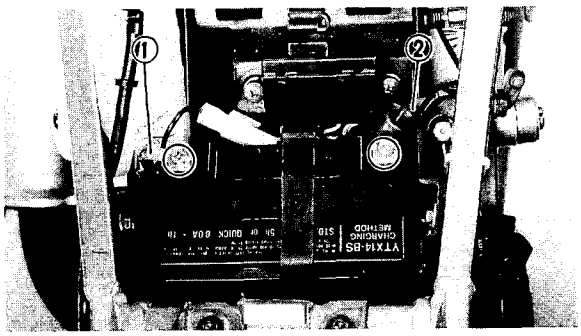

EB400010
BATTERY LEADS
1.Disconnect:
- Battery leads

CAUTION:
First, disconnect the negative lead ①, then disconnect the positive lead ②.

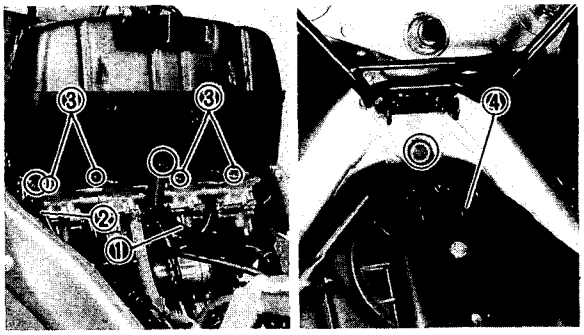

AIR FILTER CASE
1.Disconnect:
- Breather hose (crankcase) ①
- Drain hose (air filter case) ②

2.Loosen:
- Clamp screws (carburetor joints) ③

3.Remove:
- Air filter case ④

EB400020
CARBURETORS
1.Remove:
- Carburetor assembly
  Refer to "CARBURETORS – REMOVAL" in CHAPTER 6.

NOTE:
Cover the carburetor assembly with a clean rag to prevent dirt or foreign materials from entering.

RADIATOR
1.Remove:
- Radiator assembly
  Refer to "RADIATOR – REMOVAL" in CHAPTER 5.

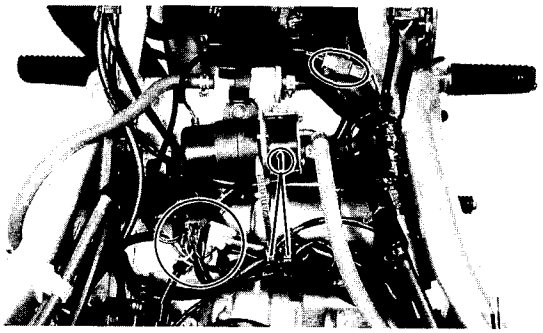

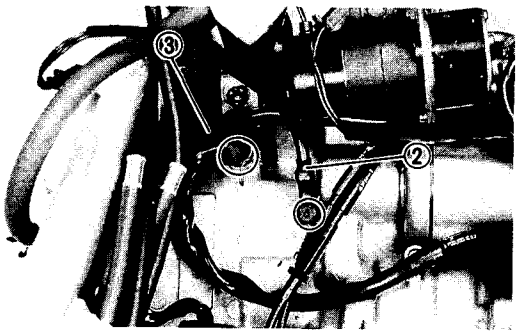

HOSES AND LEADS

1.Remove:
- Plastic bands ①

2.Disconnect:
- GPS (gear position sensor) coupler
- Rear brake switch coupler
- Pickup coil coupler
- AC generator coupler
- Starter motor coupler
- Ground lead ②
- Breather hose (crankcase) ③

NOTE:
After disconnecting the ground lead, reinstall the bolt.

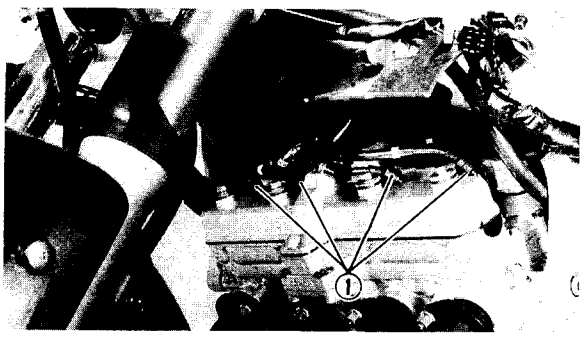

3.Disconnect:
- Spark plug caps ①

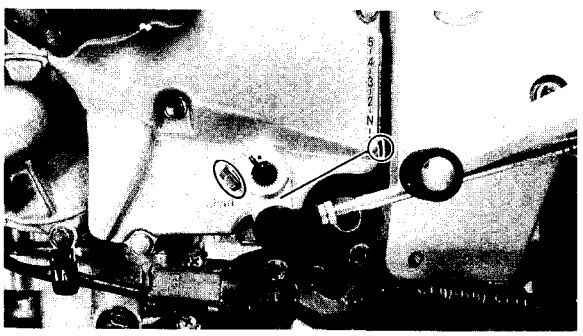

DRIVE SPROCKET

1.Remove:
- Shift pedal link ①

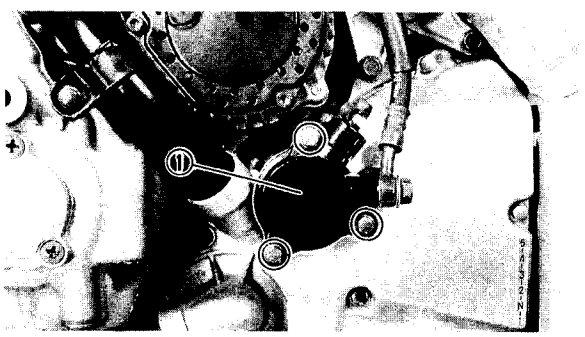

2.Remove:
- Clutch release cylinder ①
- Dowel pins

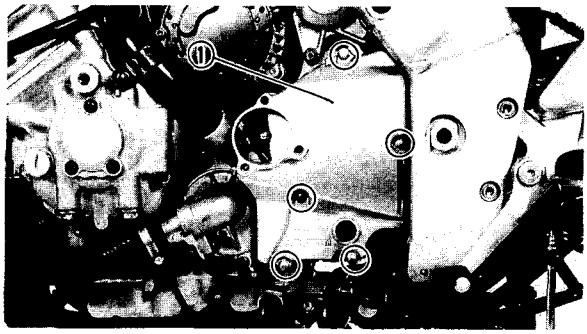

3.Remove:
- Drive sprocket cover ①
- Dowel pins
- Gasket

4.Loosen:
- Drive chain
  Refer to "DRIVE CHAIN SLACK ADJUSTMENT" in CHAPTER 3.

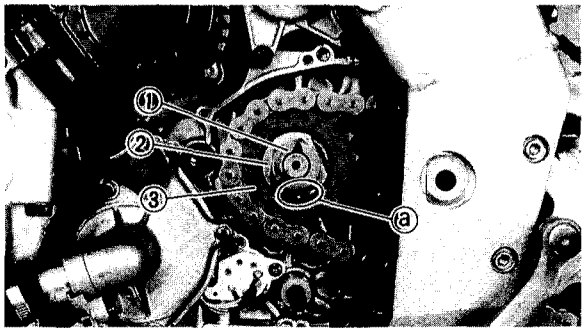

5.Straighten:
- Lock washer tab ⓐ

6.Remove:
- Nut (drive sprocket) ①
- Lock washer ②
- Drive sprocket ③

NOTE:
While applying the rear brake loosen the drive sprocket nut.

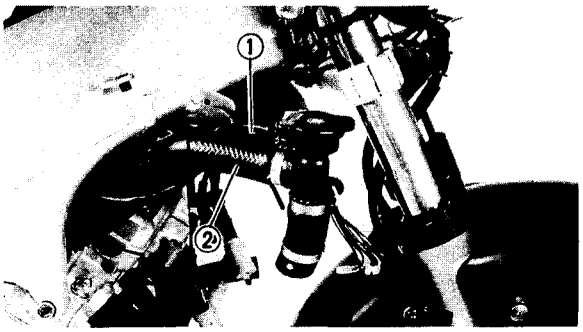

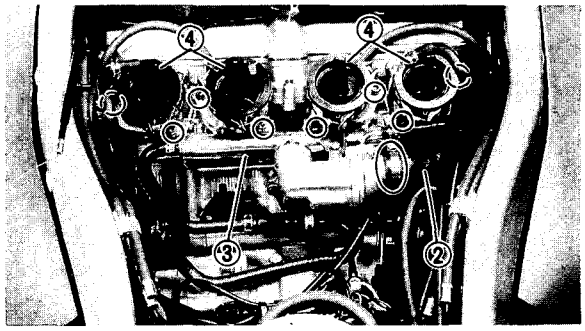

WATER JACKET JOINTS AND WATER PUMP

1.Disconnect:
- Coolant reservoir hose ①

2.Remove:
- Radiator hose (inlet) ②
- Water jacket joint (outlet) ③
  (with the thermostatic valve housing and carburetor heater hoses)
- O-rings
- Carburetor joints ④
  (with the vacuum hose)
- O-rings

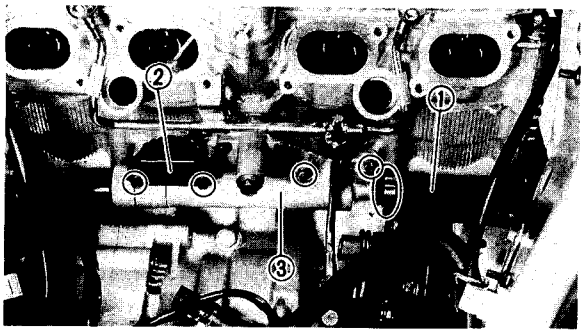

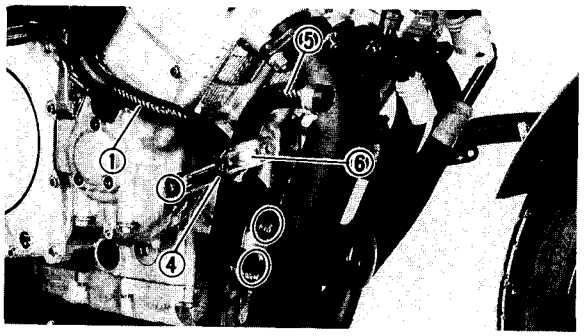

3.Remove:
- Oil cooler hose (inlet) ①
- Holder (carburetor breather hoses) ②
- Water jacket joint (inlet) ③
- O-rings
- Metal band (fold-back type) ④
- Oil cooler hose (outlet) ⑤
- Radiator stay (right) ⑥

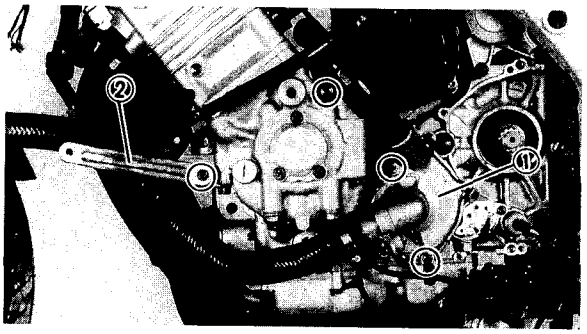

4.Remove:
- Water pump assembly ①
  (with the radiator inlet hose and water pump outlet pipe)
- Radiator stay (left) ②

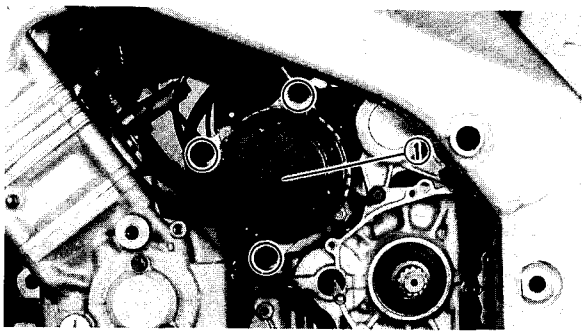

AC GENERATOR AND STARTER MOTOR

1.Remove:
- AC generator ①

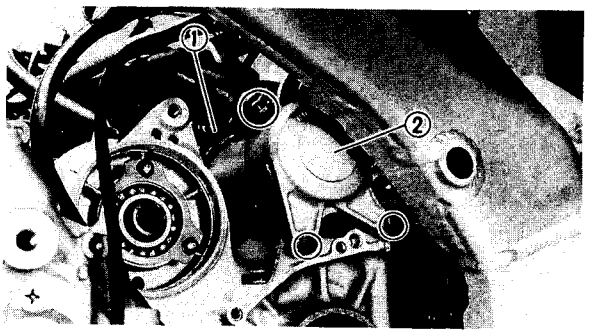

2.Disconnect:
- Starter motor lead ①

3.Remove:
- Starter motor ②

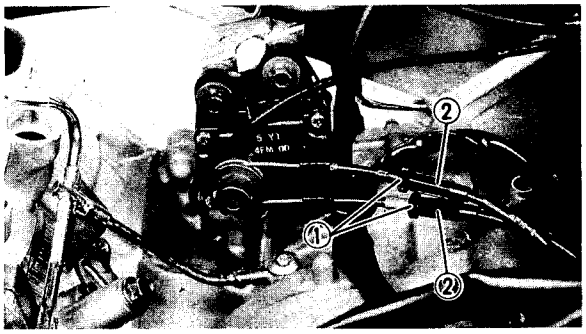

MUFFLER ASSEMBLY

1.Fully loosen the locknuts ① and turn in the adjusters ② completely.

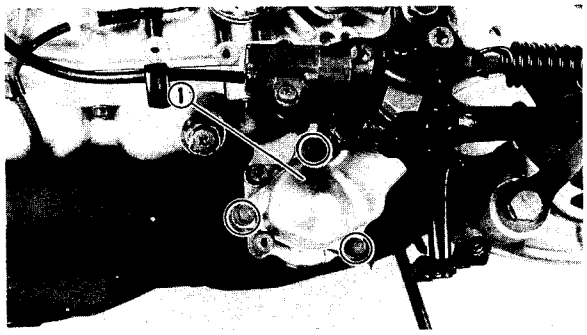

2.Remove:
- EXUP valve cover ①

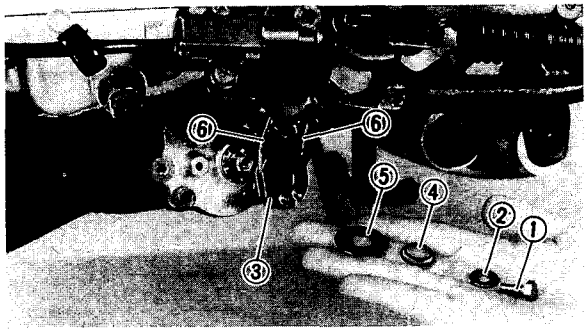

3.Remove:
- Bolt (pulley) ①
- Washer ②
- Pulley ③
- Spring ④
- Washer ⑤

4.Disconnect:
- EXUP cables ⑥

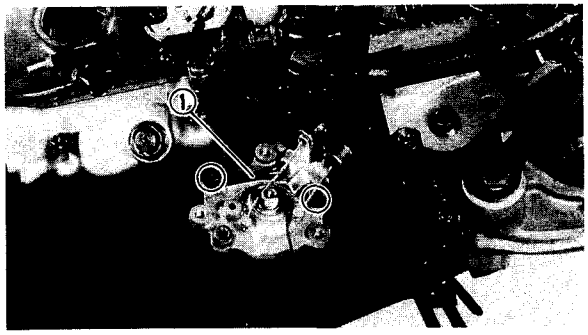

5.Remove:
- Holder (EXUP cables) ①

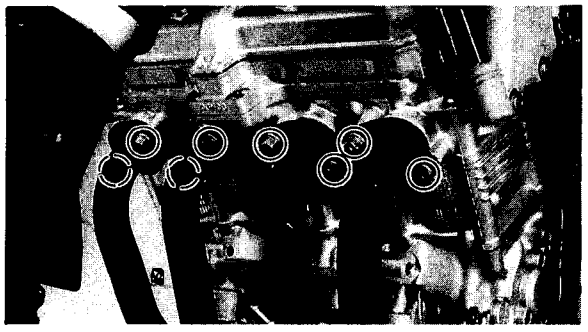

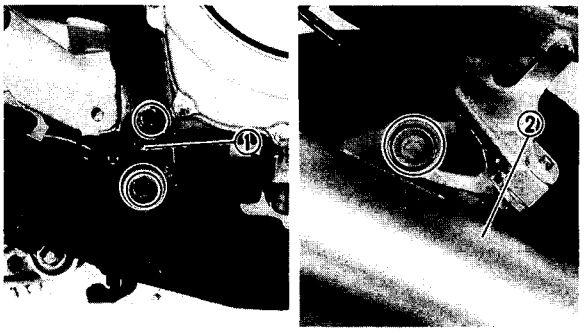

6.Remove:
- Nut (exhaust pipe)
- Stay (exhaust pipe) ①
- Washer
- Muffler assembly ②
- Gaskets (exhaust pipe)

EB400060
ENGINE REMOVAL

1.Place a suitable stand under the frame and the engine.

⚠ WARNING

Securely support the motorcycle so that there is no danger of it falling over.

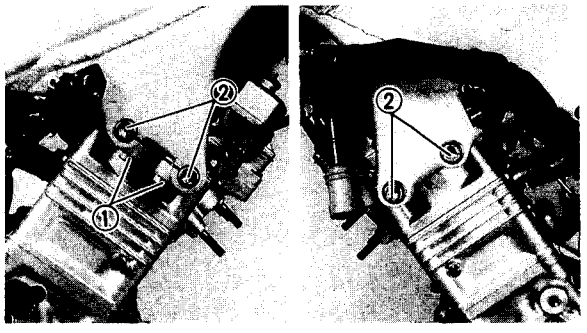

2.Loosen:
- Pinch bolts ①

3.Remove:
- Mounting bolts (front) ②

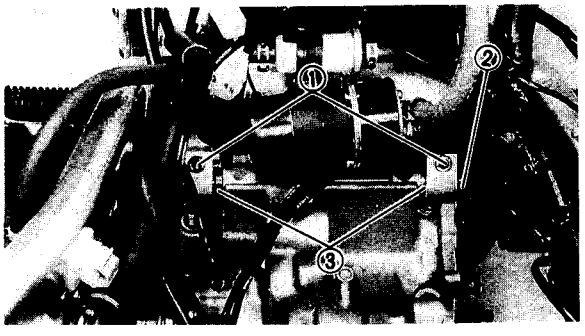

4.Loosen:
- Pinch bolts ①

5.Remove:
- Mounting bolt (rear-upper) ②
- Collars ③

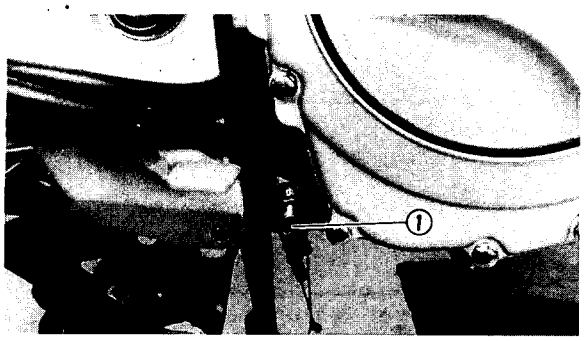

6.Remove:
- Mounting bolt (rear-lower) ①

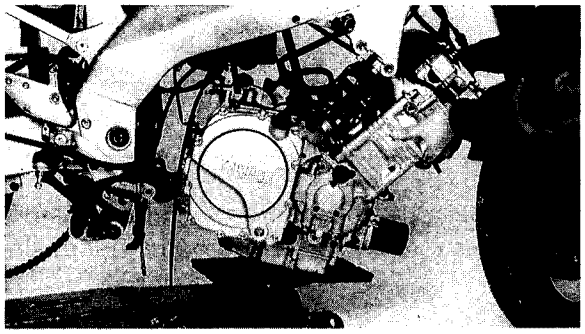

7.Remove:
- Engine assembly
  (from the right side of the motorcycle)

CAUTION:

To prevent scratching the front fender place a rug over it.

EB401000

ENGINE DISASSEMBLY

OIL FILTER AND OIL COOLER

NOTE:
The oil filter and oil cooler can be removed while the engine is mounted by removing the following parts.
- Bottom cowling
- Side cowlings (left and right)

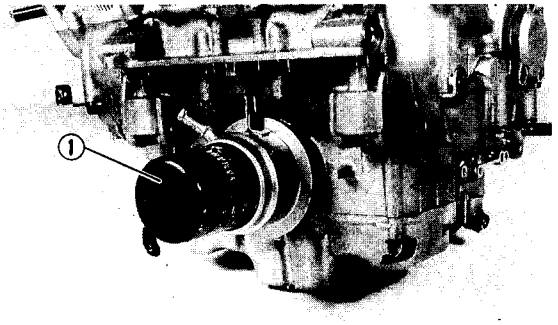

1.Remove:
- Oil filter ①
  Refer to "ENGINE OIL REPLACEMENT" in CHAPTER 3.

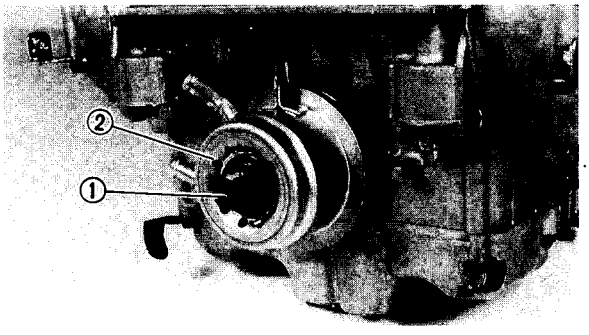

2.Remove:
- Bolt ①
- Oil cooler ②
- O-ring

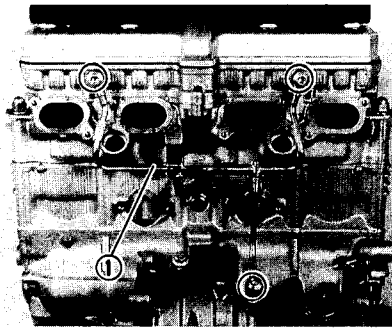

3.Remove:
- Oil delivery pipe ①
- Copper washers

EB401031
CYLINDER HEAD COVER, CYLINDER HEAD AND CAMSHAFTS

NOTE:
The cylinder head cover, cylinder head and camshafts can be removed while the engine is mounted by removing the following parts:
- Bottom cowling (front)
- Bottom cowling
- Side cowlings (left and right)
- Fuel tank
- Air filter case
- Radiator assembly
- Oil delivery pipe

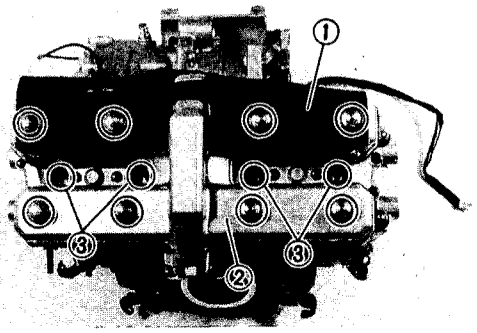

1.Remove:
- Baffle cover ①
- Cylinder head cover ②
- Gasket (cylinder head cover)
- Spark plugs ③

NOTE:
Loosen each bolt 1/4 of a turn at a time, in a crisscross pattern. After all the bolts are loosened, remove them.

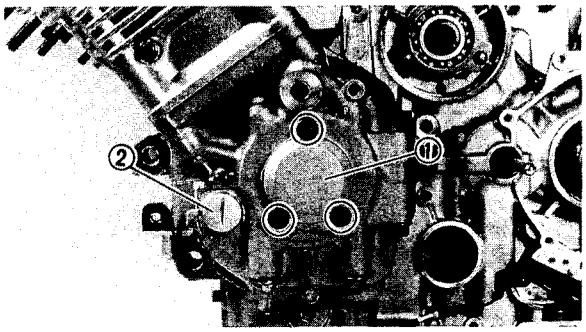

2.Remove:
- Crankshaft end cover (left) ①
  (with the O-ring)
- Timing plug ②
  (with the O-ring)

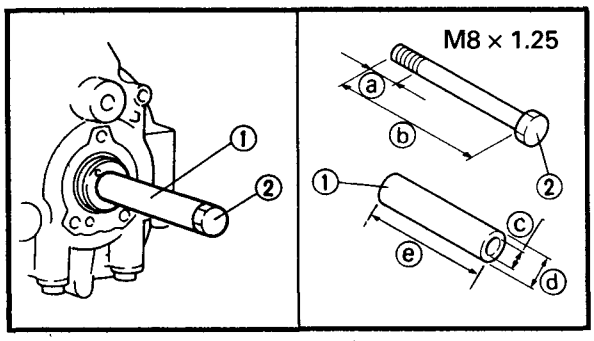

3.Install:
Procedure 1.
- Suitable collar ①
- Bolt
  (as shown in the illustration)

ⓐ 15 mm (0.6 in) ⓓ 12 mm (0.5 in)
ⓑ 75 mm (3.0 in) ⓔ 60 mm (2.4 in)
ⓒ 8 mm (0.3 in)

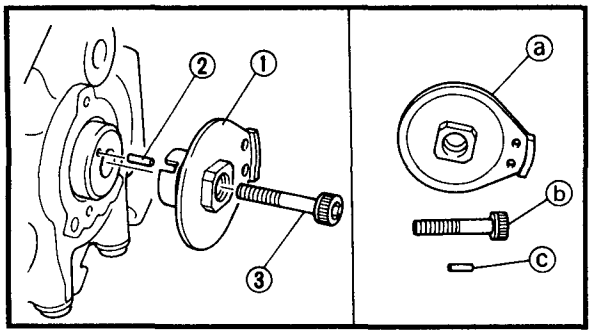

Procedure 2.

- Insert the pin ②, use it to position the pick-up rotor ①, then install the bolt ③.

Part No: ⓐ 4U8-81673-10 or 33M-81673-10
ⓑ 91317-08030
ⓒ 93604-08071

- Turn the crankshaft counterclockwise.

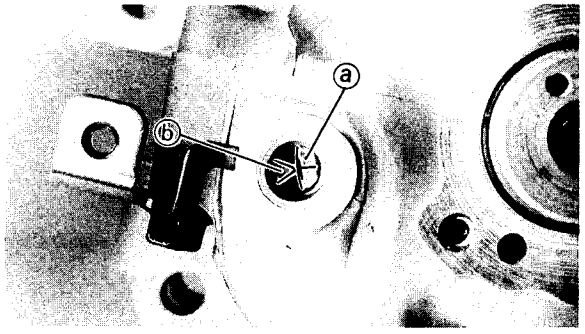

4.Align:

- "T" mark
  (with the stationary pointer)

NOTE:

- Turn the crankshaft counterclockwise and align the "T" mark ⓐ with the with stationary pointer ⓑ when the #1 piston is at TDC on the compression stroke.
- The #1 piston is at TDC on the compression stroke when the cam lobes are opposite one other, as shown in the illustration.

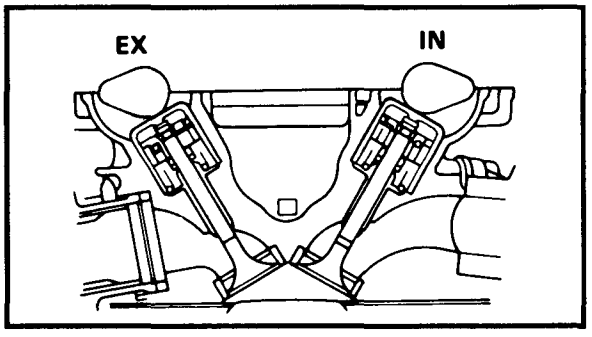

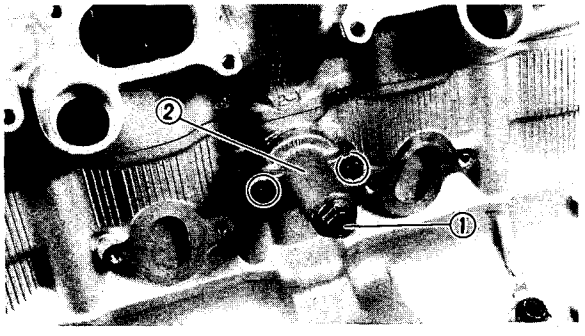

5.Loosen:

- Cap bolt (tensioner) ①

6.Remove:

- Timing chain tensioner ②
- Gasket

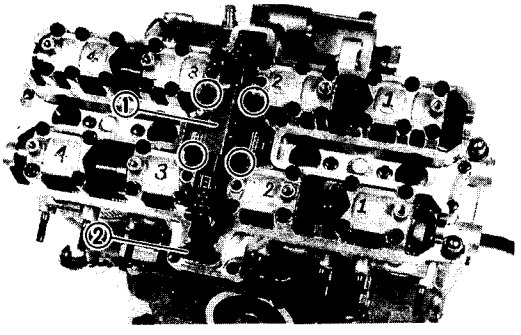

7.Remove:

- Timing chain guide (upper) ①
- Timing chain guide (exhaust side) ②

NOTE:
Select one of the following two procedures:
Procedure 1.
For engine service without cylinder head disassembly.
→ Disconnect the timing chain.
The pistons and cylinders can be removed without removing the camshafts.
Procedure 2.
For engine service including cylinder head disassembly.
→ Remove the camshaft caps and camshafts.
The camshafts can be removed without disconnecting the timing chain.

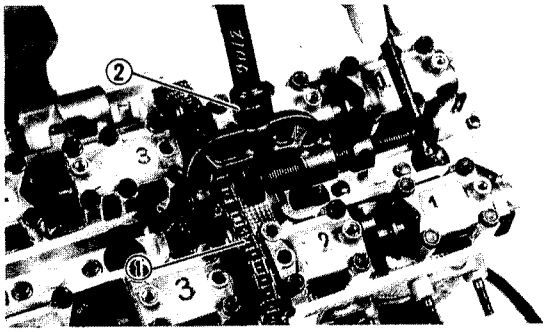

Procedure 1.
1.Disconnect:
- Timing chain ①
  Use a cam chain cutter ②.

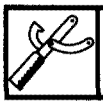	**Cam chain cutter:** **YM-01112/90890-01112**

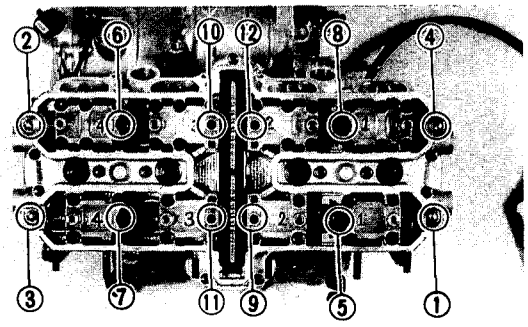

2.Remove:
- Nuts (cylinder head)

NOTE:
- Loosen the nuts in the proper sequence.
- Follow the numerical order shown in the illustration. Loosen each nut 1/2 of a turn at a time until all of them are loosened.

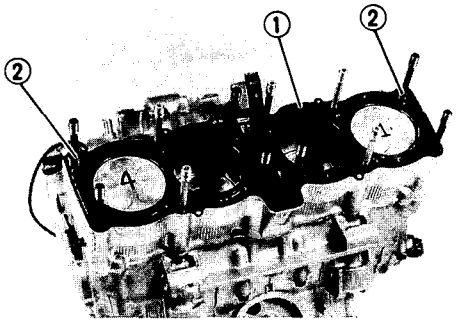

3.Remove:
- Cylinder head
  (with the camshafts)
- Gasket (cylinder head) ①
- Dowel pins ②

NOTE:
To prevent the valve lifters and adjusting pads from falling into the crankcase, remove as a unit the cylinder head and camshafts.

4.For the next step, refer to "CYLINDERS AND PISTONS".

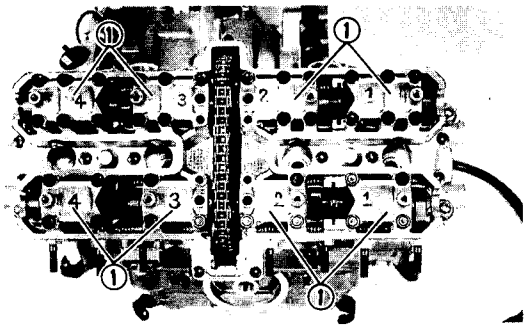

Procedure 2.

1.Remove:
- Camshaft caps ①
- Dowel pins

NOTE:
- For reference during reinstallation, put identification marks on each camshaft cap.
- Remove the camshaft cap bolts in a criss-cross pattern from the outer caps working in.

CAUTION:
To prevent damage to the cylinder head, camshafts and camshaft caps, loosen the camshaft cap bolts in a crisscross pattern, from the outside working in.

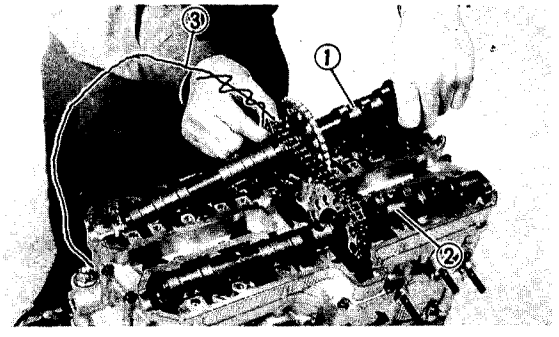

2.Remove:
- Camshafts (intake ① and exhaust ②)

NOTE:
To prevent the timing chain from falling into the crankcase fasten a wire ③ to it.

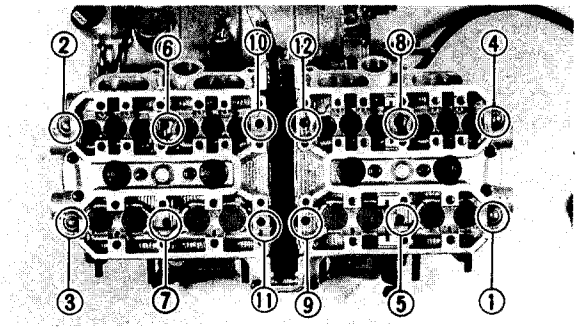

3.Remove:
- Nuts (cylinder head)

NOTE:
- Loosen the nuts in the proper sequence.
- Follow the numerical order shown in the illustration. Loosen each nut 1/2 of a turn at a time until all of the nuts are loosened.

4.Remove:
- Cylinder head

NOTE:
To prevent the valve lifters and adjusting pads from falling into the crankcase, remove as a unit the cylinder head.

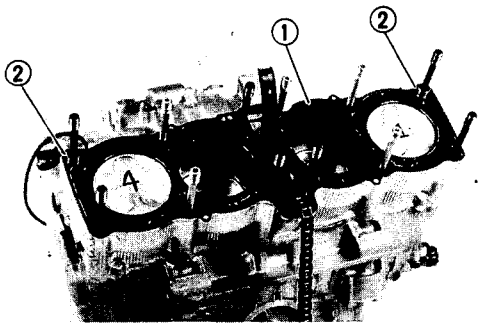

5.Remove:
- Gasket (cylinder head) ①
- Dowel pins ②

EB401040
CYLINDERS AND PISTONS

NOTE:
The cylinders and pistons can be removed while the engine is mounted by removing the following parts:
- Bottom cowling
- Side cowlings (left and right)
- Seat
- Fuel tank
- Air filter case
- Radiator assembly
- Cylinder head assembly

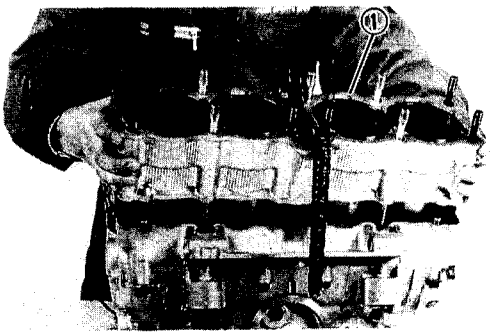

1.Remove:
- Cylinders ①

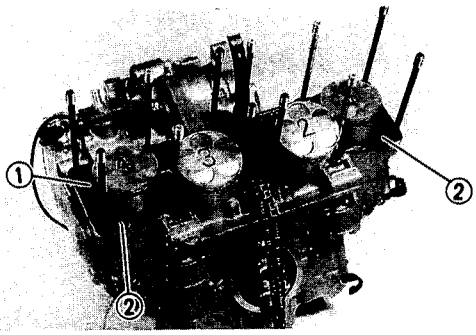

2.Remove:
- Gasket (cylinders) ①
- Dowel pins ②

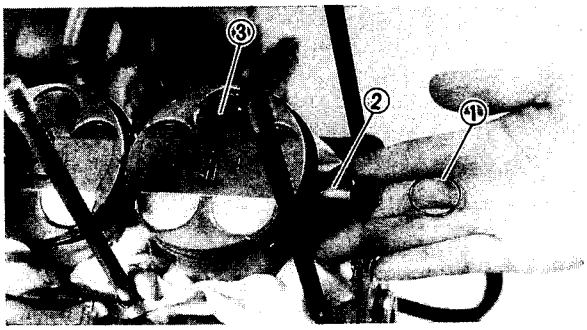

3.Remove:
- Piston pin circlips ①
- Piston pins ②
- Pistons ③

NOTE:
- Before removing each piston pin circlip, cover the crankcase opening with a clean rag to prevent the piston pin circlip from falling into the crankcase.

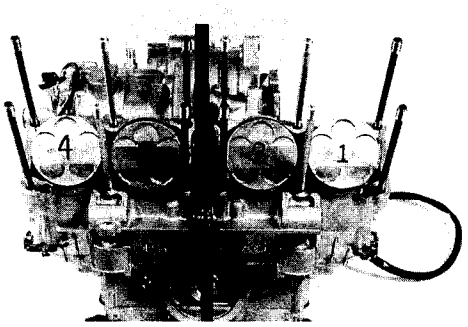

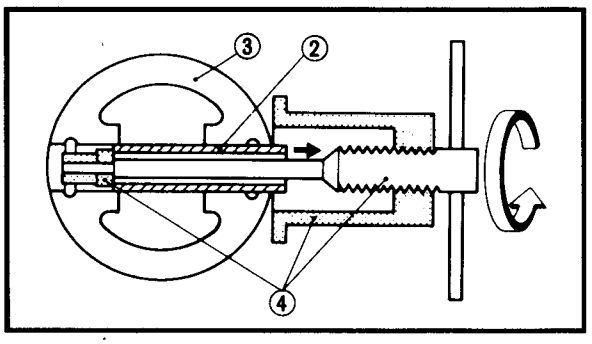

- For reference during reinstallation, put identification marks on each piston head.
- Before removing each piston pin, deburr the circlip groove and pin hole area. If the piston pin groove is deburred and the piston pin is still difficult to remove, use the piston pin puller ④.

Piston pin puller:
YU-01304/90890-01304

CAUTION:
Do not use a hammer to drive the piston pin out.

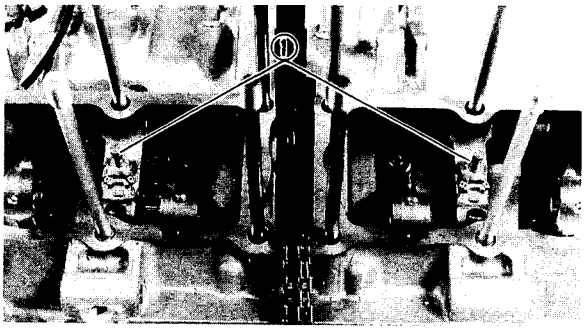

4.Remove:
- Oil-jet nozzles ①
  (with the O-ring)

EB401061
CLUTCH

NOTE:
The clutch assembly can be removed while the engine is mounted by removing the following parts:
- Bottom cowling
- Side cowling (right)

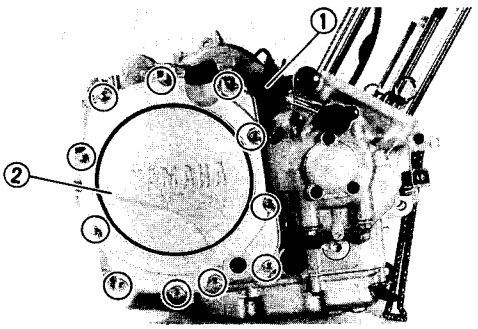

1.Remove:
- Stay (throttle stop screw) ①
- Clutch cover ②

NOTE:
Loosen the bolts in a crisscross pattern.

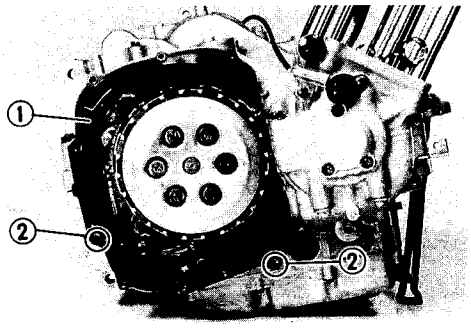

2.Remove:
- Gasket ①
- Dowel pins ②

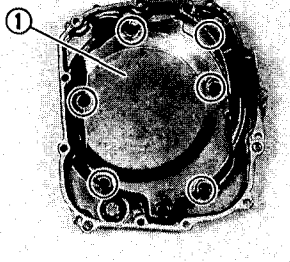

3.Remove:
- Breather cover ①
- Gasket

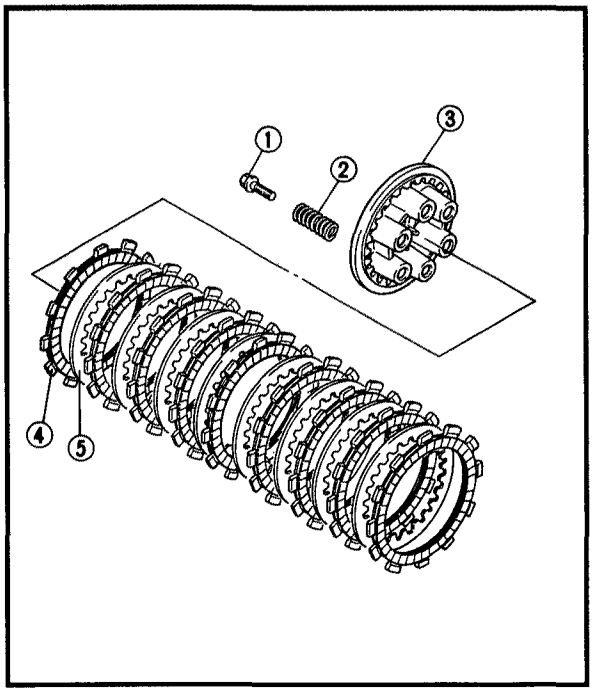

4.Remove:
- Bolts (pressure plate) ①
- Clutch springs ②
- Pressure plate ③
- Friction plates ④
- Clutch plates ⑤

NOTE:
Loosen the pressure plate bolts in a criss-cross pattern.

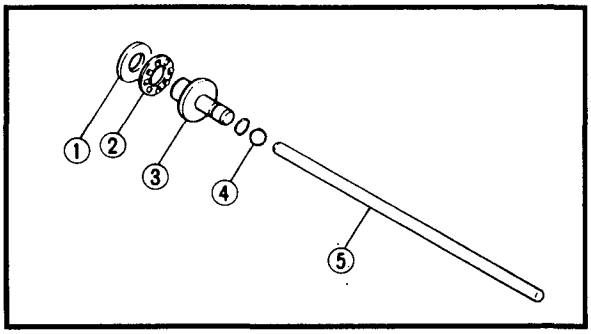

5.Remove:
- Washer ①
- Bearing ②
- Push rod #1 ③
  (with the O-ring)
- Ball ④
- Push rod #2 ⑤

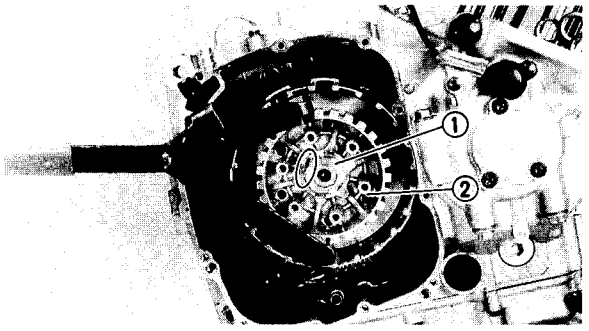

6.Straighten the lock washer tabs.
7.Loosen:
- Nut (clutch boss) ①

NOTE:
While holding the clutch boss ② with a universal clutch holder, loosen the clutch boss nut ①.

	Universal clutch holder: YM-91042/90890-04086

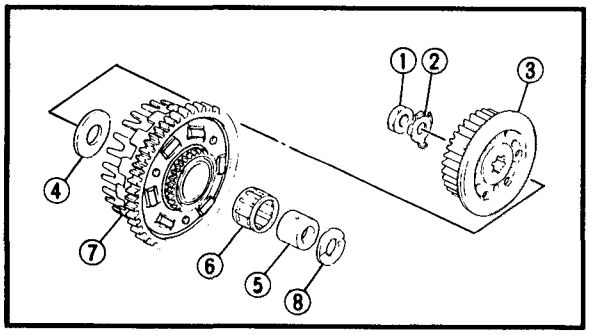

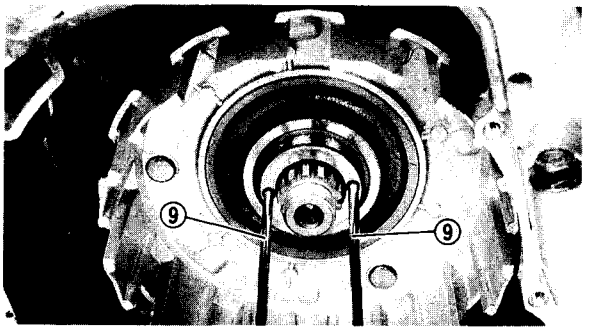

8.Remove:
- Nut (clutch boss) ①
- Lock washer ②
- Clutch boss ③
- Thrust washer ④
- Spacer ⑤
- Bearing ⑥
- Clutch housing ⑦
- Thrust washer ⑧

NOTE:
Insert two thin, phillip-head screwdrivers ⑨ into the spacer. Then remove the spacer by pulling on the screwdrivers.

EB401100
OIL PAN AND OIL STRAINER

NOTE:
The oil pan and oil strainer can be removed while the engine is mounted by removing the following parts:
- Bottom cowling
- Side cowlings (left and right)
- Exhaust pipes

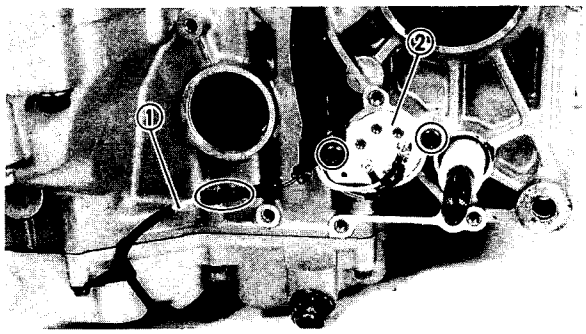

1.Disconnect:
- Oil level switch ①

2.Remove:
- GPS (gear position sensor) ②

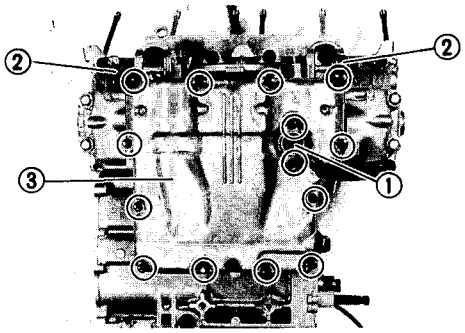

3.Remove:
- Oil level switch ①
- Stays (bottom cowling) ②
- Oil pan ③

NOTE:
Loosen each bolt 1/4 of a turn at a time, in a crisscross pattern. After all of the bolts are loosened, remove them.

- Oil pan gasket
- Dowel pins

4.Remove:
- Baffle plate (oil pan) ①

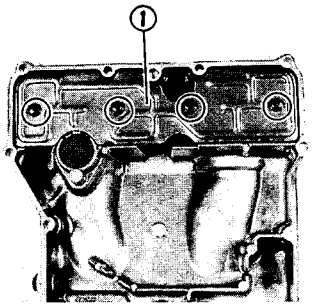

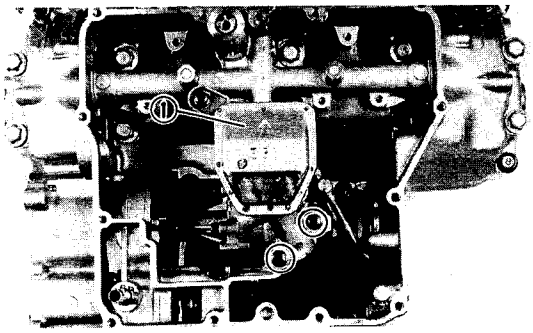

5.Remove:
- Oil strainer assembly ①

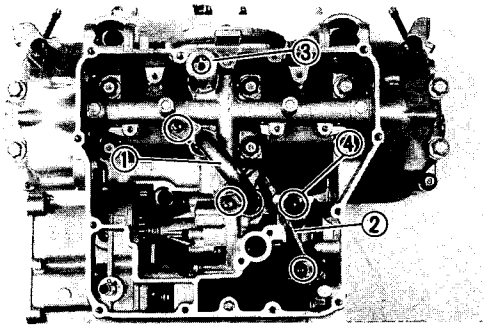

6.Remove:
- Oil delivery pipe #2 ①
- O-rings
- Oil delivery pipe #1 ②
- O-rings
- Relief valve ③
  (with the O-ring)

NOTE:
After removing oil delivery pipe #1 reinstall the bolt ④.

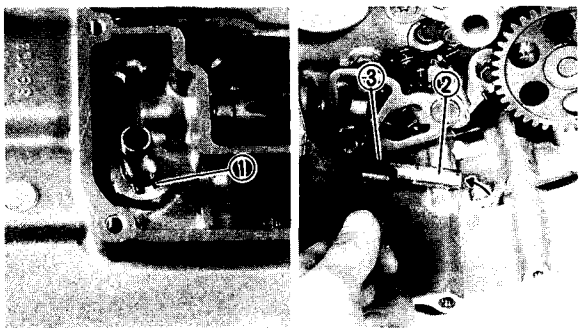

7.Remove:
- Circlip ①
- Oil pipe ②
- Mounting rubber ③

EB401110
OIL PUMP AND SHIFT SHAFT

NOTE:
The oil pump and shift shaft can be removed while the engine is mounted by removing the following parts:
- Bottom cowling
- Side cowlings (left and right)
- Crankcase covers (left and right)
- Clutch housing

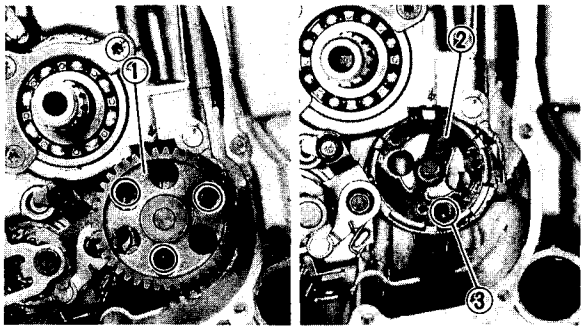

1.Remove:
- Oil pump assembly ①
- Gasket ②
- Dowel pin ③

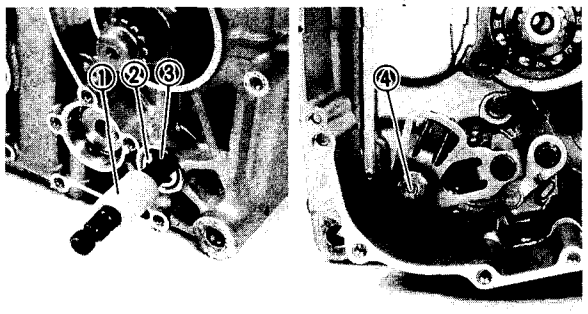

2.Remove:
- Collar ①
- Circlip ②
- Washer ③
- Shift shaft assembly ④

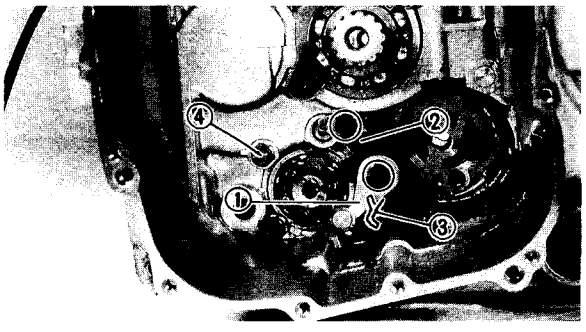

3.Remove:
- Stopper lever ①
- Stopper plate (guide bar and bearing) ②
- Return spring ③
- Stopper bolt ④

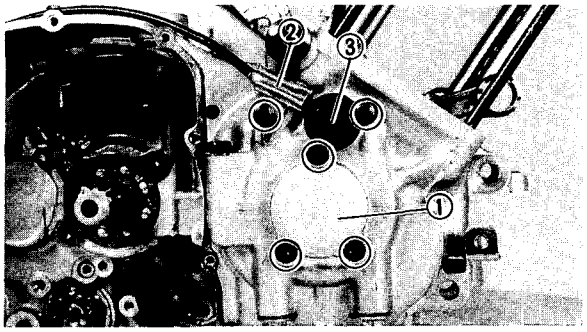

EB401130
CRANKCASE DISASSEMBLY

1.Remove:
- Crankshaft end cover (right) ①
  (with the O-ring)
- Pickup coil lead holder ②
- Pickup coil ③
  (with the O-ring)

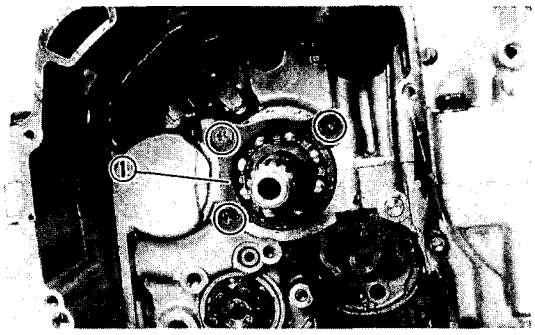

2.Remove:
- Bearing retainer (main axle) ①
  Use the torx wrench (T30).

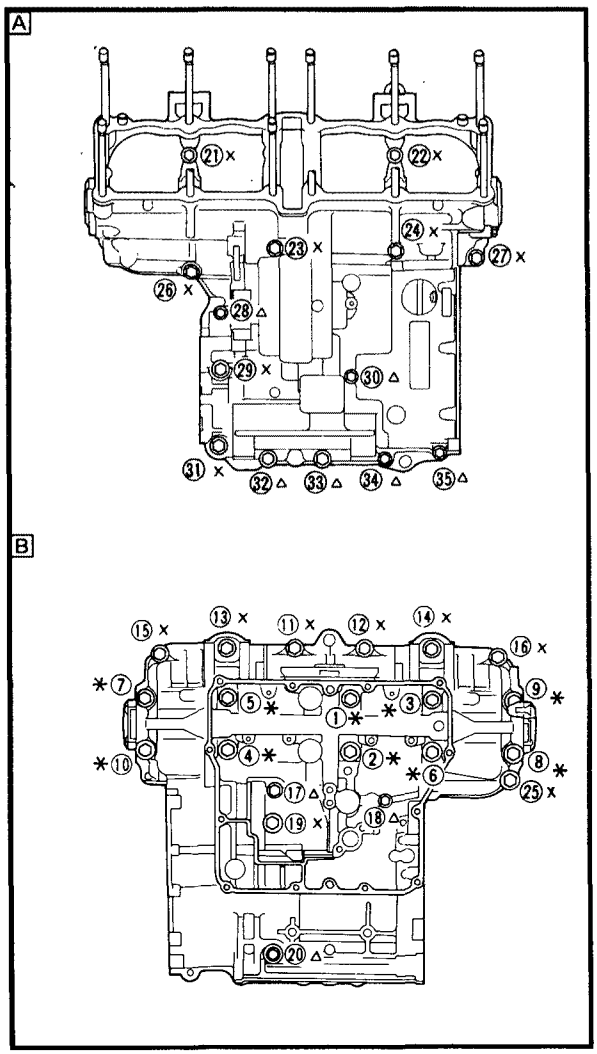

3.Remove:
- Bolts (crankcase)
- Brackets (radiator stay)

NOTE:
- Loosen each bolt 1/4 of a turn at a time and after they are all loosened, remove them.
- Loosen the bolts in decreasing numerical order (see numbers on the illustration).
- The numbers embossed on the crankcase indicate the crankcase tightening sequence.

4.Place the engine upside down.
5.Remove:
- Lower crankcase

CAUTION:
Use a soft hammer to tap on one side of the crankcase. Tap only on the reinforced portions of the crankcase. Do not tap on the crankcase mating surfaces. Work slowly and carefully. Make sure that the crankcase halves separate evenly.

- Dowel pins
- O-ring

A Upper crankcase
B Lower crankcase
△ :M6 bolts
× :M8 bolts
∗ :M9 bolts

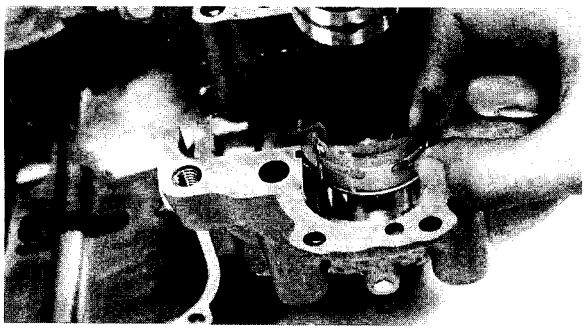

6.Remove:
- Main journal bearings (from the lower crankcase)

NOTE:
Identify the position of each main journal bearing very carefully so that it can be reinstalled in its original place.

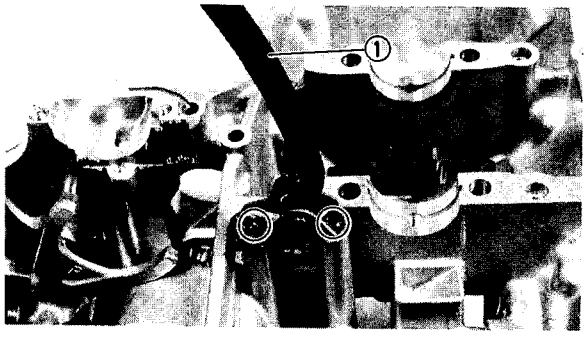

7.Remove:
- Timing chain guide (intake side) ①

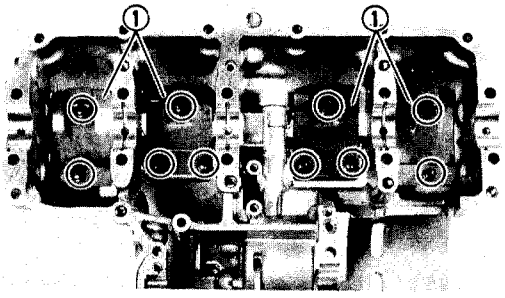

8.Remove:
- Baffle plates ①

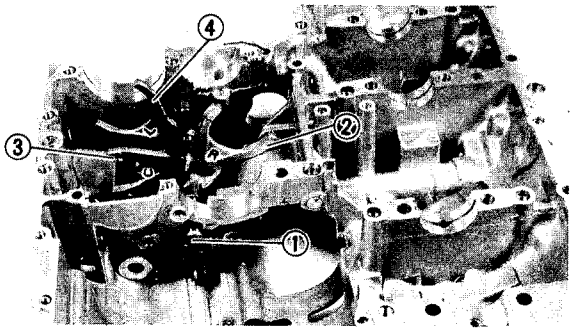

SHIFT FORKS AND SHIFT CAM

1.Remove:
- Guide bar (shift forks) ①
- Shift fork "R" ②
- Shift fork "C" ③
- Shift fork "L" ④

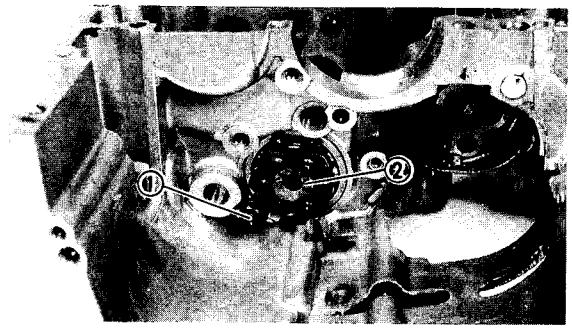

2.Remove:
- Bolt (bearing stopper) ①
- Shift cam assembly ②

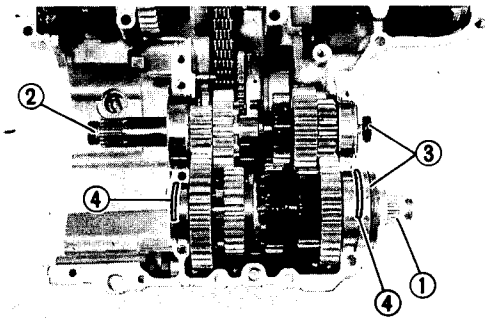

TRANSMISSION

1.Remove:
- Drive axle assembly ①
- Main axle assembly ②
- Oil seals ③
- Circlips ④

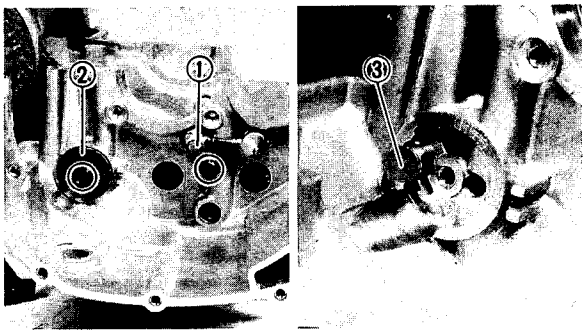

EB401050

STARTER CLUTCH AND CRANKSHAFT

1.Remove:
- Oil delivery pipe #5 ①
- O-rings
- Oil plug plate ②
- Gasket
- Oil spray nozzle ③

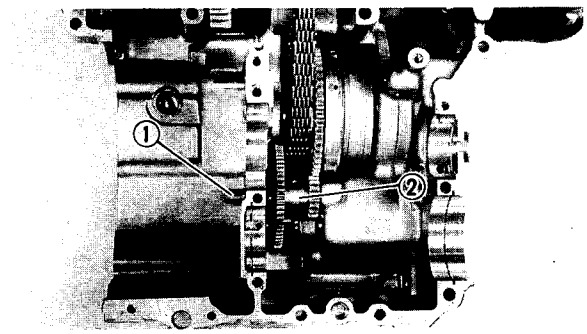

2.Remove:
- Shaft ①
- Starter idle gear ②

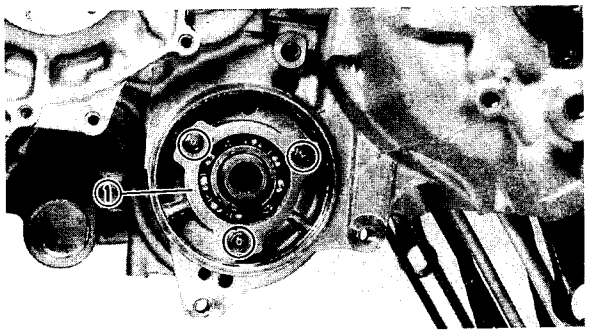

3.Remove:
- Bearing retainer ①

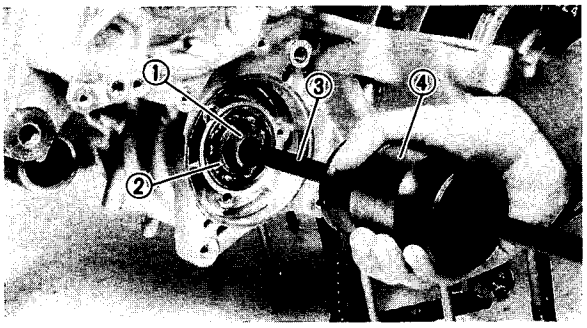

4.Remove:
- Shaft (starter clutch) ①
  (with the bearing ②)
  Use the armature shock puller ③ and weight ④.

Armature shock puller:
YU-01047-3/90890-01290
Weight:
YU-01047-2/90890-01291

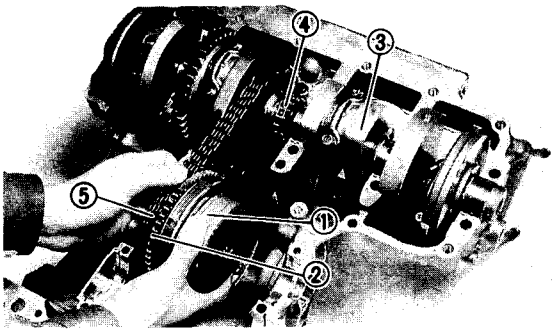

5.Remove:
- Starter clutch assembly ①
- HY-VO chain drive gear ②
- Crankshaft assembly ③
- Timing chain ④
- HY-VO chain ⑤

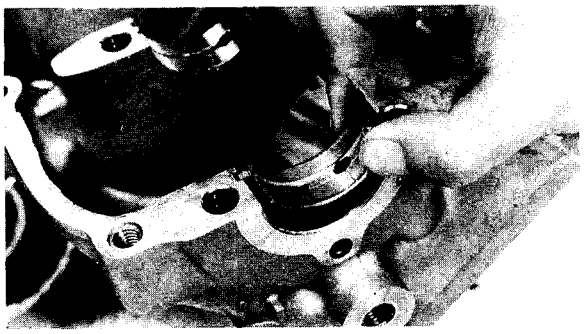

6.Remove:
- Main journal bearings
  (from the upper crankcase)

NOTE:
Identify the position of each main journal bearing very carefully so that it can be reinstalled in its original position.

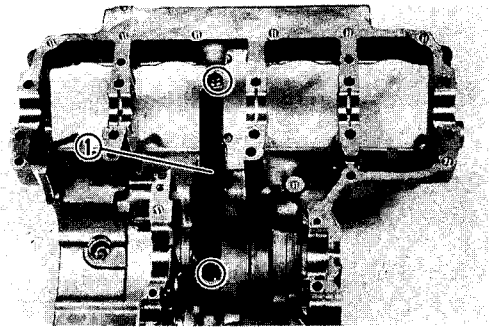

7.Remove:
- HY-VO chain guide ①

VALVES AND CAMSHAFT CASE

NOTE:
The valves can be removed while the engine is mounted by removing the following parts:
- Bottom cowling
- Side cowlings (left and right)
- Seat
- Fuel tank
- Air filter case
- Carburetor assembly
- Radiator assembly
- Cylinder head

NOTE:
Valve sealing should be checked before the internal parts (valves, valve springs, valve seats etc.) of the cylinder head are removed.

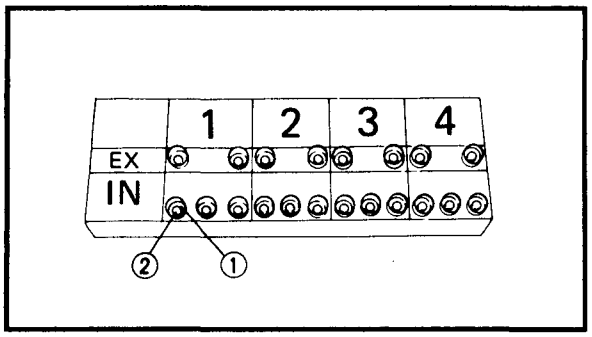

1.Remove:
- Valve lifters ①
- Pads ②

NOTE:
Identify the position of each valve lifter ① and pad ② very carefully so that they can be reinstalled in their original place.

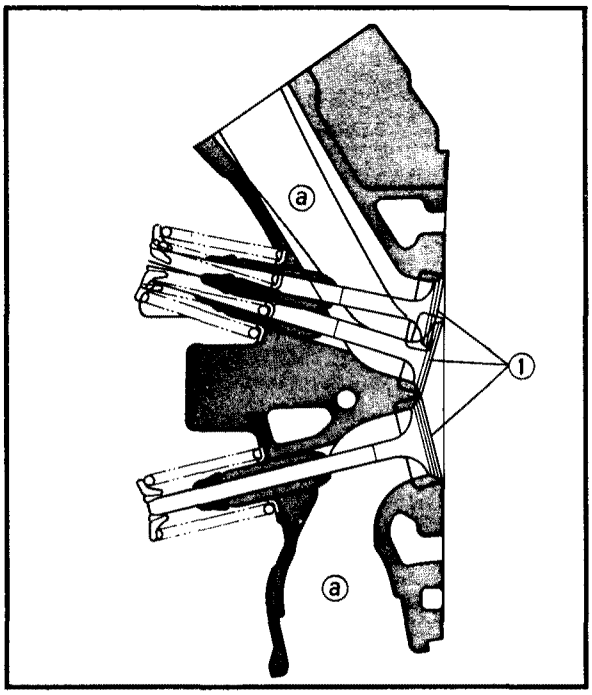

2.Check:
- Valve sealing
  Leakage at the valve seat → Inspect the valve face, valve seat and valve seat width.
  Refer to "INSPECTION AND REPAIR – VALVE SEATS".

****

Checking steps:
- Pour a clean solvent ⓐ into the intake and exhaust ports.
- Check that the valves seal properly.
  There should be no leakage at the valve seats ①.

****

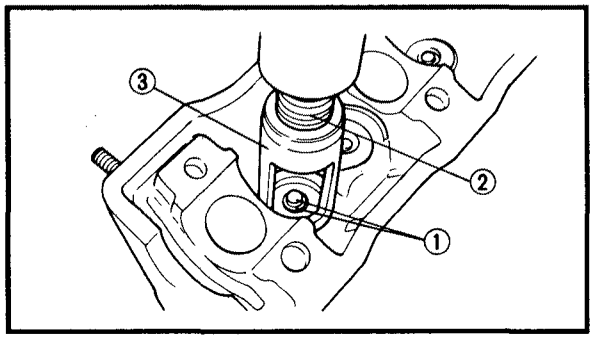

3.Remove:
- Valve cotters ①

NOTE:
Attach a valve spring compressor ② and attachment ③ between the valve spring retainer and cylinder head to remove the valve cotters.

Valve spring compressor:
YM-04019/90890-04019
Attachment:
(for exhaust valve)
YM-4108/90890-04108
(for intake valve)
YM-4114/90890-04114

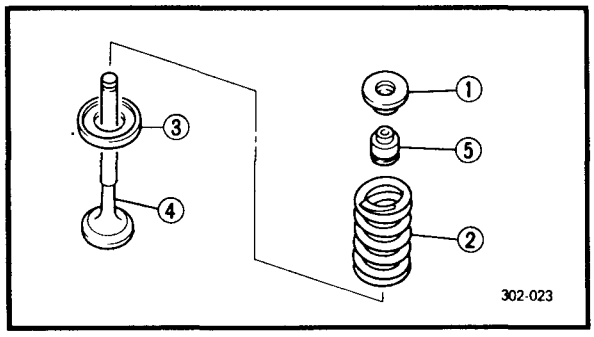

4.Remove:
- Valve spring retainer ①
- Valve spring ②
- Spring seat ③
- Valve ④
- Oil seal ⑤

NOTE:
Identify the position of each part very carefully so that it can be reinstalled in its original place.

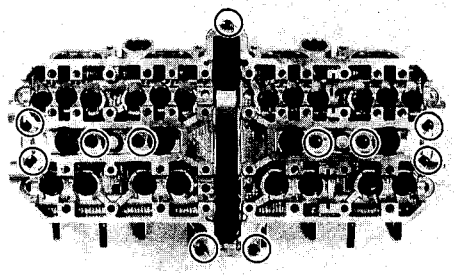

5.Remove:
- Camshaft case

NOTE:
Remove the bolts in a crisscross pattern from the outer bolts working in.

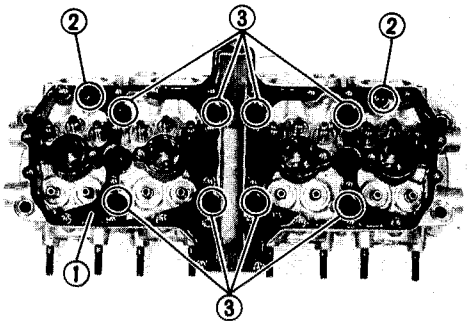

6.Remove:
- Gasket (camshaft case) ①
- Dowel pins ②
- Nuts (cylinder head) ③
- Washers

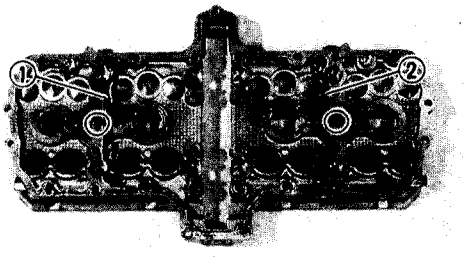

7.Remove:
- Oil delivery pipe #3 ①
- O-rings
- Oil delivery pipe #4 ②
- O-rings

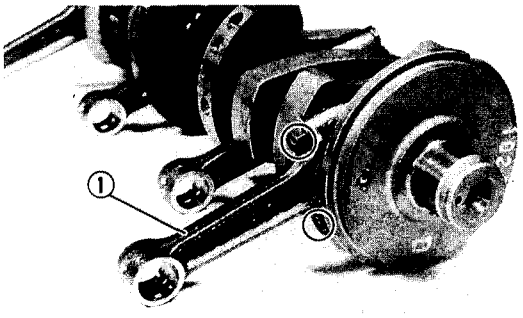

EB401160
CONNECTING RODS

1.Remove:
- Connecting rods ①
- Bearings (connecting rods)

NOTE:
Identify the position of each bearing very carefully so that it can be reinstalled in its original place.

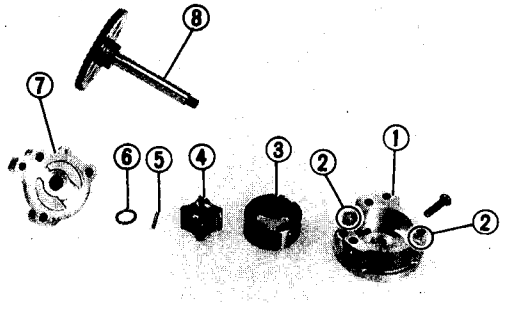

OIL PUMP

1.Remove:
- Screw
- Pump housing ①
- Dowel pins ②
- Outer rotor ③
- Inner rotor ④
- Pin ⑤
- Washer ⑥
- Pump cover ⑦
- Pump shaft ⑧

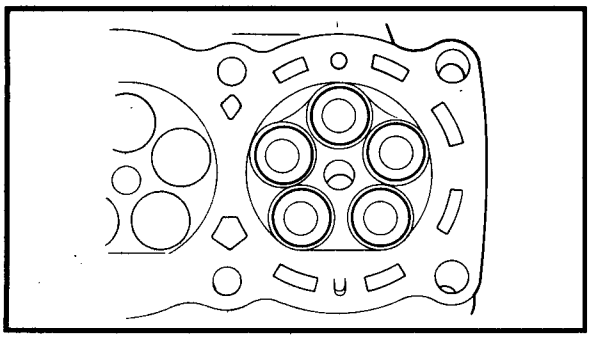

EB402001

INSPECTION AND REPAIR

CYLINDER HEAD

1.Eliminate:

- Carbon deposits
  (from the combustion chambers)
  Use a rounded scraper.

NOTE:
Do not use a sharp instrument to avoid damaging or scratching:
- Spark plug threads
- Valve seats

2.Inspect:

- Cylinder head
  Scratches/damage → Replace.
- Water jacket
  Mineral deposits/rust → Eliminate.

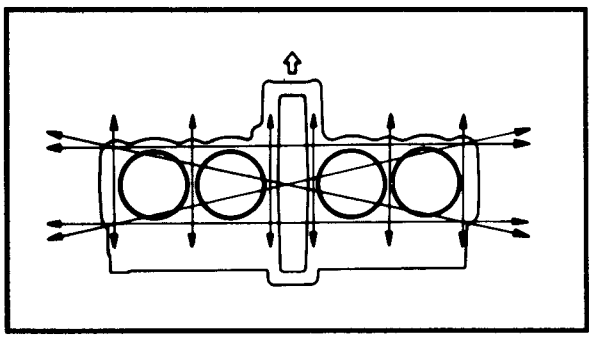

3.Measure:

- Cylinder head warpage
  Out of specification → Resurface.

	Cylinder head warpage: **Less than 0.10 mm (0.0039 in)**

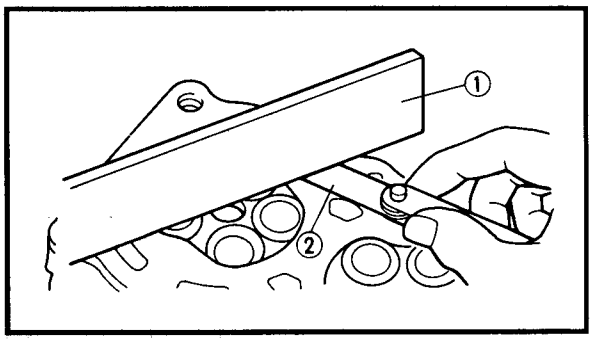

****

Warpage measurement and resurfacement steps:

- Place a straight edge ① and a feeler gauge ② across the cylinder head.
- Measure the warpage.
- If the warpage is out of specification, resurface the cylinder head.
- Place a 400 ~ 600 grit wet sandpaper on the surface plate, and resurface the head using a figure-eight sanding pattern.

NOTE:
To ensure an even surface rotate the cylinder head several times.

****

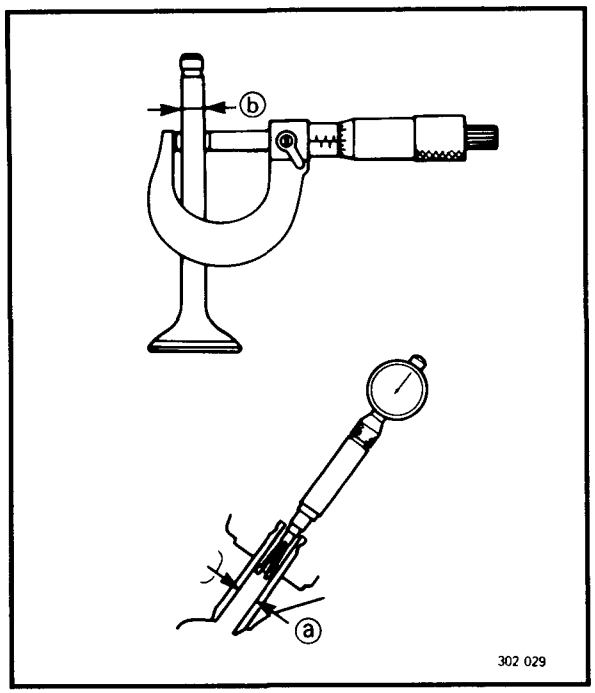

EB402010
VALVES AND VALVE GUIDES

1.Measure:
- Stem-to-guide clearance

Stem-to-guide clearance = valve guide inside diameter ⓐ – valve stem diameter ⓑ

Out of specification → Replace the valve guide.

Clearance (stem to guide):
Intake:
0.010 ~ 0.037 mm
(0.0004 ~ 0.0015 in)
<Limit>: 0.08 mm (0.003 in)
Exhaust:
0.025 ~ 0.052 mm
(0.0010 ~ 0.0020 in)
<Limit>: 0.1 mm (0.004 in)

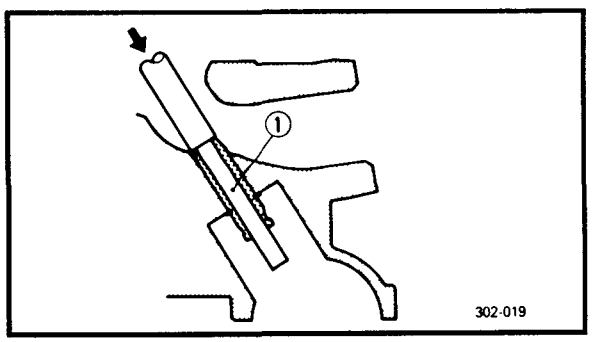

2.Replace:
- Valve guide

****

Replacement steps:

NOTE:
To ease guide removal, installation and to maintain the correct fit heat the cylinder head to 100°C in an oven.

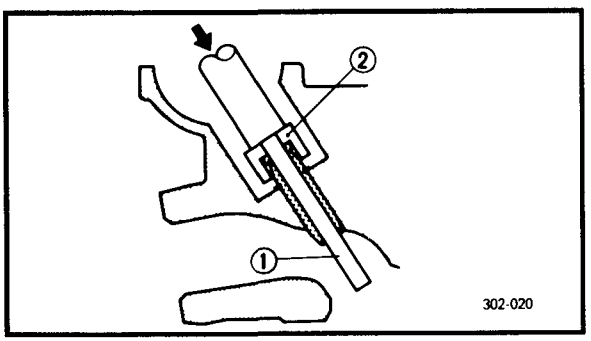

- Remove the valve guide using a valve guide remover ①.
- Install the new valve guide using a valve guide installer ② and valve guide remover ①.
- After installing the valve guide, bore the valve guide using a valve guide reamer ③ to obtain the proper stem-to-guide clearance.

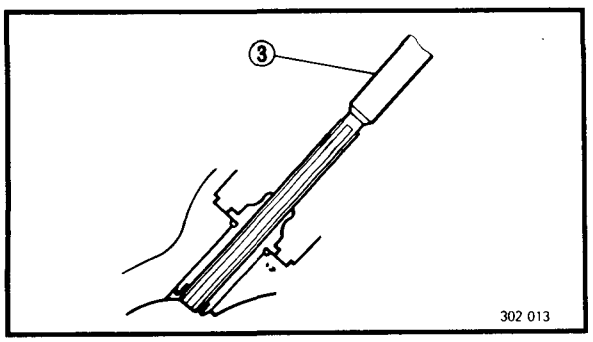

Valve guide remover (4.5 mm):
YM-4116/90890-04116
Valve guide installer (4.5 mm):
YM-4117/90890-04117
Valve guide reamer (4.5 mm):
YM-4118/90890-04118

****

3.Eliminate:
- Carbon deposits
  (from the valve face)

4.Inspect:
- Valve face
  Pitting/wear → Grind the face.
- Valve stem end
  Mushroom shape or diameter larger than the body of the stem → Replace.

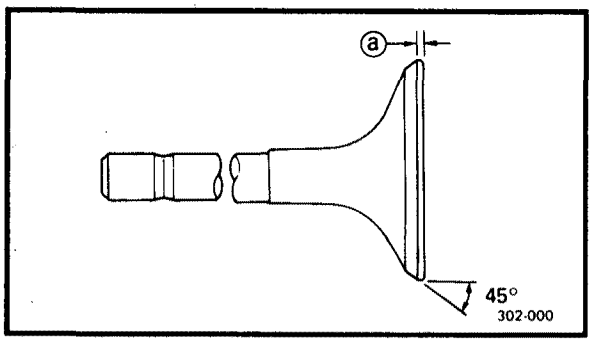

5.Measure:
- Margin thickness ⓐ
  Out of specification → Replace.

Margin thickness:
Intake:
0.45 ~ 0.95 mm (0.018 ~ 0.037 in)
Exhaust:
0.75 ~ 1.25 mm (0.030 ~ 0.049 in)

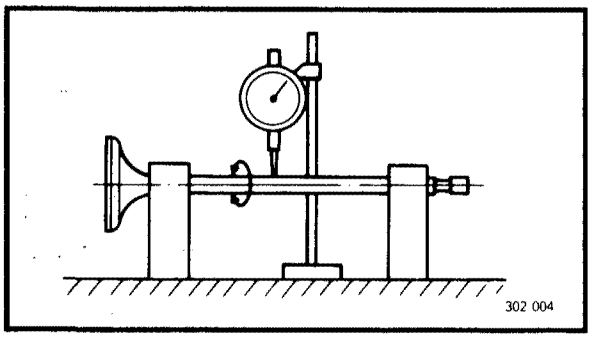

6.Measure:
- Runout (valve stem)
  Out of specification → Replace.

Runout limit:
0.01 mm (0.0004 in)

NOTE:
- When installing a new valve always replace the guide.
- If the valve is removed or replaced always replace the oil seal.

EB402020
VALVE SEATS

1.Eliminate:
- Carbon deposits
  (from the valve face and valve seat)

2.Inspect:
- Valve seat
  Pitting/wear → Reface the valve seat.

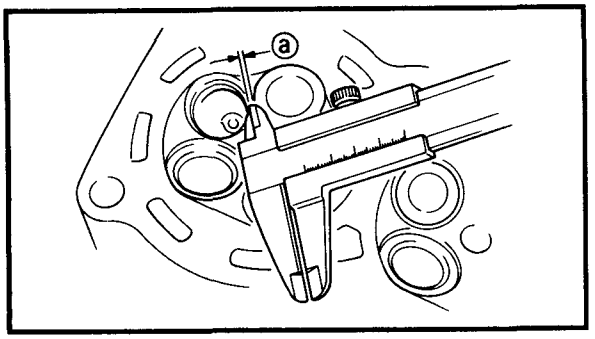

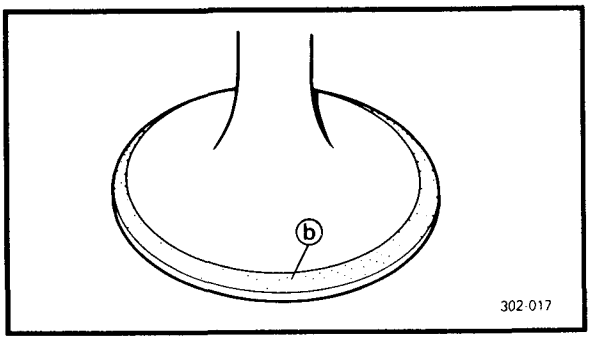

3.Measure:
- Valve seat width ⓐ
  Out of specification → Replace.

Valve seat width:
Intake:
0.9 ~ 1.1 mm (0.035 ~ 0.043 in)
<Limit>: 1.6 mm (0.06 in)
Exhaust:
0.9 ~ 1.1 mm (0.035 ~ 0.043 in)
<Limit>: 1.6 mm (0.06 in)

****

Measurement steps:
- Apply Mechanic's blueing dye (Dykem) ⓑ to the valve face.
- Install the valve into the cylinder head.
- Press the valve through the valve guide and onto the valve seat to make a clear pattern.
- Measure the valve seat width. Where the valve seat and valve face made contact, blueing will have been removed.

****

4.Lap:
- Valve face
- Valve seat

NOTE:
After replacing the valve and valve guide, the valve seat and valve face should be lapped.

****

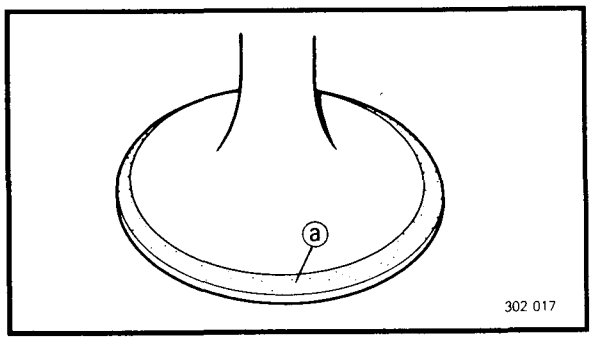

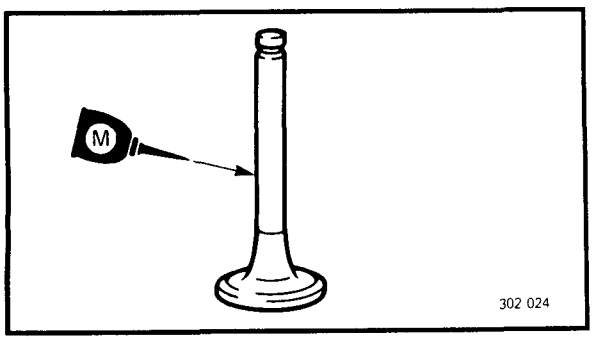

Lapping steps:
- Apply a coarse lapping compound ⓐ to the valve face.

CAUTION:
Do not let the compound enter the gap between the valve stem and the guide.

- Apply molybdenum disulfide oil to the valve stem.
- Install the valve into the cylinder head.
- Turn the valve until the valve face and valve seat are evenly polished, then clean off all of the compound.

NOTE:
For best lapping results, lightly tap the valve seat while rotating the valve back and forth between your hands.

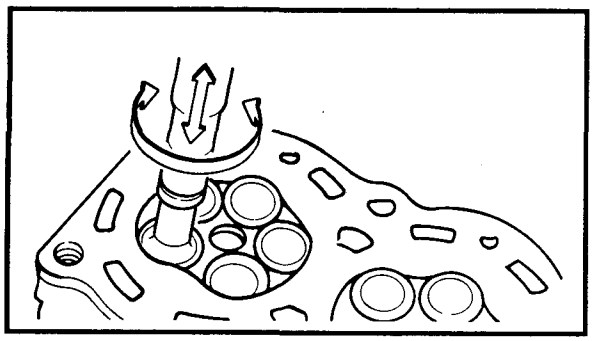

- Apply a fine lapping compound to the valve face and repeat the above steps.

NOTE:
After every lapping operation be sure to clean off all of the compound from the valve face and valve seat.

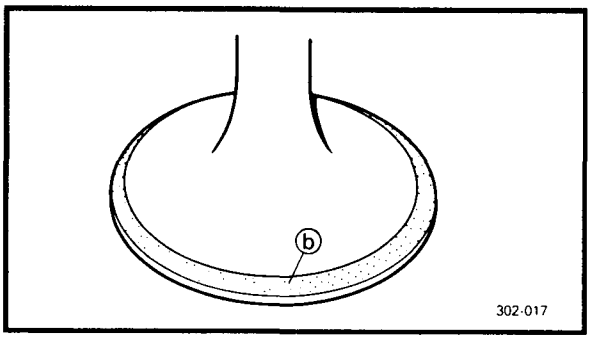

- Apply Mechanic's blueing dye (Dykem) ⓑ to the valve face.
- Install the valve into the cylinder head.
- Press the valve through the valve guide and onto the valve seat to make a clear pattern.

****

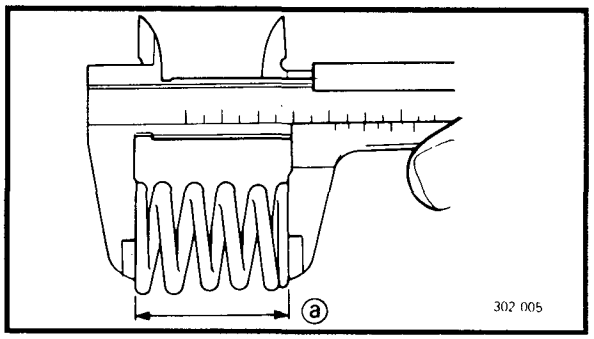

EB402030
VALVE SPRINGS

1.Measure:
- Valve spring free length ⓐ
  Out of specification → Replace.

Free length (valve spring):
Intake spring:
40.73 mm (1.60 in)
Exhaust spring:
44.01 mm (1.73 in)

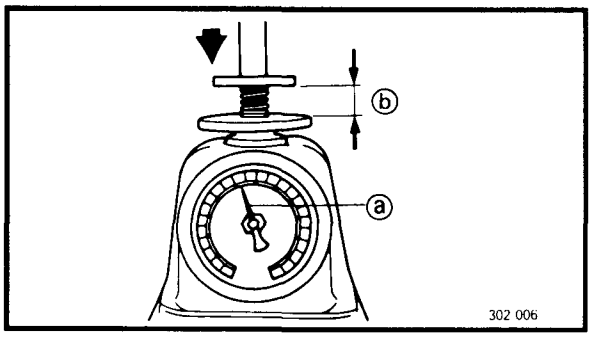

2.Measure:
- Compressed spring force ⓐ
  Out of specification → Replace.
  ⓑ Installed length

Compressed spring force:
Intake spring:
12.20 ~ 13.19 kg (26.90 ~ 29.09 lb) at 35 mm (1.4 in)
Exhaust spring:
21 ~ 23 kg (46.30 ~ 50.71 lb) at 35 mm (1.4 in)

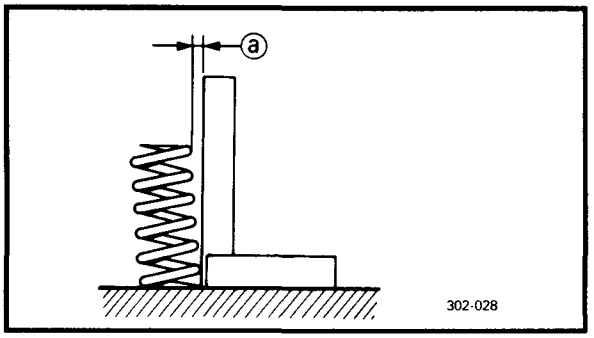

3.Measure:
- Spring tilt ⓐ
  Out of specification → Replace.

Spring tilt limit:
Intake spring:
1.7 mm (0.067 in)
Exhaust spring:
1.7 mm (0.067 in)

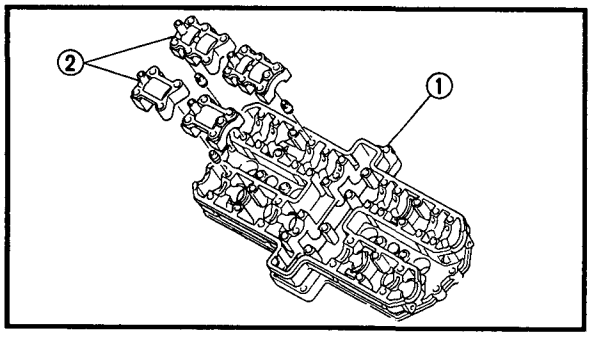

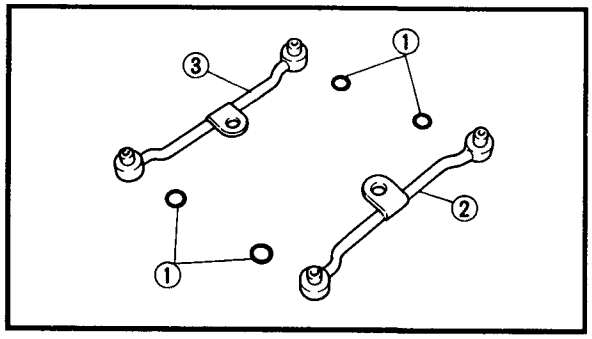

CAMSHAFT CASE

1.Inspect:
- Camshaft case ①
- Camshaft caps ②
  Cracks/damage → Replace the camshaft case and camshaft caps as a set, and inspect the camshaft.
- Camshaft bearing surfaces
  Pitting/scratches/damage → Replace the camshaft case and camshaft caps as a set, and inspect the camshaft.

2.Inspect:
- O-rings ①
- Oil delivery pipe #3 ②
- Oil delivery pipe #4 ③
  Damage → Replace.
  Contamination → Wash the pipe and then blow it out with compressed air.

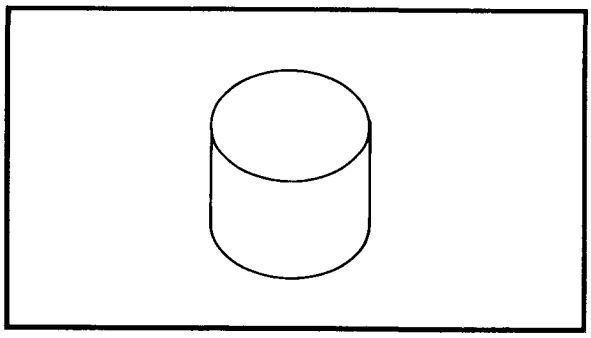

EB402040
VALVE LIFTERS

1.Inspect:
- Valve lifter
  Scratches/damage → Replace both the lifters and the cylinder head.

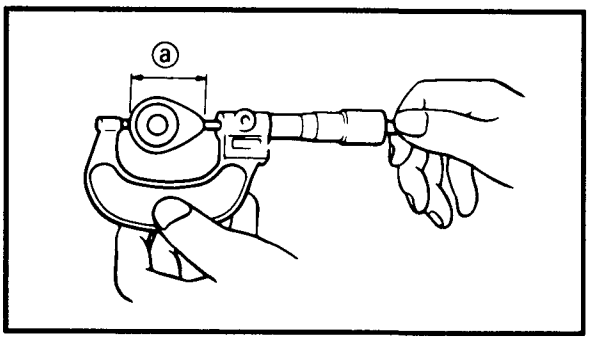

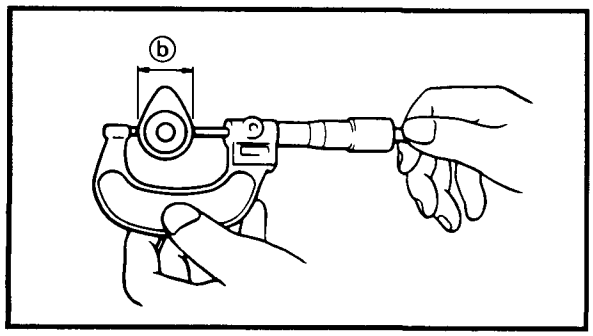

EB402050
CAMSHAFTS

1.Inspect:
- Cam lobe
  Blue discoloration/pitting/scratches → Replace.

2.Measure:
- Cam lobe length ⓐ and ⓑ
  Out of specification → Replace.

Cam lobe length limit:
Intake:
ⓐ 32.4 mm (1.276 in)
ⓑ 24.85 mm (0.978 in)
Exhaust:
ⓐ 32.85 mm (1.293 in)
ⓑ 24.85 mm (0.978 in)

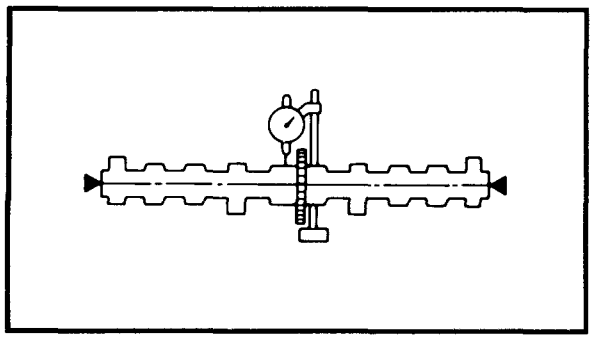

3.Measure:
- Runout (camshaft)
  Out of specification → Replace.

Runout (camshaft):
Less than 0.03 mm (0.0012 in)

4.Measure:
- Camshaft-to-cap clearance
  Out of specification → Measure the diameter (camshaft bearing)

Clearance (camshaft to cap):
0.020 ~ 0.054 mm
(0.0008 ~ 0.0021 in)

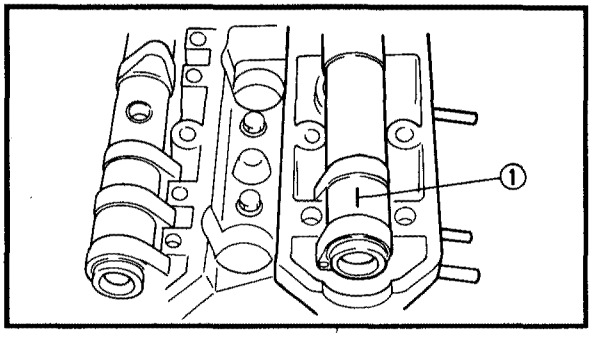

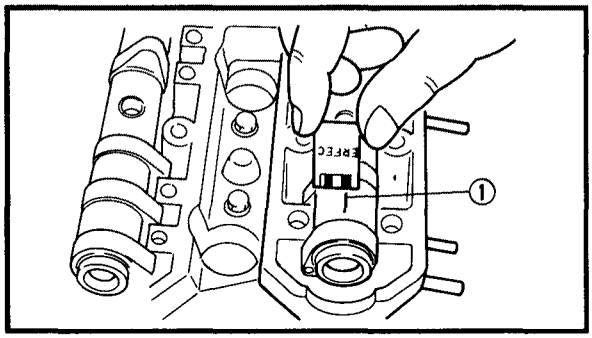

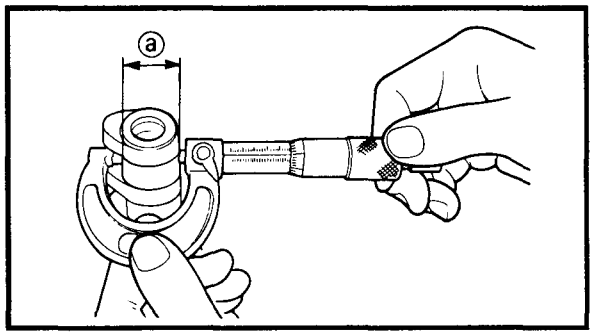

****

Measurement steps:
- Install the camshaft onto the cylinder head.
- Position a strip of Plastigauge® ① onto the camshaft.
- Install the dowel pins and camshaft caps.

Bolt (camshaft cap):
10 Nm (1.0 m • kg, 7.2 ft • lb)

NOTE:
- Tighten the camshaft cap bolts in a crisscross pattern from the inner caps working out.
- When measuring clearance with the Plastigauge® do not turn the camshaft.

- Remove the camshaft caps and measure the width of the Plastigauge® ①.

****

5.Measure:
- Diameter (camshaft bearing) ⓐ
  Out of specification → Replace the camshaft.
  Within specification → Replace the cylinder head and the camshaft caps as a set.

Diameter (camshaft bearing):
24.437 ~ 24.450 mm
(0.9621 ~ 0.9626 in)

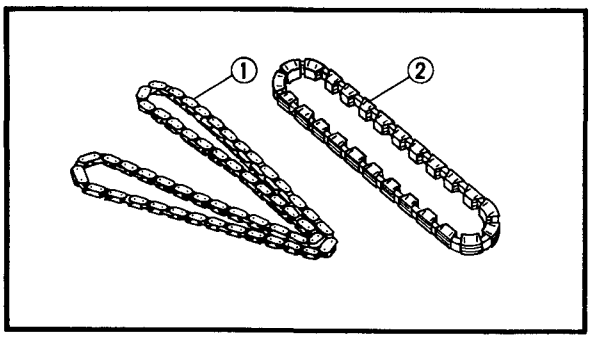

EB402070
TIMING CHAIN, HY-VO CHAIN, CAMSHAFT SPROCKETS AND CHAIN GUIDES

1.Inspect:
- Timing chain ①
- HY-VO chain ②
  Stiffness/damage → Replace the chain and the sprockets as a set.

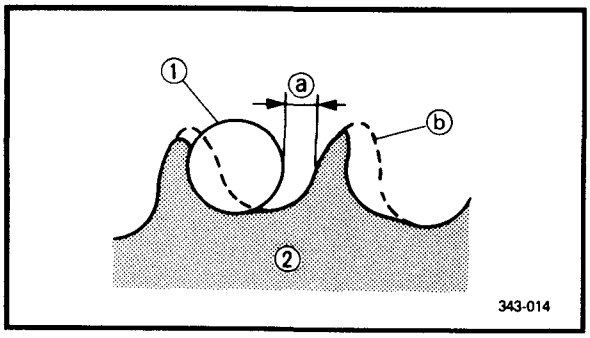

2.Inspect:
- Camshaft sprocket
  Wear/damage → Replace the camshaft sprockets and the timing chain as a set.

ⓐ 1/4 of a tooth
ⓑ Correct
① Roller
② Sprocket

3.Inspect:
- Timing chain guide (exhaust)
- Timing chain guide (intake)
- Timing chain guide (upper)
- HY-VO chain guide
  Wear/damage → Replace.

EB402080
TIMING CHAIN TENSIONER

1.Check:
- One-way cam operation
  Unsmooth operation → Replace.

EB402101
CYLINDERS AND PISTONS

1.Inspect:
- Cylinder and piston walls
  Vertical scratches → Replace the cylinder and piston.

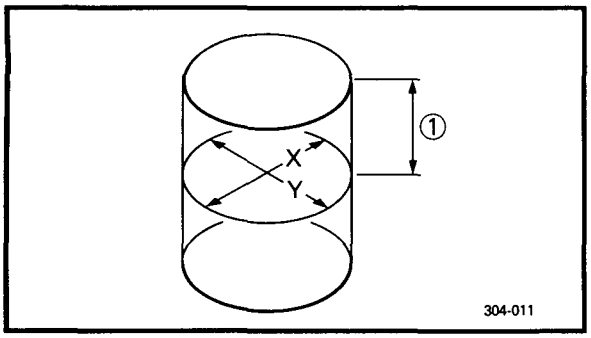

2.Measure:
- Piston-to-cylinder clearance

****

Measurement steps:

1st step:

- Measure cylinder bore "C" with a cylinder bore gauge.

① 40 mm (1.57 in) from the cylinder top

NOTE:

Measure the cylinder bore "C" in parallel to and at right angle to the crankshaft. Then, find the average of the measurements.

	Standard	Wear limit
Cylinder bore "C"	75.500 ~ 75.505mm (2.9724 ~ 2.9726) mm	75.56 mm (2.9748 in)
$C = \frac{X+Y}{2}$		

- If out of specification, replace the cylinder, the piston and the piston rings as a set.

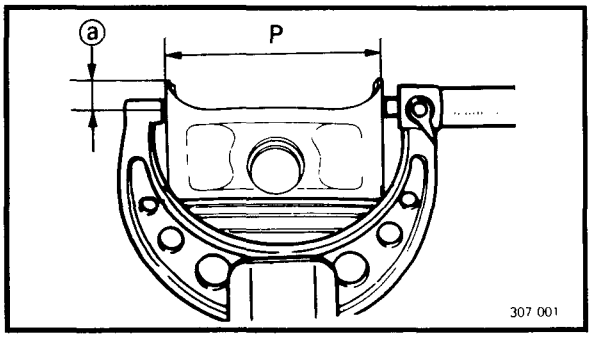

2nd step:

- Measure piston skirt diameter "P" with a micrometer.

ⓐ 3 mm (0.118 in) from the bottom edge of the piston.

	Piston size P
Standard	75.425 ~ 75.440 mm (2.969 ~ 2.970 in)

- If out of specification, replace the piston and the piston rings as a set.

3rd step:

- Use the following formula to calculate the piston-to-cylinder clearance:

Piston-to-cylinder clearance =
Cylinder bore "C" –
Piston skirt diameter "P"

Clearance (piston to cylinder):
0.06 ~ 0.08 mm
(0.0024 ~ 0.0031 in)
<Limit>: 0.1 mm (0.0039 in)

- If out of specification, replace the cylinder, the piston and the piston rings as a set.

****

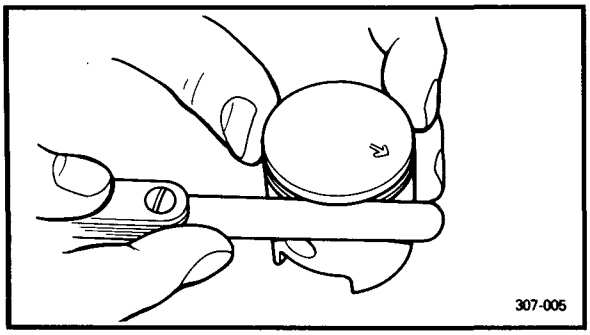

EB402110
PISTON RINGS

1.Measure:
- Side clearance
  Out of specification → Replace the piston and the piston rings as a set.

NOTE:
Before measuring the side clearance, eliminate the carbon deposits from the piston ring grooves and rings.

Side clearance (piston ring):
Top ring:
0.03 ~ 0.07 mm
(0.001 ~ 0.003 in)
<Limit>: 0.15 mm (0.006 in)
2nd ring:
0.02 ~ 0.06 mm
(0.001 ~ 0.002 in)
<Limit>: 0.15 mm (0.006 in)

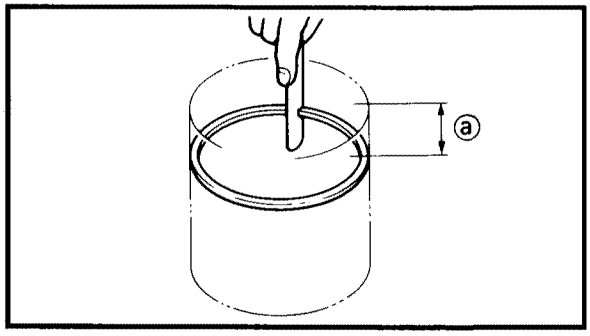

2.Position:
- Piston ring
  (into the cylinder)

NOTE:
Using the piston crown, push the ring into the cylinder.

ⓐ 20 mm (0.8 in)

3.Measure:
- End gap
  Out of specification → Replace.

NOTE:
The end gap on the expander spacer of the oil ring cannot be measured. If the oil ring rails show excessive gap, replace all three rings.

End gap:
Top ring:
0.3 ~ 0.5 mm (0.012 ~ 0.020 in)
<Limit>: 0.7 mm (0.028 in)
2nd ring:
0.3 ~ 0.5 mm (0.012 ~ 0.020 in)
<Limit>: 0.7 mm (0.028 in)
Oil ring:
0.2 ~ 0.8 mm (0.008 ~ 0.031 in)

EB402120
PISTON PINS

1.Inspect:
- Piston pin
  Blue discoloration/grooves → Replace the piston pin, then inspect the lubrication system.

2.Measure:
- Piston pin-to-piston clearance

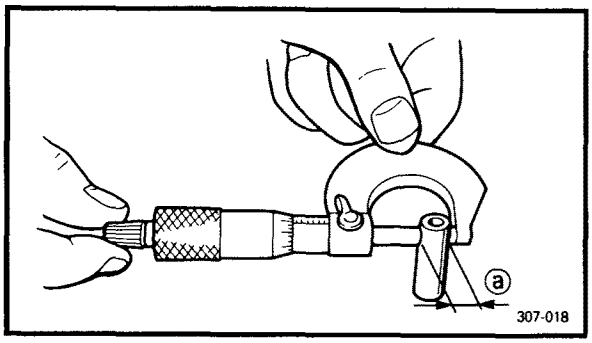

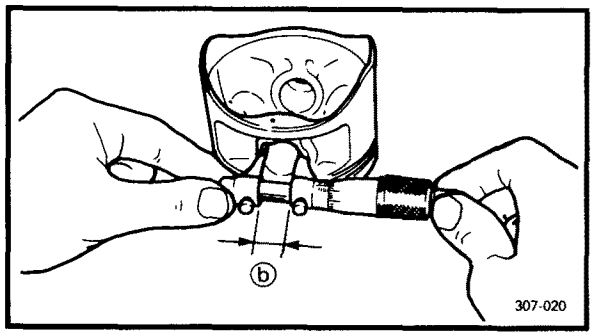

****

Measurement steps:
- Measure the piston pin outside diameter ⓐ.
  If out of specification, replace the piston pin.

Outside diameter (piston pin): **18.991 ~ 19.000 mm** **(0.7477 ~ 0.7480 in)**

- Measure the inside diameter of the piston ⓑ.
- Use the following formula to calculate the piston pin-to-piston clearance:

Piston pin-to-piston clearance = **Bore size (piston pins) ⓑ –** **Outside diameter (piston pins) ⓐ**

- If out of specification, replace the piston.

Clearance (piston pin to piston): **0.004 ~ 0.024 mm** **(0.00016 ~ 0.00094 in)** **<Limit>: 0.07 mm (0.003 in)**

****

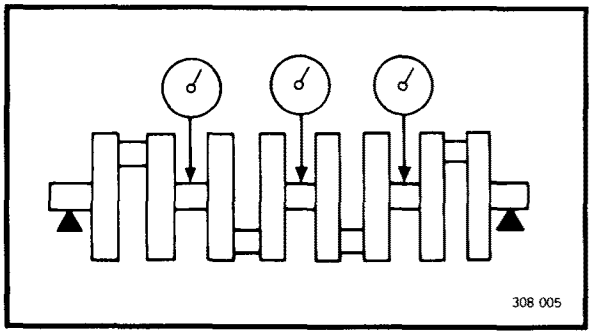

EB402131
CRANKSHAFT AND CONNECTING RODS

1.Measure:
- Runout (crankshaft)
  Out of specification → Replace.

Runout (crankshaft): **Less than 0.03 mm (0.0012 in)**

2.Inspect:
- Main journal surfaces
- Crank pin surfaces
- Bearing surfaces
  Scratches/wear → Replace.

3.Measure:
- Oil clearance (main journal)
  Out of specification → Replace the main journal bearing.

Oil clearance (main journal):
0.020 ~ 0.044 mm
(0.0008 ~ 0.0017 in)

****

Measurement steps:

CAUTION:
- **Do not interchange the main journal bearings. To obtain the correct oil clearance and to prevent engine damage, they must be installed in their original positions.**
- **There is no slot in the J_3 main journal bearing. During installation, do not interchange the *J3 main journal bearing* with any of the other ones.**

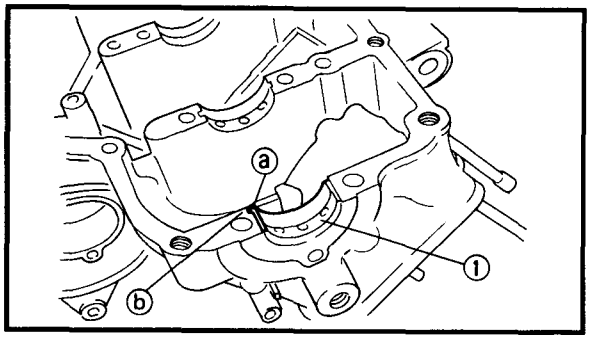

- Clean the main journal bearings, main journals and bearing portions of the crankcase.
- Place the upper crankcase upside down on a bench.
- Install the upper half of the main journal bearings ① and the crankshaft into the upper crankcase.

NOTE:
Align the projection ⓐ of the main journal bearing with the notch ⓑ in the crankcase.

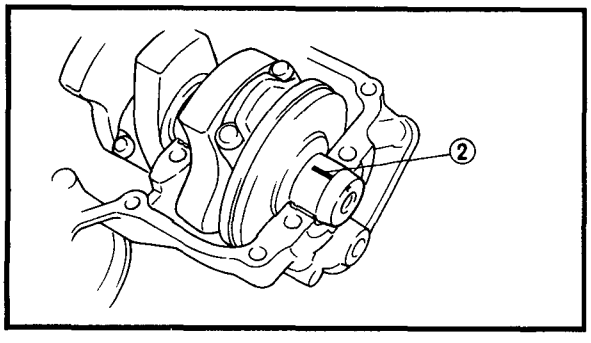

- Put a piece of Plastigauge® ② on each main journal.

NOTE:
Do not put the Plastigauge® over the oil hole in the main journal of the crankshaft.

- Install the lower half of the main journal bearing into the lower crankcase and assemble the crankcase halves.

NOTE:
- Align the projection of the main journal bearing with the notch in the crankcase.
- Do not move the crankshaft until the oil clearance measurement has been completed.

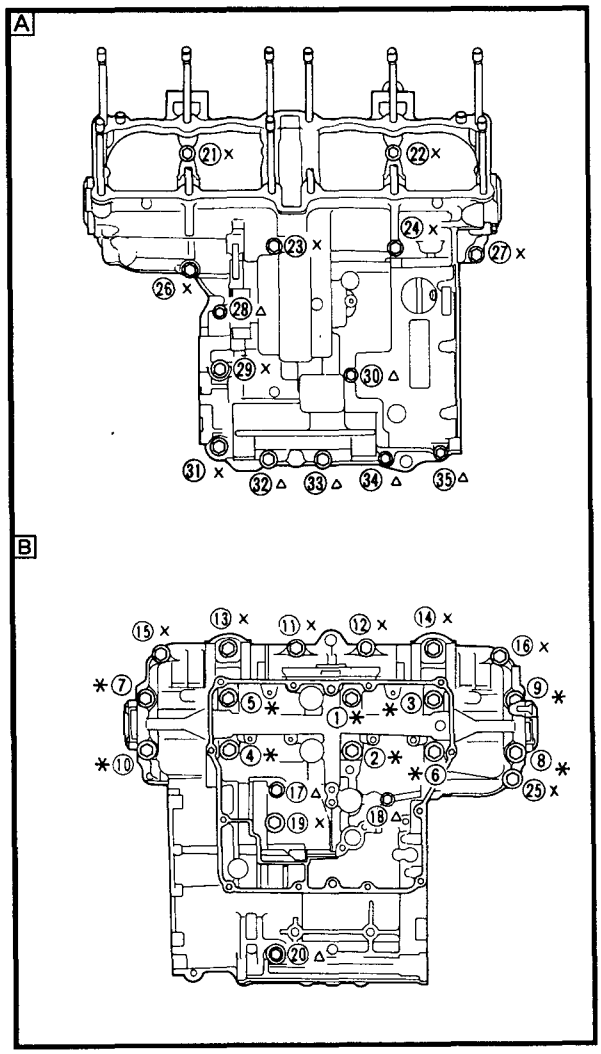

- Tighten the bolts to specification in the tightening sequence that is cast on the crankcase.

Bolt (crankcase):
*** M9 (① ~ ⑩, ㉓):**
32 Nm (3.2 m • kg, 23 ft • lb)
× M8 (⑪ ~ ⑯, ⑲, ㉑, ㉒, ㉔ ~ ㉗, ㉙ and ㉛ ~ ㉝):
24 Nm (2.4 m • kg, 17 ft • lb)
△ M6 (⑰, ⑱, ⑳, ㉘, ㉚, ㉞, ㉟):
12 Nm (1.2 m • kg, 8.7 ft • lb)

A Upper case
B Lower case

NOTE:
- Lubricate the bolt threads (M9) with molybdenum disulfide oil.
- Lubricate the bolt threads (M8 and M6) with engine oil.

- Remove the lower crankcase and the lower half of the bearings.

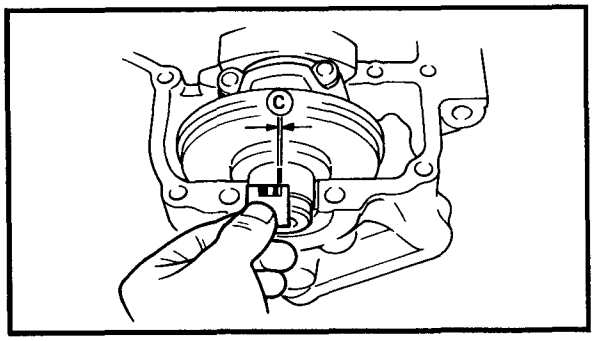

- Measure the compressed Plastigauge® width Ⓒ on each main journal.
  If the oil clearance is out of specification, select a replacement bearing.

****

4.Measure:
- Oil clearance (crank pin)
  Out of specification → Replace the crank pin bearing.

Oil clearance (crank pin):
0.032 ~ 0.056 mm
(0.001 ~ 0.002 in)

****

Measurement steps:

CAUTION:
Do not interchange the crank pin bearings and connecting rods. To obtain the correct oil clearance and to prevent engine damage they must be installed in their original positions.

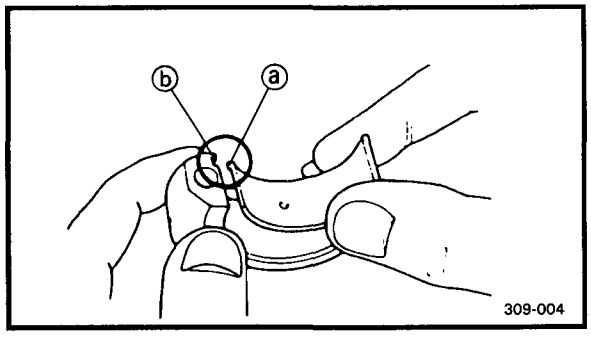

- Clean the bearings, crank pins and bearing portions of the connecting rods.
- Install the upper half of the bearing into the connecting rod and the lower half of the bearing into the connecting rod cap.

NOTE:
Align the projection ⓐ of the bearing with the notch ⓑ of the connecting rod and connecting rod cap.

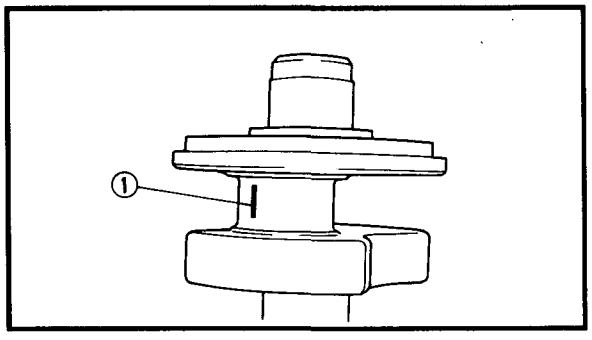

- Put a piece of Plastigauge® ① on the crank pin.
- Assemble the connecting rod halves.

NOTE:
- Do not move the connecting rod or crankshaft until the oil clearance measurement has been completed.
- Apply molybdenum disulfide grease to the bolts, threads and nut seats.

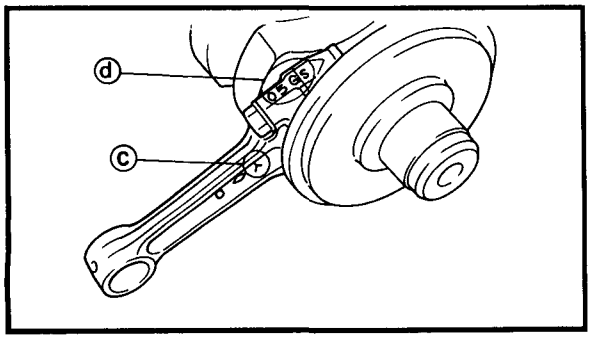

- Make sure that the "Y" marks ⓒ on the connecting rods face towards the left side of the crankshaft.
- When assembling, make sure that the letters ⓓ on both the connecting rod and the connecting rod cap align to form a perfect character.

- Tighten the connecting rod nuts.

	Nut (connecting rod): **36 Nm (3.6 m • kg, 25 ft • lb)**

CAUTION:

Without pausing, tighten the connecting rod nuts to full torque specification. Apply continuous torque between 2.0 and 3.6 m • kg. Once you reach 2.0 m • kg DO NOT STOP TIGHTENING until the final torque is reached. If the tightening is interrupted between 2.0 and 3.6 m • kg, loosen the nut to less than 2.0 m • kg and start again.

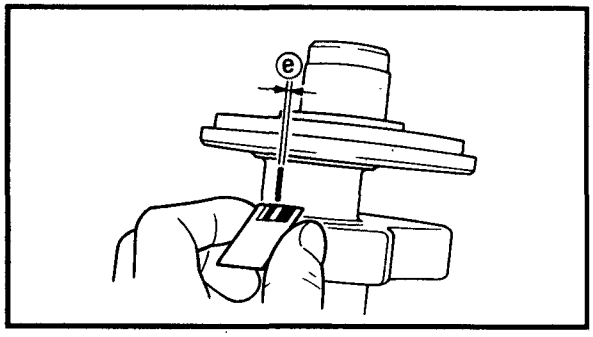

- Remove the connecting rods and bearings.
- Measure the compressed Plastigauge® width ⓔ on each crank pin.
  If the oil clearance is out of specification, select a replacement bearing.

****

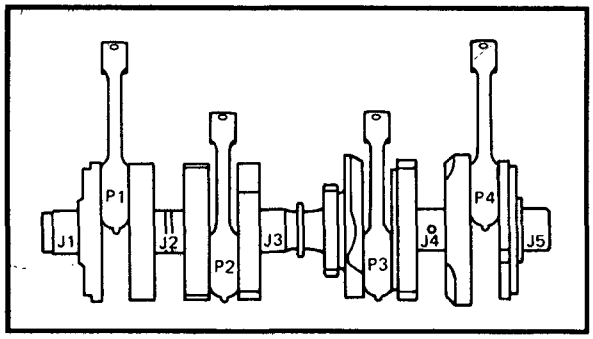

5.Select:
- Main journal bearing (J_1 ~ J_5)
- Crank pin bearing (P_1 ~ P_4)

****

Selection of bearings:

Example 1: Main journal bearing

- If "J_1" on the crankcase is "5" and "1" on the crankweb, then the bearing size for "J_1" is:

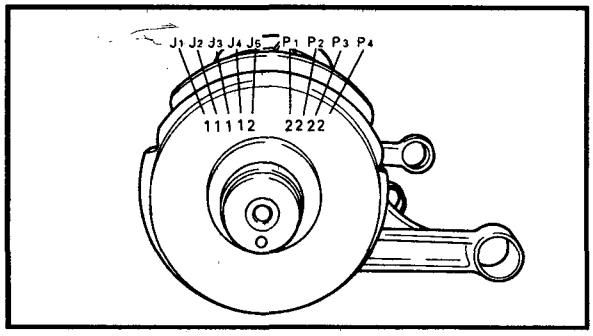

Bearing size of J_1: **Crankcase J_1 – Crankweb J_1 =** **5 – 1 = 4 (pink-green)** **Bearing size of J_3:** **Crankcase J_3 – Crankweb J_3 =** **4 – 1 = 3 (violet-brown)**

NOTE:

There is no slot in the J_3 main journal bearing. During installation, do not interchange the J_3 main journal bearing with any of the other ones.

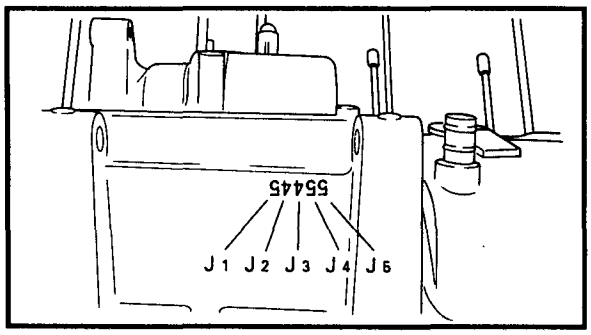

BEARING COLOR CODE		
	J_1, J_2, J_4, J_5	J_3
1	pink - blue	violet - blue
2	pink - black	violet - black
3	pink - brown	violet - brown
4	pink - green	violet - green
5	pink - yellow	violet - yellow

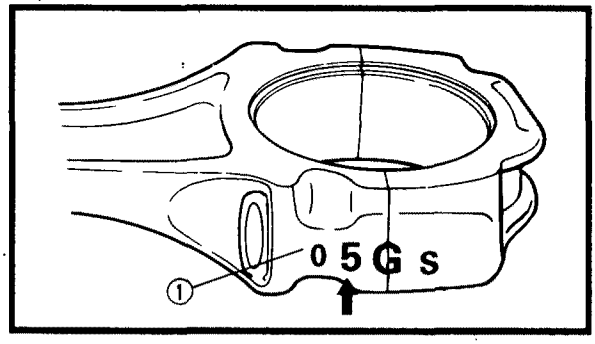

Example 2: Crank pin bearing

- If "P_1" on the connecting rod is "5" and "2" on the crankweb, then the bearing size for "P_1" is:

Bearing size of P_1:
Connecting rod P_1 – Crankweb P_1 = 5 – 2 = 3 (brown)

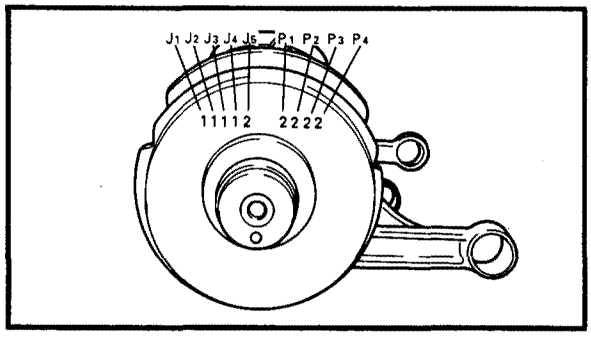

BEARING COLOR CODE	
1	blue
2	black
3	brown
4	green

****

EB402140

OIL PUMP

1.Inspect:

- Drive gear (oil pump) ①
- Driven gear (oil pump) ②
- Pump housing ③
- Pump housing cover ④
  Cracks/wear/damage → Replace.

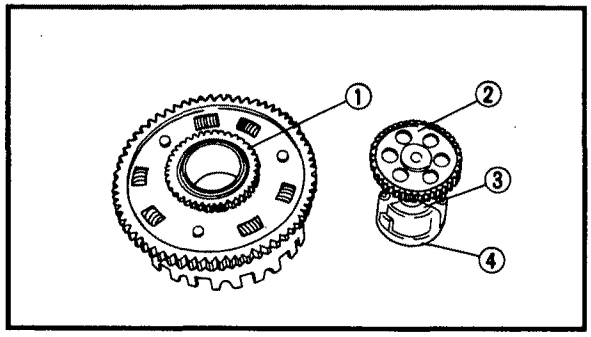

2.Measure:

- Tip clearance ⓐ
  (between the inner rotor ① and the outer rotor ②)
- Side clearance ⓑ
  (between the outer rotor ② and the pump housing ③)
  Out of specification → Replace the oil pump assembly.

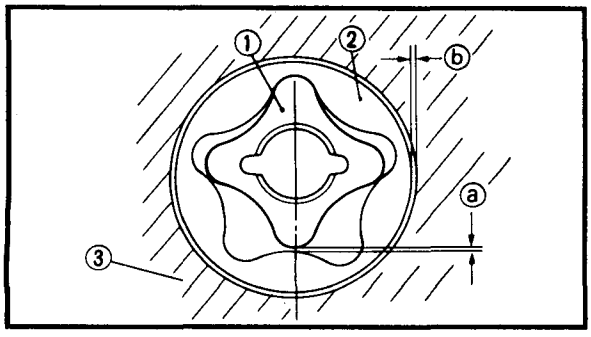

Tip clearance:
0.09 ~ 0.15 mm
(0.004 ~ 0.006 in)
<Limit>: 0.2 mm (0.008 in)
Side clearance:
0.03 ~ 0.08 mm
(0.001 ~ 0.003 in)
<Limit>: 0.15 mm (0.006 in)

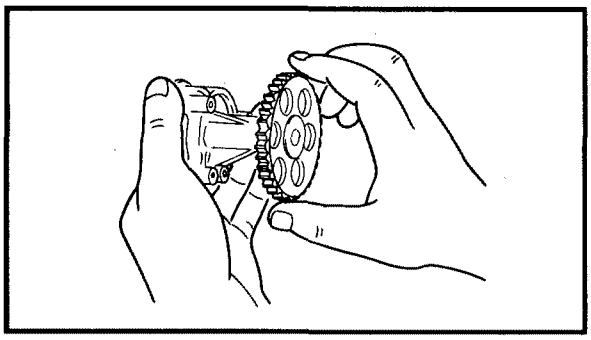

3.Check:
- Oil pump operation
  Unsmooth → Repeat steps 1 and 2 or replace the defective parts.

EB402150
PRIMARY DRIVE
1.Inspect:
- Gear teeth (primary drive)
- Gear teeth (primary driven)
  Wear/damage → Replace both gears.

Excessive noise during operation → Replace both gears.

Primary reduction ratio:		
No. of teeth		Ratio
Drive	Driven	
41	68	1.659

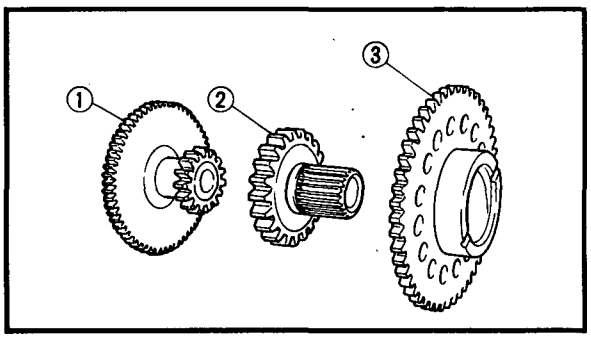

EB402160
STARTER DRIVES
1.Inspect:
- Gear teeth (starter idle) ①
- Gear teeth (HY-VO chain drive) ②
- Gear teeth (starter wheel) ③
  Burrs/chips/roughness/wear → Replace.

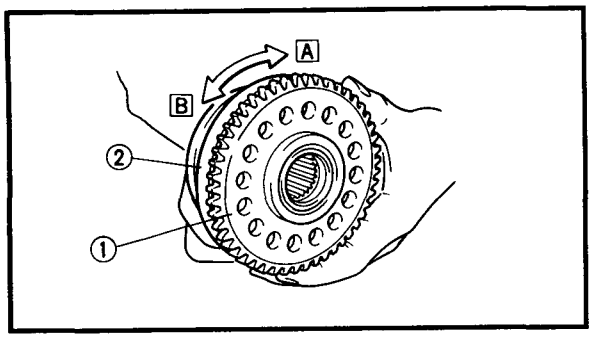

2.Check:
- Starter clutch operation

****

Clutch operation checking steps:
- Install the starter wheel gear ① to the starter clutch ② and hold the starter clutch.
- When turning the starter wheel gear clockwise A, the starter clutch and the wheel gear should be engaged.
  If not, the starter clutch is faulty. Replace it.
- When turning the starter wheel gear counterclockwise B, it should turn freely.
  If not, the starter clutch is faulty. Replace it.

****

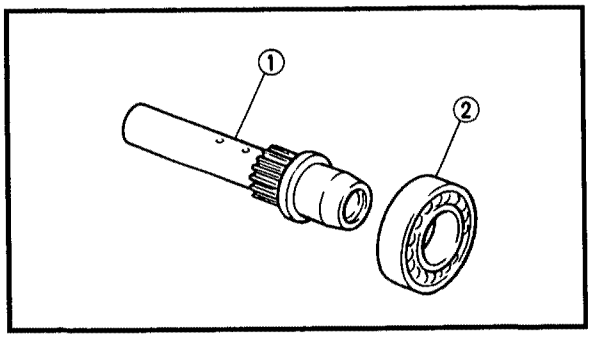

AC GENERATOR SHAFT

1.Check:
- Shaft and splines ①
  Wear/damage → Replace.
- Oil passages
  Contamination → Wash the shaft and blow out the oil passages with compressed air.
- Bearing ②
  Unsmooth operation → Replace.

EB402181
CLUTCH

1.Inspect:
- Friction plates
  Wear/damage → Replace the friction plates as a set.

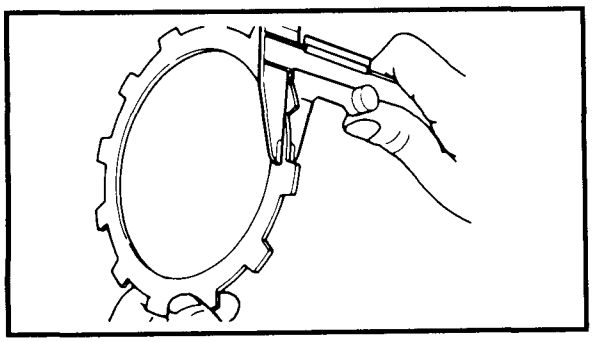

2.Measure:
- Friction plate thickness
  Out of specification → Replace the friction plates as a set.
  Measure at four places.

Thickness (friction plate):
2.9 ~ 3.1 mm (0.114 ~ 0.122 in)
<Limit>: 2.8 mm (0.11 in)

3.Inspect:
- Clutch plate
  Damage → Replace the clutch plates as a set.

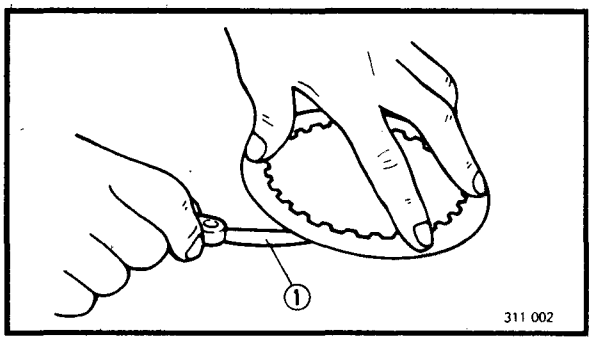

4.Measure:
- Clutch plate warpage
  Out of specification → Replace the clutch plates as a set.
  Use a surface plate and a feeler gauge ①.

Warp limit (clutch plate):
Less than 0.1 mm (0.004 in)

5.Inspect:
- Clutch spring
  Damage → Replace the clutch springs as a set.

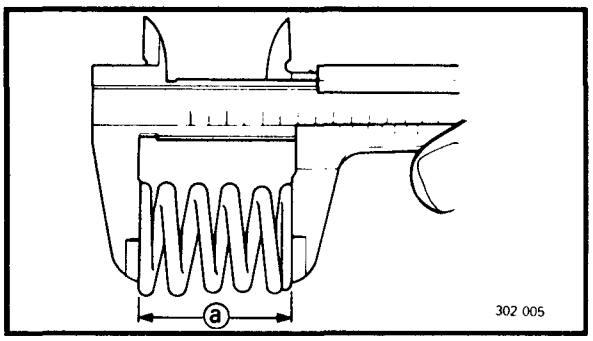

6.Measure:
- Free length (clutch spring) ⓐ
  Out of specification → Replace the clutch springs as a set.

Free length (clutch spring):
50 mm (1.97 in)
<Limit>: 48 mm (1.89 in)

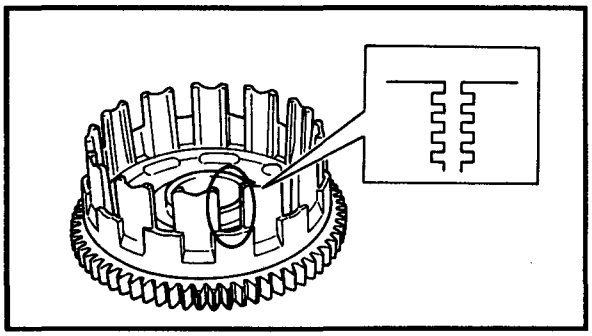

7.Inspect:
- Dogs
  (on the clutch housing)
  Pitting/wear/damage → Deburr or replace.
- Clutch housing bearing
  Wear/damage → Replace the clutch housing.

NOTE:
Pitting on the clutch housing dogs will cause erratic operation.

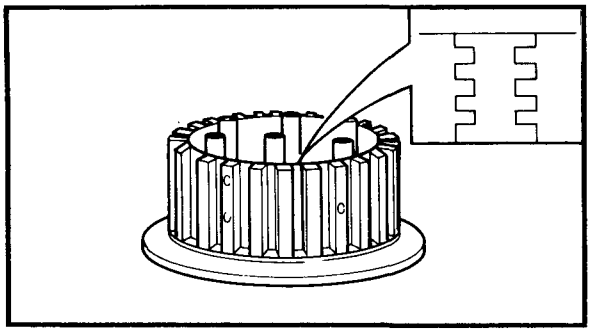

8.Inspect:
- Clutch boss splines
  Pitting/wear/damage → Replace the clutch boss.

NOTE:
Pitting on the clutch boss splines will cause erratic operation.

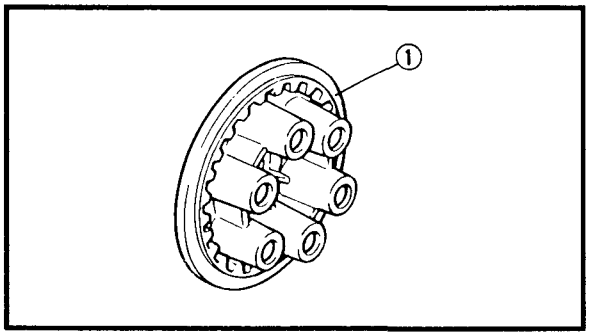

9.Inspect:
- Pressure plate ①
  Cracks/damage → Replace.

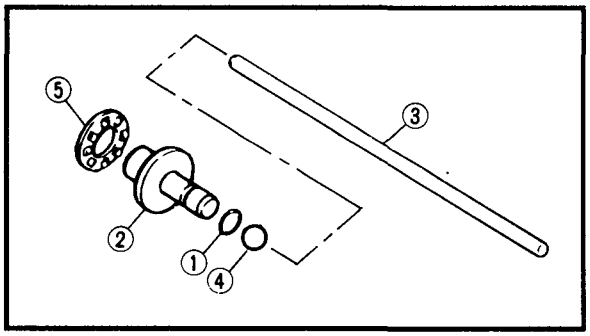

10.Inspect:
- O-ring ①
- Push rod #1 ②
- Push rod #2 ③
- Ball ④
- Bearing ⑤
  Cracks/wear/damage → Replace.

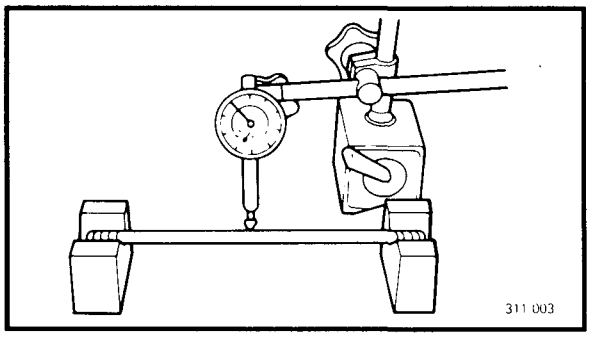

11.Measure:
- Push rod #2
  Out of specification → Replace.

Bending limit (push rod #2):
0.3 mm (0.012 in)

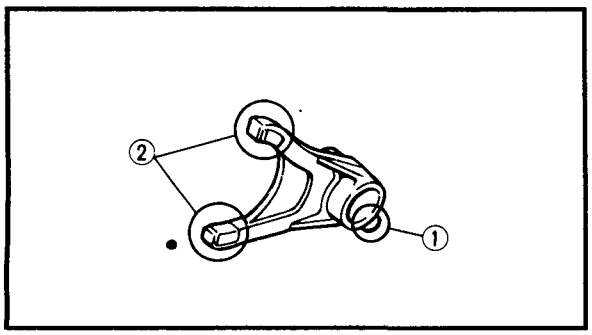

EB402191
TRANSMISSION AND SHIFTER

1.Inspect:
- Shift fork cam follower ①
- Shift fork pawl ②
  Bends/scoring/wear/damage → Replace.

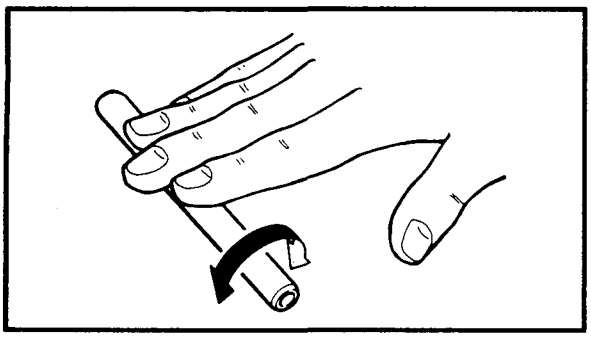

2.Inspect:
- Guide bar
  Roll the guide bar on a flat surface.
  Bends → Replace.

⚠ WARNING

Do not attempt to straighten a bent guide bar.

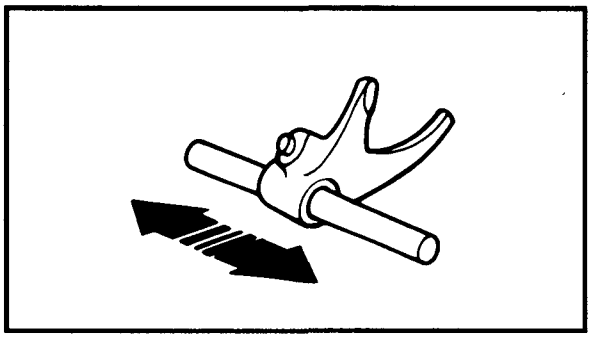

3.Check:
- Shift fork movement
  (on the guide bar)
  Unsmooth operation → Replace the shift fork and the guide bar.

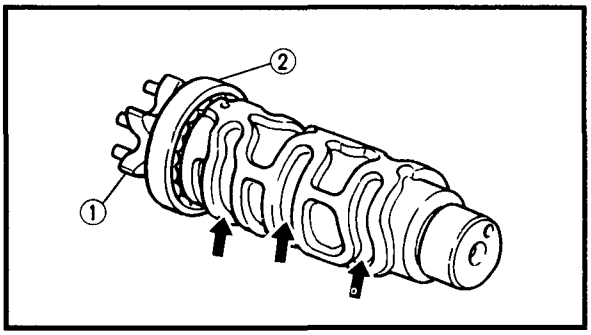

4.Inspect:
- Shift cam grooves
  Scratches/wear/damage → Replace.
- Shift cam segment ①
  Wear/damage → Replace.
- Shift cam bearing ②
  Pitting/damage → Replace.

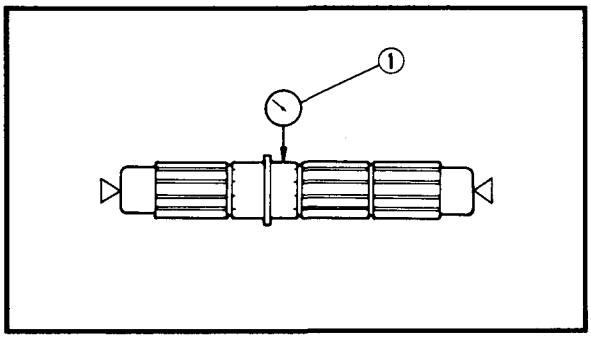

5.Measure:
- Axle runout (main and drive)
  Use a centering device and a dial gauge ①.
  Out of specification → Replace the bent axle.

Runout limit (main and drive axle):
0.08 mm (0.0003 in)

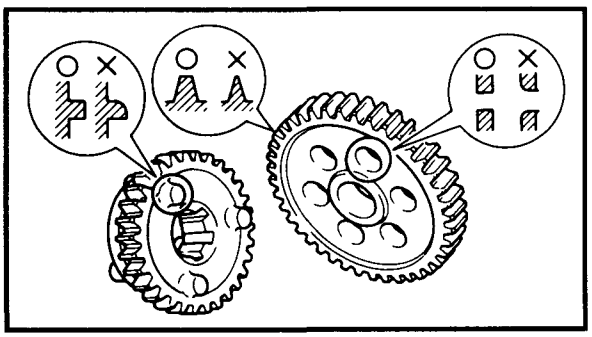

6.Inspect:
- Gear teeth
  Blue discoloration/pitting/wear → Replace.
- Mated dogs
  Cracks/missing portions/rounded edges → Replace.

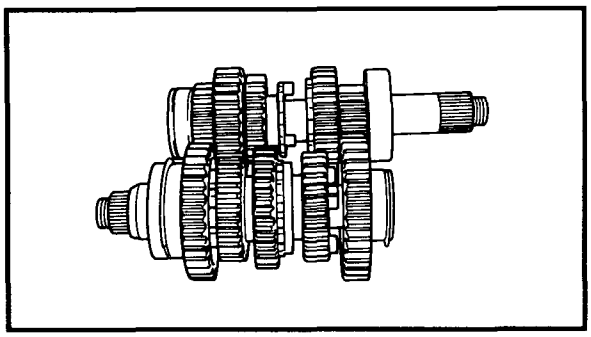

7.Check:
- Proper pinion gear engagement (each gear to its counter part)
  Incorrect → Reassemble.
- Gear movement
  Roughness → Replace.

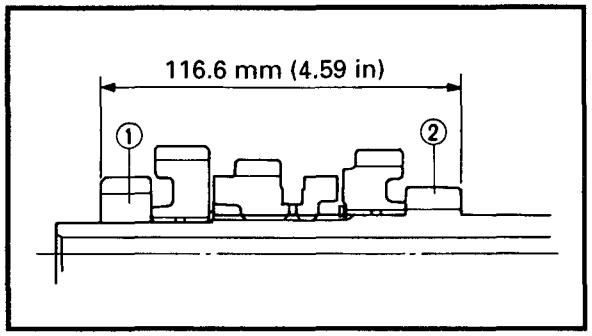

****

Transmission gear reassembling point:
Press the 2nd pinion gear ① into the 1st pinion gear (main axle) ②.

****

8.Inspect:
- Circlip
  Bends/looseness/damage → Replace.

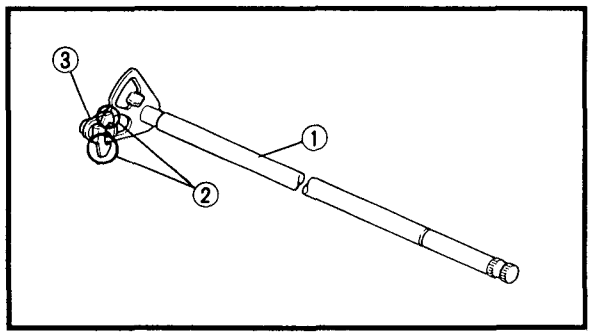

EB402201
SHIFT SHAFT AND STOPPER LEVER

1.Inspect:
- Shift shaft ①
- Shift pawl ②
- Return spring (shift pawl) ③
  Bends/wear/damage → Replace.

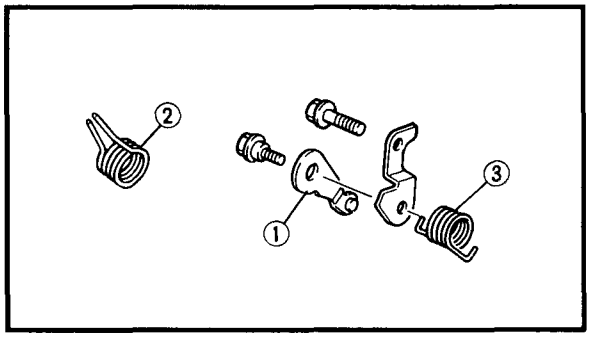

2.Inspect:
- Stopper lever ①
  Roller turns roughly → Replace.
  Bends/damage → Replace.

3.Inspect:
- Return spring (shift shaft) ②
- Return spring (stopper lever) ③
  Wear/damage → Replace.

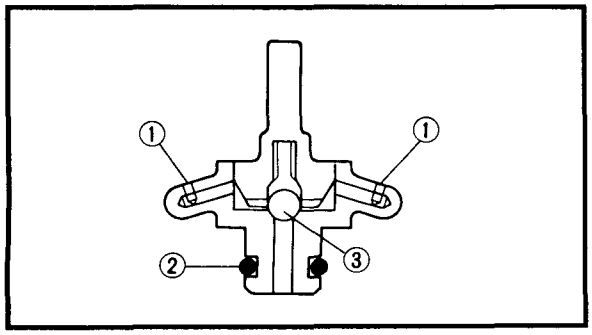

EB402210
OIL-JET NOZZLE

1.Check:
- Oil-jet nozzle ①
- O-ring ②
- Check ball ③
  Wear/damage → Replace oil-jet nozzle assembly.
- Oil jet passage
  Blockage → Blow out with compressed air.

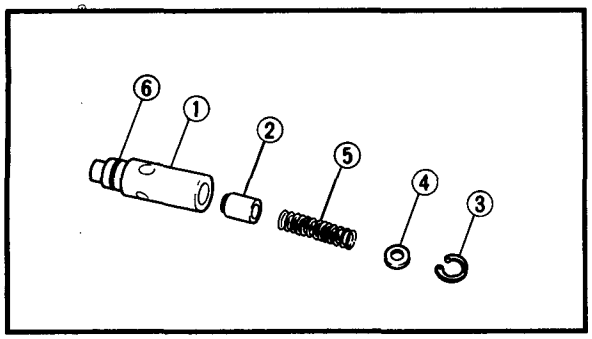

EB402221
RELIEF VALVE, OIL PIPE AND STRAINER

1.Check:
- Relief valve body ①
- Valve ②
- Circlip ③
- Spring seat ④
- Spring ⑤
- O-ring ⑥

  Wear/damage → Replace.

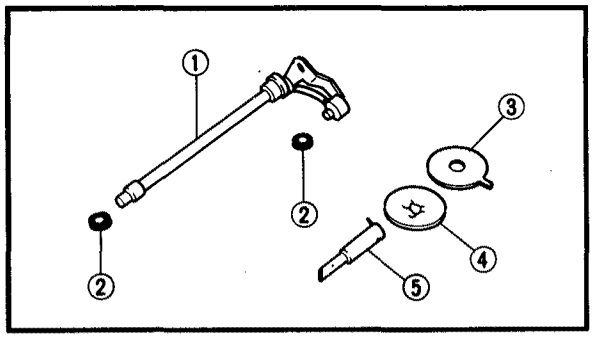

2.Check:
- Oil delivery pipe #5 ①
- O-rings ②
- Oil plug plate ③
- Gasket ④
- Oil spray nozzle ⑤

  Damage → Replace.
  Contamination → Wash the pipe and then blow out the oil passage with compressed air.

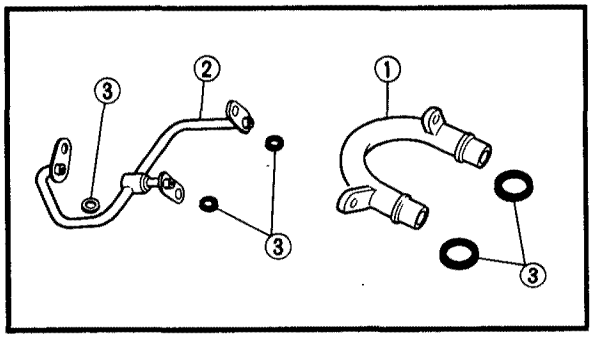

3.Check:
- Oil delivery pipe #2 ①
- Oil delivery pipe #1 ②
- O-rings ③

  Damage → Replace.
  Contamination → Wash the pipe and then blow it out with compressed air.

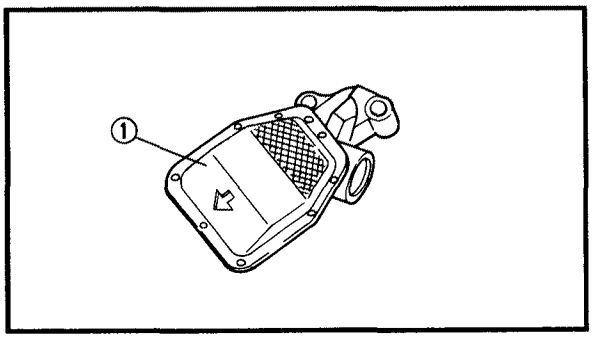

4.Inspect:
- Oil strainer ①

  Damage → Replace.

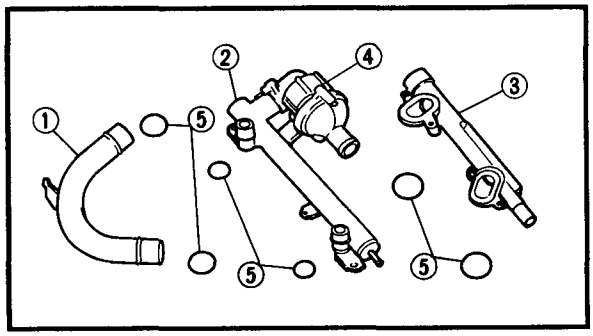

5.Check:
- Coolant pipe ①
- Water jacket joint (outlet ② and inlet ③)
- Thermostatic valve housing ④
- O-rings ⑤

  Damage → Replace.
  Refer to "COOLING SYSTEM" in CHAPTER 5.

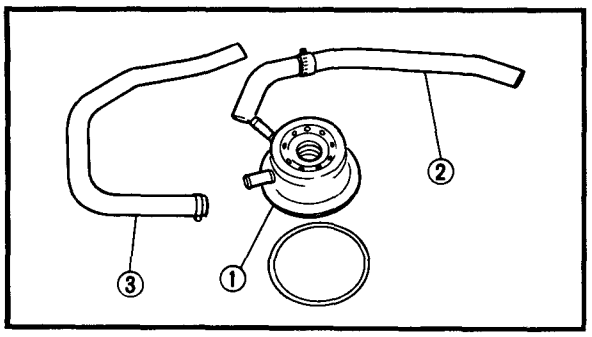

EB402230
OIL COOLER

1.Check:
- Oil cooler ①
- Inlet hose (oil cooler) ②
- Outlet hose (oil cooler) ③

  Cracks/wear/damage → Replace.

EB402240
CRANKCASE

1.Thoroughly wash the crankcase halves in a mild solvent.
2.Thoroughly clean all the gasket mating surfaces and crankcase mating surfaces.
3.Inspect:
- Crankcase

  Cracks/damage → Replace.
- Oil delivery passages

  Blockage → Blow out the passages with compressed air.

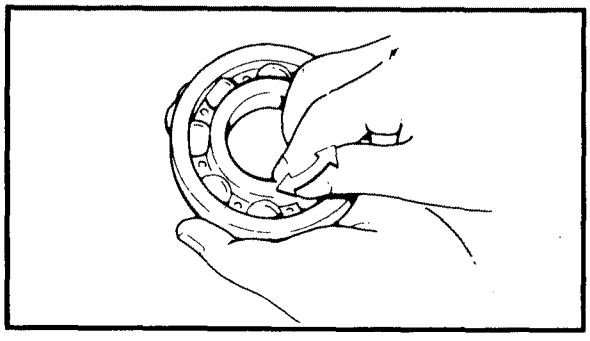

EB402250
BEARINGS AND OIL SEALS

1.Inspect:
- Bearing

  Clean and then lubricate the bearings, then using a finger, rotate the inner race.
  Roughness → Replace.

2.Inspect:
- Oil seal

  Wear/damage → Replace.

EB402260
CIRCLIPS AND WASHERS

1.Inspect:
- Circlip
- Washer

  Bends/looseness/damage → Replace.

EB404000
ENGINE ASSEMBLY AND ADJUSTMENT

⚠ WARNING

For engine assembly, replace the following parts with new ones:
- **O-rings**
- **Gaskets**
- **Oil seals**
- **Copper washers**
- **Lock washers**
- **Circlips**

EB404010
OIL PUMP

1.Lubricate:
- Inner rotor
- Outer rotor
- Pump shaft

Recommended lubricant: Engine oil

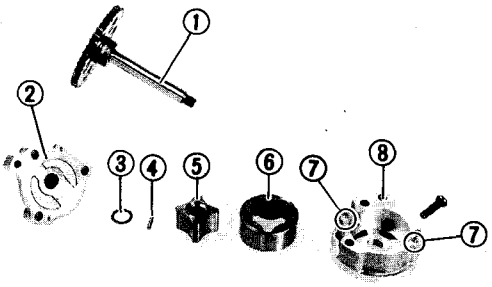

2.Install:
- Pump shaft ①
  (to pump cover ②)
- Washer ③
- Pin ④
- Inner rotor ⑤
- Outer rotor ⑥
- Dowel pins ⑦
- Pump housing ⑧
- Screw

Screw (pump housing): 7 Nm (0.7 m • kg, 5.1 ft • lb)

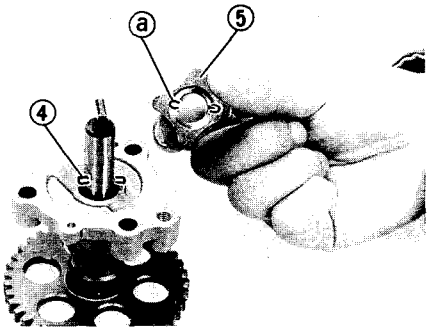

NOTE:
When installing the inner rotor, align the pin ④ in the pump shaft with the groove ⓐ on the inner rotor ⑤.

3.Check:
- Oil pump operation
  Refer to "INSPECTION AND REPAIR".

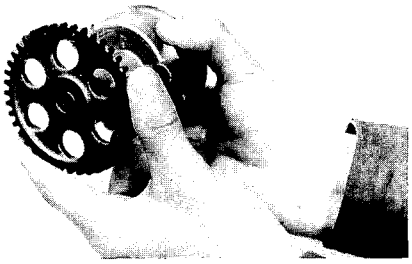

CONNECTING ROD AND CRANKSHAFT

① Connecting rod
② Plain bearing (connecting rod)
③ Connecting rod cap
④ Plain bearing (crankshaft-main journal)
⑤ Projection mark
⑥ Crank pin bearing size
⑦ Connecting rod weight number

A	CRANKSHAFT RUNOUT LIMIT: 0.03 mm (0.0012 in)
B	CRANK PIN OIL CLEARANCE: 0.032 ~ 0.056 mm (0.001 ~ 0.002 in)

36 Nm (3.6 m • kg, 25 ft • lb)

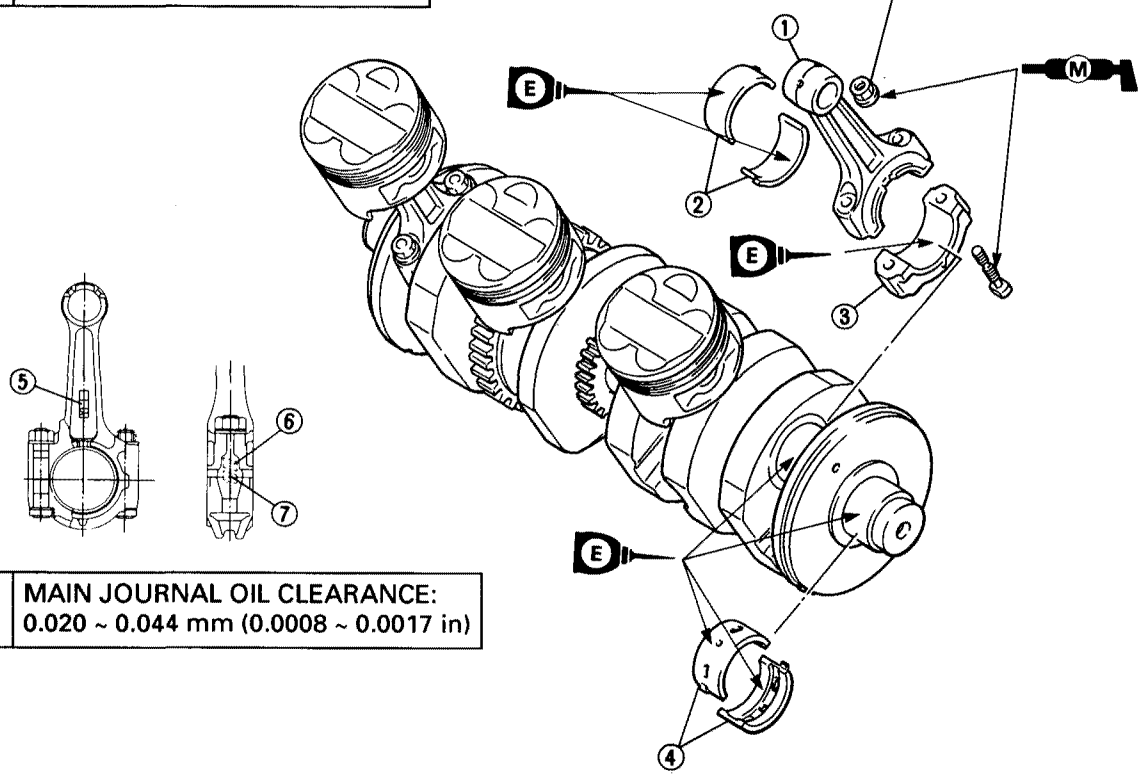

C	MAIN JOURNAL OIL CLEARANCE: 0.020 ~ 0.044 mm (0.0008 ~ 0.0017 in)

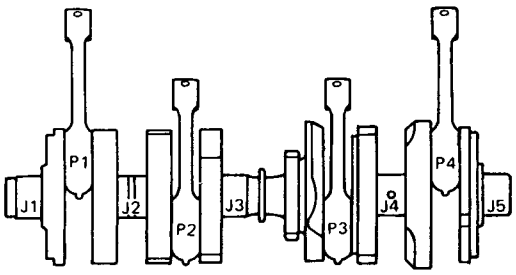

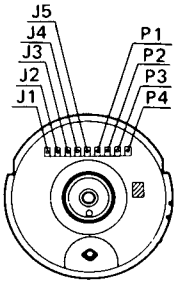

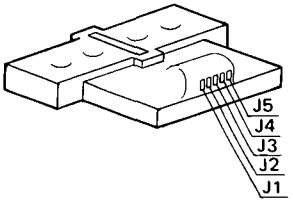

EB404021
CONNECTING RODS

1.Apply:
- Molybdenum disulfide grease
  (onto the threads of the bolts and nut seats)
- Engine oil
  (onto the crank pins, crank pin bearings and inner surfaces of each connecting rods)

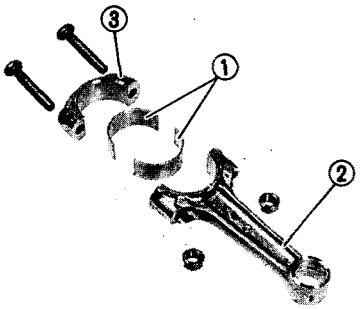

2.Install:
- Bearings (crank pin) ①
- Connecting rods ②
- Connecting rod caps ③
  (onto the crank pins)

NOTE:
- Align the projection of the bearings with the groove of the connecting rods and their caps.
- Be sure to reinstall each connecting rod bearing in its original place.
- The stamped "Y" mark ⓐ on the connecting rod should face towards the left side of the crankshaft.
- When assembling, make sure that the letters ⓑ on both the connecting rod and connecting rod cap align to form a perfect character.

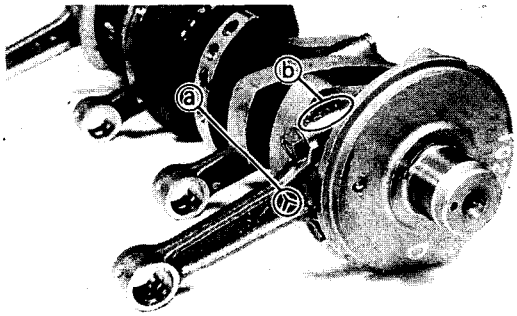

3.Align:
- Bolt heads ①
  (with the connecting rod cap)

4.Tighten:
- Nuts (connecting rod)

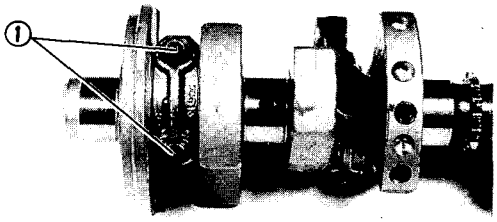

CAUTION:
Without pausing, tighten the connecting rod nuts to full torque specification. Apply continuous torque between 2.0 and 3.6 m • kg. Once you reach 2.0 m • kg DO NOT STOP TIGHTENING until the final torque is reached. If the tightening is interrupted between 2.0 and 3.6 m • kg, loosen the nut to less than 2.0 m • kg and start again.

	Nut (connecting rod): **36 Nm (3.6 m • kg, 25 ft • lb)**

CAMSHAFT CASE AND VALVES

① Valve lifter
② Pad
③ Valve cotter
④ Valve spring retainer
⑤ Valve spring
⑥ Spring seat
⑦ Oil seal
⑧ Valve
⑨ Camshaft case
⑩ Gasket (camshaft case)
⑪ Oil delivery pipe #3
⑫ Oil delivery pipe #4
⑬ O-ring

A	VALVE CLEARANCE (COLD):
B	INTAKE: 0.11 ~ 0.20 mm (0.004 ~ 0.008 in)
C	EXHAUST: 0.21 ~ 0.30 mm (0.008 ~ 0.012 in)

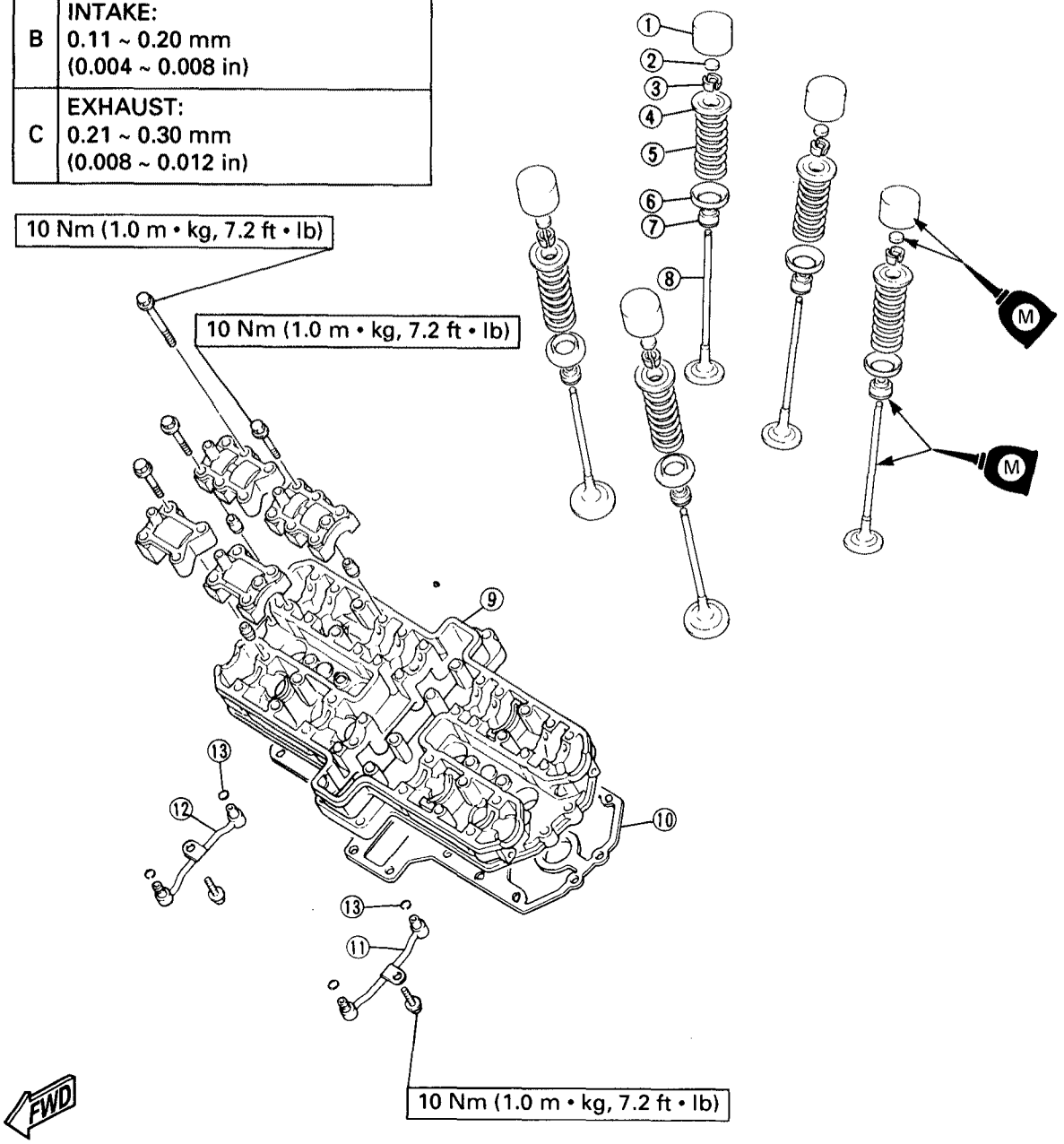

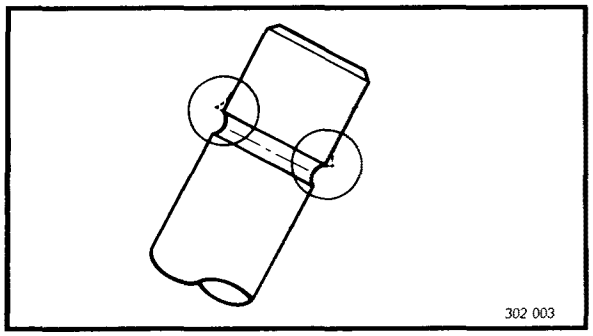

CAMSHAFT CASE AND VALVES

1.Deburr:

- Valve stem end
  Use an oil stone to smooth the stem end.

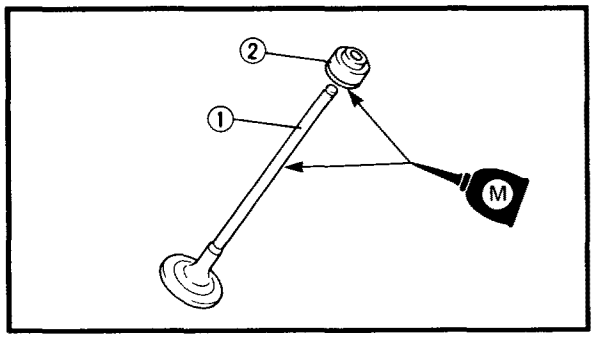

2.Apply:

- Molybdenum disulfide oil
  (onto the valve stem ① and oil seal ②)

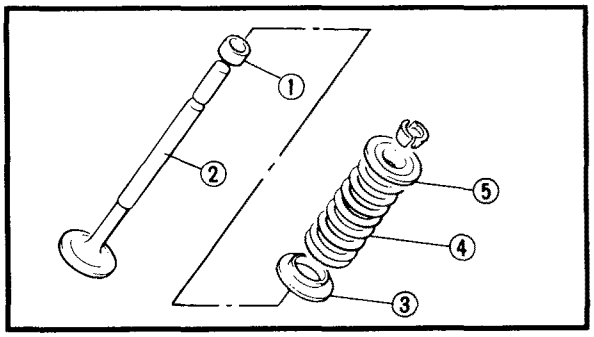

3.Install:

- Oil seal ①
- Valve ②
- Spring seat ③
- Valve spring ④
- Valve spring retainer ⑤
  (into the cylinder head)

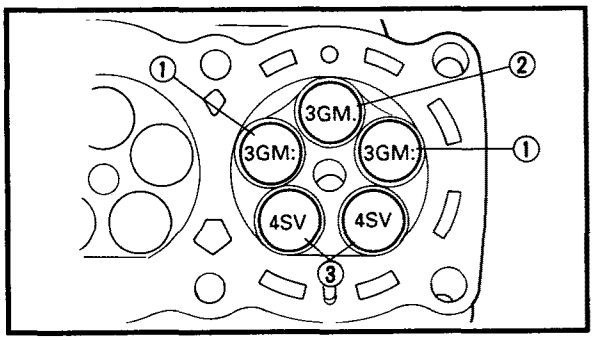

NOTE:

- Make sure that each valve is installed in its original place, also referring to the embossed mark as follows.
  Intake (right/left): "3GM:" ①
  Intake (middle): "3GM:" ②
  Exhaust "4SV" ③
- Install the valve spring with the larger pitch ⓐ facing upwards.

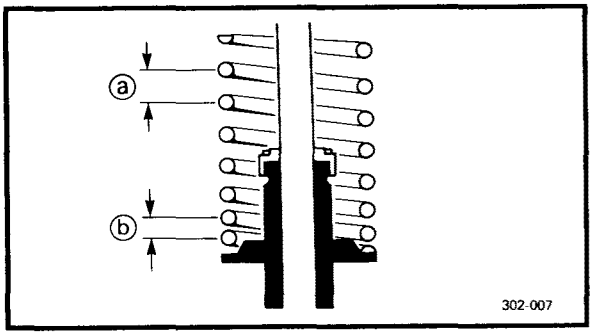

ⓑ smaller pitch

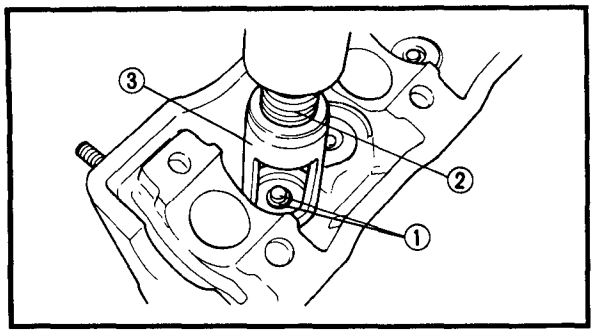

4.Install:
- Valve cotters ①

NOTE:
Install the valve cotters while compressing the valve spring with a valve spring compressor.

Valve spring compressor ②:
YM-04019/90890-04019
Attachment ③:
(for exhaust valve)
YM-04018/90890-04108
(for intake valve)
YM-04114/90890-04114

5.Secure the valve cotters ① onto the valve stem by tapping lightly with a piece of wood.

CAUTION:
Do not hit so much as to damage the valve.

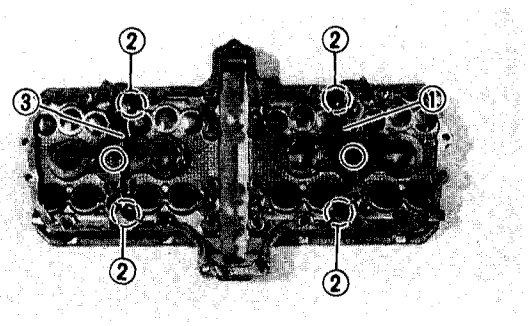

6.Install:
- Oil delivery pipe #4 ①
  (with the O-rings ②)
- Oil delivery pipe #3 ③
  (with the O-rings ②)
  (onto the camshaft case)

Bolt (oil delivery pipes #3/#4):
10 Nm (1.0 m • kg, 7.2 ft • lb)

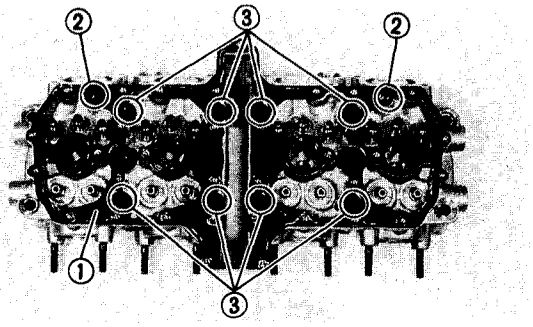

7.Install:
- Gasket (camshaft case) ①
- Dowel pins ②
- Nuts ③

NOTE:
Be sure the "UP" mark is facing up.

⚠ WARNING
Always use a new camshaft case gasket.

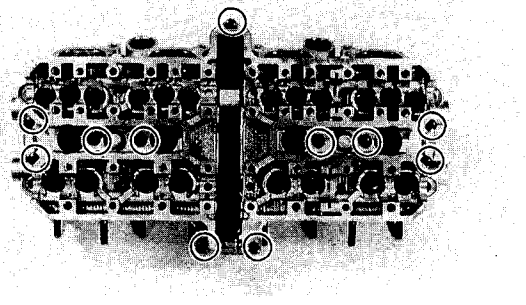

8.Install:
- Camshaft case

Bolt (camshaft case):
10 Nm (1.0 m • kg, 7.2 ft • lb)

NOTE:
- Apply molybdenum disulfide oil to the bolt threads.
- Tighten the bolts in a crisscross pattern starting from the center.

STARTER CLUTCH

① Oil-jet nozzle
② O-ring
③ Starter idle gear
④ HY-VO chain drive gear
⑤ HY-VO chain
⑥ Starter wheel gear
⑦ Starter clutch
⑧ Clutch hub
⑨ Damper rubber
⑩ HY-VO chain guide
⑪ Starter clutch shaft
⑫ Bearing
⑬ Bearing retainer

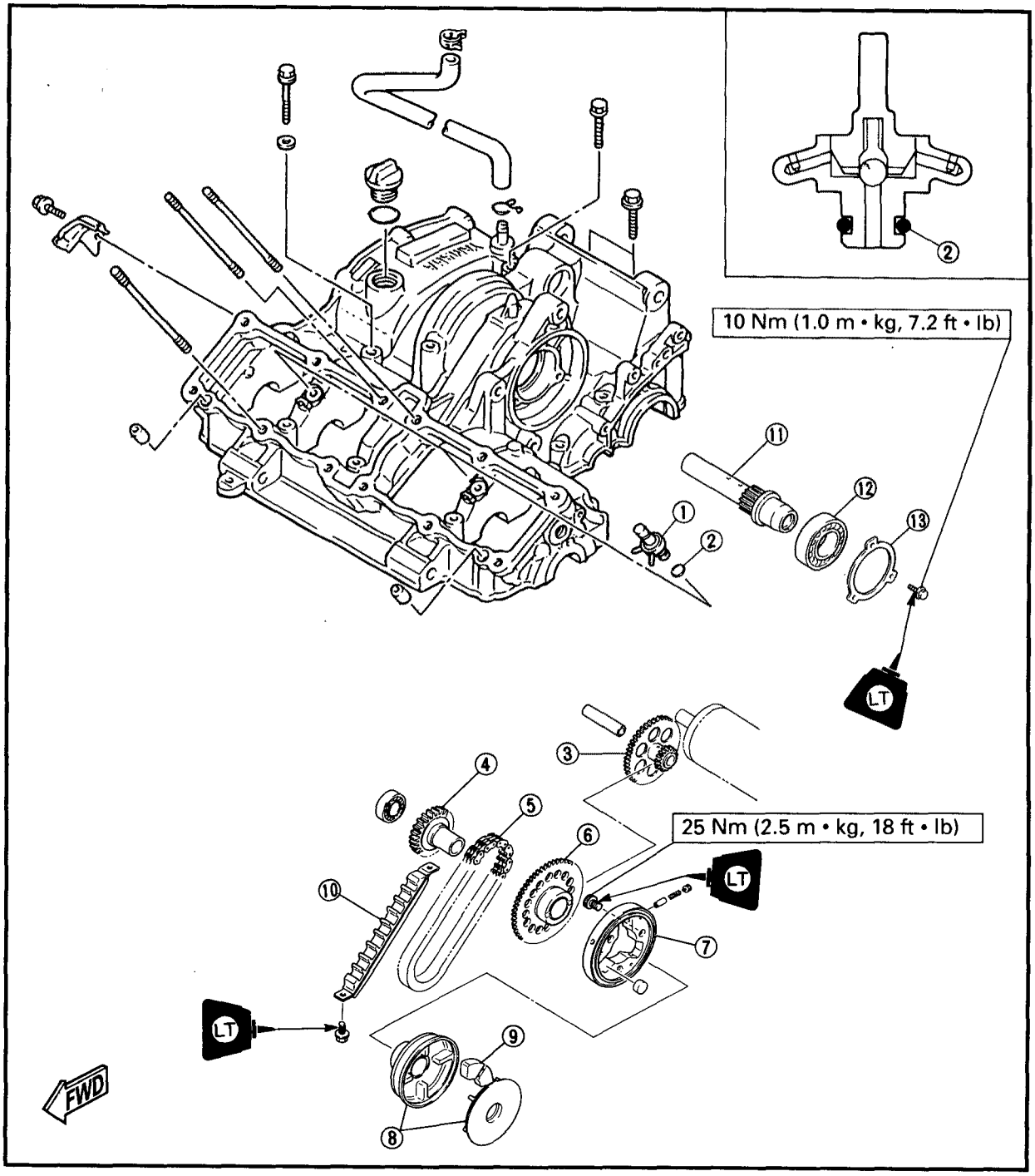

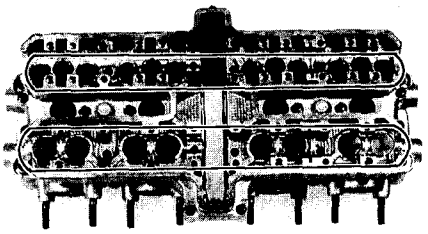

9.Install:
- Pads ①
- Valve lifters ②

NOTE:
- Apply molybdenum disulfide oil to the valve lifters and pads.
- The valve lifters must move smoothly when rotated with a finger.
- Each valve lifter and pad must be reinstalled in its original position.

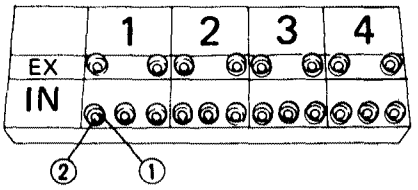

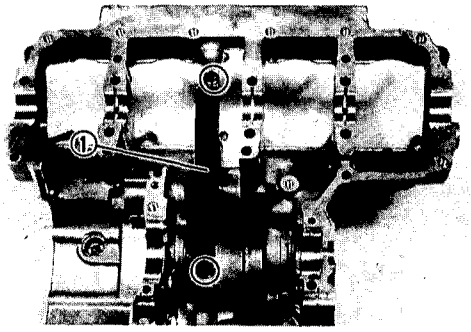

EB404041
CRANKSHAFT AND STARTER CLUTCH

1.Install:
- HY-VO chain guide ①

	Bolt (HY-VO chain guide): 10 Nm (1.0 m • kg, 7.2 ft • lb)

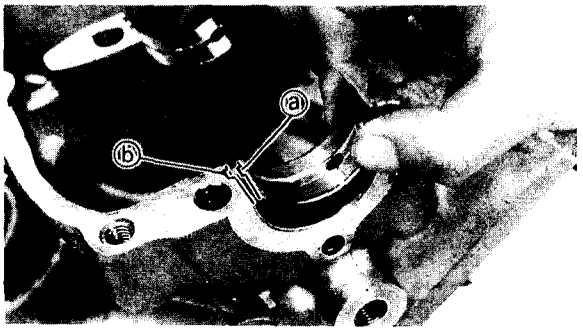

2.Install:
- Main journal bearings
  (onto the upper crankcase)

CAUTION:
There is no slot in the J_3 main journal bearing. During installation, do not interchange the J_3 main journal bearing with any of the other ones.

NOTE:
- Align the projection ⓐ of the main journal bearing with the notch ⓑ in the crankcase.
- Be sure to install each main journal bearing in its original place.

3.Apply:
- Engine oil
  (onto the bearing (main journal) surfaces)

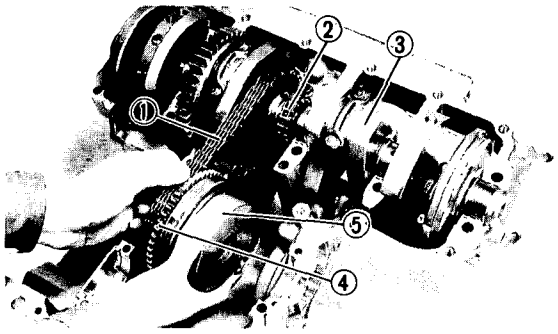

4.Install:
- HY-VO chain ①
- Timing chain ②
  (onto the crankshaft)
- Crankshaft assembly ③
- HY-VO chain drive gear ④
- Starter clutch assembly ⑤

NOTE:
Pass the timing chain through the timing chain cavity. Fasten a wire to the timing chain to retrieve it in case it falls into the crankcase.

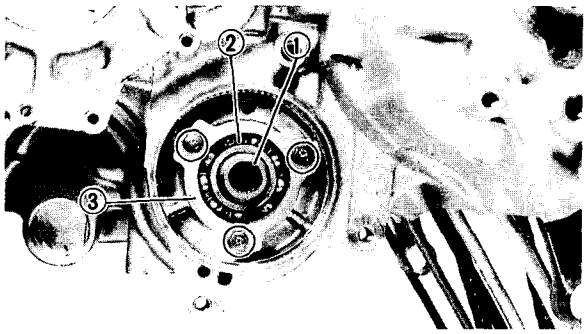

5.Install:
- Shaft (starter clutch) ①
- Bearing ②
- Bearing retainer ③

	Bolt (bearing retainer): **10 Nm (1.0 m • kg, 7.2 ft • lb)**

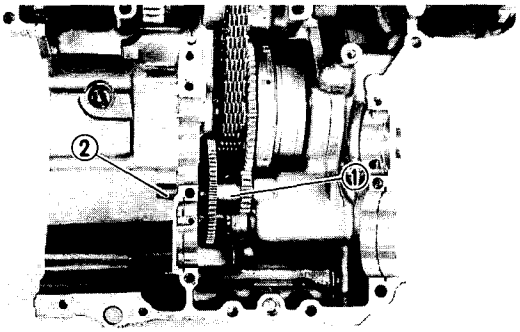

6.Install:
- Starter idle gear ①
- Shaft ②

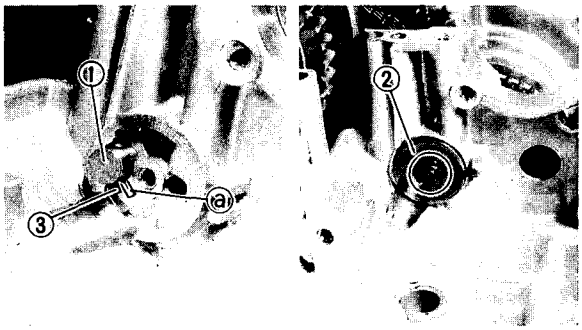

7.Install:
- Oil spray nozzle ①
- Gasket
- Oil plug plate ②

NOTE:
When installing the oil spray nozzles, align the pin ③ with the slot ⓐ in the crankcase.

	Bolt (oil plug plate): **10 Nm (1.0 m • kg, 7.2 ft • lb)**

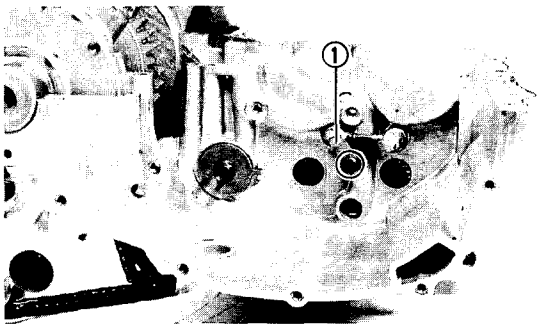

8.Install:
- Oil delivery pipe #5 ①
  (with O-rings)

NOTE:
Lubricate the O-rings with lithium soap base grease.

	Bolt (oil delivery pipe): **10 Nm (1.0 m • kg, 7.2 ft • lb)**

TRANSMISSION

① Circlip
② 1st wheel gear
③ 4th wheel gear
④ Thrust washer
⑤ 3rd wheel gear
⑥ 5th wheel gear
⑦ Drive axle
⑧ 2nd wheel gear
⑨ Drive sprocket
⑩ Lock washer
⑪ Main axle
⑫ 5th pinion gear
⑬ 3rd pinion gear
⑭ 6th pinion gear
⑮ 2nd pinion gear

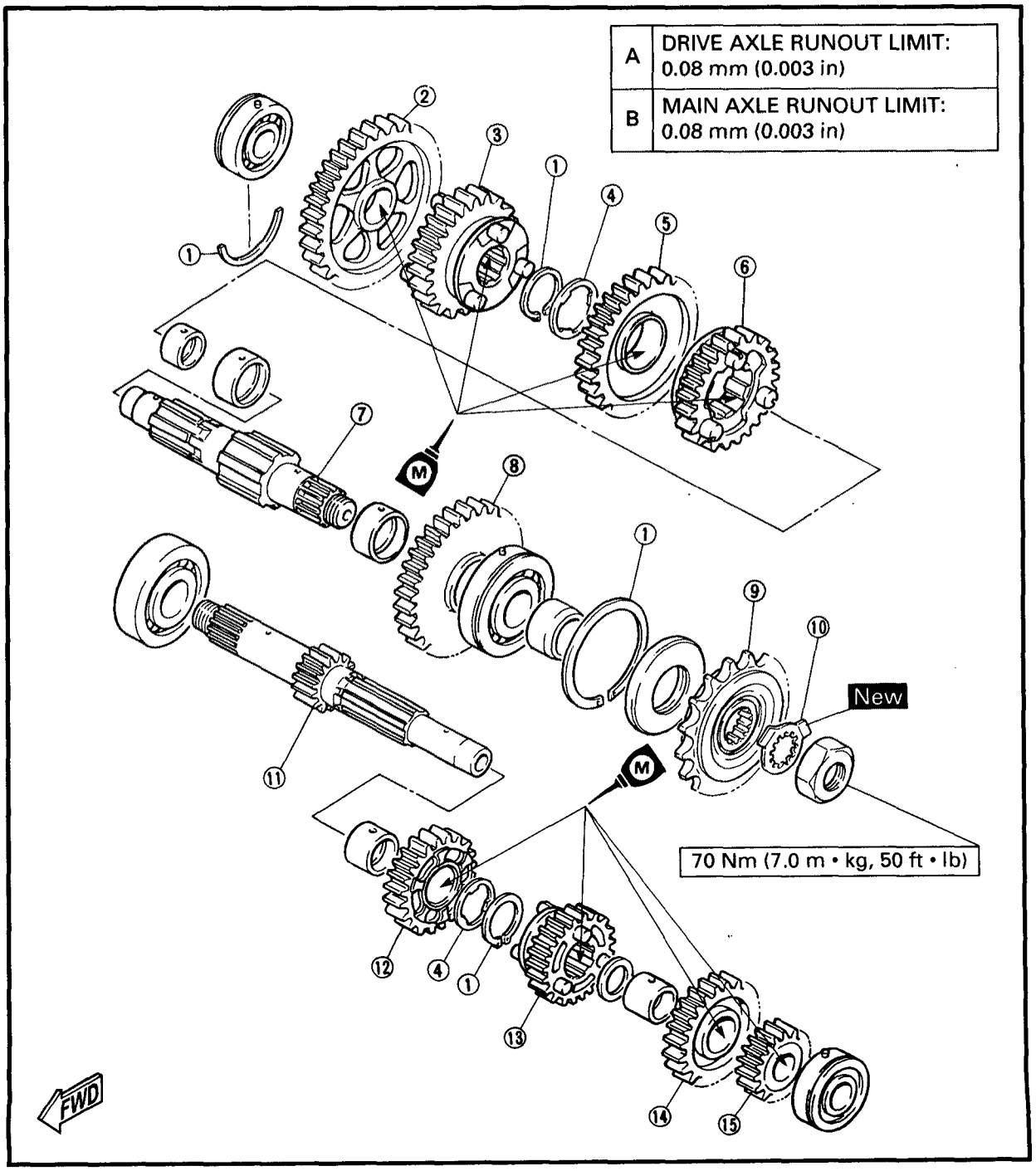

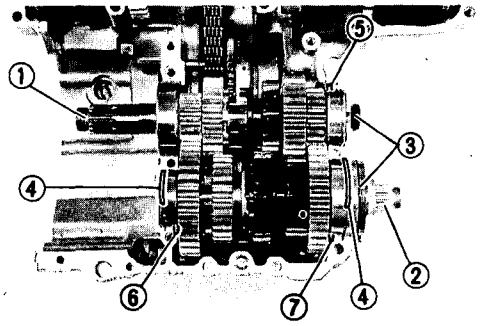

EB404051
TRANSMISSION

1.Install:
- Main axle assembly ①
- Drive axle assembly ②
- Oil seals ③
- Circlips ④

NOTE:
- Make sure that the drive axle bearing circlips ④ are inserted into the upper crankcase positioning grooves.
- The main axle bearing pin ⑤ must point to the front of the crankcase. The drive axle bearing pins ⑥ and ⑦ must point to the rear of the crankcase.

2.Check:
- Transmission
  Unsmooth rotation → Repair.

NOTE:
Oil each gear and bearing thoroughly.

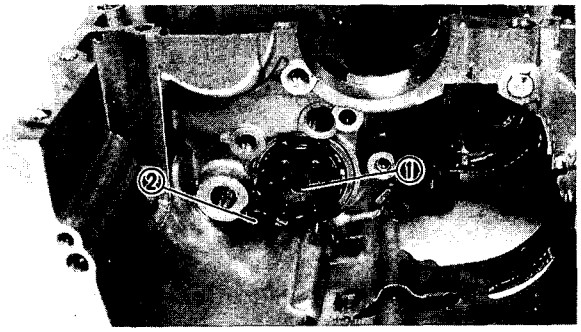

SHIFT CAM AND SHIFT FORKS

1.Install:
- Shift cam assembly ①
- Bolt (bearing stopper) ②

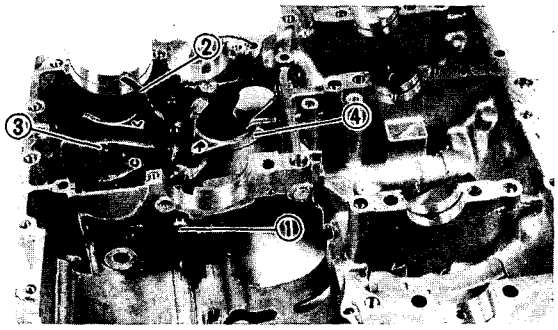

2.Install:
- Guide bars (shift fork) ①
- Shift fork "L" ②
- Shift fork "C" ③
- Shift fork "R" ④

NOTE:
The embossed mark on the shift forks should face towards the right side of the engine and be in sequence (R, C, L).

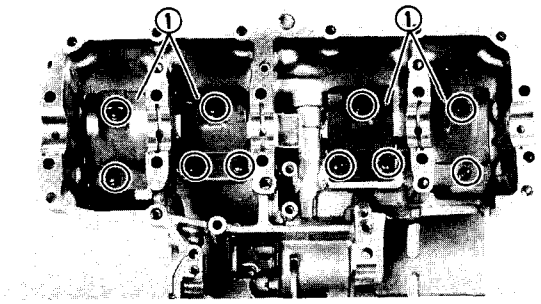

EB404072
CRANKCASE ASSEMBLY

1.Install:
- Baffle plates ①

	Bolt (baffle plate): **10 Nm (1.0 m • kg, 7.2 ft • lb)**

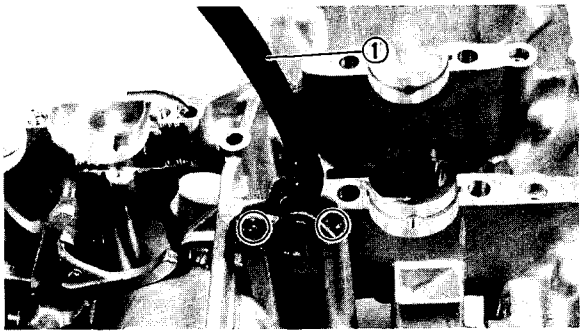

2.Install:
- Timing chain guide (intake side) ①

	Bolt (chain guide): **10 Nm (1.0 m • kg, 7.2 ft • lb)**

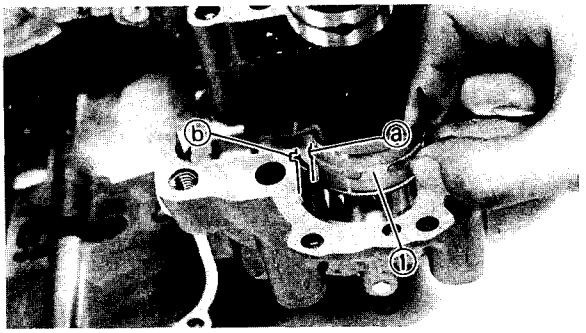

3.Install:
- Main journal bearings ①
  (onto the lower crankcase)

CAUTION:

There is no slot in the J_3 main journal bearing. During installation, do not interchange the J_3 main journal bearing with any of the other ones.

NOTE:
- Align the projection ⓐ of the bearings with the notches ⓑ in the crankcase.
- Install each bearing in its original place.

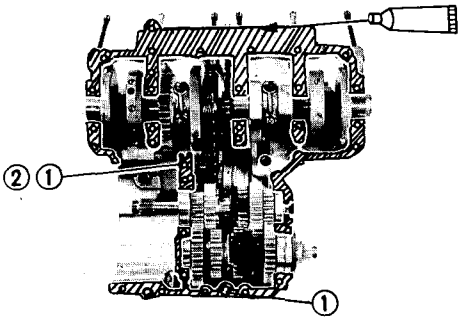

4.Apply:
- Engine oil
  (onto the main journal bearings)
- Sealant
  (onto the crankcase mating surfaces)

	Quick gasket®: **ACC-11001-15-01** **Yamaha bond No. 1215:** **90890-85505**

NOTE:
DO NOT ALLOW any sealant to come into contact with the oil gallery or crankshaft bearings. Do not apply sealant to within 2 ~ 3 mm (0.08 ~ 0.12 in) of the bearings.

5.Install:
- Dowel pin ①
- O-ring ②

⚠ WARNING

Always use a new O-ring.

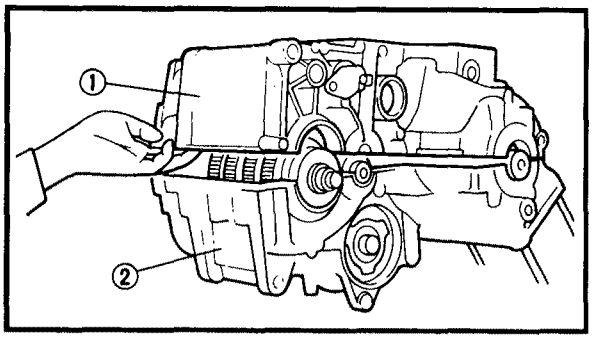

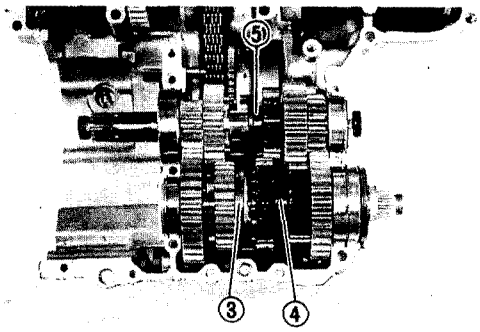

6.Set the shift cam and transmission gears in the neutral position.

7.Install:
- Lower crankcase ①
  (onto the upper crankcase ②)

NOTE:
- Carefully guide the shift forks so that they mesh smoothly with the transmission gears.
- Mesh shift fork "L" with the 4th wheel gear ③ and shift fork "R" with the 5th wheel gear ④ on the drive axle.
- Mesh shift fork "C" with the 3rd pinion gear ⑤ on the main axle.

CAUTION:

Before tightening the crankcase bolts, check the following:
- **Make sure that the gears shift correctly when the shift cam is turned by hand.**

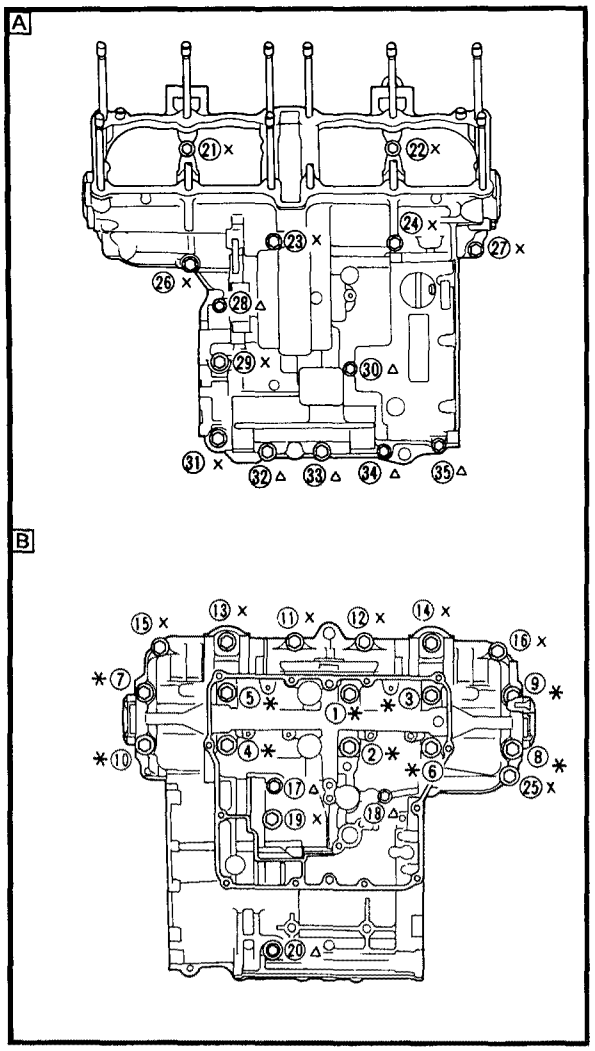

8.Tighten:
- Bolts (upper crankcase)
- Bolts (lower crankcase)
  (follow the proper tightening sequence)

Bolt (crankcase):
∗ M9 (① ~ ⑩, ㉓):
32 Nm (3.2 m • kg, 23 ft • lb)
× M8 (⑪ ~ ⑯, ⑲, ㉑, ㉒, ㉔ ~ ㉗, ㉙ and ㉛ ~ ㉝):
24 Nm (2.4 m • kg, 17 ft • lb)
△ M6 (⑰, ⑱, ⑳, ㉘, ㉚, ㉞, ㉟):
12 Nm (1.2 m • kg, 8.7 ft • lb)

A Upper crankcase
B Lower crankcase

NOTE:
- Lubricate the bolt threads (M9) with molybdenum disulfide oil.
- Lubricate the bolt threads (M8 and M6) with engine oil.
- Tighten the bolts in the tightening sequence cast on the crankcase.
- Install the bracket (radiator stay) on bolt No. ⑮ and ⑯.
- Install the washer on bolt No. ⑦ ~ ⑩.
- Install a copper washer on bolt No. ㉔.

9.Install:
- Bearing retainer (main axle) ①
  Use a torx wrench (T30).

Bolt (bearing retainer):
10 Nm (1.0 m • kg, 7.2 ft • lb)

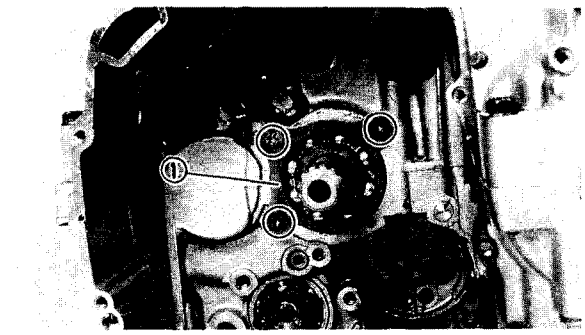

10.Install:
- Pickup coil ①
  (with the O-ring)
- Pickup coil lead holder ②
- Crankshaft end cover (right) ③
- (with the O-ring)

NOTE:
Apply engine oil to the O-ring of the pickup coil.

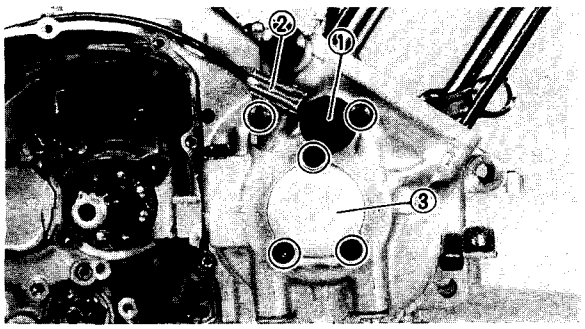

Bolt (pickup coil):
10 Nm (1.0 m • kg, 7.2 ft • lb)
Bolt (lead holder):
10 Nm (1.0 m • kg, 7.2 ft • lb)
Screw (crankshaft end cover):
7 Nm (0.7 m • kg, 5.1 ft • lb)

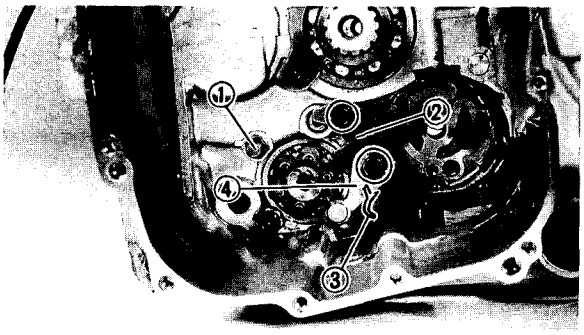

EB404110
SHIFT SHAFT AND OIL PUMP

1.Install:
- Stopper bolt ①
- Stopper plate (guide bar and bearing) ②
- Return spring ③
- Stopper lever ④

Stopper bolt:
4 Nm (0.4 m • kg, 2.9 ft • lb)
LOCTITE®
Bolt
(stopper plate/stopper lever):
10 Nm (1.0 m • kg, 7.2 ft • lb)
LOCTITE®

NOTE:
- Hook the spring ends onto the stopper lever ④ and crankcase boss.
- Mesh the stopper lever ④ with the shift cam stopper.

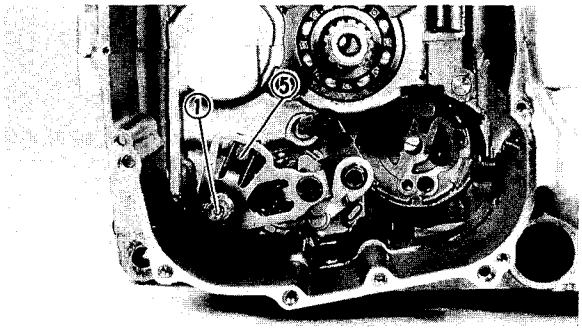

2.Install:
- Shift shaft ①
- Washer ②
- Circlip ③
- Collar ④

NOTE:
- Apply grease onto the oil seal lips.
- Hook the spring ends onto the stopper bolt ⑤.

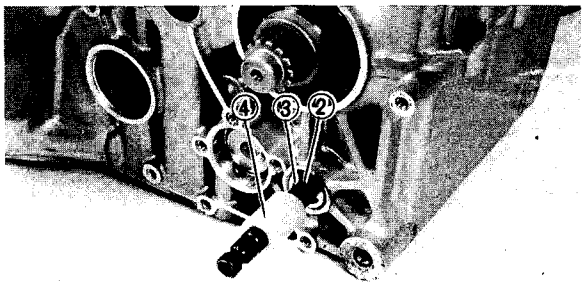

⚠ WARNING
Always use new circlips.

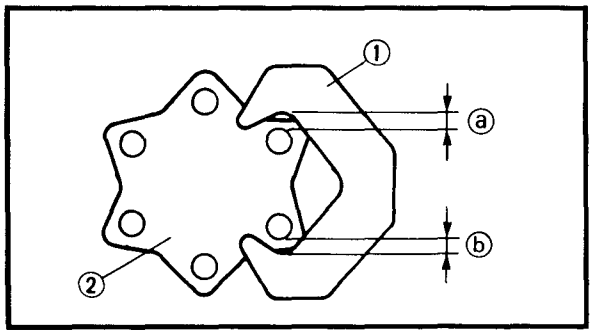

3.Check:
- Shift pawl position ①
  Gaps ⓐ and ⓑ are not equal → Replace the defective parts.

② Shift cam

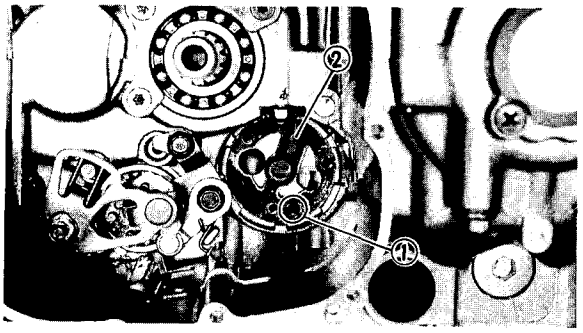

4.Install:
- Dowel pin ①
- Gasket ②

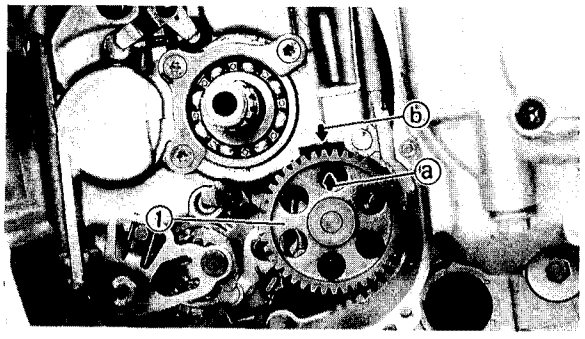

5.Install:
- Oil pump assembly ①

	Bolt (oil pump assembly): **10 Nm (1.0 m • kg, 7.2 ft • lb)** **LOCTITE®**

NOTE:
Align the arrow mark ⓐ on the oil pump with the arrow mark ⓑ on the crankcase.

CAUTION:
After tightening the bolts make sure that the oil pump turns smoothly.

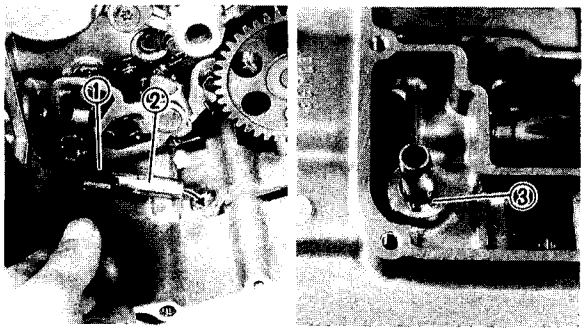

EB404120
OIL PAN AND OIL STRAINER

1.Install:
- Mounting rubber ①
- Oil pipe ②
- Circlip ③

NOTE:
Fit the mounting rubber correctly onto the crankcase.

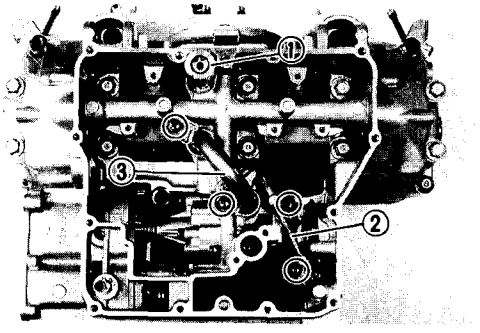

2.Install:
- Relief valve ①
  (with the O-ring)
- O-rings
- Oil delivery pipe #1 ②
- O-rings
- Oil delivery pipe #2 ③

NOTE:
Apply engine oil to the O-rings.

⚠ WARNING

Always use new O-rings.

	Bolt (oil delivery pipe #1): **10 Nm (1.0 m • kg, 7.2 ft • lb)** **LOCTITE®** **Bolt (oil delivery pipe #2):** **10 Nm (1.0 m • kg, 7.2 ft • lb)**

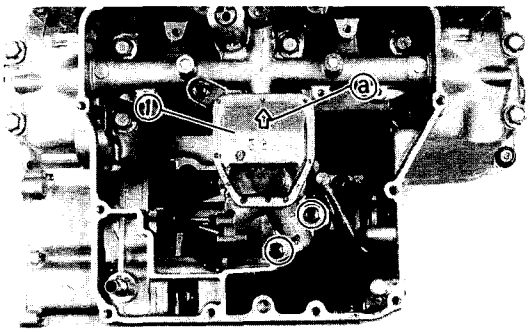

3.Install:
- Oil strainer housing ①

	Bolt (oil strainer): **10 Nm (1.0 m • kg, 7.2 ft • lb)**

NOTE:
The arrow mark ⓐ on the strainer cover must point to the front of the engine.

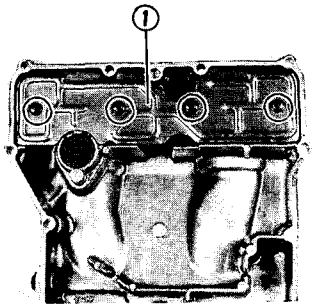

4.Install:
- Baffle plate (oil pan) ①

	Bolt (baffle plate): **10 Nm (1.0 m • kg, 7.2 ft • lb)**

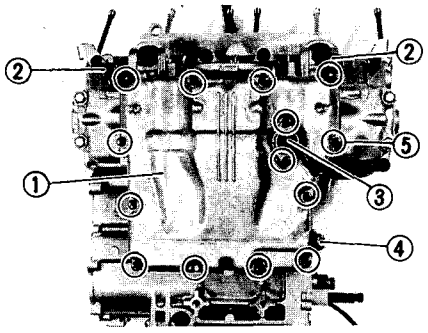

5.Install:
- Dowel pins
- Gasket (oil pan)
- Oil pan ①
- Stays (bottom cowling) ②
- Oil level switch ③
  (with the O-ring)
- Drain bolt ④
  (with the copper washer)

⑤ Clamp (oil level switch lead)

⚠ WARNING

Always use new copper washers and gaskets.

NOTE:
- Tighten the oil pan bolts in a crisscross pattern.
- Apply engine oil onto the oil level switch O-ring.

Bolt (oil pan):
12 Nm (1.2 m • kg, 8.7 ft • lb)
Bolt (oil level switch):
7 Nm (0.7 m • kg, 5.1 ft • lb)
Drain bolt:
43 Nm (4.3 m • kg, 31 ft • lb)

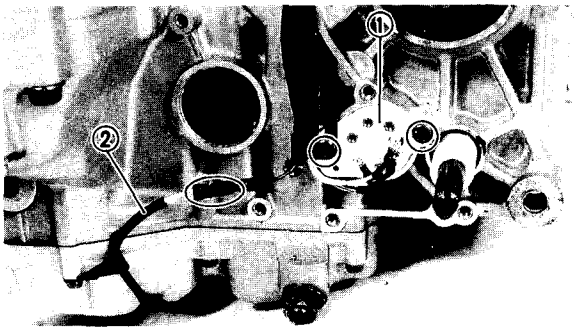

6.Install:
- GPS (gear position sensor) ①

7.Connect:
- Oil level switch lead ②

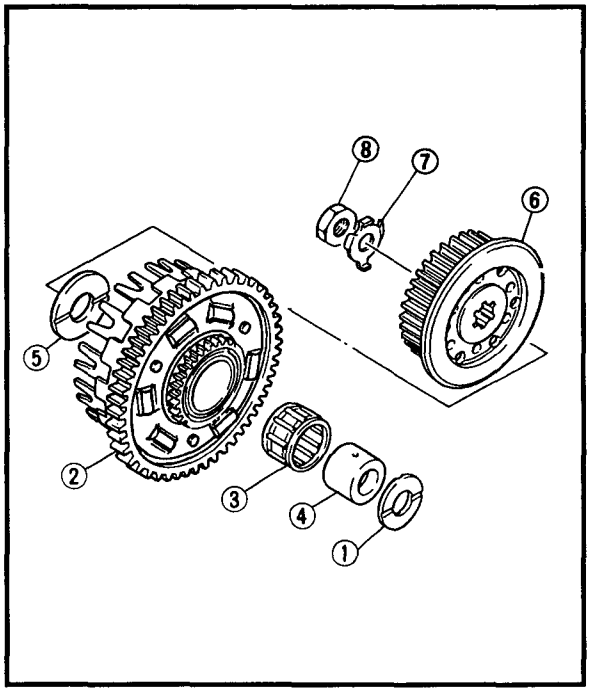

EB404160
CLUTCH

1.Install:
- Thrust washer ①
- Clutch housing ②
- Bearing ③
- Spacer ④
- Thrust washer ⑤
- Clutch boss ⑥
- Lock washer ⑦
- Nut (clutch boss) ⑧

NOTE:
Install the spacer ④ with the two screw holes facing the clutch boss.

⚠ WARNING
Always use a new lock washer.

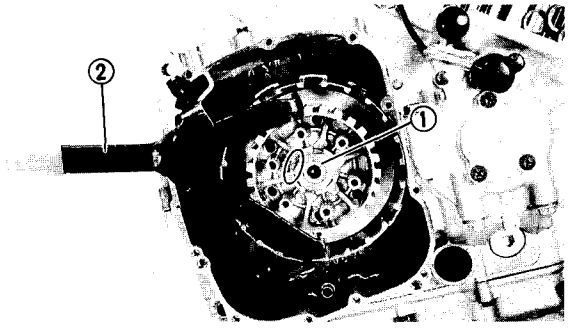

2.Tighten:
- Nut (clutch boss) ①

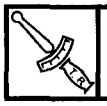

Nut (clutch boss):
70 Nm (7.0 m • kg, 50 ft • lb)

NOTE:
While holding the clutch boss with a universal clutch holder ② tighten the clutch boss nut ①.

CLUTCH

① Pressure plate
② Washer
③ Bearing
④ Push rod #1
⑤ O-ring
⑥ Ball
⑦ Lock washer
⑧ Friction plate
⑨ Clutch plate
⑩ Clutch boss
⑪ Clutch housing
⑫ Bearing
⑬ Spacer
⑭ Push rod #2
⑮ Oil seal
⑯ Clutch release cylinder

A	SPRING FREE LENGTH LIMIT: 48 mm (1.89 in)
B	CLUTCH PLATE WARP LIMIT: 0.1 mm (0.004 in)
C	FRICTION PLATE WEAR LIMIT: 2.8 mm (0.11 in)

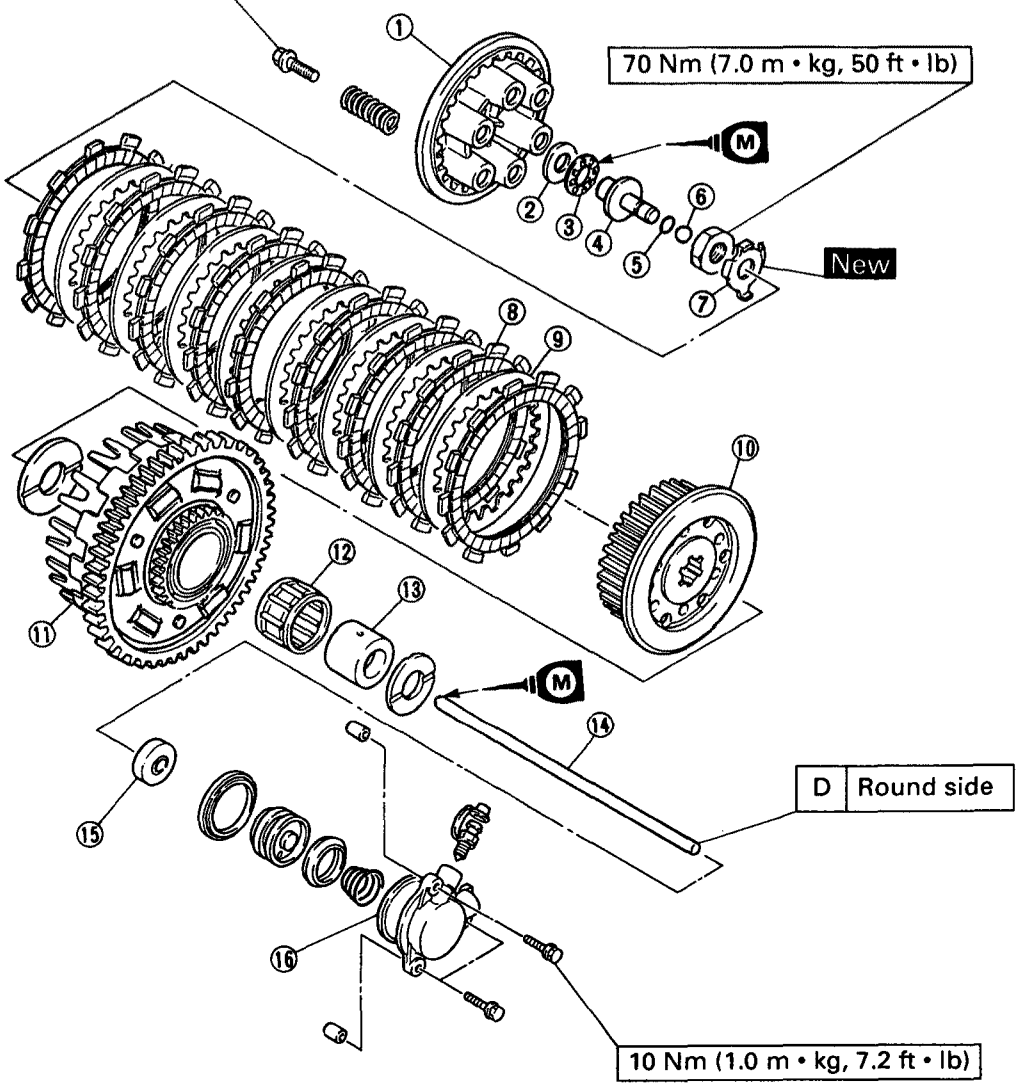

Universal clutch holder:
YM-91042/90890-04086

3.Bend:
- Lock washer tab

NOTE:
Bend the lock washer tab along a flat side of the nut.

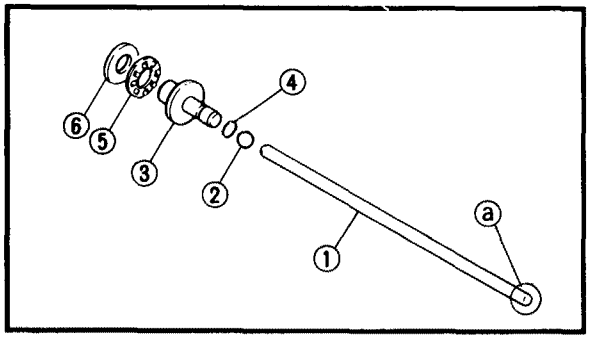

4.Install:
- Push rod #2 ①
- Ball ②
- Push rod #1 ③
  (with the O-ring ④)
- Bearing ⑤
- Washer ⑥

NOTE:
- First, insert the rounded end ⓐ of push rod #2 into the clutch boss.
- Apply lithium soap base grease onto push rod #1, #2 and onto the ball.

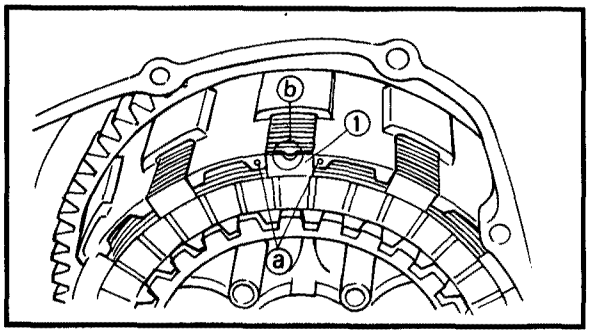

5.Install:
- Friction plates
- Clutch plates

NOTE:
- Start with a friction plate and alternate between a clutch plate and a friction plate.
- Be sure to align the mark ⓐ on the clutch housing with the notch ⓑ on friction plate ①.

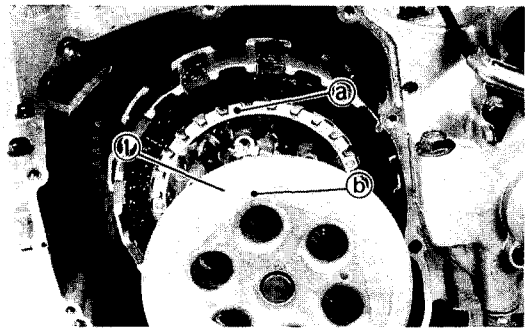

6.Install:
- Pressure plate ①

NOTE:
Align the punched mark ⓐ on the clutch boss with the punched mark ⓑ on the pressure plate.

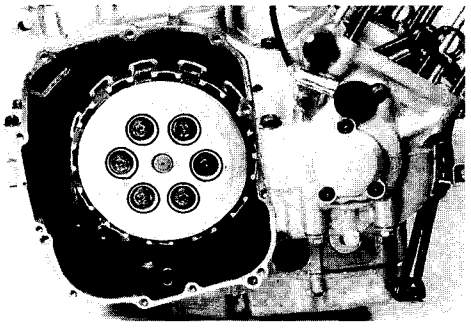

7.Install:
- Clutch springs
- Bolts (clutch springs)

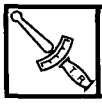

Bolt (clutch spring):
8 Nm (0.8 m • kg, 5.8 ft • lb)

NOTE:
Tighten the clutch spring bolts in stages, using a crisscross pattern.

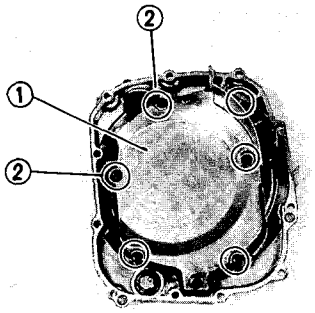

8.Install:
- Gasket
- Breather cover ①

CAUTION:

Apply LOCTITE® to the bolts ②.

⚠ WARNING

Always use a new gasket.

	Bolt (breather cover): 7 Nm (0.7 m • kg, 5.1 ft • lb)

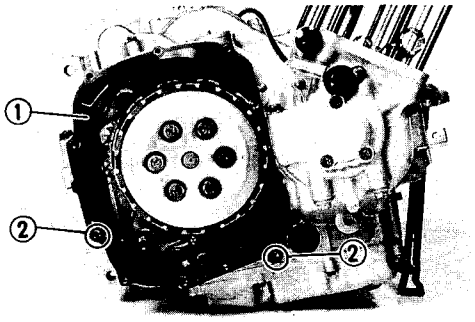

9.Install:
- Gasket ①
- Dowel pins ②

⚠ WARNING

Always use a new gasket.

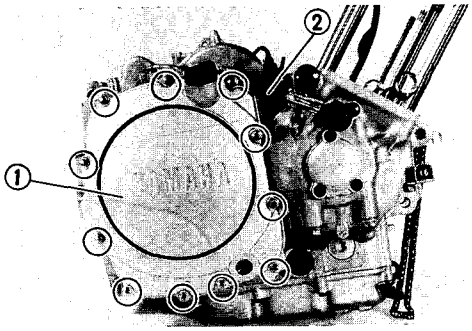

10.Install:
- Clutch cover ①
- Stay (throttle stop screw) ②

	Bolt (clutch cover): 12 Nm (1.2 m • kg, 8.7 ft • lb)

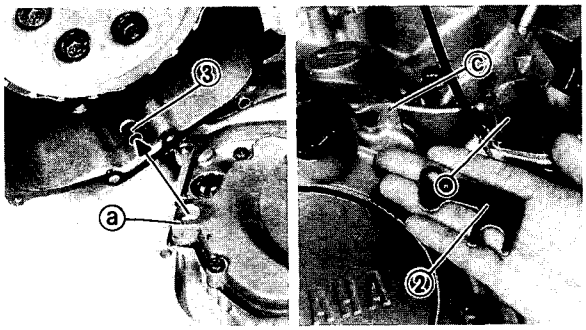

NOTE:
- When installing the clutch cover, make sure that the oil pipe ③ under the clutch fits correctly into the hole ⓐ on the cover.
- When installing the stay ②, align the projection ⓑ with the hole ⓒ on the cover.
- Tighten the clutch cover bolts in stages, using a crisscross pattern.

PISTONS AND CYLINDERS

① Top ring
② Oil ring (lower)
③ Oil ring (upper)
④ Second ring
⑤ Circlip
⑥ Piston pin
⑦ Piston
⑧ Dowel pin
⑨ Cylinder
⑩ O-ring
⑪ Gasket

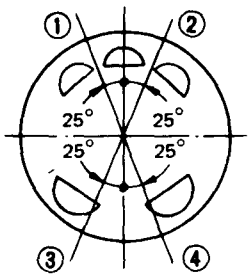

A	SIDE CLEARANCE LIMIT: TOP: 0.1 mm (0.004 in) 2nd: 0.1 mm (0.004 in)
B	END GAP LIMIT: TOP: 0.6 mm (0.024 in) 2nd: 0.7 mm (0.028 in)
C	PISTON TO CYLINDER CLEARANCE LIMIT: 0.1 mm (0.0039 in)

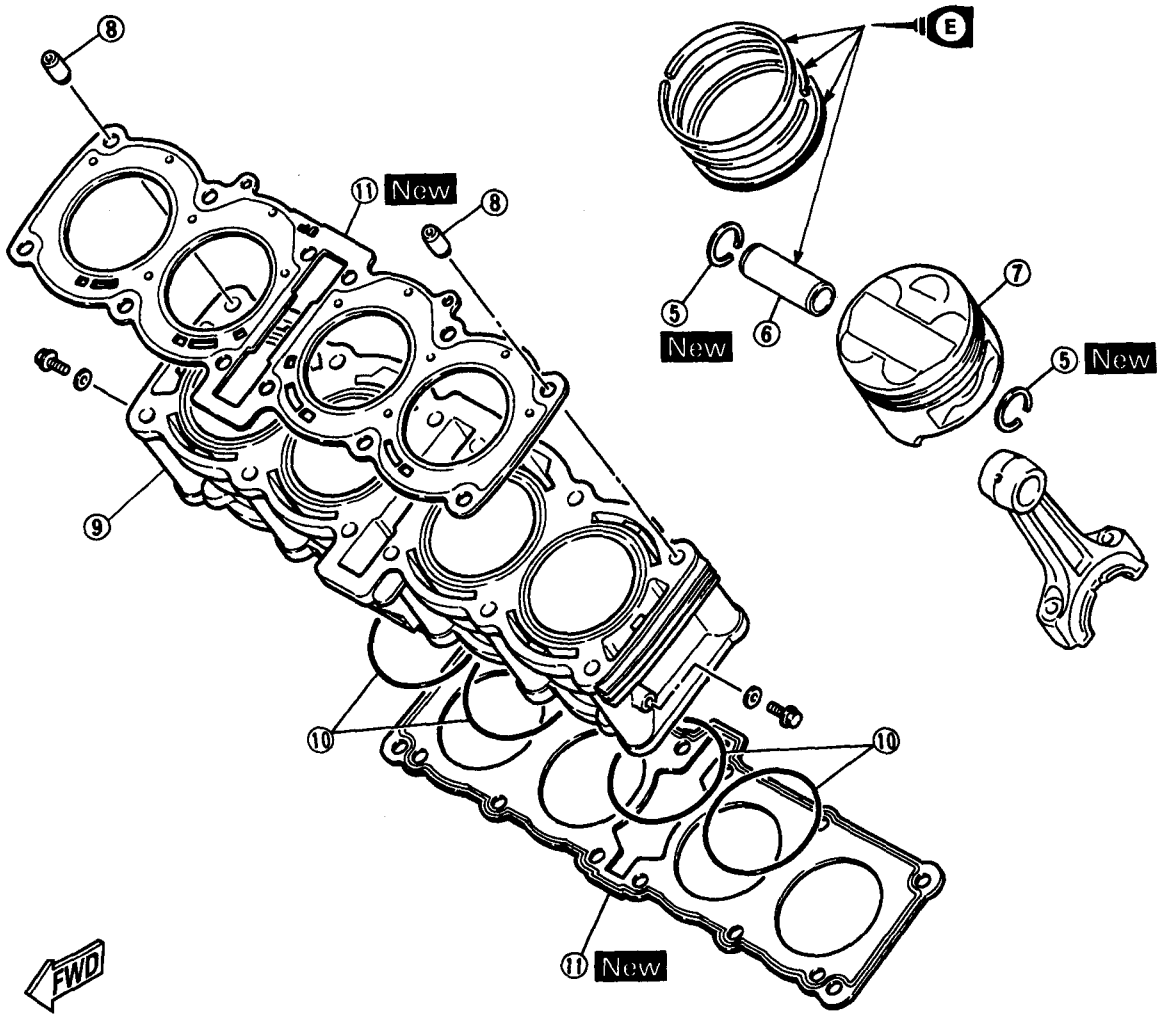

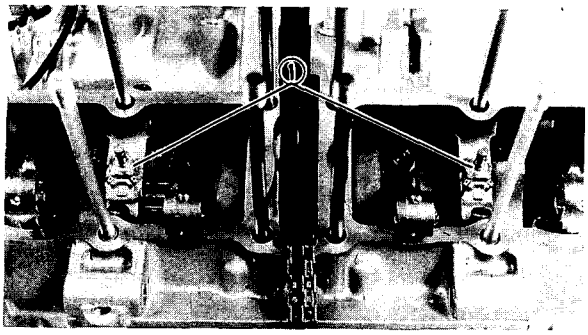

PISTONS AND CYLINDERS

1.Install:
- Oil-jet nozzles ①
  (with O-ring)

⚠ WARNING

Apply engine oil onto the O-rings.

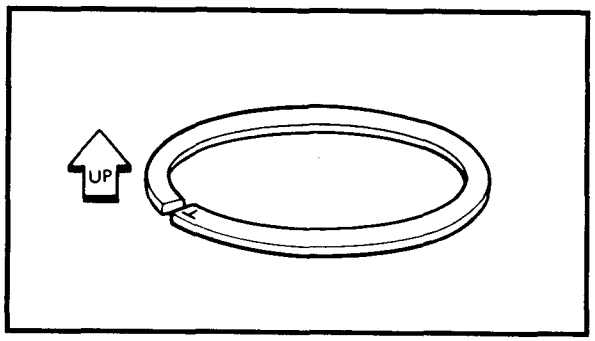

2.Install:
- Piston rings

NOTE:
- Be sure to install the piston rings so that the manufacturer's mark or numbers are located on the upper side of the rings.
- Lubricate the pistons and piston rings liberally with engine oil.

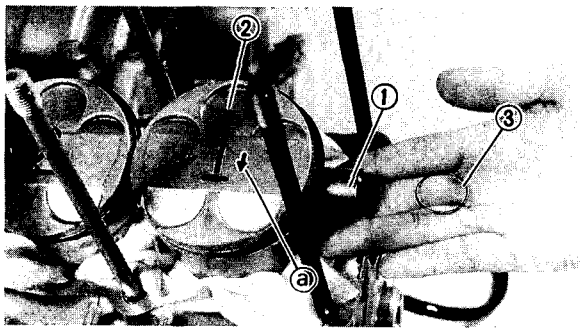

3.Install:
- Pistons ①
- Piston pins ②
- Piston pin circlips ③

NOTE:
- Apply engine oil onto the piston pin.
- Make sure that the arrow mark ⓐ on the piston points towards the exhaust side of the engine.
- Before installing the piston pin circlip, cover the crankcase opening with a clean rag to prevent the piston pin circlip from falling into the crankcase.
- Reinstall each piston into its original cylinder (numbering order 1 to 4 from the left).

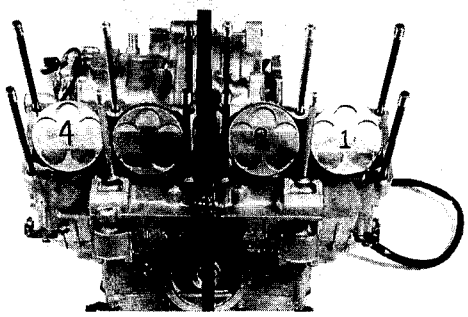

⚠ WARNING

Always use new piston pin circlips.

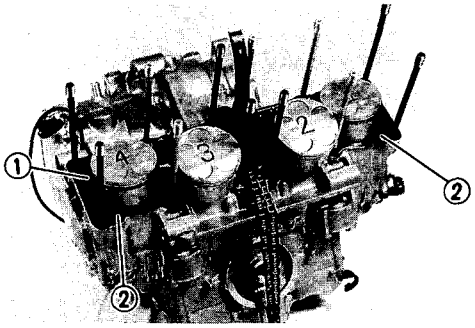

4.Install:
- Gasket (cylinders) ①
- Dowel pins ②

NOTE:
The gasket mark "UP" must be readable from above.

⚠ WARNING

Always use a new cylinder gasket.

5.Lubricate:
- Pistons
- Piston rings
- Cylinders

NOTE:
Apply a liberal coating of engine oil.

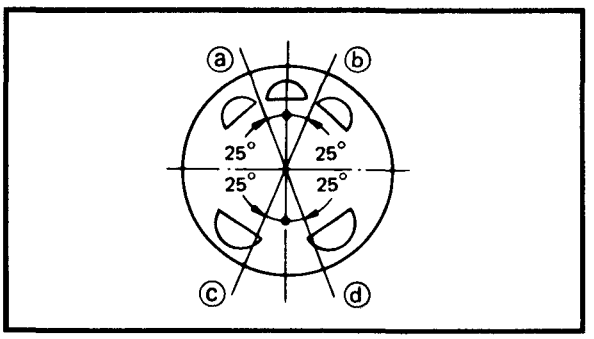

6.Position:
- Top ring
- 2nd ring
- Oil ring

Offset the piston ring end gaps as shown.
ⓐ Top ring end
ⓑ Oil ring end (lower)
ⓒ Oil ring end (upper)
ⓓ 2nd ring end

7.Install:
- Cylinders

NOTE:
- First, install pistons # 2 and # 3.
- Pass the timing chain and timing chain guide (exhaust side) through the timing chain cavity.

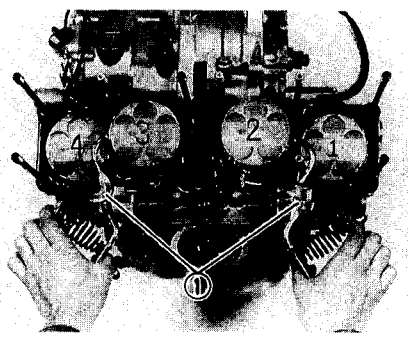

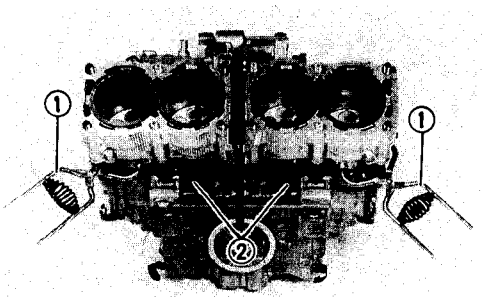

****

Installation steps:
- Install a piston ring compressor ① to pistons #2 and #3.
- Install pistons #2 and #3 onto the cylinder.
- Remove the piston ring compressor.
- Install the piston ring compressor ① and piston base ② to pistons #1 and #4.
- Install pistons #1 and #4 onto the cylinder.
- Remove the piston ring compressor and piston base.

Piston ring compressor:
YM-01066/90890-01066
Piston base:
YM-01067/90890-01067

****

CYLINDER HEAD

① Washer
② Rubber washer
③ Gasket
④ Spark plug
⑤ Valve guide
⑥ Circlip
⑦ Cylinder head
⑧ Camshaft case

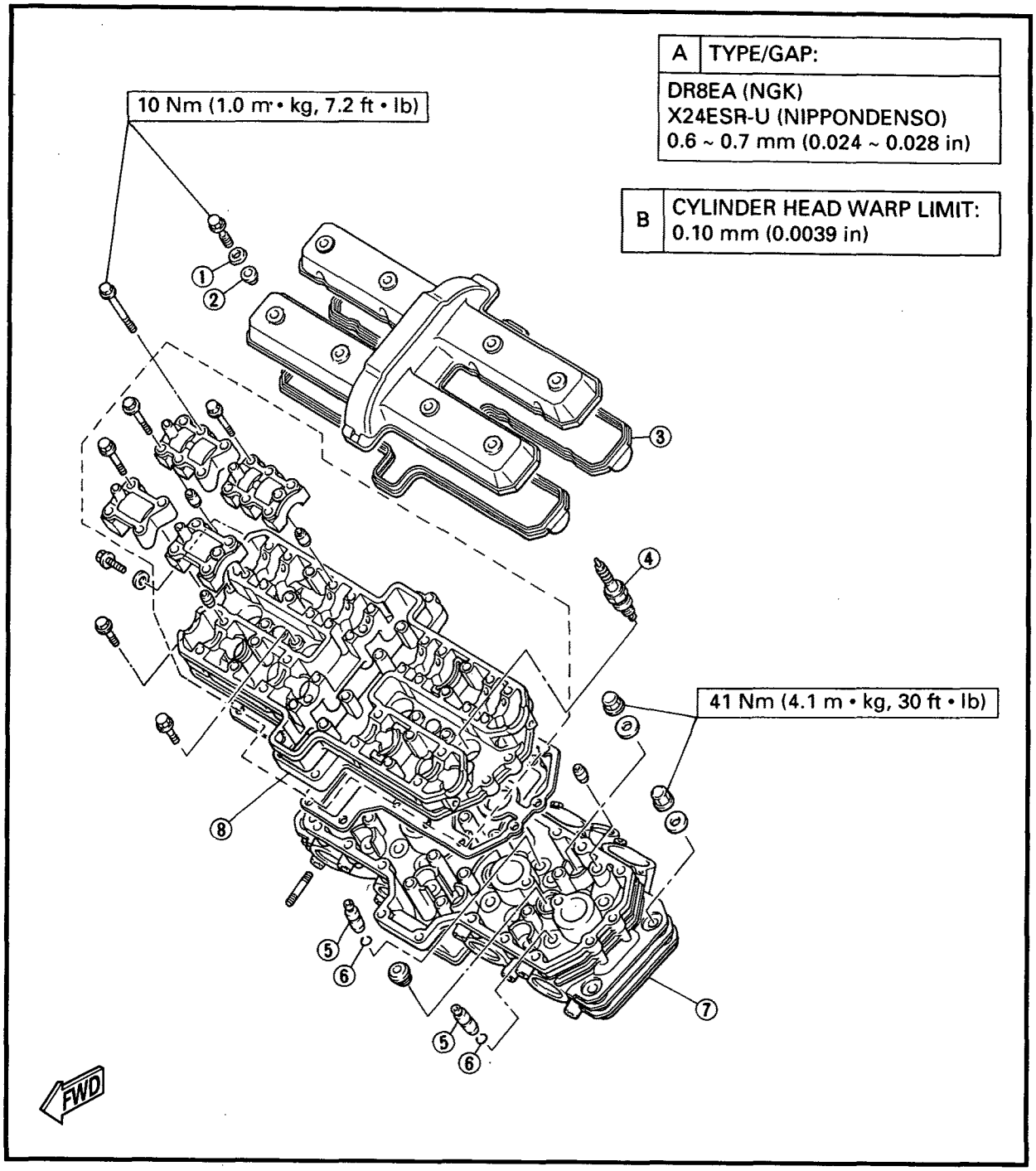

CAMSHAFTS

① Camshaft (intake)
② Timing chain sprocket
③ Camshaft (exhaust)
④ Chain guide (upper)
⑤ Timing chain tensioner
⑥ Gasket
⑦ Timing chain guide (intake side)
⑧ Timing chain guide (exhaust side)
⑨ Timing chain
ⓐ Match mark

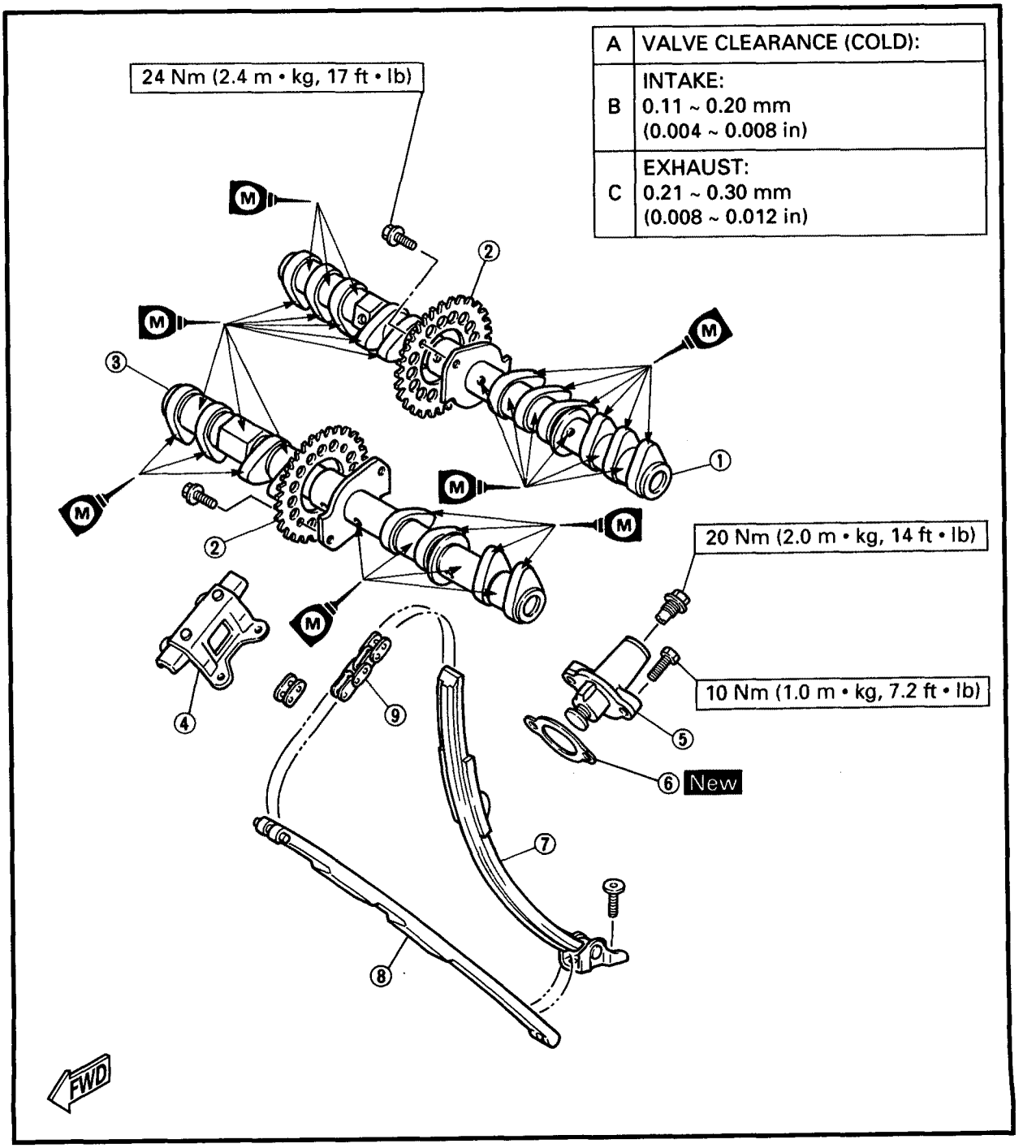

A	VALVE CLEARANCE (COLD):
B	INTAKE: 0.11 ~ 0.20 mm (0.004 ~ 0.008 in)
C	EXHAUST: 0.21 ~ 0.30 mm (0.008 ~ 0.012 in)

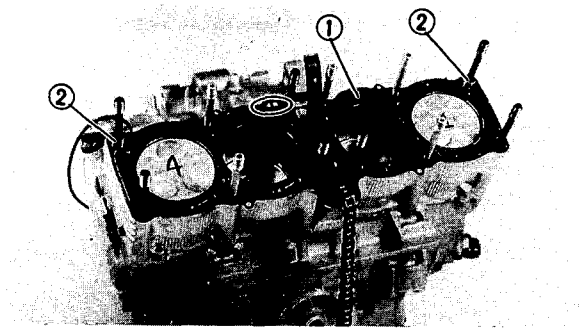

EB404191
CYLINDER HEAD AND CAMSHAFTS

1.Install:
- Gasket (cylinder head) ①
- Dowel pins ②

NOTE:
The "UP" mark on the cylinder head gasket must be readable from above.

⚠ WARNING
Always use a new cylinder head gasket.

NOTE:
- Select either of the two following procedures:
- Procedure 1:The timing chain is disconnected → Connect it.
- Procedure 2: The camshafts are removed → Install them.

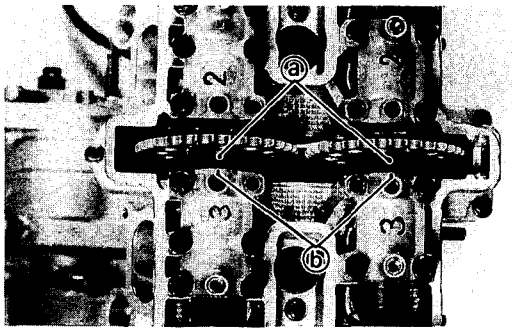

Procedure 1

1.Install:
- Cylinder head assembly (with the camshafts)

NOTE:
- Make sure that the camshaft timing marks ⓐ are aligned with the camshaft cap marks ⓑ.
- Make sure that the "T" mark ⓒ is aligned with the stationary pointer ⓓ when the #1 piston is at TDC.

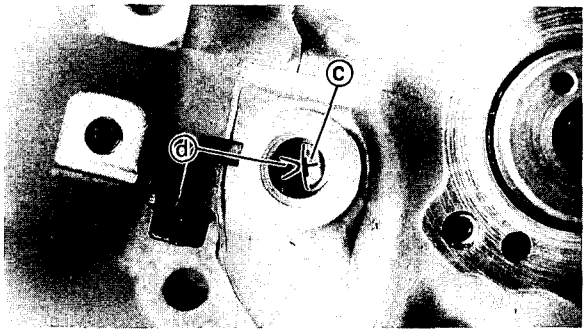

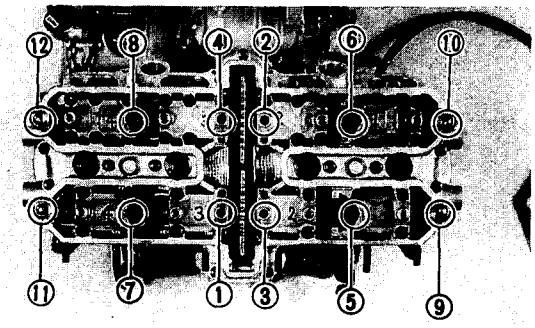

2.Tighten:
- Nuts (cylinder head)

NOTE:
- Apply engine oil onto the nut threads.
- Tighten the nuts in the proper tightening sequence and torque them in two stages.

	Nut (cylinder head): **41 Nm (4.1 m • kg, 30 ft • lb)**

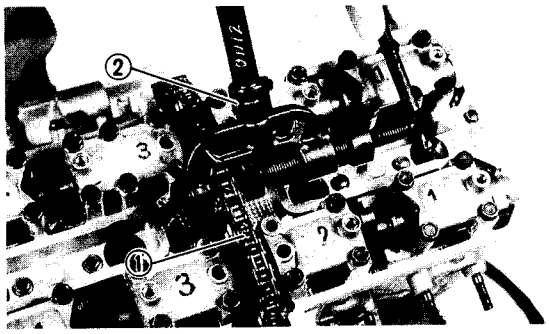

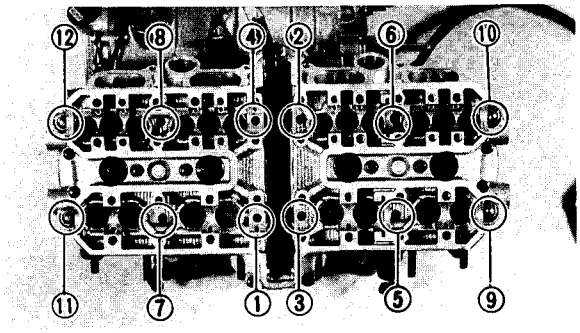

3.Connect:
- Timing chain ①
  (with the chain link)
  Use a cam chain cutter ②.

	Cam chain cutter: **YM-01112/90890-01112**

NOTE:
Keep the timing chain as tight as possible on the exhaust side.

⚠ WARNING
Always use a new chain link.

4.For the next installation step, refer to "TIMING CHAIN TENSIONER".
5.Install:
- Timing chain guide (exhaust side)

Procedure 2.
1.Install:
- Cylinder head assembly

2.Tighten:
- Nuts (cylinder head)

NOTE:
- Apply engine oil onto the nut threads.
- Tighten the nuts in their proper tightening sequence and torque them in two stages.

	Nut (cylinder head): **41 Nm (4.1 m • kg, 30 ft • lb)**

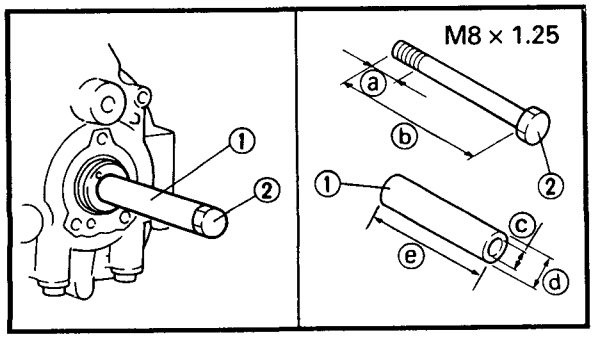

3.Install:
- Camshafts (intake and exhaust)

****

Installation steps:
Procedure 1.
- Install a suitable collar ① and a bolt ② and then tighten the bolt.

ⓐ 15 mm (0.6 in) ⓓ 12 mm (0.5 in)
ⓑ 75 mm (3.0 in) ⓔ 60 mm (2.4 in)
ⓒ 8 mm (0.3 in)

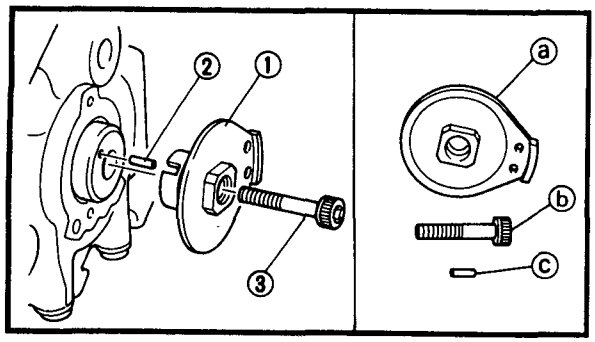

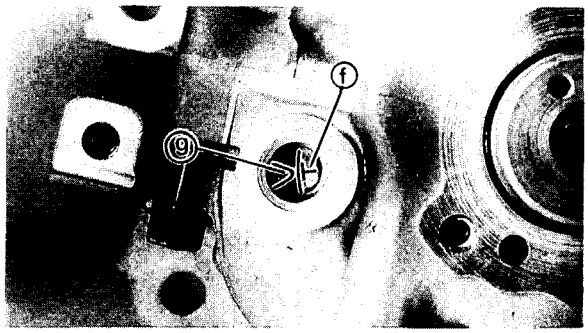

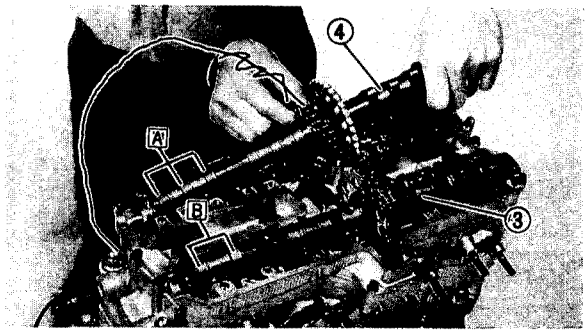

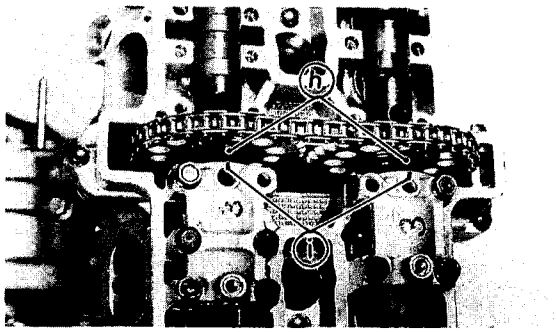

Procedure 2.

- Insert the pin ②, use it to position the pick-up rotor ①, then install the bolt ③.

Part No: ⓐ 4U8-81673-10 or 33M-81673-10
ⓑ 91317-08030
ⓒ 93604-08071

- Turn the crankshaft counterclockwise.
- Turn the crankshaft counterclockwise and align the "T" mark ⓕ with the stationary pointer ⓖ when the #1 piston is at TDC.

CAUTION:

While installing the camshafts do not turn the crankshaft. Damage or improper valve timing will result.

- Lubricate the camshaft bearing surfaces, cam lobes and cam journals.

	Recommended lubricant: Molybdenum disulfide oil

- First, install the exhaust camshaft ③ then install the intake camshaft ④.

NOTE:

- Be sure to install the camshafts in the right place: 3 lobes A = intake camshaft, 2 lobes B = exhaust camshaft
- Make sure that the timing marks ⓗ on the camshaft face upward.
- Keep the timing chain as tight as possible on the exhaust side.
- Remove the wire on the timing chain.

CAUTION:

Do not rotate the camshaft, as damage could occur to the pistons and valves.

- Install the dowel pins.
- Install the camshaft caps.
- Align the camshaft timing marks ⓗ with the camshaft cap marks ⓘ.
- Tighten the camshaft cap bolts.

	Bolt (camshaft cap): 10 Nm (1.0 m • kg, 7.2 ft • lb)

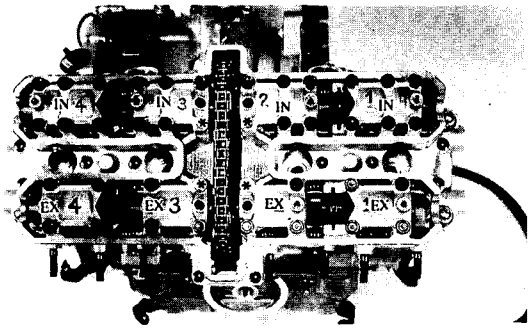

NOTE:
- The camshaft caps are numbered from left to right.
- Apply engine oil onto the camshaft cap bolt threads.
- Do not install the bolts at places marked with a "*" at this stage.
- Tighten the camshaft caps in a crisscross pattern starting from the center.

CAUTION:
The camshaft caps must be tightened evenly or damage to the cylinder head, camshaft caps and camshafts will result.

- Install the timing chain guide on the exhaust side.

****

EB404202
TIMING CHAIN TENSIONER

1.Install:
- Timing chain tensioner

****

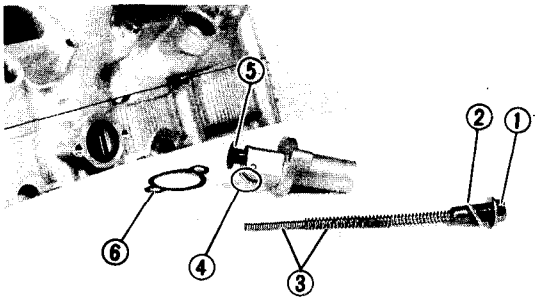

Installation steps:
- Remove the tensioner cap bolt ①, copper washer ② and springs ③.
- Release the timing chain tensioner one-way cam ④ and push the tensioner rod ⑤ all the way in.
- Install the tensioner with a new gasket ⑥ onto the cylinder.

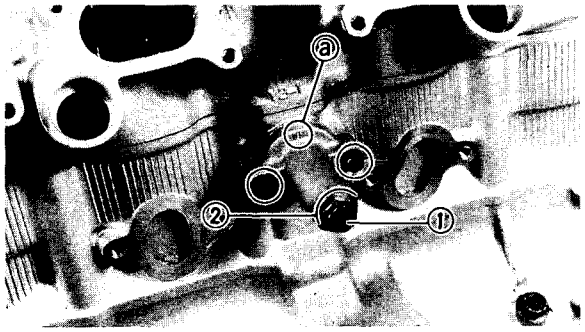

NOTE:
The "UP" mark ⓐ on the tensioner should face up.

	Bolt (timing chain tensioner): 10 Nm (1.0 m • kg, 7.2 ft • lb)

- Install the springs ③, copper washer ② and cap bolt ①.

	Cap bolt (timing chain tensioner): 20 Nm (2.0 m • kg, 14 ft • lb)

****

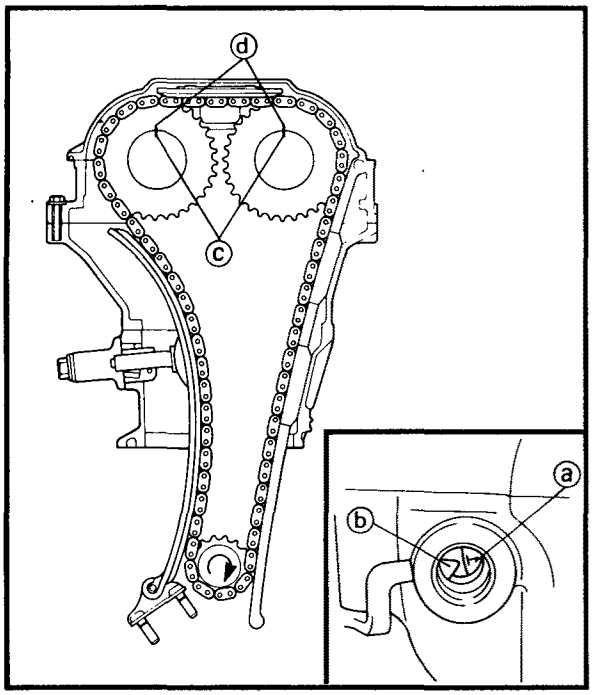

2.Turn:
- Crankshaft
  (several turns counterclockwise)

3.Check:
- Crankshaft "T" mark ⓐ
  Align the mark with the stationary pointer ⓑ.
- Camshaft timing marks ⓒ
  Align the marks with the camshaft cap marks ⓓ.
  Out of alignment → Adjust.
  Refer to "CYLINDER HEAD AND CAMSHAFTS – Installation steps:"

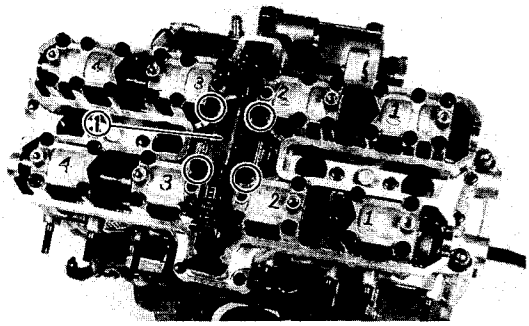

4.Install:
- Timing chain guide (upper) ①

	Bolt (chain guide – upper): **10 Nm (1.0 m • kg, 7.2 ft • lb)**

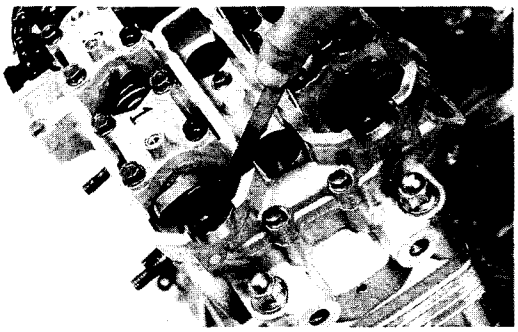

5.Measure:
- Valve clearance
  Out of specification → Adjust.
  Refer to "VALVE CLEARANCE ADJUSTMENT" in CHAPTER 3.

	Intake valve (cold): **0.11 ~ 0.20 mm** **(0.004 ~ 0.008 in)** **Exhaust valve (cold):** **0.21 ~ 0.30 mm** **(0.008 ~ 0.012 in)**

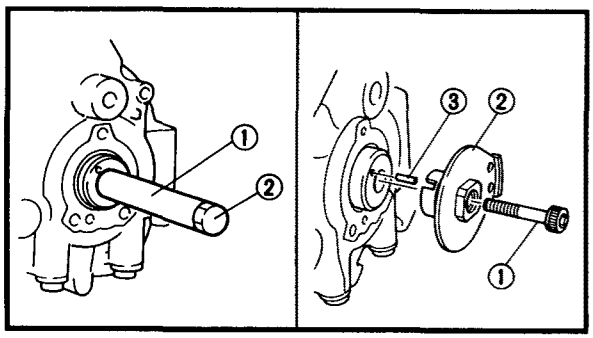

6.Remove:
Procedure 1
- Bolt ①
- Collar ②

Procedure 2
- Bolt ①
- Pick-up rotor ②
- Pin ③

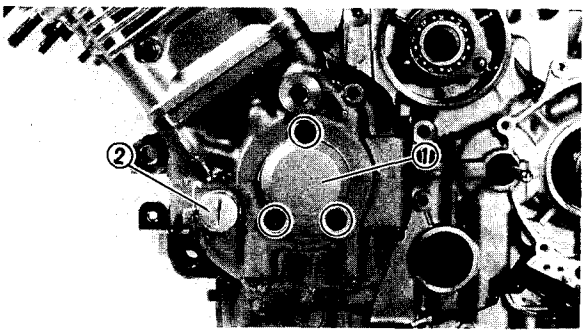

7.Install:
- Crankshaft end cover (left) ①
  (with the O-ring)
- Timing plug ②
  (with the O-ring)

NOTE:
Apply engine oil to the O-rings.

Crankshaft end cover:
7 Nm (0.7 m • kg, 5.1 ft • lb)
LOCTITE®

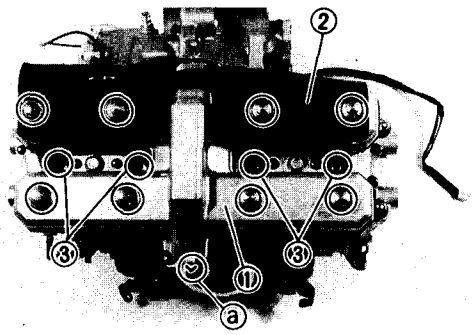

8.Install:
- Gasket (cylinder head cover)
- Cylinder head cover ①
- Baffle cover ②
- Spark plugs ③

NOTE:
- Make sure that the cylinder head gasket mark ⓐ points towards the front.
- Tighten the cylinder head cover bolts in a crisscross pattern.

Spark plug:
18 Nm (1.8 m • kg, 13 ft • lb)
Bolt (cylinder head cover):
10 Nm (1.0 m • kg, 7.2 ft • lb)

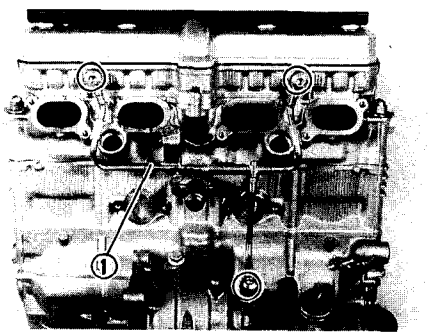

OIL COOLER AND OIL FILTER

1.Install:
- Copper washers
- Oil delivery pipe ①

Union bolt (oil delivery pipe):
20 Nm (2.0 m • kg, 14 ft • lb)
Bolt (oil delivery pipe):
10 Nm (1.0 m • kg, 7.2 ft • lb)

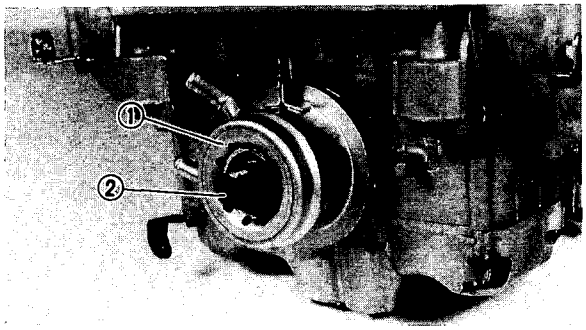

2.Install:
- O-ring
- Oil cooler ①
- Bolt ②

Bolt (oil cooler):
63 Nm (6.3 m • kg, 45 ft • lb)

NOTE:
- Apply engine oil to the O-ring of the oil cooler.
- Make sure that the O-ring is positioned properly.

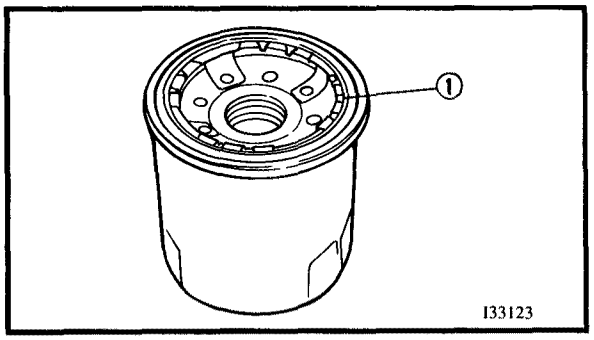

⚠ WARNING
Always use a new O-ring.

3.Apply:
- Engine oil (lightly)
  (to the O-ring ① of the new oil filter)

NOTE:
Make sure that the O-ring is positioned properly.

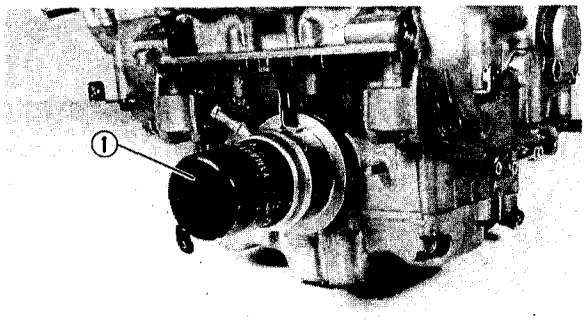

4.Install:
- Oil filter ①

Oil filter:
17 Nm (1.7 m • kg, 12 ft • lb)

⚠ WARNING
Always use a new oil filter.

Refer to "ENGINE OIL REPLACEMENT" in CHAPTER 3.

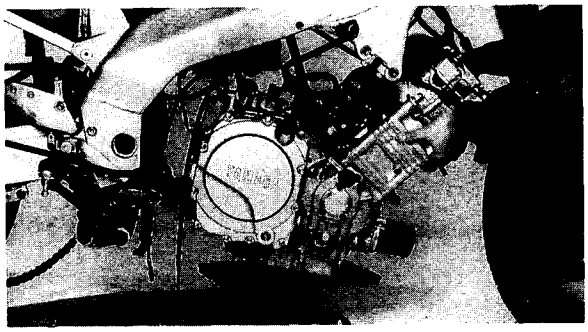

EB404230
ENGINE REMOUNTING

When remounting the engine, reverse the removal procedure.
Note the following points:
1.Install:
- Engine assembly
  (from the right side of the motorcycle)

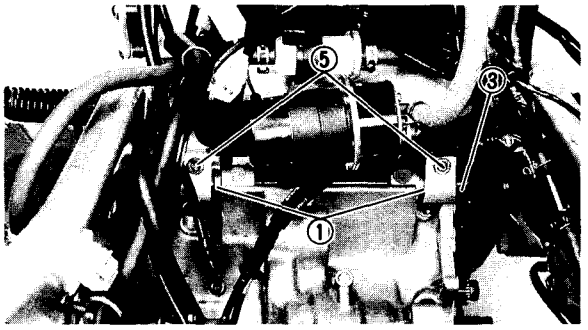

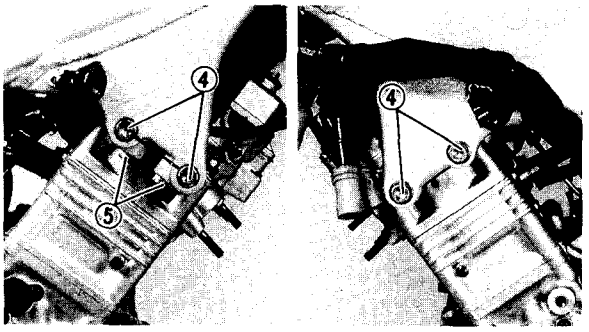

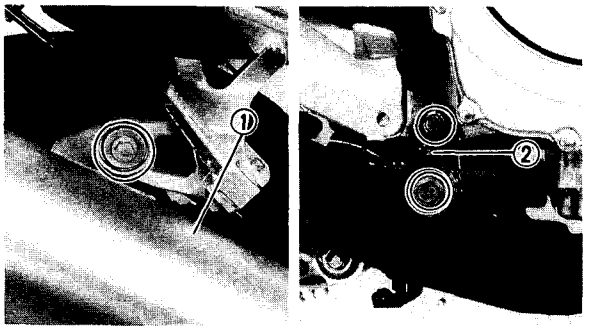

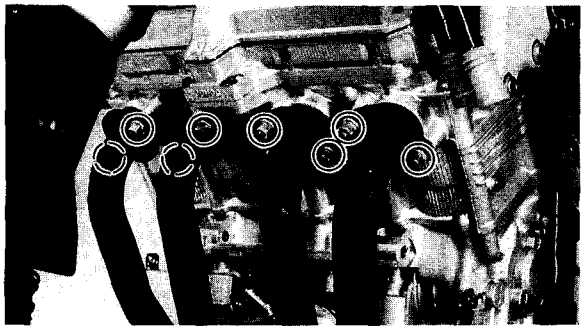

2.Install:
- Collars ①
- Mounting bolt (rear-lower) ②
- Mounting bolt (rear-upper) ③
- Mounting bolts (front) ④
- Pinch bolts ⑤

NOTE:
First, install all of the bolts and nuts and then tighten them to specification.

Mounting bolt (rear-lower):
50 Nm (5.0 m • kg, 36 ft • lb)
Mounting bolt (rear-upper):
50 Nm (5.0 m • kg, 36 ft • lb)
Pinch bolt (rear-upper):
22 Nm (2.2 m • kg, 16 ft • lb)
Mounting bolt (front):
40 Nm (4.0 m • kg, 29 ft • lb)
Pinch bolt (front):
22 Nm (2.2 m • kg, 16 ft • lb)

3.Install:
- Gaskets (exhaust pipe)
- Muffler assembly ①
- Washer
- Stay (exhaust pipe) ②
- Nut (exhaust pipe)

Bolt (muffler and stay):
38 Nm (3.8 m • kg, 27 ft • lb)
Bolt (exhaust pipe):
20 Nm (2.0 m • kg, 14 ft • lb)
Nut (exhaust pipe and stay):
20 Nm (2.0 m • kg, 14 ft • lb)

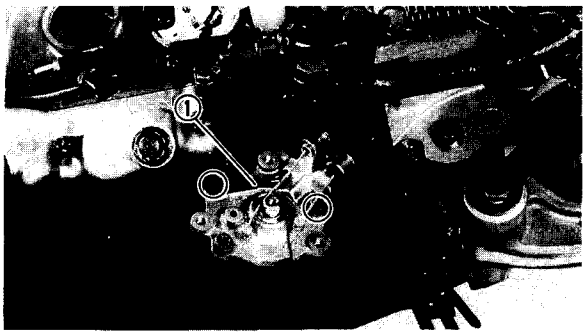

4.Install:
- Holder (EXUP cables) ①

	Bolt (EXUP cable holder): 10 Nm (1.0 m • kg, 7.2 ft • lb)

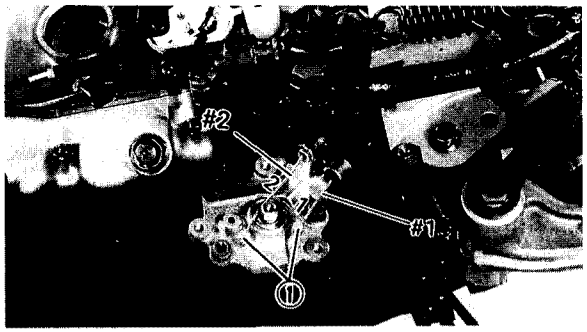

5.Connect:
- EXUP cables ①

NOTE:
When running the cables through the cable holder, fit the cable numbered "1" through holder "1" and the cable numbered "2" through holder "2".

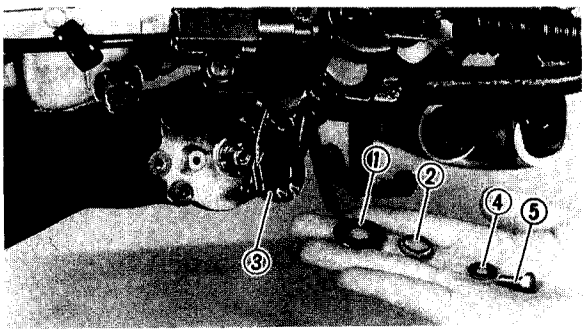

6.Install:
- Washer ①
- Spring ②
- Pulley ③
- Washer ④
- Bolt (pulley) ⑤

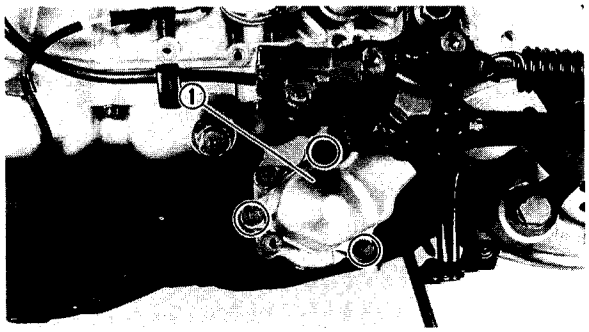

7.Install:
- EXUP valve cover ①

	Bolt (EXUP valve cover): 10 Nm (1.0 m • kg, 7.2 ft • lb)

8.Adjust:
- EXUP cable free play
  Refer to "EXUP CABLE ADJUSTMENT" in CHAPTER 3.

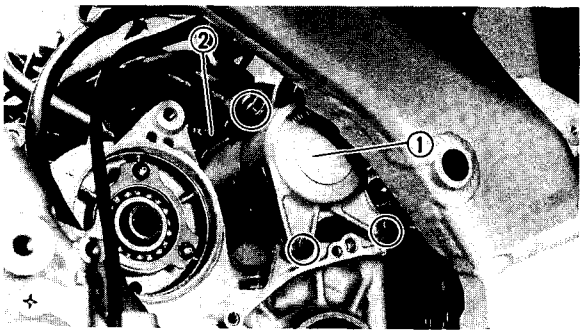

9.Install:
- Starter motor ①

	Bolt (starter motor): **8 Nm (0.8 m • kg, 5.8 ft • lb)**

10.Connect:
- Starter motor lead ②

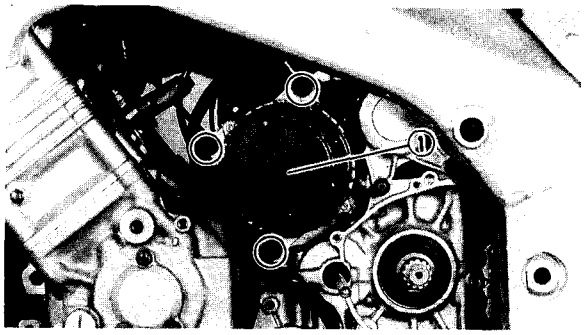

11.Install:
- AC generator ①

	Bolt (AC generator): **25 Nm (2.5 m • kg, 18 ft • lb)**

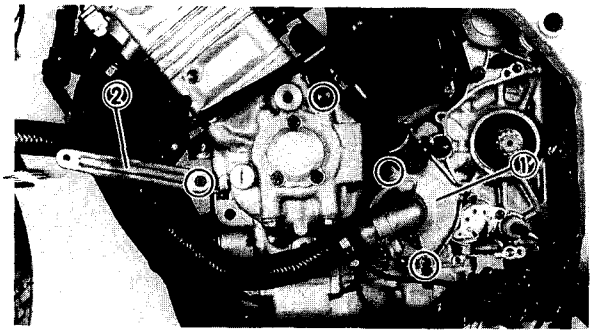

12.Install:
- Water pump assembly ①
  (with inlet radiator hose and outlet water pump pipe)
- Radiator stay (left) ②

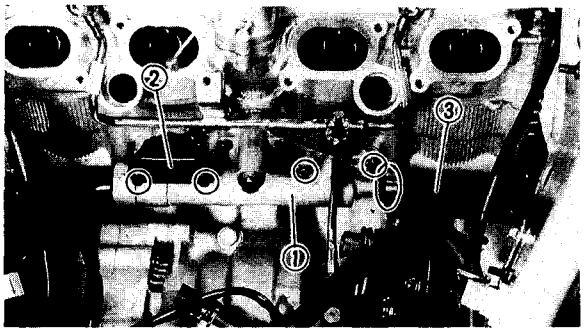

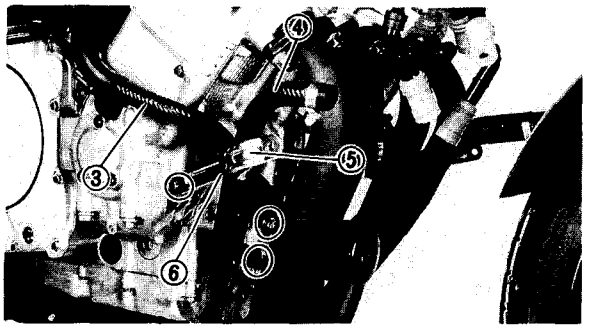

13.Install:
- O-rings
- Water jacket joint (inlet) ①
- Holder (carburetor breather hoses) ②
- Oil cooler hose (inlet) ③
- Oil cooler hose (outlet) ④
- Radiator stay (right) ⑤
- Metal band (fold-back type) ⑥

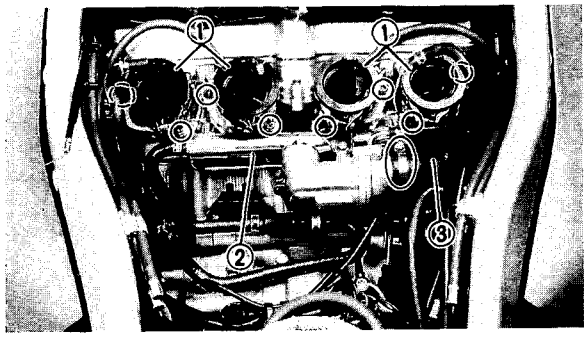

14.Install:
- O-rings
- Carburetor joints ①
  (with the vacuum hose)
- O-rings
- Water jacket joint (outlet) ②
  (with the thermostatic valve housing and carburetor heater hoses)
- Radiator hose (inlet) ③

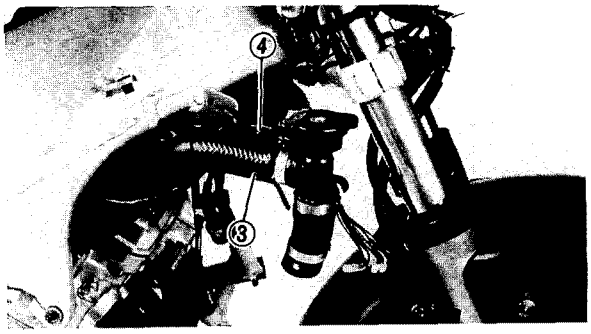

NOTE:
Install the carburetor joints with the "L" mark onto the #1 and #2 cylinders and the carburetor joints with the "R" mark onto the #3 and #4 cylinders.

	Bolt (carburetor joint): **10 Nm (1.0 m • kg, 7.2 ft • lb)**

15.Connect:
- Coolant reservoir hose ④

16.Install:
- Drive sprocket ①
  (with the drive chain) ②
- Lock washer ③
- Nut (drive sprocket) ④

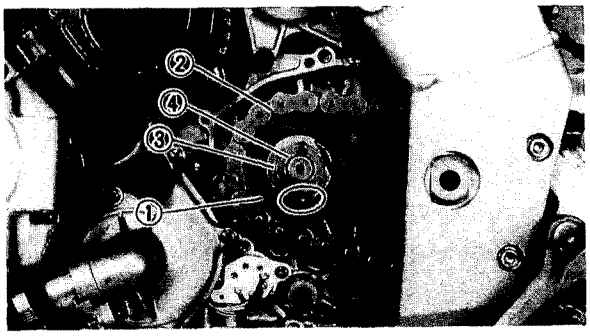

	Nut (drive sprocket): **80 Nm (8.0 m • kg, 58 ft • lb)**

⚠ WARNING
Always use a new lock washer.

NOTE:
While applying the rear brake, tighten the drive sprocket nut.

17.Bend:
- Lock washer tab
  (along a flat side of the nut)

18.Install:
- Gasket
- Dowel pins
- Drive sprocket cover ①

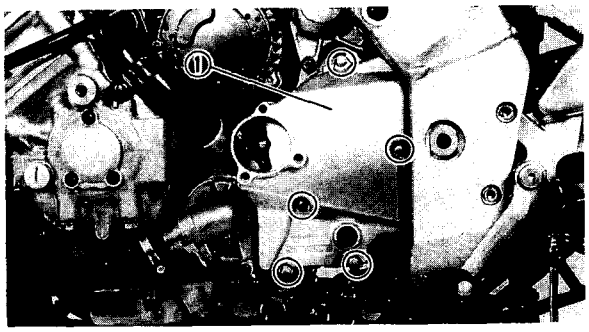

	Bolt (drive sprocket cover): **10 Nm (1.0 m • kg, 7.2 ft • lb)** **LOCTITE®**

NOTE:
Tighten the drive sprocket cover bolts in stages, using a crisscross pattern.

⚠ WARNING
Always use a new gasket.

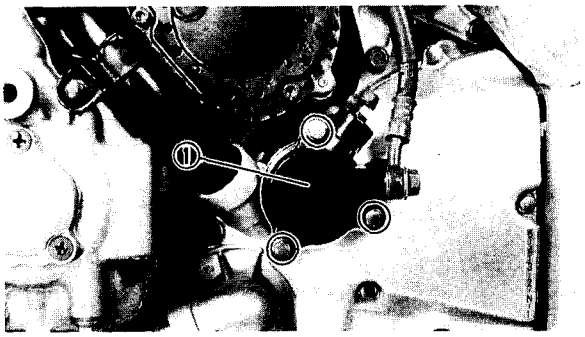

19.Install:
- Dowel pins
- Clutch release cylinder ①

	Bolt (clutch release cylinder): 10 Nm (1.0 m • kg, 7.2 ft • lb)

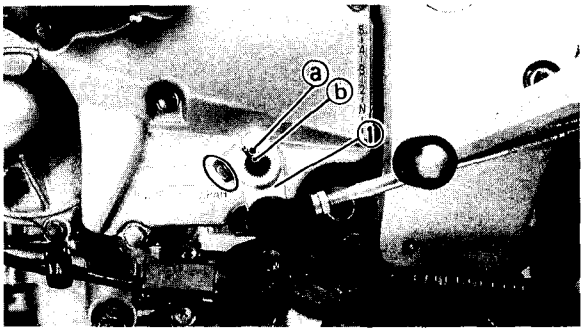

20.Install:
- Shift pedal link ①

	Bolt (shift pedal link): 10 Nm (1.0 m • kg, 7.2 ft • lb)

NOTE:
Align the punch mark ⓐ on the pedal link with the punch mark ⓑ on the shaft.

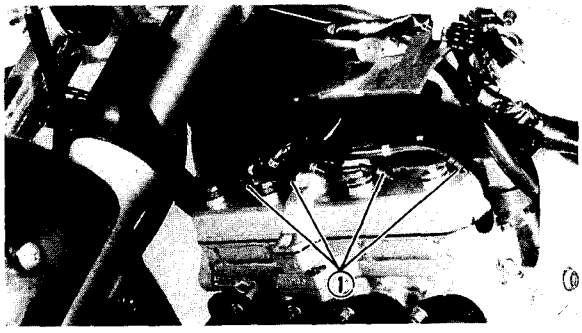

21.Connect:
- Spark plug caps ①

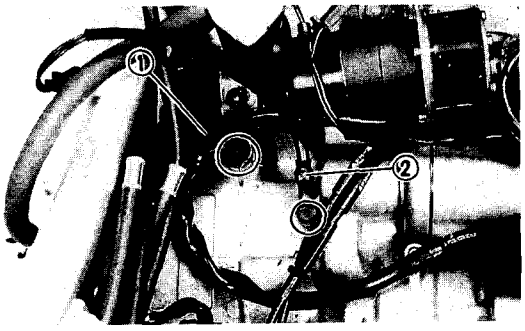

22.Install:
- Breather hose (crankcase) ①
- Ground lead ②

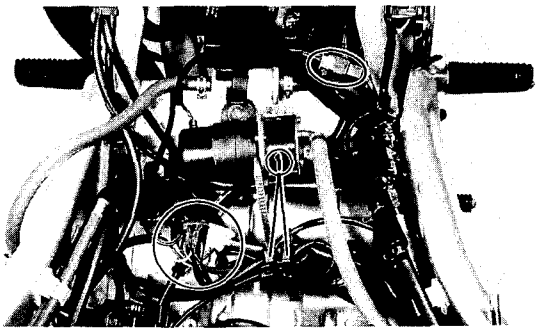

23.Connect:
- GPS (gear position sensor) coupler
- Rear brake switch coupler
- Pickup coil coupler
- AC generator coupler
- Starter motor coupler

24.Install:
- Plastic bands ①

25.Install:
- Radiator assembly
  Refer to "RADIATOR – INSTALLATION" in CHAPTER 5.

26.Install:
- Carburetor assembly
  Refer to "CARBURETORS – INSTALLATION" in CHAPTER 6.

27.Install:
- Air filter case

28.Connect:
- Battery leads

CAUTION:

First, connect the positive lead and then connect the negative lead.

29.Fill:
- Crankcase
  Refer to "ENGINE OIL REPLACEMENT" in CHAPTER 3.

Total amount:
3.5 L (3.1 Imp qt, 3.7 US qt)

30.Fill:
- Cooling system
  Refer to "COOLANT LEVEL INSPECTION" in CHAPTER 3.

31.Adjust:
- Idle speed
  Refer to "IDLING SPEED ADJUSTMENT" in CHAPTER 3.

	Idle speed: **1,050 ~ 1,150 r/min**

32.Adjust:
- Throttle cable free play
  Refer to "THROTTLE CABLE ADJUSTMENT" in CHAPTER 3.

	Throttle cable free play: **3 ~ 7 mm (0.12 ~ 0.28 in)** **(at the throttle grip flange)**

33.Adjust:
- Drive chain slack
  Refer to "DRIVE CHAIN SLACK ADJUSTMENT" in CHAPTER 3.

EB500000

COOLING

RADIATOR/OIL COOLER

① Radiator hose (inlet)
② Radiator hose (outlet)
③ Oil cooler hose (inlet)
④ Oil cooler hose (outlet)
⑤ Radiator cap
⑥ Radiator
⑦ Oil filter
⑧ Oil cooler
⑨ Water pump pipe (inlet)
⑩ Fan motor assembly

A	RADIATOR CAP OPENING PRESSURE: 95 ~ 125 kPa (0.95 ~ 1.25 kg/cm^2, 13.51 ~ 17.78 psi)
B	COOLANT CAPACITY: 2.7 L (2.38 Imp qt, 2.85 US qt) (including all routes)

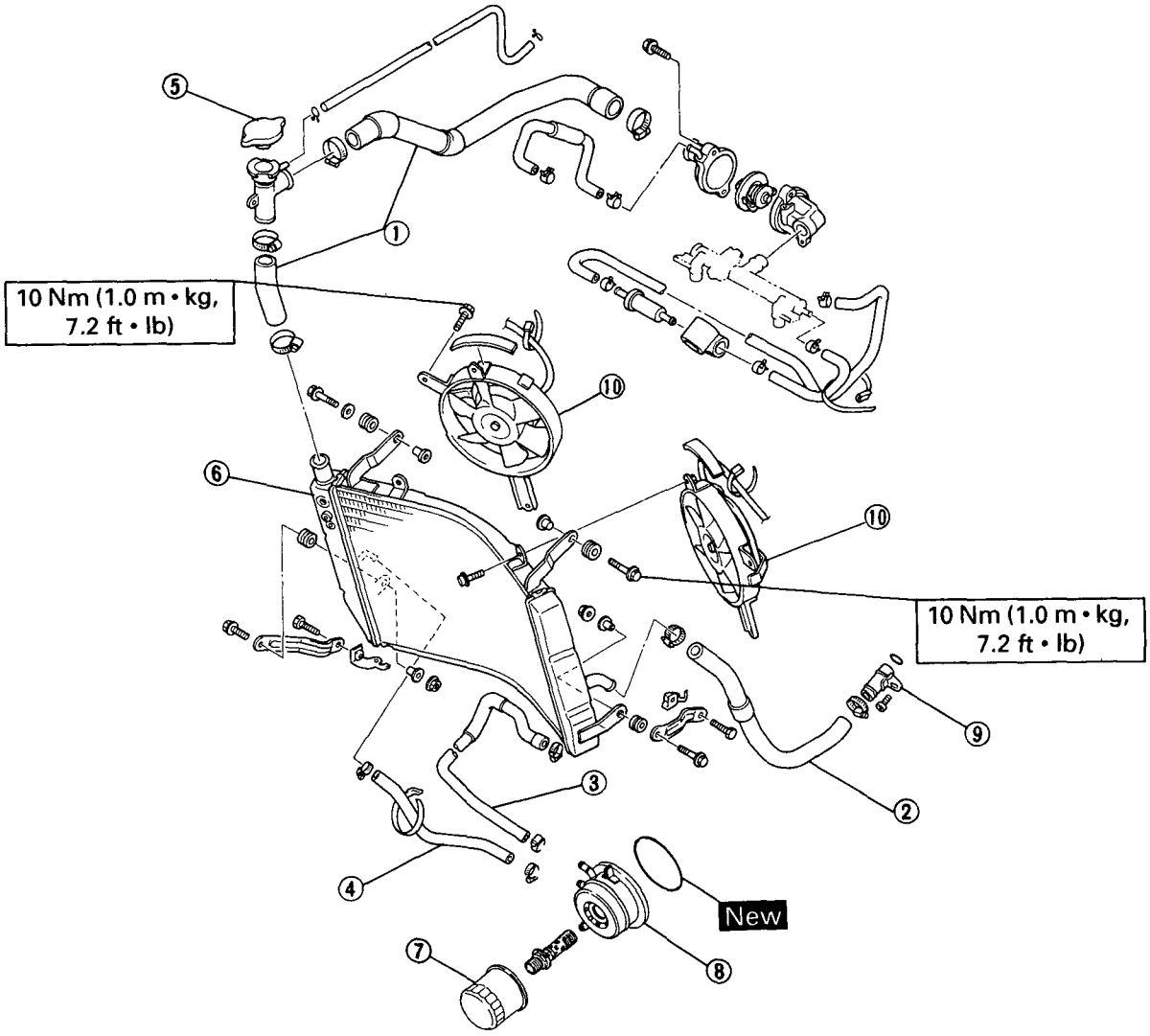

5

EB500010
RADIATOR

⚠ WARNING

Do not remove the radiator cap when the engine and radiator are hot. Scalding hot fluid and steam may be blown out under pressure, which could cause serious injury. When the engine has cooled, open the radiator cap by the following procedure:
Place a thick rag, like a towel, over the radiator cap, slowly rotate the cap counterclockwise to the detent. This procedure allows any residual pressure to escape. When the hissing sound has stopped, press down on the cap while turning counterclockwise and remove it.

EB500020
REMOVAL

1.Remove:
- Rider seat
- Passenger seat
- Side panels (left and right)
- Fuel tank
- Bottom cowling (front)
- Bottom cowling
- Side cowlings (left and right)
- Rear view mirrors (left and right)
- Front cowling assembly

  Refer to "SEATS", "FUEL TANK" and "COWLINGS" in CHAPTER 3.

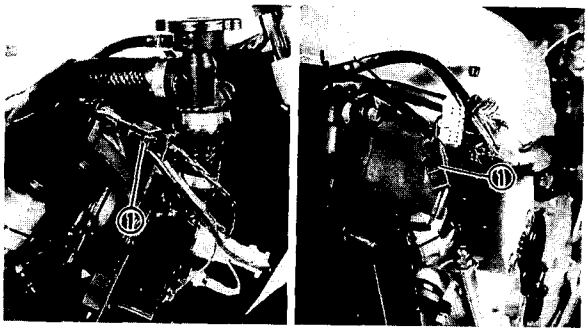

2.Disconnect:
- Couplers (cooling fan motors) ①

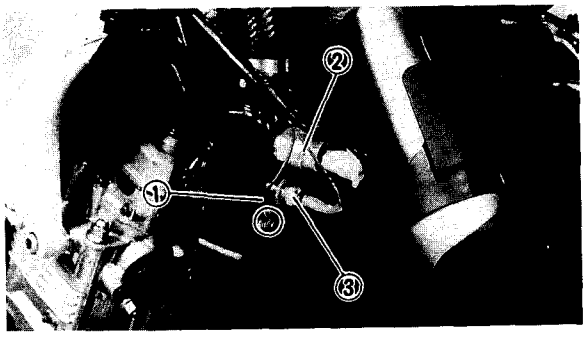

3.Disconnect:
- Thermo switch coupler
- Thermo unit coupler
- Ground lead ①

4.Remove:
- Thermo switch ②
- Thermo unit ③

5.Drain:
- Coolant:
  Refer to "COOLANT REPLACEMENT" in CHAPTER 3.

NOTE:
Thoroughly flush the cooling system with clean tap water.

CAUTION:
Take care that no coolant splashes onto the painted surfaces. If this happens, wash away the coolant with water.

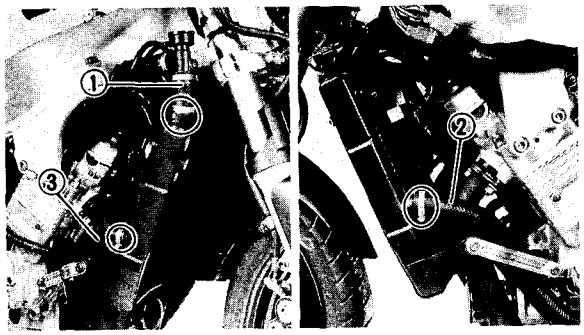

6.Disconnect:
- Radiator hose (inlet) ①
- Radiator hose (outlet) ②
- Oil cooler hose (outlet) ③

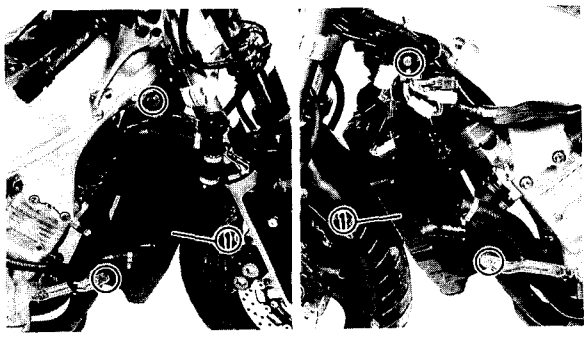

7.Remove:
- Radiator assembly ①

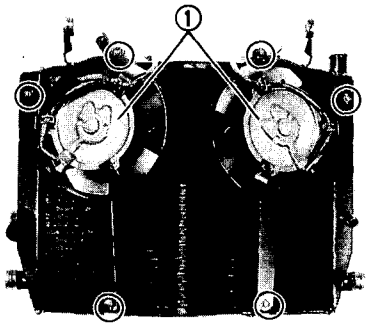

8.Remove:
- Fan motors ①

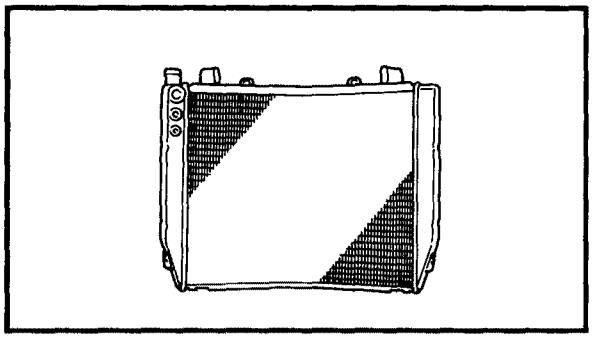

EB500030
INSPECTION

1.Inspect:
- Radiator core
  Obstruction → Blow out with compressed air through the rear of the radiator.
  Flattened fins → Repair or replace.

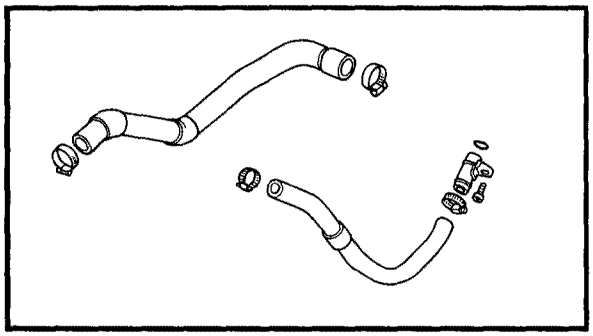

2.Inspect:
- Radiator hoses
- Radiator pipes
  Cracks/damage → Replace.

3.Measure:
- Radiator cap opening pressure
  Radiator cap opens at a pressure below the specified pressure → Replace.

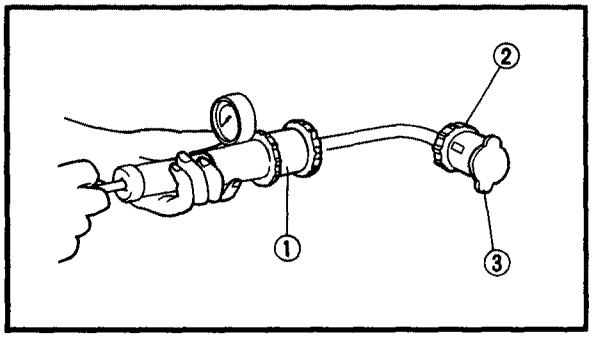

Radiator cap opening pressure:
95 ~ 125 kPa
(0.95 ~ 1.25 kg/cm², 13.51 ~ 17.78 psi)

****

Measurement steps:
- Attach the radiator cap tester ① and adapter ② to the radiator cap ③.

Radiator cap tester:
YU-24460-01/90890-01325
Adapter:
YU-33984/90890-01352

- Apply the specified pressure for ten seconds and be sure that there is no pressure drop.

****

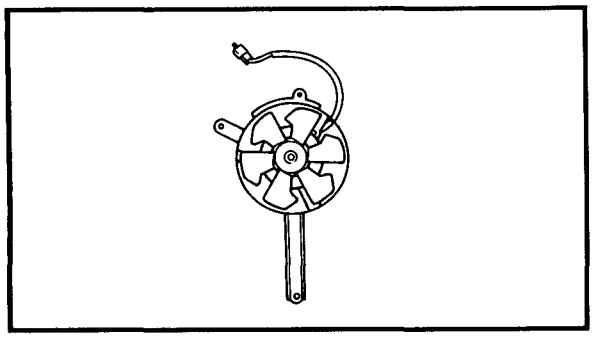

4.Inspect:
- Fan motor assembly
  Damage → Replace.
  Malfunction → Check and repair.
  Refer to "COOLING SYSTEM" in CHAPTER 8.

EB500040
INSTALLATION
Reverse the "REMOVAL" procedure.
Note the following points.
1.Install:
- Fan motors

	Bolt (fan motor): **10 Nm (1.0 m • kg, 7.2 ft • lb)**

2.Install:
- Radiator assembly ①

	Bolt (radiator assembly): **10 Nm (1.0 m • kg, 7.2 ft • lb)**

3.Fill:
- Cooling system
  Refer to "COOLANT REPLACEMENT" in CHAPTER 3.

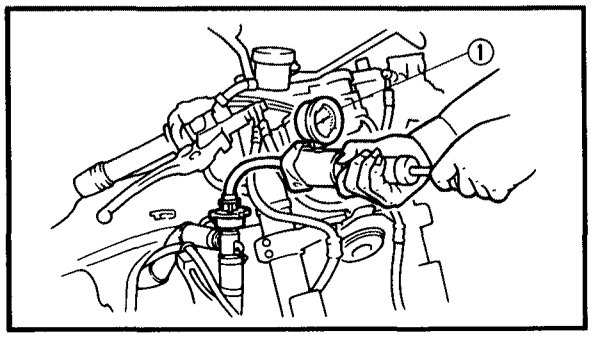

4.Inspect:
- Cooling system
  Decrease of pressure (leaks) → Repair as required.

****

Inspection steps:
- Attach the radiator cap tester ① to the radiator.

	Radiator cap tester: **YU-24460-01/90890-01325**

- Apply 100 kPa (1.0 kg/cm^2, 14 psi) of pressure.
- Measure the indicated pressure with the gauge.

****

EB501000
OIL COOLER
REMOVAL
1.Remove:
- Bottom cowling (front)
- Bottom cowling
- Side cowlings (left and right)
  Refer to "COWLINGS" in CHAPTER 3.

2.Drain:
- Engine oil
- Coolant
  Refer to "ENGINE OIL REPLACEMENT" and "COOLANT REPLACEMENT" in CHAPTER 3.

3.Remove:
- Oil filter
  Refer to "ENGINE OIL REPLACEMENT" in CHAPTER 3.

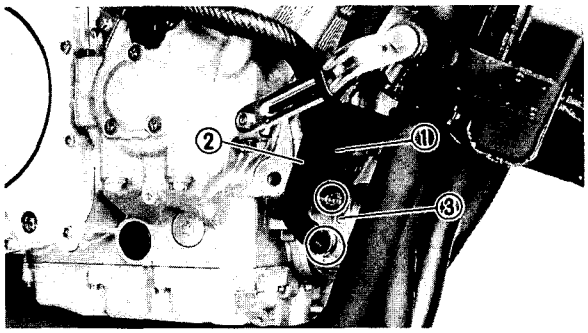

4.Disconnect:
- Oil cooler hose (inlet) ①
- Oil cooler hose (outlet) ②

5.Remove:
- Oil cooler ③

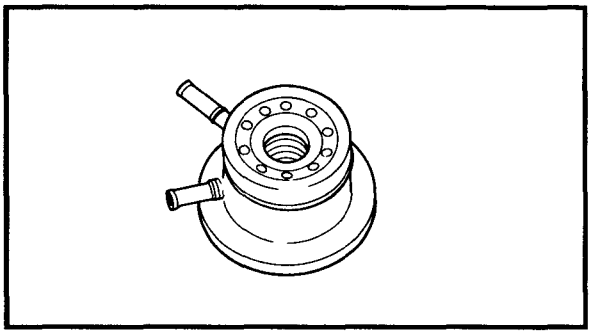

EB501010
INSPECTION
1.Inspect:
- Oil cooler
  Cracks/damage → Replace.

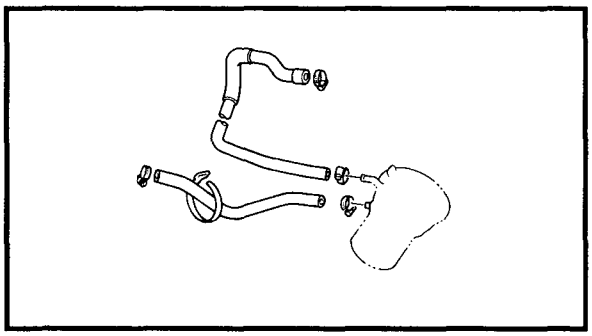

2.Inspect:
- Oil cooler hose (inlet)
- Oil cooler hose (outlet)
  Cracks/wear/damage → Replace.

EB501020
INSTALLATION

Reverse the "REMOVAL" procedure.
Note the following points.

1. Clean the mating surfaces of the oil cooler and the crankcase with a cloth dampened with lacquer thinner.

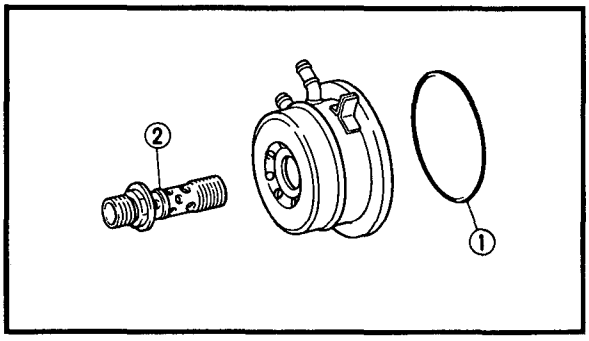

2. Lubricate:
- O-ring ①
- Bolt ②

	Recommended lubricant: Engine oil

⚠ WARNING

Always use a new O-ring on the oil cooler.

3. Install:
- O-ring
- Oil cooler

NOTE:
Make sure that the O-ring is positioned properly.

	Bolt (oil cooler): 63 Nm (6.3 m • kg, 45 ft • lb)

4. Install:
- Oil filter
  Refer to "ENGINE OIL REPLACEMENT" in CHAPTER 3.

	Oil filter: 17 Nm (1.7 m • kg, 12 ft • lb)

5. Fill:
- Cooling system
- Crankcase
  Refer to "COOLANT REPLACEMENT" and "ENGINE OIL REPLACEMENT" in CHAPTER 3.

6. Inspect:
- Cooling system (oil cooler)
  Decrease in pressure (leaks) → Replace the oil cooler as required.
  Refer to "RADIATOR – INSTALLATION".

THERMOSTATIC VALVE/WATER PUMP

① Thermostatic valve cover
② Thermostatic valve
③ Thermostatic valve housing
④ Water jacket joint (outlet)
⑤ Water jacket joint (inlet)
⑥ Water pump pipe (outlet)
⑦ Water pump cover
⑧ Impeller shaft
⑨ Water pump housing
⑩ Oil seal
⑪ Bearing
⑫ Circlip
⑬ Water pump pipe (inlet)
⑭ O-ring
⑮ Gasket

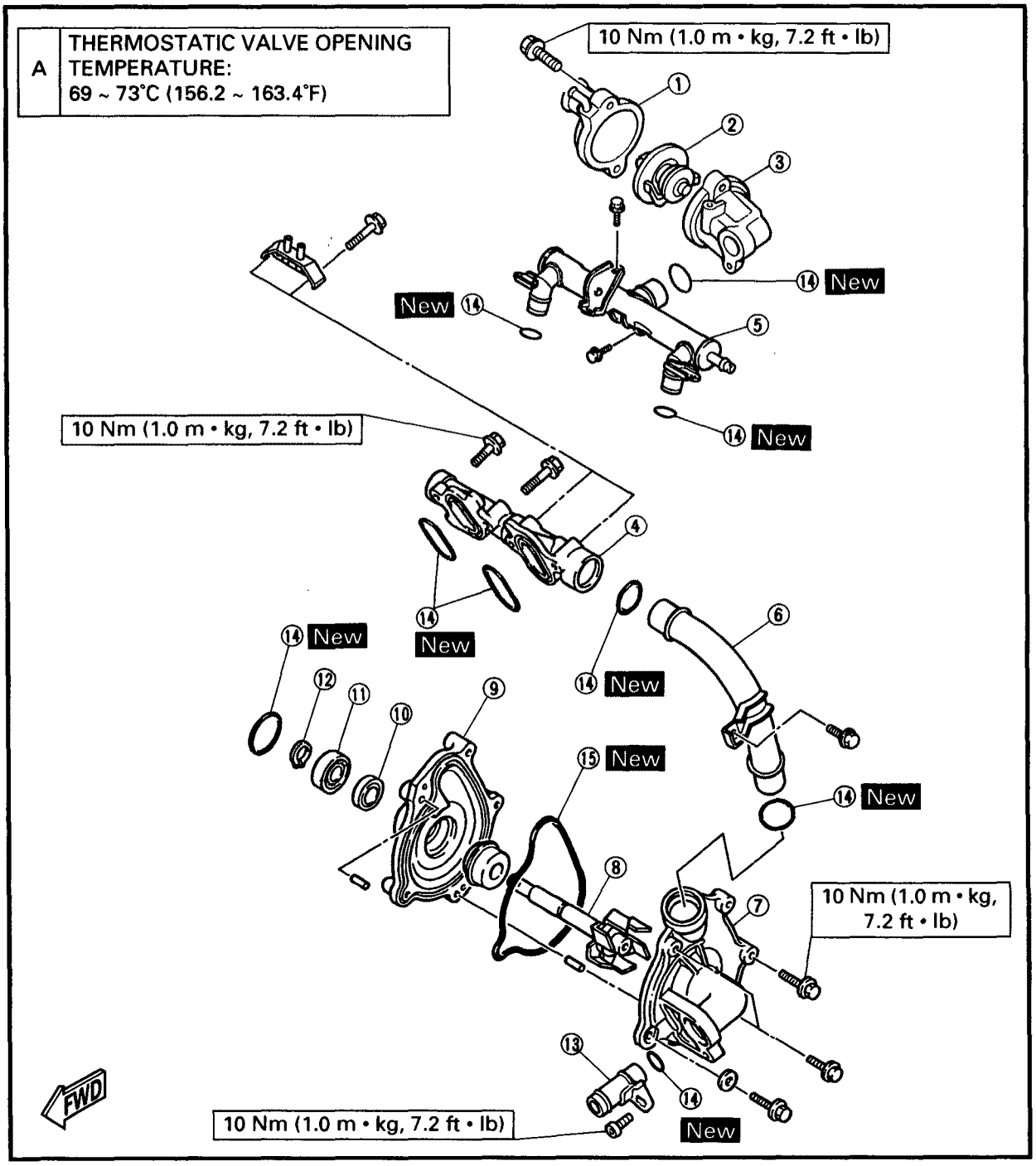

EB502000

THERMOSTATIC VALVE

REMOVAL

1.Remove:
- Rider seat
- Passenger seat
- Side panels (left and right)
- Fuel tank

Refer to "SEATS" and "FUEL TANK" in CHAPTER 3.

2.Drain:
- Coolant

Refer to "COOLANT REPLACEMENT" in CHAPTER

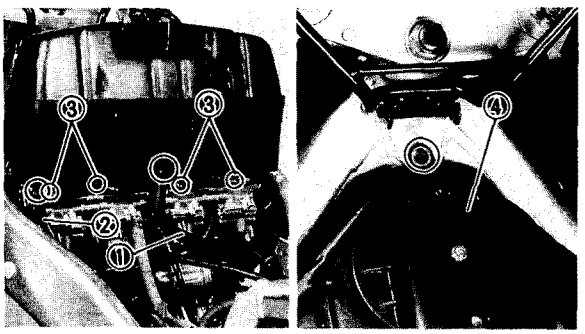

3.Disconnect:
- Breather hose (crankcase) ①
- Drain hose (air filter case) ②

4.Loosen:
- Clamp screws (carburetor joints) ③

5.Remove:
- Air filter case ④

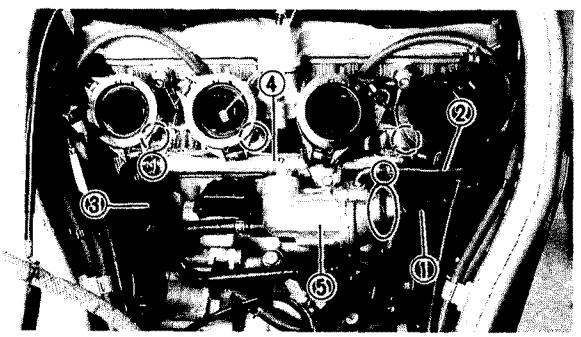

6.Remove:
- Carburetor assembly

Refer to "CARBURETORS" in CHAPTER 6.

7.Disconnect:
- Radiator hose (inlet) ①

8.Remove:
- Carburetor heater hose (outlet) ②
- Carburetor heater hose (inlet) ③
- Water jacket joint (outlet) ④ (with the thermostatic valve housing ⑤)
- O-rings

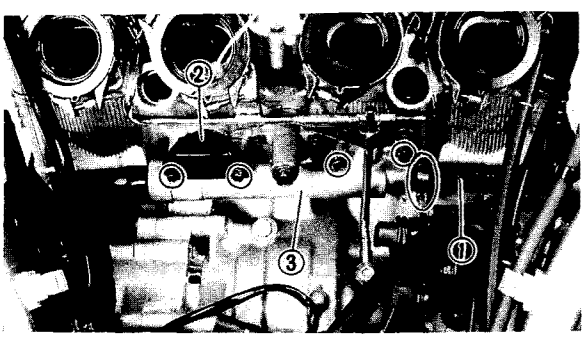

9.Disconnect:
- Oil cooler hose (outlet) ①

10.Remove:
- Holder (carburetor breather hoses) ②
- Water jacket joint (inlet) ③
- O-rings

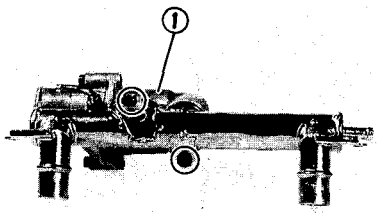

11.Remove:
- Thermostatic valve housing ①
- O-ring

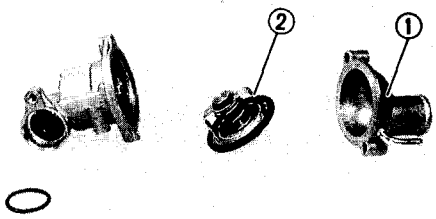

12.Remove:
- Thermostatic valve cover ①
- Thermostatic valve ②

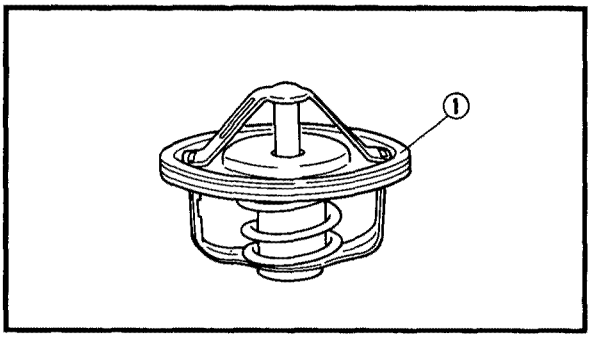

EB502010
INSPECTION

1.Inspect:
- Thermostatic valve ①
  Valve does not open at 69 ~ 73°C (156.2 ~ 163.4°F) → Replace.

****

Inspection steps:
- Suspend the thermostatic valve in a vessel.
- Place an accurate thermometer in the water.
- While stirring the water observe the thermometer's indicated temperature.

****

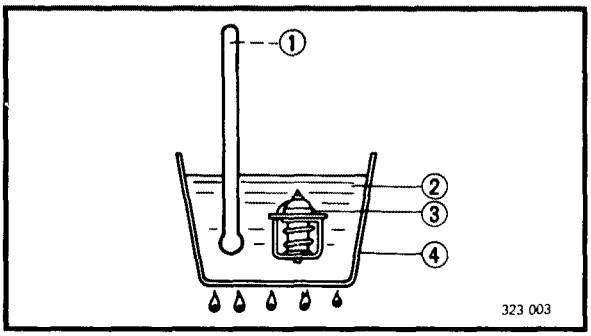

① Thermometer
② Water
③ Thermostatic valve
④ Vessel

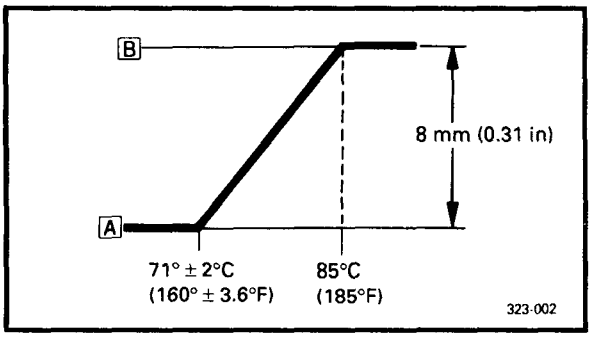

A CLOSE
B OPEN

NOTE:
The thermostatic valve is sealed and its setting requires specialized work. If its accuracy is in doubt, replace it. A faulty unit could cause serious overheating or overcooling.

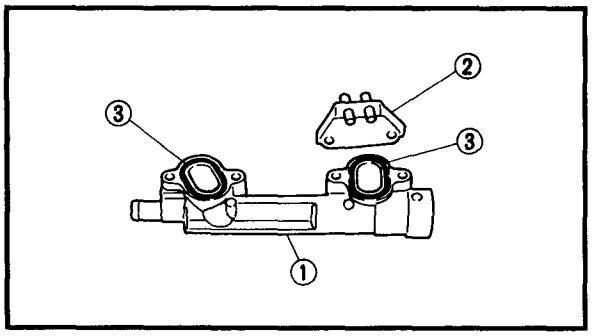

2.Inspect:
- Water jacket joint (inlet) ①
- Holder (carburetor breather hoses) ②
- O-rings ③

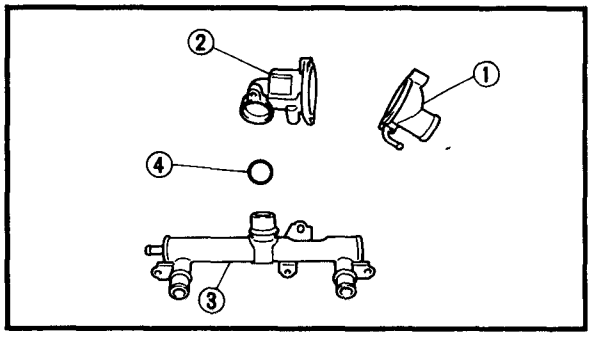

3.Inspect:
- Thermostatic valve housing cover ①
- Thermostatic valve housing ②
- Water jacket joint (outlet) ③
- O-ring ④
  Cracks/damage → Replace.

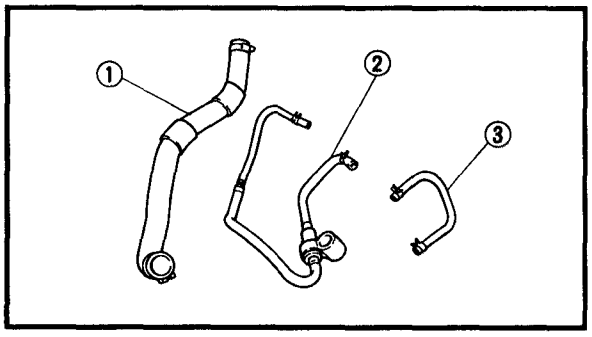

4.Inspect:
- Radiator hose (inlet) ①
- Carburetor heater hose (inlet) ②
- Carburetor heater hose (outlet) ③

EB502020
INSTALLATION
Reverse the "REMOVAL" procedure.
Note the following points.

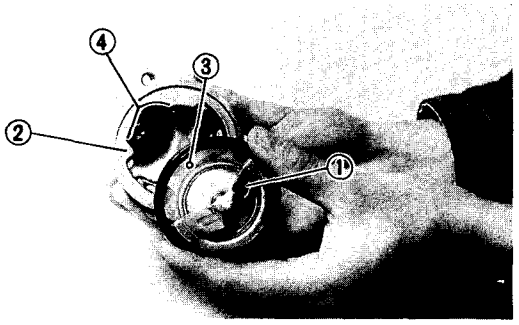

1.Install:
- Thermostatic valve ①
  (into the thermostatic valve housing ②)

NOTE:
The thermostatic valve must be installed with the breather hole ③ facing towards the housing slot ④.

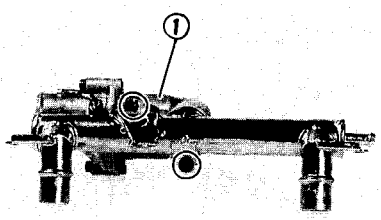

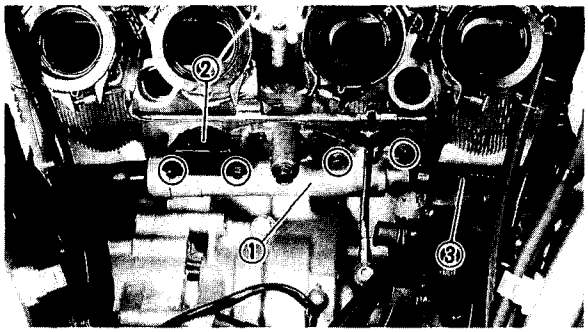

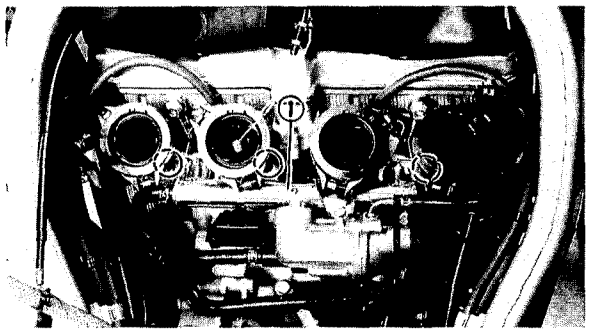

2.Install:
- Thermostatic valve cover ②
- Thermostatic valve housing ①

Bolt (thermostatic valve cover):
10 Nm (1.0 m • kg, 7.2 ft • lb)
Bolt (thermostatic valve housing):
10 Nm (1.0 m • kg, 7.2 ft • lb)

NOTE:
Before installing the thermostatic valve housing, apply a thin coating of lithium-soap base grease onto the O-ring.

⚠ WARNING
Always use a new O-ring.

3.Install:
- O-rings
- Water jacket joint (inlet) ①
- Holder (carburetor breather hoses) ②

4.Connect:
- Oil cooler hose (outlet) ③

5.Install:
- Water jacket joint (outlet) ①

Bolt (water jacket joint):
10 Nm (1.0 m • kg, 7.2 ft • lb)

NOTE:
Before installing the water jacket joint, apply a thin coat of lithium-soap base grease onto the O-rings.

⚠ WARNING
Always use new O-rings.

6.Fill:
- Cooling system
  Refer to "COOLANT REPLACEMENT" in CHAPTER 3.

7.Adjust:
- Throttle cable free play
- Refer to "THROTTLE CABLE ADJUSTMENT" in CHAPTER 3.

EB503000
WATER PUMP

REMOVAL

1.Remove:
- Bottom cowling (front)
- Bottom cowling
- Side cowling (left)
  Refer to "COWLINGS" in CHAPTER 3.

2.Drain:
- Coolant
  Refer to "COOLANT REPLACEMENT" in CHAPTER 3.

3.Remove:
- Shift pedal link ①
- Clutch release cylinder ②
- Drive sprocket cover ③
  Refer to "ENGINE REMOVAL" in CHAPTER 4.

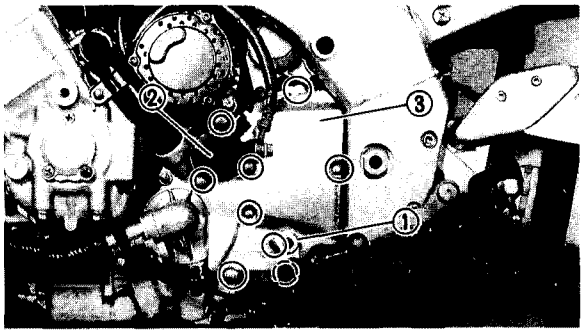

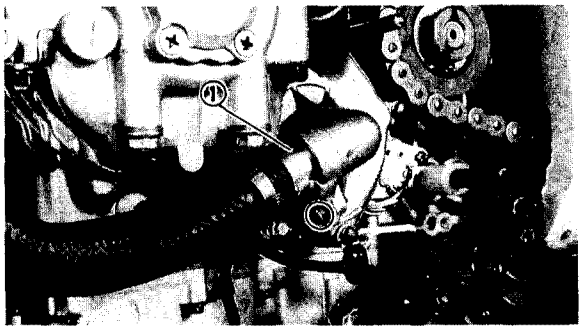

4.Remove:
- Water pump pipe (inlet) ①
- O-ring

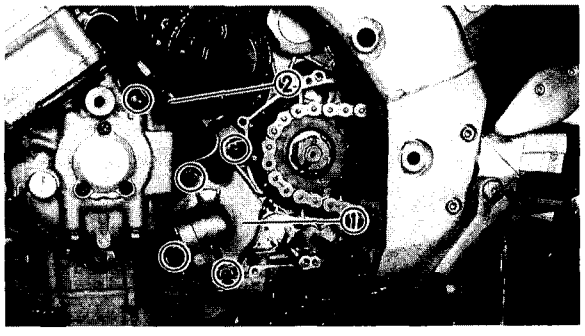

5.Remove:
- Water pump cover ①
  (with the water pump outlet pipe ②)
- Dowel pins
- O-ring

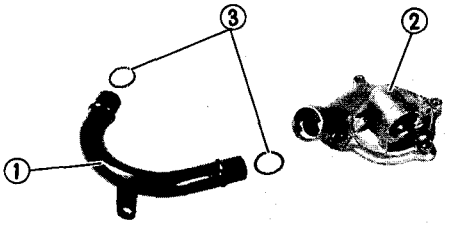

6.Remove:
- Water pump pipe (outlet) ①
  (from the water pump cover ②)
- O-rings ③

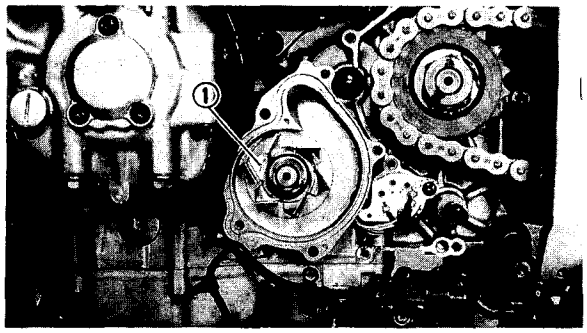

7.Remove:
- Water pump housing ①

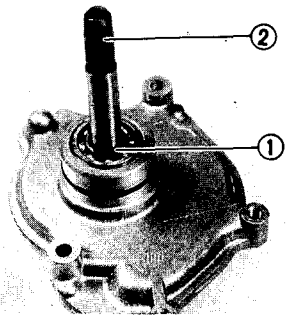

8.Remove:
- Circlip ①
- Impeller shaft ②

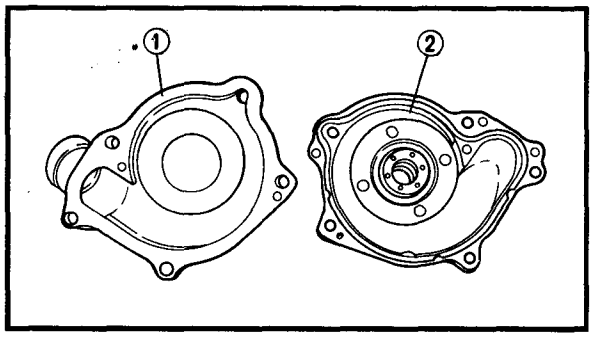

EB503010
INSPECTION

1.Inspect:
- Water pump cover ①
- Water pump housing ②
  Cracks/damage → Replace.

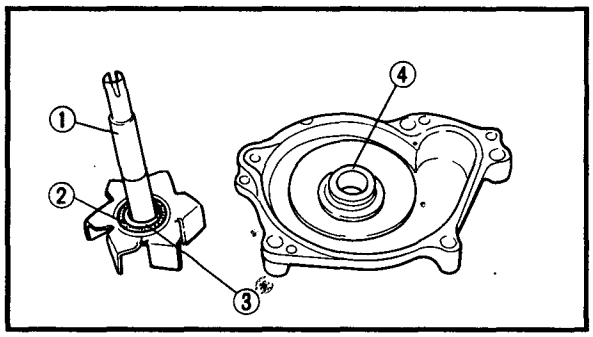

2.Inspect:
- Impeller ①
  Cracks/wear/damage → Replace the water pump housing assembly.
- Damper rubber ②
- Rubber holder ③
- Water pump seals ④
  Cracks/wear/damage → Replace.

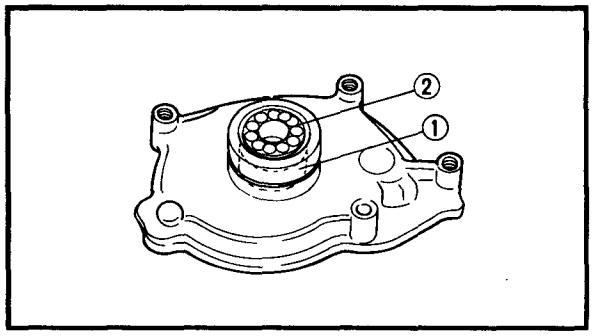

3.Inspect:
- Oil seal ①
  Wear/damage → Replace.
- Bearing ②
  Roughness → Replace the water pump housing assembly.

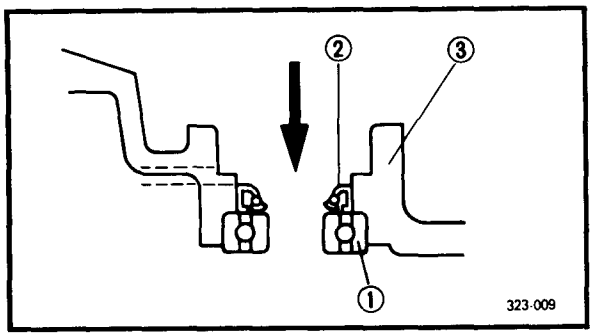

Bearing and seal replacement

1.Remove:
- Bearing ①
- Oil seal ②

  Tap out from the water pump seal side.

③ Water pump housing

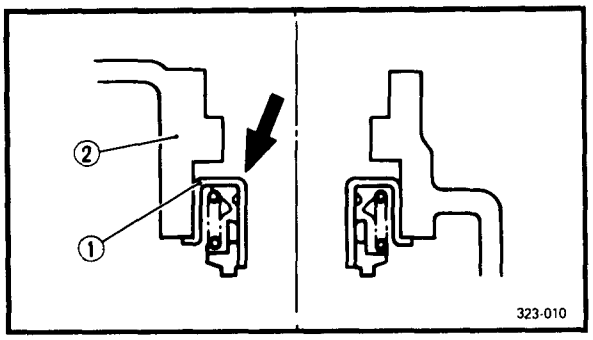

2.Remove:
- Water pump seal ①

  Tap out from the water pump housing side ②.

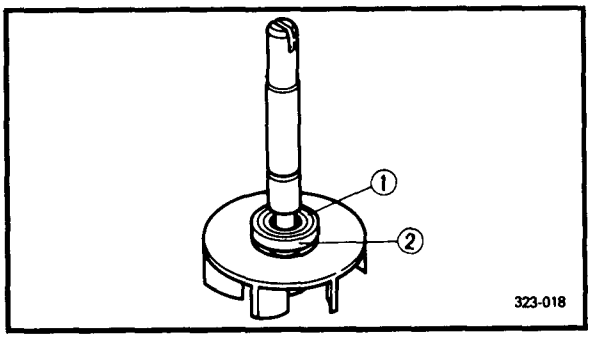

3.Remove:
- Rubber holder ①
- Damper rubber ②

  (from the impeller)

  Use a thin, flat-head screwdriver.

NOTE:

Be careful not to scratch the impeller shaft.

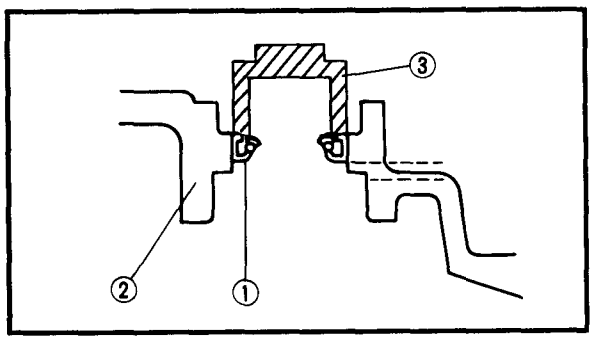

4.Install:
- Oil seal ①

  (to the water pump housing ②)

NOTE:
- Use a socket ③ that matches the outside diameter of the oil seal.
- Before installing the oil seal, apply tap water or coolant onto the outer surface of the oil seal.

⚠ WARNING

Always use a new oil seal.

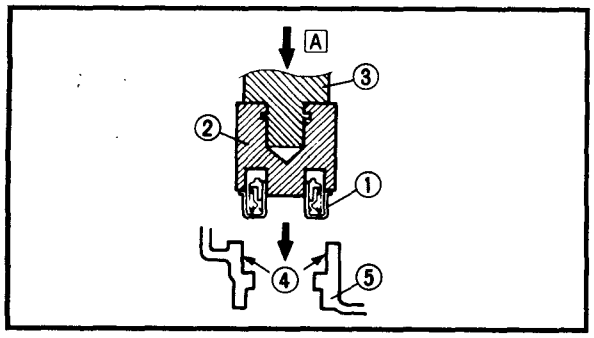

5.Install:
- Water pump seal ①

NOTE:
- Use the water pump seal installer ② and ③.
- Before installing the water pump seal, apply Yamaha bond No. 1215 or Quick Gasket® ④ to the water pump housing ⑤.

⚠ WARNING

Always use a new water pump seal.

Water pump seal installer:
YU-94051-1/90890-04058
YM-33221-1/90890-04078
Quick Gasket®:
ACC-11001-15-01
Yamaha bond No. 1215:
90890-85505

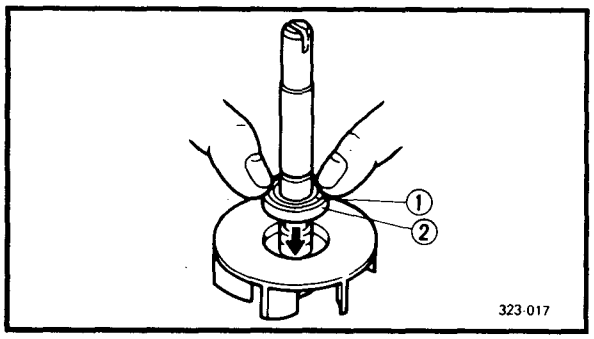

A Press

6.Apply:
- Tap water or coolant
  (to the outer surface of the damper rubber ①)

CAUTION:

Never apply oil or grease to the water pump seal surfaces.

7.Install:
- Damper rubber ①
- Rubber holder ②

⚠ WARNING

Always use a new damper rubber and rubber holder.

8.Measure:
- Tilt
  Out of specification → Repeat steps six and seven.

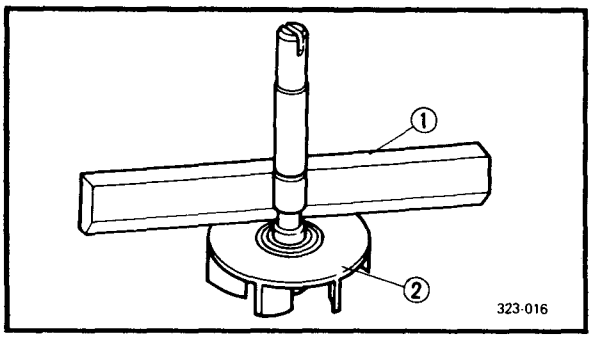

CAUTION:

Be sure the damper rubber and rubber holder fit squarely.

Tilt limit:
0.15 mm (0.006 in)

① Straight edge
② Impeller

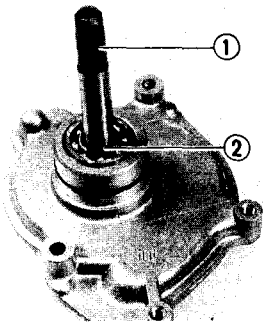

EB503020
INSTALLATION

Reverse the "REMOVAL" procedure.
Note the following points.

1.Install:
- Impeller shaft ①
- Circlip ②

NOTE:
Before installing the impeller shaft, apply tap water or coolant to the water pump seal, then apply lithium soap base grease to the bearing and oil seal.

CAUTION:
During installation, be sure not to scratch the water pump seal.

⚠ WARNING
Always use a new circlip.

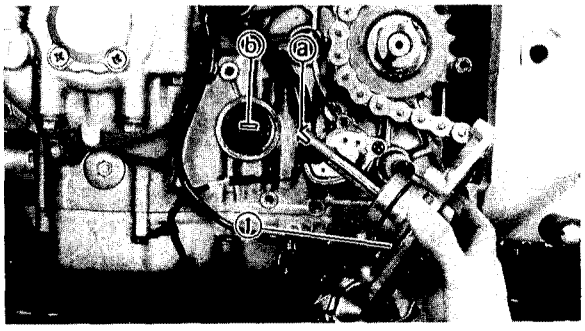

2.Install:
- Water pump housing ①

NOTE:
- Align the slot ⓐ on the impeller shaft with the projection ⓑ on the oil pump shaft.
- Apply a thin coat of grease onto the O-ring.

⚠ WARNING
Always use a new O-ring on the water pump housing.

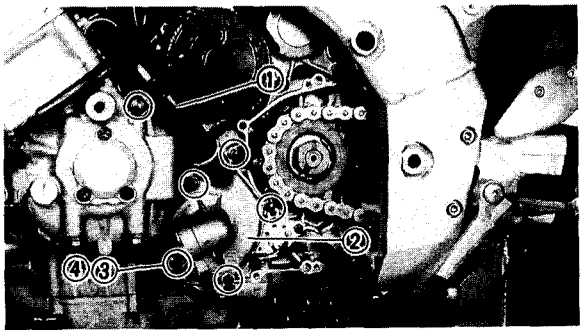

3.Install:
- O-ring
- Outlet pipe ①
  (to the water pump cover ②)
- Dowel pins
- O-ring
- Water pump cover ②

NOTE:
- Before installing the outlet pipe (water pump), apply grease onto the O-rings.
- Install a new copper washer ③ onto the coolant drain bolt ④.

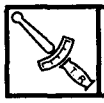	**Bolt (water pump cover): 10 Nm (1.0 m • kg, 7.2 ft • lb)**

⚠ WARNING
Always use new O-rings on the outlet pipe.

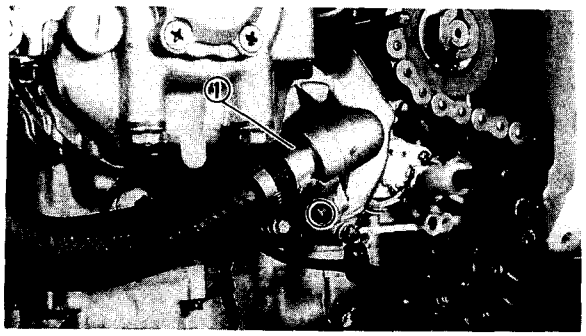

4.Install:
- O-ring
- Inlet pipe (water pump) ①

NOTE:
Before installing the inlet pipe (water pump), apply grease onto the O-ring.

⚠ WARNING
Always use a new O-ring.

	Bolt (inlet pipe): **10 Nm (1.0 m • kg, 7.2 ft • lb)**

5.Install:
- Drive sprocket cover
- Clutch release cylinder
- Shift pedal link

  Refer to "ENGINE ASSEMBLY AND ADJUSTMENT" in CHAPTER 4.

6.Fill:
- Cooling system

  Refer to "COOLANT REPLACEMENT" in CHAPTER 3.

7.Inspect:
- Cooling system

  Decrease in pressure (leaks) → Replace the oil cooler as required.
  Refer to "RADIATOR – INSTALLATION".

EB600000

CARBURETION

CARBURETORS

① Vacuum chamber cover
② Spring
③ Jet needle holder
④ Spring
⑤ Jet needle set
⑥ Throttle valve
⑦ Valve seat
⑧ Needle valve
⑨ Main jet
⑩ Pilot jet
⑪ Float
⑫ Float chamber
⑬ Starter plunger set
⑭ Throttle position sensor (TPS)

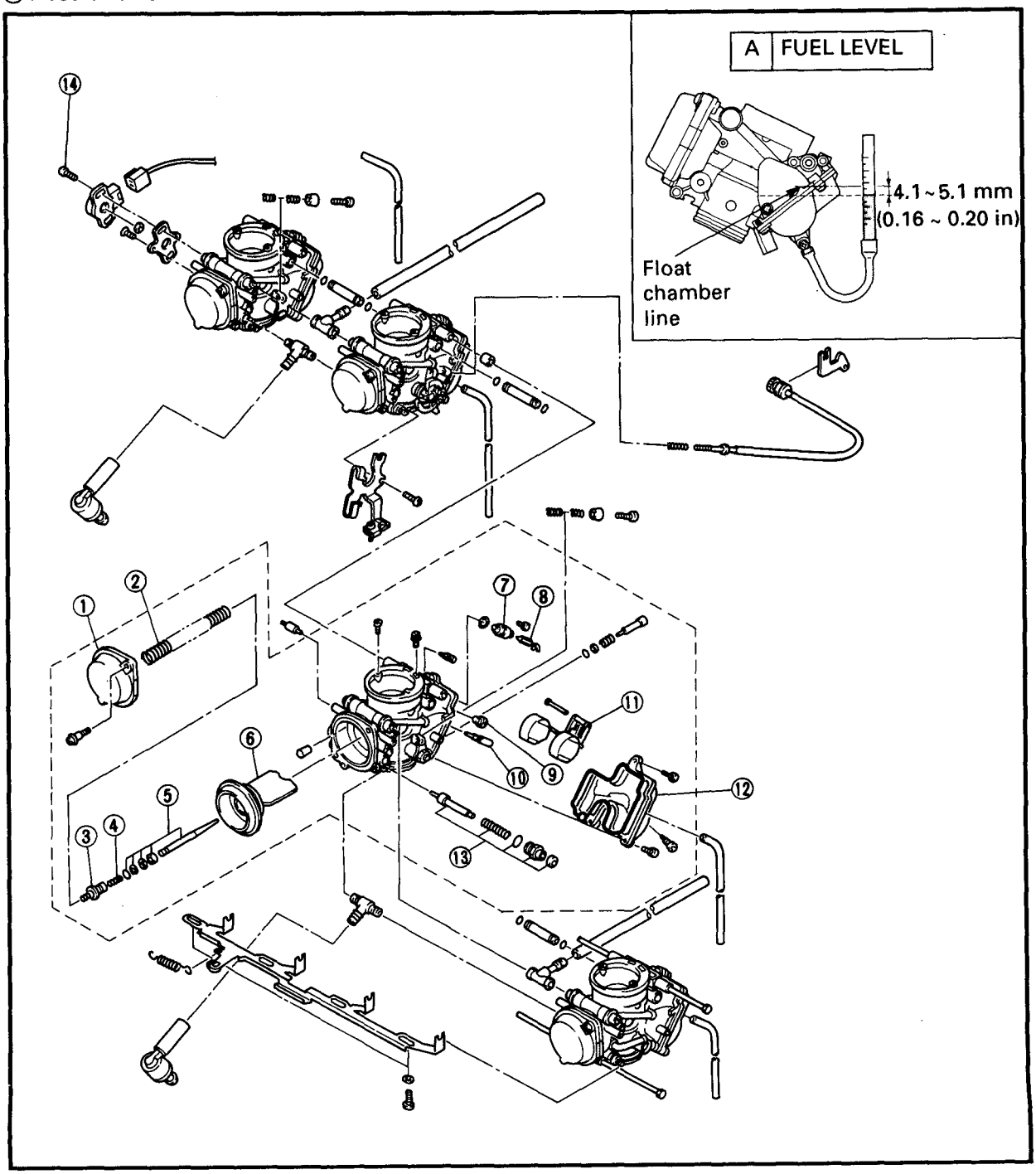

Specifications

Carburetor:		
I. D. mark		4YW 00 (YZF1000RJ) 4YW 10 (YZF1000RJC)
Main jet	(M.J)	#1,4:#127.5 #2,3:#125
Main air jet	(M.A.J)	#1,4:#60 #2,3:#45
Jet needle	(J.N)	6DJP15-53
Needle jet	(N.J)	P-0
Pilot air jet	(P.A.J.1)	#122.5
Pilot outlet	(P.O)	1.0
Pilot jet	(P.J)	#17.5
Bypass 1	(B.P.1)	0.8
Bypass 2	(B.P.2)	0.8
Bypass 3	(B.P.3)	0.8
Valve seat size	(V.S)	1.5
Starter jet	(G.S.1)	#30
Starter jet	(G.S.2)	0.8
Throttle valve size	(Th.V)	#105
Fuel level		4.1 ~ 5.1 mm (0.16 ~ 0.20 in)
IDLING CONDITION:		
Engine idle speed		1,050 ~ 1,150 r/min
Intake vacuum		20.3 ~ 30.7 kPa (190 ~ 230 mm Hg, 7.48 ~ 9.055 in Hg)
CO%		3.0 ~ 4.0%
Water temperature		80 ~ 85°C (176°F ~ 185°F)
Oil temperature		65 ~ 70°C (149°F ~ 158°F)

EB600010
REMOVAL

1.Remove:
- Rider seat
- Passenger seat
- Side panels (left and right)
- Fuel tank

  Refer to "SEATS" and "FUEL TANK" in CHAPTER 3.

2.Drain:
- Coolant

  Refer to "COOLANT REPLACEMENT" in CHAPTER 3.

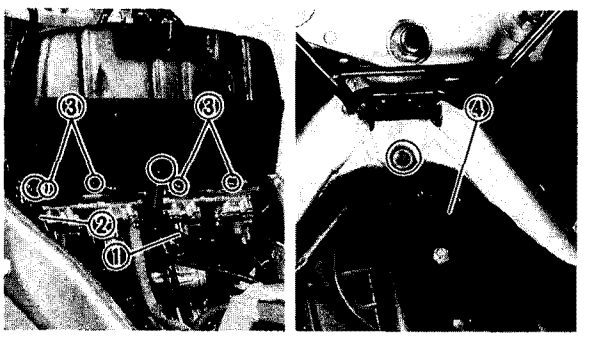

3.Disconnect:
- Breather hose (crankcase) ①
- Drain hose (air filter case) ②

4.Loosen:
- Clamp screws (carburetor joints) ③

5.Remove:
- Air filter case ④

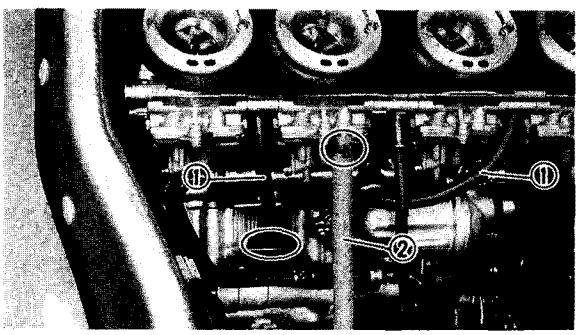

6.Disconnect:
- Breather hoses (carburetors) ①
- Fuel hose ②

⚠ WARNING

Gasoline is highly flammable.
Avoid spilling fuel onto a hot engine.

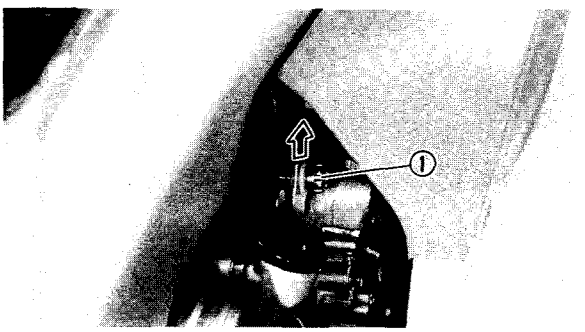

7.Remove:
- Throttle stop screw ①

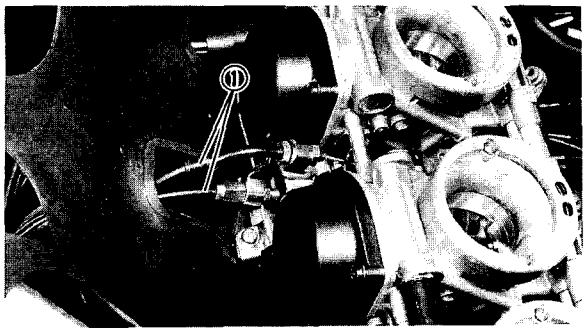

8.Fold back the baffle cover on the carburetor assembly.
9.Disconnect:
- Throttle cables ①

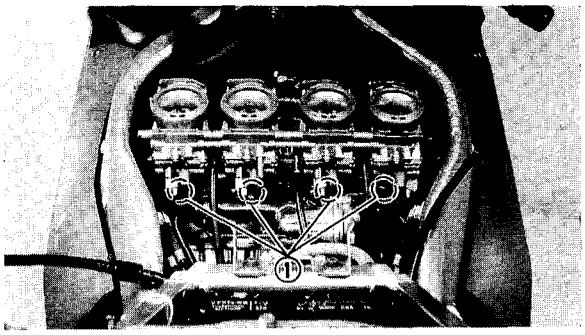

10.Loosen:
- Carburetor joint bolts ①

11.Pull out the carburetor assembly from the carburetor joints.

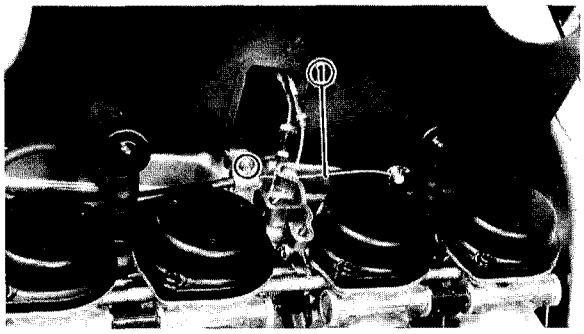

12.Disconnect:
- Starter cable ①

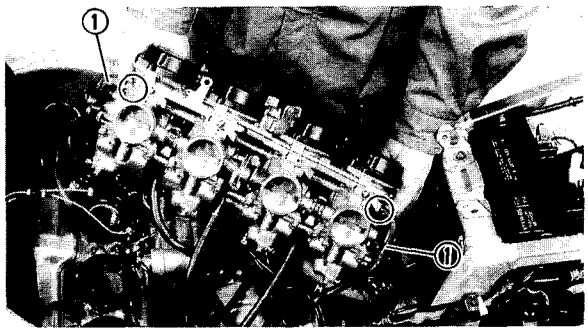

13.Disconnect:
- Carburetor heater hoses ①

14.Remove:
- Carburetor assembly

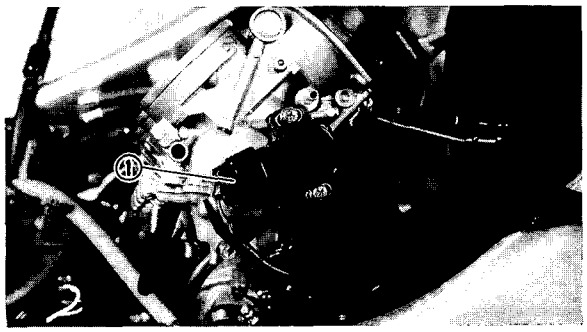

15.Disconnect:
- TPS coupler ①

EB600020
DISASSEMBLY

NOTE:
The following parts can be cleaned and inspected without disassembling the carburetors. (All inner parts except the starter plunger can be cleaned and inspected without separating the carburetors.)
- Throttle valve
- Piston valve
- All of the jets
- Float
- Needle valve
- Valve seat
- Main nozzle
- Jet needle

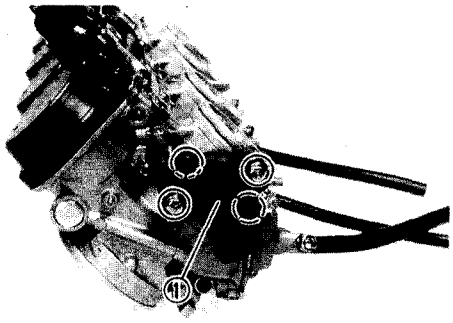

1.Remove:
- TPS ①
- TPS stay

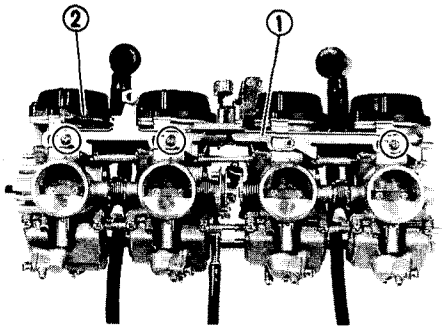

2.Remove:
- Starter joint ①
- Return spring ②

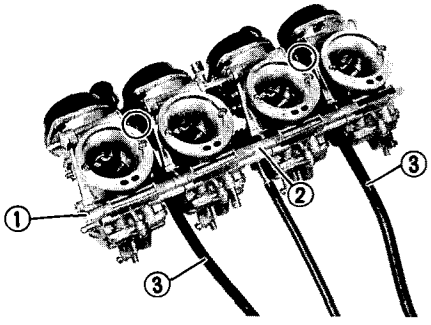

3.Remove:
- Connecting bolt (upper) ①
- Collar ②
- Breather hoses (carburetors) ③

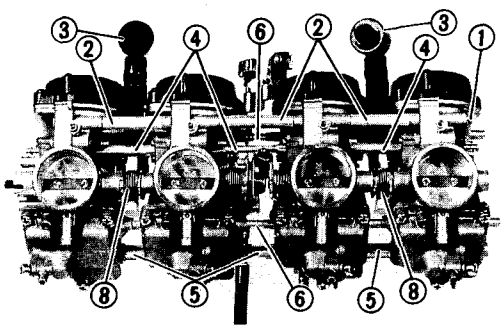

4.Remove:
- Connecting bolt (lower) ①
- Collars ②
- Joints (air vent hose-vacuum chamber) ③
- Joints (coolant feed) ④
  (with the O-rings)
- Joints (fuel feed) ⑤
  (with the O-rings)
- Joints ⑥
- Joints (carburetor breather) ⑦
- Springs ⑧
  (from between carburetors #1 and #2 and #3 and #4)

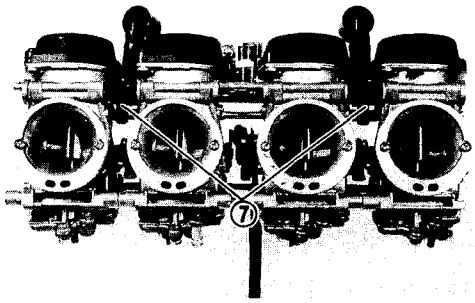

CAUTION:
Since the removed parts are defective, do not reuse them.

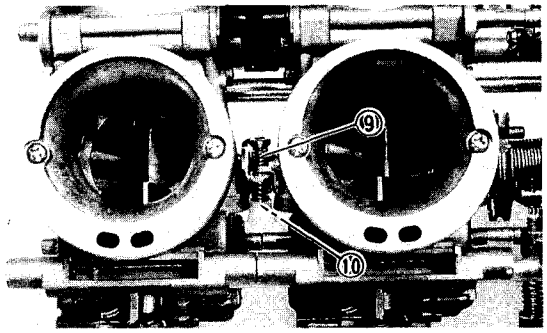

NOTE:
When separating the carburetors be careful not to lose the return spring ⑨ located under the synchronizing screw ⑩.

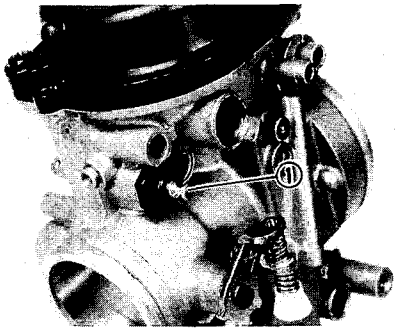

5.Remove:
- Starter plunger ①

NOTE:
Unhook the hooks from the carburetor body and then pull out the starter plunger.

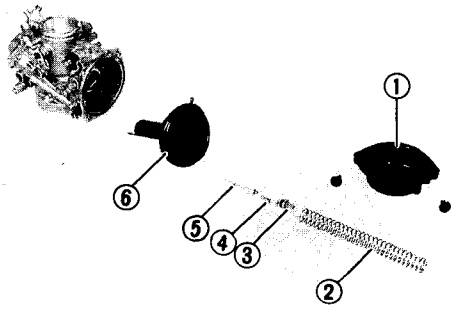

6.Remove:
- Vacuum chamber cover ①
- Spring ②
- Jet needle holder ③
- Spring ④
- Jet needle ⑤
- Throttle valve ⑥

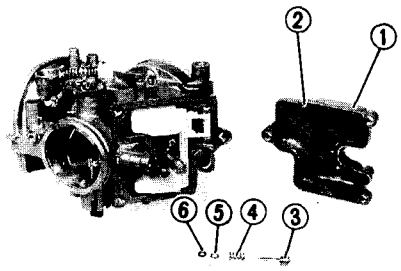

7.Remove:
- Float chamber ①
- Gasket ②
- Pilot screw ③
- Spring ④
- Washer ⑤
- O-ring ⑥

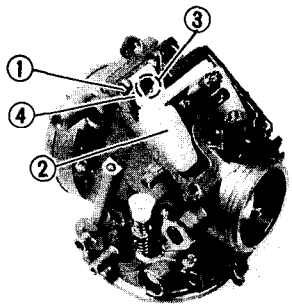

8.Remove:
- Float pin ①
- Float ②
- Needle valve ③
- Valve seat ④
- O-ring

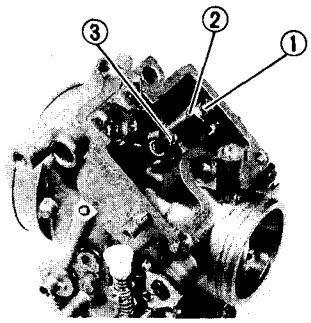

9.Remove:
- Main jet ①
- Main jet holder ②
- Pilot jet ③

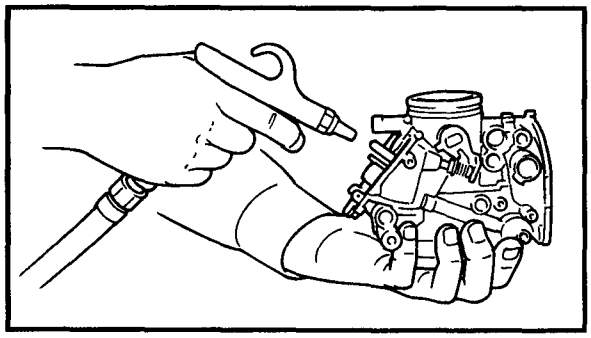

EB600030
INSPECTION

1.Inspect:
- Carburetor body
- Float chamber
- Jet housing
  Cracks/damage → Replace.
- Fuel passage
  Blockage → Clean as indicated.
- Carburetor float chamber body
  Contamination → Clean.

****

Cleaning steps:
- Wash the carburetor in a petroleum based solvent. (Do not use any caustic carburetor cleaning solution.)
- Blow out all of the passages and jets with compressed air.

****

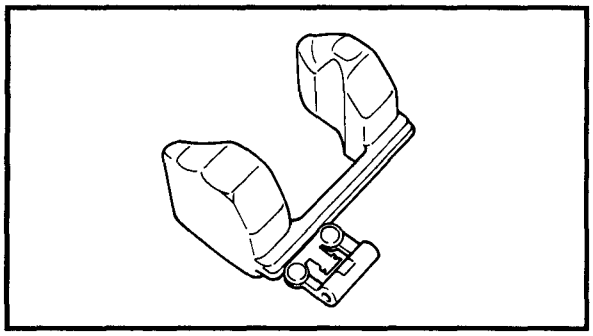

2.Inspect:
- Float
  Damage → Replace.

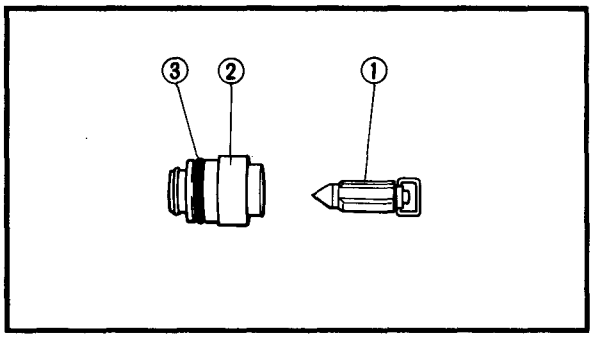

3.Inspect:
- Needle valve ①
- Valve seat ②
- O-ring ③
  Contamination/wear/damage → Replace as a set.

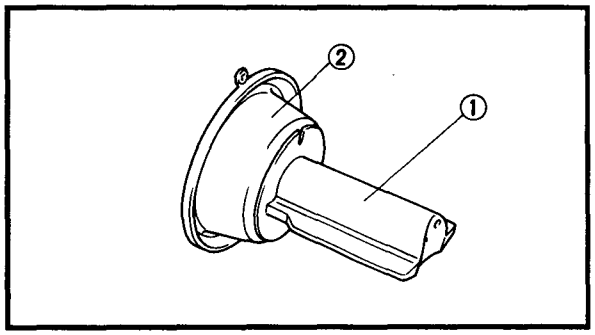

4.Inspect:
- Throttle valve ①
  Scratches/wear/damage → Replace.
- Rubber diaphragm ②
  Tears → Replace.

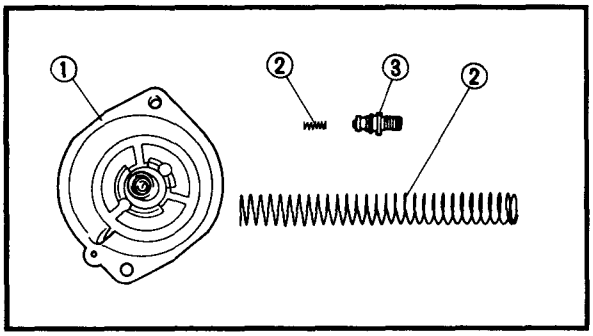

5.Inspect:
- Vacuum chamber cover ①
- Springs ②
- Jet needle holder ③
  Cracks/damage → Replace.

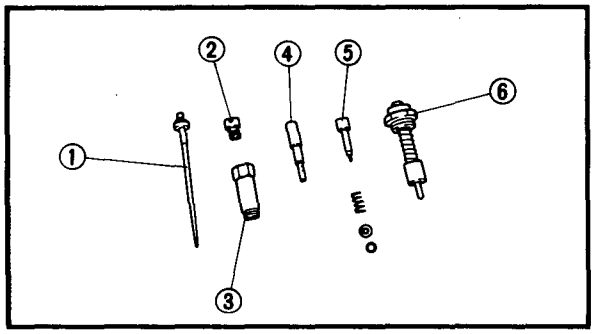

6.Inspect:
- Jet needle ①
- Main jet ②
- Main jet holder ③
- Pilot jet ④
- Pilot screw ⑤
- Starter plunger ⑥
  Bends/wear/damage → Replace.
  Blockage → Blow out the jets with compressed air.

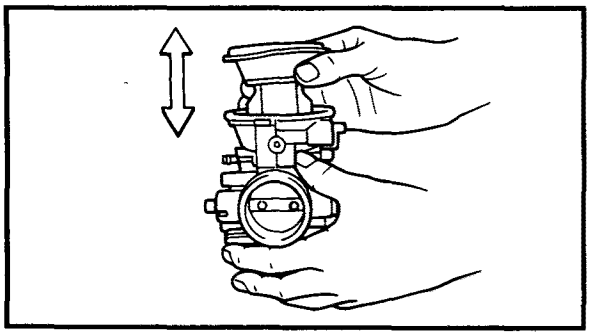

7.Check:
- Free movement
  Insert the throttle valve into the carburetor body and check for free movement.
  Sticks/tight → Replace.

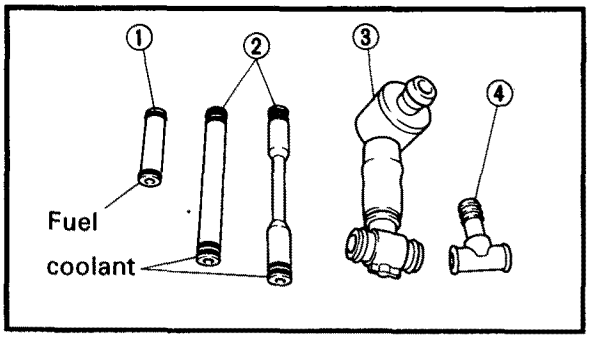

8.Inspect:
- Joints (fuel hose) ①
- Joints (coolant feed) ②
- Joints (air vent hose-vacuum chamber) ③
- Joints (carburetor breather hose) ④
  Cracks/damage → Replace.

EB600040
ASSEMBLY

Reverse the "DISASSEMBLY" procedure.
Note the following points.

CAUTION:
- **Before reassembling, wash all of the parts in a clean petroleum based solvent.**
- **Always use a new gasket.**

1.Install:
- O-ring
- Washer
- Spring
- Pilot screw

2.Install:
- Throttle valve ①
- Jet needle ②
- Spring ③
- Jet needle holder ④
- Spring ⑤
- Vacuum chamber cover ⑥

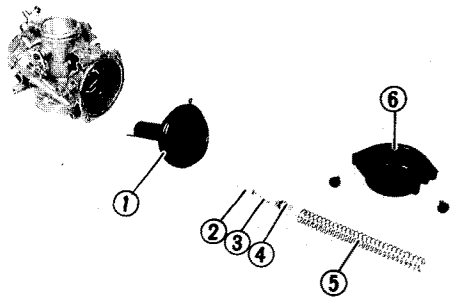

NOTE:
- Insert the spring end onto the spring guide on the vacuum chamber cover.
- Match the tab on the diaphragm to the recess in the carburetor body.

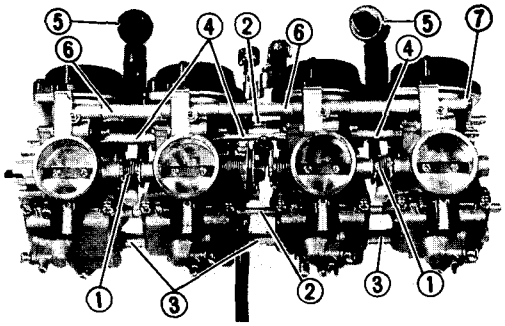

3.Install:
- Springs ①
  (between carburetors #1 and #2 and #3 and #4)
- Joints (carburetor breather)
- Joints ②
- Joints (fuel feed) ③
  (with the O-rings)
- Joints (coolant feed) ④
  (with the O-rings)
- Joints (air vent hose-vacuum chamber) ⑤
- Collars ⑥
- Connecting bolt (lower) ⑦
- Breather hoses (carburetors) ⑧
- Collar ⑨
- Connecting bolt (upper) ⑩

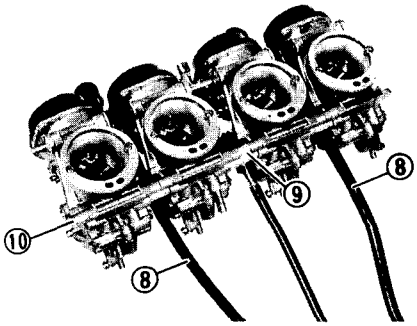

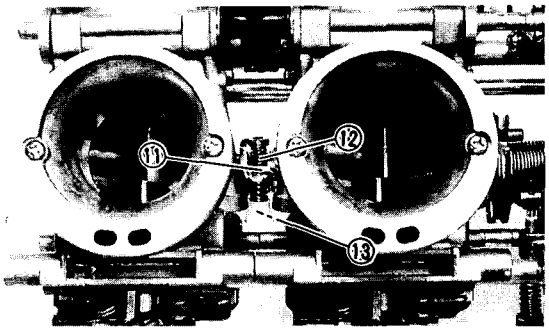

NOTE:
- Do not tighten the connecting bolts, yet.
- Insert the throttle arm ⑪ (onto carburetors #1, #2 and #4) between the spring ⑫ and synchronizing screw ⑬.

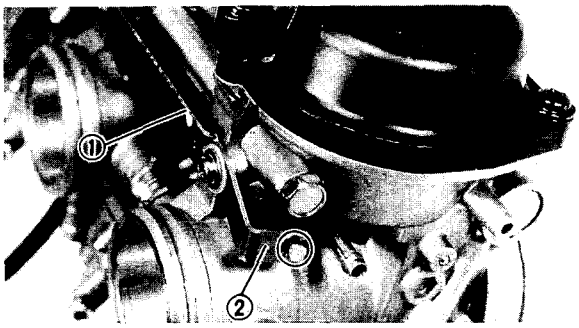

4.Install:
- Starter joint ①

NOTE:
Hook the starter joint arm ② onto each starter plunger.

5.Tighten:
- Connecting bolts

Connecting bolt (upper):
5 Nm (0.5 m • kg, 3.6 ft • lb)
Connecting plate (lower):
5 Nm (0.5 m • kg, 3.6 ft • lb)

NOTE:
- Place the carburetor assembly on a surface plate with the intake manifold side down and then tighten the connecting bolts while pushing down the respective carburetor with an even force.
- After tightening, check the throttle lever and starter joint for smooth action.

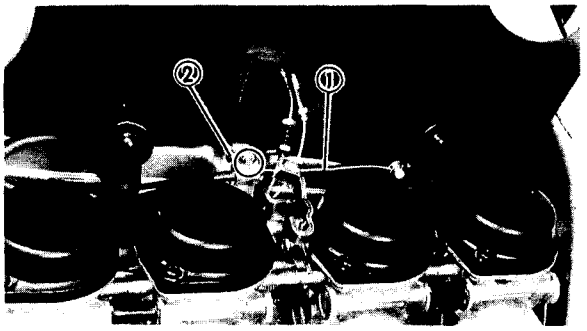

6.Install:
- Starter cable ①

NOTE:
Clamp the starter cable with the holder ②.

EB600050
INSTALLATION
Reverse the "REMOVAL" procedure.
Note the following points.

1.Fill:
- Cooling system
  Refer to "COOLANT REPLACEMENT" in CHAPTER 3.

2.Adjust:
- Carburetor synchronization
  Refer to "CARBURETOR SYNCHRONIZATION" in CHAPTER 3.

3.Adjust:
- Idling speed

	Engine idling speed: **1,050 ~ 1,150 r/min**

Refer to "IDLING SPEED ADJUSTMENT" in CHAPTER 3.

4.Adjust:
- Throttle cable free play

	Throttle cable free play: **3 ~ 7 mm (0.12 ~ 0.28 in)** **(at the throttle grip flange)**

Refer to "THROTTLE CABLE ADJUSTMENT" in CHAPTER 3.

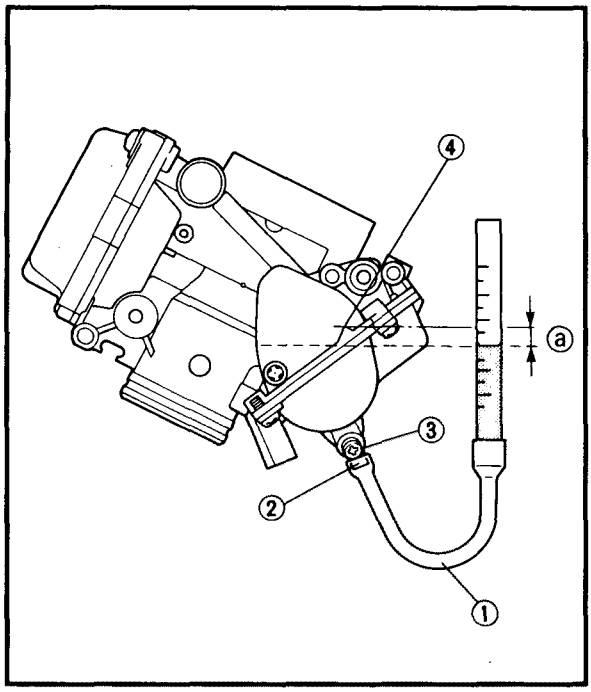

EB600061
FUEL LEVEL ADJUSTMENT

1.Measure:
- Fuel level ⓐ
  Out of specification → Adjust.

Fuel level:
4.1 ~ 5.1 mm (0.16 ~ 0.20 in)
(below the carburetor body line)

****

Measurement and adjustment steps:
- Place the motorcycle on a level surface.
- Put the motorcycle on a suitable stand to ensure that the carburetors are positioned vertically.
- Connect the fuel level gauge ① to the drain pipe ②.

Fuel level gauge:
YM-01312-A/90890-01312

- Loosen the drain screw ③.
- Hold the gauge vertically next to the float chamber line ④.
- Measure the fuel level ⓐ with the gauge.

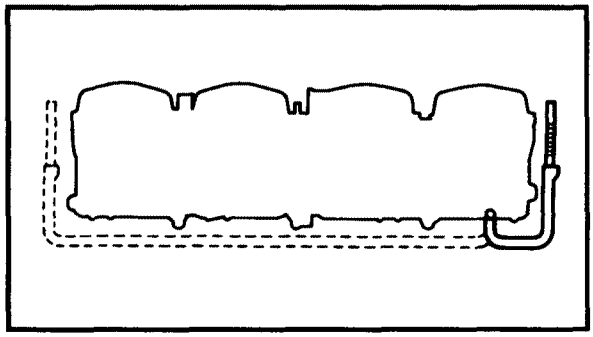

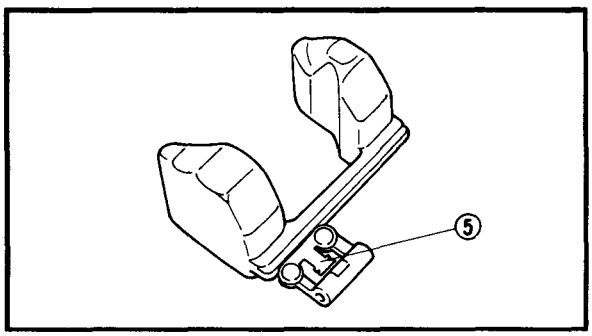

NOTE:
Fuel level readings should be equal on both sides of the carburetor assembly.

- If the fuel level is incorrect, adjust it.
- Remove the carburetor assembly.
- Inspect the valve seat and needle valve.
- If either is worn, replace them both.
- If both are fine, adjust the float level by slightly bending the float tang ⑤.
- Install the carburetor assembly.
- Check the fuel level again.

****

EB600070

THROTTLE POSITION SENSOR (TPS) ADJUSTMENT AND INSPECTION

NOTE:
- Before adjusting the TPS, idling speed should be adjusted properly.
- When installing the TPS, observe the display on the tachometer and adjust the angle accordingly. Refer to the adjustment procedure below.

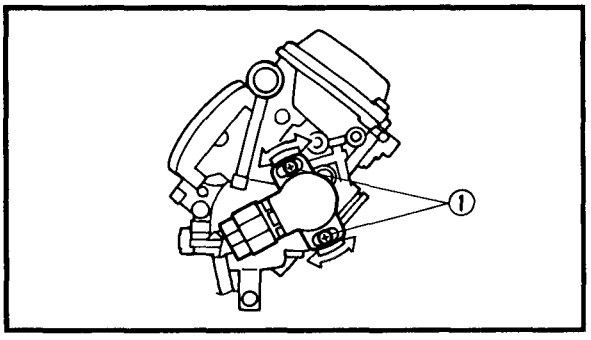

1.Adjust:
- TPS position

****

Adjustment steps:
- Turn the main switch to "ON".
- Disconnect the TPS coupler.
- Reconnect the TPS coupler.

NOTE:
When the above procedure is completed, the machine switches to the TPS adjustment mode.

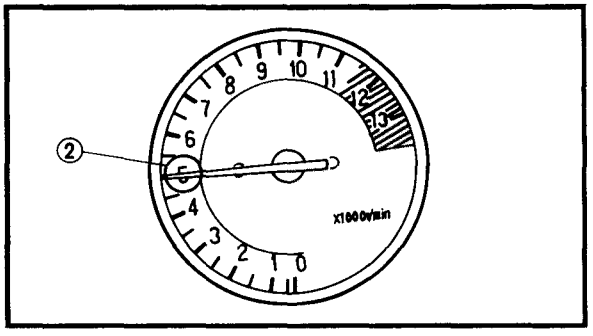

- Loosen the TPS screws ①.
- Adjust the TPS position.

NOTE:
The angle of the TPS is shown on the tachometer.

- Properly adjust the angle of the TPS, as shown below.

When the angle is correct, the tachometer reads 5,000 rpm ②.
When the angle is too wide, the tachometer reads 10,000 rpm.
When the angle is too narrow, the tachometer reads 0 rpm.

- After adjusting the angle, tighten the TPS screws.

NOTE:
To return to the normal mode, start the engine or reset the main switch.

****

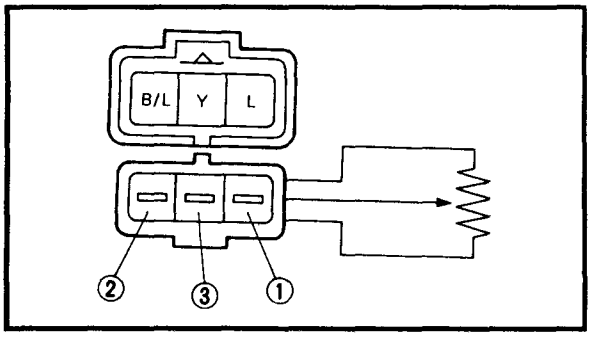

2.Inspect:
- Throttle position sensor

****

Inspection steps:
- Disconnect the throttle position sensor coupler.
- Remove the throttle position sensor from the carburetors.
- Connect the pocket tester (Ω × 1k) to the throttle position sensor coupler.

Tester (+) lead → Blue terminal ①
Tester (–) lead → Black/Blue terminal ②

- Check the throttle position sensor resistance.

TPS resistance:
4.0 ~ 6.0 kΩ at 20°C (68°F)
(Blue — Black/blue)

Out of specification → Replace the throttle position sensor.

- Connect the pocket tester (Ω × 1k) to the throttle position sensor coupler.

Tester (+) lead → Yellow terminal ③
Tester (–) lead → Black/Blue terminal ②

- While slowly turning the throttle, check the throttle position sensor resistance.

Throttle position sensor resistance:
0 ~ 5 ± 1.0 kΩ at 20°C (68°F)
(Yellow — Black/blue)

Out of specification → Replace the throttle position sensor.

****

EB700000

CHASSIS

FRONT WHEEL

① Collar
② Oil seal
③ Bearing
④ Spacer
⑤ Meter clutch
⑥ Clutch retainer
⑦ Speedometer gear unit

TIRE PRESSURE (COLD)		
Maximum load*	196 kg (432 lb) (YZF1000RJ) 195 kg (430 lb) (YZF1000RJC)	
Cold tire pressure:	Front	Rear
Up to 90 kg (198 lb) load*	250 kPa (2.5 kg/cm^2, 36 psi)	250 kPa (2.5 kg/cm^2, 36 psi)
90 kg (198 lb) load ~ Maximum load*	290 kPa (2.9 kg/cm^2, 41 psi)	290 kPa (2.9 kg/cm^2, 41 psi)
High speed riding	290 kPa (2.9 kg/cm^2, 41 psi)	290 kPa (2.9 kg/cm^2, 41 psi)

* Load is the total weight of cargo, rider, passenger, and accessories.

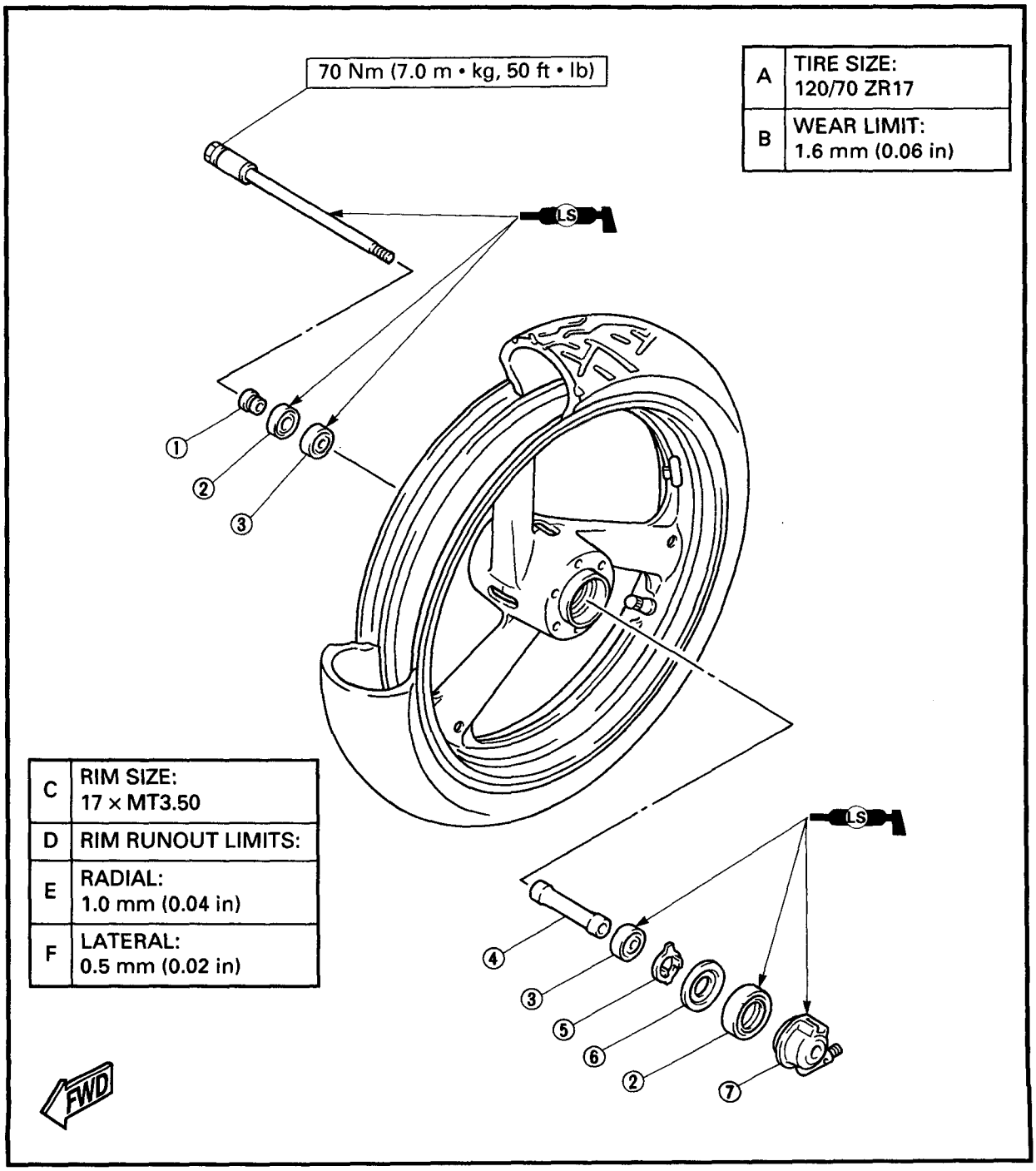

A	TIRE SIZE: 120/70 ZR17
B	WEAR LIMIT: 1.6 mm (0.06 in)

C	RIM SIZE: 17 × MT3.50
D	RIM RUNOUT LIMITS:
E	RADIAL: 1.0 mm (0.04 in)
F	LATERAL: 0.5 mm (0.02 in)

EB700010
REMOVAL

⚠ WARNING

Securely support the motorcycle so there is no danger of it falling over.

1.Stand the motorcycle on a level surface.
2.Remove:
- Bottom cowling (front)
- Bottom cowling
  Refer to "COWLINGS" in CHAPTER 3.
3.Disconnect:
- Speedometer cable ①
4.Remove:
- Nuts (brake hose holders) ②
- Front brake calipers (left and right) ③

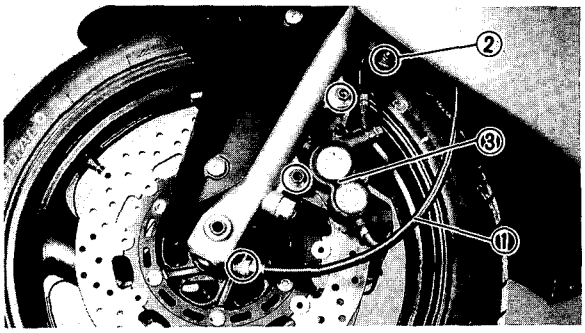

NOTE:
Do not depress the brake lever when removing the front brake caliper(s).

5.Loosen:
- Pinch bolt (front wheel axle) ①
- Front wheel axle ②

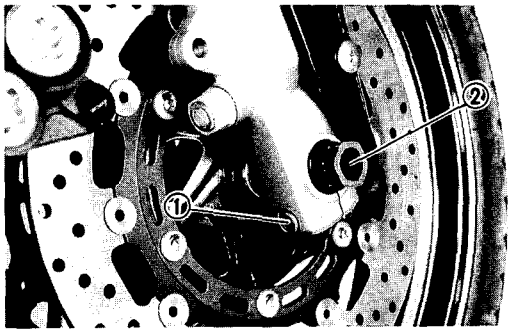

6.Elevate:
- Front wheel
  (place a suitable stand under the engine)
7.Remove:
- Front wheel axle
- Front wheel

8.Remove:
- Collar (right) ①
- Speedometer gear unit ②

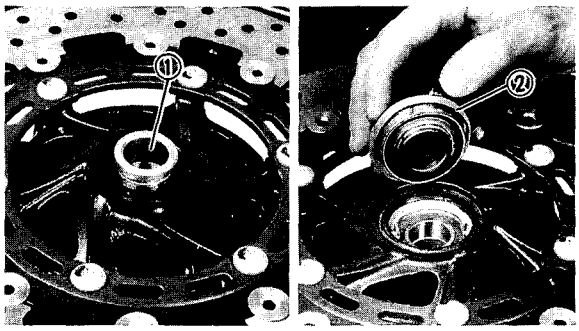

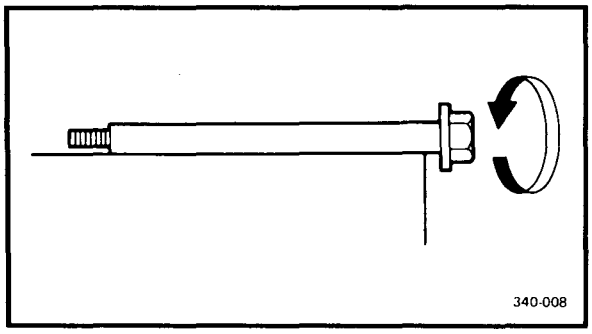

EB700020
INSPECTION

1.Inspect:
- Front wheel axle
  (by rolling it on a flat surface)
  Bends → Replace.

⚠ WARNING

Do not attempt to straighten a bent axle.

2.Inspect:
- Front tire
  Wear/damage → Replace.
- Front wheel
  Refer to "WHEEL INSPECTION" in CHAPTER 3.

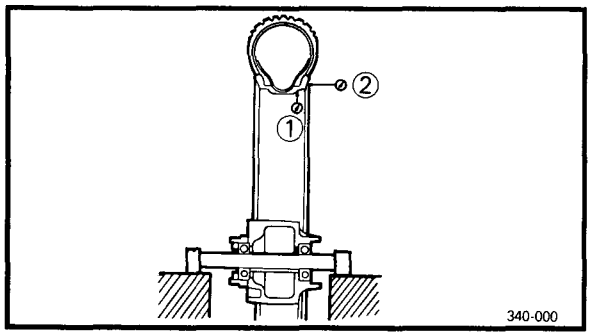

3.Measure:
- Front wheel runout
  Over the specified limits → Replace.

Front wheel runout limits:
Radial ①: 1.0 mm (0.04 in)
Lateral ②: 0.5 mm (0.02 in)

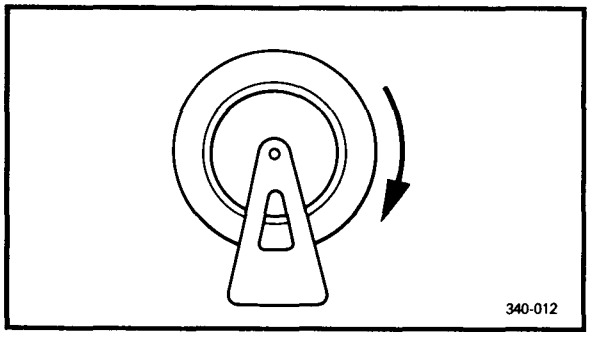

4.Inspect:
- Front wheel bearings
  Bearings allow free play in the wheel hub or the wheel does not turn smoothly → Replace.
- Oil seals
  Wear/damage → Replace.

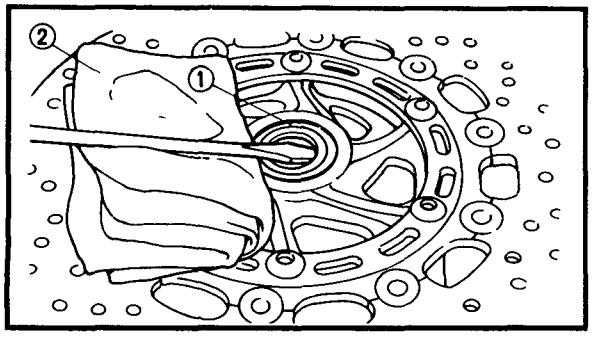

****

Front wheel bearing and oil seal replacement steps:
- Clean the outside of the front wheel hub.
- Use a flat-head screwdriver to remove the oil seals ①.

NOTE:
To prevent damage place a rag ② between the screwdriver and the wheel surface.

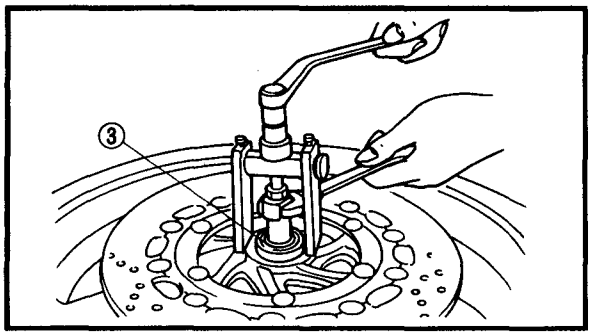

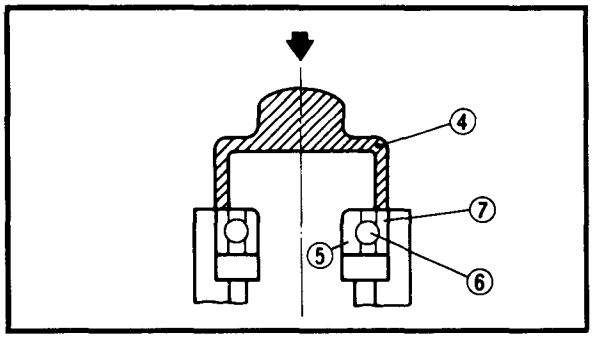

- Use a standard bearing puller to remove the bearings ③.
- Install the new bearings and oil seals by reversing the previous steps.

NOTE:
Use a socket ④ that matches the diameter of the bearing outside race and the oil seal.

CAUTION:
Do not contact the bearing center race ⑤ or balls ⑥. Contact should be made only with the outer race ⑦.

****

EB700030
INSTALLATION

Reverse the "REMOVAL" procedure.
Note the following points.

1.Lubricate:
- Front wheel axle
- Bearings
- Oil seal (lips)
- Drive/driven gear (speedometer)

	Recommended lubricant: Lithium soap base grease

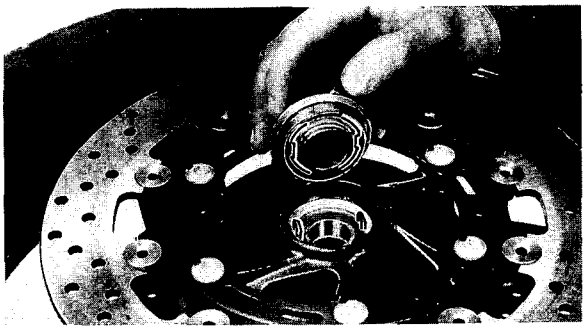

2.Install:
- Speedometer gear unit

NOTE:
Make sure that the wheel hub and the speedometer gear unit are installed with the two projections meshed into the two slots.

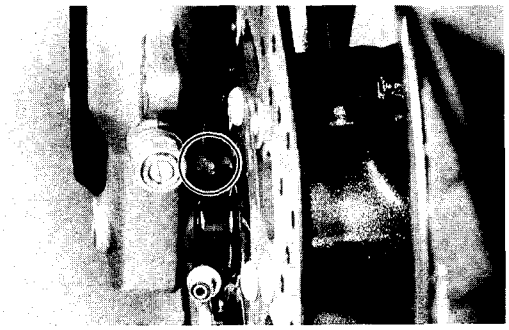

3.Install:
- Front wheel

NOTE:
Make sure that the slot in the speedometer gear unit fits over the stopper on the front fork outer tube.

4.Tighten:
- Front wheel axle
- Pinch bolt (front wheel axle)
- Bolts (brake calipers)

Front wheel axle:
70 Nm (7.0 m • kg, 50 ft • lb)
Pinch bolt (front wheel axle):
23 Nm (2.3 m • kg, 17 ft • lb)
Bolt (brake caliper):
40 Nm (4.0 m • kg, 29 ft • lb)

CAUTION:
Before tightening the pinch bolt, stroke the front fork several times to check for proper fork operation.

⚠ WARNING
Make sure that the brake hose is routed properly.

EB700040
FRONT WHEEL STATIC BALANCE ADJUSTMENT

NOTE:
- After replacing the tire and/or rim, the front wheel static balance should be adjusted.
- Adjust the front wheel static balance with the brake disc installed.

1.Remove:
- Balancing weight

2.Set:
- Front wheel
  (on a suitable stand)

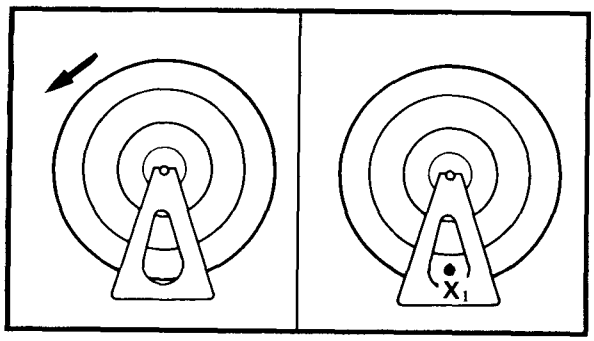

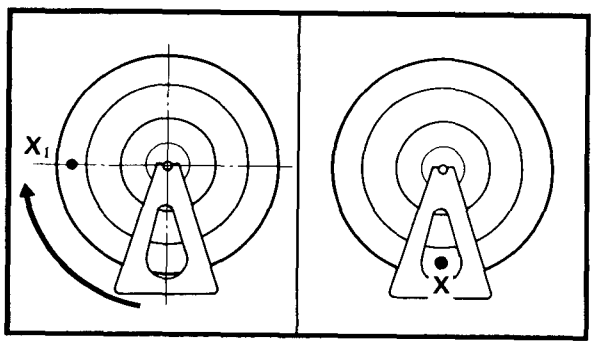

3.Find:
- Heavy spot

****

Procedure:

a.Spin the wheel and wait for it to rest.
b.Put an "X_1" mark on the wheel's bottom spot.
c.Turn the wheel so that the "X_1" mark is facing 90° up.
d.Release the wheel and wait for it to rest. Put an "X_2" mark on the wheel's bottom spot.
e.Repeat steps b, c, and d several times until all the marks come to rest at the same spot.
f. This is the wheel's heavy spot "X".

****

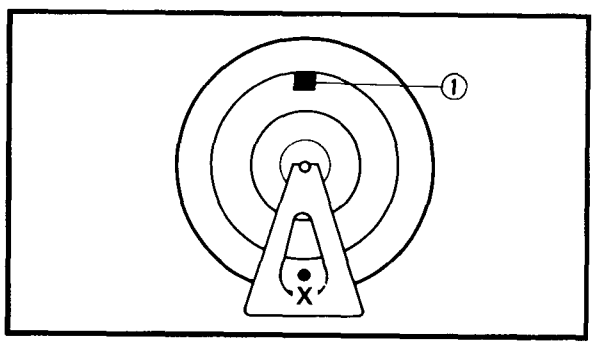

4.Adjust:
- Front wheel static balance

****

Adjusting steps:

- Install a balancing weight ① onto the rim exactly opposite to the heavy spot "X".

NOTE:
Start with the smallest weight.

- Turn the wheel so that the heavy spot is 90° up.
- Check that the heavy spot is at rest there. If not, try another weight until the wheel is balanced.

****

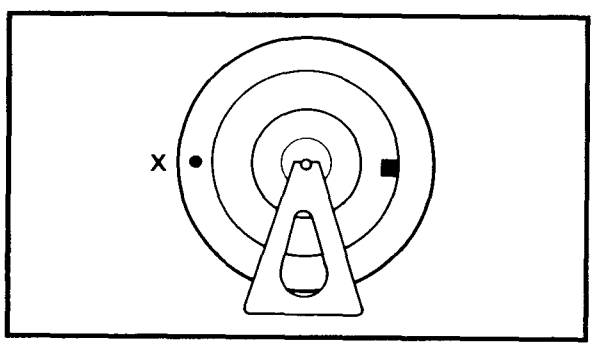

5.Check:
- Front wheel static balance

****

Checking steps:

- Turn the wheel so that it comes to each point, as shown in the illustration.
- Check that the wheel is at rest at each point. If not, readjust the front wheel static balance.

****

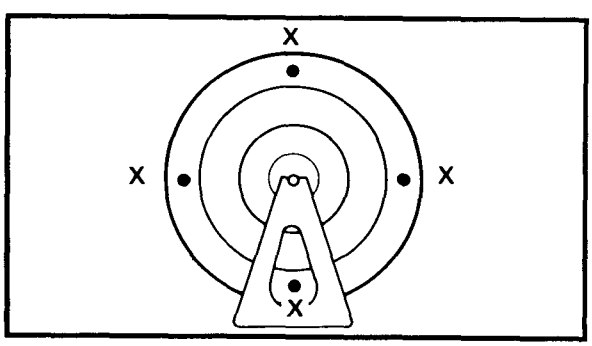

EB701000
REAR WHEEL

① Collar
② Oil seal
③ Bearing
④ Spacer
⑤ Rear wheel axle
⑥ Damper rubber

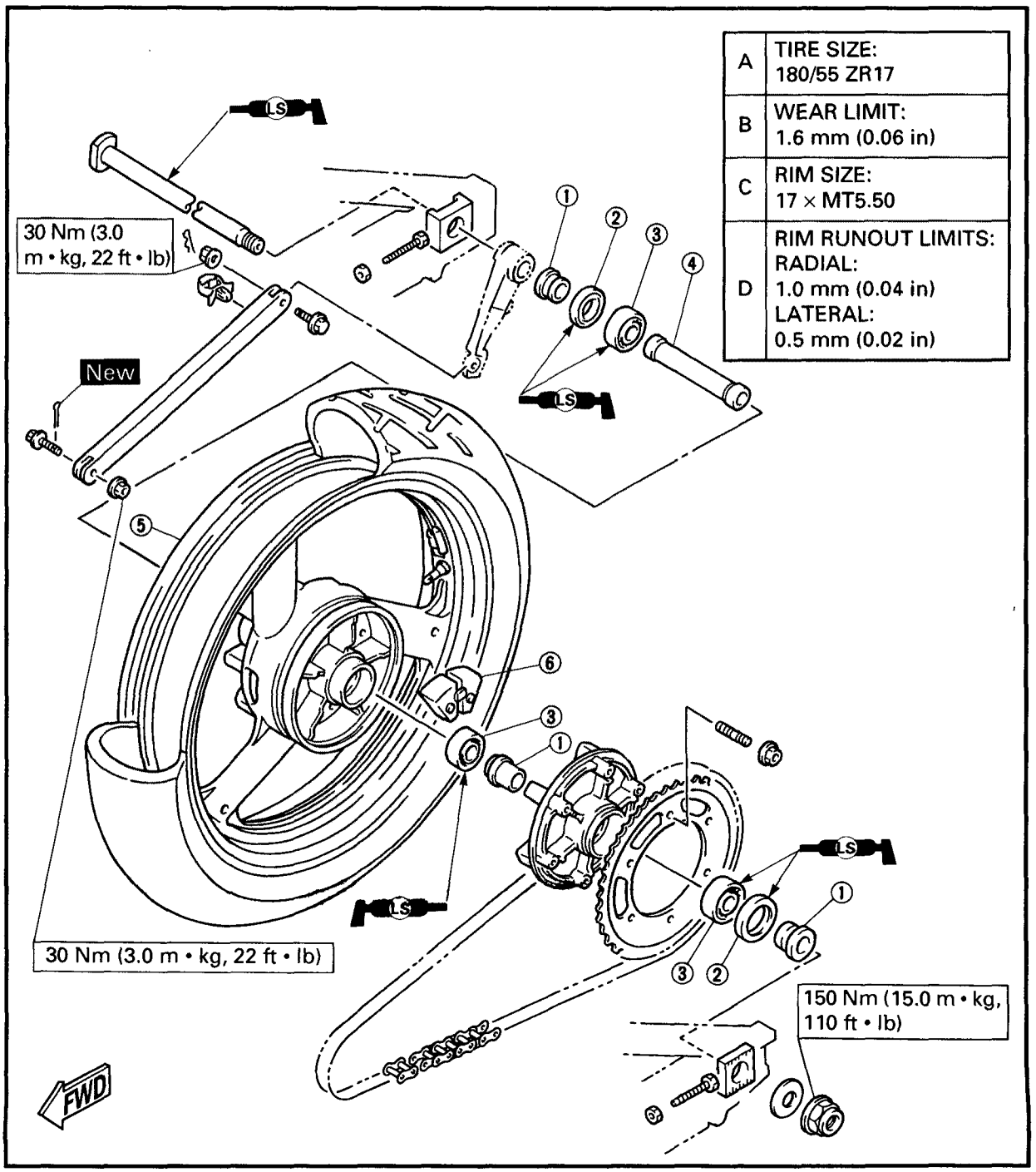

EB701011
REMOVAL

WARNING

Securely support the motorcycle so there is no danger of it falling over.

1.Stand the motorcycle on a level surface.
2.Place the motorcycle on a suitable stand.

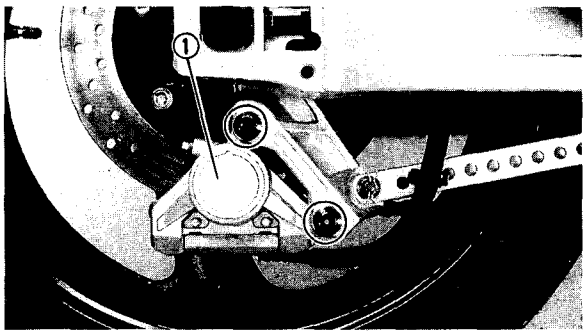

3.Remove:
- Rear brake caliper ①

NOTE:
Do not depress the brake pedal when removing the rear brake caliper.

CAUTION:

Be careful that the rubber grommet does not come out of the brake hose holder on the inside of the swingarm.

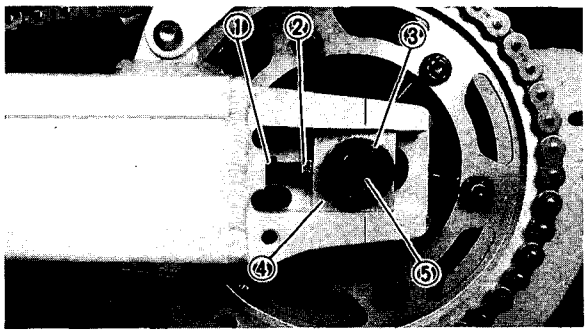

4.Loosen:
- Locknut ①
- Adjuster ②

5.Remove:
- Nut (rear wheel axle) ③
- Washer
- Adjuster collar (left) ④
- Rear wheel axle ⑤
- Adjuster collar (right)
- Rear wheel

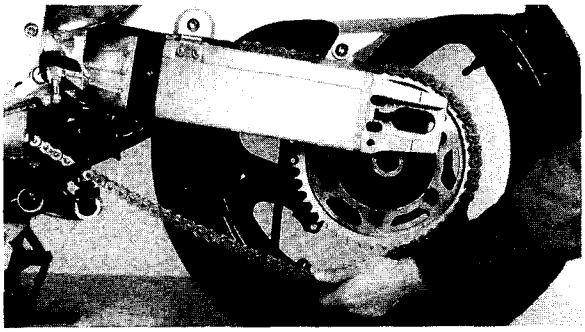

NOTE:
Push the rear wheel forward and disconnect the drive chain from the rear sprocket.

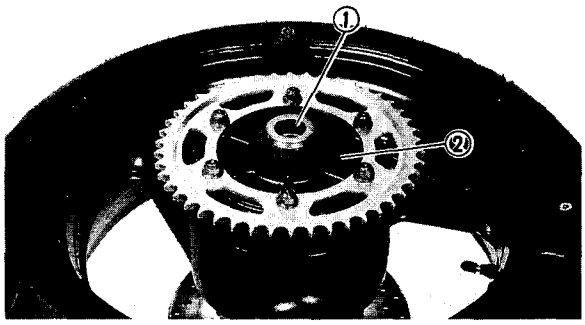

6.Remove:
- Collar (left) ①
- Sprocket hub ②
- Damper rubber
- Collar (right)

EB701020
INSPECTION

1.Inspect:
- Rear wheel axle
- Rear wheel
- Rear wheel bearings
- Oil seals

Refer to "FRONT WHEEL".

2.Measure:
- Rear wheel runout

Refer to "FRONT WHEEL".

EB701030
INSTALLATION

Reverse the "REMOVAL" procedure.
Note the following points.

1.Lubricate:
- Rear wheel axle
- Rear wheel bearings
- Oil seals

Recommended lubricant:
Lithium soap base grease

2.Adjust:
- Drive chain slack

Drive chain slack:
20 ~ 35 mm (0.8 ~ 1.4 in)

3.Tighten:
- Rear wheel axle nut
- Bolts (rear brake caliper)

Nut (rear wheel axle):
150 Nm (15.0 m • kg, 110 ft • lb)
Bolt (rear brake caliper):
40 Nm (4.0 m • kg, 29 ft • lb)

EB701040
REAR WHEEL STATIC BALANCE ADJUSTMENT

NOTE:
- After replacing the tire and/or wheel, the static wheel balance should be adjusted.
- Adjust the static wheel balance with the rear brake disc and hub installed.

1.Adjust:
- Rear wheel static balance

Refer to "FRONT WHEEL".

EB702000

FRONT AND REAR BRAKES

FRONT BRAKE

① Brake reservoir cap
② Holder (diaphragm)
③ Diaphragm
④ Brake reservoir
⑤ Brake reservoir hose
⑥ Master cylinder assembly
⑦ Master cylinder kit
⑧ Master cylinder
⑨ Front brake switch
⑩ Brake hose
⑪ Copper washer
⑫ Brake caliper
⑬ Brake pad spring
⑭ Bleed screw
⑮ Caliper piston
⑯ Brake caliper piston seal
⑰ Brake pad
⑱ Brake disc

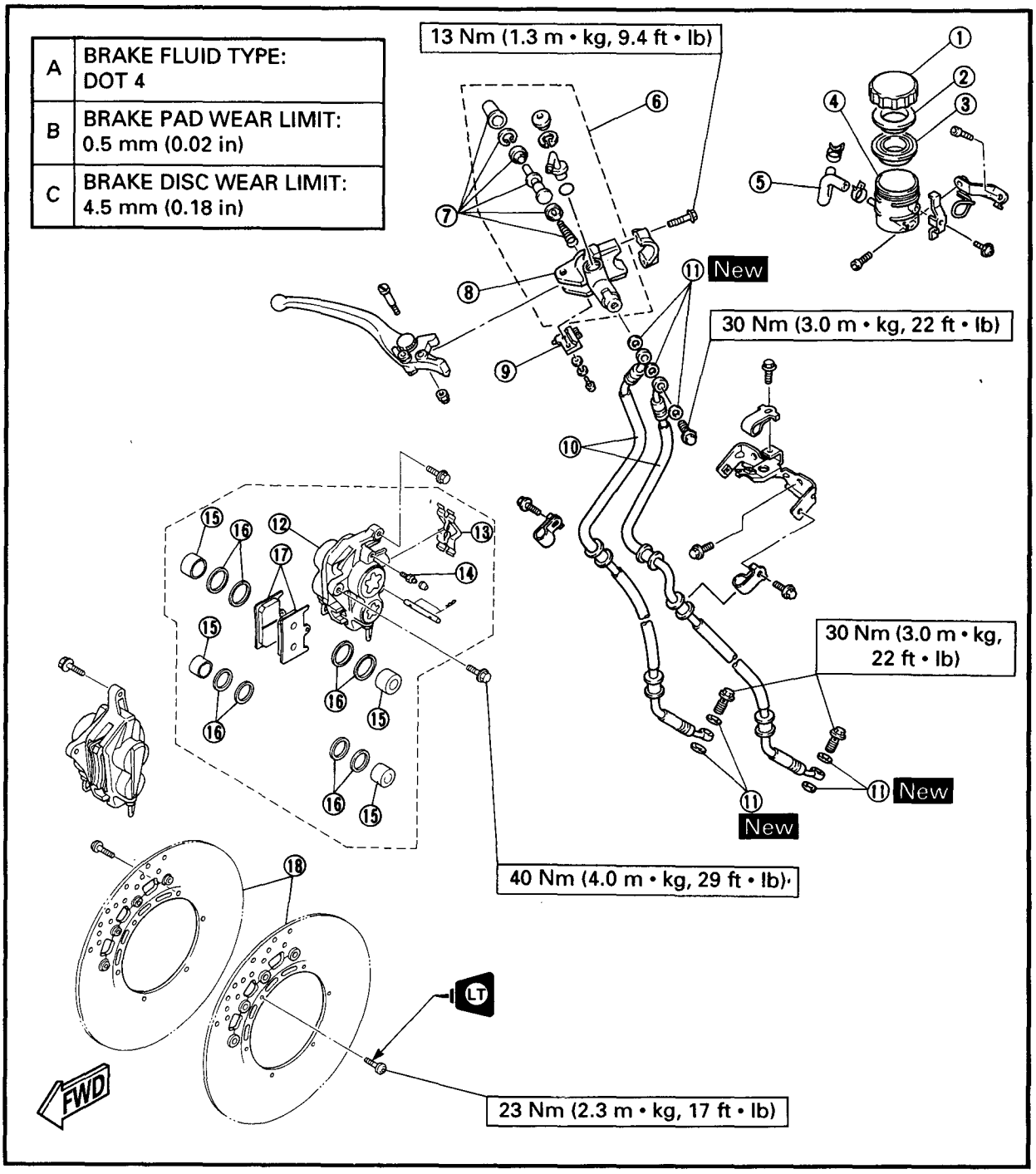

REAR BRAKE

① Brake reservoir cap
② Holder (diaphragm)
③ Diaphragm
④ Reservoir tank
⑤ Reservoir hose
⑥ Copper washer
⑦ Brake hose
⑧ Master cylinder
⑨ Master cylinder cup kit
⑩ Brake pedal
⑪ Caliper bracket
⑫ Brake disc
⑬ Piston
⑭ Piston seal
⑮ Brake pad
⑯ Brake pad shim
⑰ Brake caliper
⑱ Brake pad spring
⑲ Brake pad cover

E The longer tangs (*) of the pad spring must point in the disc rotating direction.
F The arrow mark ⓐ on the pad shim must point in the disc rotating direction.

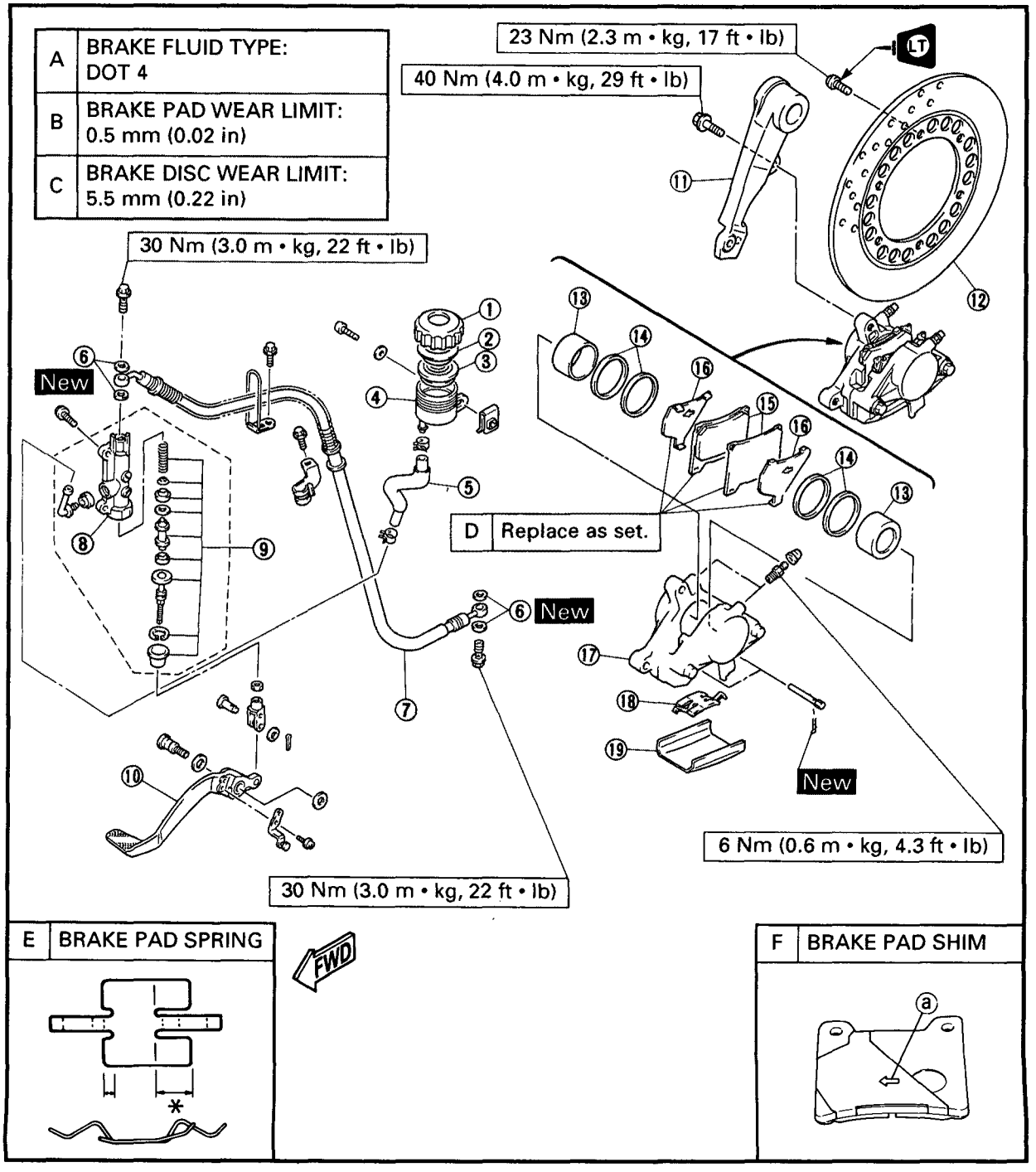

EB702001

CAUTION:

Disc brake components rarely require disassembly. DO NOT:

- **Disassemble components unless absolutely necessary.**
- **Use solvents on internal brake components.**
- **Use spent brake fluid for cleaning (use only clean brake fluid).**
- ***Allow brake fluid to come into contact* with the eyes, as this may cause eye injury.**
- ***Splash brake fluid onto painted surfaces* or plastic parts, as this may cause damage.**
- ***Disconnect any hydraulic connection, as* this would require the entire brake system to be disassembled, drained, *cleaned, properly filled and bled after* reassembly.**

EB702012

BRAKE PAD REPLACEMENT

NOTE:

When replacing the brake pads it is not necessary to disassemble the brake caliper and brake hose.

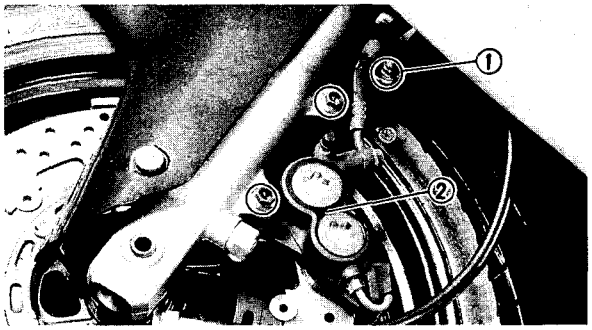

Front brake

1.Remove:

- Nut (brake hose holder) ①
- Brake caliper ②

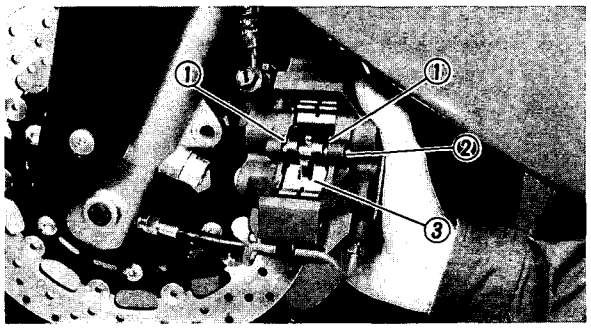

2.Remove:

- Retaining clips ①
- Retaining pin ②
- Brake pad spring ③

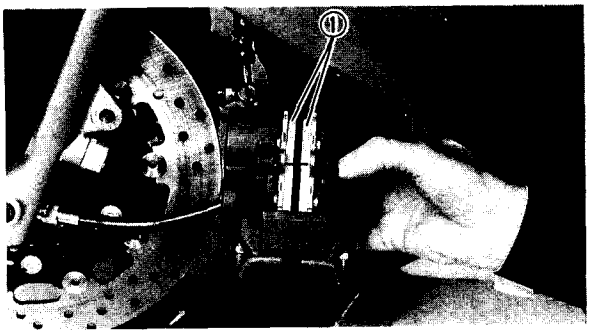

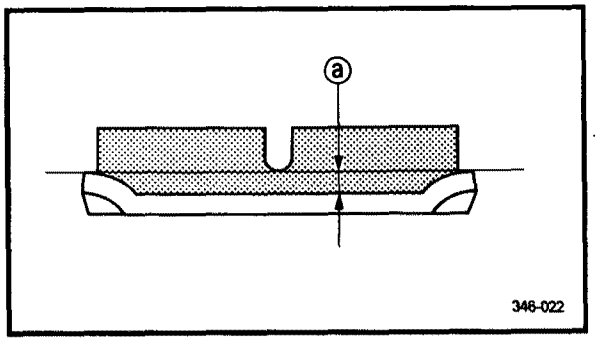

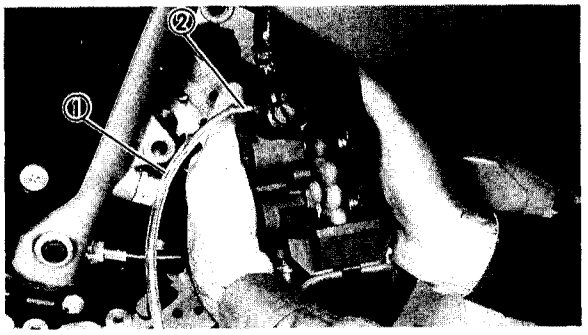

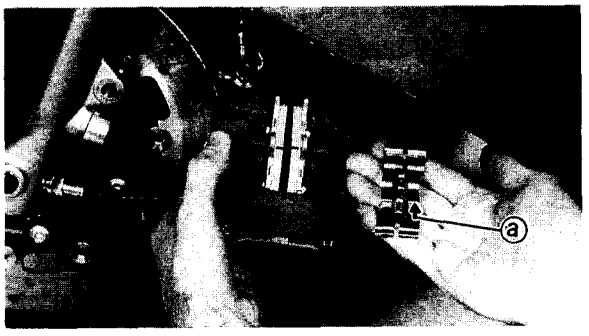

3.Remove:
- Brake pads ①
  (with the brake pad shims)

NOTE:
- When replacing the brake pads install a new brake pad spring and new brake pad shims.
- Replace the brake pads as a set if either is found to be worn to the wear limit ⓐ.

Brake pad wear limit:
0.5 mm (0.02 in)

4.Install:
- Brake pad shims
  (onto the brake pads)
- Brake pads
- Brake pad spring

****

Installation steps:
- Connect a suitable hose ① tightly to the brake caliper bleed screw ②. Put the other end of the hose into an open container.
- Loosen the brake caliper bleed screw and use a finger to push the caliper pistons into the brake caliper.
- Tighten the brake caliper bleed screw ②.

Brake caliper bleed screw:
6 Nm (0.6 m • kg, 4.3 ft • lb)

- Install new brake pad shims onto the new brake pads.
- Install new brake pads and a new brake pad spring.

NOTE:
The arrow mark ⓐ on the brake pad spring must point in the direction of disc rotation.

****

5.Install:
- Retaining pin
- Retaining clips
- Brake caliper

Bolt (brake caliper):
40 Nm (4.0 m • kg, 29 ft • lb)

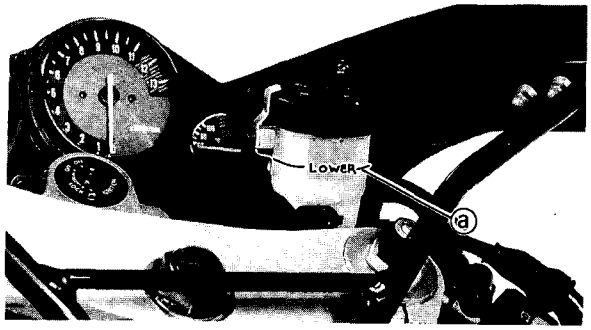

6.Inspect:
- Brake fluid level
  Refer to "BRAKE FLUID LEVEL INSPECTION" in CHAPTER 3.

ⓐ "LOWER" level line

7.Check:
- Brake lever operation
  Soft or spongy feeling → Bleed the brake system.
  Refer to "AIR BLEEDING (HYDRAULIC BRAKE SYSTEM)" in CHAPTER 3.

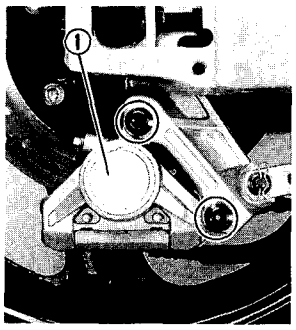

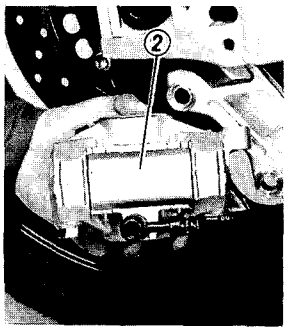

Rear brake

1.Remove:
- Brake caliper ①
- Brake pad cover ②

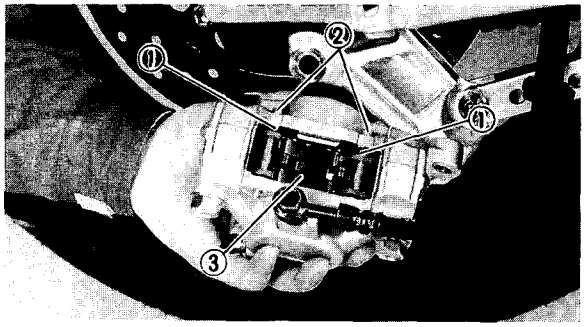

2.Remove:
- Retaining clips ①
- Retaining pins ②
- Brake pad spring ③

3.Remove:
- Brake pads ①
  (with the brake pad shims)

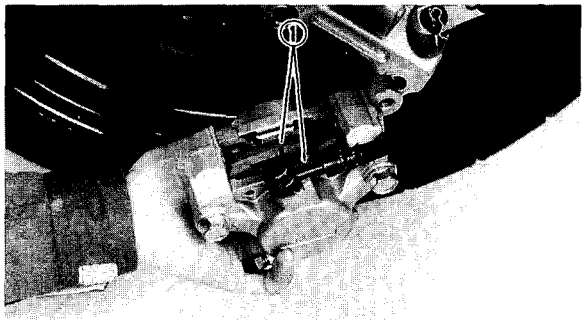

CAUTION:

Be careful that the rubber grommet does not come out of the brake hose holder on the inside of the swingarm.

NOTE:
- When replacing the brake pads install a new brake pad spring and new brake pad shims.
- Replace the brake pads as a set if either is found to be worn to the wear limit ⓐ.

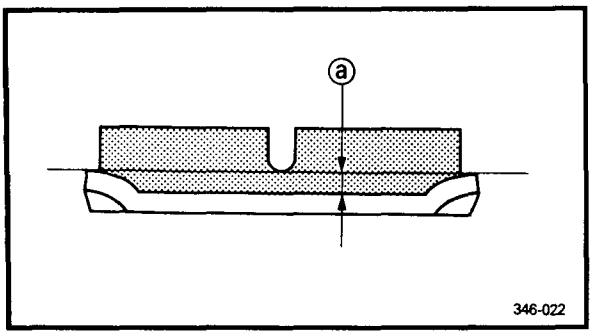

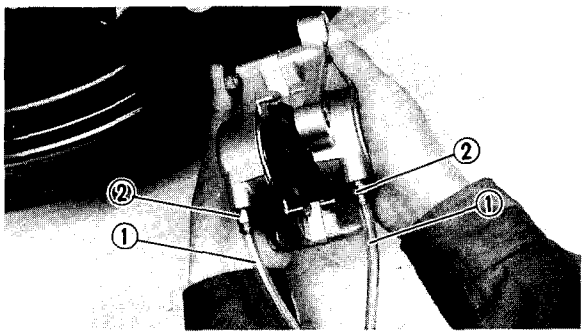

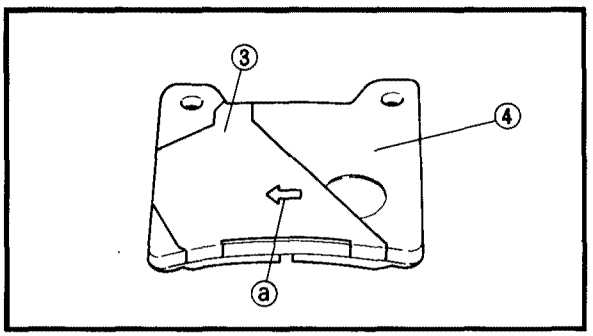

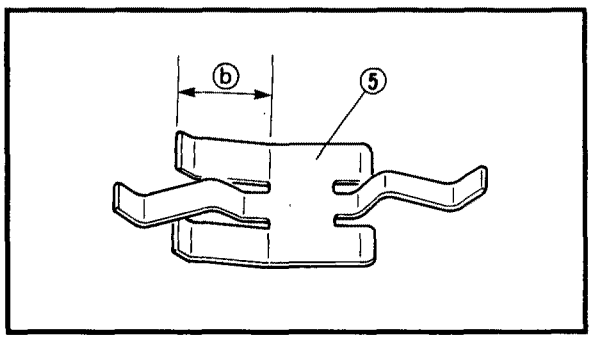

Wear limit:
0.5 mm (0.02 in)

4.Install:
- Brake pad shims (onto the brake pads)
- Brake pads
- Brake pad spring

****

Installation steps:
- Connect a suitable hose ① tightly to the brake caliper bleed screw ②. Put the other end of the hose into a container.
- Loosen the brake caliper bleed screws and use a finger to push the caliper pistons into the brake caliper.
- Tighten the brake caliper bleed screws ②.

Brake caliper bleed screw:
6 Nm (0.6 m • kg, 4.3 ft • lb)

- Install a new brake pad shim ③ onto the new brake pad ④.

NOTE:
The arrow mark ⓐ on the brake pad shim must point in the direction of brake disc rotation.

- Install new brake pads and a new brake pad spring ⑤.

NOTE:
The longer tangs ⓑ of the brake pad spring must point in the direction of the brake disc rotation.

****

5.Install:
- Retaining pins
- Retaining clips
- Brake pad cover
- Brake caliper

Bolt (brake caliper):
40 Nm (4.0 m • kg, 29 ft • lb)

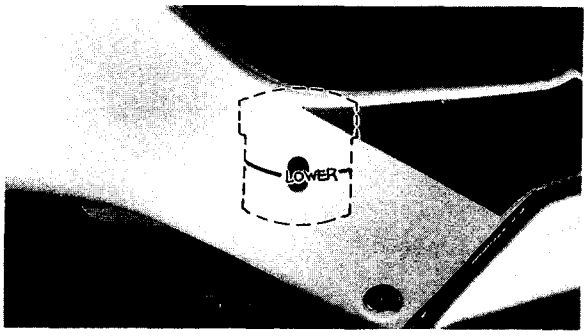

6.Inspect:
- Brake fluid level
  Refer to "BRAKE FLUID LEVEL INSPECTION" in CHAPTER 3.

ⓐ "LOWER" level line

7.Check:
- Brake pedal operation
  A soft or spongy feeling → Bleed the brake system.
  Refer to "AIR BLEEDING (HYDRAULIC BRAKE SYSTEM)" in CHAPTER 3.

EB702021

BRAKE CALIPER DISASSEMBLY

NOTE:
Before disassembling either brake caliper, drain the brake fluid from the entire brake system.

Front brake

1.Loosen:
- Union bolt

2.Remove:
- Brake caliper
- Retaining clips
- Retaining pins
- Brake pad spring
- Brake pads
  (with the brake pad shims)
  Refer to "BRAKE PAD REPLACEMENT".

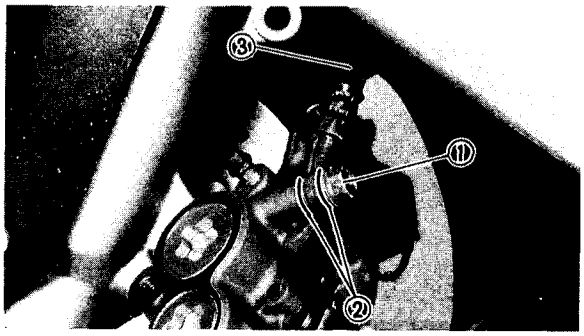

3.Remove:
- Union bolt ①
- Copper washers ②
- Brake hose ③

NOTE:
Put the brake hose end into a container and pump out the brake fluid carefully.

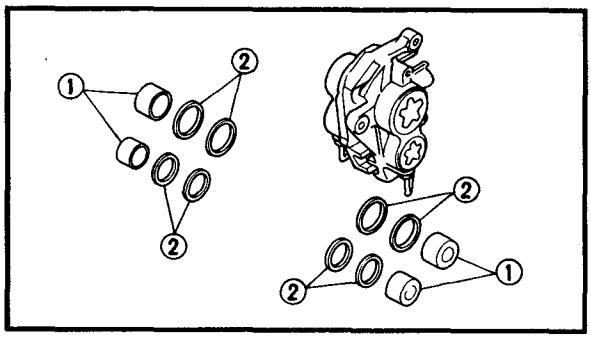

4.Remove:
- Brake caliper pistons ①
- Caliper piston seals ②

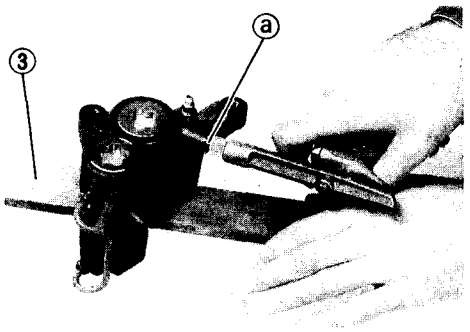

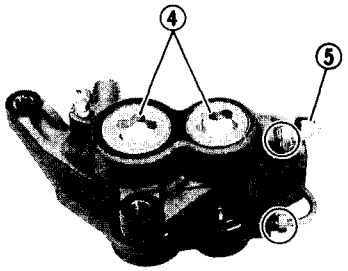

****

Removal steps:

- Use a piece of wood ③ to secure the right side caliper pistons.
- To force out the left side caliper pistons from the brake caliper body blow compressed air into the hose joint opening ⓐ.
- Remove the caliper piston seals and reinstall the left side caliper pistons.
- Repeat the previous steps to force out the right side caliper pistons from the brake caliper body.

⚠ WARNING

- **Never try to pry out the caliper pistons.**
- **Do not remove the plugs ④ and the brake caliper pipe ⑤.**

****

EB702022

Rear brake

1.Loosen:
- Union bolt

2.Remove:
- Brake caliper
- Brake pad cover
- Retaining clips
- Retaining pins
- Brake pad spring
- Brake pads
  (with the brake pad shims)
  Refer to "BRAKE PAD REPLACEMENT".

3.Remove:
- Union bolt ①
- Copper washers ②
- Brake hose ③

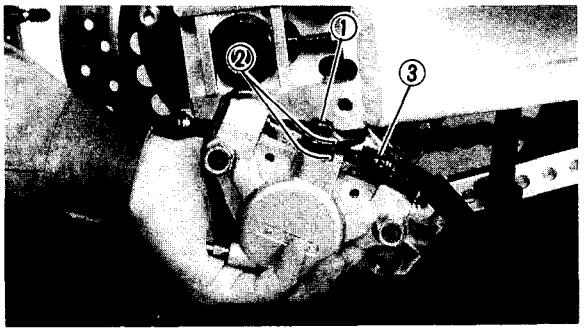

NOTE:
Put the open end of the hose into a container and pump out the brake fluid carefully.

4.Remove:
- Brake caliper pistons ①
- Caliper piston seals ②

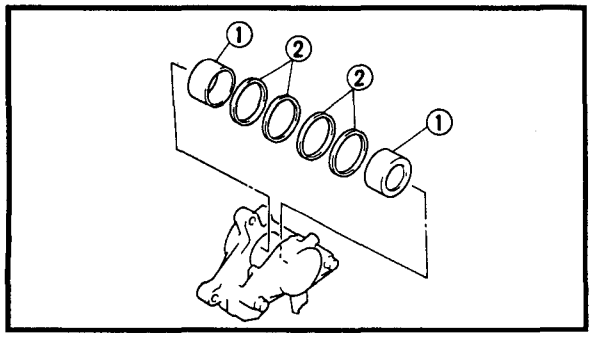

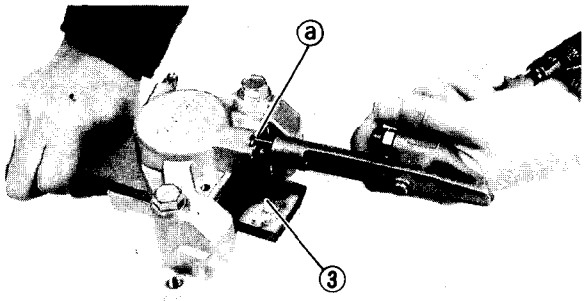

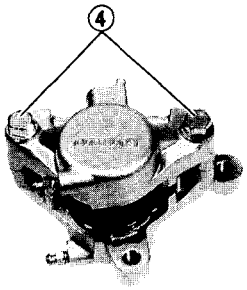

****

Removal steps:

- Use a wood piece ③ to secure the right side caliper piston.
- To force out the left side caliper piston from the brake caliper body blow compressed air into the hose joint opening ⓐ.
- Remove the caliper piston seals and reinstall the left side caliper piston.
- Repeat previous step to force out the right side caliper piston from the brake caliper body.

⚠ WARNING

- **Never try to pry out the caliper piston.**
- **Do not loosen the bolts ④.**

****

EB702030

MASTER CYLINDER DISASSEMBLY

NOTE:
Before disassembling either master cylinder drain the brake fluid from the entire brake system.

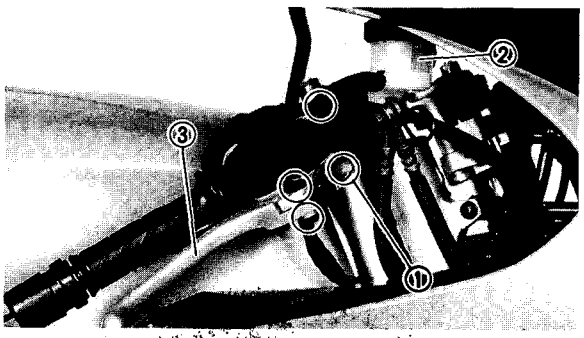

Front brake

1.Disconnect:
- Brake switch leads ①

2.Remove:
- Brake reservoir ②
- Brake lever ③

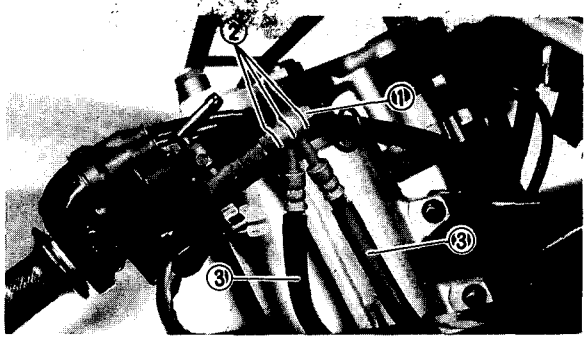

3.Remove:
- Union bolt ①
- Copper washers ②
- Brake hoses ③

NOTE:
To collect any remaining brake fluid place a container under the master cylinder and the end of the hose.

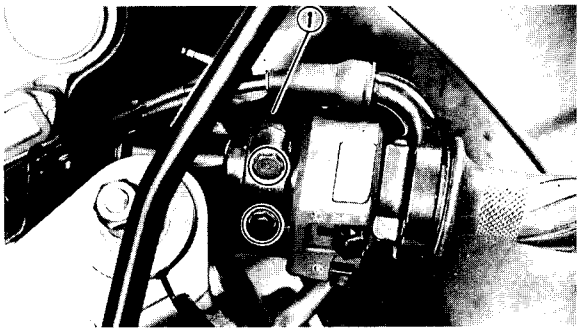

4.Remove:
- Master cylinder ①

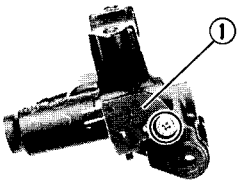

5.Remove:
- Brake switch ①

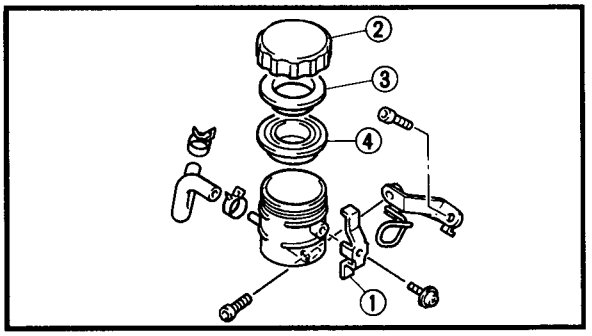

6.Remove:
- Stopper ①
- Cap (brake reservoir) ②
- Holder (diaphragm) ③
- Diaphragm ④

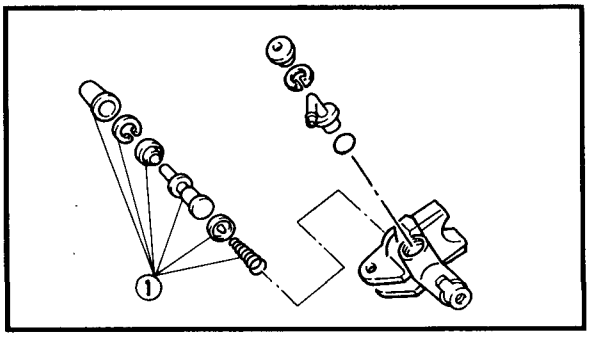

7.Remove:
- Master cylinder kit ①

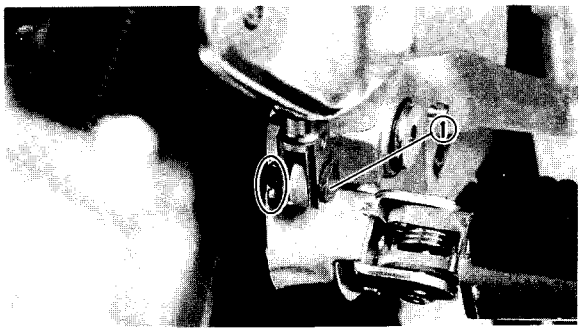

EB702031

Rear brake

1.Remove:
- Rider seat
- Passenger seat
- Side panel (right)

  Refer to "SEATS" and "FUEL TANK" in CHAPTER 3.

2.Remove:
- Cotter pin
- Washer
- Clevis pin ①

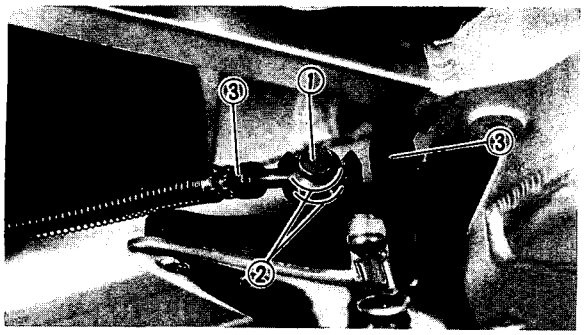

3.Remove:
- Union bolt ①
- Copper washers ②
- Brake hoses ③

NOTE:
To collect any remaining brake fluid place a container under the master cylinder and the end of the hose.

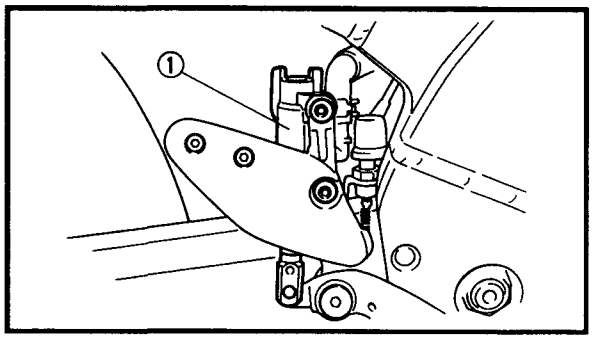

4.Remove:
- Master cylinder ①

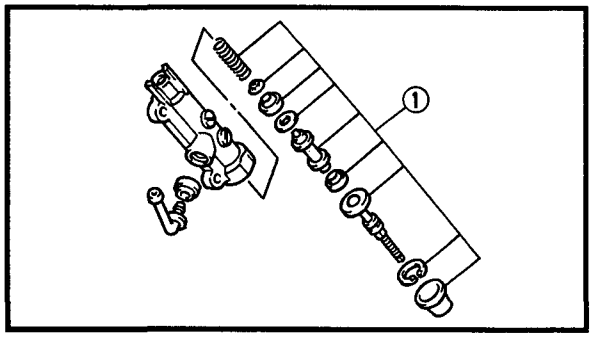

5.Remove:
- Master cylinder kit ①

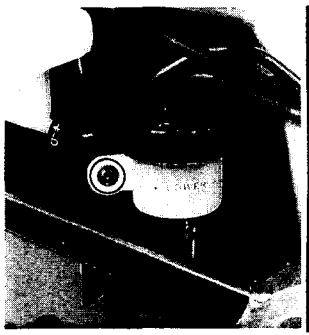

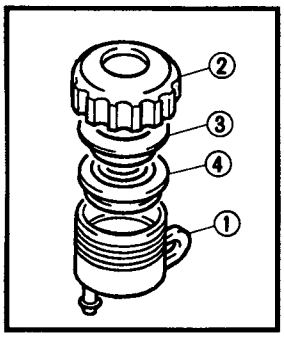

6.Remove:
- Brake reservoir ①
- Cap (brake reservoir) ②
- Holder (diaphragm) ③
- Diaphragm ④

EB702040
INSPECTION AND REPAIR

Recommended brake component replacement schedule:	
Brake pads	**As required**
Piston seals	**Every two years**
Brake hoses	**Every two years**
Brake fluid	**Replace when brakes are disassembled.**

⚠ WARNING

All internal brake components should be cleaned in new brake fluid only. Do not use solvents as they will cause the seals to swell and distort.

1.Inspect:
- Brake caliper piston ①
  Rust/scratches/wear → Replace the brake caliper assembly.
- Brake caliper cylinder ②
  Scratches/wear → Replace the brake caliper assembly.
- Brake caliper body ③
  Cracks/damage → Replace.
- Oil delivery passage (brake caliper body)
  Blockage → Blow out with compressed air.

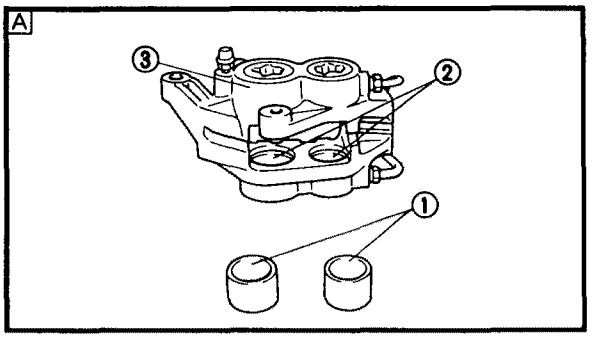

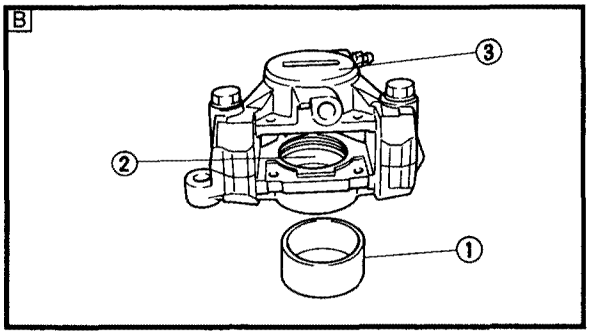

⚠ WARNING

Whenever the brake caliper is disassembled replace the caliper piston seals.

[A] Front
[B] Rear

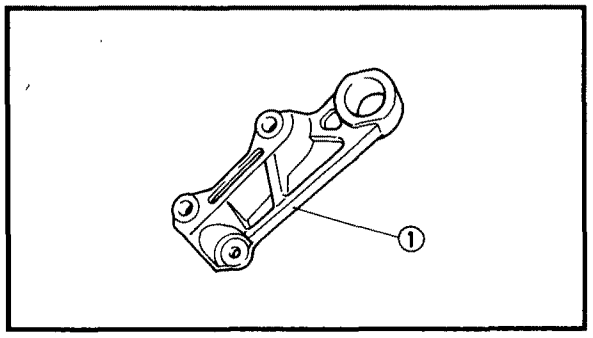

2.Inspect:
- Brake caliper bracket ①
  Cracks/damage → Replace.

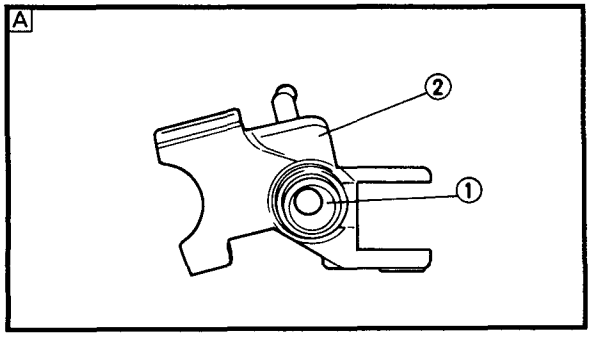

3.Inspect:
- Master cylinder ①
  Scratches/wear → Replace the master cylinder assembly.
- Master cylinder body ②
  Cracks/damage → Replace.
- Oil delivery passage (master cylinder body)
  Blockage → Blow out with compressed air.

[A] Front
[B] Rear

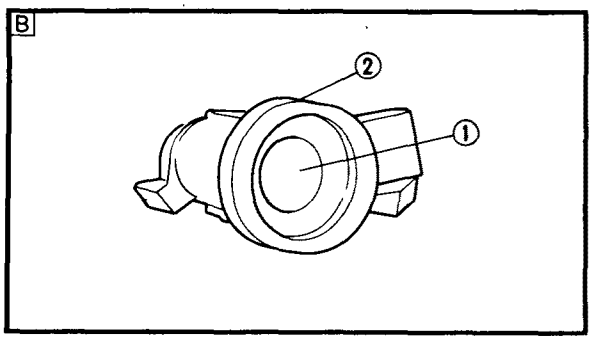

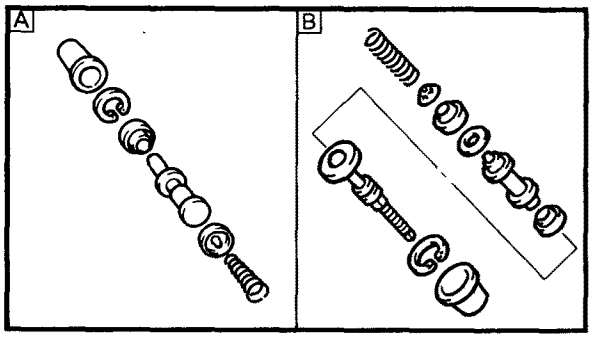

4.Inspect:
- Master cylinder assembly
  Scratches/wear/damage → Replace as a set.

A Front
B Rear

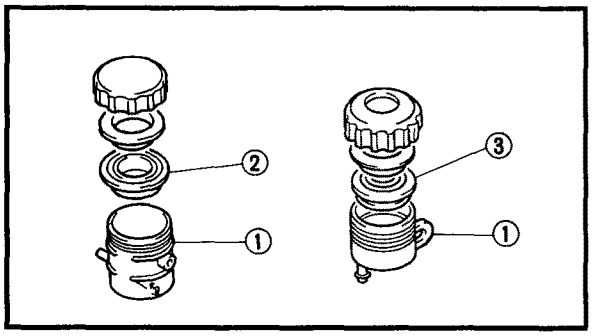

5.Inspect:
- Brake reservoir ①
  Cracks/damage → Replace.
- Diaphragm (front) ②
- Diaphragm (rear) ③
  Wear/damage → Replace.

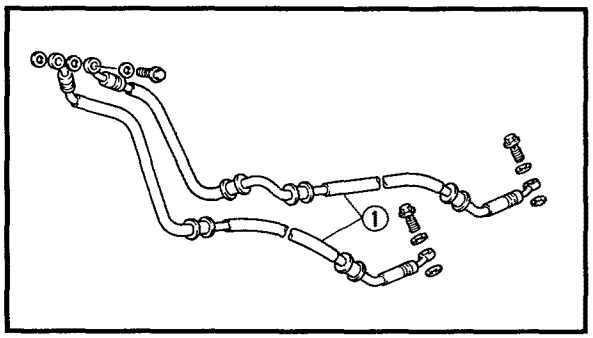

6.Inspect:
- Brake hoses ①
  Cracks/wear/damage → Replace.

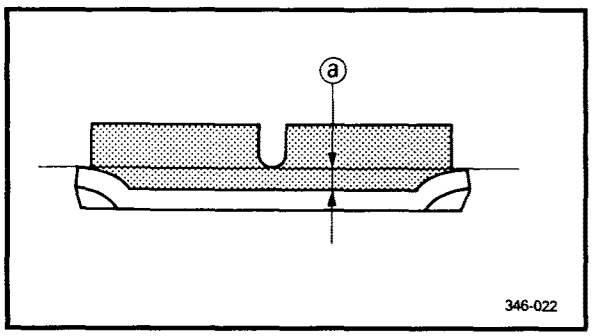

7.Measure:
- Brake pads (thickness)
  Out of specification → Replace.

NOTE:
- When replacing the brake pads install a new brake pad spring and new brake pad shims.
- Replace the brake pads as a set if either is found to be worn to the wear limit ⓐ.

Brake pad wear limit:
Front: 0.5 mm (0.02 in)
Rear: 0.5 mm (0.02 in)

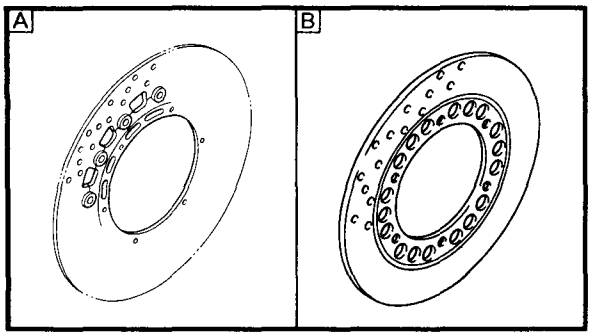

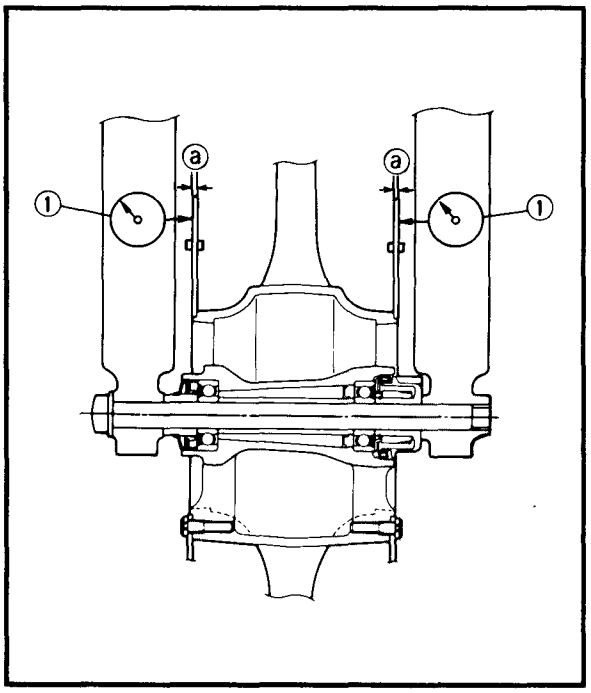

8.Inspect:
- Brake discs (front and rear)
  Galling/damage → Replace.

A Front
B Rear

9.Measure:
- Brake disc deflection
  Out of specification → Adjust or replace.

Brake disc maximum deflection:
Front: 0.1 mm (0.004 in)
Rear: 0.15 mm (0.006 in)

****

Measurement steps:
- Use a suitable stand to raise the wheel.
- When measuring the front brake disc, turn the handlebars to the left or the right to ensure that the front wheel is stationary.
- Remove the caliper.
- Hold the dial gauge at a right angle against the disc surface. Measure the deflection at a point 2 ~ 3 mm below the edge of the brake disc.

****

- Brake disc thickness ⓐ
  Measure at a few different areas on the disc.
  Out of specification → Replace.

Brake disc minimum thickness:
Front: 4.5 mm (0.18 in)
Rear: 5.5 mm (0.22 in)

① Dial gauge

10.Adjust:
- Brake disc deflection

****

Adjustment steps:
- Remove the brake disc(s) from the wheel.
- Adjust the brake disc installation position.
- Install the brake disc(s) to the wheel.

NOTE:
Tighten the brake disc bolts in stages using a crisscross pattern.

Bolt (brake disc):
23 Nm (2.3 m • kg, 17 ft • lb)
LOCTITE®

- Measure the brake disc deflection.

****

EB702051
BRAKE CALIPER ASSEMBLY

⚠ WARNING

- **Before installation, all internal brake components should be cleaned and lubricated with new brake fluid only.**

	Recommended brake fluid: **DOT 4**

- **Whenever a brake caliper is disassembled replace the caliper piston seals.**

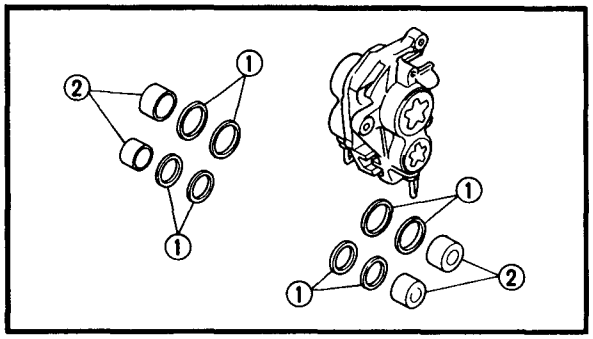

Front brake

1.Install:
- Caliper piston seals ①
- Brake caliper pistons ②

⚠ WARNING

Always use new caliper piston seals.

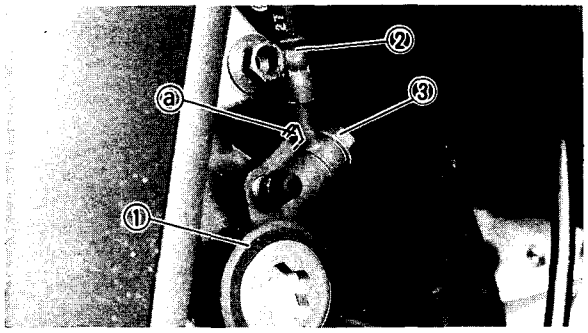

2.Install:
- Brake caliper (temporarily) ①
- Copper washers
- Brake hose ②
- Union bolt ③

	Union bolt: **30 Nm (3.0 m • kg, 22 ft • lb)**

CAUTION:

When installing the brake hose onto the brake caliper ①, make sure that the brake pipe touches the projection ⓐ on the brake caliper.

⚠ WARNING

Proper brake hose routing is essential to insure safe motorcycle operation. Refer to "CABLE ROUTING".

CAUTION:

Always use new copper washers.

3.Remove:
- Brake caliper

4.Install:
- Brake pads
  (with the brake pad shims)
- Brake pad spring

- Retaining pin
- Retaining clips
- Brake caliper
  Refer to "BRAKE PAD REPLACEMENT".

	Bolt (brake caliper): 40 Nm (4.0 m • kg, 29 ft • lb)

5.Fill:
- Brake reservoir

	Recommended brake fluid: DOT 4

CAUTION:

Brake fluid may damage painted surfaces or plastic parts. Always clean up spilled brake fluid immediately.

⚠ WARNING

- **Use only the designated quality brake fluid: other brake fluids may deteriorate the rubber seals, causing leakage and poor brake performance.**
- **Refill with the same type of brake fluid: mixing brake fluids may result in a harmful chemical reaction and lead to poor brake performance.**
- **When refilling be careful that water does not enter the master cylinder. Water will significantly lower the boiling point of the brake fluid and may result in vapor lock.**

6.Air bleed:
- Brake system
  Refer to "AIR BLEEDING (HYDRAULIC BRAKE SYSTEM)" in CHAPTER 3.

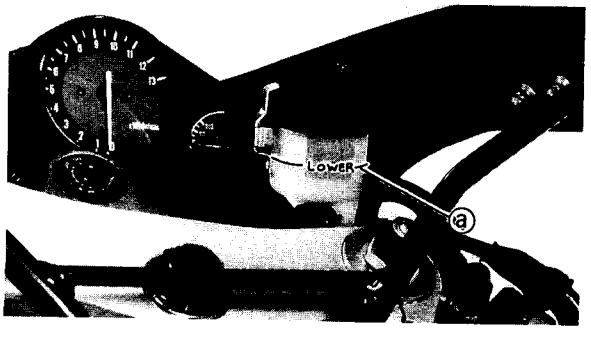

7.Inspect:
- Brake fluid level
  Brake fluid level is under the "LOWER" level line → Fill up.
  Refer to "BRAKE FLUID LEVEL INSPECTION" in CHAPTER 3.

ⓐ "LOWER" level line

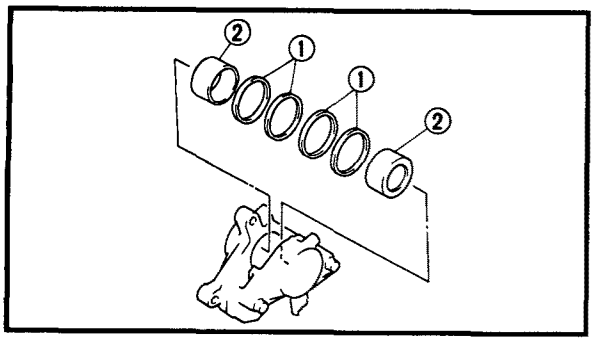

EB702052
Rear brake

1.Install:
- Caliper piston seals ①
- Brake caliper pistons ②

⚠ WARNING

Always use new caliper piston seals.

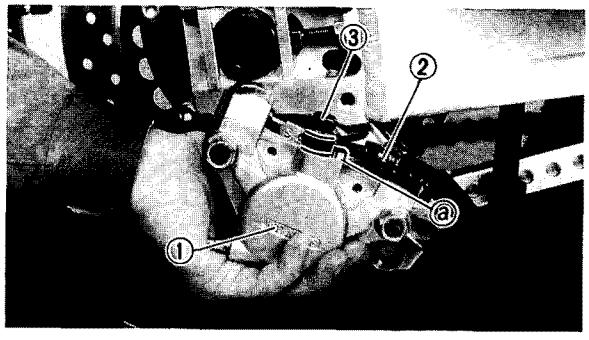

2.Install:
- Brake caliper (temporarily) ①
- Copper washers
- Brake hose ②
- Union bolt ③

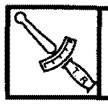	**Union bolt:** **30 Nm (3.0 m • kg, 22 ft • lb)**

CAUTION:

When installing the brake hose onto the brake caliper ①, make sure that the brake pipe touches the projection ⓐ on the brake caliper.

⚠ WARNING

- **Proper brake hose routing is essential to insure safe motorcycle operation. Refer to "CABLE ROUTING".**
- **Always use new copper washers.**

3.Remove:
- Brake caliper

4.Install:
- Brake pads
  (with the brake pad shims)
- Brake pad spring
- Retaining pins
- Retaining clips
- Brake pad cover
- Brake caliper
  Refer to "BRAKE PAD REPLACEMENT".

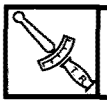	**Bolt (brake caliper):** **40 Nm (4.0 m • kg, 29 ft • lb)**

5.Fill:
- Brake reservoir

Recommended brake fluid:
DOT 4

CAUTION:

Brake fluid may damage painted surfaces or plastic parts. Always clean up spilled brake fluid immediately.

WARNING

- **Use only the designated quality brake fluid: other brake fluids may deteriorate the rubber seals, causing leakage and poor brake performance.**
- **Refill with the same type of brake fluid: mixing brake fluids may result in a harmful chemical reaction and lead to poor brake performance.**
- **When refilling be careful that water does not enter the master cylinder. Water will significantly lower the boiling point of the brake fluid and may result in vapor lock.**

6.Air bleed:
- Brake system
  Refer to "AIR BLEEDING (HYDRAULIC BRAKE SYSTEM)" in CHAPTER 3.

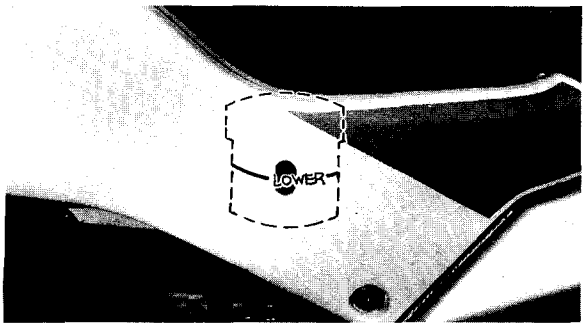

7.Inspect:
- Brake fluid level
  Brake fluid level is under the "LOWER" level line → Fill up.
  Refer to "BRAKE FLUID LEVEL INSPECTION" in CHAPTER 3.

ⓐ "LOWER" level line

EB702060
MASTER CYLINDER ASSEMBLY

WARNING

- **Before installation all internal brake components should be cleaned and lubricated with new brake fluid only.**

	Recommended brake fluid: DOT 4

- **Whenever a master cylinder is disassembled replace the caliper piston seals.**

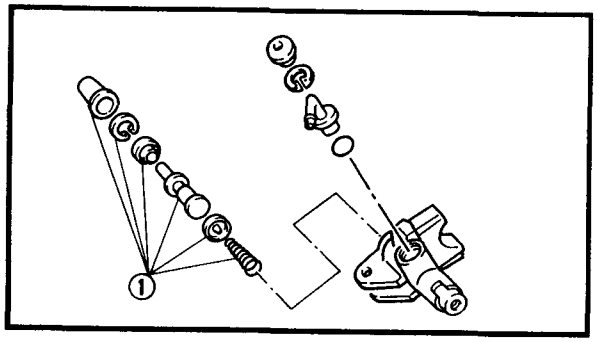

Front brake

1.Install:
- Master cylinder kit ①
- Brake switch

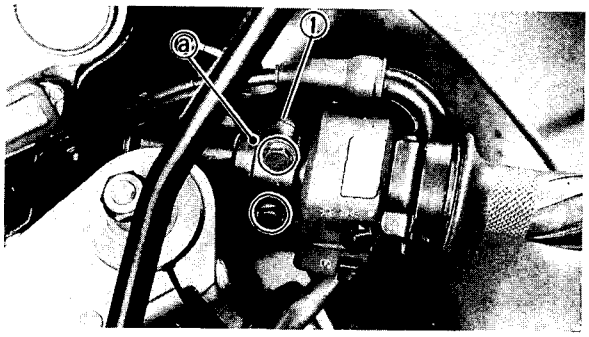

2.Install:
- Master cylinder ①

NOTE:
- Install the master cylinder holder with the "UP" mark facing up.
- Align the end of the master cylinder holder with the punch mark ⓐ on the handlebar.
- First, tighten the upper bolt, then tighten the lower bolt.

	Bolt (master cylinder holder): 13 Nm (1.3 m • kg, 9.4 ft • lb)

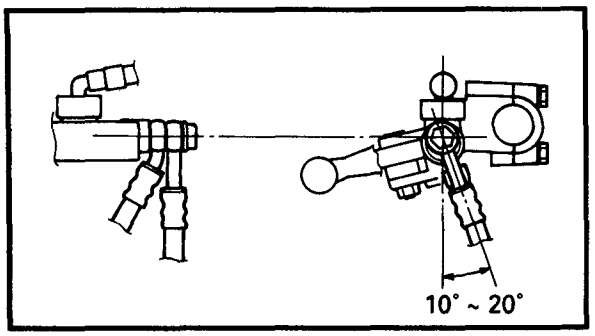

3.Install:
- Copper washers
- Brake hose
- Union bolt

Union bolt:
30 Nm (3.0 m • kg, 22 ft • lb)

NOTE:
- While holding the brake hose tighten the union bolt, as shown in the illustration.
- When turning the handlebar to the left and to the right make sure that the brake hose does not touch other parts (throttle cable, wire harness, leads, etc.). Correct if necessary.

WARNING
- **Proper brake hose routing is essential to insure safe motorcycle operation. Refer to "CABLE ROUTING".**
- **Always use new copper washers.**

4.Install:
- Brake lever
- Brake reservoir

5.Connect:
- Brake switch leads

6.Fill:
- Brake reservoir

Recommended brake fluid:
DOT 4

CAUTION:
Brake fluid may damage painted surfaces or plastic parts. Always clean up spilled brake fluid immediately.

⚠ WARNING

- **Use only the designated quality brake fluid: other brake fluids may deteriorate the rubber seals, causing leakage and poor brake performance.**
- **Refill with the same type of brake fluid: mixing brake fluids may result in a harmful chemical reaction and lead to poor brake performance.**
- **When refilling be careful that water does not enter the master cylinder. Water will significantly lower the boiling point of the brake fluid and may result in vapor lock.**

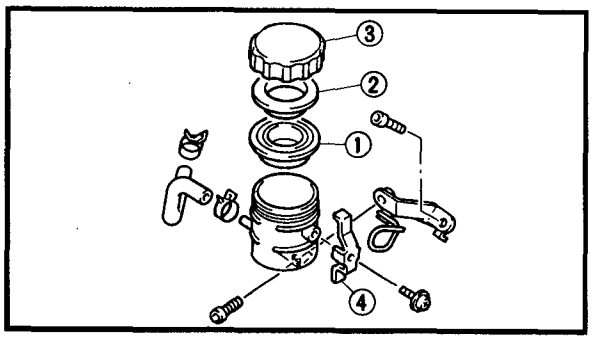

7.Install:
- Diaphragm ①
- Holder (diaphragm) ②
- Cap (brake reservoir) ③
- Stopper ④

8.Air bleed:
- Brake system
  Refer to "AIR BLEEDING (HYDRAULIC BRAKE SYSTEM)" in CHAPTER 3.

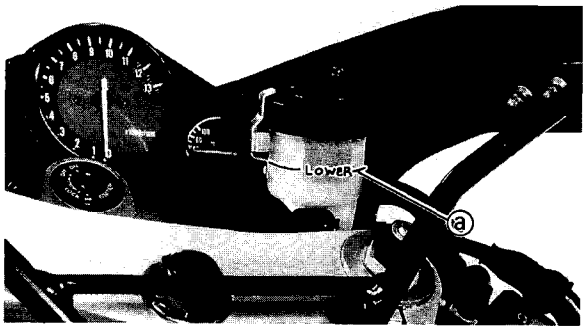

9.Inspect:
- Brake fluid level
  Brake fluid level is under the "LOWER" level line → Fill up.
  Refer to "BRAKE FLUID LEVEL INSPECTION" in CHAPTER 3.

ⓐ "LOWER" level line

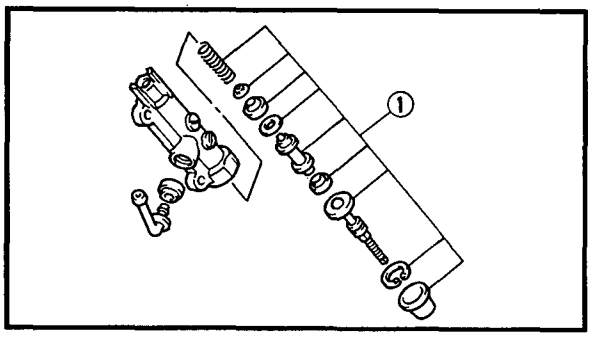

EB702061
Rear brake

1.Install:
- Brake reservoir
  (onto the frame)
- Master cylinder kit ①

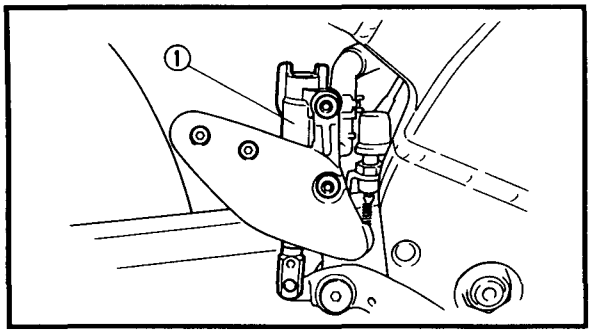

2.Install:
- Master cylinder ①

	Bolt (master cylinder): **23 Nm (2.3 m • kg, 17 ft • lb)**

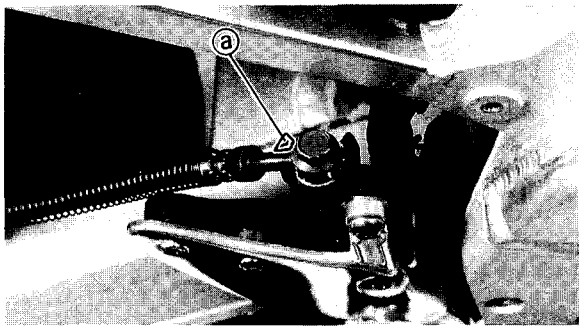

3.Install:
- Copper washers
- Brake hoses
- Union bolt

	Union bolt: **30 Nm (3.0 m • kg, 22 ft • lb)**

CAUTION:

When installing the brake hose onto the master cylinder, make sure that the brake pipe touches the projection ⓐ, as shown in the illustration.

⚠ WARNING

- **Proper brake hose routing is essential to insure safe motorcycle operation. Refer to "CABLE ROUTING".**
- **Always use new copper washers.**

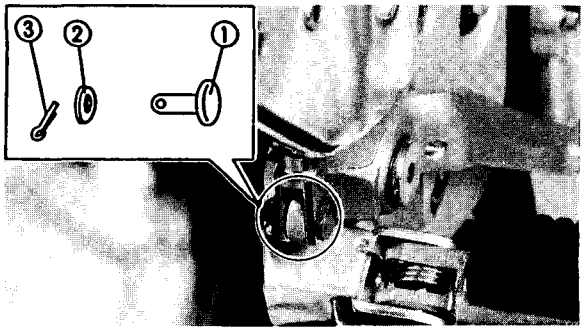

4.Install:
- Clevis pin ①
- Washer ②
- Cotter pin ③

⚠ WARNING

Always use a new cotter pin.

5.Fill:
- Brake reservoir

	Recommended brake fluid: **DOT 4**

CAUTION:

Brake fluid may damage painted surfaces or plastic parts. Always clean up spilled brake fluid immediately.

⚠ WARNING

- **Use only the designated quality brake fluid: other brake fluids may deteriorate the rubber seals, causing leakage and poor brake performance.**
- **Refill with the same type of brake fluid: mixing brake fluids may result in a harmful chemical reaction and lead to poor brake performance.**
- **When refilling be careful that water does not enter the master cylinder. Water will significantly lower the boiling point of the brake fluid and may result in vapor lock.**

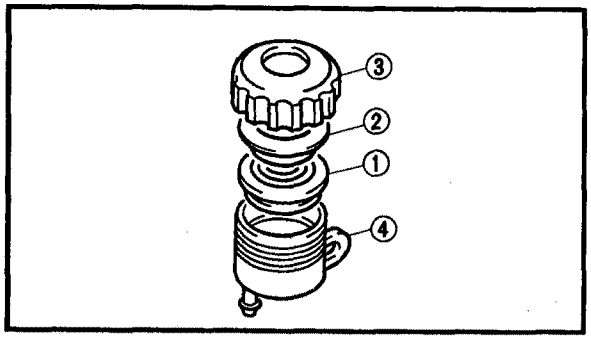

6.Install:
- Diaphragm ①
- Holder (diaphragm) ②
- Cap (brake reservoir) ③
- Brake reservoir ④

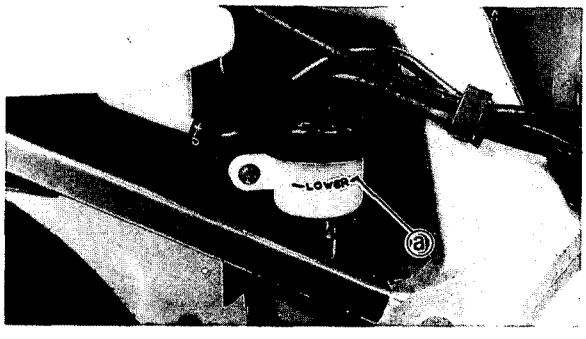

7.Air bleed:
- Brake system
  Refer to "AIR BLEEDING (HYDRAULIC BRAKE SYSTEM)" in CHAPTER 3.

8.Inspect:
- Brake fluid level
  Brake fluid level is under the "LOWER" level line → Fill up.
  Refer to "BRAKE FLUID LEVEL INSPECTION" in CHAPTER 3.

ⓐ "LOWER" level line

9.Adjust:
- Brake pedal height
  Refer to "REAR BRAKE ADJUSTMENT" in CHAPTER 3.

Brake pedal height:
50 mm (1.97 in)
(below the top of the footrest)

10.Adjust:
- Brake light switch
  Refer to "BRAKE LIGHT SWITCH ADJUSTMENT" in CHAPTER 3.

HYDRAULIC CLUTCH

① Clutch reservoir cap
② Holder (diaphragm)
③ Diaphragm
④ Master cylinder
⑤ Master cylinder kit
⑥ Clutch switch
⑦ Copper washer
⑧ Clutch hose
⑨ Clutch release cylinder
⑩ Spring
⑪ Piston seal
⑫ Piston
⑬ Dust seal

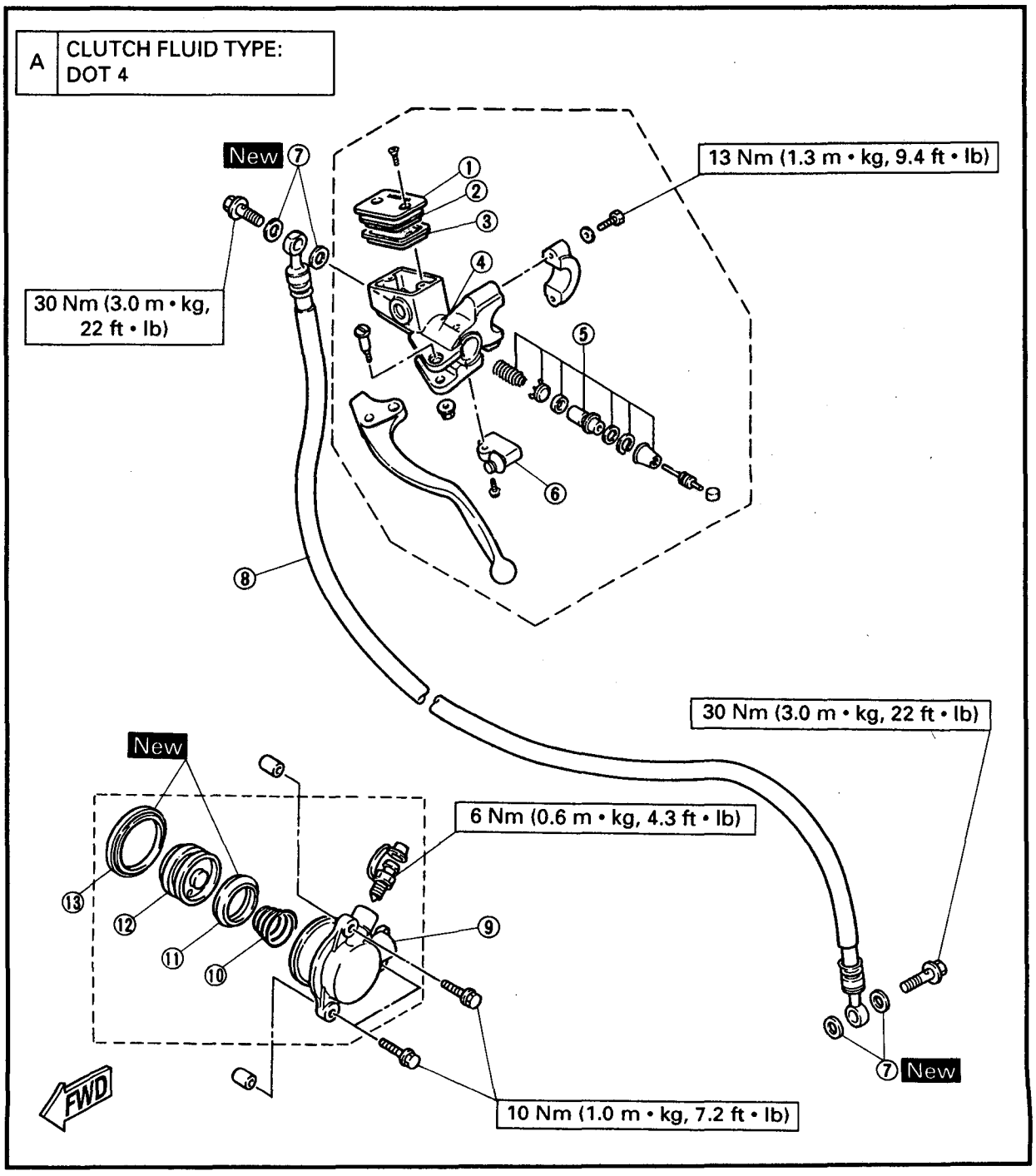

CAUTION:

Hydraulic clutch components rarely require disassembly. DO NOT:

- **Disassemble components unless absolutely necessary.**
- **Use solvents on internal clutch components.**
- **Use spent clutch fluid for cleaning (use only clean clutch fluid).**
- **Allow clutch fluid to come into contact with the eyes, as this may cause eye injury.**
- **Splash clutch fluid onto painted surfaces or plastic parts, as this may cause damage.**
- **Disconnect any hydraulic connection, as this would require the entire clutch system to be disassembled, drained, cleaned, properly filled and bled after reassembly.**

DISASSEMBLY

NOTE:

Before disassembling the clutch release cylinder or master cylinder drain the master cylinder and clutch hose of their fluid.

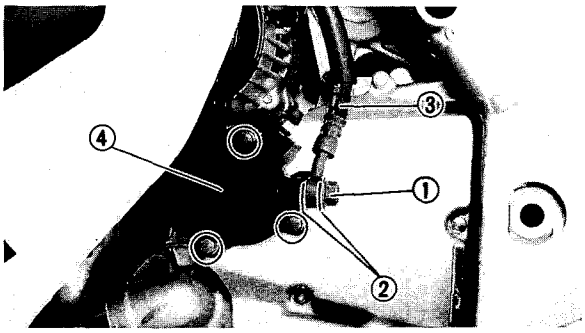

Clutch release cylinder

1.Remove:

- Union bolt ①
- Copper washers ②
- Clutch hose ③
- Clutch release cylinder ④
- Dowel pins

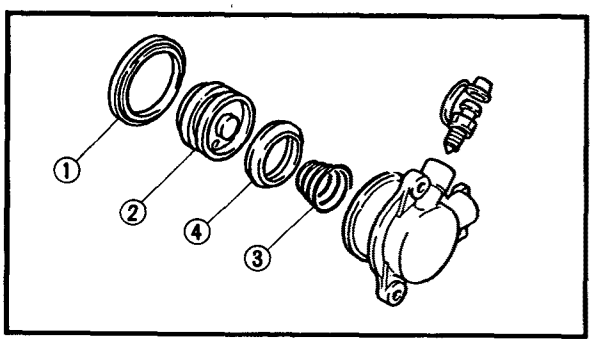

2.Remove:

- Dust seal ①
- Piston (clutch release cylinder) ②
- Spring ③
- Piston seal ④

NOTE:

Blow compressed air into the hose joint opening to force out the piston from the clutch release cylinder body.

⚠ WARNING

- **When expelling the piston from the cylinder, cover the piston with rags and use extreme caution.**
- **Never attempt to pry out the piston.**

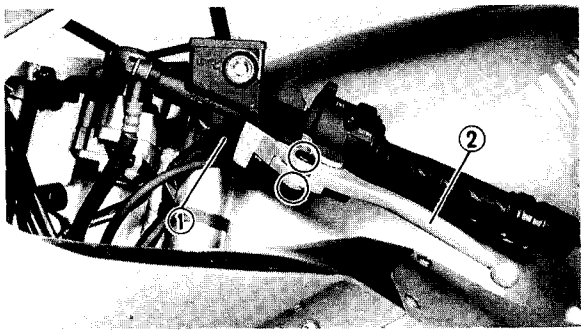

Master cylinder

1.Disconnect:
- Clutch switch coupler ①

2.Remove:
- Clutch lever ②

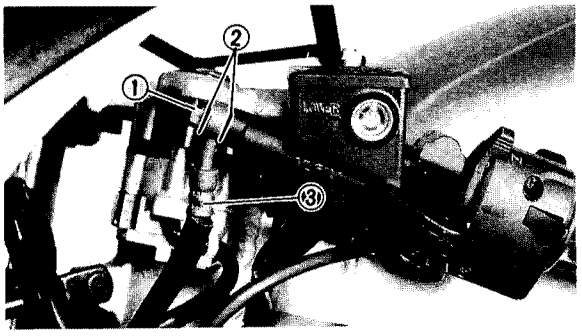

3.Remove:
- Union bolt ①
- Copper washers ②
- Clutch hose ③

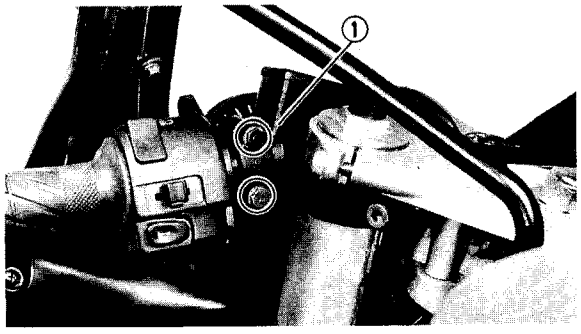

4.Remove:
- Master cylinder ①

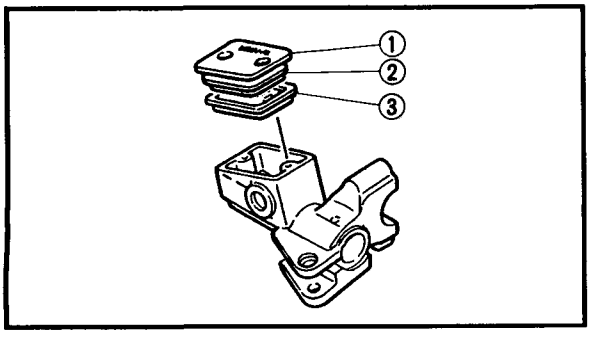

5.Remove:
- Cap (clutch reservoir) ①
- Holder (diaphragm) ②
- Diaphragm ③

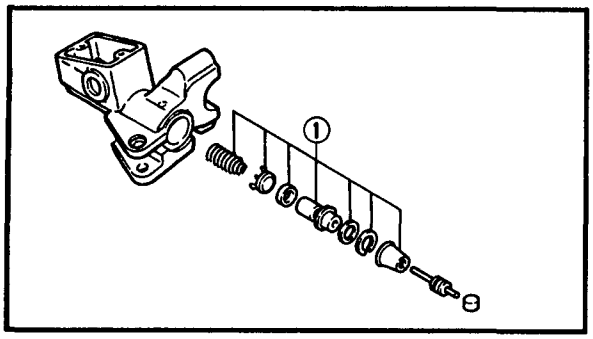

6.Remove:
- Master cylinder kit ①

INSPECTION AND REPAIR

Recommended clutch component replacement schedule:	
Piston seal, dust seal	Every two years
Clutch hose	Every four years
Clutch fluid	Replace when the clutch is disassembled.

⚠ WARNING

All internal clutch components should be cleaned in new clutch fluid only. Do not use solvents as they will cause the seals to swell and distort.

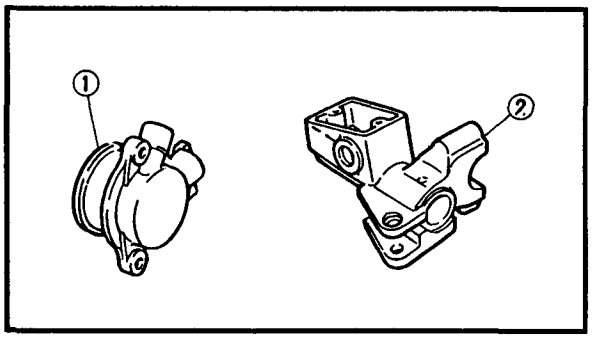

1.Inspect:
- Clutch release cylinder body ①
- Master cylinder body ②
  Cracks/damage → Replace.
- Oil delivery passage
  Blow out with compressed air.

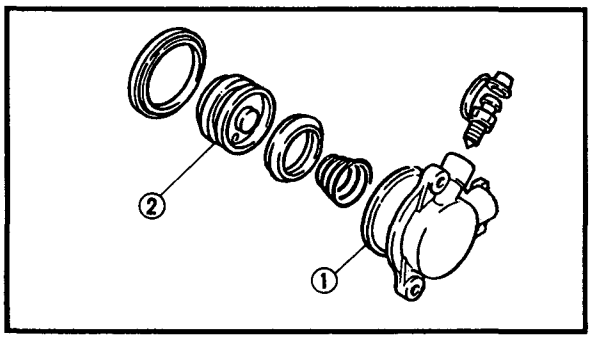

2.Inspect:
- Clutch release cylinder ①
- Piston (clutch release cylinder) ②
  Rust/scratches/wear → Replace as a set.

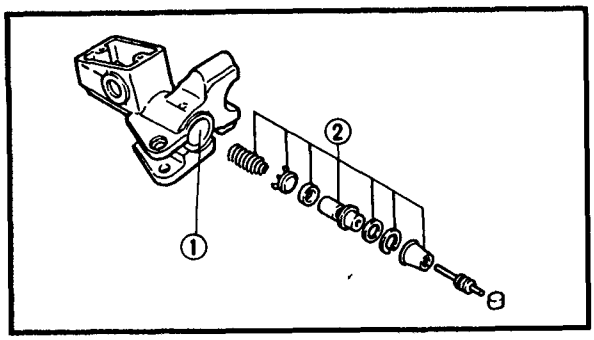

3.Inspect:
- Master cylinder ①
- Master cylinder kit ②
  Rust/scratches/wear → Replace as a set.

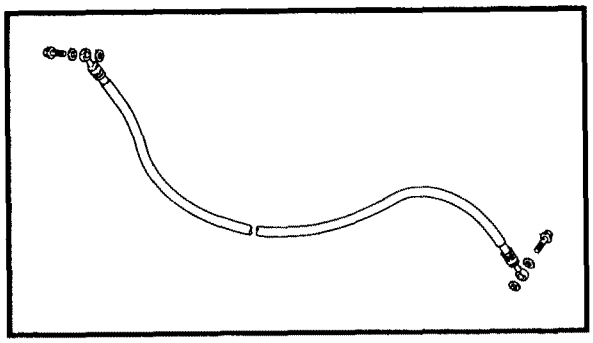

4.Inspect:
- Clutch hose
- Cracks/wear/damage → Replace.

ASSEMBLY

⚠ WARNING

- **Before installation, all internal clutch components should be cleaned and lubricated with new clutch fluid only.**

Recommended fluid:
DOT 4

- **Whenever a clutch release cylinder or master cylinder or both are disassembled, replace the piston seal and dust seal.**

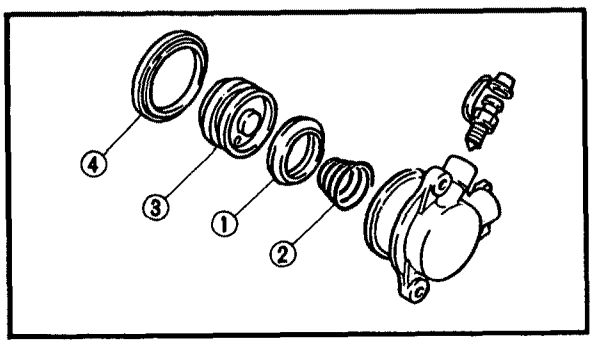

Clutch release cylinder

1.Install:
- Piston seal ①
- Spring ②
- Piston (clutch release cylinder) ③
- Dust seal ④

⚠ WARNING

Always use a new piston and dust seals.

2.Install:
- Dowel pins
- Clutch release cylinder

Bolt (clutch release cylinder):
10 Nm (1.0 m • kg, 7.2 ft • lb)

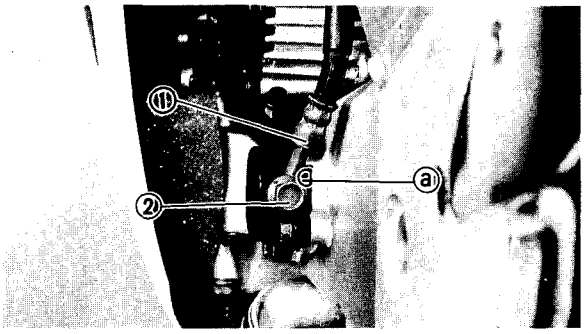

3.Install:
- Copper washers
- Clutch hose ①
- Union bolt ②

	Union bolt: **30 Nm (3.0 m • kg, 22 ft • lb)**

CAUTION:

When installing the clutch hose onto the clutch release cylinder, make sure that the pipe touches the projection ⓐ.

⚠ WARNING

- **Proper clutch hose routing is essential to insure safe motorcycle operation. Refer to "CABLE ROUTING".**
- **Always use new copper washers.**

4.Fill:
- Clutch reservoir

	Recommended fluid: **DOT 4**

CAUTION:

Clutch fluid may damage painted surfaces or plastic parts. Always clean up spilled clutch fluid immediately.

⚠ WARNING

- **Use only the designated quality clutch fluid: other clutch fluids may deteriorate the rubber seals, causing leakage and poor clutch performance.**
- **Refill with the same type of clutch fluid: mixing clutch fluids may result in a harmful chemical reaction and lead to poor clutch performance.**
- **When refilling, be careful that water does not enter the master cylinder. Water will significantly lower the boiling point of the fluid and may result in vapor lock.**

5.Air bleed:
- Clutch system
  Refer to "AIR BLEEDING (HYDRAULIC CLUTCH SYSTEM)" in CHAPTER 3.

6.Inspect:
- Clutch fluid level
  Clutch fluid level is under the "LOWER" level line → Fill up.
  Refer to "CLUTCH FLUID LEVEL INSPECTION" in CHAPTER 3.

Master cylinder

1.Install:
- Master cylinder kit ①

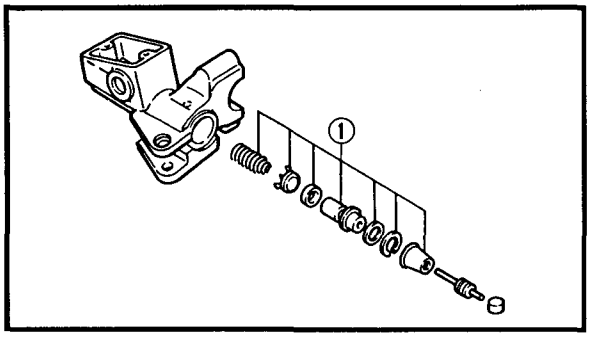

2.Install:
- Master cylinder ①

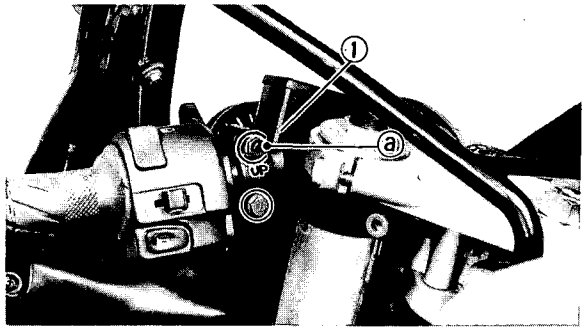

NOTE:
- Install the master cylinder holder with the "UP" mark facing up.
- Align the end of the master cylinder holder with the punch mark ⓐ on the handlebar.
- First, tighten the upper bolt, then tighten the lower bolt.

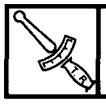	**Bolt (master cylinder holder): 13 Nm (1.3 m • kg, 9.4 ft • lb)**

3.Install:
- Copper washers ①
- Clutch hose ②
- Union bolt ③

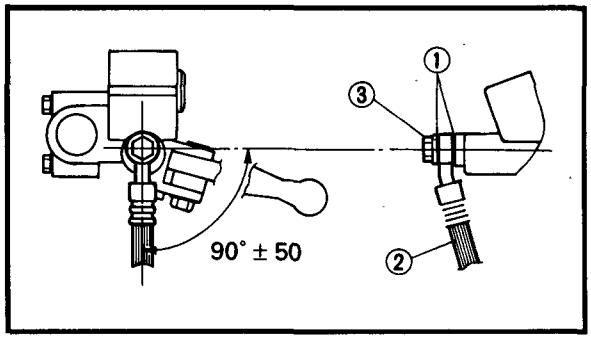

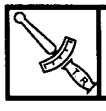	**Union bolt: 30 Nm (3.0 m • kg, 22 ft • lb)**

NOTE:
- While holding the clutch hose tighten the union bolt, as shown in the illustration.
- When turning the handlebar to the left and to the right make sure that the clutch hose does not touch other parts (starter cable, wire harness, leads, etc.). Correct if necessary.

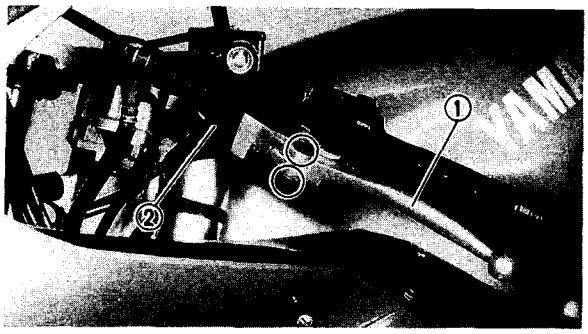

⚠ WARNING

- **Proper clutch hose routing is essential to insure safe motorcycle operation. Refer to "CABLE ROUTING".**
- **Always use new copper washers.**

4.Install:
- Clutch lever ①

NOTE:
Apply lithium soap base grease to the clutch lever pivot.

5.Connect:
- Clutch switch coupler ②

6.Fill:
- Clutch reservoir

Recommended fluid:
DOT 4

CAUTION:
Clutch fluid may damage painted surfaces or plastic parts. Always clean up spilled clutch fluid immediately.

⚠ WARNING

- **Use only the designated quality clutch fluid: other clutch fluids may deteriorate the rubber seals, causing leakage and poor clutch performance.**
- **Refill with the same type of fluid: mixing fluids may result in a harmful chemical reaction and lead to poor clutch performance.**
- **When refilling be careful that water does not enter the master cylinder. Water will significantly lower the boiling point of the clutch fluid and may result in vapor lock.**

7.Air bleed:
- Clutch system
  Refer to "AIR BLEEDING (HYDRAULIC CLUTCH SYSTEM)" in CHAPTER 3.

8.Inspect:
- Clutch fluid level
  Clutch fluid level is under the "LOWER" level line → Fill up.
  Refer to "CLUTCH FLUID LEVEL INSPECTION" in CHAPTER 3.

EB703000

FRONT FORK

① Front fork assembly (right)
② Cap bolt
③ O-ring
④ Locknut
⑤ Circlip
⑥ Spring retainer
⑦ Spring seat
⑧ Fork spring
⑨ Rod (rebound damping force adjuster)
⑩ Damper rod
⑪ Inner tube
⑫ Piston metal
⑬ Front fork protector
⑭ Dust seal
⑮ Retaining clip
⑯ Oil seal
⑰ Seal spacer
⑱ Slide metal
⑲ Outer tube
⑳ Copper washer
㉑ Under bracket

A	FORK OIL (EACH SIDE):
B	CAPACITY: 590 cm³ (20.8 Imp oz, 19.9 US oz)
C	OIL LEVEL: 123 mm (4.84 in) (from the top of the inner tube fully compressed without its spring)
D	GRADE: Fork oil "01" or equivalent

E	FORK SPRING FREE LENGTH: 297 mm (11.7 in)

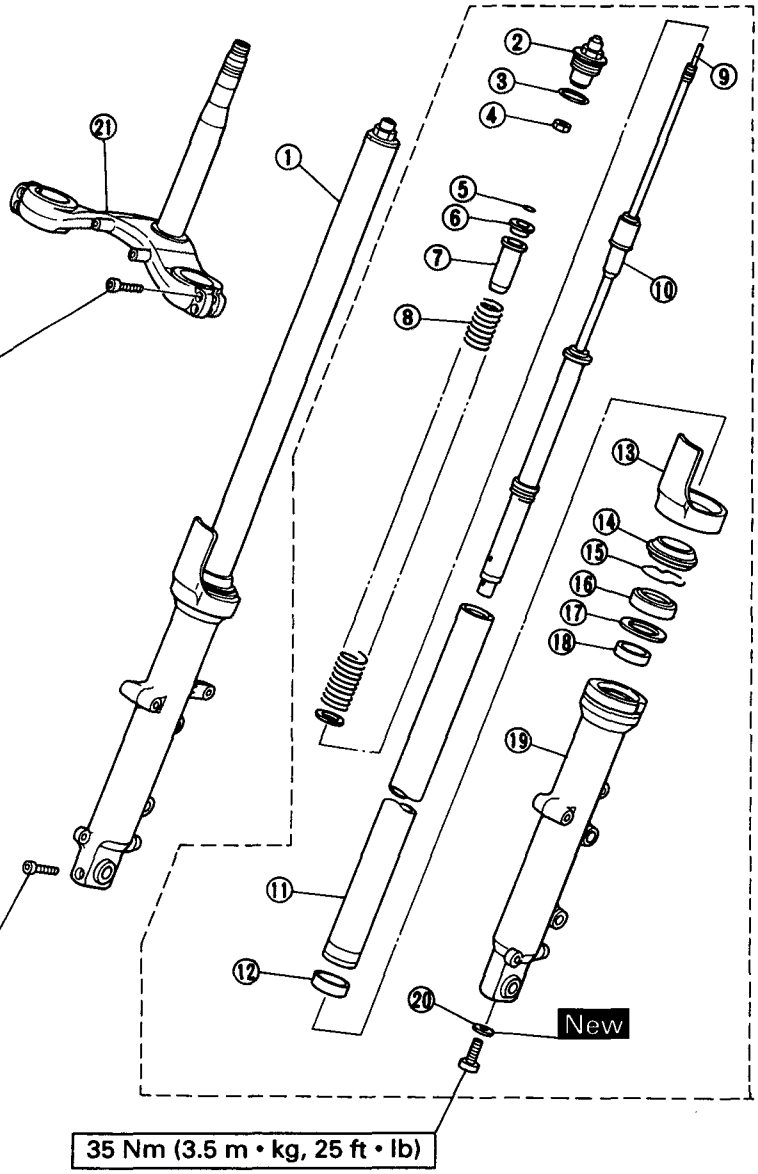

EB703010
REMOVAL

⚠ WARNING

Securely support the motorcycle so there is no danger of it falling over.

NOTE:
Place a suitable stand under the engine to elevate the front wheel.

1.Stand the motorcycle on a level surface.
2.Remove:
- Bottom cowling (front)
- Bottom cowling
  Refer to "COWLINGS" in CHAPTER 3.
- Brake calipers (left and right)
- Front wheel
  Refer to "FRONT WHEEL".

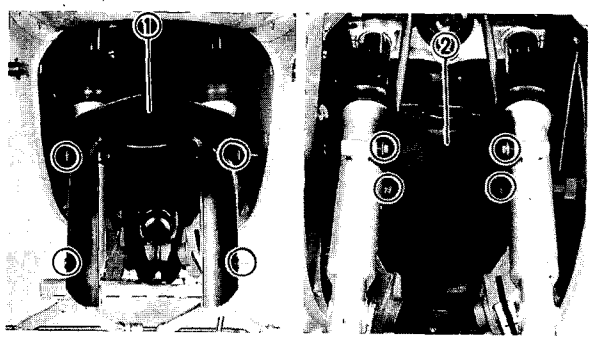

3.Remove:
- Front fender (front) ①
- Front fender (rear) ②

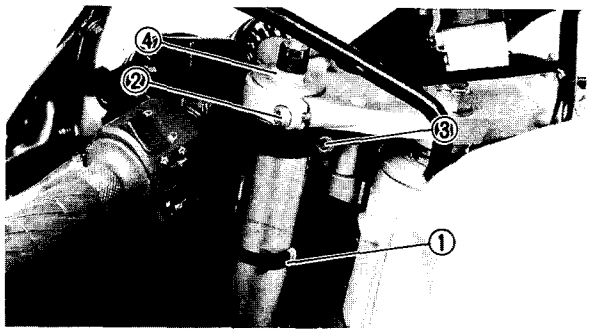

4.Remove:
- Plastic bands (handlebar switch leads) ①
5.Loosen:
- Front fork pinch bolts (upper) ②
- Pinch bolts (handlebar boss) ③
- Cap bolts ④
- Front fork pinch bolts (lower) ⑤

⚠ WARNING

Before loosening the pinch bolts support the front fork.

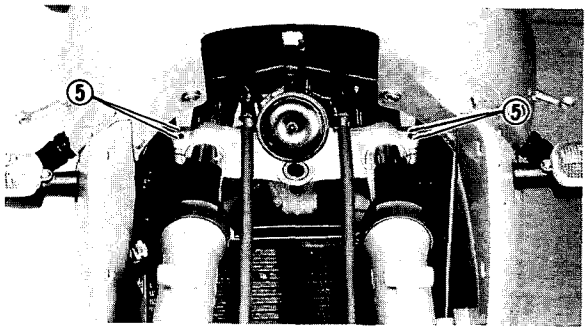

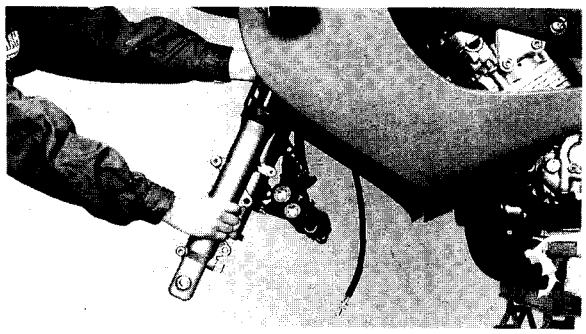

6.Remove:
- Front fork(s)

EB703020
DISASSEMBLY

1.Unscrew:
- Inner tube ①

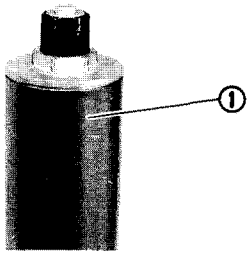

2.Loosen:
- Locknut ①

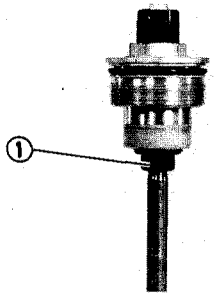

3.Remove:
- Cap bolt assembly ①
- Rod (rebound damping force adjuster) ②
- Locknut ③

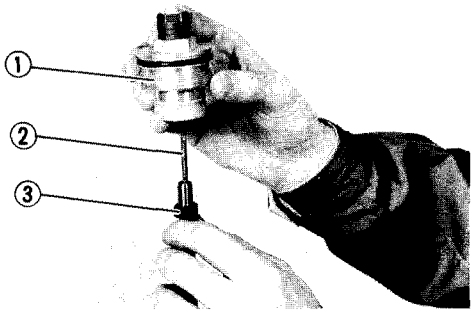

4.Remove:
- Circlip ①

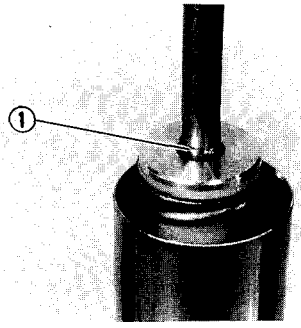

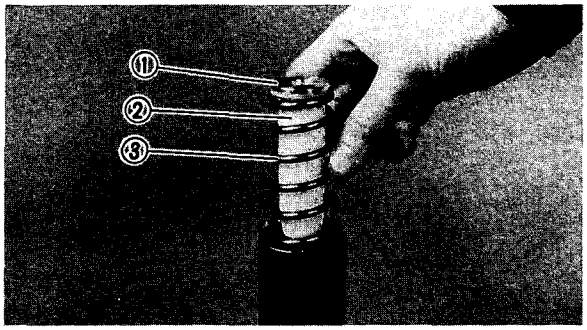

5.Remove:
- Spring retainer ①
- Spring seat ②
- Fork spring ③

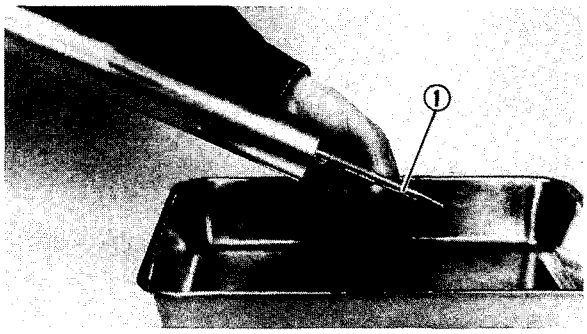

6.Drain:
- Fork oil

NOTE:
While stroking the piston rod ① several times, drain the fork oil.

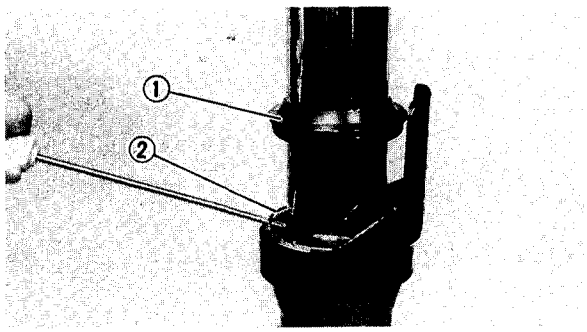

7.Remove:
- Dust seal ①
- Retaining clip ②
  Use a flat-head screwdriver.

CAUTION:
Take care not to scratch the inner tube.

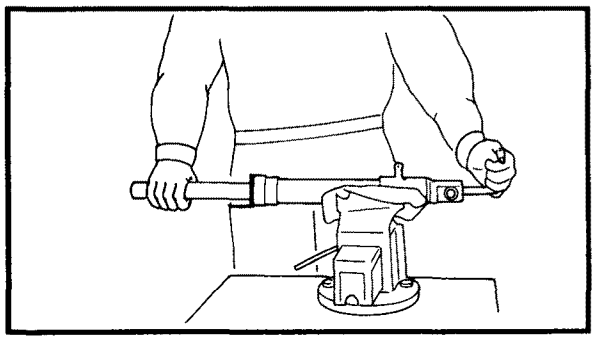

8.Remove:
- Bolt (damper rod)
- *Copper washer*

NOTE:
It is not necessary to hold the damper rod.

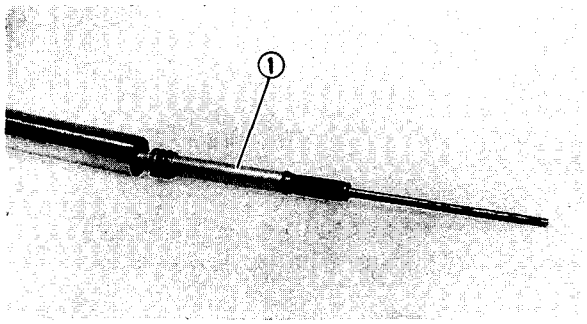

9.Remove:
- Damper rod assembly ①

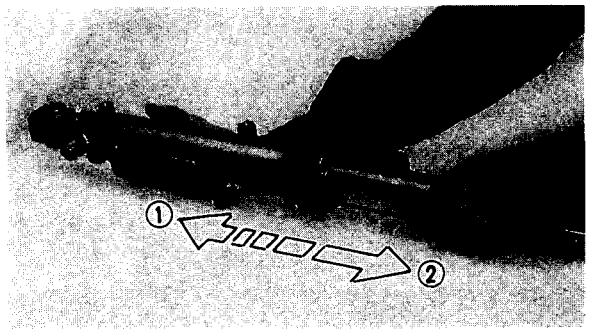

10.Remove:
- Inner tube

****

Removal steps:
- Slowly push ① the inner tube into the outer tube and just before it bottoms out pull the inner tube back quickly ②.
- Repeat this step until the inner tube can be pulled out from the outer tube.

****

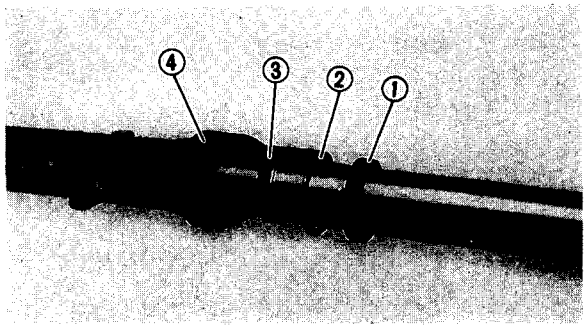

11.Remove:
- Oil seal ①
- Seal spacer ②
- Slide metal ③
- Piston metal
- Front fork protector ④

CAUTION:

When the front fork protector is removed, always install a new protector.

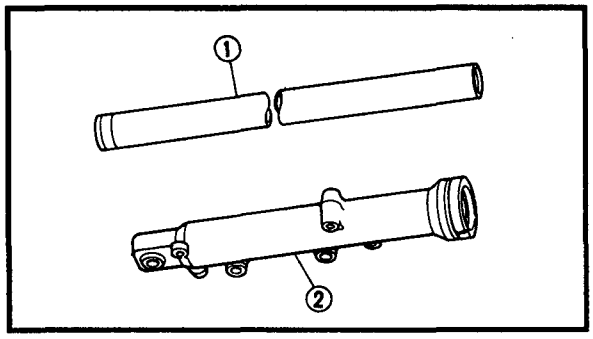

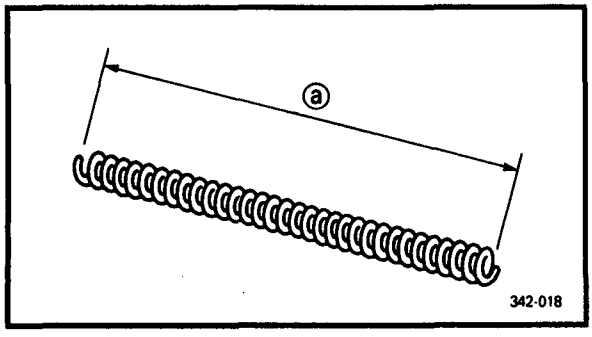

EB703030
INSPECTION

1.Inspect:
- Inner tube ①
- Outer tube ②

  Bends/scratches/damage → Replace.

⚠ WARNING

Do not attempt to straighten a bent inner tube as this may dangerously weaken the tube.

2.Measure:
- Fork spring ⓐ

  Over the specified limit → Replace.

	Fork spring free length (limit): 294 mm (11.57 in)

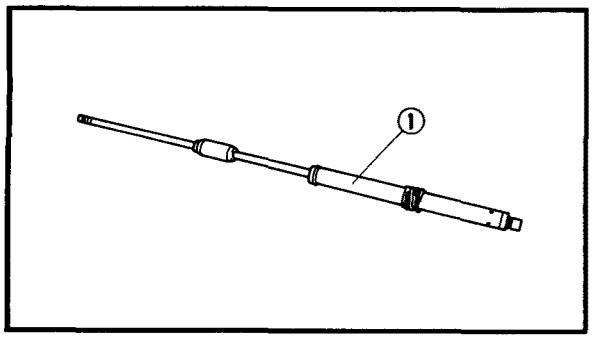

3.Inspect:
- Rod assembly ①
  Bends/damage → Replace.

CAUTION:
- **The front fork has a built-in piston rod and a very sophisticated internal construction which are particularly sensitive to foreign material.**
- **When disassembling and assembling the front fork do not allow any foreign material to enter the oil.**

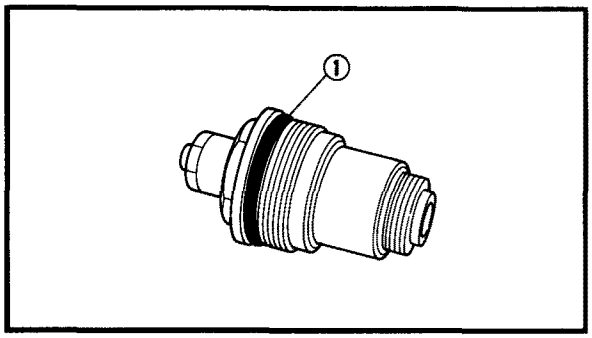

4.Inspect:
- O-ring (cap bolt) ①
  Wear/damage → Replace.

EB703040
ASSEMBLY
Reverse the "DISASSEMBLY" procedure.
Note the following points.

NOTE:
- When assembling the front fork be sure to replace the following parts.
  *Piston metal
  *Slide metal
  *Oil seal
  *Dust seal
- Before assembling the fork, make sure that all of the components are clean.

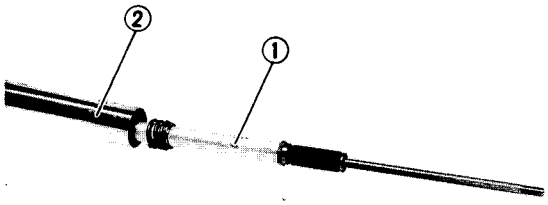

1.Install:
- Damper rod ①

CAUTION:

Allow the damper rod to slide slowly down the inner tube ② until it protrudes from the bottom, being careful not to damage the inner tube.

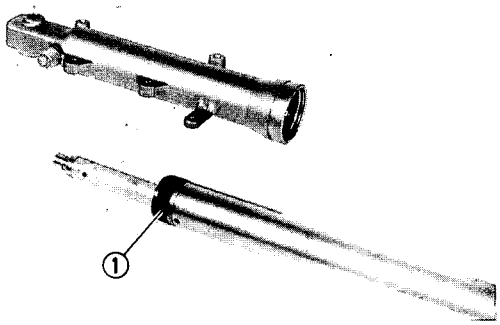

⚠ WARNING

Always use new copper washers.

2.Lubricate:
- Inner tube (outer surface)

	Recommended lubricant: **Fork oil 01 or equivalent**

3.Install:
- Piston metal ①

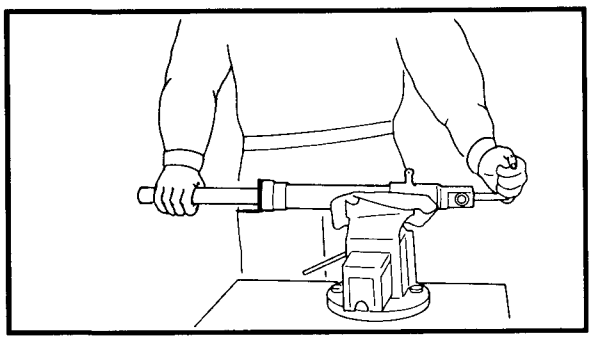

4.Tighten:
- Bolt (damper rod)

	Bolt (damper rod): **35 Nm (3.5 m • kg, 25 ft • lb)** **LOCTITE®**

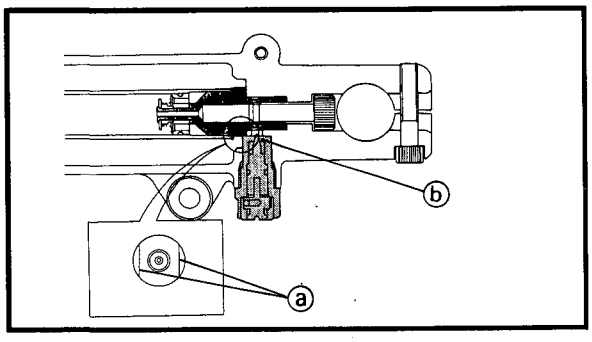

NOTE:

Fully insert the damper rod holder until one of the ends ⓐ contacts the compression damping force adjusting screw ⓑ.

CAUTION:

If the damper rod holder end and compression damping force adjusting screw are not correctly aligned, the damper rod holding bolt cannot be tightened.

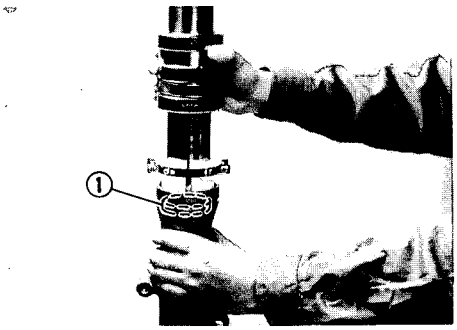

5.Install:
- Slide metal ①

Use a fork seal driver.

	Fork seal driver: **YM-01442/90890-01442**

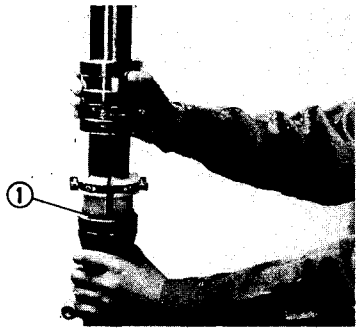

6.Install:
- Seal spacer
- Oil seal ①

  Use the fork seal driver.

	Fork seal driver: **YM-01442/90890-01442**

NOTE:
Before installing the oil seal, apply lithium soap base grease onto the oil seal lips.

CAUTION:
Make sure that the numbered side of the oil seal faces up.

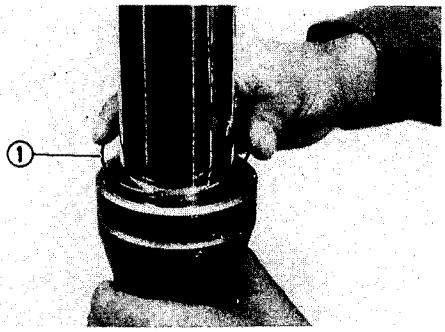

7.Install:
- Retaining clip ①

NOTE:
Adjust the retaining clip so that it fits into the outer tube groove.

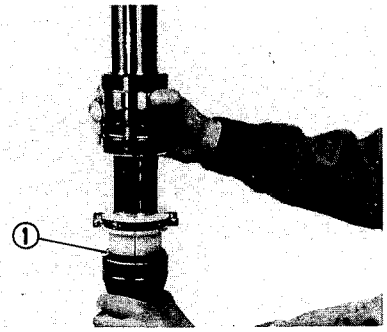

8.Install:
- Dust seal ①

  Use the fork seal driver.

	Fork seal driver: **YM-01442/90890-01442**

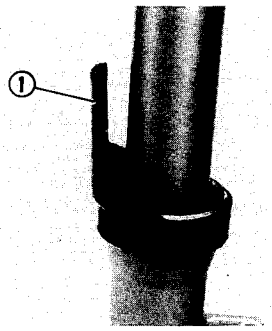

9.Install:
- Front fork protector ①

CAUTION:
When the front fork protector is removed, always install a new protector.

10.Fully compress the front fork.
11.Fill:
- Fork oil

Each fork:
590 cm^3 (20.8 Imp oz, 19.9 US oz)
Fork oil 01 or equivalent

CAUTION:
- **Be sure to use the recommended fork oil. If other oils are used they may have an adverse effect on front fork performance.**
- **NEVER allow foreign materials to enter the front fork.**

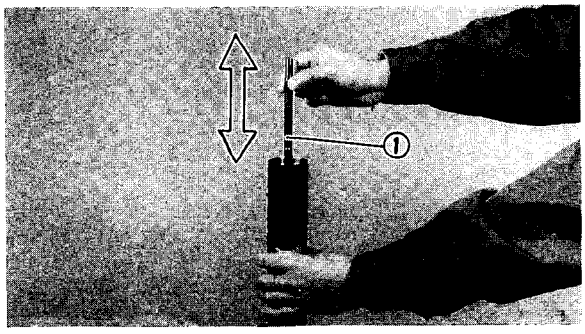

12.After filling the front fork, slowly pump the damper rod ① up and down (for at least ten times) to distribute the front fork oil.

NOTE:
Be sure to pump the damper rod slowly because the fork oil may spurt out.

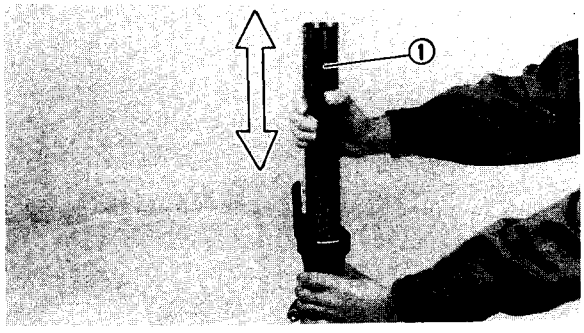

13.After filling the front fork, slowly stroke the inner tube ① up and down (stroke = about 130 mm (5.12 in) to distribute the fork oil once more.

NOTE:
Be careful not to stroke the inner tube over 130 mm (5.12 in) as this will cause air to enter. If a stroke of 130 mm (5.12 in) is exceeded, repeat steps 12 and 13.

14.Before setting the recommended oil level wait ten minutes until the oil has settled and the air bubbles have dispersed.

NOTE:
Be sure to bleed the forks of any residual air.

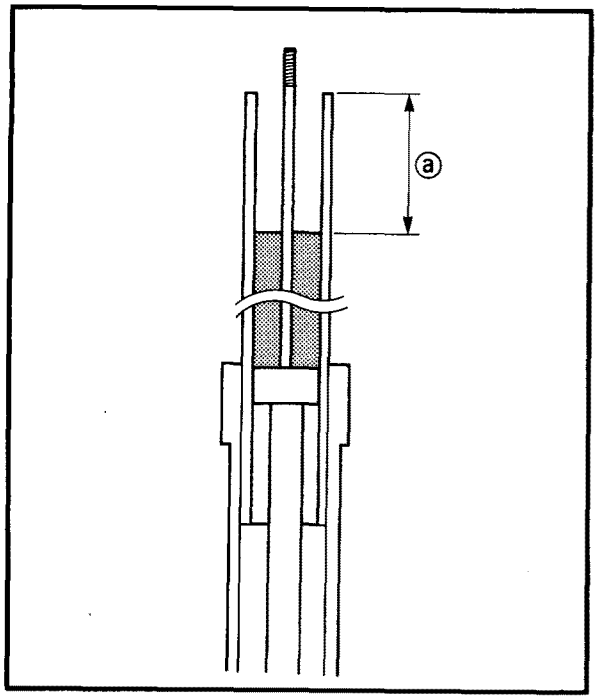

15.Measure:
- Oil level (left and right) ⓐ
  Out of specification → Adjust.

Fork oil level:
123 mm (4.84 in)
(from the top of the fork tube with the fork tube fully compressed and without the spring)

⚠ WARNING

Always adjust each fork to the same oil level. Uneven adjustment can cause poor handling and a loss of stability.

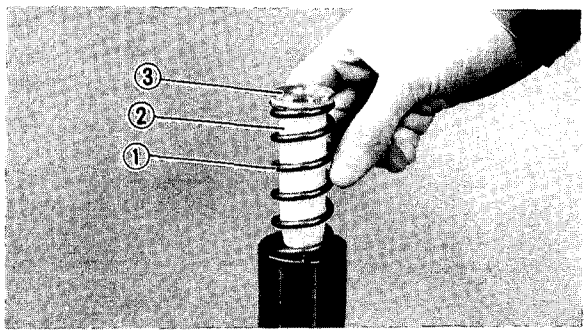

16.Install:
- Fork spring ①
- Spring seat ②
- Spring retainer ③

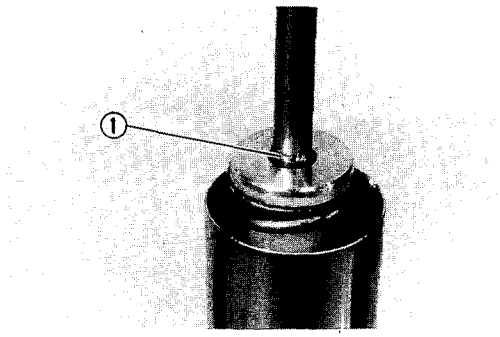

17.Install:
- Circlip ①

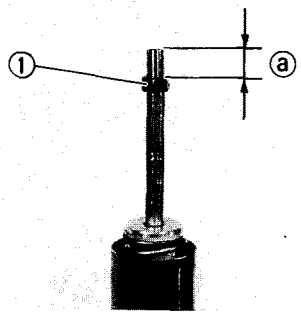

18.Install:
- Locknut
- Rod (rebound damping force adjuster)
- Cap bolt assembly

****

Installation steps:
- Remove the rod puller and adapter.
- Install the locknut ① and set the thread length ⓐ.

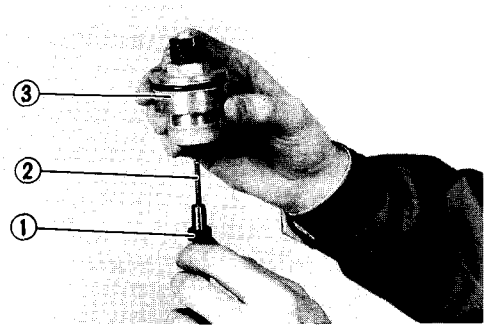

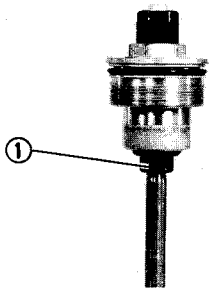

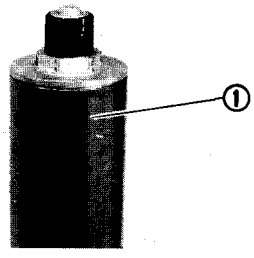

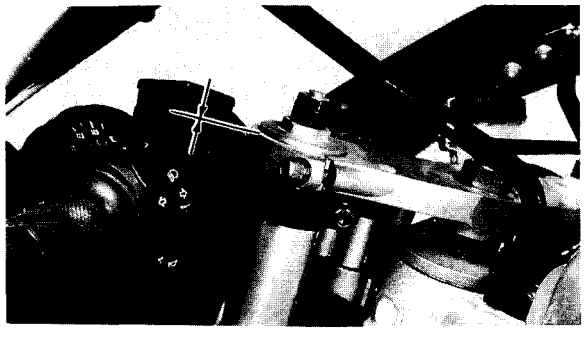

Thread length:
16 mm (0.6 in)

- Install the rod (rebound damping force adjuster) ②.
- Install the cap bolt assembly ③ and finger tighten it.
- Tighten the locknut ①.

NOTE:
Hold the cap bolt and tighten the locknut to specification.

****

⚠ WARNING

Always use a new O-ring on the cap bolt assembly.

19.Install:
- Inner fork tube ①
  (to cap bolt assembly)
  Temporarily tighten the cap bolt assembly.

EB703050
INSTALLATION

Reverse the "REMOVAL" procedure.
Note the following points.

1.Install:
- Front fork(s)
  Temporarily tighten the front fork pinch bolts.

NOTE:
Make sure that the inner tube end is flush with the top of the handlebar boss.

2.Tighten:
- Front fork pinch bolts (lower) ①
- Cap bolts ②
- Pinch bolts (handlebar boss) ③
- Front fork pinch bolts (upper) ④

Pinch bolt (lower):
23 Nm (2.3 m • kg, 17 ft • lb)
Cap bolt:
25 Nm (2.5 m • kg, 18 ft • lb)
Pinch bolt (handlebar boss):
17 Nm (1.7 m • kg, 12 ft • lb)
Pinch bolt (upper):
26 Nm (2.6 m • kg, 19 ft • lb)

3.Install:
- Front fenders (front and rear)

Bolt (front fender):
6 Nm (0.6 m • kg, 4.3 ft • lb)

4.Install:
- Front wheel
- Brake caliper

Refer to "FRONT WHEEL".

Front wheel axle:
70 Nm (7.0 m • kg, 50 ft • lb)
Bolt (brake caliper):
40 Nm (4.0 m • kg, 29 ft • lb)
Pinch bolt (front wheel axle):
23 Nm (2.3 m • kg, 17 ft • lb)

⚠ WARNING

Make sure that the brake hoses are routed properly.

5.Adjust:
- Spring preload
- Rebound damping
- Compression damping

Refer to "FRONT FORK ADJUSTMENT" in CHAPTER 3.

EB704000

STEERING HEAD AND HANDLEBARS

① Steering stem nut
② Washer
③ Upper bracket
④ Special washer
⑤ Ring nut (upper)
⑥ Rubber washer
⑦ Ring nut (lower)
⑧ Bearing cover
⑨ Bearing (upper)
⑩ Dust seal (upper)
⑪ Bearing (lower)
⑫ Dust seal (lower)
⑬ Handlebar
⑭ Grip end
⑮ Handlebar grip (right)
⑯ Handlebar grip (left)
⑰ Handlebar boss
⑱ Throttle cable
⑲ Starter cable

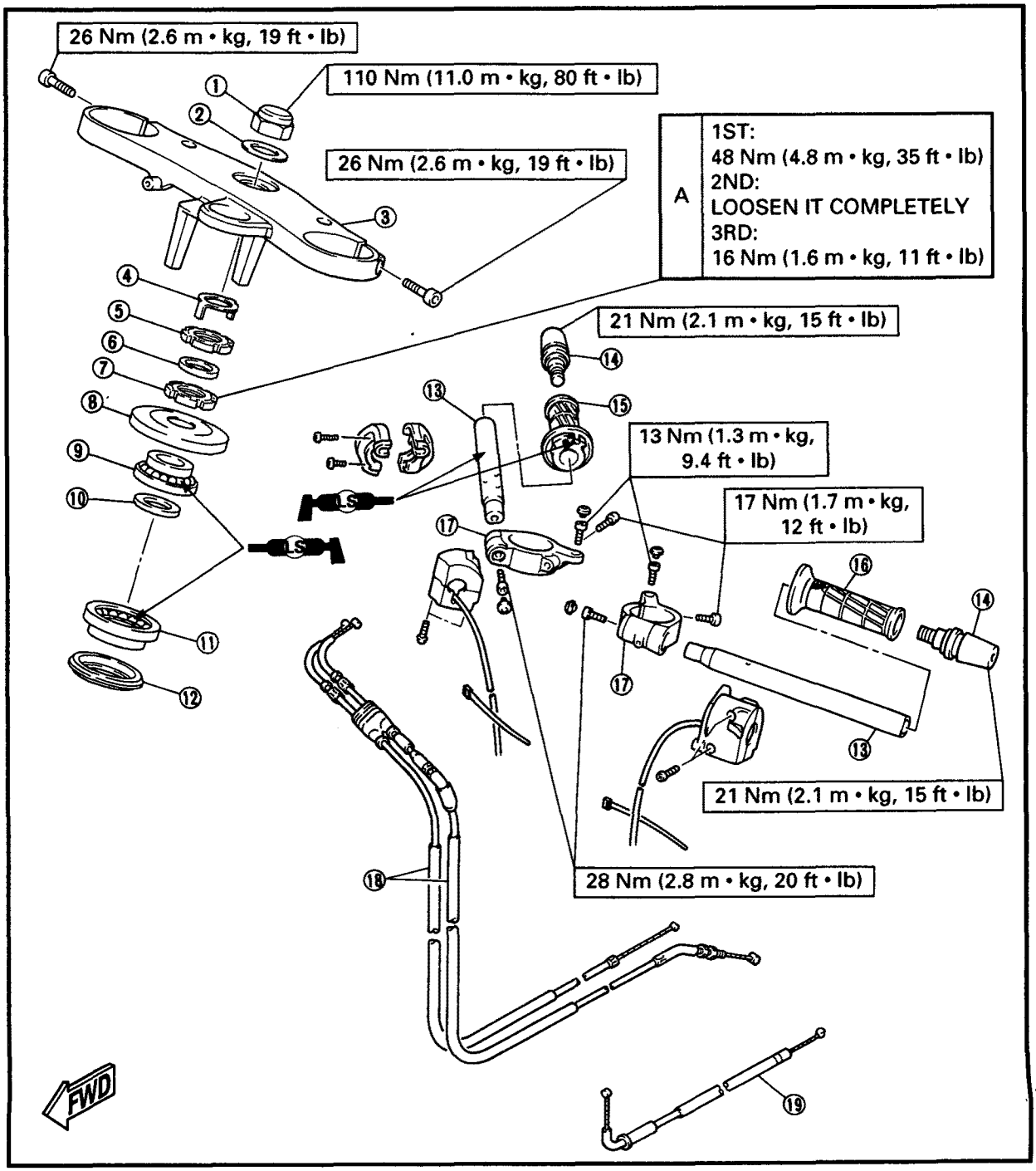

EB704010
REMOVAL

⚠ WARNING

Securely support the motorcycle so that there is no danger of it falling over.

1.Stand the motorcycle on a level surface.
2.Remove:
- Bottom cowling
- Bottom cowling (front)
- Side cowlings (left and right)
  Refer to "COWLINGS" in CHAPTER 3.

3.Disconnect:
- Main switch couplers ①

4.Remove:
- Plastic bands ②
- Metal guide ③

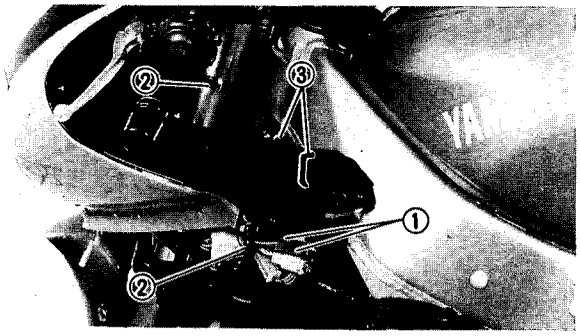

5.Remove:
- Brake reservoir ①

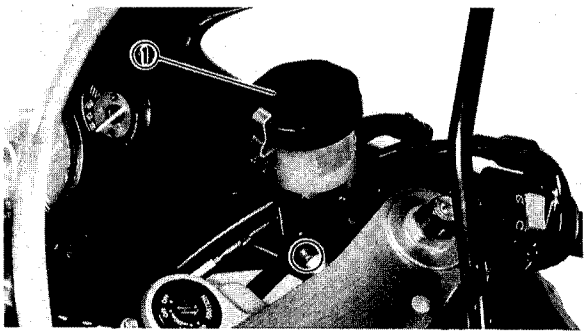

6.Remove:
- Brake switch leads ①
- Clutch switch coupler ②

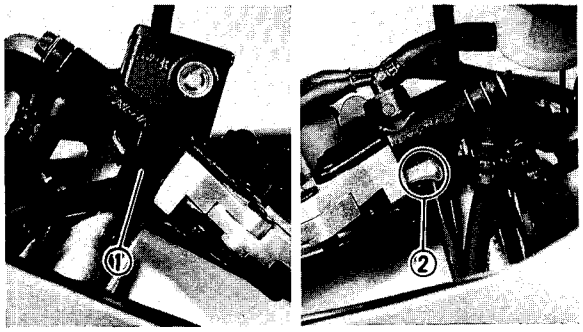

7.Remove:
- Brake lever holder ①
- Clutch lever holder ②

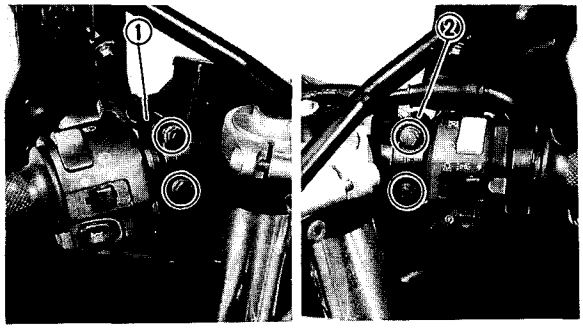

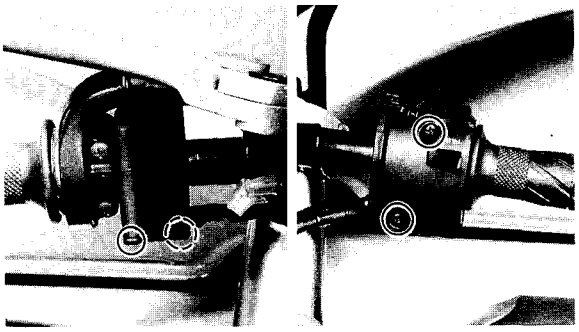

8.Remove:
- Handlebar switches (left and right)

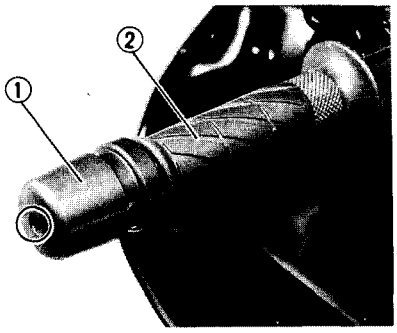

9.Remove:
- Grip ends (left and right) ①
- Grip (left) ②

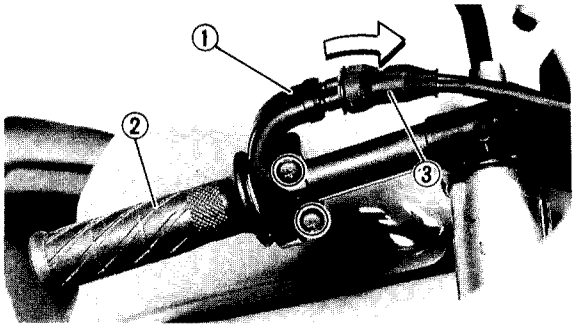

10.Remove:
- Throttle cable housing ①
- Throttle grip ②

NOTE:
When removing the throttle cable housing, pull back the rubber cover ③.

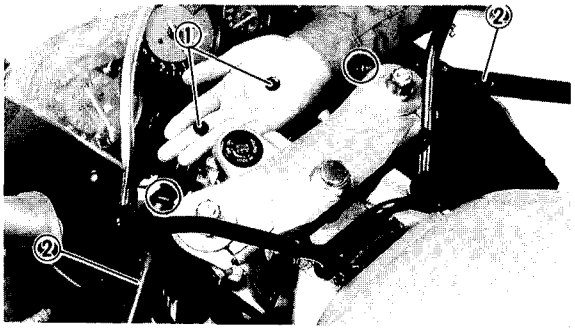

11.Remove:
- Blind plugs ①
- Handlebars (left and right) ②

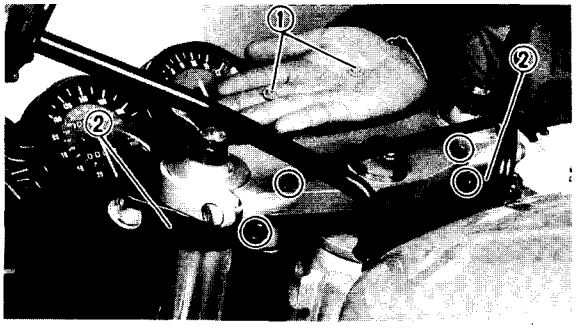

12.Remove:
- Blind plugs ①
- Handlebar bosses (left and right) ②
  (from the upper bracket)

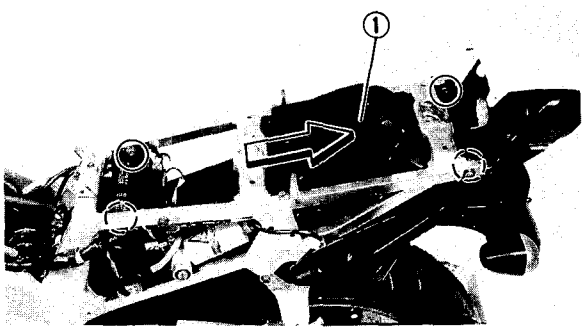

8.Remove:
- Bolts (rear fender) ①

NOTE:
When removing the gas cylinder, pull back the rear fender.

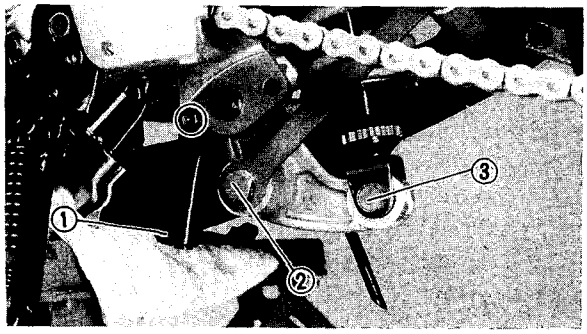

9.Remove:
- Stay (bottom cowling) ①
- Bolt (connecting rod) ②
- Bolt (shock absorber - lower) ③

NOTE:
When removing the lower bolt, hold the swingarm so that it does not drop down.

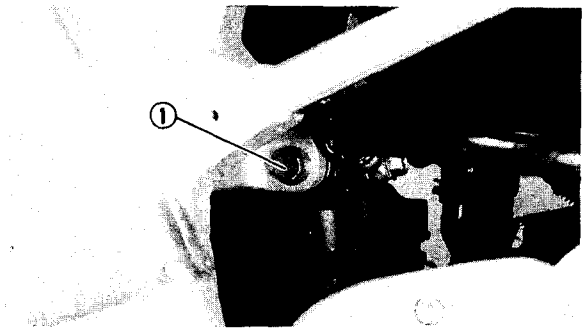

10.Remove:
- Bolt (shock absorber - upper) ①
- Rear shock absorber

NOTE:
Raise the swingarm and then remove the rear shock absorber from between the swingarm and the relay arm.

EB705031
Swingarm

1.Stand the motorcycle on a level surface.

⚠ WARNING

Securely support the motorcycle so that there is no danger of it falling over.

2.Remove:
- Bottom cowling (front)
- Bottom cowling
  Refer to "COWLINGS" in CHAPTER 3.

3.Elevate:
- Rear wheel

NOTE:
Place a suitable stand under the engine to elevate the rear wheel.

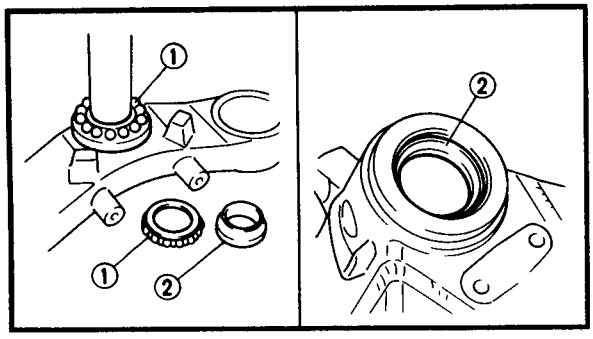

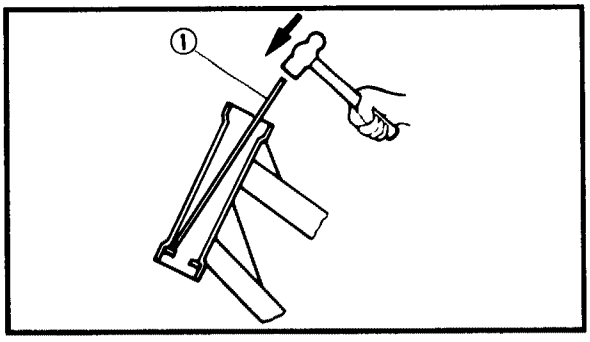

EB704020
INSPECTION

1. Wash the bearings and the bearing races with a solvent.
2. Inspect:
   - Bearings ①
   - Bearing races ②
     Pitting/damage → Replace.

****

Bearing and bearing race replacement steps:

- Remove the bearing races from the steering head pipe using a long rod ① and a hammer, as shown in the illustration.
- Install a new dust seal and new races.

****

NOTE:

- Always replace the bearings and bearing races as a set.
- Whenever the steering head is disassembled replace the dust seal.

CAUTION:

If the bearing race is not fitted squarely, the steering head pipe could be damaged.

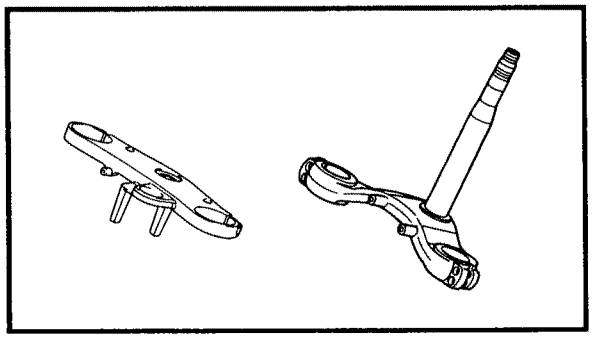

3. Inspect:
   - Upper bracket
   - Lower bracket
     (with the steering stem)
     Bends/cracks/damage → Replace.

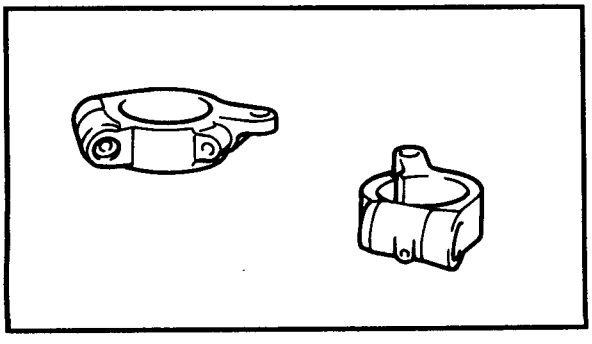

4. Inspect:
   - Handlebar bosses
     Cracks/damage → Replace.

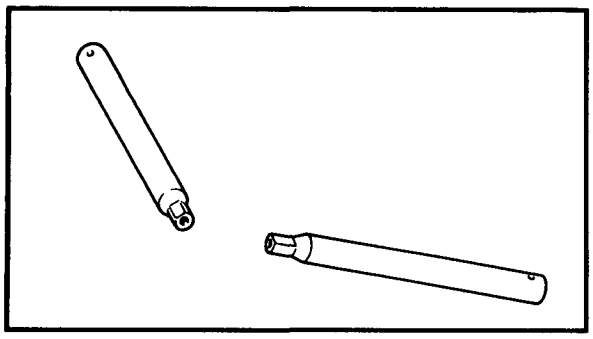

5.Inspect:
- Handlebar
  Bends/cracks/damage → Replace.

⚠ WARNING

Do not attempt to straighten a bent handlebar as this may dangerously weaken it.

****

Left handlebar grip replacement steps:
- Remove the handlebar grip.
- Apply a light coat of rubber adhesive onto the end of the handlebar.
- Install the handlebar grip.

NOTE:
Use a clean rag to wipe off any excess adhesive.

⚠ WARNING

Do not touch the grip until the adhesive has set.

****

EB704030

INSTALLATION

Reverse the "REMOVAL" procedure.
Note the following points.

1.Lubricate:
- Bearings (upper and lower)
- Bearing races

	Recommended lubricant: Lithium soap base grease

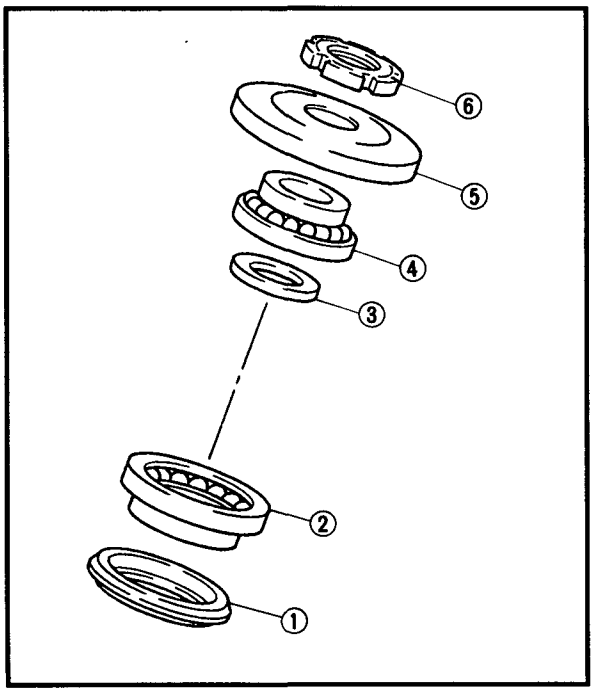

2.Install:
- Dust seal (lower) ①
- Bearing (lower) ②
- Dust seal (upper) ③
- Lower bracket
- Bearing (upper) ④
- Bearing cover ⑤
- Ring nut (lower) ⑥

CAUTION:

Hold the steering stem until it is secured.

3.Tighten:
- Ring nuts (lower and upper)
  Refer to "STEERING HEAD INSPECTION" in CHAPTER 3.

4.Install:
- Upper bracket
- Nut (steering stem)

NOTE:
Temporarily tighten the steering stem nut.

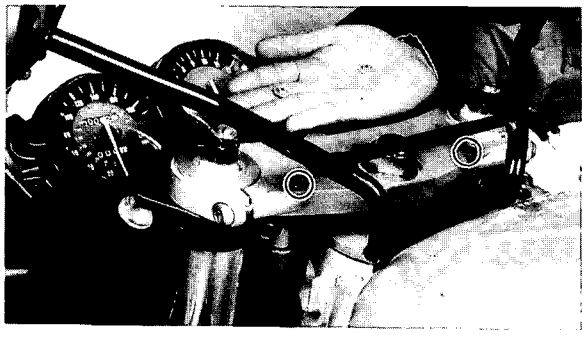

5.Install:
- Front forks
- Handlebar bosses
  Refer to "FRONT FORK".

NOTE:
Temporarily tighten the front fork pinch bolt.

6.Install:
- Handlebars (left and right)

Handlebar:
28 Nm (2.8 m • kg, 20 ft • lb)

7.Tighten:
- Nut (steering stem)
- Front fork pinch bolts (upper)
- Pinch bolts (handlebar boss)
- Front fork pinch bolts (lower)

Nut (steering stem):
110 Nm (11.0 m • kg, 80 ft • lb)
Bolt (handlebar boss and upper bracket):
13 Nm (1.3 m • kg, 9.4 ft • lb)
Pinch bolt (upper):
26 Nm (2.6 m • kg, 19 ft • lb)
Pinch bolt (handlebar boss):
17 Nm (1.7 m • kg, 12 ft • lb)
Pinch bolt (lower):
23 Nm (2.3 m • kg, 17 ft • lb)

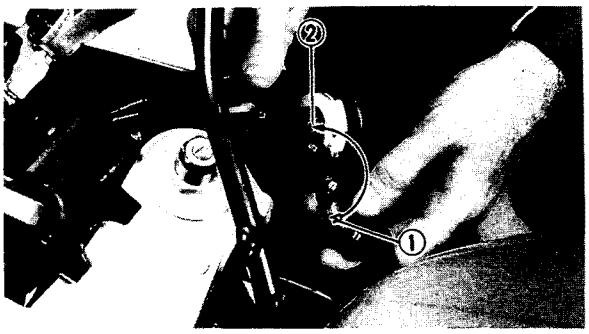

8.Install:
- Throttle grip
- Throttle cable housing

NOTE:
Align the projection ① on the handlebar switch with the hole ② in the handlebar.

9.Install:
- Grip ends (left and right)

	Grip end: **21 Nm (2.1 m • kg, 15 ft • lb)**

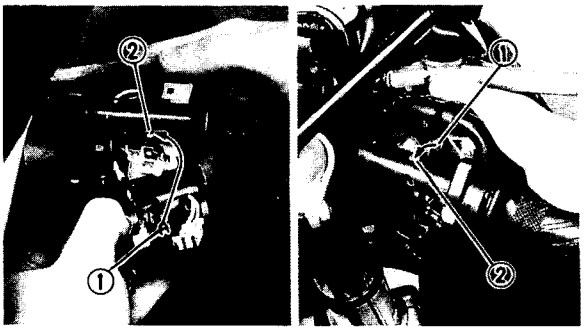

10.Install:
- Handlebar switches (left and right)

NOTE:
Align the projection ① on the handlebar switch with the hole ② in the handlebar.

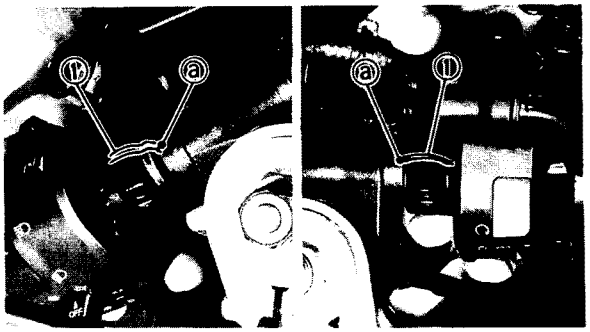

11.Install:
- Clutch lever holder
- Brake lever holder

NOTE:
Align the slit in the lever holders ① with the punch mark ⓐ on the handlebars.

CAUTION:
- **Install the lever holders with the "UP" mark facing up.**
- **First, tighten the upper bolt and then tighten the lower bolt.**

	Bolt (lever holder): **13 Nm (1.3 m • kg, 9.4 ft • lb)**

EB705000

REAR SHOCK ABSORBER AND SWINGARM

① Shock absorber
② Gas cylinder
③ Swingarm
④ Chain guard
⑤ Chain guide
⑥ Thrust cover
⑦ Bearing
⑧ Collar
⑨ Connecting rod
⑩ Oil seal
⑪ Relay arm

NOTE:
Before installation, coat the bearings, oil seals, and collars with a liberal amount of molybdenum disulfide grease. After installing, thoroughly wipe off any excess grease.

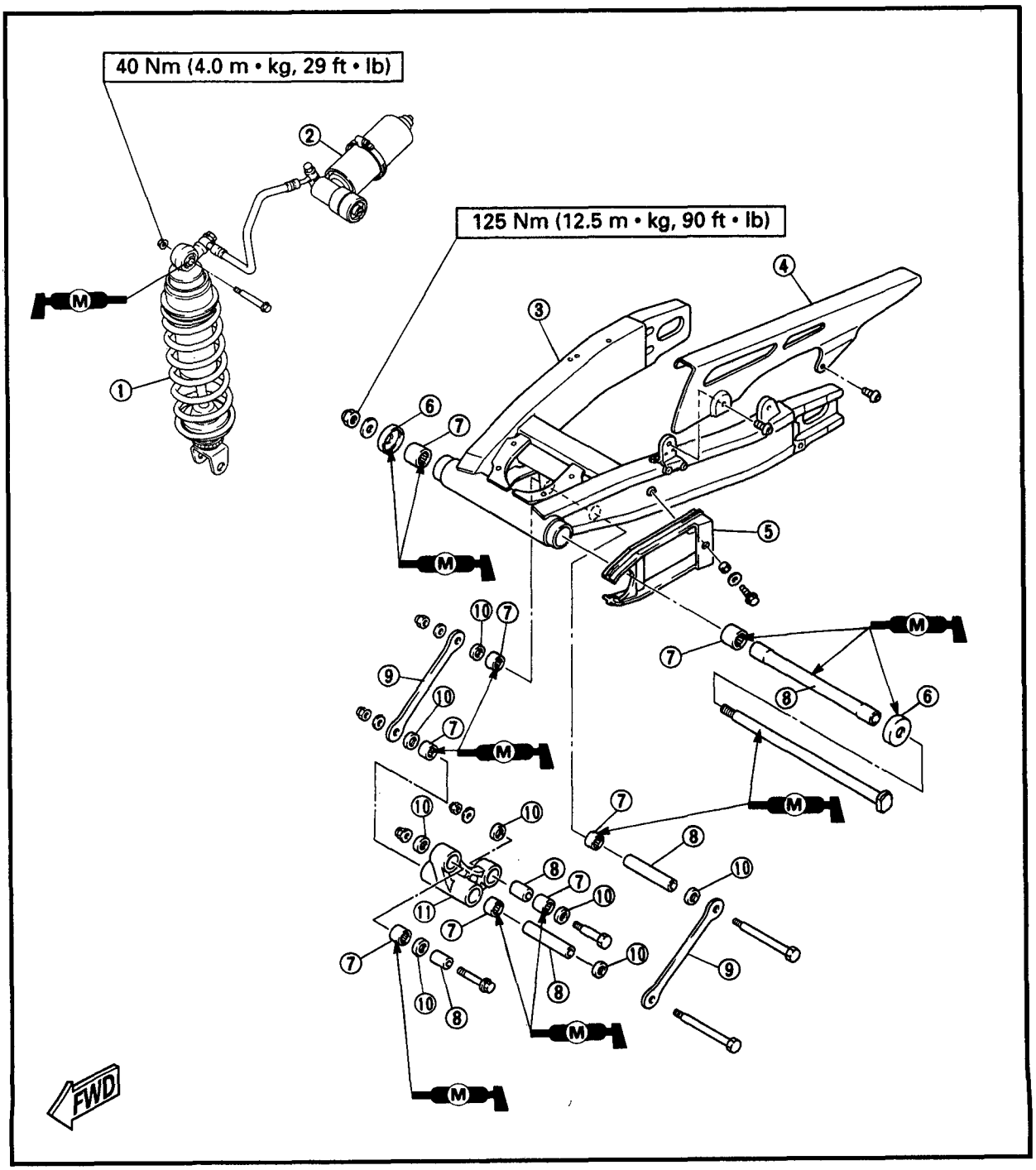

EB705010
HANDLING NOTES

⚠ WARNING

This gas cylinder contains highly compressed nitrogen gas. Before handling the shock absorber read and make sure that you understand the following information. The manufacturer cannot be held responsible for property damage or personal injury that may result from improper handling.

- **Do not tamper or attempt to open the gas cylinder.**
- **Do not subject the shock absorber to an open flame or any other source of high heat. This may cause the unit to explode due to excessive gas pressure.**
- **Do not deform or damage the gas cylinder in any way. Gas cylinder damage will result in poor damping performance.**

EB705020
NOTES ON DISPOSAL

****

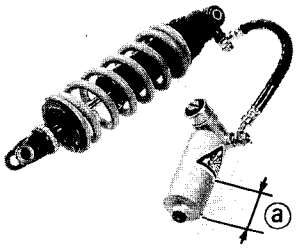

Shock absorber disposal procedure:

- Gas pressure must be released before disposing of the gas cylinder. To do so, drill a 2 ~ 3 mm (0.08 ~ 0.12 in) hole through the gas cylinder wall at a point ⓐ 15 ~ 20 mm (0.6 ~ 0.8 in) from the end of the gas cylinder.

⚠ WARNING

To prevent eye damage from released gas and/or metal chips wear eye protection.

****

EB705030
REMOVAL

Rear shock absorber

1.Stand the motorcycle on a level surface.

⚠ WARNING

Securely support the motorcycle so that there is no danger of it falling over.

2.Remove:
- Bottom cowling (front)
- Bottom cowling
  Refer to "COWLINGS" in CHAPTER 3.

3.Elevate:
- Rear wheel

NOTE:
Place a suitable stand under the engine to elevate the rear wheel.

4.Remove:
- Rider seat
- Passenger seat
- Side panels (left and right)
- Fuel tank
  Refer to "SEAT" and "FUEL TANK" in CHAPTER 3.

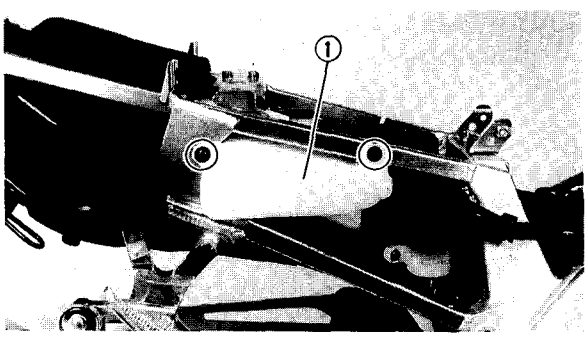

5.Unhook:
- Coolant reservoir ①

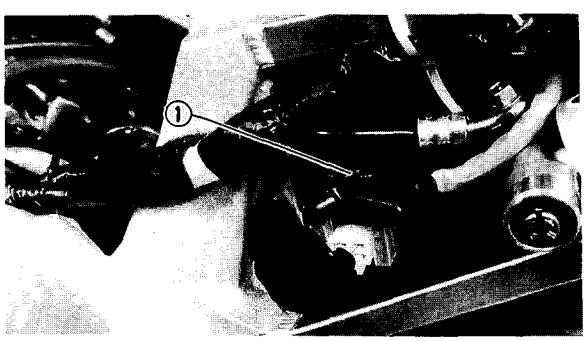

6.Unhook:
- Starter relay ①
  (from the rear fender)

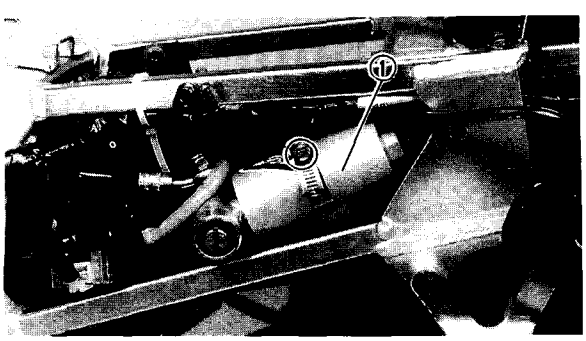

7.Remove:
- Gas cylinder ①

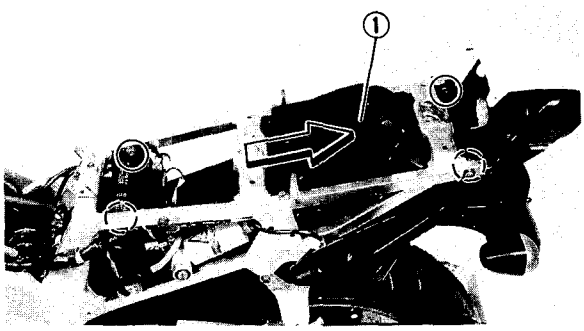

8.Remove:
- Bolts (rear fender) ①

NOTE:
When removing the gas cylinder, pull back the rear fender.

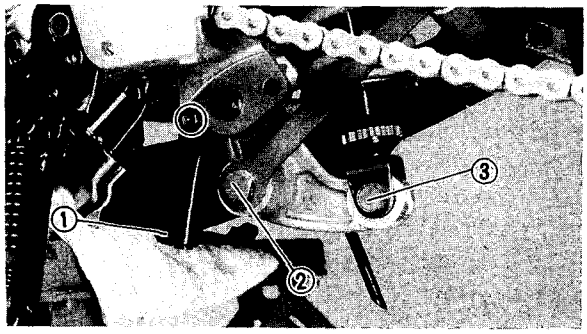

9.Remove:
- Stay (bottom cowling) ①
- Bolt (connecting rod) ②
- Bolt (shock absorber - lower) ③

NOTE:
When removing the lower bolt, hold the swingarm so that it does not drop down.

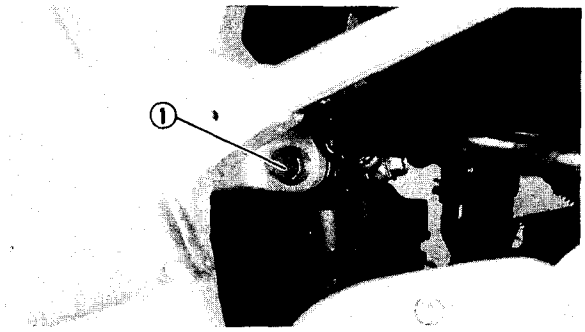

10.Remove:
- Bolt (shock absorber - upper) ①
- Rear shock absorber

NOTE:
Raise the swingarm and then remove the rear shock absorber from between the swingarm and the relay arm.

EB705031
Swingarm

1.Stand the motorcycle on a level surface.

⚠ WARNING

Securely support the motorcycle so that there is no danger of it falling over.

2.Remove:
- Bottom cowling (front)
- Bottom cowling
  Refer to "COWLINGS" in CHAPTER 3.

3.Elevate:
- Rear wheel

NOTE:
Place a suitable stand under the engine to elevate the rear wheel.

4.Remove:
- Rear wheel
  Refer to "REAR WHEEL".

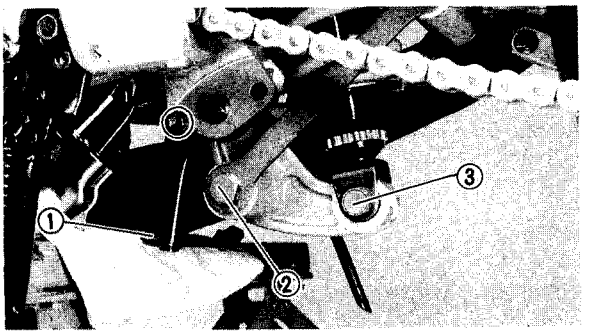

5.Remove:
- Stay (bottom cowling) ①
- Bolt (connecting rod) ②
- Bolt (shock absorber - lower) ③

NOTE:
When removing the lower bolt, hold the swingarm so that it does not drop down.

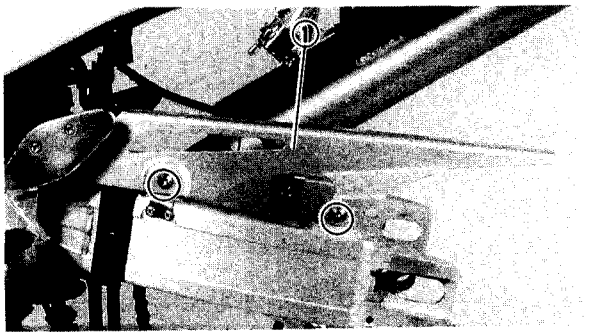

6.Remove:
- Chain guard ①

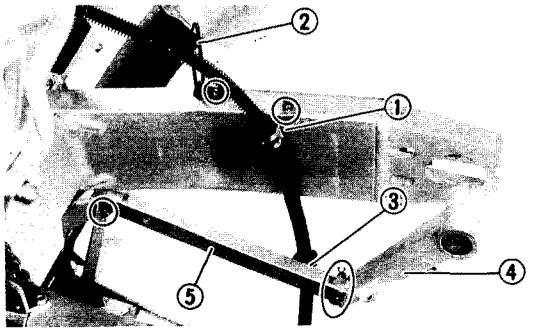

7.Remove:
- Brake hose holder ①
- Brake hose guide ②
- Brake hose guide ③
- Brake caliper bracket ④
- Tension bar ⑤

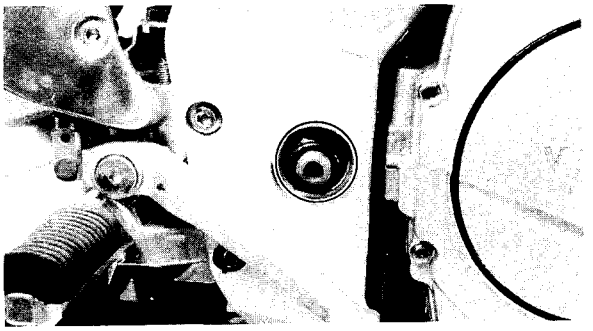

8.Check:
- Swingarm free play

****

Inspection steps:
- Check the tightening torque of the swingarm pivot shaft securing nuts.

	Nut (swingarm pivot shaft): 90 Nm (9.0 m • kg, 65 ft • lb)

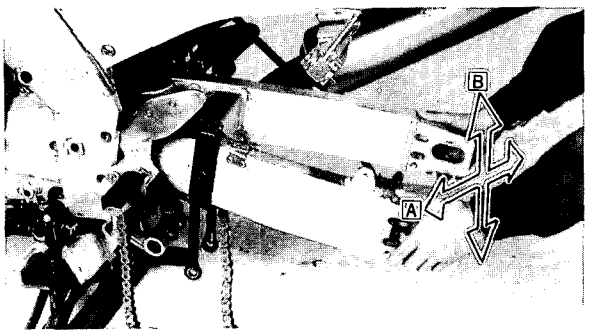

- Check the swingarm side play [A] by moving the swingarm from side to side.
  If side play is noticeable, check the inner collar, bearing, washer and thrust cover.

	Side play (at swingarm end): 1.0 mm (0.04 in)

- Check the swingarm vertical movement [B] by moving the swingarm up and down.
  If vertical movement is not smooth or if there is binding, check the inner collar, bearing, washer and thrust cover.

****

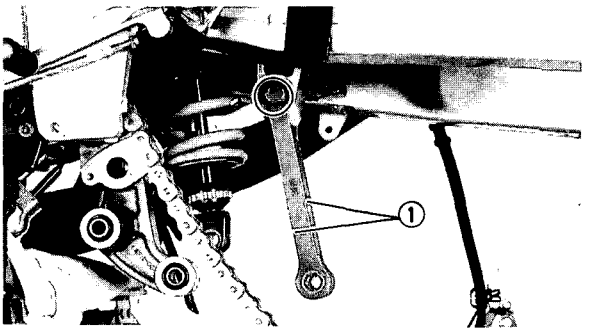

9.Remove:
- Connecting rods (left and right) ①

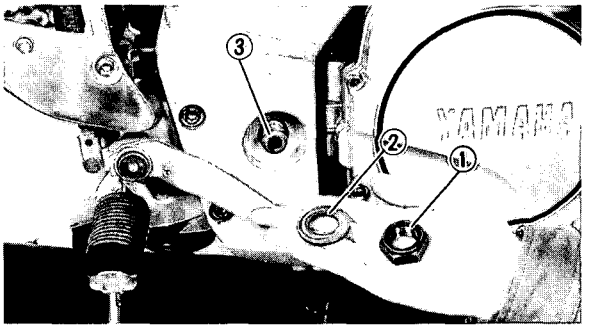

10.Remove:
- Nut (pivot shaft) ①
- Washer ②
- Pivot shaft ③
- Swingarm

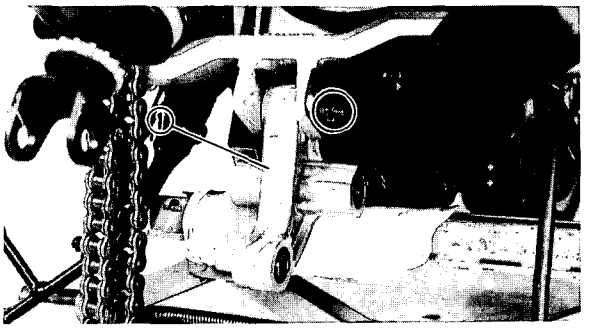

11.Remove:
- Relay arm ①

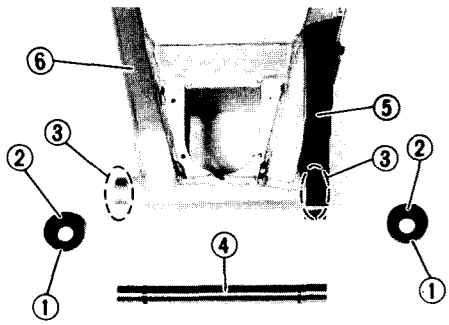

12.Remove:
- Thrust covers ①
- Oil seals ②
- Bearings ③
- Collar (swingarm) ④
- Chain guide ⑤
- Swingarm ⑥

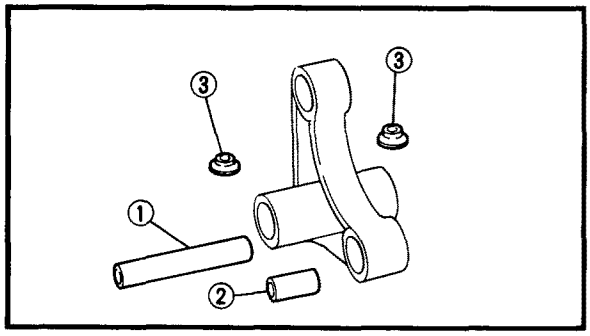

13.Remove:
- Collar (compression arm) ①
- Collar (relay arm) ②
- Collars (shock absorber) ③

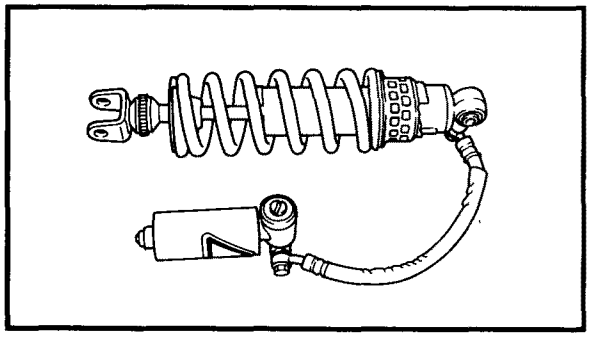

EB705040
INSPECTION
Rear shock absorber
1.Inspect:
- Rear shock absorber rod
  Bends/damage → Replace the rear shock absorber assembly.
- Rear shock absorber
  Gas leaks/oil leaks → Replace the rear shock absorber assembly.
- Spring
  Wear/damage → Replace the rear shock absorber assembly.
- Bushings
- Dust seals
  Wear/damage → Replace.
- Bolts
  Bends/wear/damage → Replace.

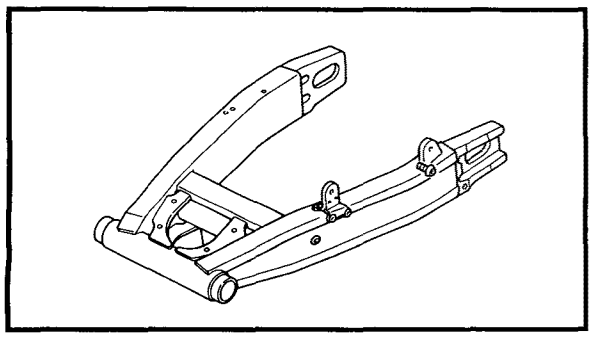

EB705042
Swingarm
1.Inspect:
- Swingarm
  Bends/cracks/damage → Replace.

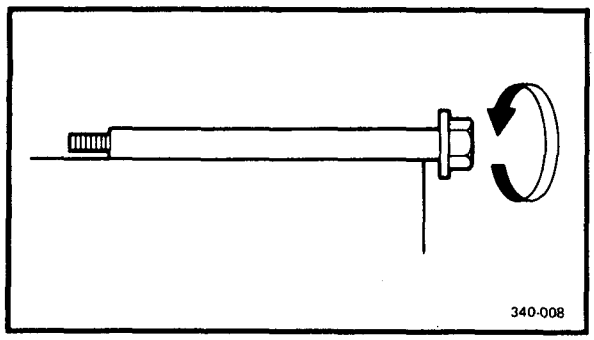

2.Inspect:
- Pivot shaft
  Roll the axle on a flat surface.
  Bends → Replace.

⚠ WARNING

Do not attempt to straighten a bent axle.

3.Wash the swingarm pivoting parts in a solvent.

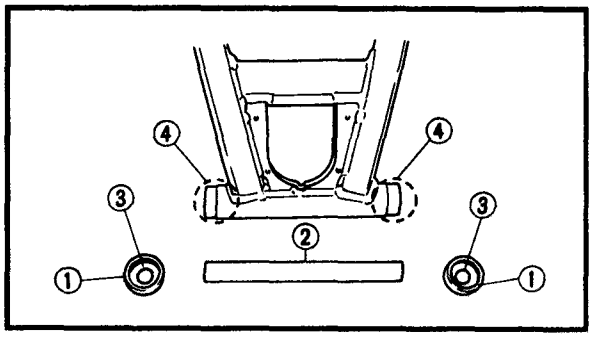

4.Inspect:
- Thrust cover ①
- Inner collar ②
- Oil seal ③
  Wear/damage → Replace.
- Bearings ④
  Pitting/damage → Replace.

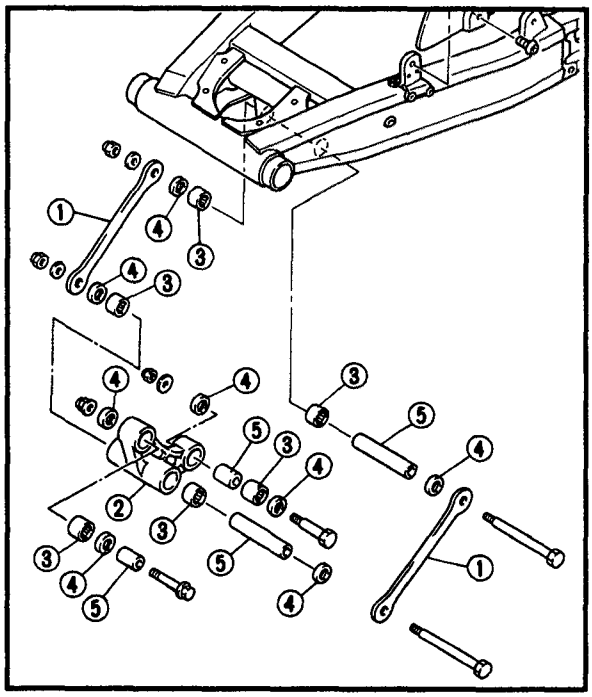

5.Inspect:
- Connecting rod ①
- Relay arm ②
  Cracks/damage → Replace.
- Bearings ③
  Pitting/damage → Replace.
- Oil seals ④
- Collars ⑤
  Scratches/damage → Replace.

EB706050

INSTALLATION

Rear shock absorber

Reverse the "REMOVAL" procedure.
Note the following points.

1.Lubricate:
- Bearings
- Oil seals
- Collars
- Bushings

Recommended lubricant:
Molybdenum disulfide grease

2.Install:
- Collars
- Rear shock absorber

Nut (rear shock absorber - upper):
40 Nm (4.0 m • kg, 29 ft • lb)
Nut (rear shock absorber - lower):
40 Nm (4.0 m • kg, 29 ft • lb)
Nut (relay arm - frame):
48 Nm (4.8 m • kg, 35 ft • lb)

NOTE:
- When installing the rear shock absorber lift up the swingarm.
- Insert the front connecting rod bolt from the right.

Swingarm
Reverse the "REMOVAL" procedure.
Note the following points.
1.Lubricate:
- Bearings
- Inner collars
- Thrust covers
- Pivot shaft

Recommended lubricant:
Molybdenum disulfide grease

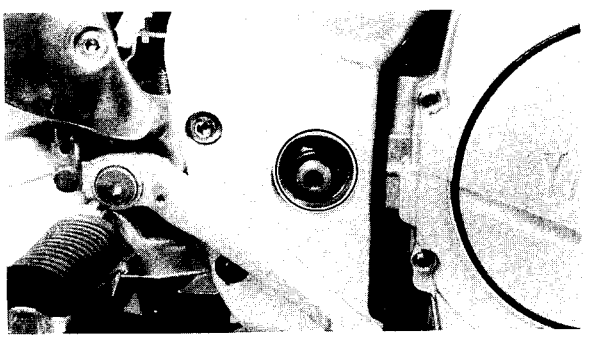

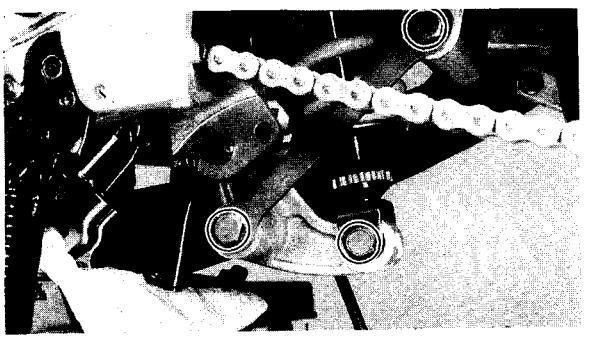

2.Install:
- Swingarm

Nut (pivot shaft):
125 Nm (12.5 m • kg, 90 ft • lb)

3.Install:
- Relay arm
- Connecting rods (left and right)

Nut (relay arm):
48 Nm (4.8 m • kg, 35 ft • lb)
Nut (connecting rod):
48 Nm (4.8 m • kg, 35 ft • lb)

CAUTION:
Insert the bolts from the right.

4.Install:
- Drive sprocket
- Drive sprocket cover
  Refer to "ENGINE REMOUNTING" in CHAPTER 4.

5.Install:
- Rear fender
- Tension bar
- Brake caliper bracket

	Nut (tension bar): **30 Nm (3.0 m • kg, 22 ft • lb)**

CAUTION:

Be careful that the rubber grommet does not come out of the brake hose holder on the inside of the swingarm.

6.Install:
- Rear shock absorber
  Refer to "INSTALLATION – Rear shock absorber".
- Rear wheel
  Refer to "REAR WHEEL".

7.Adjust:
- Drive chain slack
  Refer to "DRIVE CHAIN SLACK ADJUSTMENT" in CHAPTER 3.

EB706000

DRIVE CHAIN AND SPROCKETS

① Damper rubber
② Bearing
③ Collar
④ Sprocket hub
⑤ Driven sprocket
⑥ Oil seal
⑦ Drive chain

A	DRIVE CHAIN:
B	TYPE: 523ZLV KAI
C	NO. OF LINKS: 110
D	DRIVE CHAIN SLACK: 20 ~ 35 mm (0.8 ~ 1.4 in)

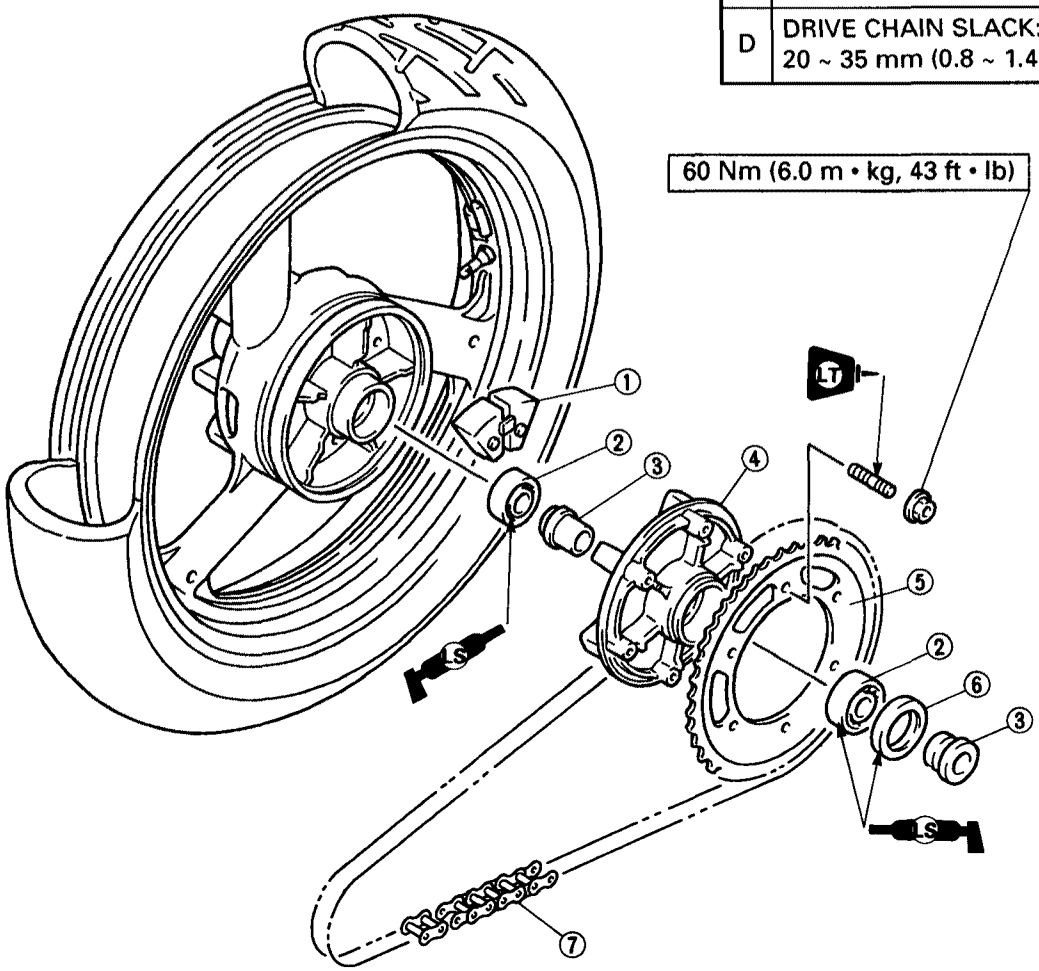

EB706001

NOTE:
Before removing the drive chain and the sprockets, measure the drive chain slack and a ten link section of the drive chain.

EB706010

REMOVAL

1.Stand the motorcycle on a level surface.

⚠ WARNING

Securely support the motorcycle so that there is no danger of it falling over.

2.Remove:
- Shift pedal link
- Drive sprocket cover
- Drive sprocket
  Refer to "ENGINE REMOVAL" in CHAPTER 4.

3.Remove:
- Rear wheel
  Refer to "REAR WHEEL".
- Rear shock absorber
- Swingarm
- Drive chain
  Refer to "REAR SHOCK ABSORBER AND SWINGARM".

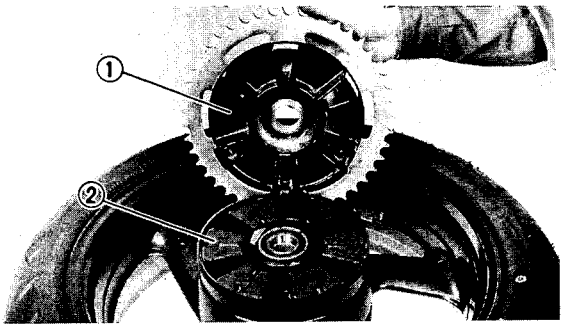

4.Remove:
- Collar
- Driven sprocket ①
  (with the sprocket hub)
- Damper rubber ②

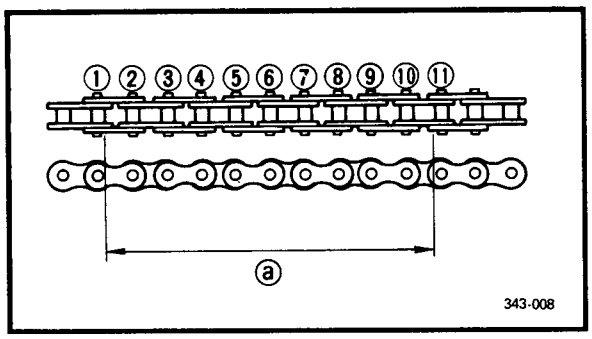

EB706020
INSPECTION

1.Measure:
- Ten link length (drive chain) ⓐ
  Out of specification → Replace the drive chain.

Ten link length limit:
149.1 mm (5.87 in)

NOTE:
- Use a finger to increase tension on the chain.
- A ten link section is the distance between the inside edge of roller ① and the inside edge of roller ⑪.
- Measurements should be taken at two or three different ten link sections.

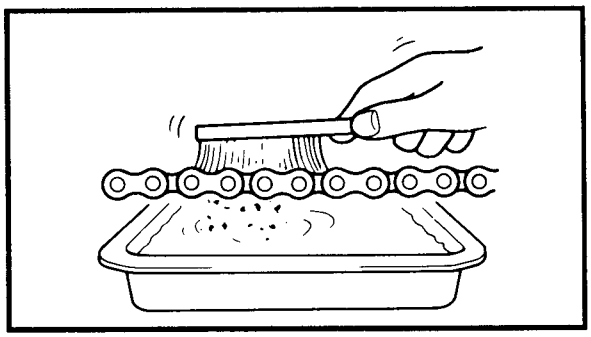

2.Clean:
- Drive chain
  Put the drive chain in kerosene and brush off as much dirt as possible. Then, remove the drive chain from the kerosene and dry it off.

CAUTION:
This motorcycle has a drive chain with small rubber O-rings ① between the chain plates. Steam cleaning, high pressure washing, and certain solvents can damage these O-rings. Use only kerosene to clean the drive chain.

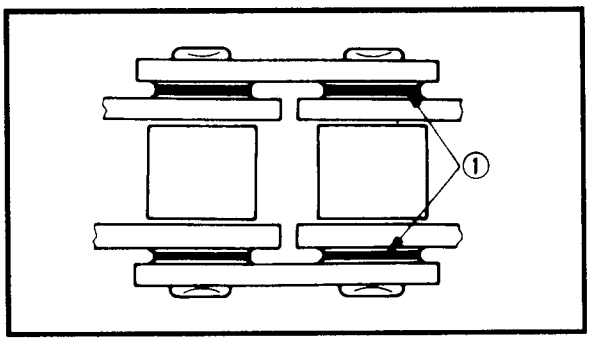

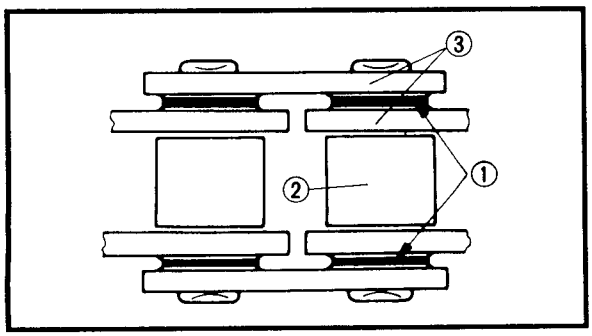

3.Inspect:
- O-rings (drive chain) ①
  Damage → Replace the drive chain.
- Rollers ②
- Side plates ③
  Wear/damage → Replace the drive chain.

4.Lubricate:
- Drive chain

Drive chain lubricant:
SAE 30 ~ 50W motor oil or chain lubricant suitable for "O-ring" chains

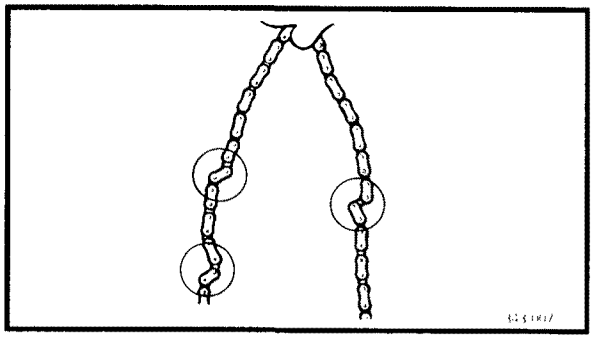

5.Inspect:
- Drive chain
  Stiffness → Clean and lubricate or replace.

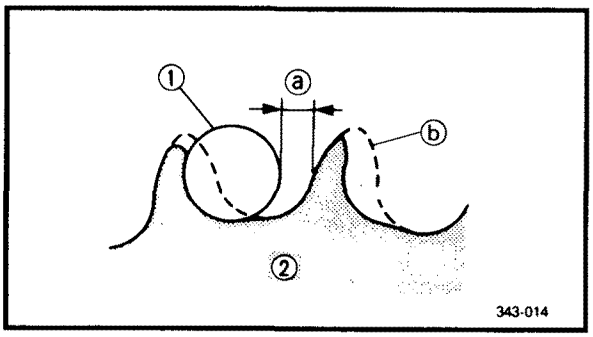

6.Inspect:
- Drive sprocket
- Driven sprocket
  More than 1/4 tooth ⓐ wear → Replace the sprocket.
  Bent teeth → Replace the sprocket.

ⓑ Correct
① Roller
② Sprocket

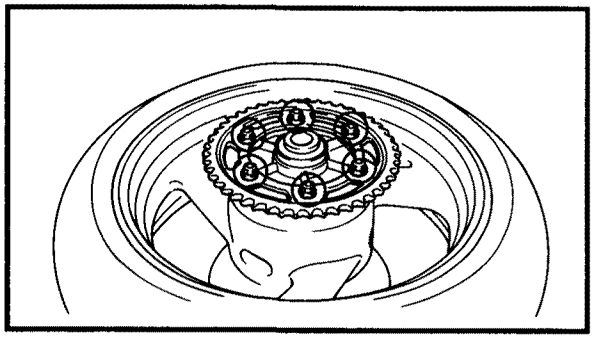

****

Driven sprocket replacement steps:
- Remove the self-locking nuts and the driven sprocket.
- Use a clean cloth to clean the hub, especially the surfaces in contact with the driven sprocket.
- Install the new driven sprocket.

NOTE:
Tighten the self-locking nuts in stages, using a crisscross pattern.

Self-locking nut (driven sprocket):
60 Nm (6.0 m • kg, 43 ft• lb)

****

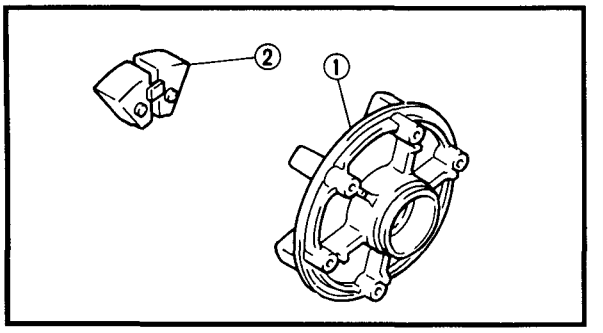

7.Inspect:
- Sprocket hub ①
  Cracks/damage → Replace.
- Damper rubber ②
  Wear/damage → Replace.

EB706030
INSTALLATION

Reverse the "REMOVAL" procedure.
Note the following points.

1.Install:
- Drive chain
- Swingarm
- Rear shock absorber
  Refer to "REAR SHOCK ABSORBER AND SWINGARM".
- Rear wheel
  Refer to "REAR WHEEL".

2.Install:
- Drive sprocket
- Drive sprocket cover
- Shift pedal link
  Refer to "ENGINE ASSEMBLY AND ADJUSTMENT" in CHAPTER 4.

3.Adjust:
- Drive chain slack
  Refer to "DRIVE CHAIN SLACK ADJUSTMENT" in CHAPTER 3.

Drive chain slack:
20 ~ 35 mm (0.8 ~ 1.4 in)

CAUTION:
Too little chain slack will overload the engine and other vital parts; keep the slack within the specified limits.

EB800000

ELECTRICAL

ELECTRICAL COMPONENTS

① Ignitor unit
② Flasher relay
③ GPS (gear position sensor)
④ Oil level switch
⑤ Ignition coil
⑥ Thermo unit
⑦ Thermo switch
⑧ Horn
⑨ EXUP servo motor

IGNITION COIL:
PRIMARY WINDING RESISTANCE:
1.9 ~ 2.5 Ω at 20 °C (68°F)
SECONDARY WINDING RESISTANCE:
12 ~ 18 kΩ at 20 °C (68°F)

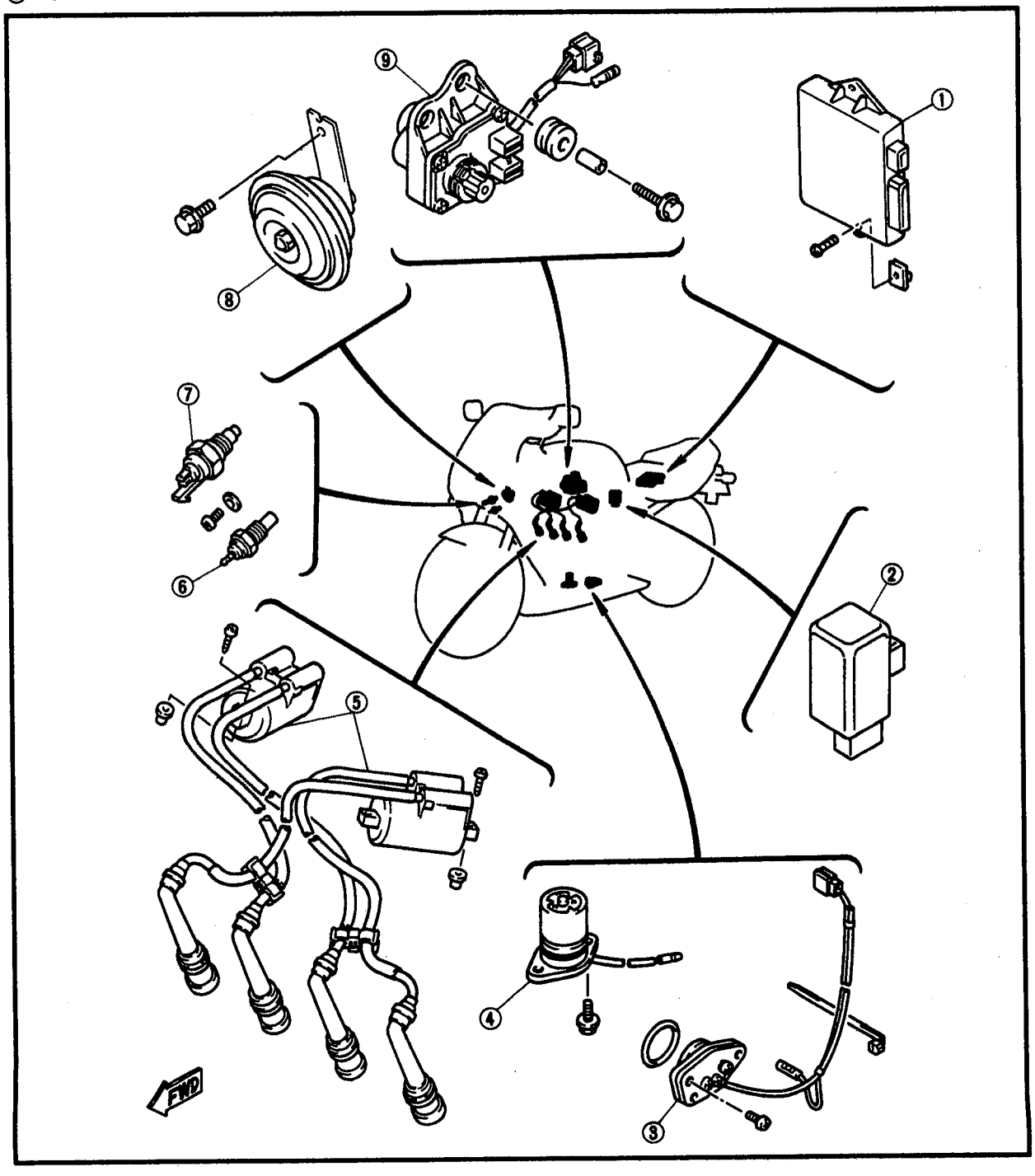

① Fuses
② Starter relay
③ Main fuse
④ Battery
⑤ Sidestand switch
⑥ Rear brake switch
⑦ Main switch
⑧ Oil level switch relay
⑨ Relay assembly
⑩ Fuel sender

BATTERY:
CAPACITY:
12V 10AH

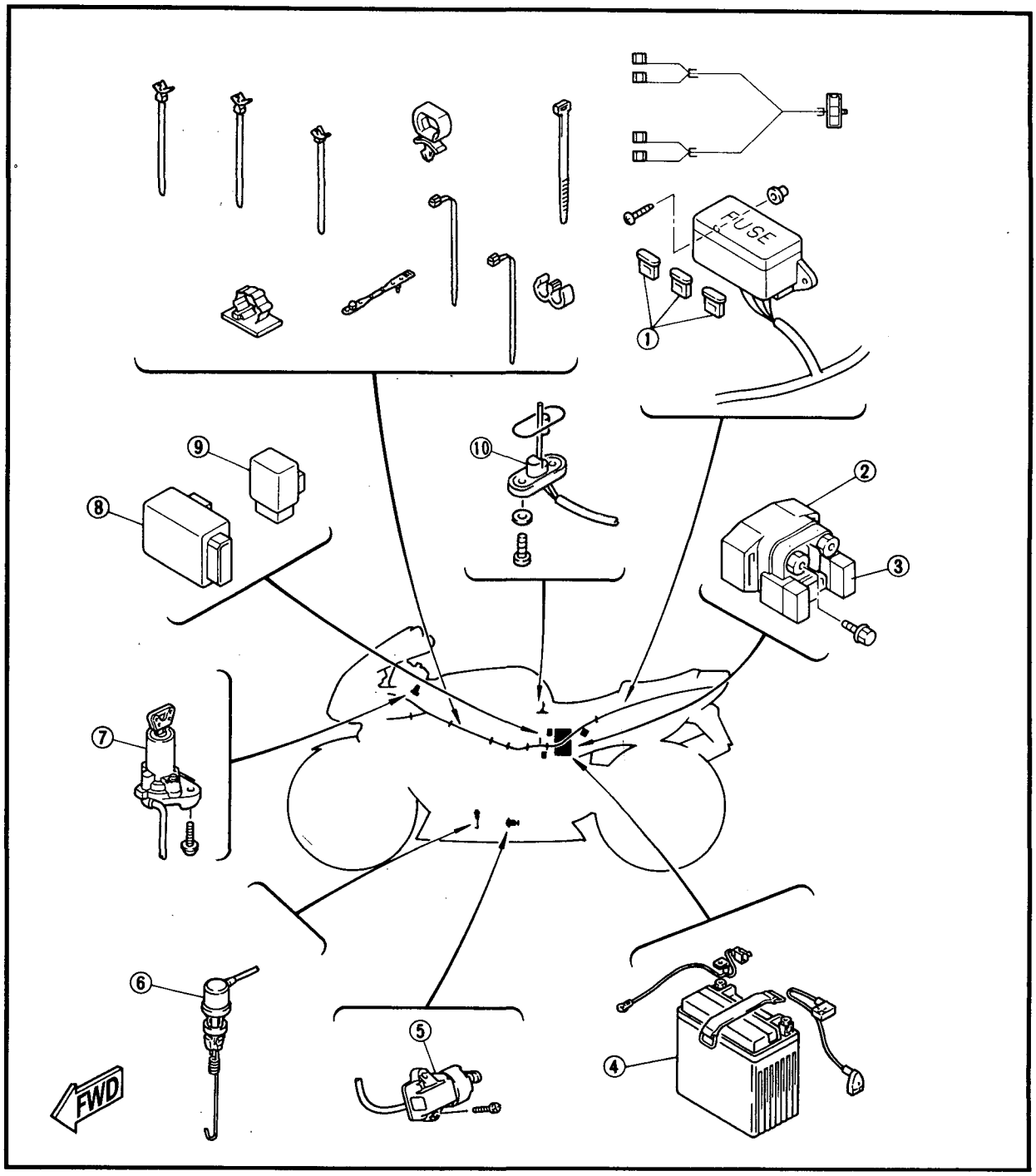

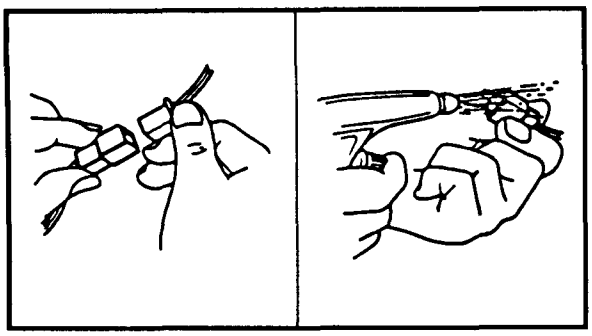

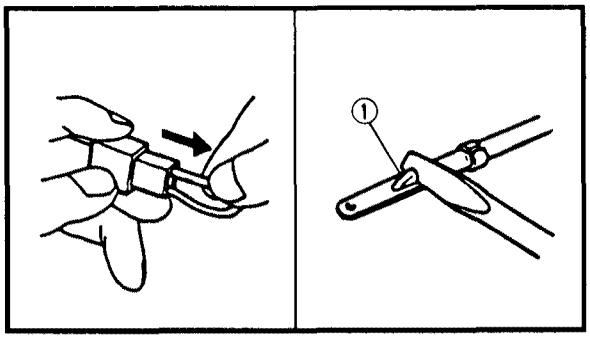

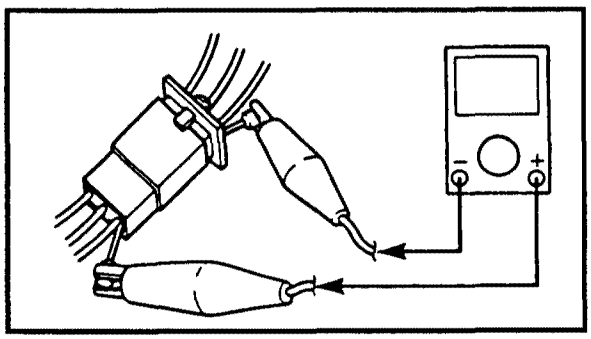

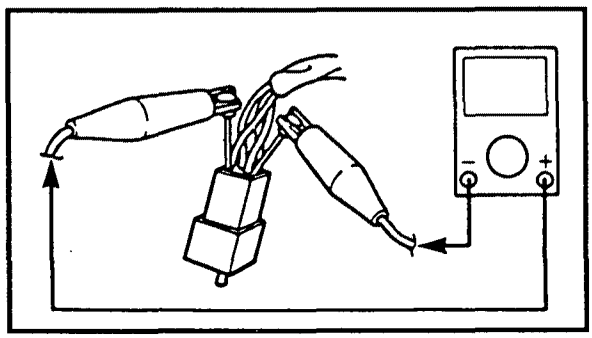

EB801000

CHECKING OF CONNECTIONS

Check the connectors for stains, rust, moisture, etc.

1.Disconnect:
- Connector

2.Check:
- Connector
  Moisture → Dry each terminal with an air blower.
  Stains/rust → Connect and disconnect the terminals several times.

3.Check:
- Connector leads
  Looseness → Bend up the pin ① and connect the terminals.

4.Connect:
- Connector terminals

NOTE:
The two terminals "click" together.

5.Check:
- Continuity (using a pocket tester)

NOTE:
- If there is no continuity, clean the terminals.
- When checking the wire harness be sure to perform steps 1 to 3.
- As a quick remedy, use a contact revitalizer available at most part stores.
- Check the connector with a pocket tester as shown.

COLOR CODE

B ..... Black	R ..... Red	G/W ..... Green/White	R/W ..... Red/White
Br ..... Brown	Sb ..... Sky blue	G/Y ..... Green/Yellow	R/Y ..... Red/Yellow
Ch ..... Chocolate	Y ..... Yellow	L/B ..... Blue/Black	W/B ..... White/Black
Dg ..... Dark green	B/L ..... Black/Blue	L/R ..... Blue/Red	W/R ..... White/Red
G ..... Green	B/R ..... Black/Red	L/W ..... Blue/White	Y/B ..... Yellow/Black
Gy ..... Gray	B/Y ..... Black/Yellow	L/Y ..... Blue/Yellow	Y/L ..... Yellow/Blue
L ..... Blue	Br/L ..... Brown/Blue	R/B ..... Red/Black	
O ..... Orange	G/R ..... Green/Red	R/L ..... Red/Blue	

EB802000

IGNITION SYSTEM

CIRCUIT DIAGRAM

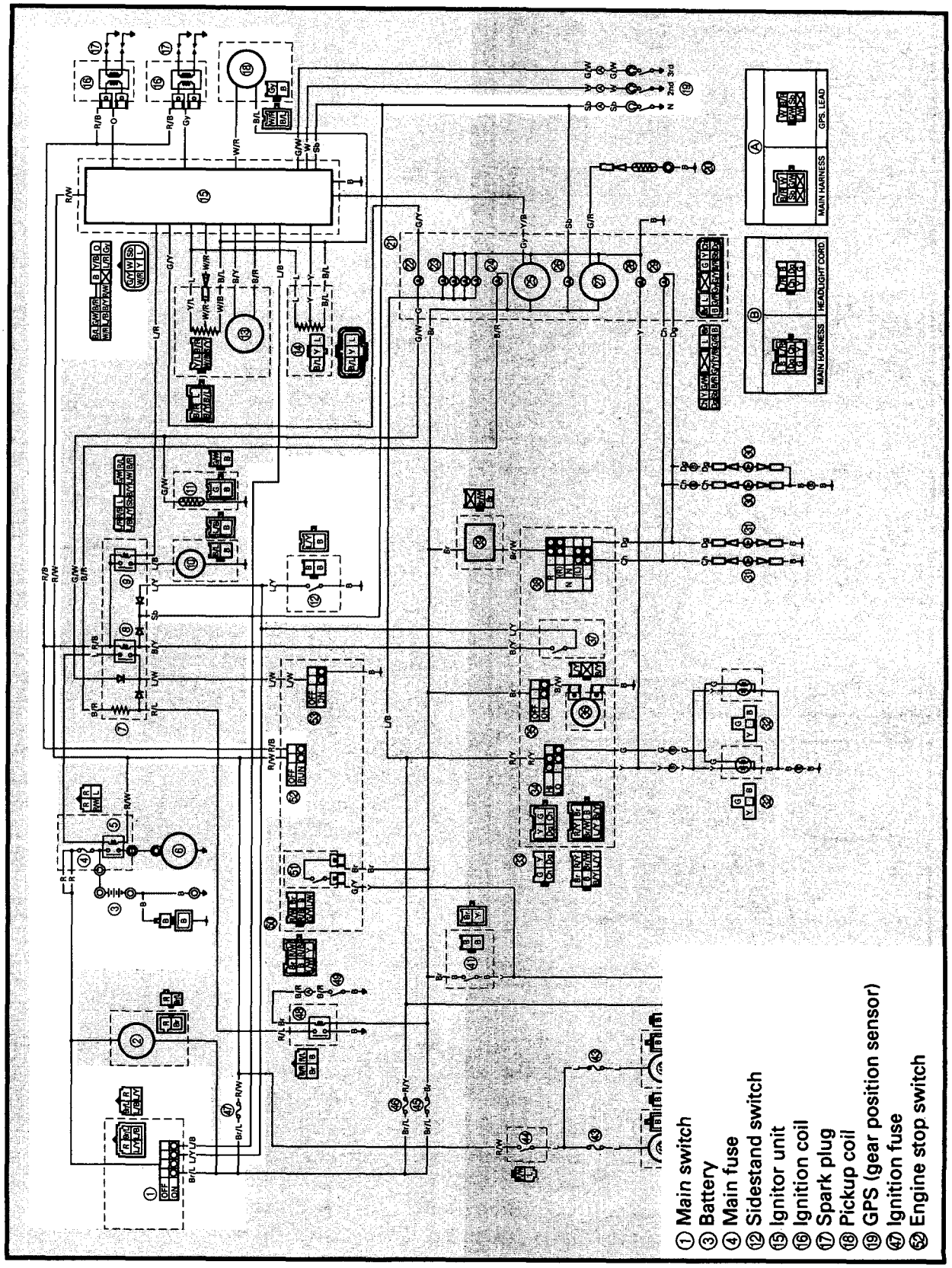

EB802010
TROUBLESHOOTING

IF THE IGNITION SYSTEM FAILS TO OPERATE (NO SPARK OR INTERMITTENT SPARK):

Procedure

Check:
1. Fuses (main and ignition)
2. Battery
3. Spark plugs
4. Ignition spark gap
5. Spark plug cap resistance
6. Ignition coil resistance
7. Main switch
8. Engine stop switch
9. GPS (gear position sensor)
10. Sidestand switch
11. Diode (starting circuit cut-off relay)
12. Pickup coil resistance
13. Wiring connection (the entire ignition system)

NOTE:
- Remove the following part(s) before troubleshooting:

1) Seats
2) Side panel (left)
3) Fuel tank
4) Air filter case
5) Bottom cowling (front)
6) Bottom cowling
7) Side cowling (left)

- Use the following special tool(s) for troubleshooting.

Ignition checker:
90890-06754
Pocket tester:
YU-03112/90890-03112

EB802011

1. Fuses (main and ignition)

- Remove the fuses.
- Connect the pocket tester (Ω × 1) to the fuses.
- Check the fuses for continuity.

NO CONTINUITY → Replace the fuses.

CONTINUITY ↓

EB802012

2. Battery

- Check the battery condition.
  Refer to "BATTERY INSPECTION" in CHAPTER 3.

Open-circuit voltage:
12.8 V or more at 20 °C (68°F)

INCORRECT →
- Clean the battery terminals.
- Recharge or replace the battery.

CORRECT ↓
*

*

EB802013

3.Spark plugs

- Check the spark plug condition.
- Check the spark plug type.
- Check the spark plug gap.
  Refer to "SPARK PLUG INSPECTION" in CHAPTER 3.

Standard spark plug:
DR8EA/X24ESR-U
NGK/NIPPONDENSO

Spark plug gap:
0.6 ~ 0.7 mm (0.024 ~ 0.028 in)

INCORRECT

Repair or replace the spark plugs.

CORRECT

EB802014

4.Ignition spark gap

- Disconnect the spark plug cap from the spark plug.
- Connect the ignition checker ① as shown.

② Spark plug cap

- Turn the main switch to "ON".

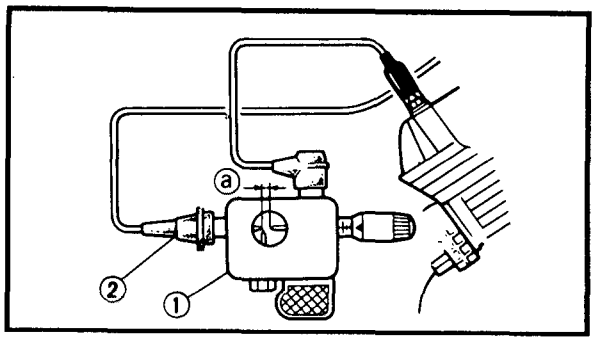

- Check the ignition spark gap ⓐ.
- Crank the engine by pushing the starter switch, and increase the spark gap until a misfire occurs.

Minimum spark gap:
6.0 mm (0.24 in)

MEETS SPECIFICATION

The ignition system is not faulty.

OUT OF SPECIFICATION OR NO SPARK

EB802015

5.Spark plug cap resistance

- Remove the spark plug cap.
- Connect the pocket tester (Ω × 1k) to the spark plug cap.

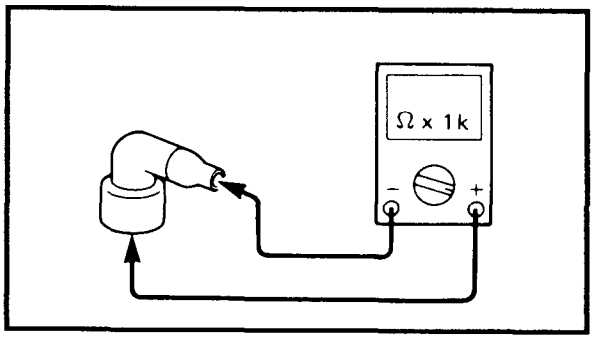

- Check if the spark plug cap has the specified resistance.

Spark plug cap resistance:
10 kΩ at 20 °C (68°F)

OUT OF SPECIFICATION

Replace the spark plug cap.

MEETS SPECIFICATION

EB802016

6.Ignition coil resistance

- Disconnect the ignition coil connector from the wire harness.
- Connect the pocket tester (Ω × 1) to the ignition coil.

Tester (+) lead → Red/Black terminal
Tester (–) lead → Orange (Gray) terminal

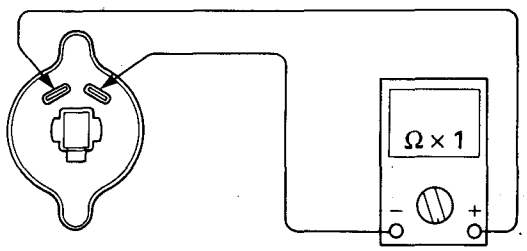

- Check if the primary coil has the specified resistance.

Primary coil resistance:
1.9 ~ 2.5 Ω at 20 °C (68°F)

- Connect the pocket tester (Ω × 1k) to the ignition coil.

Tester (+) lead → spark plug lead ①
Tester (–) lead → spark plug lead ②

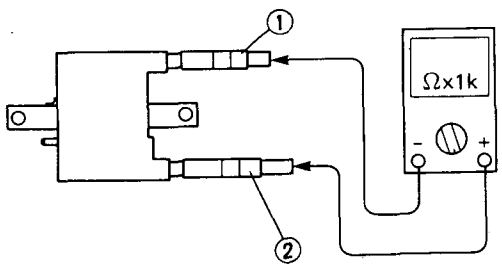

- Check if the secondary coil has the specified resistance.

Secondary coil resistance:
12 ~ 18 kΩ at 20 °C (68°F)

OUT OF SPECIFICATION

Replace the ignition coil.

BOTH MEET SPECIFICATION

EB802017

7.Main switch

- Disconnect the main switch couplers from the wire harness.
- Check for continuity as follows:
  Red ① – Brown/Blue ②
  Blue/Black ③ – Blue/Yellow ④

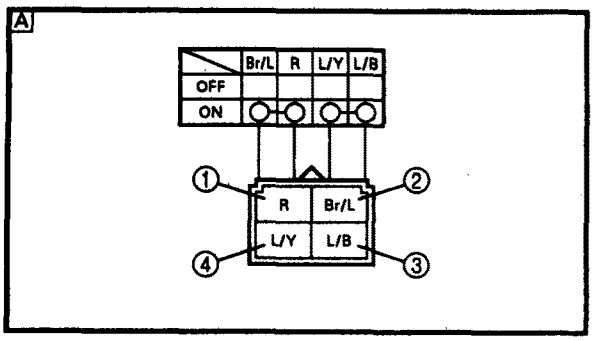

NO CONTINUITY

Replace the main switch.

CONTINUITY

EB802018

8.Engine stop switch

- Disconnect the right handlebar switch coupler from the wire harness.
- Check for continuity as follows:
  Red/White ① – Red/Black ②

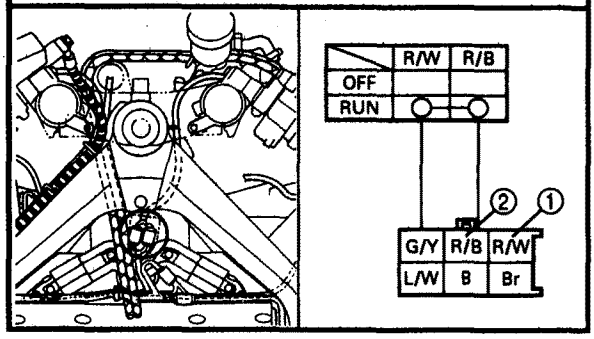

NO CONTINUITY

Replace the right handlebar switch.

CONTINUITY

EB802019

9.GPS (gear position sensor)

- Disconnect the GPS (gear position sensor) /oil level switch coupler from the wire harness.
- Check for continuity as follows:
  Sky blue ① – Ground

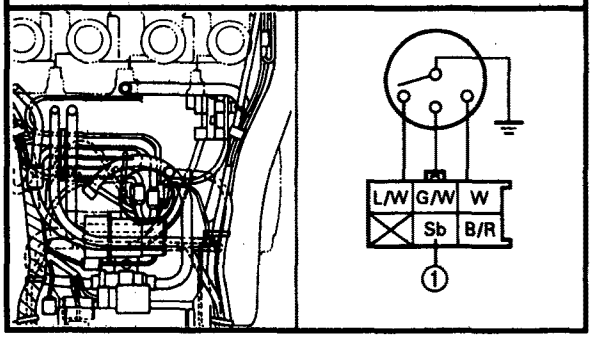

NO CONTINUITY

Replace the GPS (gear position sensor).

CONTINUITY

*

*

EB80201A

10.Sidestand switch

- Disconnect the sidestand switch coupler from the wire harness.
- Check for continuity as follows:
  Black ① – Black ②

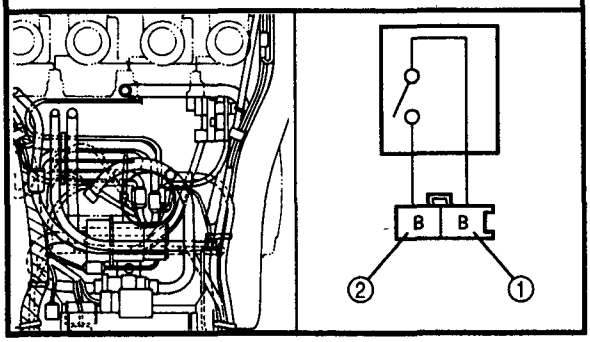

NO CONTINUITY

Replace the sidestand switch.

CONTINUITY

EB80201B

11.Diode (starting circuit cut-off relay unit)

- Remove the relay unit from the wire harness.
- Check for continuity as follows:
  Blue/Yellow ① – Sky blue ②

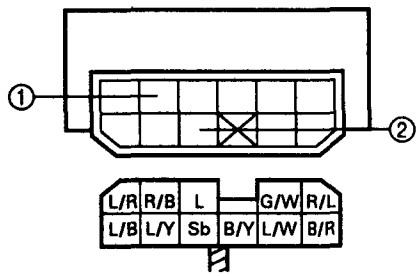

Tester ⊕ lead → Sky blue ② **Tester ⊖ lead → Blue/Yellow ①**	**Continuity**
Tester ⊕ lead → Blue/Yellow ① **Tester ⊖ lead → Sky blue ②**	**No Continuity**

NOTE:
When you switch the "–" and "+" leads of the digital pocket tester the readings in the above chart will be reversed.

INCORRECT

Replace the relay unit.

CORRECT

*

*

EB80201C

12.Pickup coil resistance

- Disconnect the pickup coil coupler from the wire harness.
- Connect the pocket tester (Ω × 100) to the pickup coil terminal.

Tester (+) lead → Gray terminal ①
Tester (–) lead → Black terminal ②

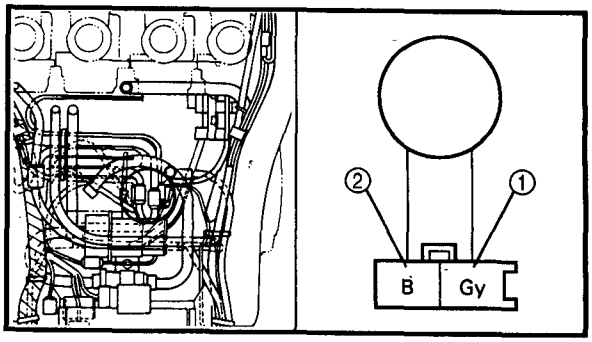

- Check if the pickup coil has the specified resistance.

Pickup coil resistance:
135 ~ 165 Ω at 20 °C (68°F)
(Gray — Black)

OUT OF SPECIFICATION → Replace the pickup coil.

MEETS SPECIFICATION

EB80201D

13.Wiring connection

- Check the connections of the entire ignition system.
  Refer to "CIRCUIT DIAGRAM".

POOR CONNECTION → Properly connect the ignition system.

CORRECT

Replace the ignitor unit.

EB803000

ELECTRIC STARTING SYSTEM

CIRCUIT DIAGRAM

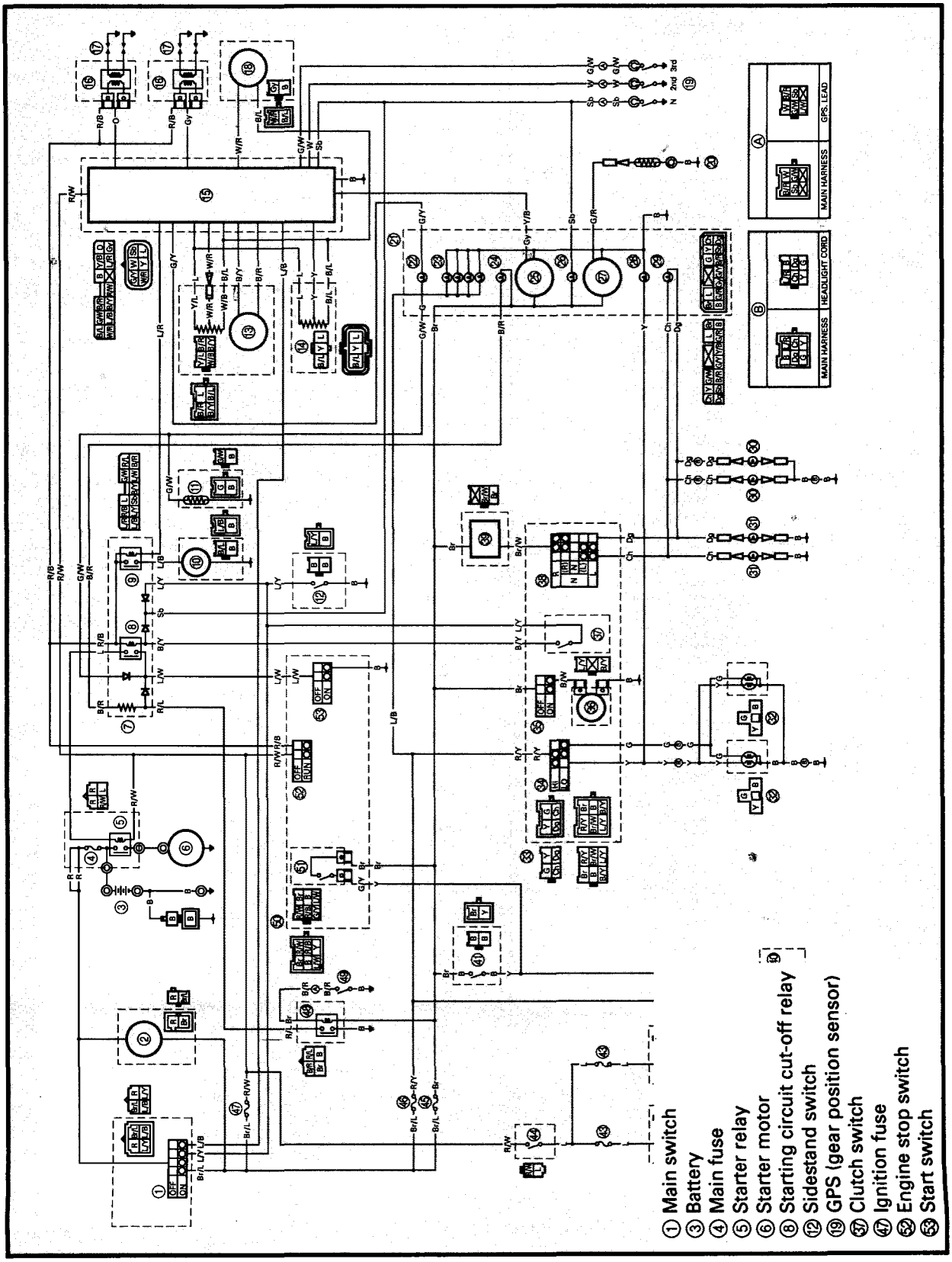

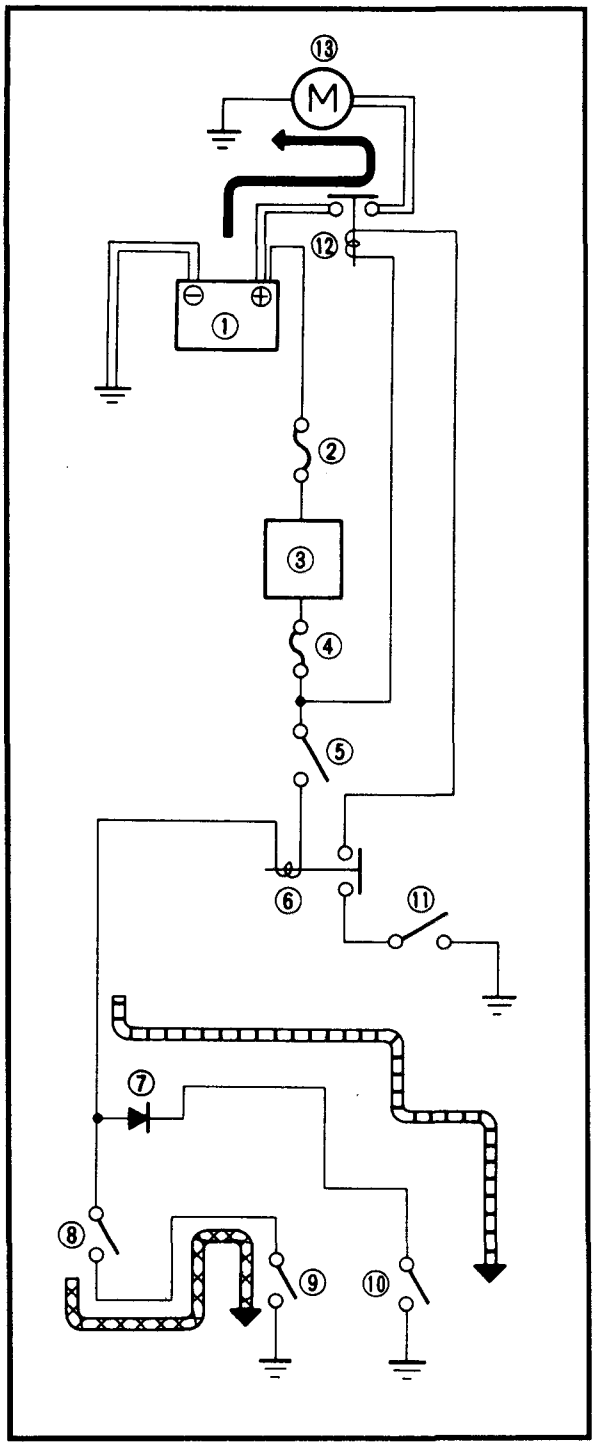

EB803010

STARTING CIRCUIT OPERATION

The starting circuit on this model consists of the starter motor, starter relay, and the starting circuit cut-off relay. If the engine stop switch is on "RUN" and the main switch is on "ON" (both switches are closed), the starter motor can operate only if:

> The transmission is in neutral.
>
> **or if**
>
> The clutch lever is pulled to the handlebar (the clutch switch is closed) and the sidestand is up (the sidestand switch is closed).

The starting circuit cut-off relay prevents the starter from operating when neither of these conditions have been met. In this instance, the starting circuit cut-off relay is open so current cannot reach the starter motor.

When at least one of the above conditions have been met however, the starting circuit cut-off relay is closed, and the engine can be started by pressing the starter switch.

WHEN THE TRANSMISSION IS IN NEUTRAL

WHEN THE SIDESTAND IS UP AND THE CLUTCH LEVER IS PULLED IN

① Battery
② Main fuse
③ Main switch
④ Ignition fuse
⑤ Engine stop switch
⑥ Starting circuit cut-off relay
⑦ Diode
⑧ Clutch switch
⑨ Sidestand switch
⑩ GPS (gear position sensor)
⑪ Start switch
⑫ Starter relay
⑬ Starter motor

EB803020
TROUBLESHOOTING

IF THE STARTER MOTOR FAILS TO OPERATE:

Procedure
Check:
1.Fuses (main and ignition)
2.Battery
3.Starter motor
4.Starting circuit cut-off relay
5.Starter relay
6.Main switch
7.Engine stop switch
8.GPS (gear position sensor)
9.Sidestand switch
10.Clutch switch
11.Start switch
12.Diode (starting circuit cut-off relay)
13.Wiring connection (the entire starting system)

NOTE:
- Remove the following part(s) before troubleshooting:
1)Seats
2)Side panel (left)
3)Fuel tank
4)Air filter case
5)Bottom cowling (front)
6)Bottom cowling
7)Side cowling (left)
- Use the following special tool(s) for troubleshooting.

Pocket tester:
YU-03112/90890-03112

EB802011

1.Fuses (main and ignition)
- Remove the fuses.
- Connect the pocket tester (Ω × 1) to the fuses.
- Check the fuses for continuity.

NO CONTINUITY → Replace the fuse(s).

CONTINUITY ↓

EB802012

2.Battery
- Check the battery condition.
Refer to "BATTERY INSPECTION" in CHAPTER 3.

Open-circuit voltage:
12.8 V or more at 20 °C (68°F)

INCORRECT →
- Clean the battery terminals.
- Recharge or replace the battery.

CORRECT ↓
*

*

EB803021

3.Starter motor

- Connect the battery positive terminal ① and starter motor cable ② using a jumper lead ③*.
- Check the operation of the starter motor.

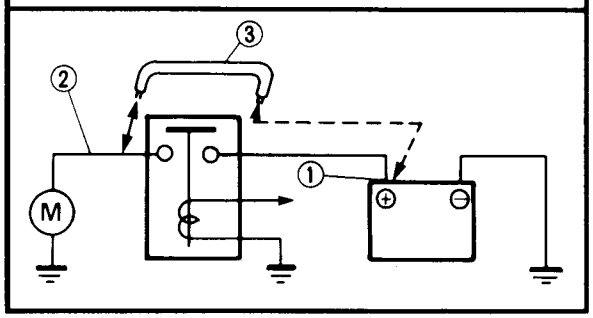

*

⚠ WARNING

- **A wire that is used as a jumper lead must have the equivalent capacity or more as that of the battery lead, otherwise the jumper lead may burn.**
- **This check is likely to produce sparks, so be sure that no flammable gas or fluid is in the vicinity.**

DOES NOT MOVE

Repair or replace the starter motor.

MOVES

EB803023

4.Starting circuit cut-off relay (relay unit)

- Remove the relay unit from the wire harness.
- Connect the pocket tester (Ω × 1) and battery (12 V) to the relay unit terminals.

Battery (+) terminal → Red/Black terminal ①
Battery (–) terminal → Black/Yellow terminal ②

Tester (+) lead → Blue terminal ③
Tester (–) lead → Blue/White terminal ④

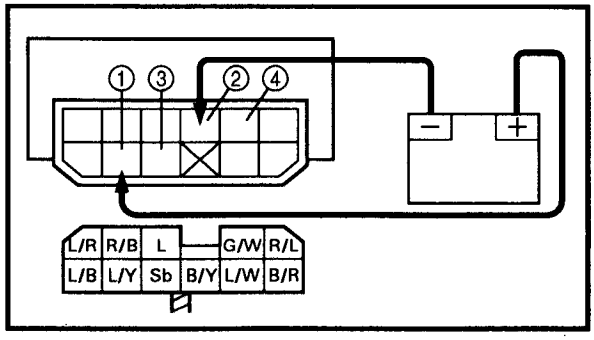

- Check the starting circuit cut-off relay for continuity.

NO CONTINUITY

Replace the starting circuit cut-off relay.

CONTINUITY

*

*

EB803024

5.Starter relay

- Remove the relay unit from the wire harness.
- Connect the pocket tester (Ω × 1) and battery (12 V) to the relay unit coupler terminals.

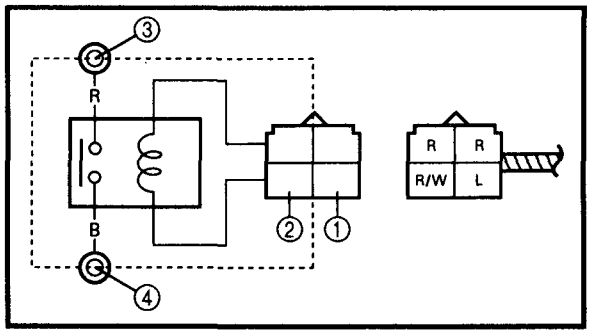

Battery (+) terminal → Red/White terminal ①
Battery (–) terminal → Blue terminal ②

Tester (+) lead → Red terminal ③
Tester (–) lead → Black terminal ④

- Check the starter relay for continuity.

NO CONTINUITY

Replace the starter relay.

CONTINUITY

EB802017

6.Main switch

- Disconnect the main switch couplers from the wire harness.
- Check for continuity as follows:
  Red ① – Brown/Blue ②

A

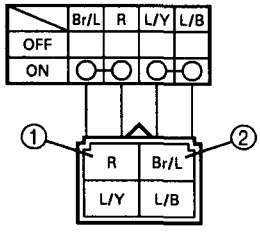

NO CONTINUITY

Replace the main switch.

CONTINUITY

*

*

EB802018

7.Engine stop switch

- Disconnect the right handlebar switch coupler from the wire harness.
- Check for continuity as follows:
  Red/White ① – Red/Black ②

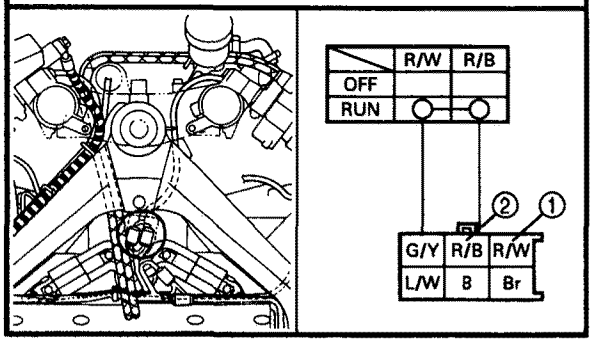

NO CONTINUITY

Replace the right handlebar switch.

CONTINUITY

EB802019

8.GPS (gear position sensor)

- Disconnect the GPS (gear position sensor)/oil level switch coupler from the wire harness.
- Check for continuity as follows:
  Sky blue ① – Ground

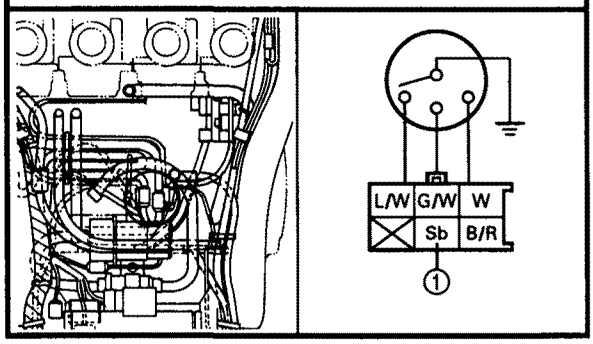

NO CONTINUITY

Replace the GPS (gear position sensor).

CONTINUITY

*

*

EB80201A

9.Sidestand switch

- Disconnect the sidestand switch coupler from the wire harness.
- Check for continuity as follows:
  Black ① – Black ②

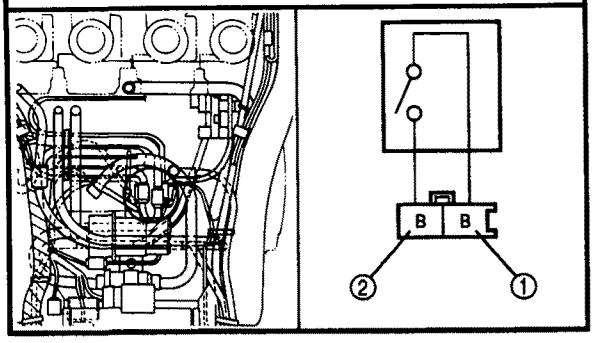

NO CONTINUITY

Replace the sidestand switch.

CONTINUITY

EB803025

10.Clutch switch

- Disconnect the clutch switch coupler from the wire harness.
- Check for continuity as follows:
  Black/Yellow ① – Blue/Yellow ②

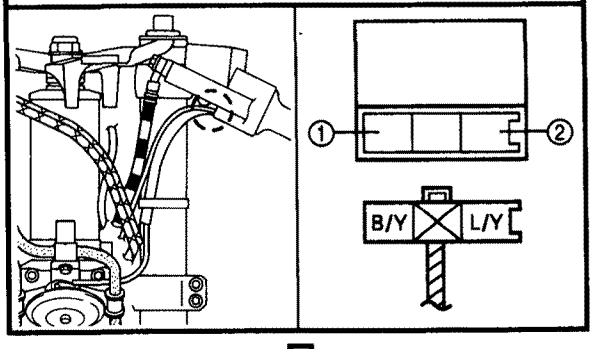

NO CONTINUITY

Replace the clutch switch.

CONTINUITY

*

*

EB803027

11.Start switch

- Disconnect the right handlebar switch coupler from the wire harness.
- Check for continuity as follows:
  Blue/White ① – Black ②

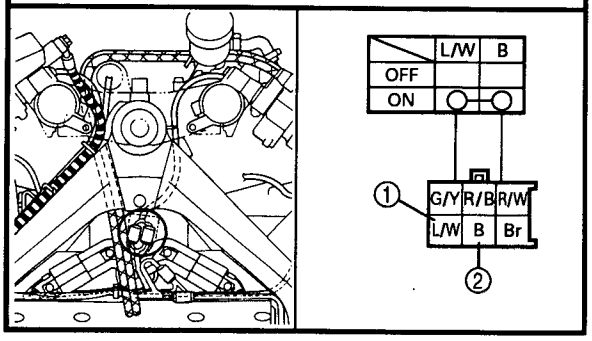

NO CONTINUITY

Replace the right handlebar switch.

CONTINUITY

EB803026

12.Diode (starting circuit cut-off relay)

- Remove the relay unit from the wire harness.
- Check for continuity as follows:
  Black/Yellow ① – Sky blue ②
  Blue/Yellow ③ – Sky blue ②

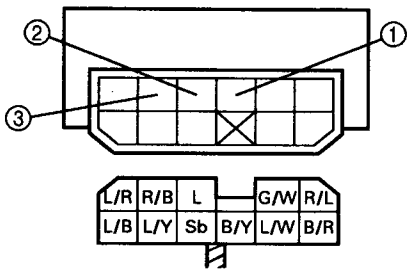

Tester (+) lead → Sky blue ② **Tester (–) lead → Black/Yellow ①**	**Continuity**
Tester (+) lead → Black/Yellow ① **Tester (–) lead → Sky blue ②**	**No Continuity**

NOTE:
When you switch the "–" and "+" leads of the digital pocket tester the readings in the above chart will be reversed.

INCORRECT

Replace the relay unit.

CORRECT

*

*

EB803028

13.Wiring connection

- Check the connections of the entire starting system.
  Refer to "CIRCUIT DIAGRAM".

POOR CONNECTION

Properly connect the starting system.

EB803030
STARTER MOTOR

① O-ring
② Yoke
③ Bearing
④ Oil seal
⑤ Armature
⑥ Bush
⑦ Brush

A	ARMATURE COIL RESISTANCE: 0.0018 ~ 0.0022 Ω at 20°C (68°F)
B	BRUSH WEAR LIMIT: 4 mm (0.16 in)
C	COMMUTATOR WEAR LIMIT: 27 mm (1.06 in)
D	MICA UNDERCUT: 0.7 mm (0.03 in)

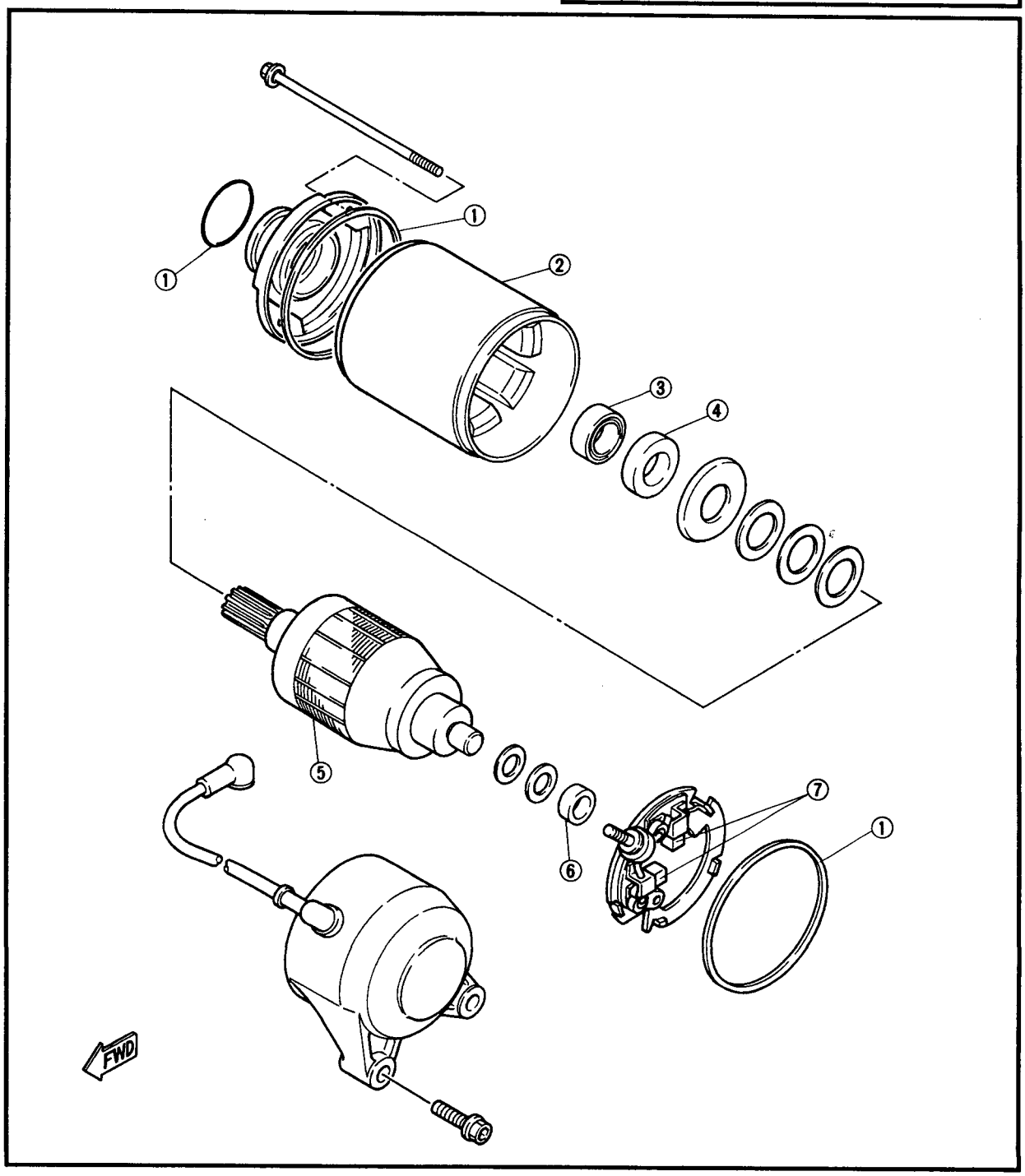

EB803031
Removal

1.Remove:
- Starter motor
  Refer to "ENGINE REMOVAL" in CHAPTER 4.

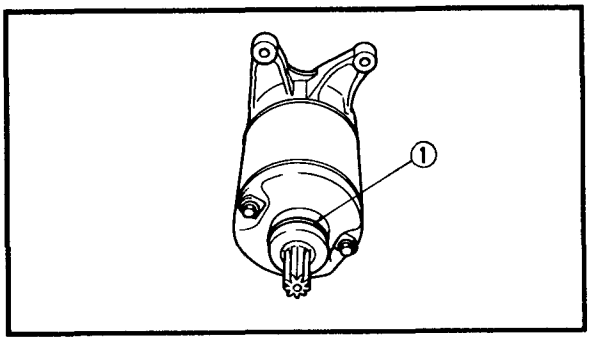

EB803032
Disassembly

1.Remove:
- Bolts ①
  (with washers and O-rings)

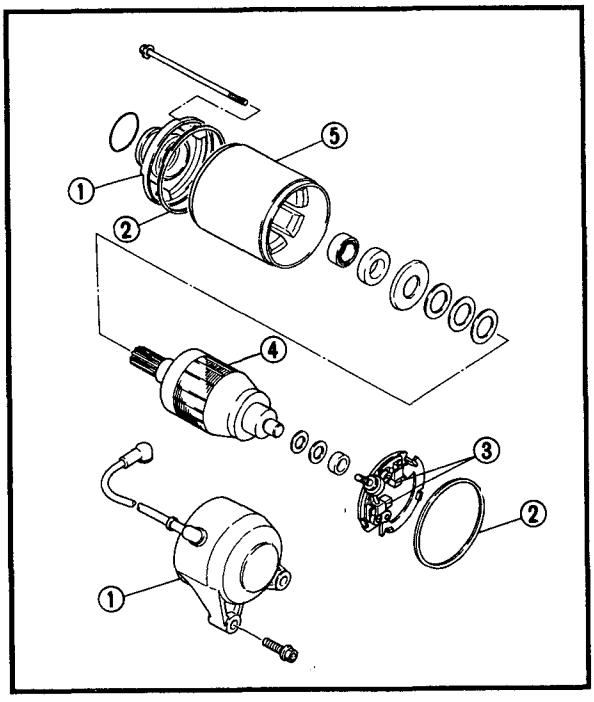

2.Remove:
- Brackets ①
- O-rings ②
- Brushes ③
- Armature ④
- Yoke ⑤

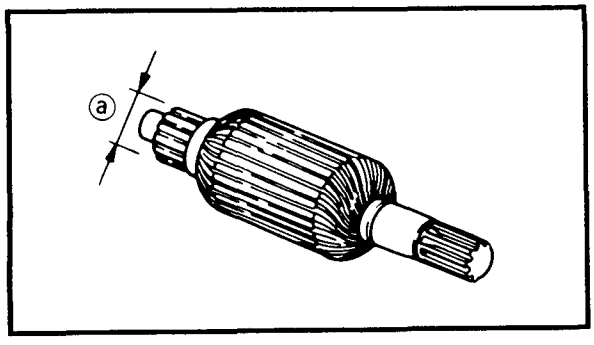

EB803034
Inspection and repair

1.Inspect:
- Commutator
  Dirty → Clean it with #600 grit sandpaper.

2.Measure:
- Commutator diameter ⓐ
  Out of specification → Replace the starter motor.

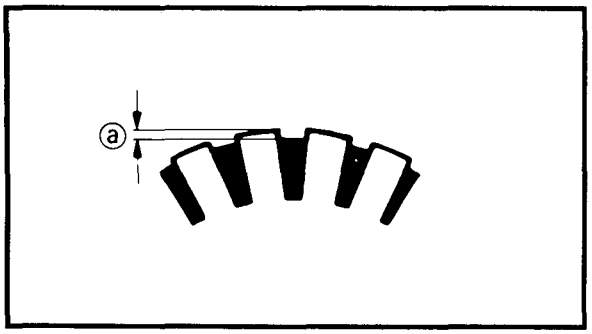

Commutator wear limit:
27 mm (1.06 in)

3.Measure:
- Mica undercut ⓐ
  Out of specification → Scrape the mica to the proper measurement using a hacksaw blade which has been grounded to fit the commutator.

Mica undercut:
0.7 mm (0.03 in)

NOTE:
The mica insulation of the commutator must be undercut to ensure proper operation of the commutator.

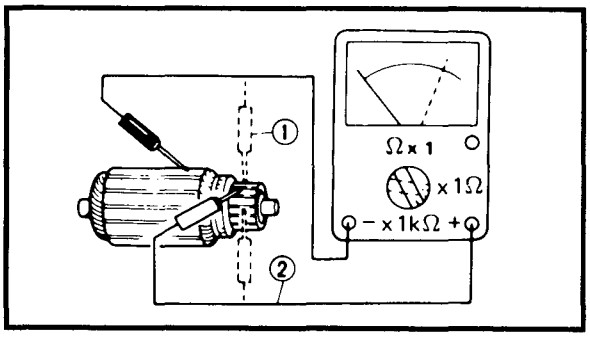

4.Inspect:
- Armature coil resistances (insulation/continuity)
  Defects → Replace the starter motor.

****

Inspection steps:
- Connect the pocket tester for the continuity ① and insulation ② checks.
- Measure the armature coil resistances.

Armature coil continuity resistance ①:
0.0018 ~ 0.0022 Ω at 20°C (68°F)
Armature coil insulation resistance ②:
More than 1 MΩ at 20°C (68°F)

- If the resistance is incorrect, replace the starter motor.

****

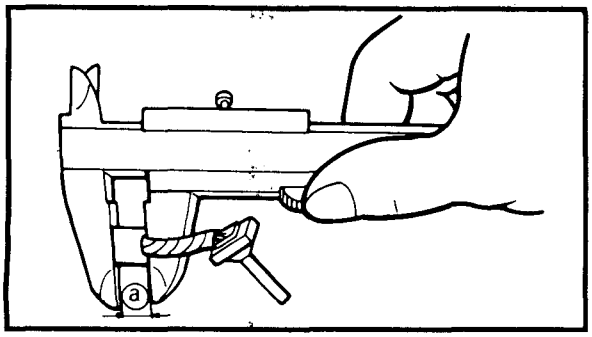

5.Measure:
- Brush length ⓐ
  Out of specification → Replace.

Brush length wear limit:
4 mm (0.16 in)

6.Measure:
- Brush spring force
  Fatigue/out of specification → Replace as a set.

	Brush spring force: **570 ~ 920 g (20.1 ~ 32.5 oz)**

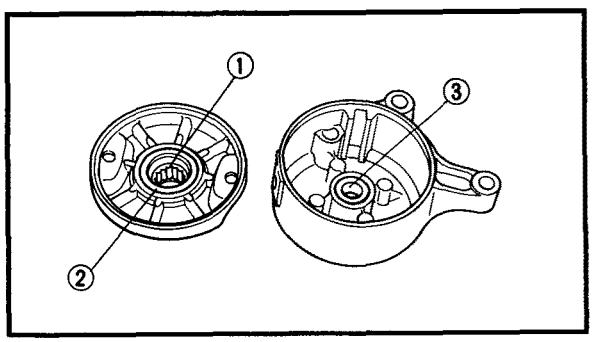

7.Inspect:
- Bearing ①
  Roughness → Replace.
- Oil seal ②
- Bushing ③
  Wear/damage → Replace.

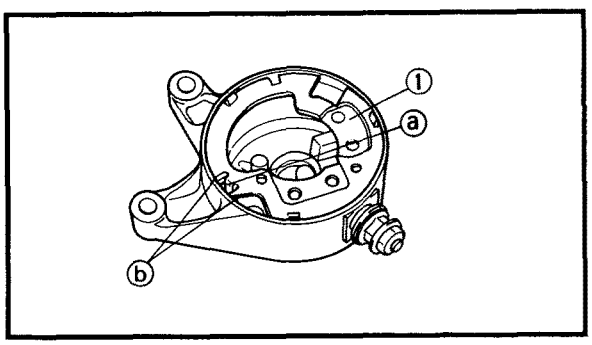

EB803036
Assembly
Reverse the "Removal" procedure.
Note the following points.
1.Install:
- Brush seat ①

NOTE:
Align the projection ⓐ on the brush seat with the slot ⓑ on the housing.

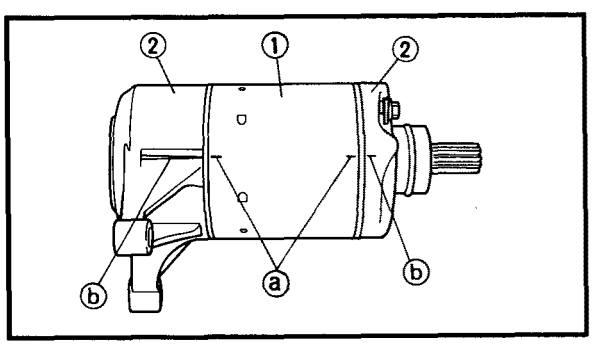

2.Install:
- Yoke ①
- Brackets ②

NOTE:
Align the match marks ⓐ on the yoke with the match marks ⓑ on the brackets.

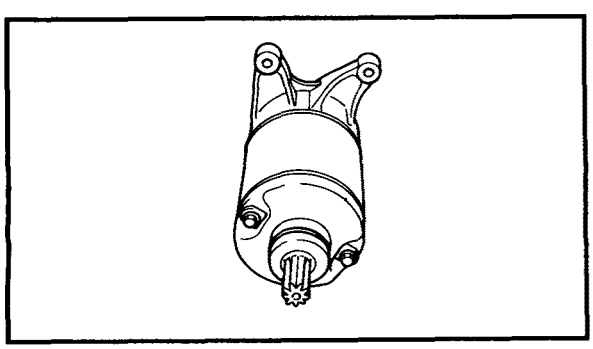

3.Install:
- O-rings
- Washers
- Bolts

⚠ WARNING
Always use new O-rings.

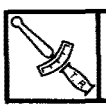	**Bolt (yoke assembly):** **5 Nm (0.5 m • kg, 3.6 ft • lb)**

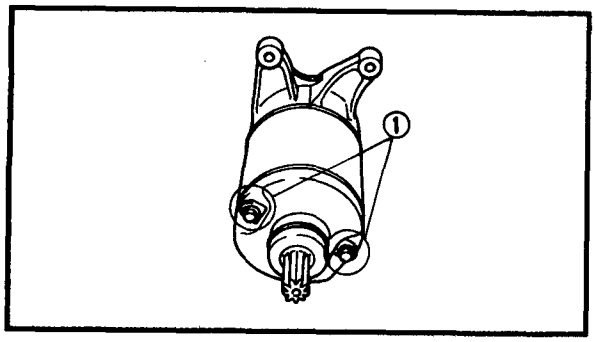

EB803037

Installation

1.Install:

- Starter motor

NOTE:

Apply a thin coat of grease onto the O-ring ①.

	Bolt (starter motor): **8 Nm (0.8 m • kg, 5.8 ft • lb)**

Refer to "ENGINE ASSEMBLY AND ADJUSTMENT" in CHAPTER 4.

EB804000

CHARGING SYSTEM

CIRCUIT DIAGRAM

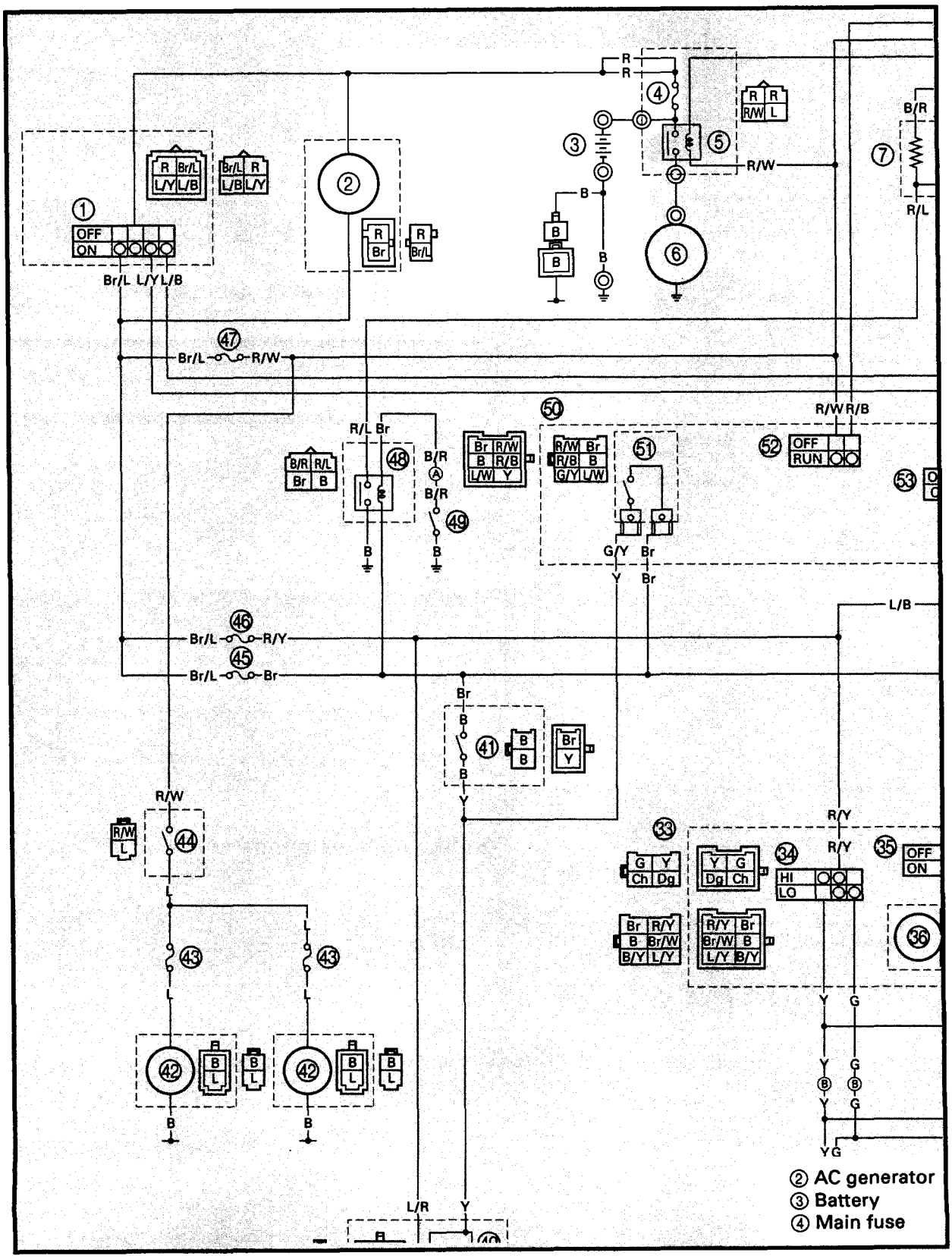

EB804010
TROUBLESHOOTING

IF THE BATTERY IS NOT CHARGED:

Procedure
Check:
1.Fuse (main)
2.Battery
3.Charging voltage
4.Stator coil resistance
5.Wiring connections (the entire charging system)

NOTE:
- Remove the following part(s) before troubleshooting:
1)Seats
2)Side panel (left)
3)Bottom cowling (front)
4)Bottom cowling
5)Side cowling (left)
- Use the following special tool(s) for troubleshooting.

Engine tachometer:
90890-03113
Pocket tester:
YU-03112/90890-03112

EB802011
1.Fuses (main)
- Remove the fuses.
- Connect the pocket tester (Ω × 1) to the fuses.
- Check the fuses for continuity.

NO CONTINUITY → Replace the fuses.

CONTINUITY ↓

EB802012
2.Battery
- Check the battery condition.
Refer to "BATTERY INSPECTION" in CHAPTER 3.

Open-circuit voltage:
12.8 V or more at 20°C (68°F)

INCORRECT →
- Clean the battery terminals.
- Recharge or replace the battery.

CORRECT ↓
*

*

EB804011

3.Charging voltage

- Connect the engine tachometer to the spark plug lead.
- Connect the pocket tester (DC 20 V) to the battery.

Tester (+) lead → Battery (+) terminal
Tester (–) lead → Battery (–) terminal

- Start the engine and accelerate to about 3,000 r/min.

Charging voltage:
14.2 ~ 14.8 V at 3,000 r/min

NOTE:
Use a fully charged battery.

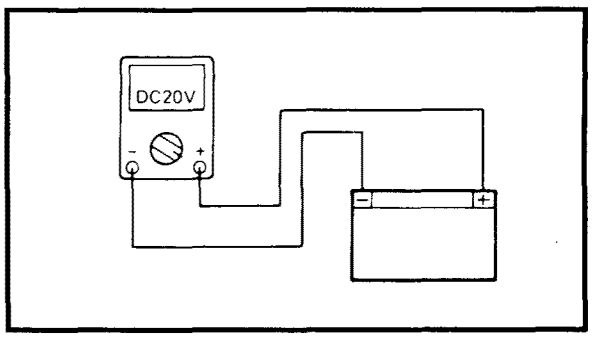

MEETS SPECIFICATION

The charging circuit is not faulty.

OUT OF SPECIFICATION

EB804012

4.Stator coil resistance

- Remove the generator cover.
- Connect the pocket tester (Ω × 1) to the stator coils.

Tester (+) lead → White terminal ①
Tester (–) lead → White terminal ②

Tester (+) lead → White terminal ①
Tester (–) lead → White terminal ③

- Measure the stator coil resistance.

Stator coil resistance:
0.19 ~ 0.21 Ω at 20°C (68°F)

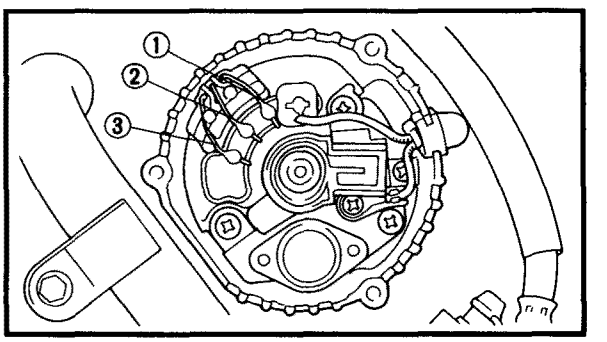

OUT OF SPECIFICATION

Replace the stator coil assembly.

BOTH MEET SPECIFICATION

*

*

5.Brush inspection

- Remove the brush holder ①.
- Inspect the brush spring.
- Check the brush length.

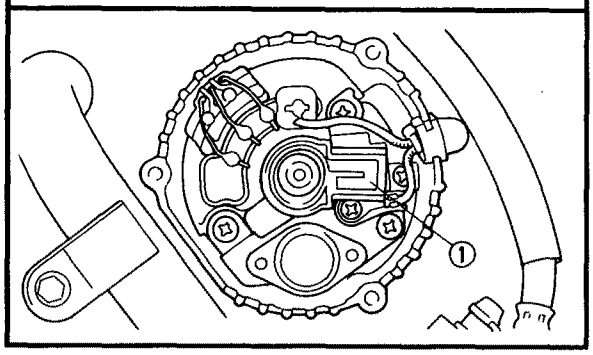

Brush spring force:
520 ~ 580 g (18.4 20.5 oz)

INCORRECT

Replace the brush and spring.

CORRECT

6.Field coil (rotor) resistance

- Connect the pocket tester (Ω × 1) to the rotor.
- Measure the resistance.

Field coil (rotor) resistance:
2.76 ~ 3.05 Ω at 20°C (68°F)

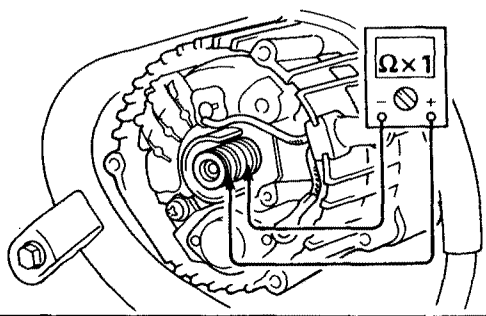

OUT OF SPECIFICATION

Replace field coil (rotor).

MEET SPECIFICATION

*

EB804015

7.Wiring connections

- Check the connections of the entire charging system.
  Refer to "CIRCUIT DIAGRAM".

POOR CONNECTION → Properly connect the charging system.

CORRECT ↓

Replace the rectifier/regulator.

EB805000

LIGHTING SYSTEM

CIRCUIT DIAGRAM

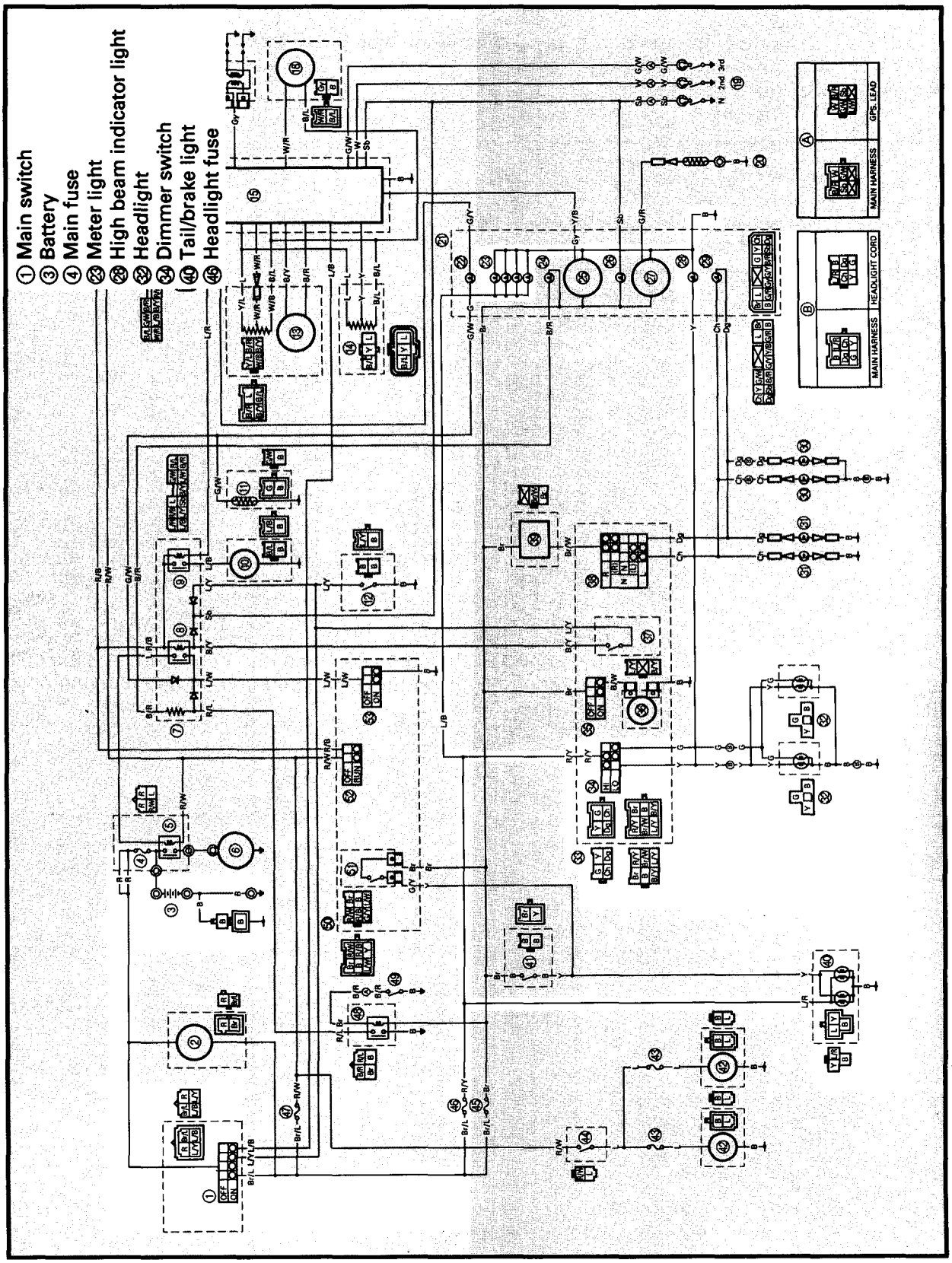

EB805010
TROUBLESHOOTING

IF THE HEADLIGHT, HIGH BEAM INDICATOR LIGHTS, TAILLIGHT, AUXILIARY LIGHT AND/ OR METER LIGHT FAIL TO COME ON:

Procedure
Check:
1. Fuses (main and head)
2. Battery
3. Main switch
4. Dimmer switch
5. Wiring connections (the entire lighting system)

NOTE:
- Remove the following part(s) before troubleshooting:
  1) Seats
  2) Side panel (left)
  3) Fuel tank
  4) Air filter case
  5) Front cowling assembly
- Use the following special tool(s) for troubleshooting.

Pocket tester:
YU-03112/90890-03112

EB802011
1. Fuses (main and head)
- Remove the fuses.
- Connect the pocket tester (Ω × 1) to the fuses.
- Check the fuses for continuity.

NO CONTINUITY → Replace the fuses.

CONTINUITY ↓

EB802012
2. Battery
- Check the battery condition. Refer to "BATTERY INSPECTION" in CHAPTER 3.

Open-circuit voltage:
12.8 V or more at 20 °C (68°F)

INCORRECT →
- Clean the battery terminals.
- Recharge or replace the battery.

CORRECT ↓
*

*

EB802017

3.Main switch

- Disconnect the main switch couplers from the wire harness.
- Check for continuity as follows:
  Red ① – Brown/Blue ②

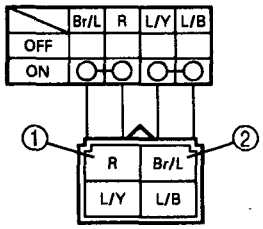

NO CONTINUITY

Replace the main switch.

CONTINUITY

4.Dimmer switch

- Disconnect the left handlebar switch couplers from the wire harness.
- Turn the dimmer switch to "LO".
- Check for continuity as follows:
  Red/Yellow ① – Green ③
- Turn the dimmer switch to "HI".
- Check for continuity as follows:
  Red/Yellow ① – Yellow ③

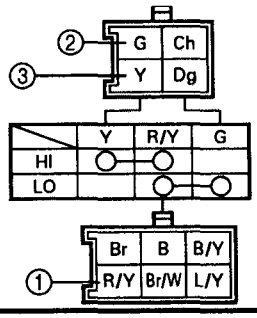

NO CONTINUITY

The dimmer switch is faulty.
Replace the left handlebar switch.

CONTINUITY

EB805013

5.Wiring connections

- Check the connections of the entire lighting system.
  Refer to "CIRCUIT DIAGRAM".

POOR CONNECTION

Properly connect the lighting system.

CORRECT

Check the condition of each of the lighting system's circuits.
Refer to "LIGHTING SYSTEM CHECK".

EB805020

LIGHTING SYSTEM CHECK

1.If the headlight and the high beam indicator light fail to come on:

1.Bulb and bulb socket

- Check the bulb and bulb socket for continuity.

NO CONTINUITY

Replace the bulb and/or bulb socket.

CONTINUITY

2.Voltage

- Connect the pocket tester (DC 20 V) to the headlight and high beam indicator light couplers.

[A] When the dimmer switch is on "LO".
[B] When the dimmer switch is on "HI".

Headlight connector

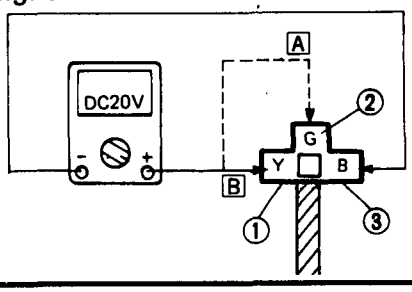

Headlight:
Tester (+) lead →
Yellow lead ① or Green lead ②
Tester (–) lead → Black lead ③
High beam indicator light:
Tester (+) lead → Yellow lead ④
Tester (–) lead → Black lead ⑤

[B] Meter connector

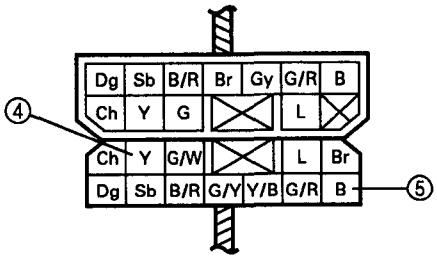

- Turn the main switch to "ON".
- Turn the light switch to "ON".
- Turn the dimmer switch to "LO" or "HI".
- Check the voltage (12 V) of the "Green" and "Yellow" leads on the bulb socket connector.

OUT OF SPECIFICATION

The wiring circuit from the main switch to the bulb socket connector is faulty, repair it.

MEETS SPECIFICATION

This circuit is not faulty.

EB805021

2.If the meter light fails to come on:

1.Bulb and bulb socket

- Check the bulb and bulb socket for continuity.

NO CONTINUITY → Replace the bulb and/or bulb socket.

CONTINUITY ↓

2.Voltage

- Connect the pocket tester (20 V) to the bulb socket coupler.

Tester (+) lead → Blue terminal ①
Tester (–) lead → Black terminal ②

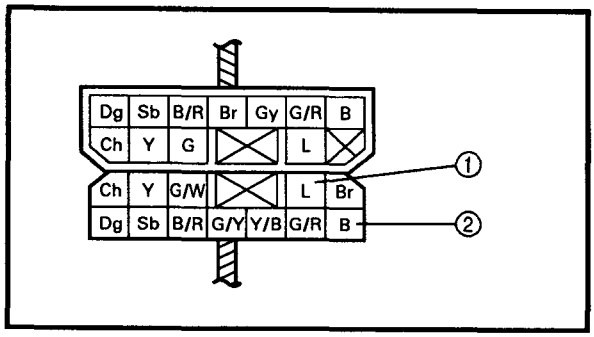

- Turn the main switch to "ON".
- Turn the light switch to "ON" or "PO".
- Check the voltage (12 V) of the "blue" lead on the bulb socket connector.

OUT OF SPECIFICATION → The wiring circuit from the main switch to the bulb socket connector is faulty, repair it.

MEETS SPECIFICATION ↓

This circuit is not faulty.

EB805022

3.If the taillight fails to come on:

1.Bulb and bulb socket

- Check the bulb and bulb socket for continuity.

NO CONTINUITY → Replace the bulb and/or bulb socket.

CONTINUITY ↓

2.Voltage

- Connect the pocket tester (DC 20 V) to the bulb socket connector.

Tester (+) lead → Blue/Red terminal ①
Tester (–) lead → Black terminal ②

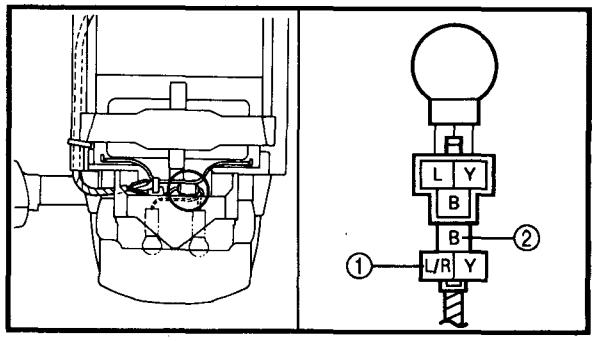

- Turn the main switch to "ON".
- Turn the lights switch to "ON" or "PO".
- Check the voltage (12 V) of the "blue/red" lead on the bulb socket connector.

OUT OF SPECIFICATION

The wiring circuit from the main switch to the bulb socket connector is faulty, repair it.

MEETS SPECIFICATION

This circuit is not faulty.

EB805023

4.If the auxiliary light fails to come on: (for Europe)

1.Bulb and bulb socket

- Check the bulb and bulb socket for continuity.

NO CONTINUITY

Replace the bulb and/or bulb socket.

CONTINUITY

2.Voltage

- Connect the pocket tester (DC 20 V) to the bulb socket connector.

Tester (+) lead → Blue/Red terminal ①
Tester (–) lead → Black terminal ②

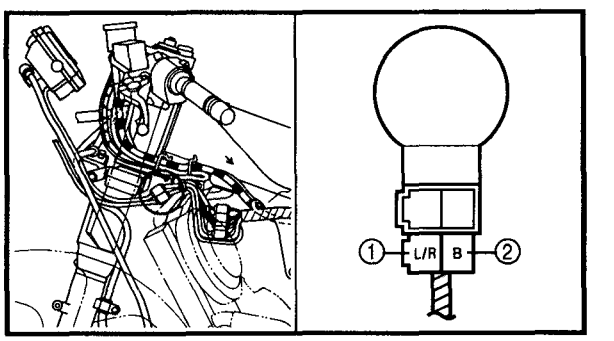

- Turn the main switch to "ON".
- Turn the lights switch to "ON" or "PO".
- Check the voltage (12 V) of the "Blue/Red" lead on the bulb socket connector.

OUT OF SPECIFICATION

The wiring circuit from the main switch to the bulb socket connector is faulty, repair it.

MEETS SPECIFICATION

This circuit is not faulty.

EB806000

SIGNAL SYSTEM

CIRCUIT DIAGRAM

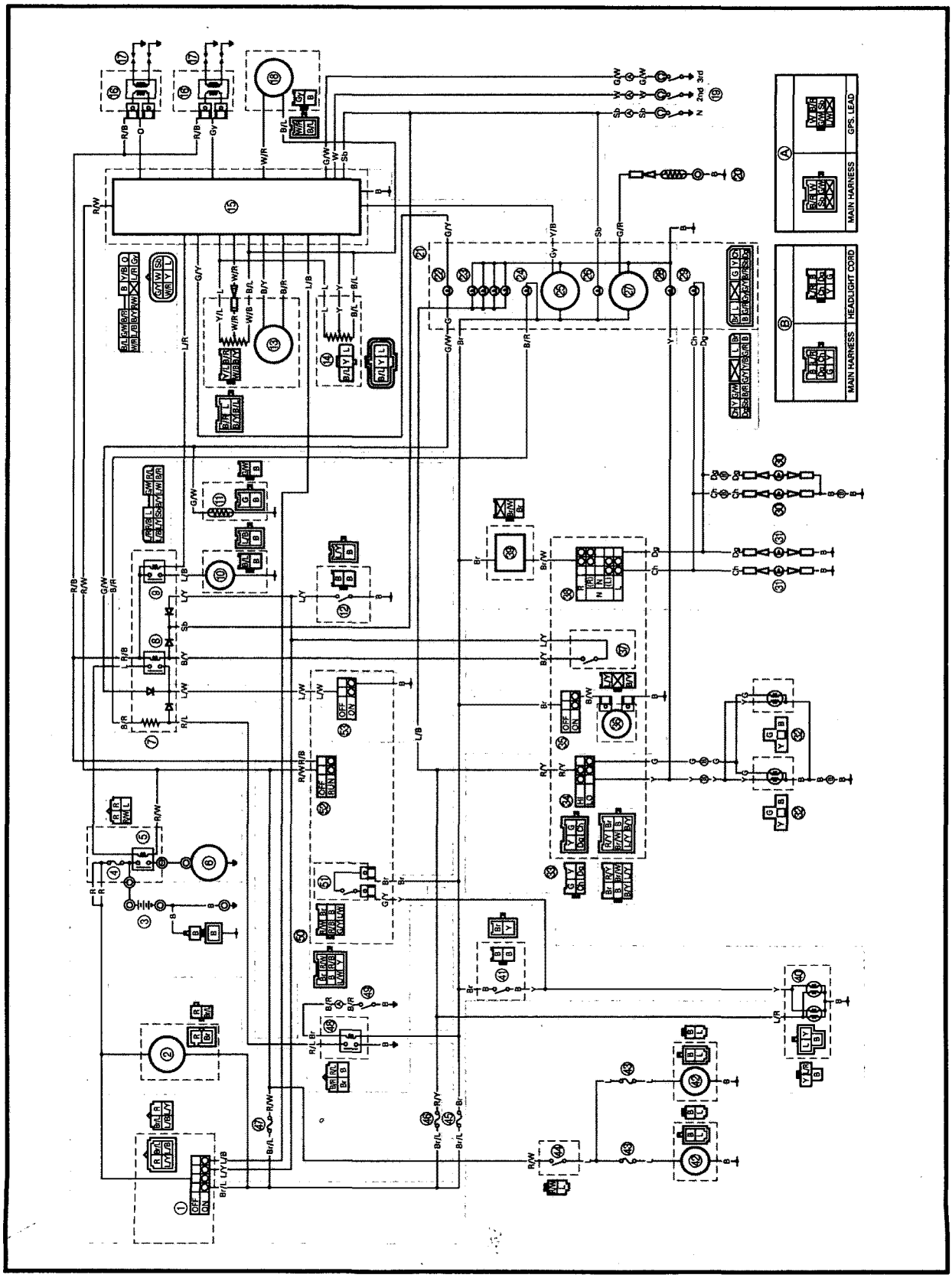

① Main switch
③ Battery
④ Main fuse
⑮ Ignitor unit
⑲ GPS (gear position sensor)
㉔ Oil level indicator light
㉕ Tachometer
㉖ Neutral indicator light
㉙ Turn indicator light
㉛ Rear flasher light
㉟ Horn switch
㊱ Horn
㊳ Turn switch
㊴ Flasher relay
㊵ Tail/brake light
㊶ Rear brake switch
㊺ Signal system fuse
㊾ Oil level switch
㊿ Front brake switch
(53) Start switch

EB806010
TROUBLESHOOTING

IF THE FLASHER LIGHT, BRAKE LIGHT AND/OR INDICATOR LIGHT FAIL TO COME ON:
IF THE HORN FAILS TO SOUND:

Procedure
Check:
1. Fuses (main and signal)
2. Battery
3. Main switch
4. Wiring connections (the entire signal system)

NOTE:
- *Remove the following part(s) before troubleshooting:*
  1) Seats
  2) Side panel (left)
  3) Fuel tank
  4) Air filter case
  5) Front cowling assembly
- Use the following special tool(s) for troubleshooting.

Pocket tester:
YU-03112/90890-03112

EB802011

1. Fuses (main and signal)
- Remove the fuses.
- Connect the pocket tester (Ω × 1) to the fuses.
- Check the fuses for continuity.

NO CONTINUITY → Replace the fuse(s).

CONTINUITY ↓

EB802012

2. Battery
- Check the battery condition.
  Refer to "BATTERY INSPECTION" in CHAPTER 3.

Open-circuit voltage:
12.8 V or more at 20 °C (68°F)

INCORRECT →
- Clean the battery terminals.
- Recharge or replace the battery.

CORRECT ↓
*

*

EB802017

3.Main switch

- Disconnect the main switch coupler from the wire harness.
- Check for continuity as follows:
  Red ① – Brown/Blue ②

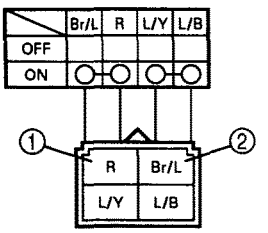

NO CONTINUITY

Replace the main switch.

CONTINUITY

EB806011

4.Wiring connections

- Check the connections of the entire signal system.
  Refer to "CIRCUIT DIAGRAM".

POOR CONNECTION

Properly connect the signal system.

CORRECT

Check the condition of each of the signal system's circuits.
Refer to "SIGNAL SYSTEM CHECK".

EB806020

SIGNAL SYSTEM CHECK

1.If the horn fails to sound:

1.Horn switch

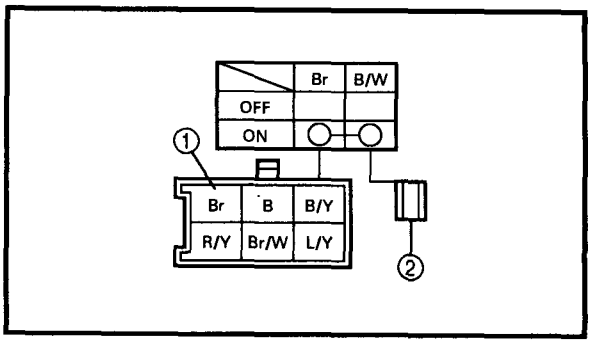

- Disconnect the left handlebar switch coupler from the wire harness.
- Disconnect the "Black/White" lead at the horn terminal.
- Check for continuity as follows:
  Brown ① – Black/White ②

NO CONTINUITY → Replace the left handlebar switch.

CONTINUITY ↓

2.Voltage

- Connect the pocket tester (DC 20 V) to the horn lead.

Tester (+) lead → Black/White lead ①
Tester (–) lead → Frame ground

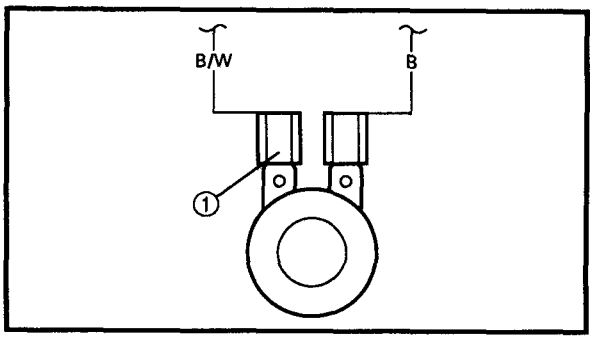

- Turn the main switch to "ON".
- Push the horn switch.
- Check the voltage (12 V) of the "Black/White" lead at the horn terminal.

OUT OF SPECIFICATION → The wiring circuit from the main switch to the horn terminal is faulty, repair it.

MEETS SPECIFICATION ↓

3.Horn

- Disconnect the "Black" lead at the horn terminal.
- Connect a jumper lead ① to the horn terminal and ground the jumper lead.
- Turn the main switch to "ON".
- Push the horn switch.

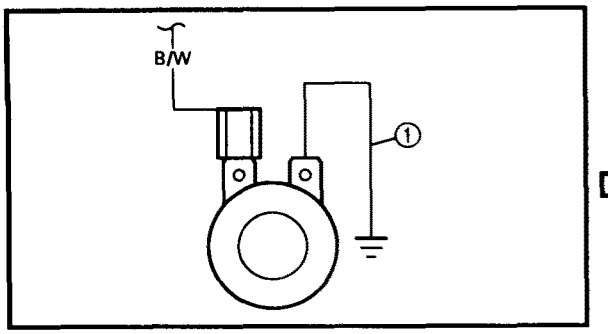

HORN SOUNDS

The horn is not faulty.

HORN DOES NOT SOUND

4.Voltage

- Connect the pocket tester (DC 20 V) to the horn at the "Black" terminal.

Tester (+) lead → Black lead ①
Tester (–) lead → Frame ground

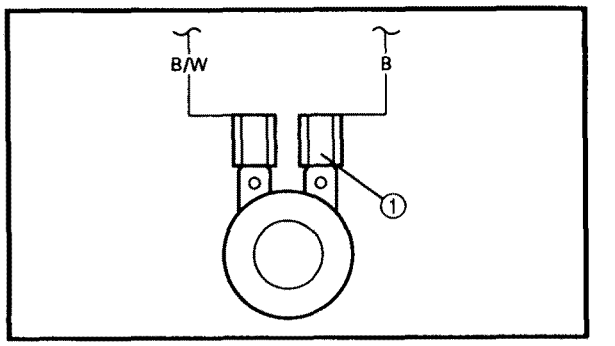

- Turn the main switch to "ON".
- Check the voltage (12 V) of the "Black" lead at the horn terminal.

OUT OF SPECIFICATION

Replace the horn.

MEETS SPECIFICATION

Adjust or replace the horn.

EB806022

2.If the brake light fails to come on:

1.Bulb and bulb socket

- Check the bulb and bulb socket for continuity.

NO CONTINUITY

Replace the bulb and/or bulb socket.

CONTINUITY

*

*

2.Brake switch

- Disconnect the front brake switch leads.
- Disconnect the rear brake switch coupler from the wire harness.
- Check for continuity as follows:
  Brown ① – Green/Yellow ②
  Black ③ – Black ④

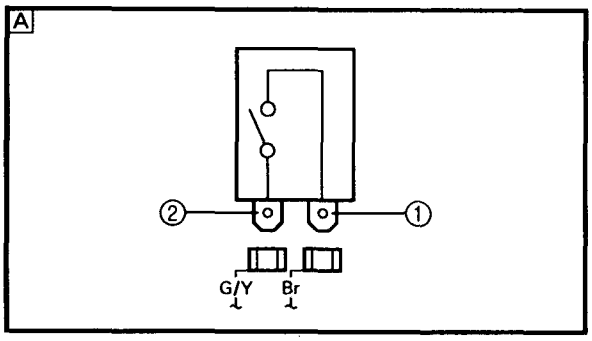

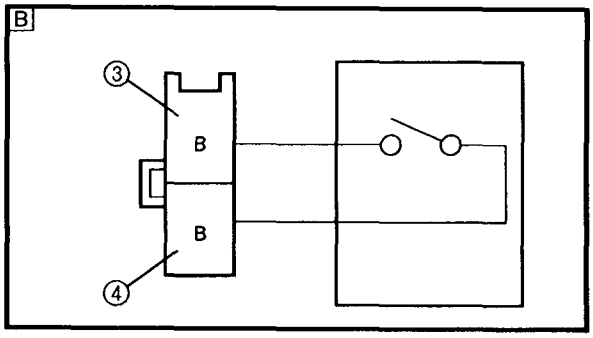

A Front brake switch
B Rear brake switch

NO CONTINUITY

Replace the brake switch.

CONTINUITY

3.Voltage

- Connect the pocket tester (DC 20 V) to the bulb socket connector.

Tester (+) lead → Yellow terminal ①
Tester (–) lead → Black terminal ②

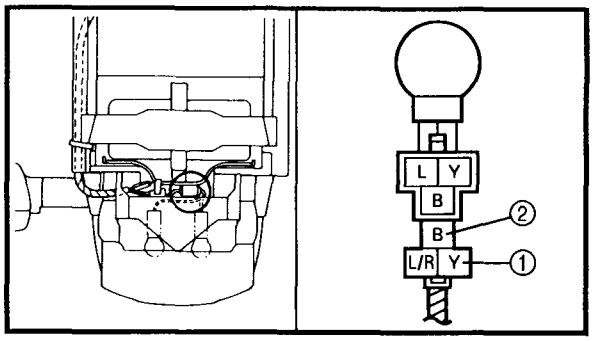

- Turn the main switch to "ON".
- The brake lever is pulled in or the brake pedal is pressed down.
- Check the voltage (12 V) of the "Yellow" lead on the bulb socket connector.

OUT OF SPECIFICATION

The wiring circuit from the main switch to the bulb socket connector is faulty, repair it.

MEETS SPECIFICATION

This circuit is not faulty.

EB806023

3.If the flasher light and/or turn indicator light fails to blink:

1.Bulb and bulb socket

- Check the bulb and bulb socket for continuity.

NO CONTINUITY → Replace the bulb and/or bulb socket.

CONTINUITY ↓

2.Turn switch

- Disconnect the left handlebar switch couplers from the wire harness.
- Check for continuity as follows:
  Brown/White ① – Chocolate ②
  Brown/White ① – Dark green ③

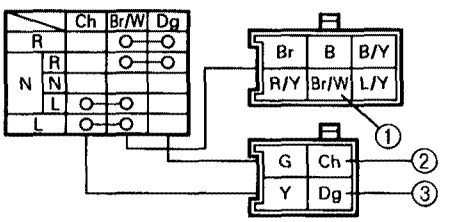

NO CONTINUITY → Replace the left handlebar switch.

CONTINUITY ↓

3.Voltage

- Connect the pocket tester (DC 20 V) to the flasher relay coupler.

Tester (+) lead → Brown terminal ①
Tester (–) lead → Frame ground

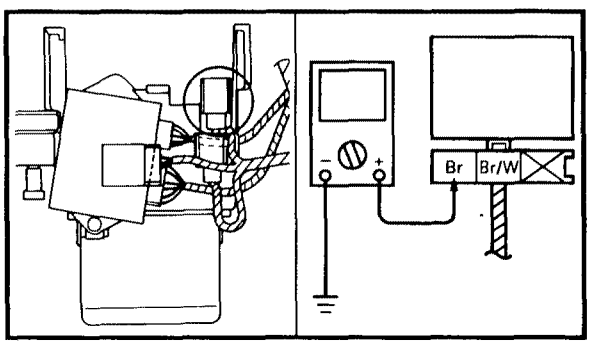

- Turn the main switch to "ON".
- Check the voltage (12 V) of the "Brown" ① lead at the flasher relay terminal.

OUT OF SPECIFICATION → The wiring circuit from the main switch to the flasher relay connector is faulty, repair it.

MEETS SPECIFICATION ↓
*

*

4.Voltage

- Connect the pocket tester (DC 20 V) to the flasher relay coupler.

Tester (+) lead →
Brown/White terminal ①
Tester (–) lead → Frame ground

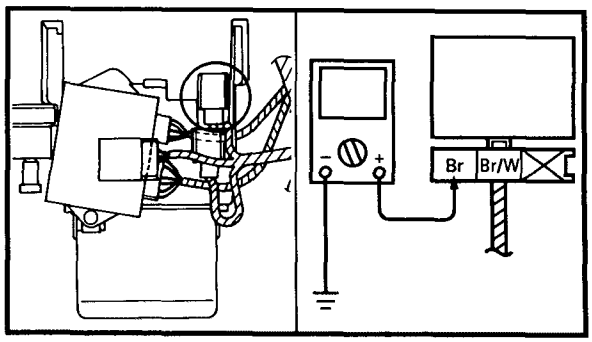

- Turn the main switch to "ON".
- Turn the turn switch to "L" or "R".
- Check the voltage (12 V) on the "Brown/White" ① lead at the flasher relay terminal.

OUT OF SPECIFICATION

The flasher relay is faulty, replace it.

MEETS SPECIFICATION

5.Voltage

- Connect the pocket tester (DC 20 V) to the bulb socket connector.

[A] Flasher light
[B] Turn indicator light

At the flasher light (left):
Tester (+) lead → Chocolate lead ①
Tester (–) lead → Frame ground

At the flasher light (right):
Tester (+) lead → Dark green lead ②
Tester (–) lead → Frame ground

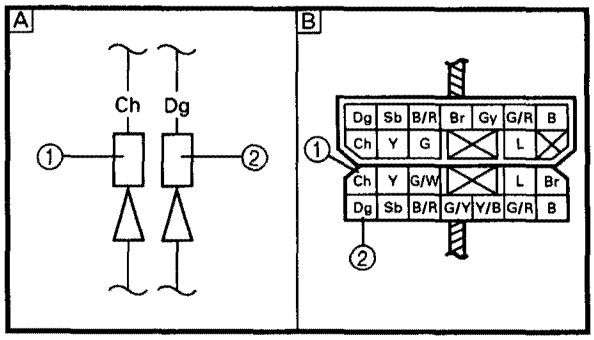

- Turn the main switch to "ON".
- Turn the turn switch to "L" or "R".
- Check the voltage (12 V) of the "Chocolate" lead or "Dark green" lead on the bulb socket connector.

OUT OF SPECIFICATION

The wiring circuit from the turn switch to the bulb socket connector is faulty, repair it.

MEETS SPECIFICATION

This circuit is not faulty.

EB806024

4.If the neutral indicator light fails to come on:

1.Bulb and bulb socket

- Check the bulb and bulb socket for continuity.

NO CONTINUITY → Replace the bulb and/or bulb socket.

CONTINUITY ↓

2.GPS (gear position sensor)

- Disconnect the GPS (gear position sensor)/oil level switch coupler from the wire harness.
- Check for continuity as follows:
  Sky blue ① – Ground

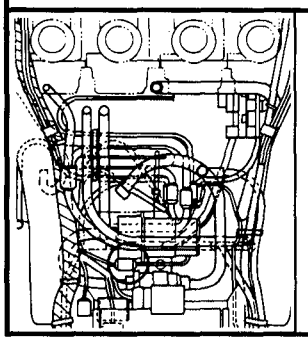

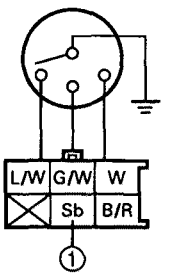

NO CONTINUITY → Replace the GPS (gear position sensor).

CONTINUITY ↓

3.Voltage

- Connect the pocket tester (DC 20 V) to the bulb socket coupler.

Tester (+) lead → Brown terminal ①
Tester (–) lead → Frame ground

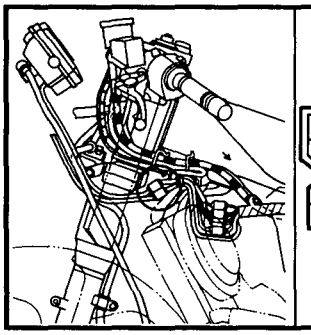

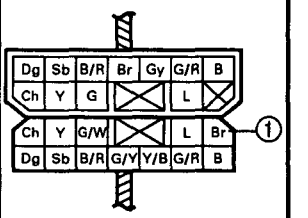

- Turn the main switch to "ON".
- Check the voltage (12 V).

OUT OF SPECIFICATION → The wiring circuit from the main switch to the bulb socket connector is faulty, repair it.

MEETS SPECIFICATION ↓

This circuit is not faulty.

EB806025

5.If the oil level indicator light fails to come on:

1.Bulb and bulb socket

- Check the bulb and bulb socket for continuity.

NO CONTINUITY → Replace the bulb and/or bulb socket.

CONTINUITY ↓

2.Starting circuit cut-off relay

- Disconnect the starting circuit cut-off relay coupler from the wire harness.
- Connect the pocket tester (Ω × 100) to the starting circuit cut-off relay coupler terminals.
- Check the resistor for the specified resistance.

Tester (+) terminal → Black/Red terminal ①
Tester (–) terminal → Red/Blue terminal ②

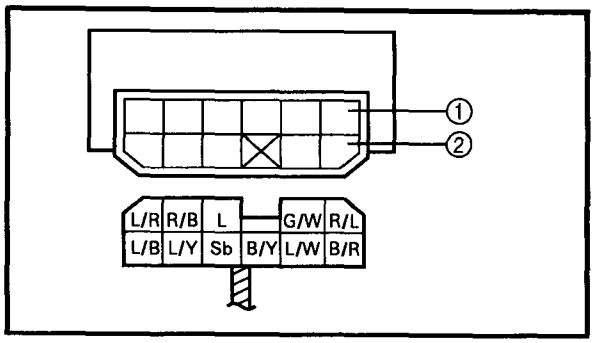

8 Ω at 20 °C (68°F)

OUT OF SPECIFICATION → Replace the starting circuit cut-off relay.

MEETS SPECIFICATION ↓

3.Oil level switch

- Drain the engine oil and remove the oil level switch from the oil pan.
- Connect the pocket tester (Ω × 1) to the oil level switch.

Tester (+) lead → Black/Red terminal ①
Tester (–) lead → Frame ground

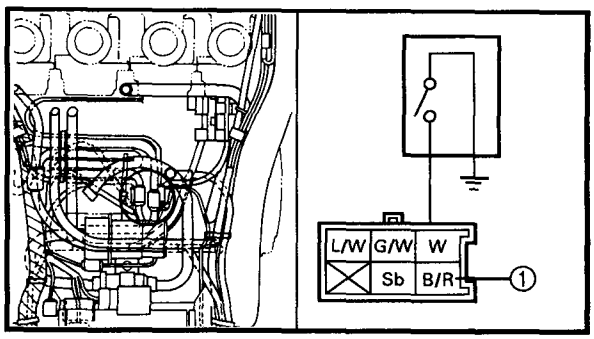

- Check the oil level switch for continuity.

NO CONTINUITY → Replace the oil level switch.

CONTINUITY ↓

*

*

4.Diode (starting circuit cut-off relay)

- Remove the relay unit from the wire harness.
- Check for continuity as follows:
  Red/Blue ① – Blue/White ②

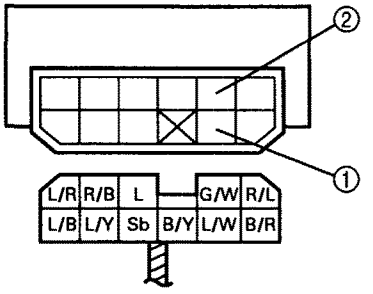

Tester (+) lead → Blue/White ② **Tester (–) lead → Red/Blue ①**	**Continuity**
Tester (+) lead → Red/Blue ① **Tester (–) lead → Blue/White ②**	**No Continuity**

NOTE:
When you switch the "–" and "+" leads of the digital pocket tester the readings in the above chart will be reversed.

INCORRECT → Replace the relay unit.

CORRECT ↓

5.Start switch

- Disconnect the right handlebar switch coupler from the wire harness.
- Check for continuity as follows:
  Blue/White ① – Black ②

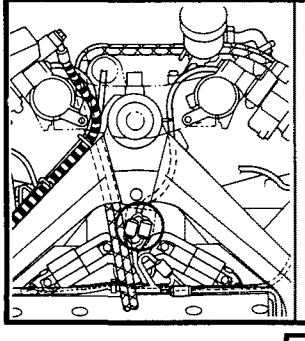

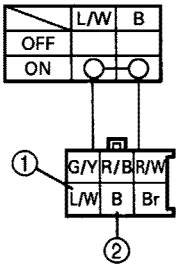

NO CONTINUITY → Replace the right handlebar switch.

CONTINUITY ↓

*

*

6.Voltage

- Connect the pocket tester (DC 20 V) to the bulb socket connector.

Tester (+) lead → Brown lead ①
Tester (–) lead → Black/Red lead ②

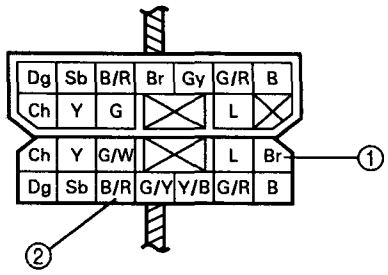

- Turn the main switch to "ON".
- Check the voltage (12 V).

MEETS SPECIFICATION

This circuit is not faulty.

OUT OF SPECIFICATION

The wiring circuit from the main switch to the bulb socket connector is faulty, repair it.

EB807000

COOLING SYSTEM

CIRCUIT DIAGRAM

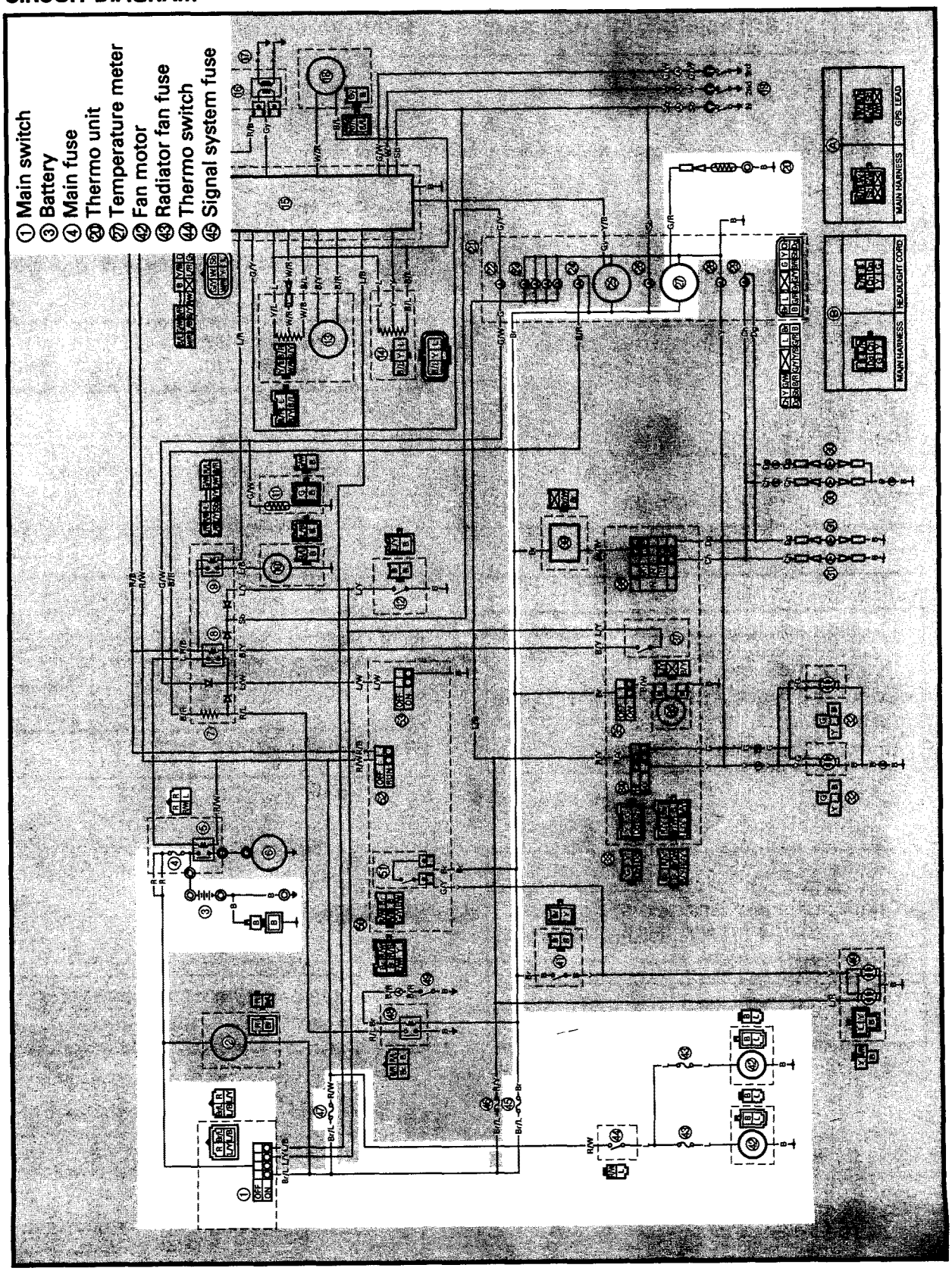

EB807010
TROUBLESHOOTING

IF THE FAN MOTOR FAILS TO TURN:
IF THE WATER TEMPERATURE METER FAILS TO MOVE WHEN THE ENGINE IS WARM:

Procedure
Check:
1.Fuses (main, ignition, signal and fan)
2.Battery
3.Main switch
4.Fan motor
5.Thermo switch
6.Thermo unit
7.Water temperature
8.Wiring connections (the entire cooling system)

NOTE:
- Remove the following part(s) before troubleshooting:
1)Seats
2)Side panel (left)
3)Bottom cowling (front)
4)Bottom cowling
5)Side cowlings (left and right)
- Use the following special tool(s) for troubleshooting.

Pocket tester:
YU-03112/90890-03112

EB802011
1.Fuses (main, ignition, signal and fan)
- Remove the fuses.
- Connect the pocket tester (Ω × 1) to the fuses.
- Check the fuses for continuity.

NO CONTINUITY → Replace the fuse(s).

CONTINUITY ↓

EB802012
2.Battery
- Check the battery condition.
Refer to "BATTERY INSPECTION" in CHAPTER 3.

Open-circuit voltage:
12.8 V or more at 20 °C (68°F)

INCORRECT →
- Clean the battery terminals.
- Recharge or replace the battery.

CORRECT ↓
*

*

EB802017

3.Main switch

- Disconnect the main switch coupler from the wire harness.
- Check for continuity as follows:
  Red ① – Brown/Blue ②

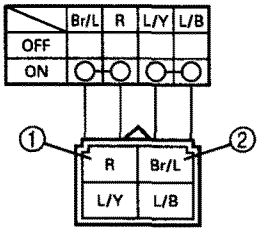

NO CONTINUITY

Replace the main switch.

CONTINUITY

EB807011

4.Fan motor

- Disconnect the fan motor coupler.
- Connect the battery (12V) as shown.

Battery (+) lead → Blue terminal ①
Battery (–) lead → Black terminal ②

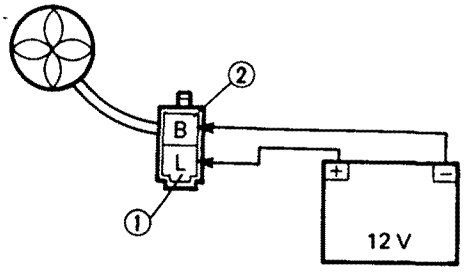

- Check the operation of the fan motor.

DOES NOT MOVE

The fan motor is faulty, replace it.

MOVES

*

*

EB807012

5.Thermo switch

- Remove the thermo switch from the thermostatic valve housing.
- Connect the pocket tester (Ω × 1) to the thermo switch ①.
- Immerse the thermo switch in coolant ②.
- Check the thermo switch for continuity. While heating the coolant use a thermometer ③ to record the temperatures.

Test step	Water temperature / Thermo switch	Good condition
1	0 ~ 98°C (32 ~ 208.4°F)	×
2	More than 105 + 3°C (221.0 ± 5.4°F)	○
3*	105 to 98°C (221.0 to 208.4°F)	○
4*	Less than 98°C (208.4°F)	×

Tests 1 & 2; Heat-up tests
Tests 3* & 4*; Cool-down tests
○: Continuity ×: No continuity

⚠ WARNING

Handle the thermo switch with special care.
Never subject it to strong shocks or allow it to be dropped. Should it be dropped, it must be replaced.

Thermo switch:
23 Nm (2.3 m • kg, 17 ft • lb)
Three bond sealock® #10

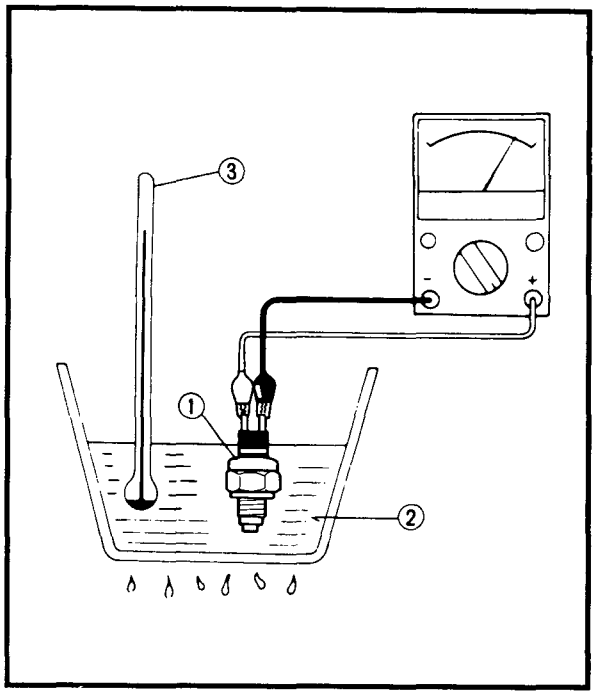

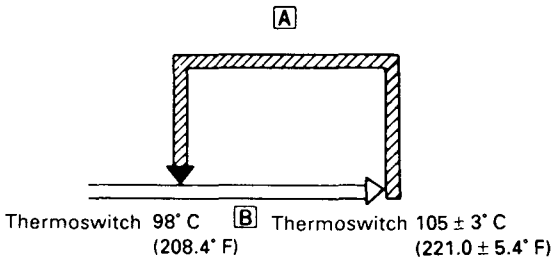

A THERMO SWITCH "ON", FAN "ON"
B COOLANT TEMPERATURE

BAD CONDITION

Replace the thermo switch.

GOOD CONDITION

*

*

EB807013

6.Thermo unit

- Remove the thermo unit from the thermostatic valve housing.
- Connect the pocket tester (Ω × 10) to the thermo unit ①.
- Immerse the thermo unit in coolant ②.
- Measure the resistance.
  While heating the coolant use a thermometer ③ to record the temperatures.

Thermo unit resistance:
80°C (176°F): 47 ~ 56 Ω
100°C (212°F): 26 ~ 29 Ω

⚠ WARNING

Handle the thermo unit with special care.
Never subject it to strong shock or allow it to be dropped. Should it be dropped, it must be replaced.

Thermo unit:
15 Nm (1.5 m • kg, 11 ft • lb)
Three bond sealock® #10

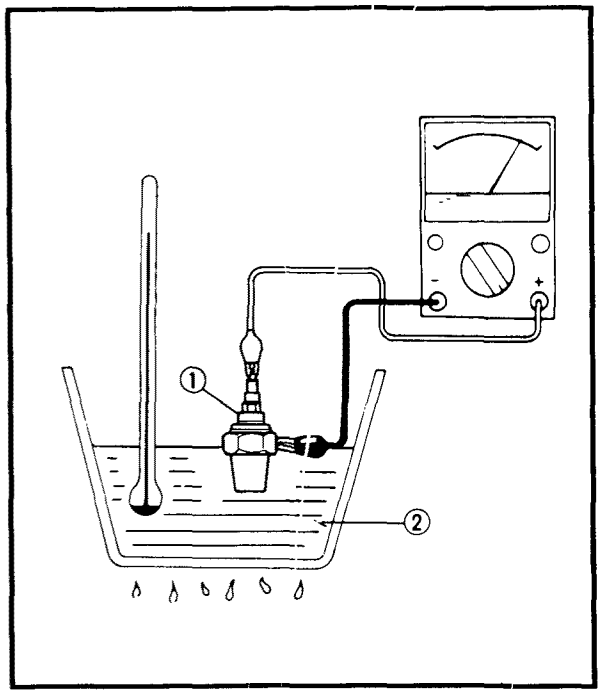

BAD CONDITION

Replace the thermo unit.

GOOD CONDITION

EB807014

7.Wiring connections

- Check the connections of the entire cooling system.
  Refer to "CIRCUIT DIAGRAM".

POOR CONNECTION

Properly connect the cooling system.

CORRECT

This circuit is not faulty.

EB808000

FUEL PUMP SYSTEM

CIRCUIT DIAGRAM

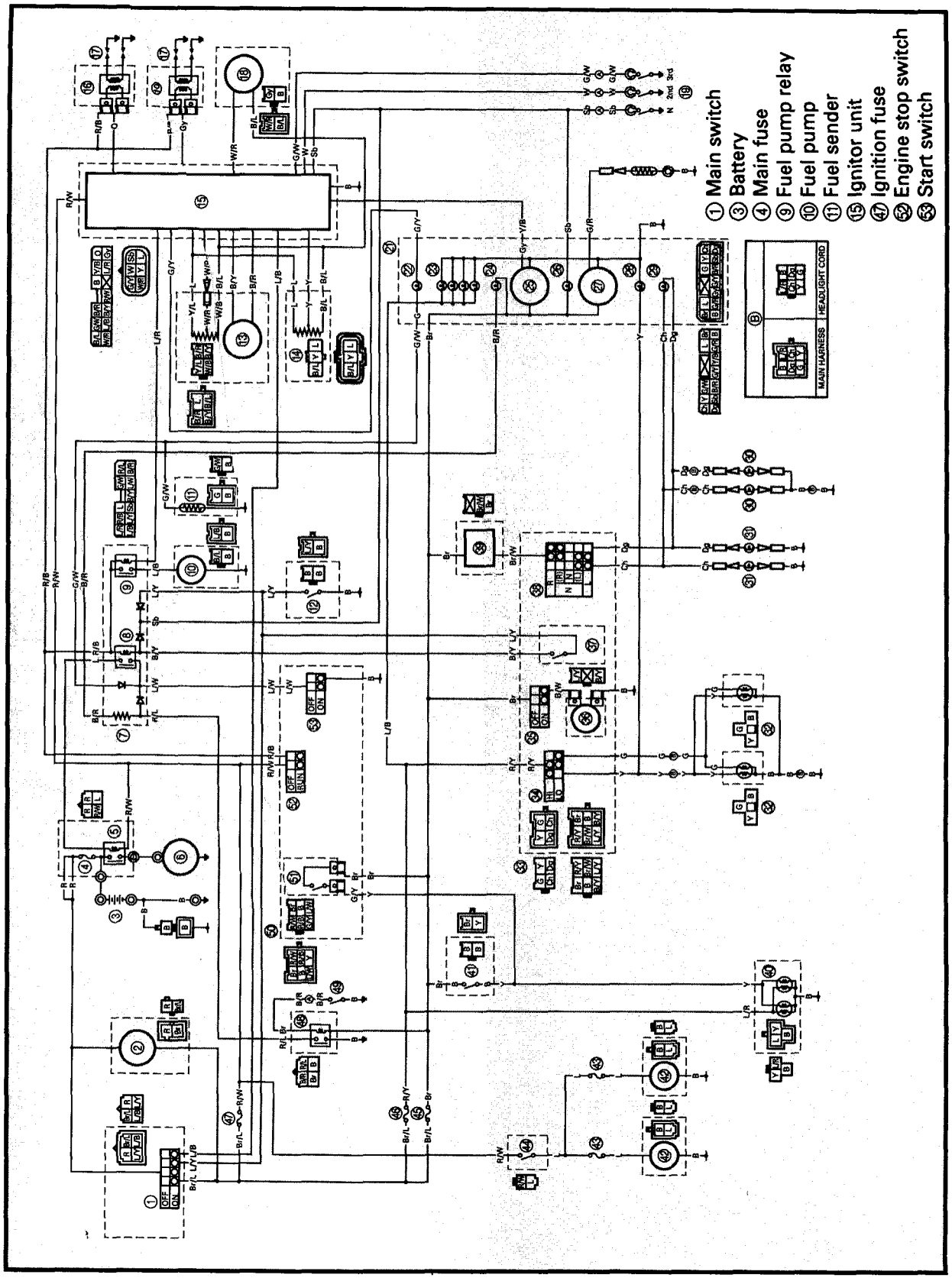

EB808010

FUEL PUMP CIRCUIT OPERATION

The fuel pump circuit consists of the fuel pump relay, fuel pump, engine stop switch and ignitor unit.
The ignitor unit includes the control unit for the fuel pump.

① Battery
② Main fuse
③ Main switch
④ Ignition fuse
⑤ Engine stop switch
⑥ Ignitor unit
⑦ Fuel pump relay
⑧ Fuel pump

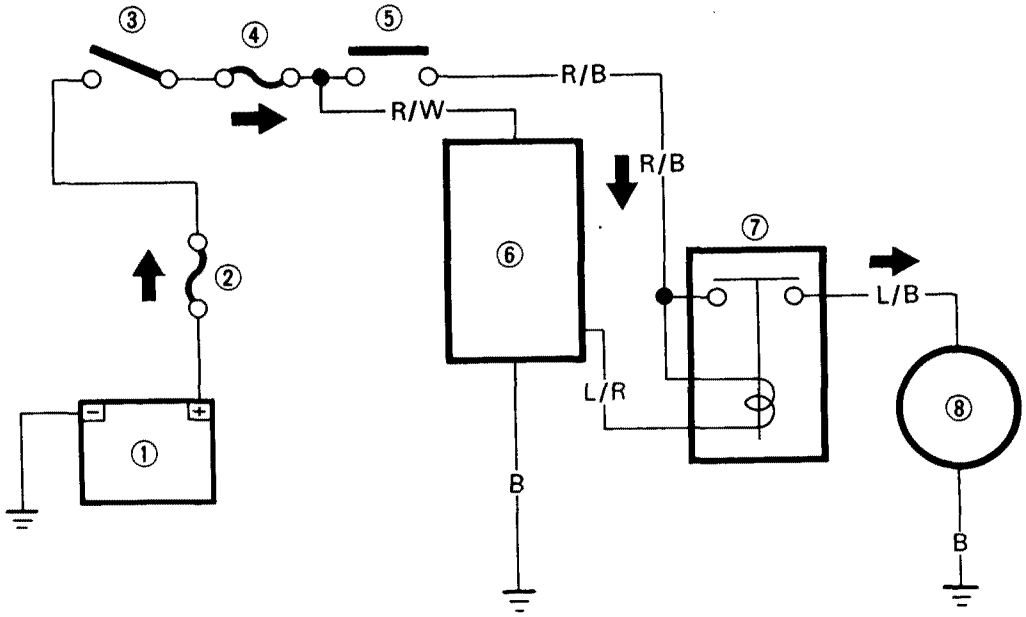

EB808020
TROUBLESHOOTING

IF THE FUEL PUMP FAILS TO OPERATE:

Procedure
Check:
1.Fuses (main and ignition)
2.Battery
3.Main switch
4.Engine stop switch
5.Fuel pump relay (relay unit)
6.Fuel pump
7.Wiring connections (the entire fuel system)

NOTE:
- Remove the following part(s) before troubleshooting:
1)Seat
2)Side panel (left)
3)Fuel tank
4)Air filter case
5)Bottom cowling (front)
6)Bottom cowling
7)Side cowling (left)
- Use the following special tool(s) for troubleshooting.

Pocket tester:
YU-03112/90890-03112

EB802011

1.Fuses (main and ignition)
- Remove the fuses.
- Connect the pocket tester (Ω × 1) to the fuses.
- Check the fuses for continuity.

NO CONTINUITY → Replace the fuse(s).

CONTINUITY ↓

EB802012

2.Battery
- Check the battery condition.
Refer to "BATTERY INSPECTION" in CHAPTER 3.

Open-circuit voltage:
12.8 V or more at 20°C (68°F)

INCORRECT →
- Clean the battery terminals.
- Recharge or replace the battery.

CORRECT ↓
*

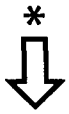

EB802017

3.Main switch

- Disconnect the main switch coupler from the wire harness.
- Check for continuity as follows:
  Red ① – Brown/Blue ②

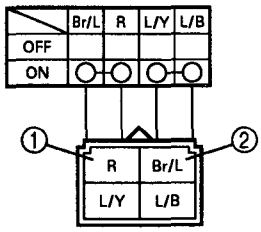

NO CONTINUITY

Replace the main switch.

CONTINUITY

EB802018

4.Engine stop switch

- Disconnect the right handlebar switch coupler from the wire harness.
- Check for continuity as follows:
  Red/White ① – Red/Black ②

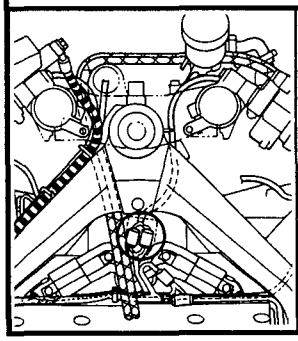

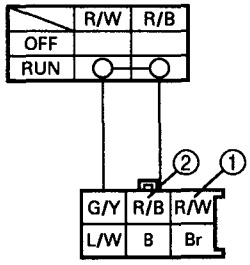

NO CONTINUITY

Replace the right handlebar switch.

CONTINUITY

EB803023

5.Fuel pump relay (relay unit)

- Remove the relay unit from the wire harness.
- Connect the pocket tester (Ω × 1) and battery (12 V) to the relay unit terminals.

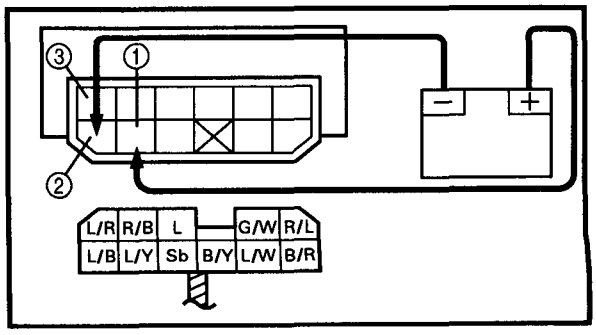

Battery (+) terminal →
Red/Black terminal ①
Battery (–) terminal →
Blue/Red terminal ②

Tester (+) lead → Red/Black terminal ①
Tester (–) lead → Blue/Black terminal ③

- Check the fuel pump relay for continuity.

NO CONTINUITY

Replace the starting circuit cut-off relay.

CONTINUITY

EB808021

6.Fuel pump resistance

- Disconnect the fuel pump coupler from the wire harness.
- Connect the pocket tester (Ω × 1) to the fuel pump coupler terminals.

Tester (+) lead → Black/Blue terminal ①
Tester (–) lead → Black terminal ②

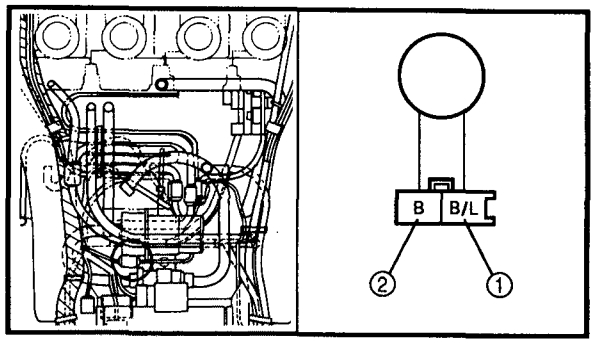

- Check if the fuel pump has the specified resistance.

Fuel pump resistance:
4 ~ 30 Ω at 20°C (68°F)

OUT OF SPECIFICATION

Replace the fuel pump.

MEET SPECIFICATION

7.Bulb and bulb socket

- Check the bulb and bulb socket for continuity.

NO CONTINUITY

Replace the bulb and/or bulb socket.

CONTINUITY

8.Fuel sender

- Drain the fuel and remove the fuel sender from the fuel tank.
- Disconnect the fuel sender coupler from the wire harness.
- Connect the pocket tester (Ω × 1) to the fuel sender.

Tester (+) lead → Green terminal ①
Tester (–) lead → Black terminal ②

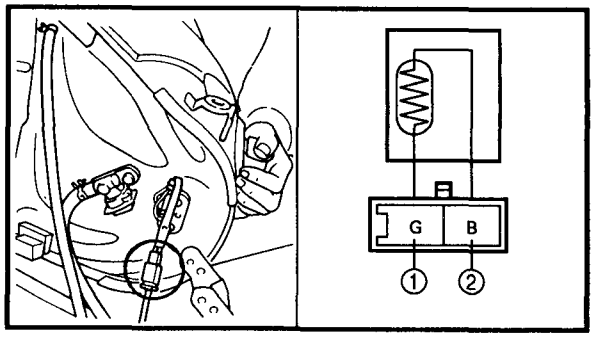

- Check the fuel sender for continuity.

NO CONTINUITY → Replace the fuel sender.

CONTINUITY ↓

9.Voltage

- Connect the pocket tester (DC 20 V) to the bulb socket connector.

Tester (+) lead → Green/Yellow terminal ①
Tester (–) lead → Green/White terminal ②

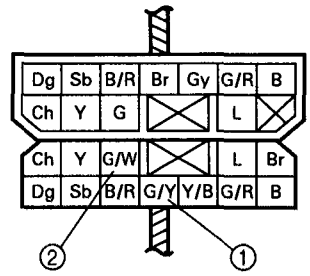

- Turn the main switch to "ON".
- Check the voltage (12 V).

OUT OF SPECIFICATION → The wiring circuit from the main switch to the bulb socket connector is faulty, repair it.

MEETS SPECIFICATION ↓

10.Diode (relay unit)

- Remove the relay unit from the wire harness.
- Check for continuity as follows:
  Green/White ① – Blue/White ②

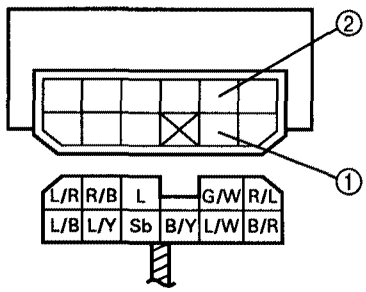

Tester (+) lead → Blue/White ② **Tester (–) lead → Green/White ①**	**Continuity**
Tester (+) lead → Green/White ① **Tester (–) lead → Blue/White ②**	**No Continuity**

NOTE:
When you switch the "–" and "+" leads of the digital pocket tester the readings in the above chart will be reversed.

INCORRECT → Replace the relay unit.

CORRECT ↓

*

*

11.Start switch

- Disconnect the right handlebar switch coupler from the wire harness.
- Check for continuity as follows:
  Blue/White ① – Black ②

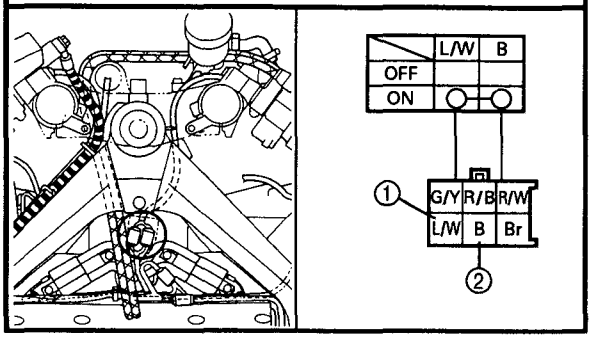

NO CONTINUITY

Replace the right handlebar switch.

CONTINUITY

EB808022

12.Wiring connections

- Check the connections of the entire fuel pump system.
  Refer to "CIRCUIT DIAGRAM".

POOR CONNECTION

Properly connect the fuel pump system.

CORRECT

Replace the ignitor unit.

EB808030
FUEL PUMP TEST

⚠ WARNING

Gasoline is extremely flammable and under certain circumstances there can be a danger of an explosion or combustion. Be extremely careful and note the following points:
- **Stop the engine before refuelling.**
- **Do not smoke and keep away from open flames, sparks, or any other source of fire.**
- **Take care not to spill gasoline. If you do accidentally spill some, wipe it up immediately with dry rags.**
- **If gasoline touches the engine when the engine is still hot, there is a danger of combustion. Make sure that the engine is completely cool before performing the following test.**

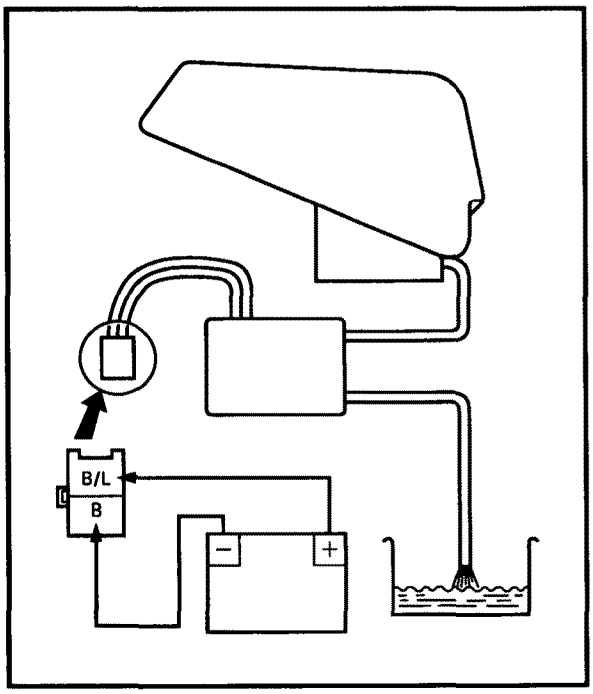

1.Check:
- Fuel pump operation

****

Checking steps:
- Fill up the fuel tank.
- Put the end of the fuel hose into an open container.
- Connect the battery (12 V) to the fuel pump coupler terminals.

Battery (+) lead → Black/Blue terminal ①
Battery (–) lead → Black terminal ②

- If fuel flows out from the fuel hose, the fuel pump is good. If not, replace the fuel pump assembly.

****

EXUP SYSTEM

CIRCUIT DIAGRAM

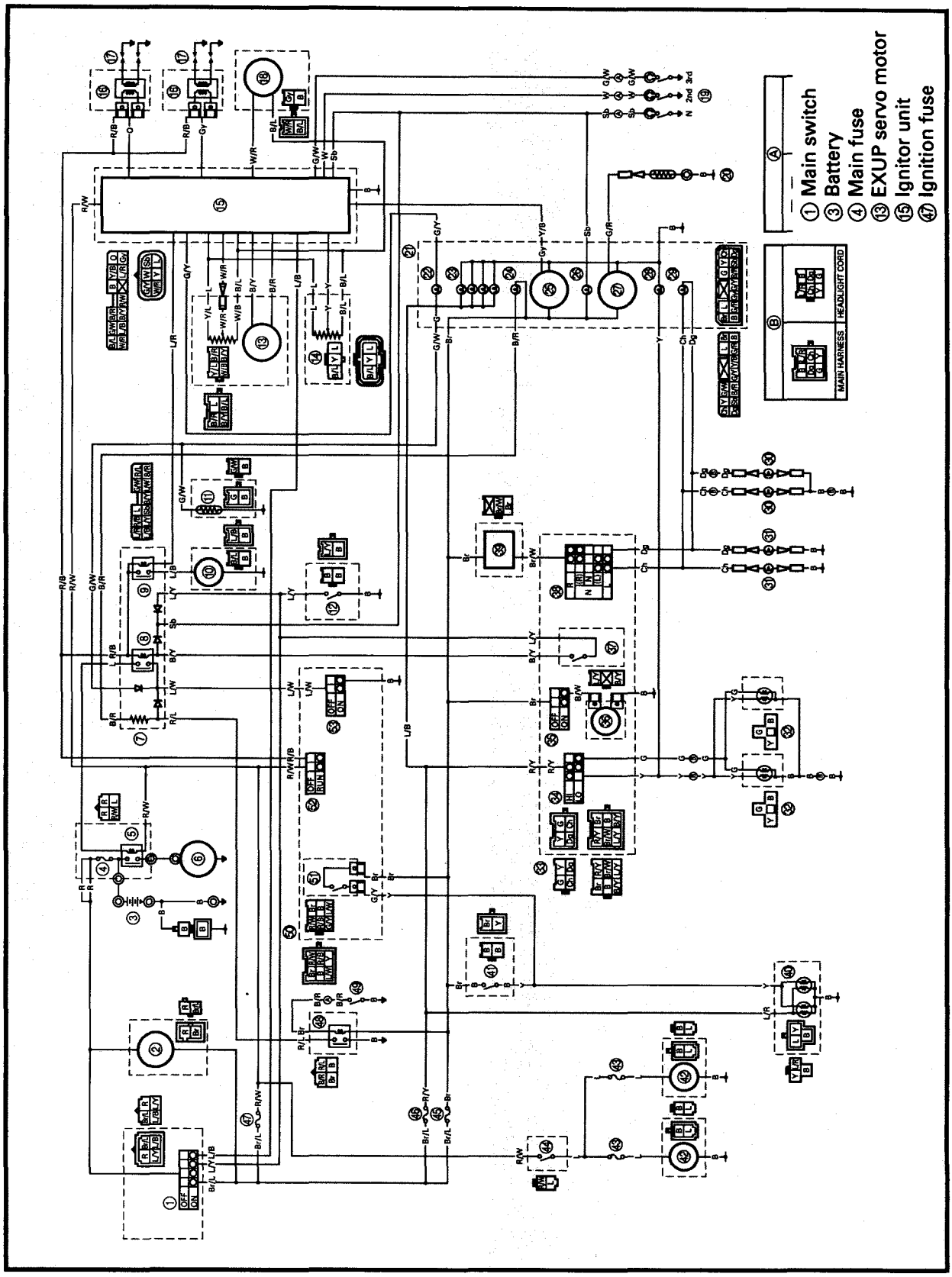

TROUBLESHOOTING

WHEN ENGINE REVOLUTION IS CHANGED, EXUP SERVO MOTOR DOES NOT OPERATE.

Procedure (1)
Check:
1. EXUP servo motor operation (with EXUP servo motor coupler connected)
2. Voltage
3. EXUP servo motor operation (with EXUP servo motor coupler disconnected)
4. EXUP servo motor resistance (potentiometer resistance)
5. Wiring connection (entire EXUP system)

Procedure (2)
Check:
1. Fuse (main and ignition)
2. Battery
3. Main switch
4. Engine stop switch
5. Wiring connection (entire EXUP system)

NOTE:
- Remove the following part(s) before troubleshooting.
1) Seats
2) Side panel (left)
3) Bottom cowling (front)
4) Bottom cowling
5) Side cowling (left)
- Use the following special tool(s) for troubleshooting.

Pocket tester:
YU-03112/90890-03112

Procedure (1)

1. EXUP servo motor operation (with EXUP servo motor coupler connected)

- Disconnect the EXUP cables at EXUP servo motor pully side.
- Start the engine and rev it at to 2,000 r/min.

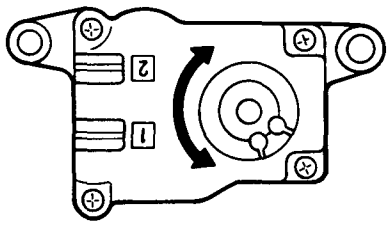

PULLY TURNS

Check the EXUP cables connection. If connection is correct, inspect the EXUP valve and cables.
Refer to "ENGINE OVERHAUL" in CHAPTER 4.

PULLY DOES NOT TURN
*

*

2.Voltage

- Connect the pocket tester (DC 20V) to the EXUP servo motor coupler terminal.

Tester (+) lead → Black/Red terminal ①
Tester (–) lead → Black/Yellow terminal ②

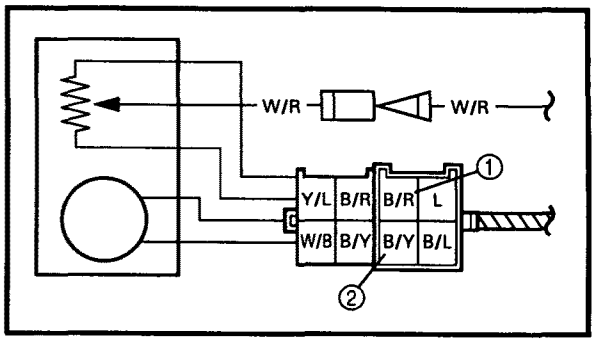

- Turn the main switch to "ON" and check for the voltage between "Black/Red ① and Black/Yellow ②".

Voltage (Black/Red-Black/Yellow) 12V

OUT OF SPECIFICATION

Refer to the "procedure (2)".

MEETS SPECIFICATION (12V)

3.EXUP servo motor operation (with EXUP servo motor coupler disconnected)

- Disconnect the EXUP cables from the EXUP servo motor pully.
- Disconnect the EXUP servo motor coupler from the wire harness.
- Connect the battery leads to the EXUP motor coupler.

Battery (+) terminal → Black/Yellow terminal ①
Battery (–) terminal → Black/Red terminal ②

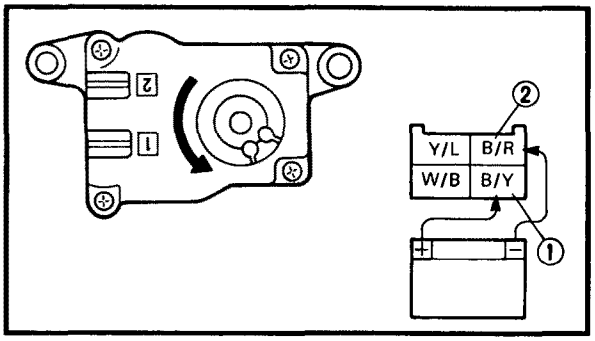

- Check the EXUP servo motor for pully operation by allowing it to rotate several times.

CAUTION:
This test should be performed within a few seconds to prevent further damage.

PULLY DOES NOT TURN

Replace EXUP servo motor.

PULLY TURNS

*

*

4.EXUP servo motor resistance (potentiometer resistance)

- Disconnect the EXUP servo motor coupler from the wire harness.

Step 1:

- Connect the pocket tester (Ω × 1k) to the EXUP servo motor couplers.

Tester (+) lead → White/Black terminal ①
Tester (–) lead → Yellow/Blue terminal ②

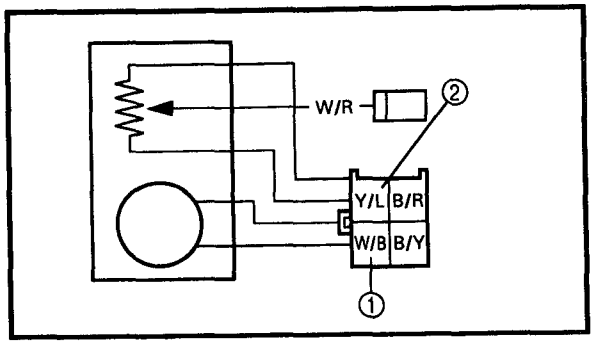

- Measure the EXUP servo motor resistance.

EXUP servo motor resistance:
5.3 ~ 9.8 kΩ
(White/Black – Yellow/Blue)

Step 2:

- Connect the pocket tester (Ω × 1k) to the EXUP servo motor coupler.

Tester (+) lead → White/Black terminal ①
Tester (–) lead → White/Red terminal ③

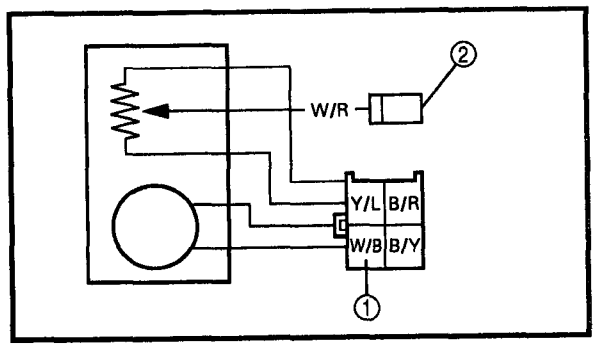

- Measure the EXUP servo motor resistance while turning the pully slowly.

EXUP servo motor resistance:
0 ~ about 7.5 kΩ
(White/Black – White/Red)
(when the pulley is turned once)

OUT OF SPECIFICATION → EXUP servo motor is faulty, replace it.

BOTH MEET SPECIFICATIONS ↓

5.Wiring connection

- Check the entire EXUP system for connections.
  Refer to "CIRCUIT DIAGRAM".

POOR CONNECTION → Correct.

CORRECT ↓

Replace ignitor unit.

Procedure (2)

EB802011

1.Fuses (main and ignition)

- Remove the fuses.
- Connect the pocket tester (Ω × 1) to the fuses.
- Check the fuses for continuity.

NO CONTINUITY → Replace the fuses.

CONTINUITY ↓

EB802012

2.Battery

- Check the battery condition.
  Refer to "BATTERY INSPECTION" in CHAPTER 3.

Open-circuit voltage:
12.8V or more at 20°C (68°F)

INCORRECT →
- Clean the battery terminals.
- Recharge or replace the battery.

CORRECT ↓

EB802017

3.Main switch

- Disconnect the main switch couplers from the wire harness.
- Check for continuity as follows:
  Red ① – Brown/Blue ②

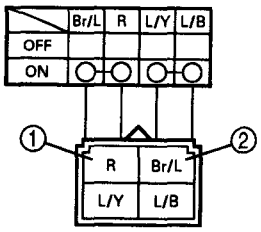

NO CONTINUITY → Replace the main switch.

CONTINUITY ↓

*

*

EB802018

4.Engine stop switch

- Disconnect the right handlebar switch couplers from the wire harness.
- Check for continuity as follows:
  Red/White ① – Red/Black ②

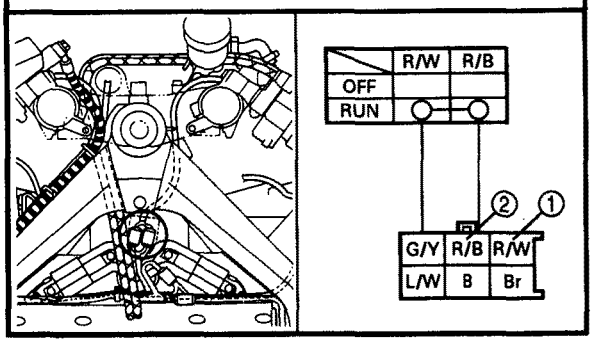

NO CONTINUITY

Replace the right handlebar switch.

CONTINUITY

EB80201D

5.Wiring connection

- Check the connections of the entire EXUP system.
  Refer to "CIRCUIT DIAGRAM".

POOR CONNECTION

Properly connect the ignition system.

CORRECT

Refer to "procedure (1)".

SELF-DIAGNOSIS

The YZF1000R features self-diagnosis.
When the main switch is turned to "ON", the following items are monitored and the condition codes are displayed on the tachometer (irrespective of whether the engine is running or not).

Item	Condition	Response	Display condition code
Throttle position sensor (TPS)	Disconnected Short-circuit Locked	• Enables the motorcycle to run so that the ignition timing is fixed when the throttle is fully opened. • Displays the condition code on the tachometer.	3,000 r/min
EXUP	Disconnected Short-circuit	• Enables the machine to run by moving the servo motor to is its open side for three seconds, and puts the servo motor in stop mode. • Displays the condition code on the tachometer.	7,000 r/min
	Servo motor is locked.	• Turns the power to the servo motor on and off so that it will not burn out. • Displays the condition code on the tachometer.	
Fuel light	Disconnected	• Displays the condition code on the tachometer.	8,000 r/min

Display order on the tachometer

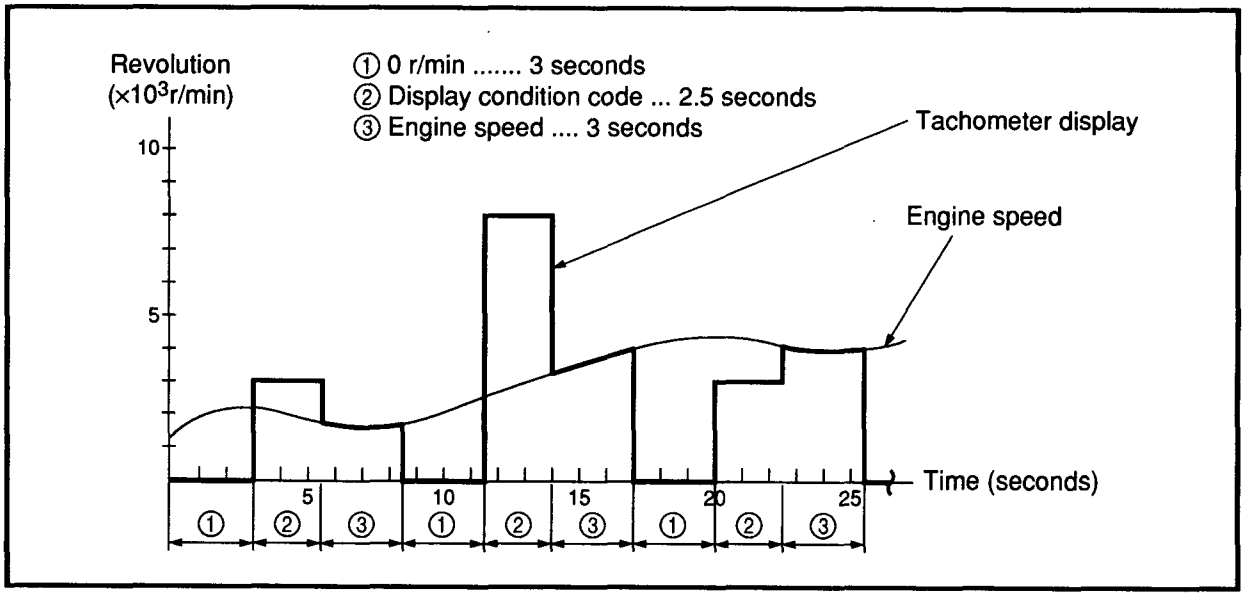

When more than one item is being monitored, the tachometer needle shows the condition codes in ascending order, cycling through the sequence repeatedly.
While the engine is stopped, the engine speed ③ is shown as 0 r/min.

TROUBLESHOOTING

The tachometer starts to display the self-diagnosis sequence.

NOTE:
Use the following special tool in this troubleshooting.

Pocket tester:
YU-03112/90890-03112

1.Throttle position sensor (TPS)

CIRCUIT DIAGRAM

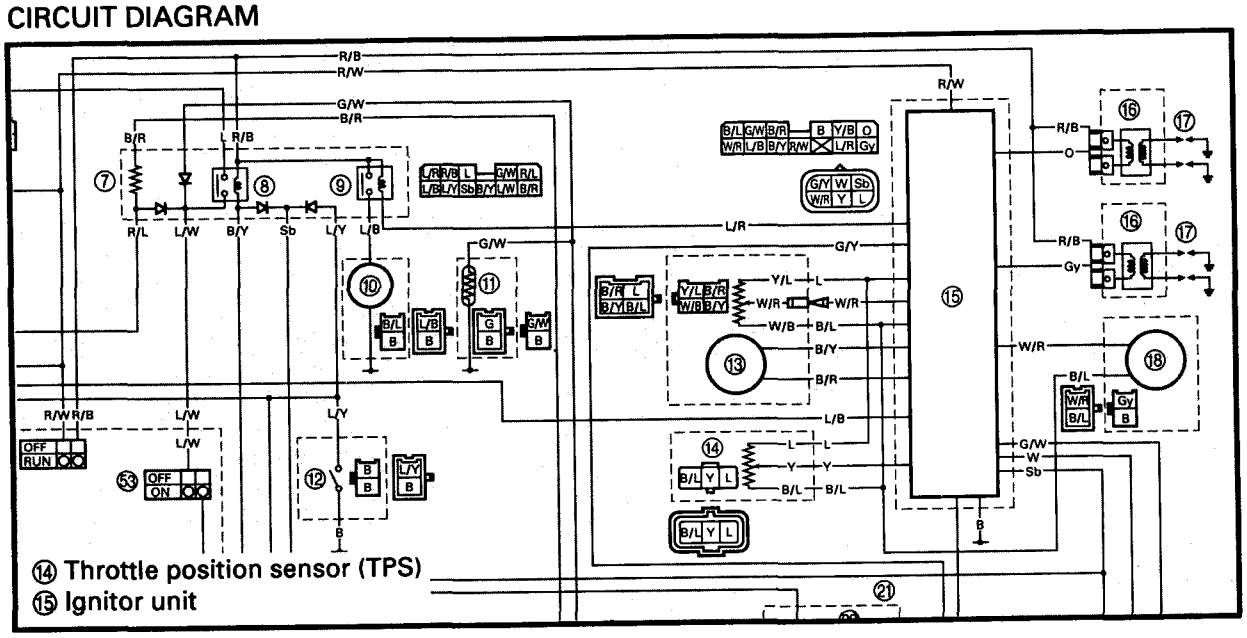

1.Wire harness

- Check the wire harness for continuity. Refer to "CIRCUIT DIAGRAM".

NO CONTINUITY → Repair or replace the wire harness.

CONTINUITY ↓

2.TPS

- Check the TPS for continuity.
- Refer to "THROTTLE POSITION SENSOR (TPS) ADJUSTMENT AND INSPECTION" in CHAPTER 6.

BAD CONDITION → Replace the TPS.

GOOD CONDITION ↓

Replace the ignitor unit.

2.EXUP

CIRCUIT DIAGRAM

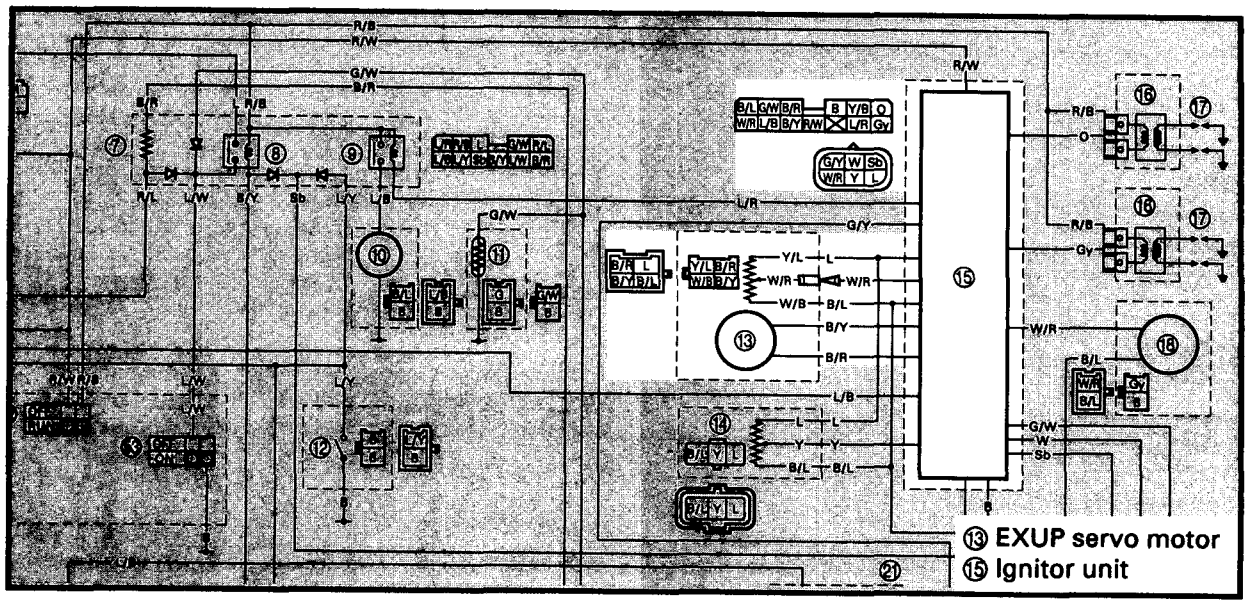

1.Wire harness

- Check the wire harness for continuity. Refer to "CIRCUIT DIAGRAM".

NO CONTINUITY → Repair or replace wire harness.

CONTINUITY ↓

2.EXUP servo motor

- Check the EXUP servo motor for continuity. Refer to "EXUP SYSTEM".

BAD CONDITION → Replace EXUP servo motor.

GOOD CONDITION ↓

Replace ignitor unit.

3.Fuel level indicator light

CIRCUIT DIAGRAM

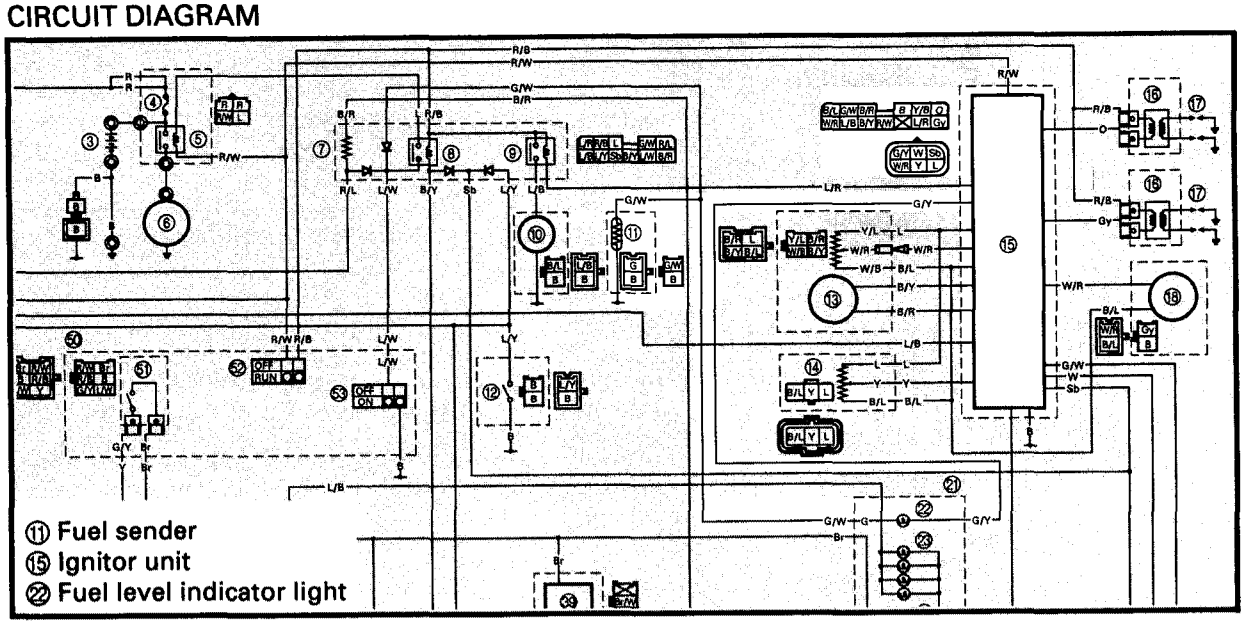

1.Fuel level indicator light

- Check the bulb and bulb socket for continuity.

NO CONTINUITY → Replace the bulb and/or socket.

CONTINUITY ↓

2.Fuel sender

- Disconnect the fuel sender coupler from the wire harness.
- Connect the pocket tester (Ω × 1) to the fuel sender coupler terminals.

Tester (+) lead → Green/Black terminal ①
Tester (–) lead → Black terminal ②

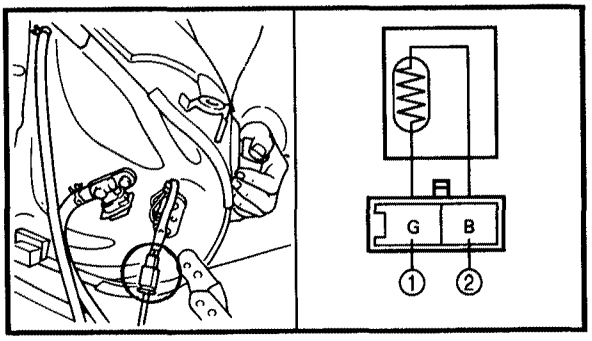

- Check the fuel pump for continuity.

NO CONTINUITY → Replace the fuel pump.

CONTINUITY ↓

*

*

3.Wire harness

- Check the wire harness for continuity. Refer to "CIRCUIT DIAGRAM".

NO CONTINUITY → Repair or replace the wire harness.

CONTINUITY ↓

Replace the ignitor unit.

EB900000

TROUBLESHOOTING

NOTE:
The following guide for troubleshooting does not cover all the possible causes of problems. It should be helpful, however, as a guide to troubleshooting. Refer to the relative procedure in this manual for inspection, adjustment and replacement of parts.

STARTING FAILURE/HARD STARTING

FUEL SYSTEM

Fuel tank
- Empty
- Clogged fuel filter
- Clogged fuel strainer
- Clogged fuel tank drain hose
- Clogged roll-over valve
- Clogged roll-over valve breather hose
- Deteriorated or contaminated fuel

Fuel cock
- Clogged fuel hose

Carburetor
- Deteriorated or contaminated fuel
- Clogged pilot jet
- Clogged pilot air passage
- Sucked-in air
- Deformed float
- Worn needle valve
- Improperly sealed valve seat
- Improperly adjusted fuel level
- Improperly set pilot jet
- Clogged starter jet
- Faulty starter plunger
- Improperly adjusted starter cable

Air filter
- Clogged air filter element

Fuel pump
- Faulty fuel pump
- Faulty fuel pump relay

ELECTRICAL SYSTEM

Spark plug
- Improper plug gap
- Worn electrodes
- Wire between terminals severed
- Improper heat range
- Faulty spark plug cap

Ignition coil
- Broken or shorted primary/secondary
- Faulty spark plug lead
- Broken body

Full-transistor system
- Faulty ignitor unit
- Faulty pickup coil

Switch and wiring
- Faulty main switch
- Faulty engine stop switch
- Broken or shorted wiring
- Faulty neutral switch
- Faulty start switch
- Faulty sidestand switch
- Faulty clutch switch

Starter motor
- Faulty starter motor
- Faulty starter relay
- Faulty circuit cut-off relay
- Faulty starter clutch

COMPRESSION SYSTEM

Cylinder and cylinder head
- Loose spark plug
- Loose cylinder head or cylinder
- Faulty cylinder head gasket
- Worn, damaged or seized cylinder
- Improperly sealed valve
- Improper valve-to-valve seat contact
- Improper valve timing
- Faulty valve spring

Piston and piston ring
- Improperly installed piston ring
- Worn, fatigued or broken piston ring
- Seized piston ring
- Seized or damaged piston

Crankcase and crankshaft
- Improperly seated crankcase
- Seized crankshaft

EB901000

POOR IDLE SPEED PERFORMANCE

POOR IDLE SPEED PERFORMANCE

Carburetor
- Improperly returned starter plunger
- Loose pilot jet
- Clogged pilot air jet
- Improperly synchronized carburetors
- Improperly adjusted idle speed (throttle stop screw)
- Improper throttle cable free play
- Flooded carburetor

Electrical system
- Faulty battery
- Faulty spark plug
- Faulty ignitor unit
- Faulty pickup coil
- Faulty ignition coil

Valve train
- Improperly adjusted valve clearance

Air filter
- Clogged air filter element

EB902000

POOR MEDIUM-AND HIGH-SPEED PERFORMANCE

POOR MEDIUM-AND HIGH-SPEED PERFORMANCE

Refer to "STARTING FAILURE/HARD STARTING". (Fuel system, electrical system, compression system and valve train)

Carburetor
- Faulty diaphragm
- Improperly adjusted fuel level
- Clogged or loose main jet

Air filter
- Clogged air filter element

Fuel pump
- Faulty fuel pump

EB903000
FAULTY GEAR SHIFTING

HARD SHIFTING
Refer to "CLUTCH DRAGGING".

SHIFT PEDAL DOES NOT MOVE
Shift shaft
- Improperly adjusted shift pedal link
- Bent shift shaft

Shift cam, shift fork
- Groove jammed with impurities
- Seized shift fork
- Bent shift fork guide bar

Transmission
- Seized transmission gear
- Jammed impurities
- Incorrectly assembled transmission

JUMPS-OUT-OF GEAR
Shift shaft
- Improperly adjusted shift lever position
- Improperly returned stopper lever

Shift fork
- Worn shift fork

Shift cam
- Improper thrust play
- Worn shift cam groove

Transmission
- Worn gear dog

EB904000
CLUTCH SLIPPING/DRAGGING

CLUTCH SLIPPING
Clutch
- Loose clutch spring
- Fatigued clutch spring
- Worn friction plate/clutch plate
- Incorrectly assembled clutch

Engine oil
- Improper oil level
- Improper viscosity (low)
- Deterioration

CLUTCH DRAGGING
Clutch
- Warped pressure plate
- Unevenly tensioned clutch springs
- Bent push rod
- Broken clutch boss
- Burnt primary driven gear bushing
- Bent clutch plate
- Swollen friction plate
- Match marks not aligned

Engine oil
- Improper oil level
- Improper viscosity (high)
- Deterioration

EB905000
OVERHEATING

OVERHEATING

Ignition system
- Improper spark plug gap
- Improper spark plug heat range
- Faulty ignitor unit

Fuel system
- Improper carburetor main jet setting
- Improper fuel level
- Clogged air filter element

Compression system
- Heavy carbon build-up

Engine oil
- Improper oil level
- Improper oil viscosity
- Inferior oil quality

Brake
- Brake drag

EB906000
FAULTY BRAKE

POOR BRAKING EFFECT

Disc brake
- Worn brake pad
- Worn disc
- Air in brake fluid
- Leaking brake fluid
- Faulty cylinder cup kit
- Faulty caliper seal kit
- Loose union bolt
- Broken brake hose
- Oily or greasy disc/brake pad
- Improper brake fluid level

EB907000
FRONT FORK OIL LEAKAGE AND FRONT FORK MALFUNCTION

MALFUNCTION
- Bent, deformed or damaged inner tube
- Bent or deformed outer tube
- Damaged fork spring
- Worn or damaged slide metal
- Bent or damaged damper rod
- Improper oil viscosity
- Improper oil level

OIL LEAKAGE
- Bent, damaged or rusty inner tube
- Damaged or cracked outer tube
- Damaged oil seal lip
- Improperly installed oil seal
- Improper oil level (too high)
- Loose damper rod holding bolt
- Broken cap bolt O-ring
- Loose drain bolt
- Damaged drain bolt gasket

EB908000
UNSTABLE HANDLING

UNSTABLE HANDLING

Handlebar
- Improperly installed or bent

Steering
- Improperly installed handlebar crown
- Bent steering stem
- Improperly installed steering shaft (improperly tightened ring nut)
- Damaged ball bearing or bearing race

Swingarm
- Worn bearing or bushing
- Bent or damaged

Rear shock absorber
- Faulty spring
- Oil and gas leakage

Tire
- Uneven tire pressures on both sides
- Incorrect tire pressure
- Uneven tire wear

Front fork
- Uneven oil levels on both sides
- Uneven spring tension (uneven damping force adjuster position)
- Broken spring
- Twisted front fork

Wheel
- Incorrect wheel balance
- Deformed cast wheel
- Damaged bearing
- Bent or loose wheel axle
- Excessive wheel runout

Frame
- Bent
- Damaged steering head tube
- Improperly installed bearing race

EB909000
FAULTY LIGHTING AND SIGNAL SYSTEMS

HEADLIGHT DOES NOT LIGHT
- Improper bulb
- Too many electric accessories
- Hard charging (broken stator coil wire, faulty rectifier/regulator)
- Incorrect connection
- Improperly grounded
- Poor contacts (main or light switch)
- Bulb life expired

FLASHER DOES NOT LIGHT
- Improperly grounded
- Discharged battery
- Faulty turn switch
- Faulty flasher relay
- Faulty wire harness
- Loosely connected coupler
- Burnt-out bulb
- Faulty fuse

FLASHER BLINKS SLOWLY
- Faulty flasher relay
- Faulty main and/or turn switch
- Improper bulb

BULB BURNT OUT
- Improper bulb
- Faulty battery
- Faulty rectifier/regulator
- Improperly grounded
- Faulty main and/or light switch
- Bulb life expired

FLASHER REMAINS LIT
- Faulty flasher relay
- Burnt-out bulb

FLASHER BLINKS QUICKLY
- Improper bulb
- Faulty flasher relay
- Burnt-out bulb

HORN DOES NOT SOUND
- Faulty battery
- Faulty fuse
- Faulty main and/or horn switch
- Improperly adjusted horn
- Faulty horn
- Broken wire harness