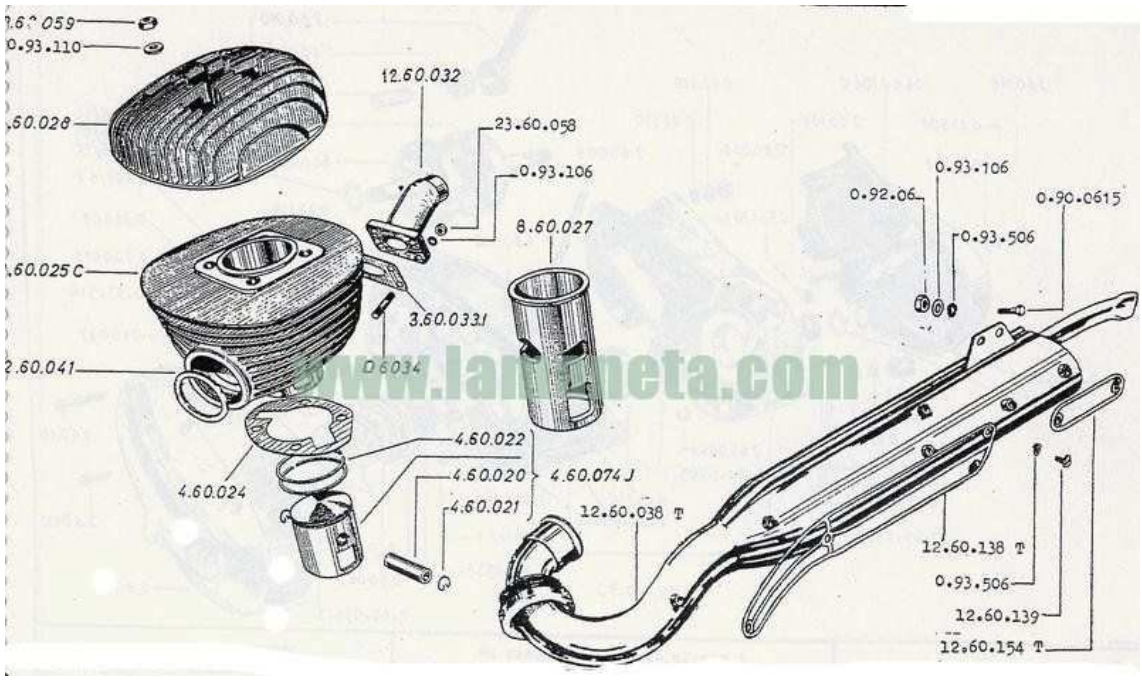
12.60.032
23.60.058
0.93.106
8.60.027
3.60.033.1
4.60.022
4.60.020
4.60.021
4.60.074 J
4.60.024
12.60.038 T
0.93.106
0.92.06
0.90.0615
0.93.506
12.60.138 T
0.93.506
12.60.139
12.60.154 T

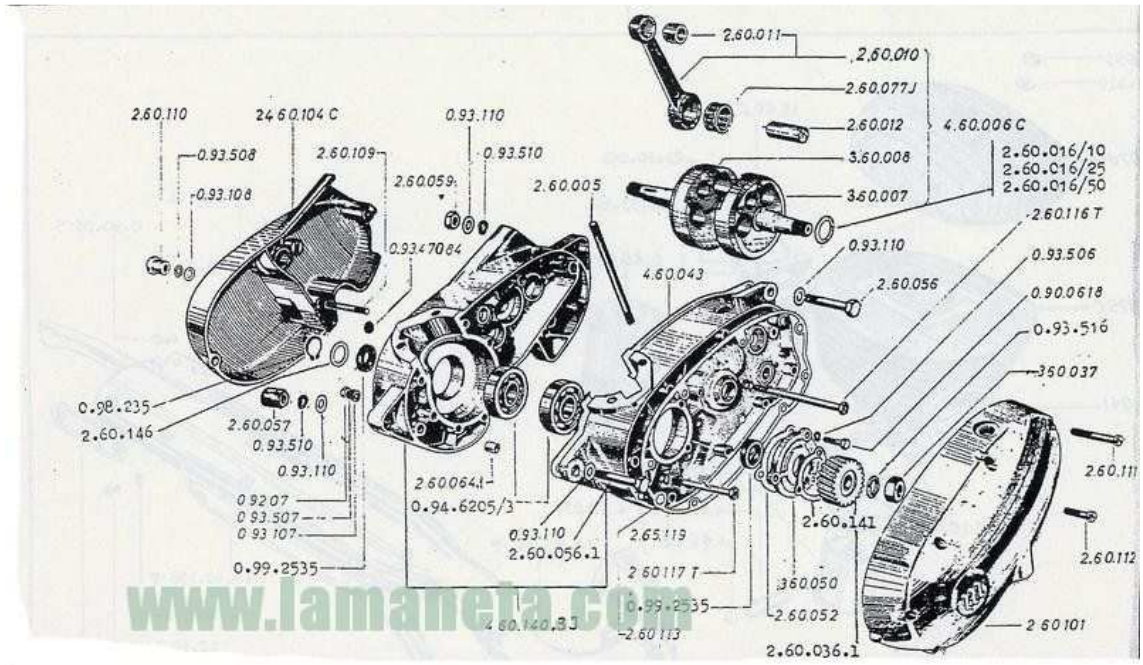
2.60.011
2.60.010
2.60.077 J
2.60.012
4.60.006 C
2.60.016/10
2.60.016/25
2.60.016/50
3.60.008
3.60.007
2.60.110
0.93.508
0.93.108
2.60.109
0.93.110
0.93.510
2.60.059
2.60.005
0.93.470.84
4.60.043
0.93.110
2.60.056
2.60.116 T
0.93.506
0.90.0618
0.93.516
3.60.037
0.98.235
2.60.146
2.60.057
0.93.510
0.93.110
0.92.07
0.93.507
0.93.107
0.99.2535
2.60.064.1
0.94.6205/3
0.93.110
2.60.056.1
2.65.119
2.60.117 T
0.99.2535
2.60.140.B3
2.60.113
2.60.141
3.60.050
2.60.052
2.60.036.1
2.60.111
2.60.112
2.60.101

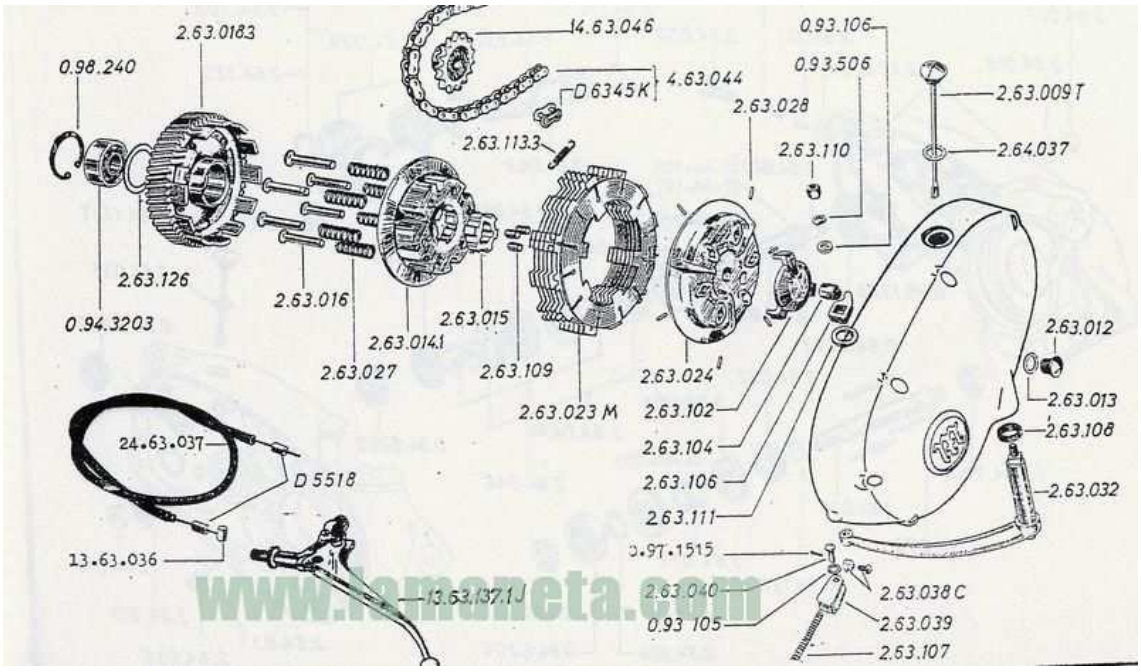
2.63.0183
0.98.240
14.63.046
4.63.044
D 6345 K
0.93.106
0.93.506
2.63.009 T
2.63.028
2.63.113.3
2.63.110
2.64.037
2.63.126
0.94.3203
2.63.016
2.63.014.1
2.63.015
2.63.027
2.63.109
2.63.023 M
2.63.024
2.63.012
2.63.013
2.63.102
2.63.104
2.63.108
2.63.106
2.63.032
2.63.111
24.63.037
D 5518
13.63.036
0.97.1515
2.63.040
2.63.038 C
0.93 105
2.63.039
2.63.107
13.63.137.1 J

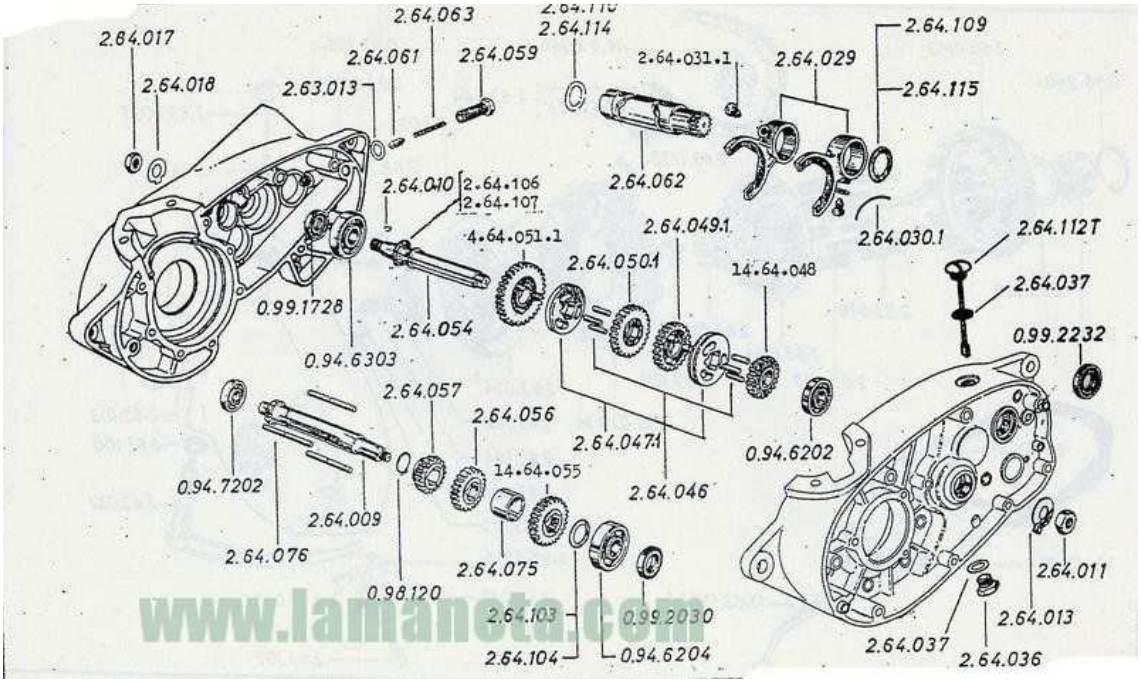
2.64.017
2.64.018
2.64.063
2.64.061
2.64.059
2.63.013
2.64.114
2.64.031.1
2.64.029
2.64.109
2.64.115
2.64.062
2.64.010
2.64.106
2.64.107
4.64.051.1
2.64.049.1
2.64.030.1
2.64.112T
2.64.050.1
14.64.048
2.64.037
0.99.1728
2.64.054
0.94.6303
0.99.2232
2.64.057
2.64.056
2.64.047.1
0.94.6202
0.94.7202
14.64.055
2.64.046
2.64.009
2.64.076
2.64.075
2.64.011
0.98.120
2.64.103
0.99.2030
2.64.013
2.64.104
0.94.6204
2.64.037
2.64.036

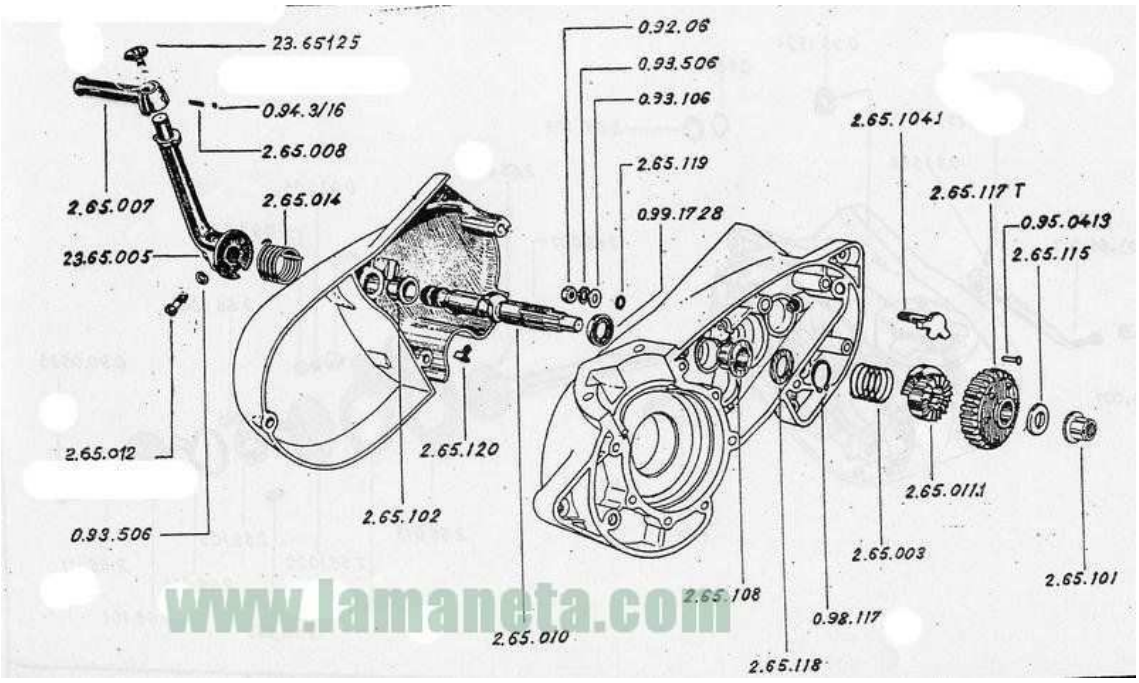

www.lamaneta.com

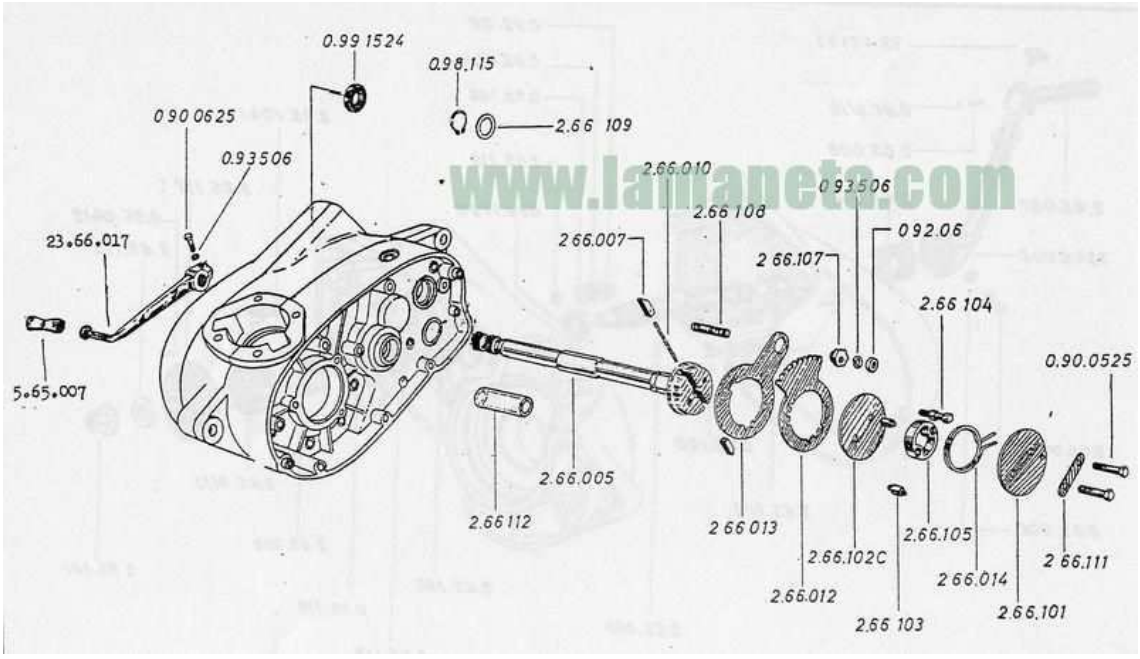

www.lamaneta.com

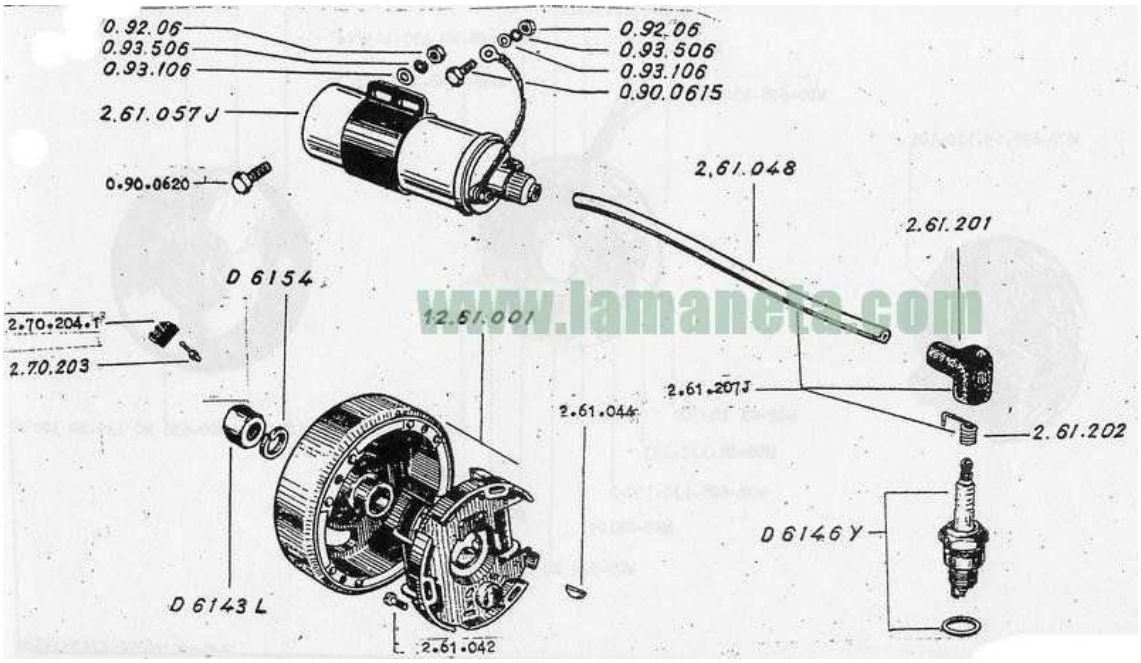

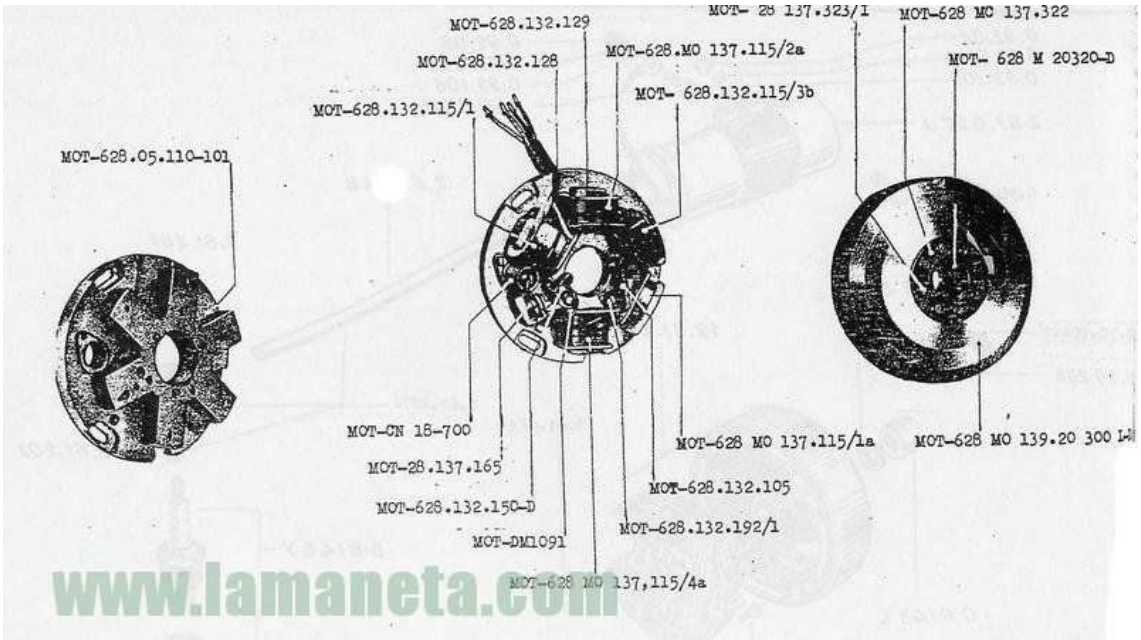

www.lamaneta.com

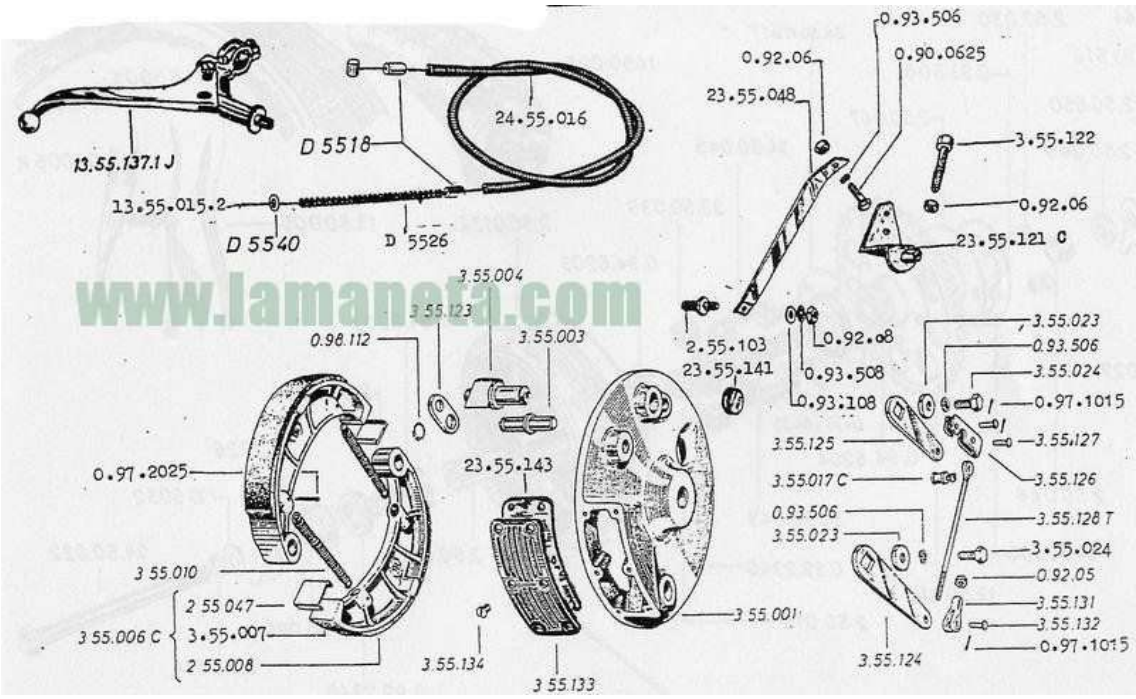
13.55.137.1 J
D 5518
24.55.016
13.55.015.2
D 5540
D 5526
0.93.506
0.92.06
0.90.0625
23.55.048
3.55.122
0.92.06
23.55.121 C
3.55.004
3.55.123
0.98.112
3.55.003
2.55.103
23.55.141
0.92.08
0.93.508
0.93.108
3.55.023
0.93.506
3.55.024
0.97.1015
3.55.125
3.55.127
3.55.017 C
3.55.126
0.93.506
3.55.128 T
3.55.023
3.55.024
0.92.05
3.55.131
3.55.132
0.97.1015
0.97.2025
23.55.143
3 55.010
2 55.047
3 55.006 C
3.55.007
2 55.008
3.55.134
3 55.133
3 55.001
3.55.124

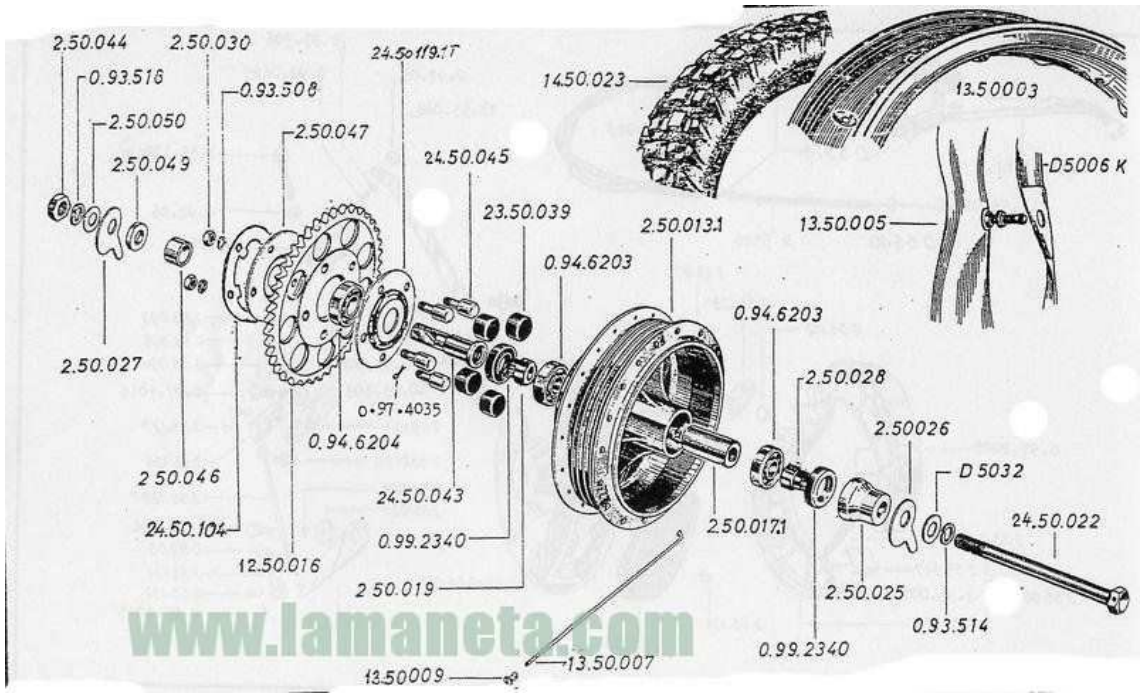
2.50.044
2.50.030
0.93.516
0.93.508
2.50.050
2.50.047
2.50.049
24.50.119.1T
24.50.045
14.50.023
13.50003
D5006 K
23.50.039
2.50.013.1
13.50.005
0.94.6203
0.94.6203
2.50.027
2.50.028
0.97.4035
0.94.6204
2.50026
D 5032
2 50.046
24.50.043
24.50.104
0.99.2340
2.50.017.1
24.50.022
12.50.016
2 50.019
2.50.025
0.93.514
0.99.2340
13.50009
13.50.007

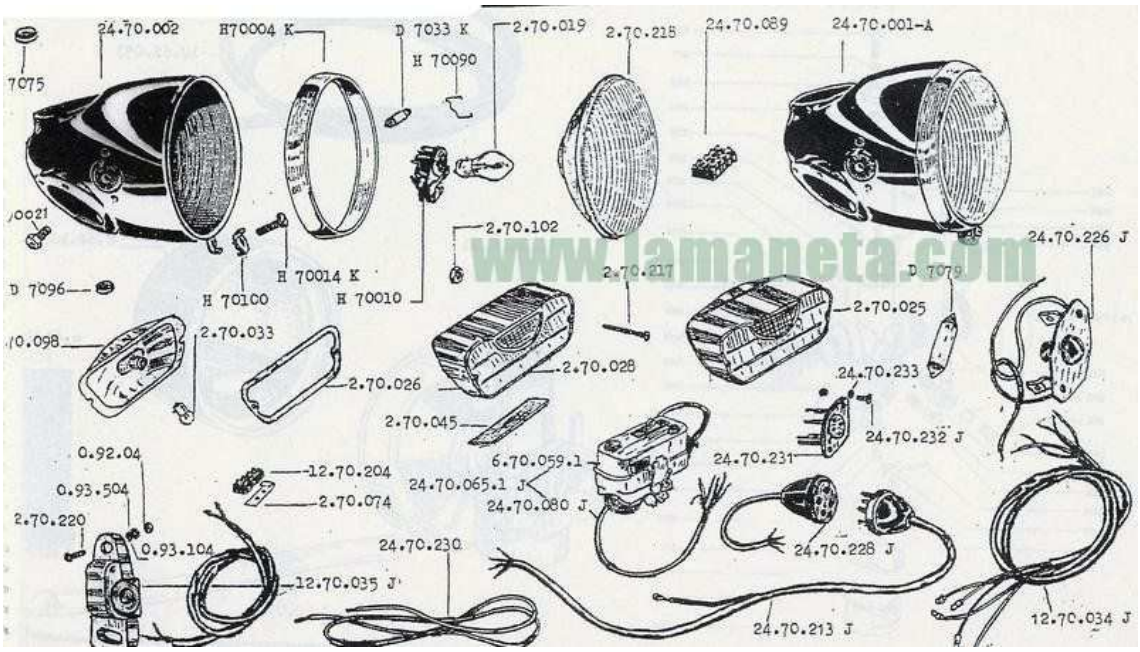

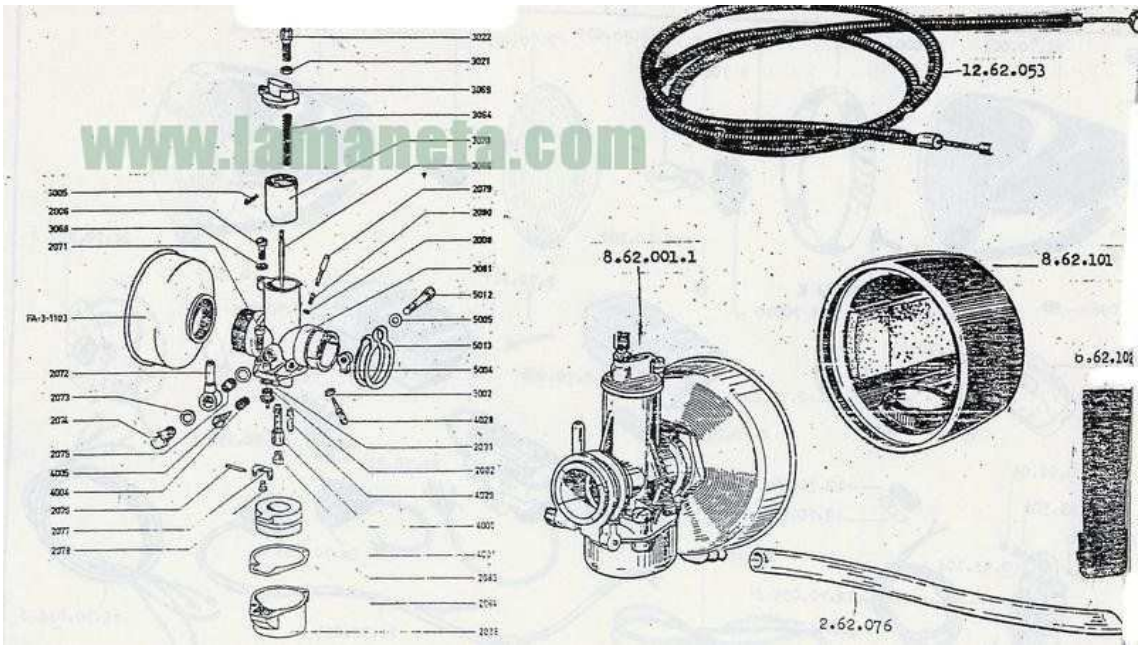

www.lamaneta.com

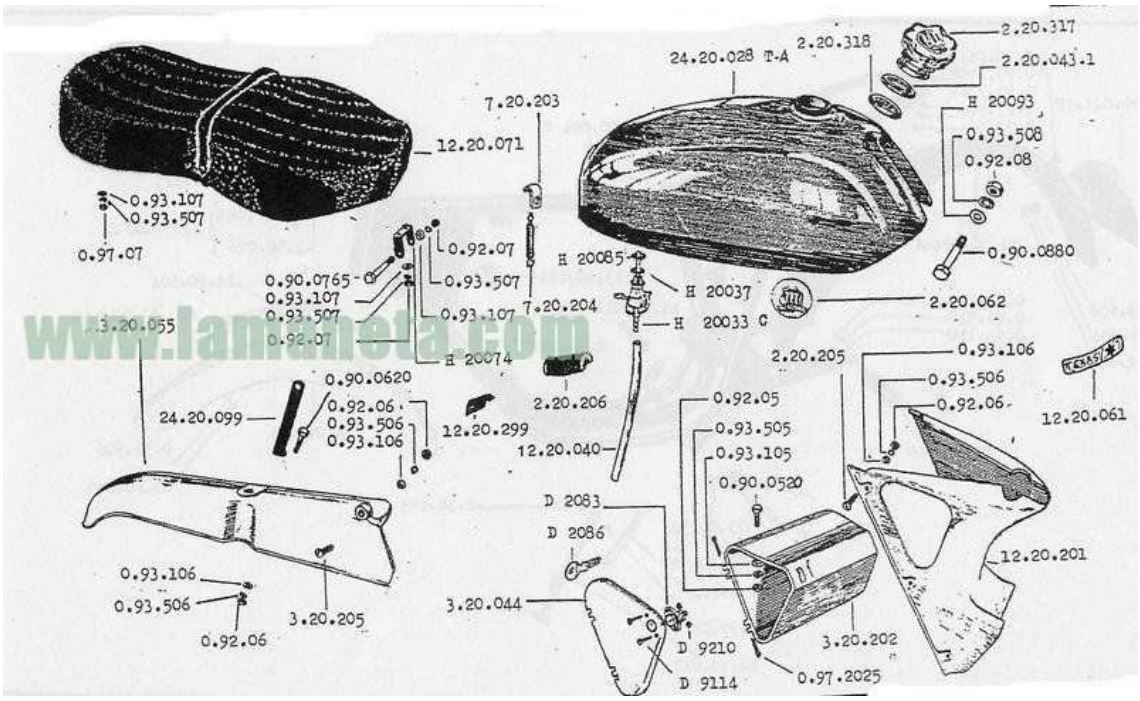

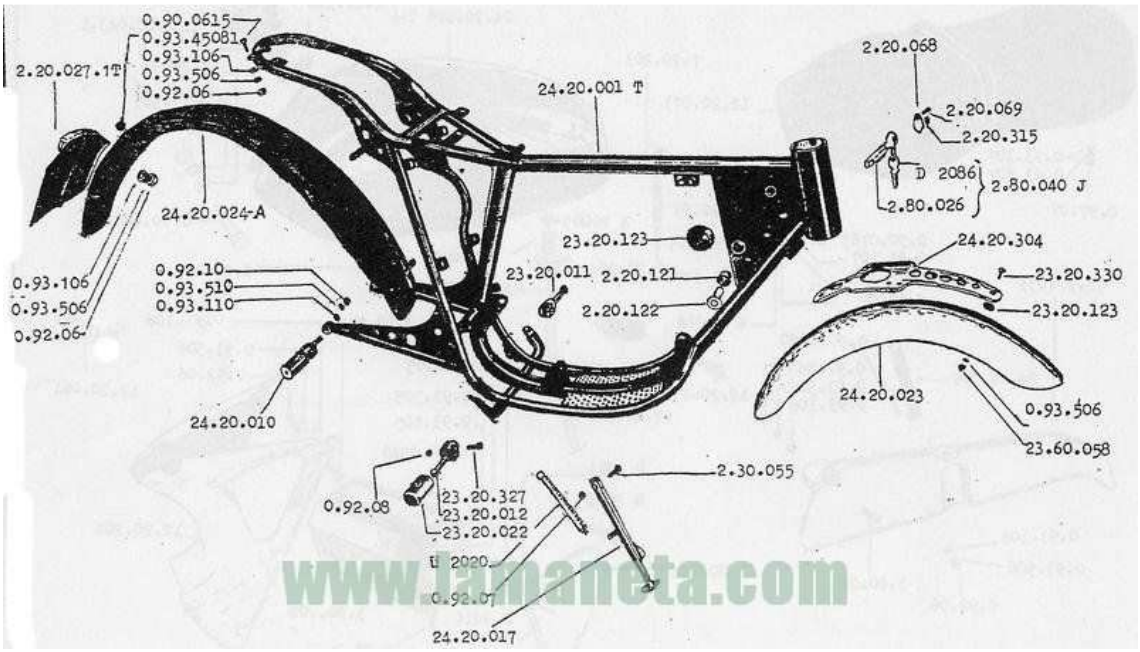

www.lamaneta.com

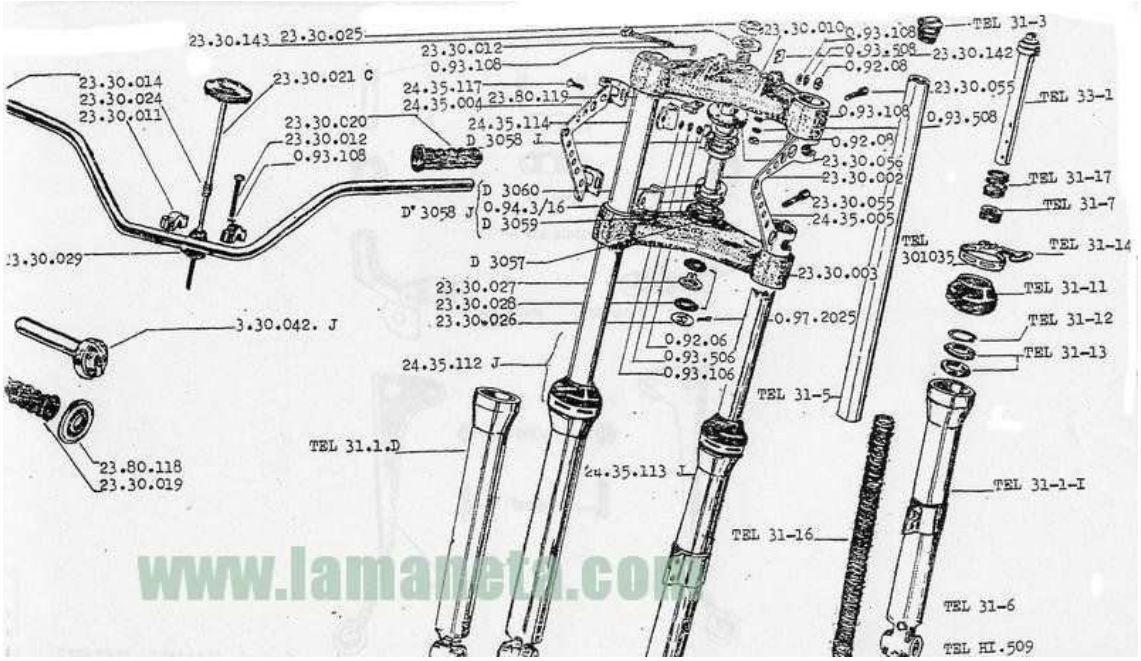

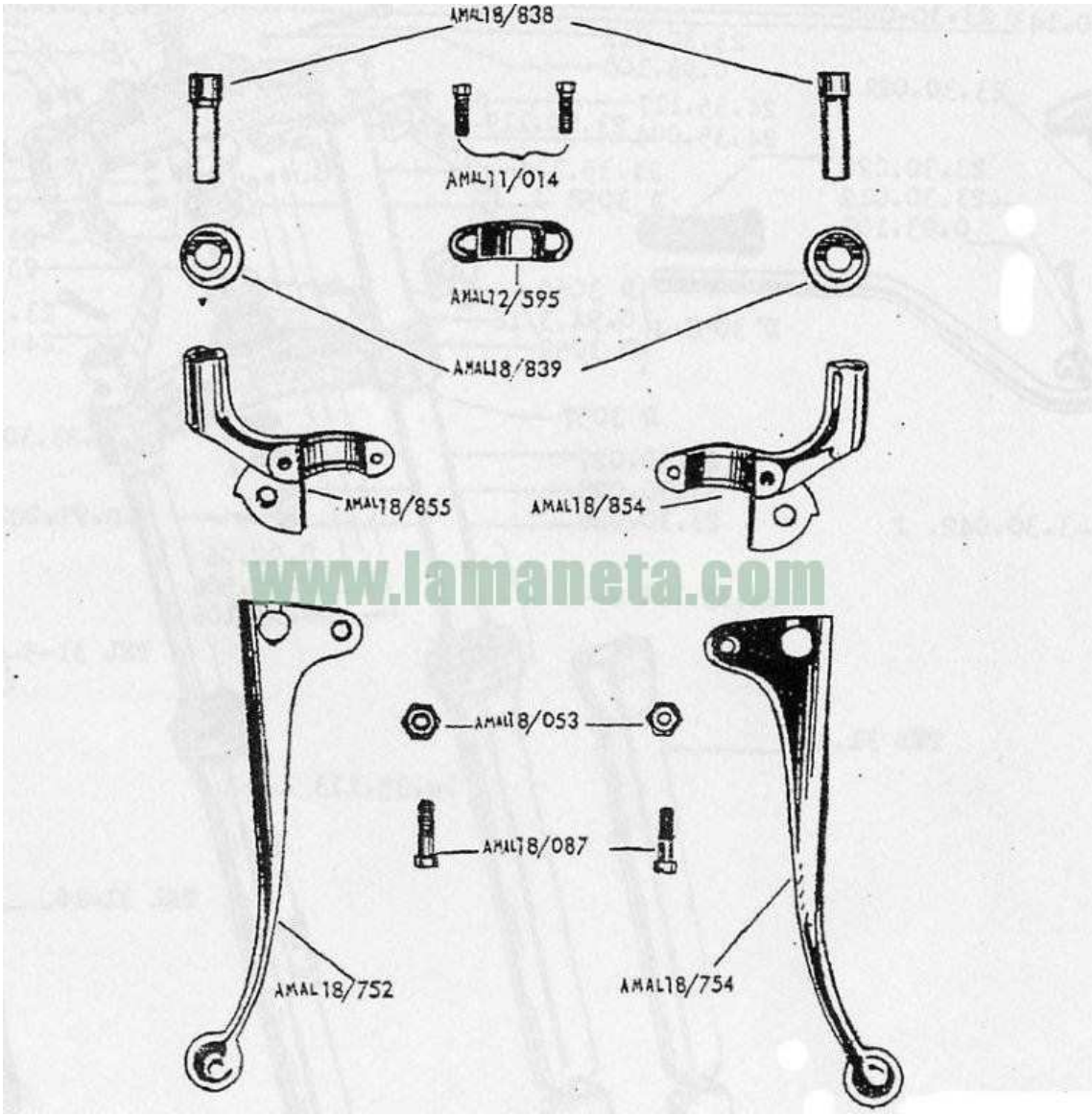

www.lamaneta.com

www.lamaneta.com

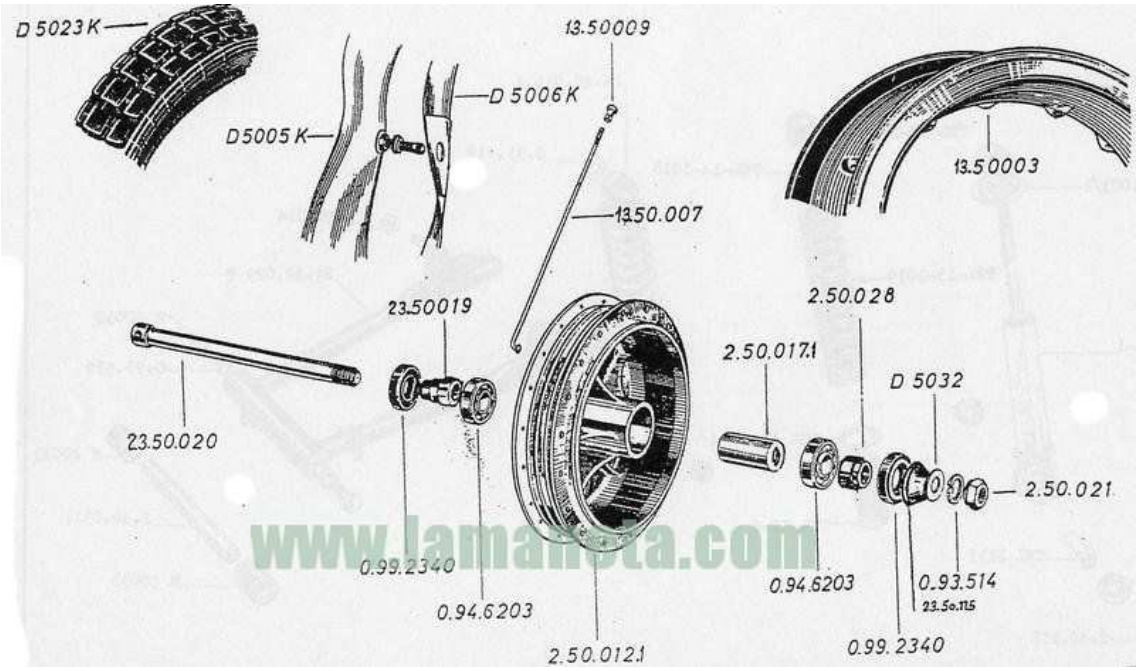

www.lamaneta.com

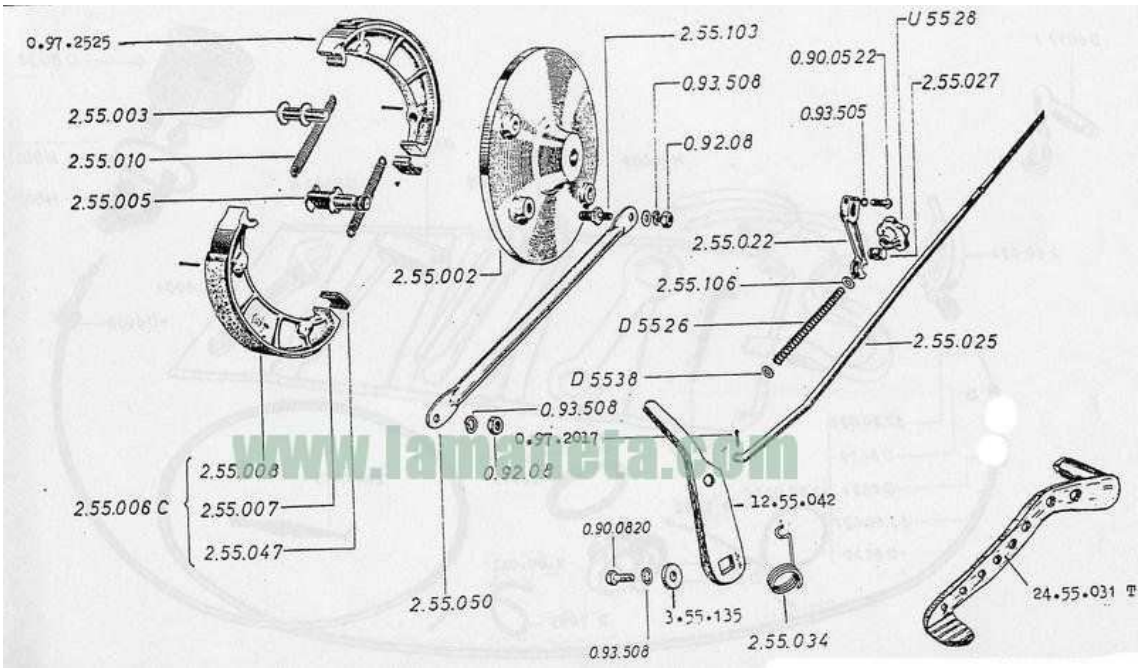
0.97.2525
2.55.003
2.55.010
2.55.005
2.55.002
2.55.103
0.93.508
0.92.08
U 5528
0.90.0522
2.55.027
0.93.505
2.55.022
2.55.106
D 5526
2.55.025
D 5538
0.93.508
0.97.2017
0.92.08
2.55.008
2.55.006 C
2.55.007
2.55.047
12.55.042
0.90.0820
2.55.050
3.55.135
0.93.508
2.55.034
24.55.031 T

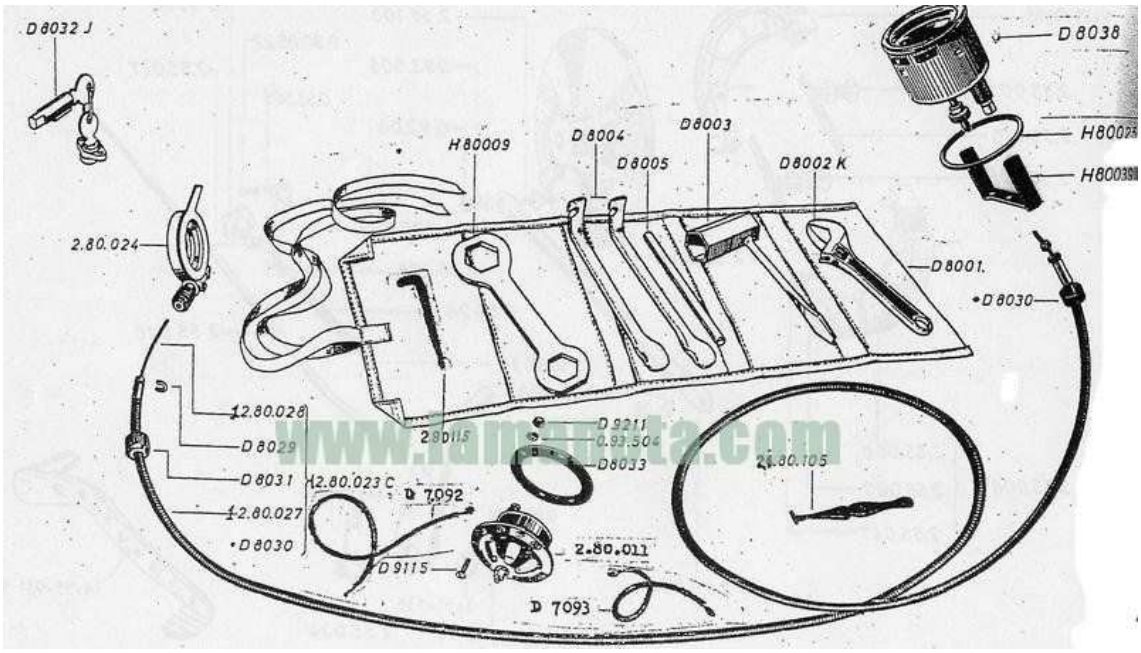
D 8032 J
D 8038
H 80009
D 8004
D 8003
D 8005
D 8002 K
2.80.024
D 8001
D 8030
12.80.028
D 8029
D 8031
12.80.023 C
12.80.027
D 8030
2.80.115
D 9211
0.93.504
D 8033
24.80.105
D 7092
D 9115
2.80.011
D 7093