

2015 Harley-Davidson Softail Models Service Manual

©2014 H-D.
ALL RIGHTS RESERVED
99482-15

Printed in the U.S.A.

VISIT THE HARLEY-DAVIDSON WEB SITE
http://www.harley-davidson.com

CMI - 2.5M - 07/14

READER COMMENTS

The Harley-Davidson Service Communications Department maintains a continuous effort to improve the quality and usefulness of its publications. To do this effectively, we need user feedback - your critical evaluation of this manual.

Please comment on the completeness, accuracy, organization, usability, and readability of this manual.

Please list the page, item, and part number(s) of any errors you find in this manual.

Please tell us how we can improve this manual.

Occupation:

Name: Dealership:

Street: Department:

City: State: Zip:

Cut Here

Cut Here

2015 Harley-Davidson Softail Models Service Manual (99482-15)

Please clip out and mail to:
Service Communications Department
Harley-Davidson Motor Company
P.O. Box 653
Milwaukee, WI USA 53201

NOTES

ABOUT THIS MANUAL

GENERAL

⚠WARNING

The rider's safety depends upon proper motorcycle service and maintenance. If a procedure in this manual is not within your capabilities or you do not have the correct tools, have a Harley-Davidson dealer perform the procedure. Improper service or maintenance could result in death or serious injury. (00627b)

This service manual has been prepared with the following purposes in mind:

- To acquaint the user with the construction of the Harley-Davidson product and assist in the performance of basic maintenance and repair.
- To introduce the professional Harley-Davidson technician to the latest field-tested and factory-approved major repair methods.

We sincerely believe that this service manual will make your association with Harley-Davidson products more pleasant and profitable.

HOW TO USE YOUR MANUAL

Refer to the table below for the content layout of this manual.

NO.	CHAPTER
1	Maintenance
2	Chassis
3	Engine
4	Fuel System
5	Drive
6	Transmission
7	Electrical
A	Appendix A Connector Repair
B	Appendix B Wiring
C	Appendix C Reference

Use the TABLE OF CONTENTS (which follows this FOREWORD) and the INDEX (at the back of this manual) to quickly locate subjects. Chapters and topics in this manual are sequentially numbered for easy navigation.

For example, a cross-reference shown as **2.2 SPECIFICATIONS** refers to chapter 2 CHASSIS, heading 2.2 SPECIFICATIONS.

For quick and easy reference, all pages contain a chapter number followed by a page number. For example, **page 3-5** refers to page 5 in Chapter 3.

A number of acronyms and abbreviations are used in this document. See the C.4 GLOSSARY for a list of acronyms, abbreviations and definitions.

PREPARATION FOR SERVICE

PART NUMBER	TOOL NAME
HD-48650	DIGITAL TECHNICIAN II

⚠WARNING

Stop the engine when refueling or servicing the fuel system. Do not smoke or allow open flame or sparks near gasoline. Gasoline is extremely flammable and highly explosive, which could result in death or serious injury. (00002a)

Good preparation is very important for efficient service work. Start each job with a clean work area. This will allow the repair to proceed as smoothly as possible. It will also reduce the incidence of misplaced tools and parts.

Clean a motorcycle that is excessively dirty before work starts. Cleaning will occasionally uncover sources of trouble. Gather any tools, instruments and any parts needed for the job before work begins. Interrupting a job to locate tools or parts is a distraction and causes needless delay.

NOTES

- *To avoid unnecessary disassembly, carefully read all related service information before repair work begins.*
- *In figure legends, the number which follows the name of a part indicates the quantity necessary for one complete assembly.*
- *When servicing a vehicle equipped with the Harley-Davidson Smart Security System (H-DSSS), first disarm the system. Keep the fob close to the vehicle or use DIGITAL TECHNICIAN II (Part No. HD-48650) to disable the system. Activate the system after service is completed.*

SERVICE BULLETINS

In addition to the information presented in this manual, Harley-Davidson Motor Company will periodically issue service bulletins to Harley-Davidson dealers. Service bulletins cover interim engineering changes and supplementary information. Consult the service bulletins to keep your product knowledge current and complete.

USE GENUINE REPLACEMENT PARTS

⚠WARNING

Harley-Davidson parts and accessories are designed for Harley-Davidson motorcycles. Using non-Harley-Davidson parts or accessories can adversely affect performance, stability or handling, which could result in death or serious injury. (00001b)

To achieve satisfactory and lasting repairs, carefully follow the service manual instructions and use only genuine Harley-Davidson replacement parts. Behind the emblem bearing the words GENUINE HARLEY-DAVIDSON stand more than 100 years of design, research, manufacturing, testing and inspecting experience. This is your assurance that the parts you are using will fit right, operate properly and last longer.

WARNINGS AND CAUTIONS

Statements in this manual preceded by the following words are of special significance.

⚠WARNING

WARNING indicates a potentially hazardous situation which, if not avoided, could result in death or serious injury. (00119a)

⚠CAUTION

CAUTION indicates a potentially hazardous situation which, if not avoided, may result in minor or moderate injury. (00139a)

NOTICE

NOTICE indicates a potentially hazardous situation which, if not avoided, may result in property damage. (00140b)

NOTE

Refers to important information. It is recommended that you take special notice of these items.

Proper service and repair are important for the safe, reliable operation of all mechanical products. The service procedures recommended and described in this manual are effective methods for performing service operations.

⚠WARNING

Always wear proper eye protection when using hammers, arbor or hydraulic presses, gear pullers, spring compressors, slide hammers and similar tools. Flying parts could result in death or serious injury. (00496b)

Some of these service operations require the use of tools specially designed for the purpose. These special tools should be used when and as recommended. It is important to note that some warnings against the use of specific service methods, which could damage the motorcycle or render it unsafe, are stated in this manual. However, remember that these warnings are not all-inclusive. Inadequate safety precautions could result in death or serious injury.

Since Harley-Davidson could not possibly know, evaluate or advise the service trade of all possible ways in which service might be performed, or of the possible hazardous consequences of each method, we have not undertaken any such broad evaluation. Accordingly, anyone who uses a service procedure or tool which is not recommended by Harley-Davidson must first thoroughly satisfy himself that neither his nor the operator's safety will be jeopardized as a result. Failure to do so could result in death or serious injury.

PRODUCT REFERENCES

⚠WARNING

Read and follow warnings and directions on all products. Failure to follow warnings and directions can result in death or serious injury. (00470b)

When reference is made in this manual to a specific brand name product, tool or instrument, an equivalent product, tool or instrument may be substituted.

Special Tools

All tools mentioned in this manual with a part number beginning with "HD", "J" or "B" must be ordered through your local Harley-Davidson dealer. Special tools may only be purchased, serviced or warrantied through a Harley-Davidson dealer.

LOCTITE Sealing and THREADLOCKING Products

Some procedures in this manual call for the use of LOCTITE products. If you have any questions regarding LOCTITE product usage or retailer/wholesaler locations, contact Loctite Corp. at www.loctite.com.

PRODUCT REGISTERED MARKS

Apple, Alcantara S.p.A., Allen, Amp Multilock, Bluetooth, Brembo, Delphi, Deutsch, Dunlop, Dynojet, Fluke, G.E. Versilube, Garmin, Gunk, Hydroseal, Hylomar, iPhone, iPod, Kevlar, Lexan, Loctite, Lubriplate, Keps, K&N, Magnaflux, Marson Thread-Setter Tool Kit, MAXI fuse, Molex, Michelin, MPZ, Mulitilock, nano, NGK, Novus, Packard, Pirelli, Permatex, Philips, PJ1, Pozidriv, Robinair, S100, Sems, SiriusXM, Snap-on, Teflon, Threadlocker, Torca, Torco, TORX, Tufoil, Tyco, Ultratorch, Velcro, X-Acto, XM Satellite Radio, and zūmo are among the trademarks of their respective owners.

H-D U.S.A., LLC TRADEMARK INFORMATION

Bar & Shield, Boom!, Cross Bones, Cruise Drive, CVO, Digital Tech, Digital Technician, Digital Technician II, Dyna, Electra Glide, Evolution, Fat Bob, Fat Boy, Forty-Eight, Glaze, Gloss, H-D, H-Dnet.com, Harley, Harley-Davidson, HD, Heritage Softail, Iron 883, Low Rider, Night Rod, Nightster, Night Train, Profile, Reflex, Revolution, Road Glide, Road King, Road Tech, Rocker, Screamin' Eagle, Seventy-Two, Softail, Sportster, Street Glide, Street Rod, Sun Ray, Sunwash, Super Glide, SuperLow, Switchback, SYN3, TechLink, TechLink II, Tour-Pak, Tri Glide, Twin Cam 88, Twin Cam 88B, Twin Cam 96, Twin Cam 96B, Twin Cam 103, Twin Cam 103B, Twin Cam 110, Twin Cam 110B, Twin-Cooled, Ultra Classic, V-Rod, VRSC and Harley-Davidson Genuine Motor Parts and Genuine Motor Accessories are among the trademarks of H-D U.S.A., LLC.

CONTENTS

All photographs, illustrations and procedures may not necessarily depict the most current model or component, but are based on the latest production information available at the time of publication.

Since product improvement is our continual goal, Harley-Davidson reserves the right to change specifications, equipment or designs at any time without notice and without incurring obligation.

MAINTENANCE

1.1 FASTENER TORQUE VALUES

Fastener Torque Values in this Chapter....1-1

1.2 GENERAL

Servicing a New Motorcycle....1-3
Safe Operating Maintenance....1-3
Disposal and Recycling....1-3
Shop Practices....1-3
- Repair Notes....1-3
- Safety....1-3
- Removing Parts....1-3
- Cleaning....1-3
- Disassembly and Assembly....1-4
- Checking Torques on Fasteners....1-4
- Magnetic Parts Trays....1-4

Repair and Replacement Procedures....1-4
- Hardware and Threaded Parts....1-4
- Threadlocking Agents....1-4
- Wiring, Hoses and Lines....1-4
- Instruments and Gauges....1-4
- Bearings....1-4
- Bushings....1-4
- Gaskets....1-4
- Lip-Type Seals....1-4
- O-Rings....1-5
- Gears....1-5
- Shafts....1-5
- Part Replacement....1-5

Cleaning....1-5
- Protecting Rubber Parts....1-5
- Cleaning Process....1-5
- Rust or Corrosion Removal....1-5
- Bearings....1-5

Tool Safety....1-5
- Air Tools....1-5
- Wrenches....1-5
- Pliers/Cutters/Pry Bars....1-5
- Hammers....1-6
- Punches/Chisels....1-6
- Screwdrivers....1-6
- Ratchets and Handles....1-6
- Sockets....1-6
- Storage Units....1-6

1.3 FUEL AND OIL

Fuel....1-7
Gasoline Blends....1-7
Engine Lubrication....1-7
Winter Lubrication....1-8

1.4 BULB REQUIREMENTS

General....1-9

1.5 MAINTENANCE SCHEDULE

General....1-10

1.6 ENGINE OIL AND FILTER

Checking and Adding Oil....1-15
Changing Oil and Filter....1-15

1.7 AIR CLEANER AND EXHAUST SYSTEM

Removal....1-17
- Cleaning and Inspection....1-17
- Installation....1-18

Exhaust System Leak Check....1-19
- Exhaust System Leakage....1-19

1.8 TIRES AND WHEELS

General....1-20
Tires....1-20
Tire Replacement....1-21
- Inspection....1-21
- When To Replace Tires....1-21

Wheel Bearings....1-21
Wheel Spokes....1-21
- Identify Wheel Spoke Groups....1-22
- Wheel Spoke Adjustment....1-22

1.9 PRIMARY CHAINCASE LUBRICANT

General....1-23
Changing Primary Chaincase Lubricant....1-23

1.10 TRANSMISSION LUBRICANT

Checking Transmission Lubricant....1-25
Changing Transmission Lubricant....1-25

1.11 CLUTCH

Adjustment....1-27

1.12 DRIVE BELT AND SPROCKETS

General....1-29
Cleaning....1-29
Inspection....1-29
- Sprockets....1-29
- Drive Belt....1-29

Checking Drive Belt Deflection....1-30
Adjusting Belt Deflection....1-32

1.13 THROTTLE CABLES

Cable Inspection, Lubrication and Adjustment....1-33
- Inspection and Lubrication....1-33
- Adjustment....1-33

1.14 CABLE AND CHASSIS LUBRICATION

General....1-35
Cables and Hand Levers....1-35
Jiffy Stand....1-35
Steering Head Bearings....1-35

1.15 BRAKES

Fluid Inspection....1-36
Rear Brake Pedal....1-36
- Pedal Height....1-36
- Pedal Lubrication....1-36
- Pedal Pad....1-36

Brake Lines Inspection....1-37

1.16 BRAKE PADS AND DISCS

Inspection....1-38
- Brake Pads....1-38
- Brake Disc....1-38

Brake Pad Replacement....1-38
- Rear Brake Caliper....1-38
- Front Brake Caliper....1-40

1.17 SPARK PLUGS

Removal....1-42
Inspection....1-42

TABLE OF CONTENTS

Cleaning....1-42
Installation....1-42
Spark Plug Cable Inspection....1-43

1.18 STEERING HEAD BEARINGS

Adjustment: FLSTC, FLSTF/B, FLSTN, FLS....1-44
Bearing Adjustment (Fall-away)....1-44
Adjustment: FXST....1-45
Bearing Adjustment (Fall-away)....1-45
Adjustment: FXSB....1-46
Bearing Adjustment (Fall-away)....1-46
Lubrication....1-47

1.19 BATTERY MAINTENANCE

General....1-48
Cleaning and Inspection....1-49
Voltmeter Test....1-49
Charging Battery....1-49
Safety Precautions....1-49
Using a Battery Charger....1-49
Battery Disconnection and Removal....1-50
Storage....1-50
Battery Installation and Connection....1-51

1.20 HEADLAMP ALIGNMENT

Headlamp Alignment....1-53
Headlamp Adjustment....1-53

1.21 SUSPENSION ADJUSTMENTS

Shock Absorbers....1-55
Calculate Number of Turns....1-55
Adjustment....1-55

1.22 STORAGE

General....1-56
Placing in Storage....1-56
Removal from Storage....1-56

1.23 TROUBLESHOOTING

General....1-58
Engine....1-58
Starter Motor Does Not Operate or Does Not Turn Engine Over....1-58
Engine Turns Over But Does Not Start....1-58
Starts Hard....1-58
Starts But Runs Irregularly or Misses....1-58
A Spark Plug Fouls Repeatedly....1-59
Pre-Ignition or Detonation (Knocks or Pings)....1-59
Overheating....1-59
Valve Train Noise....1-59
Excessive Vibration....1-59
Check Engine Light Illuminates During Operation....1-59
Lubrication System....1-59
Oil Does Not Return To Oil Tank....1-59
Engine Uses Too Much Oil Or Smokes Excessively....1-59
Engine Leaks Oil From Cases, Pushrods, Hoses, Etc....1-59
Low Oil Pressure....1-60
High Oil Pressure....1-60
Electrical System....1-60
Alternator Does Not Charge....1-60
Alternator Charge Rate Is Below Normal....1-60
Speedometer Operates Erratically....1-60
Transmission....1-60
Shifts Hard....1-60
Jumps Out Of Gear....1-60
Clutch Slips....1-60
Clutch Drags Or Does Not Release....1-60
Clutch Chatters....1-60
Handling....1-60
Irregularities....1-60
Brakes....1-60
Brake Does Not Hold Normally....1-60

CHASSIS

2.1 FASTENER TORQUE VALUES

Fastener Torque Values in this Chapter....2-1

2.2 SPECIFICATIONS

Specifications....2-5
Chassis Specifications....2-5
Tire Specifications....2-6

2.3 VEHICLE IDENTIFICATION NUMBER (V.I.N.)

Vehicle Identification Number....2-9

2.4 FRONT WHEEL

Removal....2-11
Disassembly....2-11
Disc Wheel....2-11
Laced Wheel....2-11
Cleaning and Inspection....2-13
Assembly....2-13
Disc Wheel....2-13
Laced Wheel....2-14
Installation....2-14

2.5 REAR WHEEL

Removal....2-15
Disassembly....2-15
Cleaning and Inspection....2-16
Assembly....2-16
Installation....2-17

2.6 WHEEL LACING

Wheel Lacing: Angle Flange Hub....2-18

2.7 CHECKING AND TRUING WHEELS

General....2-20
Checking Wheel Runout....2-20
Checking Radial Runout....2-20
Checking Lateral Runout....2-20
Laced Wheel Rim Offset....2-21
Truing Laced Wheels....2-23
Radial Runout....2-23
Lateral Runout....2-23

2.8 SEALED WHEEL BEARINGS

Inspection....2-25

Removal....2-25
Installation....2-27

2.9 TIRES

General....2-29
Removal....2-29
Cleaning, Inspection and Repair....2-29
Installation....2-30
Tube Type Tires....2-30
Tubeless Tires: Cast Wheels....2-30
Checking Tire Runout....2-31
Lateral Runout....2-31
Radial Runout....2-31
Wheel Balancing....2-31
Static vs Dynamic....2-31
Weights....2-31

2.10 VEHICLE ALIGNMENT

Axle Alignment....2-33
Checking Axle Alignment....2-33
Adjusting Axle Alignment....2-34

2.11 FRONT BRAKE MASTER CYLINDER

General....2-35
Removal and Disassembly....2-35
Cleaning and Inspection....2-36
Assembly and Installation....2-36

2.12 FRONT BRAKE CALIPER

Removal....2-38
Disassembly....2-38
Cleaning, Inspection and Repair....2-39
Assembly....2-40
Installation....2-40

2.13 REAR BRAKE MASTER CYLINDER

General....2-41
Removal....2-41
Disassembly....2-41
Cleaning and Inspection....2-42
Assembly....2-42
Installation....2-43

2.14 REAR BRAKE CALIPER

Removal....2-47
Disassembly....2-47
Cleaning, Inspection and Repair....2-49
Assembly....2-49
Rear Brake Line Routing....2-50
Installation....2-50

2.15 BRAKE LINES

Front Master Cylinder to Front HCU....2-52
Removal....2-52
Installation....2-52
HCU to Front Brake Caliper....2-53
Removal....2-53
Installation....2-53
Rear Master Cylinder to Rear HCU....2-54
Removal....2-54
Installation....2-55
Rear HCU to Rear Brake Caliper....2-56
Removal....2-56
Installation....2-56

2.16 ABS: ELECTRONIC CONTROL UNIT (ECU)

Removal: All But FXSB....2-58
Installation: All But FXSB....2-58
Removal: FXSB....2-59
Installation: FXSB....2-59

2.17 ABS: HYDRAULIC CONTROL UNIT (HCU)

Front Hydraulic Control Unit (HCU)....2-60
Removal....2-60
Installation....2-60
Rear Hydraulic Control Unit (HCU)....2-61
Removal....2-61
Installation....2-61

2.18 BLEEDING BRAKES

General....2-63
Procedure....2-63

2.19 FRONT FORK

General....2-65
Fork Oil Leak Check....2-65
Fork Oil Seals....2-65
Oil Leak Check....2-65
Replacing Fork Oil....2-65
Removal....2-66
Disassembly....2-66
Cleaning and Inspection....2-71
Assembly....2-71
Installation....2-71

2.20 STEERING HEAD

Removal....2-73
FLSTC, FLSTF/B, FLSTN, FLS Models....2-73
FXST Model....2-73
FXSB Models....2-73
Inspection....2-74
All Models....2-74
Disassembly....2-74
Removing Lower Bearings From Fork Stem....2-74
Steering Head Bearing Race Removal....2-74
Assembly....2-75
Installation....2-75
FLSTC, FLSTF/B, FLSTN, FLS Models....2-75
FXST Models....2-75
FXSB Model....2-76

2.21 BELT GUARD AND DEBRIS DEFLECTOR

Removal....2-77
Belt Guard....2-77
Debris Deflector....2-77
Installation....2-77
Belt Guard....2-77
Debris Deflector....2-77

2.22 REAR SHOCK ABSORBERS

General....2-78
Removal....2-78
Installation....2-78
Shock Disposal....2-79

2.23 REAR FORK

Removal....2-81
Cleaning and Inspection....2-82
Pivot Bearing Replacement....2-82
Installation....2-83

2.24 THROTTLE CONTROL

Removal/Disassembly....2-84
Cleaning and Inspection....2-84
Assembly/Installation....2-84

2.25 CLUTCH CONTROL

Removal....2-86
Installation....2-86

2.26 LEFT HAND GRIP

Removal and Installation....2-88
- Removal....2-88
- Installation....2-88

2.27 HANDLEBAR: FLSTC, FLSTN, FLS, FXST

Removal....2-89
Installation....2-90

2.28 HANDLEBAR: FLSTF/B

Removal....2-91
Installation....2-92

2.29 HANDLEBAR: FXSB

Removal....2-95
- Handlebars....2-95
- Lower Handlebar Clamps....2-95

Installation....2-95
- Lower Clamp....2-95
- Handlebars....2-96
- Return to Service....2-96

2.30 FRONT FENDER

Removal....2-98
Installation....2-99

2.31 REAR FENDER: FLSTC

Removal....2-100
Installation....2-100

2.32 REAR FENDER: FLSTF/B

Removal....2-102
Installation....2-102

2.33 REAR FENDER: FXST

Removal....2-103
Installation....2-103

2.34 REAR FENDER: FLS

Removal....2-105
Installation....2-105
- License Plate Bracket Assembly and Installation: FLS (all but Domestic and California models)....2-105
- License Plate Bracket Assembly and Installation: FLS (Domestic and California models)....2-106
- Fender Installation....2-106

2.35 REAR FENDER: FXSB

Removal....2-108
Installation....2-109

2.36 REAR FENDER: FLSTN

Removal....2-110
Disassembly....2-110
Assembly....2-111
Installation....2-112

2.37 REAR FENDER WIRE CONDUIT

Installation....2-113

2.38 FOOTBOARDS AND FOOTRESTS

Rider Footboards....2-114
- Removal....2-114
- Installation....2-114

Rider Footrest....2-114
- Removal....2-114
- Installation....2-114

Passenger Footrest....2-114
- Removal....2-114
- Installation....2-115

2.39 JIFFY STAND

Cleaning....2-116
Sensor: HDI Models....2-116
Removal....2-117
Installation....2-117

2.40 FORK LOCK

Removal....2-118
Installation....2-118

2.41 SEAT AND STRAP RETENTION NUT

Replacement....2-119

2.42 SEAT: FLS, FXST, FXSB

Replacement....2-120
- Removal....2-120
- Installation....2-120

2.43 SEAT: FLSTN, FLSTF, FLSTFB, FLSTC

Removal and Installation....2-121

2.44 LUGGAGE RACK: FLSTN

Removal and Installation....2-122

2.45 SADDLEBAGS: FLSTC

Removal....2-123
Installation....2-123

2.46 WINDSHIELD: FLSTC

Removal....2-125
Installation....2-125

2.47 SAREE GUARD: INDIA MODELS

Upper Saree Guards: All but FXSB....2-126
Removal....2-126
Installation....2-126
Upper Saree Guards: FXSB....2-126
Removal....2-126
Installation....2-126
Lower Saree Guard....2-126
Removal....2-126
Installation....2-126

2.48 FRONT LICENSE PLATE BRACKET

Removal and Installation....2-127

2.49 MEDALLIONS, BADGES AND TANK EMBLEMS

Removal....2-128
Installation....2-128

ENGINE

3.1 FASTENER TORQUE VALUES

Fastener Torque Values in this Chapter....3-1

3.2 SPECIFICATIONS

Specifications....3-3

3.3 SERVICE WEAR LIMITS

General....3-5

3.4 ENGINE OIL FLOW

Oil Feed....3-7
Top End....3-8
Bottom End....3-9
Chain Guide Bracket....3-11
Oil Return....3-11

3.5 OIL PUMP OPERATION

General....3-12
Operation....3-12

3.6 BREATHER OPERATION

General....3-14

3.7 OIL PRESSURE

Oil Pressure Indicator Lamp....3-15
Checking Oil Pressure....3-15

3.8 TROUBLESHOOTING

Diagnosing Valve Train Noise....3-17
Compression Test....3-17
Cylinder Leakdown Test....3-17
Diagnosing Smoking Engine or High Oil Consumption....3-18
Check Prior to Cylinder Head Removal....3-18
Check After Cylinder Head Removal....3-18

3.9 HOW TO USE THIS SECTION

Top End Repair....3-19
Bottom End Repair....3-19
Typical Symptoms....3-19

3.10 TOP END SERVICE

Engine in Chassis....3-20
Engine Removed from Chassis....3-21

3.11 CAM COMPARTMENT SERVICE

Engine in Chassis....3-22
Engine Removed From Chassis....3-23

3.12 STRIPPING MOTORCYCLE FOR SERVICE

Procedure....3-24

3.13 ASSEMBLING MOTORCYCLE AFTER SERVICE

Procedure....3-25

3.14 REMOVING ENGINE FROM CHASSIS

Procedure....3-26

3.15 INSTALLING ENGINE IN CHASSIS

Procedure....3-27

3.16 TOP END OVERHAUL: DISASSEMBLY

General....3-29
Rocker Covers....3-29
Rocker Arm Support Plate....3-29
Pushrods, Lifters and Covers....3-31
Cylinder Head....3-31
Cylinder....3-32
Piston....3-33

3.17 BREATHER ASSEMBLY

Disassembly....3-35
Cleaning and Inspection....3-35
Assembly....3-35

3.18 ROCKER ARM SUPPORT PLATE

Disassembly....3-36
Cleaning and Inspection....3-36
Inspection....3-36
Rocker Shaft Fit....3-36
Rocker Arm Shaft to Bushing....3-37
Replace Rocker Arm Bushings....3-37
Assembly....3-38

3.19 PUSHRODS, LIFTERS AND COVERS

Disassembly....3-39
Cleaning and General Inspection....3-39
Lifter Inspection....3-39
Assembly....3-40

3.20 CYLINDER HEAD

Disassembly....3-41
Cleaning....3-42

Inspection....3-42
Cylinder Head....3-42
Valve Guides....3-43
Valves....3-43
Valve Springs....3-43
Tapered Keepers....3-43
Valve Seats....3-43
Valve Guide Replacement....3-43
Removal....3-43
Installation....3-44
Valve and Seat Refacing....3-47
Assembly....3-49

3.21 CYLINDER

Cleaning....3-51
Inspection....3-51
Deglazing Cylinder....3-53
Boring and Honing Cylinder....3-53

3.22 PISTON

Disassembly....3-55
Piston Rings....3-55
Cleaning....3-55
Inspection....3-55
Assembly....3-57
Checking Piston Ring Gap....3-57
Installing Piston Rings....3-57

3.23 TOP END OVERHAUL: ASSEMBLY

General....3-59
Piston....3-59
Cylinder....3-60
Cylinder Head....3-62
Pushrods, Lifters and Covers....3-66
Rocker Arm Support Plate....3-67
Breather and Rocker Cover....3-68

3.24 CAM COMPARTMENT AND COMPONENTS

Cam Support Plate and Cover Removal....3-69
Prepare Engine....3-69
Cam Chain and Sprockets Removal....3-69
Cam Support Plate Removal....3-70
Cam Support Plate Cleaning and Inspection....3-71
Oil Pressure Valve....3-71
Cam Support Plate....3-71
Camshafts....3-71
Removal....3-71
Installation....3-72
Oil Pressure Relief Valve....3-73
Removal....3-73
Inspection....3-73
Installation....3-74
Cam Needle Bearings....3-74
Removal....3-74
Installation....3-75
Cam Support Plate and Cover Installation....3-77

3.25 OIL PUMP

Removal....3-81
Cleaning and Inspection....3-81
Installation....3-82

3.26 CRANKCASE DISASSEMBLY AND REPAIR

Crankcase Disassembly....3-83
Counterbalancer Assembly....3-83
Cleaning and Inspection....3-85
Right Crankcase Half....3-86
Chain Guide Screen....3-86
Main Bearing Removal....3-86
Main Bearing Installation....3-87
Piston Jets Removal....3-87
Piston Jets Installation....3-87
Left Crankcase Half....3-88
Main Bearing Removal....3-88
Main Bearing Installation....3-89
Sprocket Shaft Bearing Inner Race....3-89
Removal....3-89
Installation....3-90
Cylinder Studs....3-92
Removal....3-92
Installation....3-92
Pipe Plugs and Oil Fittings....3-92
Removal/Installation....3-92

3.27 FLYWHEEL AND CONNECTING RODS

General....3-93
Symptoms....3-93
No Oil Pressure....3-93
Vibration....3-93
Inspection....3-93
Measuring Crankshaft Runout....3-93
Crankshaft Installed....3-93
Crankshaft Removed....3-94

3.28 COUNTERBALANCER ASSEMBLY REPAIR

Cleaning, Inspection, and Repair....3-95
General....3-95
Balance Shaft Removal....3-95
Bearing Removal....3-96
Balance Shaft Installation....3-96
Balance Shaft Support Bearings Removal....3-97
Balance Shaft Support Bearings Installation....3-97
Front and Rear Balance Sprockets....3-98
Hydraulic Tensioners....3-98
Chain Tensioner Guides....3-98
Balance Shaft Support....3-98
Balance Chain....3-99

3.29 CRANKCASE ASSEMBLY

Counterbalancer Assembly Installation....3-100
Crankcase....3-103

3.30 OIL TANK: ALL BUT FXSB

Removal and Disassembly....3-106
Oil Tank....3-106
Oil Line Fittings/Retainers....3-108
Installation....3-109

3.31 OIL TANK: FXSB

Removal and Disassembly....3-110
Oil Tank....3-110
Oil Line Fittings/Retainers....3-112
Installation....3-113

FUEL SYSTEM

4.1 FASTENER TORQUE VALUES

Fastener Torque Values in this Chapter....4-1

4.2 SPECIFICATIONS: FUEL SYSTEM

Specifications....4-3

4.3 AIR CLEANER ASSEMBLY

Removal....4-4
Installation....4-4
Backplate Assembly: HDI Models....4-5

4.4 FUEL SUPPLY LINE

Purging Fuel Supply Line....4-6
Disconnecting Fuel Supply Line....4-6

4.5 FUEL PRESSURE TEST

General....4-7
Testing....4-7

4.6 FUEL TANK

General....4-9
Removal....4-9
Cleaning and Inspection....4-10
Installation....4-11

4.7 CONSOLE: FXSB

Removal....4-12
Installation....4-12

4.8 THROTTLE POSITION SENSOR (TPS)

General....4-13
Removal....4-13
Installation....4-13

4.9 INTAKE AIR TEMPERATURE SENSOR (IAT)

General....4-14
Removal....4-14
Installation....4-14

4.10 ENGINE TEMPERATURE SENSOR (ET)

General....4-15
Removal....4-15
Installation....4-15

4.11 INDUCTION MODULE

Removal....4-16
Installation....4-17

4.12 IDLE AIR CONTROL (IAC)

General....4-18
Removal....4-18
Installation....4-18

4.13 MANIFOLD ABSOLUTE PRESSURE SENSOR (MAP)

Removal....4-19
Installation....4-19

4.14 OXYGEN (O2) SENSOR

General....4-20
Removal....4-20
Front O2 Sensor....4-20
Rear O2 Sensor....4-20
Installation....4-20
Front O2 Sensor....4-20
Rear O2 Sensor....4-20

4.15 FUEL INJECTORS

General....4-22
Removal....4-22
Installation....4-22

4.16 FUEL PUMP AND FUEL GAUGE SENDING UNIT

General....4-24
Removal....4-24
Vapor Valve....4-25
Disassembly and Assembly....4-26
Fuel Filter....4-26
Regulator....4-26
Inlet sock....4-27
Fuel Pump....4-27
Installation....4-28

4.17 EXHAUST SYSTEM

Mufflers: FLSTC, FXST, FXSB....4-29
Removal....4-29
Assembly....4-29
System: FLSTC, FXST, FXSB....4-29
Removal....4-29
Installation....4-29
Mufflers: FLSTN, FLSTF/B, FLS....4-31
Removal....4-31
Assembly....4-31
System: FLSTN, FLSTF/B, FLS....4-31
Removal....4-31
Installation....4-31

4.18 INTAKE LEAK TEST

General....4-33
Leak Tester....4-33
Parts List....4-33
Tester Assembly....4-33
Tester Adjustment....4-33
Procedure....4-33

4.19 EVAPORATIVE EMISSIONS CONTROL SYSTEM

General....4-35
Charcoal Canister....4-36

Removal....4-36
Installation....4-36
Purge Solenoid....4-36
Removal....4-36
Installation....4-36
Hose Routing/Replacement....4-36
Fuel Tank Vent Hose....4-36
Purge Solenoid-to-Induction Module Tube....4-36
Charcoal Canister-to-Purge Solenoid Tube....4-37
Vent Tube-to-Charcoal Canister Tube....4-37

DRIVE

5.1 FASTENER TORQUE VALUES

Fastener Torque Values in this Chapter....5-1

5.2 SPECIFICATIONS: DRIVE

Specifications....5-2

5.3 PRIMARY CHAINCASE COVER

General....5-3
Removal....5-3
Installation....5-3

5.4 DRIVE COMPONENTS

Removal....5-4
Installation....5-6

5.5 PRIMARY CHAINCASE HOUSING

Removal....5-9
Inspection....5-9
Mainshaft Bearing and Seal....5-9
Removal....5-9
Installation....5-9
Mainshaft Bearing Inner Race....5-10
Removal....5-10
Installation....5-10
Installation....5-11

5.6 CLUTCH

Removal and Installation....5-13
Clutch Pack Only....5-13
Partial Disassembly....5-13
Cleaning And Inspection....5-13
Assembly....5-14
Clutch Pack and Bearing....5-15
Complete Disassembly....5-15
Assembly....5-16

5.7 TRANSMISSION SPROCKET

Removal....5-18
Cleaning and Inspection....5-19
Installation....5-19

5.8 DRIVE BELT

Removal....5-21
Inspection....5-21
Installation....5-21

TRANSMISSION

6.1 FASTENER TORQUE VALUES

Fastener Torque Values in this Chapter....6-1

6.2 SPECIFICATIONS: TRANSMISSION

Specifications....6-2
Service Wear Limits....6-2

6.3 TRANSMISSION

Power Flow....6-3
Neutral....6-3
First Gear....6-3
Second Gear....6-3
Third Gear....6-3
Fourth Gear....6-3
Fifth Gear....6-3
Sixth Gear....6-3

6.4 SHIFTER

Adjustment....6-5
Shifter Rod Adjustment....6-5
Shift Lever Replacement....6-5

6.5 CLUTCH RELEASE COVER

Removal and Disassembly....6-7
Cleaning and Inspection....6-7
Assembly and Installation....6-8

6.6 TRANSMISSION ASSEMBLY

Removal....6-9
Disassembly....6-10
Shifter Cam/Shifter Forks....6-10
Mainshaft....6-12
Countershaft....6-15
Removing Bearing Housing Bearings....6-16
Cleaning and Inspection....6-17
Assembly....6-17
Installing Bearing Housing Bearings....6-17
Countershaft....6-18
Mainshaft....6-18
Shifter Cam/Shifter Forks....6-19
Installation....6-21

6.7 MAIN DRIVE GEAR AND BEARING

Removal....6-22
Cleaning and Inspection....6-23
Needle Bearing Replacement....6-24
Installation....6-25
Installing Main Drive Gear Bearing....6-25
Installing Main Drive Gear....6-26
Installing Main Drive Gear Large Seal....6-26

6.8 TRANSMISSION CASE

Removal....6-29
Installation....6-29
Disassembly....6-30
Shifter Arm Assembly....6-30
Cleaning and Inspection....6-30
Assembly....6-31

Countershaft Needle Bearing Replacement.....6-31
Shifter Pawl Lever Assembly.....6-31

ELECTRICAL

7.1 FASTENER TORQUE VALUES

Fastener Torque Values in this Chapter.....7-1

7.2 SPECIFICATIONS: ELECTRICAL

Specifications.....7-4

7.3 ELECTRICAL PANEL

General.....7-5
Removal: All But FXSB.....7-5
Installation: All But FXSB.....7-6
Removal: FXSB.....7-6
Installation: FXSB.....7-6

7.4 ELECTRONIC CONTROL MODULE (ECM)

General.....7-8
Removal: All But FXSB.....7-8
Installation: All But FXSB.....7-8
Removal: FXSB.....7-8
Installation: FXSB.....7-8

7.5 BODY CONTROL MODULE (BCM)

General.....7-9
BCM Configuration.....7-9
Removal: All But FXSB.....7-9
Installation: All But FXSB.....7-9
Removal: FXSB.....7-10
Installation: FXSB.....7-10

7.6 H-DSSS ACTUATION

Sidecar Configuration.....7-11
Actuation.....7-11
Fob Assignment.....7-11

7.7 PERSONAL IDENTIFICATION NUMBER (PIN)

General.....7-12
Changing The PIN.....7-12
Modifying an Existing PIN.....7-12

7.8 HD-SSS MAINTENANCE

Fob Battery.....7-14
Battery Replacement Schedule.....7-14
Battery Replacement.....7-14
Smart Siren (If Installed).....7-14
Battery Replacement Schedule.....7-14
Battery Replacement.....7-14

7.9 SECURITY SIREN

Removal: All But FXSB.....7-15
Installation: All But FXSB.....7-15
Removal: FXSB.....7-15
Installation: FXSB.....7-16

7.10 FUSES

Removal.....7-17
Installation.....7-17

7.11 IGNITION AND LIGHT SWITCH

General.....7-18
Removal and Installation: All But FXSB.....7-18
Removal and Installation: FXSB.....7-19

7.12 BATTERY CABLES

Routing Procedure.....7-20

7.13 STARTER

General.....7-22
Removal.....7-22
Drive Assembly.....7-22
Disassembly.....7-22
Inspection.....7-22
Assembly.....7-23
Solenoid.....7-23
Cover and Plunger Removal.....7-23
Short Post Contact: Starter.....7-23
Long Post Contact: Battery Positive.....7-24
Plunger and Cover Installation.....7-24
Installation.....7-24

7.14 HEADLAMP

General.....7-26
Headlamp Assembly Removal and Installation.....7-26
Removal.....7-26
Installation.....7-26
Bulb Removal and Installation.....7-26
FXST, FXSB Models.....7-27
FLSTC, FLSTF/B, FLSTN and FLS Models.....7-27

7.15 TAIL LAMP: ALL BUT FLSTN

General.....7-29
Bulb Replacement.....7-29
Base Replacement.....7-29

7.16 TAIL LAMP: FLSTN

Bulb Replacement.....7-31
Tail Lamp Replacement.....7-31

7.17 AUXILIARY LAMPS: FLSTC, FLSTN

Auxiliary Lamp Bulb.....7-33
Removal.....7-33
Installation.....7-33
FLSTC Models.....7-33
Auxiliary Lamp Bracket Removal.....7-33
Auxiliary Lamp Bracket Installation.....7-34
Auxiliary Lamp Housing Removal.....7-34
Auxiliary Lamp Housing Installation.....7-34
FLSTN Models.....7-36
Auxiliary Lamp Bracket Removal.....7-36
Auxiliary Lamp Bracket Installation.....7-36
Auxiliary Lamp Housing Removal.....7-37
Auxiliary Lamp Housing Installation.....7-37
Adjustment: FLSTC/FLSTN Models.....7-38

7.18 TURN SIGNALS AND RUNNING LIGHTS

Bulb Replacement: Bullet Style.....7-40
Bulb Replacement: Flat Lens Style.....7-40

Lamp Replacement....7-40
All Models....7-40
Front Turn Signals....7-41
Front Turn Signals: FLSTC, FLSTN....7-42
Rear Turn Signals: All But FLSTN, FLS, FXSB....7-42
Rear Turn Signals: FLS....7-42
Rear Turn Signals: FXSB....7-44
Rear Turn Signals: FLSTN....7-45

7.19 CRANK POSITION SENSOR (CKP)
General....7-47
Removal....7-47
Installation....7-47

7.20 AUTOMATIC COMPRESSION RELEASE (ACR)
General....7-48
Removal....7-48
Installation....7-48

7.21 IGNITION COIL
Removal....7-50
All But FXSB....7-50
FXSB....7-50
Installation....7-50
All But FXSB....7-50
FXSB....7-50

7.22 SPARK PLUG CABLES
General....7-52
Removal....7-52
Installation....7-52

7.23 VOLTAGE REGULATOR
Disassembly....7-53
Installation....7-53

7.24 ALTERNATOR
Removal....7-54
Cleaning and Inspection....7-54
Installation....7-54

7.25 FUEL GAUGE
General....7-55
Removal....7-55
Installation....7-55

7.26 SPEEDOMETER
General....7-57
Removal: All But FXSB....7-57
Installation: All But FXSB....7-57
Removal: FXSB....7-57
Installation: FXSB....7-58

7.27 VEHICLE SPEED SENSOR (VSS)
General....7-59
Removal....7-59
Installation....7-59

7.28 WHEEL SPEED SENSORS
Front Wheel Speed Sensor....7-60
Removal....7-60
Installation....7-61
Rear Wheel Speed Sensor....7-61
Removal....7-61
Installation....7-62

7.29 INDICATOR LAMPS
General....7-64
Removal: All But FXSB....7-64
Installation: All But FXSB....7-64
Removal: FXSB....7-65
Installation: FXSB....7-65

7.30 NEUTRAL SWITCH
General....7-66
Removal....7-66
Installation....7-66

7.31 OIL PRESSURE SWITCH
General....7-67
Removal....7-67
Installation....7-67

7.32 REAR STOP LAMP SWITCH
General....7-68
Removal....7-68
Installation....7-68

7.33 HORN
Inspection....7-69
Removal and Installation: All But FXSB....7-69
Removal and Installation: FXSB....7-70

7.34 ACTIVE EXHAUST
General....7-71
Removal....7-71
Repair....7-71
Installation....7-71

7.35 MAIN WIRING HARNESS
Removal....7-72
Installation....7-73

7.36 HANDLEBAR CONTROL MODULES
General....7-75
Repair Procedures....7-75

7.37 RIGHT HANDLEBAR CONTROL MODULE
Removal....7-76
Installation....7-77
Front Brake Switch Replacement....7-78

7.38 LEFT HANDLEBAR CONTROL MODULE
Removal....7-79
Installation....7-79
Clutch Switch Replacement....7-80

APPENDIX A CONNECTOR REPAIR

A.1 AUTOFUSE UNSEALED ELECTRICAL CONNECTORS

Autofuse Unsealed Connector Repair....A-1
General....A-1
Disassembly....A-1
Assembly....A-1

A.2 BOSCH COMPACT 1.1M CONNECTOR

Bosch Compact 1.1M Connector....A-2
General....A-2
Housings....A-2
Removing Socket Terminal....A-2
Installing Socket Terminal....A-2

A.3 BOSCH BTC SEALED CONNECTOR

Bosch BTC Sealed Connector Repair....A-3
Plugging and Unplugging Connector....A-3
Removing and Installing Connector Cover....A-3
Removing and Installing Wire Terminals....A-4
Crimping Terminals to Leads....A-5

A.4 DELPHI 100W MICRO-PACK SEALED CONNECTOR

Delphi 100W Micro-Pack Sealed Connector Repair....A-6
General....A-6
Separating Socket Housing From ECM....A-6
Mating Socket Housing To ECM....A-6
Removing Socket Terminal....A-6
Installing Socket Terminal....A-6
Crimping Terminals....A-7

A.5 DELPHI 150 METRI-PACK SEALED CONNECTORS

Delphi 150 Metri-Pack Sealed Connector Repair....A-8
General....A-8
Separating Pin and Socket Housings....A-8
Mating Pin and Socket Housings....A-8
Removing Socket Terminal....A-8
Inserting Socket Terminal....A-8

A.6 DELPHI 280 METRI-PACK UNSEALED CONNECTORS

Fuse Block Repair....A-10
Removing Socket Terminals....A-10
Installing Socket Terminals....A-10
Crimping Terminals....A-10

A.7 DELPHI 480 METRI-PACK UNSEALED CONNECTORS

Delphi 480 Metri-Pack Unsealed Connector Repair....A-11
General....A-11
Separating Pin and Socket Housings....A-11
Mating Pin and Socket Housings....A-11
Removing Socket Terminals....A-11
Installing Socket Terminals....A-11

A.8 DELPHI 630 METRI-PACK UNSEALED CONNECTORS

Delphi 630 Metri-Pack Unsealed Connector Repair....A-12
Separating Pin and Socket Housings....A-12
Mating Pin and Socket Housings....A-12
Removing Socket Terminal....A-12
Installing Socket Terminal....A-12

A.9 DELPHI 800 METRI-PACK SEALED MAIN FUSE HOUSING

Delphi 800 Metri-Pack Sealed Main Fuse Housing Repair....A-13
Removing Socket Terminals....A-13
Installing Socket Terminals....A-13

A.10 DELPHI METRI-PACK TERMINAL REPAIR

Metri-Pack Terminal Crimps....A-14
Matching Terminal To Crimper....A-14
Preparing Wire Lead....A-14
Crimping Wire Core....A-14
Crimping Insulation/Seal....A-15
Inspecting Crimps....A-15

A.11 DELPHI MICRO 64 SEALED CONNECTORS

Delphi Micro 64 Sealed Connector Repair....A-16
General....A-16
Separating Pin and Socket Housings....A-16
Mating Pin and Socket Housings....A-16
Removing Terminal....A-16
Installing Terminal....A-17
Preparing Wire Leads for Crimping....A-17
Crimping Terminals....A-17
Inspecting Crimps....A-17

A.12 DELPHI GT 150 SEALED CONNECTORS

Delphi GT 150 Sealed Connector Repair....A-19
General....A-19
Separating Pin and Socket Housings....A-19
Mating Pin and Socket Housings....A-19
Removing Socket Terminals....A-19
Installing Socket Terminals....A-19

A.13 DEUTSCH DT SEALED CONNECTORS

Deutsch DT Sealed Connector Repair....A-21
General....A-21
Separating Pin and Socket Housings....A-21
Mating Pin and Socket Housings....A-21
Removing Socket Terminals....A-21
Installing Socket Terminals....A-21
Removing Pin Terminals....A-22
Installing Pin Terminals....A-23
Crimping Terminals....A-23

A.14 DEUTSCH DT SEALED TERMINAL REPAIR

Deutsch DT Sealed Terminal Crimps....A-25

Preparing Wire Leads for Crimping....A-25
Crimping Terminal to Lead....A-25
Inspecting Crimps....A-25

A.15 DEUTSCH DTM SEALED MINI TERMINAL REPAIR

Deutsch DTM Sealed Mini Terminal Crimps....A-26
Preparing Wire Leads for Crimping....A-26
Crimping a Mini Terminal to Wire Lead....A-26
Inspecting Crimps....A-26

A.16 DEUTSCH DTM SEALED SOLID BARREL MINI TERMINAL REPAIR

Deutsch DTM Sealed Solid Barrel Terminal Crimps....A-27
Preparing Wire Leads For Crimping....A-27
Adjusting Crimper Tool....A-27
Crimping a Barrel Contact To Wire Lead....A-27
Inspecting Crimps....A-27

A.17 JAE MX19 SEALED CONNECTORS

JAE MX19 Sealed Connectors....A-29
Connector Housings....A-29
Removing Terminals....A-29
Installing Terminals....A-29
Crimping Terminals....A-29

A.18 MOLEX CMC SEALED CONNECTORS

Molex CMC Sealed Connectors....A-30
Separating the Connector....A-30
Removing Terminals....A-30
Installing Terminals....A-30
Crimping Terminals....A-31

A.19 MOLEX MX 150 SEALED CONNECTORS

Molex MX 150 Sealed Connector Repair....A-32
Separating Pin and Socket Housings....A-32
Mating Pin and Socket Housings....A-32
Removing Terminals....A-32
Installing Terminals....A-32
Crimp Terminal to Lead....A-33
Prepare Lead....A-33
Prepare Tool....A-33
Position Terminal in the Punch/Die....A-34
Insert Stripped Lead....A-34
Crimp Terminal to Lead....A-34
Inspect Crimp....A-35

A.20 TYCO 040 MULTILOCK UNSEALED CONNECTOR

Tyco 040 Multilock Unsealed Connector Repair....A-36
General....A-36
Separating Pin and Socket Housings....A-36
Mating Pin and Socket Housings....A-36
Removing Terminals from Housing....A-36
Inserting Terminals into Housing....A-37
Crimping Terminals to Leads....A-37
Inspecting Crimped Terminals....A-37

A.21 TYCO 070 MULTILOCK UNSEALED CONNECTOR

Tyco 070 Multilock Unsealed Connector Repair....A-38
General....A-38
Separating Pin and Socket Housings....A-38
Mating Pin and Socket Housings....A-38
Removing Terminals from Housing....A-38
Inserting Terminals into Housing....A-39
Crimping Terminals to Leads....A-40
Inspecting Crimped Terminals....A-40

A.22 TYCO GET 64 SEALED CONNECTOR

Tyco GET 64 Sealed Connector Repair....A-41
General....A-41
Housings....A-41
Removing Socket Terminals....A-41
Installing Socket Terminals....A-42
Crimping Terminals....A-42

A.23 TYCO MCP SEALED CONNECTOR

Tyco MCP Sealed Connector....A-43
General....A-43
Housing....A-43
Removing the Large Terminals....A-43
Removing the Small Terminals....A-43
Installing Terminals....A-44
Crimping Terminals....A-44

A.24 SEALED SPLICE CONNECTORS

Sealed Splice Connector Repair....A-45
General....A-45
Preparing Wire Leads....A-45
Splicing Wire Leads....A-45
Inspecting Seals....A-45

APPENDIX B WIRING

B.1 CONNECTORS

Connector Locations....B-1
Function/Location....B-1
Place and Color....B-1
Connector Number....B-1
Repair Instructions....B-1

B.2 WIRING DIAGRAMS

Wiring Diagram Information....B-5
Wire Color Codes....B-5
Wiring Diagram Symbols....B-5
2015 Softail Wiring Diagrams....B-7

APPENDIX C REFERENCE

C.1 LENGTH CONVERSION

Conversion Table....C-1

C.2 FLUID CONVERSION

United States System....C-2
Metric System....C-2
British Imperial System....C-2

C.3 TORQUE CONVERSION

United States System.....C-3
Metric System.....C-3

C.4 GLOSSARY

Acronyms and Abbreviations.....C-4

REFERENCE MATERIAL

TOOLS.....I

TORQUE VALUES.....IX

INDEX.....XXI

NOTES

SUBJECT	PAGE NO.
1.1 FASTENER TORQUE VALUES	1-1
1.2 GENERAL	1-3
1.3 FUEL AND OIL	1-7
1.4 BULB REQUIREMENTS	1-9
1.5 MAINTENANCE SCHEDULE	1-10
1.6 ENGINE OIL AND FILTER	1-15
1.7 AIR CLEANER AND EXHAUST SYSTEM	1-17
1.8 TIRES AND WHEELS	1-20
1.9 PRIMARY CHAINCASE LUBRICANT	1-23
1.10 TRANSMISSION LUBRICANT	1-25
1.11 CLUTCH	1-27
1.12 DRIVE BELT AND SPROCKETS	1-29
1.13 THROTTLE CABLES	1-33
1.14 CABLE AND CHASSIS LUBRICATION	1-35
1.15 BRAKES	1-36
1.16 BRAKE PADS AND DISCS	1-38
1.17 SPARK PLUGS	1-42
1.18 STEERING HEAD BEARINGS	1-44
1.19 BATTERY MAINTENANCE	1-48
1.20 HEADLAMP ALIGNMENT	1-53
1.21 SUSPENSION ADJUSTMENTS	1-55
1.22 STORAGE	1-56
1.23 TROUBLESHOOTING	1-58

NOTES

FASTENER TORQUE VALUES IN THIS CHAPTER

The table below lists torque values for all fasteners presented in this chapter.

FASTENER	TORQUE VALUE		NOTES
Air cleaner bracket screws	40-60 **in-lbs**	4.5-6.8 Nm	1.7 AIR CLEANER AND EXHAUST SYSTEM, Installation
Air cleaner cover screw	36-60 **in-lbs**	4.1-6.8 Nm	1.7 AIR CLEANER AND EXHAUST SYSTEM, Installation
Axle nut, rear	95-105 ft-lbs	128.8-142.4 Nm	1.12 DRIVE BELT AND SPROCKETS, Adjusting Belt Deflection
Battery terminal fasteners	60-72 **in-lbs**	6.8-8.1 Nm	1.19 BATTERY MAINTENANCE, Battery Installation and Connection
Battery terminal fasteners	60-72 **in-lbs**	6.8-8.1 Nm	1.19 BATTERY MAINTENANCE, Battery Installation and Connection
Brake caliper, rear, mounting fasteners	16-20 ft-lbs	21.7-27.1 Nm	1.16 BRAKE PADS AND DISCS, Brake Pad Replacement
Brake caliper, rear, pad pin	80-120 **in-lbs**	9.0-13.6 Nm	1.16 BRAKE PADS AND DISCS, Brake Pad Replacement
Brake caliper mounting bolts, front	28-38 ft-lbs	38.0-51.5 Nm	1.16 BRAKE PADS AND DISCS, Brake Pad Replacement
Brake pad screws, front	130.1-173.5 **in-lbs**	14.7-19.6 Nm	1.16 BRAKE PADS AND DISCS, Brake Pad Replacement
Brake pedal screw, rear	12-16 ft-lbs	16.3-21.7 Nm	1.15 BRAKES, Rear Brake Pedal
Clutch adjuster screw jamnut	72-120 **in-lbs**	8.1-13.6 Nm	1.11 CLUTCH, Adjustment
Clutch cable adjuster jamnut	120 **in-lbs**	13.6 Nm	1.11 CLUTCH, Adjustment
Clutch inspection cover screws	84-108 **in-lbs**	9.5-12.2 Nm	1.9 PRIMARY CHAINCASE LUBRICANT, Changing Primary Chaincase Lubricant/Torque sequence
Clutch inspection cover screws	84-108 **in-lbs**	9.5-12.2 Nm	1.11 CLUTCH, Adjustment
Engine oil drain plug	14-21 ft-lbs	19.0-28.5 Nm	1.6 ENGINE OIL AND FILTER, Changing Oil and Filter
Fork bracket pinch bolt, lower	30-35 ft-lbs	40.7-47.5 Nm	1.18 STEERING HEAD BEARINGS, Adjustment: FXSB
Fork bracket pinch bolt, lower	30-35 ft-lbs	40.7-47.5 Nm	1.18 STEERING HEAD BEARINGS, Adjustment: FXSB
Fork bracket pinch bolt, lower, FXST	55-60 ft-lbs	74.6-81.4 Nm	1.18 STEERING HEAD BEARINGS, Adjustment: FXST
Fork bracket pinch bolt, lower, FXST	55-60 ft-lbs	74.6-81.4 Nm	1.18 STEERING HEAD BEARINGS, Adjustment: FXST
Fork bracket pinch screw, upper, FLSTC, FLSTF/B, FLSTN, FLS	25-30 ft-lbs	33.9-40.7 Nm	1.18 STEERING HEAD BEARINGS, Adjustment: FLSTC, FLSTF/B, FLSTN, FLS
Fork bracket pinch screws, lower, FLSTC, FLSTF/B, FLSTN, FLS	55-60 ft-lbs	74.6-81.4 Nm	1.18 STEERING HEAD BEARINGS, Adjustment: FLSTC, FLSTF/B, FLSTN, FLS
Fork stem nut, FXSB	70-80 ft-lbs	94.9-108.4 Nm	1.18 STEERING HEAD BEARINGS, Adjustment: FXSB
Fork stem nut, FXSB	70-80 ft-lbs	94.9-108.4 Nm	1.18 STEERING HEAD BEARINGS, Adjustment: FXSB
Fork stem nut, FXST	70-80 ft-lbs	94.9-108.4 Nm	1.18 STEERING HEAD BEARINGS, Adjustment: FXST

FASTENER	TORQUE VALUE		NOTES
Fork stem nut, FXST	70-80 ft-lbs	94.9-108.4 Nm	1.18 STEERING HEAD BEARINGS, Adjustment: FXST
Handlebar switch housing screws	35-45 in-lbs	4.0-5.1 Nm	1.13 THROTTLE CABLES, Cable Inspection, Lubrication and Adjustment
Headlamp horizontal adjustment fastener	30-35 ft-lbs	40.7-47.5 Nm	1.20 HEADLAMP ALIGNMENT, Headlamp Adjustment
Headlamp vertical adjusting bolt	25-30 ft-lbs	33.9-40.7 Nm	1.20 HEADLAMP ALIGNMENT, Headlamp Adjustment
Primary chaincase drain plug	14-21 ft-lbs	19.0-28.5 Nm	1.9 PRIMARY CHAINCASE LUBRICANT, Changing Primary Chaincase Lubricant
Rear back panel screw	20-30 in-lbs	2.3-3.4 Nm	1.18 STEERING HEAD BEARINGS, Adjustment: FLSTC, FLSTF/B, FLSTN, FLS
Spark plug	12-18 ft-lbs	16.3-24.4 Nm	1.17 SPARK PLUGS, Installation
Spoke nipple	55 in-lbs	6.2 Nm	1.8 TIRES AND WHEELS, Wheel Spokes
Starter nut	70-90 in-lbs	7.9-10.2 Nm	1.19 BATTERY MAINTENANCE, Battery Installation and Connection
Transmission drain plug	14-21 ft-lbs	19.0-28.5 Nm	1.10 TRANSMISSION LUBRICANT, Changing Transmission Lubricant
Transmission filler plug/dipstick	25-75 in-lbs	2.8-8.5 Nm	1.10 TRANSMISSION LUBRICANT, Checking Transmission Lubricant
Transmission filler plug/dipstick	25-75 in-lbs	2.8-8.5 Nm	1.10 TRANSMISSION LUBRICANT, Changing Transmission Lubricant
Windshield mounting screw	96-120 in-lbs	10.8-13.6 Nm	1.18 STEERING HEAD BEARINGS, Adjustment: FLSTC, FLSTF/B, FLSTN, FLS

SERVICING A NEW MOTORCYCLE

⚠WARNING

Perform the service and maintenance operations as indicated in the regular service interval table. Lack of regular maintenance at the recommended intervals can affect the safe operation of your motorcycle, which could result in death or serious injury. (00010a)

Perform necessary set-up tasks before customer delivery. See applicable model year predelivery and set-up instructions.

The performance of new motorcycle initial service is required to keep warranty in force and to verify proper emissions systems operation. See 1.5 MAINTENANCE SCHEDULE.

SAFE OPERATING MAINTENANCE

NOTES

- *Do not attempt to tighten engine headbolts or engine damage may result.*
- *During the initial break-in period, use only GENUINE HARLEY-DAVIDSON H-D 360 MOTORCYCLE OIL 20W50. Failure to use the recommended oil will result in improper break-in of the engine cylinders and piston rings.*

Inspect motorcycle on a regular basis for additional maintenance needs. Routinely check components between regular maintenance intervals. Always inspect motorcycle after periods of storage before riding.

Check:

1. Tires for correct pressure, excessive wear or any signs of tire damage.
2. Drive belt tension and condition.
3. Brakes, steering and throttle for responsiveness.
4. Brake fluid level and condition. Hydraulic lines and fittings for leaks.
5. Check brake pads and discs for wear.
6. Cables for fraying, crimping and free operation.
7. Engine oil and transmission fluid levels.
8. Headlamp, auxiliary/fog lamp, tail lamp, stop lamp, horn and turn signal operation.

DISPOSAL AND RECYCLING

Help protect our environment! Many communities maintain facilities for recycling used fluids, plastics and metals. Dispose of or recycle used oil, lubricants, fuel, coolant, brake fluid and batteries in accordance with local regulations. Many Harley-Davidson parts and accessories are made of plastics and metals which can also be recycled.

SHOP PRACTICES

Repair Notes

General maintenance practices are given in this section.

NOTES

- *Repair = Disassembly/Assembly.*
- *Replacement = Substitute a **new** part for existing component.*

All special tools and torque values are noted at the point of use.

All required parts or materials can be found in the parts catalog.

Safety

Safety is always the most important consideration when performing any job.

- Always have a complete understanding of the task.
- Use common sense.
- Use the proper tools.
- Protect yourself and bystanders with approved eye protection.

Don't just do the job, do the job safely.

Removing Parts

Always consider the weight of a part when lifting. Use a hoist whenever necessary. Do not lift heavy parts by hand. If a hoist and adjustable lifting beam or sling are needed to remove some parts, verify that:

- The lengths of multiple chains or cables from the hoist to the part are equal and parallel.
- Slings, chains and cables are positioned directly over the center of the part.
- No obstructions will interfere with the lifting operation.
- Parts are not left suspended.

⚠WARNING

Be sure to check capacity rating and condition of hoists, slings, chains and cables before use. Exceeding capacity ratings or using lifting devices that are in poor condition can lead to an accident, which could result in death or serious injury. (00466c)

Always use blocking or proper stands to support the part that has been hoisted. If a part cannot be removed, verify that all bolts and attaching hardware have been removed. Verify that no parts are in the way of the part being removed.

When removing hoses, wiring or tubes, always tag each part to verify proper installation.

Cleaning

Always clean around lines or covers before they are removed. Plug, tape or cap holes and openings to keep out dirt, dust and debris. Clean and inspect all parts as they are removed. Verify all holes and passages are clean and open. After cleaning, cover all parts with clean lint-free cloth, paper or other material. Verify the part is clean when installed.

Thoroughly clean all parts to be reused before assembly. Clean parts promote better component operation and longer life. Seals, filters and covers used in this vehicle keep out

extraneous dirt and dust. Keep these items in good condition to guarantee satisfactory operation.

When instructed to clean fastener threads or threaded holes, always:

- Clean all threadlocking material from fastener threads and threaded holes.
- Use a wire brush to clean fastener threads.
- Use a thread chaser or other suitable tool to clean threaded holes.
- Use PJ1 cleaner or equivalent to remove all traces of oil and contaminants from threads.
- Clear all threaded holes with low pressure compressed air.

Always verify cleanliness of blind holes before assembly. Tightening a screw with dirt, water or oil in the hole can cause castings to crack or break.

Disassembly and Assembly

Always assemble or disassemble one part at a time. Do not work on two assemblies simultaneously. Make all necessary adjustments. Inspect your work when finished to verify that everything is done.

Operate the vehicle to perform any final check or adjustments. If all is correct, the vehicle is ready to go back to the customer.

Checking Torques on Fasteners

Check torque using a torque wrench set to the minimum specification for that fastener. If the fastener does not rotate, the torque has been maintained. If the fastener rotates, remove it to determine if it has a threadlocking agent.

If it has a threadlocking agent, clean all material from the threaded hole. Replace the fastener with a **new** one or clean the original fastener threads and apply the appropriate threadlocking product. Install and tighten the fastener to specification.

If the fastener does not use a threadlocking agent, install and tighten it to specification.

Magnetic Parts Trays

Magnetic parts trays are common in the service facility because they are convenient and can keep parts from becoming lost during a repair procedure. However, hardened steel parts can become magnetized when held in magnetic parts trays.

Metal fragments from normal wear are usually trapped in the oil filter or by the magnetic drain plug. Magnetized parts in the engine can retain these fragments, potentially causing accelerated engine wear and damage.

Never place parts from inside the vehicle's powertrain on a magnetic parts tray.

REPAIR AND REPLACEMENT PROCEDURES

Hardware and Threaded Parts

Install thread repair inserts when threaded holes in castings are stripped, damaged or not capable of withstanding specified torque.

Replace bolts, nuts, studs, washers, spacers and small common hardware if missing or damaged. Clean up or repair minor thread damage with a suitable tap or die.

Replace all damaged or missing lubrication fittings.

Use LOCTITE 565 THREAD SEALANT on pipe fitting threads.

Threadlocking Agents

Always follow specific service manual procedures when working with fasteners containing preapplied threadlocking agents when fastener replacement is recommended. When re-using fasteners containing threadlocking agents, thoroughly clean all fasteners and threaded holes. Always use the recommended threadlocking agent for the specific procedure.

Wiring, Hoses and Lines

Replace hoses, clamps, electrical wiring, electrical switches or fuel lines if they do not meet specifications.

Instruments and Gauges

Replace damaged or defective instruments and gauges.

Bearings

Always use the proper tools and fixtures when servicing bearings.

Anti-friction bearings must be handled in a special way. To keep out dirt and abrasives, cover the bearings as soon as they are removed from the package.

When bearings are installed against shoulders, always verify that the chamfered side of the bearing faces the shoulder. Lubricate bearings and all metal contact surfaces before pressing into place. Only apply pressure on the part of the bearing that makes direct contact with the mating part. Install bearings with numbered side facing out.

Only remove bearings if necessary. Removal usually damages bearings requiring replacement with **new** parts.

Bushings

Do not remove a bushing unless damaged, excessively worn or loose in its bore. Press out bushings requiring replacement.

When pressing or driving bushings, always apply pressure in line with the bushing bore. Use a bearing/bushing driver or a bar with a smooth, flat end. Never use a hammer to drive bushings.

Verify that all oil holes are properly aligned during installation.

Gaskets

Always discard gaskets after removal. Replace with **new** gaskets. Never use the same gasket twice. Verify that gasket holes match up with holes in the mating part. Be aware that sections of a gasket may be used to seal passages.

Lip-Type Seals

Lip seals are used to seal oil or grease and are usually installed with the sealing lip facing the contained lubricant. Seal orientation, however, may vary under different applications.

Do not remove seals unless necessary. Only remove seals to gain access to other parts or if seal damage or wear dictates replacement.

Leaking oil or grease usually means that a seal is damaged. Replace leaking seals to prevent overheated bearings.

Always discard seals after removal. Do not use the same seal twice.

O-Rings

Always discard O-rings after removal. Many O-rings are similar in size and appearance. Always use **new** O-rings keeping them packaged until use to avoid confusion. To prevent leaks, lubricate the O-rings before installation with the same type of lubricant as that being sealed. Be sure that all gasket, O-ring and seal mating surfaces are thoroughly clean before installation.

Gears

Always check gears for damaged or worn teeth.

Remove burrs and rough spots with a honing stone or crocus cloth before installation.

Lubricate mating surfaces before pressing gears on shafts.

Shafts

If a shaft does not come out easily, check that all nuts, bolts or retaining rings have been removed. Check to see if other parts are in the way before using force to remove.

Shafts fitted to tapered splines should be very tight. If shafts are not tight, disassemble and inspect tapered splines. Discard parts that are worn. Verify that tapered splines are clean, dry and free of burrs before putting them in place. Press mating parts together tightly.

Clean all rust from the machined surfaces of **new** parts.

Part Replacement

⚠WARNING

Harley-Davidson parts and accessories are designed for Harley-Davidson motorcycles. Using non-Harley-Davidson parts or accessories can adversely affect performance, stability or handling, which could result in death or serious injury. (00001b)

Always install **new** genuine Harley-Davidson parts and accessories. This will provide best service life and maintain compliance with noise and emissions regulations.

Installing non-Harley-Davidson, off-road or competition parts can void warranty or result in an unsafe vehicle.

CLEANING

Protecting Rubber Parts

Before cleaning, protect rubber parts (such as hoses, boots and electrical insulation) from cleaning solutions. Use a grease-proof barrier material. Remove the rubber part if it cannot be properly protected.

Cleaning Process

Any cleaning method may be used as long as it does not result in parts damage. Thorough cleaning is necessary for proper parts inspection. Strip rusted paint areas to bare metal before priming and repainting.

Never use cleaners containing chlorine or ammonia on plastic parts. Chlorine will cause parts to become distorted and brittle resulting in cracks. Ammonia will cause cloudiness and brittleness in windshields and non-painted parts to form a white haze.

Rust or Corrosion Removal

Remove rust and corrosion with a wire brush, abrasive cloth, sand blasting, vapor blasting or rust remover. Use buffing crocus cloth on highly polished parts that are rusted.

Bearings

Wash bearings in a non-flammable petroleum cleaning solution. Never use a solution that contains chlorine. Knock out packed lubricant by tapping the bearing against a wooden block. Wash bearings again.

⚠WARNING

Using compressed air to "spin dry" bearings can cause bearing to fly apart, which could result in death or serious injury. (00505b)

Cover bearings with a clean shop towel and allow to air dry. Do not spin bearings while they are drying. Never use compressed air to dry bearings.

When dry, coat bearings with clean oil. Wrap bearings in clean paper.

TOOL SAFETY

Air Tools

- Always use approved eye protection equipment when performing any task using air-operated tools.
- On all power tools, use only recommended accessories with proper capacity ratings.
- Do not exceed air pressure ratings of any power tools.
- Bits should be placed against work surface before air hammers are operated.
- Disconnect the air supply line to an air hammer before attaching a bit.
- Never point an air tool at yourself or another person.
- Protect bystanders with approved eye protection.

Wrenches

- Never use an extension on a wrench handle.
- If possible, always pull on a wrench handle and adjust your stance to prevent a fall if something suddenly releases.
- Always keep the wrench squarely installed on the fastener.
- Never use a hammer on any wrench other than a STRIKING FACE wrench.
- Discard any wrench with damaged or battered points.
- Never use a pipe wrench to bend, raise or lift a pipe.

Pliers/Cutters/Pry Bars

- Plastic- or vinyl-covered pliers handles are not intended to act as insulation. Do not use them on live electrical circuits.
- Do not use pliers or cutters for cutting hardened wire unless they were designed for that purpose.
- Always cut at right angles.
- Do not use any pry bar as a chisel, punch or hammer.

Hammers

- Never strike a hammer against a hardened object, such as another hammer.
- Always grasp a hammer handle firmly, close to the end.
- Strike the object with the full face of the hammer.
- Never work with a hammer which has a loose head or cracked handle.
- Discard hammer if face is chipped or mushroomed.
- Wear approved eye protection when using striking tools.
- Protect bystanders with approved eye protection.

Punches/Chisels

- Never use a punch or chisel with a chipped or mushroomed end. Dress mushroomed chisels and punches with a grinder.
- Hold a chisel or a punch with a tool holder if possible.
- When using a chisel on a small piece, clamp the piece firmly in a vise and chip toward the stationary jaw.
- Always wear approved eye protection when using these tools.
- Protect bystanders with approved eye protection.

Screwdrivers

- Do not use a screwdriver for prying, punching, chiseling, scoring or scraping.
- Use the right type of screwdriver for the job. Match the tip of a screwdriver to the fastener.
- Do not interchange POZIDRIV, PHILLIPS or REED AND PRINCE screwdrivers.
- Screwdriver handles are not intended to act as insulation. Do not use them on live electrical circuits.
- Do not use a screwdriver with rounded edges because it will slip. Redress with a grinder.

Ratchets and Handles

- Periodically clean and lubricate ratchet mechanisms with a light grade oil. Do not replace parts individually. Ratchets should be rebuilt with the entire contents of service kit.
- Never hammer on a ratchet or put a pipe extension on a ratchet handle for added leverage.
- Always support the ratchet head when using socket extensions, but do not put your hand on the head or you may interfere with the action of its reversing mechanism.
- When breaking a fastener loose, apply a small amount of pressure as a test to be sure the ratchet's gear wheel is engaged with the pawl.

Sockets

- Never use hand sockets on power or impact wrenches. Select only impact sockets for use with air or electric impact wrenches.
- Select the right size socket for the job.
- Always keep the wrench or socket squarely on the fastener.
- Replace sockets showing cracks or wear.
- Keep sockets clean.
- Always use approved eye protection when using power or impact sockets.

Storage Units

- Do not open more than one loaded drawer at a time. Close each drawer before opening another to prevent the cabinet from unexpectedly tipping over.
- Close lids and lock drawers and doors before moving storage units.
- Do not pull on a tool cabinet. Always push tool cabinets in front of you.
- Set the brakes on the locking casters after the cabinet has been rolled into position.

FUEL

Always use a good quality unleaded gasoline. Octane ratings are usually found on the pump. Refer to Table 1-1.

⚠WARNING

Avoid spills. Slowly remove filler cap. Do not fill above bottom of filler neck insert, leaving air space for fuel expansion. Secure filler cap after refueling. Gasoline is extremely flammable and highly explosive, which could result in death or serious injury. (00028a)

⚠WARNING

Use care when refueling. Pressurized air in fuel tank can force gasoline to escape through filler tube. Gasoline is extremely flammable and highly explosive, which could result in death or serious injury. (00029a)

Modern service station pumps dispense a high flow of gasoline into a motorcycle fuel tank. This can cause air entrapment and pressurization.

Table 1-1. Octane Ratings

SPECIFICATION	RATING
Pump Octane (R+M)/2	91 (95 RON)

GASOLINE BLENDS

Your motorcycle was designed to get the best performance and efficiency using unleaded gasoline. Most gasoline is blended with alcohol and/or ether to create oxygenated blends. The type and amount of alcohol or ether added to the fuel is important.

NOTICE

Do not use gasoline that contains methanol. Doing so can result in fuel system component failure, engine damage and/or equipment malfunction. (00148a)

- Gasoline/METHYL TERTIARY BUTYL ETHER (MTBE) blends are a mixture of gasoline and as much as 15 percent MTBE. Gasoline/MTBE blends use in your motorcycle is approved.
- ETHANOL fuel is a mixture of ethanol (grain alcohol) and unleaded gasoline and can have an impact on fuel mileage. Fuels with an ethanol content of up to 10 percent may be used in your motorcycle without affecting vehicle performance. U.S. EPA regulations currently indicate that fuels with 15 percent ethanol (E15) are restricted from use in motorcycles at the time of this publication. Some motorcycles are calibrated to operate with higher ethanol concentrations to meet the fuel standards in certain countries.
- REFORMULATED OR OXYGENATED GASOLINES (RFG) describes gasoline blends that are specifically designed to burn cleaner than other types of gasoline. This results in fewer tailpipe emissions. They are also formulated to evaporate less when filling the tank. Reformulated gasolines use additives to oxygenate the gas. Your motorcycle will run normally using this type of fuel. Harley-Davidson recommends using it whenever possible as an aid to cleaner air in our environment.
- Do not use racing fuel or fuel containing methanol. Use of these fuels will damage the fuel system.
- Using fuel additives other than those approved for use by Harley-Davidson may damage the engine, fuel system and other components.

Some gasoline blends might adversely affect starting, driveability or fuel efficiency. If any of these problems are experienced, try a different brand of gasoline or gasoline with a higher octane blend.

ENGINE LUBRICATION

⚠CAUTION

Prolonged or repeated contact with used motor oil may be harmful to skin and could cause skin cancer. Promptly wash affected areas with soap and water. (00358b)

⚠CAUTION

If engine oil is swallowed, do not induce vomiting. Contact a physician immediately. In case of contact with eyes, immediately flush with water. Contact a physician if irritation persists. (00357d)

NOTICE

Do not switch lubricant brands indiscriminately because some lubricants interact chemically when mixed. Use of inferior lubricants can damage the engine. (00184a)

Engine oil is a major factor in the performance and service life of the engine. Use the proper grade of oil for the lowest temperature expected before the next oil change. Refer to Table 1-2.

This motorcycle was originally equipped with GENUINE HARLEY-DAVIDSON H-D 360 MOTORCYCLE OIL 20W50. H-D 360 is the preferred oil under normal operating conditions. If operation under extreme cold or heat are expected, refer to Table 1-2 for alternative choices.

If necessary and H-D 360 is not available, add oil certified for diesel engines. Acceptable designations include: CH-4, CI-4 and CJ-4. The preferred viscosities, in descending order are: 20W50, 15W40 and 10W40.

At the first opportunity, see an authorized dealer to change back to 100 percent Harley-Davidson oil.

Table 1-2. Recommended Engine Oils

TYPE	VISCOSITY	RATING	LOWEST AMBIENT TEMPERATURE	COLD-WEATHER STARTS BELOW 50 °F (10 °C)
Screamin' Eagle SYN 3 Full Synthetic Motorcycle Lubricant	SAE 20W50	HD 360	Above 30 °F (-1 °C)	Excellent
Genuine Harley-Davidson H-D 360 Motorcycle Oil	SAE 20W50	HD 360	Above 40 °F (4 °C)	Good
Genuine Harley-Davidson H-D 360 Motorcycle Oil	SAE 50	HD 360	Above 60 °F (16 °C)	Poor
Genuine Harley-Davidson H-D 360 Motorcycle Oil	SAE 60	HD 360	Above 80 °F (27 °C)	Poor
Genuine Harley-Davidson H-D 360 Motorcycle Oil	SAE 10W40	HD 360	Below 40 °F (4 °C)	Excellent

WINTER LUBRICATION

Change engine oil often in colder climates. If motorcycle is frequently used for trips less than 15 mi (24 km), in ambient temperatures below 60 °F (16 °C), reduce oil change intervals to 1500 mi (2400 km).

NOTE

The further below freezing the temperature drops, the shorter the oil change interval should be.

Water vapor is a normal by-product of combustion in any engine. During cold weather operation, some water vapor condenses to liquid form on the cool metal surfaces inside the engine. In freezing weather this water will become slush or ice. Over time, accumulated slush or ice may block the oil lines and cause engine damage.

If the engine is run frequently and allowed to thoroughly warm up, most of this water will become vapor again and will be blown out through the crankcase breather.

If the engine is not run frequently and not allowed to thoroughly warm up, this water will accumulate, mix with the engine oil and form a sludge that is harmful to the engine.

GENERAL

Refer to Table 1-3. This table gives the location and bulb requirements for all Harley-Davidson Softail motorcycles.

NOTE

All Softail model speedometers, tachometers, indicator lamps and odometers are illuminated with LEDs.

Table 1-3. Bulb Chart

LAMP	DESCRIPTION (ALL LAMPS 12 V)	BULBS REQUIRED	CURRENT DRAW (AMPERAGE)		HARLEY-DAVIDSON PART NUMBER
Headlamp	High beam/low beam	1	4.7 (high beam)	4.3 (low beam)	68329-03
	Position lamp international	1	0.32		53436-97
Tail and stop lamp (FLSTN)	Tail/stop lamp	1	0.59/2.10		68168-89A
	Tail/stop lamp international	1	0.59/2.10		68169-90A
	License plate lamp	1	0.35		52441-95
	License plate lamp international	1	0.37		53436-97
Tail and stop lamp (Canada FLS and FXSB)	Tail/stop lamp	Illuminated with LEDs. Replace assembly upon failure.			
Tail and stop lamp (other models, except international FLS and FXSB)	Tail/stop lamp	1	0.59/2.10		68167-04
License plate lamp	Domestic/Canada FLS and FXSB	Illuminated with LEDs. Replace assembly upon failure.			
	International FLS and FXSB	2	.35		52441-95
Turn signal lamps	Front/running	2	2.25 (turn signals)	0.59 (front running)	68168-89A
	Front international (except FLSTC)	2	1.75		68163-84
	Front international (FLSTC)	2	1.75		68572-64B
	Rear (FLSTC)	2	2.25		68572-64B
	Rear (Domestic/Canada FLS and FXSB)	2	2.25		68168-89A
	Rear turn signal (international FLS and FXSB)	Illuminated with LEDs. Replace assembly upon failure.			
	Rear (other models)	2	1.75		68163-84
Auxiliary/fog lamps (FLSTC/FLSTN)	Domestic	2	2.50		68453-05
	International	2	2.10		68000056
Fender tip lamp	FLSTC	2	0.10		68193-95
Instrument panel lamps	Illuminated with LEDs. Replace assembly upon failure.				

GENERAL

At each regular service interval, perform the required maintenance. Refer to Table 1-4.

Use the quick reference maintenance chart for torque values, lubricants or cross references to maintenance procedures. Refer to Table 1-5.

Use the lubricants, greases and sealants table to identify maintenance supplies. Refer to Table 1-6.

Table 1-4. Regular Service Intervals: 2015 Softail Models

ITEM SERVICED	PROCEDURE	1000 MI 1600 KM	5000 MI 8000 KM	10000 MI 16000 KM	15000 MI 24000 KM	20000 MI 32000 KM	25000 MI 40000 KM	30000 MI 48000 KM	35000 MI 56000 KM	40000 MI 64000 KM	45000 MI 72000 KM	50000 MI 80000 KM	NOTES
Electrical equipment and switches	Check operation	X	X	X	X	X	X	X	X	X	X	X	
Front tire	Check pressure, inspect tread	X	X	X	X	X	X	X	X	X	X	X	1
Front wheel spokes (if equipped)	Check torque	X	X			X			X			X	2, 3, 4
Front brake fluid	Inspect sight glass	X	X	X	X	X	X	X	X	X	X	X	5
Reservoir cover screw: front	Check torque	X		X		X		X		X		X	1, 2, 6
Steering head bearings	Adjust	X		X		X		X		X		X	2
	Lubricate			X		X		X		X		X	2, 7
Lower fork bracket pinch bolt	Check torque	X		X		X		X		X		X	1, 2, 6
Upper fork bracket pinch bolt: all but FXST	Check torque	X		X		X		X		X		X	1, 2, 6
Windshield bushings (if applicable)	Inspect			X		X		X		X		X	
Throttle controls	Check, adjust and lubricate	X	X	X	X	X	X	X	X	X	X	X	2
Hand controls: upper and lower switch housing screws	Check torque	X		X		X		X		X		X	1, 2, 6
Clutch lever handlebar clamp screws	Check torque	X		X		X		X		X		X	1, 2, 6
Master cylinder handlebar clamp screws	Check torque	X		X		X		X		X		X	1, 2, 6
Air cleaner	Inspect, service as required		X	X	X	X	X	X	X	X	X	X	4
Engine oil and filter	Replace	X	X	X	X	X	X	X	X	X	X	X	1, 4
Primary chaincase lubricant	Replace	X		X		X		X		X		X	4
Transmission lubricant	Replace	X				X				X			4
Oil lines and brake system	Inspect for leaks, contact, or abrasion	X	X	X	X	X	X	X	X	X	X	X	1, 2
Fuel lines and fittings	Inspect for leaks, contact or abrasion	X	X	X	X	X	X	X	X	X	X	X	1, 2
Rear brake fluid	Inspect sight glass	X	X	X	X	X	X	X	X	X	X	X	5
Reservoir cover screw: rear	Check torque	X		X		X		X		X		X	1, 2, 6
Brake pads and discs	Inspect for wear	X	X	X	X	X	X	X	X	X	X	X	
Front axle nut	Check torque	X		X		X		X		X		X	1, 2, 6
Brake master cylinder and caliper banjo bolts	Check torque	X		X		X		X		X		X	1, 2, 6
ABS HCU banjo bolts	Check torque	X		X		X		X		X		X	1, 2, 6

Table 1-4. Regular Service Intervals: 2015 Softail Models

ITEM SERVICED	PROCEDURE	1000 MI 1600 KM	5000 MI 8000 KM	10000 MI 16000 KM	15000 MI 24000 KM	20000 MI 32000 KM	25000 MI 40000 KM	30000 MI 48000 KM	35000 MI 56000 KM	40000 MI 64000 KM	45000 MI 72000 KM	50000 MI 80000 KM	NOTES
Jiffy stand	Inspect and lubricate	X	X	X	X	X	X	X	X	X	X	X	2, 4
Clutch	Check adjustment	X	X	X	X	X	X	X	X	X	X	X	2, 4
Brake and clutch controls	Check, adjust and lubricate	X	X	X	X	X	X	X	X	X	X	X	
Rear wheel spokes (if equipped)	Check torque	X	X			X			X			X	2, 3, 4
Rear tire	Check pressure, inspect tread	X	X	X	X	X	X	X	X	X	X	X	1
Drive belt and sprockets	Inspect, adjust belt	X	X	X	X	X	X	X	X	X	X	X	2
Rear axle nut	Check torque	X		X		X		X		X		X	1, 2, 6
Exhaust system	Inspect for leaks, cracks, and loose or missing fasteners or exhaust shields	X	X	X	X	X	X	X	X	X	X	X	1, 4
Battery		Check battery, terminal torque and clean connections annually.											1
Spark plugs		Replace every two years or every 30,000 mi (48,000 km), whichever comes first.											
Front fork		Disassemble, inspect, rebuild forks and replace fork oil every 50,000 mi (80,000 km)											2
Fuel filter element		Replace every 100,000 mi (160,000 km)											2
Road test	Verify component and system functions	X	X	X	X	X	X	X	X	X	X	X	

NOTES:

1. Perform annually or at specified intervals, whichever comes first.
2. Should be performed by an authorized Harley-Davidson dealer, unless you have the proper tools, service data and are mechanically qualified.
3. Perform spoke tension check at the 1000 mi (1600 km), 5000 mi (8000 km), 20,000 mi (32,000 km) services and every 15,000 mi (24,000 km) interval thereafter. Not all vehicles are equipped with spoke wheels. Consult appropriate topic in service manual.
4. Perform maintenance more frequently in severe riding conditions (such as extreme temperatures, dusty environments, mountainous or rough roads, long storage conditions, short runs, heavy stop/go traffic or poor fuel quality).
5. Replace DOT 4 brake fluid and flush system every two years.
6. Attempt to turn the fastener using a torque wrench set to the minimum torque specification for that fastener. If fastener does not rotate, the fastener torque has been maintained. No further attention is necessary. If fastener moves, tighten to specification.
7. Disassemble, lubricate and inspect every 30,000 mi (48,000 km).

Table 1-5. Quick Reference Maintenance and Torque Chart

ITEM SERVICED	SPECIFICATION	DATA
Air cleaner	Bracket screw torque	40-60 **in-lbs** (4.5-6.8 Nm)
	Cover screw torque	36-60 **in-lbs** (4.1-6.8 Nm)
	Cover screw adhesive	LOCTITE 243 MEDIUM STRENGTH THREAD-LOCKER AND SEALANT (blue)
Axles	Front nut torque	70-75 ft-lbs (95.0-101.8 Nm)
	Rear nut torque	95-105 ft-lbs (128.1-142.4 Nm)
Battery	Lubricant	ELECTRICAL CONTACT LUBRICANT
	Terminal screw torque	60-72 **in-lbs** (6.8-8.1 Nm)

Table 1-5. Quick Reference Maintenance and Torque Chart

ITEM SERVICED	SPECIFICATION	DATA
Brakes	Fluid Type	DOT 4 hydraulic brake fluid
	Fluid level	1/4 ± 1/8 in. (6.35 ± 3.18 mm) from top
	Master cylinder, front, cover screw torque	12-15 **in-lbs** (1.4-1.7 Nm)
	Master cylinder, rear, cover screw torque	6-8 **in-lbs** (0.7-0.9 Nm)
	Caliper banjo bolt torque	17-22 ft-lbs (23.1-29.9 Nm)
	HCU banjo bolt torque	120-144 **in-lbs** (13.6-16.3 Nm)
	Master cylinder banjo bolt torque	17-22 ft-lbs (23.1-29.9 Nm)
	Minimum pad thickness	0.04 in. (1.02 mm)
	Minimum disc thickness	See stamp on side of disc
Cables, clutch and throttle	Lubricant	HARLEY LUBE
Clutch	Free play at adjuster screw	1/2-1 turn
	Adjuster screw jamnut torque	72-120 **in-lbs** (8.1-13.6 Nm)
	Free play at hand lever	1/16-1/8 in. (1.6-3.2 mm)
	Inspection cover screw torque	84-108 **in-lbs** (9.5-12.2 Nm)
Drive belt	Apply upward measurement force at midpoint of bottom belt strand	10 lb (4.5 kg)
	With motorcycle on Jiffy Stand without rider or luggage	FXSB, FLS, FLSTN, FLSTFB (LO): 1/4-5/16 in. (6.4-7.9 mm) FXST, FLSTC, FLSTF/B: 9/16-5/8 in. (14.3-15.9 mm)
Engine idle speed	Idle speed	950-1050 RPM
Engine oil and filter	Oil capacity (with filter)	3.0 qt (2.84 L) wet 3.5 qt (3.31 L) dry
	Filter	Hand tighten 1/2-3/4 turn after gasket contact
	Drain plug torque	14-21 ft-lbs (19.0-28.5 Nm)
Fork, front	Oil type	HYDRAULIC FORK OIL (TYPE E) See 2.19 FRONT FORK.
	Lower pinch bolt torque: all but FXSB	55-60 ft-lbs (74.6-81.4 Nm)
	Lower pinch bolt torque: FXSB	30-35 ft-lbs (40.7-47.5 Nm)
	Upper pinch bolt torque: all but FXSB	25-30 ft-lbs (33.9-40.7 Nm)
	Upper pinch bolt torque: FXSB	30-35 ft-lbs (40.7-47.5 Nm)
Handlebar/hand controls	Handlebar clamp screw torque	12-15 ft-lbs (16.3-20.3 Nm)
	Switch housing screw torque	35-45 **in-lbs** (4.0-5.1 Nm)
	Clutch lever clamp screw torque	60-80 **in-lbs** (6.8-9.0 Nm)
	Master cylinder lever clamp screw torque	60-80 **in-lbs** (6.8-9.0 Nm)
Primary chaincase	Lubricant type	FORMULA+ TRANSMISSION AND PRIMARY CHAIN LUBRICATION
	Lubricant capacity	32 oz (0.95 L) wet 40 oz (1.18 L) dry
	Drain plug torque	14-21 ft-lbs (19.0-28.5 Nm)
Spark plugs	Type	HD-6R12
	Gap	0.038-0.043 in. (0.97-1.09 mm)
	Torque	12-18 ft-lbs (16.3-24.4 Nm)
Steering head bearings	Lubricant for neck fitting	SPECIAL PURPOSE GREASE

Table 1-5. Quick Reference Maintenance and Torque Chart

ITEM SERVICED	SPECIFICATION	DATA
Transmission	Lubricant level (cold)	Dipstick between ADD and FULL marks with motorcycle on jiffy stand. Thread dipstick in until O-ring makes contact with case. Do not tighten.
	Lubricant type and capacity *	FORMULA+ TRANSMISSION AND PRIMARY CHAIN LUBRICATION or SYN3 20W50 OIL 32 oz (0.95 L)
	Drain plug Torque	14-21 ft-lbs (19.0-28.5 Nm)
	Filler plug torque	25-75 **in-lbs** (2.8-8.5 Nm)
Tires	Pressure for rider and passenger	FLSTC, FLSTN, FLS Models: Front: 36 psi (248 kPa) Rear: 40 psi (276 kPa)
		FXST Model: Front: 30 psi (207 kPa) Rear: 42 psi (290 kPa)
		FLSTF/B Models: Front: 36 psi (248 kPa) Rear: 42 psi (290 kPa)
		FXSB Models: Front: 36 psi (248 kPa) Rear: 42 psi (290 kPa)
	Wear	Replace tire if 1/32 in. (0.8 mm) or less of tread pattern remains.
Wheel spokes	Nipple torque (minimum)	Steel laced wheel: 55 **in-lbs** (6.2 Nm)
		Chrome aluminum laced wheel: 55 **in-lbs** (6.2 Nm)
* Capacity is approximate. When changing lubricant, initially add 28 oz (0.83 L). Check and fill as necessary.		

Table 1-6. Lubricants, Greases, Sealants

ITEM	PART NUMBER	PACKAGE
3M 847 Adhesive	021200-19718 *	5 oz tube
3M General Purpose Adhesive Remover		15 oz aerosol
Anti-Seize Lubricant	98960-97	1 oz squeeze tube
CCI #20 Brake Grease	42830-05	squeeze packet (included in master cylinder rebuild kit)
DOT 4 Brake Fluid	99953-99A	12 oz bottle
Dow Corning Moly 44 Grease	94674-99	2 cc packet
Electrical Contact Lubricant	11300004	1 oz squeeze tube
Formula+ Transmission and Primary Chaincase Lubricant	99851-05	1 qt bottle
G40M Brake Grease	42820-04	squeeze packet
Genuine Harley-Davidson Extended Life Antifreeze and Coolant	99822-02	1 gal container
Genuine Harley-Davidson H-D 360 20W50 Motorcycle Oil	99816-2050/00QT	1 qt bottle
Harley-Davidson Adhesive (Griplock)	99839-95	10 g tube
Harley-Davidson High Performance Sealant - Gray	99650-02	1.9 oz squeeze tube

Table 1-6. Lubricants, Greases, Sealants

ITEM	PART NUMBER	PACKAGE
Harley-Davidson Leather Dressing	98261-91V	6 oz can
Harley-Davidson Seal Grease	11300005	1 oz tube
Harley Lube	94968-09	1/4 oz needle dispenser
Hylomar Gasket and Thread Sealant	99653-85	3.5 oz tube
Loctite 222 Low Strength Threadlocker and Sealant (purple)	99811-97	6 mL tube
Loctite 243 Medium Strength Threadlocker and Sealant (blue)	99642-97	6 mL tube
	11100005	50 mL bottle
Loctite 246 Medium Strength/High Temperature Threadlocker (blue)		
Loctite 262 High Strength Threadlocker and Sealant (red)	94759-99	6 mL tube
Loctite 271 High Strength Threadlocker and Sealant (red)		6 mL tube
	11100006	50 mL bottle
Loctite 411 Prism Instant Adhesive		
Loctite 420 Super Bonder Adhesive		
Loctite 565 Thread Sealant	99818-97	6 mL tube
Loctite 770 Prism Primer		
Loctite 7649 Cleaner/Primer	98968-99	1.75 oz bottle
RTV Silicone Sealer	99650-02	1.9 oz tube
Screamin' Eagle Assembly Lube	11300002	4 oz bottle
Screamin' Eagle SYN3 Full Synthetic Motorcycle Lubricant 20W50	99824-03/00QT	1 qt bottle
Special Purpose Grease	99857-97A	14 oz cartridge
Type "E" Hydraulic Fork Oil	62600026	16 oz bottle
Wheel Bearing Grease	99855-89	1 lb can
	99856-92	14 oz cartridge
* Not a Harley-Davidson part number		

CHECKING AND ADDING OIL

NOTICE

Oil level cannot be accurately measured on a cold engine. For pre-ride inspection, with motorcycle leaning on jiffy stand on level ground, oil should register on dipstick between arrows when engine is cold. Do not add oil to bring the level to the FULL mark on a COLD engine. (00185a)

NOTICE

Do not allow hot oil level to fall below Add/Fill mark on dipstick. Doing so can result in equipment damage and/or equipment malfunction. (00189a)

NOTICE

Do not overfill oil. Doing so can result in oil carryover to the air cleaner leading to equipment damage and/or equipment malfunction. (00190b)

1. Ride motorcycle until engine is warmed up to operating temperature.
2. Idle motorcycle on jiffy stand for 1-2 minutes.
3. Shut motorcycle off and leave motorcycle **resting on jiffy stand**.
4. See Figure 1-2. Check oil level on dipstick. If necessary, add oil until oil registers at upper groove on dipstick (FULL HOT). Do not overfill oil tank.

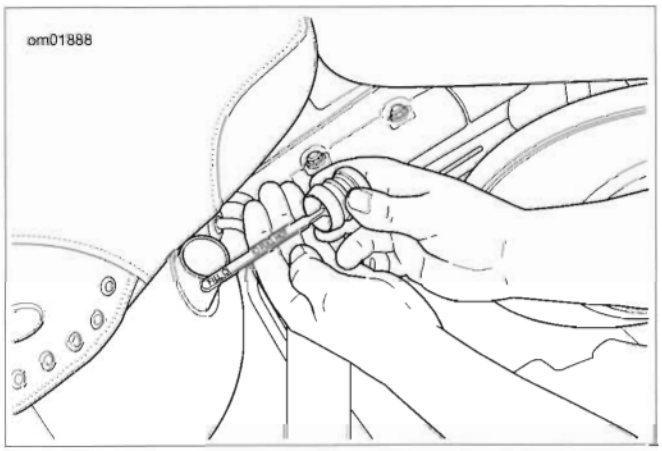

Figure 1-1. Checking Oil Tank Level

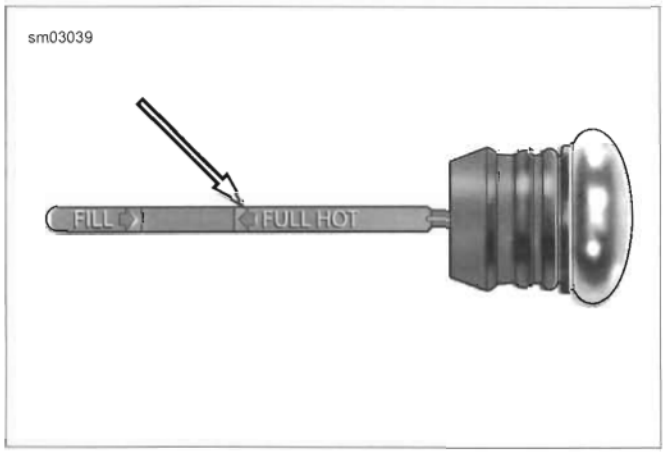

Figure 1-2. Oil Tank Dipstick Upper Groove

CHANGING OIL AND FILTER

PART NUMBER	TOOL NAME
HD-42311	OIL FILTER WRENCH
HD-44067	OIL FILTER WRENCH

FASTENER	TORQUE VALUE	
Engine oil drain plug	14-21 ft-lbs	19.0-28.5 Nm

NOTES

- *Change engine oil at shorter intervals if ridden extremely hard, used in competition or driven on dusty roads.*
- *All Softail models are shipped from the factory with SAE 20W50 Harley-Davidson 360 Motor Oil.*
- *Softail models come equipped from the factory with a premium 5 micron synthetic media oil filter, Part No. 63798-99A (Chrome) or 63731-99A (Black). These are the only recommended replacement filters.*

1. Run motorcycle until engine is at normal operating temperature.
2. See Figure 1-1. Remove the engine oil dipstick.
3. See Figure 1-3. Remove the engine oil drain plug with O-ring (2). Drain engine oil.

NOTICE

Use Harley-Davidson oil filter wrench for filter removal. This tool can prevent damage to crankshaft position sensor and/or sensor cable. (00192b)

4. See Figure 1-4. Remove the oil filter using the OIL FILTER WRENCH (Part No. HD-42311) or OIL FILTER WRENCH (Part No. HD-44067). Clean the oil filter mounting surface of any old gasket material.
5. See Figure 1-5. Lubricate the gasket on **new** oil filter with engine oil. Install filter. Hand tighten oil filter 1/2 to 3/4 turn after gasket contacts filter mounting surface. **Do not** use oil filter wrench for oil filter installation.

6. See Figure 1-3. Install oil tank drain plug (2).
   a. Inspect O-ring for tears or damage. Replace if necessary. Clean magnetic drain plug.
   b. Install O-ring and drain plug. Tighten to 14-21 ft-lbs (19.0-28.5 Nm).
7. Refer to Table 1-7. Initially add 2.0 quarts (1.90 liters) of engine oil. Use the proper grade of oil for the lowest temperature expected before the next oil change. Refer to Table 1-2.

Table 1-7. Engine Oil Capacity

ITEM	CAPACITY
Engine oil (wet refill)	3.0 qt (2.84 L)
Engine oil (dry refill)	3.5 qt (3.31 L)
Use wet capacity values for engines that have just had the oil drained. Use dry capacity values for engines that have been disassembled, cleaned in solvent and dried.	

8. See Figure 1-1. Fully install oil filler plug/dipstick in oil tank.
9. Perform engine oil level hot check.
10. See Figure 1-2. Add engine oil to bring oil level to the upper groove on the dipstick (FULL HOT).
11. Start engine and carefully check for oil leaks around drain plug and oil filter.

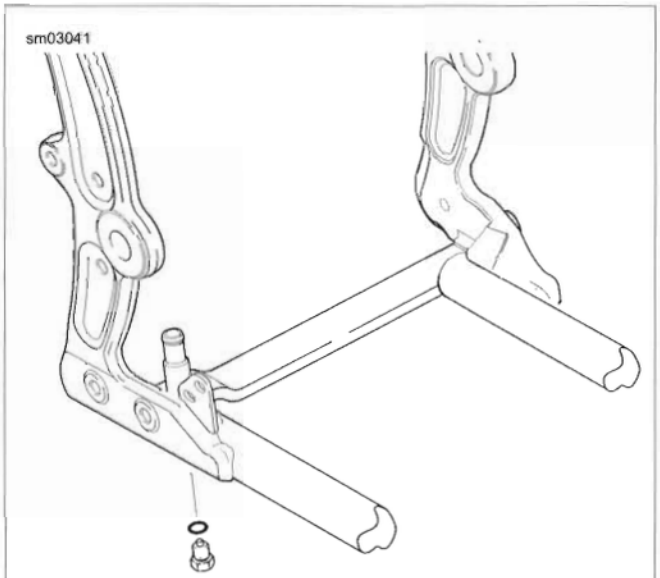

1. **Frame connection for oil tank drain hose**
2. **Oil tank drain plug and O-ring**

Figure 1-3. Oil Tank Drain Plug

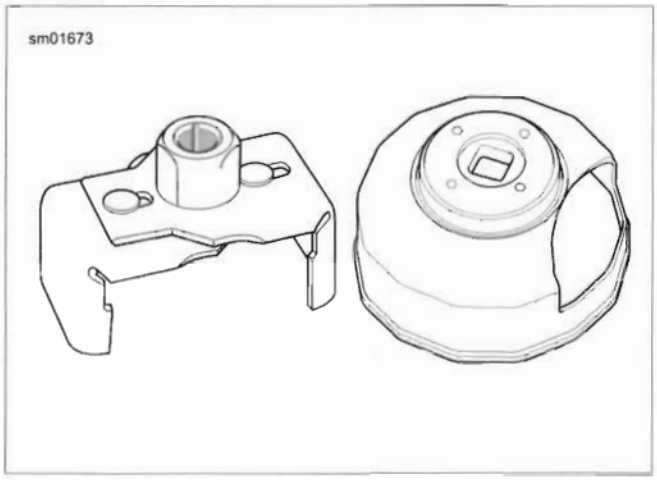

Figure 1-4. Oil Filter Wrenches

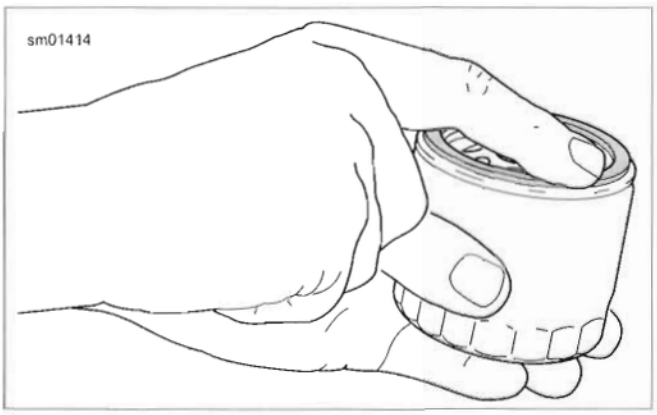

Figure 1-5. Lubricating New Oil Filter Gasket

REMOVAL

1. See Figure 1-6. Remove screw (1) and air cleaner cover (2).
2. Remove three screws (4) and bracket (5) from filter element (6).
3. Gently pull both rubber breather hoses (9) from the element. Remove filter element (6) and gasket (7).
4. Replace the filter element if damaged or if filter media cannot be adequately cleaned.

Cleaning and Inspection

⚠WARNING

Do not use gasoline or solvents to clean filter element. Flammable cleaning agents can cause an intake system fire, which could result in death or serious injury. (00101a)

1. Gently pull the breather hoses from the breather bolts on the backplate (8).

⚠WARNING

Compressed air can pierce the skin and flying debris from compressed air could cause serious eye injury. Wear safety glasses when working with compressed air. Never use your hand to check for air leaks or to determine air flow rates. (00061a)

2. Clean filter element.
   a. Wash the paper/wire mesh air filter element and breather hoses in lukewarm water with a mild detergent. Do not strike filter element on a hard surface to dislodge dirt.
   b. Allow filter to either air dry or blow it dry, from the inside, with low pressure air. Do not use air cleaner filter oil on the Harley-Davidson paper/wire mesh air filter element.
   c. Hold the filter element up to a strong light source. If light is uniformly visible through the element, it is sufficiently clean.
3. Inspect seal ring (3) on cover for cracks or tears. Verify that it seals tightly to backplate. Replace as required.
4. Inspect breather hoses for tears, cuts, holes or other damage. Replace as necessary.

NOTE

The breather hoses allow crankcase vapors to be directed into the air filter element. Unless breather hoses are properly mounted, crankcase vapors can be vented into the atmosphere. This is a violation of legal emissions standards. This will also cause problems with the engine's breather system. It will cause the umbrella valve to flutter.

5. Wipe inside of air cleaner cover and backplate with damp cloth to remove dust.

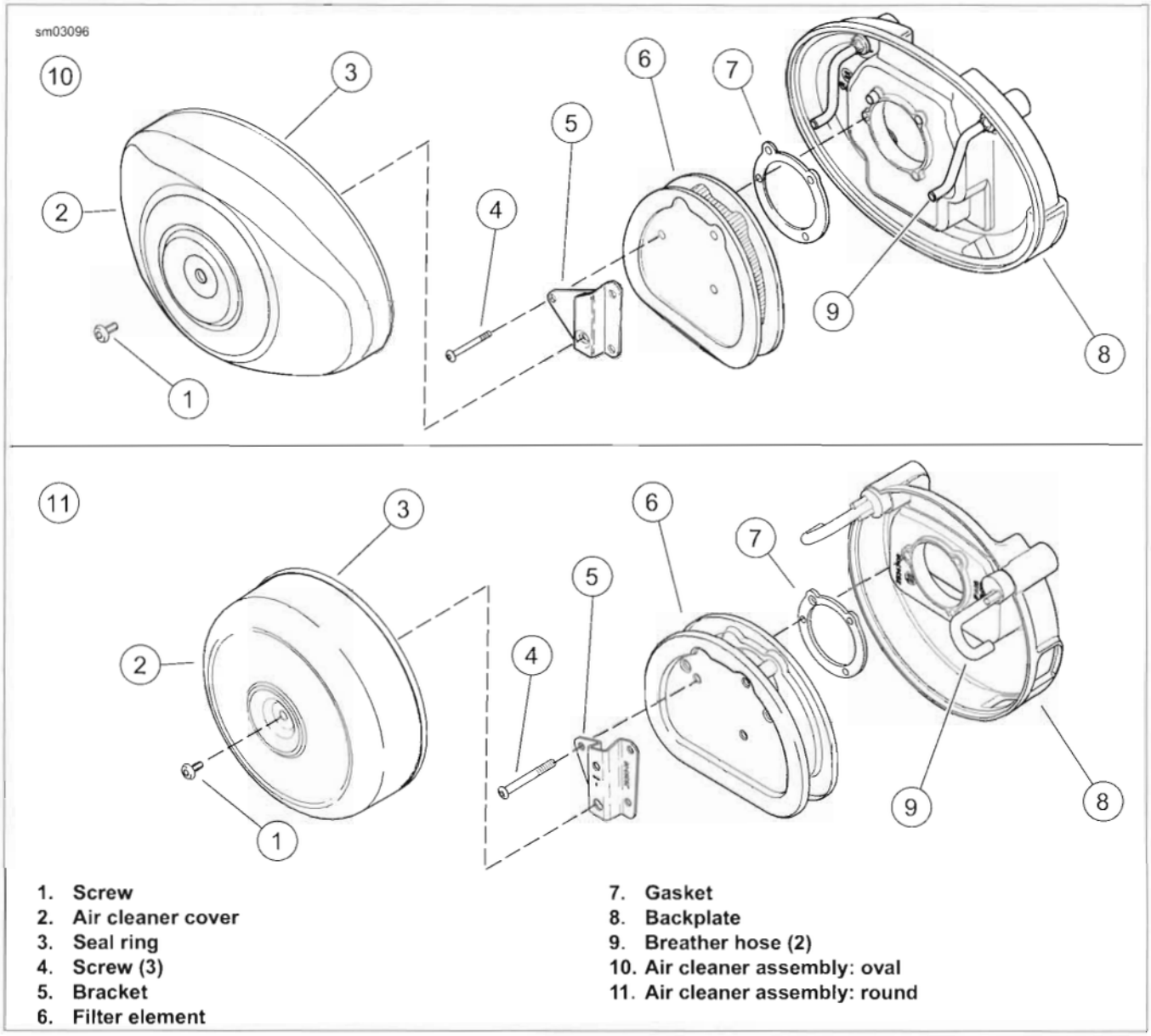

1. **Screw**
2. **Air cleaner cover**
3. **Seal ring**
4. **Screw (3)**
5. **Bracket**
6. **Filter element**
7. **Gasket**
8. **Backplate**
9. **Breather hose (2)**
10. **Air cleaner assembly: oval**
11. **Air cleaner assembly: round**

Figure 1-6. Air Cleaner Assembly

INSTALLATION

FASTENER	TORQUE VALUE	
Air cleaner bracket screws	40-60 **in-lbs**	4.5-6.8 Nm
Air cleaner cover screw	36-60 **in-lbs**	4.1-6.8 Nm

1. See Figure 1-**7**. Position **new** gasket on backplate.
2. **Oval air cleaner:** See Figure 1-8. Insert two breather hoses into the holes in back of the filter element and place the element back into position. Attach breather hoses to breather screws on backplate.
3. **Round air cleaner:** Place filter element back into position on backplate and then insert two breather hoses into the holes on front of the filter element. Place breather hoses on breather screws on backplate.
4. See Figure 1-6. Install air filter element and bracket.
   a. Make sure gasket holes are aligned with backplate holes.
   b. Use three screws (4) to secure bracket and filter element. Tighten to 40-60 **in-lbs** (4.5-6.8 Nm).
5. Install air filter cover (2).
   a. Apply a drop of LOCTITE 243 MEDIUM STRENGTH THREADLOCKER AND SEALANT (blue) to threads of air cleaner cover screw (1).
   b. Install air cleaner cover using screw. Tighten to 36-60 **in-lbs** (4.1-6.8 Nm).

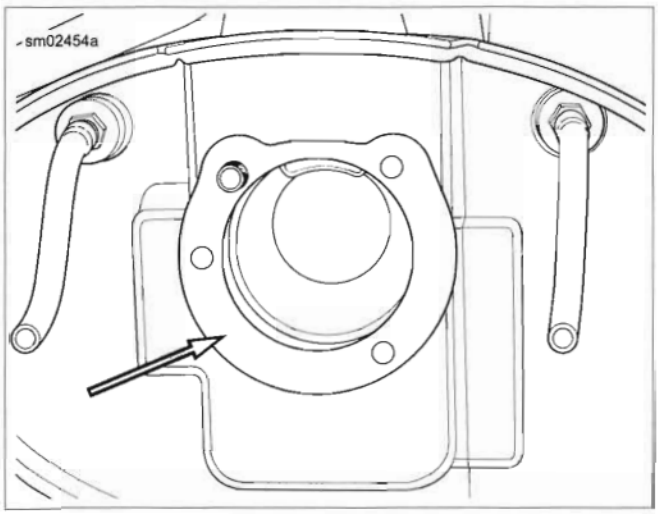

Figure 1-7. Gasket (Typical)

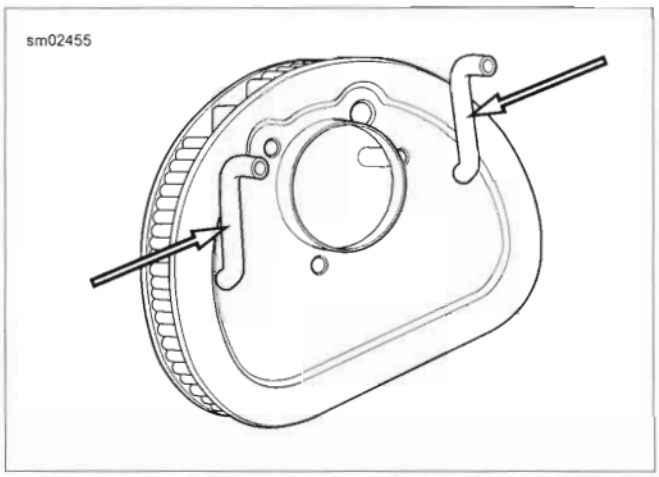

Figure 1-8. Breather Tubes on Backside of Filter

EXHAUST SYSTEM LEAK CHECK

Check exhaust system for leaks at every scheduled service interval.

1. Check entire exhaust system for loose or missing fasteners and fractured pipe clamps or brackets. Check exhaust system for obvious signs of leakage such as carbon tracks at pipe joints.
2. Check for loose or fractured exhaust shields. Replace or repair as necessary.
3. Start engine, cover muffler ends with clean, dry shop towels and listen for audible signs of exhaust leakage.
4. Correct any leaks detected.

Exhaust System Leakage

If an exhaust system leak is evident at a muffler or header pipe connection, disassemble and clean all mating surfaces. See 4.17 EXHAUST SYSTEM.

- Replace any damaged components and assemble.
- If leak continues, disassemble and apply Permatex Ultra Copper or LOCTITE 5920 FLANGE SEALANT. If neither are available, use an equivalent oxygen sensor/catalyst-safe alternative.
- Assemble components. Wipe off any excess sealant.
- Follow sealant product instructions. Allow adequate curing time before operating vehicle.

GENERAL

⚠WARNING

Match tires, tubes, rim strips or seals, air valves and caps to the correct wheel. Contact a Harley-Davidson dealer. Mismatching can lead to tire damage, allow tire slippage on the wheel or cause tire failure, which could result in death or serious injury. (00023c)

⚠WARNING

Be sure tires are properly inflated, balanced, undamaged, and have adequate tread. Inspect your tires regularly and see a Harley-Davidson dealer for replacements. Riding with excessively worn, unbalanced, improperly inflated, overloaded or damaged tires can lead to tire failure and adversely affect stability and handling, which could result in death or serious injury. (00014b)

⚠WARNING

Do not use liquid tire balancers or sealants in aluminum wheels. Using liquid tire balancers or sealants can cause rapid corrosion of the rim surface, which could cause tire deflation. Tire deflation can cause loss of vehicle control, which could result in death or serious injury. (00631b)

Always maintain proper tire pressure as specified in Table 1-8. Do not load tires beyond GAWR specified in Table 2-4 and Table 2-5. Underinflated, over-inflated or overloaded tires can fail.

Use only tires listed in Table 1-8.

NOTE

ABS equipped motorcycles must always use properly inflated tires and wheels that are the same as the original equipment. The ABS system monitors rotational speed of the wheels through individual wheel speed sensors to determine the application of ABS.

Different diameter wheels or tires can:

- *Alter the rotational speed which can upset the calibration of the ABS.*
- *Adversely affect its ability to detect and prevent lockups.*

Operating with inflation pressure other than those specified in Table 1-8 can reduce ABS performance.

TIRES

⚠WARNING

Use only Harley-Davidson specified tires. See a Harley-Davidson dealer. Using non-specified tires can adversely affect stability, handling or braking, which could result in death or serious injury. (00024b)

NOTES

- *Tubeless tires are used on all Harley-Davidson cast and disc wheels, and tubeless profile laced wheels with MTM designation.*
- *Tire sizes are molded on the tire sidewall. Inner tube sizes are printed on the tube.*
- ***New** tires should be stored on a horizontal tire rack. Avoid stacking **new** tires in a vertical stack. The weight of the stack compresses the tires and closes down the beads.*

Check tire pressure and tread:

- As part of the pre-ride inspection.
- At every scheduled service interval.

1. Inspect each tire for punctures, cuts and breaks.
2. Inspect each tire for wear. Replace tires before they reach the tread wear indicator bars.

⚠WARNING

Be sure tires are properly inflated, balanced, undamaged, and have adequate tread. Inspect your tires regularly and see a Harley-Davidson dealer for replacements. Riding with excessively worn, unbalanced, improperly inflated, overloaded or damaged tires can lead to tire failure and adversely affect stability and handling, which could result in death or serious injury. (00014b)

NOTE

Missing indicator wear bars represent less than 1/32 in. (0.8 mm) tread pattern depth remaining.

3. Check for proper front and rear tire pressures when tires are cold. Compare results against Table 1-8.

NOTE

Harley-Davidson does not perform any testing with only nitrogen in tires. Harley-Davidson neither recommends nor discourages the use of pure nitrogen to inflate tires.

Table 1-8. Specified Tires

MODEL	MOUNT	SIZE	SPECIFIED TIRE	PRESSURE (COLD)	
				psi	kPa
FLSTC, FLS	front	16 in	Dunlop D402F MT90B16	36	248
FLSTN, FLSTC (whitewall)	front	16 in	Dunlop D402F MT90B16	36	248
FLSTF, FLSTFB	front	17 in	Dunlop D408F 140/75R17	36	248
FXST	front	21 in	Dunlop D408F MH90-21	30	207
FXSB	front	21 in	Dunlop D408F 130/60B21	36	248

Table 1-8. Specified Tires

MODEL	MOUNT	SIZE	SPECIFIED TIRE	PRESSURE (COLD)	
				psi	kPa
FLSTC	rear	16 in	Dunlop D401 150/80B16	40	276
FLSTN, FLSTC (whitewall)	rear	16 in	Dunlop D402 MU85B16	40	276
FLS	rear	16 in	Dunlop D402 MU85B16	40	276
FLSTF, FXST, FLSTFB	rear	17 in	Dunlop D407 200/55R17	42	290
FXSB	rear	18 in	Dunlop D407 240/40R18	42	290

TIRE REPLACEMENT

Inspection

⚠WARNING

Replace tire immediately with a Harley-Davidson specified tire when wear bars become visible or only 1/32 in (0.8 mm) tread depth remains. Riding with a worn tire could result in death or serious injury. (00090c)

Harley-Davidson tires are equipped with wear bars that run horizontally across the tread. When a tire is worn to the point that the wear bars are visible, or 1/32 in. (0.8 mm) tread depth remains, the tire can:

- Be more easily damaged leading to tire failure.
- Provide reduced traction.
- Adversely affect stability and handling.

Arrows on tire sidewalls pinpoint location of wear bar indicators.

When To Replace Tires

New tires are needed if any of the following conditions exist:

1. Tread wear indicator bars become visible on the tread surfaces.
2. Tire cords or fabric become visible through cracked sidewalls, snags or deep cuts.
3. A bump, bulge or split in the tire.
4. Puncture, cut or other damage to the tire that cannot be repaired.

NOTES

- *When installing tires on rims, do not rely on tread design to determine direction of rotation. Always be sure the rotational arrows molded into the sidewalls point in the direction of rotation when the vehicle is moving forward.*
- *Never install a tire and inner tube on a laced rim with TUBELESS and MTM designations etched into the rim. These rims are specially designed for tubeless use only.*
- *Replace rim strip and rim seal whenever the tire is removed.*

WHEEL BEARINGS

NOTE

Replace bearings in sets only. See 2.8 SEALED WHEEL BEARINGS.

1. Replace when bearings exceed end play service wear limit of 0.002 in (0.051 mm).
2. Inspect any time the wheels are removed.
   a. Inspect the play of the wheel bearings by finger while they are in the wheel.
   b. Rotate the inner bearing race and check for abnormal noise.
   c. Make sure bearing rotates smoothly.
3. Check wheel bearings and axle spacers for wear and corrosion. Excessive play or roughness indicates worn bearings.

WHEEL SPOKES

PART NUMBER	TOOL NAME
HD-48985	SPOKE TORQUE WRENCH
HD-94681-80	SPOKE NIPPLE WRENCH

FASTENER	TORQUE VALUE	
Spoke nipple	55 in-lbs	6.2 Nm

⚠WARNING

Spokes that are too tight can draw nipples through the rim or distort hub flanges. Spokes that are too loose can continue to loosen when put in service. Either condition can adversely affect stability and handling, which could result in death or serious injury. (00286a)

⚠WARNING

Do not over tighten spoke nipples. Protruding spoke nipples can damage rim seal, resulting in rapid tire deflation, which could cause death or serious injury. (00511b)

NOTICE

When lifting a motorcycle using a jack, be sure jack contacts both lower frame tubes where down tubes and lower frame tubes converge. Never lift by jacking on crossmembers, oil pan, mounting brackets, components or housings. Failure to comply can cause serious damage resulting in the need to perform major repair work. (00586d)

Identify Wheel Spoke Groups

NOTE

Spokes are grouped in sets of four.

1. Raise wheel with a suitable lifting device.
2. See Figure 1-9. Starting at the valve stem, identify the first group of four spokes (1-4).
3. Using a different color for each spoke in the group, draw an alignment mark across the spoke nipple and onto the rim.
4. Continue around the wheel marking the rest of the spokes the same as they were marked in the previous way.

Wheel Spoke Adjustment

NOTES

- *Do not tighten spoke more than 1/4 turn past alignment mark. If more tension is needed, label spoke and check after completing rest of wheel.*
- *Do not use the spoke torque wrench to loosen spokes. Use SPOKE NIPPLE WRENCH (Part No. HD-94681-80) to loosen spokes.*

1. See Figure 1-9. Starting with the first group of spokes, loosen spoke (1) 1/4 turn using SPOKE NIPPLE WRENCH (Part No. HD-94681-80).
2. Using SPOKE TORQUE WRENCH (Part No. HD-48985) tighten spoke (1) to the value listed in Table 1-9.
   a. While tightening, if the torque wrench clicks before the alignment marks align, continue to turn the spoke nipple until the marks align.
   b. If the alignment marks align and the torque specification has not been reached, continue to tighten the spoke nipple until the correct torque is achieved, but do not turn spoke nipple more than 1/4 turn past alignment mark.
3. Repeat previous two steps for spoke (4) in the same group.
4. Continue around the wheel checking spokes 1 and 4 until all groups are done.
5. Repeat procedure for spokes (2, 3) in each group.

NOTE

When checking any spokes that were labeled, make sure to use the original alignment mark.

6. Check spokes, if any, that were labeled as not reaching the proper torque value after tightening 1/4 turn past alignment mark.
   a. Loosen spoke 1/4 turn past original alignment mark using SPOKE NIPPLE WRENCH (Part No. HD-94681-80).
   b. While tightening, if the torque wrench clicks before the alignment marks align, continue to turn the spoke nipple until the marks align.
   c. If the alignment marks align and the torque specification has not been reached, continue to tighten the spoke nipple until the correct torque is achieved, but do not turn spoke nipple more than 1/4 turn past alignment mark.
7. True the wheel. See 2.7 CHECKING AND TRUING WHEELS.

Table 1-9. Spoke Nipple Torque Specification

RIM TYPE	MINIMUM TORQUE
All	55 **in-lbs** (6.2 Nm)

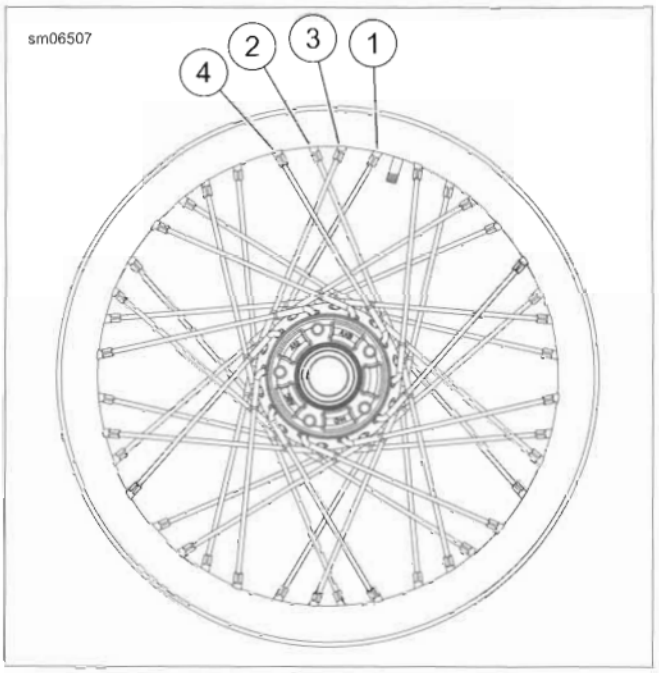

Figure 1-9. Tightening Laced Wheels (typical)

GENERAL

All models have an automatic chain tensioner. For primary chain service procedures, see 5.4 DRIVE COMPONENTS.

CHANGING PRIMARY CHAINCASE LUBRICANT

FASTENER	TORQUE VALUE	
Primary chaincase drain plug	14-21 ft-lbs	19.0-28.5 Nm
Clutch inspection cover screws	84-108 **in-lbs**	9.5-12.2 Nm

1. Run motorcycle until engine is at normal operating temperature.
2. Turn off ignition switch and STOP/RUN switch.

⚠WARNING

Be sure that no lubricants or fluids get on tires, wheels or brakes when changing fluid. Traction can be adversely affected, which could result in loss of control of the motorcycle and death or serious injury. (00047d)

NOTICE

When draining or adding lubricant, do not allow dirt, debris or other contaminants to enter the engine. (00198a)

3. See Figure 1-10. Drain primary chaincase.
4. Clean drain plug. If plug has accumulated much debris, inspect the condition of chaincase components.
5. Install **new** O-ring on drain plug.
6. Install drain plug into primary chaincase cover. Tighten to 14-21 ft-lbs (19.0-28.5 Nm).

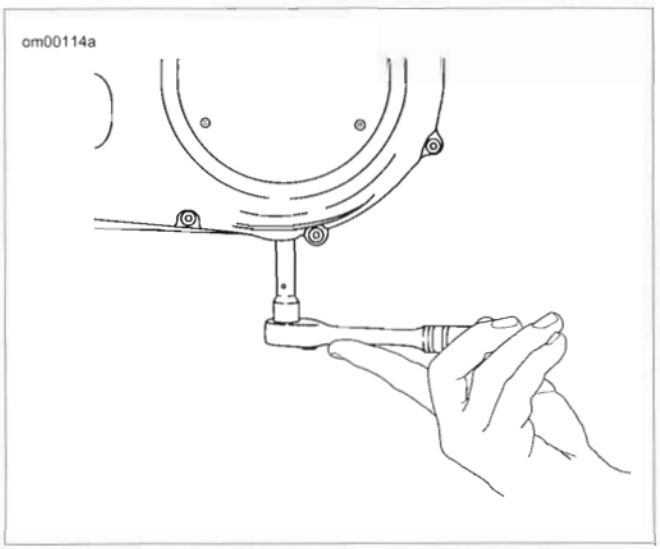

Figure 1-10. Removal/Installation of Chaincase Drain Plug

7. See Figure 1-11. Remove screws and captive washers (3) and clutch inspection cover (2).
8. Remove seal (1). Wipe oil from groove in chaincase cover and mounting surface.

NOTICE

Do not overfill the primary chaincase with lubricant. Overfilling can cause rough clutch engagement, incomplete disengagement, clutch drag and/or difficulty in finding neutral at engine idle. (00199b)

9. Place motorcycle in an upright position to fill primary chaincase.
10. Pour specified amount of FORMULA+ TRANSMISSION AND PRIMARY CHAINCASE LUBRICANT through clutch inspection cover opening. Refer to Table 1-10.

Table 1-10. Primary Chaincase Lubricant Refill Capacity

ITEM	CAPACITY
Primary chaincase lubricant	32 oz (0.95 L) wet
	40 oz (1.18 L) dry

11. Install clutch inspection cover and **new** seal:
    a. Thoroughly wipe all lubricant from cover mounting surface and groove in chaincase cover.
    b. See Figure 1-11. Position **new** seal (1) in groove in clutch inspection cover. Press each of the nubs on seal into the groove.
    c. Secure inspection cover with screws and captive washers (3).
    d. See Figure 1-12. Tighten in sequence shown to 84-108 **in-lbs** (9.5-12.2 Nm).

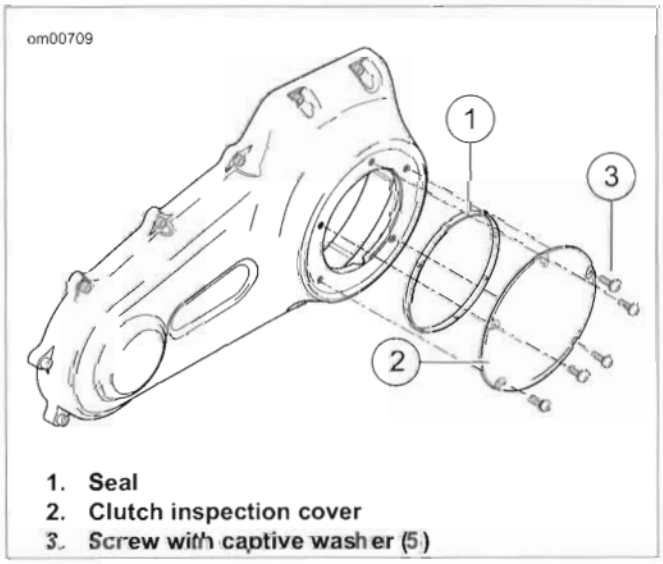

1. **Seal**
2. **Clutch inspection cover**
3. **Screw with captive washer (5)**

Figure 1-11. Clutch Cover

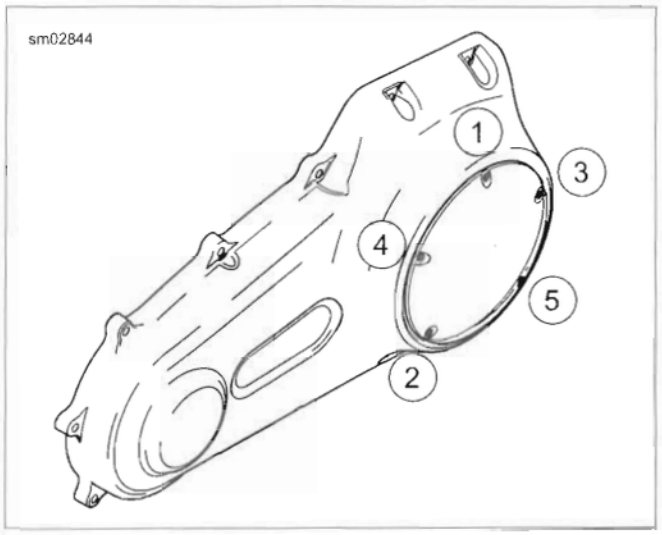

Figure 1-12. Clutch Cover Torque Sequence

CHECKING TRANSMISSION LUBRICANT

FASTENER	TORQUE VALUE	
Transmission filler plug/dipstick	25-75 **in-lbs**	2.8-8.5 Nm

NOTE

Check transmission fluid with the motorcycle at room temperature.

1. Park on level ground on the jiffy stand.
2. See Figure 1-13. Remove transmission lubricant dipstick. Wipe dipstick clean.
3. Insert dipstick into transmission. Thread dipstick in until O-ring makes contact with case. Do not tighten.
4. See Figure 1-14. Remove dipstick. Check lubricant level on dipstick.

NOTICE

Mixing mineral-based lubricants with SYN-3 in the transmission can damage the transmission. (00452b)

5. The level should be between the A and F marks. Add only enough lubricant to bring level to between the A mark and the F mark. Refer to Table 1-11.
6. Install dipstick. Tighten to 25-75 **in-lbs** (2.8-8.5 Nm).

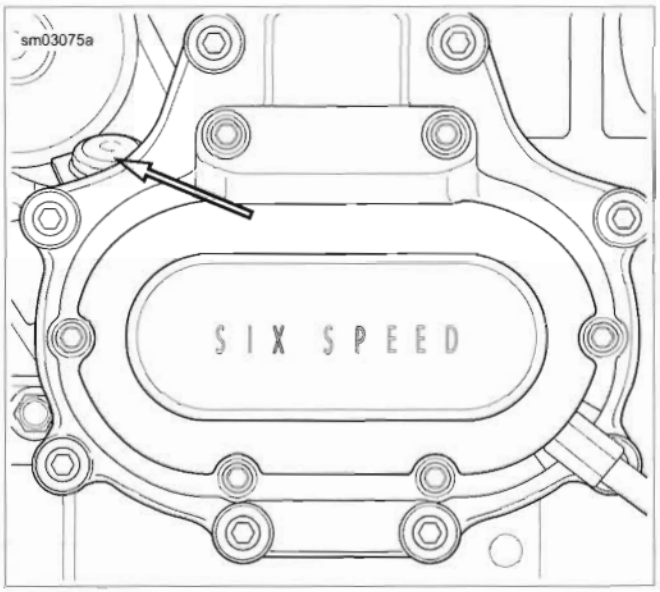

Figure 1-13. Transmission Lubricant Check/Fill

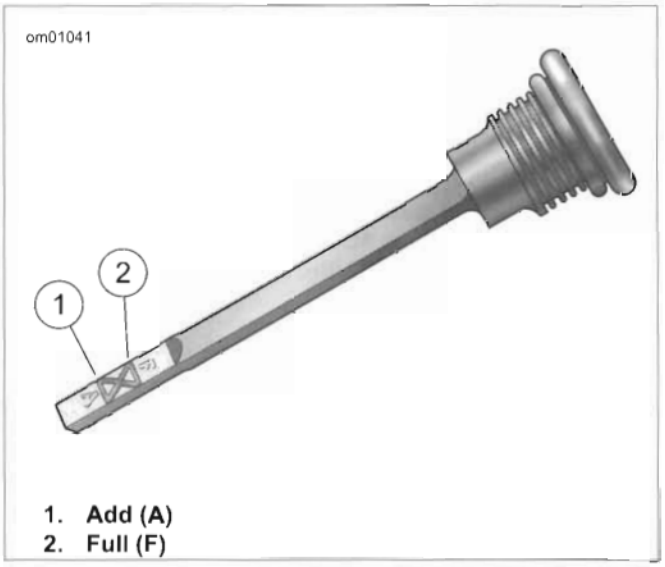

1. **Add (A)**
2. **Full (F)**

Figure 1-14. Transmission Dipstick Lubricant Level

Table 1-11. Recommended Lubricant

LUBRICANT	REFILL QUANTITY *
FORMULA+ TRANSMISSION AND PRIMARY CHAIN LUBRICANT or SCREAMIN' EAGLE SYN3 FULL SYNTHETIC MOTORCYCLE LUBRICANT 20W50	28 oz (0.83 L)
*Approximate. Check and add as needed to bring level within specification.	

CHANGING TRANSMISSION LUBRICANT

FASTENER	TORQUE VALUE	
Transmission drain plug	14-21 ft-lbs	19.0-28.5 Nm
Transmission filler plug/dipstick	25-75 **in-lbs**	2.8-8.5 Nm

1. See Figure 1-13. Remove transmission filler plug/dipstick.

⚠WARNING

Be sure that no lubricants or fluids get on tires, wheels or brakes when changing fluid. Traction can be adversely affected, which could result in loss of control of the motorcycle and death or serious injury. (00047d)

NOTICE

When draining or adding lubricant, do not allow dirt, debris or other contaminants to enter the engine. (00198a)

2. See Figure 1-15. Remove transmission drain plug. Drain primary chaincase.
3. Clean and inspect drain plug and O-ring.

NOTICE

Do not over-tighten filler or drain plug. Doing so could result in a lubricant leak. (00200b)

4. Install drain plug with O-ring. Tighten to 14-21 ft-lbs (19.0-28.5 Nm). Do not over-tighten.
5. Fill the transmission with 28 oz (0.83 L) of recommended Harley-Davidson lubricant. Refer to Table 1-11.
6. Check lubricant level and add enough lubricant to bring the level between the ADD (A) and FULL (F) marks. See 1.10 TRANSMISSION LUBRICANT, Checking Transmission Lubricant.
7. Install filler plug/dipstick. Tighten to 25-75 **in-lbs** (2.8-8.5 Nm).

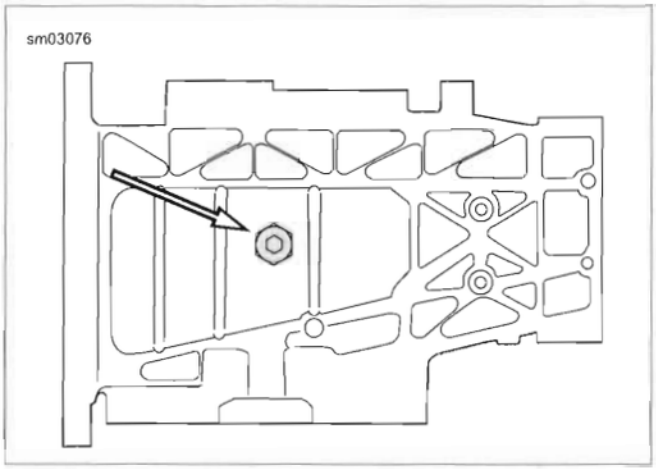

Figure 1-15. Transmission Drain Plug (Bottom View)

ADJUSTMENT

FASTENER	TORQUE VALUE	
Clutch adjuster screw jamnut	72-120 **in-lbs**	8.1-13.6 Nm
Clutch cable adjuster jamnut	120 **in-lbs**	13.6 Nm
Clutch inspection cover screws	84-108 **in-lbs**	9.5-12.2 Nm

NOTES

- *Perform clutch adjustment with motorcycle at room temperature.*
- *Clearance at adjuster screw will increase as powertrain temperature increases.*
- *If adjuster screw is adjusted with powertrain hot, clutch slippage could occur when powertrain is cold.*

1. Position motorcycle on a suitable lift, upright and level. Point front wheel straight ahead.
2. Remove clutch inspection cover.
3. Remove and discard seal.
4. See Figure 1-16. Add free play to cable.
   a. Slide rubber boot (1) off cable adjuster.
   b. Loosen jamnut (3).
   c. Turn cable adjuster (2) until there is a large amount of free play at clutch hand lever.
5. See Figure 1-17. Loosen jamnut (1) on clutch adjuster screw (2). To take up all free play, turn screw inward (clockwise) until lightly seated. Activate the clutch lever to verify the balls are seated in the ramps.
6. Back out adjusting screw (counterclockwise) 1/2 to 1 full turn. Tighten jamnut to 72-120 **in-lbs** (8.1-13.6 Nm), while holding adjusting screw with an Allen wrench.
7. Squeeze clutch lever to maximum limit three times, to set ball and ramp release mechanism.
8. Check free play.
   a. Turn cable adjuster away from jamnut until slack is eliminated at hand lever.
   b. See Figure 1-18. Pull clutch cable ferrule (2) away from clutch lever bracket (3) to check free play. Turn cable adjuster as necessary to obtain 1/16-1/8 in. (1.6-3.2 mm) free play between end of cable ferrule and clutch lever bracket.
9. Tighten jamnut against cable adjuster to 120 **in-lbs** (13.6 Nm). Cover cable adjuster mechanism with rubber boot.

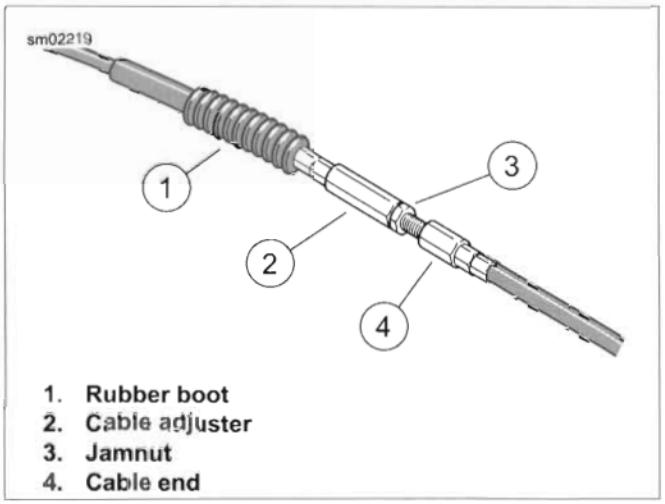

1. **Rubber boot**
2. **Cable adjuster**
3. **Jamnut**
4. **Cable end**

Figure 1-16. Clutch Cable Adjuster

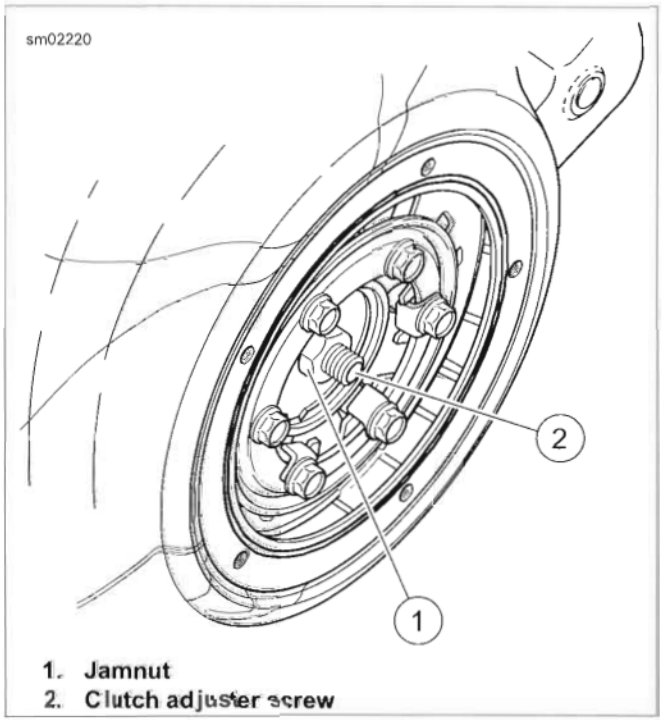

1. **Jamnut**
2. **Clutch adjuster screw**

Figure 1-17. Clutch Adjuster Screw

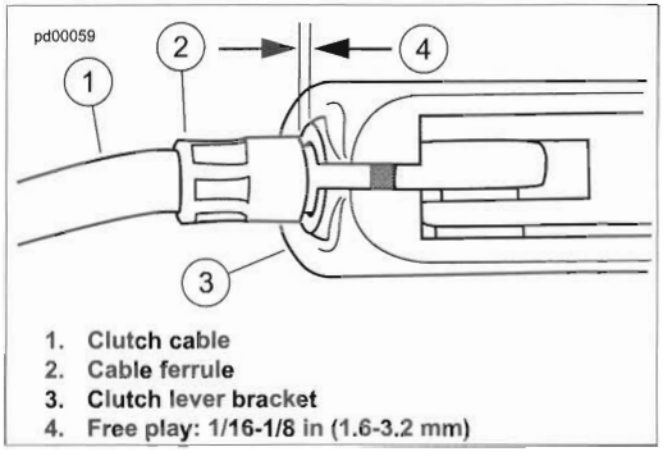

1. **Clutch cable**
2. **Cable ferrule**
3. **Clutch lever bracket**
4. **Free play: 1/16-1/8 in (1.6-3.2 mm)**

Figure 1-18. Clutch Cable Free Play

10. Install clutch inspection cover and **new** seal as follows:
    a. Thoroughly wipe all lubricant from cover mounting surface and groove in chaincase.
    b. Position **new** seal in groove in clutch inspection cover.
    c. Insert screw with captive washer through clutch inspection cover. Carefully thread it into the top cover screw hole.
    d. Start the remaining four screws with captive washers.
    e. Following the torque sequence shown in Figure 1-19. Alternately tighten screws to 84-108 **in-lbs** (9.5-12.2 Nm).

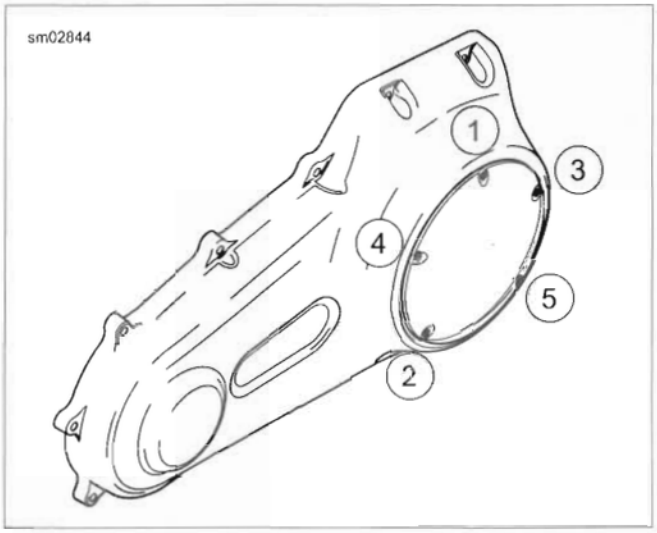

Figure 1-19. Clutch Cover Torque Sequence

GENERAL

⚠WARNING

Never bend belt forward into a loop smaller than the drive sprocket diameter. Never bend belt into a reverse loop. Over bending can damage belt resulting in premature failure, which could cause loss of control and death or serious injury. (00339a)

In the case of stone damage to belt, inspect the sprockets for damage and replace as required. If replacing belt, always replace both transmission and rear sprockets.

CLEANING

Keep dirt, grease, oil, and debris off the drive belt and sprockets. Clean the belt with a rag slightly dampened with a light cleaning agent.

INSPECTION

Sprockets

NOTE

If chrome chips or gouges to rear sprocket are large enough to be harmful, they will leave a pattern on the belt face.

1. See Figure 1-20. Inspect each tooth (1) of rear sprocket for:
   - Major tooth damage
   - Large chrome chips with sharp edges
   - Gouges caused by hard objects
   - Excessive loss of chrome plating (see next step)
2. To check if chrome plating has worn off, drag a scribe or sharp knife point across the bottom of a groove (2) (between two teeth) with medium pressure.
   a. If scribe or knife point slides across groove without digging in or leaving a visible mark, chrome plating is still good.
   b. If scribe or knife points digs in and leaves a visible mark, it is cutting the bare aluminum. A knife point will not penetrate the chrome plating.
3. Replace rear sprocket if major tooth damage or loss of chrome exists.

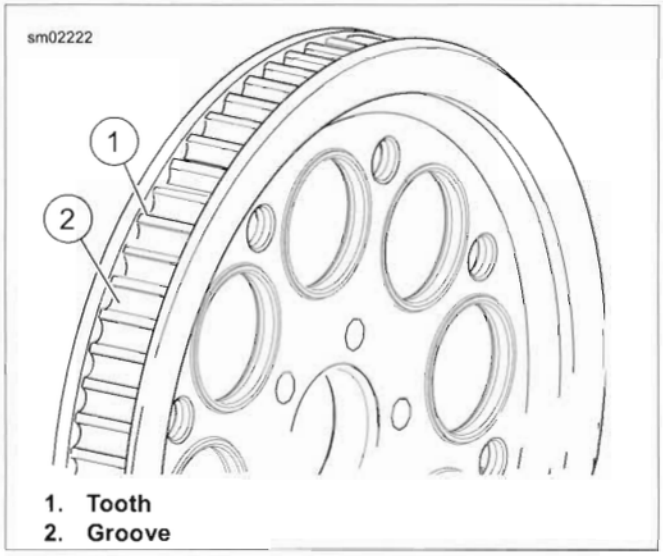

1. **Tooth**
2. **Groove**

Figure 1-20. Rear Sprocket

Drive Belt

See Figure 1-21. Inspect drive belt for:

- Cuts or unusual wear patterns.
- Outside edge beveling (8). Some beveling is common, but it indicates that sprockets are misaligned.
- Outside ribbed surface for signs of stone puncture (7). If cracks or other damage exists near edge of belt, replace belt immediately. Damage to center of belt will require belt replacement eventually. However, when cracks extend to edge of belt, failure is imminent.
- Inside (toothed portion) of belt for exposed tensile cords (normally covered by nylon layer and polyethylene layer). This condition will result in belt failure and indicates worn transmission sprocket teeth. Replace belt and transmission sprocket.
- Signs of puncture or cracking at the base of the belt teeth. Replace belt if either condition exists.
- Replace belt if conditions 2, 3, 6 or 7 (on edge of belt) exist.

NOTE

Condition 1 may develop into 2 or 3 over time. Condition 1 is not grounds for replacing the belt, but it should be watched closely before condition 2 develops which will require belt replacement.

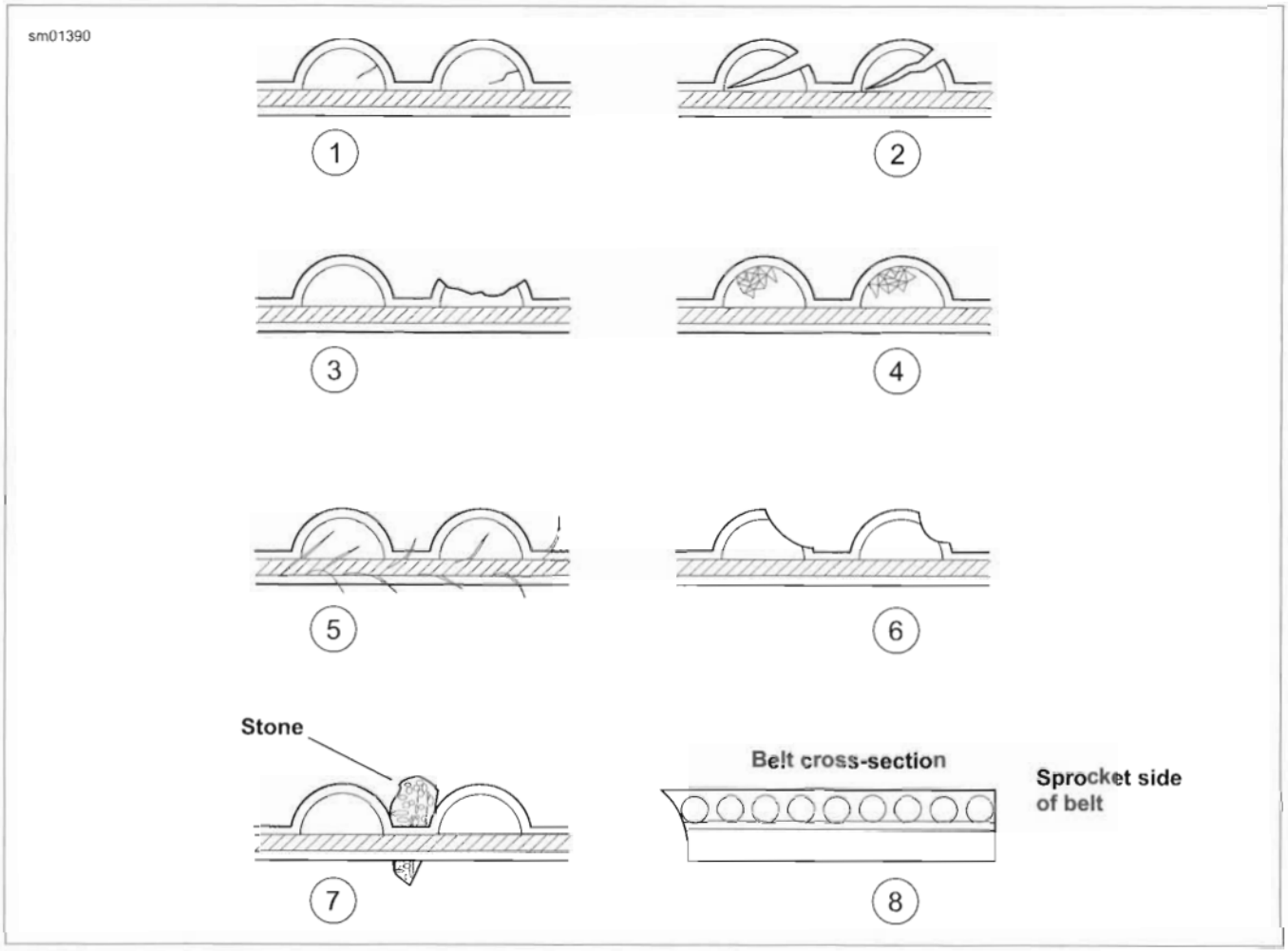

Figure 1-21. Drive Belt Wear Patterns

Table 1-12. Drive Belt Wear Analysis

PATTERN	CONDITION	REQUIRED ACTION
1	Internal tooth cracks (hairline)	OK to run, but monitor condition.
2	External tooth cracks	Replace belt.
3	Missing teeth	Replace belt.
4	Chipping (not serious)	OK to run, but monitor condition.
5	Fuzzy edge cord	OK to run, but monitor condition.
6	Hook wear	Replace belt and sprocket.
7	Stone damage	Replace belt if damage is on the edge.
8	Bevel wear (outboard edge only)	OK to run, but monitor condition.

CHECKING DRIVE BELT DEFLECTION

PART NUMBER	TOOL NAME
HD-35381-A	BELT TENSION GAUGE

NOTE

Always use BELT TENSION GAUGE (Part No. HD-35381-A) to measure belt deflection. Failure to use tension gauge may cause under-tensioned belts. Loose belts can fail due to "ratcheting" (jumping a tooth) which causes tensile cord crimping and breakage.

Check deflection:

- As part of pre-ride inspection.
- At every scheduled service interval.
- With transmission in neutral.
- With motorcycle at ambient temperature.
- With motorcycle upright or on jiffy stand with rear wheel on the ground.
- With the vehicle unladen: no rider, no luggage and saddlebags (if equipped) empty.

⚠WARNING

To prevent accidental vehicle start-up, which could cause death or serious injury, remove main fuse before proceeding. (00251b)

1. Disarm security system. Remove main fuse. See 7.10 FUSES, Removal.
2. See Figure 1-22. Obtain H-D BELT TENSION GAUGE (Part No. HD-35381-A).

NOTE

Gauge is available from an authorized Harley-Davidson dealer.

3. To use the belt tension gauge:
   a. Slide O-ring (4) to 0 lb (0 kg) mark (3).
   b. **Models equipped with belt deflection window:** Fit belt cradle (2) against bottom of drive belt in line with belt deflection window.
   c. **All other models:** Fit belt cradle (2) against bottom of drive belt half-way between drive pulleys.
   d. Press upward on knob (6) until O-ring slides down to 10 lb (4.5 kg) mark (5) and hold steady.

NOTE

Measure belt deflection with motorcycle unladen and upright or on jiffy stand with rear wheel on the ground.

4. Measure belt deflection:
   a. **Models equipped with belt deflection window:** See Figure 1-24. Measure belt deflection as viewed through belt deflection viewing window while holding gauge steady. Each deflection graduation is approximately 1/16 in (1.59 mm).
   b. **All other models:** See Figure 1-23. Measure belt deflection (4) while holding gauge steady.
5. Compare with specifications listed in Table 1-13. Adjust as necessary.
6. Install main fuse.

Table 1-13. Drive Belt Deflection

VEHICLE	FXSB, FLSTN, FLS*, FLSTFB**	OTHER MODELS
Upright or on jiffy stand without rider or luggage	1/4-5/16 in (6.4-7.9 mm)	9/16-5/8 in (14.3-15.9 mm)
* FLS (DOM/CAL/CAN/HDI/JPN configurations) ** FLSTFB (DOM/CAL/CAN/JPN/AUS configurations) Refer to Table 2-11 to determine vehicle configuration.		

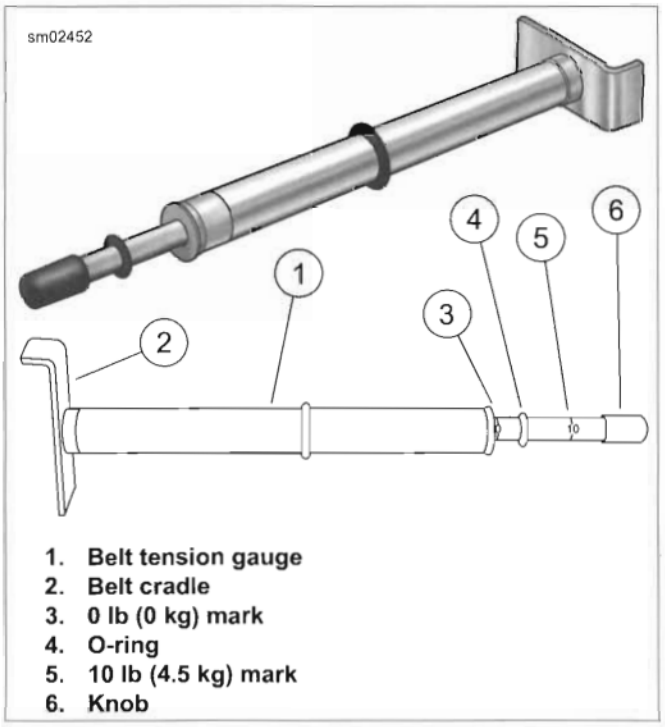

1. **Belt tension gauge**
2. **Belt cradle**
3. **0 lb (0 kg) mark**
4. **O-ring**
5. **10 lb (4.5 kg) mark**
6. **Knob**

Figure 1-22. Belt Tension Gauge

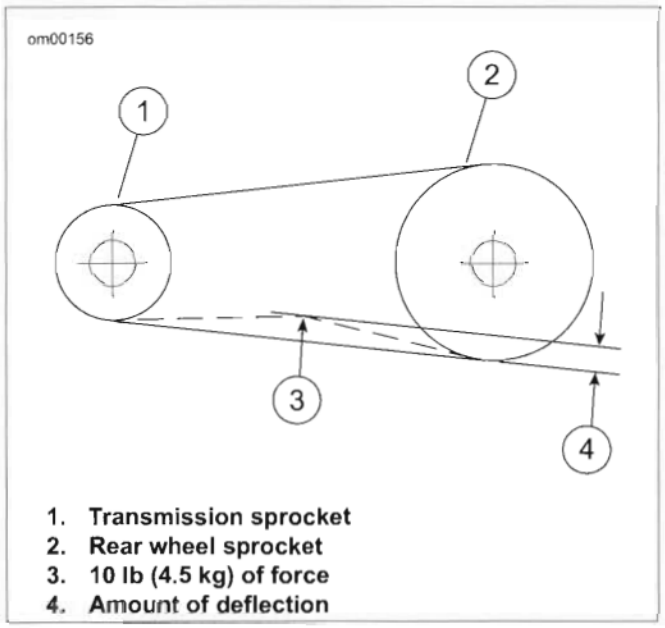

1. **Transmission sprocket**
2. **Rear wheel sprocket**
3. **10 lb (4.5 kg) of force**
4. **Amount of deflection**

Figure 1-23. Checking Belt Deflection

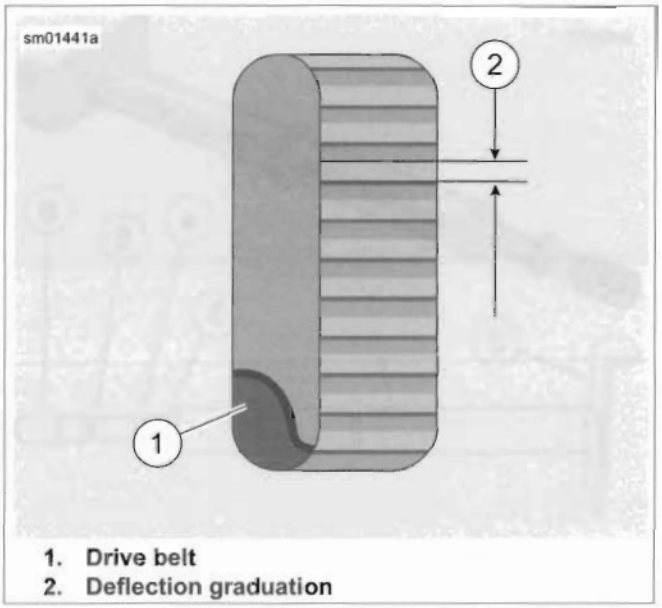

1. Drive belt
2. Deflection graduation

Figure 1-24. Belt Deflection Window

ADJUSTING BELT DEFLECTION

FASTENER	TORQUE VALUE	
Axle nut, rear	95-105 ft-lbs	128.8-142.4 Nm

1. **All but FXSB:** See Figure 1-25. Remove e-clip (1). Loosen rear axle nut (2).
2. **FXSB:** See Figure 1-26. Loosen rear axle nut (2).
3. Adjust belt tension by turning the axle adjusters (3) an equal number of turns to keep the wheel aligned until the specification in Table 1-13 is achieved.
4. Tighten axle nut (2) to 95-105 ft-lbs (128.8-142.4 Nm).
5. **All but FXSB:** See Figure 1-25. Install e-clip.
6. Verify rear wheel alignment. See 2.10 VEHICLE ALIGNMENT.

⚠WARNING

Check wheel bearing end play after tightening axle nut to specified torque. Excessive end play can adversely affect stability and handling and can cause loss of control, which could result in death or serious injury. (00285b)

7. Check wheel bearing end play. See 2.8 SEALED WHEEL BEARINGS, Inspection.

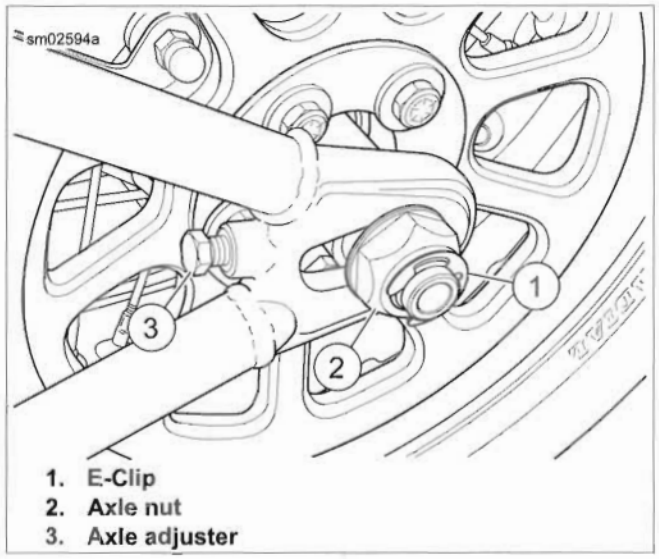

1. E-Clip
2. Axle nut
3. Axle adjuster

Figure 1-25. Axle Adjusters

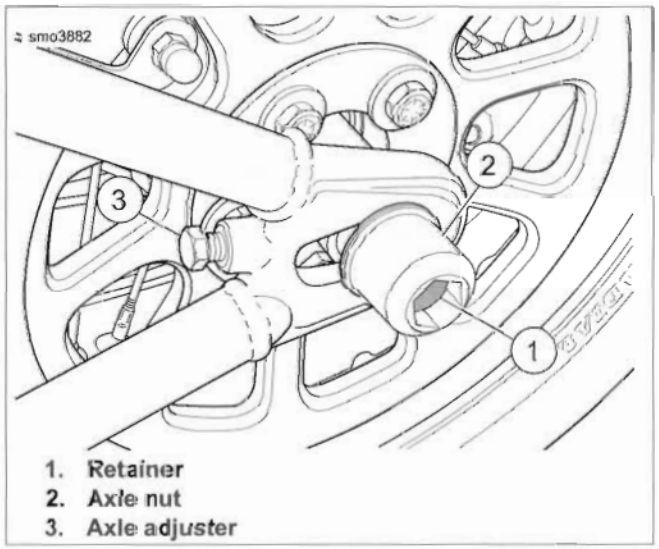

1. Retainer
2. Axle nut
3. Axle adjuster

Figure 1-26. Axle Adjusters: FXSB

CABLE INSPECTION, LUBRICATION AND ADJUSTMENT

FASTENER	TORQUE VALUE	
Handlebar switch housing screws	35-45 **in-lbs**	4.0-5.1 Nm

Inspection and Lubrication

1. See Figure 1-27. Remove two screws (1) to separate the upper handlebar module housing from the lower housing.
2. Unhook each ferrule and cable from the throttle grip and remove the throttle sleeve.
3. Apply a light coat of graphite to the handlebar and replace throttle grip.
4. Put one or two drops of HARLEY LUBE into the housing of each cable.

NOTE

Always tighten the lower module housing screw first. Any gap between the upper and lower housings is at the front of the housing.

5. Assemble handlebar module housing. Tighten screws (1) to 35-45 **in-lbs** (4.0-5.1 Nm).

Adjustment

The throttle control must operate freely without binding. With throttle friction adjustment screw loosened, throttle grip must freely return to closed (idle) position.

The throttle control must operate freely when front wheel is turned to right and left fork stops. If the throttle grip does not return to idle position freely, check throttle friction adjustment screw tension. If adjuster screw is loosened, inspect cables for tight bends.

⚠WARNING

Before starting engine, be sure throttle control will snap back to idle position when released. A throttle control that prevents engine from automatically returning to idle can lead to loss of control, which could result in death or serious injury. (00390a)

⚠WARNING

Do not tighten throttle friction adjustment screw to the point where the engine will not return to idle automatically. Over-tightening can lead to loss of vehicle control, which could result in death or serious injury. (00031b)

Adjust throttle cables:

1. See Figure 1-27. Slide rubber boot off throttle cable adjuster mechanism (2).
2. Loosen jamnut (clockwise).
3. Back jamnut (3) away from cable adjuster until it stops. Turn cable adjuster clockwise until it contacts jamnut. Repeat procedure on idle cable adjuster.
4. See Figure 1-28. Point front wheel straight ahead. Gently turn throttle grip so throttle is wide open. Hold this position. Turn throttle cable adjuster counterclockwise until throttle cam (2) just touches cam stop (5) on induction module.
5. Release the throttle grip, turn throttle cable adjuster counterclockwise an additional one-half to one full turn, and then tighten the jamnut against the cable adjuster. Cover cable adjuster mechanism with rubber boot.
6. Turn the front wheel full right. Turn the idle cable adjuster counterclockwise until the idle cable housing (4) just touches the spring (6) in the cable guide (as seen through slot).
7. Operate the throttle grip to verify that the throttle cable returns to the idle position when released. If the cable does not return to idle, turn the cable adjuster clockwise slightly until the correct response is achieved.
8. Tighten jamnut against the cable adjuster and cover cable adjuster mechanism with rubber boot.

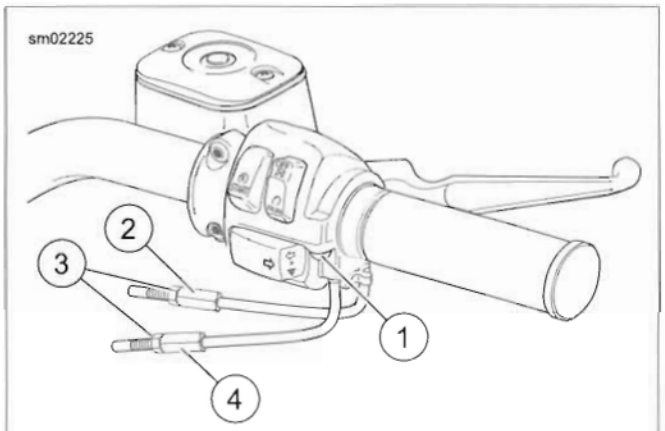

1. **Screw (2)**
2. **Throttle cable adjuster**
3. **Jamnut (2)**
4. **Idle cable adjuster**

Figure 1-27. Throttle Cable Adjusters

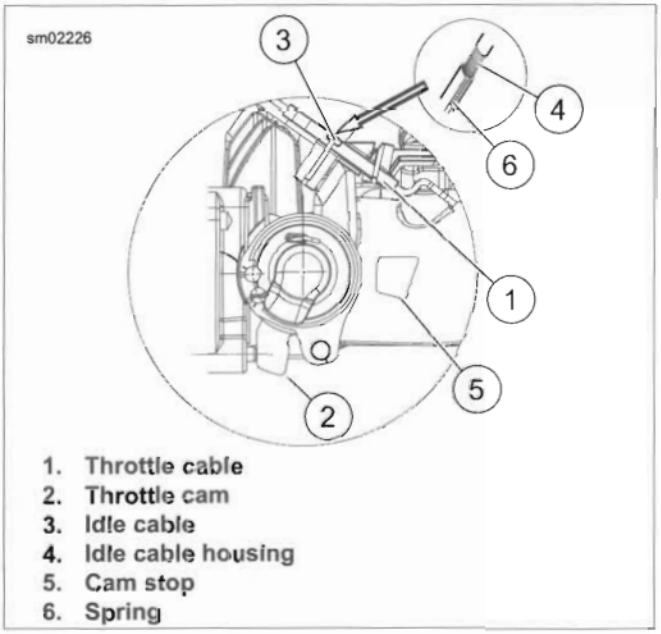

1. Throttle cable
2. Throttle cam
3. Idle cable
4. Idle cable housing
5. Cam stop
6. Spring

Figure 1-28. Induction Module Cable Connection

GENERAL

Inspect and lubricate the following items according to 1.5 MAINTENANCE SCHEDULE.

- Front brake hand lever
- Clutch hand lever
- Throttle control cables
- Throttle control grip sleeve
- Clutch cable
- Steering head bearings
- Jiffy stand

If service is on muddy or dusty roads, clean and lubricate at shorter intervals.

CABLES AND HAND LEVERS

For throttle cables, see 1.13 THROTTLE CABLES.

Use HARLEY® LUBE for clutch lever and cable.

Use G40M BRAKE GREASE on front brake lever pin pivot hole and on the end of piston that contacts brake lever.

JIFFY STAND

Clean and lubricate the jiffy stand. For more information, see 2.39 JIFFY STAND.

STEERING HEAD BEARINGS

Lubricate the steering head bearings with HARLEY-DAVIDSON SPECIAL PURPOSE GREASE. See 1.18 STEERING HEAD BEARINGS.

FLUID INSPECTION

⚠WARNING

Clean filler cap before removing. Use only D.O.T. 4 brake fluid from a sealed container. Contaminated fluid can adversely affect braking, which could result in death or serious injury. (00504c)

⚠CAUTION

Direct contact of D.O.T. 4 brake fluid with eyes can cause irritation. Avoid eye contact. In case of eye contact flush with large amounts of water and get medical attention. Swallowing large amounts of D.O.T. 4 brake fluid can cause digestive discomfort. If swallowed, obtain medical attention. Use in well ventilated area. KEEP OUT OF REACH OF CHILDREN. (00240a)

NOTICE

D.O.T. 4 brake fluid will damage painted and body panel surfaces it comes in contact with. Always use caution and protect surfaces from spills whenever brake work is performed. Failure to comply can result in cosmetic damage. (00239b)

NOTICE

Do not allow dirt or debris to enter the master cylinder reservoir. Dirt or debris in the reservoir can cause improper operation and equipment damage. (00205c)

NOTE

- *Fluid level in reservoir will decrease with brake wear.*
- *Reservoir volume is adequate to provide fluid to the wear limits of the pads and rotors. If fluid level is below low level, check brake pad and rotor wear. If pads and rotors are within limits, check for leaks.*

1. Properly position vehicle:
   a. **Front brake:** Level the master cylinder by turning the handlebar and/or standing the motorcycle upright (not leaning on jiffy stand).
   b. **Rear brake:** Position the motorcycle so the master cylinder reservoir is level.
2. See Figure 1-29. View reservoir sight glass.
   a. **Front:** Verify that fluid is visible in the sight glass (1). If the fluid level is below the minimum mark (2) or not present, see 2.18 BLEEDING BRAKES.
   b. **Rear:** Verify fluid presence. The sight glass (3) appears dark when fluid is present. If the sight glass is clear, see 2.18 BLEEDING BRAKES.
3. Verify front brake hand lever and rear brake foot pedal have a firm feel when applied. If brakes are not firm, the brake system must be bled. see 2.18 BLEEDING BRAKES.

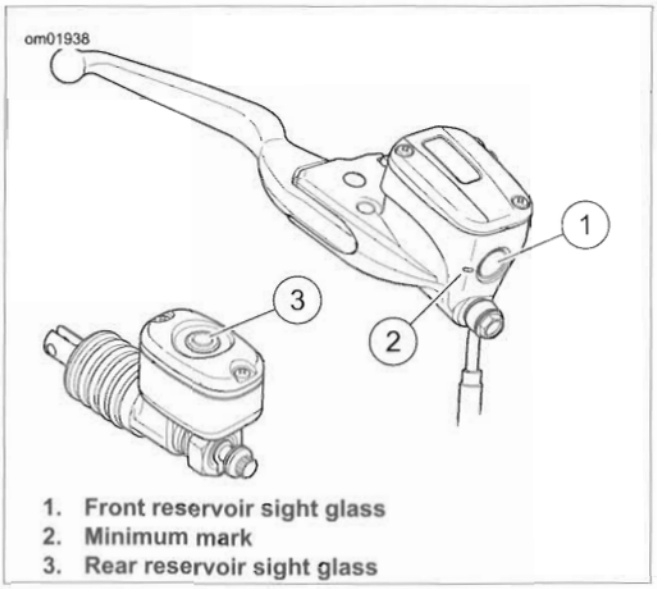

1. **Front reservoir sight glass**
2. **Minimum mark**
3. **Rear reservoir sight glass**

Figure 1-29. Brake Fluid Reservoirs

REAR BRAKE PEDAL

FASTENER	TORQUE VALUE	
Brake pedal screw, rear	12-16 ft-lbs	16.3-21.7 Nm

Pedal Height

The rear brake pedal is nonadjustable. When brake system components are properly assembled, brake pedal is correctly adjusted.

Pedal Lubrication

See Figure 1-30. Rear brake pedal contains greaseless bushings (4, 5). Replace bushings if worn.

Tighten brake pedal screw (1) to 12-16 ft-lbs (16.3-21.7 Nm).

Pedal Pad

If replacing brake pedal pad (8), slide old pad off brake pedal (7) then slide **new** pad on pedal.

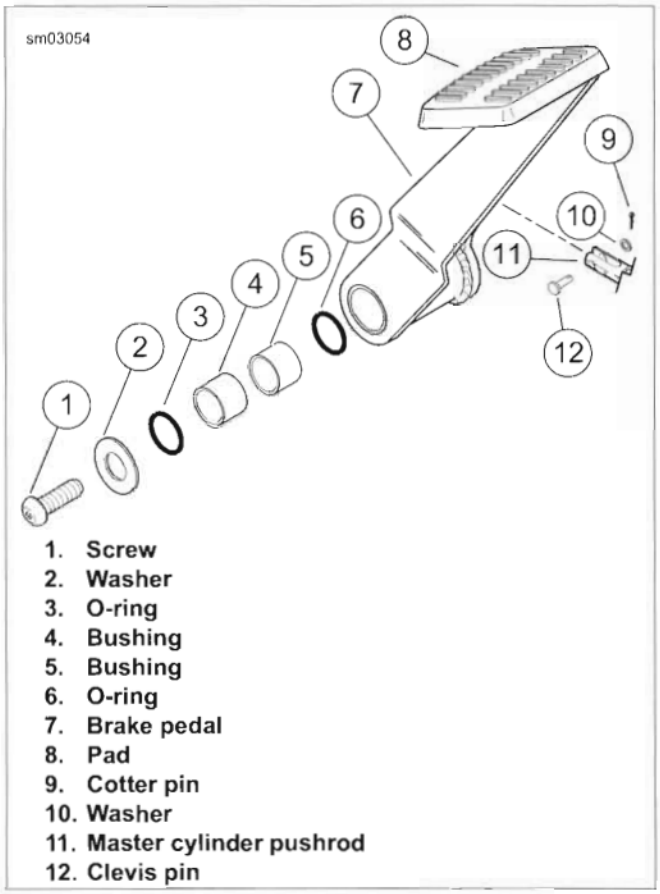

1. **Screw**
2. **Washer**
3. **O-ring**
4. **Bushing**
5. **Bushing**
6. **O-ring**
7. **Brake pedal**
8. **Pad**
9. **Cotter pin**
10. **Washer**
11. **Master cylinder pushrod**
12. **Clevis pin**

Figure 1-30. Rear Brake Pedal (typical)

BRAKE LINES INSPECTION

Inspect brake lines for leaks, contact or abrasion. Refer to Table 1-14.

Table 1-14. Brake Line Inspection

LINE TYPE	INSPECTION	REMEDY
Steel lines	No marks	OK/Monitor
	Slight mark in paint or plating*	
	Copper colored-paint/plating worn off*	
	Silver colored base material-no noticeable feel of wear*	
	Silver colored base material-noticeable feel of wear*	Replace
	Brake fluid leak or other damage	
Flexible lines	No marks	OK/Monitor
	Slight dent in protective cover or flattening of ribs*	
	Worn through protective cover or to bottom of ribs	Replace
	Brake fluid leak or other damage	
Protective cover (steel, rubber, plastic or braided)	No marks	OK/Monitor
	Slight dent in covering*	
	Slight dent or flattening of plastic covering*	
	Worn or cut-through covering-exposed brake line material	Replace
	Brake fluid leak or other damage	

* If there is line contact, reposition the line. If base material is visible, prevent corrosion with touch-up paint.

INSPECTION

Check brake pads and discs:

- At every scheduled service interval.
- Whenever the components are removed during service procedures.

Brake Pads

⚠WARNING

Always replace brake pads in complete sets for correct and safe brake operation. Improper brake operation could result in death or serious injury. (00111a)

⚠CAUTION

Direct contact of D.O.T. 4 brake fluid with eyes can cause irritation. Avoid eye contact. In case of eye contact flush with large amounts of water and get medical attention. Swallowing large amounts of D.O.T. 4 brake fluid can cause digestive discomfort. If swallowed, obtain medical attention. Use in well ventilated area. KEEP OUT OF REACH OF CHILDREN. (00240a)

NOTICE

D.O.T. 4 brake fluid will damage painted and body panel surfaces it comes in contact with. Always use caution and protect surfaces from spills whenever brake work is performed. Failure to comply can result in cosmetic damage. (00239b)

See Figure 1-31. Replace brake pads (3) if brake pad friction material on either the front or rear caliper is worn to 0.04 in. (1.02 mm) or less above the backing plate (4). Always replace both pads in a caliper as a set. See 1.16 BRAKE PADS AND DISCS, Brake Pad Replacement.

When checking the brake pads and discs, inspect the brake hoses for correct routing and any signs of damage.

Brake Disc

- The minimum brake disc (2) thickness is stamped on the side of the disc.
- Maximum brake disc lateral runout and warpage is 0.008 in. (0.2 mm) when measured near the outside diameter.

Replace disc if badly scored or warped. See 2.4 FRONT WHEEL or 2.5 REAR WHEEL.

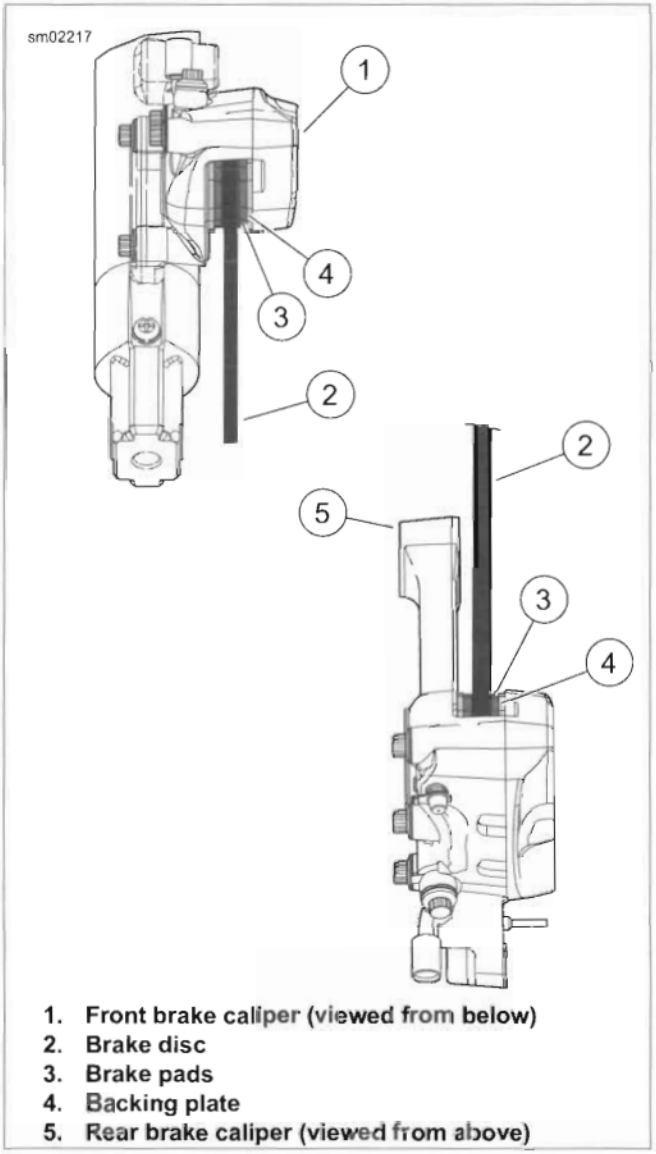

1. **Front brake caliper (viewed from below)**
2. **Brake disc**
3. **Brake pads**
4. **Backing plate**
5. **Rear brake caliper (viewed from above)**

Figure 1-31. Brake Pad Inspection

BRAKE PAD REPLACEMENT

FASTENER	TORQUE VALUE	
Brake caliper, rear, pad pin	80-120 **in-lbs**	9.0-13.6 Nm
Brake caliper, rear, mounting fasteners	16-20 ft-lbs	21.7-27.1 Nm
Brake caliper mounting bolts, front	28-38 ft-lbs	38.0-51.5 Nm
Brake pad screws, front	130.1-173.5 **in-lbs**	14.7-19.6 Nm

Rear Brake Caliper

1. Remove right saddlebag, if present.
2. **ABS models:** Remove cable strap securing wheel speed sensor cable to rear brake hose at caliper.
3. See Figure 1-32. Loosen, but do not remove pad pin (2).

4. Remove mounting bolt (1) and slider pin (3). Pull rear caliper away from brake disc.

5. Remove pad pin (2) and pads.

NOTE

Loosening the reservoir cap allows air to escape and helps prevent contamination. It also helps prevent fluid from squirting out of the reservoir.

6. Loosen rear master cylinder reservoir cap.

NOTE

As the pistons are pushed back into the caliper, verify fluid does not overflow reservoir. Remove fluid if necessary.

7. Using the old brake pad and a C-clamp, retract the pistons fully into the caliper.

⚠WARNING

Always replace brake pads in complete sets for correct and safe brake operation. Improper brake operation could result in death or serious injury. (00111a)

8. Inspect pad pin for grooving and wear. Measure the pad pin diameter in an unworn area. Then in the area of any grooving or wear. If wear exceeds 0.015 in. (0.38 mm), replace pin.

9. See Figure 1-33. Inspect torque clip. Replace parts if necessary.

10. See Figure 1-34. Inspect anti-rattle spring. Replace parts if necessary.

11. See Figure 1-35. Install **new** brake pads and pad pin. Tab (1) must engage clip (2) in caliper housing. Tighten pad pin to 80-120 **in-lbs** (9.0-13.6 Nm).

12. See Figure 1-32. Install caliper. Tighten mounting bolt (1) and slider pin (3) to 16-20 ft-lbs (21.7-27.1 Nm).

13. **ABS models:** Secure wheel speed sensor cable to rear brake hose with a cable strap near the caliper.

⚠WARNING

After servicing brakes and before moving motorcycle, pump brakes to build brake system pressure. Insufficient pressure can adversely affect brake performance, which could result in death or serious injury. (00279a)

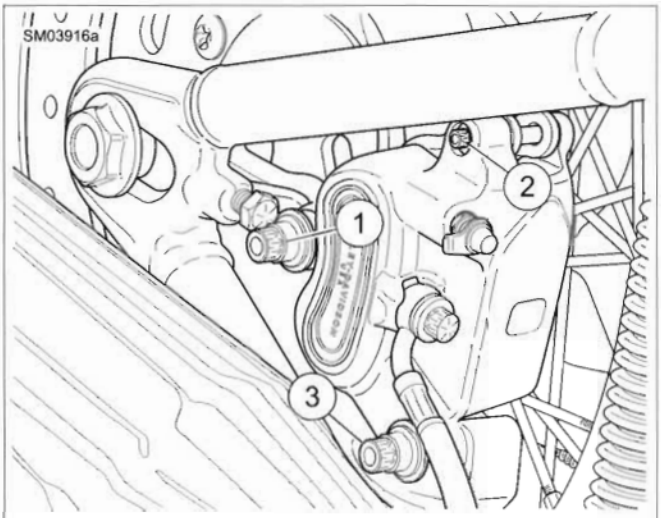

1. **Mounting bolt**
2. **Pad pin**
3. **Slider pin**

Figure 1-32. Rear Brake Caliper

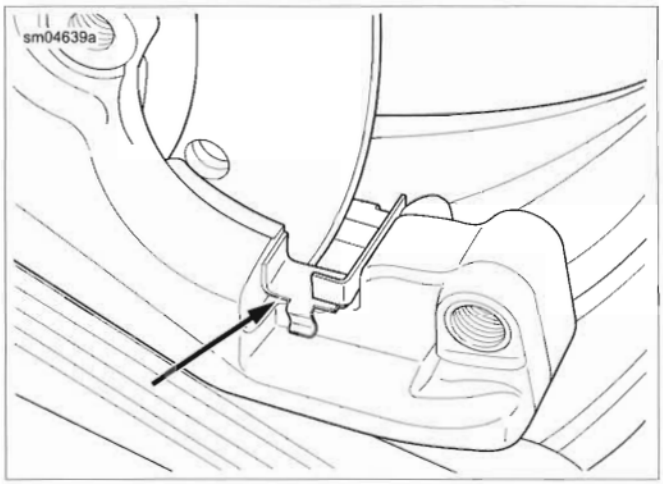

Figure 1-33. Torque Clip

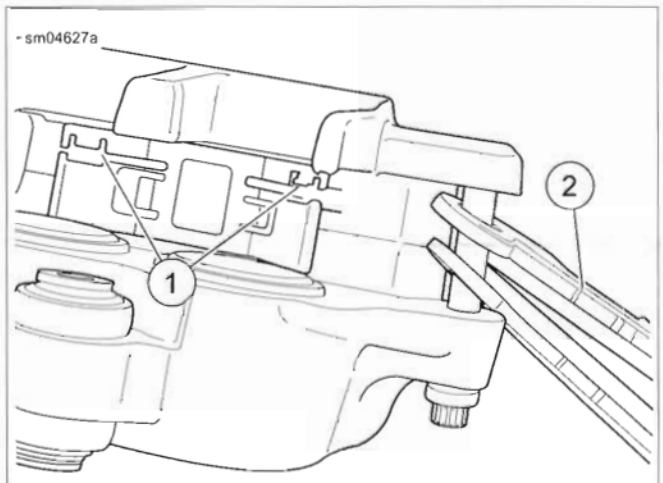

1. **Anti-rattle spring tabs**
2. **Inner brake pad tab**

Figure 1-34. Anti-rattle Spring

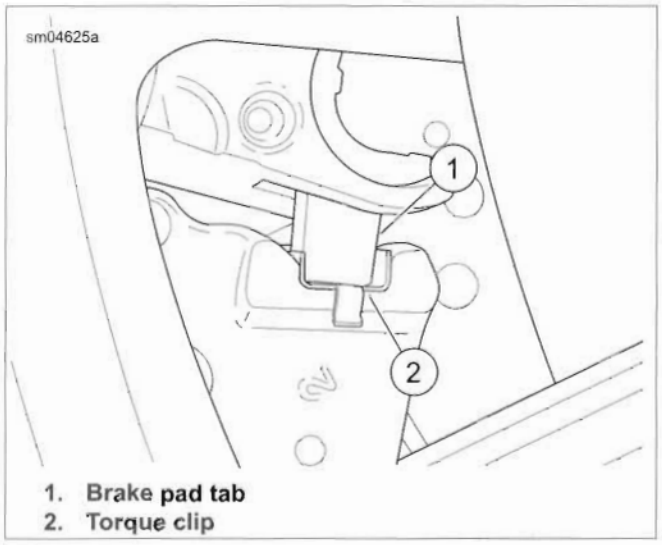

1. **Brake pad tab**
2. **Torque clip**

Figure 1-35. Rear Brake Pad Installation

14. Pump brake pedal to move pistons outward until both brake pads contact rotor.
15. Check fluid level. See 2.18 BLEEDING BRAKES.
16. Install right saddlebag if necessary.

⚠WARNING

After repairing the brake system, test brakes at low speed. If brakes are not operating properly, testing at high speeds can cause loss of control, which could result in death or serious injury. (00289a)

17. Test brakes.
    a. Turn ignition switch ON. Check operation of rear lamps.
    b. Test ride motorcycle. Repeat the bleeding procedure if brakes feel spongy. See 2.18 BLEEDING BRAKES.

NOTE

*Avoid making hard stops for the first 100 miles (160 km). This allows the **new** pads to become conditioned to the brake discs.*

Front Brake Caliper

1. See Figure 1-36. Remove brake pad screws (3).
2. Remove brake pad spring (4).
3. Remove caliper mounting bolts (1). Detach caliper from front forks and brake disc.
4. Remove brake pads.

NOTE

Loosening the reservoir cap allows air to escape and helps prevent contamination. It also helps prevent fluid from squirting out of the reservoir.

5. Loosen front master cylinder reservoir cap.

NOTE

As the pistons are pushed back into the caliper, verify fluid does not overflow reservoir. Remove fluid if necessary.

6. Using the old brake pad and a C-clamp, retract the pistons fully into the caliper.

⚠WARNING

Always replace brake pads in complete sets for correct and safe brake operation. Improper brake operation could result in death or serious injury. (00111a)

7. Install **new** pads into caliper.

NOTE

See Figure 1-36. Brake pad spring (4) must be installed with the stamped arrow facing up.

8. Loosely install **new** brake pad screws (3) and **new** brake pad spring (4).
9. Attach caliper to front fork.
    a. Install caliper.
    b. **ABS models:** Place wheel speed sensor cable retainer (2) in position.
    c. Install caliper mounting bolts (1). Tighten to 28-38 ft-lbs (38.0-51.5 Nm).
    d. Tighten brake pad screws to 130.1-173.5 **in-lbs** (14.7-19.6 Nm).
10. Pump brake hand lever to move pistons outward until they contact both brake pads. Verify piston location against pads. If the front wheel is off the ground, rotate wheel to check for excessive brake pad drag.
11. Check fluid level in brake master cylinder reservoir. See 2.18 BLEEDING BRAKES.

⚠WARNING

After repairing the brake system, test brakes at low speed. If brakes are not operating properly, testing at high speeds can cause loss of control, which could result in death or serious injury. (00289a)

12. Test brakes.
    a. Turn ignition switch ON. Check operation of rear lamps.
    b. Test ride motorcycle. Repeat the bleeding procedure if brakes feel spongy. See 2.18 BLEEDING BRAKES.

NOTE

*Avoid making hard stops for the first 100 miles (160 km). This allows the **new** pads to become conditioned to the brake discs.*

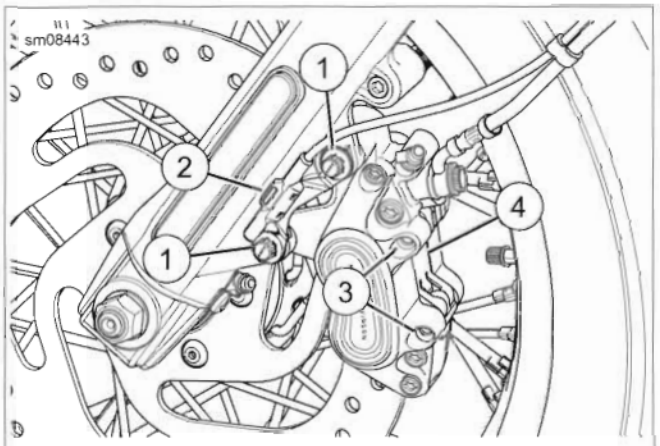

1. Caliper mounting bolt (2) (metric)
2. Wheel speed sensor cable retainer (ABS only)
3. Brake pad screw (2) (metric)
4. Brake pad spring

Figure 1-36. Front Brake Caliper

REMOVAL

⚠WARNING

Disconnecting spark plug cable with engine running can result in electric shock and death or serious injury. (00464b)

NOTE

Allow the engine to cool before servicing.

1. Disconnect spark plug cables.
2. Remove spark plugs.

INSPECTION

NOTE

Discard plugs with eroded electrodes, heavy deposits or a cracked insulator.

See Figure 1-37. Compare plug deposits to Table 1-15.



Figure 1-37. Spark Plug Deposits

Table 1-15. Spark Plug Deposit Analysis

PLUG	DEPOSITS	POSSIBLE CAUSE
1	Wet, black and shiny	Worn pistons Worn piston rings Worn valves Worn valve guides Worn valve seals Weak battery Faulty ignition system
2	Dry, fluffy or sooty and black	Air-fuel mixture too rich
3	Light brown and glassy* May be accompanied by cracks in the insulator or by electrode erosion.	Air-fuel mixture too lean Hot running engine Valves not seating Improper ignition timing
4	White, gray or tan and powdery	Balanced combustion Clean off deposits at regular intervals.

* The glassy deposit on a spark plug may cause high-speed misfiring.

CLEANING

⚠WARNING

Compressed air can pierce the skin and flying debris from compressed air could cause serious eye injury. Wear safety glasses when working with compressed air. Never use your hand to check for air leaks or to determine air flow rates. (00061a)

If the plugs require cleaning between tune-ups:

1. Clean electrodes and insulator with electrical contact cleaner. Dry plug with compressed air.
2. Use a thin file to flatten electrodes.

NOTE

Electrodes with sharp edges require 25-40 percent less voltage than ones with rounded edges.

3. Check condition of threads in cylinder head. Use a penetrating oil and clean out with a thread chaser. Verify that plug threads are clean.
4. If necessary, replace with **new** spark plugs.

INSTALLATION

FASTENER	TORQUE VALUE	
Spark plug	12-18 ft-lbs	16.3-24.4 Nm

1. Verify proper gap before installing **new** or cleaned spark plugs.
   a. Select a wire-type feeler gauge within specification. Refer to Table 1-16.

NOTE

If there is a slight drag on the gauge, the spark plug gap is within specification.

b. Pass the wire gauge between the center and the outer electrodes.

c. If necessary use the proper tool to bend the outer electrode to bring the gap to within specification.

2. Apply ANTI-SEIZE LUBRICANT to the spark plug threads. Tighten to 12-18 ft-lbs (16.3-24.4 Nm).

3. See Figure 1-38. Connect spark plug cables. Verify that the cables are connected to coil, spark plugs and anchor clips or harness caddies.

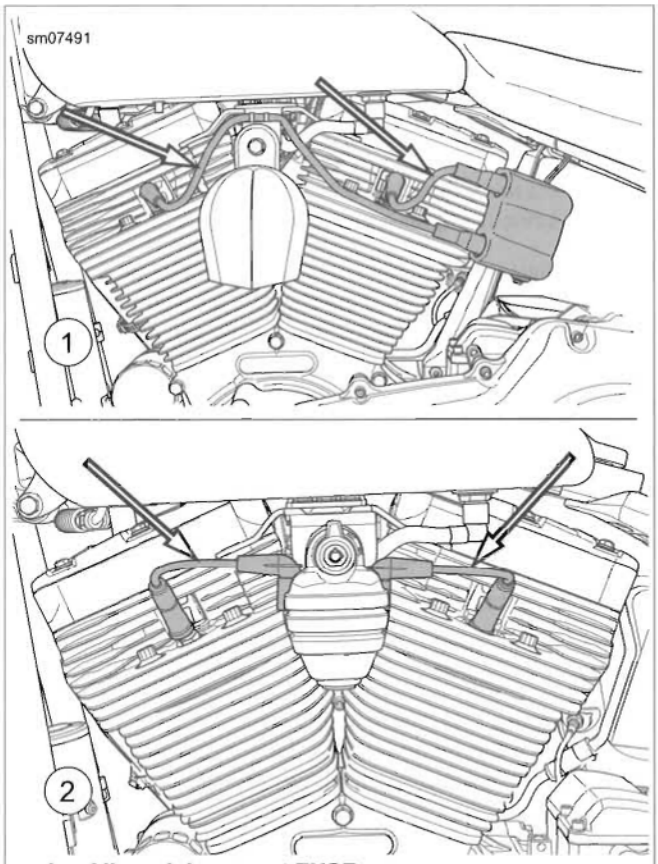

1. **All models except FXSB**
2. **FXSB**

Figure 1-38. Spark Plug Cable Routing

Table 1-16. Spark Plug Gap

MODEL	TYPE	in	mm
All Models	HD-6R12	0.038-0.043	0.97-1.09

SPARK PLUG CABLE INSPECTION

1. Inspect spark plug cables. Replace if necessary.
   a. Check for cracks or loose terminals.
   b. Check for loose fit on ignition coil and spark plugs.
2. Check cable boots/caps for cracks or tears. Replace boots/caps that are worn or damaged.
3. See Figure 1-39. Check spark plug cable resistance with an ohmmeter. Replace cables not meeting resistance specifications. Refer to Table 1-17.

Table 1-17. SPARK PLUG CABLE RESISTANCE VALUES

Description	Length		Resistance Value (Ohms)
	In.	mm	
All except FXSB: front cable	19.00	483	4750-12,675
All except FXSB: rear cable	6.50	165	1625-4350
FXSB: both cables	7.25	184	1813-4833

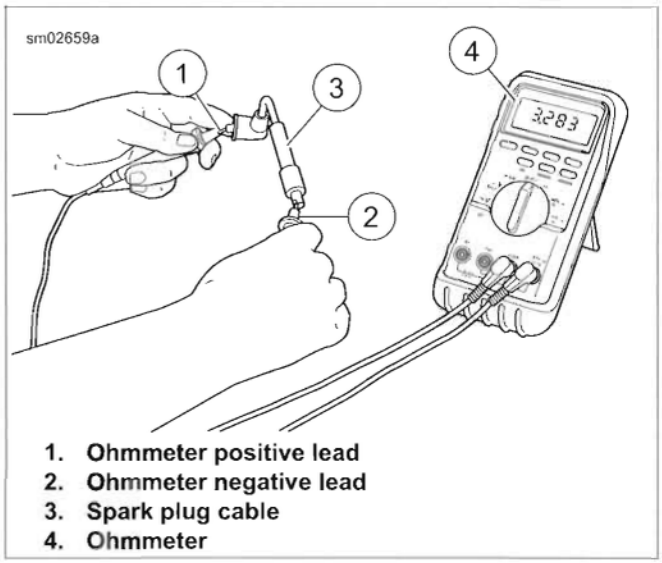

1. **Ohmmeter positive lead**
2. **Ohmmeter negative lead**
3. **Spark plug cable**
4. **Ohmmeter**

Figure 1-39. Testing Resistance

ADJUSTMENT: FLSTC, FLSTF/B, FLSTN, FLS

FASTENER	TORQUE VALUE	
Fork bracket pinch screw, upper, FLSTC, FLSTF/B, FLSTN, FLS	25-30 ft-lbs	33.9-40.7 Nm
Fork bracket pinch screws, lower, FLSTC, FLSTF/B, FLSTN, FLS	55-60 ft-lbs	74.6-81.4 Nm
Rear back panel screw	20-30 in-lbs	2.3-3.4 Nm
Windshield mounting screw	96-120 in-lbs	10.8-13.6 Nm

Bearing Adjustment (Fall-away)

1. Support motorcycle upright so the front fork is suspended and the vehicle is level.
2. Remove all accessory weight, such as a windshield, that could influence the way the front fork swings. Disconnect clutch and throttle cables.

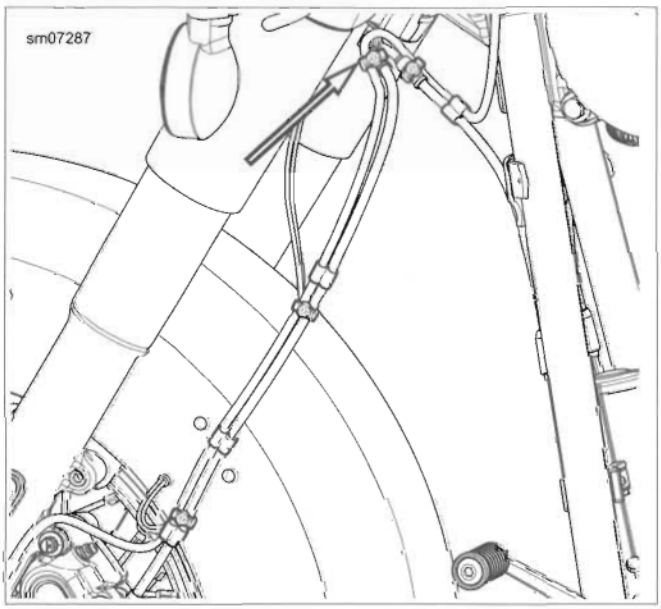

Figure 1-40. Front ABS Brake Line

3. **ABS models:** see Figure 1-40. Disconnect brake line from steering head.
4. Place a suitable marking material, such as masking tape, over the fender tip.
5. Install a pointer so the base is stationary on the floor and the pointer indicates the center of the fender. The front fork should point straight ahead, however the balance point could be slightly off center.
6. Check steering head bearing fall-away.
   a. Rotate the front fork from steering stop to steering stop three times. Center front fork moving from the left steering stop to the center.
   b. Tap the fender on right side toward the left steering stop until the front fork begins to fall-away by itself. Label this point on the marking material.
   c. Rotate the front fork from steering stop to steering stop three times. Center front fork moving from the right steering stop to the center.
   d. Tap the fender on left side toward the right steering stop until the front fork begins to fall-away by itself. Label this point on the marking material.
   e. Repeat steps a through d until the points become consistent.
   f. Measure distance between the two marks. This distance is the fall-away measurement.
7. The distance between the fall-away marks must be 1.0-2.0 in (25.4-50.8 mm). If the distance is within specification, no further action is necessary. Otherwise, proceed to the next step.
8. Cover fuel tank with a blanket or other protective material.
9. Loosen, but do not remove, windshield mounting screws.
10. Remove screws and right and left rear back panels from fork bracket. When removing left rear back panel, disconnect spade terminals from auxiliary lamp switch.
11. Remove fork stem cap.
12. See Figure 1-41. Loosen the upper fork stem pinch screw (4).
13. See Figure 1-42. Using a ratchet handle, socket extension (1) and a torque adapter (2), loosen, but do not remove, lower fork bracket pinch screws (3).
14. See Figure 1-41. Adjust fall-away to specification:
   a. If the distance (fall-away measurement) exceeds 2.0 in (50.8 mm), loosen the fork stem bolt (2) slightly.
   b. If the distance (fall-away measurement) is less than 1.0 in (25.4 mm), tighten the fork stem bolt (2) slightly.
15. Tighten the upper fork bracket pinch screw to 25-30 ft-lbs (33.9-40.7 Nm).
16. Strike both fork tubes with a composite dead blow hammer to free the tubes if they are stuck in the lower fork bracket.

NOTE

See Figure 1-42. The torque adapter must be positioned at a 90 degree angle to the torque wrench handle to obtain an accurate torque reading.

17. Using a socket extension and torque adapter, tighten lower fork bracket pinch bolts to 55-60 ft-lbs (74.6-81.4 Nm).
18. Repeat procedure to determine if fall-away is within specifications.

19. Plug auxiliary lamp spade terminals into switch mounted on left rear back panel.
20. Install left and right rear back panels onto fork bracket. Tighten screws to 20-30 **in-lbs** (2.3-3.4 Nm).
21. Tighten windshield mounting screws to 96-120 **in-lbs** (10.8-13.6 Nm).
22. **ABS models:** see Figure 1-40 and 2.15 BRAKE LINES. Connect brake line to steering head.
23. Connect clutch and/or throttle cables, if disconnected.
24. Install windshield and any other accessories, if removed.

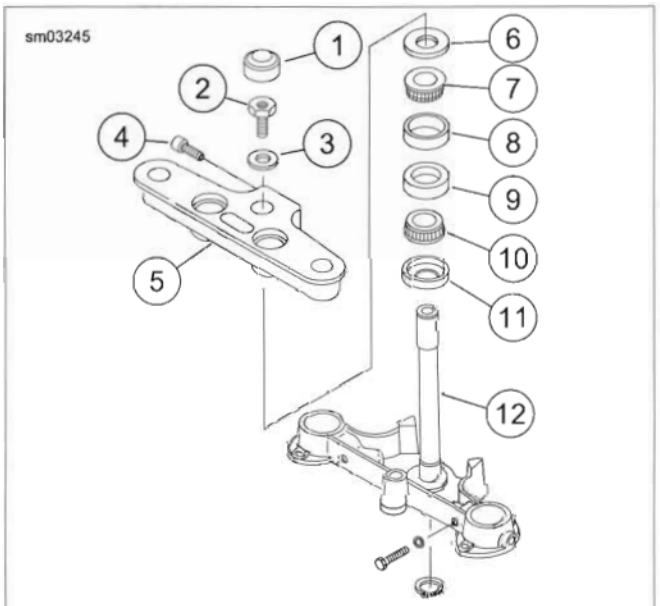

1. **Fork stem cap**
2. **Fork stem bolt**
3. **Washer**
4. **Pinch screw**
5. **Upper bracket**
6. **Upper dust shield**
7. **Upper bearing**
8. **Upper bearing race**
9. **Lower bearing race**
10. **Lower bearing**
11. **Lower dust shield**
12. **Fork stem and bracket**

Figure 1-41. Steering Head: FLSTC, FLSTF/B, FLSTN, FLS

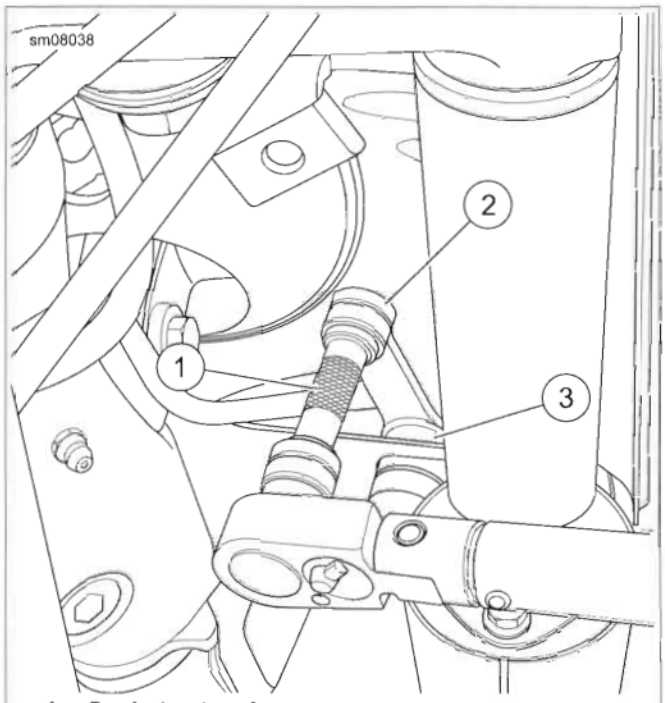

1. **Socket extension**
2. **Torque adapter**
3. **Lower fork bracket pinch screw**

Figure 1-42. Accessing Lower Fork Bracket Pinch Screws

ADJUSTMENT: FXST

FASTENER	TORQUE VALUE	
Fork stem nut, FXST	70-80 ft-lbs	94.9-108.4 Nm
Fork bracket pinch bolt, lower, FXST	55-60 ft-lbs	74.6-81.4 Nm
Fork stem nut, FXST	70-80 ft-lbs	94.9-108.4 Nm
Fork bracket pinch bolt, lower, FXST	55-60 ft-lbs	74.6-81.4 Nm

Bearing Adjustment (Fall-away)

1. Support motorcycle upright so the front fork is completely suspended and the vehicle is level.
2. Remove all accessory weight, such as a windshield, that may influence the way the front fork swings. If clutch cable is routed so it pulls the front fork one way or the other, disconnect it.
3. **ABS models:** disconnect brake line from steering head.
4. Place a suitable marking material, such as masking tape, over the fender tip.
5. Install a pointer so the base is stationary on the floor and the pointer indicates the center of the fender. The front fork should be straight ahead, however the balance point may be slightly off center.

6. Check steering head bearing fall-away.
   a. Rotate the front fork from steering stop to steering stop three times and then center the front fork.
   b. Tap the fender on one side until the front fork begins to fall-away by itself. Label this point on the marking material.
   c. Repeat the previous step in the other direction.
   d. Repeat until marks are consistent. If marks vary, use the average.
   e. Measure distance between marks.
7. The distance between the fall-away marks must be 1.0-2.0 in. (25.4-50.8 mm). If fall-away is not within specifications, see next steps.
8. If the distance exceeds 2.0 in. (50.8 mm):
   a. See Figure 1-43. Loosen the upper fork stem bracket pinch bolts (5).
   b. Loosen the lower fork stem pinch bolts.
   c. Loosen the fork stem nut (2).
   d. Loosen the bearing adjustment nut (6) slightly.
   e. Tighten the fork stem nut to 70-80 ft-lbs (94.9-108.4 Nm).
   f. Tighten lower fork bracket pinch bolts to 55-60 ft-lbs (74.6-81.4 Nm).
   g. Repeat procedure to determine if fall-away is within specifications.
9. If the distance is less than 1.0 in. (25.4 mm):
   a. See Figure 1-43. Loosen the upper fork stem bracket pinch bolts (5).
   b. Loosen the lower fork stem pinch bolts.
   c. Loosen the fork stem nut (2).
   d. Tighten the bearing adjustment nut (6) slightly.
   e. Tighten the fork stem nut to 70-80 ft-lbs (94.9-108.4 Nm).
   f. Tighten lower fork bracket pinch bolts to 55-60 ft-lbs (74.6-81.4 Nm).
   g. Repeat procedure to determine if fall-away is within specifications.

NOTE

If adjustment seems to have no impact, check to see if fork tubes are stuck in clamps. If necessary, strike tubes with a dead blow hammer to free. Test steering head bearing fall-away after freeing forks.

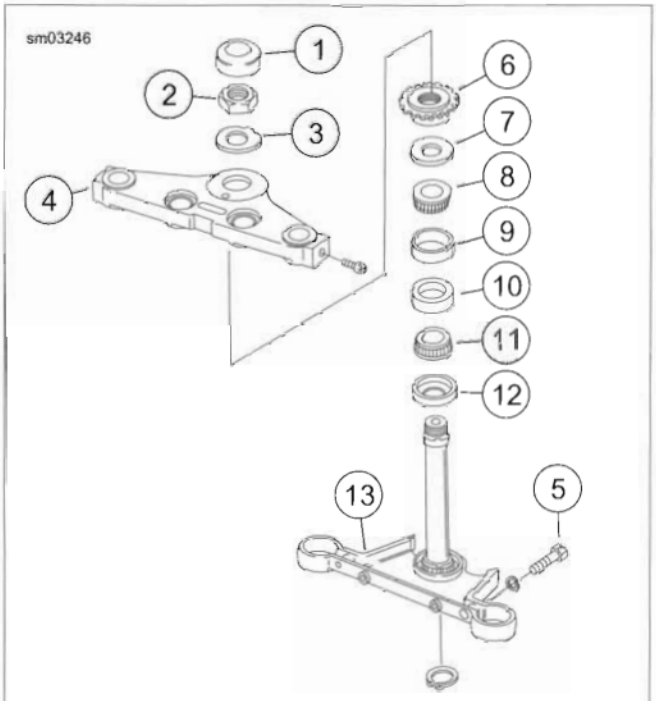

1. **Fork stem cap**
2. **Fork stem nut**
3. **Lockwasher**
4. **Upper bracket**
5. **Pinch bolt**
6. **Adjusting nut**
7. **Upper dust shield**
8. **Upper bearing**
9. **Upper bearing race**
10. **Lower bearing race**
11. **Lower bearing**
12. **Lower dust shield**
13. **Fork stem and bracket**

Figure 1-43. Steering Head: FXST

ADJUSTMENT: FXSB

FASTENER	TORQUE VALUE	
Fork stem nut, FXSB	70-80 ft-lbs	94.9-108.4 Nm
Fork bracket pinch bolt, lower	30-35 ft-lbs	40.7-47.5 Nm
Fork stem nut, FXSB	70-80 ft-lbs	94.9-108.4 Nm
Fork bracket pinch bolt, lower	30-35 ft-lbs	40.7-47.5 Nm

Bearing Adjustment (Fall-away)

1. Support motorcycle upright so front fork is completely suspended and the vehicle is level.
2. Remove all accessory weight, such as a windshield, that may influence the way the front fork swings.
3. **ABS models:** disconnect brake line from steering head.
4. Place a suitable marking material, such as masking tape, over the fender tip.
5. Install a pointer so the base is stationary on the floor and the pointer indicates the center of the fender. The front

fork should be straight ahead, however the balance point may be slightly off center.

6. Check steering head bearing fall-away.
   a. Rotate the front fork from steering stop to steering stop three times and then center the front fork.
   b. Tap the fender on one side until the front fork begins to fall-away by itself. Label this point on the marking material.
   c. Repeat the previous step in the other direction.
   d. Repeat until marks are consistent. If marks vary, use the average.
   e. Measure distance between marks.
7. The distance between the fall-away marks must be 2.0-4.0 in. (50.8-101.6 mm). If fall-away is not within specifications, see next steps.
8. If the distance exceeds 4.0 in. (101.6 mm):
   a. See Figure 1-44. Loosen the lower pinch bolts (5).
   b. Remove fork stem cap (1).
   c. Loosen the fork stem nut (2).
   d. Loosen the bearing adjustment nut (4) slightly.
   e. Tighten the fork stem nut to 70-80 ft-lbs (94.9-108.4 Nm).
   f. Tighten pinch bolts to 30-35 ft-lbs (40.7-47.5 Nm).
   g. Install fork stem cap (1).
   h. Repeat procedure to determine if fall-away is within specifications.
9. If the distance is less than 2.0 in. (50.8 mm):
   a. See Figure 1-44. Loosen lower pinch bolts (5).
   b. Remove fork stem cap (1).
   c. Loosen fork stem nut (2).
   d. Tighten bearing adjustment nut (4) slightly.
   e. Tighten fork stem nut to 70-80 ft-lbs (94.9-108.4 Nm).
   f. Tighten lower pinch bolts to 30-35 ft-lbs (40.7-47.5 Nm).
   g. Install fork stem cap (1).
   h. Repeat procedure to determine if fall-away is within specifications.

NOTE

If adjustment seems to have no impact, check to see if fork tubes are stuck in clamps. If necessary, strike tubes with a dead blow hammer to free. Test steering head bearing fall-away after freeing forks.

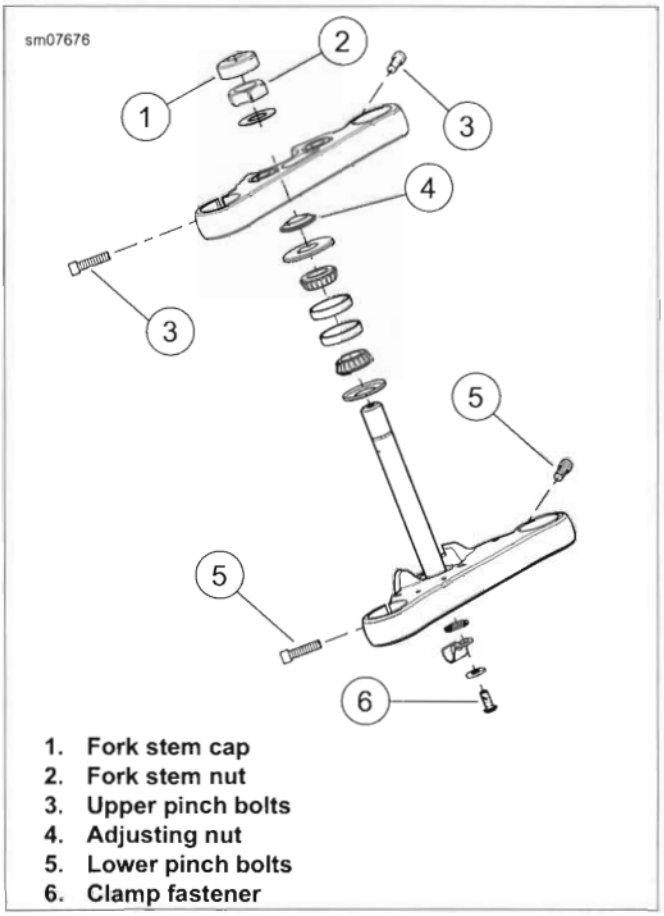

1. **Fork stem cap**
2. **Fork stem nut**
3. **Upper pinch bolts**
4. **Adjusting nut**
5. **Lower pinch bolts**
6. **Clamp fastener**

Figure 1-44. Steering Head: FXSB

LUBRICATION

See Figure 1-45. Use SPECIAL PURPOSE GREASE every 10,000 mile (16,000 km) service interval. Fill grease fitting on steering neck until grease begins to come out the top and bottom of the steering head.

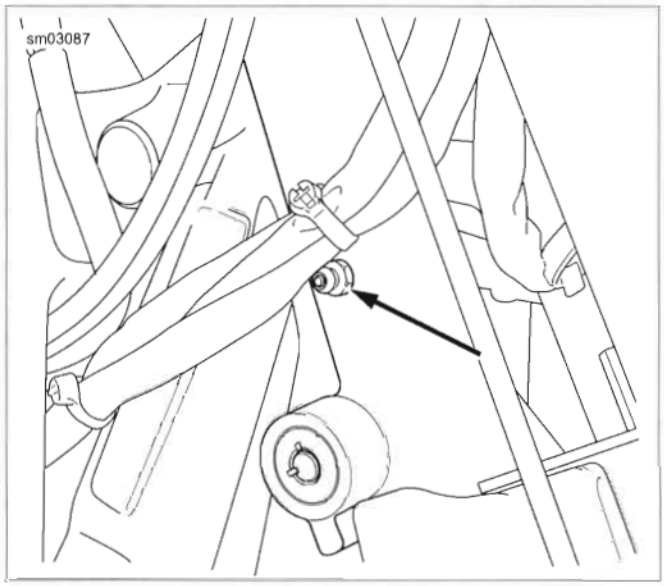

Figure 1-45. Grease Fitting

GENERAL

⚠WARNING

Batteries contain sulfuric acid, which could cause severe burns to eyes and skin. Wear a protective face shield, rubberized gloves and protective clothing when working with batteries. KEEP BATTERIES AWAY FROM CHILDREN. (00063a)

⚠WARNING

Never remove warning label attached to top of battery. Failure to read and understand all precautions contained in warning, could result in death or serious injury. (00064a)

⚠WARNING

Batteries, battery posts, terminals and related accessories contain lead and lead compounds, and other chemicals known to the State of California to cause cancer, and birth defects or other reproductive harm. Wash hands after handling. (00019e)

NOTICE

Keep battery clean and lightly coat terminals with petroleum jelly to prevent corrosion. Failure to do so could result in damage to battery terminals. (00217a)

AGM batteries are permanently sealed, maintenance-free, valve-regulated, lead/calcium and sulfuric acid batteries. The batteries are shipped pre-charged and ready to be put into service. Do not attempt to open these batteries for any reason.

NOTE

For charging information, see 1.19 BATTERY MAINTENANCE, Charging Battery. For testing information, see the electrical diagnostic manual.

om01163

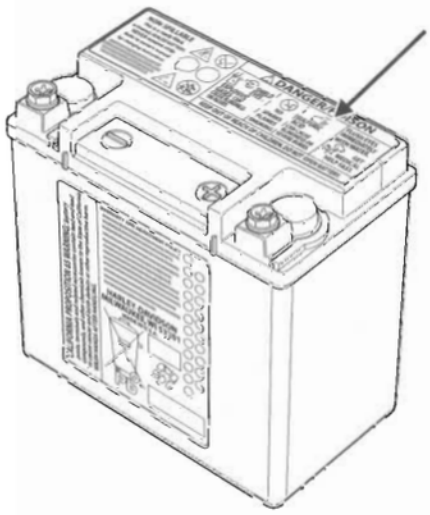

Figure 1-46. Battery Warning Label

sm02241



1. Contents are corrosive
2. Wear safety glasses
3. Contents are explosive
4. Keep flames away
5. Read instructions
6. Keep away from children

Figure 1-47. Battery Warning Label

Table 1-18. Antidotes for Battery Acid

CONTACT	TREATMENT
External	Flush with water.
Internal	Drink large quantities of milk or water, followed by milk of magnesia, vegetable oil or beaten eggs. Get immediate medical attention.
Eyes	Flush with water. Get immediate medical attention.

CLEANING AND INSPECTION

NOTE

Battery top must be clean and dry. Dirt and electrolyte on top of the battery causes battery to self-discharge.

1. Clean battery top with a solution of baking soda (sodium bicarbonate) and water (5 teaspoons baking soda per quart or liter of water).
2. When the solution stops bubbling, rinse off the battery with clean water.
3. Clean cable connectors and battery terminals using a wire brush or sandpaper. Remove any oxidation.
4. Inspect the battery screws, and cables for breakage, loose connections and corrosion.
5. Check the battery terminals for melting or damage caused by over-tightening.
6. Inspect the battery for discoloration, raised top or a warped or distorted case. This might indicate that the battery has been frozen, overheated or overcharged.
7. Inspect the battery case for cracks or leaks.

VOLTMETER TEST

⚠WARNING

Batteries contain sulfuric acid, which could cause severe burns to eyes and skin. Wear a protective face shield, rubberized gloves and protective clothing when working with batteries. KEEP BATTERIES AWAY FROM CHILDREN. (00063a)

⚠WARNING

Never remove warning label attached to top of battery. Failure to read and understand all precautions contained in warning, could result in death or serious injury. (00064a)

The voltmeter test provides a general indicator of battery condition. Check the voltage of the battery to verify that it is fully charged.

1. If the open circuit (disconnected) voltage reading is below 12.6 V:
   a. Charge the battery.
   b. Check the voltage after the battery has set for at least one hour.
2. If the voltage reading is 12.7 V or above:
   a. Perform a battery diagnostic test. See the electrical diagnostic manual for the load test procedure.
   b. Refer to Table 1-19.

Table 1-19. Voltmeter Test For Battery Charge Conditions

VOLTAGE (OCV)	STATE OF CHARGE
12.7 V	100%
12.6 V	75%
12.3 V	50%
12.0 V	25%
11.8 V	0%

CHARGING BATTERY

Safety Precautions

An automatic, constant monitoring battery charger/tender with a charging rate of 5 amps maximum at no more than 14.6 volts is recommended. The use of constant current chargers (including trickle chargers) to charge sealed AGM batteries is not recommended.

Any overcharge will cause dry-out and premature battery failure. Always review charger instructions before charging a battery. In addition to the manufacturer's instructions, follow these general safety precautions:

- Always wear eye, face and hand protection.
- Always charge batteries in a well-ventilated area.
- Turn the charger off before connecting or disconnecting the leads to the battery to avoid dangerous sparks.
- Never try to charge a visibly damaged or frozen battery.
- Connect the charger leads to the battery. Red positive lead to the positive terminal. Black negative lead to the negative terminal. If the battery is still in the vehicle, connect the negative lead to the chassis ground. Verify that the ignition and all electrical accessories are turned off.
- Verify that charger leads to battery are not separated, frayed or loose.
- If the battery temperature exceeds 110 °F (43 °C) during charging, discontinue charger and allow the battery to cool.

Using a Battery Charger

Charge the battery if:

- Vehicle lights appear dim.
- Electric starter sounds weak.
- Battery has not been used for an extended period of time.

⚠WARNING

Explosive hydrogen gas, which escapes during charging, could cause death or serious injury. Charge battery in a well-ventilated area. Keep open flames, electrical sparks and smoking materials away from battery at all times. KEEP BATTERIES AWAY FROM CHILDREN. (00065a)

NOTICE

If battery releases an excessive amount of gas during charging, decrease the charging rate. Overheating can result in plate distortion, internal shorting, drying out or damage. (00413b)

1. Check charge state with voltmeter test. If battery voltage is less than 12.7 volts, see the next step.

⚠WARNING

Unplug or turn OFF battery charger before connecting charger cables to battery. Connecting cables with charger ON can cause a spark and battery explosion, which could result in death or serious injury. (00066a)

NOTICE

Do not reverse the charger connections described in the following steps or the charging system of the motorcycle could be damaged. (00214a)

NOTES

- *Most constant monitoring battery chargers are completely automatic. They can be left connected to both AC power and to the battery that is being charged. When leaving this type of charger connected for extended periods of time, periodically check the battery to see if it is unusually warm. This is an indication that the battery may have a weak cell or internal short. Read the manufacturer's instructions for the charger.*
- *Do not use battery chargers that produce excessively high voltage designed for flooded batteries or excessively high current designed for much larger batteries. Charging should be limited to 5 amps maximum at no more than 14.6 volts.*

2. Connect red battery charger lead to the positive terminal and black battery charger lead to the negative terminal of the battery.

NOTE

If the battery is still in the vehicle, connect the negative lead to the chassis ground. Be sure that the ignition and all electrical accessories are turned off.

3. Step away from the battery and turn on the charger.

⚠WARNING

Unplug or turn OFF battery charger before disconnecting charger cables from battery. Disconnecting clamps with charger ON can cause a spark and battery explosion, which could result in death or serious injury. (00067a)

4. After the battery is fully charged, turn the charger OFF. Disconnect the black battery charger lead from the negative terminal of the battery.
5. Disconnect the red battery charger lead from the positive terminal of the battery.
6. Mark the charging date on the battery.
7. Perform a battery diagnostic test to determine the condition of the battery. See the electrical diagnostic manual.
8. If charging a battery because voltmeter test reading was below 12.6 V, perform voltmeter test. See the electrical diagnostic manual.

BATTERY DISCONNECTION AND REMOVAL

⚠WARNING

Disconnect negative (-) battery cable first. If positive (+) cable should contact ground with negative (-) cable connected, the resulting sparks can cause a battery explosion, which could result in death or serious injury. (00049a)

Security siren: To prevent the optional siren from sounding, turn on the ignition with the hands-free fob present to disarm the security system.

1. Remove seat.
2. See Figure 1-48. Remove battery negative cable (black) from battery negative terminal.
3. Remove battery positive cable (red) from battery positive terminal.
4. Remove battery.

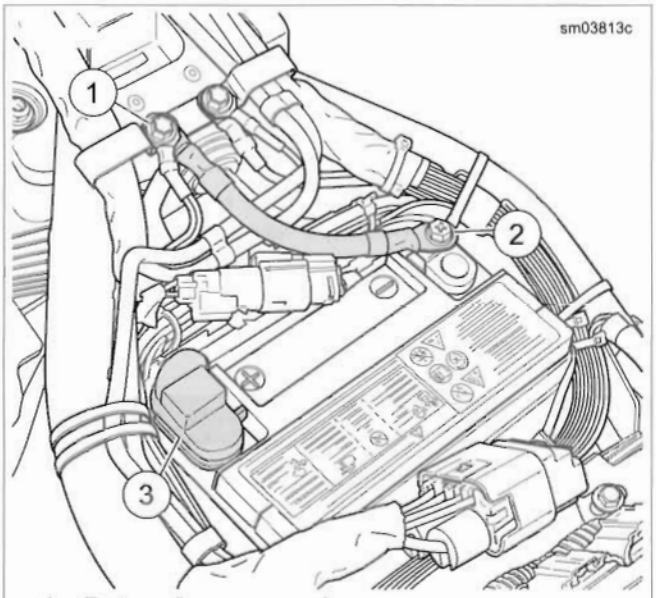

1. **Battery frame ground**
2. **Negative battery cable**
3. **Positive battery cable**

Figure 1-48. Battery Connections

STORAGE

⚠WARNING

Batteries contain sulfuric acid, which could cause severe burns to eyes and skin. Wear a protective face shield, rubberized gloves and protective clothing when working with batteries. KEEP BATTERIES AWAY FROM CHILDREN. (00063a)

If the motorcycle is stored with the security system armed, connect an automatic, constant monitoring battery charger/tender to maintain battery charge. Refer to the Harley-Davidson Parts and Accessories catalog.

If the motorcycle is stored with the battery installed, without a Harley-Davidson constant monitoring battery charger/tender, and with the security system **not** armed, remove main fuse.

If the motorcycle will not be operated for several weeks, such as during the winter season, remove the battery from the motorcycle and fully charge.

See Figure 1-49. A battery that is removed from the vehicle is affected by self-discharge. A battery that is stored in the vehicle is affected by self-discharge and, more significantly, by parasitic loads. A parasitic load is caused by things like diode leakage or maintaining computer memory with the vehicle turned off.

Batteries self-discharge at a faster rate at higher ambient temperatures. To reduce the self-discharge rate, store battery in a cool, dry place.

Charge the battery every two weeks if stored in the vehicle. Charge the battery once per month if stored out of the vehicle.

NOTE

Use a Harley-Davidson constant monitoring battery charger/tender to maintain battery charge for extended periods of time without risk of overcharging or boiling.

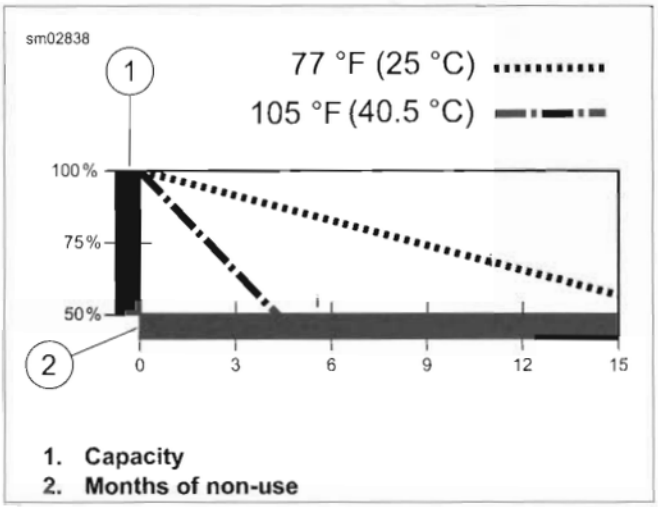

1. **Capacity**
2. **Months of non-use**

Figure 1-49. Battery Self-Discharge Rate

BATTERY INSTALLATION AND CONNECTION

FASTENER	TORQUE VALUE	
Starter nut	70-90 **in-lbs**	7.9-10.2 Nm
Battery terminal fasteners	60-72 **in-lbs**	6.8-8.1 Nm
Battery terminal fasteners	60-72 **in-lbs**	6.8-8.1 Nm

1. See Figure 1-50. Position positive battery cable properly at starter. Cable end must face 35 +/-10 degrees forward from left side of vehicle.

⚠WARNING

Be sure rubber boot covers starter solenoid terminal connected to positive (+) battery cable. An uncovered terminal can short and cause sparks, which could result in a battery explosion and death or serious injury. (00463c)

2. Tighten starter nut to 70-90 **in-lbs** (7.9-10.2 Nm). Cover with boot.
3. See Figure 1-51. Place battery caddy into position and install battery caddy clip (1) under front of battery tray (3). Make sure tabs (2) of battery caddy fit over rear of battery tray.
4. See Figure 1-52. Install positive battery cable (1) into clip in caddy. Place an S-shaped bend in the positive battery cable at the starter end of the cable. This properly positions the terminal end for battery installation.
5. Route rear O2 sensor harness (2) through clip (3).

NOTICE

Connect the cables to the correct battery terminals. Failure to do so could result in damage to the motorcycle electrical system. (00215a)

⚠WARNING

Connect positive (+) battery cable first. If positive (+) cable should contact ground with negative (-) cable connected, the resulting sparks can cause a battery explosion, which could result in death or serious injury. (00068a)

6. See Figure 1-53. Install battery. Tighten positive battery terminal fastener to 60-72 **in-lbs** (6.8-8.1 Nm).
7. Install negative battery cable at battery frame ground (1) before any accessory ground wires.
8. Install negative battery cable (2) at battery. Tighten negative battery terminal fastener to 60-72 **in-lbs** (6.8-8.1 Nm).

⚠WARNING

After installing seat, pull upward on seat to be sure it is locked in position. While riding, a loose seat can shift causing loss of control, which could result in death or serious injury. (00070b)

9. Install seat.

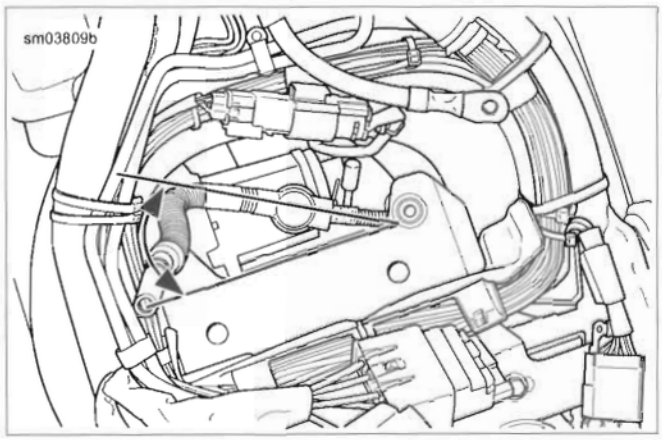

Figure 1-50. Positive Battery Cable Routing

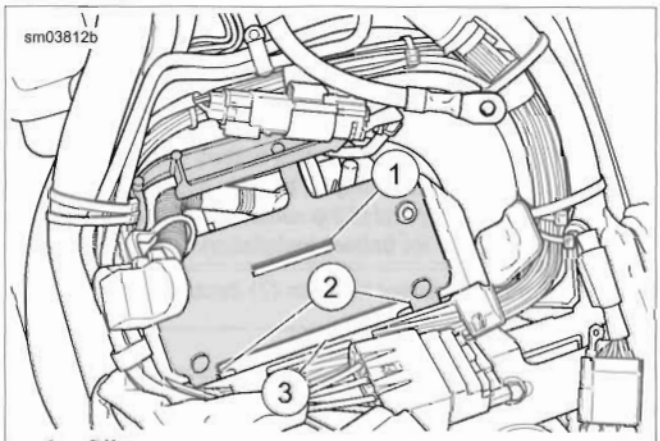

1. Clip
2. Tabs
3. Battery tray

Figure 1-51. Battery Caddy

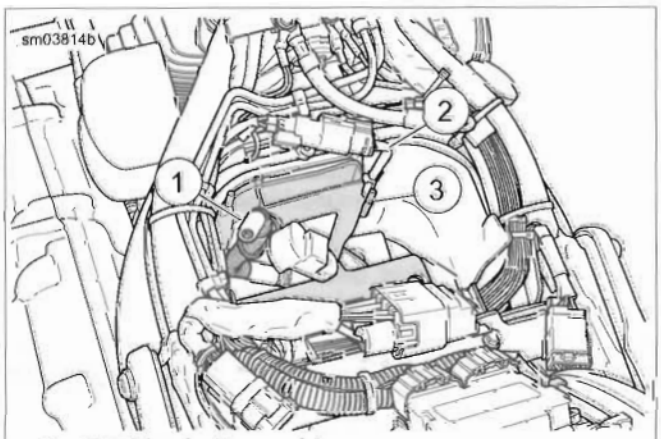

1. Positive battery cable
2. Rear oxygen sensor harness
3. Clip

Figure 1-52. Battery Caddy Wire Routing

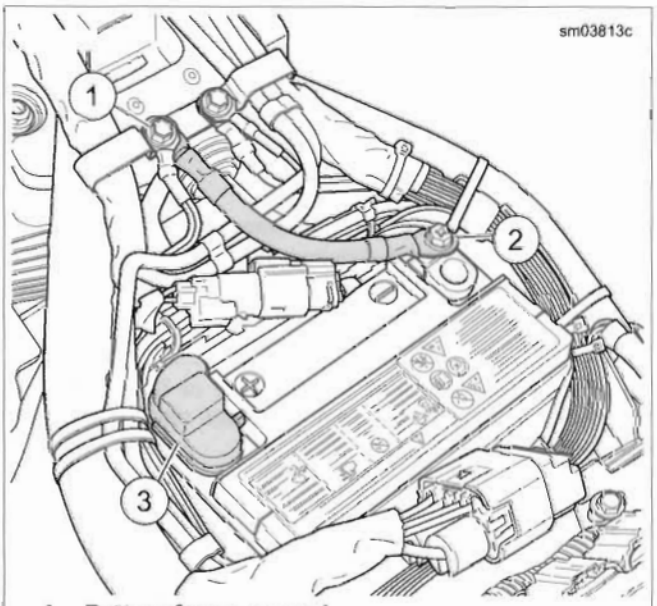

1. Battery frame ground
2. Negative battery cable
3. Positive battery cable

Figure 1-53. Battery Connections

HEADLAMP ALIGNMENT

⚠WARNING

The automatic-on headlamp feature provides increased visibility of the rider to other motorists. Be sure headlamp is on at all times. Poor visibility of rider to other motorists can result in death or serious injury. (00030b)

NOTE

Adjust the headlamps of motorcycles with multiple beam headlamps to converge into one pattern.

1. Check the tire pressure.
2. Fill fuel tank or add an equal amount of ballast.
3. Adjust the rear shocks for the rider and intended load.

NOTE

Choose a wall in minimum light.

4. See Figure 1-54. Park the motorcycle in a line (1) perpendicular to the wall.
5. Position motorcycle so that front axle is 25 ft (7.6 m) from wall.
6. Draw a vertical line (2) on the wall.
7. With the motorcycle loaded, point the front wheel straight forward at wall. Measure the distance (4) from the floor to the center of the high beam bulb.
8. Draw a horizontal line (5) through the vertical line on the wall. Place line 2.1 in (53.3 mm) lower than the measured bulb centerline.

NOTE

See Figure 1-54. The headlamp is aligned when the light beam hot spot is located over the intersection of the lines.

9. With the high beam activated, verify headlamp alignment. Adjust as necessary.

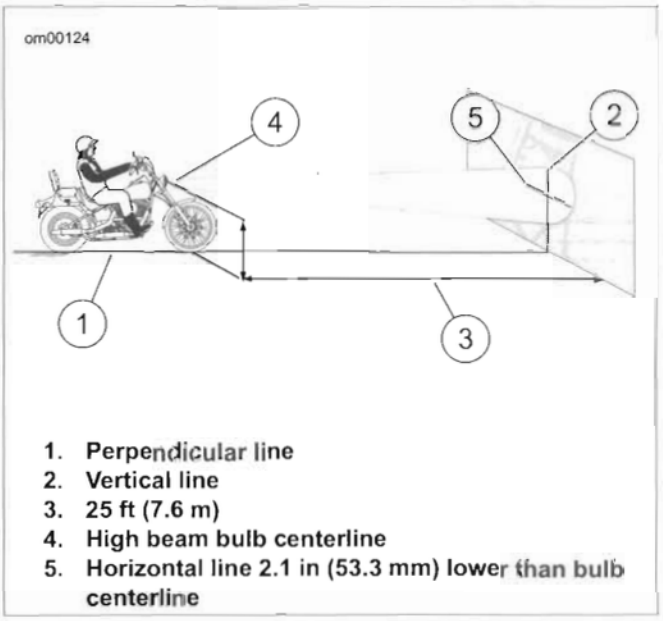

1. **Perpendicular line**
2. **Vertical line**
3. **25 ft (7.6 m)**
4. **High beam bulb centerline**
5. **Horizontal line 2.1 in (53.3 mm) lower than bulb centerline**

Figure 1-54. Headlamp Alignment

HEADLAMP ADJUSTMENT

FASTENER	TORQUE VALUE	
Headlamp horizontal adjustment fastener	30-35 ft-lbs	40.7-47.5 Nm
Headlamp vertical adjusting bolt	25-30 ft-lbs	33.9-40.7 Nm

1. See Figure 1-55. Loosen horizontal adjustment fastener (2). Tilt headlamp left or right to direct light beam straight ahead.
2. Tighten horizontal adjustment fastener (2) to 30-35 ft-lbs (40.7-47.5 Nm).
3. Loosen vertical adjustment fastener (1). Tilt headlamp up or down in relationship to the horizontal line from the headlamp alignment inspection.
4. Tighten vertical adjustment fastener (1) to:
   a. **FXSB:** 25-30 ft-lbs (33.9-40.7 Nm).

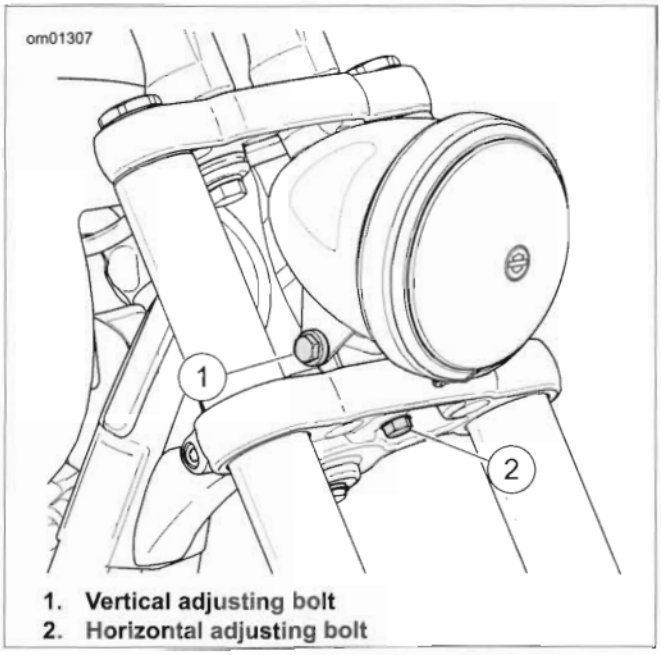

1. Vertical adjusting bolt
2. Horizontal adjusting bolt

Figure 1-55. Headlamp Adjustment (typical)

SHOCK ABSORBERS

PART NUMBER	TOOL NAME
94448-82B	SHOCK ADJUSTMENT SPANNER

Calculate Number of Turns

Softail models feature adjustable rear shock absorbers located under the motorcycle. The rear shock spring preload is adjusted to the total load or may be varied to suit your own personal comfort.

NOTE

Refer to Table 2-11. To determine the motorcycle configuration for an FLS or FLSTFB, check the configuration/calibration character stamped on the VIN.

1. Identify the number of preload turns for the weight of the rider.
   a. **FLSTC, FLSTF, FXST, FLS (APC, AUS), FLSTFB (HDI, ENG, IND, BRZ):** Refer to Table 1-20.
   b. **FXSB, FLSTN, FLS (all except APC/AUS), FLSTFB (all except HDI, ENG, IND, BRZ):** Refer to Table 1-21.
2. Calculate the number of turns for the intended passenger and cargo.
3. Add the number of turns for the rider to the number of turns required for the total weight of the passenger and/or cargo.

Table 1-20. Shock Preload: FLSTC, FLSTF, FXST, FLS (APC, AUS), FLSTFB (HDI, ENG, IND, BRZ)

RIDER WEIGHT*	TURNS**
Less than 165 lb (75 kg)	0
165-220 lb (75-100 kg)	1
220-275 lb (100-125 kg)	2
275-335 lb (125-152 kg)	3
335-395 lb (152-179 kg)	4
395 lb (179 kg) to maximum added weight allowed (refer to Table 2-4 and Table 2-5)	5

* **Passenger/Cargo:** For every 40 lb (18.1 kg) increase preload one turn.
** Turns out (counterclockwise) from minimum preload.

Table 1-21. Shock Preload: FXSB, FLSTN, FLS (all except APC, AUS), FLSTFB (all except HDI, ENG, IND, BRZ)

RIDER WEIGHT*	TURNS**
Less than 185 lb (84 kg)	0
185-235 lb (84-107 kg)	1
235-285 lb (107-129 kg)	2
285-340 lb (129-154 kg)	3
340 lb (154 kg) to maximum added weight allowed (refer to Table 2-4 and Table 2-5)	4

* **Passenger/Cargo:** For every 35 lb (15.8 kg) increase preload one turn.
** Turns out (counterclockwise) from minimum preload.

Adjustment

NOTES

- *Adjust the shocks with the motorcycle resting on the jiffy stand.*
- *Adjust both shocks the same number of turns.*

1. See Figure 1-56. Hold the shaft with a wrench on the flats of the shock shaft and loosen the jamnut (2).
2. Use the tangs of the SHOCK ADJUSTMENT SPANNER (Part No. 94448-82B) in the holes in the rear shock canister (1) to turn the canister clockwise until it stops. This position is the minimum preload position.
3. Mark the face of the canister for reference.
4. Turn the canister counterclockwise the number of turns calculated for the total load.
5. Tighten the jamnut.

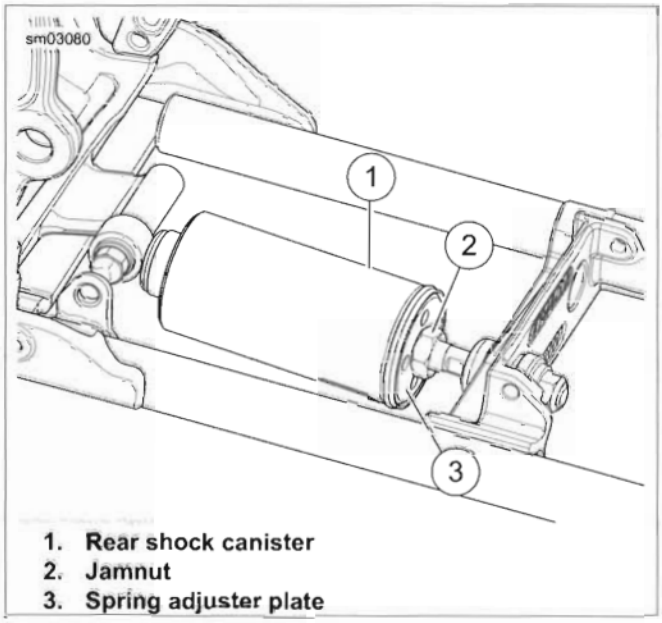

1. **Rear shock canister**
2. **Jamnut**
3. **Spring adjuster plate**

Figure 1-56. Rear Shock Adjustment

GENERAL

Always prepare motorcycle for extended storage following service manual procedures. This will help protect parts against corrosion, preserve the battery and prevent buildup of gum and varnish in the fuel system.

PLACING IN STORAGE

⚠WARNING

Do not store motorcycle with gasoline in tank within the home or garage where open flames, pilot lights, sparks or electric motors are present. Gasoline is extremely flammable and highly explosive, which could result in death or serious injury. (00003a)

1. Run motorcycle until engine is at normal operating temperature. Stop the engine then drain the oil tank, install a **new** oil filter, and fill oil tank with the proper grade oil. Check the transmission lubricant level.

⚠WARNING

Avoid spills. Slowly remove filler cap. Do not fill above bottom of filler neck insert, leaving air space for fuel expansion. Secure filler cap after refueling. Gasoline is extremely flammable and highly explosive, which could result in death or serious injury. (00028a)

⚠WARNING

Use care when refueling. Pressurized air in fuel tank can force gasoline to escape through filler tube. Gasoline is extremely flammable and highly explosive, which could result in death or serious injury. (00029a)

2. Prepare your fuel system by filling fuel tank and adding a gasoline stabilizer. Use one of the commercially available gasoline stabilizers following the manufacturer's instructions.
3. Remove the spark plugs, inject a few squirts of engine oil into each cylinder and crank the engine 5-6 revolutions. install spark plugs.
4. Inspect drive belt deflection. See 1.12 DRIVE BELT AND SPROCKETS.
5. Inspect drive belt and sprockets. See 1.12 DRIVE BELT AND SPROCKETS.
6. Inspect air cleaner filter. See 1.7 AIR CLEANER AND EXHAUST SYSTEM.
7. Lubricate controls. See 1.14 CABLE AND CHASSIS LUBRICATION.
8. Inspect operation of all electrical equipment and switches.
9. Check tire inflation and inspect tires for wear and/or damage. See 1.8 TIRES AND WHEELS. If the motorcycle will be stored for an extended period of time, securely support the motorcycle under the frame so that all weight is off the tires.

⚠WARNING

Be sure that brake fluid or other lubricants do not contact brake pads or discs. Such contact can adversely affect braking ability, which could cause loss of control, resulting in death or serious injury. (00290a)

10. Wash painted and chrome-plated surfaces. Apply a light film of oil to exposed unpainted surfaces.

⚠WARNING

Unplug or turn OFF battery charger before connecting charger cables to battery. Connecting cables with charger ON can cause a spark and battery explosion, which could result in death or serious injury. (00066a)

⚠WARNING

Explosive hydrogen gas, which escapes during charging, could cause death or serious injury. Charge battery in a well-ventilated area. Keep open flames, electrical sparks and smoking materials away from battery at all times. KEEP BATTERIES AWAY FROM CHILDREN. (00065a)

11. Remove battery from vehicle. Charge battery until the correct voltage is obtained. Charge the battery every other month if it is stored at temperatures below 60 ° F (16 ° C). Charge battery once a month if it is stored at temperatures above 60 ° F (16 ° C). See 1.19 BATTERY MAINTENANCE.

⚠WARNING

Unplug or turn OFF battery charger before disconnecting charger cables from battery. Disconnecting clamps with charger ON can cause a spark and battery explosion, which could result in death or serious injury. (00067a)

12. If the motorcycle is to be covered, use a material that will breathe, such as a Harley-Davidson storage cover or light canvas. Plastic materials that do not breathe promote the formation of condensation, which leads to corrosion.

REMOVAL FROM STORAGE

⚠WARNING

The clutch failing to disengage can cause loss of control, which could result in death or serious injury. Prior to starting after extended periods of storage, place transmission in gear and push vehicle back and forth several times to assure proper clutch disengagement. (00075a)

1. Charge and install the battery.
2. Remove and inspect the spark plugs. Replace if necessary.
3. Clean the air cleaner element.
4. If fuel tank was drained, fill fuel tank with fresh gasoline.
5. Start the engine and run until it reaches normal operating temperature.

6. Check engine oil level. Check the transmission lubricant level. Fill to proper levels with correct fluids, if required.
7. Perform all of the checks in the PRE-RIDING CHECKLIST in the owner's manual.

GENERAL

⚠WARNING

The Troubleshooting section of this manual is a guide to diagnose problems. Read the appropriate sections of this manual before performing any work. Improper repair and/or maintenance could result in death or serious injury. (00528b)

Use the symptoms listed for general troubleshooting. More than one condition may be present at a time. Check all possible items to keep motorcycle in good operating condition.

NOTE

See the electrical diagnostic manual for additional information.

ENGINE

Starter Motor Does Not Operate or Does Not Turn Engine Over

1. Ignition switch not in IGNITION position.
2. Engine run switch in OFF position.
3. Discharged battery, loose or corroded connections (solenoid chatters).
4. Starter control circuit, relay, or solenoid faulty.
5. Electric starter shaft pinion gear not engaging or overrunning clutch slipping.
6. BCM Bank Angle Sensor tripped and ignition/light key switch not cycled OFF then back to IGNITION.
7. Security system activated.
8. Motorcycle in gear and clutch not pulled in.
9. Jiffy stand down and transmission in gear (HDI models only)
10. Main fuse not in place

Engine Turns Over But Does Not Start

1. Fuel tank empty.
2. Fouled spark plugs.
3. Discharged battery, loose or damaged battery terminal connections.
4. Engine lubricant too heavy (winter operation).

NOTE

For cold weather starts, always disengage clutch.

5. Spark plug cables in bad condition and shorting, cable connections loose or cables connected to incorrect cylinders.
6. Loose wire connection at coil, battery, or ECM connector.
7. Ignition timing incorrect due to faulty coil, ECM or sensors.
8. Bank Angle Sensor tripped and ignition switch not cycled OFF then back to IGNITION.
9. Fuel filter clogged.
10. Sticking or damaged valve(s) or wrong length pushrod(s).
11. Plugged fuel injectors.

Starts Hard

1. Spark plugs in bad condition or have improper gap or are partially fouled.
2. Spark plug cables in poor condition.
3. Battery nearly discharged.
4. Damaged wire or loose wire connection at one of the battery terminals, ignition coil or ECM connector.
5. Water or dirt in fuel system.
6. Intake air leak.
7. Fuel tank vent hose, filler cap vent or vapor valve plugged, or fuel line closed off, restricting fuel flow.
8. Engine lubricant too heavy (winter operation).

NOTE

For cold weather starts, always disengage clutch.

9. Ignition not functioning properly (possible sensor failure).
10. Faulty ignition coil.
11. Valves sticking.
12. Partially plugged fuel injector(s).

Starts But Runs Irregularly or Misses

1. Spark plugs in poor condition or partially fouled.
2. Spark plug cables in poor condition and shorting or leaking.
3. Spark plug gap too close or too wide.
4. Faulty ignition coil, ECM, or sensor.
5. Battery nearly discharged.
6. Damaged wire or loose connection at battery terminals, ignition coil or ECM connector.
7. Intermittent short circuit due to damaged wire insulation.
8. Water or dirt in fuel system.
9. Fuel tank vent system plugged.
10. Air leak at intake manifold or air cleaner.
11. Loose or dirty ECM connector.
12. Faulty Sensor(s): Manifold Absolute Pressure (MAP), Crank Position (CKP) or Oxygen (O2).
13. Incorrect valve timing.
14. Weak or damaged valve springs.
15. Damaged intake or exhaust valve.
16. Partially plugged fuel injector(s).
17. Air cleaner EVAP solenoid (if equipped) stuck closed or inoperative.

A Spark Plug Fouls Repeatedly

1. Fuel mixture too rich.
2. Incorrect spark plug for the kind of service.
3. Piston rings badly worn or damaged.
4. Valve guides or seals badly worn.

Pre-Ignition or Detonation (Knocks or Pings)

1. Fuel octane rating too low.
2. Faulty spark plugs.
3. Incorrect spark plug for the kind of service.
4. Excessive carbon deposit on piston head or in combustion chamber.
5. Ignition timing advanced due to faulty sensor inputs (MAP and/or CKP).
6. Ignition timing advanced due to ECM or sensors (CKP, ET or MAP) defective.
7. Intake manifold vacuum leak.

Overheating

1. Insufficient oil supply or oil not circulating.
2. Insufficient air flow over engine.
3. Heavy carbon deposits.
4. Ignition timing retarded due to defective ECM or faulty sensor(s): Manifold Absolute Pressure (MAP) and/or Crank Position (CKP).
5. Leaking valve(s).
6. O-ring damaged or missing from oil pump/crankcase junction (also results in poor engine performance).

Valve Train Noise

1. Low oil pressure caused by oil feed pump not functioning properly or oil passages obstructed.
2. Faulty hydraulic lifter(s).
3. Bent pushrod(s).
4. Incorrect pushrod length.
5. Rocker arm binding on shaft.
6. Valve sticking in guide.
7. Chain tensioning spring or shoe worn.
8. Cam(s), cam gear(s) or cam bushing(s) worn.
9. Cam timing incorrect.

Excessive Vibration

1. Wheels bent or damaged and/or tires worn or damaged.
2. Primary chain badly worn or links tight as a result of insufficient lubrication or misalignment.
3. Engine to transmission mounting bolts loose.
4. Upper engine mounting bracket loose.
5. Ignition timing advanced due to faulty sensor inputs (MAP, CKP) or poorly tuned engine.
6. Internal engine problem.
7. Damaged frame.
8. Engine counterbalancer out of time or bearing failed.
9. Rear fork pivot shaft fasteners loose.
10. Front engine mounting bolts loose.

Check Engine Light Illuminates During Operation

1. Fault detected. See the electrical diagnostic manual for more information.

LUBRICATION SYSTEM

Oil Does Not Return To Oil Tank

1. Oil tank empty.
2. Oil pump not functioning.
3. Return oil pump gears damaged.
4. Restricted oil lines or fittings.
5. Restricted oil filter.
6. Oil pump misaligned or in poor condition.
7. O-ring damaged or missing from oil pump/crankcase junction (also results in poor engine performance).

Engine Uses Too Much Oil Or Smokes Excessively

1. Oil tank overfilled.
2. Restricted oil return line to oil tank.
3. Restricted breather operation.
4. Restricted oil filter.
5. Oil pump misaligned or in poor condition.
6. Piston rings badly worn or damaged.
7. Valve guides or seals worn or damaged.
8. O-ring damaged or missing from oil pump/crankcase junction (also results in poor engine performance).
9. Plugged crankcase scavenge port.
10. Oil diluted with gasoline.

Engine Leaks Oil From Cases, Pushrods, Hoses, Etc.

1. Loose parts.
2. Imperfect seal at gaskets, pushrod cover, washers, etc.
3. Restricted breather passages or hose to air cleaner.
4. Restricted oil filter.
5. Oil tank overfilled.
6. Lower rocker housing gasket installed incorrectly (upside down).
7. Restricted oil return line to oil tank.
8. Porosity.

Low Oil Pressure

1. Oil tank underfilled.
2. Faulty low oil pressure switch.
3. Oil pump O-ring damaged or missing.
4. Bypass valve stuck in open position.
5. Ball missing or leaking in cam support plate.
6. Worn oil pump gerotor(s).
7. Restricted feed hose from oil tank.
8. Oil diluted with gasoline.

High Oil Pressure

1. Bypass valve stuck in closed position.

ELECTRICAL SYSTEM

NOTE

For diagnostic information see the electrical diagnostic manual.

Alternator Does Not Charge

1. Voltage regulator module not grounded.
2. Engine ground wire loose or damaged.
3. Faulty voltage regulator module.
4. Loose or damaged wires in charging circuit.
5. Faulty stator and/or rotor.

Alternator Charge Rate Is Below Normal

1. Weak or damaged battery.
2. Loose connections.
3. Faulty voltage regulator module.
4. Faulty stator and/or rotor.

Speedometer Operates Erratically

1. Contaminated vehicle speed sensor (remove sensor and clean off metal particles).
2. Loose connections.

TRANSMISSION

Shifts Hard

1. Primary chaincase overfilled with lubricant.
2. Clutch not fully disengaging.
3. Transmission lubricant too heavy (winter operation).
4. Shifter return spring (inside transmission) bent or broken.
5. Bent shifter rod.
6. Shifter forks (inside transmission) sprung.
7. Corners worn off shifter clutch dog rings (inside transmission).

Jumps Out Of Gear

1. Shifter rod improperly adjusted.
2. Shifter drum (inside transmission) improperly adjusted or damaged/worn.
3. Shifter engaging parts (inside transmission) badly worn and rounded.
4. Shifter forks bent.
5. Damaged gears.

Clutch Slips

1. Clutch controls improperly adjusted.
2. Insufficient clutch spring tension.
3. Worn friction discs.

Clutch Drags Or Does Not Release

1. Lubricant level too high in primary chaincase.
2. Clutch controls improperly adjusted.
3. Primary chain badly misaligned or too tight.
4. Insufficient clutch spring tension.
5. Clutch discs warped.

Clutch Chatters

Friction discs or steel discs worn or warped.

HANDLING

Irregularities

1. Improperly loaded motorcycle. Non-standard equipment on the front end such as heavy radio receivers, extra lighting equipment or luggage tends to cause unstable handling.
2. Damaged tire(s) or improper front-rear tire combination.
3. Irregular or peaked front tire tread wear.
4. Incorrect tire pressure. See 1.8 TIRES AND WHEELS
5. Shock absorber not functioning normally.
6. Loose wheel axle nuts. Tighten to recommended torque specification.
7. Rear wheel out of alignment with frame and front wheel.
8. Steering head bearings improperly adjusted. Correct adjustment and replace pitted or worn bearings and races.
9. Loose spokes (laced wheel vehicles only).
10. Tire and wheel unbalanced.
11. Rims and tires out-of-round or eccentric with hub.
12. Rims and tires out-of-true sideways.
13. Rear fork pivot-improper torque.
14. Incorrect, non-specified tire(s) mounted on front or rear wheel.

BRAKES

Brake Does Not Hold Normally

1. Brake fluid reservoir low, system leaking or pads worn.
2. Brake system contains air bubbles.

3. Master cylinder/caliper piston seals worn or parts damaged.
4. Brake pads contaminated with grease or oil.
5. Brake pads badly worn.
6. Brake disc badly worn or warped.
7. Brake drags - insufficient brake pedal or hand lever free play, caliper piston worn or damaged, or excessive brake fluid in reservoir.
8. Brake fades due to heat build up - brake pads dragging or excessive braking.
9. Brake fluid leak when under pressure.

NOTES

SUBJECT	PAGE NO.
2.1 FASTENER TORQUE VALUES	2-1
2.2 SPECIFICATIONS	2-5
2.3 VEHICLE IDENTIFICATION NUMBER (V.I.N.)	2-9
2.4 FRONT WHEEL	2-11
2.5 REAR WHEEL	2-15
2.6 WHEEL LACING	2-18
2.7 CHECKING AND TRUING WHEELS	2-20
2.8 SEALED WHEEL BEARINGS	2-25
2.9 TIRES	2-29
2.10 VEHICLE ALIGNMENT	2-33
2.11 FRONT BRAKE MASTER CYLINDER	2-35
2.12 FRONT BRAKE CALIPER	2-38
2.13 REAR BRAKE MASTER CYLINDER	2-41
2.14 REAR BRAKE CALIPER	2-47
2.15 BRAKE LINES	2-52
2.16 ABS: ELECTRONIC CONTROL UNIT (ECU)	2-58
2.17 ABS: HYDRAULIC CONTROL UNIT (HCU)	2-60
2.18 BLEEDING BRAKES	2-63
2.19 FRONT FORK	2-65
2.20 STEERING HEAD	2-73
2.21 BELT GUARD AND DEBRIS DEFLECTOR	2-77
2.22 REAR SHOCK ABSORBERS	2-78
2.23 REAR FORK	2-81
2.24 THROTTLE CONTROL	2-84
2.25 CLUTCH CONTROL	2-86
2.26 LEFT HAND GRIP	2-88
2.27 HANDLEBAR: FLSTC, FLSTN, FLS, FXST	2-89
2.28 HANDLEBAR: FLSTF/B	2-91
2.29 HANDLEBAR: FXSB	2-95
2.30 FRONT FENDER	2-98
2.31 REAR FENDER: FLSTC	2-100
2.32 REAR FENDER: FLSTF/B	2-102
2.33 REAR FENDER: FXST	2-103
2.34 REAR FENDER: FLS	2-105
2.35 REAR FENDER: FXSB	2-108
2.36 REAR FENDER: FLSTN	2-110
2.37 REAR FENDER WIRE CONDUIT	2-113
2.38 FOOTBOARDS AND FOOTRESTS	2-114
2.39 JIFFY STAND	2-116
2.40 FORK LOCK	2-118
2.41 SEAT AND STRAP RETENTION NUT	2-119
2.42 SEAT: FLS, FXST, FXSB	2-120
2.43 SEAT: FLSTN, FLSTF, FLSTFB, FLSTC	2-121
2.44 LUGGAGE RACK: FLSTN	2-122
2.45 SADDLEBAGS: FLSTC	2-123
2.46 WINDSHIELD: FLSTC	2-125
2.47 SAREE GUARD: INDIA MODELS	2-126
2.48 FRONT LICENSE PLATE BRACKET	2-127
2.49 MEDALLIONS, BADGES AND TANK EMBLEMS	2-128

NOTES

FASTENER TORQUE VALUES IN THIS CHAPTER

The table below lists torque values for all fasteners presented in this chapter.

FASTENER	TORQUE VALUE		NOTES
ABS front brake line 90 degree fitting bolt	36-48 **in-lbs**	4.1-5.4 Nm	2.15 BRAKE LINES, HCU to Front Brake Caliper
Axle nut, front	70-75 ft-lbs	95.0-101.8 Nm	2.4 FRONT WHEEL, Installation
Axle nut, rear	95-105 ft-lbs	129-142 Nm	2.10 VEHICLE ALIGNMENT, Axle Alignment
Axle slider cap fasteners, front	132-180 **in-lbs**	14.9-20.3 Nm	2.4 FRONT WHEEL, Installation
Banjo bolts to front HCU	120-144 **in-lbs**	13.6-16.3 Nm	2.17 ABS: HYDRAULIC CONTROL UNIT (HCU), Front Hydraulic Control Unit (HCU)
Banjo bolts to rear HCU	120-144 **in-lbs**	13.6-16.3 Nm	2.17 ABS: HYDRAULIC CONTROL UNIT (HCU), Rear Hydraulic Control Unit (HCU)
Banjo bolt to front caliper	17-22 ft-lbs	23.1-29.9 Nm	2.15 BRAKE LINES, HCU to Front Brake Caliper
Banjo bolt-to-front master cylinder	17-22 ft-lbs	23.1-29.9 Nm	2.15 BRAKE LINES, Front Master Cylinder to Front HCU
Banjo bolt to HCU	120-144 **in-lbs**	13.6-16.3 Nm	2.15 BRAKE LINES, Front Master Cylinder to Front HCU
Banjo bolt to HCU	120-144 **in-lbs**	13.6-16.3 Nm	2.15 BRAKE LINES, HCU to Front Brake Caliper
Banjo bolt to HCU	120-144 **in-lbs**	13.6-16.3 Nm	2.15 BRAKE LINES, Rear HCU to Rear Brake Caliper
Banjo bolt to rear caliper	17-22 ft-lbs	23.1-29.9 Nm	2.15 BRAKE LINES, Rear HCU to Rear Brake Caliper
Banjo bolt to rear HCU	120-144 **in-lbs**	13.6-16.3 Nm	2.15 BRAKE LINES, Rear Master Cylinder to Rear HCU
Banjo bolt to rear master cylinder	17-22 ft-lbs	23.1-29.9 Nm	2.15 BRAKE LINES, Rear Master Cylinder to Rear HCU
Belt sprocket screws, final torque	67-73 ft-lbs	90.9-99.0 Nm	2.5 REAR WHEEL, Assembly
Belt sprocket screws, first torque	50 ft-lbs	67.8 Nm	2.5 REAR WHEEL, Assembly/After initial torque, loosen screws 1/2 turn (180 degrees)
Brake caliper, front, banjo bolt	14-18 ft-lbs	19.0-24.4 Nm	2.12 FRONT BRAKE CALIPER, Installation
Brake caliper, front, bleeder valve	35-61 **in-lbs**	3.9-6.9 Nm	2.18 BLEEDING BRAKES, Procedure
Brake caliper, front, bridge bolt	14.5-18.0 ft-lbs	19.6-24.5 Nm	2.12 FRONT BRAKE CALIPER, Assembly
Brake caliper, front, mounting bolts	28-38 ft-lbs	38.0-51.5 Nm	2.12 FRONT BRAKE CALIPER, Installation
Brake caliper, rear, bleeder valve	80-100 **in-lbs**	9.0-11.3 Nm	2.18 BLEEDING BRAKES, Procedure
Brake caliper/master cylinder banjo bolt	14-18 ft-lbs	19.0-24.4 Nm	2.11 FRONT BRAKE MASTER CYLINDER, Assembly and Installation
Brake caliper bleeder screw	35-61 **in-lbs**	4.0-6.9 Nm	2.12 FRONT BRAKE CALIPER, Assembly
Brake caliper bleeder screw	80-100 **in-lbs**	9.0-11.3 Nm	2.14 REAR BRAKE CALIPER, Assembly
Brake caliper mounting bolt, front	28-38 ft-lbs	38.0-51.5 Nm	2.4 FRONT WHEEL, Installation
Brake caliper mounting bolt, rear	16-20 ft-lbs	21.7-27.1 Nm	2.14 REAR BRAKE CALIPER, Installation
Brake disc screws, front	16-24 ft-lbs	21.7-32.5 Nm	2.4 FRONT WHEEL, Assembly
Brake disc screws, front	16-24 ft-lbs	21.7-32.5 Nm	2.4 FRONT WHEEL, Assembly
Brake disc screws, rear	30-45 ft-lbs	40.7-61.0 Nm	2.5 REAR WHEEL, Assembly
Brake hose bracket bolt, front	96-120 **in-lbs**	10.8-13.6 Nm	2.20 STEERING HEAD, Installation
Brake hose bracket bolt, front	96-120 **in-lbs**	10.8-13.6 Nm	2.20 STEERING HEAD, Installation
Brake hose bracket bolt, front	96-120 **in-lbs**	10.8-13.6 Nm	2.20 STEERING HEAD, Installation

FASTENER	TORQUE VALUE		NOTES
Brake master cylinder, front, reservoir cover screws	8.9-17.7 **in-lbs**	1.0-2.0 Nm	2.18 BLEEDING BRAKES, Procedure
Brake master cylinder, rear, reservoir cover screws	6-8 **in-lbs**	0.7-0.9 Nm	2.18 BLEEDING BRAKES, Procedure
Brake pad pin, rear caliper	80-120 **in-lbs**	9.0-13.6 Nm	2.14 REAR BRAKE CALIPER, Assembly
Fender, rear, support fasteners, lower-front, 1st torque: FLSTC	30-35 ft-lbs	40.7-47.5 Nm	2.31 REAR FENDER: FLSTC, Installation/Initial torque
Fender, rear, support fasteners, lower-front, 1st torque: FLSTF/B	30-35 ft-lbs	40.7-47.5 Nm	2.32 REAR FENDER: FLSTF/B, Installation/Initial torque
Fender, rear, support fasteners, lower-front, 1st torque: FLSTN	30-35 ft-lbs	40.7-47.5 Nm	2.36 REAR FENDER: FLSTN, Installation/Initial torque
Fender, rear, support fasteners, lower-front, 1st torque: FXST	30-35 ft-lbs	40.7-47.5 Nm	2.33 REAR FENDER: FXST, Installation/Initial torque
Fender, rear, support fasteners, lower-front, final torque: FLSTC	38-42 ft-lbs	51.5-56.9 Nm	2.31 REAR FENDER: FLSTC, Installation/Final torque
Fender, rear, support fasteners, lower-front, final torque: FLSTF/B	38-42 ft-lbs	51.5-56.9 Nm	2.32 REAR FENDER: FLSTF/B, Installation/Final torque
Fender, rear, support fasteners, lower-front, final torque: FLSTN	38-42 ft-lbs	51.5-56.9 Nm	2.36 REAR FENDER: FLSTN, Installation/Final torque
Fender, rear, support fasteners, lower-front, final torque: FXST	38-42 ft-lbs	51.5-56.9 Nm	2.33 REAR FENDER: FXST, Installation/Final torque
Fender, rear, support fasteners, upper: FLSTC	21-27 ft-lbs	28.5-36.6 Nm	2.31 REAR FENDER: FLSTC, Installation
Fender, rear, support fasteners, upper: FLSTF/B	21-27 ft-lbs	28.5-36.6 Nm	2.32 REAR FENDER: FLSTF/B, Installation
Fender, rear, support fasteners, upper: FLSTN	21-27 ft-lbs	28.5-36.6 Nm	2.36 REAR FENDER: FLSTN, Installation
Fender, rear, support fasteners, upper: FXST	21-27 ft-lbs	28.5-36.6 Nm	2.33 REAR FENDER: FXST, Installation
Fender fasteners, front	15-21 ft-lbs	20.3-28.5 Nm	2.30 FRONT FENDER, Installation
Fender support fasteners, rear, 1st torque: FLS	30-35 ft-lbs	40.7-47.5 Nm	2.34 REAR FENDER: FLS, Installation/Initial torque
Fender support fasteners, rear, final torque: FLS	38-42 ft-lbs	51.5-56.9 Nm	2.34 REAR FENDER: FLS, Installation/Final torque
Fender support fasteners - final torque	38-42 ft-lbs	51.5-56.9 Nm	2.47 SAREE GUARD: INDIA MODELS, Upper Saree Guards: All but FXSB
Fender support fasteners - first torque	30-35 ft-lbs	40.7-47.5 Nm	2.47 SAREE GUARD: INDIA MODELS, Upper Saree Guards: All but FXSB
Fender support studs: FLSTC	21-27 ft-lbs	28.5-36.6 Nm	2.45 SADDLEBAGS: FLSTC, Installation
Fender support to fender fasteners, rear: FLS	21-27 ft-lbs	28.5-36.6 Nm	2.34 REAR FENDER: FLS, Installation/Rear mount license plate.
Footrest support screw, passenger	25-30 ft-lbs	33.9-40.7 Nm	2.38 FOOTBOARDS AND FOOTRESTS, Passenger Footrest
Footrest support screw, passenger, left-side: FLSTN	25-30 ft-lbs	33.9-40.7 Nm	2.38 FOOTBOARDS AND FOOTRESTS, Passenger Footrest
Fork damper tube screw, front	130-216 **in-lbs**	14.7-24.5 Nm	2.19 FRONT FORK, Assembly
Fork drain screw	52-78 **in-lbs**	5.9-8.9 Nm	2.19 FRONT FORK, Replacing Fork Oil
Fork lock set screw	10-12 **in-lbs**	1.1-1.4 Nm	2.40 FORK LOCK, Installation
Fork stem nut: FXSB	70-80 ft-lbs	94.9-108.4 Nm	2.20 STEERING HEAD, Installation
Fork stem nut: FXST	70-80 ft-lbs	94.9-108.4 Nm	2.20 STEERING HEAD, Installation
Fork stem pinch bolts, lower: all but FXSB	55-60 ft-lbs	74.6-81.3 Nm	2.19 FRONT FORK, Installation

FASTENER	TORQUE VALUE		NOTES
Fork stem pinch bolts, upper and lower: FXSB	30-35 ft-lbs	40.7-47.5 Nm	2.19 FRONT FORK, Installation
Fork stem upper bracket pinch bolt: FLSTC, FLSTF/B, FLSTN, FLS	25-30 ft-lbs	33.9-40.7 Nm	2.20 STEERING HEAD, Installation
Fork tube cap	60-70 ft-lbs	81.3-95.0 Nm	2.19 FRONT FORK, Replacing Fork Oil
Handlebar clamp fasteners, lower: FLSTC, FLSTN, FLS, FXST	30-40 ft-lbs	40.7-54.3 Nm	2.27 HANDLEBAR: FLSTC, FLSTN, FLS, FXST, Installation
Handlebar clamp front fasteners	12-16 ft-lbs	16.3-21.7 Nm	2.29 HANDLEBAR: FXSB, Installation
Handlebar clamp front fasteners: FLSTC, FLSTN, FLS, FXST	12-15 ft-lbs	16.3-20.3 Nm	2.27 HANDLEBAR: FLSTC, FLSTN, FLS, FXST, Installation
Handlebar clamp rear fasteners	12-16 ft-lbs	16.3-21.7 Nm	2.29 HANDLEBAR: FXSB, Installation
Handlebar clamp rear fasteners: FLSTC, FLSTN, FLS, FXST	12-15 ft-lbs	16.3-20.3 Nm	2.27 HANDLEBAR: FLSTC, FLSTN, FLS, FXST, Installation
Handlebar lower clamp fastener; FLSTF/B	30-40 ft-lbs	40.7-54.2 Nm	2.28 HANDLEBAR: FLSTF/B, Installation
Handlebar switch clamp screw	60-80 **in-lbs**	6.8-9.0 Nm	2.11 FRONT BRAKE MASTER CYLINDER, Assembly and Installation
Handlebar upper clamp fasteners; FLSTF/B	12-18 ft-lbs	16.3-24.4 Nm	2.28 HANDLEBAR: FLSTF/B, Installation
HCU, rear, bracket screws	36-72 **in-lbs**	5.0-10.0 Nm	2.17 ABS: HYDRAULIC CONTROL UNIT (HCU), Rear Hydraulic Control Unit (HCU)
HCU, rear, clamp screw	24-42 **in-lbs**	2.7-4.7 Nm	2.17 ABS: HYDRAULIC CONTROL UNIT (HCU), Rear Hydraulic Control Unit (HCU)
HCU screws, lower front	54-84 **in-lbs**	6.1-9.5 Nm	2.17 ABS: HYDRAULIC CONTROL UNIT (HCU), Front Hydraulic Control Unit (HCU)
HCU screws, rear cover to front	24-36 **in-lbs**	2.7-4.1 Nm	2.17 ABS: HYDRAULIC CONTROL UNIT (HCU), Front Hydraulic Control Unit (HCU)
HCU screws, upper front	48-72 **in-lbs**	5.4-8.1 Nm	2.17 ABS: HYDRAULIC CONTROL UNIT (HCU), Front Hydraulic Control Unit (HCU)
Jiffy stand bracket assembly screws	25-30 ft-lbs	33.9-40.7 Nm	2.39 JIFFY STAND, Installation
Jiffy stand sensor screw	96-144 **in-lbs**	10.8-16.3 Nm	2.39 JIFFY STAND, Sensor: HDI Models
License plate bracket to mounting bracket lower fasteners: FLS	12-18 **in-lbs**	1.4-2.0 Nm	2.34 REAR FENDER: FLS, Installation/Rear mount license plate.
License plate bracket to mounting bracket upper fasteners: FLS	60-80 **in-lbs**	6.8-9.0 Nm	2.34 REAR FENDER: FLS, Installation/Rear mount license plate.
Lower handlebar clamp fasteners	30-40 ft-lbs	40.7-54.3 Nm	2.29 HANDLEBAR: FXSB, Installation
Luggage rack front fasteners: FLSTN	96-120 **in-lbs**	10.8-13.6 Nm	2.44 LUGGAGE RACK: FLSTN, Removal and Installation
Luggage rack rear fasteners: FLSTN	12-14 ft-lbs	16.3-19.0 Nm	2.44 LUGGAGE RACK: FLSTN, Removal and Installation
Pivot shaft nut	90-110 ft-lbs	122.1-149.3 Nm	2.23 REAR FORK, Installation
Rear brake master cylinder retainer fastener	29-34 ft-lbs	39.4-46.1 Nm	2.13 REAR BRAKE MASTER CYLINDER, Installation
Rear caliper banjo bolt	17-22 ft-lbs	23.1-29.9 Nm	2.14 REAR BRAKE CALIPER, Installation
Rear fender support to fender, FXSB	21-27 ft-lbs	28.5-36.6 Nm	2.35 REAR FENDER: FXSB, Installation
Rear fender support to frame fasteners: 1st torque, FXSB	30-35 ft-lbs	40.7-47.5 Nm	2.35 REAR FENDER: FXSB, Installation
Rear fender support to frame fasteners: final torque, FXSB	38-42 ft-lbs	51.6-57.0 Nm	2.35 REAR FENDER: FXSB, Installation
Rear master cylinder banjo bolt	17-22 ft-lbs	23.1-29.9 Nm	2.13 REAR BRAKE MASTER CYLINDER, Installation

FASTENER	TORQUE VALUE		NOTES
Rear master cylinder nut	30-40 ft-lbs	40.7-54.2 Nm	2.13 REAR BRAKE MASTER CYLINDER, Installation
Rider footboard screws	60-80 **in-lbs**	6.8-9.0 Nm	2.38 FOOTBOARDS AND FOOTRESTS, Rider Footboards
Rider footrest support screws	32-37 ft-lbs	43.4-50.2 Nm	2.38 FOOTBOARDS AND FOOTRESTS, Rider Footrest
Saddlebag flange nuts: FLSTC	120-144 **in-lbs**	13.6-16.3 Nm	2.45 SADDLEBAGS: FLSTC, Installation
Saddlebag lower bracket acorn nut: FLSTC	120-144 **in-lbs**	13.6-16.3 Nm	2.45 SADDLEBAGS: FLSTC, Installation
Saree guard, lower, fasteners	21-27 ft-lbs	28.5-36.6 Nm	2.47 SAREE GUARD: INDIA MODELS, Lower Saree Guard
Saree guard, upper, fasteners: all but FXSB	21-27 ft-lbs	28.5-36.6 Nm	2.47 SAREE GUARD: INDIA MODELS, Upper Saree Guards: All but FXSB
Saree guard, upper, fasteners: FXSB	21-27 ft-lbs	28.5-36.6 Nm	2.47 SAREE GUARD: INDIA MODELS, Upper Saree Guards: FXSB
Saree guard, upper, nut: all but FXSB	21-27 ft-lbs	28.5-36.6 Nm	2.47 SAREE GUARD: INDIA MODELS, Upper Saree Guards: All but FXSB
Shock bolt, rear	121-136 ft-lbs	164.0-184.4 Nm	2.22 REAR SHOCK ABSORBERS, Installation
Shock locknut, rear	32-39 ft-lbs	43.4-52.9 Nm	2.22 REAR SHOCK ABSORBERS, Installation
Slider tube cap	60-70 ft-lbs	81.3-95.0 Nm	2.19 FRONT FORK, Installation
Splash guard screw: all but FXSB	36-48 **in-lbs**	4.1-5.4 Nm	2.16 ABS: ELECTRONIC CONTROL UNIT (ECU), Installation: All But FXSB
Spoke nipple	55 **in-lbs**	6.2 Nm	2.7 CHECKING AND TRUING WHEELS, Truing Laced Wheels
Stoplight switch, rear	12-15 ft-lbs	16.3-20.3 Nm	2.15 BRAKE LINES, Rear Master Cylinder to Rear HCU/Use LOCTITE 565 THREAD SEALANT
Stoplight switch bracket fastener	30-35 ft-lbs	40.6-47.4 Nm	2.15 BRAKE LINES, Rear Master Cylinder to Rear HCU
Throttle control housing screws	35-45 **in-lbs**	4.0-5.1 Nm	2.24 THROTTLE CONTROL, Assembly/Installation
Valve stem nut	12-15 **in-lbs**	1.4-1.7 Nm	2.9 TIRES, Installation

SPECIFICATIONS

Chassis Specifications

Table 2-1. Capacities

ITEM	U.S.	L
Fuel tank (total)	5.0 gal	18.9
Low fuel warning light on	1.0 gal	3.8
Oil tank with filter *	3.0 qt	2.8
Transmission (approximate) **	1.0 qt	0.95
Primary chaincase (approximate)	1.0 qt	0.95
* When refilling, initially add 2.0 qt (1.90 L) and add as needed to bring level within specification. ** When refilling, initially add 28 oz (0.83 L) and add as needed to bring level within specification.		

Table 2-2. Dimensions: FLSTFB, FLSTC, FLSTF and FLSTN

ITEM	FLSTFB		FLSTC		FLSTF		FLSTN	
	in	mm	in	mm	in	mm	in	mm
Length	93.9	2385	94.7	2405	94.3	2395	94.5	2400
Overall width	39.0	990	37.6	955	39.0	990	38.6	980
Overall height	43.1	1095	55.4	1408	43.1	1095	43.9	1115
Wheel base	64.2	1630	64.4	1635	64.4	1635	64.4	1635
Road clearance	4.9	125	5.2	131	5.1	130	4.5	113
Seat height*	24.3	616	25.5	648	25.0	635	24.5	622
* With 180 lb (81.6 kg) rider on seat								

Table 2-3. Dimensions: FLS, FXST and FXSB

ITEM	FLS		FXST		FXSB	
	in	mm	in	mm	in	mm
Length	92.5	2350	94.9	2410	96.3	2445
Overall width	39.0	990	36.0	915	36.0	915
Overall height	43.3	1100	48.4	1230	40.9	1040
Wheel base	64.4	1635	66.9	1700	67.3	1710
Road clearance	4.5	115	6.2	159	4.7	120
Seat height*	23.8	605	26.1	663	24.7	627
* With 180 lb (81.6 kg) rider on seat.						

Table 2-4. Weights: FLSTC, FLSTF, FLSTFB and FLSTN

ITEM	FLSTC		FLSTF		FLSTFB		FLSTN	
	lb	kg	lb	kg	lb	kg	lb	kg
Running weight*	761	345	725	329	731	332	726	329
Maximum added weight allowed**	399	181	435	197	429	194	434	197
GVWR	1160	526	1160	526	1160	526	1160	526
GAWR front	430	195	430	195	430	195	430	195
GAWR rear	730	331	730	331	730	331	730	331

* The total weight of the motorcycle as delivered with all oil/fluids and approximately 90% of fuel.
** The total weight of accessories, cargo, riding gear, passenger and rider must not exceed this weight.

Table 2-5. Weights: FLS, FXST and FXSB

ITEM	FLS		FXST		FXSB	
	lb	kg	lb	kg	lb	kg
Running weight*	701	318	699	317	710	322
Maximum added weight allowed**	459	208	426	193	465	211
GVWR	1160	526	1125	510	1175	533
GAWR front	430	195	415	188	415	188
GAWR rear	730	331	710	322	760	345

* The total weight of the motorcycle as delivered with all oil/fluids and approximately 90% of fuel.
** The total weight of accessories, cargo, riding gear, passenger and rider must not exceed this weight.

⚠WARNING

Do not exceed the motorcycle's Gross Vehicle Weight Rating (GVWR) or Gross Axle Weight Rating (GAWR). Exceeding these weight ratings can lead to component failure and adversely affect stability, handling and performance, which could result in death or serious injury. (00016f)

- GVWR is the sum of the weight of the motorcycle, accessories, and the maximum weight of the rider, passenger and cargo that can be safely carried.
- GAWR is the maximum amount of weight that can be safely carried on each axle.
- The GVWR and GAWR are shown on the information plate, located on the frame down tube.

NOTES

- *The maximum additional weight allowed on the motorcycle equals the Gross Vehicle Weight Rating (GVWR) minus the running weight. For example, a motorcycle with GVWR of 1200 lbs (544 kg) having a running weight of 800 lbs (363 kg), would allow a maximum of an additional 400 lbs (181 kg) combined weight of the rider, passenger, riding gear, cargo and installed accessories.*
- *For important information regarding tire data and tire inflation, see 1.8 TIRES AND WHEELS.*

Tire Specifications

⚠WARNING

Match tires, tubes, rim strips or seals, air valves and caps to the correct wheel. Contact a Harley-Davidson dealer. Mismatching can lead to tire damage, allow tire slippage on the wheel or cause tire failure, which could result in death or serious injury. (00023c)

NOTE

ABS equipped motorcycles must always use tires and wheels that are the same as the original equipment. ABS monitors rotational speed of the wheels through individual wheel speed sensors to determine the application of ABS. Changing to different diameter wheels or different size tires can alter the rotational speed. This will upset the system calibration and have an adverse effect on its ability to detect and prevent lockups. Operating with inflation pressure other than those specified in Table 2-10 can reduce ABS performance.

Tire sizes are molded on the sidewall. Refer to the tire fitment tables below. Rim size and contour are cast or stamped into the exterior surface of the rim.

Example: T21 x 2.15 TLA DOT. "T" indicates that the rim conforms to Tire and Rim Association standards. The "21" is the normal diameter of the rim in inches, measured at the bead seat diameter. The "2.15" is the width of the bead seat measured in inches. "TLA" designates the rim contour. "DOT" means that the rim meets Department of Transportation Federal Motor Vehicle Safety Standards.

Table 2-6. Fitment - Tubeless Cast Wheels

WHEEL SIZE AND POSITION	RIM SIZE AND CONTOUR	RIM VALVE HOLE DIA.	SPECIFIED TIRE
17 in. - Front	T17 x 3.50 MT	0.35 in.	**Dunlop D408F** 140/75R17 67V
21 in. - Front	T21 x 3.50 MT	0.35 in.	**Dunlop D408F** 130/60B21 78V
17 in. - Rear	T17 x 6.00 MT	0.35 in.	**Dunlop D407** 200/55R17 78V
18 in. - Rear	T18 x 8.00 MT	0.35 in.	**Dunlop D407** 240/40R18 78V

Table 2-7. Tire Fitment - Tubeless Aluminum Profile Laced Wheels

WHEEL SIZE & POSITION	RIM SIZE & CONTOUR	SPECIFIED TIRE
16 in. - Front	T16x3.0 MTM	**Dunlop D402F** MT90B16 72H
16 in. - Rear	T16x3.0 MTM	**Dunlop D402** MU85B16 77H

Table 2-8. Tire Fitment - Tube Type Steel Laced Wheels

WHEEL SIZE & POSITION	RIM SIZE & CONTOUR	TUBE SIZE	SPECIFIED TIRE
16 in - Front	T16x3.00 D	MT90-16	**Dunlop D402F** MT90B16 72H
16 in - Rear (FLSTN)	T16x3.00 D	MT90-16/MU85-16	**Dunlop D402** MU85B16 77H
21 in - Front	T21x2.15 TLA	MH90-21	**Dunlop D408F** MH90-21 54H
16 in - Rear (FLSTC)	T16x3.00 D	MT90-16/MU85-16	**Dunlop D401** 150/80B16

Table 2-9. Tire Fitment - Tube Type Aluminum Profile Laced Wheels

WHEEL SIZE & POSITION	RIM SIZE & CONTOUR	TUBE SIZE	SPECIFIED TIRE
16 in - Rear (FLSTN)	T16x3.0 MT	MT90-16/MU85-16	**Dunlop D402** MU85B16 77H

Table 2-10. Specified Tires

MODEL	MOUNT	SIZE	SPECIFIED TIRE	PRESSURE (COLD)	
				psi	kPa
FLSTC, FLS	front	16 in	Dunlop D402F MT90B16	36	248
FLSTN, FLSTC (whitewall)	front	16 in	Dunlop D402F MT90B16	36	248
FLSTF, FLSTFB	front	17 in	Dunlop D408F 140/75R17	36	248
FXST	front	21 in	Dunlop D408F MH90-21	30	207
FXSB	front	21 in	Dunlop D408F 130/60B21	36	248

Table 2-10. Specified Tires

MODEL	MOUNT	SIZE	SPECIFIED TIRE	PRESSURE (COLD)	
				psi	kPa
FLSTC	rear	16 in	Dunlop D401 150/80B16	40	276
FLSTN, FLSTC (whitewall)	rear	16 in	Dunlop D402 MU85B16	40	276
FLS	rear	16 in	Dunlop D402 MU85B16	40	276
FLSTF, FXST, FLSTFB	rear	17 in	Dunlop D407 200/55R17	42	290
FXSB	rear	18 in	Dunlop D407 240/40R18	42	290

VEHICLE IDENTIFICATION NUMBER

See Figure 2-1. The full 17 digit serial or Vehicle Identification Number (V.I.N.) is stamped on the steering head. In some destinations, a printed V.I.N. label will also be affixed to the right front frame down tube.

An abbreviated V.I.N. is stamped on the left side crankcase at the base of the rear cylinder.

NOTE

Always give the full 17 digit Vehicle Identification Number when ordering parts or making any inquiry about your motorcycle.

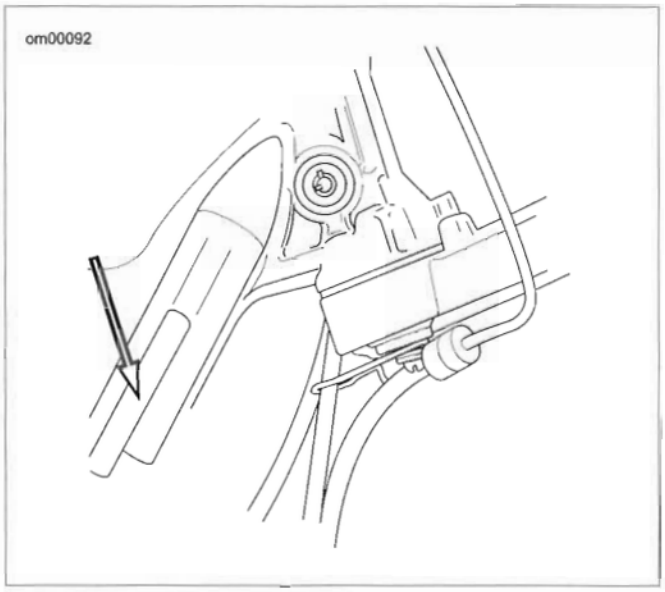

Figure 2-1. V.I.N. Stamping Location

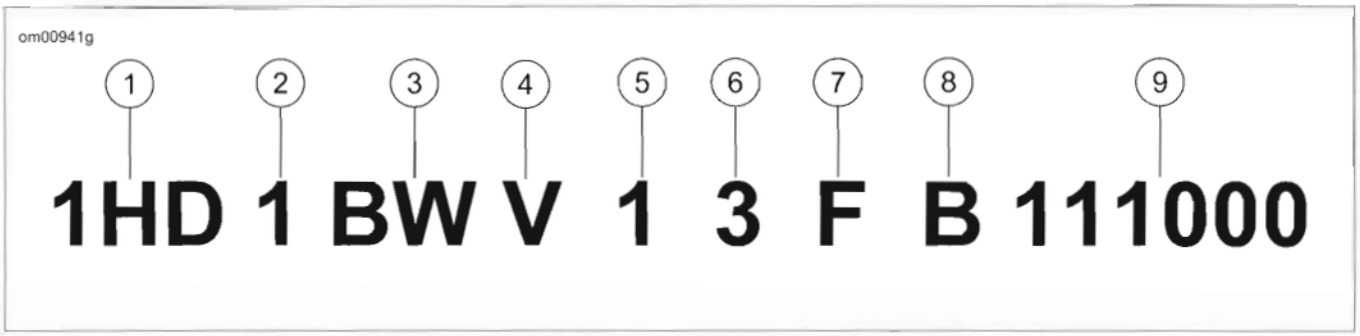

Figure 2-2. Typical Harley-Davidson VIN: 2015 Softail Models

Table 2-11. Harley-Davidson VIN Breakdown: 2015 Softail Models

POSITION	DESCRIPTION	POSSIBLE VALUES
1	World manufacturer identifier	1HD=Originally manufactured in the United States 5HD=Originally manufactured in the United States for sale outside of the United States 932=Originally manufactured in Brazil MEG=Originally manufactured in India
2	Motorcycle type	1=Heavyweight motorcycle (901 cm^3 or larger)
3	Model	See VIN model table
4	Engine type	5=Twin Cam 96B™, 1585 cm^3 air-cooled, fuel-injected, balanced V=Twin Cam 103B™, 1690 cm^3 air-cooled, fuel-injected, balanced

Table 2-11. Harley-Davidson VIN Breakdown: 2015 Softail Models

POSITION	DESCRIPTION	POSSIBLE VALUES	
5	Calibration/configuration, introduction	**Normal Introduction** 1=Domestic (DOM) 3=California (CAL) A=Canada (CAN) C=HDI E=Japan (JPN) G=Australia (AUS) J=Brazil (BRZ) L=Asia Pacific (APC) N=India (IND)	**Mid-year or Special Introduction** 2, 4=Domestic (DOM) 5, 6=California (CAL) B=Canada (CAN) D=HDI F=Japan (JPN) H=Australia (AUS) K=Brazil (BRZ) M=Asia Pacific (APC) P=India (IND)
6	VIN check digit	Can be 0-9 or X	
7	Model year	F=2015	
8	Assembly plant	B=York, PA U.S.A. C=Kansas City, MO U.S.A. D=H-D Brazil-Manaus, Brazil (CKD) N=Haryana India (Bawal District Rewari)	
9	Sequential number	Varies	

Table 2-12. VIN Model Codes: 2015 Softail Models

CODE	MODEL	CODE	MODEL
BF	FXSB Breakout®	JD	FLSTN Softail® Deluxe
BV	FXST Softail® Standard (Australia only)	JR	FLS Softail® Slim™
BX	FLSTF Fat Boy®	JN	FLSTFB Fat Boy® Lo FLSTFB Fat Boy® Special (some international markets)
BW	FLSTC Heritage Softail® Classic		

REMOVAL

1. Raise the front end.
2. Inspect wheel bearing end play and service bearings if necessary. See 2.8 SEALED WHEEL BEARINGS.
3. See Figure 2-3. Remove mounting bolts (1). Move caliper away from wheel. Support caliper using a rubber bungee cord. Verify that caliper does not contact fender.

NOTE

Do not operate front brake lever with the front wheel removed. The caliper piston will be forced out of piston bore. Reseating the piston requires disassembly of the caliper.

4. Remove axle nut, lockwasher and washer (2).
5. Label wheel spacers for location (left or right) and orientation (fork side or wheel side).
6. See Figure 2-4. Loosen the slider cap fasteners (2). Pull the axle (1) free.

NOTES

- ***ABS models:** never pull wheel speed sensor cable taut or use to retain wheel, axle or other components.*
- *Always keep the wheel speed sensor and ABS encoder bearing away from magnetic fields. Items such as magnetic parts trays, magnetic base dial indicators, alternator rotors will damage sensor.*

7. Remove wheel from forks.

NOTE

***FLSTC models:** the hub cap comes off with the wheel.*

DISASSEMBLY

Disc Wheel

NOTE

See 2.9 TIRES to service tire or valve stem assembly.

If necessary, remove brake disc (6). On left side of wheel, remove five screws (10) to detach brake disc. Discard screws.

Laced Wheel

1. See Figure 2-6. If necessary, remove brake disc (7). On left side of wheel, remove five screws (11) to detach left brake disc. Discard screws.
2. To disassemble FLSTC hub cap, remove retaining ring from hub spacer. Discard retaining ring.

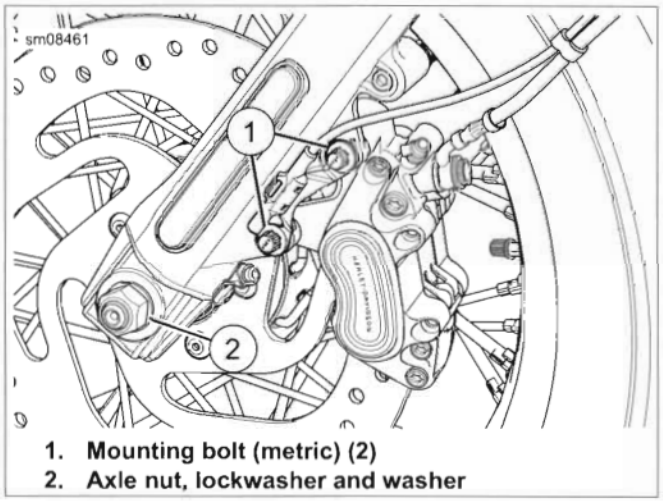

1. **Mounting bolt (metric) (2)**
2. **Axle nut, lockwasher and washer**

Figure 2-3. Front Caliper and Axle Mounting (Left Side)

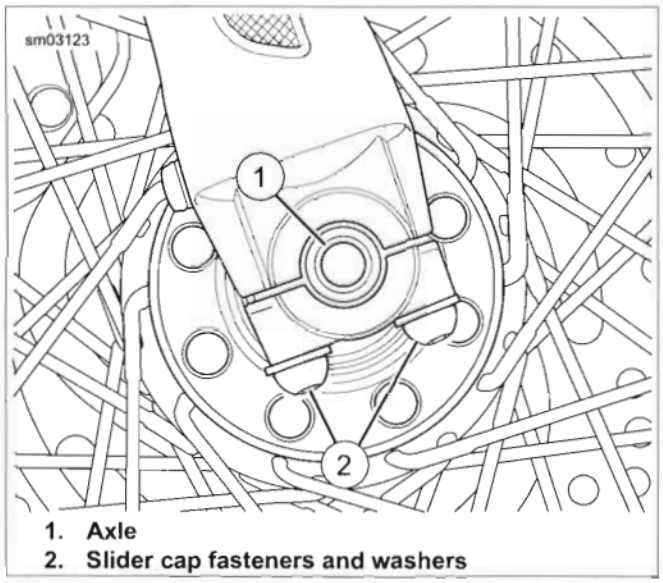

1. **Axle**
2. **Slider cap fasteners and washers**

Figure 2-4. Front Wheel Mounting

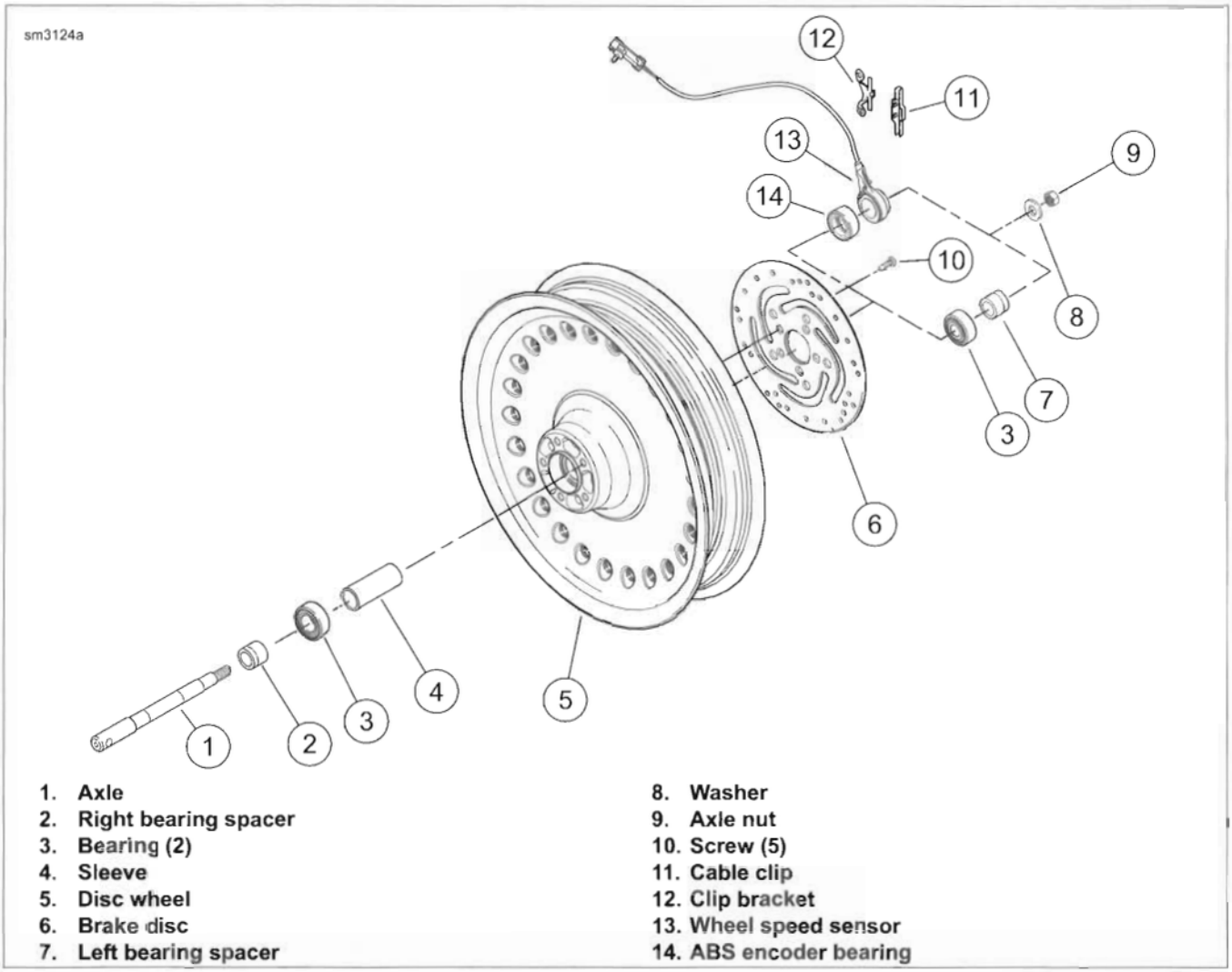

1. Axle
2. Right bearing spacer
3. Bearing (2)
4. Sleeve
5. Disc wheel
6. Brake disc
7. Left bearing spacer
8. Washer
9. Axle nut
10. Screw (5)
11. Cable clip
12. Clip bracket
13. Wheel speed sensor
14. ABS encoder bearing

Figure 2-5. Disc Front Wheel: FLSTF/B

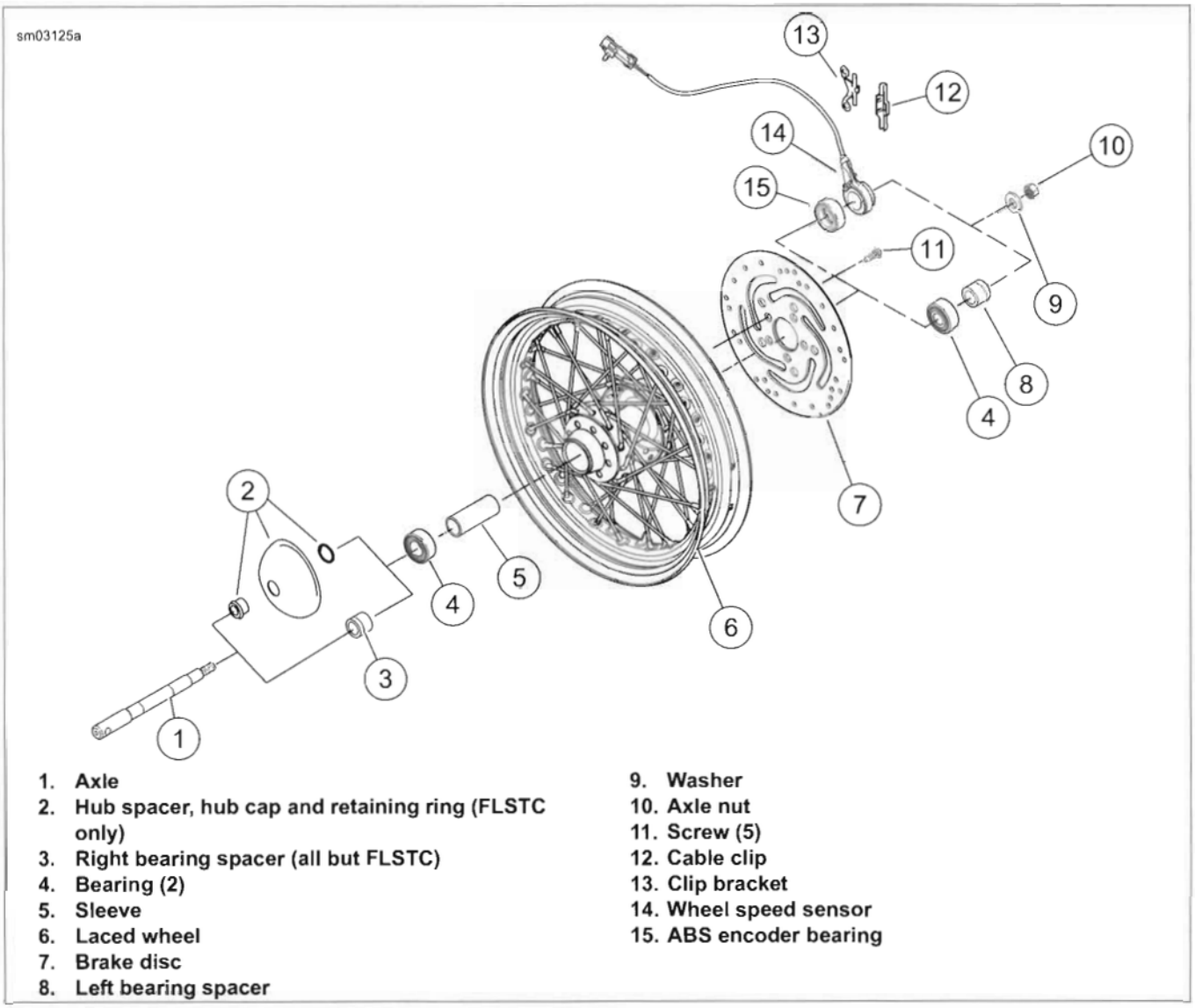

1. **Axle**
2. **Hub spacer, hub cap and retaining ring (FLSTC only)**
3. **Right bearing spacer (all but FLSTC)**
4. **Bearing (2)**
5. **Sleeve**
6. **Laced wheel**
7. **Brake disc**
8. **Left bearing spacer**
9. **Washer**
10. **Axle nut**
11. **Screw (5)**
12. **Cable clip**
13. **Clip bracket**
14. **Wheel speed sensor**
15. **ABS encoder bearing**

Figure 2-6. Laced Front Wheel: All but FLSTF/B

CLEANING AND INSPECTION

1. Inspect all parts for damage or excessive wear. If sealed wheel bearings must be serviced, see 2.8 SEALED WHEEL BEARINGS.

⚠WARNING

Always replace brake pads in complete sets for correct and safe brake operation. Improper brake operation could result in death or serious injury. (00111a)

2. Inspect brake disc and pads. See 1.16 BRAKE PADS AND DISCS.

ASSEMBLY

FASTENER	TORQUE VALUE	
Brake disc screws, front	16-24 ft-lbs	21.7-32.5 Nm
Brake disc screws, front	16-24 ft-lbs	21.7-32.5 Nm

⚠WARNING

Be sure that brake fluid or other lubricants do not contact brake pads or discs. Such contact can adversely affect braking ability, which could cause loss of control, resulting in death or serious injury. (00290a)

NOTICE

Do not re-use brake disc/rotor screws. Re-using these screws can result in torque loss and damage to brake components. (00319c)

Disc Wheel

1. Verify that wheel and tire are true. See 2.7 CHECKING AND TRUING WHEELS.

2. See Figure 2-5. If removed, install brake disc (6). Verify that brake disc is clean. Install five **new** screws (10) to attach brake disc. Tighten to 16-24 ft-lbs (21.7-32.5 Nm).

Laced Wheel

1. If hub and rim were disassembled, see 2.6 WHEEL LACING.
2. Verify that wheel and tire are true. See 2.7 CHECKING AND TRUING WHEELS.
3. On FLSTC models, attach hub cap to spacer with **new** retaining ring.
4. See Figure 2-6. If necessary, install brake disc in its original position. Verify that brake disc is clean. Install five **new** screws (11) to attach brake disc (7). Tighten to 16-24 ft-lbs (21.7-32.5 Nm).

INSTALLATION

FASTENER	TORQUE VALUE	
Axle nut, front	70-75 ft-lbs	95.0-101.8 Nm
Axle slider cap fasteners, front	132-180 **in-lbs**	14.9-20.3 Nm
Brake caliper mounting bolt, front	28-38 ft-lbs	38.0-51.5 Nm

1. Apply a light coat of ANTI-SEIZE LUBRICANT to the axle, bearing bores, and bore of inner sleeve.
2. Place wheel into front fork and install axle. Verify that axle spacers on right and left side and wheel speed sensor (if ABS equipped) are properly installed.
3. **ABS models:** see Figure 2-7. Rotate front wheel speed sensor counterclockwise until index pin makes contact with shoulder on left fork slider.
4. See Figure 2-3. Install the washer and axle nut (2). Insert screwdriver or steel rod through hole in axle on right side of vehicle. While holding axle stationary, tighten axle nut to 70-75 ft-lbs (95.0-101.8 Nm).

NOTE

In next step, make sure front and rear gaps between slider cap and slider are even.

5. See Figure 2-4. Tighten the slider cap nuts to 132-180 **in-lbs** (14.9-20.3 Nm).

NOTE

***ABS models:** see Figure 2-5 or Figure 2-6. Install wheel speed sensor cable bracket (12 or 13) when installing brake caliper. Secure wheel speed sensor cable to clip bracket with cable clip (11 or 12).*

6. see Figure 2-3. Install the brake caliper and clip bracket, if equipped, to the fork leg using mounting bolts (1).
7. Tighten fasteners to 28-38 ft-lbs (38.0-51.5 Nm).
8. **ABS models:** make sure wheel speed sensor cable is properly secured to brake line with all three retainer clips and both cable straps.

⚠WARNING

Whenever a wheel is installed and before moving the motorcycle, pump brakes to build brake system pressure. Insufficient pressure can adversely affect brake performance, which could result in death or serious injury. (00284a)

9. Pump brake hand lever to move pistons out until they contact both brake pads. Verify piston location against pads.



Figure 2-7. Front Wheel Speed Sensor Index Pin (ABS Equipped)

REMOVAL

1. Block motorcycle underneath frame so weight of motorcycle is off of rear wheel.
2. Remove saddlebags if equipped.
3. Remove belt guard and debris deflector from rear fork. See 2.21 BELT GUARD AND DEBRIS DEFLECTOR.
4. Inspect wheel bearing end play and service bearings if necessary. See 2.8 SEALED WHEEL BEARINGS.
5. Label wheel spacers for location (left or right) and orientation (fork side or wheel side).
6. **If ABS equipped:** Cut cable strap to release rear wheel speed sensor cable from rear brake hose.
7. Remove rear brake caliper from caliper mount and support using an elastic cord or similar. See 2.14 REAR BRAKE CALIPER.
8. **All but FXSB:** See Figure 2-8. Remove e-clip (1). Loosen rear axle nut (2).
9. **FXSB:** See Figure 2-9. Loosen rear axle nut (2).
10. Loosen both axle adjuster screws (3) an equal number of turns to remove tension from drive belt.

NOTES

- *If ABS equipped, never pull wheel speed sensor cable taut or use to retain wheel, axle or other components.*
- *Always keep the wheel speed sensor and ABS encoder bearing away from magnetic fields. Items such as magnetic parts trays, magnetic base dial indicators, alternator rotors, etc. will damage sensor.*
- *Support rear wheel from underneath during removal.*

11. Tap axle towards right side and remove. Remove spacers, caliper mounting bracket, and rear wheel speed sensor (if ABS equipped).
12. Move wheel forward and slip belt off sprocket.
13. Raise motorcycle to allow enough clearance to remove rear wheel.
14. Pull wheel from rear fork.

NOTE

Do not operate rear brake pedal with the rear wheel removed or the caliper piston may be forced out of piston bores. Reseating the piston requires disassembly of the caliper.

DISASSEMBLY

1. If necessary, remove brake disc and/or rear sprocket.
   a. Remove five screws (18) to detach rear sprocket (13). Discard screws.
   b. Remove five screws (5) to remove rear brake disc (6). Discard screws.

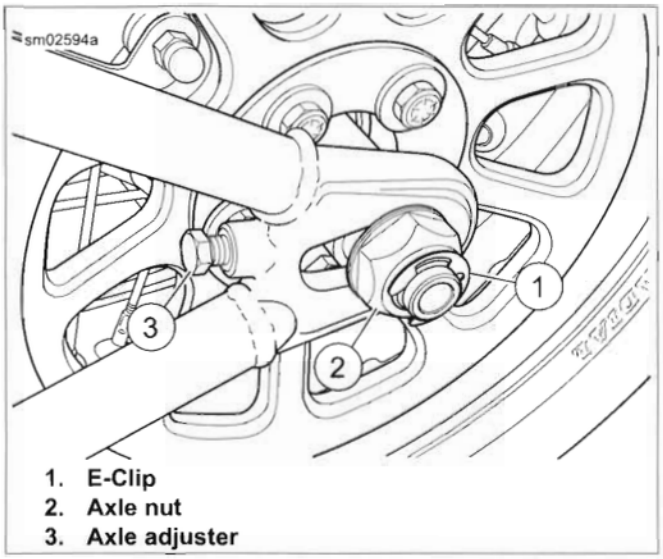

1. **E-Clip**
2. **Axle nut**
3. **Axle adjuster**

Figure 2-8. Axle Adjusters

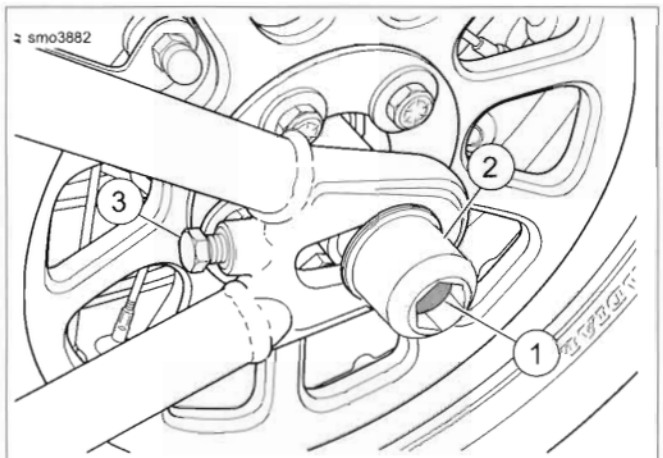

1. **Retainer**
2. **Axle nut**
3. **Axle adjuster**

Figure 2-9. Axle Adjusters: FXSB

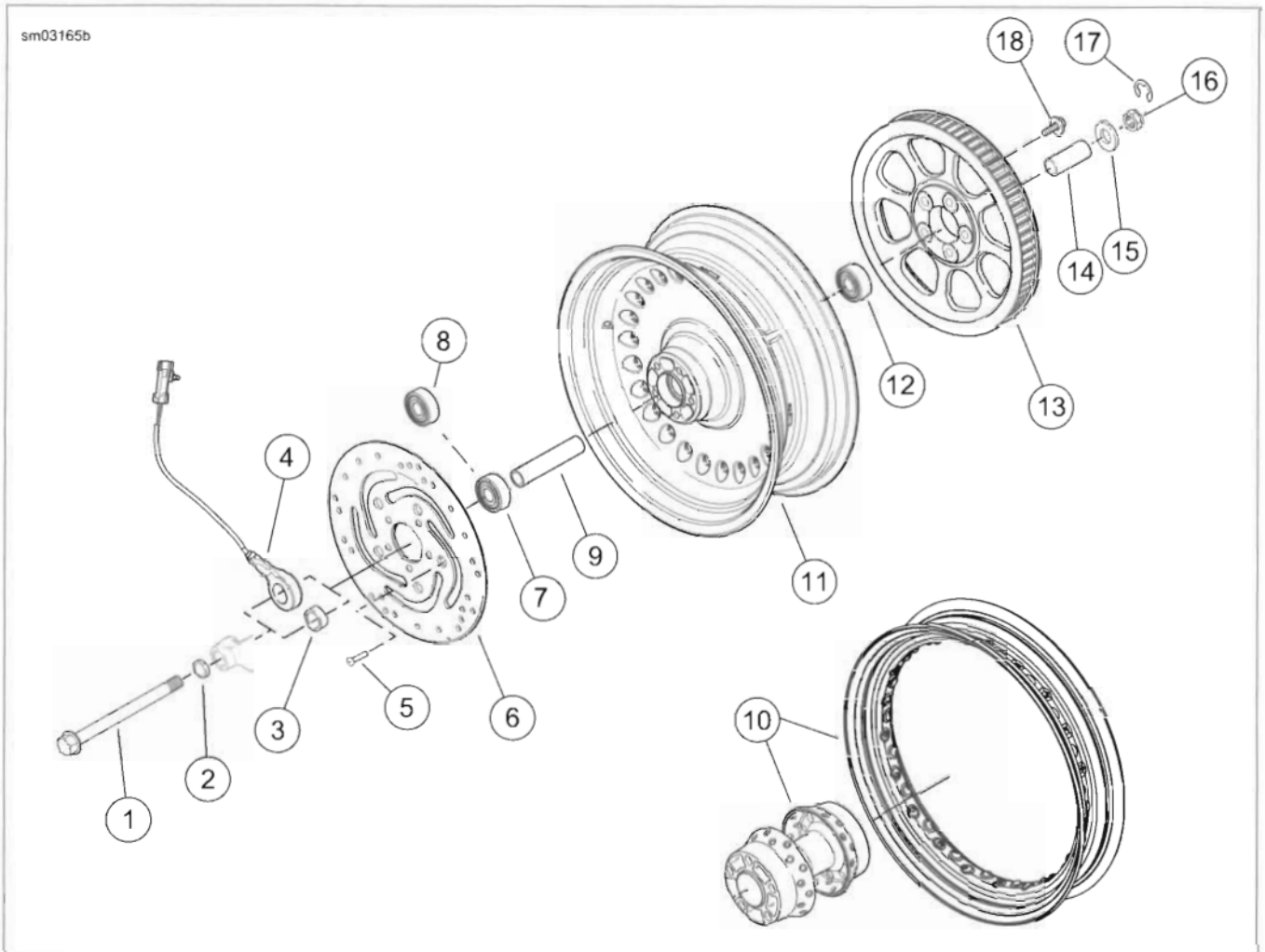

1. Axle
2. Right bearing spacer, short
3. Right bearing spacer, long (non-ABS)
4. Wheel speed sensor (ABS)
5. Screw (5)
6. Rear brake disc
7. Bearing (non-ABS)
8. Encoder bearing (ABS)
9. Sleeve
10. Laced wheel hub and rim
11. Disc wheel
12. Bearing
13. Rear sprocket
14. Left bearing spacer
15. Washer
16. Axle nut
17. Retainer
18. Screw (5)

Figure 2-10. Rear Wheel/Hub (typical)

CLEANING AND INSPECTION

1. Inspect all parts for damage or excessive wear.
2. Inspect brake disc and pads. See 1.16 BRAKE PADS AND DISCS.
3. Inspect drive belt and sprocket. See 1.12 DRIVE BELT AND SPROCKETS.

ASSEMBLY

FASTENER	TORQUE VALUE	
Brake disc screws, rear	30-45 ft-lbs	40.7-61.0 Nm
Belt sprocket screws, first torque	50 ft-lbs	67.8 Nm
Belt sprocket screws, final torque	67-73 ft-lbs	90.9-99.0 Nm

1. See Figure 2-10. If laced wheel (10) was disassembled, see 2.6 WHEEL LACING.

NOTICE

Do not re-use brake disc/rotor screws. Re-using these screws can result in torque loss and damage to brake components. (00319c)

2. Using **new** screws (5), install brake disc (6) if removed. Tighten screws to 30-45 ft-lbs (40.7-61.0 Nm).

NOTICE

Do not re-use sprocket mounting screws. Re-using sprocket mounting screws can result in torque loss and damage to the sprocket and/or belt assembly. (00480b)

3. Using **new** screws (18), install belt sprocket (13) if removed. Tighten screws using the following sequence:
   a. Tighten screws (18) to an initial torque of 50 ft-lbs (67.8 Nm).
   b. Back screws off 1/2 turn (180 degrees).
   c. Tighten screws to a final torque of 67-73 ft-lbs (90.9-99.0 Nm).
4. Verify that wheel and tire are true. See 2.7 CHECKING AND TRUING WHEELS.

INSTALLATION

1. See Figure 2-10. Apply a light coat of ANTI-SEIZE LUBRICANT to the axle (1), bearing bores, and the bore of the inner sleeve (9).
2. Roll wheel into rear fork and slide drive belt over drive sprocket.
3. Position left bearing spacer (14) between wheel and fork.
4. From right side, carefully insert axle through right rear fork, short spacer (3), rear caliper mounting bracket, wheel speed sensor (4) (if ABS equipped) or long spacer (3) and into bearing bore.

   Continue sliding axle through wheel hub sleeve, left side spacer and left rear fork.
5. Install washer (15) and axle nut (16). Do not tighten axle nut at this time.
6. **If ABS equipped:** see Figure 2-11. Rotate rear wheel speed sensor counterclockwise until index pin makes contact with caliper bracket at point shown.
7. Verify correct axle alignment (see 2.10 VEHICLE ALIGNMENT) and check belt deflection (see 1.12 DRIVE BELT AND SPROCKETS).

⚠WARNING

Check wheel bearing end play after tightening axle nut to specified torque. Excessive end play can adversely affect stability and handling and can cause loss of control, which could result in death or serious injury. (00285b)

8. Install belt guard and debris deflector. See 2.21 BELT GUARD AND DEBRIS DEFLECTOR.
9. Install brake caliper and pads. See 2.14 REAR BRAKE CALIPER.
10. **If ABS equipped:** secure wheel speed sensor cable to rear brake line near brake caliper with a cable strap.
11. Install saddlebags, if equipped.

⚠WARNING

Whenever a wheel is installed and before moving the motorcycle, pump brakes to build brake system pressure. Insufficient pressure can adversely affect brake performance, which could result in death or serious injury. (00284a)

12. Pump brake pedal to move pistons out until they contact both brake pads. Verify piston location against pads.

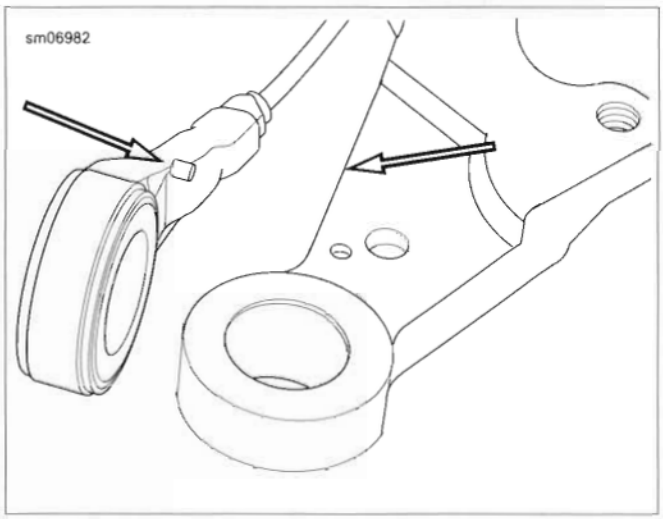

Figure 2-11. Rear Wheel Speed Sensor Index Pin (ABS Equipped)

WHEEL LACING: ANGLE FLANGE HUB

NOTES

- *See Figure 2-12. The following procedure is valid for wheels that use an angle flange hub regardless of rim style or diameter.*
- *The primary brake side of the hub has one or two grooves cut into the disc mounting surface.*

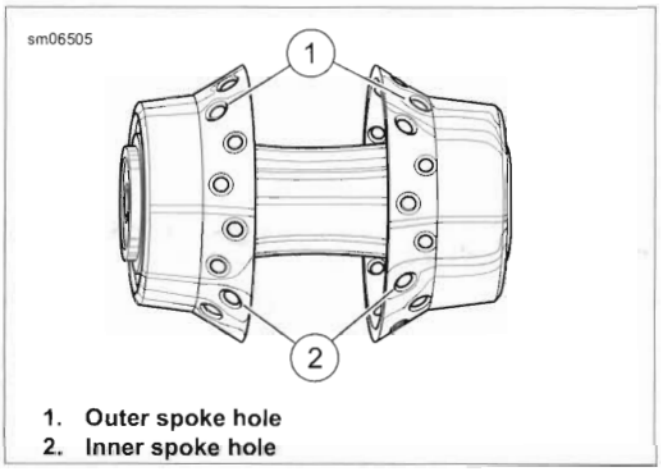

1. **Outer spoke hole**
2. **Inner spoke hole**

Figure 2-12. Angle Flange Hub

1. Place hub on workbench:
   a. **Front:** primary brake side up.
   b. **Rear:** brake side down.
2. Install all spokes in the lower flange.
3. See Figure 2-13. Flip hub over. Gather all outer spokes and hold upright with a rubber band. Repeat with the inner spokes using a second rubber band.
4. Install spokes in remaining flange.
5. Rotate the lower flange spokes as far as they will go:
   a. Outer spokes clockwise.
   b. Inner spokes counterclockwise.
6. Center the rim over the hub and spokes assembly and support on wooden blocks approximately 1.5 in (38.1 mm) thick.
   a. If valve is not located in the center of the rim, place valve hole facing up.
   b. If the valve located in the center of the rim can be placed either side up.

NOTE

Install nipples until approximately 1/8 in (3.2 mm) of spoke thread shows.

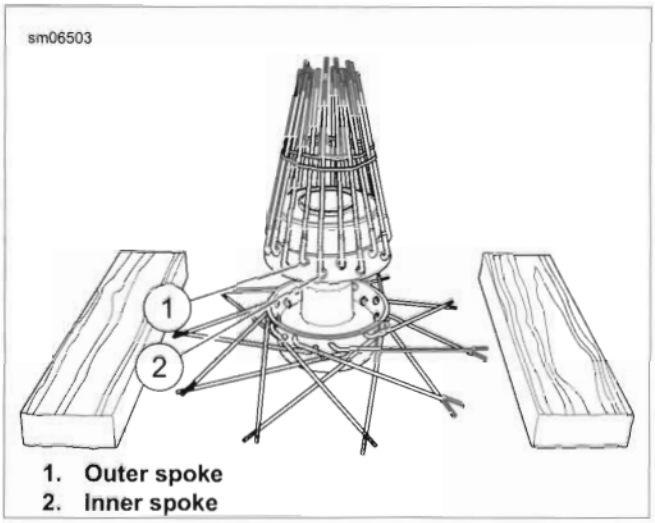

1. **Outer spoke**
2. **Inner spoke**

Figure 2-13. Spokes Gathered

7. Install lower flange outer spokes and loosely install spoke nipples:
   a. **Rim with side valve hole:** See Figure 2-14. Start at the valve stem hole (1).
   b. **Rim with center valve hole:** See Figure 2-15. Start at the first hole counterclockwise (1) from valve stem hole.
8. Install remaining outer spokes in every 4th hole.
9. Install lower flange inner spokes and loosely install spoke nipples:
   a. Starting at the 2nd hole counterclockwise (2) from first spoke installed, install inner spoke.
   b. Install remaining inner spokes in every 4th hole.
10. Carefully release upper flange inner spokes and fan out around rim, rotating them clockwise.
11. Starting at the first hole counterclockwise (3) from first spoke installed, install inner spoke. Install all remaining inner spokes in every 4th hole.
12. Carefully release upper flange outer spokes and fan out around rim, rotating them counterclockwise.
13. Install outer spokes in remaining holes (4).
14. Verify spoke heads are seated. See 2.7 CHECKING AND TRUING WHEELS.
   a. Evenly hand-tighten spoke nipples until snug.
   b. Only tighten until slack is removed.
   c. Proper torque will be applied when the wheel is trued.
   d. Adjust offset and true the wheel.

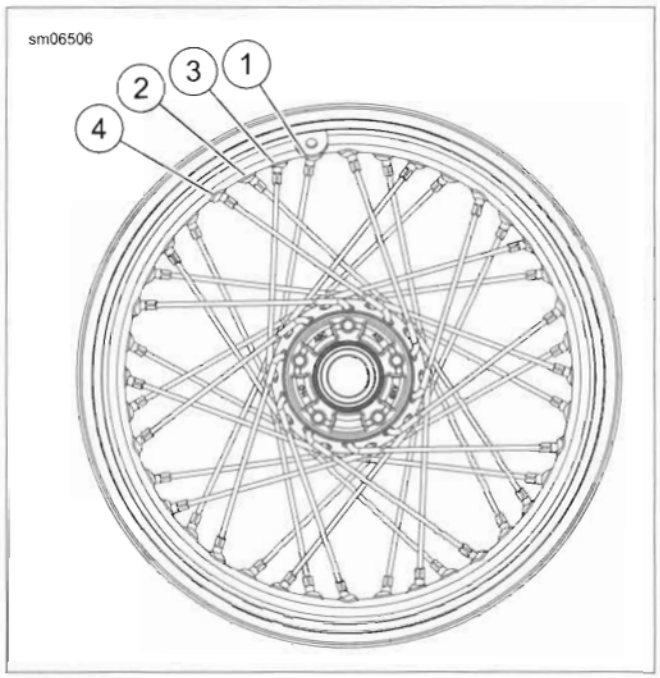

Figure 2-14. Side Valve Rim

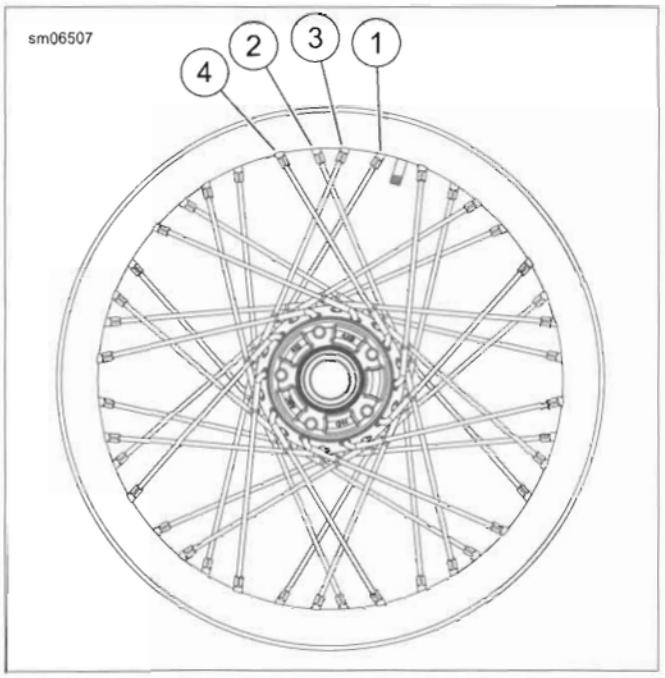

Figure 2-15. Center Valve Rim

GENERAL

Check wheels for lateral and radial runout before installing a **new** tire, tube or rim seal. Checking cast or laced wheels is performed using the same procedure.

Laced wheels having excess runout can be trued. However, cast wheels must be replaced. Never attempt to straighten cast wheels.

Always check condition of the wheel bearings before checking or adjusting wheel runout. See 1.8 TIRES AND WHEELS, Wheel Bearings.

CHECKING WHEEL RUNOUT

PART NUMBER	TOOL NAME
HD-99500-80	WHEEL TRUING AND BALANCING STAND

Check wheels for both radial runout and lateral runout. If either measurement is not within specification:

- **Cast wheel:** Replace the wheel.
- **Laced wheel:** Adjust spokes to true the wheel. See steps in this section.

Checking Radial Runout

1. See Figure 2-16. Mount wheel in WHEEL TRUING AND BALANCING STAND (Part No. HD-99500-80).
2. Adjust gauge rod or dial indicator to the rim's tire bead safety hump.
3. Rotate wheel and measure distance at several locations. Runout must not exceed 0.030 in (0.76 mm).

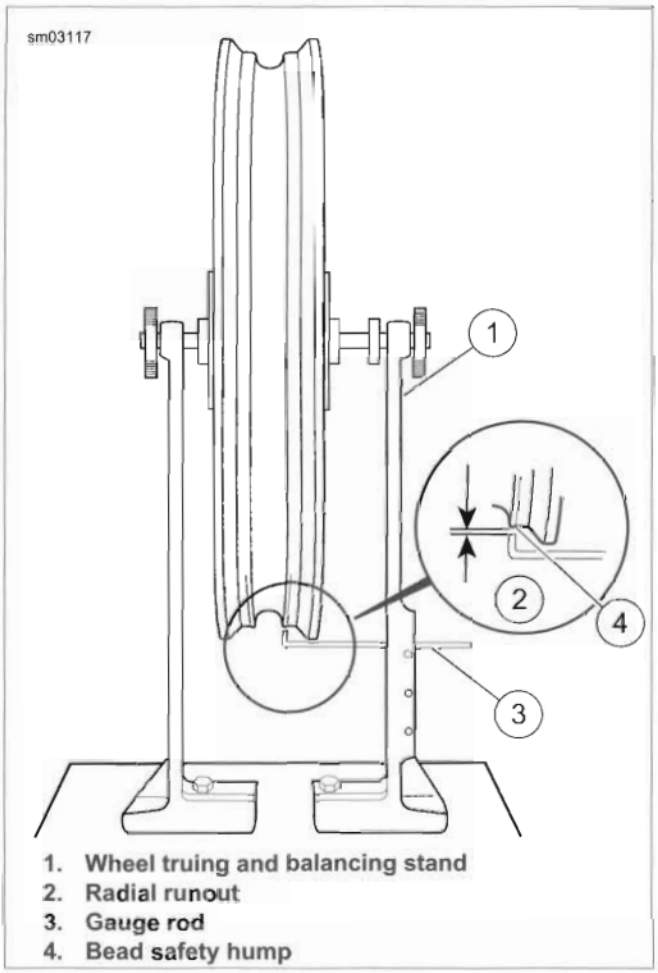

1. **Wheel truing and balancing stand**
2. **Radial runout**
3. **Gauge rod**
4. **Bead safety hump**

Figure 2-16. Checking Radial Runout

Checking Lateral Runout

1. See Figure 2-17. Mount wheel in WHEEL TRUING AND BALANCING STAND (Part No. HD-99500-80).

NOTE

Dial indicators are more accurate than gauge rods.

2. Place a gauge rod near, or dial indicator on the rim bead flange.
3. Measure distance at several locations. Lateral runout must not exceed 0.030 in (0.76 mm).

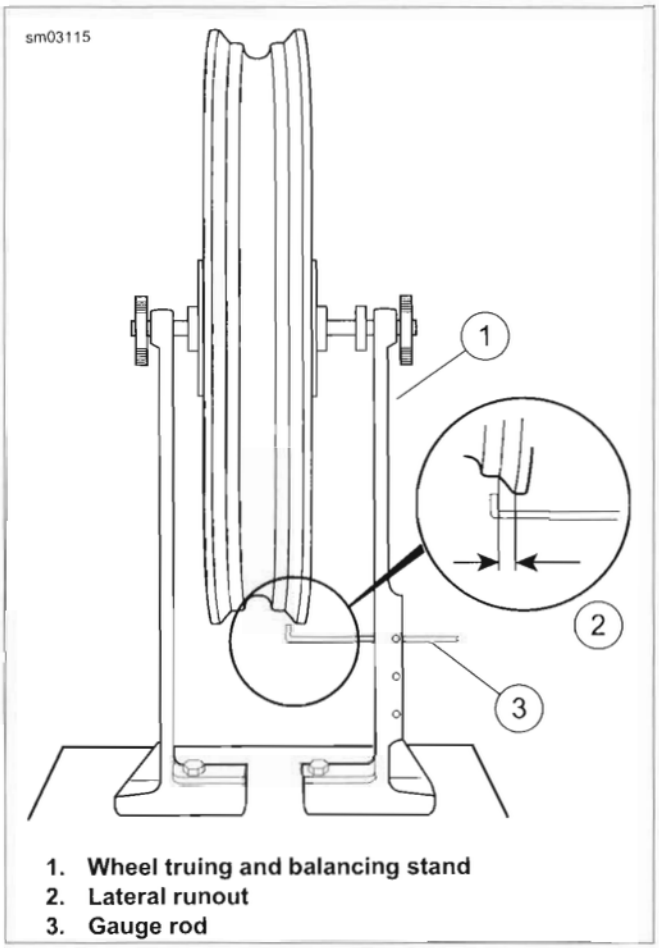

1. **Wheel truing and balancing stand**
2. **Lateral runout**
3. **Gauge rod**

Figure 2-17. Checking Lateral Runout

LACED WHEEL RIM OFFSET

PART NUMBER	TOOL NAME
HD-94681-80	SPOKE NIPPLE WRENCH
HD-99500-80	WHEEL TRUING STAND

1. See Figure 2-18. Place a piece of tape to mark the center of each group of four spokes as shown. The groups should be directly opposite one another and approximately 90 degrees apart. Using different colors of tape or numbering each group is helpful.

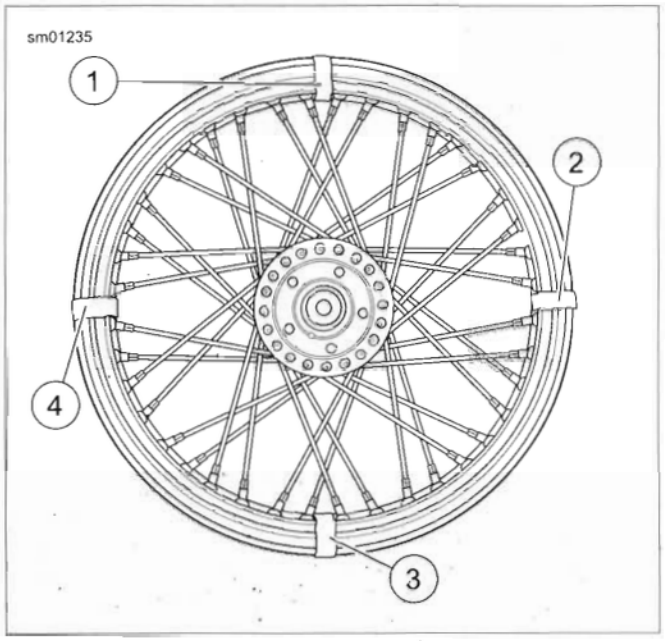

Figure 2-18. Marking Spoke Groups

2. See Figure 2-19. Mount wheel in WHEEL TRUING STAND (Part No. HD-99500-80) using truing arbor. Tighten arbor nuts so hub will turn on its bearings.

NOTE

The primary brake disc side of the hub has one or two grooves cut into the disc mounting surface.

3. Lay a straightedge across the primary brake disc mounting surface of hub and one of the marked spoke groups.
4. See Figure 2-20. Measure the distance from the straightedge to the location shown, based on rim design, to determine distance A. Refer to Table 2-13.

NOTES

- *Always loosen the appropriate spokes before tightening the other two. Reversing this procedure will cause the rim to become out-of-round.*
- *Tighten or loosen spokes one flat at a time and recheck measurement.*
- *Always work on groups that are opposite each other to maintain radial runout.*

5. If the dimension is not correct, adjust the four spokes using SPOKE NIPPLE WRENCH (Part No. HD-94681-80). For example: if the **right** side is **less** than specification, **loosen** the two spokes on the hub **right** side. Then **tighten** the two spokes attached to the hub **left** side. Turn all four spokes an equal number of turns until offset is to specification.
6. Repeat the previous step for all groups on the wheel. Verify the offset.
7. True the wheel. See 2.7 CHECKING AND TRUING WHEELS, Truing Laced Wheels.

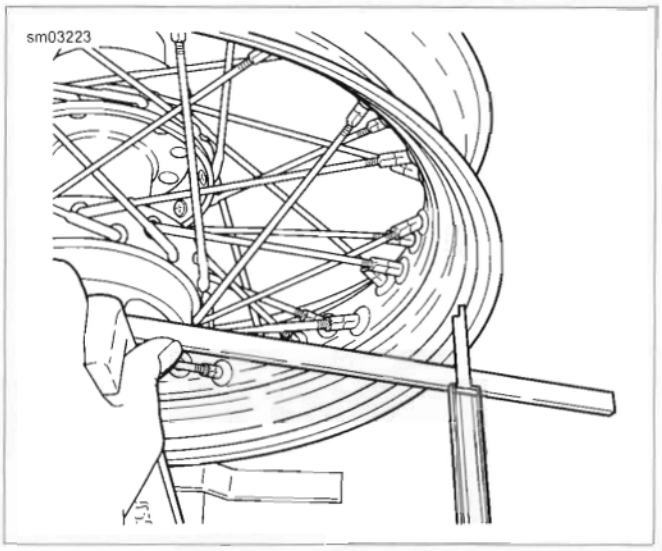

Figure 2-19. Checking Wheel Hub Offset Dimension (typical)

Table 2-13. Wheel Offset Dimensions

RIM TYPE	MODEL	SIZE	WHEEL	IN	MM
Steel Laced (1)	FXST	21 x 2.15	Front	1.660-1.690	42.16-42.93
	FLSTC, FLSTN, FLS	16 x 3	Front	1.267-1.297	32.18-32.94
	FLSTC, FLSTN, FLS	16 x 3	Rear	1.387-1.417	35.23-35.99
Aluminum Profile Laced (2)	FLSTC, FLSTN	16 x 3	Front	1.002-1.032	25.46-26.22
	FLSTC, FLSTN	16 x 3	Rear	1.123-1.153	28.52-29.28

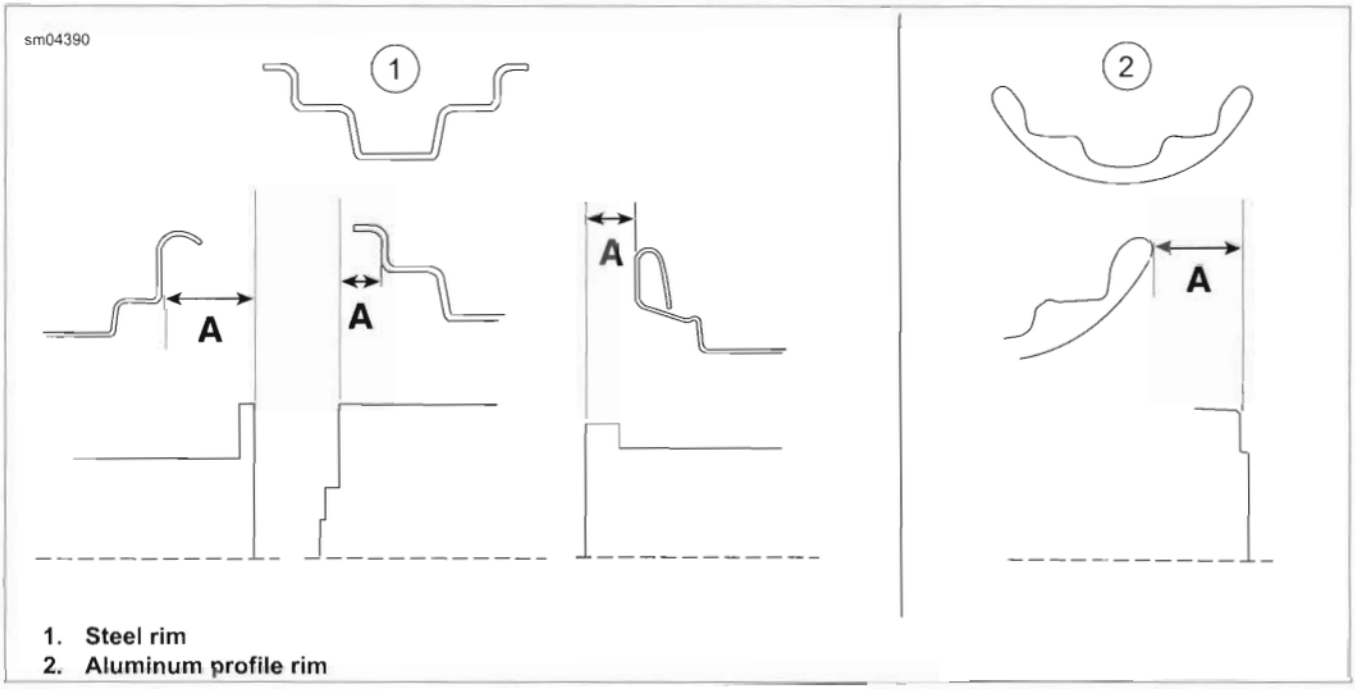

1. Steel rim
2. Aluminum profile rim

Figure 2-20. Laced Wheel Hub Offset Dimensions

TRUING LACED WHEELS

PART NUMBER	TOOL NAME
HD-48985	SPOKE TORQUE WRENCH
HD-94681-80	SPOKE NIPPLE WRENCH
HD-99500-80	WHEEL TRUING AND BALANCING STAND

FASTENER	TORQUE VALUE	
Spoke nipple	55 **in-lbs**	6.2 Nm

NOTES

- *Dial indicators are more accurate than gauge rods.*
- *Perform radial truing before lateral truing.*

Radial Runout

1. See Figure 2-21. With the wheel mounted in WHEEL TRUING AND BALANCING STAND (Part No. HD-99500-80), adjust the truing stand gauge (3) near to the tire bead safety hump (4). If using a dial indicator, place the tip on the safety bead hump.
2. If working with a straight flange hub, seat each spoke head in the hub flange using a flat nose punch and mallet.

NOTES

- *Always loosen the appropriate spokes, using SPOKE NIPPLE WRENCH (Part No. HD-94681-80), before tightening the other two. Reversing this procedure will cause the rim to become out of round.*
- *Tighten or loosen spoke, one flat at a time, and recheck measurement. Small changes in the spokes can make large changes in the runout.*
- *Always work on groups that are opposite each other to maintain radial runout.*

3. Spin the rim slowly and check distance (2). The rim should be true within 0.030 in (0.76 mm).
   a. If the rim contacts the gauge on or near a marked group of spokes, loosen the spokes in the group on the opposite side of the rim. Then tighten the spokes in the group where the rim makes contact an equal number of turns.
   b. If the rim contacts the gauge between two marked groups, loosen the spokes in both groups on the opposite side of the rim. Then tighten the spoke groups on the side of the rim that makes contact an equal number of turns.
4. When the wheel is centered and trued, start at the valve stem hole and tighten any loose spoke nipples one turn at a time until they are snug.
5. Working alternately across the wheel, use SPOKE TORQUE WRENCH (Part No. HD-48985) evenly tighten all spokes to specification listed in Table 2-14.
6. If working with a straight flange hub, verify each spoke head is seated in the hub flange using a flat nose punch and mallet.
7. Verify radial runout is still within specification.
8. After you have verified that radial runout is still within specification, proceed to lateral runout.

⚠WARNING

Spokes that are too tight can draw nipples through the rim or distort hub flanges. Spokes that are too loose can continue to loosen when put in service. Either condition can adversely affect stability and handling, which could result in death or serious injury. (00286a)

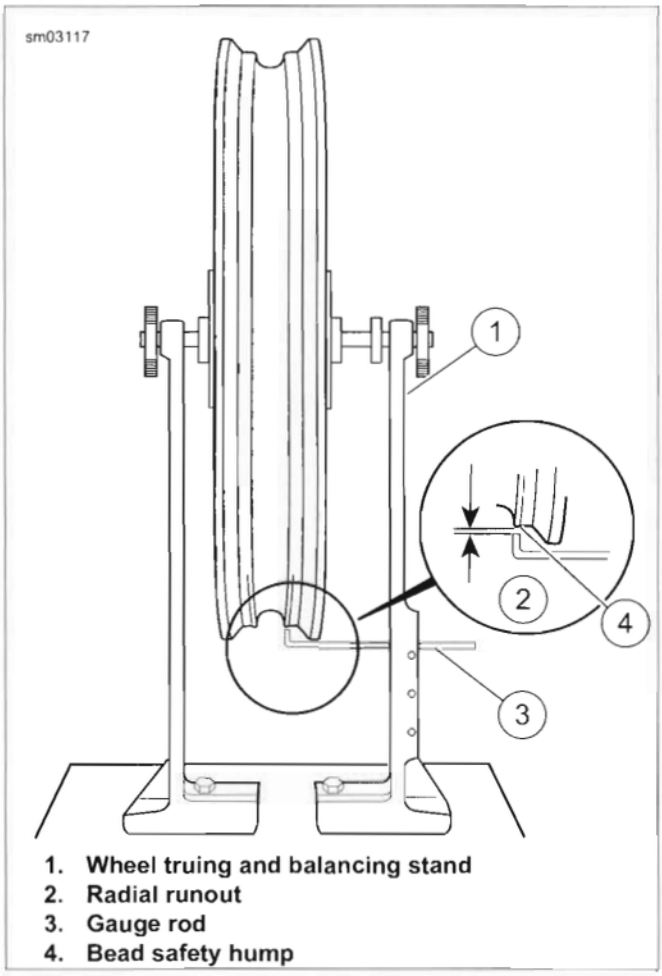

1. **Wheel truing and balancing stand**
2. **Radial runout**
3. **Gauge rod**
4. **Bead safety hump**

Figure 2-21. Checking Radial Runout

Table 2-14. Spoke Nipple Torque Specification

RIM TYPE	MINIMUM TORQUE
All	55 **in-lbs** (6.2 Nm)

Lateral Runout

NOTE

Dial indicators are more accurate than gauge rods.

1. See Figure 2-22. With the wheel mounted in WHEEL TRUING AND BALANCING STAND (Part No. HD-99500-80), adjust the gauge rod (3) near the rim bead flange.
2. Rotate the rim slowly and check lateral runout (2). If runout exceeds 0.030 in (0.76 mm), adjust spokes as follows.

NOTES

- *Always loosen the appropriate spokes before tightening the other two. Reversing this procedure will cause the rim to become out of round.*
- *Tighten or loosen spoke, one flat at a time, and recheck measurement. Small changes in the spokes can make large changes in the runout.*

3. Again working in groups of four, loosen two spokes on the tight side and tighten the two spokes on the loose side.
4. Repeat with each group until wheel is within specification.
5. Verify that all spoke nipples are tightened to the specification. Refer to Table 2-14.
6. If the tire is removed from the rim, file or grind off ends of spokes that protrude through the nipples to prevent puncturing tube or rim seal when tire is mounted.

NOTE

After installation, verify the wheel is approximately centered between the fork fender bosses.

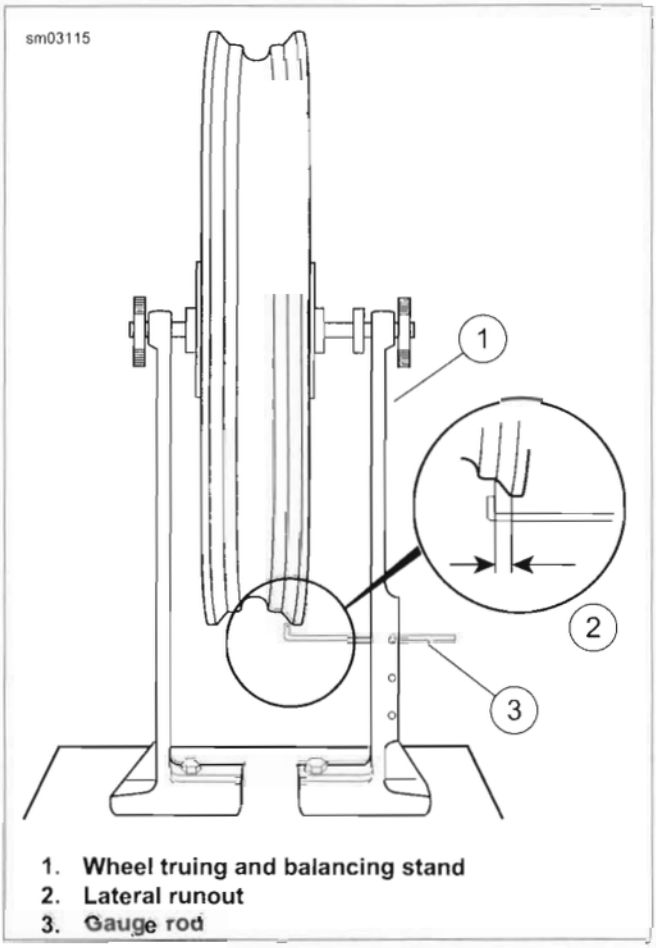

1. **Wheel truing and balancing stand**
2. **Lateral runout**
3. **Gauge rod**

Figure 2-22. Checking Lateral Runout

INSPECTION

NOTICE

When lifting a motorcycle using a jack, be sure jack contacts both lower frame tubes where down tubes and lower frame tubes converge. Never lift by jacking on cross-members, oil pan, mounting brackets, components or housings. Failure to comply can cause serious damage resulting in the need to perform major repair work. (00586d)

1. Raise the wheel with a suitable lifting device.
2. Turn the wheel through several rotations.

NOTES

- *Keep ABS encoder bearings away from magnetic fields (such as magnetic parts trays, magnetic base dial indicators, alternator rotors) or damage occurs.*
- *When checking end play, pull or push on the wheel not the brake disc. Pulling or pushing brake disc can distort disc causing a false end play reading.*

3. Check end play:
   a. See Figure 2-23. Mount a magnetic base dial indicator to the brake disc. Set the indicator contact point on the end of the axle.
   b. Firmly push the wheel to one side and zero the dial indicator gauge.
   c. Firmly pull the wheel back as far as it goes and note the reading of the dial indicator.
   d. Repeat the procedure to verify the reading.
   e. Replace the bearings if end play exceeds 0.002 in (0.051 mm) or if there is drag, rough rotation or abnormal noise.

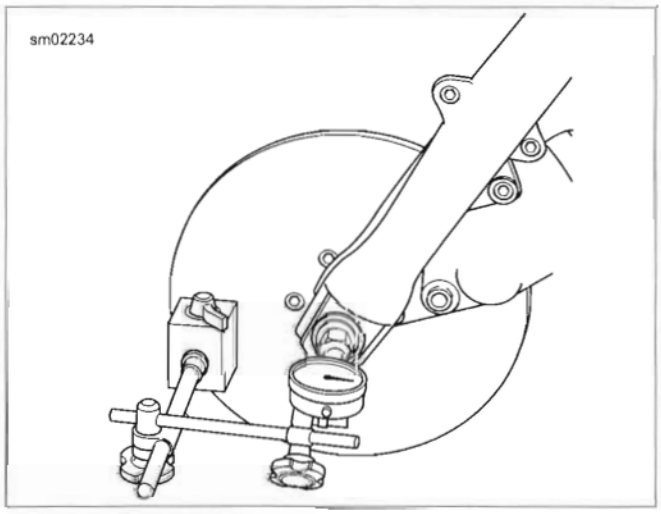

Figure 2-23. Wheel Bearing Inspection (Front Wheel Shown)

REMOVAL

PART NUMBER	TOOL NAME
HD-44060-10A	25MM BEARING REMOVER (NON-ABS)
HD-44060-11A	25MM BEARING REMOVER (ABS)
HD-44060C	WHEEL BEARING INSTALLER/REMOVER

1. Remove wheel. See 2.4 FRONT WHEEL or 2.5 REAR WHEEL.
2. If present, remove hub plate from wheel on opposite side of front brake disc.

NOTES

- *See Figure 2-25. Some wheel hubs may not provide adequate support for the puller bridge. In these cases center a used brake disc over the hub to support the puller bridge while removing the bearings.*
- *ABS equipped motorcycles use both a special encoder bearing (greenish tan in color) on the primary brake disc side. They use a standard bearing (black) on the opposite side. Select 25MM BEARING REMOVER (ABS) (Part No. HD-44060-11A) or 25MM BEARING REMOVER (NON-ABS) (Part No. HD-44060-10A).*

3. See Figure 2-24. Obtain WHEEL BEARING INSTALLER/REMOVER (Part No. HD-44060C) and assemble using 25MM BEARING REMOVER (ABS) (Part No. HD-44060-11A) or 25MM BEARING REMOVER (NON-ABS) (Part No. HD-44060-10A) (6).
   a. Sparingly apply GRAPHITE LUBRICANT to forcing screw (1) to maintain smooth operation and prolong service life.
   b. Install nut (2), washer (3) and bearing (4) on screw. Insert assembly through hole in bridge (5).
   c. Drop ball bearing inside 25 mm collet (6). Fasten collet and ball bearing to forcing screw.
4. Hold end of forcing screw and turn collet to expand edges of collet.
5. See Figure 2-26. When expanded collet has gripped bearing edges, hold end of forcing screw and turn the nut to remove bearing from wheel.
6. Remove spacer from inside wheel hub.
7. Repeat procedure for opposite side bearing. Discard all bearings upon removal.

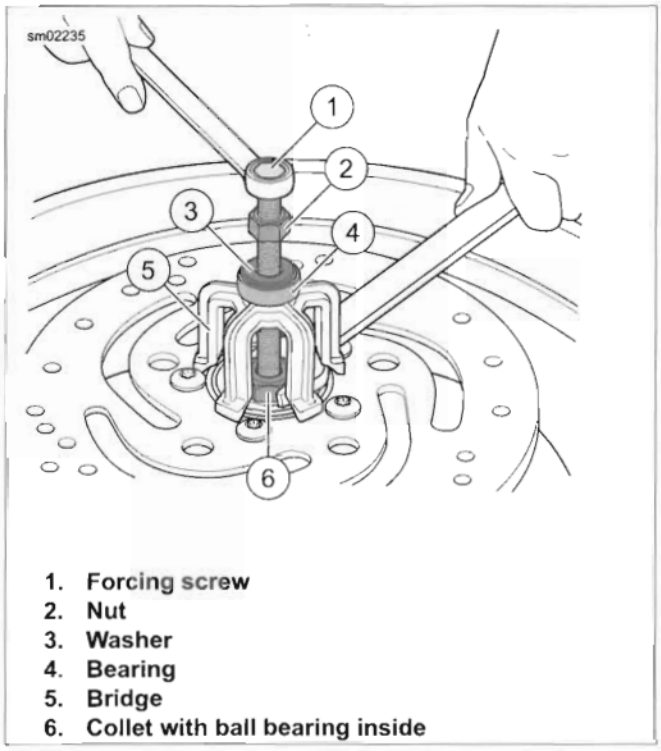

1. Forcing screw
2. Nut
3. Washer
4. Bearing
5. Bridge
6. Collet with ball bearing inside

Figure 2-24. Wheel Bearing Removal Tool

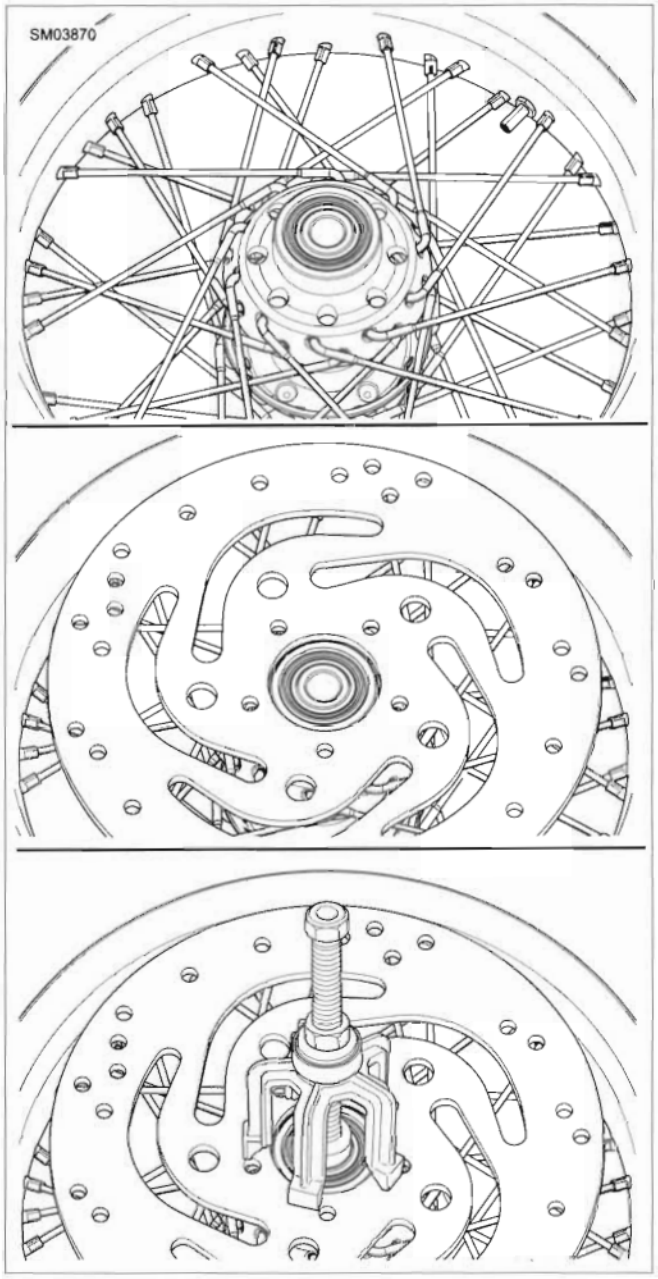

Figure 2-25. Brake Disk as Puller Aid

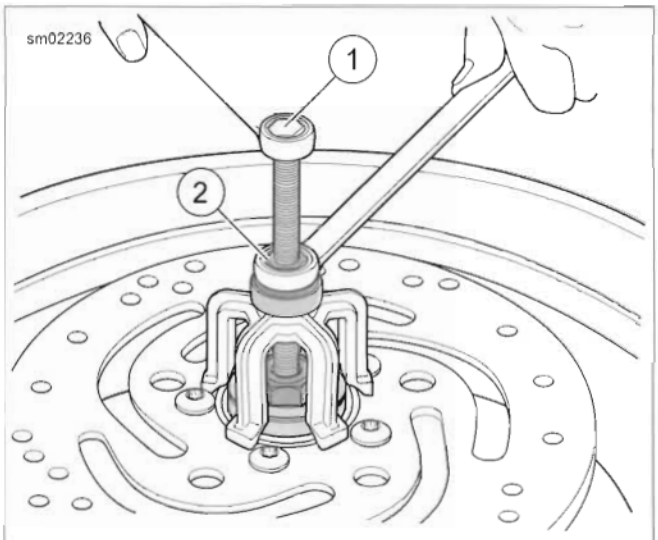

1. **Forcing screw**
2. **Nut**

Figure 2-26. Removing Bearing

INSTALLATION

PART NUMBER	TOOL NAME
HD-44060C	WHEEL BEARING INSTALLER/REMOVER

NOTES

- *Install first bearing on primary brake disc side of hub, which is identified by having one or two grooves cut into the disc mounting surface.*
- *Keep ABS encoder bearings away from magnetic fields (such as magnetic parts trays, magnetic base dial indicators, alternator rotors, etc.) or damage will occur.*
- *ABS equipped motorcycles use a special encoder bearing (greenish tan in color) on the primary brake disc side and a standard bearing (black) on the opposite side.*

1. Obtain WHEEL BEARING INSTALLER/REMOVER (Part No. HD-44060C) and assemble.
   a. Sparingly apply graphite lubricant to threads of threaded rod to prolong service life and maintain smooth operation.
   b. See Figure 2-27. Place threaded rod through support plate. Insert assembly through wheel.
   c. See Figure 2-28. Place the **new** bearing (6) on rod (1) with lettered side facing away from wheel centerline. ABS bearing with greenish tan side against pilot (5).
   d. Install pilot (5), bearing (4), washer (3) and nut (2) over rod.
2. Hold hex end of threaded rod (1) and turn nut (2) to install bearing (6) into primary side of hub. Bearing will be fully seated when nut can no longer be turned. Remove tool.
3. Install spacer inside wheel hub.
4. Reverse tool and install opposite side bearing until bearing contacts inner spacer.

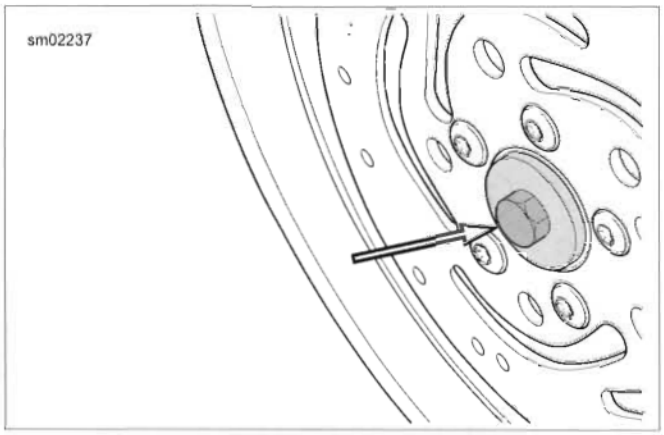

Figure 2-27. Assembling Installation Tool

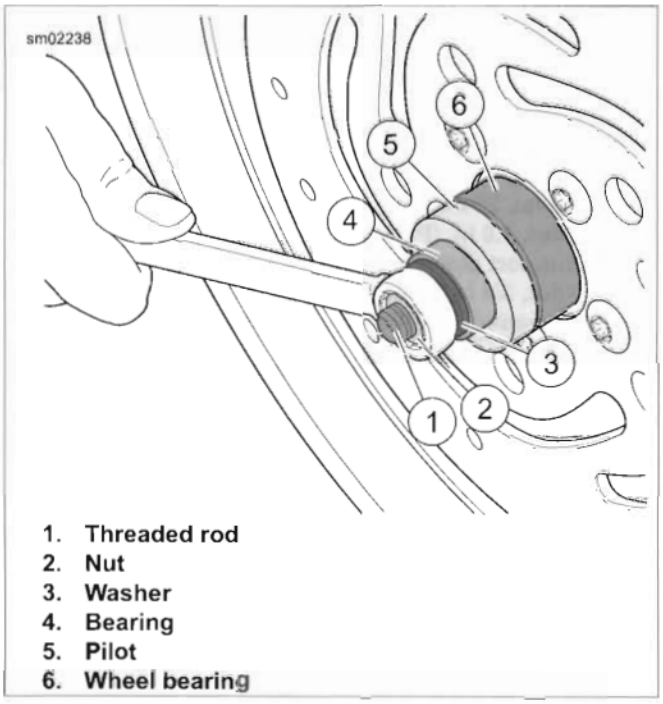

1. **Threaded rod**
2. **Nut**
3. **Washer**
4. **Bearing**
5. **Pilot**
6. **Wheel bearing**

Figure 2-28. Installing Bearings

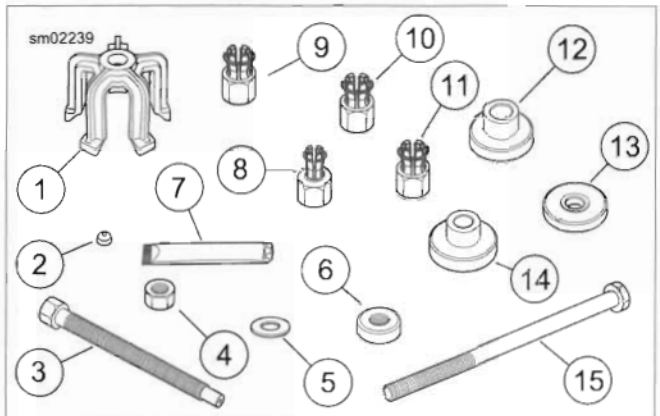

1. Bridge, (Part No. HD-44060-5)
2. Steel ball, (Part No. 12547)
3. Forcing screw, (Part No. HD-44060-4)
4. Nut, (Part No. 10210)
5. Washer, (Part No. 12004)
6. Bearing, (Part No. 217801)
7. Lubricant, (Part No. J-23444A)
8. Collet, 3/4 in, (Part No. HD-44060-3A)
9. Collet (ABS), 25 mm, (Part No. HD-44060-11A)
10. Collet, 1.0 in, (Part No. HD-44060-7)
11. Collet, 25 mm, (Part No. HD-44060-10A)
12. Pilot, 1.0 in, (Part No. HD-44060-8)
13. Support plate, (Part No. HD-44060-1)
14. Pilot, 3/4 in, (Part No. HD-44060-6)
15. Threaded rod, (Part No. 280856)

Figure 2-29. Wheel Bearing Installer/Remover Components

NOTES

- *Parts 1-7 are common to removal and installation.*
- *Parts 8-10 are used for removal only.*
- *Parts 11-15 are used for installation only.*

GENERAL

⚠WARNING

Be sure tires are properly inflated, balanced, undamaged, and have adequate tread. Inspect your tires regularly and see a Harley-Davidson dealer for replacements. Riding with excessively worn, unbalanced, improperly inflated, overloaded or damaged tires can lead to tire failure and adversely affect stability and handling, which could result in death or serious injury. (00014b)

Always maintain proper tire pressure as specified in Table 2-10. Do not load tires beyond GAWR specified in Table 2-4 or Table 2-5. Underinflated, over-inflated or overloaded tires can fail.

NOTES

- *Check runout on all cast or spoke wheels before installing a **new** tire. See 2.7 CHECKING AND TRUING WHEELS.*
- *Store **new** tires on a horizontal tire rack. Avoid stacking **new** tires in a vertical stack. The weight of the stack compresses the tires and closes down the beads.*
- *Inspect tires for punctures, cuts, breaks and wear at least weekly.*
- *See Figure 2-30. The tread wear indicator bars will appear on tire tread surfaces when 1/32 in (0.8 mm) or less of tread remains. Always replace tires before they reach the tread wear indicator bars.*

***New** tires are needed if any of the following conditions exist. See 1.8 TIRES AND WHEELS.*

- Tire wear indicator bars are visible on the tread surfaces.
- Tire cords or fabric are visible through cracked sidewalls, snags or deep cuts.
- A bump, bulge or split in the tire.
- Puncture, cut or other damage to the tire that cannot be repaired.

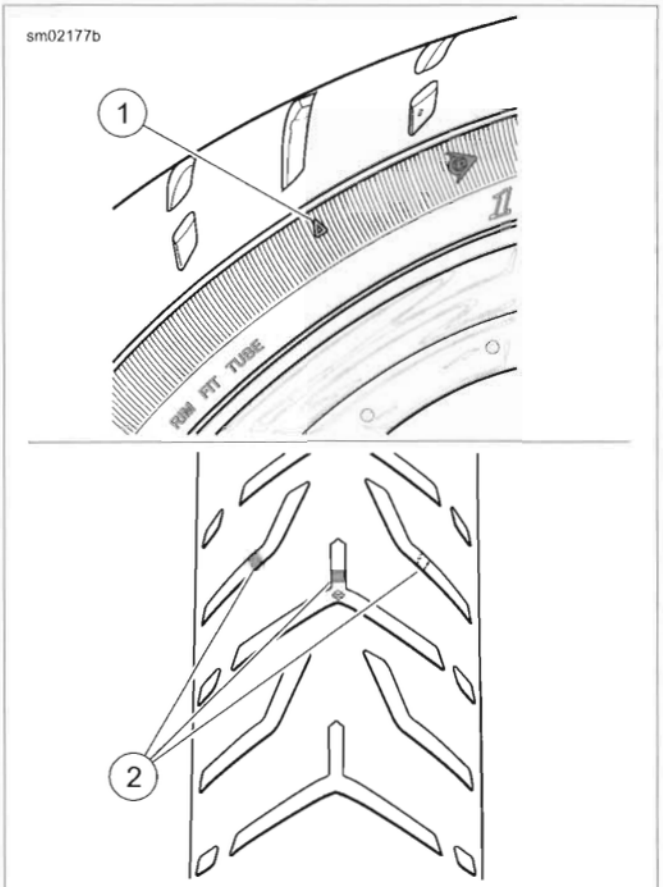

1. **Sidewall**
2. **Tread surface**

Figure 2-30. Tread Wear Indicators (Typical)

REMOVAL

NOTE

Take care when removing and installing tire to prevent cosmetic damage to wheel. This is especially true with wheels that feature painted surfaces.

1. Remove wheel from motorcycle:
   a. **Front wheel:** see 2.4 FRONT WHEEL, Removal.
   b. **Rear wheel:** see 2.5 REAR WHEEL, Removal.
2. Deflate tire.

NOTE

On tube type wheels, it is not necessary to completely remove tire from rim to replace tube. Removing one side allows the tube to be replaced and allows for inspection of tire.

3. Loosen both tire beads from rim flange. In most cases, a bead breaker machine will be required to loosen the beads from the rim.
4. Remove tire.

CLEANING, INSPECTION AND REPAIR

1. Clean the inside of tire and outer surface of tube.

2. If rim is dirty or rusty, clean with a stiff wire brush.
3. Check wheels for lateral and radial runout before installing a tire. See 2.7 CHECKING AND TRUING WHEELS.
4. Inspect the tire for wear and damage.
5. Inspect tread depth. Replace worn tires.

⚠WARNING

Replace punctured or damaged tires. In some cases, small punctures in the tread area may be repaired from within the removed tire by a Harley-Davidson dealer. Speed should NOT exceed 50 mph (80 km/h) for the first 24 hours after repair, and the repaired tire should NEVER be used over 80 mph (130 km/h). Failure to follow this warning could lead to tire failure and result in death or serious injury. (00015b)

6. Repair tread on tubeless tires if puncture is 1/4 in (6.4 mm) or smaller. Make repairs from inside the tire.
7. Always combine a patch and plug when repairing damaged tires.

INSTALLATION

FASTENER	TORQUE VALUE	
Valve stem nut	12-15 in-lbs	1.4-1.7 Nm

⚠WARNING

Use only Harley-Davidson specified tires. See a Harley-Davidson dealer. Using non-specified tires can adversely affect stability, handling or braking, which could result in death or serious injury. (00024b)

⚠WARNING

Harley-Davidson front and rear tires are not the same. Interchanging front and rear tires can cause tire failure, which could result in death or serious injury. (00026a)

⚠WARNING

Do not exceed manufacturer's recommended pressure to seat beads. Exceeding recommended bead seat pressure can cause tire rim assembly to burst, which could result in death or serious injury. (00282a)

For tire pressures, see 1.8 TIRES AND WHEELS, Tires.

Some tires have arrows molded into the tire sidewall. Mount these tires with the arrow pointing in the direction of forward rotation. The colored dot on the sidewall is a balance mark. Align it with the valve stem.

Tube Type Tires

⚠WARNING

Match tires, tubes, rim strips or seals, air valves and caps to the correct wheel. Contact a Harley-Davidson dealer. Mismatching can lead to tire damage, allow tire slippage on the wheel or cause tire failure, which could result in death or serious injury. (00023c)

NOTES

- *For correct tire and tube types, see 2.2 SPECIFICATIONS.*
- *When replacing a tube type tire, replace the tube. Inner tubes should be patched only as an emergency measure. Replace a damaged or patched tube as soon as possible. Always use a rim strip on all tube-type laced wheels.*

1. See Figure 2-31. On tube type laced wheels, verify that no spokes protrude through nipples. Install a rim strip into the rim well. Check to align the valve stem hole in rim strip with valve stem hole in rim.
2. Install tube and tire.



Figure 2-31. Installed Rim Strip

Tubeless Tires: Cast Wheels

⚠WARNING

Only install original equipment tire valves and valve caps. A valve, or valve and cap combination, that is too long or too heavy can strike adjacent components and damage the valve, causing rapid tire deflation. Rapid tire deflation can cause loss of vehicle control, which could result in death or serious injury. (00281a)

On tubeless cast wheels, replace damaged or leaking valve stems.

1. See Figure 2-32. Install rubber grommet (5) on valve stem.
2. Insert valve stem into rim hole.
3. Install metal washer (4) and nut (3).
4. Tighten to 12-15 in-lbs (1.4-1.7 Nm).
5. Install tire.

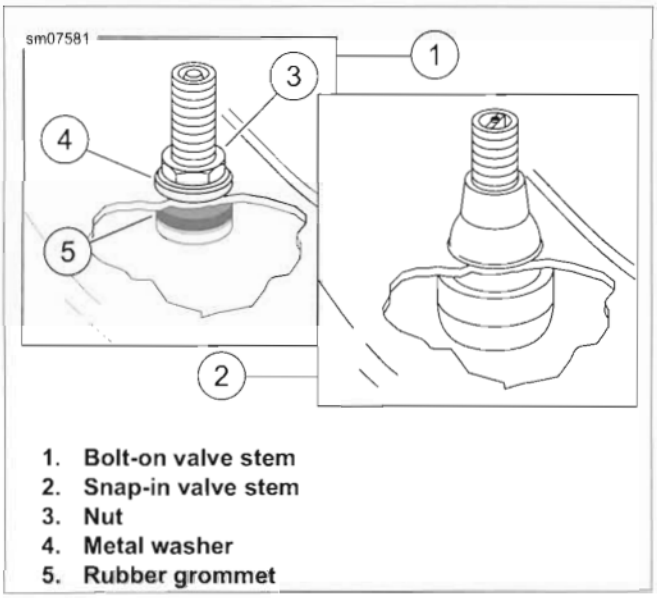

1. **Bolt-on valve stem**
2. **Snap-in valve stem**
3. **Nut**
4. **Metal washer**
5. **Rubber grommet**

Figure 2-32. Tubeless Tire Valve Stems

CHECKING TIRE RUNOUT

Lateral Runout

1. Check tire pressure.
2. See Figure 2-33. Turn the wheel on the axle and measure tire lateral runout from a fixed point to a smooth area on the tire sidewall. Avoid measuring on raised letters or vents.
3. Tire lateral runout should not exceed 0.090 in (2.29 mm). If tire runout exceeds specification, remove tire from rim and check rim lateral runout. See 2.7 CHECKING AND TRUING WHEELS.
   a. If rim lateral runout is within specification, the tire is at fault and must be replaced.
   b. If rim lateral runout is not within specification, correct by adjusting selected spokes on laced wheels or replace cast wheels. See 2.7 CHECKING AND TRUING WHEELS.
4. Install the tire. Check tire lateral runout of replacement tire.

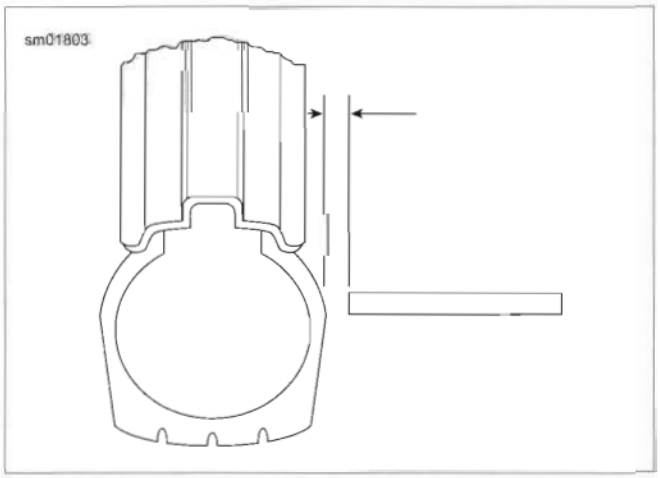

Figure 2-33. Checking Tire Lateral Runout

Radial Runout

1. Check tire pressure.
2. See Figure 2-34. Turn the wheel on the axle and measure tire radial runout at the tread centerline.
3. Tire radial runout should not exceed 0.090 in (2.29 mm). If tire runout exceeds this specification, remove tire from rim and check rim radial runout.See 2.7 CHECKING AND TRUING WHEELS.
   a. If rim radial runout is within specification, the tire is at fault and must be replaced.
   b. If rim radial runout is not within specification, correct by adjusting selected spokes on laced wheels or replace cast wheels. See 2.7 CHECKING AND TRUING WHEELS.
4. Install the tire. Check tire radial runout of replacement tire.

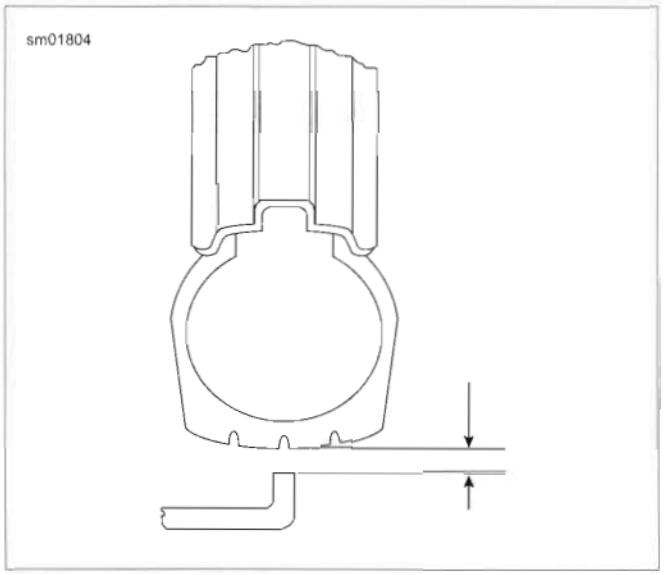

Figure 2-34. Checking Tire Radial Runout

WHEEL BALANCING

Static vs Dynamic

Wheel balancing is recommended to improve handling. Balancing wheels reduces vibration especially at high speeds.

Static balancing produces satisfactory results for normal highway speeds. Dynamic balancing can produce better results for deceleration.

Weights

The maximum weight permissible to balance a wheel is 3.5 oz (99.2 g) (total weight applied to the rim). If more than 3.5 oz (99.2 g) of weight is required, rotate the tire 180 degrees on the rim and again balance the assembly. Balance wheels to within 0.5 oz (14 g).

All wheel weights currently supplied by Harley-Davidson are made from zinc which is lighter than lead. The weight of each zinc segment is 0.18 oz (5 g) as compared to 0.25 oz (7 g) for lead. Weights are stamped for easy identification.

NOTES

- *If adding more than 1.5 oz (43 g) of weight at one location, divide the amount to apply half to each side of rim.*
- *On cast wheels without a flat area near the bead, place the weights crosswise through the opening.*

1. See Figure 2-36. Place weights on a smooth surface of the wheel rim such that centrifugal force keeps them in place. Make sure that the area of application is clean, dry and free of oil and grease.

NOTE

See Figure 2-35. When installing wheel weights, consider cosmetics. Keep snaking (1) within 0.040 in (1.02 mm) (2) of straight. Also keep the angle alignment of individual segments (3) within three degrees.

2. Remove paper backing from the weight. Press firmly in place and hold for ten seconds.

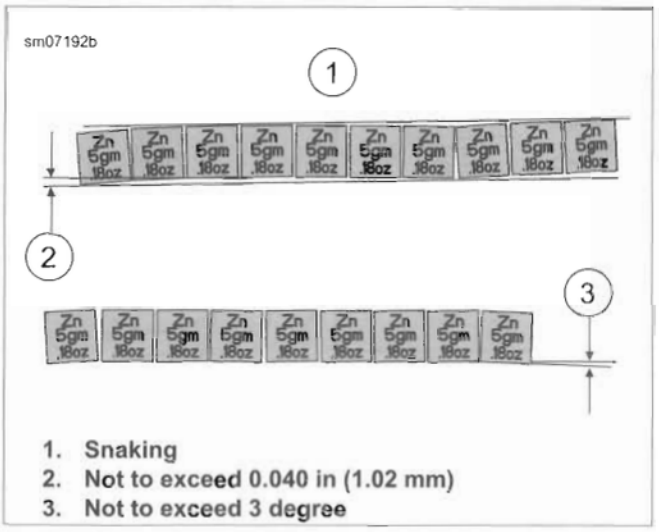

1. **Snaking**
2. **Not to exceed 0.040 in (1.02 mm)**
3. **Not to exceed 3 degree**

Figure 2-35. Weight Segment Alignment

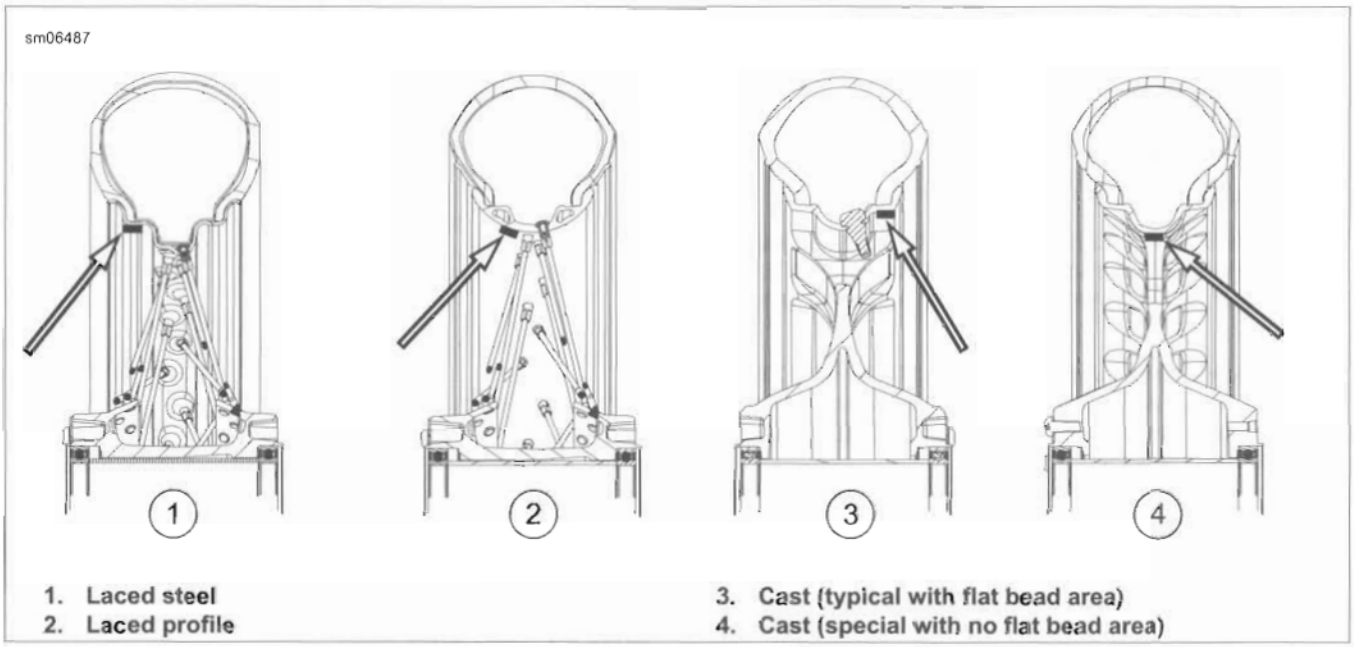

1. **Laced steel**
2. **Laced profile**
3. **Cast (typical with flat bead area)**
4. **Cast (special with no flat bead area)**

Figure 2-36. Wheel Weight Placement

AXLE ALIGNMENT

PART NUMBER	TOOL NAME
HD-48856-A	AXLE ALIGNMENT PLUGS

FASTENER	TORQUE VALUE	
Axle nut, rear	95-105 ft-lbs	129-142 Nm

Checking Axle Alignment

⚠WARNING

Only a Harley-Davidson dealer should perform vehicle alignment. Improper alignment can adversely affect stability and handling, which could result in death or serious injury. (00060a)

⚠WARNING

Check vehicle alignment according to following procedures. Incorrect alignment can adversely affect stability and handling, which could result in death or serious injury. (00287a)

1. Verify wheels are true to specifications. See 2.7 CHECKING AND TRUING WHEELS.
2. Check steering head bearing adjustment and adjust if necessary. See 1.18 STEERING HEAD BEARINGS.
3. Remove exhaust components as necessary.
4. See Figure 2-37. Insert alignment plugs (1, 2) from the AXLE ALIGNMENT PLUGS (Part No. HD-48856-A) into left and right ends of rear axle. Turn handle until plug is firmly held in the axle.
5. See Figure 2-38. Fabricate an alignment tool using a piece of 1/8 in (3.175 mm) diameter aluminum welding rod approximately 20 in (508 mm) long:
   a. Grind one end down to a blunt point (1).
   b. Use pliers to bend rod at a 90 degree angle (3), 1.75 in (44.45 mm) from the blunt point.
   c. Place a snug-fitting rubber grommet (2) on rod to act as a slide measurement indicator.
6. Gauge distance between rear fork pivot bolt and rear axle alignment plug center:
   a. See Figure 2-39. Measure outer diameter of rear fork pivot bolt and divide measurement by two. Using a pencil, draw a line from two different directions to mark an X.
   b. See Figure 2-40. Place blunt point of alignment tool (1) in the center of the X marked on the rear fork pivot bolt (2).
   c. Slide rubber grommet (3) along tool shaft until it aligns with hole in center of alignment plug (4).
   d. Without moving grommet, position alignment tool on left side of rear fork.
7. Check measurements on both sides of vehicle. Left and right measurements must be equal within 0.03125 in. (0.79375 mm) on both sides of vehicle. Adjust if necessary. See Adjusting Axle Alignment which follows.

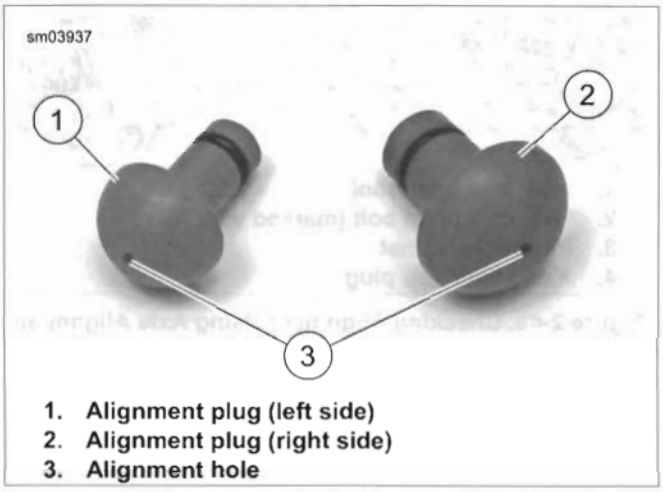

1. **Alignment plug (left side)**
2. **Alignment plug (right side)**
3. **Alignment hole**

Figure 2-37. Axle Alignment Plugs

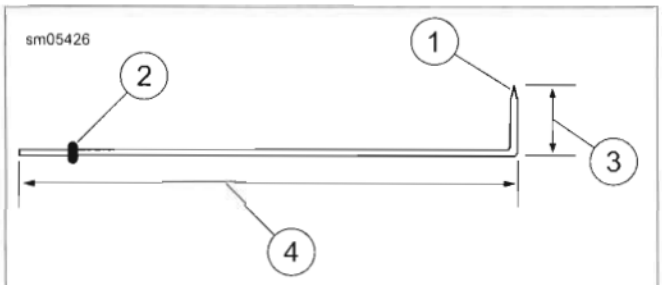

1. **Blunt point**
2. **Rubber grommet**
3. **1.75 in (44.45 mm)**
4. **18 in (457 mm)**

Figure 2-38. Axle Alignment Tool

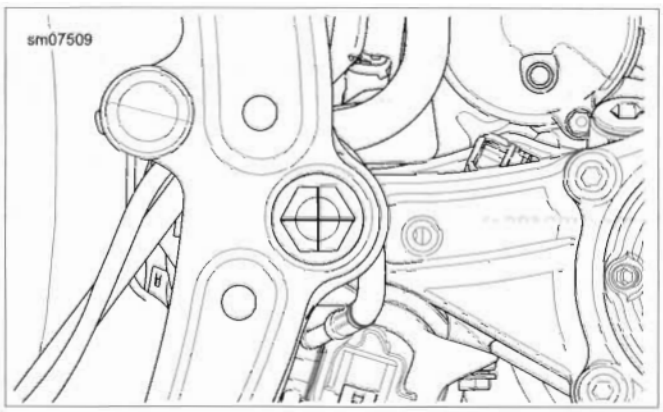

Figure 2-39. Pivot Bolt Center Marking

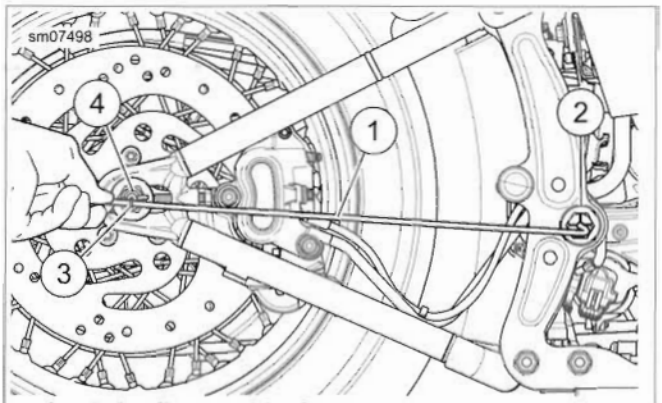

1. **Axle alignment tool**
2. **Rear fork pivot bolt (marked with X)**
3. **Rubber grommet**
4. **Axle alignment plug**

Figure 2-40. Checking Alignment Using Axle Alignment Tool

Adjusting Axle Alignment

1. **All but FXSB:** See Figure 2-41. Remove e-clip (1). Loosen rear axle nut (2).
2. **FXSB:** See Figure 2-42. Loosen rear axle nut (2).
3. On side of rear fork that has longer distance from pivot bolt to axle center, turn nut on axle adjuster (3) counter-clockwise to shorten distance. Adjust axle until left and right side alignment measurements are equal.

NOTES

- *Keep axle adjuster mechanisms firmly seated (under tension) on each side of rear fork during wheel alignment procedures above. Do so by applying moderate upward force on lower span of drive belt. This tensions drive belt, which holds rear axle forward against both adjuster mechanisms.*
- *Do not tighten rear axle nut or install **new** E-clip until after checking drive belt deflection.*

4. Verify drive belt deflection after aligning rear wheel. Adjust if required. See 1.12 DRIVE BELT AND SPROCKETS, Adjusting Belt Deflection.

⚠WARNING

Do not exceed specified torque when tightening axle nut. Exceeding torque can cause wheel bearings to seize during vehicle operation, which could result in death or serious injury. (00408e)

5. Tighten axle nut to 95-105 ft-lbs (129-142 Nm).
6. **All but FXSB:** See Figure 2-41. Install e-clip.
7. Erase pencil marks on pivot shaft when complete.
8. Install exhaust components.

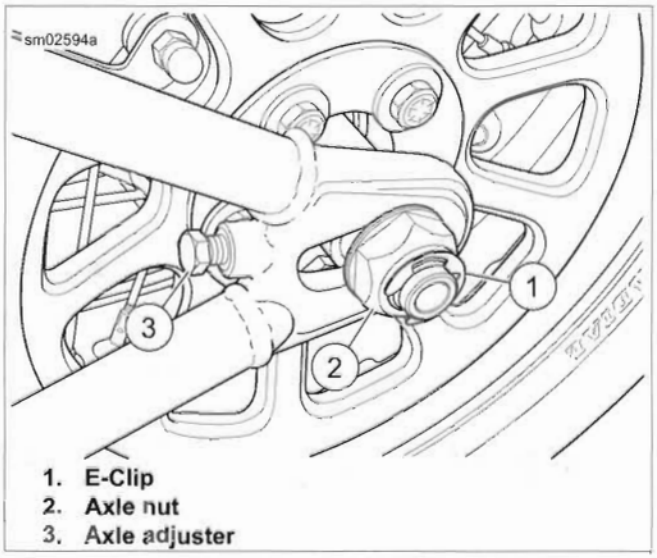

1. **E-Clip**
2. **Axle nut**
3. **Axle adjuster**

Figure 2-41. Axle Adjusters

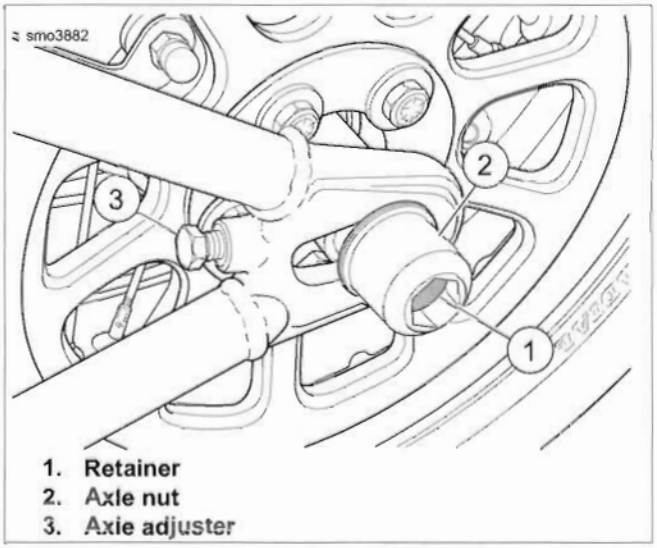

1. **Retainer**
2. **Axle nut**
3. **Axle adjuster**

Figure 2-42. Axle Adjusters: FXSB

GENERAL

NOTICE

D.O.T. 4 brake fluid will damage painted and body panel surfaces it comes in contact with. Always use caution and protect surfaces from spills whenever brake work is performed. Failure to comply can result in cosmetic damage. (00239b)

NOTICE

Do not allow dirt or debris to enter the master cylinder reservoir. Dirt or debris in the reservoir can cause improper operation and equipment damage. (00205c)

REMOVAL AND DISASSEMBLY

1. Drain brake fluid.
   a. Open bleeder nipple cap on front brake caliper.
   b. Install end of a length of clear plastic tubing over caliper bleeder valve, while placing free end in a suitable container.
   c. Open bleeder valve about 1/2-turn.
   d. Pump brake hand lever to drain brake fluid.
   e. Close bleeder valve.

NOTICE

Avoid leakage. Be sure gaskets, banjo bolt(s), brake line and master cylinder bore are clean and undamaged before assembly. (00322a)

2. Remove bolt and two steel/rubber washers to disconnect fitting of hydraulic brake line from master cylinder. Discard washers.

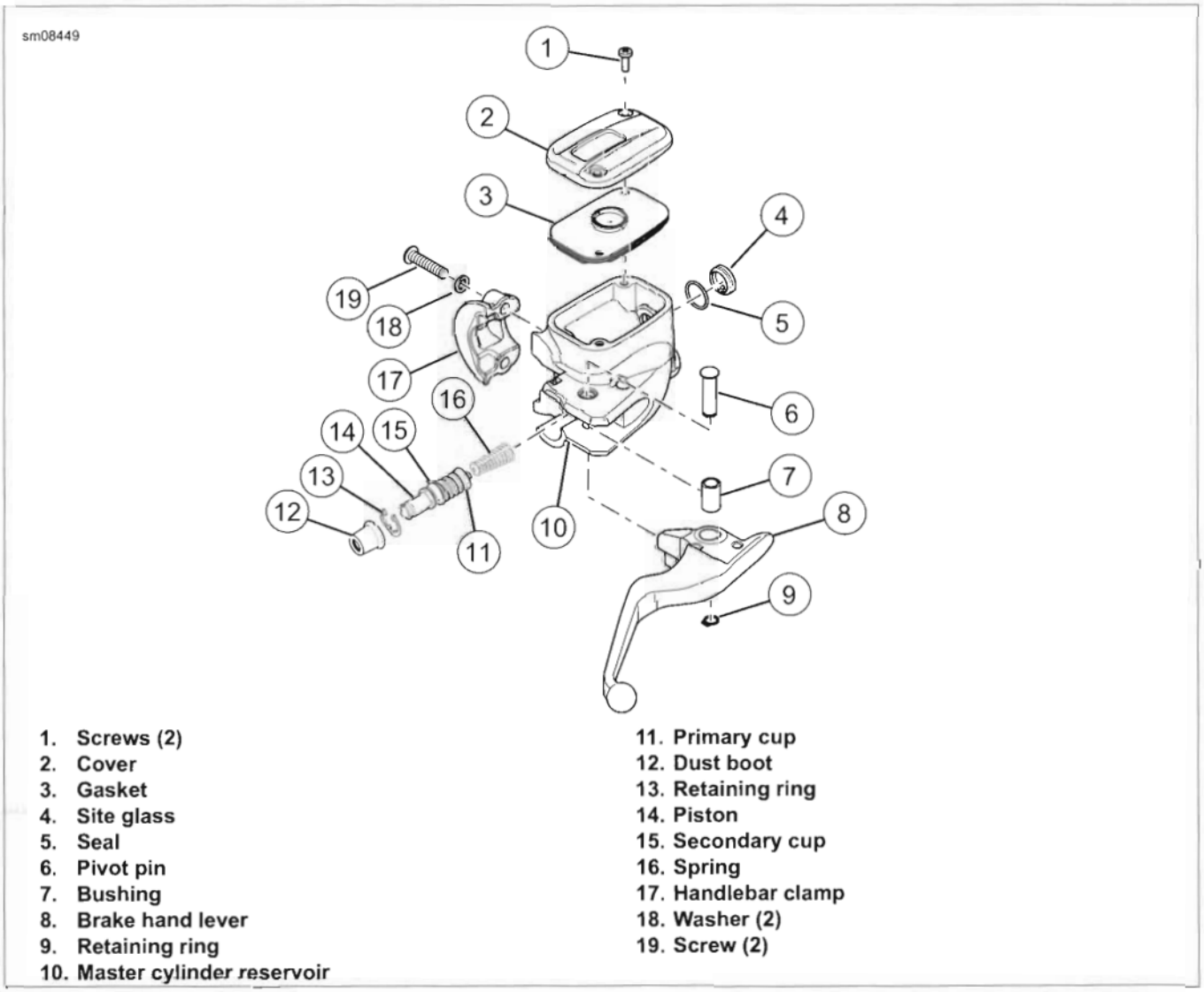

1. Screws (2)
2. Cover
3. Gasket
4. Site glass
5. Seal
6. Pivot pin
7. Bushing
8. Brake hand lever
9. Retaining ring
10. Master cylinder reservoir
11. Primary cup
12. Dust boot
13. Retaining ring
14. Piston
15. Secondary cup
16. Spring
17. Handlebar clamp
18. Washer (2)
19. Screw (2)

Figure 2-43. Front Brake master Cylinder

3. If necessary, remove mirror and turn signal. See 7.18 TURN SIGNALS AND RUNNING LIGHTS.
4. See Figure 2-43.Remove screws (19) and washers (18) to detach handlebar clamp (17) from master cylinder reservoir (10).
5. Remove retaining ring (9) from pivot pin groove at bottom of master cylinder bracket.
6. Remove pivot pin (6) and brake hand lever (8).
7. Remove dust boot (12) and discard.
8. Remove retaining ring (13).
9. Remove and discard piston assembly (11, 14-16).
10. Remove screws (1), cover (2) and gasket (3).

CLEANING AND INSPECTION

⚠WARNING

Use denatured alcohol to clean brake system components. Do not use mineral-based solvents (such as gasoline or paint thinner), which will deteriorate rubber parts even after assembly. Deterioration of these components can cause brake failure, which could result in death or serious injury. (00291a)

⚠WARNING

Compressed air can pierce the skin and flying debris from compressed air could cause serious eye injury. Wear safety glasses when working with compressed air. Never use your hand to check for air leaks or to determine air flow rates. (00061a)

1. Clean all parts with denatured alcohol or DOT 4 BRAKE FLUID.
   a. Wipe parts dry with a clean, lint-free cloth.
   b. Clear drilled passages and bore with clean compressed air.

NOTE

Do not use a wire or similar instrument to clean drilled passages in bottom of reservoir.

2. Inspect parts for wear or damage. Replace parts if necessary.
3. Inspect the piston bore in the master cylinder housing for scoring, pitting or corrosion. Replace as necessary.
4. Carefully inspect the outlet port that mates with the brake line fitting. As a critical sealing surface, replace the master cylinder assembly if any damage is noted.
5. Carefully inspect the cover gasket for damage. Replace as necessary.

ASSEMBLY AND INSTALLATION

FASTENER	TORQUE VALUE	
Handlebar switch clamp screw	60-80 in-lbs	6.8-9.0 Nm
Brake caliper/master cylinder banjo bolt	14-18 ft-lbs	19.0-24.4 Nm

NOTES

- *Always reassemble the master cylinder using **new** parts from the correct repair kit.*
- *Use CCI #20 Brake Grease, included in kit, to lubricate cylinder bore, cups and seals prior to assembly.*

1. See Figure 2-43. Coat piston bore of master cylinder reservoir (10), piston (14), primary cup (11) and secondary cup (15) with CCI #20 BRAKE GREASE (supplied in kit).
2. Install piston assembly into piston bore of master cylinder reservoir.
   a. Press small end of spring (16) onto piston (14).
   b. Install piston/spring assembly into master cylinder reservoir (10) bore.
3. Press in on piston (14) and install **new** retaining ring (13).
4. Install **new** dust boot (12). Press large end against retaining ring. Small end should fit into groove on shaft.
5. Install gasket (3), cover (2) and screws (1). Do not tighten at this time.
6. Assemble brake hand lever (8) with pivot pin (6) to master cylinder reservoir (10).

⚠WARNING

Wear safety glasses or goggles when removing or installing retaining rings. Retaining rings can slip from the pliers and could be propelled with enough force to cause serious eye injury. (00312a)

7. Install **new** retaining ring (9).
8. See Figure 2-44. Position the brake lever/master cylinder assembly inboard of the switch housing assembly, engaging the tab (2) on the lower switch housing (1) in the groove (3) at the top of the brake lever bracket (4).
9. Secure the handlebar clamp to master cylinder with two screws (with flat washers). Position hand lever and controls for rider comfort. Beginning with the top screw, tighten to 60-80 **in-lbs** (6.8-9.0 Nm).
10. If removed, install mirror and turn signal housing. See 7.18 TURN SIGNALS AND RUNNING LIGHTS.

NOTICE

Avoid leakage. Be sure gaskets, banjo bolt(s), brake line and caliper bore are clean and undamaged before assembly. (00321a)

11. Start banjo bolt (with **new** steel/rubber washers) to secure brake line fitting to master cylinder reservoir. Tighten to 14-18 ft-lbs (19.0-24.4 Nm).

⚠WARNING

When any hydraulic brake component, line or connection is loosened or replaced on an ABS motorcycle, Digital Technician II must be used during the brake bleeding procedure to verify all air is removed from the system. Failure to properly bleed the brake system could adversely affect braking, which could result in death or serious injury. (00585c)

12. Bleed front brake system. See 2.18 BLEEDING BRAKES.

NOTE

The shelf life of an unopened bottle of DOT 4 brake fluid is one year. The shelf life of an uncontaminated bottle that has been opened and then resealed is one week.

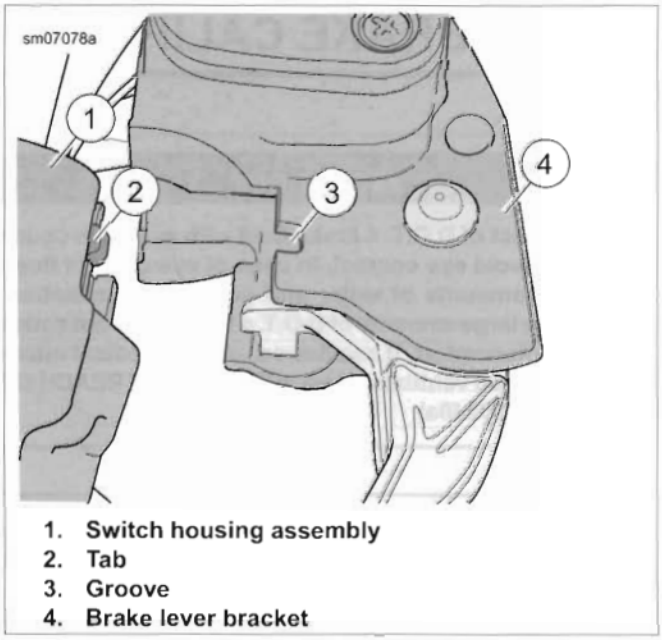

1. **Switch housing assembly**
2. **Tab**
3. **Groove**
4. **Brake lever bracket**

Figure 2-44. Attach Master Cylinder to Right Handlebar Switches

REMOVAL

⚠CAUTION

Direct contact of D.O.T. 4 brake fluid with eyes can cause irritation. Avoid eye contact. In case of eye contact flush with large amounts of water and get medical attention. Swallowing large amounts of D.O.T. 4 brake fluid can cause digestive discomfort. If swallowed, obtain medical attention. Use in well ventilated area. KEEP OUT OF REACH OF CHILDREN. (00240a)

NOTICE

Avoid leakage. Be sure gaskets, banjo bolt(s), brake line and caliper bore are clean and undamaged before assembly. (00321a)

NOTICE

D.O.T. 4 brake fluid will damage painted and body panel surfaces it comes in contact with. Always use caution and protect surfaces from spills whenever brake work is performed. Failure to comply can result in cosmetic damage. (00239b)

NOTE

If only replacing brake pads, see 1.16 BRAKE PADS AND DISCS.

1. See Figure 2-45. Remove the banjo bolt (4) and both steel/rubber washers (3) to detach front brake line (5) from caliper. Discard washers.
2. Remove the mounting bolts (1). Lift caliper upward to remove from brake disc.

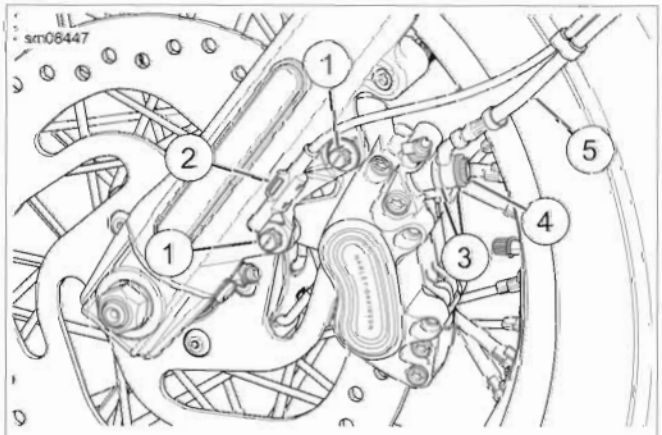

1. Caliper mounting bolt (metric)
2. Wheel speed sensor cable retainer (ABS only)
3. Steel/rubber washer (2)
4. Banjo bolt
5. Front brake line

Figure 2-45. Front Brake Caliper

DISASSEMBLY

1. Remove one brake pad. See 1.16 BRAKE PADS AND DISCS.
2. Verify remaining brake pad is installed with brake pad pins.
3. Verify bleeder valve is installed.

⚠WARNING

Compressed air can pierce the skin and flying debris from compressed air could cause serious eye injury. Wear safety glasses when working with compressed air. Never use your hand to check for air leaks or to determine air flow rates. (00061a)

⚠CAUTION

When removing piston with compressed air, piston can develop considerable force and fly out of caliper bore. Keep hands away from piston to avoid possible injury. (00530b)

NOTE

Do not damage banjo bolt sealing surface or threads of banjo bolt hole in brake caliper. Use an air nozzle with a rubber tip.

4. Gently apply low pressure compressed air to banjo bolt hole to force pistons from caliper bores.
5. Remove brake pad pins and brake pad.
6. See Figure 2-46. Remove bridge bolts (11, 12) and separate caliper housings.
7. Remove pistons from each housing by hand. If necessary, wiggle pistons gently to completely remove.

NOTE

Damaged piston bores will leak when reassembled. Do not use metal objects to remove or install objects from piston bores. Prevent damage to pistons, seals and bores by only using a wooden toothpick when servicing calipers.

8. Using a wooden toothpick, remove dust seals (6, 8) and piston seals (5, 9) from each caliper bore. Discard seals.
9. If necessary, remove bleeder valve (1).

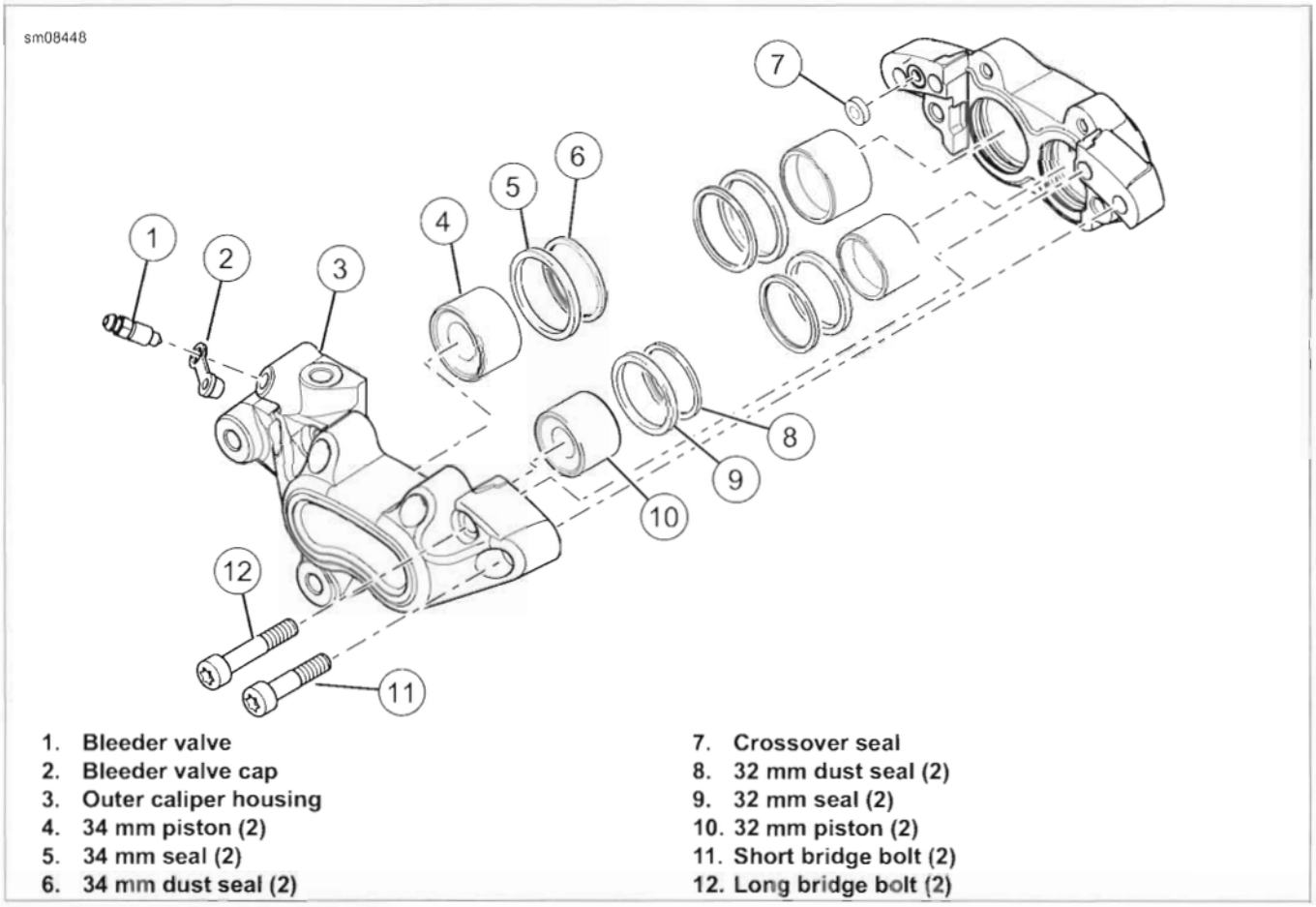

1. **Bleeder valve**
2. **Bleeder valve cap**
3. **Outer caliper housing**
4. **34 mm piston (2)**
5. **34 mm seal (2)**
6. **34 mm dust seal (2)**
7. **Crossover seal**
8. **32 mm dust seal (2)**
9. **32 mm seal (2)**
10. **32 mm piston (2)**
11. **Short bridge bolt (2)**
12. **Long bridge bolt (2)**

Figure 2-46. Front Caliper

CLEANING, INSPECTION AND REPAIR

⚠WARNING

Use denatured alcohol to clean brake system components. Do not use mineral-based solvents (such as gasoline or paint thinner), which will deteriorate rubber parts even after assembly. Deterioration of these components can cause brake failure, which could result in death or serious injury. (00291a)

1. Clean all rubber parts with DOT 4 BRAKE FLUID. Do not contaminate with mineral oil or other solvents. Clean all metal parts with denatured alcohol. Wipe parts dry with a clean, lint-free cloth.

⚠WARNING

Compressed air can pierce the skin and flying debris from compressed air could cause serious eye injury. Wear safety glasses when working with compressed air. Never use your hand to check for air leaks or to determine air flow rates. (00061a)

2. Blow out drilled passages and piston bore with low pressure compressed air from a clean air supply. Do not use a wire or similar instrument to clean drilled passages.
3. Carefully inspect all components. Replace as necessary.
   a. Check pistons for pitting, scratches or corrosion on outside surfaces.
   b. Inspect piston bores. Do not hone bores. Replace as necessary.

NOTE

The pad pins are manufactured with a relief near the center of their length, where the pad spring touches. Do not use this area as a measurement point to determine pad pin wear.

   c. Inspect pad pin for grooving and wear at the pad contact points. Measure the pad pin diameter in an unworn area and in an area of any grooving or wear. If wear exceeds 0.011 in (0.28 mm), replace pad pin.
   d. Inspect pad spring for wear or cracks. Replace if necessary.
   e. Always replace all seals after disassembly.

⚠WARNING

Always replace brake pads in complete sets for correct and safe brake operation. Improper brake operation could result in death or serious injury. (00111a)

4. Inspect brake pads and brake disc. Replace if necessary.
   a. **Specifications:** See 1.16 BRAKE PADS AND DISCS.
   b. **Brake Disc:** See 2.4 FRONT WHEEL.

ASSEMBLY

FASTENER	TORQUE VALUE	
Brake caliper, front, bridge bolt	14.5-18.0 ft-lbs	19.6-24.5 Nm
Brake caliper bleeder screw	35-61 **in-lbs**	4.0-6.9 Nm

1. Lubricate the following parts using a light coat of G40M BRAKE GREASE. All other surfaces must be dry.
   a. Nose radius of pistons.
   b. All surfaces of piston seals and dust seals.

NOTES

- *Damaged piston bores leak when reassembled. Do not use metal objects to remove or install objects in piston bores. Prevent damage to bores by only using a wooden toothpick when servicing calipers.*
- *Pistons and bores differ slightly in diameter: one large and one small in each housing.*

2. See Figure 2-46. Install a **new** piston seal (5, 9) and a **new** dust seal (6, 8) into each piston bore.
3. Carefully insert pistons (4, 10) by hand, nose radius first, into caliper bores. If installation shows resistance, remove pistons. Check that seals are properly installed and fully seated in grooves. Press pistons completely into bores.
4. Install **new** crossover seal (7).
5. Install bridge bolts (11, 12).
   a. Apply a drop of LOCTITE 569 THREAD SEALANT to the threads of the bridge bolts.
   b. Assemble caliper housings. Secure with bridge bolts. Tighten to 14.5-18.0 ft-lbs (19.6-24.5 Nm).
6. Install bleeder screw on caliper housing if removed. Tighten to 35-61 **in-lbs** (4.0-6.9 Nm).

INSTALLATION

FASTENER	TORQUE VALUE	
Brake caliper, front, mounting bolts	28-38 ft-lbs	38.0-51.5 Nm
Brake caliper, front, banjo bolt	14-18 ft-lbs	19.0-24.4 Nm

1. See Figure 2-47. Attach caliper to fork leg.
   a. Place caliper over brake disc with bleeder screw facing upwards.

NOTE

***ABS Models:** Install wheel speed sensor cable retainer (2) when installing caliper to front fork.*

   b. Install caliper mounting bolts (1). Tighten to 28-38 ft-lbs (38.0-51.5 Nm).

NOTICE

Avoid leakage. Be sure gaskets, banjo bolt(s), brake line and master cylinder bore are clean and undamaged before assembly. (00322a)

2. Lubricate **new** steel/rubber washers (3) with DOT 4 BRAKE FLUID. Connect the brake line (5) to caliper using two **new** steel/rubber washers and banjo bolt (4). Tighten to 14-18 ft-lbs (19.0-24.4 Nm).

⚠WARNING

When any hydraulic brake component, line or connection is loosened or replaced on an ABS motorcycle, Digital Technician II must be used during the brake bleeding procedure to verify all air is removed from the system. Failure to properly bleed the brake system could adversely affect braking, which could result in death or serious injury. (00585c)

3. Bleed brake system. See 2.18 BLEEDING BRAKES.

NOTE

*Avoid making hard stops for the first 100 miles (160 km). This break-in period allows the **new** pads to become conditioned to the brake discs.*

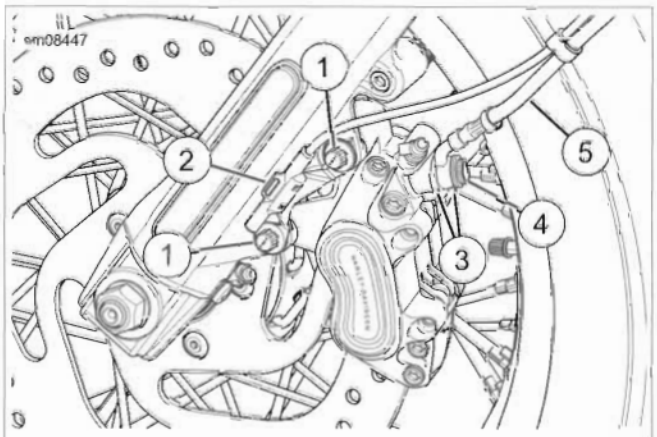

1. **Caliper mounting bolt (metric)**
2. **Wheel speed sensor cable retainer (ABS only)**
3. **Steel/rubber washer (2)**
4. **Banjo bolt**
5. **Front brake line**

Figure 2-47. Front Brake Caliper

GENERAL

⚠CAUTION

Direct contact of D.O.T. 4 brake fluid with eyes can cause irritation. Avoid eye contact. In case of eye contact flush with large amounts of water and get medical attention. Swallowing large amounts of D.O.T. 4 brake fluid can cause digestive discomfort. If swallowed, obtain medical attention. Use in well ventilated area. KEEP OUT OF REACH OF CHILDREN. (00240a)

NOTICE

D.O.T. 4 brake fluid will damage painted and body panel surfaces it comes in contact with. Always use caution and protect surfaces from spills whenever brake work is performed. Failure to comply can result in cosmetic damage. (00239b)

NOTICE

Do not allow dirt or debris to enter the master cylinder reservoir. Dirt or debris in the reservoir can cause improper operation and equipment damage. (00205c)

NOTES

- *Use only CCI #20 BRAKE GREASE to lubricate master cylinder bores, pistons, primary cups and secondary cups.*
- *Use only KS62F assembly grease on caliper pistons and piston seals.*
- *Use only G40M BRAKE GREASE on the caliper pins and boots.*

REMOVAL

NOTICE

D.O.T. 4 brake fluid will damage painted and body panel surfaces it comes in contact with. Always use caution and protect surfaces from spills whenever brake work is performed. Failure to comply can result in cosmetic damage. (00239b)

1. See Figure 2-53. Remove fastener (1) and retainer (2).
2. See Figure 2-52. Remove banjo bolt (1) and two steel/rubber washers (2) to disconnect brake line from master cylinder. Discard washers.
3. Remove nut (4) to free assembly from mounting bracket.
4. Figure 2-54. Remove cotter pin (4) and washer (5) from clevis pin (6). Remove master cylinder assembly from brake pedal.
5. If disassembling master cylinder, remove retaining ring (3).

DISASSEMBLY

NOTE

Do not disassemble the cartridge body. The cartridge body components are not sold separately.

1. Thoroughly clean exterior of master cylinder assembly with denatured alcohol.
2. Stand master cylinder assembly upright on banjo sealing surface. For best results, suspend reservoir over edge of table. Be sure to lay down a clean shop cloth to protect the sealing surface from damage.

⚠WARNING

Wear safety glasses or goggles when removing or installing retaining rings. Retaining rings can slip from the pliers and could be propelled with enough force to cause serious eye injury. (00312a)

3. See Figure 2-48. Push down on large flat washer to compress spring. While holding the spring in a compressed state, remove retaining ring from groove in clevis and then carefully release spring. Discard retaining ring.

NOTE

See Figure 2-55. Pushrod/clevis/spacer washer (7) are a one-piece assembly.

4. Remove the large flat washer (17), dust boot (12) and spring (10) from pushrod/clevis/spacer washer (7) end of cartridge body (2). Remove spring (10) and spring retainer (11) from dust boot (12).
5. See Figure 2-49. Push on threaded end of cartridge body to remove from reservoir adapter. Use hand pressure only. Exercise care to keep cartridge body free of dirt and grease.
6. See Figure 2-55. Carefully remove two O-rings (1) from outside of cartridge body (2). Exercise caution to avoid scratching O-ring grooves.
7. Remove small retaining ring (8) from pushrod end of cartridge body. Assembly is spring loaded so be sure to hold the parts together as retaining ring is removed.
8. Remove pushrod/clevis/spacer washer (7) from cartridge body. Remove small retaining ring (8) from pushrod, if attached. Discard retaining ring.

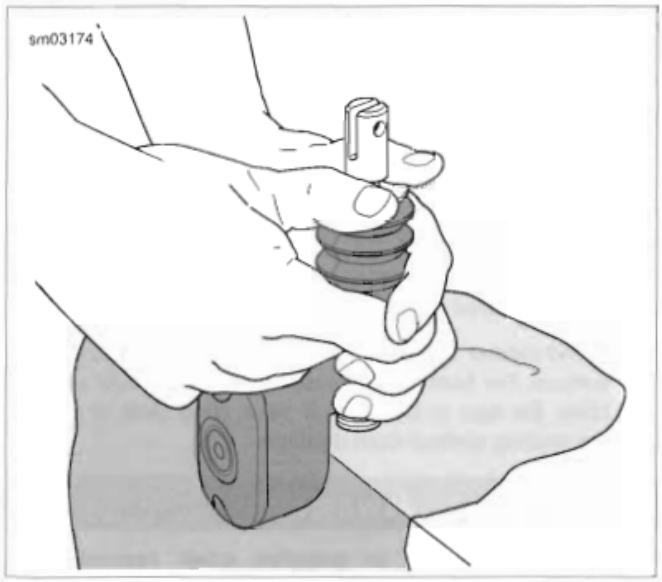

Figure 2-48. Removing Clevis

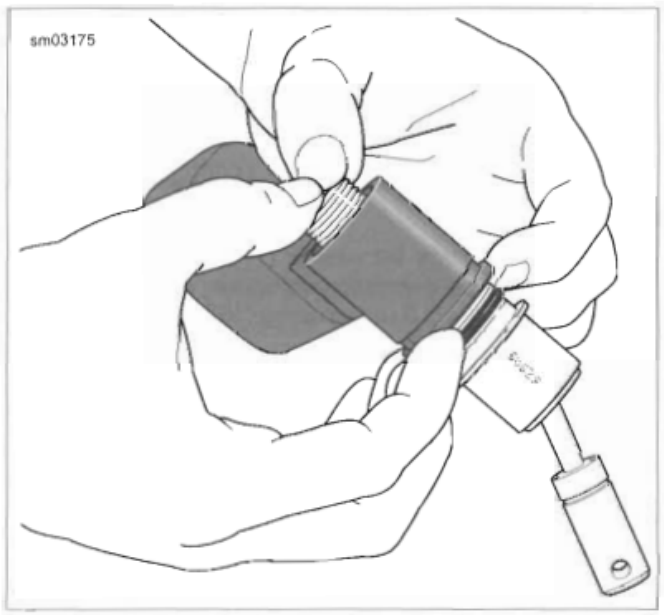

Figure 2-49. Removing Cartridge

CLEANING AND INSPECTION

⚠WARNING

Use denatured alcohol to clean brake system components. Do not use mineral-based solvents (such as gasoline or paint thinner), which will deteriorate rubber parts even after assembly. Deterioration of these components can cause brake failure, which could result in death or serious injury. (00291a)

1. Clean all metal parts, except the cartridge body assembly, and blow dry with compressed air. Clean all rubber parts using denatured alcohol.
2. Inspect the reservoir adapter bore for scratches. Replace the reservoir if scratches are present.
3. Check the dust boot for cuts or tears. Replace as necessary.
4. Inspect the threads on the cartridge body and pushrod. Replace part if threads are damaged.
5. Inspect the spring for cracks or damaged coils. Replace as necessary.
6. Inspect O-ring grooves on the cartridge body for dirt. Carefully clean O-ring grooves using a soft cotton cloth moistened with alcohol and allow to dry. Inspect O-ring grooves for scratches. Replace cartridge body if grooves are scratched.
7. Inspect the reservoir cover gasket for cuts, tears or general deterioration. If gasket and/or sight glass replacement is necessary, proceed as follows:
   a. From inboard side, push sight glass toward top of cover until free.
   b. Pull rubber gasket from cover.
   c. Fit nipple of **new** gasket into hole of cover aligning gasket and cover through holes.
   d. From bottom of gasket, push flat end of sight glass through nipple until top of glass is flush with top of gasket. Verify that glass is square in bore. If some lubrication is necessary, use a small quantity of clean brake fluid.

ASSEMBLY

1. See Figure 2-55. To install piston (5) in cartridge body (2), proceed as follows:
   a. Install small spring (3) into cartridge body (2) making sure that spring is seated in counterbore.
   b. Lightly lubricate primary cup (4) and O-ring (6) on piston (5) with DOT 4 BRAKE FLUID.
   c. Install piston (5) over spring (3).
2. Install **new** large retaining ring (9) in groove on pushrod/clevis/spacer washer (7) side of cartridge body (2).
3. Position **new** retaining ring (8) on pushrod between spacer washer and clevis, or on clevis inboard of the retaining ring groove.



Figure 2-50. Compress Spring and Retaining Ring

4. See Figure 2-50. Stand cartridge body upright on banjo sealing surface. Lay down a clean shop cloth to protect the sealing surface from damage.

⚠WARNING

Wear safety glasses or goggles when removing or installing retaining rings. Retaining rings can slip from the pliers and could be propelled with enough force to cause serious eye injury. (00312a)

5. Insert ball end of pushrod into piston cup. Pushing down on pushrod to compress spring, fit captured spacer washer into cartridge body. Further compressing spring as necessary, install retaining ring positioned in step 3 in groove of cartridge body bore.
6. Verify that retaining ring is completely seated in groove and that pushrod rotates freely.
7. See Figure 2-55. Lubricate **new** O-rings (1) with DOT 4 BRAKE FLUID and carefully install in grooves on outside of cartridge body (2).
8. Wipe bore of reservoir (18) adapter with DOT 4 BRAKE FLUID.
9. Insert cartridge body (2) into reservoir adapter. Align tab on adapter with slot on threaded end of cartridge. Use hand pressure only. Cartridge body is fully installed when reservoir adapter contacts large retaining ring.
10. See Figure 2-51. Stand master cylinder assembly upright on banjo sealing surface. For best results, suspend reservoir over edge of table. Be sure to lay down a clean shop cloth to protect the sealing surface from damage.
11. Install spring over pushrod and cartridge body until it contacts side of large retaining ring.
12. Place concave side of spring retainer over end of spring fitting inside tabs in slot of clevis.
13. Slide dust boot over spring and spring retainer.
14. Place large flat washer on top of dust boot fitting inside tabs in slot of clevis.
15. Push down on large flat washer to compress spring. While holding spring in a compressed state, install **new** retaining ring in groove of clevis.
16. Pull down dust boot as necessary to seat over lip on reservoir adapter.
17. Rotate boot so that hole is at the bottom. Bottom is the side opposite the index tab on reservoir adapter.

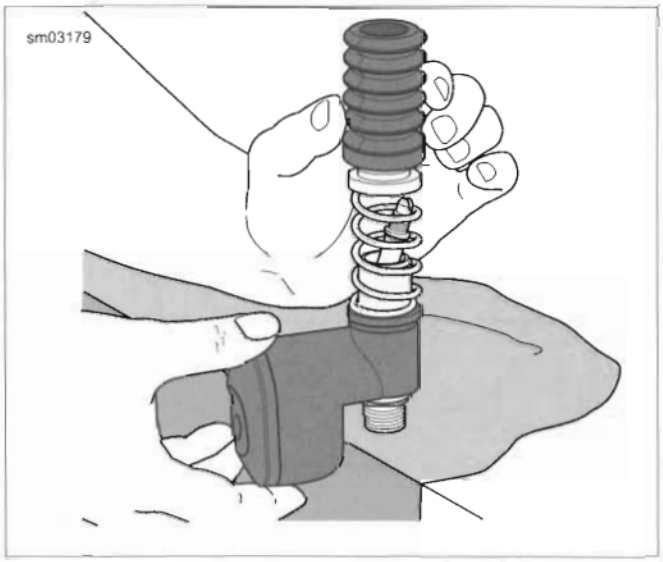

Figure 2-51. Master Cylinder Assembly

INSTALLATION

FASTENER	TORQUE VALUE	
Rear master cylinder nut	30-40 ft-lbs	40.7-54.2 Nm
Rear master cylinder banjo bolt	17-22 ft-lbs	23.1-29.9 Nm
Rear brake master cylinder retainer fastener	29-34 ft-lbs	39.4-46.1 Nm

1. See Figure 2-54. If master cylinder was disassembled, install **new** retaining ring (3).
2. Install master cylinder assembly on brake pedal. Install washer (5) and **new** cotter pin (4) on clevis pin (6).
3. See Figure 2-52. Fit collar on cartridge body into hole of mounting bracket. Apply LOCTITE 243 MEDIUM STRENGTH THREADLOCKER AND SEALANT (blue) to threads of nut (4). Install nut on cartridge body until finger tight. Tighten to 30-40 ft-lbs (40.7-54.2 Nm).
4. Lubricate **new** steel/rubber washers (2) with DOT 4 BRAKE FLUID. Position **new** steel/rubber washers on each side of brake line (3). Insert the banjo bolt (1) through washers and fitting. Tighten to 17-22 ft-lbs (23.1-29.9 Nm).
5. See Figure 2-53. Install retainer (2) into position. Make sure tab on retainer is in alignment hole (3). Install fastener (1) and tighten to 29-34 ft-lbs (39.4-46.1 Nm).

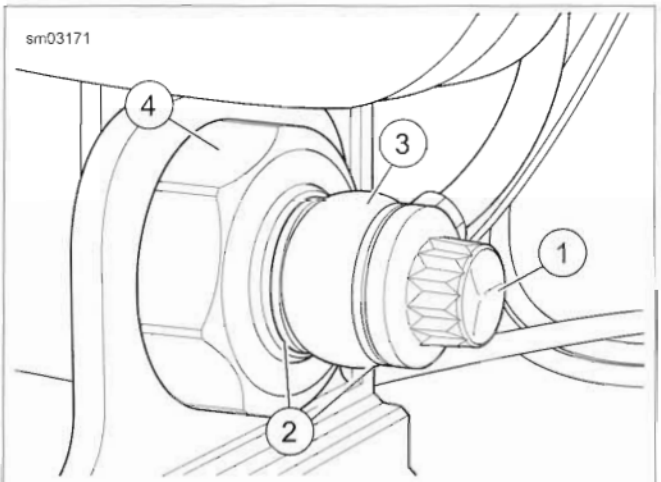

1. Banjo bolt
2. Steel/rubber washers (2)
3. Brake line
4. Nut

Figure 2-52. Rear Brake Control: Front Mount

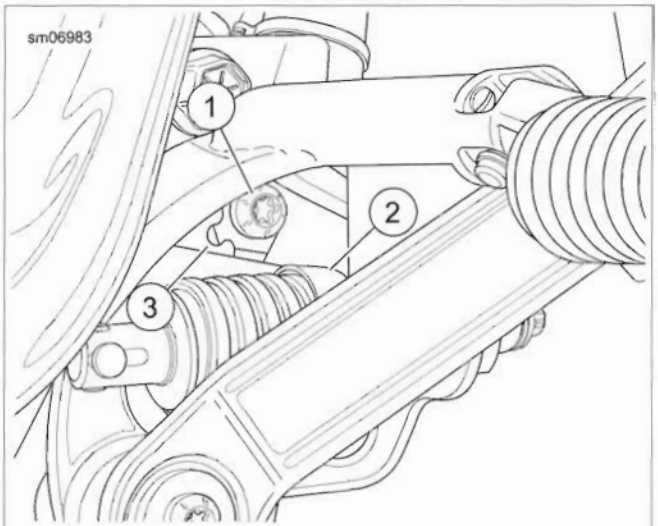

1. Fastener
2. Retainer
3. Alignment hole

Figure 2-53. Master Cylinder Retainer

⚠WARNING

When any hydraulic brake component, line or connection is loosened or replaced on an ABS motorcycle, Digital Technician II must be used during the brake bleeding procedure to verify all air is removed from the system. Failure to properly bleed the brake system could adversely affect braking, which could result in death or serious injury. (00585c)

6. Bleed brake system. See 2.18 BLEEDING BRAKES.

NOTE

A sight glass enables the rider to visually check the brake fluid level without removing the master cylinder cover. When the reservoir is full, the sight glass is dark. As the fluid level drops, the glass lightens up to indicate this condition to the rider.

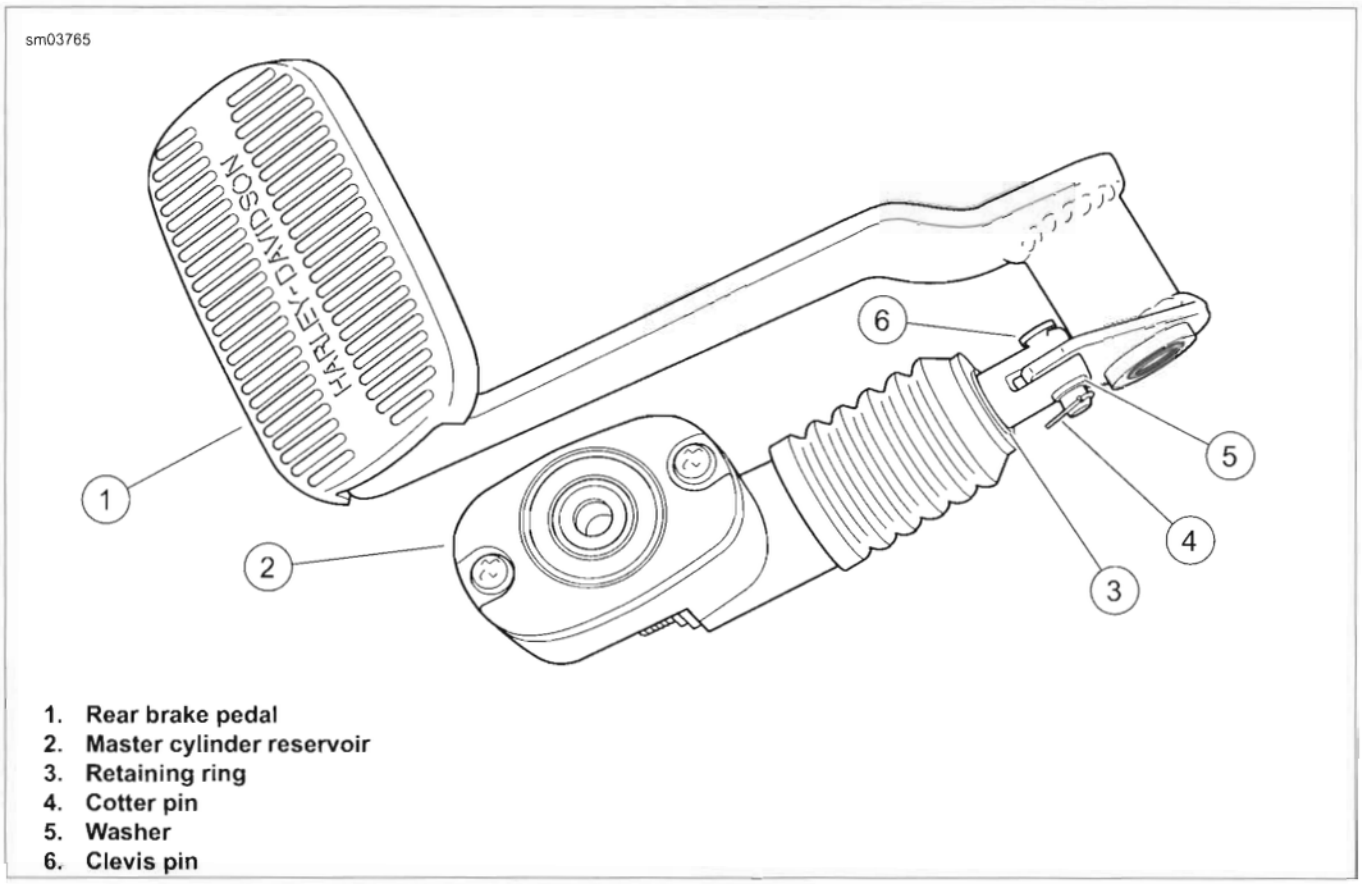

1. Rear brake pedal
2. Master cylinder reservoir
3. Retaining ring
4. Cotter pin
5. Washer
6. Clevis pin

Figure 2-54. Rear Brake Control: Rear Mount

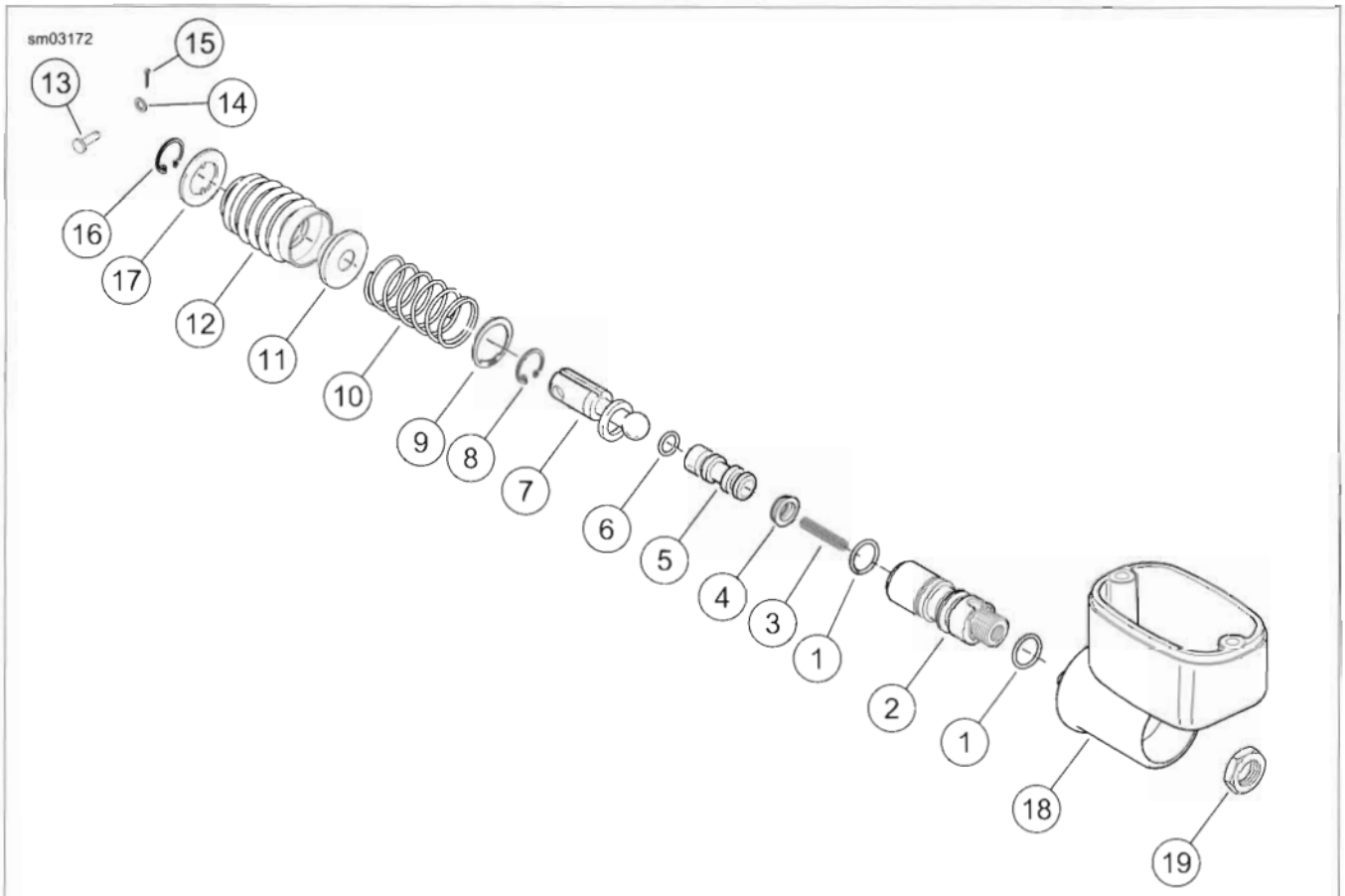

1. O-ring
2. Cartridge body
3. Spring
4. Primary cup
5. Piston
6. O-ring
7. Pushrod, Clevis, Spacer washer (one piece assembly)
8. Retaining ring
9. Retaining ring
10. Spring
11. Spring retainer
12. Dust boot
13. Clevis pin
14. Flat washer
15. Cotter pin
16. Retaining ring
17. Washer
18. Reservoir
19. Hex nut

Figure 2-55. Rear Master Cylinder Assembly

REMOVAL

NOTICE

D.O.T. 4 brake fluid will damage painted and body panel surfaces it comes in contact with. Always use caution and protect surfaces from spills whenever brake work is performed. Failure to comply can result in cosmetic damage. (00239b)

NOTE

If only replacing brake pads, do not remove rear brake caliper. If pad replacement is necessary, see 1.16 BRAKE PADS AND DISCS.

1. See Figure 2-56. Remove the banjo bolt (1) and both steel/rubber washers (2) to detach rear brake line from caliper. Discard washers.
2. Remove both the slider pin (3) and mounting bolt (4) (metric). Remove caliper assembly from brake disc.
3. To remove rear caliper mount:
   a. Remove axle from rear wheel. See 2.5 REAR WHEEL.
   b. Lift rear caliper mount away from axle and rear fork. Notch in caliper mount must clear tab on rear fork.

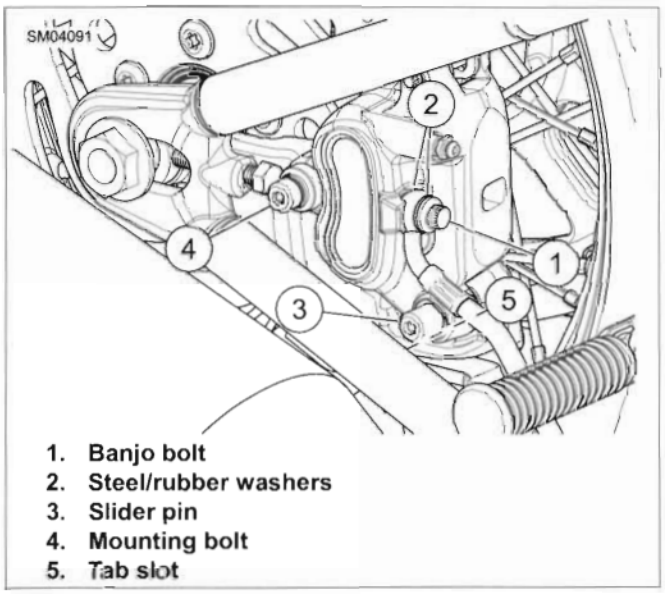

1. **Banjo bolt**
2. **Steel/rubber washers**
3. **Slider pin**
4. **Mounting bolt**
5. **Tab slot**

Figure 2-56. Rear Caliper

DISASSEMBLY

PART NUMBER	TOOL NAME
HD-48648	BRAKE CALIPER PISTON REMOVER

1. See Figure 2-57. Remove pad pin (3) and brake pads (12).
2. If necessary, remove bleeder screw (4).

NOTE

If phenolic insulators (8) are loose, remove from pistons.

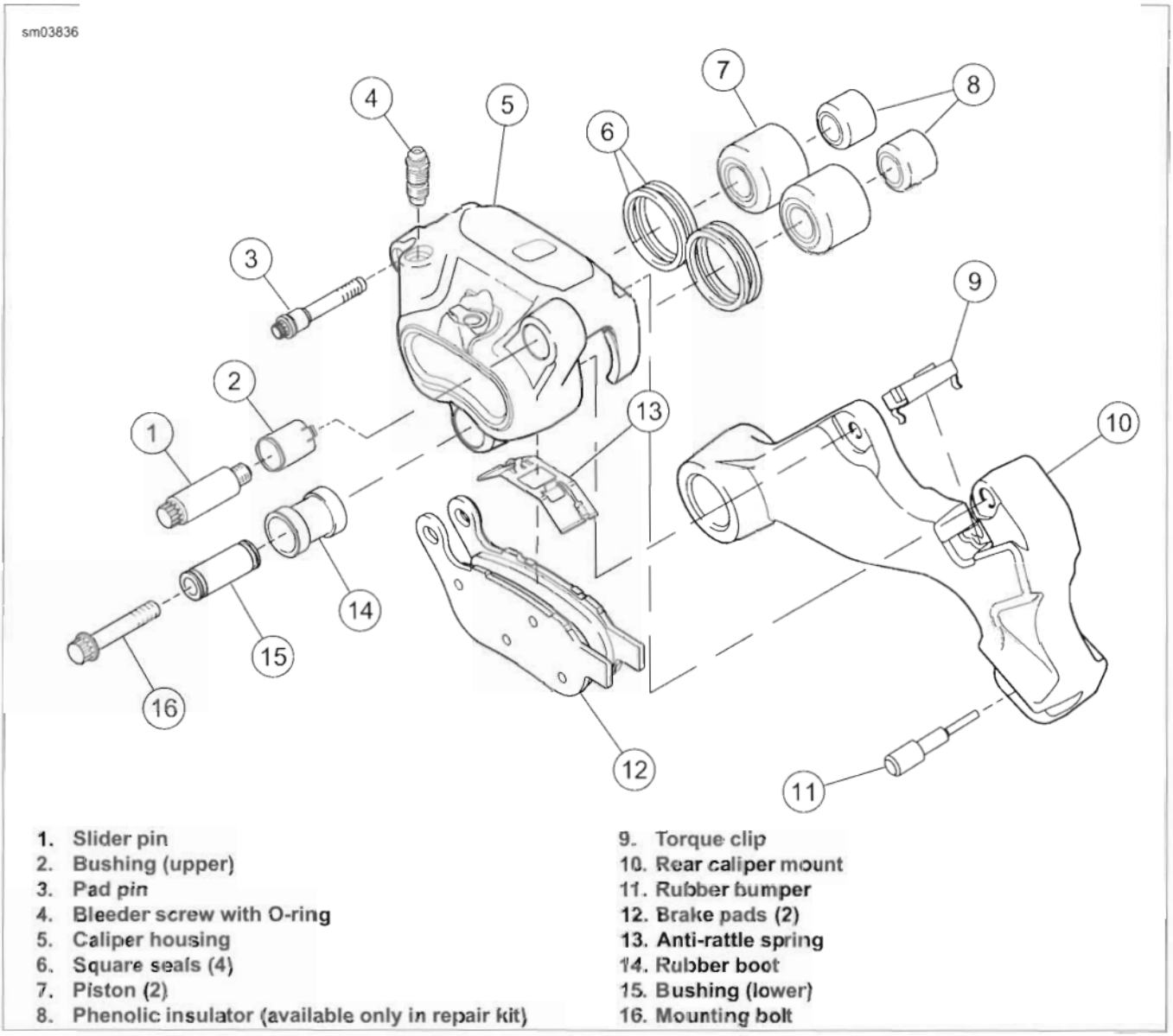

1. Slider pin
2. Bushing (upper)
3. Pad pin
4. Bleeder screw with O-ring
5. Caliper housing
6. Square seals (4)
7. Piston (2)
8. Phenolic insulator (available only in repair kit)
9. Torque clip
10. Rear caliper mount
11. Rubber bumper
12. Brake pads (2)
13. Anti-rattle spring
14. Rubber boot
15. Bushing (lower)
16. Mounting bolt

Figure 2-57. Rear Brake Caliper

⚠WARNING

Compressed air can pierce the skin and flying debris from compressed air could cause serious eye injury. Wear safety glasses when working with compressed air. Never use your hand to check for air leaks or to determine air flow rates. (00061a)

⚠CAUTION

When removing piston with compressed air, piston can develop considerable force and fly out of caliper bore. Keep hands away from piston to avoid possible injury. (00530b)

NOTE

Phenolic insulators may be loose when the brake pads are removed. Insulators can also loosen when the pistons are expanded from their bores. If insulators are not damaged, they can be reused.

3. See Figure 2-58. Remove pistons.
   a. Place BRAKE CALIPER PISTON REMOVER (Part No. HD-48648) (3) into caliper housing. Install bolt (2) only enough to hold tool in place.

   NOTE

   Tool retaining bolt (2) is used only to keep tool from slipping out of the caliper during piston removal. Finger tighten bolt. Do not use a wrench to tighten.

   b. If the bleeder screw was removed, install it finger-tight.
   c. Apply low pressure compressed air to banjo bolt hole (1) to remove pistons from caliper bores. Listen for both pistons to "pop" against the tool.
   d. Remove piston remover tool.
4. Wiggle pistons to remove them completely from caliper bores.

NOTICE

Avoid leakage. Prevent damage to piston or piston bore. Use non-metallic tools when servicing components. (00529d)

5. See Figure 2-59. Using a wooden toothpick (1), remove two square seals (2) from each caliper bore. Discard all removed parts.
6. Pull anti-rattle spring (3) straight out to remove.

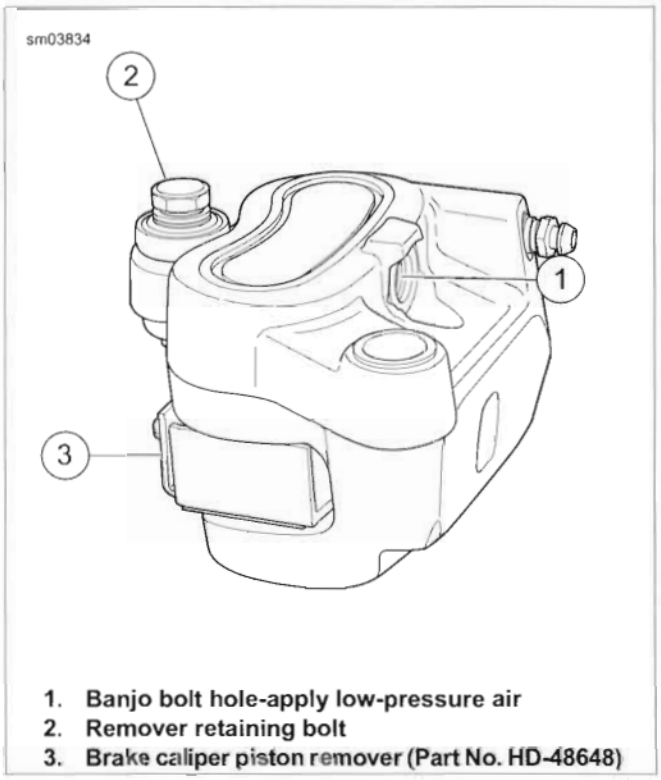

1. **Banjo bolt hole-apply low-pressure air**
2. **Remover retaining bolt**
3. **Brake caliper piston remover (Part No. HD-48648)**

Figure 2-58. Removing Pistons

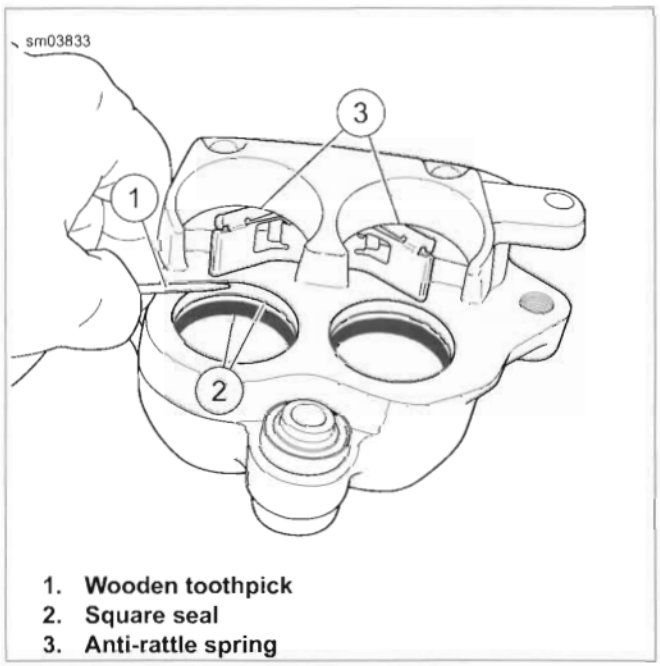

1. **Wooden toothpick**
2. **Square seal**
3. **Anti-rattle spring**

Figure 2-59. Seals and Spring

CLEANING, INSPECTION AND REPAIR

WARNING

Use denatured alcohol to clean brake system components. Do not use mineral-based solvents (such as gasoline or paint thinner), which will deteriorate rubber parts even after assembly. Deterioration of these components can cause brake failure, which could result in death or serious injury. (00291a)

WARNING

Compressed air can pierce the skin and flying debris from compressed air could cause serious eye injury. Wear safety glasses when working with compressed air. Never use your hand to check for air leaks or to determine air flow rates. (00061a)

1. Clean all parts with denatured alcohol or DOT 4 BRAKE FLUID. Do not contaminate with mineral oil or other solvents. Wipe parts dry with a clean, lint-free cloth. Clear drilled passages and bore with clean compressed air. Do not use a wire or similar instrument to clean drilled passages.
2. Carefully inspect all components. Replace any parts that appear damaged or worn.
   a. Check pistons for pitting, scratches or corrosion on face and also on ground surfaces.
   b. Inspect phenolic insulators for damage.
   c. Inspect caliper piston bore. Do not hone bore. If bore should show pitting or corrosion, replace caliper.
   d. Inspect pad pin for grooving and wear. Measure the pad pin diameter in an unworn area and then in the area of any grooving or wear. If wear exceeds 0.015 in. (0.38 mm), replace both pins.
   e. See Figure 2-57. Inspect rubber boot (14) for cracks and damage. Inspect bushing (15) for free movement. Inspect bushing (2) for free movement or damage.
   f. Always replace square seals after disassembly.
3. If decal on outside housing is removed, scrape remaining adhesive from surface with a razor blade.
4. Inspect brake pads and brake disc. See 1.16 BRAKE PADS AND DISCS.

ASSEMBLY

FASTENER	TORQUE VALUE	
Brake caliper bleeder screw	80-100 in-lbs	9.0-11.3 Nm
Brake pad pin, rear caliper	80-120 in-lbs	9.0-13.6 Nm

NOTE

Do not use DOT 4 BRAKE FLUID for lubrication. Use of DOT 4 BRAKE FLUID will result in increased lever travel.

1. Lubricate the following parts before assembly using the lubricant supplied in the service parts kit. All other surfaces must be dry for assembly.
   a. Lubricate nose radius and outside diameter of piston. Apply lube to inside of caliper piston bores.
   b. Apply lube to inside diameter of square seals.

NOTICE

Avoid leakage. Prevent damage to piston or piston bore. Use non-metallic tools when servicing components. (00529d)

2. See Figure 2-59. Install two **new** square seals (2) into each piston bore. Use a wooden toothpick (1) to aid installation if needed.
3. Install anti-rattle spring (3). Verify that it is oriented correctly.
4. Carefully insert pistons, by hand, into bores of caliper housing. Press pistons squarely into place until they bottom in the bores. If installation shows resistance, remove piston and check that seals are properly installed.
5. See Figure 2-57. Install bleeder screw (4) (with O-ring) in caliper housing, if removed. Tighten to 80-100 **in-lbs** (9.0-11.3 Nm).

NOTE

Verify phenolic insulators (8) are in place before installing brake pads.

6. Insert brake pads into caliper with friction material facing opening for brake disc.
7. Install pad pin (3). Tighten to 80-120 **in-lbs** (9.0-13.6 Nm).

NOTE

If pad pins do not fit, check the following:

- *You are using a set of pads, not two identical pads.*
- *Anti-rattle spring orientation matches Figure 2-57.*

REAR BRAKE LINE ROUTING

See Figure 2-60. When routing the rear brake line (3), make sure it is placed over the pivot shaft (2) and held in place by hose clip (1). 2010 model year and earlier brake lines are routed under the pivot shaft.

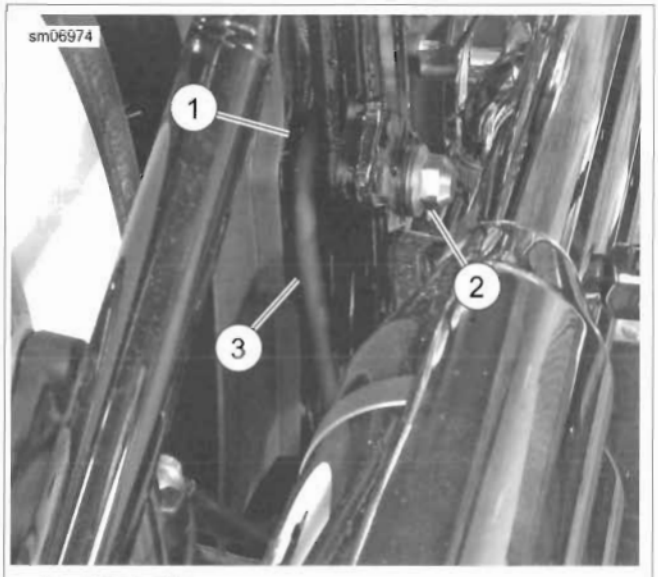

1. **Hose clip**
2. **Pivot shaft**
3. **Brake line**

Figure 2-60. Rear Brake Line Routing

INSTALLATION

FASTENER	TORQUE VALUE	
Brake caliper mounting bolt, rear	16-20 ft-lbs	21.7-27.1 Nm
Rear caliper banjo bolt	17-22 ft-lbs	23.1-29.9 Nm

1. Install rear axle and caliper mount if removed. Verify notch in mount engages tab on rear fork. See 2.5 REAR WHEEL.
2. See Figure 2-57. Verify torque clip (9) is in place in caliper mount.
3. See Figure 2-56. Install caliper with pads on caliper mount. Tighten slider pin (3) and mounting bolt (4) (metric) to 16-20 ft-lbs (21.7-27.1 Nm). Verify tabs on brake pads engage slot (5) in caliper mount.

NOTICE

Avoid leakage. Be sure gaskets, banjo bolt(s), brake line and caliper bore are clean and undamaged before assembly. (00321a)

4. Lubricate **new** steel/rubber washers with DOT 4 BRAKE FLUID. Connect the brake line to caliper using two **new** washers (2) and banjo bolt (1). Tighten to 17-22 ft-lbs (23.1-29.9 Nm).

⚠WARNING

When any hydraulic brake component, line or connection is loosened or replaced on an ABS motorcycle, Digital Technician II must be used during the brake bleeding procedure to verify all air is removed from the system. Failure to properly bleed the brake system could adversely affect braking, which could result in death or serious injury. (00585c)

5. Bleed brake system. See 2.18 BLEEDING BRAKES.

NOTE

*Avoid making hard stops for the first 100 miles (160 km). This allows the **new** pads to become conditioned to the brake discs.*

FRONT MASTER CYLINDER TO FRONT HCU

PART NUMBER	TOOL NAME
HD-48650	DIGITAL TECHNICIAN II

FASTENER	TORQUE VALUE	
Banjo bolt-to-front master cylinder	17-22 ft-lbs	23.1-29.9 Nm
Banjo bolt to HCU	120-144 in-lbs	13.6-16.3 Nm

Removal

1. See Figure 2-61. Cut cable strap (1).
2. Remove clip (2).
3. **FLSTC:** Remove brake line from handlebar clip.

NOTE

Wrap banjo fittings with pieces of lint-free shop towel to absorb any loss of brake fluid.

4. Remove banjo bolt from HCU. Discard sealing washers.

NOTE

Always clean master cylinder cover before removal.

5. Remove cover from master cylinder reservoir.
6. Remove banjo bolt to release brake line from master cylinder reservoir. Hold suitable container under banjo bolt bore to allow reservoir to drain. Discard sealing washers.



1. Cable Strap
2. Clip

Figure 2-61. Master Cylinder-to-Front HCU Line

Installation

1. Start banjo bolt with **new** sealing washers to secure brake line to master cylinder.
2. Start banjo bolt with **new** sealing washers to secure brake line to HCU.
3. See Figure 2-61. Install clip (2).
4. Install **new** cable strap (1) to secure brake line to fuel tank vent hose.
5. **FLSTC:** Install brake line through clip on right handlebar.
6. Tighten master cylinder banjo bolt to 17-22 ft-lbs (23.1-29.9 Nm).
7. Tighten HCU banjo bolt to 120-144 **in-lbs** (13.6-16.3 Nm).

⚠WARNING

When any hydraulic brake component, line or connection is loosened or replaced on an ABS motorcycle, Digital Technician II must be used during the brake bleeding procedure to verify all air is removed from the system. Failure to properly bleed the brake system could adversely affect braking, which could result in death or serious injury. (00585c)

8. Fill and bleed brake system. See 2.18 BLEEDING BRAKES.

9. To confirm that brake system is properly connected and that all air is purged, connect motorcycle to DIGITAL TECHNICIAN II (Part No. HD-48650) and perform "ABS Service" procedure in the "Tool Box" menu.

⚠WARNING

After repairing the brake system, test brakes at low speed. If brakes are not operating properly, testing at high speeds can cause loss of control, which could result in death or serious injury. (00289a)

10. Test brake system.
    a. Turn ignition switch ON. Pump brake hand lever to verify operation of the brake lamp.
    b. Test ride the motorcycle. If the brakes feel spongy, bleed the system again.

HCU TO FRONT BRAKE CALIPER

PART NUMBER	TOOL NAME
HD-48650	DIGITAL TECHNICIAN II

FASTENER	TORQUE VALUE	
ABS front brake line 90 degree fitting bolt	36-48 **in-lbs**	4.1-5.4 Nm
Banjo bolt to front caliper	17-22 ft-lbs	23.1-29.9 Nm
Banjo bolt to HCU	120-144 **in-lbs**	13.6-16.3 Nm

Removal

1. See Figure 2-62. Disconnect clips (3) from brake line.
2. Remove cable straps (1) from brake line.
3. **All but FLSTC:** Remove clip (2).
4. **FLSTC:** Remove cable straps (4).
5. Remove clip securing brake line to left frame downtube.
6. Remove bolt securing brake line 90 degree fitting to bottom of fork stem.

NOTE

Wrap banjo fittings with pieces of lint-free shop towel to absorb any loss of brake fluid.

7. Remove banjo bolt to release brake line from HCU. Discard sealing washers.
8. Remove banjo bolt to release brake lines from caliper. Discard sealing washers.

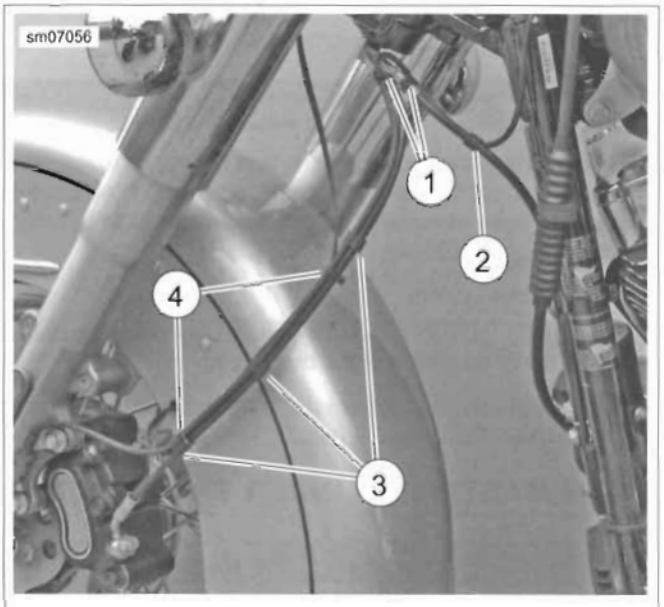

1. **Cable strap (2)**
2. **Clip: all but FLSTC**
3. **Clip (3)**
4. **Cable strap: FLSTC (2)**

Figure 2-62. WSS Cable Rounting

Installation

1. Start banjo bolt with **new** sealing washers to secure brake line to caliper.
2. Start banjo bolt with **new** sealing washers to secure brake line to caliper to HCU.
3. Install brake line 90 degree fitting with bolt to bottom of fork stem. Tighten bolt to 36-48 **in-lbs** (4.1-5.4 Nm).
4. See Figure 2-62. Connect clips (3) securing WSS wire to brake line.
5. Install **new** cable straps (1) securing WSS wire to crimped ends on 90 degree fitting.
6. **All but FLSTC:** install clip (2).
7. **FLSTC:** Install **new** cable straps (4).
8. Install clip securing brake line to left frame downtube.
9. Tighten caliper banjo bolt to 17-22 ft-lbs (23.1-29.9 Nm).
10. Tighten HCU banjo bolt to 120-144 **in-lbs** (13.6-16.3 Nm).

⚠WARNING

When any hydraulic brake component, line or connection is loosened or replaced on an ABS motorcycle, Digital Technician II must be used during the brake bleeding procedure to verify all air is removed from the system. Failure to properly bleed the brake system could adversely affect braking, which could result in death or serious injury. (00585c)

11. Fill and bleed brake system. See 2.18 BLEEDING BRAKES.
12. To confirm that brake system is properly connected and that all air is purged, connect motorcycle to DIGITAL

TECHNICIAN II (Part No. HD-48650) and perform "ABS Service" procedure in the "Tool Box" menu.

⚠WARNING

After repairing the brake system, test brakes at low speed. If brakes are not operating properly, testing at high speeds can cause loss of control, which could result in death or serious injury. (00289a)

13. Test brake system.
    a. Turn ignition switch ON. Pump brake foot pedal to verify operation of the brake lamp.
    b. Test ride the motorcycle. If the brakes feel spongy, bleed the system again.

REAR MASTER CYLINDER TO REAR HCU

PART NUMBER	TOOL NAME
HD-48650	DIGITAL TECHNICIAN II

FASTENER	TORQUE VALUE	
Stoplight switch, rear	12-15 ft-lbs	16.3-20.3 Nm
Stoplight switch bracket fastener	30-35 ft-lbs	40.6-47.4 Nm
Banjo bolt to rear master cylinder	17-22 ft-lbs	23.1-29.9 Nm
Banjo bolt to rear HCU	120-144 **in-lbs**	13.6-16.3 Nm

Removal

1. Remove electrical panel. See 7.3 ELECTRICAL PANEL.
2. See Figure 2-63. Remove electrical connectors (3) from stoplight switch (2).
3. Remove fastener (1) securing stoplight switch to frame.

NOTE

Record location of cable straps before removal to aid during installation.

4. Remove cable straps securing brake line with electrical harness to frame.

NOTE

Wrap banjo fittings with pieces of lint-free shop towel to absorb any loss of brake fluid.

5. See Figure 2-64. Remove alignment cover (7).
6. Remove banjo bolt from master cylinder-to-rear HCU line (8). Discard sealing washers.
7. Stand motorcycle upright so rear master cylinder reservoir is level.

NOTE

Always clean master cylinder cover before removal.

8. Remove cover from master cylinder reservoir.

NOTE

Wrap banjo fittings with pieces of lint-free shop towel to absorb any loss of brake fluid.

9. Remove banjo bolt from master cylinder reservoir. Hold suitable container under banjo bolt bore to allow reservoir to drain. Discard sealing washers.
10. Using a clean shop cloth, wipe out any remaining fluid in the master cylinder reservoir.
11. Remove brake line.

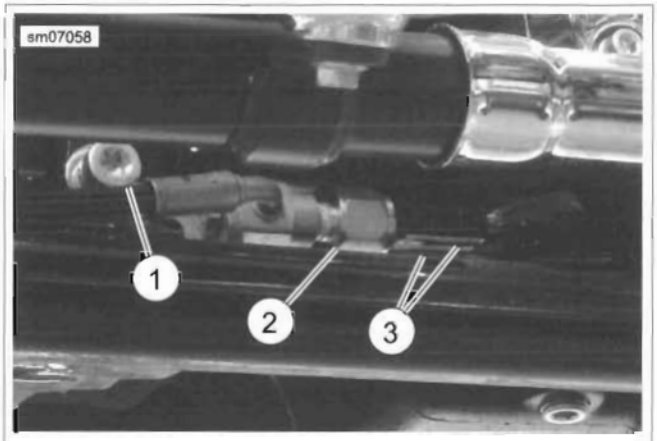

1. **Fastener**
2. **Stoplight switch**
3. **Connectors**

Figure 2-63. Rear Stoplight Switch

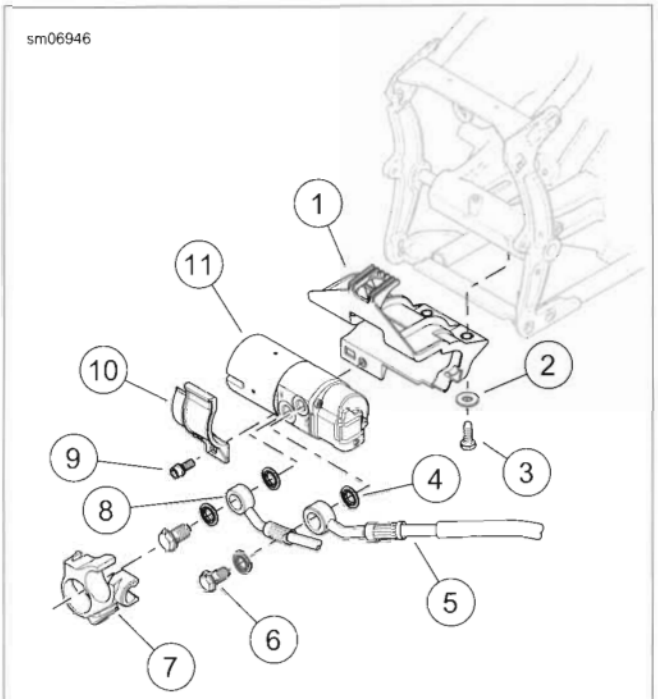

1. **Bracket**
2. **Washer (2)**
3. **Screw (2)**
4. **Sealing washer (4)**
5. **Rear HCU-to-caliper line**
6. **Banjo bolt (2)**
7. **Alignment cover**
8. **Master cylinder-to-rear HCU line**
9. **Screw**
10. **Clamp**
11. **Rear HCU**

Figure 2-64. Rear Hydraulic Control Unit (HCU)

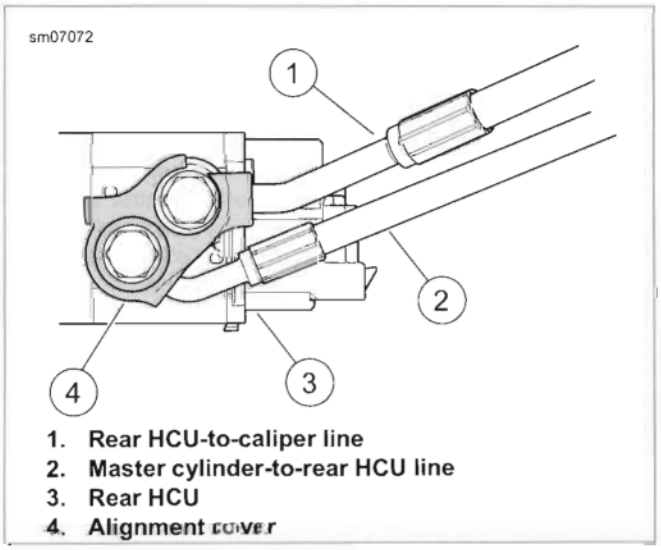

1. **Rear HCU-to-caliper line**
2. **Master cylinder-to-rear HCU line**
3. **Rear HCU**
4. **Alignment cover**

Figure 2-65. Rear HCU Fittings Properly Installed

Installation

1. If installing **new** rear stoplight switch, apply LOCTITE 565 THREAD SEALANT to threads. Install switch into rear brake line. Tighten to 12-15 ft-lbs (16.3-20.3 Nm).
2. Place rear brake line into approximate position along top of lower right frame tube.
3. See Figure 2-64. Start banjo bolt with **new** sealing washers to secure brake line (8) to HCU.
4. Install alignment cover (7).
5. See Figure 2-65. Verify both brake lines at rear HCU are properly positioned.
6. See Figure 2-63. Install fastener (1) with washer securing stoplight switch to frame. Tighten to 30-35 ft-lbs (40.6-47.4 Nm).
7. Install electrical connectors (3) to stoplight switch (2).
8. Secure brake line to master cylinder reservoir using **new** sealing washers. Tighten banjo bolt (12) to 17-22 ft-lbs (23.1-29.9 Nm).
9. Tighten banjo bolt to HCU to 120-144 **in-lbs** (13.6-16.3 Nm).
10. Install **new** cable straps securing brake line and electrical harness to frame.

⚠WARNING

When any hydraulic brake component, line or connection is loosened or replaced on an ABS motorcycle, Digital Technician II must be used during the brake bleeding procedure to verify all air is removed from the system. Failure to properly bleed the brake system could adversely affect braking, which could result in death or serious injury. (00585c)

11. Fill and bleed brake system. See 2.18 BLEEDING BRAKES.
12. Install electrical panel. See 7.3 ELECTRICAL PANEL.
13. To confirm that the brake systems are properly connected and air is completely purged, perform the following tasks:
    a. Install master cylinder reservoir covers.
    b. Connect motorcycle to DIGITAL TECHNICIAN II (Part No. HD-48650).
    c. Perform "ABS Service" procedure in the "Tool Box" menu.

⚠WARNING

After repairing the brake system, test brakes at low speed. If brakes are not operating properly, testing at high speeds can cause loss of control, which could result in death or serious injury. (00289a)

14. Test brake system.
    a. Turn ignition switch ON. Pump brake hand lever to verify operation of the brake lamp.
    b. Test ride the motorcycle. If the brakes feel spongy, bleed the system again.

REAR HCU TO REAR BRAKE CALIPER

PART NUMBER	TOOL NAME
HD-48650	DIGITAL TECHNICIAN II

FASTENER	TORQUE VALUE	
Banjo bolt to rear caliper	17-22 ft-lbs	23.1-29.9 Nm
Banjo bolt to HCU	120-144 in-lbs	13.6-16.3 Nm

Removal

1. Remove electrical panel. See 7.3 ELECTRICAL PANEL.
2. See Figure 2-66. Remove clips (3) and cut cable strap (1).
3. Remove brake line from weldment (2).

NOTE

Wrap banjo fittings with pieces of lint-free shop towel to absorb any loss of brake fluid.

4. See Figure 2-64. Remove alignment cover (7).
5. Remove banjo bolt to release rear HCU-to-caliper line (5) from HCU. Discard sealing washers.
6. Remove banjo bolt from rear brake caliper. Discard sealing washers.
7. Remove brake line.

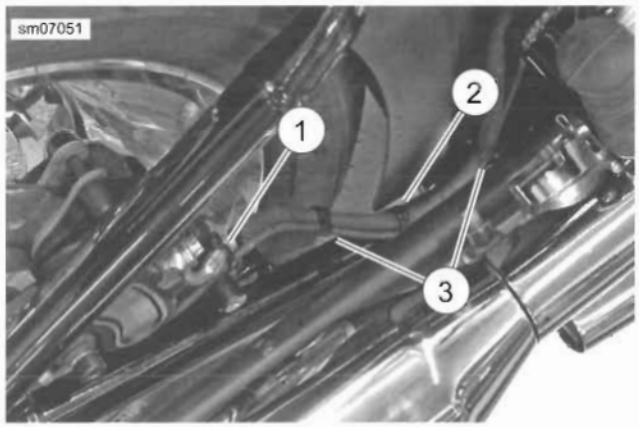

1. Cable strap
2. Weldment
3. Clip (2)

Figure 2-66. WSS cable Routing

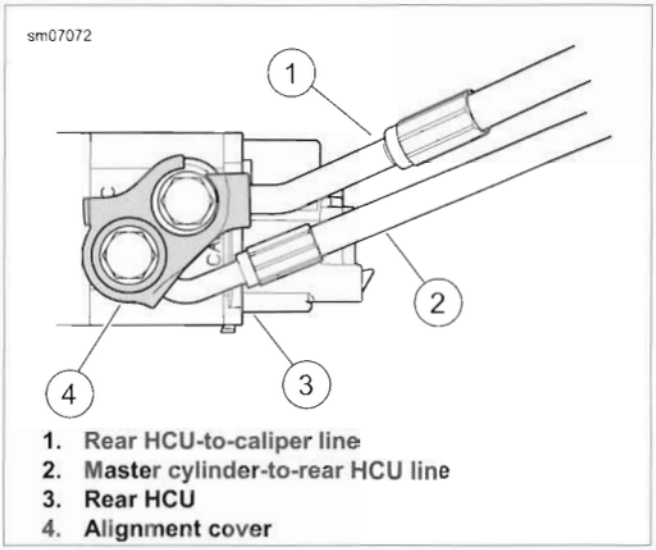

1. Rear HCU-to-caliper line
2. Master cylinder-to-rear HCU line
3. Rear HCU
4. Alignment cover

Figure 2-67. Rear HCU Fittings Properly Installed

Installation

1. See Figure 2-64. Start banjo bolt with **new** sealing washers to secure brake line (5) to HCU.
2. Install alignment cover (7).
3. See Figure 2-67. Verify both brake lines at rear HCU are properly positioned.
4. See Figure 2-66. Route brake line into weldment over pivot shaft and down rear fork frame. Attach brake line to weldment (2).
5. Install banjo bolt to caliper with **new** sealing washers and tighten to 17-22 ft-lbs (23.1-29.9 Nm).
6. Tighten banjo bolt at rear HCU to 120-144 **in-lbs** (13.6-16.3 Nm).
7. See Figure 2-66. Install clips (3) and **new** cable strap (1).

⚠WARNING

When any hydraulic brake component, line or connection is loosened or replaced on an ABS motorcycle, Digital Technician II must be used during the brake bleeding procedure to verify all air is removed from the system. Failure to properly bleed the brake system could adversely affect braking, which could result in death or serious injury. (00585c)

8. Fill and bleed brake system. See 2.18 BLEEDING BRAKES.
9. Install electrical panel. See 7.3 ELECTRICAL PANEL.
10. To confirm that brake system is properly connected and all air is purged, connect motorcycle to DIGITAL TECHNICIAN II (Part No. HD-48650) and perform "ABS Service" procedure in the "Tool Box" menu.

⚠WARNING

After repairing the brake system, test brakes at low speed. If brakes are not operating properly, testing at high speeds can cause loss of control, which could result in death or serious injury. (00289a)

11. Test brake system.
    a. Turn ignition switch ON. Pump brake foot pedal to verify operation of the brake lamp.
    b. Test ride the motorcycle. If the brakes feel spongy, bleed the system again.

REMOVAL: ALL BUT FXSB

1. Remove seat.

⚠WARNING

To prevent accidental vehicle start-up, which could cause death or serious injury, remove main fuse before proceeding. (00251b)

2. Disarm security system, if equipped and remove main fuse.
3. Remove right side saddlebag, if present.

NOTE

Rear wheel may have to be raised slightly to allow for splash guard removal.

4. Remove splash guard.
5. See Figure 2-68. Detach body control module (BCM) (1) from electrical panel and remove both electrical connectors.
6. See Figure 2-69. Detach electronic control unit (ECU) (1) from electrical panel and remove electrical connector.

INSTALLATION: ALL BUT FXSB

FASTENER	TORQUE VALUE	
Splash guard screw: all but FXSB	36-48 in-lbs	4.1-5.4 Nm

1. See Figure 2-69. Connect ECU connector and install ECU (1) onto electrical panel.
2. See Figure 2-68. Connect both BCM connectors and install BCM (1) onto electrical panel.
3. Install splash guard with screw(s). Tighten to 36-48 in-lbs (4.1-5.4 Nm).
4. Install right side saddlebag, if removed.
5. Install main fuse.

⚠WARNING

Be sure that all lights and switches operate properly before operating motorcycle. Low visibility of rider can result in death or serious injury. (00316a)

6. Test for correct operation.

⚠WARNING

After installing seat, pull upward on seat to be sure it is locked in position. While riding, a loose seat can shift causing loss of control, which could result in death or serious injury. (00070b)

7. Install seat.

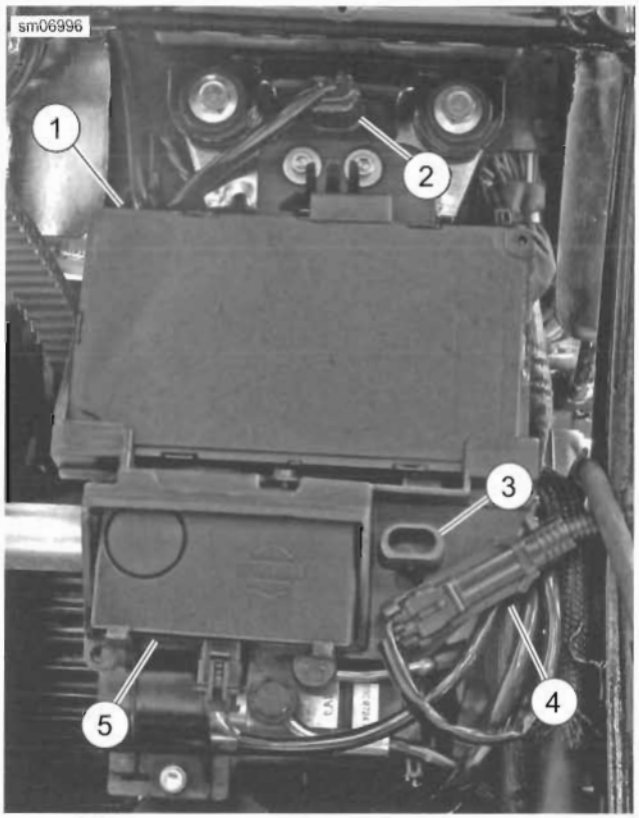

1. **BCM**
2. **Purge solenoid connector receptacle**
3. **Security siren connector receptacle**
4. **Wheel speed sensor connector**
5. **Security siren**

Figure 2-68. Body Control Module (BCM): All But FXSB

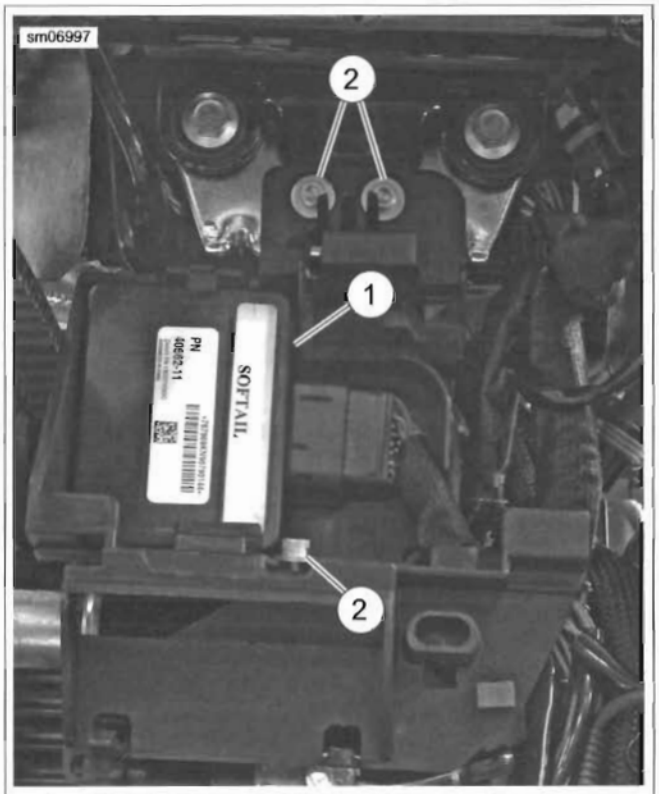

1. **Electronic control unit (ECU)**
2. **Electrical panel fasteners**

Figure 2-69. Electrical Panel

REMOVAL: FXSB

1. Remove main fuse.
2. Remove rear wheel. See 2.5 REAR WHEEL.
3. Remove splash guard.
4. See Figure 2-70. Remove WSS connector (1).
5. Disconnect ECU connector.
6. Remove ECU (2) from panel.

INSTALLATION: FXSB

1. See Figure 2-70. Install ECU (2).
2. Connect ECU connector.
3. Install WSS connector (1).
4. Install splash guard.
5. Install rear wheel. See 2.5 REAR WHEEL.
6. Install main fuse.

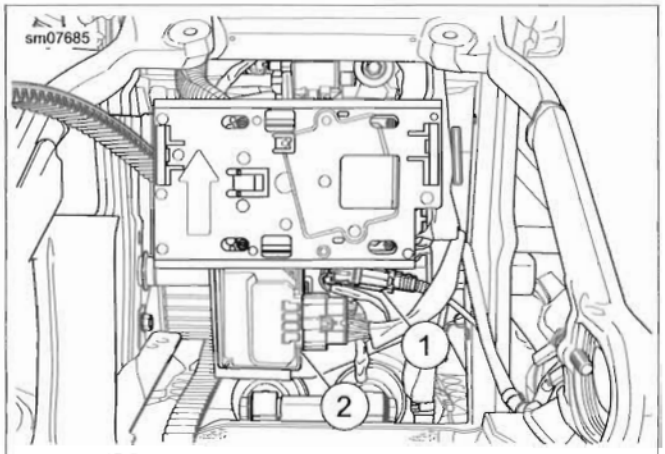

1. **WSS connector**
2. **ECU**

Figure 2-70. ECU

FRONT HYDRAULIC CONTROL UNIT (HCU)

PART NUMBER	TOOL NAME
HD-48650	DIGITAL TECHNICIAN II
SNAP-ON BB200A	BASIC VACUUM BRAKE BLEEDER

FASTENER	TORQUE VALUE	
HCU screws, rear cover to front	24-36 in-lbs	2.7-4.1 Nm
HCU screws, lower front	54-84 in-lbs	6.1-9.5 Nm
HCU screws, upper front	48-72 in-lbs	5.4-8.1 Nm
Banjo bolts to front HCU	120-144 in-lbs	13.6-16.3 Nm

Removal

1. Disconnect front HCU electrical connector.

NOTE

For best results, use the BASIC VACUUM BRAKE BLEEDER (Part No. Snap-On BB200A) or equivalent tool to drain the brake systems.

2. Drain front brake system.

NOTE

Plug open HCU ports and seal banjo fittings to prevent leakage and contamination.

3. See Figure 2-71. Remove banjo bolts (6) to release brake lines from front HCU. Discard sealing washers.
4. Remove screws (4, 7, 11) and separate front HCU (13) from front and rear covers (8, 12).

Installation

1. See Figure 2-71. Place rear cover (12) on front HCU (13) and secure with screws (11). Tighten screws to 24-36 **in-lbs** (2.7-4.1 Nm).
2. Attach electrical connector to front HCU (13).
3. Place front cover (8) into position and secure with screws (4, 7). Tighten screws as follows.
   a. Screws (7) to 54-84 **in-lbs** (6.1-9.5 Nm).
   b. Screws (4) to 48-72 **in-lbs** (5.4-8.1 Nm).
4. Install banjo bolts (6) with **new** sealing washers (5). Tighten to 120-144 **in-lbs** (13.6-16.3 Nm).

⚠WARNING

When any hydraulic brake component, line or connection is loosened or replaced on an ABS motorcycle, Digital Technician II must be used during the brake bleeding procedure to verify all air is removed from the system. Failure to properly bleed the brake system could adversely affect braking, which could result in death or serious injury. (00585c)

5. Fill and bleed brake systems. See 2.18 BLEEDING BRAKES.

NOTE

For best results, use the BASIC VACUUM BRAKE BLEEDER (Part No. Snap-On BB200A) or equivalent tool to drain the brake systems.

6. To confirm that the brake systems are properly connected and air is completely purged, perform the following tasks:
   a. Install master cylinder reservoir covers.
   b. Connect motorcycle to DIGITAL TECHNICIAN II (Part No. HD-48650).
   c. Perform "ABS Service" procedure in the "Tool Box" menu.

⚠WARNING

After repairing the brake system, test brakes at low speed. If brakes are not operating properly, testing at high speeds can cause loss of control, which could result in death or serious injury. (00289a)

7. Test brake system.
   a. Turn ignition switch ON. Pump brake hand lever to verify operation of the brake lamp.
   b. Test ride the motorcycle. If the brakes feel spongy, bleed the system again.

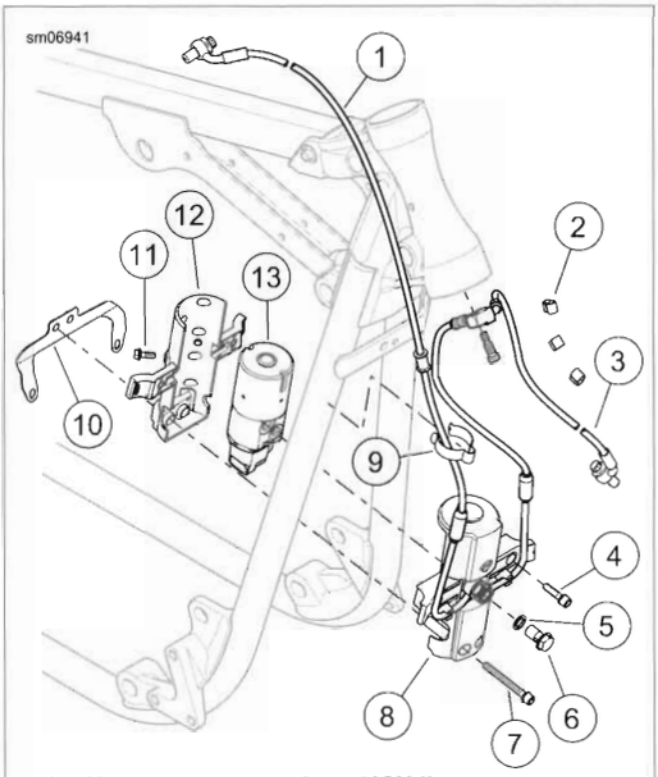

1. **Master cylinder-to-front HCU line**
2. **Clip (3)**
3. **Front HCU-to-caliper line**
4. **Screw (2)**
5. **Sealing washer (4)**
6. **Banjo bolt (2)**
7. **Screw (2)**
8. **Front cover**
9. **Clip (2)**
10. **Bracket**
11. **screw (2)**
12. **Rear cover**
13. **Front hydraulic control unit**

Figure 2-71. Front Hydraulic Control Unit

REAR HYDRAULIC CONTROL UNIT (HCU)

PART NUMBER	TOOL NAME
HD-48650	DIGITAL TECHNICIAN II
SNAP-ON BB200A	BASIC VACUUM BRAKE BLEEDER

FASTENER	TORQUE VALUE	
HCU, rear, bracket screws	36-72 **in-lbs**	5.0-10.0 Nm
HCU, rear, clamp screw	24-42 **in-lbs**	2.7-4.7 Nm
Banjo bolts to rear HCU	120-144 **in-lbs**	13.6-16.3 Nm

Removal

1. Remove electrical panel. See 7.3 ELECTRICAL PANEL.
2. Disconnect rear HCU electrical connector.

NOTE

For best results, use the BASIC VACUUM BRAKE BLEEDER (Part No. Snap-On BB200A) or equivalent tool to drain the brake systems.

3. Drain rear brake system.

NOTE

Plug open HCU ports and seal banjo fittings to prevent leakage and contamination.

4. See Figure 2-72. Remove banjo bolts (6) to release brake lines from rear HCU. Discard sealing washers.
5. Remove screw (9), clamp (10), and rear HCU (11).

Installation

1. See Figure 2-72. If bracket (1) was removed, install bracket with washers (2) and screws (3). Tighten screws to 36-72 **in-lbs** (5.0-10.0 Nm).
2. Install rear HCU, and secure with clamp (10) and screw (9). Tighten screw to 24-42 **in-lbs** (2.7-4.7 Nm).
3. Attach electrical connector to rear HCU (11).
4. Loosely install banjo bolts (6) with **new** sealing washers (5).
5. Install alignment cover (7) over banjo bolts.
6. Tighten banjo bolts to 120-144 **in-lbs** (13.6-16.3 Nm).
7. See Figure 2-73. Verify both brake lines at rear HCU are properly positioned.

⚠WARNING

When any hydraulic brake component, line or connection is loosened or replaced on an ABS motorcycle, Digital Technician II must be used during the brake bleeding procedure to verify all air is removed from the system. Failure to properly bleed the brake system could adversely affect braking, which could result in death or serious injury. (00585c)

8. Fill and bleed brake systems. See 2.18 BLEEDING BRAKES.

NOTE

For best results, use the BASIC VACUUM BRAKE BLEEDER (Part No. Snap-On BB200A) or equivalent tool.

9. Install electrical panel. See 7.3 ELECTRICAL PANEL.
10. To confirm that the brake systems are properly connected and air is completely purged, install master cylinder reservoir covers, connect motorcycle to DIGITAL TECHNICIAN II (Part No. HD-48650) and perform "ABS Service" procedure in the "Tool Box" menu.

⚠WARNING

After repairing the brake system, test brakes at low speed. If brakes are not operating properly, testing at high speeds can cause loss of control, which could result in death or serious injury. (00289a)

11. Test brake system.
    a. Turn ignition switch ON. Pump brake foot pedal to verify operation of the brake lamp.
    b. Test ride the motorcycle. If the brakes feel spongy, bleed the system again.

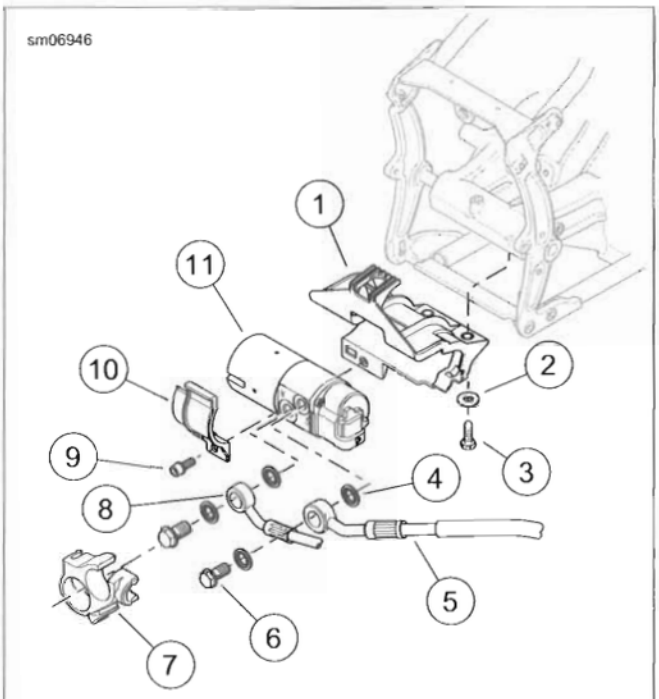

1. Bracket
2. Washer (2)
3. Screw (2)
4. Sealing washer (4)
5. Rear HCU-to-caliper line
6. Banjo bolt (2)
7. Alignment cover
8. Master cylinder-to-rear HCU line
9. Screw
10. Clamp
11. Rear HCU

Figure 2-72. Rear Hydraulic Control Unit (HCU)

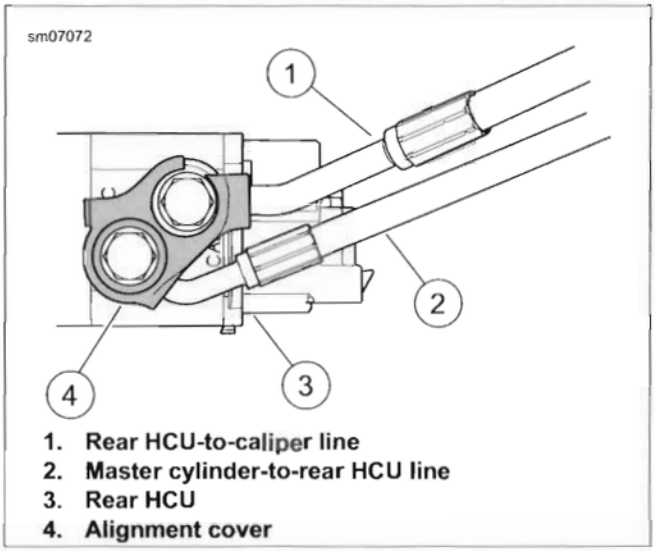

1. Rear HCU-to-caliper line
2. Master cylinder-to-rear HCU line
3. Rear HCU
4. Alignment cover

Figure 2-73. Rear HCU Fittings Properly Installed

GENERAL

⚠WARNING

When any hydraulic brake component, line or connection is loosened or replaced on an ABS motorcycle, Digital Technician II must be used during the brake bleeding procedure to verify all air is removed from the system. Failure to properly bleed the brake system could adversely affect braking, which could result in death or serious injury. (00585c)

⚠WARNING

Use denatured alcohol to clean brake system components. Do not use mineral-based solvents (such as gasoline or paint thinner), which will deteriorate rubber parts even after assembly. Deterioration of these components can cause brake failure, which could result in death or serious injury. (00291a)

⚠CAUTION

Direct contact of D.O.T. 4 brake fluid with eyes can cause irritation. Avoid eye contact. In case of eye contact flush with large amounts of water and get medical attention. Swallowing large amounts of D.O.T. 4 brake fluid can cause digestive discomfort. If swallowed, obtain medical attention. Use in well ventilated area. KEEP OUT OF REACH OF CHILDREN. (00240a)

NOTICE

D.O.T. 4 brake fluid will damage painted and body panel surfaces it comes in contact with. Always use caution and protect surfaces from spills whenever brake work is performed. Failure to comply can result in cosmetic damage. (00239b)

- If DOT 4 brake fluid contacts painted surfaces, IMMEDIATELY flush area with clear water.

NOTICE

Do not allow dirt or debris to enter the master cylinder reservoir. Dirt or debris in the reservoir can cause improper operation and equipment damage. (00205c)

Front brake lever and rear brake pedal must have a firm feel when brakes are applied. If not, bleed system as described.

PROCEDURE

PART NUMBER	TOOL NAME
HD-48650	DIGITAL TECHNICIAN II
SNAP-ON BB200A	BASIC VACUUM BRAKE BLEEDER

FASTENER	TORQUE VALUE	
Brake caliper, front, bleeder valve	35-61 **in-lbs**	3.9-6.9 Nm
Brake caliper, rear, bleeder valve	80-100 **in-lbs**	9.0-11.3 Nm
Brake master cylinder, front, reservoir cover screws	8.9-17.7 **in-lbs**	1.0-2.0 Nm
Brake master cylinder, rear, reservoir cover screws	6-8 **in-lbs**	0.7-0.9 Nm

NOTES

- *For best results, use of BASIC VACUUM BRAKE BLEEDER (Part No. Snap-on BB200A) or equivalent tool is recommended, particularly if the brake system was completely drained. If a vacuum brake bleeder is not available, use the following procedure.*
- ***ABS models:** To confirm that the brake systems are properly connected and air is completely purged, install master cylinder reservoir covers, connect motorcycle to DIGITAL TECHNICIAN II (Part No. HD-48650) and perform "ABS Service" procedure.*

1. Remove bleeder valve cap. Install end of clear plastic tubing over bleeder valve and place free end in a clean container.
2. Position vehicle or handlebar so master cylinder reservoir is level.

NOTES

- *Wrap a clean shop towel around the outside of the master cylinder reservoir to protect paint from brake fluid spills.*
- *Always clean master cylinder cover before removing.*

3. Remove cover from master cylinder reservoir.

⚠WARNING

A plugged or covered relief port can cause brake drag or lock-up, which could lead to loss of control, resulting in death or serious injury. (00288a)

4. Top off the reservoir. Verify proper operation of the master cylinder relief port by actuating the brake pedal or lever. A slight spurt of fluid will break the fluid surface in the reservoir if internal components are working properly. Refer to Table 2-15.
5. Operate the brake lever or pedal to build hydraulic pressure.

NOTE

Pay careful attention to fluid level in the master cylinder reservoir. Add fluid before it empties to avoid drawing air into the brake lines.

6. While holding pressure with the brake lever or pedal:
   a. Open bleeder valve about 3/4 turn.
   b. Close bleeder valve as soon as the lever or pedal has moved full range of travel.
   c. Allow brake lever or pedal to return slowly to its released position.
7. Repeat steps until all air bubbles are purged and a solid column of fluid is observed in the bleeder tube.
8. Tighten bleeder valve to specification. Refer to Table 2-16. Install bleeder valve cap.
9. Check and fill reservoir to specified level.
10. Refer to Table 2-16. Verify gasket and sealing surfaces are free of debris. Install master cylinder reservoir cover as follows:
    a. **Front master cylinder reservoir:** Orient the cover with the vent holes facing the rear. Install cover screws. Tighten to specification.
    b. **Rear master cylinder reservoir:** Install cover screws. Tighten to specification.
11. **ABS equipped models:** Connect DIGITAL TECHNICIAN II (Part No. HD-48650) and perform "ABS Service" procedure.
12. Verify stop lamp operation.

⚠WARNING

After repairing the brake system, test brakes at low speed. If brakes are not operating properly, testing at high speeds can cause loss of control, which could result in death or serious injury. (00289a)

13. Test ride motorcycle. Repeat the bleeding procedure if brakes feel spongy.

Table 2-15. Fluid Level

ITEM	SPECIFICATION
Front reservoir	Between upper and lower step at top of boss.
Rear reservoir	1/4-1/2 in (6.4-12.7 mm) below gasket surface

Table 2-16. Torque Specifications

COMPONENT	TORQUE
Front bleeder	35-61 **in-lbs** (3.9-6.9 Nm)
Rear bleeder	80-100 **in-lbs** (9.0-11.3 Nm)
Front cover screws	8.9-17.7 **in-lbs** (1.0-2.0 Nm)
Rear cover screws	6-8 **in-lbs** (0.7-0.9 Nm)

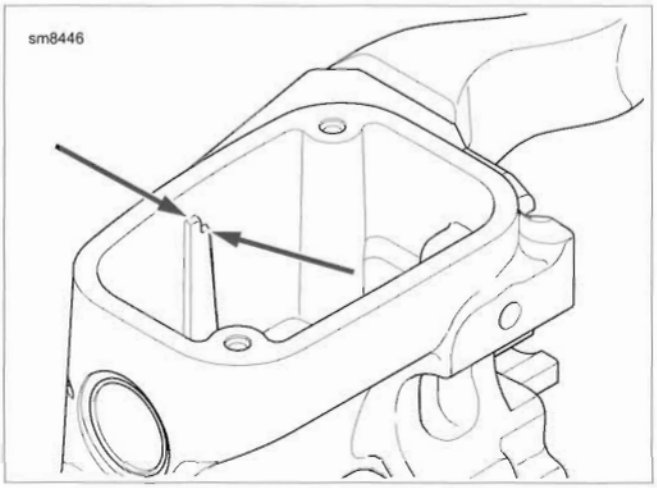

Figure 2-74. Front Master Cylinder Fill Level

GENERAL

There are three varieties of hydraulic forks:

- All FLSTC, FLSTF/B, FLSTN and FLS models use the type shown in Figure 2-78.
- All FXST models use the type shown in Figure 2-79.
- All FXSB models use the type shown in Figure 2-80.

Use the following information to service the models listed above.

FORK OIL LEAK CHECK

Fork Oil Seals

The fork oil seal allows a fine film of oil to lubricate the fork sliding surface.

- The oil film is more visible after continuous high-speed compression and rebound movement.
- Due to greater lubrication needs, larger forks have a greater amount of oil film than smaller forks.

Oil Leak Check

1. Observe oil-ring.
2. Wipe fork clean.
3. Ride motorcycle over bumpy road or complete six braking events.
4. See Figure 2-75. Check fork slider tube for oil.
   a. If a normal oil/dust film (1, 2) is present, there is no leak.
   b. If an oil run or drip (3) is present, perform procedure two or three more times to confirm oil leak.

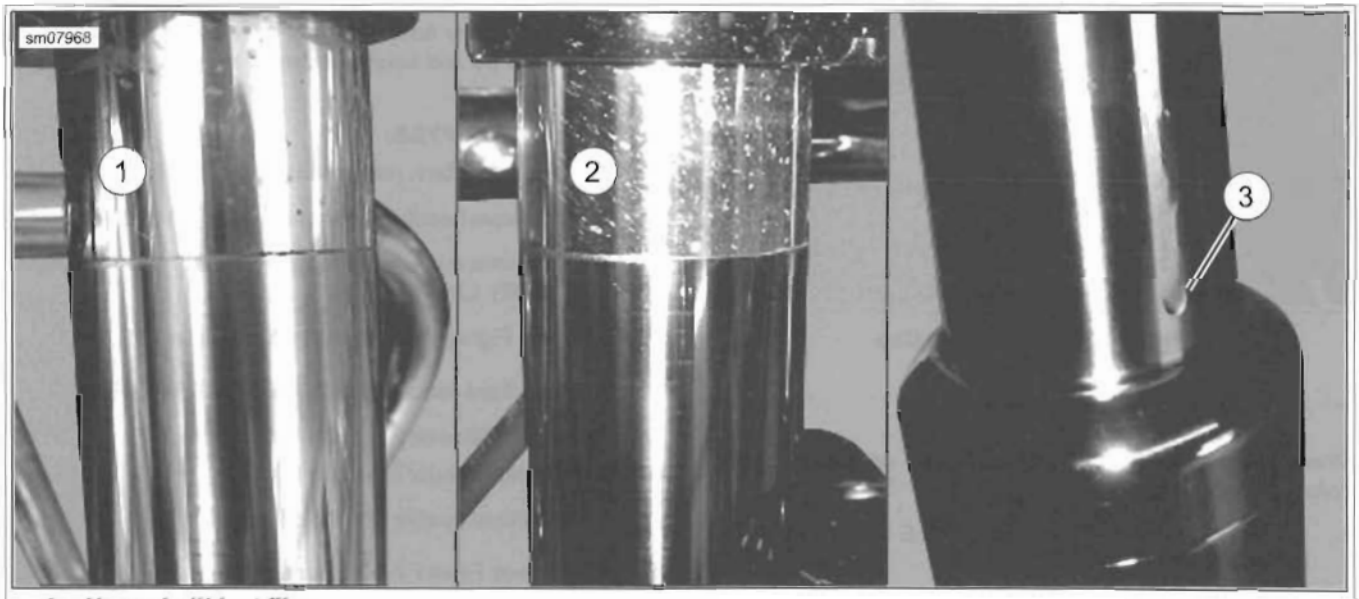

1. **Normal oil/dust film**
2. **Normal oil/dust film**
3. **Drip**

Figure 2-75. Front Forks

REPLACING FORK OIL

FASTENER	TORQUE VALUE	
Fork drain screw	52-78 in-lbs	5.9-8.9 Nm
Fork tube cap	60-70 ft-lbs	81.3-95.0 Nm

NOTES

- *At the specified fork oil change service interval, inspect the front fork assembly. Look for oil leakage past the seals and excessive wear on slider tubes. Disassemble and clean components. Replace or repair as necessary.*
- *The FLSTC and FLSTF/B models have a preloaded fork spring.*

1. Support the motorcycle so the front wheel is off the floor and the fork is fully extended.

⚠WARNING

Wear safety glasses or goggles when servicing fork assembly. Do not remove slider tube caps without relieving spring preload or caps and springs can fly out, which could result in death or serious injury. (00297a)

2. See Figure 2-76. Remove the fork tube caps.

NOTE

FXSB models require the fork tubes be removed and to drain fork oil.

3. Drain fork oil. See Figure 2-77. Remove and discard the drain screws and washers from each fork tube and drain the fork oil.

4. Install **new** drain screws and washers. Tighten to 52-78 **in-lbs** (5.9-8.9 Nm).

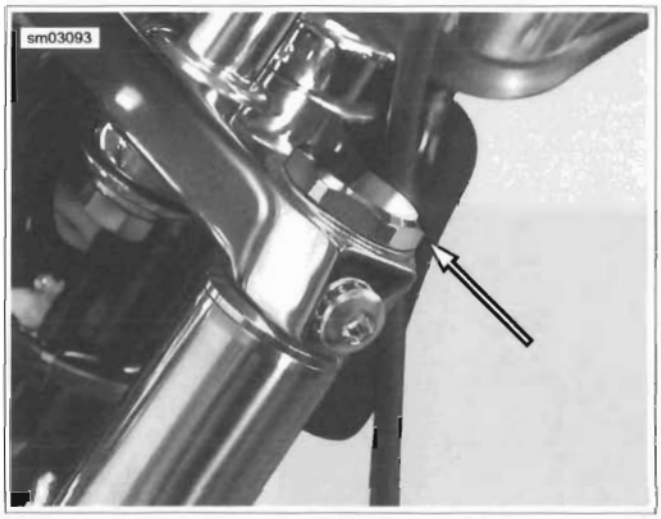

Figure 2-76. Fork Tube Cap

NOTE

Slowly pump slider 8 - 10 times to remove air from assembly before measurement.

5. Fill fork with Harley-Davidson TYPE E FORK OIL. Refer to Table 2-17.

6. Tighten fork tube caps to 60-70 ft-lbs (81.3-95.0 Nm).

Table 2-17. Type E Fork Oil Amounts

MODEL	OZ	CC	IN	MM
FLSTC, FLSTN, FLS, FLSTF/B	13.4	395	4.41	112.0
FXST	12.5	370	6.69	170.0
FXSB	26.7	790	3.35	85.0

NOTE

Fork oil amounts can be measured two ways. Refer to Table 2-17.

- *Use oz/cc measurement if fork is left in frame.*
- *Use in/mm measurement if fork is disassembled. In this case, oil level is measured from top of fork tube, with spring removed and fork fully compressed.*



Figure 2-77. Fork Drain Screw: (Left Side Shown)

REMOVAL

1. Support the motorcycle so the front wheel is off the ground and the fork is fully extended.

2. Remove front wheel and brake caliper. See 2.4 FRONT WHEEL.

NOTE

Fuel tank crossover hose does not need to be disconnected. Fuel tank can be slid back enough to remove required connectors.

3. **All but FXST, FXSB:**
   a. Slide fuel tank rearward. See 4.6 FUEL TANK.
   b. Remove headlamp assembly. See 7.14 HEADLAMP.
   c. Remove auxiliary lamps, if equipped. See 7.17 AUXILIARY LAMPS: FLSTC, FLSTN.
   d. See Figure 2-78. Remove front panel (51).

4. Remove front fender. See 2.30 FRONT FENDER.

5. **All but FXSB:** see Figure 2-78 or Figure 2-79.
   a. Remove slider tube cap (1).
   b. Remove spacer (2) and oil seal (3).

6. **FXSB:** see Figure 2-80. Loosen fork bracket pinch bolts (4,34) and pull each slider and tube assembly from brackets.

7. **All but FXSB:** see Figure 2-78 or Figure 2-79. Loosen lower fork stem bracket pinch bolts (4) and pull each slider and tube assembly from brackets.

DISASSEMBLY

⚠WARNING

Wear safety glasses or goggles when servicing fork assembly. Do not remove slider tube caps without relieving spring preload or caps and springs can fly out, which could result in death or serious injury. (00297a)

1. See Figure 2-78, Figure 2-79, or Figure 2-80. Remove the fork tube plug (5) and O-ring (6). Pull spring (7) out of slider tube (8).

2. **All but FXSB:** Remove drain screw (9) and washer (10) to drain the fork.
3. **FXST:** See Figure 2-79. Remove dust cover (23) and dust shield (47).
4. **FXSB:** See Figure 2-80. Remove case cover (23) and dust seal (24).
5. See Figure 2-78, Figure 2-79, or Figure 2-80. Compress retaining ring (11) and remove the clip from the internal groove at the top of slider (12).

NOTE

Since there is little resistance to rotation when removing socket screw (13), the job is done more easily with an air impact wrench.

6. Remove socket head screw (13) with washer (14) from the bottom end of fork slider (12). This will free damper tube (15) and fork slider tube (8) from slider.
7. The upper slider tube bushing (16) is a slight interference fit in slider (12). The upper bushing, seal spacer (17) and slider oil seal (18) are removed together. Use the fork tube and lower slider bushing (19) as a slide hammer. Pull the fork tube in a quick continuous stroke. Continue this slide hammer action until the components are freed.
8. Push the damper tube (15) and damper tube spring (20) free of slider tube (8) by inserting a small diameter rod through the opening in the bottom of tube.
9. Remove lower stop (21) from the lower end of damper tube (15).
10. Damper tube ring (22) can now be removed from the grooves at the top end of damper tube (15). Do not remove lower slider bushing (19) unless it requires replacement. When replacing lower slider bushing (19), expand the **new** split bushing only enough to fit over slider tube (8). Slide bushing into the bushing groove.

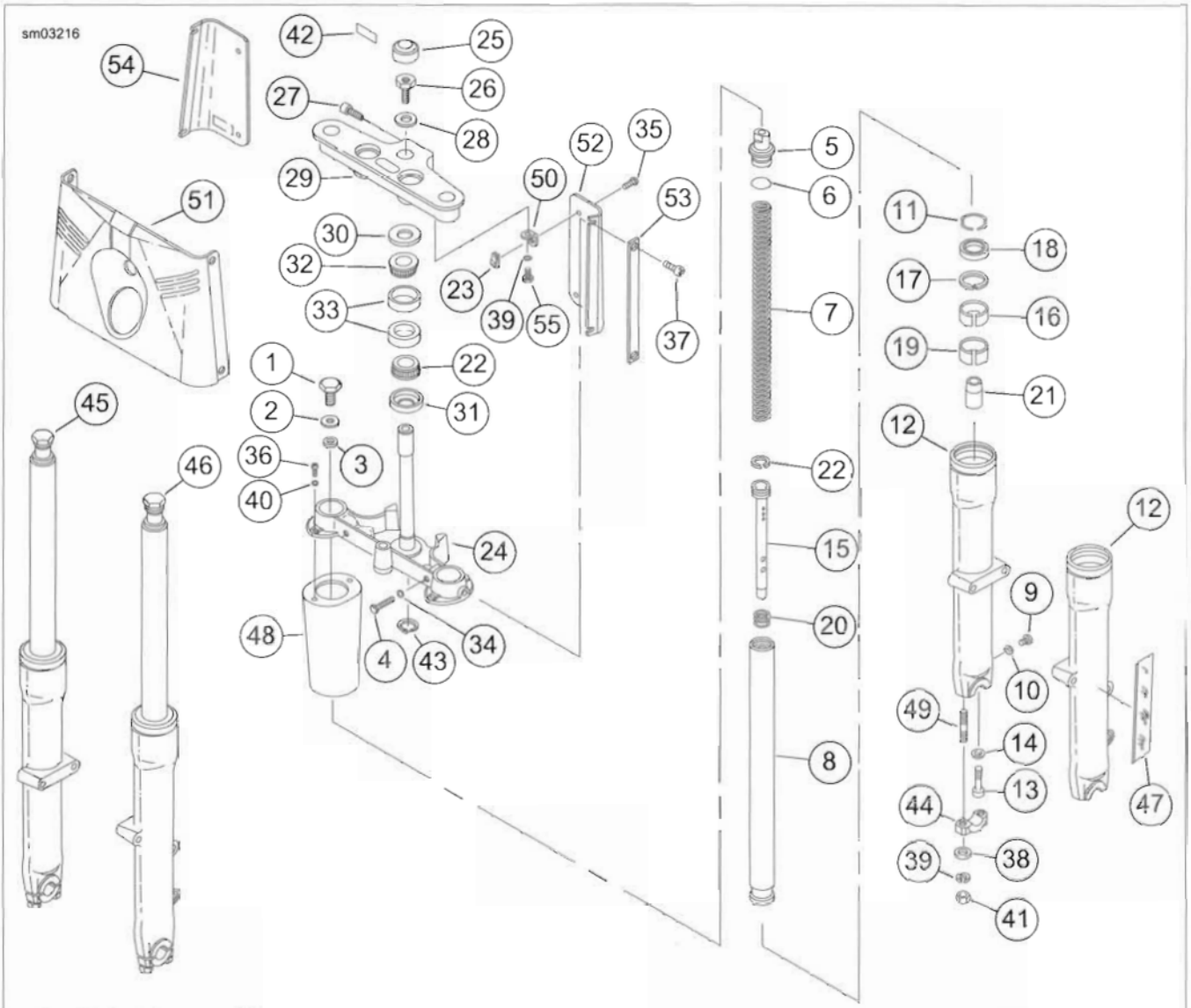

1. Slider tube cap (2)
2. Spacer (2)
3. Oil seal (2)
4. Bolt (2)
5. Fork tube plug (2)
6. Fork tube plug O-ring (2)
7. Spring (2)
8. Slider tube (2)
9. Drain screw (2)
10. Washer (2)
11. Oil seal retaining ring (2)
12. Slider
13. Screw (2)
14. Washer (2)
15. Damper tube (2)
16. Upper slider tube bushing (2)
17. Seal spacer
18. Slider oil seal (2)
19. Lower slider bushing
20. Damper tube spring (2)
21. Lower stop (2)
22. Damper tube spring (2)
23. Clip nut
24. Stem and bracket
25. Fork stem cap
26. Bolt
27. Screw (2)
28. Fork stem washer
29. Upper bracket
30. Upper dust shield
31. Lower dust shield
32. Roller bearing (2)
33. Bearing cup (2)
34. Adjusting nut
35. Screw (4)
36. Screw (4)
37. Screw (4)
38. Washer (2)
39. Lockwasher (2)
40. Lockwasher (4)
41. Nut (2)
42. Warning label
43. Fork stem retaining ring
44. Axle cap (2)
45. Fork slider/tube asmb. right
46. Fork slider/tube asmb. left
47. Reflector (2)
48. Slider cover (2)
49. Stud (4)
50. Front panel bracket (2)
51. Front panel
52. Left rear back panel
53. Trim strip (2)
54. Right rear back panel
55. Bolt (2)

Figure 2-78. Front Fork: FLSTC, FLSTF/B, FLSTN, FLS

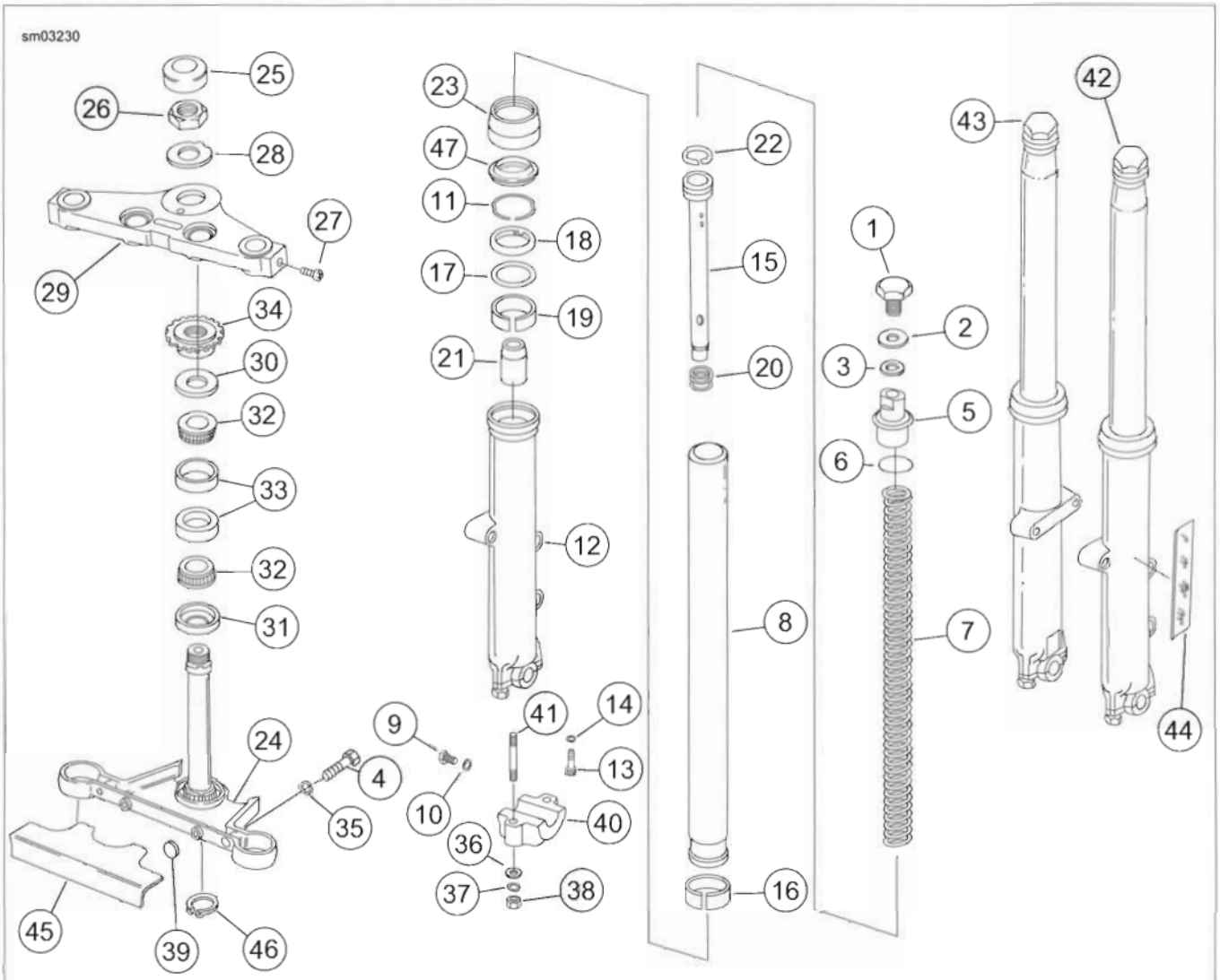

1. Slider tube cap (2)
2. Spacer (2)
3. Oil seal (2)
4. Bolt (2)
5. Fork tube plug (2)
6. Fork tube plug O-ring (2)
7. Spring (2)
8. Slider tube (2)
9. Drain screw (2)
10. Washer (2)
11. Oil seal retaining ring (2)
12. Slider
13. Screw (2)
14. Washer (2)
15. Damper tube (2)
16. Upper slider tube bushing (2)
17. Seal spacer
18. Slider oil seal (2)
19. Lower slider bushing
20. Damper tube spring (2)
21. Lower stop (2)
22. Damper tube ring (2)
23. Dust cover (2)
24. Stem and bracket
25. Fork stem cap
26. Fork stem nut
27. Screw (2)
28. Fork stem lockwasher
29. Upper bracket
30. Upper dust shield
31. Lower dust shield
32. Roller bearing (2)
33. Bearing race (2)
34. Adjusting nut
35. Lockwasher (2)
36. Washer (2)
37. Lockwasher (2)
38. Nut (2)
39. Pad (2)
40. Axle cap
41. Stud (2)
42. Fork slider and tube assy. left
43. Fork slider and tube assy. right
44. Reflector (2)
45. Headlamp mounting plate
46. Fork stem retaining ring
47. Dust shield (2)

Figure 2-79. Front Fork: FXST

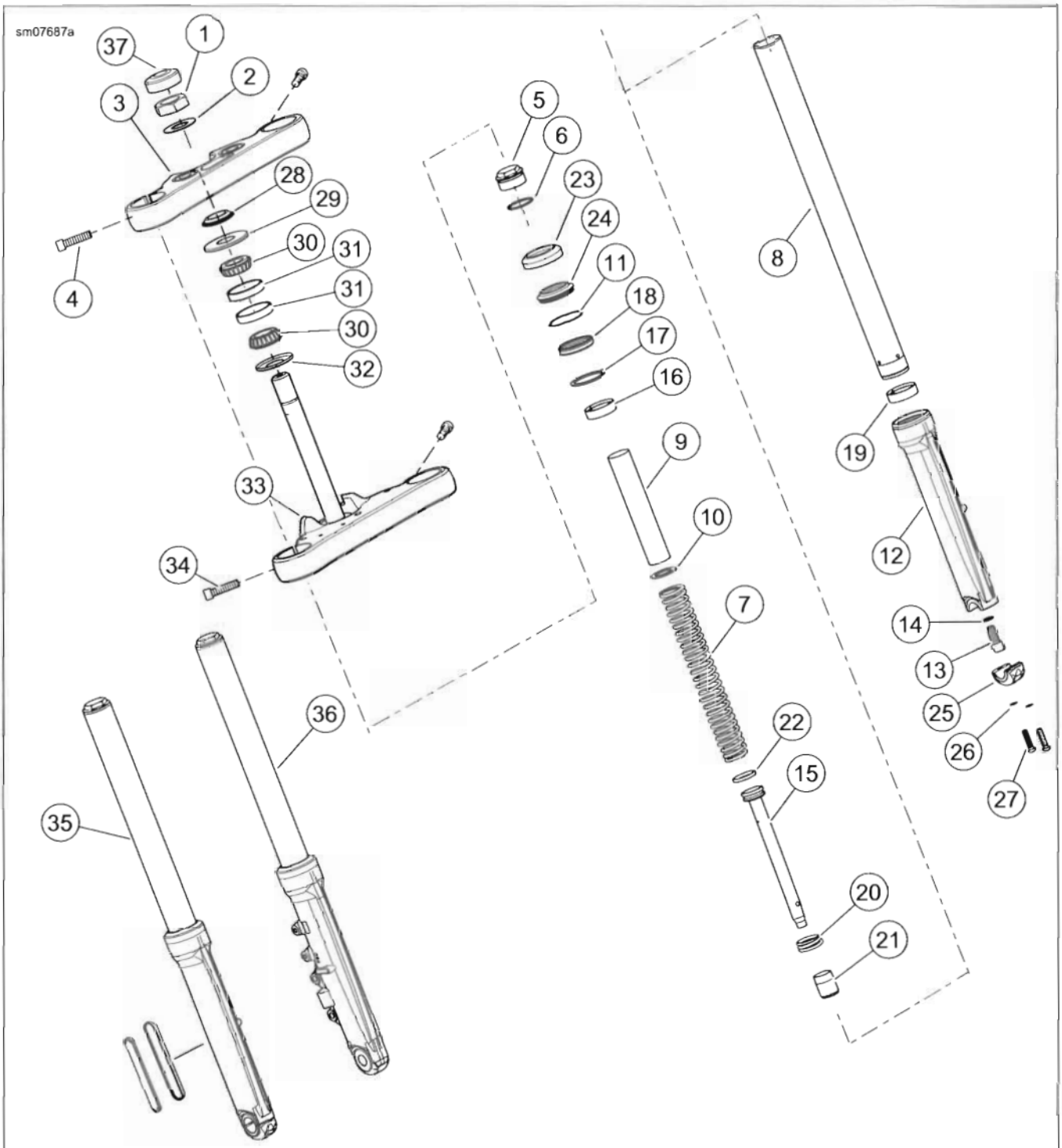

1. Fork stem nut
2. Washer
3. Upper bracket
4. Upper pinch bolt (2)
5. Slider tube plug
6. O-ring
7. Spring
8. Slider tube (2)
9. Spring collar
10. Washer
11. Stopper ring
12. Slider
13. Screw
14. Washer
15. Damper tube
16. Upper slider tube bushing (2)
17. Seal spacer
18. Slider Oil seal (2)
19. Lower slider tube bushing
20. Damper tube spring
21. Lower stop
22. Damper tube ring
23. Case cover
24. Dust seal
25. Axle cap
26. Washer (2)
27. Screw (2)
28. Adjusting nut
29. Upper dust shield
30. Roller bearing (2)
31. Bearing race (2)
32. Lower dust shield
33. Stem and bracket
34. Lower pinch bolt (2)
35. Fork slider and tube assembly, right
36. Fork slider and tube assembly, left
37. Fork stem cap

Figure 2-80. Front Forks: FXSB

CLEANING AND INSPECTION

1. Clean all parts.
2. Inspect parts for wear or damage. Replace any parts that are damaged.
3. Replace retaining clip if bent or distorted.
4. Inspect OD of slider bushing and ID of fork tube bushing:
   a. If coating is worn through (metallic substrate showing), replace bushing.
   b. Inspect for distortion.
   c. If deep scratches or scoring are found, replace bushing. Also inspect mating components for similar wear. Repair or replace as necessary.
5. Check fork tube and slider for scoring, scratches and abnormal wear.
6. Inspect fork tube for nicks from stones and road debris, especially in area where seal contacts it. Replace if necessary.
7. See Figure 2-81. Check runout with a dial indicator.
   a. Set fork tube on V-blocks.
   b. Replace fork if runout exceeds 0.008 in (0.2 mm).

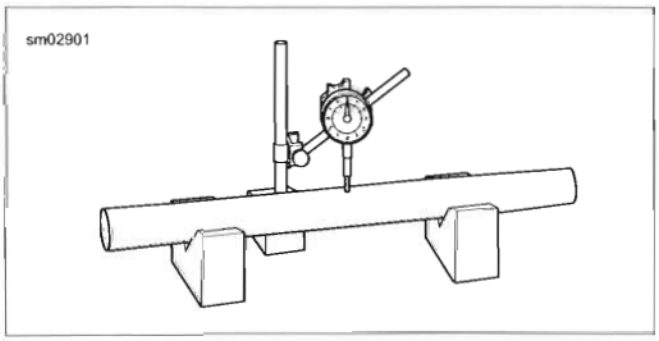

Figure 2-81. Measure Fork Tube Runout

ASSEMBLY

PART NUMBER	TOOL NAME
HD-34634	FORK SEAL INSTALLER

FASTENER	TORQUE VALUE	
Fork damper tube screw, front	130-216 **in-lbs**	14.7-24.5 Nm

NOTE

Lubricate all seal lips, quad rings and O-rings with HARLEY DAVIDSON SEAL GREASE during assembly.

1. Install damper tube ring (22). Place damper tube spring (20) on damper tube (15). Insert damper tube into slider tube (8).
2. Insert spring (7) into slider tube (8), tapered side toward damper tube (15), and push bottom of damper tube through the opening at the bottom end of the fork tube. Place lower stop (21) over end of damper tube (15).
3. Apply LOCTITE 565 THREAD SEALANT to screw (13).
4. Position slider tube (8) and damper tube (15) in slider (12). Hold the assembly in place by exerting pressure on the spring and install socket screw (13) with washer (14).
5. Tighten screw (13) to 130-216 **in-lbs** (14.7-24.5 Nm).
6. Place upper slider tube bushing (16), seal spacer (17) and a **new** slider oil seal (18) (in that order) over fork slider (12). Be sure that the lettered side of the seal is facing upward.
7. Place FORK SEAL INSTALLER (Part No. HD-34634) over fork slider (12). Seat upper slide tube bushing (16), seal spacer (17), and slider oil seal (18) into the slider bore by lightly tapping the components into place with the installation tool.
8. Install oil seal retaining ring (11).
9. **FXST:** Install dust cover (23) and dust shield (47).
10. **FXSB:** Install case cover (23) and dust seal (24).
11. Fill forks with Harley-Davidson TYPE E FORK OIL. See 2.19 FRONT FORK, Replacing Fork Oil.

INSTALLATION

FASTENER	TORQUE VALUE	
Slider tube cap	60-70 ft-lbs	81.3-95.0 Nm
Fork stem pinch bolts, lower: all but FXSB	55-60 ft-lbs	74.6-81.3 Nm
Fork stem pinch bolts, upper and lower: FXSB	30-35 ft-lbs	40.7-47.5 Nm

1. Insert both fork side assemblies up through the fork stem and bracket (24) and upper bracket (29).
2. **FXSB:** see Figure 2-82. Adjust fork stem protrusion to 0.35 in. (8.9 mm).

NOTE

Be sure one flat on each fork tube plug (5) faces toward the inside of the fork.

3. **All but FXSB:** Install **new** oil seal (3), spacer (2), and slider tube cap (1). Tighten cap (1) to 60-70 ft-lbs (81.3-95.0 Nm).
4. Tighten fork bracket pinch bolt(s) (4) to the following:
   a. **All but FXSB:** 55-60 ft-lbs (74.6-81.3 Nm).
   b. **FXSB upper and lower:** 30-35 ft-lbs (40.7-47.5 Nm).
5. Install front fender. See 2.30 FRONT FENDER.
6. **All but FXST, FXSB:**
   a. See Figure 2-78. Install front panel (51).
   b. Install auxiliary lamps, if equipped. See 7.17 AUXILIARY LAMPS: FLSTC, FLSTN.
   c. Install headlamp assembly. See 7.14 HEADLAMP.
   d. Install fuel tank. See 4.6 FUEL TANK.
7. Install front wheel and brake caliper. See 2.4 FRONT WHEEL.
8. Check steering head bearing adjustment if fork stem was removed. See 1.18 STEERING HEAD BEARINGS.

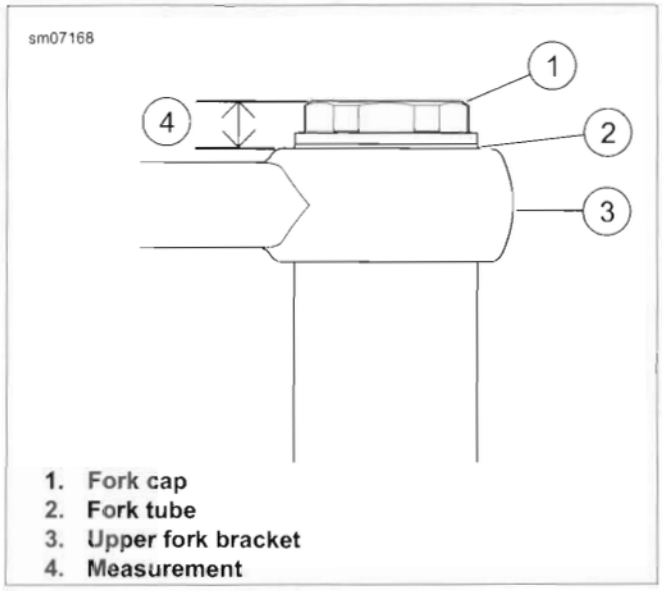

1. Fork cap
2. Fork tube
3. Upper fork bracket
4. Measurement

Figure 2-82. Fork Tube Protrusion: FXSB

REMOVAL

NOTE

If bearing races are removed, the bearings cannot be reused. They must be replaced. See 2.20 STEERING HEAD, Disassembly, which follows.

FLSTC, FLSTF/B, FLSTN, FLS Models

1. Remove fork shrouds.
2. Remove the fork sides. See 2.19 FRONT FORK.
3. Remove the headlamp and headlamp bracket.
4. See Figure 2-83. Remove the brake hose bracket from the bottom of the fork stem and bracket (12).
5. Remove the fork stem cap (1). Loosen pinch bolt (4) and remove fork stem bolt (2). Remove washer (3) with the handlebar and upper bracket (5) assembly.
6. Remove the fork stem and bracket (12) from the steering head. Remove the upper dust shield (6).
7. Remove upper bearing (7).

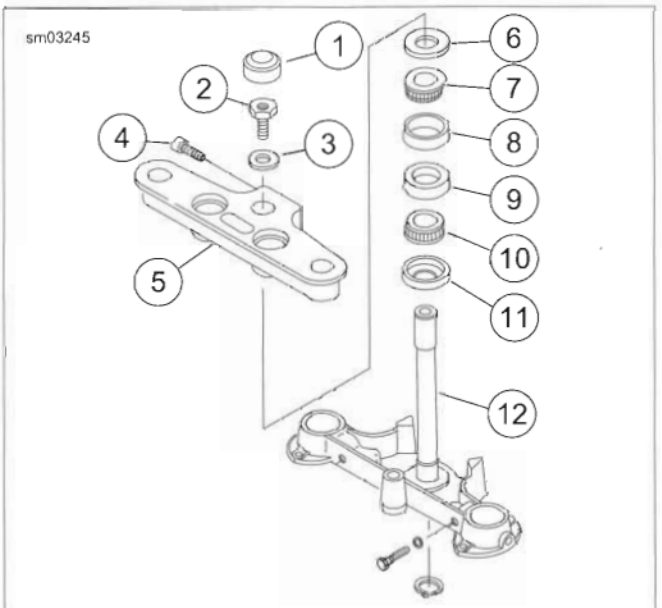

1. **Fork stem cap**
2. **Fork stem bolt**
3. **Washer**
4. **Pinch screw**
5. **Upper bracket**
6. **Upper dust shield**
7. **Upper bearing**
8. **Upper bearing race**
9. **Lower bearing race**
10. **Lower bearing**
11. **Lower dust shield**
12. **Fork stem and bracket**

Figure 2-83. Steering Head: FLSTC, FLSTF/B, FLSTN, FLS

FXST Model

1. Remove the fork sides. See 2.19 FRONT FORK.
2. Remove the headlamp and headlamp bracket.
3. See Figure 2-84. Remove the brake hose bracket from the bottom of the fork stem and bracket (13).
4. Remove the fork stem cap (1). Remove the fork stem nut (2) with the handlebar and upper bracket (4) as an assembly.
5. Remove the adjusting nut (6) and pull the fork stem and bracket (13) out of the steering head.
6. Remove the upper dust shield (7) and upper bearing (8) from steering head.

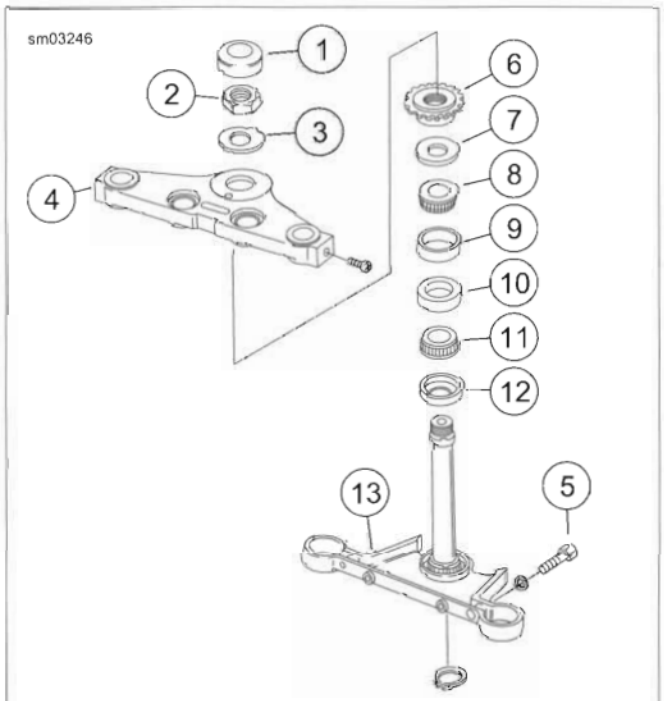

1. **Fork stem cap**
2. **Fork stem nut**
3. **Lockwasher**
4. **Upper bracket**
5. **Pinch bolt**
6. **Adjusting nut**
7. **Upper dust shield**
8. **Upper bearing**
9. **Upper bearing race**
10. **Lower bearing race**
11. **Lower bearing**
12. **Lower dust shield**
13. **Fork stem and bracket**

Figure 2-84. Steering Head: FXST

FXSB Models

1. Remove the fork sides. See 2.19 FRONT FORK.
2. Remove the headlamp and headlamp bracket.
3. See Figure 2-85. Remove the brake hose bracket from the bottom of the fork stem and bracket (12).
4. Remove the fork sides. See 2.19 FRONT FORK.

5. Remove speedometer. See 7.26 SPEEDOMETER.
6. Remove the fork stem nut (1) with the handlebars and upper bracket (4) as an assembly.
7. Remove the adjusting nut (5) and pull the fork stem and bracket out of the steering head.
8. Remove the upper dust shield (6) and upper bearing (7) from steering head.

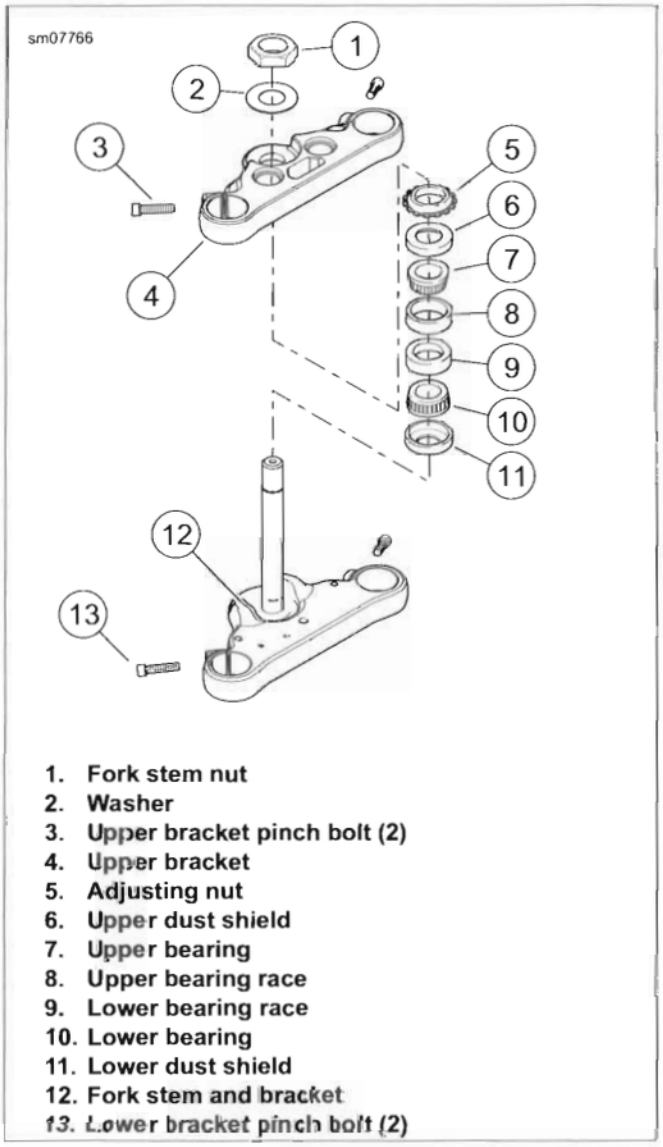

1. **Fork stem nut**
2. **Washer**
3. **Upper bracket pinch bolt (2)**
4. **Upper bracket**
5. **Adjusting nut**
6. **Upper dust shield**
7. **Upper bearing**
8. **Upper bearing race**
9. **Lower bearing race**
10. **Lower bearing**
11. **Lower dust shield**
12. **Fork stem and bracket**
13. **Lower bracket pinch bolt (2)**

Figure 2-85. Steering Head: FXSB

INSPECTION

All Models

1. Check upper and lower bearing races in steering head. If they are pitted or grooved, replace the bearings and races in sets.
2. Check the roughness of the bearings by turning them in the race. Replace bearings if they do not turn freely and smoothly.

DISASSEMBLY

PART NUMBER	TOOL NAME
HD-33416	UNIVERSAL DRIVER HANDLE
HD-39301A	STEERING HEAD BEARING RACE REMOVER

NOTICE

Replace both bearing assemblies even if one assembly appears to be good. Mismatched bearings can lead to excessive wear and premature replacement. (00532c)

Removing Lower Bearings From Fork Stem

1. Chisel cage that holds rollers on bearing.
2. Turn the fork stem upside down and heat the inner race. The race will expand and fall off fork stem. Once the race is removed, you will be able to remove the lower dust shield.

Steering Head Bearing Race Removal

1. See Figure 2-86. With the tapered side down, seat the two-piece removal tool from the STEERING HEAD BEARING RACE REMOVER (Part No. HD-39301A) on the upper bearing race leaving a gap in the middle.
2. Install the driver handle adapter on the UNIVERSAL DRIVER HANDLE (Part No. HD-33416).
3. Insert the driver at the bottom of the steering head tube, and while holding the remover tool on the race, center the collet in the gap. Tap the driver to remove the upper race.
4. Reverse the tool and repeat the procedure to remove the lower bearing race.

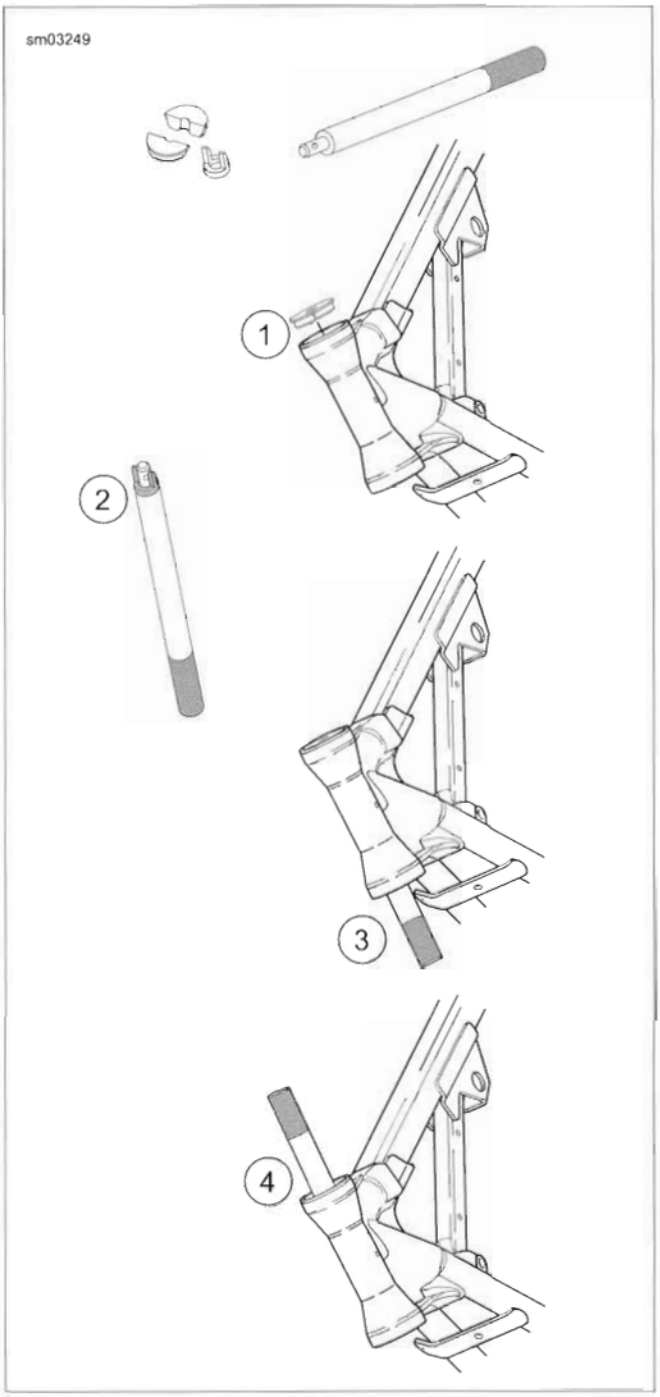

Figure 2-86. Remove Upper and Lower Steering Head Bearing Races

ASSEMBLY

PART NUMBER	TOOL NAME
HD-39302	STEERING HEAD BEARING RACE INSTALLER

1. Lubricate outside of the bearing races with engine oil.
2. Install the **new** races using STEERING HEAD BEARING RACE INSTALLER (Part No. HD-39302).

NOTE

*Use care not to damage the **new** races' tapered surface. The race should be firmly seated against the shoulder in the bore.*

3. Pack the **new** bearings with SPECIAL PURPOSE GREASE.
4. Install the lower dust shield on the fork stem. Press the lower bearing into place. Use a sleeve that will contact only the inner race of the **new** bearing.

INSTALLATION

FASTENER	TORQUE VALUE	
Brake hose bracket bolt, front	96-120 **in-lbs**	10.8-13.6 Nm
Fork stem upper bracket pinch bolt: FLSTC, FLSTF/B, FLSTN, FLS	25-30 ft-lbs	33.9-40.7 Nm
Brake hose bracket bolt, front	96-120 **in-lbs**	10.8-13.6 Nm
Fork stem nut: FXST	70-80 ft-lbs	94.9-108.4 Nm
Brake hose bracket bolt, front	96-120 **in-lbs**	10.8-13.6 Nm
Fork stem nut: FXSB	70-80 ft-lbs	94.9-108.4 Nm

FLSTC, FLSTF/B, FLSTN, FLS Models

1. See Figure 2-83. Insert the fork stem and bracket assembly (12) (with lower dust shield and bearing) into the frame steering head. Install the upper bearing (7) and dust shield (6).
2. Install the upper bracket (5), a **new** washer (3), and fork stem bolt (2). Tighten the fork stem bolt until the bearings have no noticeable shake. Fork stem must turn freely from side to side.
3. Fasten the brake hose bracket to bottom bracket using original hardware. Tighten bolt to 96-120 **in-lbs** (10.8-13.6 Nm).
4. Install the headlamp assembly.
5. Install the fork sides.
6. Fill neck with SPECIAL PURPOSE GREASE through grease fitting located in the steering head.

⚠WARNING

Properly adjust fork stem bearings. Improper adjustments can adversely affect stability and handling, which could result in death or serious injury. (00301c)

7. Adjust fall-away. See 1.18 STEERING HEAD BEARINGS.
8. Apply ANTI-SEIZE LUBRICANT to upper bracket pinch bolt (4). Tighten to 25-30 ft-lbs (33.9-40.7 Nm).
9. Install the fork stem cap (1).

FXST Models

1. See Figure 2-84. Insert the fork stem bracket assembly (13) (with lower dust shield and bearing) into the frame steering head and install the upper bearing (8) and dust shield (7). Secure with the adjusting nut (6).
2. Install the upper bracket (4), a **new** lockwasher (3), and fork stem nut (2). Be sure pin on lockwasher is engaged in upper bracket hole.

3. Fasten the brake hose bracket to bottom bracket using original hardware. Tighten bolt to 96-120 **in-lbs** (10.8-13.6 Nm).
4. Install the headlamp assembly.
5. Install the fork sides.
6. Fill neck with SPECIAL PURPOSE GREASE through grease fitting located in the steering head.

⚠WARNING

Properly adjust fork stem bearings. Improper adjustments can adversely affect stability and handling, which could result in death or serious injury. (00301c)

7. Adjust fall-away. See 1.18 STEERING HEAD BEARINGS.
8. Tighten fork stem nut (2) to 70-80 ft-lbs (94.9-108.4 Nm).
9. Install the fork stem cap (1).

FXSB Model

1. See Figure 2-85. Insert the fork stem bracket assembly (12), with lower dust shield and bearing, into the frame steering head and install the upper bearing (7) and dust shield (6). Secure with the adjusting nut (5).
2. Install the upper bracket (4), washer (2), and fork stem nut (1).
3. Fasten the brake hose bracket to bottom bracket using original hardware. Tighten bolt to 96-120 **in-lbs** (10.8-13.6 Nm).
4. Install the headlamp assembly.
5. Install the fork sides. See 2.19 FRONT FORK.
6. Fill neck with SPECIAL PURPOSE GREASE through grease fitting located in the steering head.

⚠WARNING

Properly adjust fork stem bearings. Improper adjustments can adversely affect stability and handling, which could result in death or serious injury. (00301c)

7. Adjust fall-away. See 1.18 STEERING HEAD BEARINGS.
8. Tighten fork stem nut (1) to 70-80 ft-lbs (94.9-108.4 Nm).

REMOVAL

Belt Guard

1. Remove left saddlebag if present.
2. See Figure 2-87. Remove acorn bolt (9) from tee nut (7).
3. Remove acorn nut (4) to detach belt guard (5).

Debris Deflector

1. Remove left saddlebag if present.
2. Remove lower acorn bolt (3).
3. Loosen, but do not remove, bolt (1) at front (slotted) portion of deflector.
4. Remove acorn nut (4). Lift debris deflector up and away from frame.

INSTALLATION

Belt Guard

1. See Figure 2-87. Place the belt guard (5) into position. Tab for bolt and washer (6) must fit inboard of tab on debris deflector (2).
2. Install bolt and washer (6) through belt guard (5), debris deflector (2) and rear fork. Install acorn nut (4) securely.
3. Install acorn bolt (9) onto tee nut (7).
4. Install left saddlebag if removed.

Debris Deflector

1. Place debris deflector (2) into position. Slotted opening on front of deflector slides over bolt (1). Do not tighten bolt at this time.
2. Install bolt and washer (6) through belt guard (5), debris deflector (2) and rear fork. Install acorn nut (4) securely.
3. Install lower acorn bolt (3) and tighten bolt (1) at front of deflector.
4. Install left saddlebag if removed.

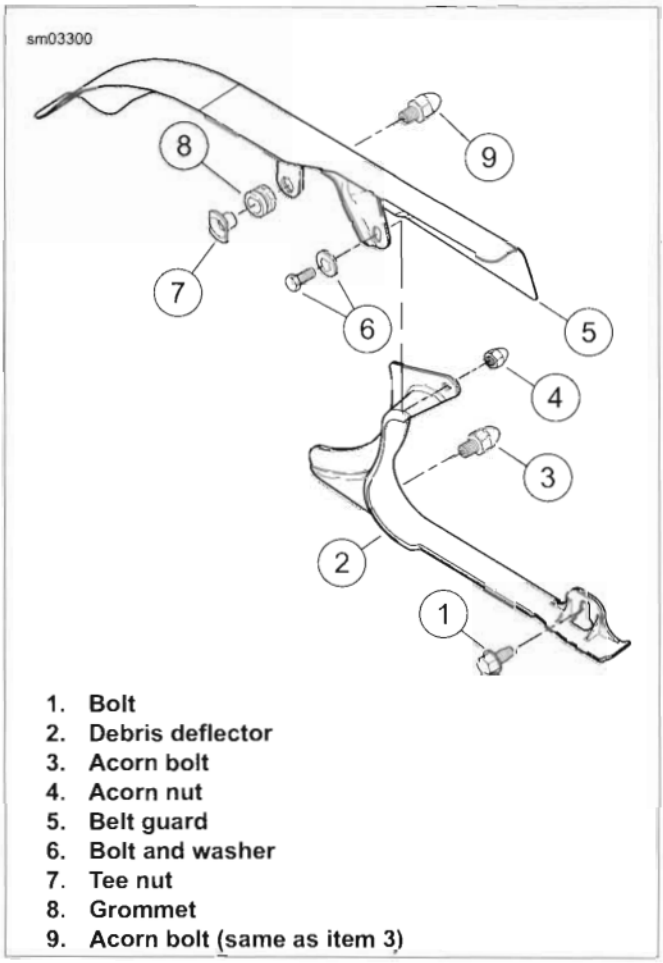

1. **Bolt**
2. **Debris deflector**
3. **Acorn bolt**
4. **Acorn nut**
5. **Belt guard**
6. **Bolt and washer**
7. **Tee nut**
8. **Grommet**
9. **Acorn bolt (same as item 3)**

Figure 2-87. Belt Guard/Debris Deflector

GENERAL

The rear shock absorbers are not repairable. If either shock absorber becomes damaged, it must be replaced as an assembly.

NOTE

See 1.21 SUSPENSION ADJUSTMENTS for information regarding setting up the suspension for carrying cargo.

REMOVAL

PART NUMBER	TOOL NAME
SRES24	SNAP-ON-ADAPTER

1. Remove exhaust system. See 4.17 EXHAUST SYSTEM, System: FLSTC, FXST, FXSB.
2. Remove HCU lower clamp fastener to allow for enough clearance to remove left shock absorber. See 2.17 ABS: HYDRAULIC CONTROL UNIT (HCU), Rear Hydraulic Control Unit (HCU).
3. See Figure 2-88. Remove jounce bumper (6) to raise rear fork enough to remove right shock.
4. Using a suitable lift, support motorcycle under frame until rear tire is slightly off the ground.
5. Remove bolt and washer (1) attaching shock to rear fork.

NOTE

SNAP-ON-ADAPTER (Part No. SRES24) is necessary to gain access to shock bolt.

6. Remove flange locknut (5) and washer with grommet (4) at front of shock.

INSTALLATION

PART NUMBER	TOOL NAME
SRES24	SNAP-ON-ADAPTER
SS-306G	SNAP-ON TORQUE COMPUTER

FASTENER	TORQUE VALUE	
Shock bolt, rear	121-136 ft-lbs	164.0-184.4 Nm
Shock locknut, rear	32-39 ft-lbs	43.4-52.9 Nm

1. See Figure 2-88. Place washer with grommet (4) inside frame. Install bushing (3) over stud end of shock. Insert stud end through keyed frame tab and loosely install the flange locknut (5).
2. Coat shoulder of bolt (1) with ANTI-SEIZE LUBRICANT and threads of bolt with LOCTITE 243 MEDIUM STRENGTH THREADLOCKER AND SEALANT (blue). Insert bolt and washer (1) through shock end. Pivot shock absorber to align bolt with hole in rear fork.

NOTE

Softail shock absorber bolt torquing procedure requires the use of a SNAP-ON-ADAPTER (Part No. SRES24). Since the adapter lengthens the torque wrench, torque must be computed with a SNAP-ON TORQUE COMPUTER (Part No. SS-306G).

3. Tighten rear shock hardware.
   a. Tighten bolt and washer (1) at rear of shock to 121-136 ft-lbs (164.0-184.4 Nm).
   b. Tighten the flange locknut (5) to 32-39 ft-lbs (43.4-52.9 Nm).
4. Adjust both shock absorbers equally. See 1.21 SUSPENSION ADJUSTMENTS.
5. Install jounce bumper (6).
6. Install HCU lower clamp fastener. See 2.17 ABS: HYDRAULIC CONTROL UNIT (HCU), Rear Hydraulic Control Unit (HCU).
7. Install exhaust system. See 4.17 EXHAUST SYSTEM, System: FLSTC, FXST, FXSB.

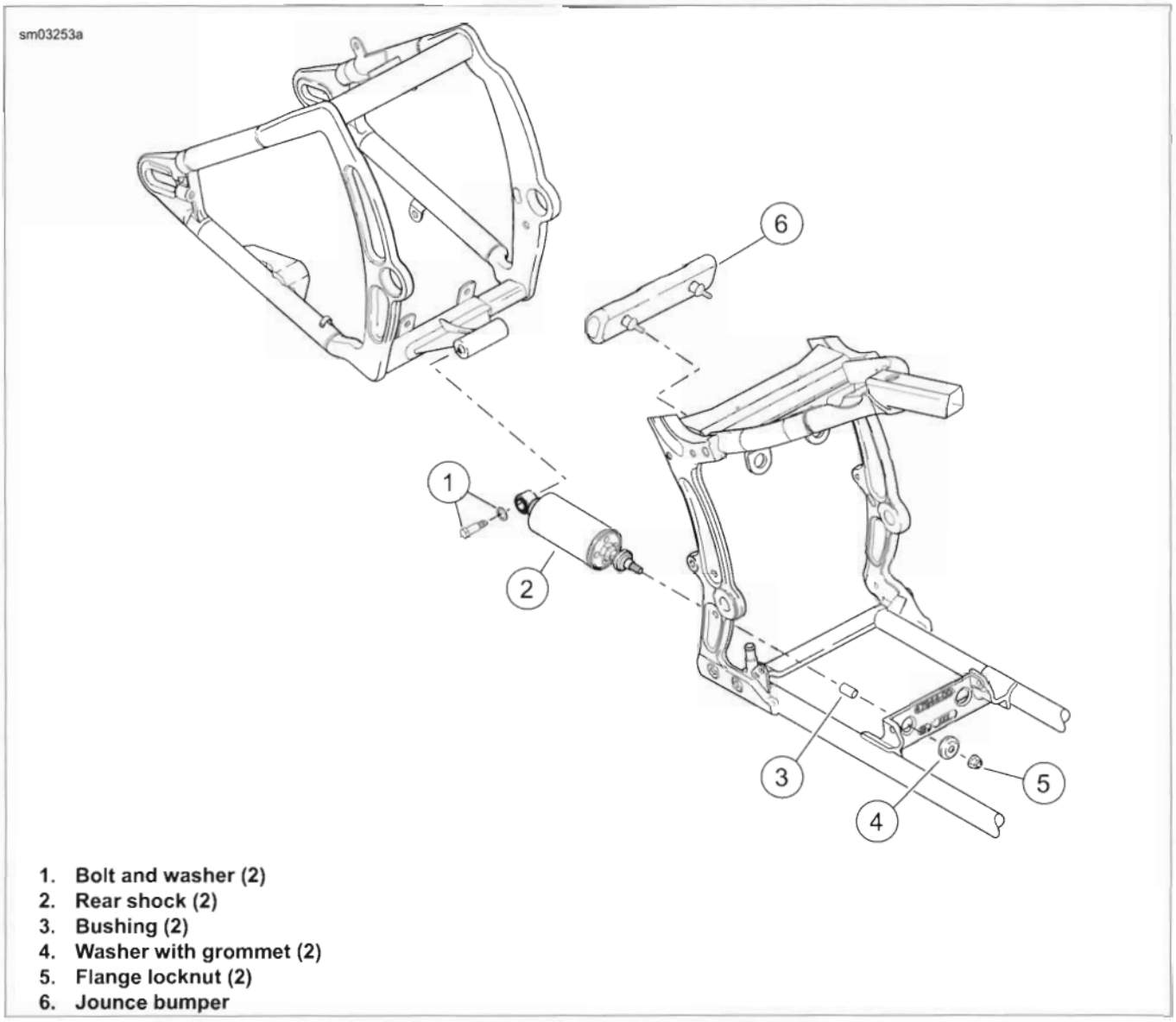

1. **Bolt and washer (2)**
2. **Rear shock (2)**
3. **Bushing (2)**
4. **Washer with grommet (2)**
5. **Flange locknut (2)**
6. **Jounce bumper**

Figure 2-88. Rear Shocks

SHOCK DISPOSAL

1. Disassemble the shock absorber.

NOTE

The damper reservoir contains nitrogen gas and oil under pressure. Do not drill into the oil chamber.

2. See Figure 2-89. Center punch the reservoir between the weld and the reservoir can.
3. Support the reservoir in a vise.

⚠WARNING

Do not expose shock absorber to heat source. Exposure to heat source can build excessive gas pressure, which could cause explosion and result in death or serious injury. (00600b)

- Use sharp drill bit to prevent excessive heat build up when discharging.

4. Install a 6/64-1/8 in. bit in a drill.

⚠WARNING

Discharging pressurized oil and gas can pierce skin and cause flying debris, which could cause serious injury. Wear safety glasses and gloves. (00601b)

5. Drill at the punch mark retracting the drill as it penetrates the shell.
6. Allow the gas to escape.
7. Dispose of the shock absorber.

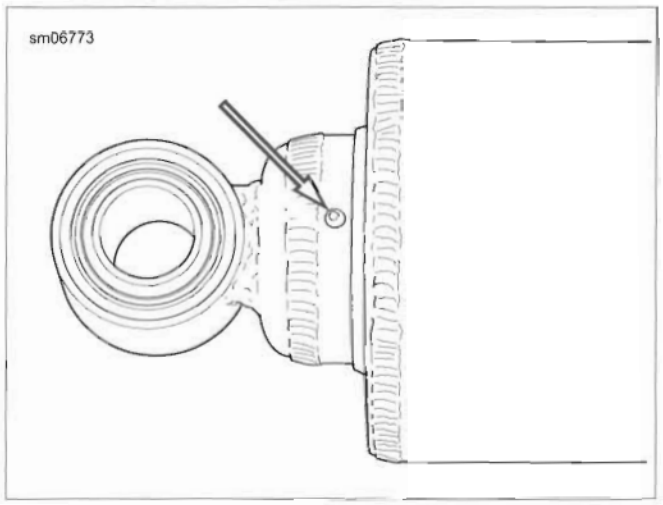

Figure 2-89. Center Punch/Drill Hole Location

REMOVAL

1. Remove the rear wheel, rear brake caliper, and caliper mounting bracket. See 2.5 REAR WHEEL.
2. **All But FXSB:** See Figure 2-90. Remove bolt (1) from splash guard (2). Lift up on lower tabs and pull lower end of splash guard rearward. Remove splash guard from rear fork.
3. **FXSB:** Pull splash guard away from rear fork.
4. Remove the rear shock absorber bolts and washers (8) only. See 2.22 REAR SHOCK ABSORBERS.

NOTE

When removing pivot shaft, make note of spacer position on each side of transmission. Spacers differ slightly in length from each other and must be installed on the same side from which they were removed. Refer to Table 2-18.

5. Remove pivot shaft (4) and two spacers (11, 12). Remove the two bushings (10) inside the spherical bearings (7). The rear fork can now be removed from the frame.

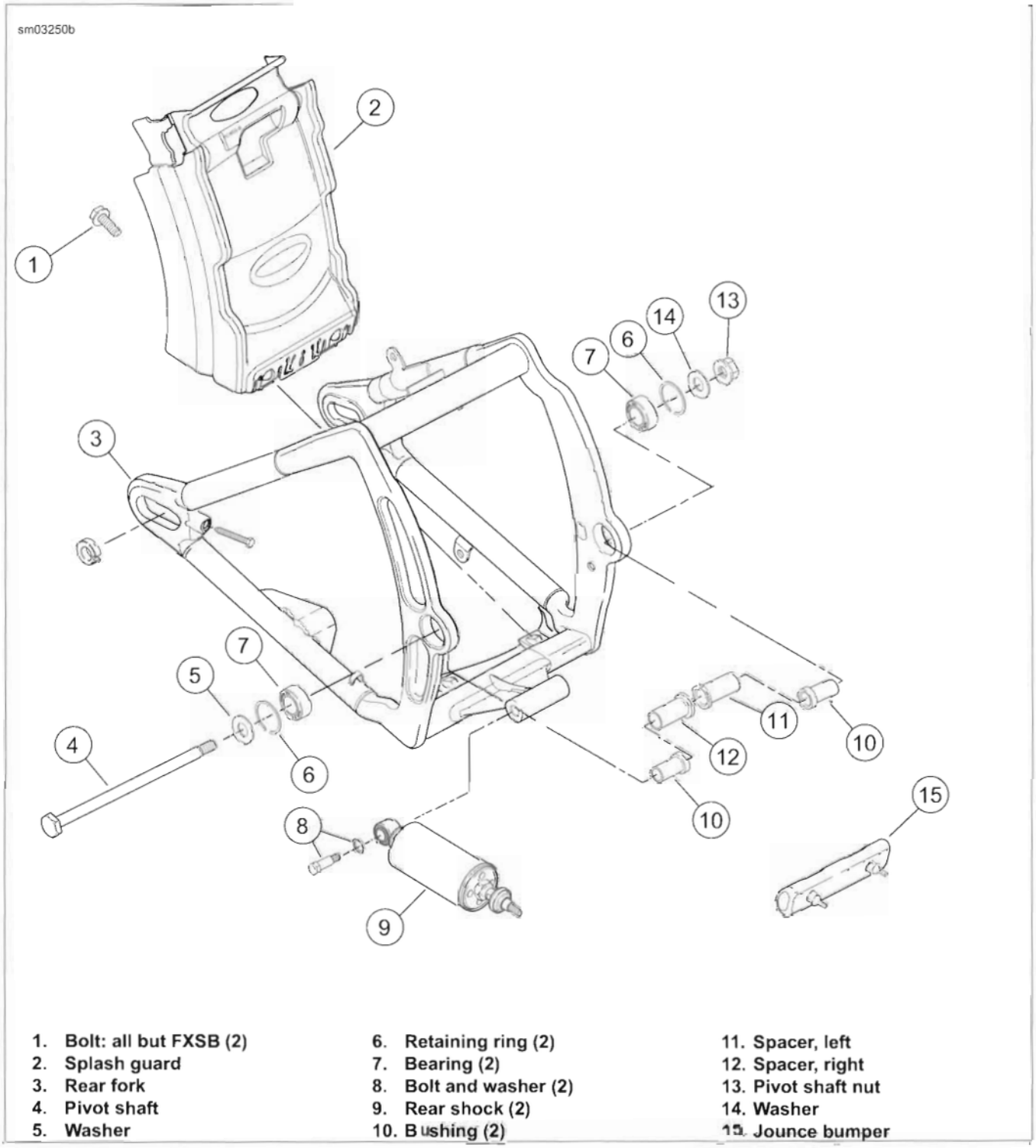

1. **Bolt: all but FXSB (2)**
2. **Splash guard**
3. **Rear fork**
4. **Pivot shaft**
5. **Washer**
6. **Retaining ring (2)**
7. **Bearing (2)**
8. **Bolt and washer (2)**
9. **Rear shock (2)**
10. **Bushing (2)**
11. **Spacer, left**
12. **Spacer, right**
13. **Pivot shaft nut**
14. **Washer**
15. **Jounce bumper**

Figure 2-90. Rear Fork

CLEANING AND INSPECTION

The spherical bearings are lifetime lubricated. No further attention other than cleaning is required. The sleeve type spherical bearings, if not damaged, will last the life of the motorcycle.

Clean the bearing bore with a clean shop towel, removing any dirt or grit adhering to the bearing surface.

Rough check the rear fork for correct alignment. Replace the rear fork if bent.

PIVOT BEARING REPLACEMENT

1. Remove the rear fork from the vehicle. See 2.23 REAR FORK, Removal.

NOTE

The retaining ring fits into a machined groove on the bearing and can be removed with the bearing.

2. Press out the fork pivot bearing with a suitable driver from the center of the fork toward the outside.
3. Install a **new** retaining ring onto a **new** bearing.

4. Position the bearing assembly against the outboard side of the rear fork pivot boss with the retaining ring outboard.
5. Press the bearing assembly into the rear fork pivot boss using a suitable driver.
6. Repeat for the other side.
7. Install rear fork on vehicle. See 2.23 REAR FORK, Installation.

INSTALLATION

FASTENER	TORQUE VALUE	
Pivot shaft nut	90-110 ft-lbs	122.1-149.3 Nm

1. See Figure 2-90. Install jounce bumper (15), if removed.
2. Place rear fork (3) in the frame so that the bores in the frame align with the bores in the fork. Insert the bushings (10) into the spherical bearings (7) from the inside.
3. Install pivot shaft (4).
   a. Apply ANTI-SEIZE LUBRICANT to pivot shaft.

   NOTE

   Spacers differ slightly in length from each other and must be installed on the same side from which they were removed. Spacers are identified by the number of machined lines. Refer to Table 2-18.

   b. From the right side, install pivot shaft (4) and spacers (11, 12) with spacer collars facing transmission case.
   c. Apply LOCTITE 262 HIGH STRENGTH THREADLOCKER AND SEALANT (red) to threads of pivot shaft nut. Install and tighten pivot shaft nut to 90-110 ft-lbs (122.1-149.3 Nm).

   NOTE

   Proper pivot shaft tightening is important to maintain rear fork alignment.

4. Check for freedom of rotation of the rear fork around the bearings and that the fork and frame side members have not been distorted when the pivot shaft nut was tightened.
5. Install the evaporative canister (California models). See 4.19 EVAPORATIVE EMISSIONS CONTROL SYSTEM.
6. Install splash guard (2). Install bolts (1), if equipped.
7. Install caliper mounting bracket, rear wheel and brake caliper. See 2.5 REAR WHEEL.
8. Install both rear shock absorbers (9) using bolts and washers (8). See 2.22 REAR SHOCK ABSORBERS.

Table 2-18. Transmission Spacer Sizes

VEHICLE LEFT OR RIGHT SIDE	IN.	MM	NUMBER OF MACHINED LINES
Left side	1.946	49.43	2
Right side	1.569	39.85	1

REMOVAL/DISASSEMBLY

1. See Figure 2-91. Loosen cable adjuster jamnuts (1). Screw throttle cable adjuster until it is as short as possible. Remove the two screws that hold the handlebar housing together to separate the upper and lower housings.
2. Unhook the ferrules and cables from the throttle grip and lower housing.
3. Remove air cleaner assembly. See 4.3 AIR CLEANER ASSEMBLY.
4. Disconnect throttle cables from induction module. See 4.11 INDUCTION MODULE, Removal.
5. See Figure 2-92. Pull the cables from the housing by placing a drop of oil on the retaining ring that holds the cable in the housing, then firmly pull the bent tubing portion of the cable out of the housing using a rocking motion.

CLEANING AND INSPECTION

⚠WARNING

Compressed air can pierce the skin and flying debris from compressed air could cause serious eye injury. Wear safety glasses when working with compressed air. Never use your hand to check for air leaks or to determine air flow rates. (00061a)

1. Wash all components in non-flammable cleaning solvent. Blow parts dry with low pressure compressed air.
2. Replace the control cables if frayed, kinked or bent.
3. Put one or two drops of oil into the housing of each control cable.

ASSEMBLY/INSTALLATION

FASTENER	TORQUE VALUE	
Throttle control housing screws	35-45 in-lbs	4.0-5.1 Nm

1. Apply a light coating of graphite to the handlebar and inside surface of the housings.
2. See Figure 2-92. Attach the control cable assemblies to the lower housing.
   a. Push the silver insert of the throttle cable (1) housing into the hole in front of the tension adjuster screw.
   b. Push the gold diameter insert of the idle cable (5) housing into the hole at the rear of the tension adjuster screw.
   c. Install adjusting screw, spring and friction pad in the lower housing if they were removed.
3. Position the throttle grip on the handlebar. Place the lower housing on the throttle. Position the ferrules and retaining rings over the cable balls and seat them in the throttle notches.

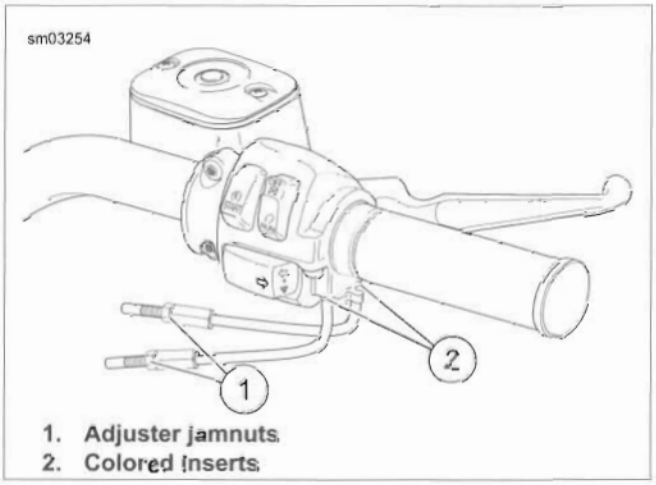

1. Adjuster jamnuts
2. Colored inserts

Figure 2-91. Handlebar Throttle Control

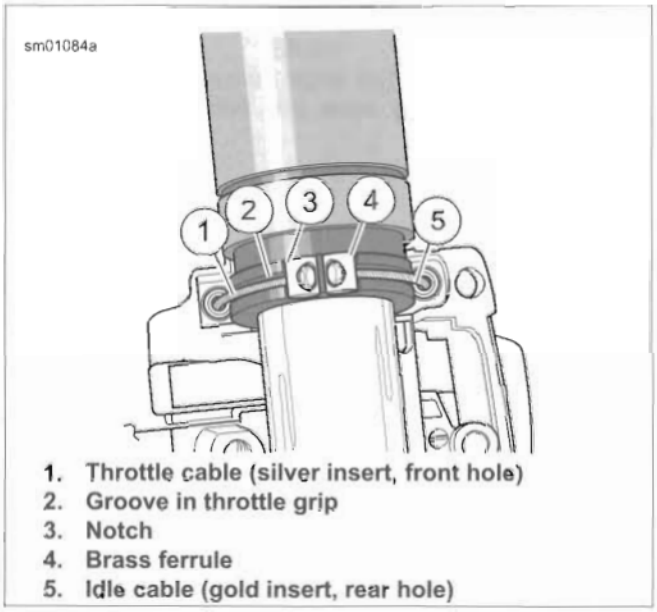

1. Throttle cable (silver insert, front hole)
2. Groove in throttle grip
3. Notch
4. Brass ferrule
5. Idle cable (gold insert, rear hole)

Figure 2-92. Throttle Cable Attachment

⚠WARNING

Do not tighten throttle friction adjustment screw to the point where the engine will not return to idle automatically. Over-tightening can lead to loss of vehicle control, which could result in death or serious injury. (00031b)

4. Fasten upper housing to lower housing using two screws. Tighten to 35-45 in-lbs (4.0-5.1 Nm).

⚠WARNING

Pinched throttle cables can restrict throttle response, which could result in loss of control and death or serious injury. (00423b)

5. Make sure throttle cables are routed below the handlebars and behind the fork bracket. They continue under the fuel tank through two cable clamps and back to throttle body.

6. Install throttle cables on induction module. See 4.11 INDUCTION MODULE, Installation.
7. Adjust throttle cables. See 1.13 THROTTLE CABLES.
8. Install air cleaner. See 4.3 AIR CLEANER ASSEMBLY.

REMOVAL

1. Loosen clutch adjuster so clutch cable is fully slack. See 1.11 CLUTCH.
2. See Figure 2-93. Remove the retaining ring (2) and pivot pin (4). Remove the clutch cable anchor pin (1) from the hand lever.

⚠WARNING

Wear safety glasses or goggles when removing or installing retaining rings. Retaining rings can slip from the pliers and could be propelled with enough force to cause serious eye injury. (00312a)

3. Drain transmission lubricant and remove fill plug dipstick. Remove transmission side cover. See 6.5 CLUTCH RELEASE COVER.
4. See Figure 2-94. Note position of retaining ring (1) opening. Retaining ring opening must be positioned in approximately the same location during assembly. Remove retaining ring.
5. Pull inner ramp (2) and ramp coupling (3) out of side cover. Hold inner and outer ramps together to keep balls from falling free.
6. Rotate the inner ramp to a position which will allow the coupling to be disconnected from the inner ramp lever arm. Disconnect coupling from inner ramp. Disconnect cable end (4) from coupling.
7. Back out threaded cable fitting (5) from side cover.

INSTALLATION

1. See Figure 2-93. Insert anchor pin (1) through handle and clutch cable clevis (3).
2. Place handle in bracket and install pivot pin (4) and retaining ring (2).
3. Check that clutch cable is properly routed.
   a. Route clutch cable across the front of handlebars for the following model: FXST. Route clutch cable behind handlebars for the following models: FLSTF/B, FLSTC, FLSTN.
   b. Route cable down to clamp on left frame downtube.
   c. Route cable under engine mount spacer, gear cover, and through bracket.
   d. Route cable to transmission cover.
4. See Figure 2-94. Install new O-ring on end of clutch cable threads. Apply a drop of LOCTITE 243 MEDIUM STRENGTH THREADLOCKER AND SEALANT (blue) to clutch cable fitting. Screw fitting into clutch release cover. Do not tighten at this time.
5. Connect cable end to ramp coupling (3). Rotate ramps for best access and install coupling on inner ramp (2). Place ramp assembly in position in side cover.

⚠WARNING

Wear safety glasses or goggles when removing or installing retaining rings. Retaining rings can slip from the pliers and could be propelled with enough force to cause serious eye injury. (00312a)

6. Install retaining ring (1). Position retaining ring opening to the right of the outer ramp tang (the stop that prevents rotation).
7. Place **new** gasket on side cover and install, fully tightening the clutch cable fitting. See 6.5 CLUTCH RELEASE COVER.
8. Place a few drops of oil inside cable housing.

NOTE

Anchor pin does not require lubrication.

9. Adjust clutch cable. See 1.11 CLUTCH.

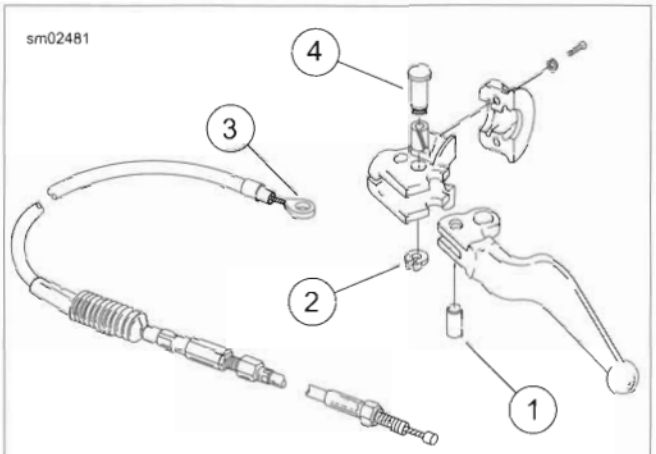

1. **Anchor pin**
2. **Retaining ring**
3. **Clevis**
4. **Pivot pin**

Figure 2-93. Clutch Cable Installation

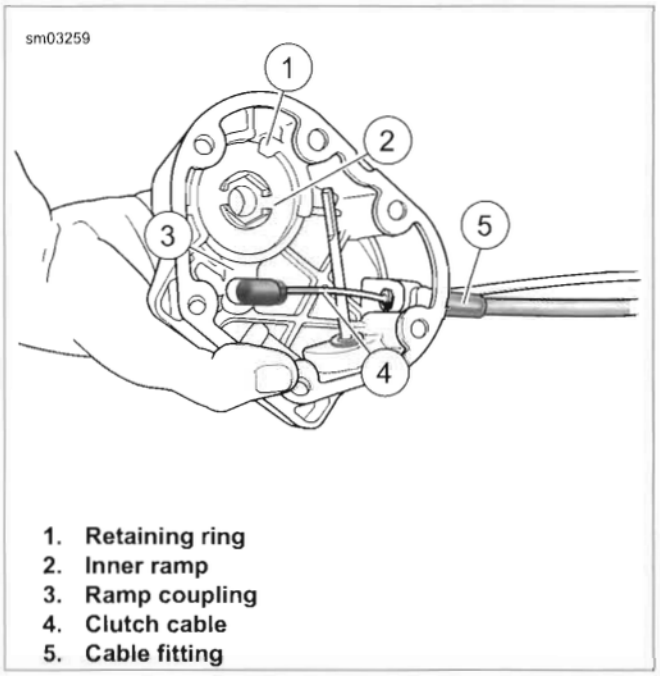

1. Retaining ring
2. Inner ramp
3. Ramp coupling
4. Clutch cable
5. Cable fitting

Figure 2-94. Clutch Cable Connection

REMOVAL AND INSTALLATION

Removal

Slice the hand grip open with a sharp knife. Peel the hand grip open to remove.

Installation

1. Rough the left grip end of the handlebar with emery cloth.
2. Clean the grip end with acetone.
3. Apply LOCTITE 770 PRISM PRIMER to the inside of a **new** hand grip. Remove any excess primer with a clean cloth. Wait two minutes for the primer to set.
4. Apply LOCTITE 411 PRISM INSTANT ADHESIVE to the inside of the **new** hand grip.

NOTE

LOCTITE 411 PRISM INSTANT ADHESIVE will set in four minutes and cure in 24 hours.

5. Install the **new** hand grip with a twisting motion.

REMOVAL

⚠WARNING

To prevent accidental vehicle start-up, which could cause death or serious injury, remove main fuse before proceeding. (00251b)

1. Remove main fuse.
2. Cover fuel tank to protect from damage.
3. Remove front master cylinder, right handlebar switch assembly, and throttle. See 7.37 RIGHT HANDLEBAR CONTROL MODULE.
4. Remove clutch control and left handlebar switch assembly. See 7.38 LEFT HANDLEBAR CONTROL MODULE.

NOTE

Original equipment grip is glued in place and must be cut off. Remove grip only if necessary.

5. Remove left handlebar grip.
6. See Figure 2-95. Remove upper handlebar clamp fasteners (2).
   a. **FLSTC/FXST:** remove upper handlebar clamp (4).
   b. **FLSTN/FLS:** remove upper handlebar clamp (3).
7. Remove handlebar (1).
8. If removing lower handlebar clamps (6), remove two lower handlebar clamp fasteners (13), lockwashers (12), and lower handlebar clamps from upper fork bracket (10). Replace bushings (8) if necessary.

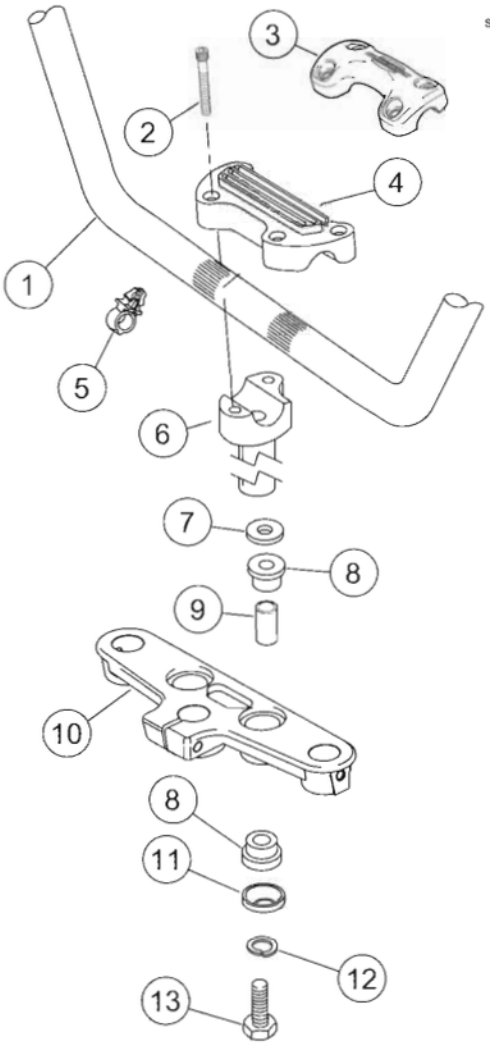

1. **Handlebar**
2. **Upper handlebar clamp fastener (4)**
3. **Upper handlebar clamp (FLSTN/FLS)**
4. **Upper handlebar clamp (FLSTC/FXST)**
5. **Wire harness retainer (4)**
6. **Lower handlebar clamp (2)**
7. **Upper cup washer (2)**
8. **Bushing (2)**
9. **Spacer (2)**
10. **Upper fork bracket (typical)**
11. **Lower cup washer (2)**
12. **Lockwasher (2)**
13. **Lower handlebar clamp fastener (2)**

Figure 2-95. Handlebars: All but FLSTF/B

INSTALLATION

FASTENER	TORQUE VALUE	
Handlebar clamp rear fasteners: FLSTC, FLSTN, FLS, FXST	12-15 ft-lbs	16.3-20.3 Nm
Handlebar clamp front fasteners: FLSTC, FLSTN, FLS, FXST	12-15 ft-lbs	16.3-20.3 Nm
Handlebar clamp fasteners, lower: FLSTC, FLSTN, FLS, FXST	30-40 ft-lbs	40.7-54.3 Nm

1. See Figure 2-95. If lower handlebar clamps (6) were removed, install lockwashers (12) on lower handlebar clamp fasteners (13).

NOTE

In next step, make sure cup washers (7, 11), bushings (8) and spacer (9) are in position in upper fork bracket (10).

2. Slide lower handlebar clamp fasteners through upper fork bracket.
3. Loosely install lower handlebar clamps to upper fork bracket using lower handlebar clamp fasteners.
4. See Figure 2-96. Place handlebars on lower handlebar clamps. Install upper handlebar clamps. Install but do not tighten clamp fasteners.
5. Using knurled areas of handlebar as a guide, center handlebars between lower handlebar clamps.

NOTE

On some models, knurled areas of handlebar will be completely hidden by upper handlebar clamp and will not be visible at all when handlebar is centered properly.

6. Raise handlebars to normal riding position and hold in position.
7. Secure handlebars in clamp:
   a. Hand tighten two front screws (4).
   b. Tighten rear fasteners (3) to 12-15 ft-lbs (16.3-20.3 Nm).
   c. Final tighten two front screws (4) to 12-15 ft-lbs (16.3-20.3 Nm). Slight gap between upper and lower clamps should exist at front.
8. See Figure 2-95. Tighten lower handlebar clamp fasteners (15) to 30-40 ft-lbs (40.7-54.3 Nm).
9. Install right and left switch assemblies, throttle control, clutch lever assembly, and front master cylinder assembly. See 7.37 RIGHT HANDLEBAR CONTROL MODULE and 7.38 LEFT HANDLEBAR CONTROL MODULE.
10. Test front brake lever for pressure and operation.
11. Test throttle for correct operation. Adjust as required. See 1.13 THROTTLE CABLES.
12. Install main fuse.

⚠WARNING

After installing seat, pull upward on seat to be sure it is locked in position. While riding, a loose seat can shift causing loss of control, which could result in death or serious injury. (00070b)

13. Install seat.

⚠WARNING

Be sure that all lights and switches operate properly before operating motorcycle. Low visibility of rider can result in death or serious injury. (00316a)

14. Turn the ignition/light key switch to IGNITION and test lights and switches for proper operation.
15. Apply brake lever to test stop lamp.

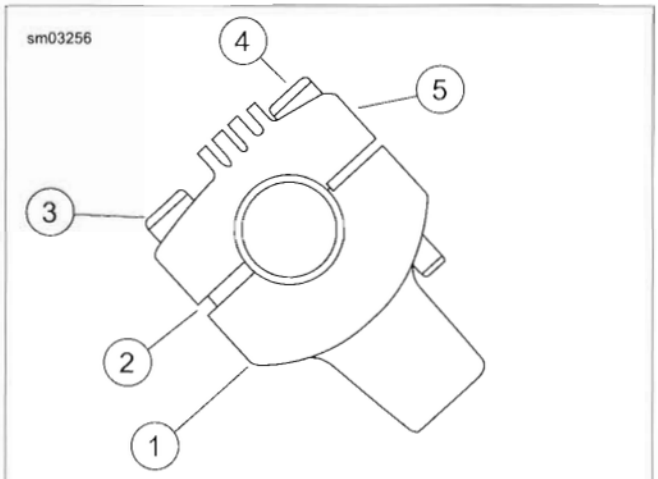

1. **Lower clamp (2)**
2. **Cast-in spacers (2)**
3. **Rear screw (2)**
4. **Front screw (2)**
5. **Upper clamp**

Figure 2-96. Handlebar Riser

REMOVAL

⚠WARNING

To prevent accidental vehicle start-up, which could cause death or serious injury, remove main fuse before proceeding. (00251b)

1. Remove main fuse.
2. See Figure 2-97. Remove acorn nut (1) and washer (2).
3. Remove instrument console and allow to hang off the left side. Suspend console using an elastic cord or piece of small rope to prevent strain on the harness.
4. Unplug fuel gauge connector located under the fuel tank.
5. Remove fuel tank fasteners, vent hose, and fuel supply fitting. Slide fuel tank back to access electrical connectors. See 4.6 FUEL TANK.
6. Place blanket or protective cover over front of fuel tank to protect against scratches and other damage.
7. Disconnect all left and right side hand control connectors from main harness.

NOTE

Make note of wire colors and locations in connector before removal to aid during installation.

8. Identify wire locations and remove terminals from hand control connector housings (left hand control connector [24], right hand control connector [22]). See A.19 MOLEX MX 150 SEALED CONNECTORS for connector information.
9. Remove terminals from turn signal lamp multilock connector. See A.21 TYCO 070 MULTILOCK UNSEALED CONNECTOR for connector information.
10. Remove front master cylinder, right handlebar switch assembly, and throttle. See 7.37 RIGHT HANDLEBAR CONTROL MODULE.
11. Remove clutch control and left handlebar switch assembly. See 7.38 LEFT HANDLEBAR CONTROL MODULE.

NOTE

Original equipment grip is glued in place and must be cut off to remove. Remove grip only if necessary.

12. Remove left handlebar grip.
13. Remove switch housings, turn signals and wiring from handlebars.
14. See Figure 2-98. Remove upper handlebar clamp fasteners (2) and upper handlebar clamps (3).
15. Remove handlebars.
16. If removing lower handlebar clamps (4), remove two lower handlebar clamp fasteners (12), lockwashers (11), washers (10), and lower handlebar clamps from upper fork bracket (8).

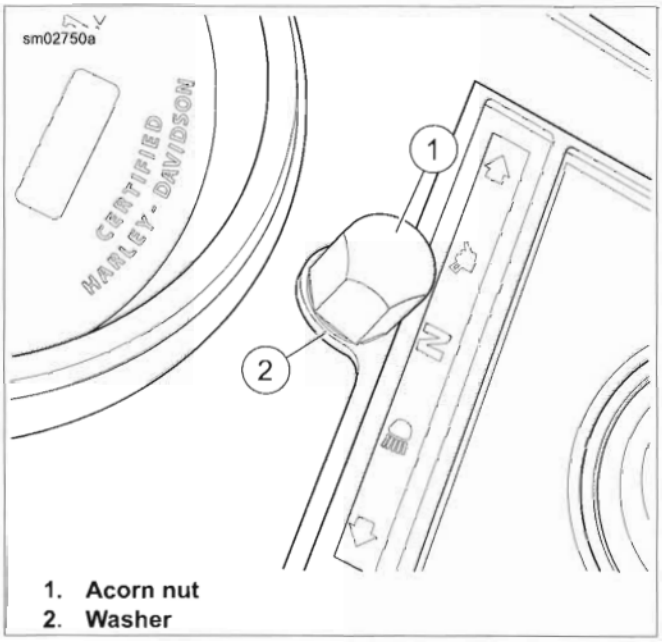

1. **Acorn nut**
2. **Washer**

Figure 2-97. Instrument Console

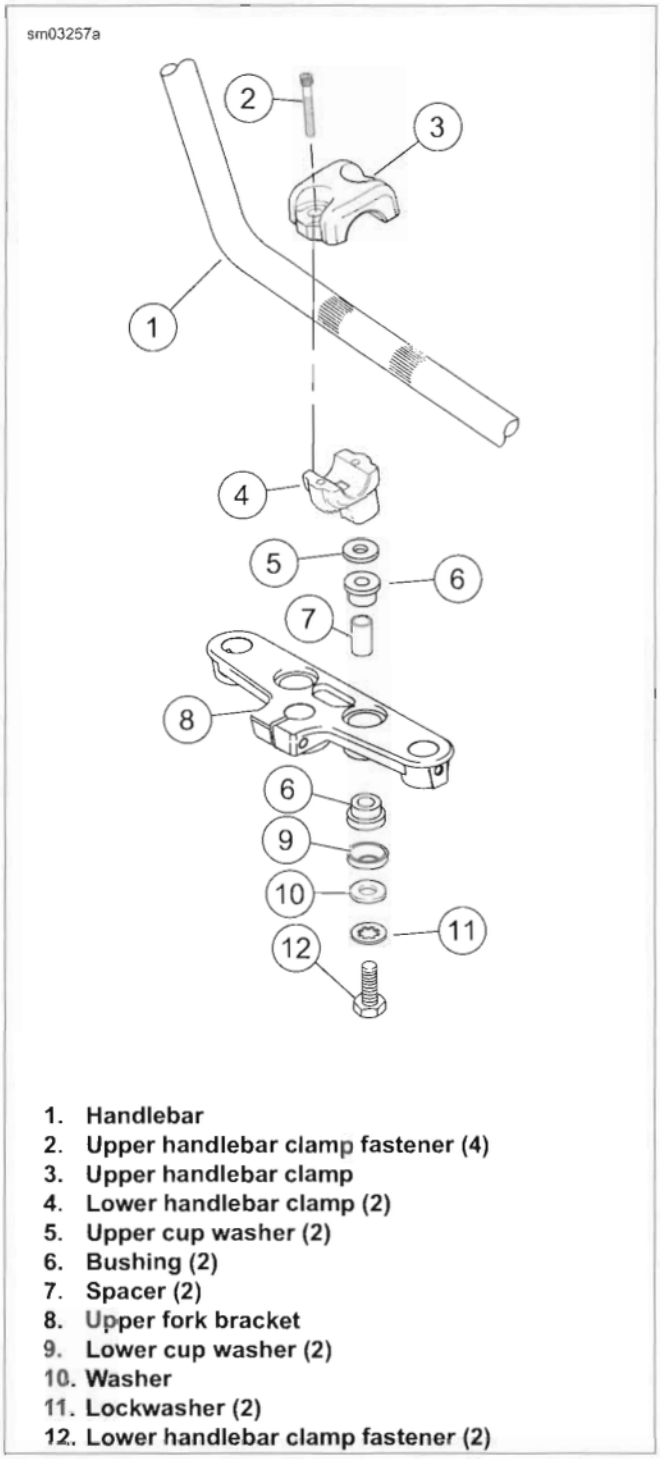

1. **Handlebar**
2. **Upper handlebar clamp fastener (4)**
3. **Upper handlebar clamp**
4. **Lower handlebar clamp (2)**
5. **Upper cup washer (2)**
6. **Bushing (2)**
7. **Spacer (2)**
8. **Upper fork bracket**
9. **Lower cup washer (2)**
10. **Washer**
11. **Lockwasher (2)**
12. **Lower handlebar clamp fastener (2)**

Figure 2-98. Handlebars: FLSTF/B

INSTALLATION

FASTENER	TORQUE VALUE	
Handlebar upper clamp fasteners; FLSTF/B	12-18 ft-lbs	16.3-24.4 Nm
Handlebar lower clamp fastener; FLSTF/B	30-40 ft-lbs	40.7-54.2 Nm

NOTE

The turn signal wires enter the switch housings through a relief grommet in the housing. The turn signals must be supported throughout this procedure to prevent pulling the grommet or the turn signal wires out of the housing.

1. Repair or replace switches, turn signal switches, wires and grommets as necessary.

NOTE

For handlebar switch repair procedures, see 7.36 HANDLEBAR CONTROL MODULES.

2. Wrap wire ends and open ends of conduit with electrical tape.
3. Cut a length of mechanics wire to use as a leader.
4. Lay mechanics wire along the wire harnesses so a few inches overlap and secure using electrical tape.
5. If necessary, replace grommets on handlebars wire openings.
6. Lubricate wire conduits with glass cleaner.
7. See Figure 2-99. Thread the wire leaders through the handlebar grommets and out the center hole.
8. Pull wire bundles through to the handlebar center hole.
9. Loosely install left and right switch housings.
10. Pull slack from wire harnesses and remove the tape and mechanics wire.

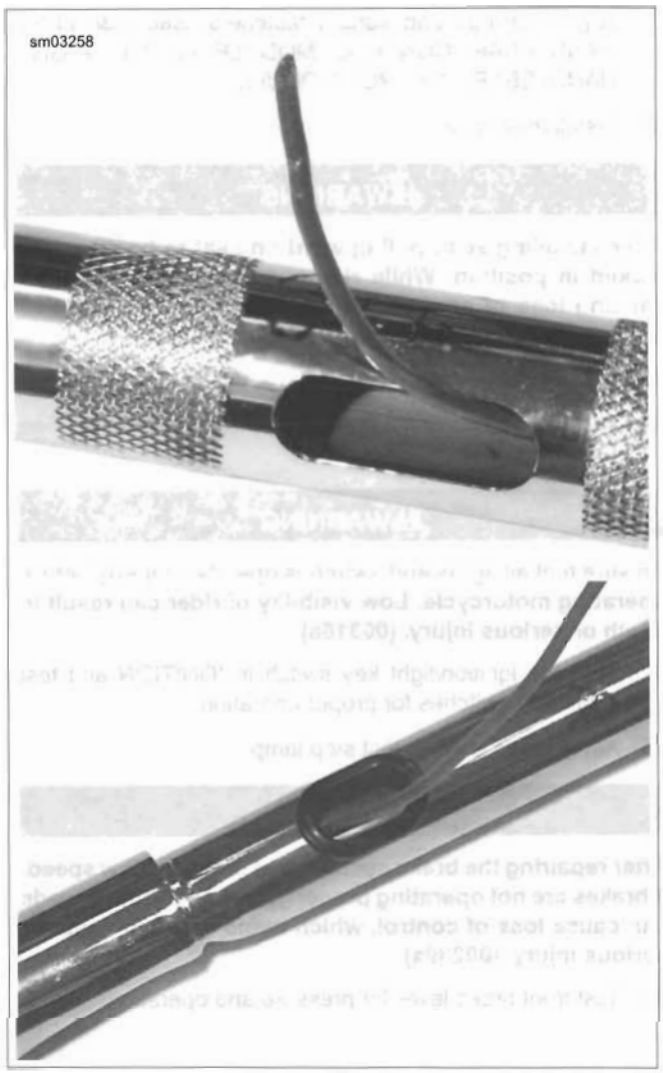

Figure 2-99. Wire Leader in Handlebars (handlebars removed from motorcycle)

11. See Figure 2-98. If lower handlebar clamps (4) were removed, install washers (10), and lockwashers (11) on lower handlebar clamp fasteners (12).
12. Slide lower handlebar clamp fasteners through upper fork bracket (8).
13. Loosely install lower handlebar clamps to upper fork bracket using lower handlebar clamp fasteners.
14. Place handlebars (1) on lower handlebar clamps. Install upper handlebar clamps (3). Install but do not tighten clamp fasteners.
15. Insert wires into proper locations in wire connector housings. See B.2 WIRING DIAGRAMS for connector/wire assignments.
16. Connect left and right hand control connectors [22, 24].
17. Connect turn signal connector [31].
18. Slide fuel tank into position and install fuel tank fasteners. Connect vent hose and fuel supply fitting. See 4.6 FUEL TANK.
19. Connect fuel gauge connector [117].
20. Install instrument console and secure with washer and acorn nut.
21. Using knurled areas of handlebar as a guide, center handlebars between lower handlebar clamps.

NOTE

On some models, knurled areas of handlebar will be completely hidden by upper handlebar clamp when handlebar is centered properly.

22. Raise handlebars to normal riding position and hold in position.

NOTE

Gap between upper and lower clamps should be equal front and rear.

23. Tighten front and rear fasteners to 12-18 ft-lbs (16.3-24.4 Nm).
24. See Figure 2-98. Remove one lower handlebar clamp fastener (12). Apply LOCTITE 262 HIGH STRENGTH THREADLOCKER AND SEALANT (red) to fastener threads.
25. Install fastener and tighten to 30-40 ft-lbs (40.7-54.2 Nm). Repeat for other fastener.



1. **Clamping surface**
2. **Range marks**

Figure 2-100. Left Hand Control Assembly to Handlebar Alignment



1. **Clamping surface**
2. **Range marks**

Figure 2-101. Right Hand Control Assembly to Handlebar Alignment

NOTE

See Figure 2-100 or Figure 2-101. When installing left and right handlebar switch assemblies, make sure that clamping surface (1) stays within the range marks (2) or damage to the wires will occur.

26. Install clutch control, front master cylinder, left handlebar switch assembly, and right handlebar switch assembly. Align housings and tighten fasteners. See 7.38 LEFT HANDLEBAR CONTROL MODULE or 7.37 RIGHT HANDLEBAR CONTROL MODULE.
27. Install main fuse.

⚠WARNING

After installing seat, pull upward on seat to be sure it is locked in position. While riding, a loose seat can shift causing loss of control, which could result in death or serious injury. (00070b)

28. Install seat.
29. Test throttle for correct operation. Adjust as required. See 1.13 THROTTLE CABLES.

⚠WARNING

Be sure that all lights and switches operate properly before operating motorcycle. Low visibility of rider can result in death or serious injury. (00316a)

30. Turn the ignition/light key switch to IGNITION and test lights and switches for proper operation.
31. Apply brake lever to test stop lamp.

⚠WARNING

After repairing the brake system, test brakes at low speed. If brakes are not operating properly, testing at high speeds can cause loss of control, which could result in death or serious injury. (00289a)

32. Test front brake lever for pressure and operation.

REMOVAL

Handlebars

NOTE

Note conduit routing and the location of cable straps for assembly.

⚠WARNING

To prevent accidental vehicle start-up, which could cause death or serious injury, remove main fuse before proceeding. (00251b)

1. Remove main fuse.
2. Remove console. See 4.7 CONSOLE: FXSB.
3. Remove fuel tank fasteners, vent hose, fuel supply fitting and fuel pump connector. Slide fuel tank back to access electrical connectors. See 4.6 FUEL TANK.
4. Cover fuel tank to protect from damage.
5. See 7.38 LEFT HANDLEBAR CONTROL MODULE and 7.37 RIGHT HANDLEBAR CONTROL MODULE. Disconnect all left and right side hand control connectors from main harness. It is not necessary to remove connectors from wiring.
6. Remove front master cylinder, right handlebar switch assembly, and throttle. See 7.37 RIGHT HANDLEBAR CONTROL MODULE.
7. Remove clutch control and left handlebar switch assembly. See 7.38 LEFT HANDLEBAR CONTROL MODULE.

NOTE

Original equipment grip is glued in place and must be cut off to remove. Remove grip only if necessary.

8. Remove left handlebar grip.
9. See Figure 2-102. Remove upper handlebar clamp fasteners (2).
10. Remove the handlebar.

Lower Handlebar Clamps

1. See Figure 2-102. Remove two lower handlebar clamp fasteners (10), washers (9), cup washers (8) and lower bushings (7).
2. Remove lower handlebar clamps (3).
3. Remove upper spacers (6), bushings (5) and upper cup washers (4).

INSTALLATION

FASTENER	TORQUE VALUE	
Handlebar clamp front fasteners	12-16 ft-lbs	16.3-21.7 Nm
Handlebar clamp rear fasteners	12-16 ft-lbs	16.3-21.7 Nm
Lower handlebar clamp fasteners	30-40 ft-lbs	40.7-54.3 Nm

Lower Clamp

1. See Figure 2-102. Install lower bushings (7), spacers (6), upper bushings (5) and upper cup washers (4) in upper fork bracket.
2. Install washers (9) and lower cup washers (8) on lower handlebar clamp fasteners (10).
3. Install lower handlebar clamps and finger tighten lower handlebar clamp fasteners.

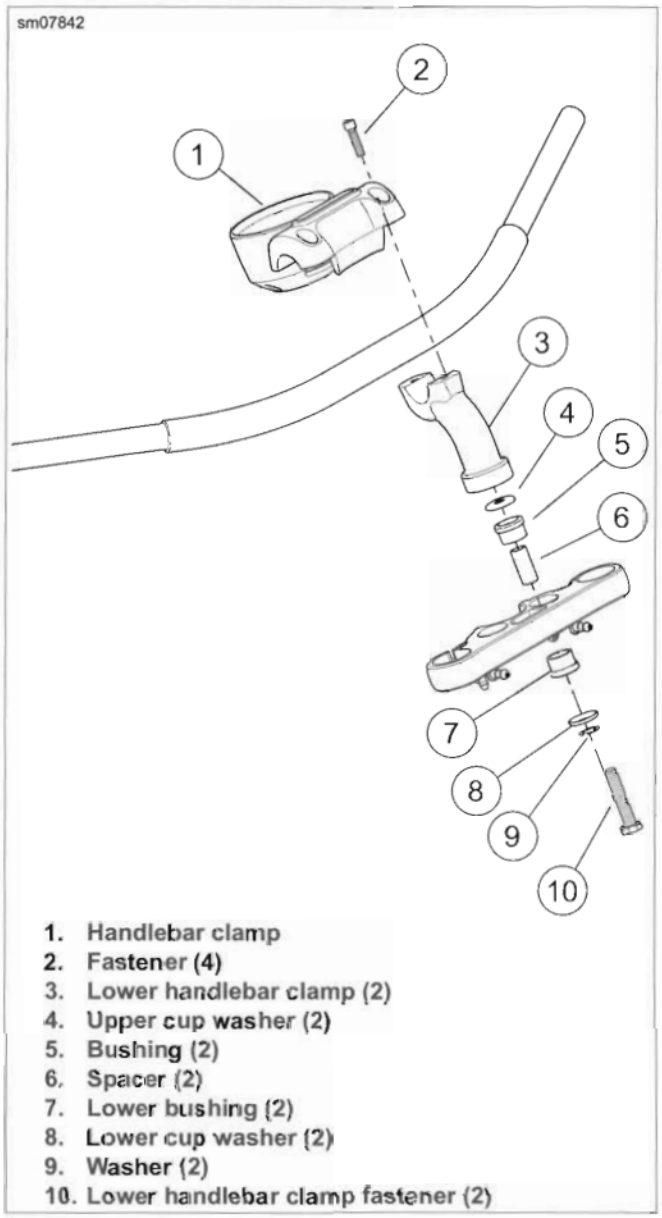

1. Handlebar clamp
2. Fastener (4)
3. Lower handlebar clamp (2)
4. Upper cup washer (2)
5. Bushing (2)
6. Spacer (2)
7. Lower bushing (2)
8. Lower cup washer (2)
9. Washer (2)
10. Lower handlebar clamp fastener (2)

Figure 2-102. Handlebar Assembly

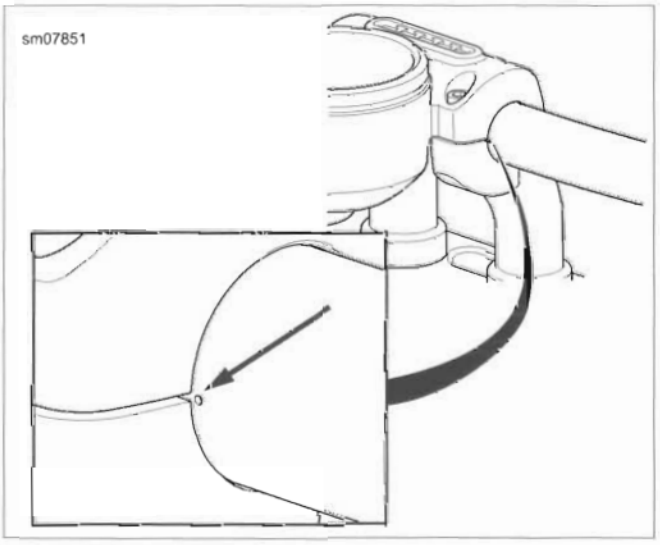

Figure 2-103. Alignment Marks

Handlebars

1. See Figure 2-103. Place handlebars on lower handlebar clamps. Using the two indicator marks near the center of the handlebar as a guide, center handlebars between lower handlebar clamps.
2. See Figure 2-102. Install upper handlebar clamp (1). Install but do not tighten clamp fasteners (2).
3. Rotate handlebar so that the seam of the clamps line up with the indicator marks.
4. Tighten upper handlebar clamp fasteners:
   a. Front upper clamp screws to 12-16 ft-lbs (16.3-21.7 Nm).

   NOTE

   The slight gap between upper and lower clamps should face the rider.

   b. Rear upper clamp fasteners to 12-16 ft-lbs (16.3-21.7 Nm).
   c. Lower handlebar clamp fasteners to 30-40 ft-lbs (40.7-54.3 Nm).
5. Install clutch control, front master cylinder, left handlebar switch assembly, and right handlebar switch assembly. Align housings and tighten fasteners. See 7.38 LEFT HANDLEBAR CONTROL MODULE or 7.37 RIGHT HANDLEBAR CONTROL MODULE.
6. Replace left and right rear view mirror with turn signal brackets. See 7.18 TURN SIGNALS AND RUNNING LIGHTS, Lamp Replacement.

NOTICE

Improperly aligned handlebars or components can contact the fuel tank when turned to the left or right. Contact with the fuel tank can cause cosmetic damage. (00372b)

7. Connect left and right hand control connectors [22, 24].
8. Replace wire conduits in frame clips and install cable strap.

Return to Service

1. Slide fuel tank forward and replace fuel tank fasteners, vent, fuel supply fitting. See 4.6 FUEL TANK.
2. Install main fuse.

⚠WARNING

After installing seat, pull upward on seat to be sure it is locked in position. While riding, a loose seat can shift causing loss of control, which could result in death or serious injury. (00070b)

3. Install seat.

⚠WARNING

After servicing brakes and before moving motorcycle, pump brakes to build brake system pressure. Insufficient pressure can adversely affect brake performance, which could result in death or serious injury. (00279a)

4. Test front brake lever and clutch lever for pressure and operation.

⚠WARNING

Be sure that all lights and switches operate properly before operating motorcycle. Low visibility of rider can result in death or serious injury. (00316a)

5. Test ride motorcycle.

REMOVAL

NOTE

See the appropriate figure for the model being serviced.

1. Remove front wheel. See 2.4 FRONT WHEEL.
2. **FLSTC/FLSTN:** Disconnect fender tip lamp.
3. Remove fasteners that hold fender in place and remove fender.

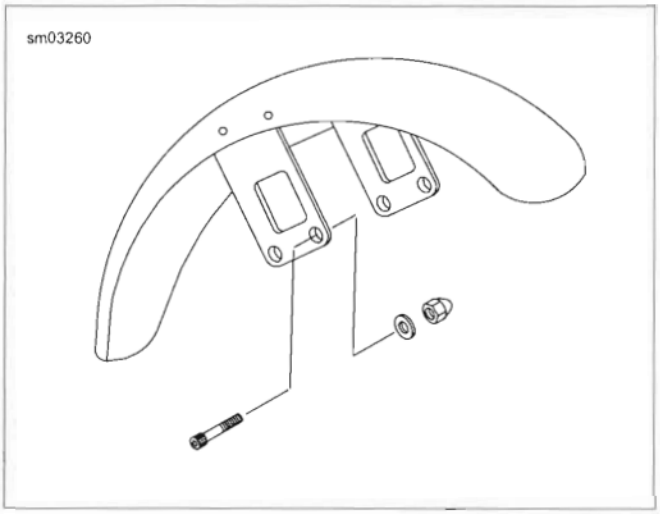

Figure 2-104. Front Fender: FXST

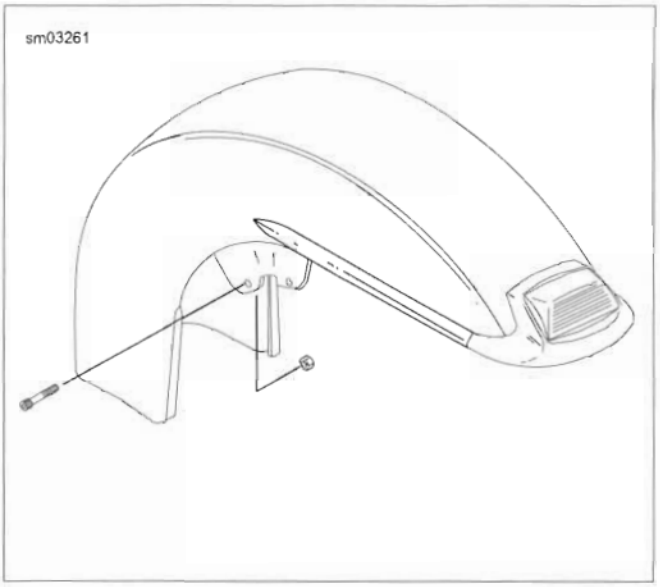

Figure 2-105. Front Fender: FLSTC

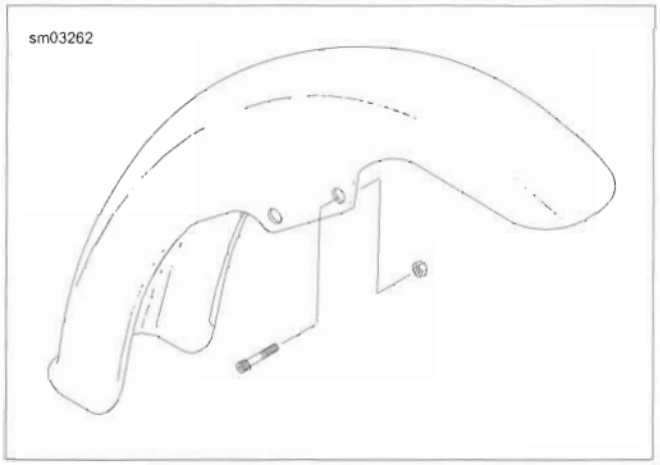

Figure 2-106. Front Fender: FLSTF/B

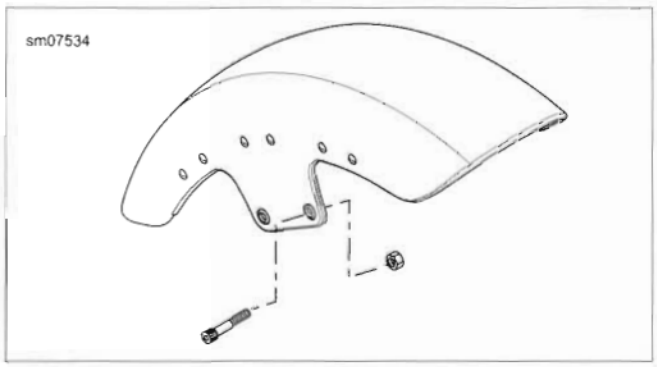

Figure 2-107. Front Fender: FLS

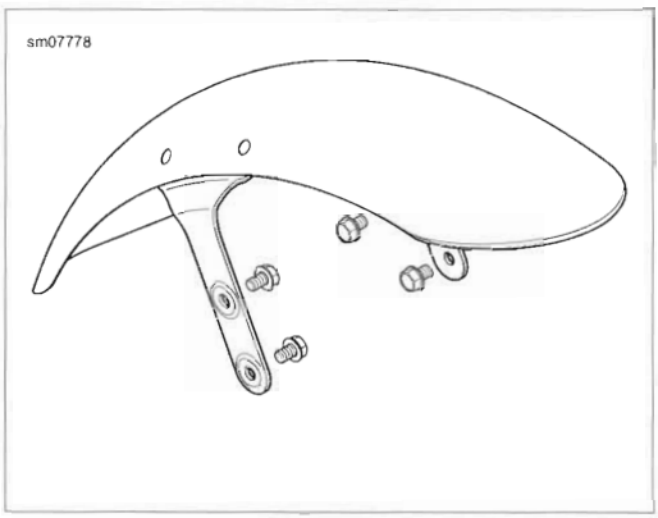

Figure 2-108. Front Fender: FXSB

INSTALLATION

FASTENER	TORQUE VALUE	
Fender fasteners, front	15-21 ft-lbs	20.3-28.5 Nm

1. Put fender in position and install fasteners. Tighten to 15-21 ft-lbs (20.3-28.5 Nm).
2. **FLSTC/FLSTN:** Connect fender tip lamp.
3. Install front wheel. See 2.4 FRONT WHEEL.

REMOVAL

1. Remove seat.

⚠WARNING

To prevent accidental vehicle start-up, which could cause death or serious injury, remove main fuse before proceeding. (00251b)

2. Remove main fuse.
3. Remove saddlebags. See 2.45 SADDLEBAGS: FLSTC.

NOTE

To verify proper installation, make note of fender wire routing and hardware locations before removal.

4. Disconnect rear wiring harness connector under seat.
5. Disconnect left and right turn signal connectors from within tail lamp. See 7.15 TAIL LAMP: ALL BUT FLSTN.
6. See Figure 2-109. Remove nylon fastener from electrical box.
7. See Figure 2-110. Remove fasteners (2) and saddlebag support studs (3) from front (7) and rear (5) fender mounting brackets.
8. Lift fender from frame.

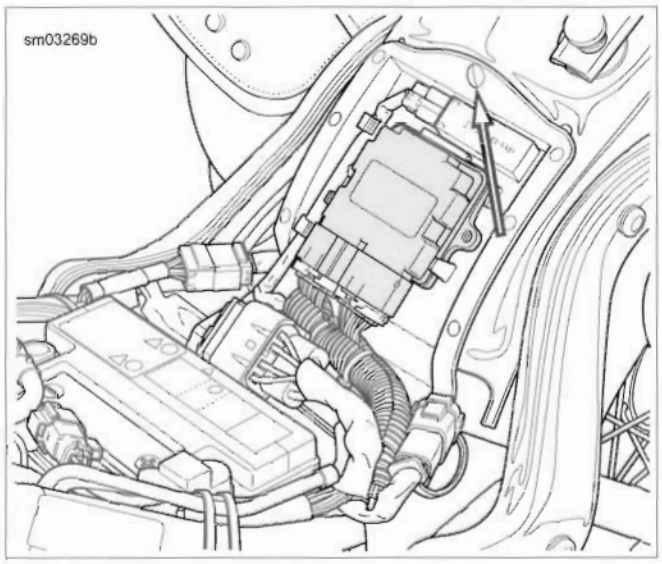

Figure 2-109. ECM Mount

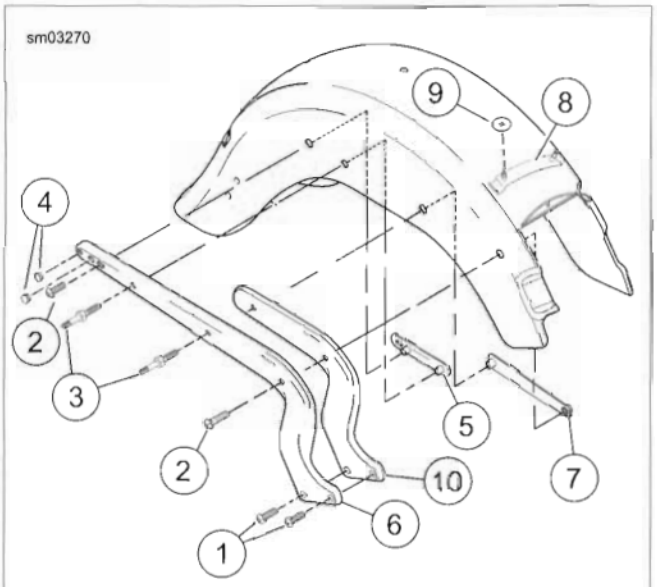

1. **Fender support fasteners, lower-front (4)**
2. **Fastener**
3. **Saddlebag stud: FLSTC (4)**
4. **Plug**
5. **Fender mounting bracket (rear, 2)**
6. **Fender support cover (2)**
7. **Fender mounting bracket (front, 2)**
8. **Stud plate**
9. **Plastic washer**
10. **Fender support (2)**

Figure 2-110. Rear Fender: FLSTC

INSTALLATION

FASTENER	TORQUE VALUE	
Fender, rear, support fasteners, upper: FLSTC	21-27 ft-lbs	28.5-36.6 Nm
Fender, rear, support fasteners, lower-front, 1st torque: FLSTC	30-35 ft-lbs	40.7-47.5 Nm
Fender, rear, support fasteners, lower-front, final torque: FLSTC	38-42 ft-lbs	51.5-56.9 Nm

1. Route turn signal wires through holes in fender. Install wires inside connector terminals.
2. See Figure 2-110. Carefully place the fender into position. Install fender supports using hardware shown.
   a. Tighten fasteners (2, 3) to 21-27 ft-lbs (28.5-36.6 Nm).
   b. Tighten fasteners (1) to an initial torque of 30-35 ft-lbs (40.7-47.5 Nm).
   c. Loosen fasteners (1) and final-tighten to 38-42 ft-lbs (51.5-56.9 Nm).
3. Connect the turn signal wiring harness at connector [7] under the seat. Also attach wiring for left and right turn signals.

4. See Figure 2-109. Install nylon fastener into electrical box and fender. Install saddlebags if equipped.
5. Install main fuse.

⚠WARNING

After installing seat, pull upward on seat to be sure it is locked in position. While riding, a loose seat can shift causing loss of control, which could result in death or serious injury. (00070b)

6. Install seat.

⚠WARNING

Be sure that all lights and switches operate properly before operating motorcycle. Low visibility of rider can result in death or serious injury. (00316a)

7. Check turn signal and lamp operation.

REMOVAL

1. Remove seat.

⚠WARNING

To prevent accidental vehicle start-up, which could cause death or serious injury, remove main fuse before proceeding. (00251b)

2. Remove main fuse.

NOTE

To verify proper installation, make note of fender wire routing and hardware locations before removal.

3. Disconnect rear wiring harness connector [7] under seat.
4. Disconnect left and right turn signal connectors from within tail lamp. See 7.15 TAIL LAMP: ALL BUT FLSTN.
5. Remove nylon fastener securing ECM electrical box to rear fender.
6. See Figure 2-111. Remove fasteners (2) from front fender mounting brackets (7), rear fender mounting brackets (5) and wire retainer plates (4).
7. Lift fender from frame.

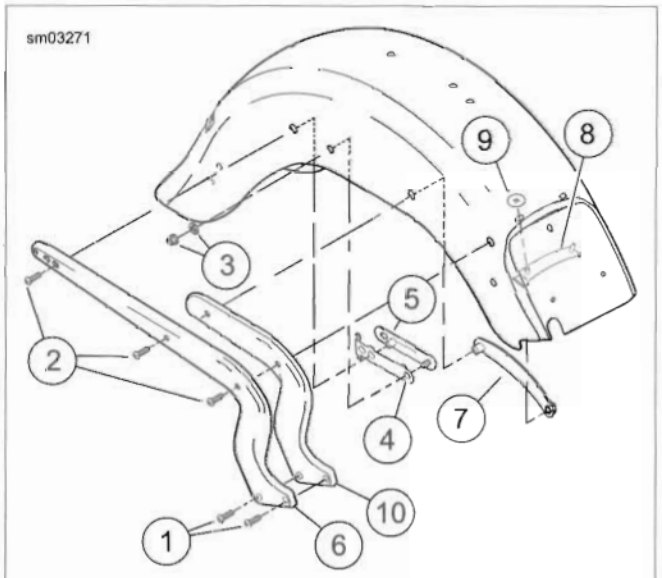

1. **Fender support fasteners, lower-front (4)**
2. **Fastener**
3. **Locknut and washer (2)**
4. **Wire retainer plate**
5. **Fender mounting bracket (rear, 2)**
6. **Fender support cover (2)**
7. **Fender mounting bracket (front, 2)**
8. **Stud plate**
9. **Plastic washer**
10. **Fender support (2)**

Figure 2-111. Rear Fender: FLSTF/B

INSTALLATION

FASTENER	TORQUE VALUE	
Fender, rear, support fasteners, upper: FLSTF/B	21-27 ft-lbs	28.5-36.6 Nm
Fender, rear, support fasteners, lower-front, 1st torque: FLSTF/B	30-35 ft-lbs	40.7-47.5 Nm
Fender, rear, support fasteners, lower-front, final torque: FLSTF/B	38-42 ft-lbs	51.5-56.9 Nm

1. Route turn signal wires through holes in fender. Install wires inside connector terminals.
2. See Figure 2-111. Carefully place the fender into position. Install fender supports using hardware shown.
   a. Tighten fasteners (2) to 21-27 ft-lbs (28.5-36.6 Nm).
   b. Tighten fasteners (1) to an initial torque of 30-35 ft-lbs (40.7-47.5 Nm).
   c. Loosen fasteners (1) and final-tighten to 38-42 ft-lbs (51.5-56.9 Nm).
3. Connect the turn signal wiring harness at connector [7] under the seat. Also attach wiring for left and right turn signals.
4. Install nylon fastener securing electrical box to fender.
5. Install main fuse.

⚠WARNING

After installing seat, pull upward on seat to be sure it is locked in position. While riding, a loose seat can shift causing loss of control, which could result in death or serious injury. (00070b)

6. Install seat.

⚠WARNING

Be sure that all lights and switches operate properly before operating motorcycle. Low visibility of rider can result in death or serious injury. (00316a)

7. Check turn signal and lamp operation.

REMOVAL

1. Remove seat.

⚠WARNING

To prevent accidental vehicle start-up, which could cause death or serious injury, remove main fuse before proceeding. (00251b)

2. Remove main fuse.
3. Remove saddlebags, if equipped.

NOTE

To verify proper installation, make note of fender wire routing and hardware locations before removal.

4. Disconnect rear wiring harness connector [7] under seat.
5. Disconnect left and right turn signal connectors from within tail lamp. See 7.15 TAIL LAMP: ALL BUT FLSTN.
6. Remove electronic control module. See 7.4 ELECTRONIC CONTROL MODULE (ECM).
7. See Figure 2-112. Loosen but do not remove fender support fasteners (1).
8. Remove front fender screw (2) from front fender mounting bracket (8).
9. Remove middle fender mounting screw (3) from front fender mounting bracket.
10. Remove rear fender mounting screw (4) from rear fender mounting bracket (6).
11. Remove fender support fasteners (1). Remove fender support cover (7) and fender support (9).
12. Repeat for opposite side.

NOTE

After removing both fender supports and support covers, support fender by installing a long screwdriver through frame and fender holes.

13. Remove locknuts and washers (5) from rear fender mounting bracket.
14. Lift fender from frame.

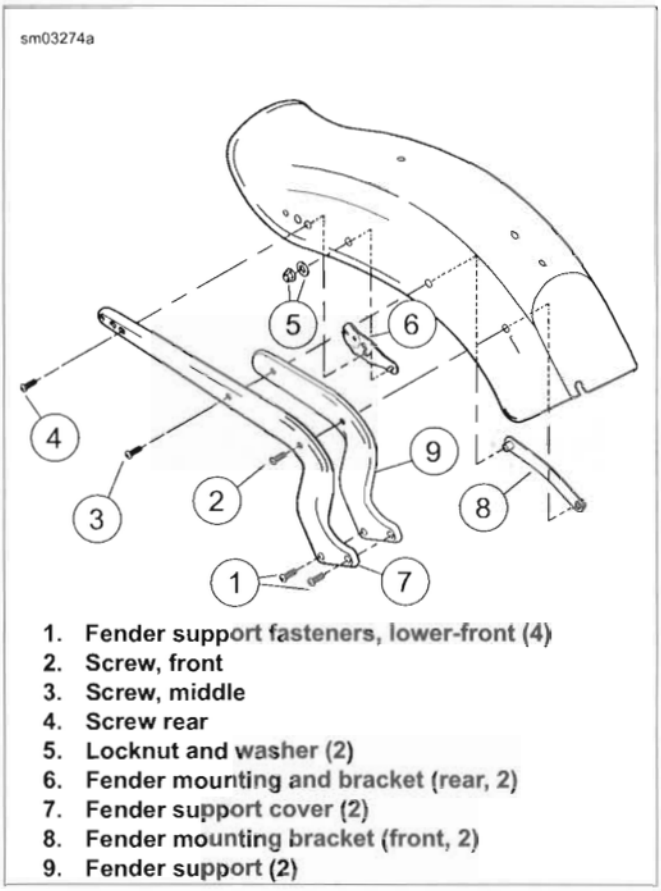

1. **Fender support fasteners, lower-front (4)**
2. **Screw, front**
3. **Screw, middle**
4. **Screw rear**
5. **Locknut and washer (2)**
6. **Fender mounting and bracket (rear, 2)**
7. **Fender support cover (2)**
8. **Fender mounting bracket (front, 2)**
9. **Fender support (2)**

Figure 2-112. Rear Fender: FXST

INSTALLATION

FASTENER	TORQUE VALUE	
Fender, rear, support fasteners, upper: FXST	21-27 ft-lbs	28.5-36.6 Nm
Fender, rear, support fasteners, lower-front, 1st torque: FXST	30-35 ft-lbs	40.7-47.5 Nm
Fender, rear, support fasteners, lower-front, final torque: FXST	38-42 ft-lbs	51.5-56.9 Nm

NOTE

In next step, verify wire harness is routed properly so tire will not contact wiring.

1. Route turn signal wires through holes in fender. Install wires inside connector terminals.
2. See Figure 2-112. Carefully place the fender into position.
3. Place fender supports into position.

4. Install fender supports hardware:
   a. Tighten fasteners (2, 3, 4) to 21-27 ft-lbs (28.5-36.6 Nm).
   b. Tighten fasteners (1) to an initial torque of 30-35 ft-lbs (40.7-47.5 Nm).
   c. Loosen fasteners (1) and final-tighten to 38-42 ft-lbs (51.5-56.9 Nm).
5. Connect the turn signal wiring harness at connector [7] under the seat. Also attach wiring for left and right turn signals.
6. Install electronic control module.
7. Install saddlebags if equipped.
8. Install main fuse.

⚠WARNING

After installing seat, pull upward on seat to be sure it is locked in position. While riding, a loose seat can shift causing loss of control, which could result in death or serious injury. (00070b)

9. Install seat.

⚠WARNING

Be sure that all lights and switches operate properly before operating motorcycle. Low visibility of rider can result in death or serious injury. (00316a)

10. Check turn signal and lamp operation.

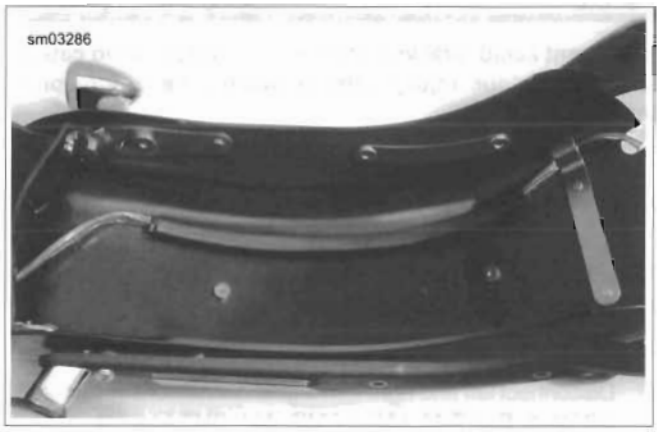

Figure 2-113. FXST Rear Fender Wire Routing

REMOVAL

1. Remove seat.

⚠WARNING

To prevent accidental vehicle start-up, which could cause death or serious injury, remove main fuse before proceeding. (00251b)

2. Remove main fuse.

NOTE

To verify proper installation, make note of fender wire routing and hardware locations before removal.

3. See Figure 2-114. Disconnect all three rear wiring harness connectors [18, 19, 40] (1).
4. Remove nylon fastener that secures electronic control module (ECM) to rear fender. See 7.4 ELECTRONIC CONTROL MODULE (ECM).
5. Remove fender support fasteners (2) and pull rear fender assembly away from motorcycle.
6. See Figure 2-117. If replacing rear fender, remove fasteners (6) securing support brackets and license plate bracket assembly to rear fender.

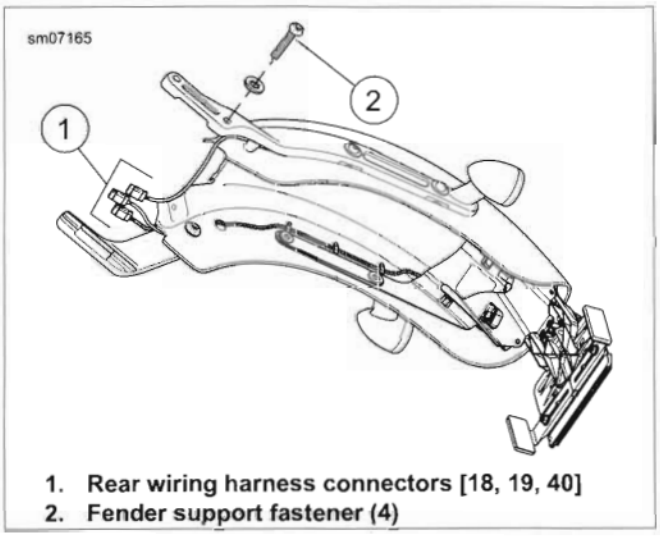

1. **Rear wiring harness connectors [18, 19, 40]**
2. **Fender support fastener (4)**

Figure 2-114. Rear Fender

INSTALLATION

FASTENER	TORQUE VALUE	
License plate bracket to mounting bracket upper fasteners: FLS	60-80 **in-lbs**	6.8-9.0 Nm
License plate bracket to mounting bracket lower fasteners: FLS	12-18 **in-lbs**	1.4-2.0 Nm
Fender support to fender fasteners, rear: FLS	21-27 ft-lbs	28.5-36.6 Nm
Fender support fasteners, rear, 1st torque: FLS	30-35 ft-lbs	40.7-47.5 Nm
Fender support fasteners, rear, final torque: FLS	38-42 ft-lbs	51.5-56.9 Nm

License Plate Bracket Assembly and Installation: FLS (all but Domestic and California models)

NOTES

- *Verify wires are routed properly to prevent tire from contacting wiring.*
- *See Figure 2-117. If replacing adhesive tape (1), thoroughly clean affected areas with isopropyl alcohol.*

1. Press **new** adhesive tape (1) onto surface for 1-3 minutes.
2. See Figure 2-115. Make sure wiring is properly routed through license plate bracket.
3. See Figure 2-116. Attach license plate bracket to mounting bracket. Make sure tabs (1, 2) are inserted as shown.
4. Install fasteners (3). Tighten to 60-80 **in-lbs** (6.8-9.0 Nm).
5. See Figure 2-117. Install screws (10) and tighten to 12-18 **in-lbs** (1.4-2.0 Nm).
6. Clean threadlocking compound from fasteners (6) and threaded holes before assembly.

NOTE

When installing license plate bracket assembly, verify wiring is routed through the four wire retainers (8) on the right side.

7. Place license plate bracket assembly into position. Install fender mounting brackets (7).
8. Route wiring through hole (5) to outside of fender.
9. Install **new** cable strap securing wiring to fender between last wire retainer (8) and hole (5).

NOTE

When installing fender supports to fender, make sure wire routing is correct. See 7.18 TURN SIGNALS AND RUNNING LIGHTS, Lamp Replacement.

10. Apply LOCTITE 243 MEDIUM STRENGTH THREADLOCKER AND SEALANT (blue) to fasteners (6) and install fender supports to fender with fasteners (6). Tighten fasteners to 21-27 ft-lbs (28.5-36.6 Nm).

11. Install wiring to connector housing, if removed. Refer to Table 2-19 or Table 2-20 and see A.16 DEUTSCH DTM SEALED SOLID BARREL MINI TERMINAL REPAIR.

License Plate Bracket Assembly and Installation: FLS (Domestic and California models)

See 7.18 TURN SIGNALS AND RUNNING LIGHTS.

Fender Installation

1. See Figure 2-114. Carefully place the fender into position.
2. Install fender support fasteners (2). Tighten fasteners to an initial torque of 30-35 ft-lbs (40.7-47.5 Nm). Loosen fasteners and final-tighten to 38-42 ft-lbs (51.5-56.9 Nm).
3. Install nylon fastener that secures ECM to rear fender. See 7.4 ELECTRONIC CONTROL MODULE (ECM).
4. Connect all three rear wiring harness connectors [18, 19, 40] (1).
5. Install main fuse.

⚠WARNING

After installing seat, pull upward on seat to be sure it is locked in position. While riding, a loose seat can shift causing loss of control, which could result in death or serious injury. (00070b)

6. Install seat.

⚠WARNING

Be sure that all lights and switches operate properly before operating motorcycle. Low visibility of rider can result in death or serious injury. (00316a)

7. Check rear lighting for proper operation.

Table 2-19. License Plate Lighting Connector Pin Location (Domestic and HDI)

PIN	COLOR	FUNCTION
1	BK	License plate lamp
2	-	Not used
3	BK	Ground

Table 2-20. Tail Light Connector Pin Location (Canada)

PIN	COLOR	FUNCTION
1	BE	Running/License plate lamp
2	R/Y	Brake
3	BK	Ground

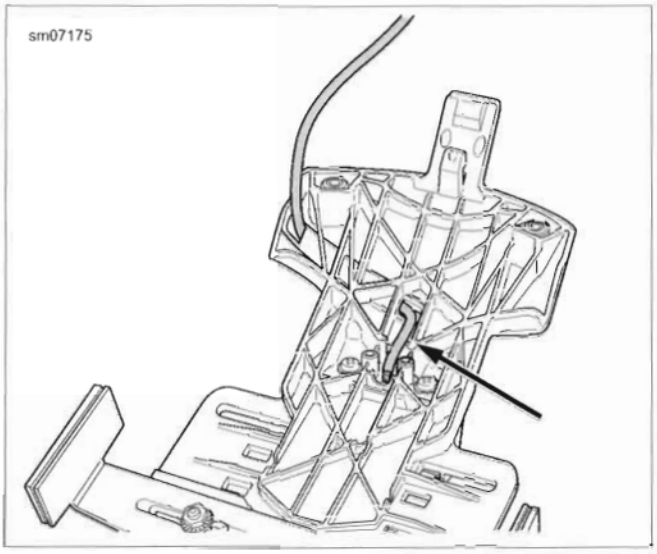

Figure 2-115. License Plate Bracket Wire Routing

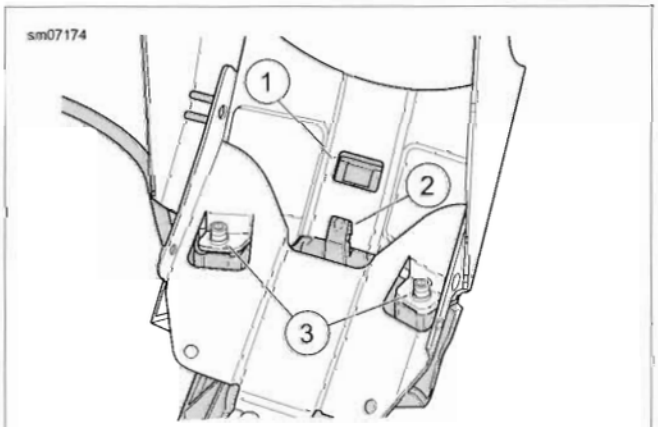

1. **Tab**
2. **Tab**
3. **Fastener (2)**

Figure 2-116. License Plate Bracket Clips

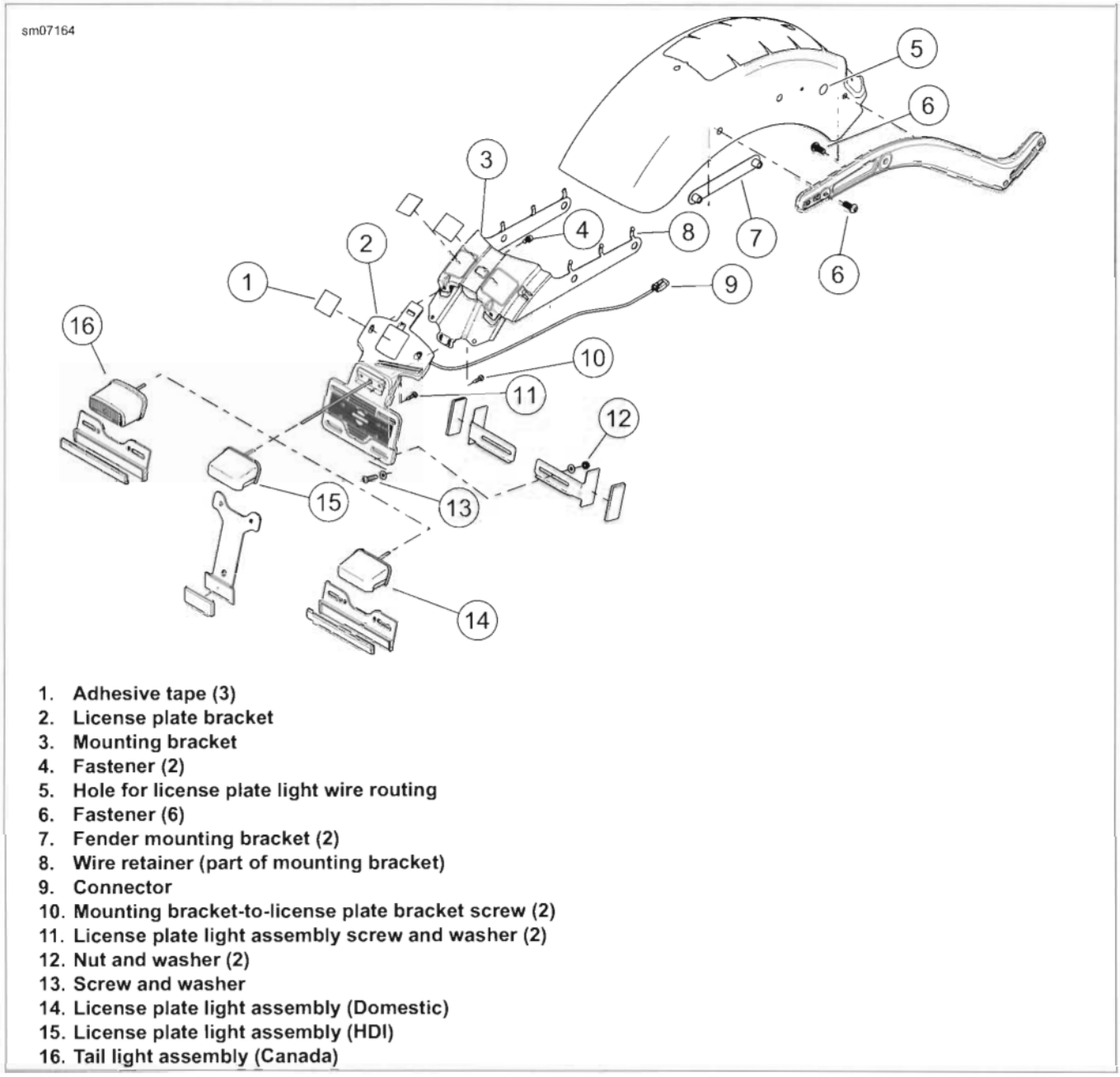

1. Adhesive tape (3)
2. License plate bracket
3. Mounting bracket
4. Fastener (2)
5. Hole for license plate light wire routing
6. Fastener (6)
7. Fender mounting bracket (2)
8. Wire retainer (part of mounting bracket)
9. Connector
10. Mounting bracket-to-license plate bracket screw (2)
11. License plate light assembly screw and washer (2)
12. Nut and washer (2)
13. Screw and washer
14. License plate light assembly (Domestic)
15. License plate light assembly (HDI)
16. Tail light assembly (Canada)

Figure 2-117. License Plate Bracket Assembly

REMOVAL

1. Remove seat.

⚠WARNING

To prevent accidental vehicle start-up, which could cause death or serious injury, remove main fuse before proceeding. (00251b)

2. Remove main fuse.
3. Disconnect rear lighting harness connector housings:
   a. Right turn signal [18]
   b. License plate/running lamp [40]
   c. Left turn signal [19]
4. See Figure 2-118. Remove fasteners (6). Lift fender from frame.
5. If replacing fender, perform the following steps:
   a. Remove rear lighting. See 7.18 TURN SIGNALS AND RUNNING LIGHTS.
   b. Remove fasteners (1), fender supports (2) and brackets (4).

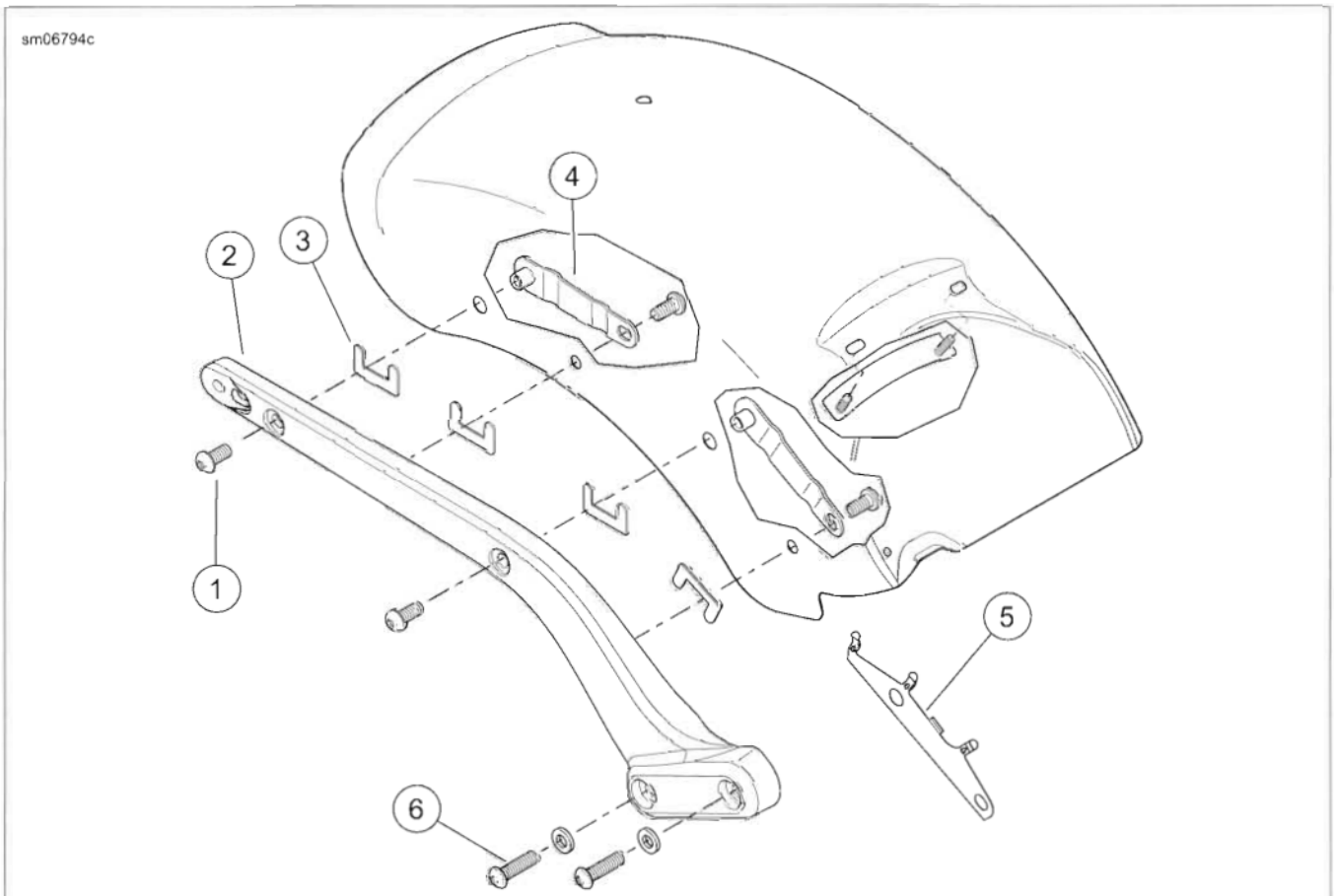

1. **Fastener (8)**
2. **Fender support (2)**
3. **Retention pad (8)**
4. **Bracket (4)**
5. **Retainer bracket (HDI, Canada) (1)**
6. **Fastener (4)**

Figure 2-118. Rear Fender

INSTALLATION

FASTENER	TORQUE VALUE	
Rear fender support to fender, FXSB	21-27 ft-lbs	28.5-36.6 Nm
Rear fender support to frame fasteners: 1st torque, FXSB	30-35 ft-lbs	40.7-47.5 Nm
Rear fender support to frame fasteners: final torque, FXSB	38-42 ft-lbs	51.6-57.0 Nm

1. See Figure 2-118. If fender was replaced, perform the following steps.
   a. Install rear lighting. See 7.18 TURN SIGNALS AND RUNNING LIGHTS.

   NOTE

   HDI and Canada Markets: *install retainer bracket (5) between front left bracket (4) and fender.*

   b. Install fender supports (2) with brackets (4) and fasteners (1). Tighten outer fasteners first then inner fasteners to 21-27 ft-lbs (28.5-36.6 Nm).
2. Install rear fender using fasteners (6). Tighten fasteners to 30-35 ft-lbs (40.7-47.5 Nm) then loosen.
3. Final tighten fasteners (6) to 38-42 ft-lbs (51.6-57.0 Nm).
4. Connect rear lighting harness connector housings:
   a. Right turn signal [18]
   b. License plate/running lamp [40]
   c. Left turn signal [19]
5. Install main fuse.

⚠WARNING

After installing seat, pull upward on seat to be sure it is locked in position. While riding, a loose seat can shift causing loss of control, which could result in death or serious injury. (00070b)

6. Install seat.

⚠WARNING

Be sure that all lights and switches operate properly before operating motorcycle. Low visibility of rider can result in death or serious injury. (00316a)

7. Check turn signal and tail lamp operation.

REMOVAL

1. Remove seat.

⚠WARNING

To prevent accidental vehicle start-up, which could cause death or serious injury, remove main fuse before proceeding. (00251b)

2. Remove main fuse.
3. See Figure 2-119. Disconnect rear wiring harness connector [7] (1) under seat.
4. Remove nylon fastener (3) from electronic control module tray (2).

NOTE

Note location of hardware for correct installation.

5. See Figure 2-120. Remove fender mounting bracket (19) by removing fender mounting fasteners (3). Insert rods through forward-most holes created by fastener removal. Rods will keep fender in place during next step.
6. Remove fender mounting fasteners (2).
7. Remove rods.
8. Slide fender towards rear of vehicle to disengage fender from frame rails.

DISASSEMBLY

1. See Figure 2-120. If rear fender is to be completely disassembled, detach fender support covers (1) by removing fender mounting fasteners (4).
2. Remove luggage rack (10). See 2.44 LUGGAGE RACK: FLSTN.
3. Remove fender support (16) and fender mounting brackets (20).
4. Remove tail lamp. See 7.16 TAIL LAMP: FLSTN.
5. Remove turn signal lamps. See 7.18 TURN SIGNALS AND RUNNING LIGHTS.

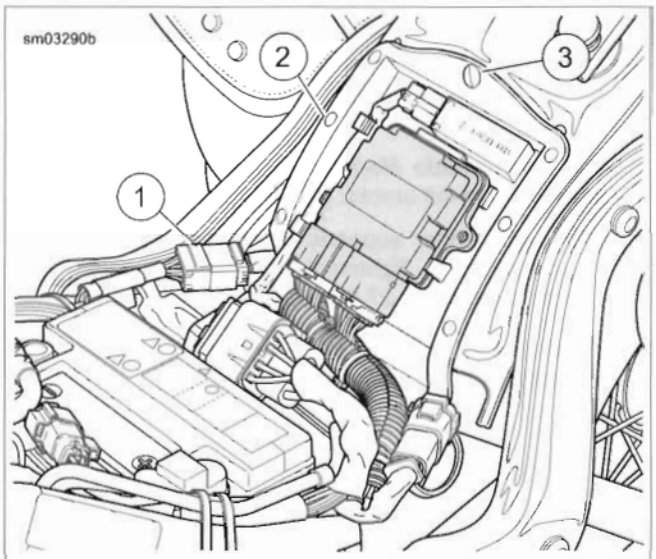

1. **Rear wiring harness connector [7]**
2. **Electronic control module tray**
3. **Nylon fastener**

Figure 2-119. Electrical Box: Typical

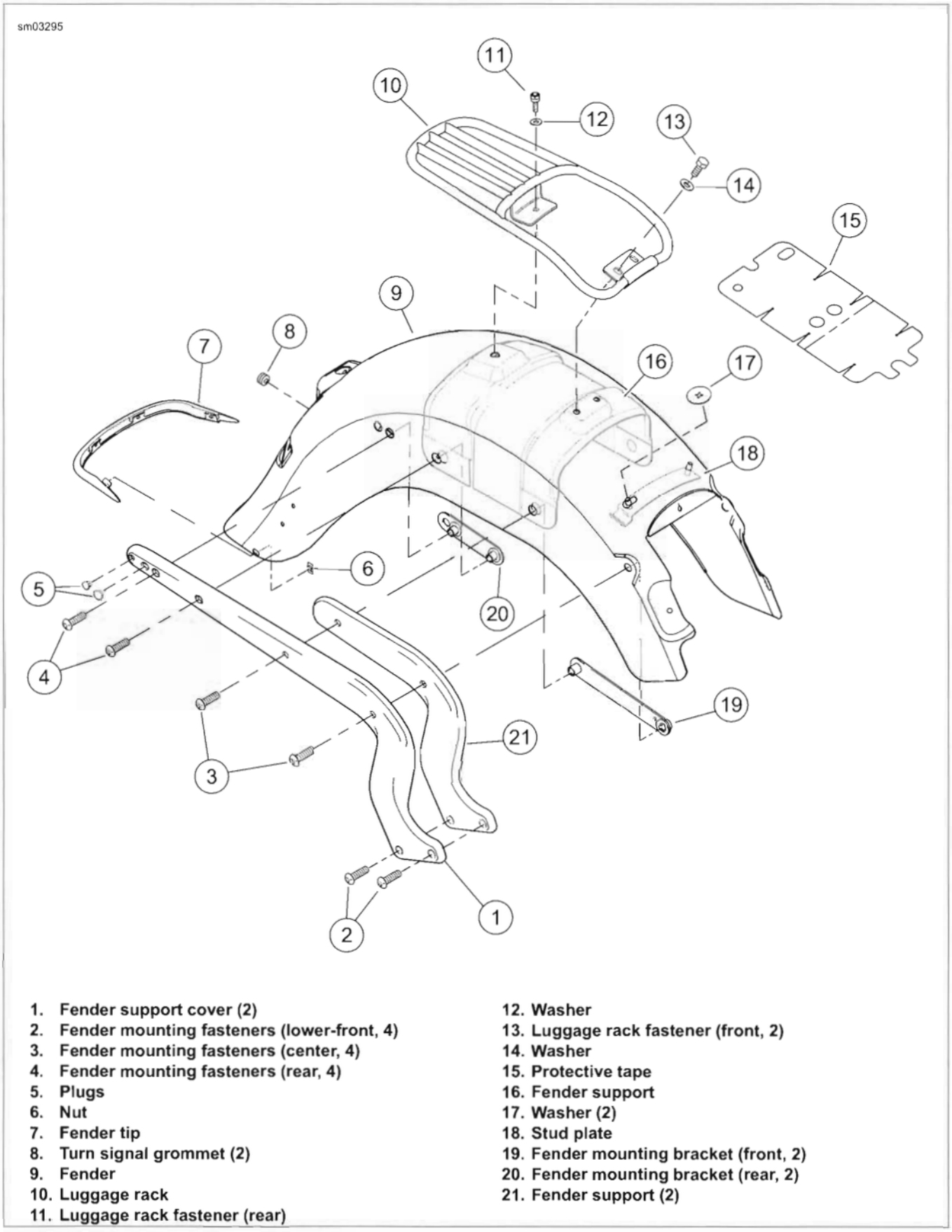

1. Fender support cover (2)
2. Fender mounting fasteners (lower-front, 4)
3. Fender mounting fasteners (center, 4)
4. Fender mounting fasteners (rear, 4)
5. Plugs
6. Nut
7. Fender tip
8. Turn signal grommet (2)
9. Fender
10. Luggage rack
11. Luggage rack fastener (rear)
12. Washer
13. Luggage rack fastener (front, 2)
14. Washer
15. Protective tape
16. Fender support
17. Washer (2)
18. Stud plate
19. Fender mounting bracket (front, 2)
20. Fender mounting bracket (rear, 2)
21. Fender support (2)

Figure 2-120. Rear Fender: FLSTN

ASSEMBLY

1. See 7.16 TAIL LAMP: FLSTN for tail lamp assembly.
2. See 7.18 TURN SIGNALS AND RUNNING LIGHTS for turn signal bracket assembly.

NOTE

See Figure 2-120. If fender support (16) has been removed, do not tighten luggage rack hardware until rest of fender has been installed.

3. Assemble fender:
   a. Place fender support (16) into position in fender (9).
   b. Install but do not tighten luggage rack hardware. See 2.44 LUGGAGE RACK: FLSTN.
4. Install fender support covers (1) using fender mounting fasteners (4). Snug but do not fully tighten fasteners at this time.

INSTALLATION

FASTENER	TORQUE VALUE	
Fender, rear, support fasteners, upper: FLSTN	21-27 ft-lbs	28.5-36.6 Nm
Fender, rear, support fasteners, lower-front, 1st torque: FLSTN	30-35 ft-lbs	40.7-47.5 Nm
Fender, rear, support fasteners, lower-front, final torque: FLSTN	38-42 ft-lbs	51.5-56.9 Nm

1. See Figure 2-120. Carefully place the fender into position. Install fender supports using hardware and brackets shown.
   a. Tighten fasteners (3, 4) to 21-27 ft-lbs (28.5-36.6 Nm).
   b. Tighten fasteners (2) to an initial torque of 30-35 ft-lbs (40.7-47.5 Nm).
   c. Loosen fasteners (2) and final-tighten to 38-42 ft-lbs (51.5-56.9 Nm).
2. Tighten luggage rack fasteners. See 2.44 LUGGAGE RACK: FLSTN.
3. See Figure 2-119. Install nylon fastener (3) into electronic control module tray (2) and fender.
4. Connect the harness at connector [7] (1).
5. Install main fuse.

⚠WARNING

After installing seat, pull upward on seat to be sure it is locked in position. While riding, a loose seat can shift causing loss of control, which could result in death or serious injury. (00070b)

6. Install seat.

⚠WARNING

Be sure that all lights and switches operate properly before operating motorcycle. Low visibility of rider can result in death or serious injury. (00316a)

7. Check turn signal and lamp operation.

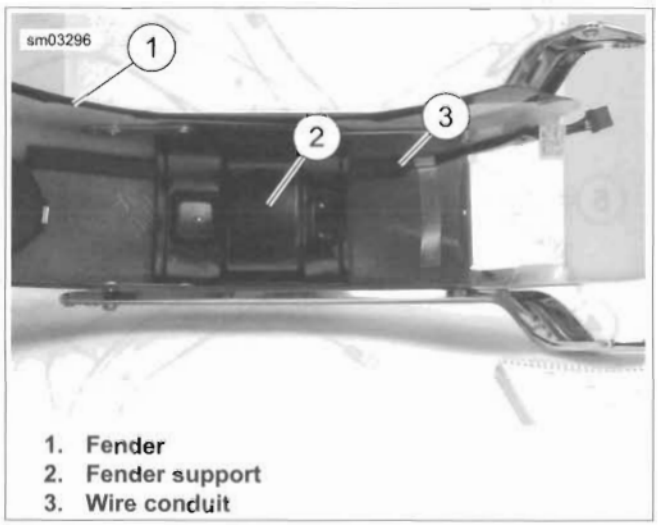

1. **Fender**
2. **Fender support**
3. **Wire conduit**

Figure 2-121. Rear Fender Wire Routing: FLSTN

INSTALLATION

1. Remove wire terminals from harness connectors.
2. Remove wire harness from conduit.
3. Remove old conduit from fender.
4. Thoroughly clean inside surface of fender with soap and water until it is free of dirt, oil, or other debris.
5. Dry the surface, then wipe the area where conduit will be placed with isopropyl alcohol. Allow to dry completely.
6. Slide tail lamp wiring harness through **new** conduit and install wire terminals into connector housings. See B.2 WIRING DIAGRAMS for more information.
7. See Figure 2-122. Remove protective strip covering adhesive on conduit.
8. See Figure 2-124. Lightly position the conduit in place.
9. See Figure 2-123. Using a wallpaper corner roller (available at most home improvement stores), roll along conduit to purge the air from between the adhesive and the fender.

NOTES

- *Do NOT rub the conduit to make it adhere to the fender. This will not do an adequate job of purging the air from between the adhesive and fender.*
- *Once the adhesive is in place, it requires 72 hours to fully cure. Continue with installation but do NOT pull or try to reposition the conduit during this period.*

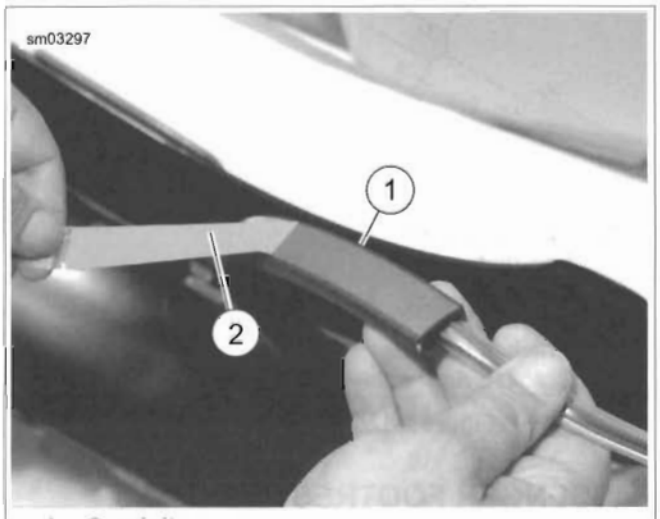

1. **Conduit**
2. **Protective strip**

Figure 2-122. Removing Protective Strip From Conduit

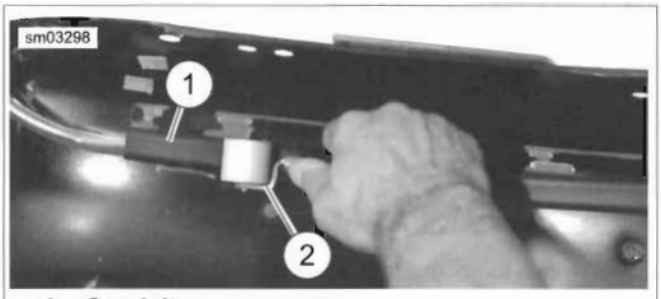

1. **Conduit**
2. **Wallpaper corner roller**

Figure 2-123. Purging Air Between Adhesive and Fender

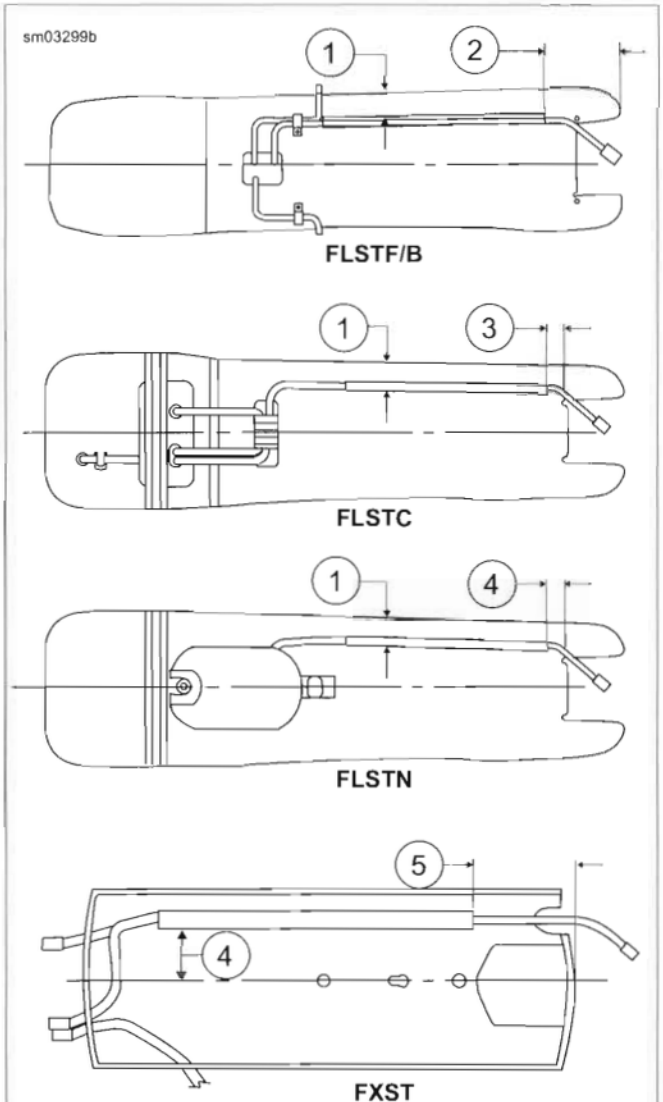

1. **1.15 in. (29.2 mm)**
2. **8.00 in. (203.2 mm)**
3. **0.75 in. (19.1 mm)**
4. **3.00 in. (76.2 mm)**
5. **2.25 in. (57.2 mm)**

Figure 2-124. Conduit Placement

RIDER FOOTBOARDS

FASTENER	TORQUE VALUE	
Rider footboard screws	60-80 **in-lbs**	6.8-9.0 Nm

Removal

1. See Figure 2-125. Remove pivot screws (5) and nuts (3).
2. Remove footboard from motorcycle.

Installation

1. See Figure 2-125. Install footboard and secure with pivot screws (5) and nuts (3).
2. Tighten screws to 60-80 **in-lbs** (6.8-9.0 Nm).

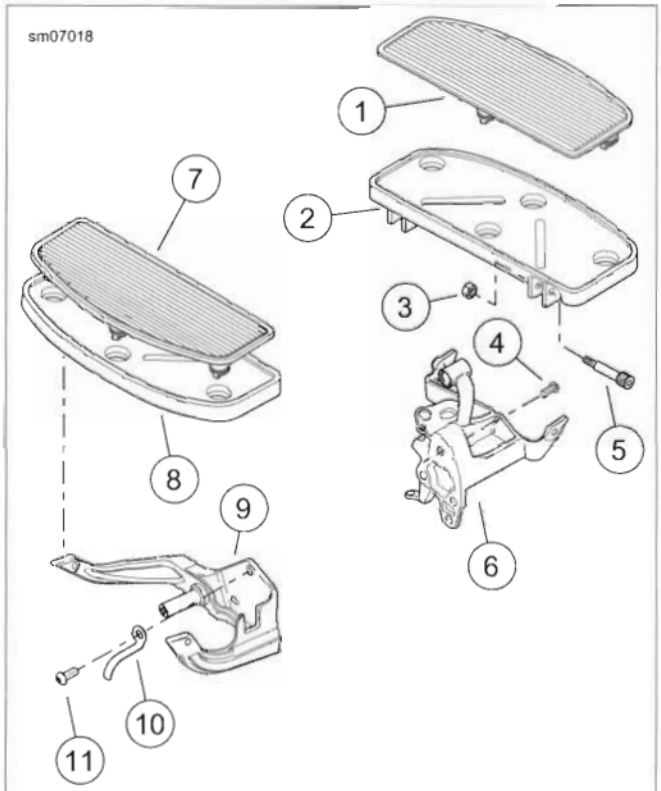

1. **Rubber pad (left side)**
2. **Footboard (left side)**
3. **Pivot screw nut (2 each side)**
4. **Fastener (3)**
5. **Pivot screw (2 each side)**
6. **Bracket**
7. **Rubber pad (right side)**
8. **Footboard (right side)**
9. **Bracket**
10. **Clip**
11. **Screw (3)**

Figure 2-125. Rider Footboards (Typical)

RIDER FOOTREST

FASTENER	TORQUE VALUE	
Rider footrest support screws	32-37 ft-lbs	43.4-50.2 Nm

Removal

See Figure 2-126. Remove retaining ring (1) and clevis pin (4). Pull footrest (3) and spring washer (2) from support (6 or 7).

Installation

1. See Figure 2-126. If support (6 or 7) was removed, install with screws (5). Tighten to 32-37 ft-lbs (43.4-50.2 Nm).
2. Place footrest (3) and spring washer (2) into position on support (6).
3. Install clevis pin (4) and **new** retaining ring (1).

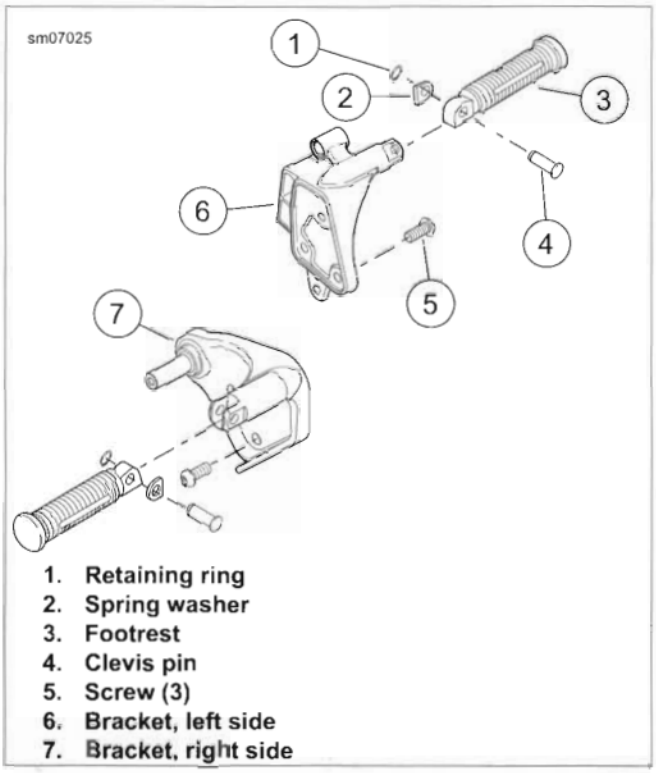

1. **Retaining ring**
2. **Spring washer**
3. **Footrest**
4. **Clevis pin**
5. **Screw (3)**
6. **Bracket, left side**
7. **Bracket, right side**

Figure 2-126. Rider Footrests

PASSENGER FOOTREST

FASTENER	TORQUE VALUE	
Footrest support screw, passenger, left-side: FLSTN	25-30 ft-lbs	33.9-40.7 Nm
Footrest support screw, passenger	25-30 ft-lbs	33.9-40.7 Nm

Removal

See Figure 2-127. Remove retaining ring (1) and clevis pin (4). Pull footrest (3) and spring washer (2) from support (6).

Installation

1. **FLSTN:** see Figure 2-127. If support (8) was removed, install support and tighten screw (7) to 25-30 ft-lbs (33.9-40.7 Nm).
2. See Figure 2-127. If support (6) was removed, install with screw (5). Tighten to 25-30 ft-lbs (33.9-40.7 Nm).
3. Place footrest (3) and spring washer (2) into position on support (6).
4. Install clevis pin (4) and **new** retaining ring (1).

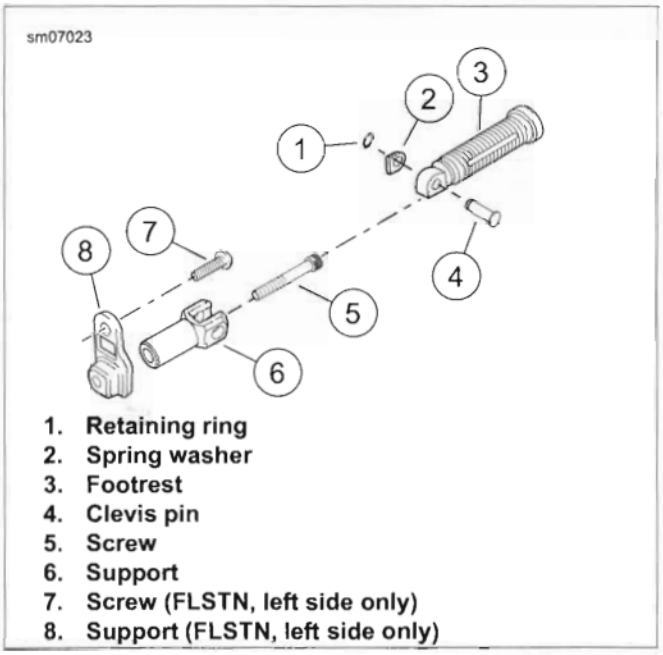

1. **Retaining ring**
2. **Spring washer**
3. **Footrest**
4. **Clevis pin**
5. **Screw**
6. **Support**
7. **Screw (FLSTN, left side only)**
8. **Support (FLSTN, left side only)**

Figure 2-127. Passenger Footrests

CLEANING

⚠WARNING

The jiffy stand locks when placed in the full forward (down) position with vehicle weight on it. If the jiffy stand is not in the full forward (down) position with vehicle weight on it, the vehicle can fall over which could result in death or serious injury. (00006a)

⚠WARNING

Always park motorcycle on a level, firm surface. An unbalanced motorcycle can fall over, which could result in death or serious injury. (00039a)

⚠WARNING

Be sure jiffy stand is fully retracted before riding. If jiffy stand is not fully retracted, it can contact the road surface causing a loss of vehicle control, which could result in death or serious injury. (00007a)

1. Block motorcycle underneath frame so both wheels are raised off the ground.
2. See Figure 2-128. Inspect clevis pin (1) and bushings (2). If covered with dirt, wipe dirt off with a shop towel and lubricate clevis pin and bushings with ANTI-SEIZE LUBRICANT.
3. Move jiffy stand (9, 10) forward and back to infuse lubricant into mating parts.
4. Check that jiffy stand operates correctly before using.

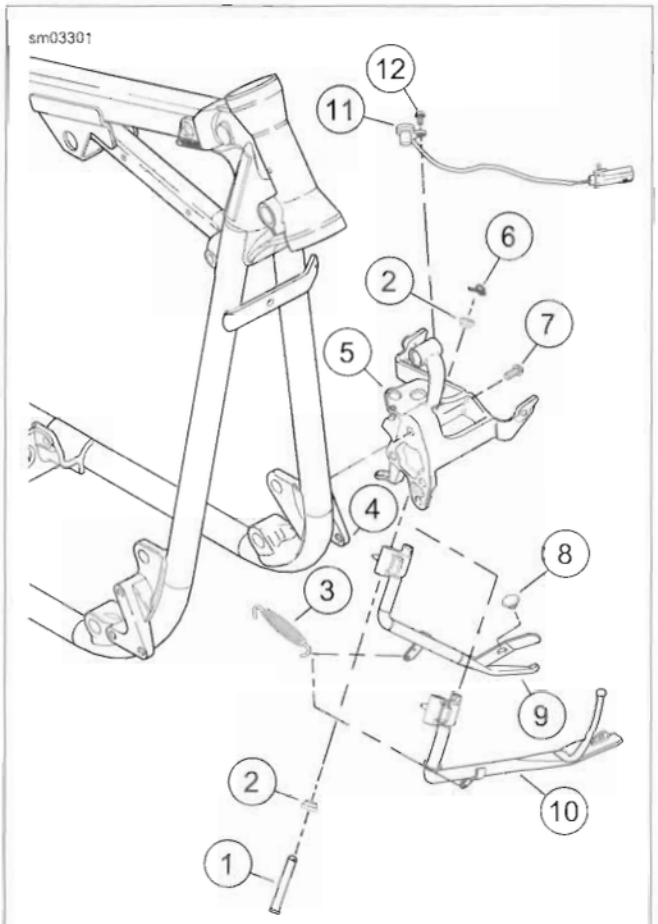

1. **Clevis pin**
2. **Bushing (2)**
3. **Spring**
4. **Spring bracket**
5. **Jiffy stand bracket**
6. **Pretzel clip**
7. **Fastener (3)**
8. **Bumper**
9. **Jiffy stand (all but FLSTN, FLS)**
10. **Jiffy stand (FLSTN, FLS)**
11. **Sensor (HDI models)**
12. **Screw, sensor (HDI models)**

Figure 2-128. Jiffy Stand

SENSOR: HDI MODELS

FASTENER	TORQUE VALUE	
Jiffy stand sensor screw	96-144 in-lbs	10.8-16.3 Nm

1. See Figure 2-128. Make a note of harness routing for ease of assembly. Disconnect sensor connector located behind the regulator.
2. Remove any cable anchors and cable straps.
3. Remove screw (12) and remove sensor (11).
4. Installation is in reverse of removal. Tighten screw (12) to 96-144 **in-lbs** (10.8-16.3 Nm).

REMOVAL

⚠WARNING

Block or jack vehicle under frame in a way that the vehicle will not fall over. Failure to properly block and/or raise the vehicle could result in death or serious injury. (00462c)

1. Detach shifter linkage.
2. See Figure 2-128. Remove the three fasteners (7) from jiffy stand bracket (5).
3. Detach spring (3) from jiffy stand and spring bracket (4).
4. Remove pretzel clip (6) from clevis pin (1).
5. Remove clevis pin and bushings (2) to free jiffy stand from jiffy stand bracket.

INSTALLATION

FASTENER	TORQUE VALUE	
Jiffy stand bracket assembly screws	25-30 ft-lbs	33.9-40.7 Nm

⚠WARNING

If leg stop is incorrectly installed, excessive wear can allow vehicle to fall when rested on jiffy stand, which could result in death or serious injury. (00479b)

1. See Figure 2-128. Install bracket.
   a. Apply ANTI-SEIZE LUBRICANT to clevis pin (1).
   b. Place jiffy stand into position.
   c. Install lower bushing (2) on clevis pin (1).
   d. Install clevis pin (1) through jiffy stand (9, 10) and jiffy stand bracket (5).
   e. Place top bushing (2) on clevis pin (1).
   f. Install pretzel clip (6) in clevis pin (1).

   NOTE

   See Figure 2-129. FXSB models have spring hook end facing up. All but FXSB models have spring hook facing down.

   g. Attach spring (3) to jiffy stand (9,10) and spring bracket (4).
   h. Install jiffy stand and bracket assembly with three fasteners (7). Tighten to 25-30 ft-lbs (33.9-40.7 Nm).
2. Attach shifter linkage.
3. Check that jiffy stand operates correctly before using.

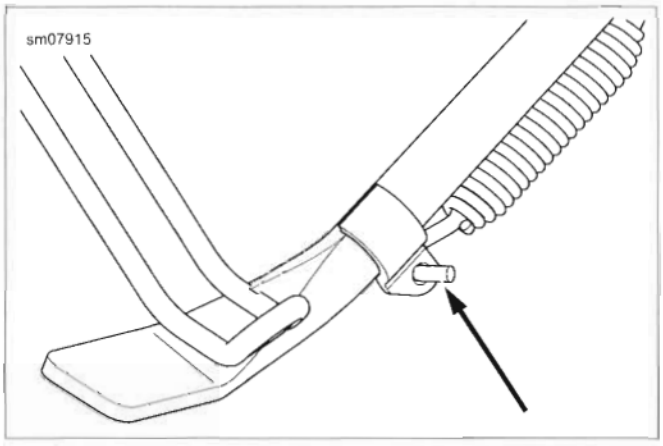

Figure 2-129. Spring Orientation: FXSB

REMOVAL

1. Remove steering stem. See 2.20 STEERING HEAD.
2. See Figure 2-130. Remove set screw (1).
3. Insert key (3) in lock (2) and turn partially.
4. Wiggle lock and pull until enough of the lock comes out to get a grip with pliers or other suitable tool.
5. Pull fork lock to remove.

INSTALLATION

FASTENER	TORQUE VALUE	
Fork lock set screw	10-12 **in-lbs**	1.1-1.4 Nm

NOTES

- *There is an internal boss in the left side of the steering head opposite the external boss. The end of the lock fits into this internal boss.*
- *See Figure 2-131. There is a flat (1) in the bottom of the lock into which the set screw fits. This flat must be at the bottom when the lock is installed.*
- *When the lock is correctly installed, a forward-facing flat (2) on the lock will fit against a flat inside the external lock boss and the face of the lock will be flush with the face of the external boss.*

1. Grease the end of the lock (the part that goes into the internal boss) and slide lock into external boss.
2. Insert steering stem into frame. See 2.20 STEERING HEAD.

NOTE

Stem must be in locked fork position.

3. Move steering stem into locked fork position. Rotate steering stem slightly, while fully installing lock.
4. See Figure 2-130. Apply LOCTITE 243 MEDIUM STRENGTH THREADLOCKER AND SEALANT (blue) to set screw (1).
5. Install set screw. Tighten to 10-12 **in-lbs** (1.1-1.4 Nm).
6. Insert key in the lock and tighten set screw (1) until lock begins to bind; then back set screw out 1/2 turn.
7. Seal screw with a good quality sealant.
8. Finish steering stem installation including installing upper fork bracket and handlebars. See 2.20 STEERING HEAD.

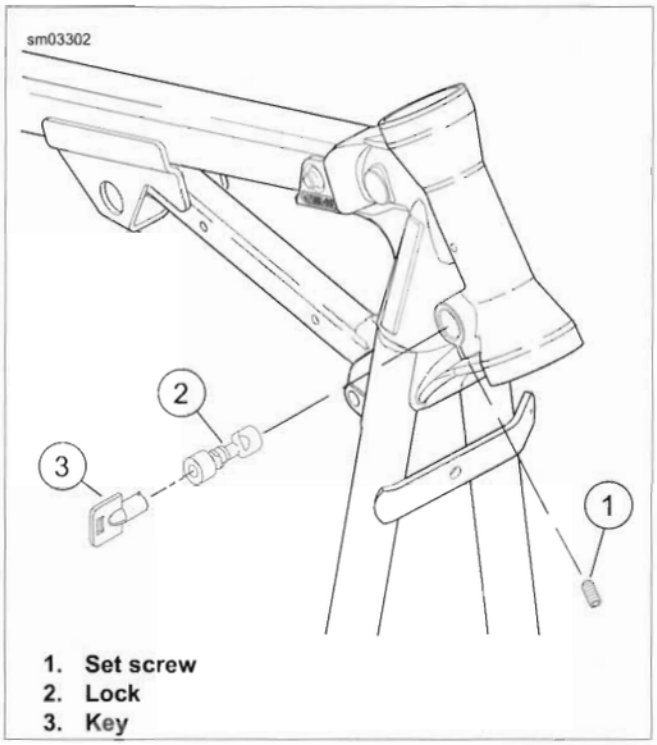

1. **Set screw**
2. **Lock**
3. **Key**

Figure 2-130. Fork Lock Installation

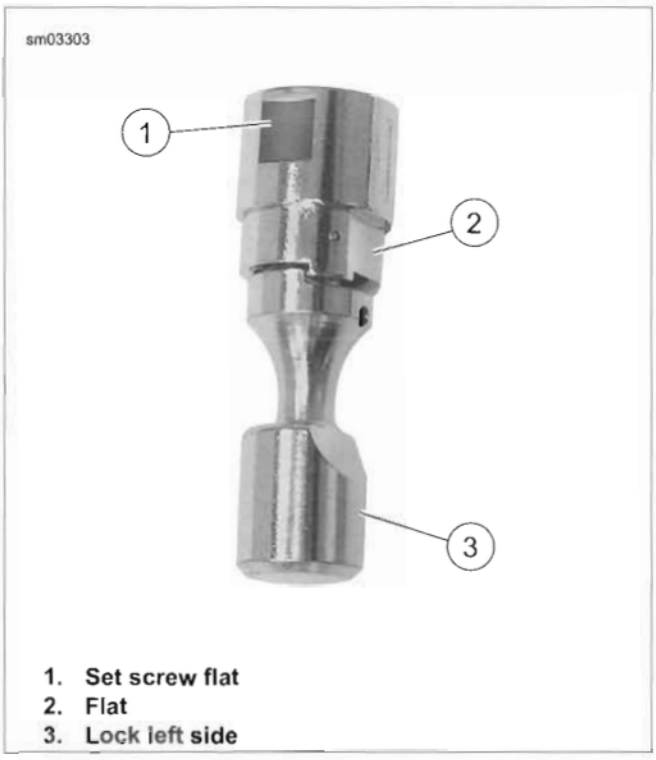

1. **Set screw flat**
2. **Flat**
3. **Lock left side**

Figure 2-131. Fork Lock

REPLACEMENT

NOTE

If the retention washer is removed, the retention nut will fall through the fender. The procedure below lifts the retention nut up through the fender on the cable strap for ease of replacement.

1. Slide retention nut over tapered end of cable strap so that larger O.D. of nut rests on cable strap eyelet.
2. From bottom of rear fender, feed cable strap up through fender hole.
3. See Figure 2-132. With tab (1) on retention nut (2) seated in notch of fender hole, pull up on cable strap to hold nut snug against underside of rear fender.
4. From the side opposite the tab, slide on the retention washer (3) to lock the position of the retention nut.

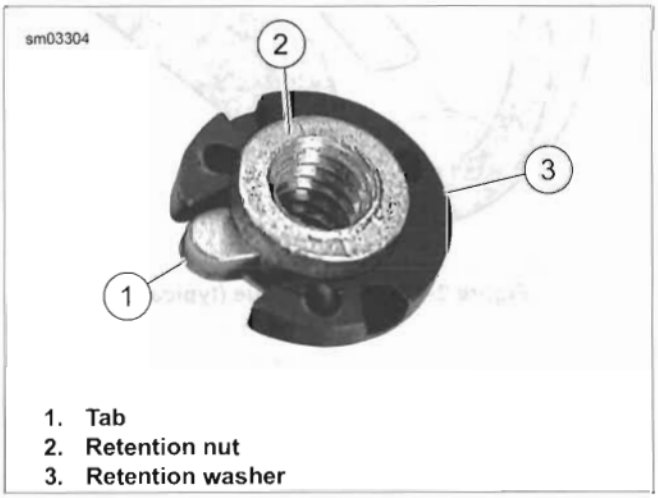

1. **Tab**
2. **Retention nut**
3. **Retention washer**

Figure 2-132. Seat Retention Nut

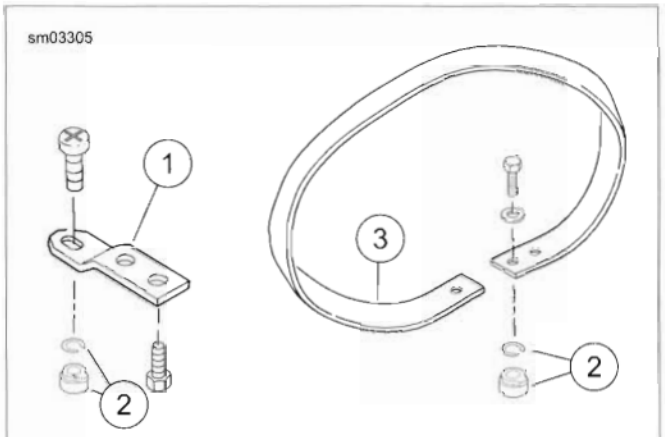

1. **Bracket for seat/pillion**
2. **Retention nut and retention nut washer**
3. **Seat strap (FXST/C/B/D style shown)**

Figure 2-133. Retention Nut In Use

REPLACEMENT

Removal

1. See Figure 2-135. Remove seat mounting screw from top of rear fender.
2. See Figure 2-134. Push seat rearward to free tongue at front of seat from slot or bracket in frame back.
3. Two-up seats: gently slide seat out of grab strap.
4. Remove seat from frame.

Installation

1. Two-up seats: slide seat into grab strap.
2. Place seat on frame back.
3. Slide seat toward front of motorcycle until the tongue locks into the bracket or slot in the frame back.
4. Push seat forward until rear fender seat retention nut is centered in hole of mounting bracket.
5. Hand-tighten the seat mounting screw.

⚠WARNING

After installing seat, pull upward on seat to be sure it is locked in position. While riding, a loose seat can shift causing loss of control, which could result in death or serious injury. (00070b)

6. Pull up on seat to verify that it is properly secured.

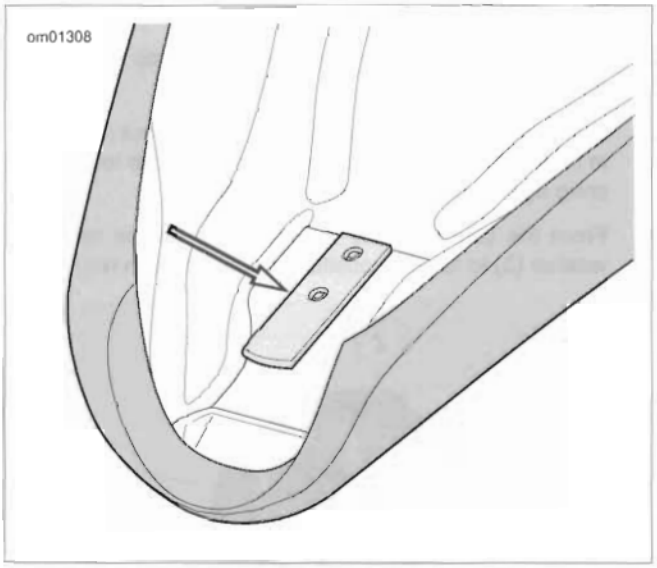

Figure 2-134. Seat Tongue (typical)

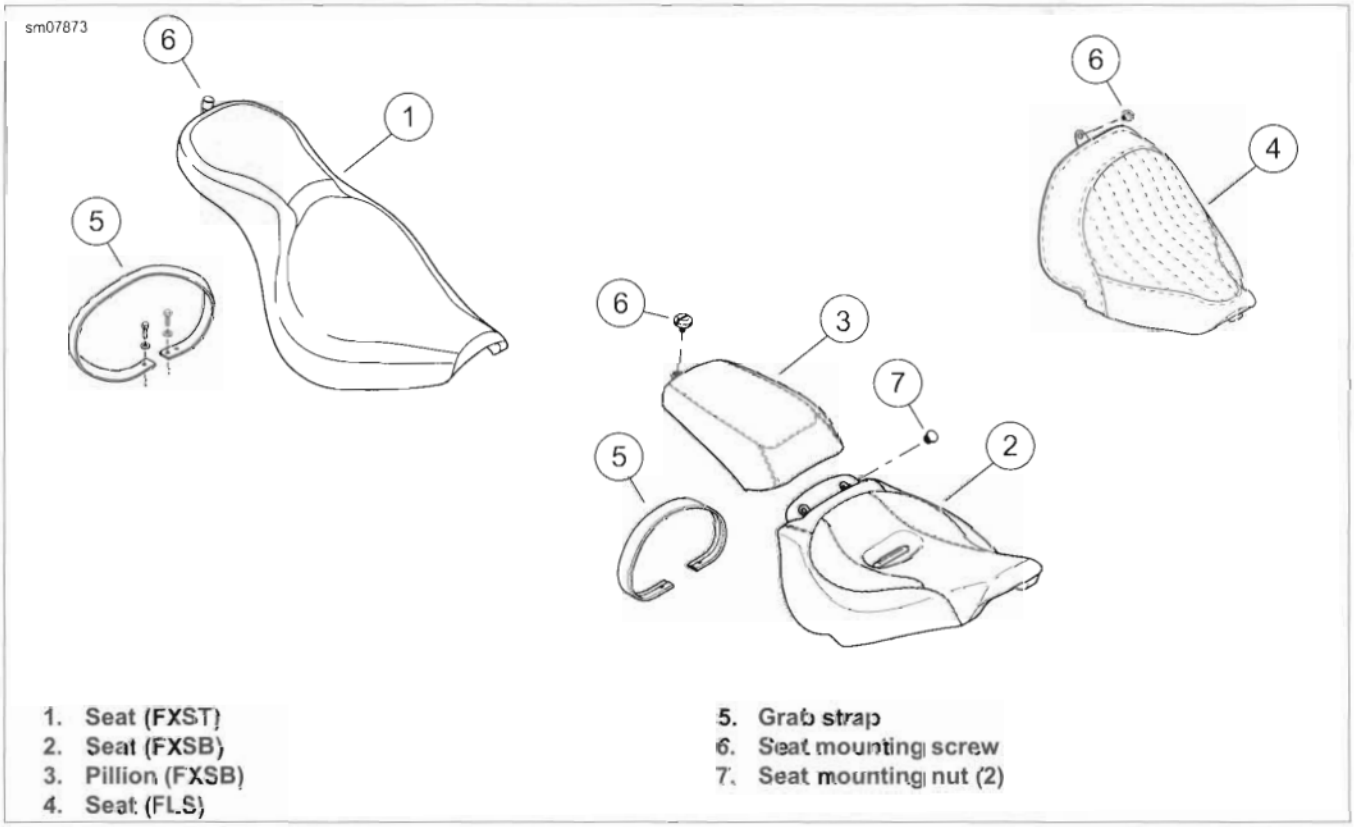

1. Seat (FXST)
2. Seat (FXSB)
3. Pillion (FXSB)
4. Seat (FLS)
5. Grab strap
6. Seat mounting screw
7. Seat mounting nut (2)

Figure 2-135. Seat: FXST/FXSB/FLS

REMOVAL AND INSTALLATION

⚠WARNING

After installing seat, pull upward on seat to be sure it is locked in position. While riding, a loose seat can shift causing loss of control, which could result in death or serious injury. (00070b)

See Figure 2-136. The passenger seat attaches with a single screw (1) at the rear and engages the seat mounting fasteners (6) at the front.

To remove seat (7, 8, 9), remove passenger seat (2, 3, 4) and seat mounting fasteners (6). When installing seat, insert tang at front of seat into the channel in the frame and install seat mounting nuts. Install passenger seat.

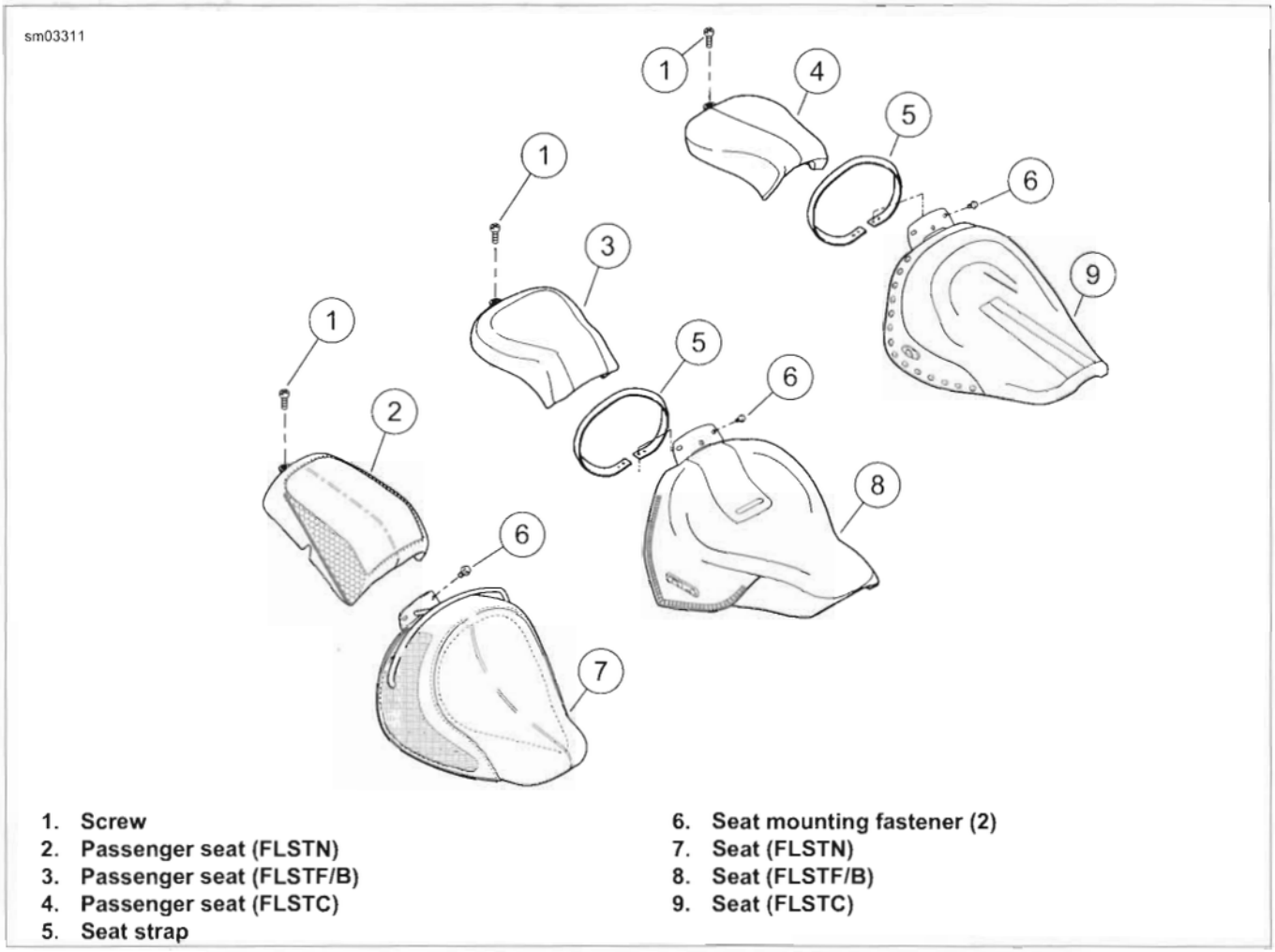

1. Screw
2. Passenger seat (FLSTN)
3. Passenger seat (FLSTF/B)
4. Passenger seat (FLSTC)
5. Seat strap
6. Seat mounting fastener (2)
7. Seat (FLSTN)
8. Seat (FLSTF/B)
9. Seat (FLSTC)

Figure 2-136. Seat: FLSTN/FLSTF/FLSTFB/FLSTC

REMOVAL AND INSTALLATION

FASTENER	TORQUE VALUE	
Luggage rack rear fasteners: FLSTN	12-14 ft-lbs	16.3-19.0 Nm
Luggage rack front fasteners: FLSTN	96-120 **in-lbs**	10.8-13.6 Nm

1. Remove seat. See 2.43 SEAT: FLSTN, FLSTF, FLSTFB, FLSTC.
2. Remove front fasteners (1) and rear fasteners (3) to detach luggage rack (2) from fender.
3. Place luggage rack on fender.
4. Install, but do not tighten front fasteners.
5. Install rear fastener. Tighten to 12-14 ft-lbs (16.3-19.0 Nm).
6. Tighten front fasteners to 96-120 **in-lbs** (10.8-13.6 Nm).

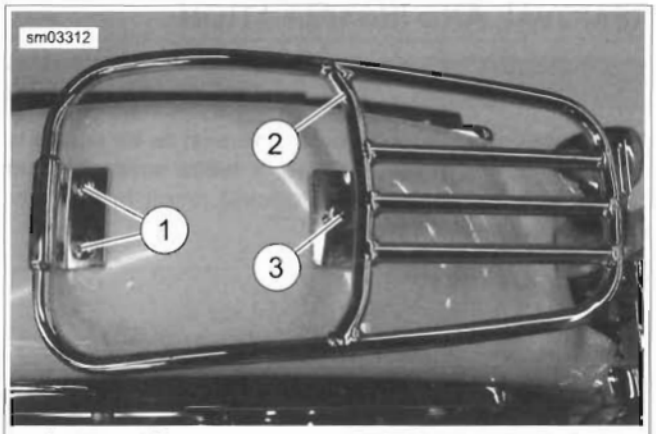

1. **Front fasteners**
2. **Luggage rack**
3. **Rear fastener**

Figure 2-137. Luggage Rack

REMOVAL

1. See Figure 2-138. Remove acorn nut (7) and washer (8) from lower support.
2. Remove flange nuts and washers (5) from inside saddlebag.
3. Lift saddlebag away from motorcycle. Remove nuts (1) and studs (4) if necessary.

INSTALLATION

FASTENER	TORQUE VALUE	
Fender support studs: FLSTC	21-27 ft-lbs	28.5-36.6 Nm
Saddlebag flange nuts: FLSTC	120-144 **in-lbs**	13.6-16.3 Nm
Saddlebag lower bracket acorn nut: FLSTC	120-144 **in-lbs**	13.6-16.3 Nm

NOTES

- *See Figure 2-138. On FLSTC models, there are no washers between studs (4) and sissybar sideplate (3).*
- *If replacing isolator (9), long (silver) threads face saddlebag and short (yellow) threads face support.*

1. If removed, install studs (4) and tighten nuts (1) behind fender support (2) to 21-27 ft-lbs (28.5-36.6 Nm).
2. Install flange nuts and washers (5) inside saddlebags. Tighten to 120-144 **in-lbs** (13.6-16.3 Nm).
3. Install lower bracket acorn nut (7) and washer (8). Tighten to 120-144 **in-lbs** (13.6-16.3 Nm).

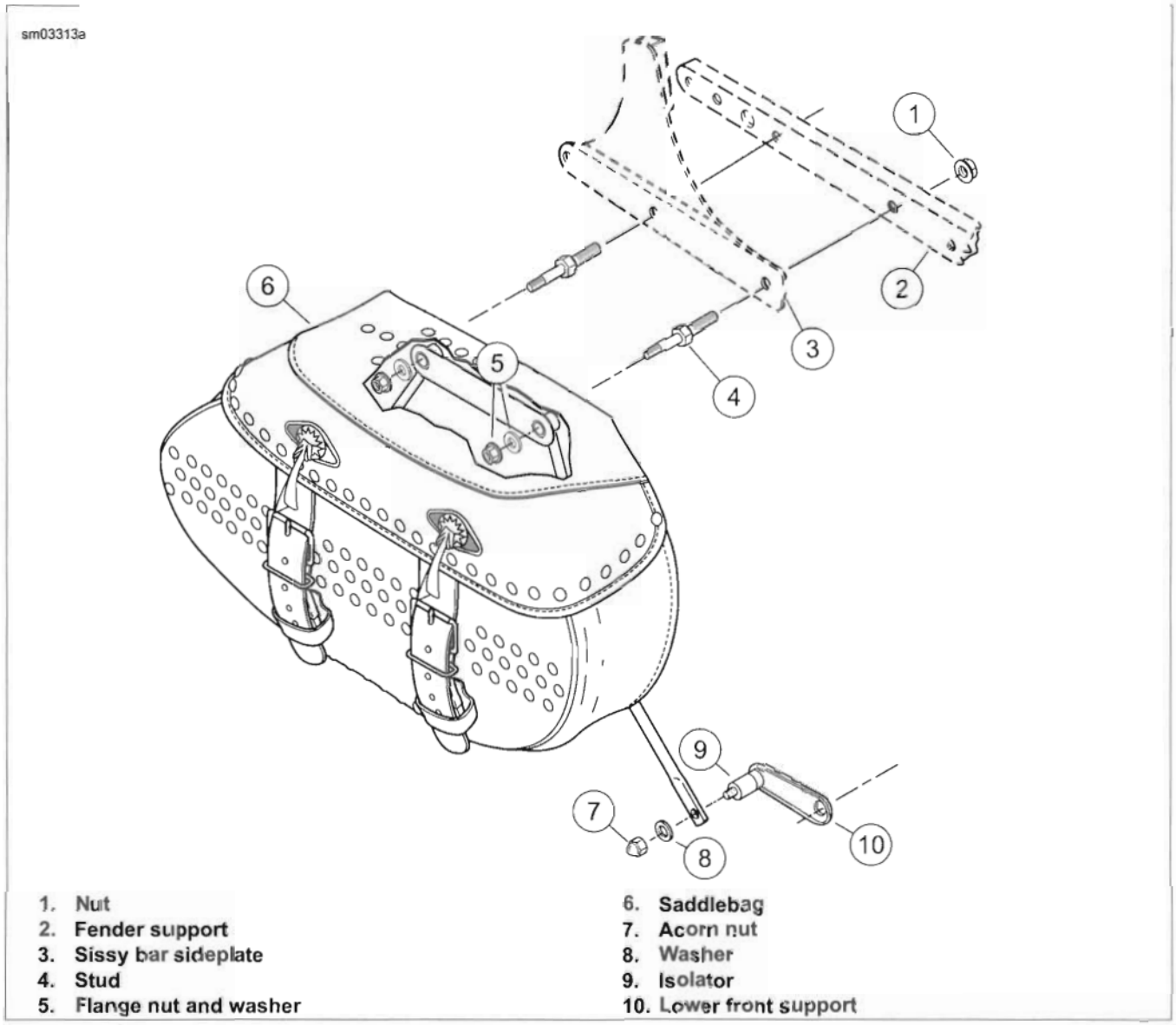

1. Nut
2. Fender support
3. Sissy bar sideplate
4. Stud
5. Flange nut and washer
6. Saddlebag
7. Acorn nut
8. Washer
9. Isolator
10. Lower front support

Figure 2-138. Saddlebags: FLSTC

REMOVAL

1. See Figure 2-139. Use a finger to raise the wireform latch springs on each side of the windshield.
2. Standing at the front of the vehicle, gently pull the top of the windshield until the upper notches (2) on the side brackets are free of the upper grommets.
3. Carefully raise the windshield until the lower notches (3) in the side brackets are free of the lower grommets.
4. Remove windshield from vehicle.

INSTALLATION

1. See Figure 2-139. Lower the windshield into position until the lower notches (3) are seated on the lower grommets.
2. Standing at the front of the vehicle, gently push the top of the windshield toward the rear until the upper notches (2) fully engage the upper grommets.
3. Push down on the wireform latch springs (1) so that they overhang the rubber grommets. If some adjustment is necessary, loosen the retaining bolts and rotate the latch springs into the proper position.

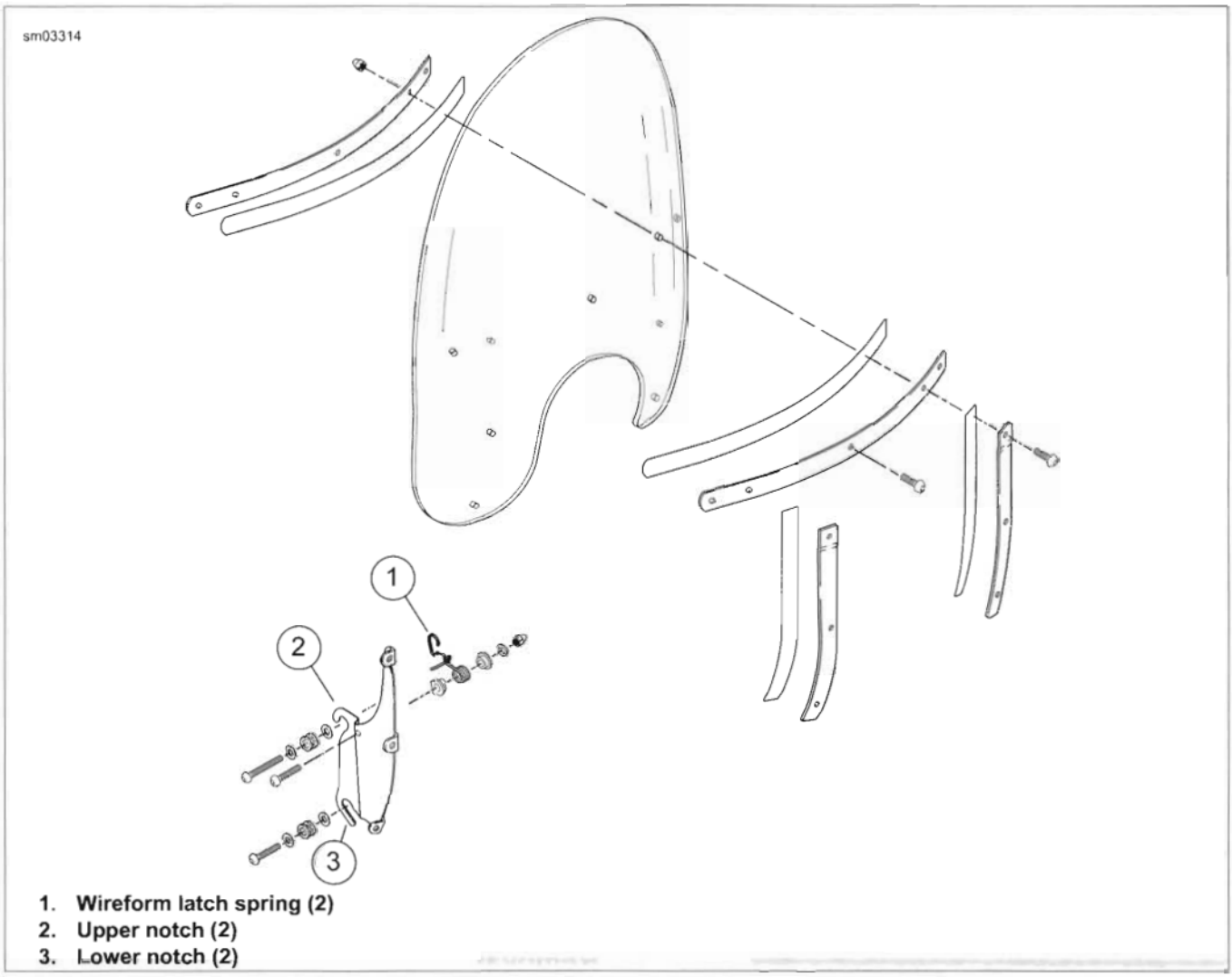

1. **Wireform latch spring (2)**
2. **Upper notch (2)**
3. **Lower notch (2)**

Figure 2-139. Windshield: FLSTC

UPPER SAREE GUARDS: ALL BUT FXSB

FASTENER	TORQUE VALUE	
Saree guard, upper, nut: all but FXSB	21-27 ft-lbs	28.5-36.6 Nm
Saree guard, upper, fasteners: all but FXSB	21-27 ft-lbs	28.5-36.6 Nm
Fender support fasteners - first torque	30-35 ft-lbs	40.7-47.5 Nm
Fender support fasteners - final torque	38-42 ft-lbs	51.5-56.9 Nm

Removal

1. See Figure 2-140. Loosen fender support fasteners (1).
2. Remove three fasteners (2).
3. Remove nut (3) located behind strut cover.
4. Remove upper saree guard.

Installation

1. See Figure 2-140. Set upper saree guard into position. Install nut (3) finger-tight.
2. Loosely install three fasteners (2).
3. Tighten nut (3) to 21-27 ft-lbs (28.5-36.6 Nm).
4. Tighten fasteners (2) to 21-27 ft-lbs (28.5-36.6 Nm).
5. Tighten fender support fasteners (1) to an initial torque of 30-35 ft-lbs (40.7-47.5 Nm). Loosen fasteners and final-tighten to 38-42 ft-lbs (51.5-56.9 Nm).

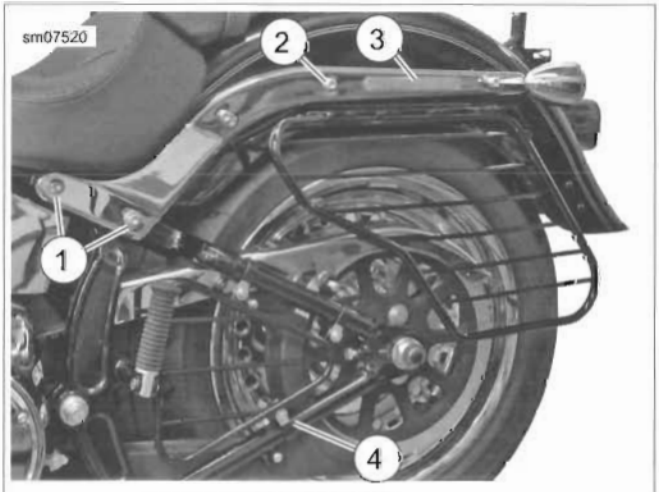

1. **Fender support fastener (2)**
2. **Fastener (3)**
3. **Nut**
4. **Screws (3)**

Figure 2-140. Left Saree Guards

UPPER SAREE GUARDS: FXSB

FASTENER	TORQUE VALUE	
Saree guard, upper, fasteners: FXSB	21-27 ft-lbs	28.5-36.6 Nm

Removal

1. See Figure 2-141. Remove screws (1), washers (2) and spacers (3).
2. Remove saree guard (4).

Installation

1. See Figure 2-141. Set saree guard into position.
2. Install spacers (3) between saree guard and fender.
3. Install screws (1) and washers (2). Tighten to 21-27 ft-lbs (28.5-36.6 Nm).

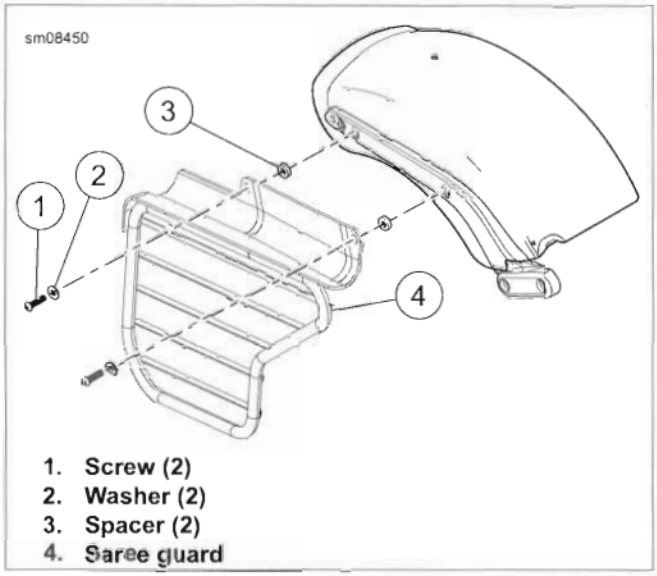

1. **Screw (2)**
2. **Washer (2)**
3. **Spacer (2)**
4. **Saree guard**

Figure 2-141. Upper Saree Guards: FXSB

LOWER SAREE GUARD

FASTENER	TORQUE VALUE	
Saree guard, lower, fasteners	21-27 ft-lbs	28.5-36.6 Nm

Removal

1. See Figure 2-140. Remove screws (4).
2. Remove lower saree guard.

Installation

1. Install lower saree guard.
2. See Figure 2-140. Install screws (4) with washers. Tighten to 21-27 ft-lbs (28.5-36.6 Nm).

REMOVAL AND INSTALLATION

1. See Figure 2-142. Remove fastener securing front license plate bracket.
2. Install **new** license plate bracket and tighten fastener finger tight.
3. Adjust headlamp. See 1.20 HEADLAMP ALIGNMENT.



Figure 2-142. Front License Plate Bracket

REMOVAL

1. Mark location of emblem with masking tape.

NOTE

Wear protective gloves.

2. Saw behind emblem with mono-filament fishing line or waxed dental floss to remove emblem.
3. Use 3M GENERAL PURPOSE ADHESIVE REMOVER to remove remaining foam backing tape and adhesive from mounting surface.

NOTE

For maximum bond, surface must be clean and dry.

4. Clean with a mixture of 50 percent isopropyl alcohol and 50 percent distilled water.

NOTE

Apply medallion within minutes of cleaning.

5. Allow to dry completely.

INSTALLATION

NOTES

- *Apply in ambient temperatures between 70-100 °F (21-38 °C).*
- *Do not remove protective film from adhesive until ready to apply.*
- *Do not bend emblem to fit contour of mounting surface.*

1. Test fit medallion in intended location.
   a. Check medallion against curve of mounting surface.
   b. Match left and right sides of fuel tank.

NOTES

- *Protect adhesive from grease, oil, dust, dirt and finger prints.*
- *Once applied, do not shift medallion.*
- *The adhesive bonds in 72 hours at room temperature.*

2. Remove protective film from back of medallion.
3. Apply even pressure across entire surface with palms and fingers of both hands. Hold in place for 15 seconds.
4. Wait 20 minutes before touching medallion.
5. Wait 24 hours before washing.

SUBJECT	PAGE NO.
3.1 FASTENER TORQUE VALUES	3-1
3.2 SPECIFICATIONS	3-3
3.3 SERVICE WEAR LIMITS	3-5
3.4 ENGINE OIL FLOW	3-7
3.5 OIL PUMP OPERATION	3-12
3.6 BREATHER OPERATION	3-14
3.7 OIL PRESSURE	3-15
3.8 TROUBLESHOOTING	3-17
3.9 HOW TO USE THIS SECTION	3-19
3.10 TOP END SERVICE	3-20
3.11 CAM COMPARTMENT SERVICE	3-22
3.12 STRIPPING MOTORCYCLE FOR SERVICE	3-24
3.13 ASSEMBLING MOTORCYCLE AFTER SERVICE	3-25
3.14 REMOVING ENGINE FROM CHASSIS	3-26
3.15 INSTALLING ENGINE IN CHASSIS	3-27
3.16 TOP END OVERHAUL: DISASSEMBLY	3-29
3.17 BREATHER ASSEMBLY	3-35
3.18 ROCKER ARM SUPPORT PLATE	3-36
3.19 PUSHRODS, LIFTERS AND COVERS	3-39
3.20 CYLINDER HEAD	3-41
3.21 CYLINDER	3-51
3.22 PISTON	3-55
3.23 TOP END OVERHAUL: ASSEMBLY	3-59
3.24 CAM COMPARTMENT AND COMPONENTS	3-69
3.25 OIL PUMP	3-81
3.26 CRANKCASE DISASSEMBLY AND REPAIR	3-83
3.27 FLYWHEEL AND CONNECTING RODS	3-93
3.28 COUNTERBALANCER ASSEMBLY REPAIR	3-95
3.29 CRANKCASE ASSEMBLY	3-100
3.30 OIL TANK: ALL BUT FXSB	3-106
3.31 OIL TANK: FXSB	3-110

FASTENER TORQUE VALUES IN THIS CHAPTER

The table below lists torque values for all fasteners presented in this chapter.

FASTENER	TORQUE VALUE		NOTES
Balance shaft bolts	42-47 ft-lbs	56.9-63.7 Nm	3.29 CRANKCASE ASSEMBLY, Counterbalancer Assembly Installation
Balance shaft support screws	18-22 ft-lbs	24.4-29.8 Nm	3.29 CRANKCASE ASSEMBLY, Counterbalancer Assembly Installation
Breather assembly screws	120-156 **in-lbs**	13.6-17.6 Nm	3.23 TOP END OVERHAUL: ASSEMBLY, Breather and Rocker Cover
Cam chain tensioner fasteners	100-120 **in-lbs**	11.3-13.6 Nm	3.24 CAM COMPARTMENT AND COMPONENTS, Cam Support Plate and Cover Installation
Cam cover screws	125-155 **in-lbs**	14.1-17.5 Nm	3.24 CAM COMPARTMENT AND COMPONENTS, Cam Support Plate and Cover Installation
Cam sprocket flange bolt, 1st torque	15 ft-lbs	20.3 Nm	3.24 CAM COMPARTMENT AND COMPONENTS, Cam Support Plate and Cover Installation
Cam sprocket flange bolt, final torque	34 ft-lbs	46.1 Nm	3.24 CAM COMPARTMENT AND COMPONENTS, Cam Support Plate and Cover Installation
Cam support plate screws	100-120 **in-lbs**	11.3-13.6 Nm	3.24 CAM COMPARTMENT AND COMPONENTS, Cam Support Plate and Cover Installation
Counterbalance assembly bearing	40-70 **in-lbs**	4.5-7.9 Nm	3.28 COUNTERBALANCER ASSEMBLY REPAIR, Cleaning, Inspection, and Repair
Crankcase bolt, 1st torque	120 **in-lbs**	13.6 Nm	3.29 CRANKCASE ASSEMBLY, Crankcase
Crankcase bolt, final torque	15-19 ft-lbs	20.3-25.8 Nm	3.29 CRANKCASE ASSEMBLY, Crankcase
Crankcase oil fittings	120-168 **in-lbs**	13.6-19.0 Nm	3.26 CRANKCASE DISASSEMBLY AND REPAIR, Pipe Plugs and Oil Fittings
Crankcase pipe plugs	120-144 **in-lbs**	13.6-16.3 Nm	3.26 CRANKCASE DISASSEMBLY AND REPAIR, Pipe Plugs and Oil Fittings
Crankshaft sprocket bolt, 1st torque	15 ft-lbs	20.3 Nm	3.24 CAM COMPARTMENT AND COMPONENTS, Cam Support Plate and Cover Installation
Crankshaft sprocket bolt, final torque	24 ft-lbs	32.5 Nm	3.24 CAM COMPARTMENT AND COMPONENTS, Cam Support Plate and Cover Installation
Cylinder headbolts, 1st torque	120-144 **in-lbs**	13.6-16.3 Nm	3.23 TOP END OVERHAUL: ASSEMBLY, Cylinder Head/ See procedure to tighten
Cylinder headbolts, 2nd torque	15-17 ft-lbs	20.3-23.0 Nm	3.23 TOP END OVERHAUL: ASSEMBLY, Cylinder Head
Cylinder headbolts, final torque	90 degrees	90 degrees	3.23 TOP END OVERHAUL: ASSEMBLY, Cylinder Head
Cylinder head bracket bolts	35-40 ft-lbs	47.5-54.2 Nm	3.13 ASSEMBLING MOTORCYCLE AFTER SERVICE, Procedure
Cylinder head bracket bolts	35-40 ft-lbs	47.5-54.2 Nm	3.15 INSTALLING ENGINE IN CHASSIS, Procedure
Cylinder stud	120-240 **in-lbs**	13.6-27.1 Nm	3.26 CRANKCASE DISASSEMBLY AND REPAIR, Cylinder Studs
Cylinder torque plate bolts, 1st torque	120-144 **in-lbs**	13.6-16.3 Nm	3.21 CYLINDER, Inspection/ See procedure to tighten
Cylinder torque plate bolts, 2nd torque	15-17 ft-lbs	20.3-23.0 Nm	3.21 CYLINDER, Inspection
Cylinder torque plate bolts, final torque	90 degrees	90 degrees	3.21 CYLINDER, Inspection
Electrical panel fastener: FXSB	36-60 **in-lbs**	4.1-6.8 Nm	3.31 OIL TANK: FXSB, Installation

FASTENER	TORQUE VALUE		NOTES
Electrical panel fasteners: all but FXSB	36-60 **in-lbs**	4.1-6.8 Nm	3.30 OIL TANK: ALL BUT FXSB, Installation
Engine/transmission bracket bolts	30-35 ft-lbs	40.7-47.5 Nm	3.15 INSTALLING ENGINE IN CHASSIS, Procedure
Engine mount bolt, top	45-50 ft-lbs	61.0-67.8 Nm	3.15 INSTALLING ENGINE IN CHASSIS, Procedure
Engine mount bracket nuts, top	20-25 ft-lbs	27.1-33.9 Nm	3.15 INSTALLING ENGINE IN CHASSIS, Procedure
Engine mounting bolt, upper	45-50 ft-lbs	61.0-67.8 Nm	3.13 ASSEMBLING MOTORCYCLE AFTER SERVICE, Procedure
Engine mounting bolts, front	70-80 ft-lbs	94.9-108.5 Nm	3.15 INSTALLING ENGINE IN CHASSIS, Procedure
Lifter cover screws	100-120 **in-lbs**	11.3-13.6 Nm	3.23 TOP END OVERHAUL: ASSEMBLY, Pushrods, Lifters and Covers
Oil pump screws, 1st torque	40-45 **in-lbs**	4.5-5.1 Nm	3.24 CAM COMPARTMENT AND COMPONENTS, Cam Support Plate and Cover Installation
Oil pump screws, final torque	90-120 **in-lbs**	10.2-13.6 Nm	3.24 CAM COMPARTMENT AND COMPONENTS, Cam Support Plate and Cover Installation
Oil tank bolts: FXSB	12-15 ft-lbs	16.3-20.3 Nm	3.31 OIL TANK: FXSB, Installation
Piston jet screw	25-35 **in-lbs**	2.8-3.9 Nm	3.26 CRANKCASE DISASSEMBLY AND REPAIR, Right Crankcase Half
Pivot shaft nut	90-110 ft-lbs	122-149.1 Nm	3.15 INSTALLING ENGINE IN CHASSIS, Procedure
Right main bearing retaining screws	40-70 **in-lbs**	4.5-7.9 Nm	3.26 CRANKCASE DISASSEMBLY AND REPAIR, Right Crankcase Half
Rocker arm support plate bolts	18-22 ft-lbs	24.4-29.8 Nm	3.23 TOP END OVERHAUL: ASSEMBLY, Rocker Arm Support Plate
Rocker cover screws	15-18 ft-lbs	20.3-24.4 Nm	3.23 TOP END OVERHAUL: ASSEMBLY, Breather and Rocker Cover
Rocker housing bolts	120-168 **in-lbs**	13.6-19.0 Nm	3.23 TOP END OVERHAUL: ASSEMBLY, Cylinder Head
Secondary cam chain tensioner fastener	90-120 **in-lbs**	10.2-13.6 Nm	3.24 CAM COMPARTMENT AND COMPONENTS, Camshafts
Spark plug	12-18 ft-lbs	16.3-24.4 Nm	3.8 TROUBLESHOOTING, Compression Test
Splash guard fastener: all but FXSB	36-48 **in-lbs**	4.1-5.4 Nm	3.30 OIL TANK: ALL BUT FXSB, Installation
Splash guard fasteners: FXSB	36-60 **in-lbs**	4.1-6.8 Nm	3.31 OIL TANK: FXSB, Installation
Timer cover screws	20-30 **in-lbs**	2.3-3.4 Nm	3.24 CAM COMPARTMENT AND COMPONENTS, Cam Support Plate and Cover Installation
Transmission mounting bolts, 1st torque	15 ft-lbs	20.3 Nm	3.15 INSTALLING ENGINE IN CHASSIS, Procedure
Transmission mounting bolts, final torque	34-39 ft-lbs	46.1-52.9 Nm	3.15 INSTALLING ENGINE IN CHASSIS, Procedure

SPECIFICATIONS

Table 3-1. Engine: Twin Cam 96

ITEM	SPECIFICATION	
Number of cylinders	2	
Type	4-cycle, 45 degree V-Type, air cooled	
Compression ratio	9.2:1	
Bore	3.75 in	95.3 mm
Stroke	4.38 in	111.3 mm
Displacement	96.0 in^3	1585 cm^3
Lubrication system	Pressurized, dry sump	

Table 3-2. Engine: Twin Cam 103

ITEM	SPECIFICATION	
Number of cylinders	2	
Type	4-cycle, 45 degree V-Type, air-cooled	
Compression ratio	9.6:1	
Bore	3.875 in	98.42 mm
Stroke	4.375 in	111.12 mm
Displacement	103.0 in^3	1690 cm^3
Lubrication system	Pressurized, dry sump	

Table 3-3. Oiling System

OIL PUMP	DATA
Type	Twin gerotor, dual scavenge, crank mounted and driven, internal oil pump, dry sump
Pressure	30-38 psi (207-262 kPa) at 2000 rpm and normal operating temperature of 230 °F (110 °C)
Filtration	5 micron media, filtered between pump and engine

Table 3-4. Rocker Arms Specifications

ROCKER ARMS	IN	MM
Shaft fit in bushing (loose)	0.0005-0.0020	0.013-0.051
End clearance	0.003-0.013	0.08-0.33
Bushing fit in rocker arm (tight)	0.002-0.004	0.051-0.102

Table 3-5. Rocker Arm Shaft Specifications

ROCKER ARM SHAFTS	IN	MM
Shaft fit in rocker arm support plate (loose)	0.0007-0.0022	0.018-0.056

Table 3-6. Hydraulic Lifter Specifications

HYDRAULIC LIFTERS	IN	MM
Fit in crankcase (loose)	0.0009-0.0026	0.002-0.066

Table 3-7. Cylinder Head Specifications

CYLINDER HEAD	IN	MM
Valve guide in head (tight)	0.0022-0.0033	0.051-0.084
Valve seat in head (tight)	0.003-0.0045	0.076-0.114
Valve stem protrusion (min)	2.022	51.36
Head gasket surface (flatness)	0-0.006	0-0.152

Table 3-8. Valve Specifications

VALVES	IN	MM
Exhaust: fit in guide	0.001-0.003	0.0254-0.0762
Intake: fit in guide	0.001-0.003	0.0254-0.0762
Seat width	0.040-0.062	1.02-1.58
Stem protrusion from cylinder head boss	2.012-2.032	51.10-51.61

Table 3-9. Valve Springs Specifications

VALVE SPRINGS	IN	MM
Closed	135 lbs @ 1.850 in.	61.2 kg @ 47.0 mm
Open	312 lbs @ 1.300 in.	141.5 kg @ 33.0 mm
Free length	2.325 in.	59.1 mm

Table 3-10. Piston: Twin Cam 96

PISTON		IN	MM
Fit in cylinder (loose)		0.0014-0.0025	0.036-0.064
Piston pin fit (loose)		0.0002-0.0005	0.005-0.013
Ring end gap	Top compression	0.010-0.020	0.254-0.508
	2nd compression	0.014-0.024	0.356-0.610
	Oil control ring	0.010-0.050	0.254-1.27
Ring side clearance	Top compression	0.0012-0.0037	0.030-0.094
	2nd compression	0.0012-0.0037	0.030-0.094
	Oil control rails	0.0031-0.0091	0.079-0.231

Table 3-11. Piston: Twin Cam 103

PISTON		IN	MM
Fit in cylinder (loose)		0.0014-0.0025	0.036-0.064
Piston pin fit (loose)		0.0002-0.0005	0.005-0.013
Ring end gap	Top compression	0.012-0.022	0.305-0.559
	2nd compression	0.015-0.025	0.381-0.635
	Oil control ring	0.010-0.050	0.254-1.270
Ring side clearance	Top compression	0.0012-0.0037	0.030-0.094
	2nd compression	0.0012-0.0037	0.030-0.094
	Oil control rails	0.0031-0.0091	0.079-0.231

Table 3-12. Connecting Rod Specifications

CONNECTING ROD	IN	MM
Piston pin fit (loose)	0.0007-0.0012	0.018-0.030
Side play between flywheels	greater than 0.005	greater than 0.13
Connecting rod to crankpin (loose)	0.0004-0.0017	0.0102-0.0432

Table 3-13. Flywheel Specifications

FLYWHEELS	IN	MM
Runout (shaft measured in case)	0.000-0.010	0.0-0.254
Runout (measured in truing stand)	0.000-0.004	0.0-0.102
End play	0.003-0.013	0.076-0.330

Table 3-14. Crankshaft/Sprocket Shaft Bearing Specifications

CRANKSHAFT/SPROCKET SHAFT BEARINGS	IN	MM
Roller bearing fit (loose)	0.0002-0.0015	0.005-0.038
Bearing fit in crankcase (tight)	0.0038-0.0054	0.097-0.137
Bearing inner race on crankshaft (tight)	0.0004-0.0014	0.010-0.036

GENERAL

Wear limits are given here as a guideline for measuring used engine components. Replace components when they exceed values listed here.

Table 3-15. Rocker Arm/Rocker Arm Shaft

ROCKER ARM/ROCKER ARM SHAFT	REPLACE IF WEAR EXCEEDS	
	IN	MM
Shaft fit in bushing (loose)	0.0035	0.089
End clearance	0.025	0.635
Shaft fit in rocker arm support (loose)	0.0035	0.089

Table 3-16. Hydraulic Lifter

HYDRAULIC LIFTER	REPLACE IF WEAR EXCEEDS	
	IN	MM
Fit in crankcase	0.006	0.152
Roller fit	0.0015	0.038
Roller end clearance	0.022	0.559

Table 3-17. Cam Support Plate

ITEM	REPLACE IF WEAR EXCEEDS	
	IN	MM
Cam chain tensioner shoe thickness	0.060 min.	1.52 min.
Crankshaft bore maximum ID	0.8545	21.704
Camshaft bore	1.1023	27.998
Flatness	0.010	0.25

Table 3-18. Oil Pump

OIL PUMP	REPLACE IF WEAR EXCEEDS	
	IN	MM
Rotor tip clearance	0.004	0.10
Rotor thickness variation	0.001	0.025
Rotor protrusion (pump assembled)	0.015-0.025	0.38-0.64

Table 3-19. Cylinder Head

CYLINDER HEAD	REPLACE IF	
	IN	MM
Valve guide press fit in head	Less than 0.002	Less than 0.05
Valve seat press fit in head	Less than 0.002	Less than 0.05
Valve seat width (max)	0.062	1.57
Valve margin (min)	0.031	0.80
Valve stem protrusion (max)	2.069	52.55
Head warpage (max)	0.006	0.15

Table 3-20. Cylinder

CYLINDER	REPLACE IF WEAR EXCEEDS	
	IN	MM
Taper	0.002	0.051
Out of round	0.002	0.051
Warpage of gasket surfaces: top	0.006	0.152
Warpage of gasket or O-ring surfaces: base	0.004	0.102

Table 3-21. Cylinder Bore (Twin Cam 96)

CYLINDER BORE	REPLACE IF WEAR EXCEEDS	
	IN	MM
Standard	3.752	95.301
0.005 in oversize	3.757	95.428
0.010 in oversize	3.762	95.555

Table 3-22. Cylinder Bore (Twin Cam 103)

ITEM	REPLACE IF WEAR EXCEEDS	
	IN	MM
Standard	3.877	98.48
0.005 in oversize	3.882	98.60
0.010 in oversize	3.887	98.73

Table 3-23. Piston

PISTON		REPLACE IF WEAR EXCEEDS	
		IN	MM
Fit in cylinder (loose)		0.003	0.076
Piston pin fit (loose)		0.0008	0.020
Ring end gap	Top compression	0.030	0.762
	2nd compression	0.034	0.864
	Oil control rails	0.050	1.27
Ring side clearance	Top compression	0.0045	0.114
	2nd compression	0.0045	0.114
	Oil control rails	0.010	0.254

Table 3-24. Connecting Rod

CONNECTING ROD	REPLACE IF WEAR EXCEEDS	
	IN	MM
Piston pin fit (loose)	0.002	0.051
Fit on crankpin (loose)	0.002	0.051

Table 3-25. Breather Assembly

BREATHER ASSEMBLY	REPLACE IF WEAR EXCEEDS	
	IN	MM
Breather cover warpage	0.005	0.13
Breather baffle warpage	0.005	0.13

Table 3-26. Valve Stem to Guide

VALVE STEM TO GUIDE	REPLACE IF WEAR EXCEEDS	
	IN	MM
Intake	0.0038	0.0965
Exhaust	0.0038	0.0965

Table 3-27. Flywheel

FLYWHEEL	REPLACE IF WEAR EXCEEDS	
	IN	MM
Runout (shaft measured in case)	0.012	0.305
Runout (measured in truing stand)	0.005	0.127
End play	0.013	0.330

Table 3-28. Crankshaft Roller Bearing

CRANKSHAFT ROLLER BEARING	REPLACE IF	
	IN	MM
Roller bearing fit (loose)	More than 0.0015	More than 0.038
Bearing fit in crankcase (tight)	Less than 0.0038	Less than 0.097
Inner race on crankshaft (tight)	Less than 0.0004	Less than 0.010

Table 3-29. Counterbalancer

COUNTERBALANCER	REPLACE IF WEAR EXCEEDS	
	IN	MM
Sprocket flatness	0.008	0.203
Tensioner guide grooving (max)	0.080	2.03
Tensioner spring length (min)	1.85	47.0

OIL FEED

See Figure 3-1. Oil flows from the oil tank feed line (1) to the engine feed connection (2) at the rear right side of the crankcase.

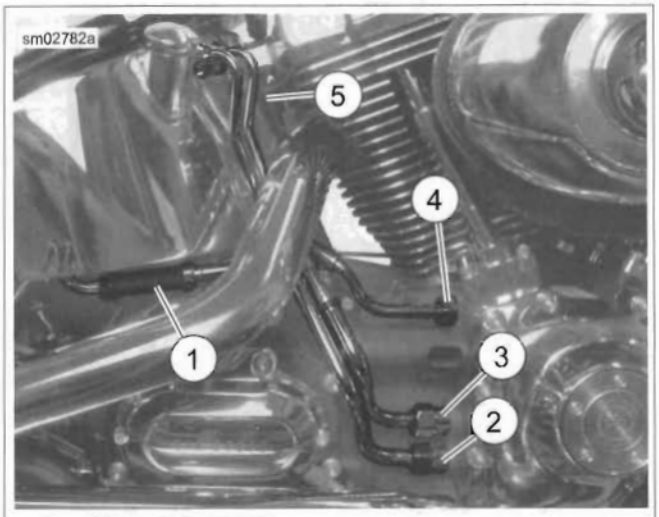

1. Oil tank feed line
2. Feed connection on engine
3. Return line
4. Vent line
5. Oil tank

Figure 3-1. Oil Flow from Tank

See Figure 3-2. Running through a passageway in the crankcase (1), oil exits a hole in the crankcase and then enters a hole in the cam support plate (2). Passing through a channel in the cam support plate, oil enters the feed side of the oil pump (3). See 3.5 OIL PUMP OPERATION. The feed gerotors of the pump direct the flow up a second channel in the cam support plate.

A passage (5) connects to a pressure relief valve (6) mounted in the bypass port of the cam support plate. When the oil pressure exceeds the setting of the valve spring (35 psi (241kPa)), the orifice opens to bypass (7) excess oil back to the feed side of the pump (3).

See Figure 3-3. Oil not returned to the feed side exits the cam support plate and passes through a hole in the crankcase. Flowing through a passageway in the crankcase, the oil exits the lower hole in the oil filter mount. The oil pressure sending unit (8) also reads the pressure within that passageway.

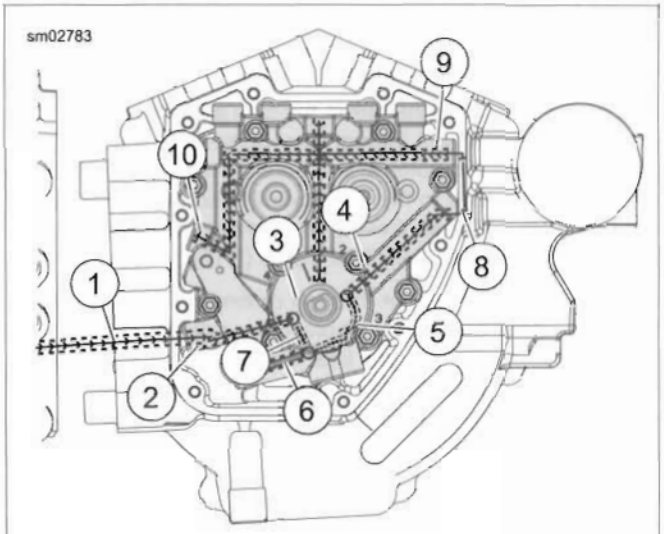

1. Crankcase passage
2. Cam support plate/crankcase connection
3. Feed side of oil pump
4. Oil pump output
5. Overflow passage
6. Pressure relief valve
7. Bypass passage
8. Oil pressure sending unit
9. Return from oil filter into cam support plate
10. Feed to chain guide bracket

Figure 3-2. Cam Support Plate Oil Flow

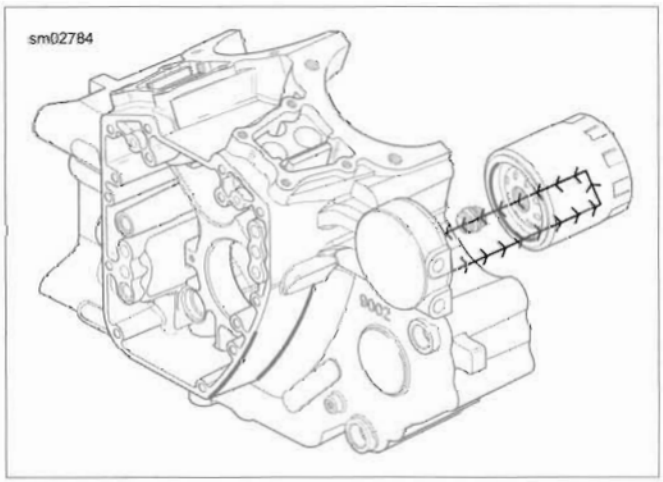

Figure 3-3. Oil Filter Flow

See Figure 3-2. After circulating through the oil filter, oil is directed back into the crankcase through the spigot in the oil filter mount. Exiting through a passageway in the crankcase, oil reenters the cam support plate (9).

Filtered oil is then routed to the top and bottom ends of the engine. See 3.4 ENGINE OIL FLOW, Top End, 3.4 ENGINE OIL FLOW, Bottom End and 3.4 ENGINE OIL FLOW, Chain Guide Bracket.

TOP END

Two illustrations accompany this explanation.

- Cam support plate oil flow is shown in Figure 3-4.
- Top end oil flow is shown in Figure 3-5.

Oil passes through a channel in the cam support plate. It exits on the crankcase side through two holes near the top (A11, A12). Oil enters two holes in the crankcase flange (B13, B14). One passage leads to the front cylinder and the other to the rear cylinder. Oil then travels through passageways in the crankcase to the hydraulic lifter bores (D15).

Oil enters each lifter bore through oblong holes (E16), flows around the lifter and enters a hole at the side of the lifter body. As the chamber inside the lifter body is filled, the pushrod socket rises to eliminate lash of the valve train components. Oil then exits a hole centered in the lifter socket and flows up the hollow pushrods.

NOTE

An additional round hole (E17) drilled into the lifter bores feed oil to the piston jets.

Exiting holes at the top of the pushrods, oil enters the rocker arms lubricating the rocker arm bushings. Oil flows along the rocker arm shafts and exits a pin hole in the outboard side of each rocker arm (F18). This oil lubricates the valve springs and the top of the valve stem.

Oil runs to the low side of the rocker housing and enters the exhaust valve spring pocket. A drain hole (G19) leads to a passageway in the cylinder head casting.

Oil exits the bottom of the cylinder head and passes through a dowel pin (H20) on the cylinder flange. Oil flows through a vertical passageway in the cylinder. It then passes through a second dowel pin on the cylinder deck (I21) and enters the left crankcase half.

Flowing through a horizontal passageway in the left crankcase half (J22), oil runs through a third dowel pin (K23) to the right crankcase half. Finally it travels through another passageway before emptying into the cam compartment (B23, B24).

Oil collecting in the cam compartment is picked up by one of two scavenge lobes on the oil pump (B25).

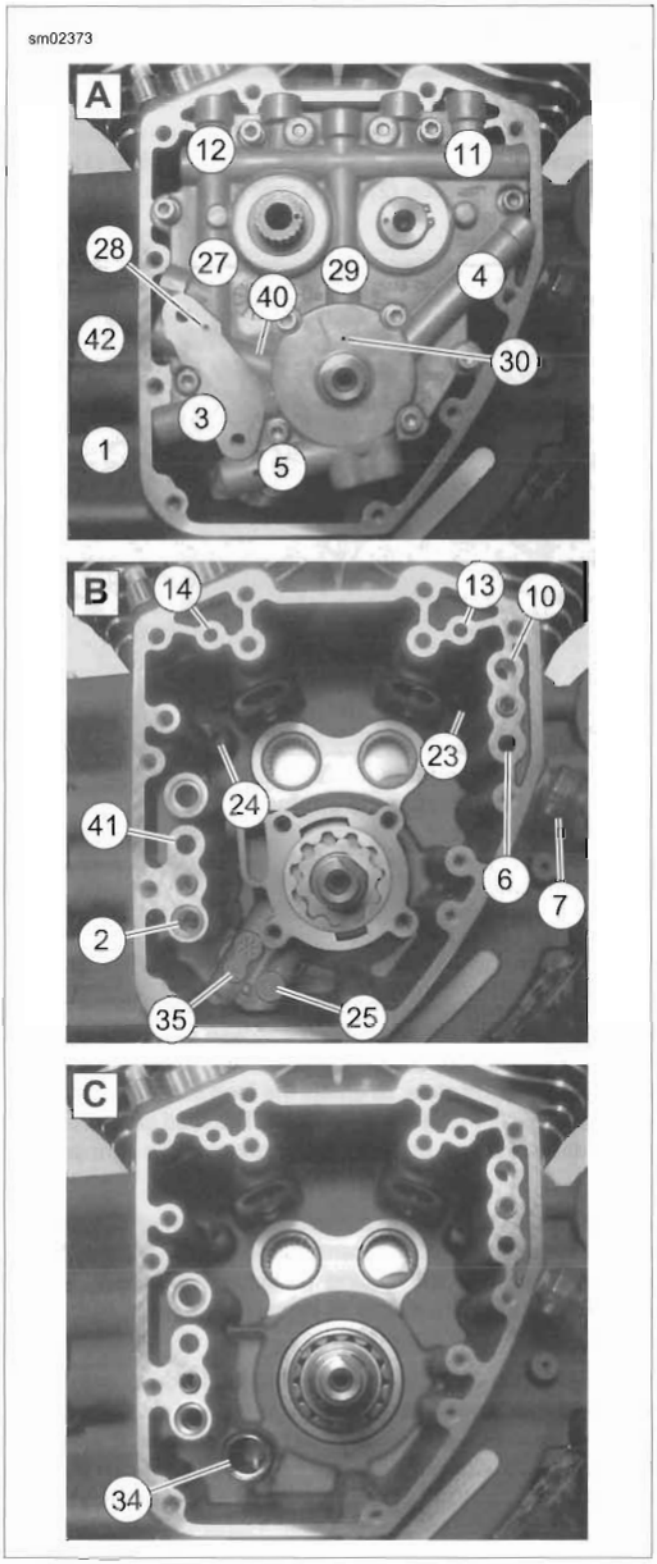

Figure 3-4. Engine Oil Flow: Cam Support Plate/Right Crankcase Half

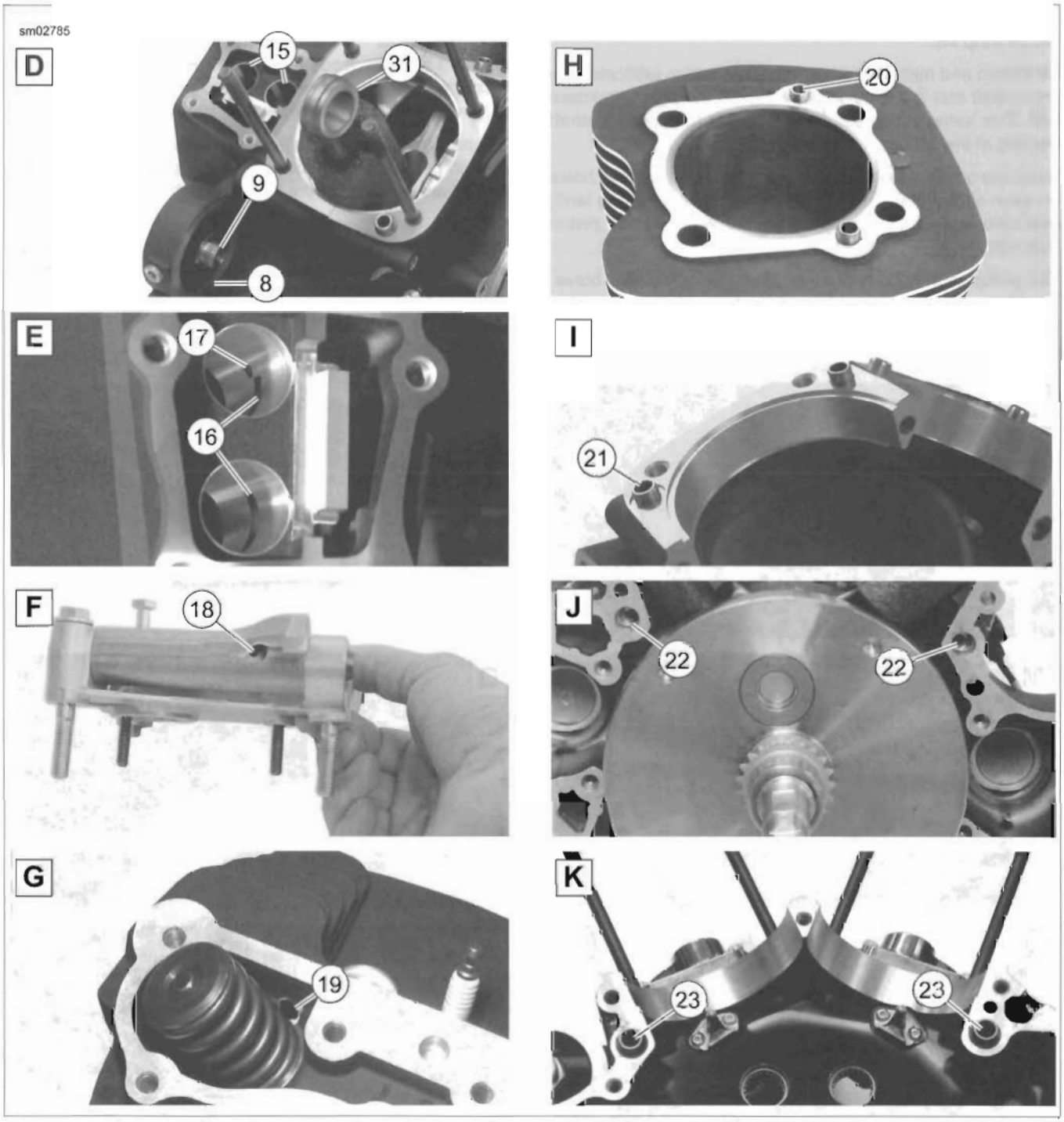

Figure 3-5. Engine Oil Flow: Top End

BOTTOM END

Three illustrations accompany this explanation.

- Cam support plate oil flow is shown in Figure 3-4.
- Top end oil flow is shown in Figure 3-5.
- Bottom end oil flow is shown in Figure 3-6.

Oil traveling through the horizontal passage (A11-A12) at the top of the cam support plate (en route to the cylinders) also passes through a hole at the top of each camshaft bore. This oil lubricates the journals of the plain bearing cams. Some oil flowing to the rear cylinder sprays through a pin hole to lubricate the secondary cam chain.

Oil to the rear cylinder also travels down the vertical passage (A27) at the rear of the cam support plate. This oil exits a hole on the outboard side to supply oil to the primary cam chain tensioner (A28).

The flow of oil in the vertical passage (A29) at the center of the cam support plate passes through a hole on the inboard side. This supplies oil to the secondary cam chain tensioner. Oil also sprays through a pin hole (A30) to lubricate the primary cam chain. Oil then flows through a hole in the crankshaft bushing where it enters a passage in the crankshaft (L27).

Oil flows through the center of the crankshaft and through a cross passage into the right side of the flywheel. Oil enters the

crank pin and exits through three holes to lubricate the lower rod bearing set.

Oil splash and mist created by flywheel rotation lubricates the crankshaft and the camshaft bearings in the right crankcase half. This same action serves to lubricate the sprocket shaft bearing in the left crankcase half (M28).

Since the oil mist also lubricates the cylinder walls, three holes on each side of the piston (in the area of the third ring land) evacuate excess oil scraped from the walls on the piston downstroke.

The piston jets (N29) receive oil from the intake lifter bores. They spray the underside of the piston for cooling of the piston crown and skirt area. A check valve in each jet opens only when the oil pressure reaches 12-18 PSI (82.7-124.1 kPa), at which point the engine is operating above idle speed. Oil pressure at idle speeds will be 9-12 PSI (62.1-82.7). At this pressure the valve remains closed to prevent over oiling and to provide proper system operating pressure.

Oil spray from each piston jet also enters a hole at the bottom of each pin boss (O30) to lubricate the piston pin. The spray also allows a portion of the oil to reach the upper rod bushing (D31).

Surplus oil falls back to the bottom of the flywheel compartment where it collects in the sump area (P32). Oil in the sump is drawn to the scavenge side of the oil pump (B35) through an internal channel (P33, C34).

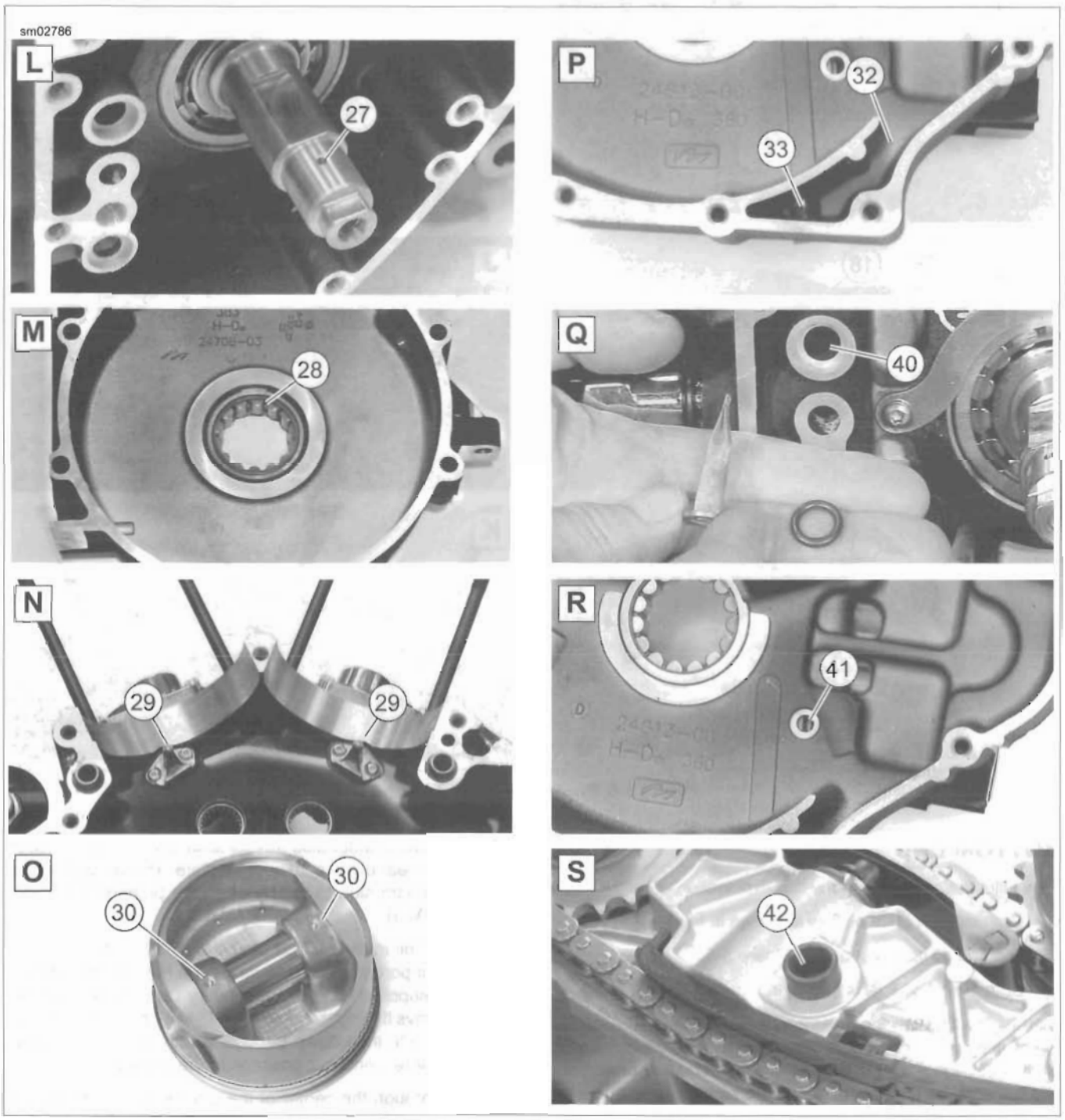

Figure 3-6. Engine Oil Flow: Bottom End

CHAIN GUIDE BRACKET

Three illustrations accompany this explanation.

- Cam support plate oil flow is shown in Figure 3-4.
- Bottom end oil flow is shown in Figure 3-6.
- Chain guide bracket oil flow is shown in Figure 3-7.

The flow of oil travels down the vertical passage at the rear of the cam support plate (A27).

As oil exits the inboard side of the cam support plate, it enters a crankcase dowel. The hole contains the chain guide screen and O-ring (Q40).

NOTE

This screen blocks any debris which might enter the chain guide bracket. The screen has no regular maintenance schedule. However, clean the screen and replace the O-ring every time the engine is disassembled.

Oil travels through the right side crankcase (R41) and goes into the chain guide bracket rubber interconnect (S42). Inside the chain guide (T43), oil travels to both the front and rear hydraulic tensioners (T45, T44). The tensioners sit underneath the front and rear tensioner guides which provide support for the counterbalancer chain. A small hole at the top of each tensioner vents any trapped air into the flywheel compartment.

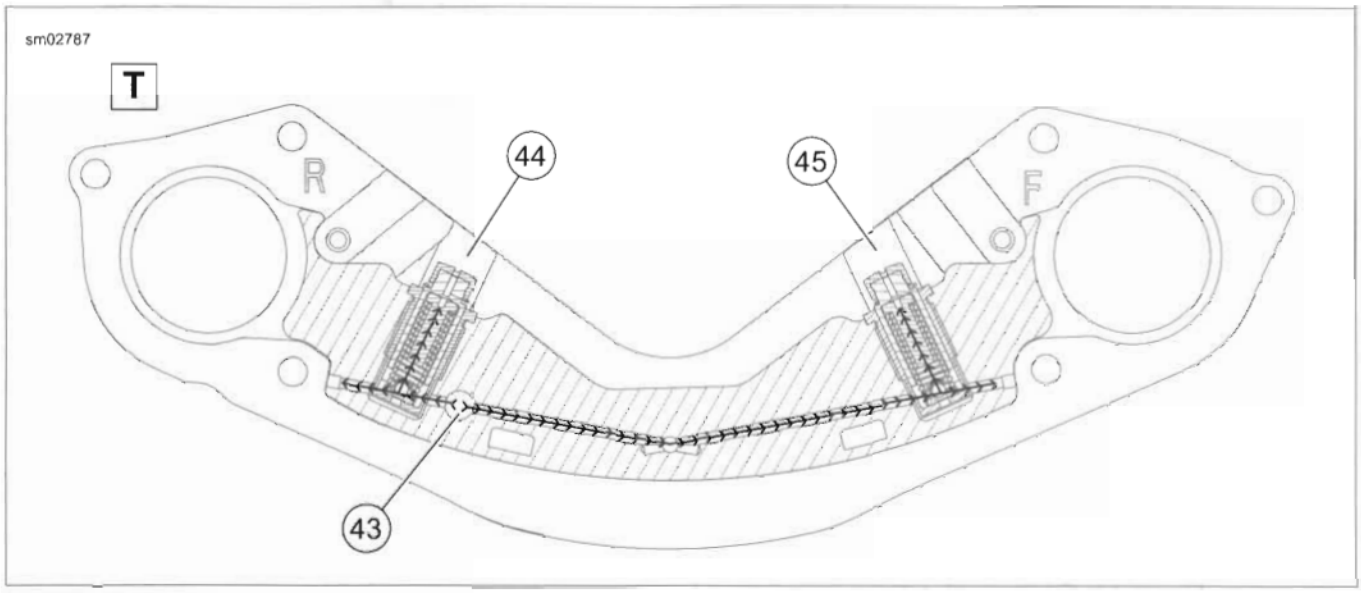

Figure 3-7. Engine Oil Flow: Chain Guide Bracket

OIL RETURN

The "dual kidney" designation given to the oil pump refers to its two scavenging functions, whereby it simultaneously draws oil from both the cam and flywheel compartments.

Oil sucked up by the scavenge lobes passes through the scavenge gerotors of the oil pump and is directed through a return channel (A40) in the cam support plate. See 3.5 OIL PUMP OPERATION.

Exiting a hole on the inboard side of the cam support plate, the oil enters a hole in the crankcase flange (B41).

The oil flows through a passageway in the crankcase and exits the upper fitting (3) at the rear right side of the crankcase as shown in Figure 3-1. Passing through a flexible hose, the flow of oil returns to the oil tank.

A third hose (4) connects the cam compartment with the oil tank via a third passage in the transmission case. This crankcase breather connection provides the pressure balance necessary for oil circulation.

GENERAL

See Figure 3-8. The oil pump has two gerotor gear sets driven by the crankshaft.

- The feed gerotor set distributes oil to the engine.
- The scavenge gerotor set draws oil from the cam and flywheel compartments and returns it to the oil pan.

Each gerotor gear set has an inner and outer gerotor. The inner and outer gerotors have fixed centers that are slightly offset to one another. Also, the inner gerotor has one less tooth.

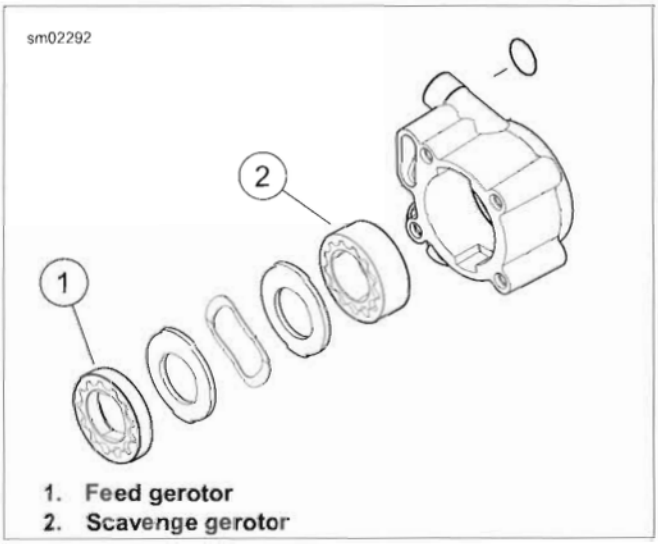

1. Feed gerotor
2. Scavenge gerotor

Figure 3-8. Oil Pump Gerotors

OPERATION

The oil pump is driven by the crankshaft. The inlet and outlet sides of the pump are sealed by the tips and lobes of the inner and outer gerotors. This prevents oil on the outlet side (high pressure) from being transferred to the inlet side.

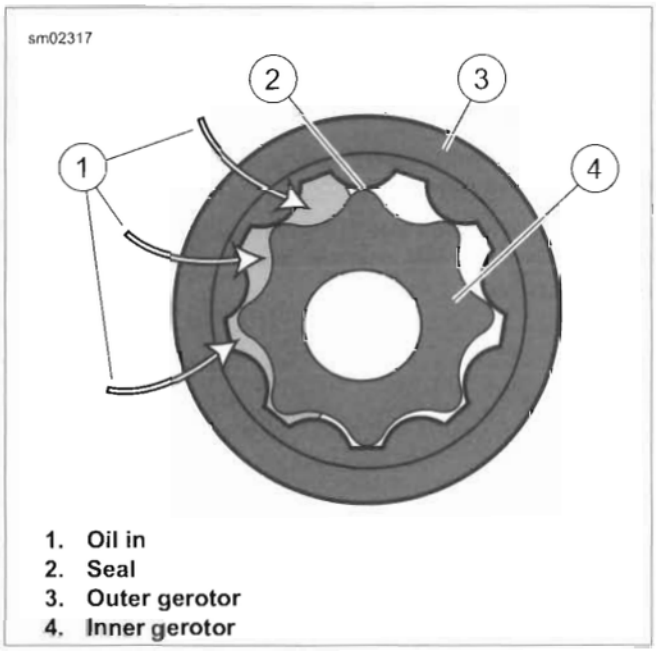

1. Oil in
2. Seal
3. Outer gerotor
4. Inner gerotor

Figure 3-9. Inlet Side Oil Flow

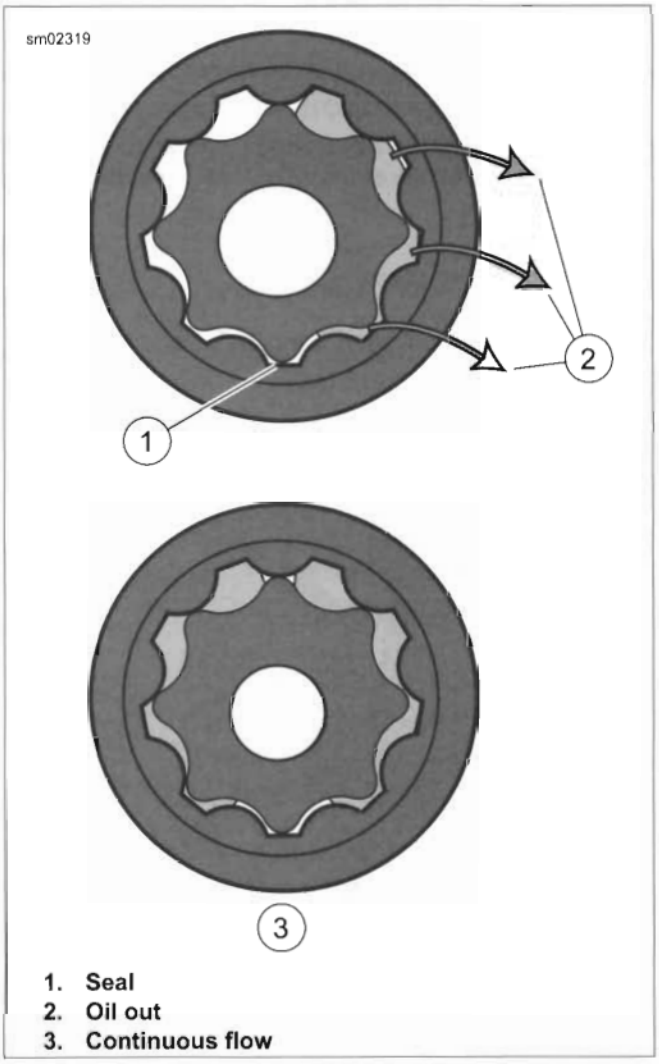

1. **Seal**
2. **Oil out**
3. **Continuous flow**

Figure 3-10. Outlet Side Oil Flow

See Figure 3-9. As the gerotors rotate, the cavity volume increases between the inner and outer gerotors on the inlet side of the pump. This creates a vacuum causing oil to be drawn in. The cavity increases until the volume is equivalent to that of the missing tooth on the inner gerotor.

See Figure 3-10. As the oil moves to the outlet side of the pump, the cavity decreases in volume. This forces pressurized oil out the discharge port. In operation, the gerotors provide a continuous flow of oil.

GENERAL

The crankcase breather system relieves crankcase pressure produced by the downstroke of the pistons. Crankcase vapors are then directed into the intake air stream to be burned during normal combustion. Burning crankcase vapors eliminates the pollutants normally discharged from the crankcase.

See Figure 3-11. As pistons push downward, displaced air in the crankcase is vented through the crankshaft roller bearing into the cam compartment. The air then flows up the pushrod covers (1) into the rocker housing. The moving air absorbs a small amount if oil vapor as it travels through the engine.

The oil/air vapor rushes under the rocker arm support plate and passes through an opening at the bottom of the plate to enter the breather baffle compartment (2).

In the baffle compartment, the flow of air passes upward through the oil filter gauze, where the oil is removed from the air. Two pin holes in the rocker arm support plate allow the separated oil to drain back into the crankcase.

Passing through the oil filter gauze, the vapor passes through the umbrella valve (3) into the breather compartment. The umbrella valve only allows air to be vented one way.

In the breather compartment, air flows downward through holes aligned in the breather baffle, rocker arm support plate and rocker housing. Exiting the rocker housing, air enters a passageway cast into the top of the cylinder head. Proper orientation of the rocker housing gasket is critical for effective sealing of this passageway.

Air flows through the cylinder head passageway and through a passage in the air cleaner backplate bolt (4). It passes through a breather tube (5) into the air filter element. It then joins with the intake air stream and is burned during normal combustion.

NOTE

Always connect breather tubes. Loose or detached tubes vent crankcase gases into the atmosphere which violates emissions standards.

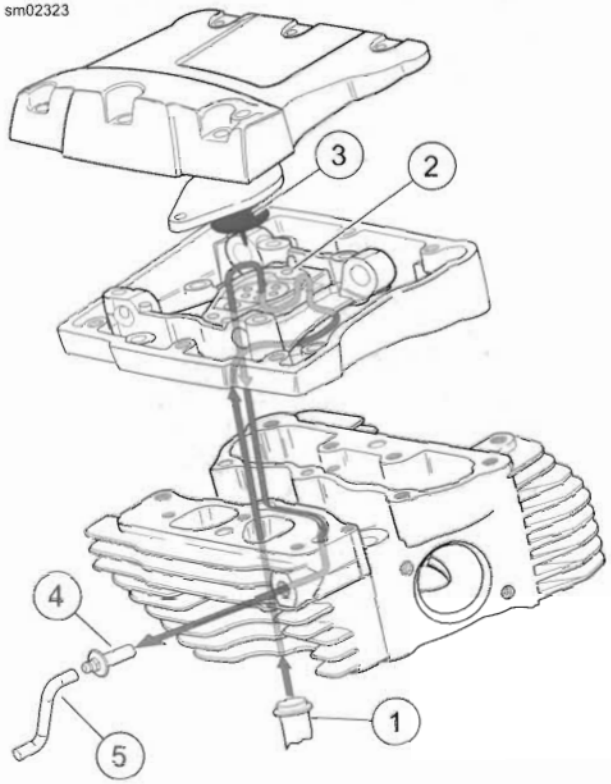

1. **Pushrod cover**
2. **Breather baffle compartment**
3. **Umbrella valve**
4. **Air cleaner backplate bolt**
5. **Breather tube**

Figure 3-11. Breather Air Flow

OIL PRESSURE INDICATOR LAMP

See Figure 3-12. The red OIL PRESSURE indicator lamp illuminates to indicate improper circulation of the engine oil. The lamp illuminates when the ignition is first turned on (before the engine is started), but should extinguish once the engine is running.

NOTICE

If the oil pressure indicator lamp remains lit, always check the oil supply first. If the oil supply is normal and the lamp is still lit, stop the engine at once and do not ride further until the trouble is located and the necessary repairs are made. Failure to do so may result in engine damage. (00157a)

If the indicator lamp does not extinguish, it may be caused by low oil level or diluted oil supply. In freezing weather, the oil feed and return lines can clog with ice or sludge. Other conditions that may cause the lamp to remain lit are:

- Faulty lamp wiring
- Faulty oil pressure sending unit
- Damaged oil pump
- Plugged oil filter element
- Incorrect oil viscosity for the operating temperature
- Fractured or weak spring in the oil pressure relief valve
- Incorrectly installed O-rings in the engine

To troubleshoot the problem, always check the engine oil level first. If the oil level is OK, determine if oil returns to the oil pan. If oil does not return, shut off the engine until the problem is located and corrected.

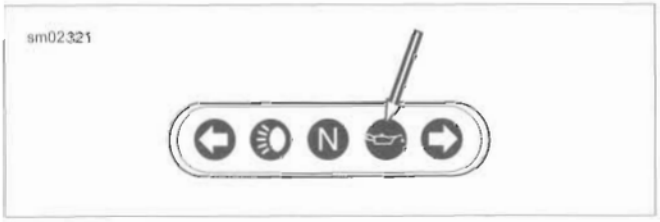

Figure 3-12. Oil Pressure Indicator Lamp

CHECKING OIL PRESSURE

PART NUMBER	TOOL NAME
HD-96921-52D	OIL PRESSURE GAUGE SET

Check operating oil pressure as follows:

1. Verify engine oil is at the proper level. See 1.6 ENGINE OIL AND FILTER.
2. See Figure 3-13. Remove oil pressure switch from crankcase. See 7.31 OIL PRESSURE SWITCH.
3. See Figure 3-14. Install OIL PRESSURE GAUGE SET (Part No. HD-96921-52D).
   a. Hand-tighten adapter (2) in oil pressure switch mounting hole.
   b. Assemble banjo bolt (3), washer (4), oil pressure gauge (1), banjo fitting and second washer onto adapter. Hand-tighten.
4. Run motorcycle until engine is at normal operating temperature.

NOTE

Engine oil should be at normal operating temperature, 230 °F (110 °C), for an accurate reading.

5. Oil pressure should be within specifications. Refer to Table 3-30.
6. See 3.8 TROUBLESHOOTING if readings are not within specification.
7. Stop engine. Remove oil pressure gauge assembly.
8. Install oil pressure switch. See 7.31 OIL PRESSURE SWITCH.

Table 3-30. Oil Pressure

CHECK	SPECIFICATION *	
	SAE	METRIC
Oil pressure - min at idle	5 psi	34.5 kPa
Oil pressure - normal at 2000 rpm	30-38 psi	207-262 kPa
Oil pressure - max	50 psi	345 kPa
* With oil at normal operating temperature of 230 °F (110 °C)		

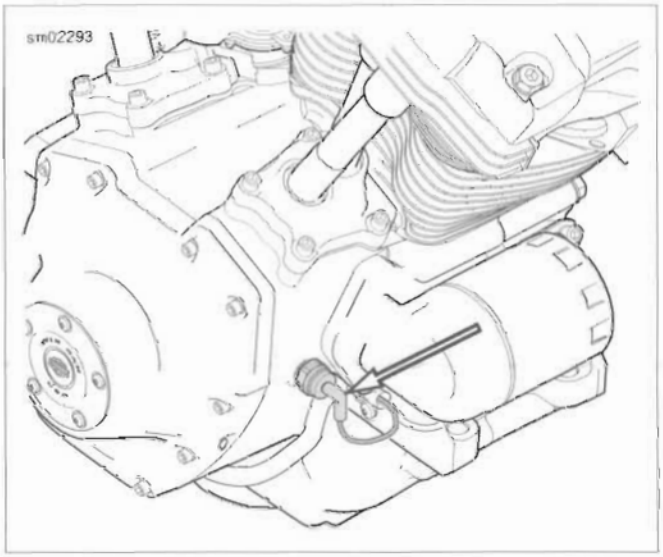

Figure 3-13. Oil Pressure Switch

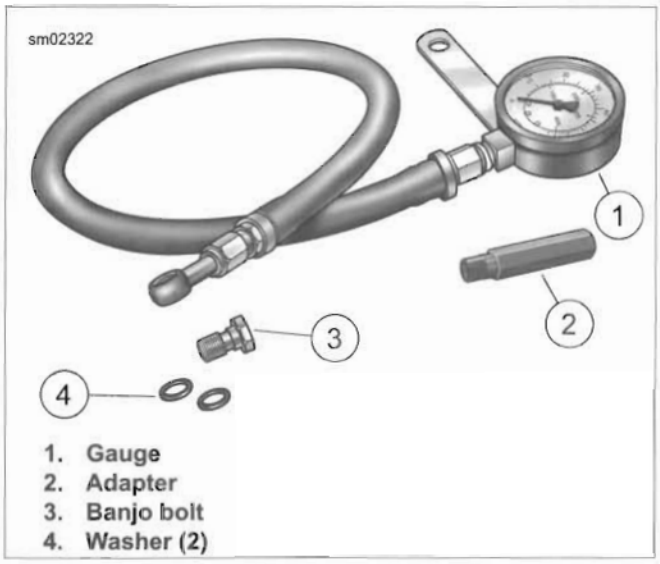

1. Gauge
2. Adapter
3. Banjo bolt
4. Washer (2)

Figure 3-14. Oil Pressure Gauge Set

DIAGNOSING VALVE TRAIN NOISE

1. With engine and oil at normal operating temperature, check oil pressure at 2000 rpm. If oil pressure is above 50 psi (345 kPa) or below 5 psi (34 kPa), inspect the following for restrictions or blockage:
   a. Oil pump
   b. Crankcase passages
   c. Oil hoses
2. Repair or replace parts as necessary.
3. If oil is not reaching the hydraulic lifters, remove and inspect. See 3.19 PUSHRODS, LIFTERS AND COVERS, Lifter Inspection. Clean lifter bore of all foreign material. Replace hydraulic lifter if required.
4. Inspect pushrod, lifter and lifter block for proper fit and unusual wear. Replace parts as necessary.
5. Visually inspect camshaft lobes for abnormal wear.
6. Check cam chain tensioning shoe for wear.
7. Remove cylinder head and rocker box assemblies. Check rocker arm end play and check for binding. Inspect valve stems for scuffing and check stem to guide clearance. Check valve seats for signs of looseness or shifting.
8. Grind valves and valve seats. See 3.20 CYLINDER HEAD, Valve and Seat Refacing.

COMPRESSION TEST

PART NUMBER	TOOL NAME
HD-33223-1	CYLINDER COMPRESSION GAUGE

FASTENER	TORQUE VALUE	
Spark plug	12-18 ft-lbs	16.3-24.4 Nm

A compression test can help determine the source of cylinder leakage. Use CYLINDER COMPRESSION GAUGE (Part No. HD-33223-1) with a screw-in type adapter.

NOTE

All Twin Cam engines use a 12 mm adapter with the compression gauge.

1. Run motorcycle until engine is at normal operating temperature.
2. Disconnect spark plug wires, clean around plug base. Remove spark plugs.
3. Remove air cleaner. See 4.3 AIR CLEANER ASSEMBLY.
4. Connect compression tester to front cylinder per manufacturer's instructions.
5. Verify transmission is in NEUTRAL. Hold throttle at wide open throttle position and crank engine continuously through 5-7 full compression strokes. Note gauge readings at the end of the first and last compression strokes. Record test results.
6. Repeat test on rear cylinder.

NOTE

Verify that throttle is closed before assembling air cleaner.

7. Install air cleaner. See 4.3 AIR CLEANER ASSEMBLY.
8. If the final readings are a minimum of 125 psi (862 kPa) and readings do not indicate more than a 10% variance between cylinders, compression is considered normal. If compression does not meet specifications, refer to Table 3-31 for possible causes.
9. If readings do not meet specifications, inject approximately 1/2 oz. (15 ml) engine oil into each cylinder. Repeat the compression tests on both cylinders. Readings that are considerably higher during the second test indicate worn piston rings.
10. Install the spark plugs. Tighten to 12-18 ft-lbs (16.3-24.4 Nm). Connect spark plug wires.

Table 3-31. Compression Test Results

DIAGNOSIS	TEST RESULTS
Ring trouble	Compression low on first stroke, tends to build up on the following strokes, but does not reach normal. Improves considerably when oil is added to cylinder.
Valve trouble	Compression low on first stroke, does not build up much on following strokes. Does not improve considerably with the addition of oil. Check for correct pushrod length.
Head gasket leak	Same reaction as valve trouble.

CYLINDER LEAKDOWN TEST

PART NUMBER	TOOL NAME
HD-35667-A	CYLINDER LEAKDOWN TESTER

NOTE

On vehicles with automatic compression release (ACR), verify the ACRs are closed for this test. Perform the test with the ignition/light switch in the OFF position.

The cylinder leakdown test will help pinpoint leaking valves, worn, damaged or stuck piston rings and blown head gaskets. The cylinder leakage tester applies compressed air to the cylinder at a controlled pressure and volume. It then measures the percent of leakage from the cylinder.

Use the CYLINDER LEAKDOWN TESTER (Part No. HD-35667-A). Follow the specific instructions supplied with the tester.

The following are some general instructions that apply to Harley-Davidson V-twin engines:

1. Run motorcycle until engine is at normal operating temperature. Stop engine.
2. Disconnect spark plug wires. Clean around plug base and remove plugs.

3. Rotate crankshaft until piston in the cylinder being tested is at top dead center (TDC) of compression stroke (both valves closed) during the test.

4. Engage transmission in highest gear and lock the rear brake. This prevents the engine from turning over when air pressure is applied to the cylinder.

NOTE

Before performing the cylinder leakdown test, verify the tester itself is free from leakage. Apply a soap solution around all tester fittings. Connect cylinder leakdown tester to compressed air source. Look for any bubbles that indicate leakage from the tester.

5. Following the manufacturer's instructions, perform a cylinder leakdown test on the front cylinder. Make a note of the percent of leakage. Leakage greater than 10 percent indicates internal engine problems.

6. Listen for air leaks at throttle body, exhaust pipe and head gasket. Air escaping through the throttle body indicates a leaking intake valve. Air escaping through the exhaust pipe indicates a leaking exhaust valve.

NOTE

If air is escaping through valves, verify that piston is still at TDC or check for correct pushrod length.

7. Repeat procedure on rear cylinder.

DIAGNOSING SMOKING ENGINE OR HIGH OIL CONSUMPTION

Perform both a compression test and a cylinder leakage test. See 3.8 TROUBLESHOOTING, Compression Test and 3.8 TROUBLESHOOTING, Cylinder Leakdown Test. If further testing is needed, remove suspect head(s) and inspect for the following:

Check Prior to Cylinder Head Removal

1. Oil level too high.
2. Oil carryover.
3. Breather hose restricted.
4. Restricted oil filter.

Check After Cylinder Head Removal

1. Oil return passages for clogging.
2. Valve guide seals.
3. Valve guide to valve stem clearance.
4. Gasket surface of both head and cylinder.
5. Cylinder head casting porosity allowing oil to drain into combustion chamber.
6. O-ring damaged or missing from oil pump/crankcase junction.
7. If the above checks do not reveal the cause, remove the cylinder to inspect for excess piston ring wear. Also verify the piston ring gaps are properly staggered.

TOP END REPAIR

NOTE

During top end disassembly, the engine may be left in the chassis for service.

If servicing only cylinder head components, pistons, cylinders and/or upper rod bushings, two options are available depending upon engine status.

- 3.10 TOP END SERVICE, Engine in Chassis.
- 3.10 TOP END SERVICE, Engine Removed from Chassis.

BOTTOM END REPAIR

NOTE

Servicing components in the cam compartment requires only partial disassembly. This can be done with the engine left in the chassis.

After disassembling as far as the cylinder heads you may find that bottom end repair is necessary. Bottom end service may require either partial or complete disassembly of the engine.

- To service the cam compartment, see 3.24 CAM COMPARTMENT AND COMPONENTS.
- To service components in the flywheel compartment, the engine must be removed and the crankcase halves split. See 3.11 CAM COMPARTMENT SERVICE, Engine Removed From Chassis.

TYPICAL SYMPTOMS

Symptoms indicating a need for engine repair are often misleading. If more than one symptom is present, possible causes can be narrowed to make at least a partial diagnosis.

For example, an above normal consumption of oil could be caused by several mechanical faults. But when accompanied by blue-gray smoke from the exhaust and low compression, it indicates the rings need replacing. Low compression by itself is more likely to be caused by improperly seated or burned valves, not worn rings.

Certain "knocking" noises may occur because of loose bearings, others by piston slap. Piston slap is a condition where piston or cylinder or both are out of tolerance. This excessive clearance allows the piston to "slap" the cylinder as it moves up and down.

Most frequently, valves, rings, pins, bushings and bearings need attention at about the same time. If the symptoms indicate that any one of the above components is worn, service all related parts.

ENGINE IN CHASSIS

Table 3-32. Engine In Chassis

SERVICE PROCEDURE		COMPONENT REPAIR PROCEDURE
Remove parts to gain access to all components above cylinder deck. See 3.12 STRIPPING MOTORCYCLE FOR SERVICE.		
Disassemble top end. See 3.16 TOP END OVERHAUL: DISASSEMBLY.		
	BREATHER ASSEMBLY	Inspect and repair. See 3.17 BREATHER ASSEMBLY*.
	ROCKER ARM SUPPORT	Inspect and repair. See 3.18 ROCKER ARM SUPPORT PLATE*.
	PUSHRODS, LIFTERS AND COVERS	Inspect and repair. See 3.19 PUSHRODS, LIFTERS AND COVERS*.
	CYLINDER HEAD	Inspect and repair. See 3.20 CYLINDER HEAD*.
	CYLINDER	Inspect and repair. See 3.21 CYLINDER*.
	PISTON	Inspect and repair. See 3.22 PISTON*.
Assemble top end. See 3.23 TOP END OVERHAUL: ASSEMBLY.		
Assemble motorcycle. See 3.13 ASSEMBLING MOTORCYCLE AFTER SERVICE.		
Note: * If no other work is to be done, you may advance to 3.23 TOP END OVERHAUL: ASSEMBLY when this step is completed during top end service.		

ENGINE REMOVED FROM CHASSIS

Table 3-33. Engine Removed From Chassis

SERVICE PROCEDURE		COMPONENT REPAIR PROCEDURE
Remove engine from motorcycle. See 3.14 REMOVING ENGINE FROM CHASSIS.		
Disassemble top end. See 3.16 TOP END OVERHAUL: DISASSEMBLY.		
	BREATHER ASSEMBLY	Inspect and repair. See 3.17 BREATHER ASSEMBLY*.
	ROCKER ARM SUPPORT	Inspect and repair. See 3.18 ROCKER ARM SUPPORT PLATE*.
	PUSHRODS, LIFTERS AND COVERS	Inspect and repair. See 3.19 PUSHRODS, LIFTERS AND COVERS*.
	CYLINDER HEAD	Inspect and repair. See 3.20 CYLINDER HEAD*.
	CYLINDER	Inspect and repair. See 3.21 CYLINDER*.
	PISTON	Inspect and repair. See 3.22 PISTON.
Assemble top end. See 3.23 TOP END OVERHAUL: ASSEMBLY.		
Install engine in motorcycle. See 3.15 INSTALLING ENGINE IN CHASSIS.		
Note: * If no other work is to be done, you may advance to 3.23 TOP END OVERHAUL: ASSEMBLY when this step is completed during top end service.		

ENGINE IN CHASSIS

Table 3-34. Engine In Chassis: Cam Compartment Service

SERVICE PROCEDURE		COMPONENT REPAIR PROCEDURES
Remove parts to gain access to all components above cylinder deck. See 3.12 STRIPPING MOTORCYCLE FOR SERVICE.		
Disassemble top end. See 3.16 TOP END OVERHAUL: DISASSEMBLY.		
	BREATHER ASSEMBLY.	Inspect and repair. See 3.17 BREATHER ASSEMBLY.
	ROCKER ARM SUPPORT PLATE.	Inspect and repair. See 3.18 ROCKER ARM SUPPORT PLATE.
	PUSHRODS, LIFTERS AND COVERS.	Inspect and repair. See 3.19 PUSHRODS, LIFTERS AND COVERS.
Disassemble bottom end. See 3.24 CAM COMPARTMENT AND COMPONENTS.		
	COVER AND CAM SUPPORT PLATE	Inspect and repair. See 3.24 CAM COMPARTMENT AND COMPONENTS*.
	OIL PUMP	Inspect and repair. See 3.25 OIL PUMP.
Assemble bottom end. See 3.24 CAM COMPARTMENT AND COMPONENTS.		
Assemble motorcycle. See 3.13 ASSEMBLING MOTORCYCLE AFTER SERVICE.		
Note: * If no other work is to be done, you may advance to 3.29 CRANKCASE ASSEMBLY when this step is completed during bottom end service.		

Table 3-35. Engine Removed: Flywheel Compartment Service or Complete Engine Overhaul

SERVICE PROCEDURE		COMPONENT REPAIR PROCEDURES
Remove engine from motorcycle. See 3.14 REMOVING ENGINE FROM CHASSIS.		
Disassemble top end. See 3.16 TOP END OVERHAUL: DISASSEMBLY.		
	BREATHER ASSEMBLY	Inspect and repair. See 3.17 BREATHER ASSEMBLY.
	ROCKER ARM SUPPORT PLATE	Inspect and repair. See 3.18 ROCKER ARM SUPPORT PLATE.
	PUSHRODS, LIFTERS AND COVERS	Inspect and repair. See 3.19 PUSHRODS, LIFTERS AND COVERS.
	CYLINDER HEAD	Inspect and repair. See 3.20 CYLINDER HEAD.
	CYLINDER	Inspect and repair. See 3.21 CYLINDER.
	PISTON	Inspect and repair. See 3.22 PISTON.
Disassemble bottom end.		
	COVER AND CAM SUPPORT PLATE	Inspect and repair. See 3.24 CAM COMPARTMENT AND COMPONENTS.
	CRANKCASE	Inspect crankcase and repair. See 3.26 CRANKCASE DISASSEMBLY AND REPAIR.
		Inspect and repair flywheel/connecting rod assembly. See 3.27 FLYWHEEL AND CONNECTING RODS.
Assemble bottom end. See 3.29 CRANKCASE ASSEMBLY and 3.24 CAM COMPARTMENT AND COMPONENTS.		
Assemble top end. See 3.23 TOP END OVERHAUL: ASSEMBLY.		
Install engine in motorcycle. See 3.15 INSTALLING ENGINE IN CHASSIS.		

PROCEDURE

NOTE

If performing top end service (or both cam compartment and top end), follow all the steps listed. If servicing cam compartment components only, perform steps 1 though 8.

1. Position motorcycle on a suitable lift.
2. Remove seat.

⚠WARNING

To prevent accidental vehicle start-up, which could cause death or serious injury, disconnect negative (-) battery cable before proceeding. (00048a)

3. Disconnect negative battery cable.
4. Drain engine oil. See 1.6 ENGINE OIL AND FILTER.
5. Remove right footboard.
6. Remove exhaust system. See 4.17 EXHAUST SYSTEM.
7. Remove air cleaner cover and backplate. See 4.3 AIR CLEANER ASSEMBLY.

⚠WARNING

Stop the engine when refueling or servicing the fuel system. Do not smoke or allow open flame or sparks near gasoline. Gasoline is extremely flammable and highly explosive, which could result in death or serious injury. (00002a)

8. Drain and remove fuel tank. See 4.6 FUEL TANK.
9. Loosen and remove throttle control cables, if equipped, from induction module.
10. Remove spark plug cables from spark plugs. Remove spark plugs to avoid damaging them.
11. Remove top engine mount as an assembly.
12. Remove induction module connectors and induction module. See 4.11 INDUCTION MODULE.

PROCEDURE

FASTENER	TORQUE VALUE	
Cylinder head bracket bolts	35-40 ft-lbs	47.5-54.2 Nm
Engine mounting bolt, upper	45-50 ft-lbs	61.0-67.8 Nm

NOTE

If top end service was performed (or both cam compartment and top end), follow all the steps listed. If only cam compartment components were serviced, start with step 5.

1. Install induction module. See 4.11 INDUCTION MODULE.
2. Install top engine bracket assembly to frame tab and cylinder heads.
   a. Tighten two cylinder head bracket bolts to 35-40 ft-lbs (47.5-54.2 Nm).
   b. Tighten the upper engine to frame mounting bolt to 45-50 ft-lbs (61.0-67.8 Nm).
3. Install spark plugs to cylinder heads. Connect spark plug cables to spark plugs. See 1.17 SPARK PLUGS.
4. Install throttle cables to induction module.
5. Install fuel tank, fuel gauge connector, fuel tank crossover tube and instrument console. See 4.6 FUEL TANK.
6. Fill fuel tank with fuel.
7. Install backplate and air cleaner cover. See 4.3 AIR CLEANER ASSEMBLY.
8. Install heat shields and exhaust. See 4.17 EXHAUST SYSTEM.
9. Install right footboard.
10. Fill engine oil to proper level. See 1.6 ENGINE OIL AND FILTER.
11. Connect negative battery cable.

⚠WARNING

After installing seat, pull upward on seat to be sure it is locked in position. While riding, a loose seat can shift causing loss of control, which could result in death or serious injury. (00070b)

12. Install seat.
13. Remove motorcycle from lift.

PROCEDURE

1. Position motorcycle on a suitable lift.
2. Remove seat.

⚠WARNING

Disconnect negative (-) battery cable first. If positive (+) cable should contact ground with negative (-) cable connected, the resulting sparks can cause a battery explosion, which could result in death or serious injury. (00049a)

3. Disconnect both battery cables, negative cable first. Remove battery.
4. Drain primary chaincase and oil tank. See 1.6 ENGINE OIL AND FILTER and 1.9 PRIMARY CHAINCASE LUBRICANT.

⚠WARNING

Stop the engine when refueling or servicing the fuel system. Do not smoke or allow open flame or sparks near gasoline. Gasoline is extremely flammable and highly explosive, which could result in death or serious injury. (00002a)

5. Drain fuel tank. Remove instrument panel and fuel tank. See 4.6 FUEL TANK.
6. Remove left and right footboards or footpegs.
7. Remove voltage regulator bracket. See 7.23 VOLTAGE REGULATOR.
8. Remove exhaust system. See 4.17 EXHAUST SYSTEM.
9. Remove belt guard.
10. Loosen rear axle. Loosen belt adjusters. Remove drive belt from rear pulley. Move rear wheel back to provide access to electrical panel.
11. Remove electrical panel. See 7.3 ELECTRICAL PANEL.
12. Remove oil tank. See 3.30 OIL TANK: ALL BUT FXSB or 3.31 OIL TANK: FXSB.
13. Remove starter. See 7.13 STARTER.
14. Unplug the vehicle speed sensor (VSS).
15. Remove primary chaincase cover and primary chaincase. See 5.5 PRIMARY CHAINCASE HOUSING.
16. Remove upper and lower fasteners from seat post. Disconnect coil connector and remove the post with the coil attached.
17. Position a jack with a wooden block under the engine. Remove the shift arm.
18. Remove the bracket (right side) connecting the frame to the transmission case.
19. Remove the four fasteners connecting the engine to the transmission.
20. Note routing of clutch cable before removing. Disconnect clutch cable from clutch lever. Unclip cable at left side frame downtube and pull cable through chassis to right side of motorcycle. Leave cable installed on transmission.
21. **Models equipped with evaporative emissions:** remove the three hoses from the evaporative emissions canister.
22. Remove the pivot shaft. Disconnect neutral switch wires and slide the transmission back and then out the right side.
23. Remove bolts from horn bracket and cylinder heads. Remove bracket as an assembly. Disconnect horn wire.
24. Remove induction module connectors. Remove air cleaner cover and backplate. See 4.3 AIR CLEANER ASSEMBLY. Disconnect throttle cables.
25. **Models equipped with ACRs:** disconnect ACR connectors.
26. Detach oil pressure sending unit connector.
27. Remove two bolts on front engine mount. Lift engine out from right side of frame.

PROCEDURE

FASTENER	TORQUE VALUE	
Transmission mounting bolts, 1st torque	15 ft-lbs	20.3 Nm
Transmission mounting bolts, final torque	34-39 ft-lbs	46.1-52.9 Nm
Pivot shaft nut	90-110 ft-lbs	122-149.1 Nm
Engine mounting bolts, front	70-80 ft-lbs	94.9-108.5 Nm
Engine/transmission bracket bolts	30-35 ft-lbs	40.7-47.5 Nm
Cylinder head bracket bolts	35-40 ft-lbs	47.5-54.2 Nm
Engine mount bolt, top	45-50 ft-lbs	61.0-67.8 Nm
Engine mount bracket nuts, top	20-25 ft-lbs	27.1-33.9 Nm

1. Using a suitable hoist, install engine in chassis from the right side.
2. Loosely install the front two mounting bolts and spacers from the right side.
   a. The shorter top bolt has a spacer installed on the right side between the frame and the engine.
   b. The longer lower bolt has a spacer on both sides. Loosely install corresponding washers and nuts.
3. Attach induction module connectors and horn wire.

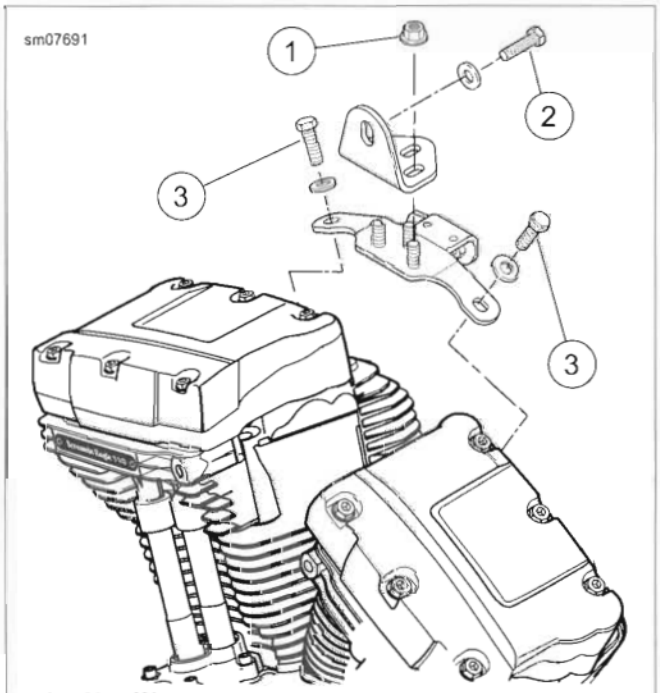

1. **Nut (3)**
2. **Upper engine to frame mounting bolt with washer**
3. **Cylinder head bracket bolt with washer (2)**

Figure 3-15. Top Engine Mount

4. See Figure 3-15. Loosen nuts (1).
5. Loosely install upper engine to frame mounting bolt with washer (2). Loosely install both cylinder head bracket bolts with washers (3).
6. **If equipped with ACRs:** attach ACR connectors.

NOTE

*Use **new** transmission mounting bolts when installing transmission case. Do not reuse old bolts.*

7. See Figure 3-16. Install transmission case from the right side. Align all four transmission mounting holes verifying that the two lower locating dowels engage their holes in crankcase.
8. Tighten the four transmission mounting bolts in a crosswise pattern:
   a. Tighten finger-tight.
   b. Tighten to 15 ft-lbs (20.3 Nm).
   c. Tighten to 34-39 ft-lbs (46.1-52.9 Nm).
9. Apply ANTI-SEIZE LUBRICANT to pivot shaft. From the right side, install pivot shaft and spacers with spacer collars facing transmission case.
10. Apply LOCTITE 262 HIGH STRENGTH THREADLOCKER and SEALANT (red) to pivot shaft nut.
11. Install pivot shaft nut. tighten to 90-110 ft-lbs (122-149.1 Nm).
12. Apply LOCTITE 262 HIGH STRENGTH THREADLOCKER and SEALANT (red) to both front mounting bolts. Tighten to 70-80 ft-lbs (94.9-108.5 Nm).
13. Install lower bracket (right side). Apply LOCTITE 262 HIGH STRENGTH THREADLOCKER and SEALANT (red). Tighten bracket bolts to 30-35 ft-lbs (40.7-47.5 Nm).

NOTE

Always tighten the top engine mount hardware in the order listed below to alleviate stress on the engine mount.

14. Final tighten upper engine mount hardware in the order below.
   a. Tighten two cylinder head bracket bolts to 35-40 ft-lbs (47.5-54.2 Nm).
   b. Tighten the upper engine to frame mounting bolt to 45-50 ft-lbs (61.0-67.8 Nm).
   c. Tighten the upper bracket to lower bracket nuts to 20-25 ft-lbs (27.1-33.9 Nm).
15. **If equipped with evaporitive emissions:** install the three hoses on the evaporative emissions canister.
16. Attach throttle cables. Adjust throttle cables. Connect fuel hose to fuel tank.
17. Install air cleaner backplate and cover. See 4.3 AIR CLEANER ASSEMBLY.
18. Install voltage regulator bracket. See 7.23 VOLTAGE REGULATOR.

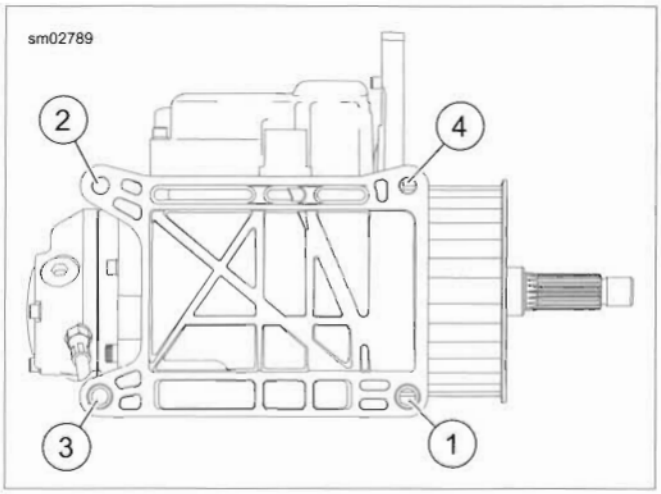

Figure 3-16. Transmission Case Hardware

19. Install rear electrical panel. See 7.3 ELECTRICAL PANEL.

NOTE

Replace the gasket between the primary chaincase cover and chaincase each time the cover is removed. Failure to replace this gasket could cause primary chaincase leaks.

20. Install primary chaincase. Attach the clutch cable, adjust the clutch and fill with LUBRICANT. Start with 5.5 PRIMARY CHAINCASE HOUSING and follow all necessary steps.
21. Install the left footpeg or footboard.
22. Install the seat post. Connect the coil connector and the neutral switch wires.
23. Connect VSS to transmission.
24. Install starter. See 7.13 STARTER.
25. Install oil tank and connect all oil lines. See 3.30 OIL TANK: ALL BUT FXSB or 3.31 OIL TANK: FXSB.
26. Install belt guard.
27. Tighten axle nut.
28. Install heat shields, exhaust and right foot peg. See 4.17 EXHAUST SYSTEM.
29. Install instrument console, fuel tank, fuel gauge connector and fuel tank crossover tube. See 4.6 FUEL TANK.

⚠WARNING

Connect positive (+) battery cable first. If positive (+) cable should contact ground with negative (-) cable connected, the resulting sparks can cause a battery explosion, which could result in death or serious injury. (00068a)

30. Install battery and connect battery cables, positive cable first.

⚠WARNING

After installing seat, pull upward on seat to be sure it is locked in position. While riding, a loose seat can shift causing loss of control, which could result in death or serious injury. (00070b)

31. Install seat.
32. Install **new** oil filter and fill oil tank to proper level. See 1.6 ENGINE OIL AND FILTER.
33. Check drive belt deflection and alignment. See 1.12 DRIVE BELT AND SPROCKETS.
34. Remove motorcycle from lift.
35. Check rear brakes, clutch and throttle for proper operation.
36. Check oil level after running motorcycle on jiffy stand. See 1.6 ENGINE OIL AND FILTER.

GENERAL

It is assumed that each step performed on one cylinder is automatically repeated on the other.

To perform a complete top end overhaul, follow all steps listed in this section including inspection and repair procedures.

ROCKER COVERS

NOTE

Dirt caked on cooling fins and other areas can fall into crankcase bore. It can also stick to subassemblies as parts are removed. Abrasive particles can damage machined surfaces or plug oil passageways. Clean parts before disassembly to prevent component damage.

1. Use low pressure air to thoroughly clean exterior surfaces of engine prior to disassembly.
2. See Figure 3-17. Following the sequence shown, alternately loosen the six rocker cover bolts. Remove the rocker cover bolts and their captive washers.
3. Remove the rocker cover and gasket. Discard gasket.

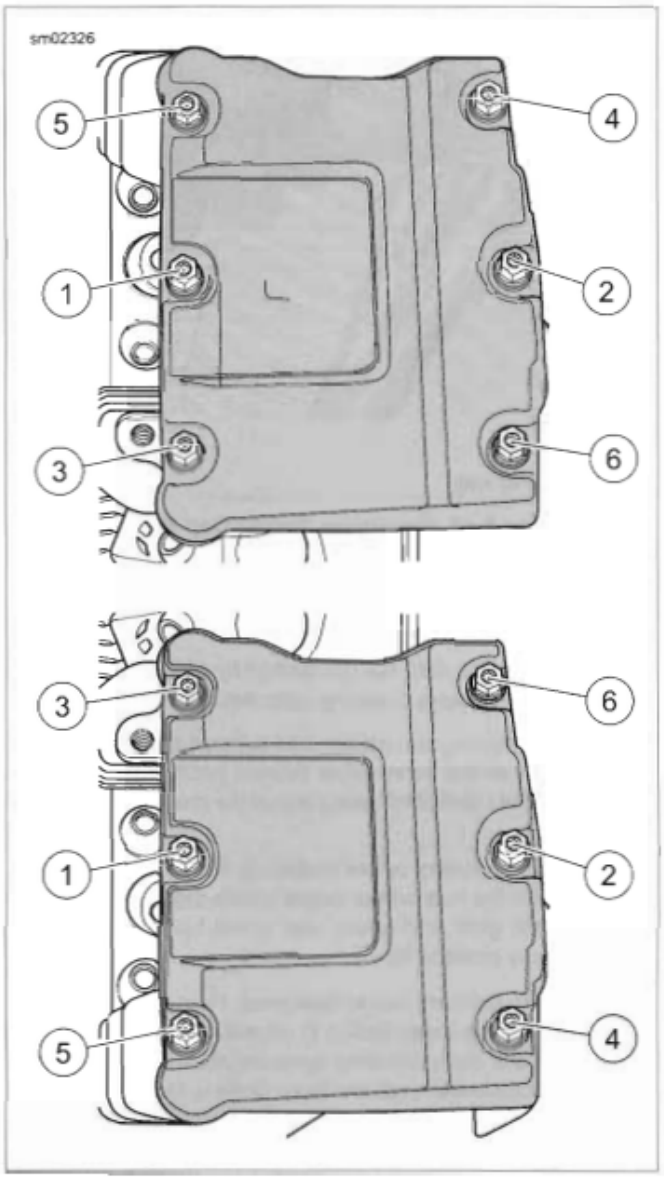

Figure 3-17. Rocker Cover Bolt Removal Sequence

ROCKER ARM SUPPORT PLATE

PART NUMBER	TOOL NAME
HD-48283	CRANKSHAFT ROTATING WRENCH

1. See Figure 3-18. Insert the blade of a small screwdriver into tab (1) of spring cap retainer. While pushing down on spring cap (2), rotate bottom of screwdriver toward outboard side to remove. Repeat step on second pushrod cover.

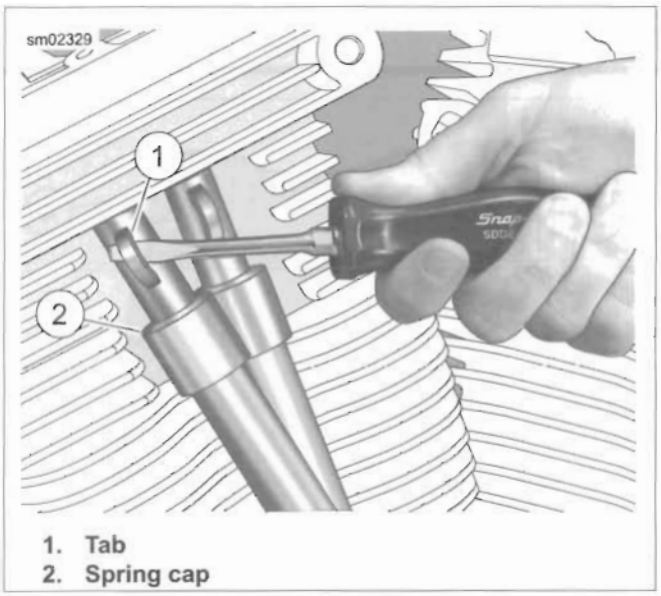

1. Tab
2. Spring cap

Figure 3-18. Removing Spring Cap Retainer

2. Collapse upper and lower pushrod covers.

NOTE

Do not attempt to rotate the crankshaft by placing a socket on the crankshaft or compensating sprocket bolt.

3. When removing the rocker arm support plate, both lifters must be on the base circle (lowest position) of the cam. Rotate the crankshaft using one of the methods presented below.
   a. **With primary cover installed:** Remove spark plugs. With the rear wheel raised, place the transmission in sixth gear and rotate rear wheel backward until the base circle is found.
   b. **With primary cover removed:** Remove spark plugs. Place the transmission in neutral. Using a large socket on the compensating sprocket retainer, rotate counterclockwise until the base circle is found.
   c. See Figure 3-19. **With engine mounted in engine stand:** Install CRANKSHAFT ROTATING WRENCH (Part No. HD-48283) on sprocket shaft and rotate counterclockwise until the base circle is found.



Figure 3-19. Crankshaft Rotating Wrench

4. Rotate engine until piston is at TDC of compression stroke.

NOTE

Breather baffle assembly is manufactured with gaskets attached. Any time the breather is disassembled, the baffle assembly must be replaced with a ***new*** *assembly.*

5. See Figure 3-20. Remove breather assembly (arrow) and filter element from the rocker arm support plate. For inspection and repair information, see 3.17 BREATHER ASSEMBLY.
6. Loosen the four rocker arm support plate bolts 1/4 turn at a time in the sequence shown. Remove the rocker arm support plate bolts with flat washers.
7. Remove the rocker arm support plate assembly. For inspection and repair information, see 3.18 ROCKER ARM SUPPORT PLATE.
8. See Figure 3-21. Remove and discard breather O-ring from rocker housing.

NOTE

If the other cylinder also requires service, find the cam base circle for that cylinder before disassembling.

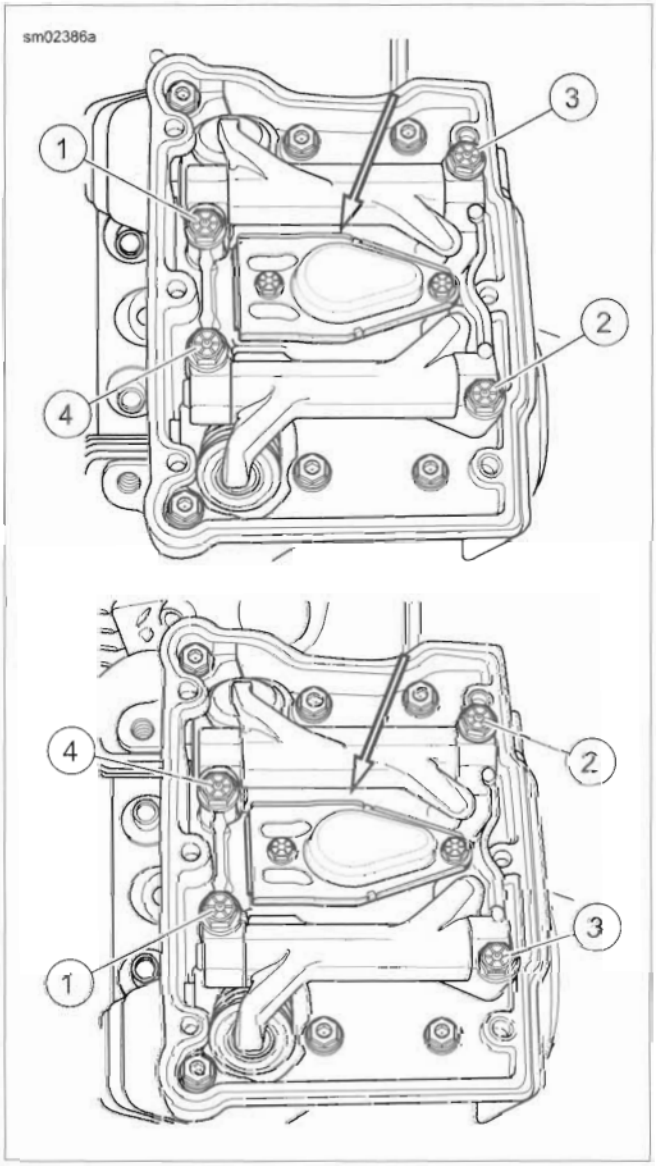

Figure 3-20. Rocker Arm Support Screw Sequence

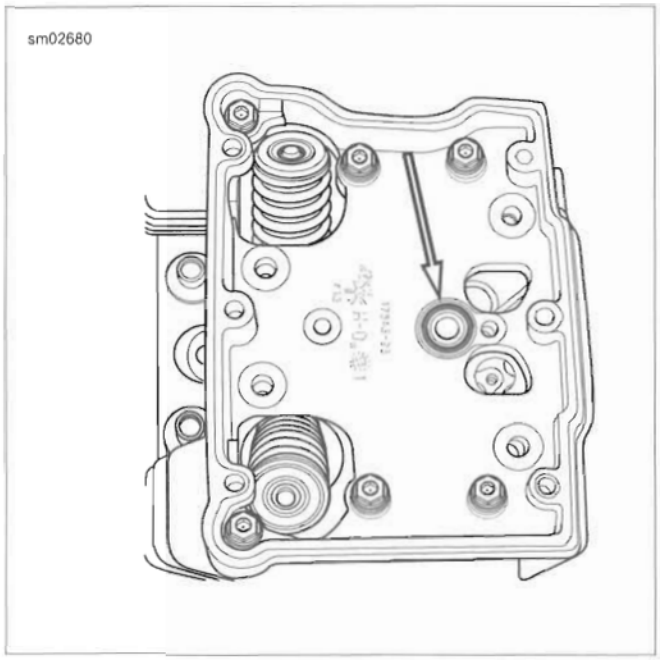

Figure 3-21. Breather Baffle Hole O-Ring

PUSHRODS, LIFTERS AND COVERS

NOTE

Mark parts for location and orientation upon removal.

1. See Figure 3-22. Remove the intake and exhaust pushrods and pushrod covers:
   a. Remove pushrods.
   b. Remove pushrod covers.
   c. Remove three O-rings from pushrod covers and discard. If O-ring is missing from upper pushrod cover, make sure to dislodge it from the cylinder head bore.
2. See Figure 3-23. Remove lifter covers:
   a. Using a crosswise pattern, remove four screws (1).
   b. Remove the lifter cover (2) and gasket. Discard gasket.
3. Remove lifters:
   a. Remove the anti-rotation pin to free the hydraulic lifters.
   b. Remove the lifters and place in clean plastic bags to prevent contamination.
4. For inspection and repair information, see 3.19 PUSHRODS, LIFTERS AND COVERS.

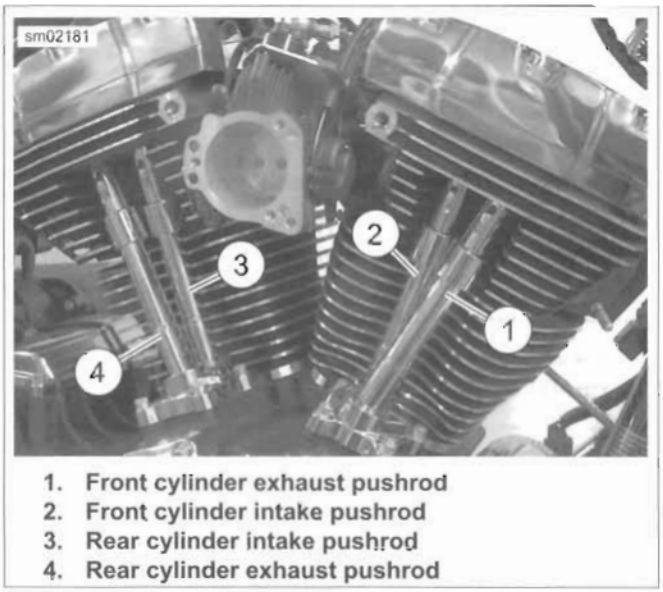

1. Front cylinder exhaust pushrod
2. Front cylinder intake pushrod
3. Rear cylinder intake pushrod
4. Rear cylinder exhaust pushrod

Figure 3-22. Pushrod Locations

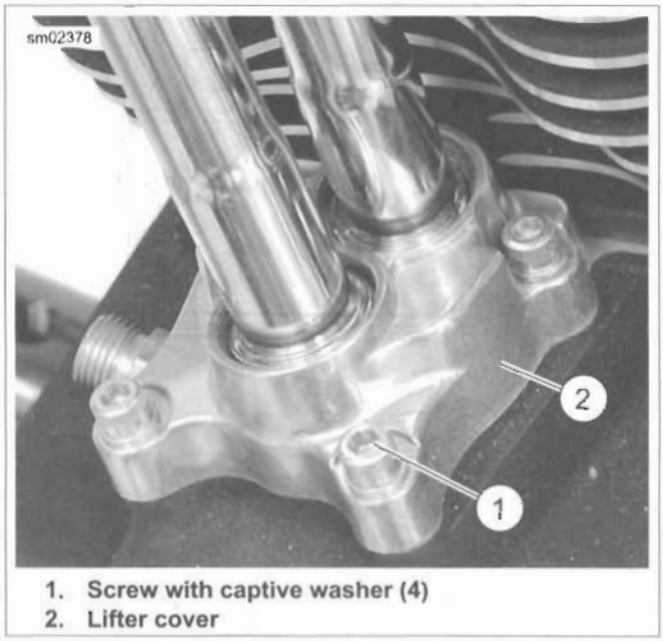

1. Screw with captive washer (4)
2. Lifter cover

Figure 3-23. Lifter Cover

CYLINDER HEAD

PART NUMBER	TOOL NAME
HD-42324-A	CYLINDER TORQUE PLATES

1. See Figure 3-24. Following the sequence shown, loosen the six rocker housing bolts. Remove rocker housing bolts.
2. Remove rocker housing and gasket. Discard gasket.

NOTE

To prevent distortion of the cylinder head, cylinder and cylinder studs, gradually loosen the cylinder head bolts in the specified sequence.

3. See Figure 3-25. Remove cylinder head bolts:
   a. Alternately loosen cylinder head bolts 1/4 turn at a time the sequence shown.
   b. Remove the cylinder head bolts.
4. Remove cylinder head and head gasket.

NOTE

Save the cylinder head gasket (if salvageable) for use with the CYLINDER TORQUE PLATES (Part No. HD-42324-A) when measuring, boring or honing of the cylinder is required.

5. For inspection and repair information, see 3.20 CYLINDER HEAD.

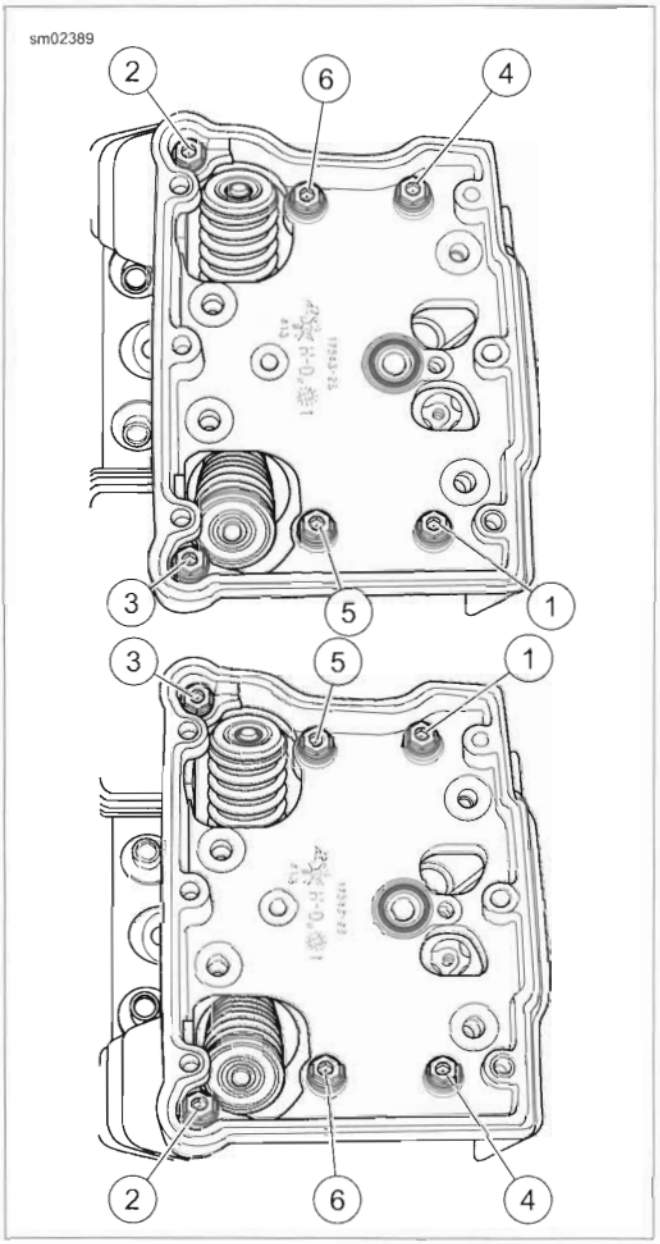

Figure 3-24. Rocker Housing Bolts Removal Sequence

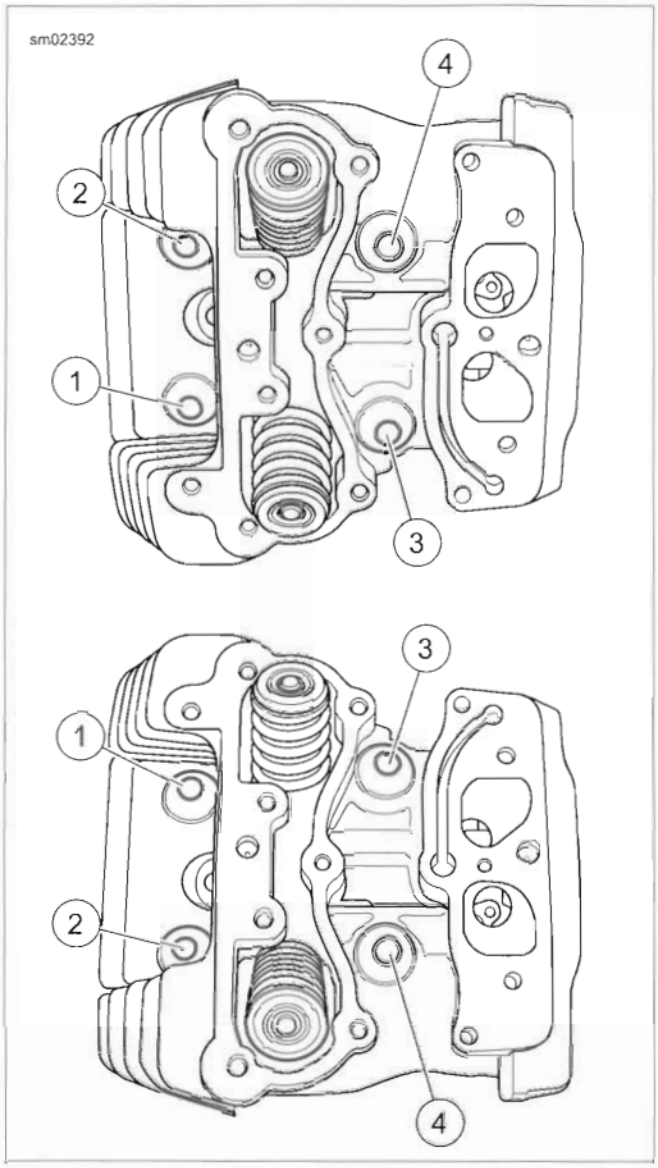

Figure 3-25. 1/4 Turn Head Bolts in Sequence

CYLINDER

1. Raise the cylinder just enough to place clean shop towels under the piston. This will prevent any dirt or debris, such as broken ring pieces, from falling into the crankcase bore.

NOTE

Do not bend the cylinder studs. Even a slight bend or nick can cause a stress riser leading to stud failure.

2. Carefully remove the cylinder. Exercise caution to avoid bending the cylinder studs. As the piston becomes free of the cylinder, hold it upright to prevent it from striking the studs or dragging across the stud thread area.
3. Mark cylinder FRONT or REAR as appropriate.
4. Slide approximately 6.0 in (152 mm) of plastic tubing, rubber hose or conduit over each cylinder stud. Use material with ID of 0.5 in (12.7 mm) to protect cylinder studs and piston from damage.
5. See Figure 3-26. Remove O-ring seal (4) from the bottom of the cylinder liner. Discard O-ring seal.

6. See Figure 3-27. Remove O-ring from dowel pin (4) on base of cylinder deck. Discard O-ring.
7. For inspection and repair information, see 3.21 CYLINDER.

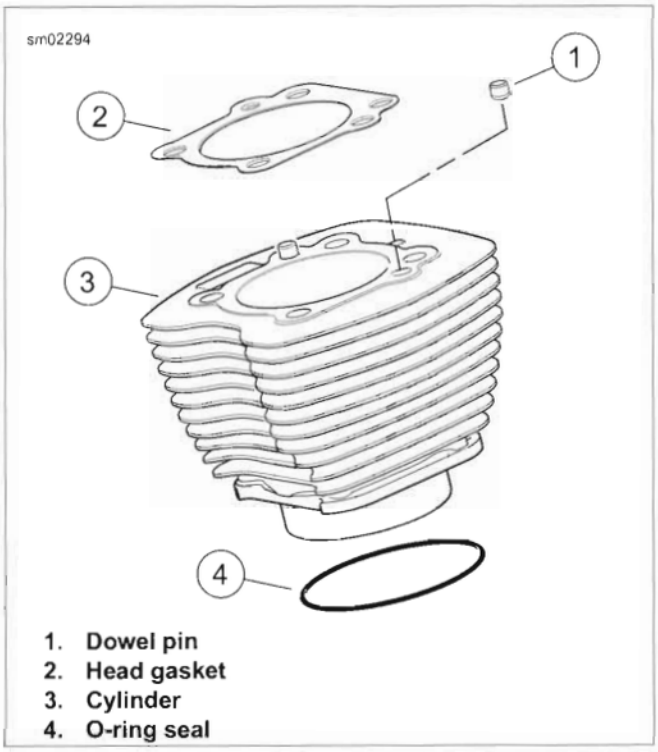

1. **Dowel pin**
2. **Head gasket**
3. **Cylinder**
4. **O-ring seal**

Figure 3-26. Cylinder Assembly

PISTON

PART NUMBER	TOOL NAME
HD-42317-A	PISTON PIN RETAINING RING INSTALLER
HD-42320-B	PISTON PIN REMOVER

1. Place clean shop towels over crankcase bore. This prevents the piston pin retaining ring from falling into the crankcase.

⚠WARNING

Wear safety glasses or goggles when removing or installing piston pin retaining rings. Piston pin retaining rings are compressed in the ring groove and can fly out when removed from the groove, which could result in serious eye injury. (00293a)

NOTE

It is not necessary to remove both piston pin retaining rings for piston removal.

2. See Figure 3-27. Using PISTON PIN RETAINING RING INSTALLER (Part No. HD-42317-A), remove and discard one piston pin retaining ring.
   a. Insert tool (1) into piston pin bore. Position claw on tool in slot of piston (2) (directly under retaining ring).
   b. Squeeze handles of tool together. Pull retaining ring from bore. Discard retaining ring.

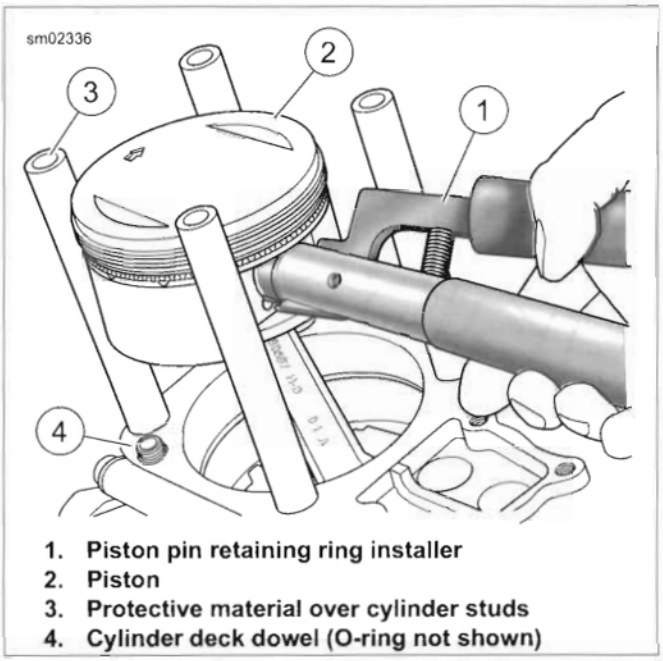

1. **Piston pin retaining ring installer**
2. **Piston**
3. **Protective material over cylinder studs**
4. **Cylinder deck dowel (O-ring not shown)**

Figure 3-27. Piston Pin Retaining Ring Removal

3. See Figure 3-28. Remove the piston pin. If piston pin is difficult to remove, use PISTON PIN REMOVER (Part No. HD-42320-B).
4. Remove the piston. Hold the connecting rod upright to prevent it from striking the crankcase.
5. Place a 3.0 in. (76.2 mm) long piece of foam-type water pipe insulation around connecting rod to prevent damage. Use material with an I.D. of 1.0 in. (25.4 mm).
6. Turn the piston over. Mark the pin boss with the letters F(ront) or R(ear) to identify location.
7. For inspection information, see 3.22 PISTON.
8. Complete engine repair:
   a. If performing a top end overhaul only, see 3.23 TOP END OVERHAUL: ASSEMBLY.
   b. If performing a complete engine overhaul, see 3.24 CAM COMPARTMENT AND COMPONENTS and 3.26 CRANKCASE DISASSEMBLY AND REPAIR.

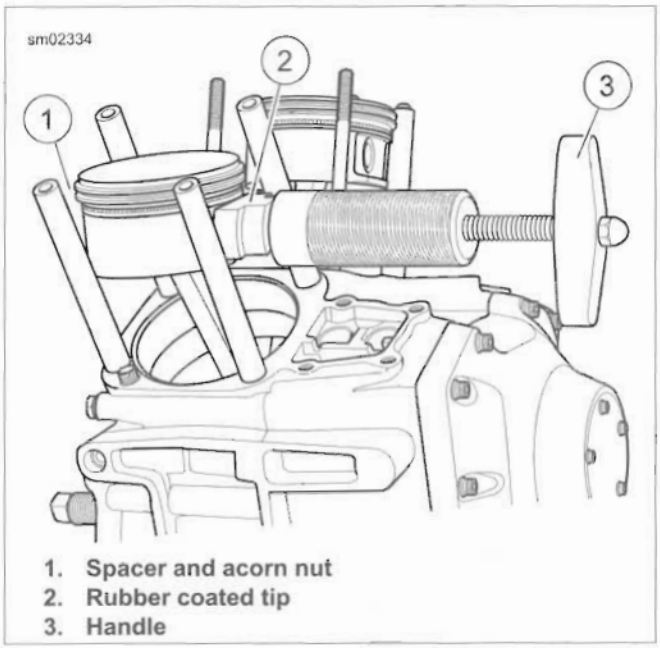

1. Spacer and acorn nut
2. Rubber coated tip
3. Handle

Figure 3-28. Piston Pin Removal

DISASSEMBLY

NOTE

See Figure 3-29. Breather baffle assembly is manufactured with gaskets attached. Replacement part is supplied with the filter element (5) and umbrella valve (3). Any time the breather is disassembled, the baffle assembly must be replaced with a ***new*** *assembly.*

1. Remove rocker cover. See 3.16 TOP END OVERHAUL: DISASSEMBLY, Rocker Covers.
2. Remove two fasteners (1) and remove breather cover (2).
3. Remove breather baffle (4). Discard breather baffle, filter element (5) and umbrella valve (3).

CLEANING AND INSPECTION

⚠WARNING

Compressed air can pierce the skin and flying debris from compressed air could cause serious eye injury. Wear safety glasses when working with compressed air. Never use your hand to check for air leaks or to determine air flow rates. (00061a)

1. Clean cover and screws in a non-volatile cleaning solution or solvent. Dry parts with low pressure compressed air.
2. Set a straightedge diagonally across the length of the breather cover intersecting the opposite corners of the gasket surface.
3. Slide a feeler gauge beneath the straightedge to check the breather cover flatness.
4. Repeat the step checking the opposite diagonal.
5. Replace the breather cover if warpage exceeds 0.005 in. (0.13 mm).

ASSEMBLY

See Figure 3-29. Install breather assembly and rocker cover using **new** baffle assembly. See 3.23 TOP END OVERHAUL: ASSEMBLY, Breather and Rocker Cover.

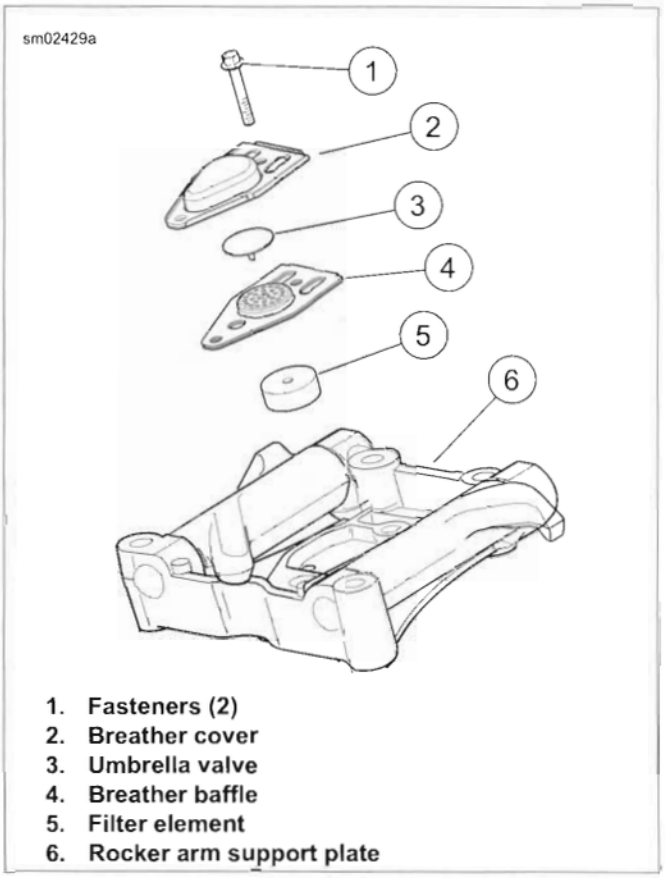

1. **Fasteners (2)**
2. **Breather cover**
3. **Umbrella valve**
4. **Breather baffle**
5. **Filter element**
6. **Rocker arm support plate**

Figure 3-29. Breather Assembly

DISASSEMBLY

1. See Figure 3-30. Remove four bolts and flat washers (1) from the rocker arm support plate (5).
2. Remove the rocker arm shafts (4) so that the notched ends exit the rocker arm support plate (5) first. Use a hammer and brass drift if necessary. Mark the shafts so that they are installed in their original locations at time of assembly.
3. Remove the rocker arms. Mark the rocker arms to indicate location.

CLEANING AND INSPECTION

Inspection

⚠WARNING

Compressed air can pierce the skin and flying debris from compressed air could cause serious eye injury. Wear safety glasses when working with compressed air. Never use your hand to check for air leaks or to determine air flow rates. (00061a)

1. Clean all parts in a non-volatile cleaning solution or solvent. Dry parts with low pressure compressed air.
2. See Figure 3-30. Check rocker arms (3) for uneven wear or pitting where contact is made with the valve stem tips. Check for concave wear where rocker arms contact the pushrod ends. Replace rocker arm if excessive wear is found.
3. Verify that oil holes in rocker arms and rocker arm support plate (5) are clean and open.
4. Inspect rocker arm shafts (4) for scratches, burrs, scoring or excessive wear. Replace as necessary.

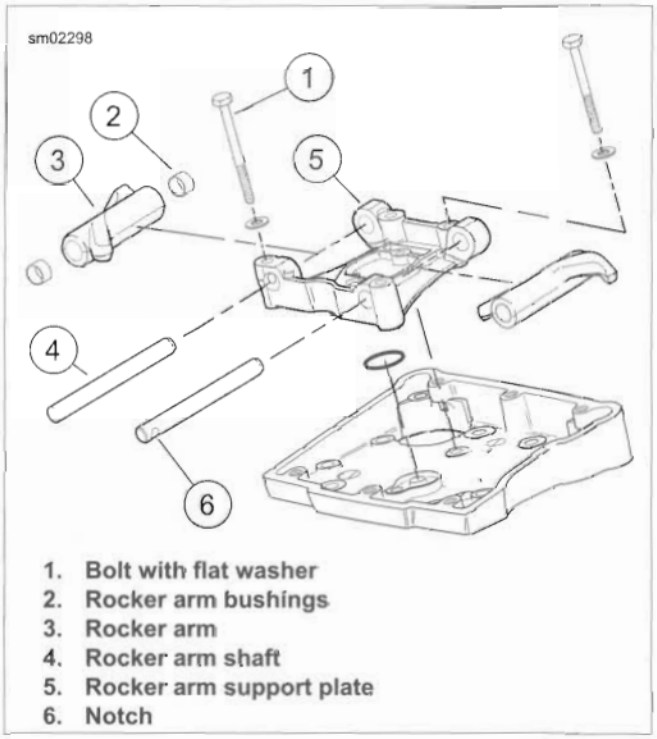

1. Bolt with flat washer
2. Rocker arm bushings
3. Rocker arm
4. Rocker arm shaft
5. Rocker arm support plate
6. Notch

Figure 3-30. Rocker Arm Assembly

Rocker Shaft Fit

1. See Figure 3-31. Measure the inside diameter of the rocker arm support plate bore.
2. See Figure 3-32. Measure the outside diameter of the rocker arm shaft where it fits in the bore.
3. Repeat the measurement on opposite side of support plate and shaft. Replace shaft or support plate if clearance exceeds service wear limit of 0.0035 in (0.089 mm).

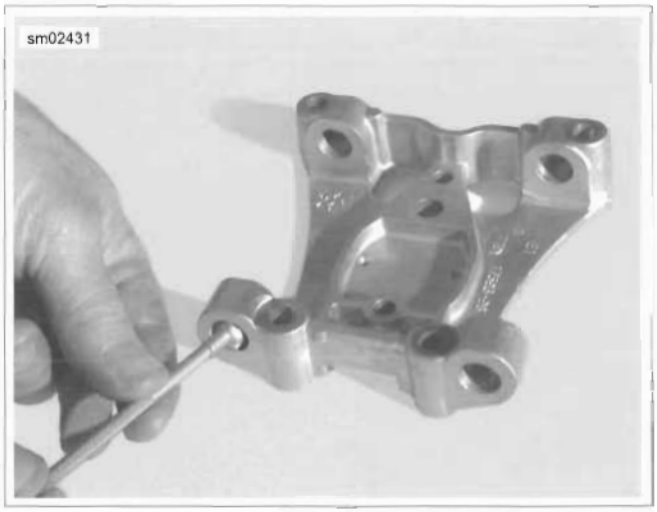

Figure 3-31. Checking Support Plate Bore



Figure 3-32. Checking Shaft to Support Plate Fit

Rocker Arm Shaft to Bushing

1. Check rocker arm shaft to bushing fit.
   a. See Figure 3-33. Measure the inside diameter of the rocker arm bushing.
   b. See Figure 3-34. Measure the outside diameter of the rocker arm shaft where it rides in the bushing.
2. Repeat measurement on opposite side of rocker arm and shaft. Replace shaft or bushings if clearance exceeds service wear limit of 0.0035 in (0.089 mm).

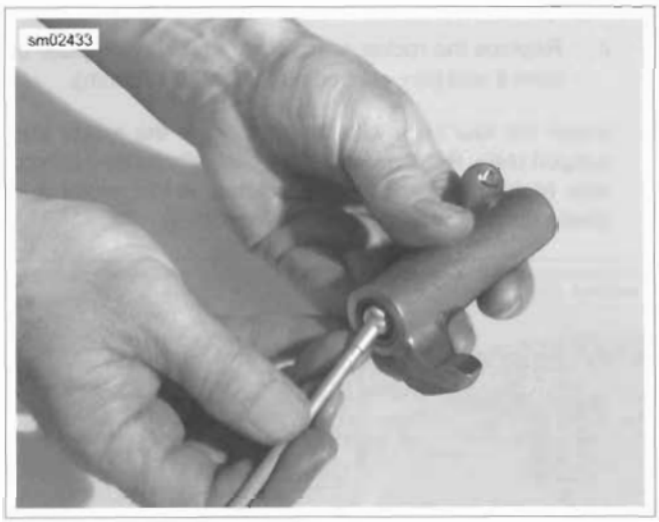

Figure 3-33. Checking Bushings



Figure 3-34. Checking Shaft to Bushing Fit

Replace Rocker Arm Bushings

NOTE

Bushing replacement and reaming must be done one at a time to achieve proper alignment. Follow all steps for one bushing and then repeat for the other bushing.

1. See Figure 3-35. Remove bushing from rocker arm:
   a. Turn a 9/16-18 tap (2) into bushing until tight.
   b. Place rocker arm under ram of arbor press with tap at bottom.
   c. Slide a discarded rocker arm shaft (1) through open end of rocker arm until contact is made with tap.
   d. Using shaft as driver (and untapped bushing as pilot), press against shaft until both tap and bushing are free.
2. See Figure 3-36. Using a suitable driver, press **new** bushing into side of rocker arm until flush with casting. Be sure to orient bushing so that split line faces top of rocker arm.

NOTE

*Never back the reamer out of rocker arm or **new** bushing will be damaged.*

3. Ream bushing:
   a. See Figure 3-37. Lock rocker arm in a vise using brass jaw inserts or shop towels to prevent casting damage. Note that old bushing on drive side of reamer as pilot.
   b. Rotate reamer until the new bushing on the far side is reamed.
   c. Continuing in the same direction, draw drive side of reamer from **new** bushing.
4. Repeat steps to remove, install and ream second bushing.

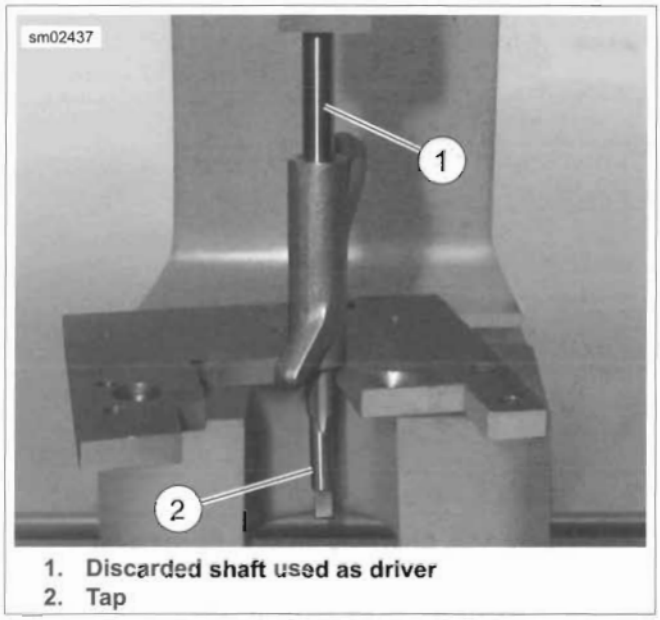

1. Discarded shaft used as driver
2. Tap

Figure 3-35. Removing Bushing

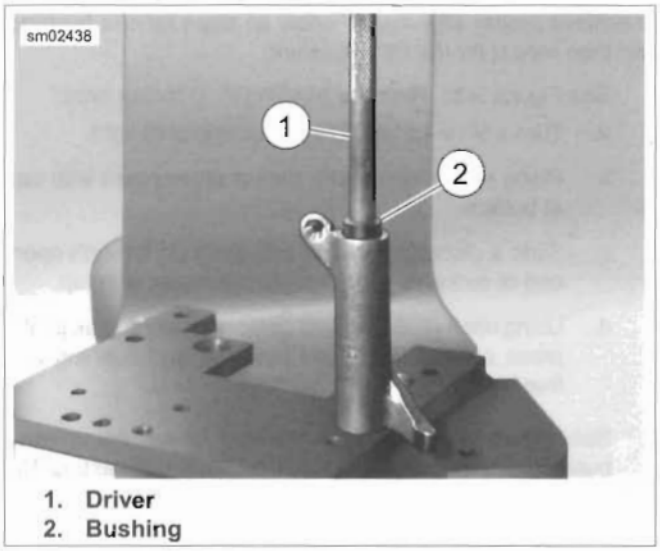

1. Driver
2. Bushing

Figure 3-36. Installing Bushing

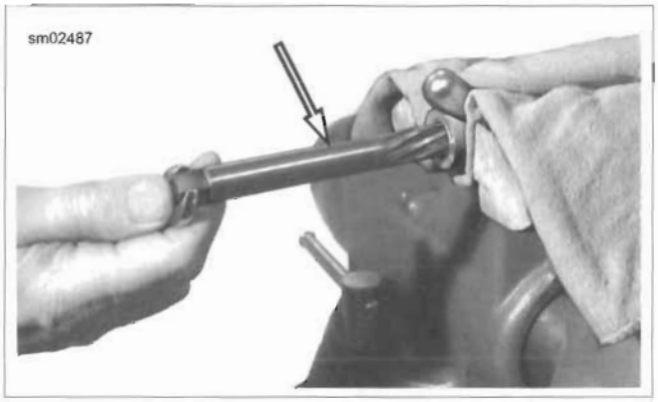

Figure 3-37. Ream Bushing

ASSEMBLY

1. Place the rocker arms into position on the rocker arm support plate.
2. Install rocker arm shafts:
   a. Push un-notched ends of rocker arm shafts into right side of support plate and then into rocker arms.
   b. As they approach their fully installed positions, rotate shafts until notches are aligned with bolt holes in support plate.
3. See Figure 3-38. Check for proper end play.
   a. Insert a feeler gauge between the rocker arm and support plate.
   b. Repeat measurement on other rocker arm.
   c. Replace the rocker arm, rocker arm support plate or both if end play exceeds 0.025 in. (0.635 mm).
4. Install the four bolts with flat washers in the rocker arm support plate. Remember that the two bolts on the pushrod side (right) must engage the notches in the rocker arm shafts for proper assembly.



Figure 3-38. Check End Play

DISASSEMBLY

1. See Figure 3-39. Separate upper (2) and lower (8) pushrod covers.
2. Remove and discard O-ring (9).
3. Remove O-ring (1). Slide O-ring (7), flat washer (6), spring (5) and spring cap (4) from upper pushrod cover (2). Discard O-rings.

CLEANING AND GENERAL INSPECTION

1. See Figure 3-39. Clean old gasket material from the lifter cover (11).
2. With the exception of the hydraulic lifters (14), clean all parts in a non-volatile cleaning solution or solvent. Verify that the O-ring seats and contact surfaces of the pushrod covers (2, 8) are completely clean.

⚠WARNING

Compressed air can pierce the skin and flying debris from compressed air could cause serious eye injury. Wear safety glasses when working with compressed air. Never use your hand to check for air leaks or to determine air flow rates. (00061a)

3. Dry parts with low pressure compressed air. Verify that all oil holes are clean and open.
4. Verify that the hydraulic lifter rollers turn freely and are free of flat spots, scuff marks and pitting. If flat spots exist, examine the cam lobe on which the lifter operates.
5. Inspect the lifter socket for signs of wear. Verify that the plunger of the hydraulic lifter is fully extended up against the C-clip. Use index finger to pump plunger to verify lifter operation.
6. Examine the pushrods (15). Replace any pushrods that are bent, dented, damaged, discolored or if the ball ends show signs of excessive wear or damage.
7. Cover all parts with a clean plastic sheet to protect them from dust and dirt.

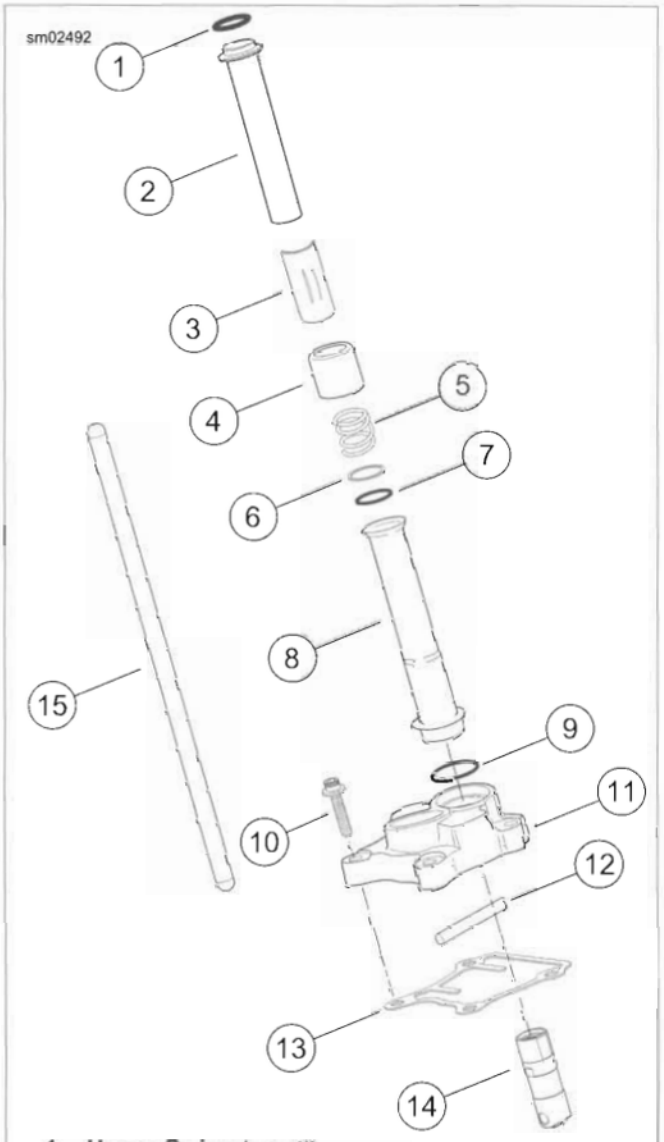

1. Upper O-ring (small)
2. Upper pushrod cover
3. Spring cap retainer
4. Spring cap
5. Spring
6. Flat washer
7. Middle O-ring (intermediate)
8. Lower pushrod cover
9. Lower O-ring (large)
10. Lifter cover screw
11. Lifter cover
12. Anti-rotation pin
13. Lifter cover gasket
14. Hydraulic lifter
15. Pushrod

Figure 3-39. Pushrods, Lifters and Covers

LIFTER INSPECTION

1. Inspect lifters for excessive clearance in bores. Accurately measure the lifter outer diameter and record the measurement.

2. Accurately measure lifter bore inner diameter with a snap gauge. Subtract this measurement from the lifter measurement to determine clearance.
   a. Clearance should be within 0.0008-0.0020 in (0.0203-0.0508 mm).
   b. Install **new** lifters and/or replace crankcases if clearance exceeds service wear limit of 0.007 in (0.076 mm).
3. Check lifter roller end clearance.
   a. End clearance should be within 0.008-0.022 in (0.203-0.559 mm).
   b. Replace lifters if end clearance exceeds service wear limit of 0.022 in (0.559 mm).
4. Soak lifters in clean engine oil. Keep covered until assembly.

ASSEMBLY

With the exception of the pushrod covers, all parts will be assembled during the installation procedure.

1. See Figure 3-40. Apply a very thin film of clean engine oil to **new** O-rings (1, 7 and 9) before installation.
2. Install small O-ring (1) on seat at the top of the upper pushrod cover (2).
3. Slide the spring cap (4), spring (5), flat washer (6) and intermediate size O-ring (7) onto the body of the upper pushrod cover. Move parts up body until spring cap contacts upper O-ring seat.
4. Fit the straight end of the upper pushrod cover into the flared end of the lower pushrod cover (8).
5. Install large O-ring (9) on seat at bottom of lower pushrod cover.

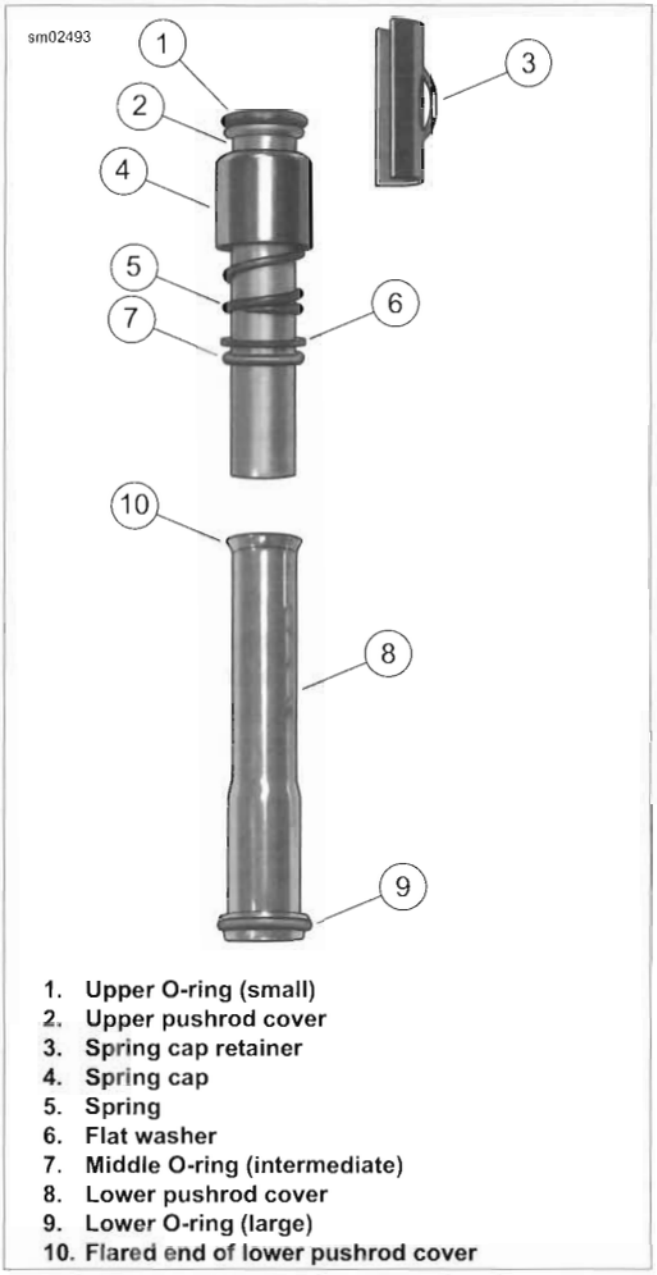

1. **Upper O-ring (small)**
2. **Upper pushrod cover**
3. **Spring cap retainer**
4. **Spring cap**
5. **Spring**
6. **Flat washer**
7. **Middle O-ring (intermediate)**
8. **Lower pushrod cover**
9. **Lower O-ring (large)**
10. **Flared end of lower pushrod cover**

Figure 3-40. Assembled Pushrod Cover

DISASSEMBLY

PART NUMBER	TOOL NAME
HD-34736-B	VALVE SPRING COMPRESSOR
HD-39786	CYLINDER HEAD HOLDING FIXTURE

1. Before proceeding with disassembly procedure, determine if valve reconditioning is necessary.
   a. Raise valve ports of cylinder head to strong light source. If light is visible between valves and seats, the cylinder head and valves require reconditioning.
   b. Fill ports with solvent. Wait ten full seconds and check for leakage past valve seats. Recondition cylinder heads and valves that leak.
2. See Figure 3-41. Secure cylinder head for service.
   a. Thread 12 mm end of CYLINDER HEAD HOLDING FIXTURE (Part No. HD-39786) (1) into cylinder head (2) spark plug hole.
   b. Clamp tool in vise at a 45 degree angle or one that offers a comfortable working position.

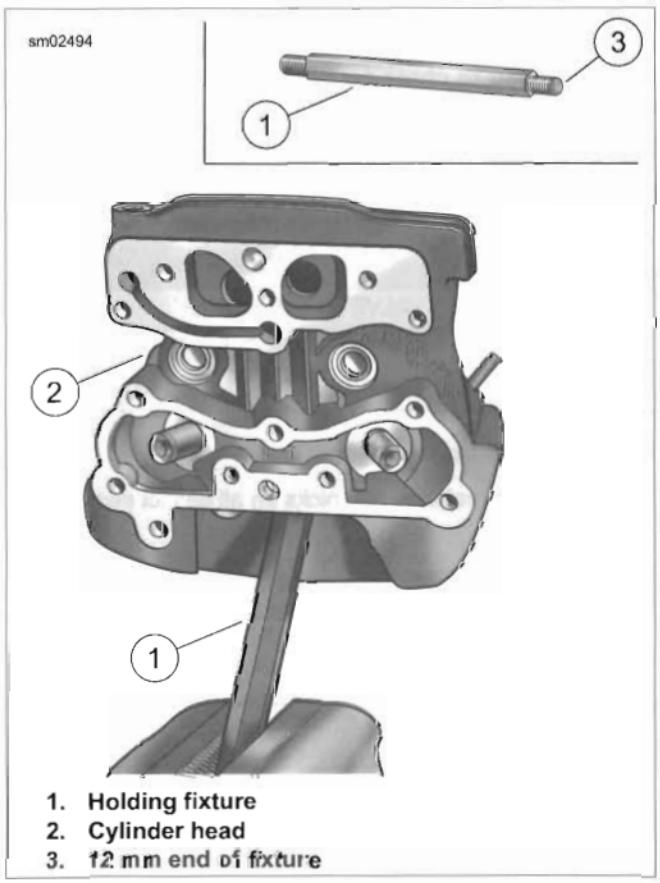

1. **Holding fixture**
2. **Cylinder head**
3. **12 mm end of fixture**

Figure 3-41. Cylinder Head Holding Fixture

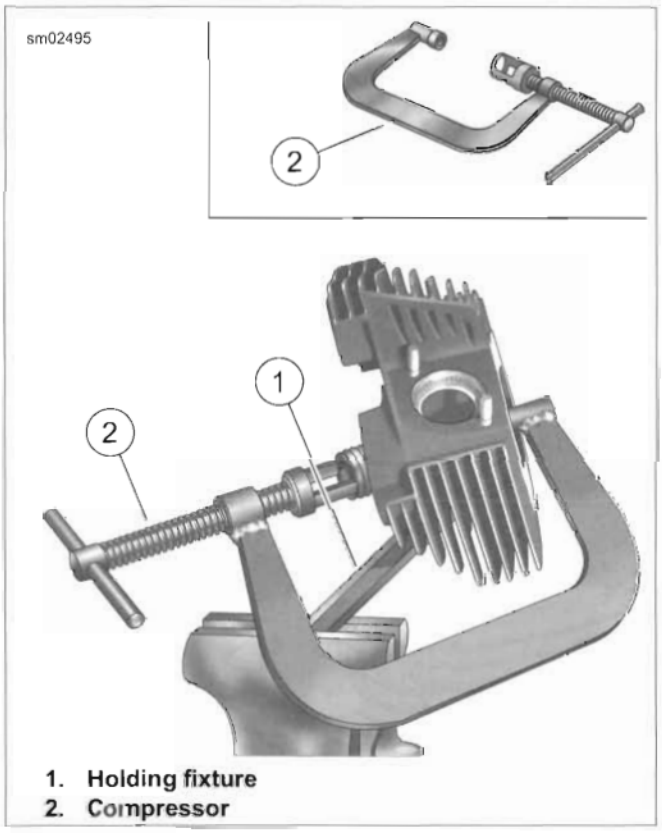

1. **Holding fixture**
2. **Compressor**

Figure 3-42. Valve Spring Compressor

3. See Figure 3-42. Release valve spring compression.
   a. Place VALVE SPRING COMPRESSOR (Part No. HD-34736-B) (2) over cylinder head. Center blunt end on the valve head. Seat adapter at end of forcing screw on the valve spring retainer.
   b. See Figure 3-43. Rotate forcing screw to compress valve spring until keepers (1) can be removed from valve stem (11).
   c. Rotate forcing screw to release valve spring compression.
4. Remove spring retainer (2) and valve spring (3).
5. Slide valve (11) from the valve guide (5).
6. Remove valve seal assembly.
7. Mark valve head F(ront) or R(ear) for identification. Also, separate and tag tapered keepers, valve spring and spring retainer so that they are installed on the same valve at time of assembly.
8. Remove remaining valve and components.
9. Remove fixture tool from spark plug hole.

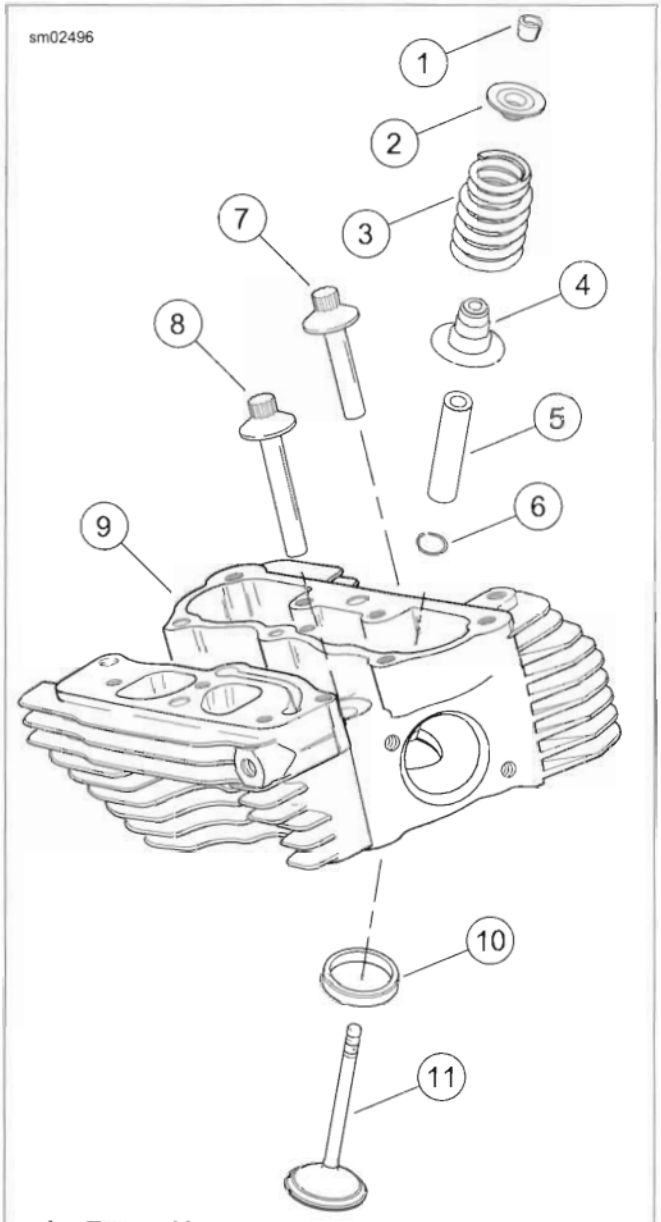

1. **Tapered keepers**
2. **Spring retainer**
3. **Valve spring**
4. **Spring seat/valve stem seal**
5. **Valve guide**
6. **Lock ring**
7. **Cylinder headbolt, short**
8. **Cylinder headbolt, long**
9. **Cylinder head**
10. **Valve seat**
11. **Valve**

Figure 3-43. Cylinder Head Assembly

CLEANING

1. See Figure 3-43. Remove old gasket material from cylinder head (9). Gasket material left on sealing surfaces will cause leaks. Scraping may result in scratches or nicks.

NOTICE

Do not use glass or sand to bead blast surfaces exposed to engine oil. Blasting materials can lodge in pores of the casting. Heat expansion releases this material which can contaminate oil resulting in engine damage. (00534b)

NOTE

Bead blasting materials could also enter threaded holes. This would adversely affect fastener engagement and torque indication. Cover all threaded holes before bead blasting.

2. Remove all carbon deposits from combustion chamber and machined surfaces of cylinder head. Do not remove any metal material.
3. To soften stubborn deposits, soak the cylinder head in a chemical solution, such as GUNK HYDRO-SEAL or other carbon and gum dissolving agent. Repeat previous step as necessary.
4. Thoroughly clean the cylinder head, spring retainers, tapered keepers, valves and valve springs in a non-volatile cleaning solution or solvent. Follow up with a thorough wash in hot soapy water.

⚠WARNING

Compressed air can pierce the skin and flying debris from compressed air could cause serious eye injury. Wear safety glasses when working with compressed air. Never use your hand to check for air leaks or to determine air flow rates. (00061a)

5. Dry parts with low pressure compressed air.

INSPECTION

PART NUMBER	TOOL NAME
B-45525	VALVE GUIDE HONE
HD-34751	VALVE GUIDE CLEANING BRUSH
HD-42324-A	CYLINDER TORQUE PLATES

Cylinder Head

1. Check for scratches and nicks on all gasket sealing surfaces.
2. Check for warpage.
   a. Place a straightedge diagonally across the cylinder head gasket surface.
   b. Slide a feeler gauge beneath the straightedge to check the head for warpage.
   c. Repeat the procedure on the opposite diagonal. Discard the head if warpage is 0.006 in. (0.152 mm) or greater.

3. Check for warpage (alternate method.)
   a. Use one of the CYLINDER TORQUE PLATES (Part No. HD-42324-A) in lieu of the straightedge.
   b. Lay the upper plate (without vise grip) flat on the machined surface of the head.
   c. As a preliminary check, see if the plate rocks from side to side. A head on which the plate rocks is immediately suspect.
   d. Insert a feeler gauge between the plate and head at various locations.
   e. Discard the head if warpage is 0.006 in. (0.152 mm) or greater.
4. Verify that oil passageways are open and clean.

Valve Guides

1. Inspect external surfaces, particularly the combustion chamber side, for cracks. Replace as necessary.
2. Prepare valve guides for inspection.
   a. Lightly hone bore using the VALVE GUIDE HONE (Part No. B-45525).
   b. Scrub with the VALVE GUIDE CLEANING BRUSH (Part No. HD-34751) to remove any dust or debris.
   c. Polish the valve stem with fine emery cloth or steel wool to remove carbon buildup.
3. Check valve stem to guide clearance:
   a. Carefully measure the **inside** diameter of the valve guide using a ball gauge.
   b. Measure the **outside** diameter of the valve stem with a micrometer.
   c. Refer to Table 3-36. If the clearance between stem and guide exceeds the limits shown, the valve stem and/or guide are excessively worn.
   d. Repeat measurements with a **new** valve to determine if the guide must be replaced.

Table 3-36. Valve Stem to Guide Clearance Service Wear Limits

VALVE	IN	MM
Intake	0.0038	0.0965
Exhaust	0.0038	0.0965

Valves

1. Replace the valve if there is evidence of burning or cracking.
2. Inspect the end of the valve stem for pitting or uneven wear. Replace as necessary.
3. Inspect for burrs around the valve stem keeper groove. Remove burrs with a fine tooth file.
4. To determine if the valve stem is excessively worn, see valve guide inspection.

Valve Springs

1. Inspect springs for cracked or discolored coils. Replace as necessary.
2. Set the valve springs on a level surface. Check for proper squareness.
3. Check free length of springs using a caliper and load test using a commercially available valve spring tester. Replace springs if free length or compression force do not meet specifications. See 3.2 SPECIFICATIONS.

Tapered Keepers

Install **new** keepers any time valves are installed.

Valve Seats

1. Inspect seats for cracking, chipping or burning. Replace as necessary.
2. Check seats wear by measuring valve stem protrusion. See 3.20 CYLINDER HEAD, Valve and Seat Refacing.

VALVE GUIDE REPLACEMENT

PART NUMBER	TOOL NAME
B-45523	VALVE GUIDE REAMER
B-45524-1	VALVE GUIDE DRIVER
B-45524-2A	VALVE GUIDE INSTALLER SLEEVE
B-45525	VALVE GUIDE HONE
HD-34751	VALVE GUIDE CLEANING BRUSH
HD-39782-B	CYLINDER HEAD SUPPORT STAND KIT
HD-39786	CYLINDER HEAD HOLDING FIXTURE
HD-39847	REAMER T-HANDLE
HD-39964	REAMER LUBRICANT

Removal

NOTES

- *If valve guide replacement is necessary, always install **new** guide before refacing valve seat.*
- *CYLINDER HEAD SUPPORT STAND KIT (Part No. HD-39782-B) ensures that valve guide and seat are perpendicular. Not keeping cylinder head valve guide bore perpendicular will result in damage during the press procedure.*

1. See Figure 3-44. Prepare cylinder head for valve guide replacement.
   a. Obtain CYLINDER HEAD SUPPORT STAND KIT (Part No. HD-39782-B).
   b. Insert sleeve of appropriate seat adapter (3 or 4) into tube at top of support stand (2).
   c. Position cylinder head so that valve seat is centered on seat adapter.

NOTE

Always press valve guide toward combustion chamber. Carbon buildup on combustion chamber side of guide can damage cylinder head bore. this may prevent a proper interference fit.

2. Remove and discard lock ring from valve guide groove.

NOTE

Lock ring is present on OEM intake and exhaust valve guides.

3. Insert VALVE GUIDE DRIVER (Part No. B-45524-1) (1) into valve guide bore.

4. See Figure 3-45. Center valve guide driver under ram of arbor press. Apply pressure until valve guide drops free of cylinder head. Discard valve guide.

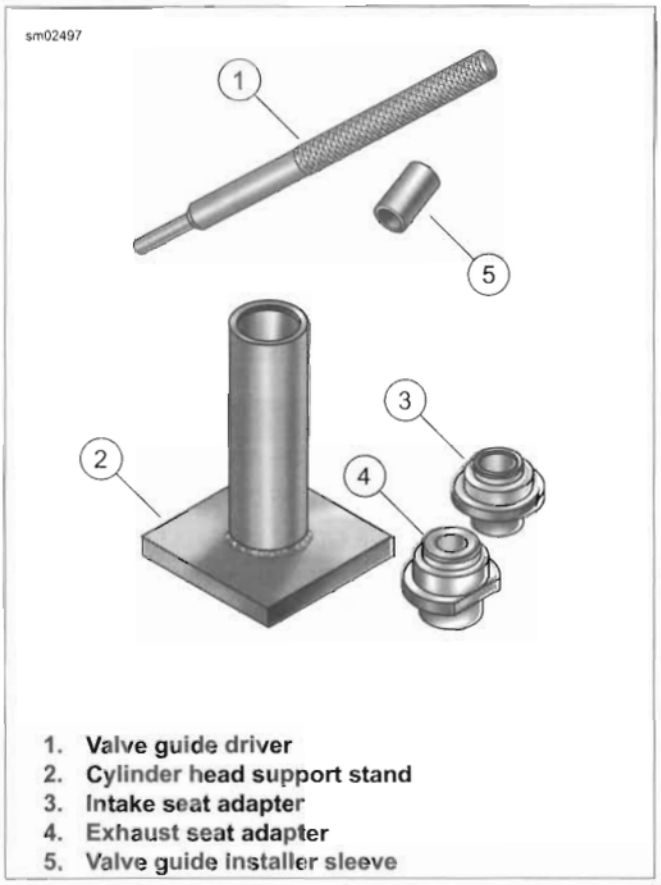

1. **Valve guide driver**
2. **Cylinder head support stand**
3. **Intake seat adapter**
4. **Exhaust seat adapter**
5. **Valve guide installer sleeve**

Figure 3-44. Valve Guide Replacement Tools

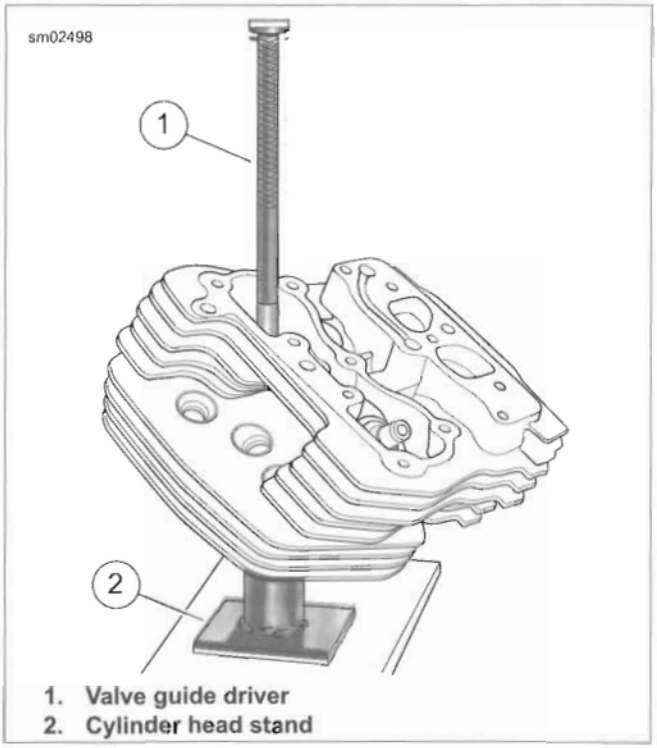

1. **Valve guide driver**
2. **Cylinder head stand**

Figure 3-45. Remove Valve Guide

Installation

1. Check valve guide to valve bore interference fit.
   a. Measure the outside diameter of a **new** standard valve guide.
   b. Measure the cylinder head valve guide bore. The valve guide should be 0.0020-0.0033 in. (0.051-0.084 mm) larger than the bore.
   c. If interference is not within specification, select one of the following oversize guides: 0.001 in. (0.025 mm), 0.002 in. (0.05 mm) or 0.003 in. (0.08 mm).

NOTE

Pressing out guide may remove material. Using the next larger size is not uncommon to guarantee proper interference fit.

2. Select an oversize guide that will provide the correct interference fit.

NOTE

The support stand ensures that valve guide and seat are perpendicular. This alignment helps prevent damage during the press procedure.

3. Prepare cylinder head for valve guide replacement.
   a. See Figure 3-44. Insert sleeve of the appropriate seat adapter (3 or 4) into tube at top of support stand (2). Position cylinder head so that valve seat is centered on seat adapter.
   b. Apply a thin film of petroleum jelly to lightly lubricate external surface of valve guide.
   c. Start valve guide into bore.
   d. See Figure 3-46. Place VALVE GUIDE INSTALLER SLEEVE (Part No. B-45524-2A) (2) over valve guide and then insert valve guide driver (1) into sleeve.
   e. Center valve guide driver under ram of arbor press and apply pressure only until valve guide is started in bore and then back off ram slightly to allow guide to center itself.

NOTE

Always back off ram to allow the valve guide to find center. Pressing guide into cylinder head in one stroke can bend driver, break guide, distort cylinder head casting and/or damage cylinder head valve guide bore.

   f. Verify that support stand (3) and driver (1) are square. Center driver under ram and press valve guide further into bore, then back off ram again to allow valve guide to center itself.
   g. Repeat previous step until installer sleeve contacts machined area of cylinder head.
   h. Install **new** lock ring into valve guide groove. Verify that lock ring is square and fully seated in the groove.

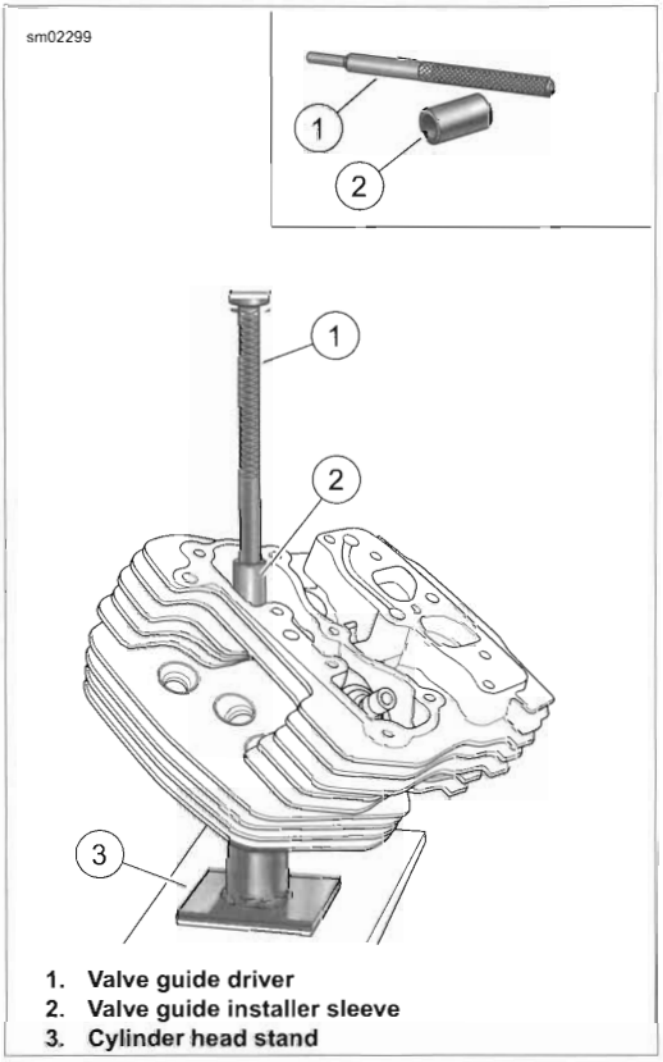

1. **Valve guide driver**
2. **Valve guide installer sleeve**
3. **Cylinder head stand**

Figure 3-46. Install Valve Guide

4. Secure cylinder head for service.
   a. Thread 12 mm end of CYLINDER HEAD HOLDING FIXTURE (Part No. HD-39786) into cylinder head spark plug hole.
   b. Clamp tool in vise at a 45 degree angle or one that offers a comfortable working position.

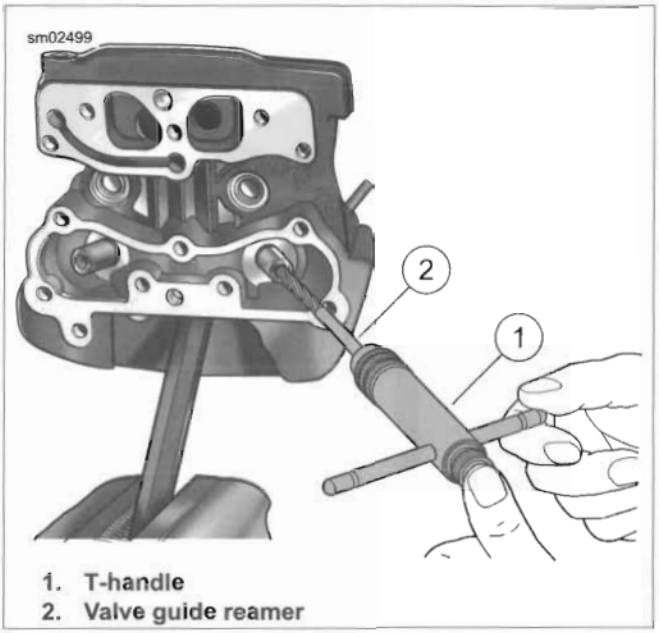

1. T-handle
2. Valve guide reamer

Figure 3-47. Reaming Valve Guide Bore

NOTE

Valve guides are reamed to within 0.0005-0.0001 in. (0.013-0.0025 mm) under finished size.

5. See Figure 3-47. Ream the guide.
   a. Install REAMER T-HANDLE (Part No. HD-39847) (1) on VALVE GUIDE REAMER (Part No. B-45523) (2).
   b. Apply a liberal amount of REAMER LUBRICANT (Part No. HD-39964) to valve guide bore and reamer. Start reamer into bore.

NOTE

Never turn reamer counterclockwise.

   c. Apply slight pressure on reamer while rotating clockwise. Squirt additional lubricant onto reamer and into guide as necessary.

NOTE

For best results, do not push reamer or apply pressure to the reamer handle. Excessive pressure results in a rough cut and the bore will be tapered if pressure is not centrally applied.

   d. Continue rotating reamer T-handle until entire bit has passed through valve guide bore.
   e. Remove T-handle from reamer, and carefully draw out reamer through combustion chamber side of valve guide.

⚠WARNING

Compressed air can pierce the skin and flying debris from compressed air could cause serious eye injury. Wear safety glasses when working with compressed air. Never use your hand to check for air leaks or to determine air flow rates. (00061a)

6. Remove metal shavings with low pressure compressed air.
7. See Figure 3-48. Clean valve guide bore with the VALVE GUIDE CLEANING BRUSH (Part No. HD-34751).
8. See Figure 3-49. Hone bore to finished size.
   a. Install VALVE GUIDE HONE (Part No. B-45525) in a high-speed electric drill.
   b. Apply reamer lubricant to stones of hone and valve guide bore.
   c. Start stones of hone into bore.
   d. Rotate the hone while moving the stones through the entire length of the bore for 10-12 complete strokes. Work for a crosshatch pattern of approximately 60 degrees.
9. Remove debris with low pressure compressed air. Clean with the VALVE GUIDE CLEANING BRUSH (Part No. HD-34751).

NOTE

Always check valve stem to valve guide clearance after honing.

10. Check valve stem to valve guide clearance. Refer to Table 3-37. If the clearance is not within specification, repeat the honing process and recheck.

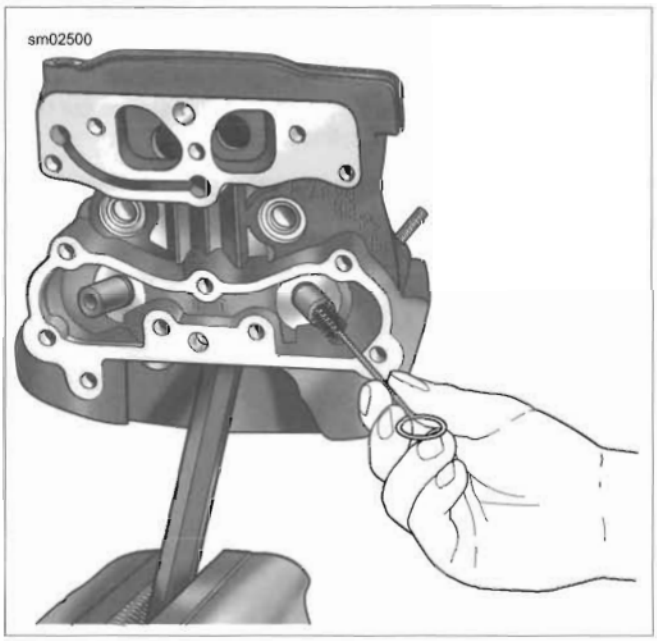

Figure 3-48. Scrubbing Valve Guide Bore

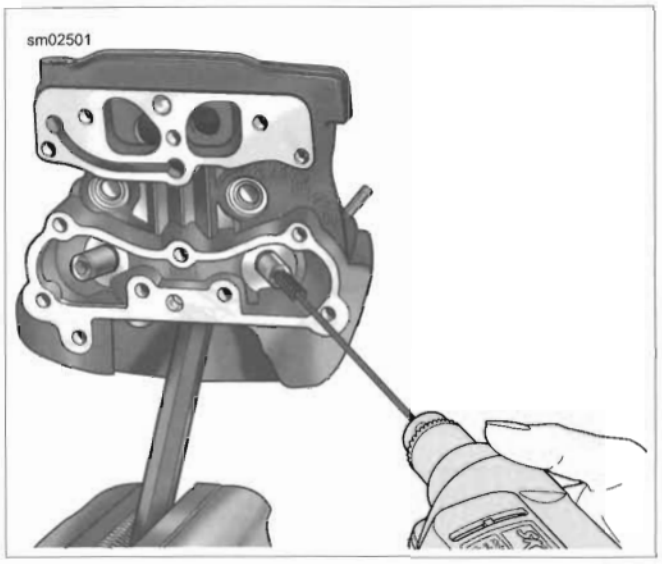

Figure 3-49. Honing Valve Guide Bore

11. Clean cylinder head assembly.
    a. Using cleaning solvent, thoroughly clean cylinder head and valve guide bore.
    b. Scrub valve guide bore with the VALVE GUIDE CLEANING BRUSH (Part No. HD-34751). For best results, clean the valve guide bore with the type of swabs or patches found in gun cleaning kits and a thin engine oil.
    c. Continue to wipe bore until a clean cloth shows no evidence of dirt or debris. Follow up with a thorough wash in hot soapy water.

⚠WARNING

Compressed air can pierce the skin and flying debris from compressed air could cause serious eye injury. Wear safety glasses when working with compressed air. Never use your hand to check for air leaks or to determine air flow rates. (00061a)

12. Dry parts with low-pressure compressed air.

Table 3-37. Valve Stem to Guide Clearance

VALVE	IN	MM
Intake	0.001-0.003	0.0254-0.0762
Exhaust	0.001-0.003	0.0254-0.0762

VALVE AND SEAT REFACING

PART NUMBER	TOOL NAME
HD-34751	VALVE GUIDE CLEANING BRUSH
HD-35758-C	NEWAY VALVE SEAT CUTTER SET
HD-39786	CYLINDER HEAD HOLDING FIXTURE

NOTES

- *Verify correct valve stem to valve guide clearance before refacing. If **new** guides must be installed, complete that task before refacing valve seats. Refer to Table 3-37.*
- *This procedure is not based on the lapping of valves. The end result is an interference fit between the 45 degree valve face and the valve seat which will be 46 degrees.*

1. Remove carbon deposits from valve head, face and stem with a wire wheel. Do not remove any metal. Carbon left on stem may affect alignment during valve refacing.
2. Polish valve stem with steel wool or crocus cloth to remove marks left by wire wheel.
3. Grind valve face to a 45 degree angle using a valve grinding machine.

NOTES

- *Do not remove any more metal than necessary to clean up and true the valve face.*
- *Replace the valve if margin is less than 0.0313 in (0.795 mm). See Figure 3-50.*

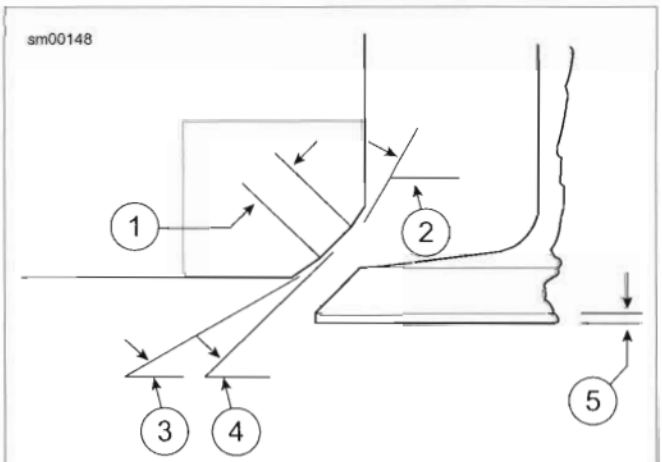

1. **Minimum: 0.040 in. (1.016 mm) / Maximum: 0.062 in. (1.575 mm)**
2. **60 degrees**
3. **31 degrees**
4. **46 degrees**
5. **Margin**

Figure 3-50. Valve and Seat Dimensions

4. Wipe valve seats and valve faces clean. Install the valve into the valve guide. Push on head of valve until it contacts the valve seat.

5. See Figure 3-51. Measure valve stem protrusion.
   a. Use a dial caliper to check the distance from the top of the valve stem to the machined area on the cylinder head.
   b. If protrusion exceeds 2.069 in. (52.553 mm), replace the valve, valve seat or cylinder head as necessary.

NOTE

Do not shorten the valve by grinding the end of the stem. Grinding removes the hardened case which results in accelerated wear.

6. Secure cylinder head for servicing.
   a. Thread 12 mm end of CYLINDER HEAD HOLDING FIXTURE (Part No. HD-39786) into cylinder head spark plug hole.
   b. Clamp fixture in vise and further tighten cylinder head onto the fixture to prevent any movement during operation.
   c. Place cylinder head at a 45 degree angle or one that offers a comfortable working position.
7. To determine the correct location of the 46 degree valve seat in the head, measure the diameter of the valve head and subtract 0.080 in. (2.032 mm) from that number.
8. Set the dial caliper to the lesser measurement and lock down for quick reference. This is the diameter of the valve seat.
9. Use a permanent marker to highlight the valve seat area. Highlight all three angles. Allow marker to dry before proceeding.

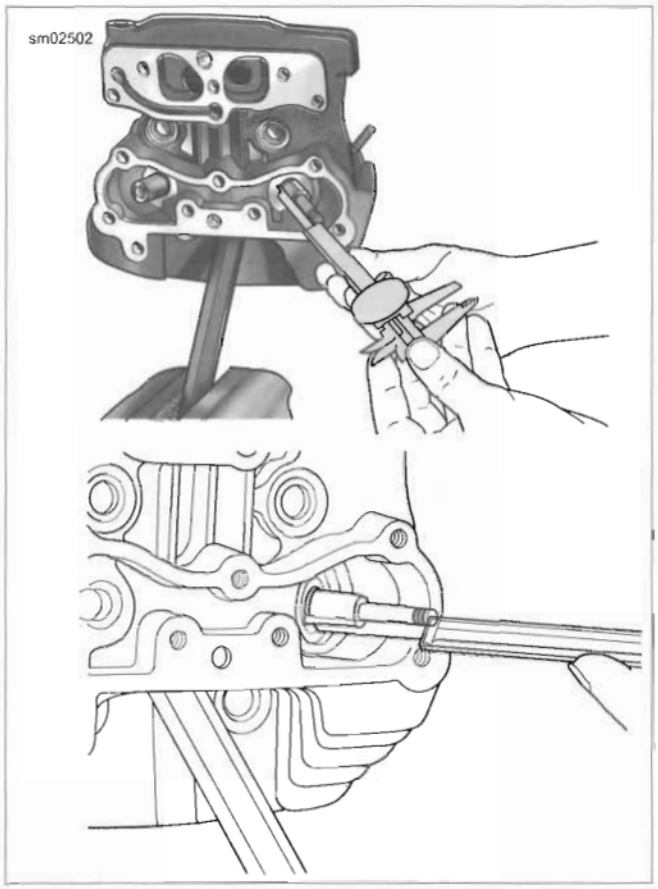

Figure 3-51. Checking Valve Stem Protrusion

NOTES

- *Always verify cutter blades and cutter pilot are clean before beginning the cutting process. The correct cleaning brush is supplied with the Neway tool set.*
- *Always verify the inside of the valve guide is clean by using VALVE GUIDE CLEANING BRUSH (Part No. HD-34751).*

10. See Figure 3-52. Obtain the NEWAY VALVE SEAT CUTTER SET (Part No. HD-35758-C). Choose the cutter pilot that fits properly into the valve guide hole. Securely seat the pilot by pushing down and turning using the installation tool supplied in the tool set.
11. Choose the proper 46 degree cutter (intake or exhaust) and gently slide the cutter onto the pilot. Do not drop the cutter onto the seat.
12. While applying a constant and consistent pressure, remove only enough metal to provide a uniform finish and to remove pitting.

NOTES

- *If the width of the clean-up cut is greater on one side of the seat than the other, the guide may need to be replaced due to improper installation.*
- *If a groove cut completely around the seat is apparent, slightly stagger the blades of the cutter.*

13. Measure the 46 degree cut at the outermost edge at the widest point of the circle to determine what cut will be made next.
    a. If the outer diameter is too large, use the 31 degree cutter to lower the valve seat.
    b. If the outer diameter is too small, use the 46 degree cutter to widen the valve seat or move it away from the port.

NOTES

- *Because the OD measurement of the valve seat is used as a reference point it will usually be necessary to use the 31 degree cutter following the initial 46 degree cut.*
- *Always highlight the valve seat with the permanent marker in order to better view the location of the 46 degree valve seat.*

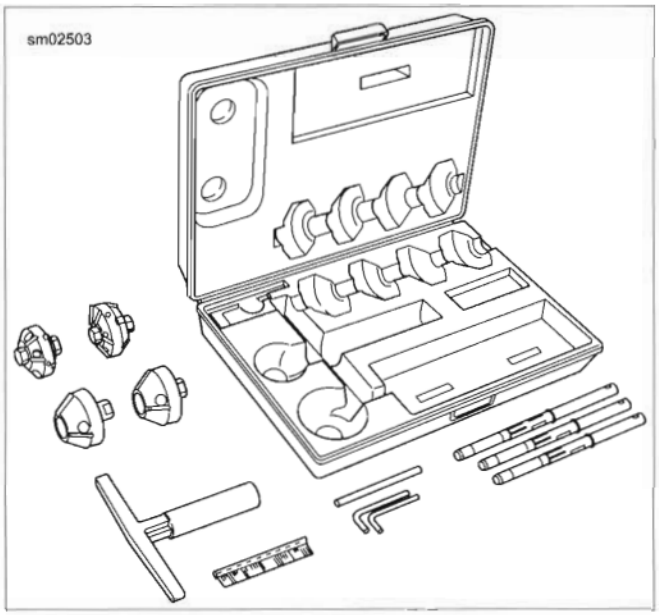

Figure 3-52. Neway Valve Seat Cutter Set

14. If the location of the valve seat is not correct, repeat steps 10 through 13.
15. When a complete clean-up of the 46 degree angle is accomplished and the width is at least 0.062 in. (1.575 mm), proceed to the next step.
16. Select the proper 60 degree cutter and gently slide the cutter down the cutter pilot to the valve seat.
17. Remove just enough material to provide an even valve seat width of 0.040-0.062 in. (1.016-1.575 mm).
18. Remove cutter and cutter pilot.
19. Insert valve into the cylinder head. Use thumb pressure against valve to hold it closed.
20. Completely fill the port with solvent to verify proper seal between valve and valve seat.

NOTE

Hold pressure against the valve for a minimum of 10 seconds. If any leakage occurs, examine the valve and valve seat for irregularities or defects. If necessary repeat the above valve grinding or valve seat cutting process.

21. Repeat the process on any valve seat that needs service.
22. Clean valves, cylinder head and valve seats in solvent. Follow up with a thorough wash in hot soapy water.

⚠WARNING

Compressed air can pierce the skin and flying debris from compressed air could cause serious eye injury. Wear safety glasses when working with compressed air. Never use your hand to check for air leaks or to determine air flow rates. (00061a)

23. Dry parts with low pressure compressed air.

ASSEMBLY

PART NUMBER	TOOL NAME
HD-34736-B	VALVE SPRING COMPRESSOR
HD-34751	VALVE GUIDE CLEANING BRUSH
HD-39786	CYLINDER HEAD HOLDING FIXTURE

1. Secure cylinder head for service.
    a. Thread 12 mm end of CYLINDER HEAD HOLDING FIXTURE (Part No. HD-39786) into cylinder head spark plug hole.
    b. Clamp tool in vise at a 45 degree angle or one that offers a comfortable working position.

NOTE

At the time of disassembly, all parts should have been marked or tagged so that they are installed on the same valve (and in the same head).

2. Run the VALVE GUIDE CLEANING BRUSH (Part No. HD-34751) through the valve guide bore to verify cleanliness.
3. Apply a liberal amount of SCREAMIN' EAGLE ASSEMBLY LUBE to valve stem.
4. Install the valve into the cylinder head.
5. To distribute the assembly lube evenly around the valve stem and guide, hand spin the valve as it is installed. Work the valve back and forth in the bore to verify that it slides smoothly and seats properly.
6. Remove the valve and apply a second coat of SCREAMIN' EAGLE ASSEMBLY LUBE to the valve stem. Install the valve.

NOTICE

Failure to install plastic capsule can cause the valve stem seal to catch the edge of the valve stem keeper groove. The resulting damage can cause leakage around the valve stem, excessive oil consumption and valve sticking. (00535b)

7. See Figure 3-53. Hold valve against the valve seat. Slide plastic capsule over valve stem tip and keeper groove.
8. Apply a very thin film of SCREAMIN' EAGLE ASSEMBLY LUBE to capsule.
9. See Figure 3-54. Slide **new** valve stem seal/spring seat over capsule and down valve stem until seated against

cylinder head casting. Remove capsule from valve stem tip.

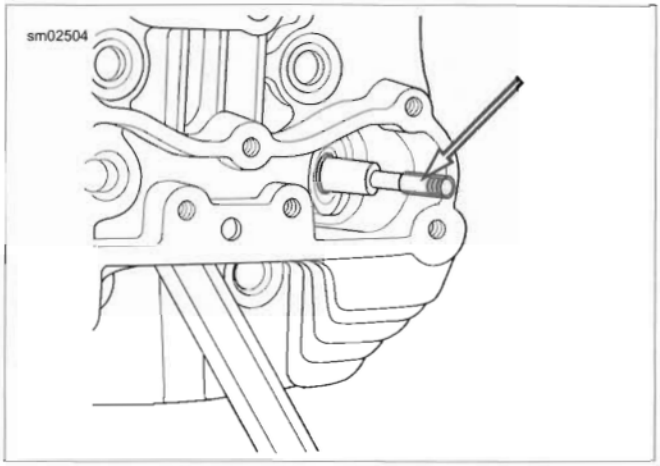

Figure 3-53. Plastic Capsule



Figure 3-54. Valve Stem Seal/Spring Seat Assembly

10. See Figure 3-55. Apply a liberal amount of SCREAMIN' EAGLE ASSEMBLY LUBE to valve stem tip and keeper groove (1).
11. With the smaller diameter coils topside, install the valve spring (3). Place the spring retainer (2) on top of the valve spring.
12. Install keepers:
    a. Place VALVE SPRING COMPRESSOR (Part No. HD-34736-B) over cylinder head so that the blunt end is centered on the valve head and adapter at end of forcing screw is seated on the valve spring retainer.
    b. Rotate forcing screw to compress valve spring.
    c. With the tapered side down, fit the keepers into the valve stem groove. For best results, apply a dab of grease to the inboard side of the keepers before installation and use a magnetic rod for easy placement.
    d. Arrange tapered keepers so that the gaps are evenly spaced and release valve spring compression.
13. Tap the end of the valve stem once or twice with a soft mallet to be sure that tapered keepers are tightly seated.
14. Install the other valve and components.
15. Release the cylinder head holding fixture from the vise. Remove fixture tool from spark plug hole.
16. Cover the cylinder head to protect it from dust and dirt until time of installation.

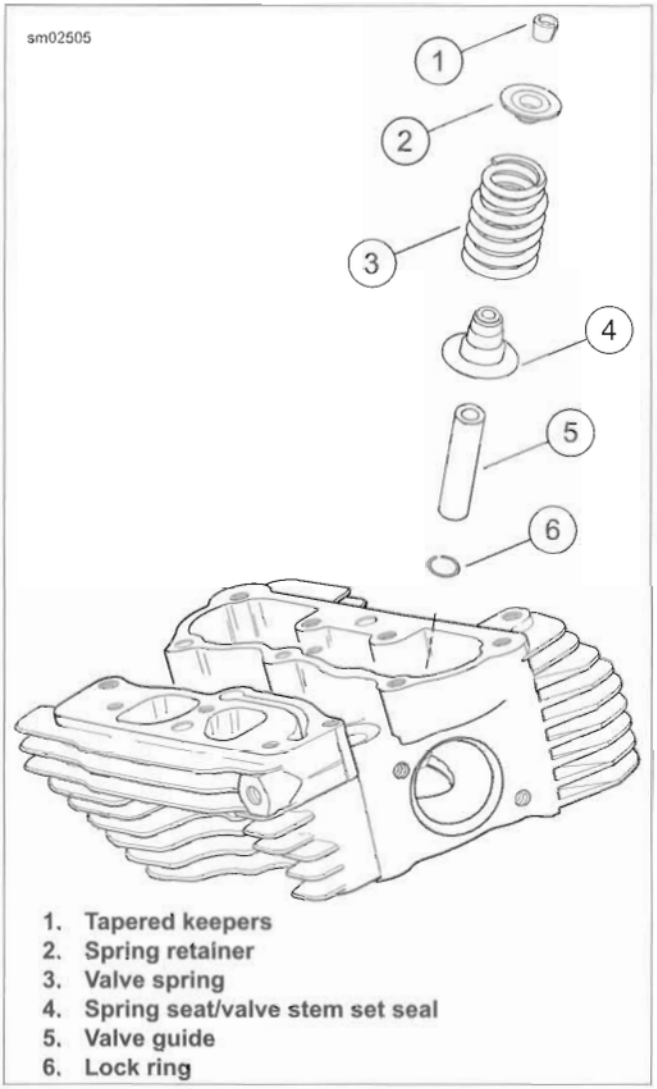

1. **Tapered keepers**
2. **Spring retainer**
3. **Valve spring**
4. **Spring seat/valve stem set seal**
5. **Valve guide**
6. **Lock ring**

Figure 3-55. Valve Assembly

CLEANING

1. See Figure 3-56. Scrape any remaining cylinder head gasket material from the gasket surface at the top of the cylinder (3).

⚠WARNING

Compressed air can pierce the skin and flying debris from compressed air could cause serious eye injury. Wear safety glasses when working with compressed air. Never use your hand to check for air leaks or to determine air flow rates. (00061a)

2. Clean cylinder in a non-volatile cleaning solution or solvent. Dry parts with low pressure compressed air. Verify that oil passageways are clean and open.
3. Inspect the cylinder bore for obvious defects or damage in the ring travel area. Replace cylinders that are severely scored, scuffed, scratched, burnt or gouged.
4. Use a file to carefully remove any nicks or burrs from the machined surfaces of the cylinder.

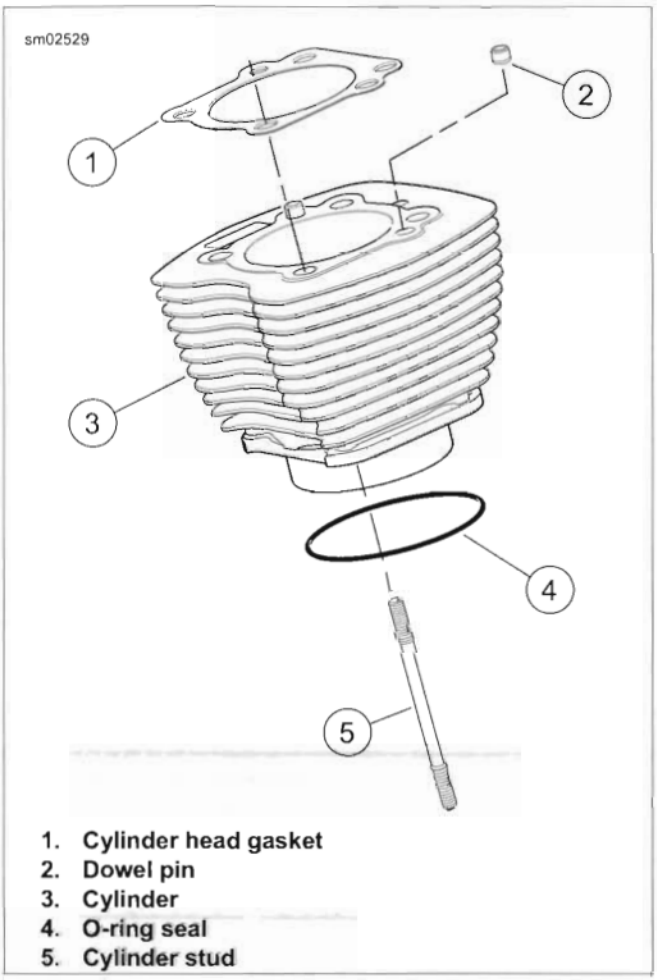

1. **Cylinder head gasket**
2. **Dowel pin**
3. **Cylinder**
4. **O-ring seal**
5. **Cylinder stud**

Figure 3-56. Cylinder Assembly

INSPECTION

PART NUMBER	TOOL NAME
HD-42324-A	CYLINDER TORQUE PLATES
TA360	SNAP-ON TORQUE ANGLE GAUGE

FASTENER	TORQUE VALUE	
Cylinder torque plate bolts, 1st torque	120-144 **in-lbs**	13.6-16.3 Nm
Cylinder torque plate bolts, 2nd torque	15-17 ft-lbs	20.3-23.0 Nm
Cylinder torque plate bolts, final torque	90 degrees	90 degrees

1. Using dye penetrant, inspect the cylinder for cracks. If no cracks are found, thoroughly wash cylinder to remove traces of dye.
2. See Figure 3-57. Check the machined surfaces for flatness using a feeler gauge and CYLINDER TORQUE PLATES (Part No. HD-42324-A):
   a. Lay gasket side of the upper torque plate (3) flat against the head gasket surface of the cylinder.
   b. As a preliminary check, see if the plate rocks from side to side. A cylinder on which the plate rocks is immediately suspect.
   c. Insert a feeler gauge between the plate and cylinder at various locations.
   d. The head gasket surface must be flat within 0.006 in. (0.15 mm).
   e. Lay the seal side of the lower torque plate (2) flat against the O-ring seal surface and check flatness using a feeler gauge.
   f. The O-ring seal surface must be flat within 0.004 in. (0.102 mm).
   g. Replace the cylinder (and piston) if either surface exceeds specification.

NOTE

Failure to use cylinder torque plates can produce measurements that vary by as much as 0.001 in. (0.025 mm). This may result in the use of parts that are unsuitable for service.

3. Install CYLINDER TORQUE PLATES (Part No. HD-42324-A):
   a. Remove O-ring seal from cylinder sleeve, if installed.
   b. See Figure 3-58. Clamp the stepped side of the lower plate in a vise with soft jaws.
   c. Lightly oil threads and shoulders of four bolts (1) with clean engine oil and slide through holes of lower plate (2).
   d. Slide cylinder onto bolts with the indent in the cooling fins facing upward.
   e. Place a used head gasket on cylinder and install upper plate with blind holes aligned with dowel pins in cylinder. Secure with bolts (1).
   f. See Figure 3-59. Tighten the bolts to 120-144 **in-lbs** (13.6-16.3 Nm) in the sequence shown.
   g. Following the same sequence, tighten each bolt to 15-17 ft-lbs (20.3-23.0 Nm).
   h. Final-tighten each bolt an additional 90 degrees (90 degrees) in the same sequence.

NOTE

For best results use SNAP-ON TORQUE ANGLE GAUGE (Part No. TA360). If the tool is not available, mark a straight line on each bolt head continuing the line onto the lower plate.

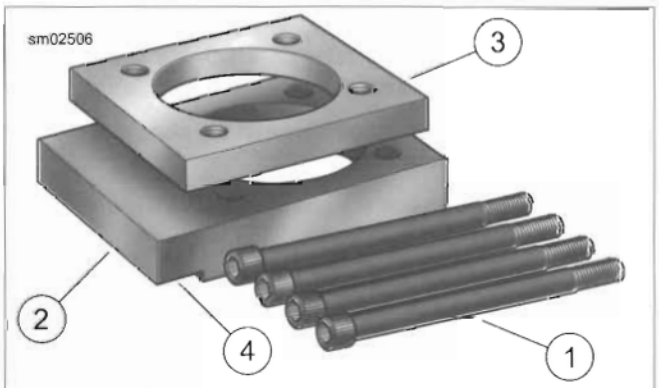

1. **Bolts**
2. **Lower plate**
3. **Upper plate**
4. **Vise grip step**

Figure 3-57. Cylinder Torque Plates

NOTE

Maximum cylinder wear occurs at the top of top ring travel. Minimum wear occurs below ring travel. Always take measurements in both areas.

4. See Figure 3-60. Using an inside micrometer or dial bore gauge, check cylinder bore for out-of-round and taper:
   a. At the top of the piston ring travel zone, measure the cylinder diameter at two locations; parallel and perpendicular to the crankshaft. Record the readings.
   b. Repeat the two measurements at the center of the piston ring travel zone and again at the bottom of the bore at a point below the piston ring travel zone.
   c. See 3.3 SERVICE WEAR LIMITS. If the out-of-round or taper measurements are not within specification, the cylinder must be rebored and/or honed to accept the next standard oversize piston. See 3.21 CYLINDER, Boring and Honing Cylinder.
   d. If cylinders are not scuffed or scored and are not worn beyond the service limits, see 3.21 CYLINDER, Deglazing Cylinder.

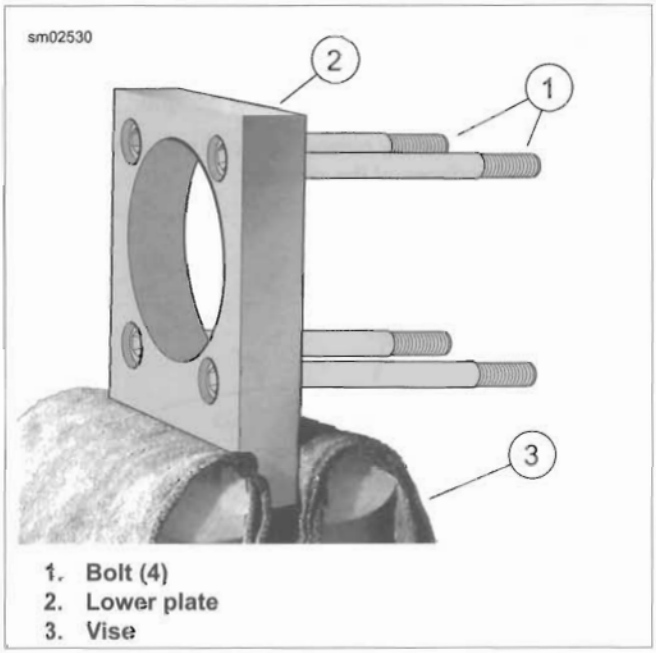

1. **Bolt (4)**
2. **Lower plate**
3. **Vise**

Figure 3-58. Attaching Cylinder Torque Plates

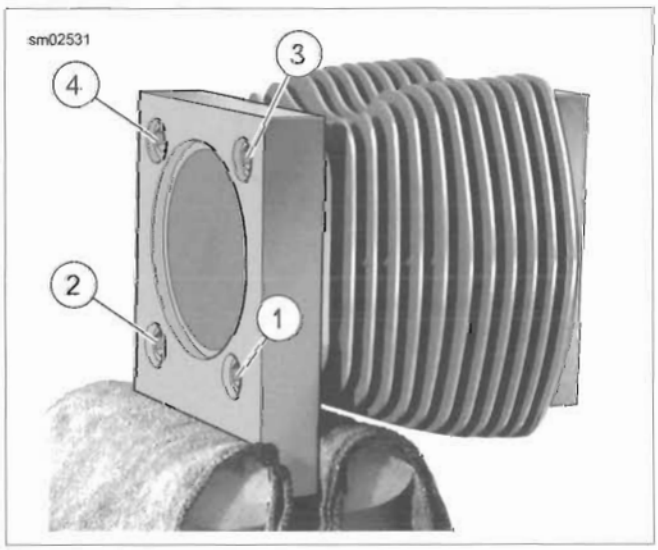

Figure 3-59. Cylinder Torque Plate Bolt Sequence

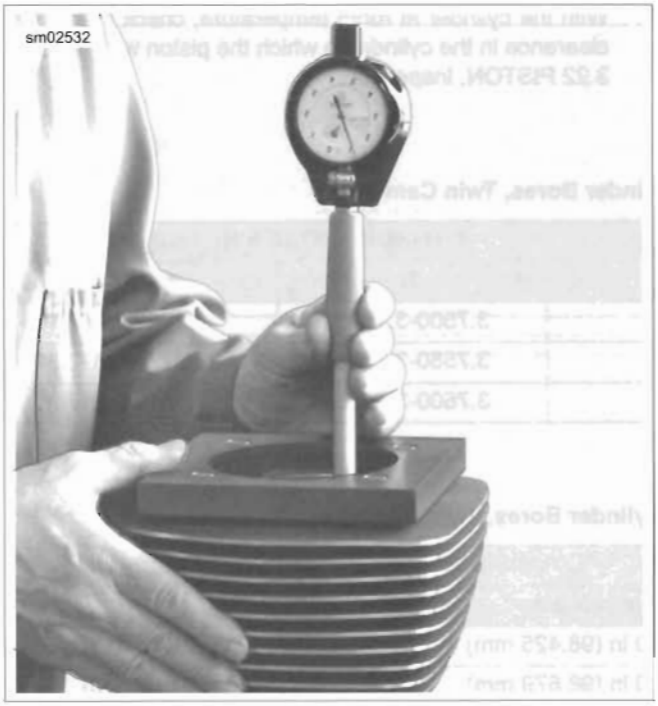

Figure 3-60. Measure for Out-of-Round and Taper

DEGLAZING CYLINDER

NOTE

Deglazing removes wear patterns, minor scuff marks and scratches without enlarging the bore diameter.

1. Lightly swab the cylinder bore with a cloth dipped in clean engine oil.
2. Obtain a 240 grit flexible ball-type deglazing tool with a bristle tip or finishing stone arrangement able to produce a 60 degree crosshatch pattern.
3. Install the deglazing tool in a slow-speed drill. The speed at which the tool rotates determines the speed at which it must be stroked up and down the bore to produce the desired crosshatch pattern.
4. Starting at the bottom of the cylinder, move the deglazing tool up and down the entire length of the cylinder bore for 10 to 12 complete strokes.
5. Stop to examine the cylinder bore and/or take measurements. A precise 60 degree crosshatch pattern in the piston travel area is the most important.

NOTICE

The angular crosshatch pattern ensures an even flow of oil onto the cylinder walls and promotes longer cylinder, piston and ring life. An incorrect cross hatch pattern will result in insufficient oil retention and possible piston seizure and/or high oil consumption. (00536c)

NOTICE

Failure to remove all abrasive particles may result in premature cylinder, piston and ring wear and engine failure. (00537c)

6. Thoroughly wash the cylinder bore with liquid dishwashing soap and hot water to remove all abrasive particles and residual grit. Continue cleaning until a clean cloth shows no evidence of dirt or debris.
7. Hot rinse the cylinder and dry with moisture free compressed air. Immediately apply a thin film of clean engine oil to a clean white paper towel and thoroughly wipe the inside of the cylinder to prevent the cylinder bore from rusting.

NOTE

After wiping the cylinder with a clean, oiled paper towel, the towel will be dark with contamination. Repeat this process using a ***new*** *lightly oiled paper towel each time until the towel remains white. The cylinder is now clean.*

8. With the cylinder at room temperature, check the piston clearance in the cylinder in which the piston will run. See 3.22 PISTON, Inspection.

BORING AND HONING CYLINDER

1. Bore cylinder with gaskets and torque plates attached. Bore the cylinder to 0.003 in (0.08 mm) under the desired finished size. Refer to Table 3-38 or Table 3-39.

NOTICE

An incorrect crosshatch pattern or too fine a hone will result in insufficient oil retention and possible piston seizure and/or high oil consumption. (00538c)

2. Honing the cylinder:
   a. Hone the cylinder to its finished size using a 280 grit rigid hone followed by a 240 grit flexible ball hone.
   b. Honing must be done with the torque plates attached.
   c. All honing must be done from the bottom (crankcase) end of the cylinder. Work for a 60 degree crosshatch pattern.
3. Stop frequently to examine the cylinder bore and/or take measurements. Remember, a precise 60 degree crosshatch pattern in the piston travel area is important.

NOTICE

Failure to remove all abrasive particles may result in premature cylinder, piston and ring wear and engine failure. (00537c)

NOTE

Example: A 0.005 in (0.13 mm) oversize piston for a Twin Cam 96 will have the proper running clearance with a cylinder bore size of 3.7550-3.7555 in (95.377-95.390 mm).

4. Thoroughly wash the cylinder bore with liquid dishwashing soap and hot water to remove all abrasive particles and residual grit. Continue cleaning until a clean cloth shows no evidence of dirt or debris.
5. Hot rinse the cylinder and dry with moisture free compressed air. Immediately apply a thin film of clean engine oil to a clean white paper towel and thoroughly wipe the inside of the cylinder to prevent the cylinder bore from rusting.

NOTE

After wiping the cylinder with a clean, oiled paper towel, the towel will be dark with contamination. Repeat this process using a ***new*** *lightly oiled paper towel each time until the towel remains white. The cylinder is now clean.*

6. With the cylinder at room temperature, check the piston clearance in the cylinder in which the piston will run. See 3.22 PISTON, Inspection.

Table 3-38. Oversize Pistons/Cylinder Bores, Twin Cam 96

PISTON			CYLINDER BORE FINISHED SIZE	
SIZE	IN	MM	IN	MM
Standard	N/A	N/A	3.7500-3.7505	95.250-95.263
Oversize	0.005	0.13	3.7550-3.7555	95.377-95.390
	0.010	0.25	3.7600-3.7605	95.504-95.517

Table 3-39. Oversize Pistons and Cylinder Bores, Twin Cam 103

PISTON		CYLINDER BORE FINISHED SIZE	
TYPE	SIZE	MINIMUM	MAXIMUM
Standard	STD	3.8750 in (98.425 mm)	3.8755 in (98.438 mm)
Oversize	0.010 in (0.25 mm)	3.8850 in (98.679 mm)	3.8855 in (98.692 mm)

DISASSEMBLY

PART NUMBER	TOOL NAME
SNAP-ON PRS8	PISTON RING EXPANDER

Piston Rings

⚠WARNING

Wear safety glasses or goggles when removing or installing compression rings. Compression rings can slip from the pliers and could be propelled with enough force to cause serious eye injury. (00469c)

1. See Figure 3-61. Carefully remove top (7) and second (6) compression rings using the proper PISTON RING EXPANDER (Part No. Snap-on PRS8).
2. Using your fingers, remove top and bottom oil rails (4) from the third ring groove. Remove the oil rail expansion ring (5).
3. Discard the piston rings.

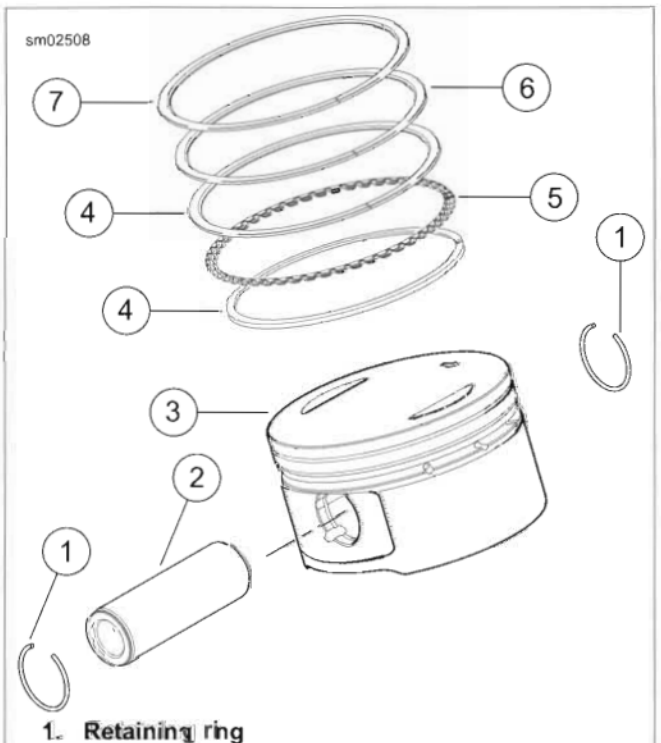

1. Retaining ring
2. Piston pin
3. Piston
4. Oil rail
5. Expansion ring
6. Second compression ring
7. Top compression ring

Figure 3-61. Piston Assembly

CLEANING

1. Remove all combustion deposits by soaking the pistons in hot water with dishwashing liquid or a cleaner specifically designed to remove carbon and will not corrode aluminum. Follow the manufacturer's instructions when using these cleaners.

⚠WARNING

Compressed air can pierce the skin and flying debris from compressed air could cause serious eye injury. Wear safety glasses when working with compressed air. Never use your hand to check for air leaks or to determine air flow rates. (00061a)

NOTE

Do not sand blast or glass bead blast pistons. Bead blasting rounds off ring lands. This will result in oil contamination leading to accelerated wear.

2. Thoroughly rinse the pistons. Dry parts with moisture free compressed air.
3. Clean the oil drain holes leading from the oil control ring groove to the underside of the piston crown. Run a small bristle brush through the passageways. Do not damage or enlarge the holes. Do not use a wire brush.
4. Verify that all other oil holes are clean and open.

NOTE

Avoid scratching the sides of the piston ring grooves.

5. Thoroughly clean the three piston ring grooves of all carbon deposits. A portion of a compression ring properly ground to a sharp chisel-like edge works well for this purpose.
6. Using dye penetrant, inspect the piston for surface cracks. Particularly examine the area around the pin bores, ring lands and oil drain holes beneath the piston crown. If no cracks are found, thoroughly wash piston to remove traces of dye.

INSPECTION

1. See Figure 3-62. Check piston pin. Pin must slide without binding.
   a. Insert a lightly oiled good piston pin into the piston pin bore to feel for the proper interference fit. The pin should slide in and out without binding, but also without pivoting or rocking.
   b. Measure pin and pin bore diameters to determine running clearance. Replace piston and/or pin if clearance exceeds 0.0008 in (0.02 mm).

NOTE

Pistons with superficial wear marks, minor scratching or mild scoring are acceptable for use.

2. Carefully inspect the pistons for damage or excessive wear. Discard if any of the following conditions are found:
   a. Cracked, worn or bent ring lands.
   b. Cracks, gouges, deep scratches or heavy scoring.
   c. Evidence of burning, etching or melting.
   d. Marks or imprints caused by contact with valves.

3. Run your index finger around the edge of the piston crown to feel for dings, nicks or burrs. Lightly file the edge of the crown to remove any defects.

NOTE

Worn ring grooves result in high oil consumption and blow-by of exhaust gases. Blow-by of exhaust gases contaminate the engine oil supply with acids and leaves sludge in the crankcase. It also reduces engine efficiency by weakening the combustion seal necessary for efficient transfer of energy to the piston.

4. See Figure 3-63. Measure piston ring side clearance.
   a. Insert the edge of a **new** ring into the piston ring groove. Insert a feeler gauge between the upper surface of the ring and the ring land.
   b. Since the grooves wear unevenly, repeat this check at several locations around the piston groove circumference.
   c. Discard the piston if the side clearance of either compression ring exceeds 0.0045 in (0.11 mm).
   d. Discard the piston if the oil control ring side clearance exceeds 0.010 in (0.25 mm).

NOTES

- *Check the piston clearance in the cylinder in which the piston will run. The cylinder must be deglazed and have torque plates installed when measuring bore.*
- *This inspection is very heat-sensitive. Both the piston and cylinder must be at room temperature before proceeding. Do not check piston running clearance immediately after honing or deglazing cylinder. Even holding the piston for too long can cause measurements to vary by as much as 0.0002 in (0.0051 mm).*
- *See upper frame of Figure 3-64. Piston measurement is taken on the bare aluminum for greatest accuracy. The coating has an oval-shaped opening (1) on each side of the piston for proper micrometer placement.*
- *See lower frame of Figure 3-64. The oval openings are too small for a standard flat anvil micrometer which would result in measuring errors. Use a blade or ball anvil style micrometer to measure piston.*

5. See Figure 3-64. Measure running clearance of pistons as follows:
   a. Measure the piston skirt at the bare aluminum openings (1) in the coating. Transfer that measurement to dial bore gauge.
   b. Using a grease pencil, mark the top, middle and bottom of the piston ring travel zone in the cylinder bore. Measure at markings in cylinder parallel and perpendicular to crankshaft.
   c. Replace piston and/or cylinder if running clearance exceeds 0.003 in (0.076 mm).



Figure 3-62. Piston Pin Clearance



Figure 3-63. Measure Piston Ring Side Clearance



1. Bare aluminum opening
2. 4-5 in micrometer
3. Spherical ball anvil adapters

Figure 3-64. Measuring Running Clearance of Piston

ASSEMBLY

PART NUMBER	TOOL NAME
SNAP-ON PRS8	PISTON RING EXPANDER

Checking Piston Ring Gap

NOTES

- *Always use new piston rings. Piston rings take a definite set and must not be reused if the engine has been operated. Always deglaze (or hone) the cylinder before installing new rings.*
- *Insufficient ring gap may cause the ends to abut at operating temperatures. This will result in ring breakage, cylinder scuffing and/or piston seizure.*
- *Excessive ring gap results in high oil consumption and blow-by of exhaust gases. Blow-by contaminates the oil supply and leaves sludge in the crankcase. It also reduces engine efficiency by weakening the combustion seal necessary for efficient transfer of energy to the piston.*

1. See Figure 3-65. Check ring end gap of each ring before placing on the piston. Insert the new ring into the cylinder and square it in the bore using the top of the piston. Measure the ring end gap with a feeler gauge. Refer to Table 3-40.

⚠WARNING

Compressed air can pierce the skin and flying debris from compressed air could cause serious eye injury. Wear safety glasses when working with compressed air. Never use your hand to check for air leaks or to determine air flow rates. (00061a)

NOTE

Ring end gap dimensions also apply to oversize rings. Replace ring if end gap exceeds specification. If end gap is under specification, filing is permissible.

2. Use compressed air to remove any dirt or dust that may have settled in the oil drain holes and piston ring grooves.

Table 3-40. Piston Ring End Gap

PISTON		IN	MM
Twin Cam 103	Top compression	0.012-0.022	0.305-0.559
	2nd compression	0.015-0.025	0.381-0.635
	Oil control ring	0.010-0.050	0.254-1.270



Figure 3-65. Measuring Ring Gap

Installing Piston Rings

1. See Figure 3-66. Apply clean engine oil to three piston ring grooves.
2. Install expansion ring (4) into third ring groove.
3. Spiral bottom oil rail (5) into space below expansion ring (4). Position gap 90 degrees from the gap in the expansion ring.
4. Spiral top oil rail (3) into space above expansion ring (4). Position gap 180 degrees from the gap in the bottom oil rail.

⚠WARNING

Wear safety glasses or goggles when removing or installing compression rings. Compression rings can slip from the pliers and could be propelled with enough force to cause serious eye injury. (00469c)

NOTES

- *Use the proper piston ring spreader to prevent excessive ring twist and expansion. Over expansion may cause the ring to crack. Damaged or distorted rings result in blow-by of exhaust gases. This will result in increased oil consumption and lower service life on valves and other components.*
- *Installing the second compression ring upside down will cause oil to be scraped up into the combustion chamber. This will result in excessive oil consumption and lower service life on valves and other components.*

5. Using PISTON RING EXPANDER (Part No. Snap-on PRS8), carefully install the second compression ring. Make sure the dot (punch mark) near the ring gap faces the piston crown. Rotate the ring so the gap is 180 degrees from the gap in the oil expansion ring.
6. Install the top compression ring. Make sure the dot (punch mark) near the ring gap faces the piston crown. Rotate the ring so the gap is 180 degrees from the gap in the second compression ring.
7. Rotate the three piston rings using the palms of both hands. The rings must rotate freely without sticking.
8. See Figure 3-67. Verify the ring gaps are still properly staggered.

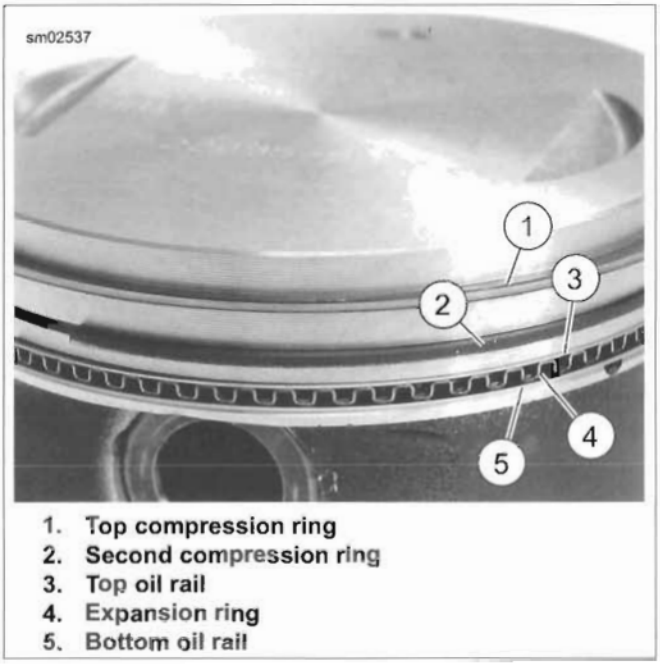

1. **Top compression ring**
2. **Second compression ring**
3. **Top oil rail**
4. **Expansion ring**
5. **Bottom oil rail**

Figure 3-66. Piston Rings

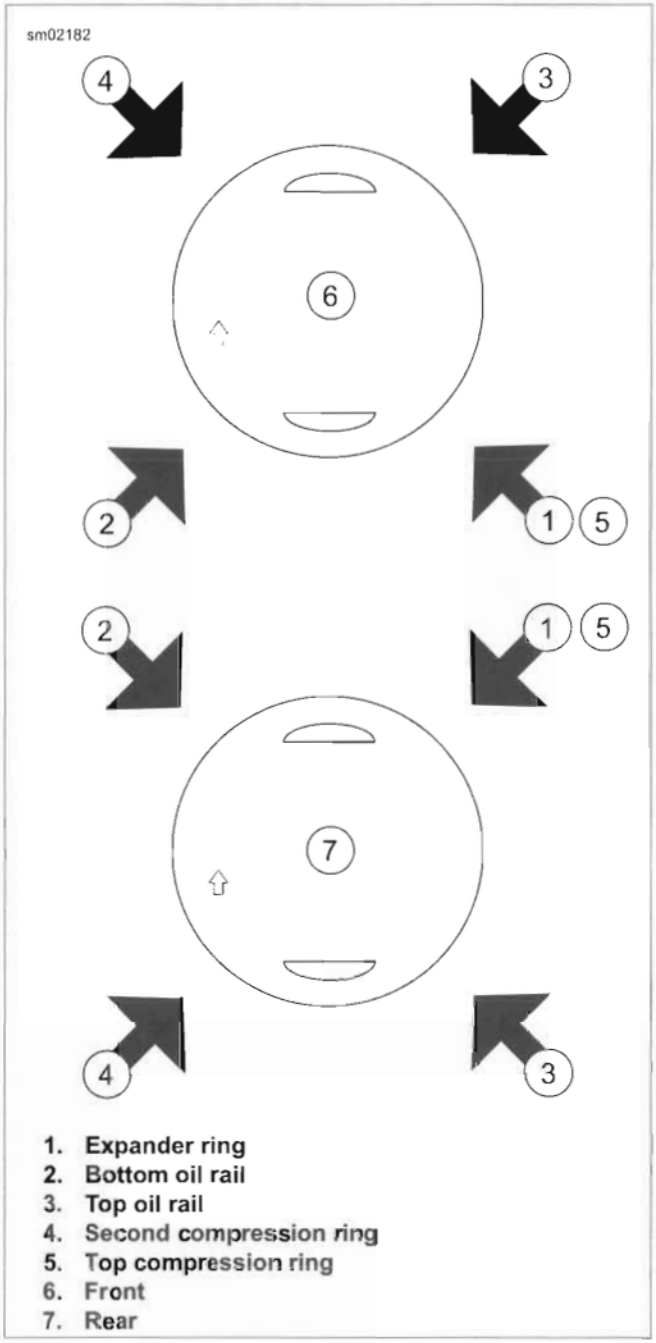

1. **Expander ring**
2. **Bottom oil rail**
3. **Top oil rail**
4. **Second compression ring**
5. **Top compression ring**
6. **Front**
7. **Rear**

Figure 3-67. Piston Ring Gap Alignment

GENERAL

NOTES

- *It is assumed that each step performed on one cylinder is automatically repeated on the other.*
- *Do not use 2006 and earlier connecting rods with 2007 and later pistons. 2007 and later pistons have a tapered wrist pin boss. The wrist pin portion of the 2007 and later connecting rod is tapered to match the boss on the piston.*

This section provides a sequential process for top end assembly after a complete disassembly. If only a partial disassembly was performed, start where necessary and continue to the end of the section.

PISTON

PART NUMBER	TOOL NAME
HD-42317-A	PISTON PIN RETAINING RING INSTALLER

1. Slide approximately 6.0 in. (152 mm) of plastic tubing, rubber hose or conduit over each cylinder stud, if removed. Use material with I.D. of 0.5 in. (12.7 mm) to protect cylinder studs and piston from damage.
2. Apply SCREAMIN' EAGLE ASSEMBLY LUBE to piston pin, piston bosses and upper connecting rod bore.
3. Remove water pipe insulation from connecting rod shank.
4. See Figure 3-68. Place piston over rod end so that the arrow stamped at the top of the piston points toward the front of the engine.
5. See Figure 3-69. Insert piston pin (1) through pin bore and upper connecting rod bore. Push pin until it contacts retaining ring installed in opposite pin boss. Verify that end gap (3) for retaining ring is 180 degrees from opening (2).
6. Place clean shop towels over the cylinder and lifter bores to prevent the piston pin retaining ring from falling into the crankcase. Verify that the retaining ring groove is clean and free of dirt and grime.



Figure 3-68. Piston Installation Arrow

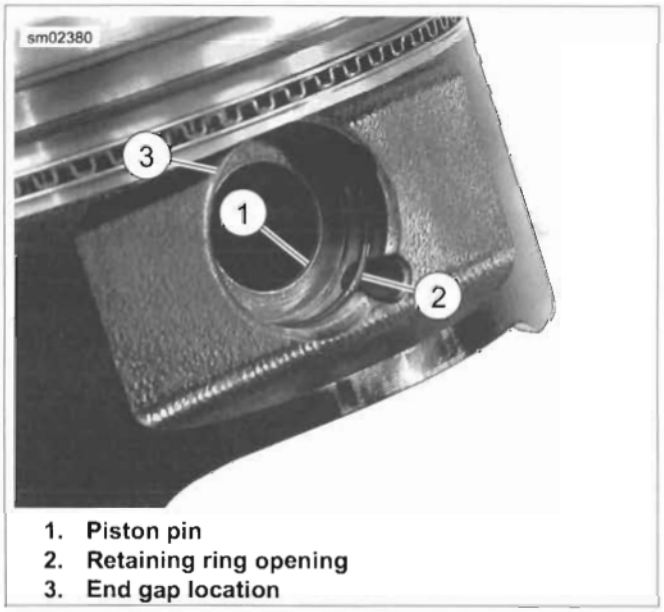

1. **Piston pin**
2. **Retaining ring opening**
3. **End gap location**

Figure 3-69. Pre-Installed Retaining Ring

NOTE

Do not reuse piston pin retaining rings. They could weaken during removal causing them to break or dislodge during engine operation. This condition will result in engine damage.

7. Install **new** piston pin retaining ring with the PISTON PIN RETAINING RING INSTALLER (Part No. HD-42317-A).
   a. See Figure 3-70. Slide retaining ring down nose of tool until it contacts claw. Lightly squeeze handles of tool to capture retaining ring in claw.
   b. Releasing pressure on handles, rotate retaining ring so that the end gap is centered at top of tool and then recapture in claw.
   c. Tilt the retaining ring forward until the end gap contacts nose of tool.
   d. See Figure 3-71. Insert the tool (1) into the piston pin bore until claw is aligned with slot (2) in piston.
   e. Firmly push the tool into the piston pin bore until it bottoms. Release handles and remove tool.
   f. Inspect the retaining ring to verify that it is fully seated in the groove.

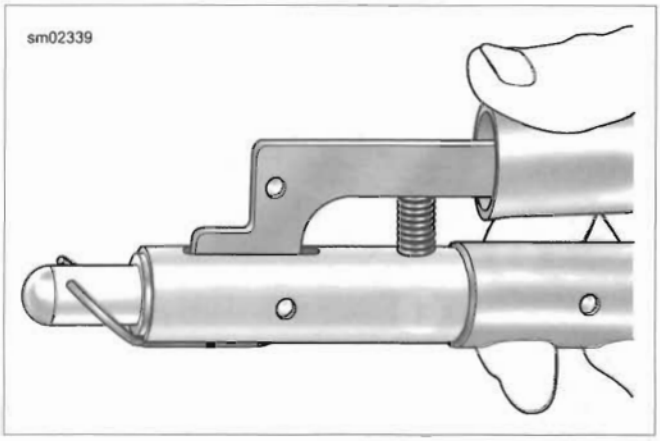

Figure 3-70. Aligning Retaining Ring

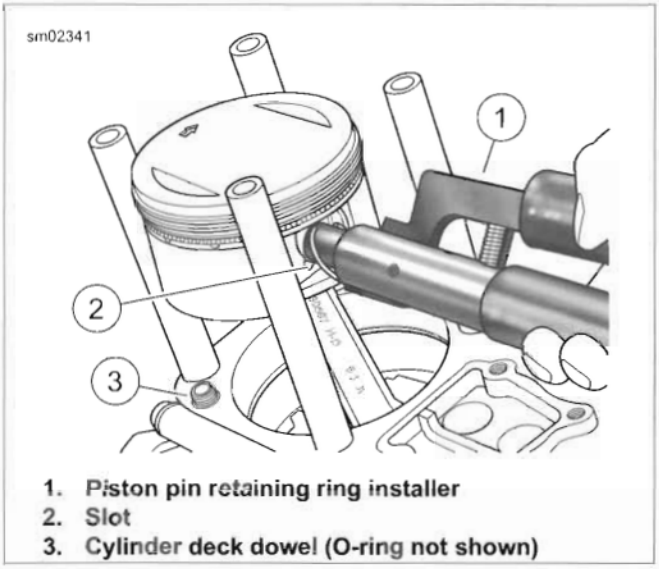

1. **Piston pin retaining ring installer**
2. **Slot**
3. **Cylinder deck dowel (O-ring not shown)**

Figure 3-71. Pin Retaining Ring Installation

CYLINDER

PART NUMBER	TOOL NAME
HD-42322	PISTON SUPPORT PLATE
HD-95952-1	THREADED CYLINDERS
HD-95952-33C	CONNECTING ROD CLAMPING TOOL
HD-96333-51F	PISTON RING COMPRESSOR

1. See Figure 3-71. Apply a very thin film of clean engine oil to **new** O-rings for both lower cylinder deck dowels. Install and verify that O-ring is properly seated in groove.
2. See Figure 3-72. Apply a very thin film of clean engine oil to **new** O-ring seal for the bottom of the cylinder liner. Install **new** O-ring seal.

NOTE

Excessive lubrication of cylinder sleeve O-ring seal will result in oil weepage between cylinder and crankcase as engine is run. This condition may be incorrectly diagnosed as an oil leak.

3. See Figure 3-73. Verify that the piston ring end gaps are staggered. Rotate each ring to position the gap 90 to 180 degrees from the gap in the ring above it. Locate the top piston ring (5) gap towards the intake port.
4. Apply clean engine oil to piston, piston rings and cylinder bore.
5. Remove protective covers from cylinder studs. Rotate engine until piston is at top dead center. If necessary, see 3.16 TOP END OVERHAUL: DISASSEMBLY, Rocker Arm Support Plate for different methods of engine rotation.
6. See Figure 3-74. Install the PISTON SUPPORT PLATE (Part No. HD-42322).
   a. Slide both adjustable knobs (2) on support plate (1) down away from forked end. Tighten knobs when contact is made with flats at end of slots.
   b. With the forked end of the tool pointing towards the center of the engine and the adjustable knobs facing downward, capture shank of connecting rod in fork. Lay tool on cylinder deck so that adjustable knobs contact wall of cylinder bore.
   c. Rotate engine until piston skirt is centered and firmly seated on top of support plate.
7. See Figure 3-75. Install cylinder using PISTON RING COMPRESSOR (Part No. HD-96333-51F).
   a. Fit tabs on pliers (1) into slots of ring compressor band (2). The arrow stamped on the band indicates the side that faces up. The word "bottom" refers to the piston bottom.
   b. Place band around piston. Press the lever on the right side of the pliers to open the jaws for band expansion.
   c. Orient tool so that the top of the band is positioned between the top compression ring and the piston crown.
   d. Tightly squeeze handles of tool to compress piston rings. The ratcheting action of the tool allows release of the handles after the rings are compressed.
   e. With the indent in the cooling fins facing the right side of the engine, gently slide cylinder over the cylinder studs and the piston crown resting it on the top of the ring compressor band.
   f. Place the palms of both hands at the top of the cylinder. Push down on the cylinder with a sharp, quick motion to pass the piston ring area.
   g. Rotate the engine slightly to raise piston off support plate. Remove pliers from band and then remove band from around shank of connecting rod. Remove piston support plate.
8. Remove shop towels from around the crankcase bore and keep out any dirt or debris.
9. Carefully set the cylinder over the two dowel pins in the cylinder deck. Push down on the cylinder until it is fully seated in the crankcase bore.
10. See Figure 3-76. Install THREADED CYLINDERS (Part No. HD-95952-1) from CONNECTING ROD CLAMPING TOOL (Part No. HD-95952-33C) onto cylinder studs with the knurled side down.

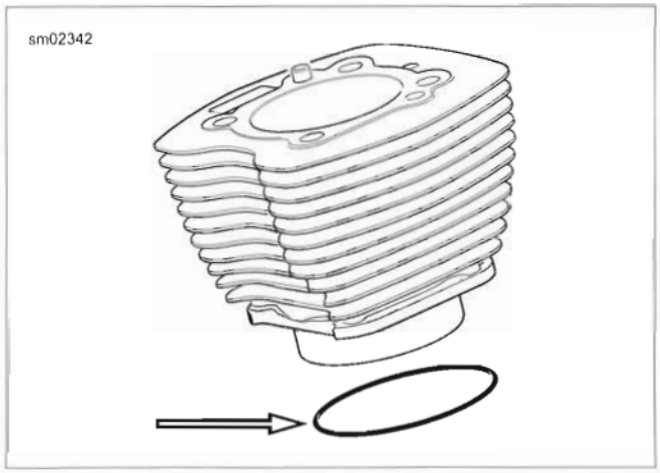

Figure 3-72. O-ring Seal For Cylinder

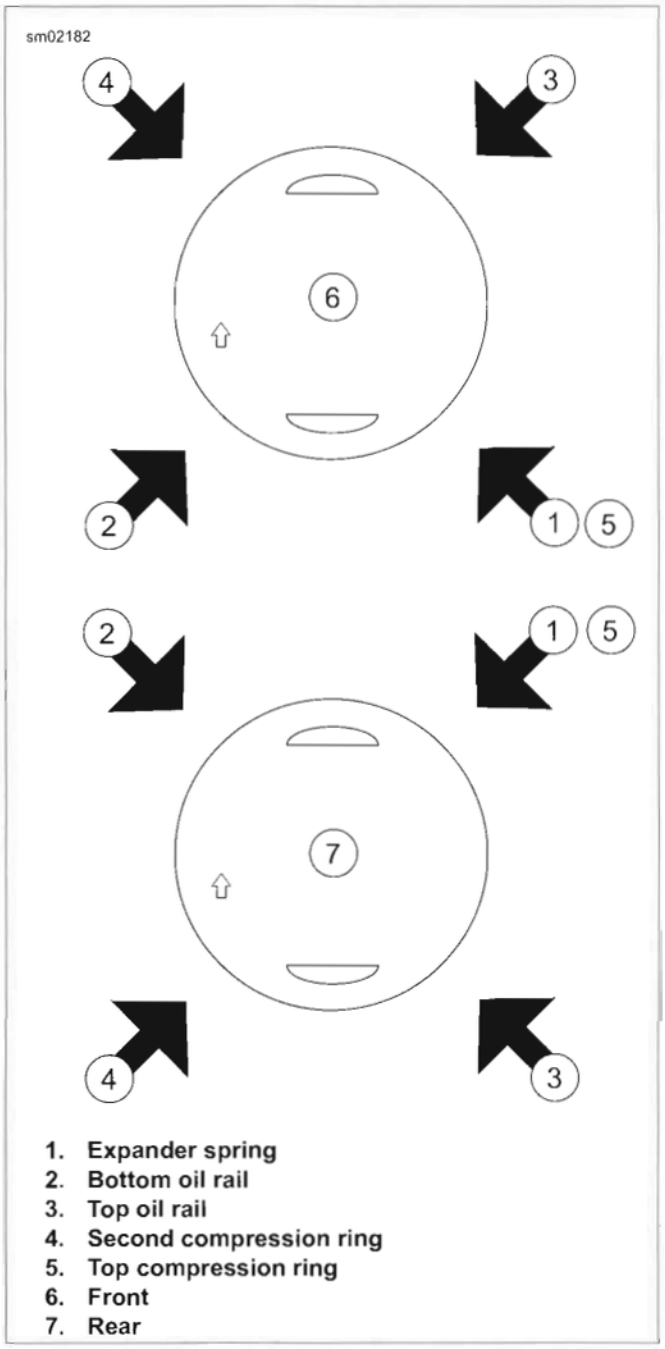

1. Expander spring
2. Bottom oil rail
3. Top oil rail
4. Second compression ring
5. Top compression ring
6. Front
7. Rear

Figure 3-73. Piston Ring Alignment

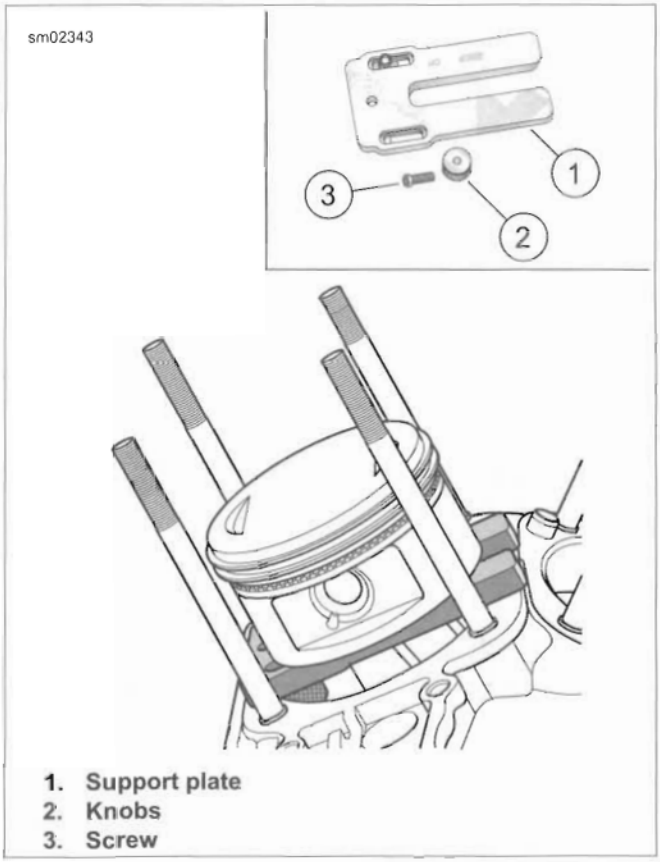

1. Support plate
2. Knobs
3. Screw

Figure 3-74. Piston Support Plate

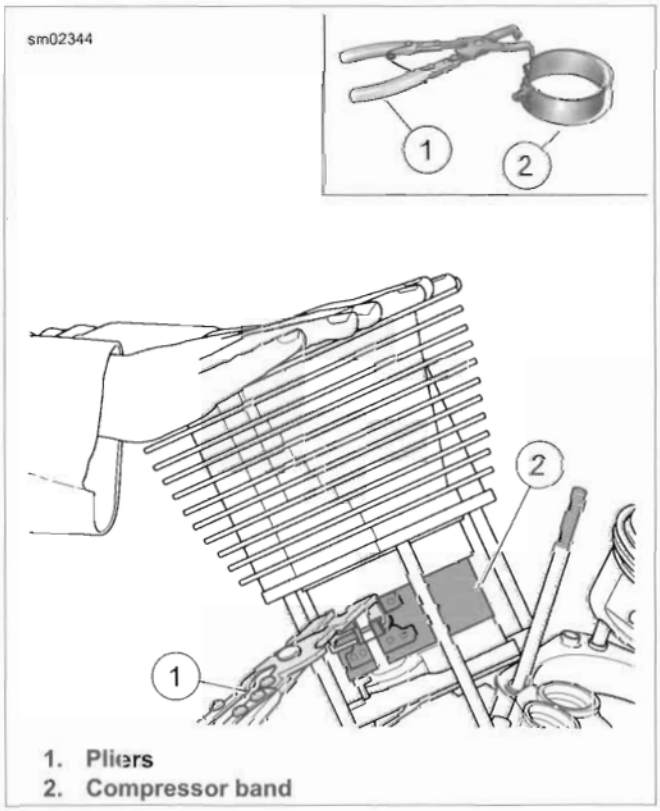

1. Pliers
2. Compressor band

Figure 3-75. Piston Ring Compressor

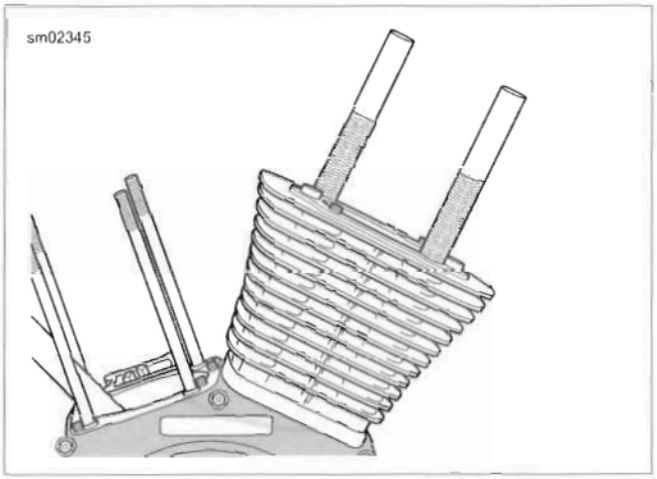

Figure 3-76. Install Threaded Cylinders to Studs

CYLINDER HEAD

PART NUMBER	TOOL NAME
TA360	SNAP-ON TORQUE ANGLE GAUGE

FASTENER	TORQUE VALUE	
Cylinder headbolts, 1st torque	120-144 in-lbs	13.6-16.3 Nm
Cylinder headbolts, 2nd torque	15-17 ft-lbs	20.3-23.0 Nm
Cylinder headbolts, final torque	90 degrees	90 degrees
Rocker housing bolts	120-168 in-lbs	13.6-19.0 Nm

NOTES

- *"Front" or "Rear" is cast into the top of the cylinder head to verify proper installation. The indent in the cooling fins always faces the right side of the engine.*
- *Lower the cylinder head at an angle that closely approximates the angle of the crankcase to avoid damage to machined surfaces or the dowel pins.*
- *Thoroughly clean and lubricate the threads of the cylinder headbolts before installation. Friction caused by dirt and grime results in a false torque indication.*

1. See Figure 3-77. With the part number facing up, place the head gasket over the two dowel pins in the upper flange of the cylinder.
2. Slide cylinder head squarely over the two cylinder flange dowel pins.
3. Lightly coat the threads and bottom face of the cylinder headbolts in clean engine oil. Wipe off any excess oil.
4. See Figure 3-78. Loosely install the cylinder headbolts. Place two short bolts on the left side of the engine and two long bolts on the right.

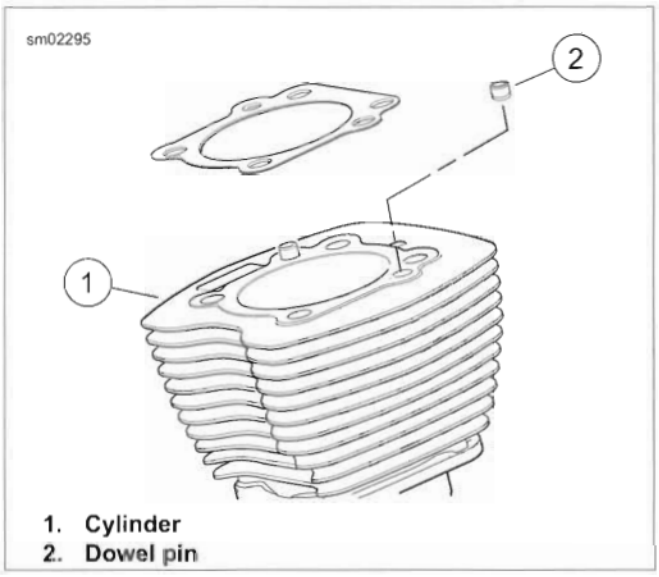

1. Cylinder
2. Dowel pin

Figure 3-77. Cylinder Dowel Pins

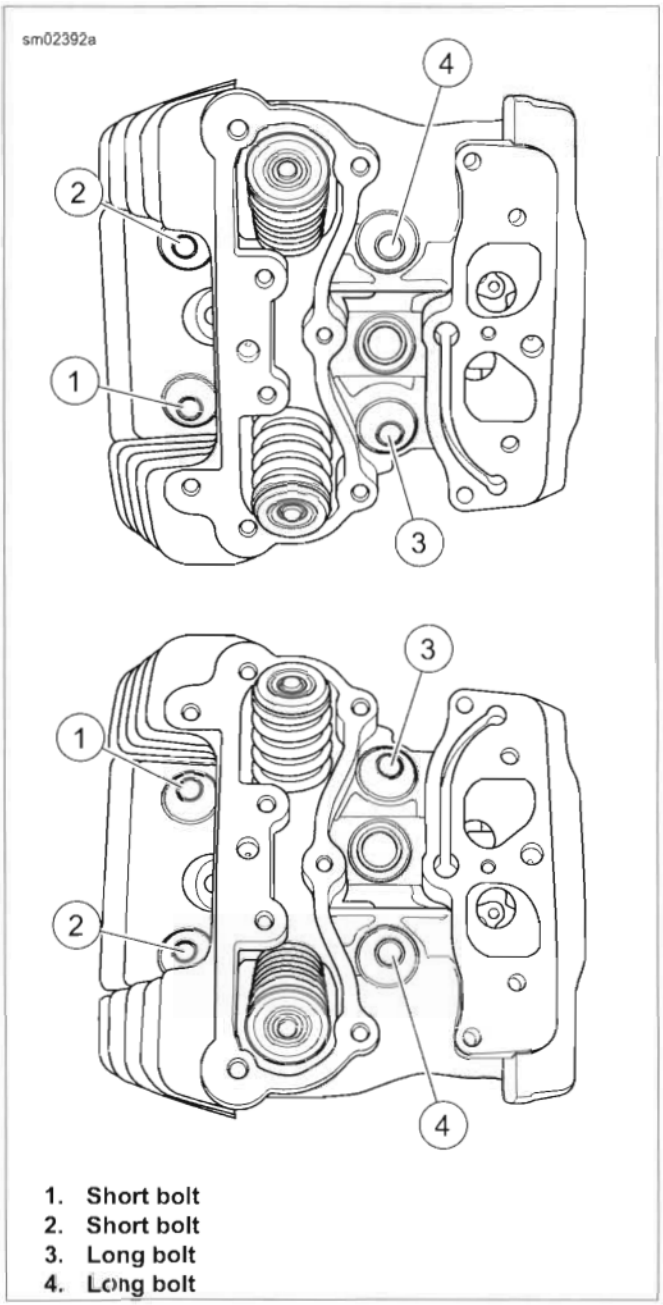

1. Short bolt
2. Short bolt
3. Long bolt
4. Long bolt

Figure 3-78. Cylinder Head Bolt Torque Sequence (Top: Front Cylinder Head, Bottom: Rear Cylinder Head)

NOTE

Improperly tightened cylinder headbolts may result in gasket leaks, stud failure or distortion of the cylinder and/or cylinder head.

5. Tighten the cylinder headbolts:
   a. See Figure 3-78. Following sequence shown, turn each cylinder headbolt until finger-tight.
   b. Following the same sequence, tighten the cylinder headbolts to 120-144 **in-lbs** (13.6-16.3 Nm).
   c. Continuing the same sequence, tighten each bolt to 15-17 ft-lbs (20.3-23.0 Nm).
6. See Figure 3-79. Final-tighten each bolt an additional 90 degrees (90 degrees) in the same sequence. For best

results, use SNAP-ON TORQUE ANGLE GAUGE (Part No. TA360).

a. If using a grease pencil, mark a straight line on the cylinder headbolt continuing the line over onto the cylinder head.

b. Use the marks as a guide to achieve the 90 degrees.

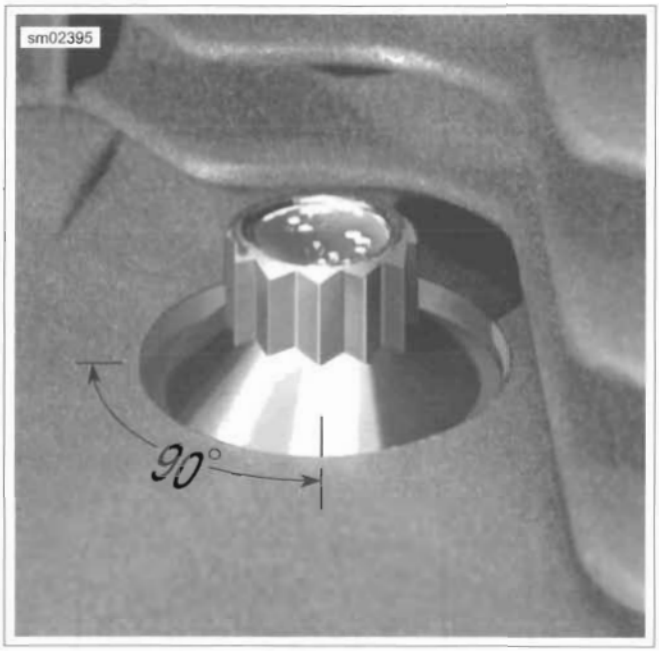

Figure 3-79. Final Tightening for Cylinder Head Bolts

NOTES

- *The rocker housing gasket can be installed upside down resulting in an open breather channel. This causes a major oil leak when the vehicle is started, possibly resulting in engine and/or property damage.*
- *On front cylinder head, install side of gasket marked "front" facing up. On rear cylinder head, install side of gasket marked "rear" facing up.*

7. See Figure 3-80. Install a **new** rocker housing gasket on the cylinder head. Verify that the rocker housing gasket covers the breather channel.

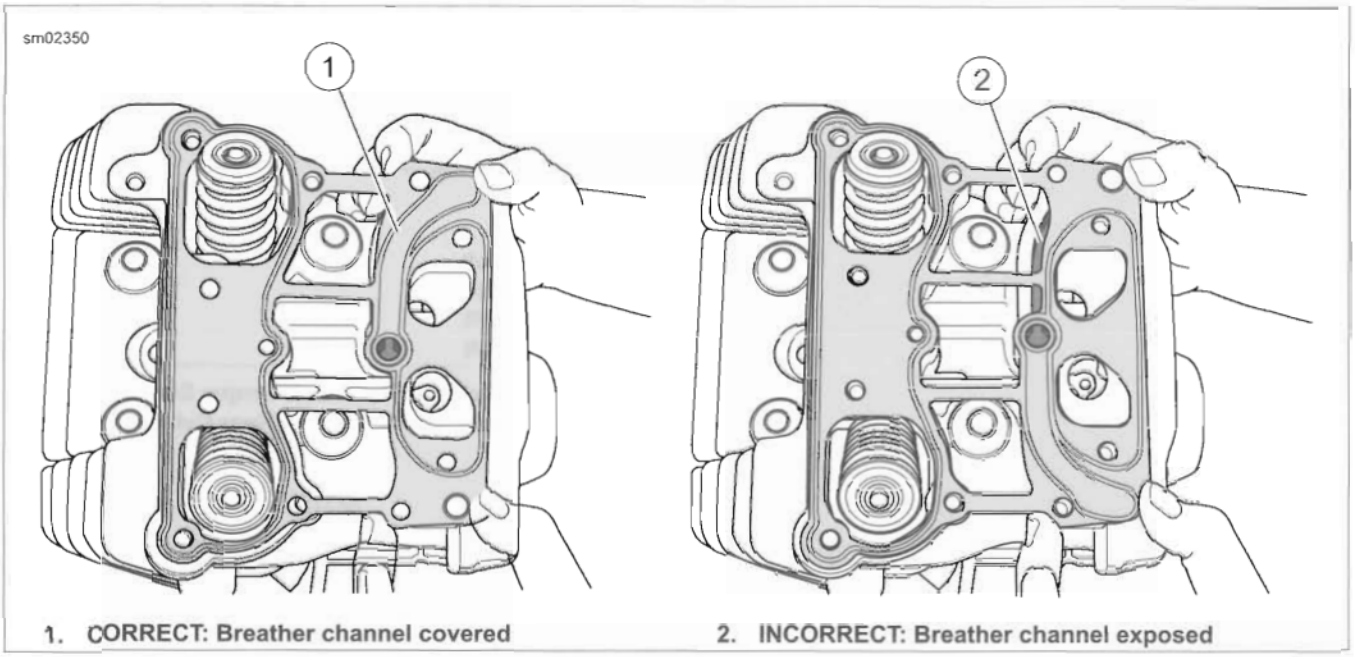

1. **CORRECT: Breather channel covered**
2. **INCORRECT: Breather channel exposed**

Figure 3-80. Install Rocker Housing Gasket (Rear Cylinder Shown)

8. See Figure 3-82. Install rocker housing.
   a. With the indent (1) facing forward, place the rocker housing into position aligning the holes in the housing with those in the gasket.
   b. See Figure 3-81. Apply a drop of LOCTITE 243 MEDIUM STRENGTH THREADLOCKER AND SEALANT (blue) to threads of six rocker housing bolts.
   c. Loosely install the rocker housing bolts.
   d. Place two long bolts on the left side of the engine and four intermediate bolts in the interior.
   e. Tighten the bolts in the sequence shown to 120-168 **in-lbs** (13.6-19.0 Nm).

NOTES

- *If the engine was left in the chassis for service, final tighten the rear left rocker housing bolt (rear cylinder) using a torque wrench with a 1/4 in. drive.*
- *Since many O-rings are similar in size and appearance, always use **new** O-rings, keeping them packaged until use to avoid confusion. **Use of the wrong O-ring will result in either oil leakage or low oil pressure.***

9. See Figure 3-82. Apply a very thin film of clean engine oil to **new** baffle hole O-ring (2). Install **new** O-ring in groove around breather baffle hole in rocker housing.

NOTE

Do not confuse breather baffle hole O-ring (Part No. 11270, large inner diameter) with the top pushrod O-ring (Part No. 11293, small inner diameter).

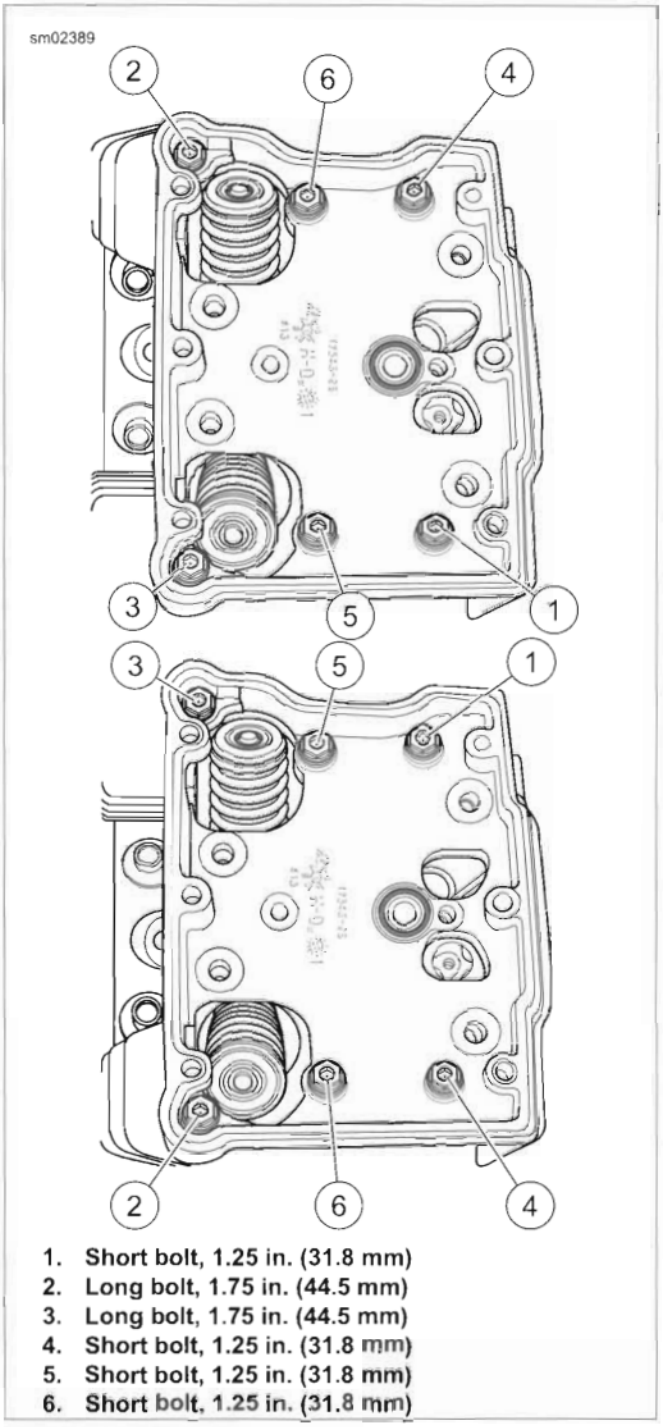

1. **Short bolt, 1.25 in. (31.8 mm)**
2. **Long bolt, 1.75 in. (44.5 mm)**
3. **Long bolt, 1.75 in. (44.5 mm)**
4. **Short bolt, 1.25 in. (31.8 mm)**
5. **Short bolt, 1.25 in. (31.8 mm)**
6. **Short bolt, 1.25 in. (31.8 mm)**

Figure 3-81. Rocker Housing Torque Sequence and Bolt Size

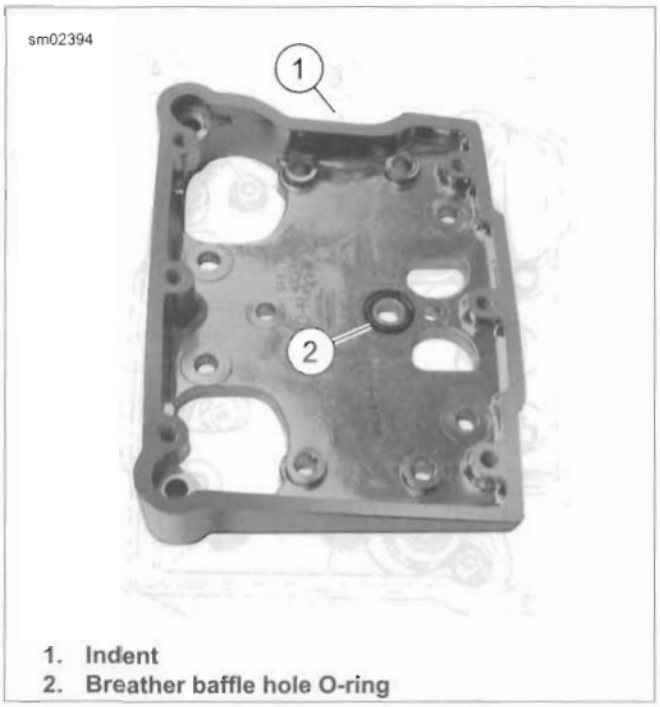

1. **Indent**
2. **Breather baffle hole O-ring**

Figure 3-82. Rocker Housing Alignment

PUSHRODS, LIFTERS AND COVERS

FASTENER	TORQUE VALUE	
Lifter cover screws	100-120 **in-lbs**	11.3-13.6 Nm

1. Remove any labels used on the hydraulic lifters. Apply a thin film of SCREAMIN' EAGLE ASSEMBLY LUBE to outer surface of each lifter. Pour a small amount onto each cam lobe.
2. Install lifters in the crankcase bores with the oil hole on the inboard side and the flats on the lifters facing forward and rearward. To avoid damage, do not drop lifters onto cam lobes.
3. See Figure 3-83. Place the anti-rotation pin (4) on the machined flat between the blocks cast into the crankcase.
4. Install **new** O-rings in the lifter cover bores and the cylinder head pushrod cover bores.

NOTE

During cover installation, verify that the anti-rotation pin (4) is held in place by the ribs (3) cast into the inboard side of the lifter cover. Movement or loss of the pin can result in lifter rotation causing engine damage.

5. Install the lifter cover (1) and **new** gasket (2). Install four socket head screws. Tighten the lifter cover screws to 100-120 **in-lbs** (11.3-13.6 Nm) in a crosswise pattern.
6. Install pushrod covers.
   a. Assemble pushrod covers with **new** O-rings.
   b. Hand compress the pushrod cover assembly and fit the pushrod cover into the lifter cover bore.
   c. Extending the assembly, fit the pushrod cover into the cylinder head bore.
   d. Do not install the spring cap retainers at this time.

NOTE

To install spring cap retainers, see 3.23 TOP END OVERHAUL: ASSEMBLY, Rocker Arm Support Plate.

7. Apply a small amount of SCREAMIN' EAGLE ASSEMBLY LUBE to the ends of each pushrod.
8. See Figure 3-84. Install the pushrods. If installing original parts, install them in their original locations and orientation. Always remove any tags that may have been used for identification.

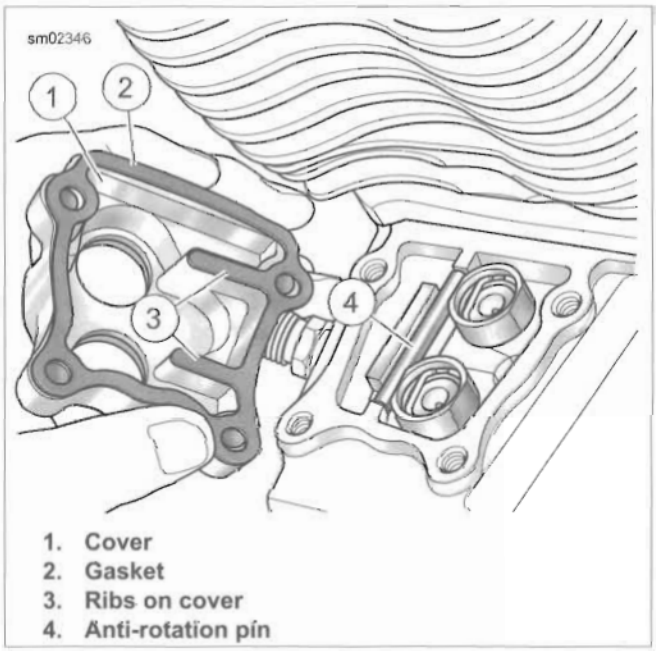

1. **Cover**
2. **Gasket**
3. **Ribs on cover**
4. **Anti-rotation pin**

Figure 3-83. Installing Lifters

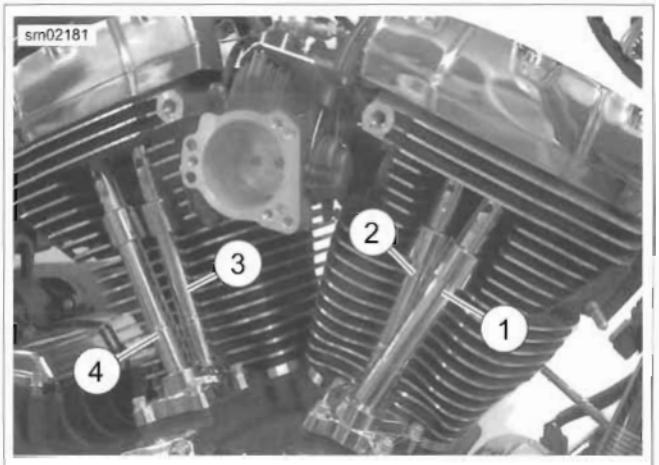

1. **Front cylinder exhaust pushrod**
2. **Front cylinder intake pushrod**
3. **Rear cylinder intake pushrod**
4. **Rear cylinder exhaust pushrod**

Figure 3-84. Pushrod Locations

ROCKER ARM SUPPORT PLATE

PART NUMBER	TOOL NAME
FRDH161	SNAP-ON "DOG BONE" TORQUE ADAPTER

FASTENER	TORQUE VALUE	
Rocker arm support plate bolts	18-22 ft-lbs	24.4-29.8 Nm

NOTE

Installing the rocker arms and rotating the crankshaft with the valve train loaded can result in bent pushrods, damaged bushings or a warped support plate.

1. Rotate the crankshaft to position both lifters of the cylinder being serviced on the base circle (or lowest position) of the cam lobe.
2. See Figure 3-85. Place the rocker arm support plate assembly into the rocker housing and loosely install four rocker arm support plate bolts with flat washers.

NOTE

Engine in chassis: *Final tighten rocker arm support plate bolt on rear left side of rear cylinder using 3/8 in. drive torque wrench with 1/2 in. flank drive SNAP-ON "DOG BONE" TORQUE ADAPTER (Part No. FRDH161) or equivalent.*

3. Tighten rocker arm support plate bolts.
   a. Following the sequence shown, alternately tighten each of the four rocker arm support plate bolts 1/4 turn at a time until snug.
   b. Following the same sequence, tighten the bolts to 18-22 ft-lbs (24.4-29.8 Nm).
4. Verify that both pushrods spin freely.

NOTE

Always service each cylinder separately. After the first cylinder is serviced rotate the crankshaft to find the base circle on the second cam.

5. Repeat steps on remaining cylinder.

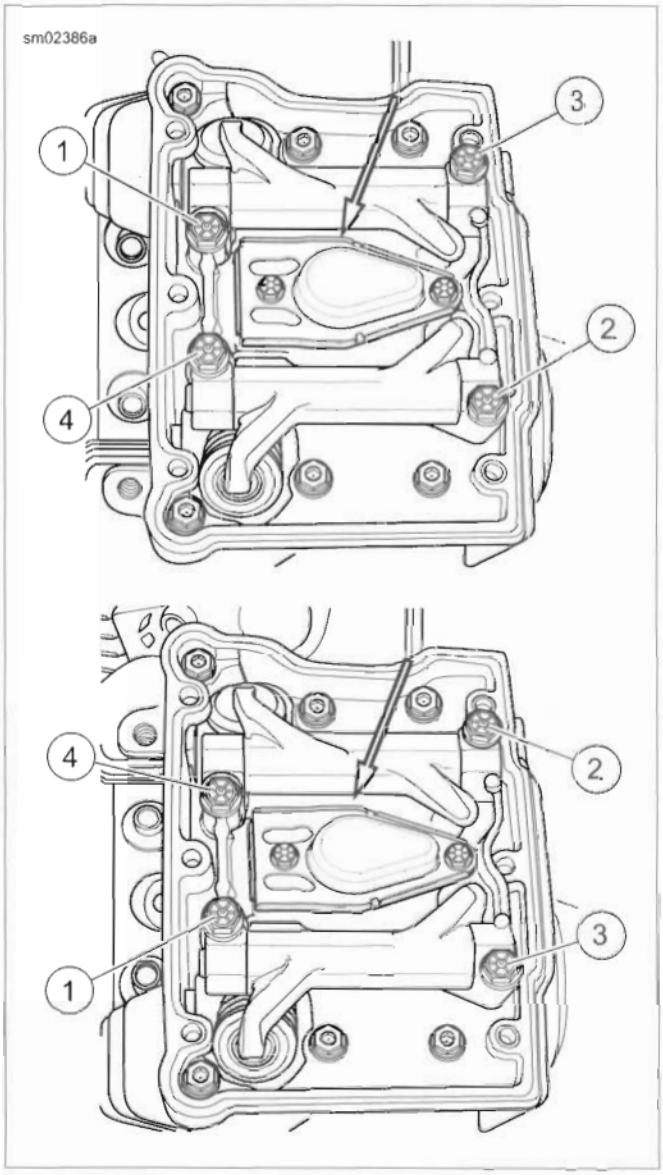

Figure 3-85. Rocker Arm Support Screw Sequence

6. Complete installation of the pushrod covers.
   a. Verify that the O-ring ends of the upper and lower pushrod covers fit snugly into the cylinder head and lifter cover bores.
   b. Insert the upper edge of spring cap retainer into the cylinder head bore leaving the bottom edge free.
   c. Insert blade of small screwdriver between bottom edge of spring cap retainer and top of spring cap.

NOTE

For best results, verify that screwdriver, spring cap and spring cap retainer are free of grease and oil.

   d. See Figure 3-86. Press spring cap down with tip of screwdriver and slide bottom edge of retainer towards tip of screwdriver.
   e. Verify that spring cap retainer seats tightly against upper pushrod cover.



Figure 3-86. Install Spring Cap Retainers

BREATHER AND ROCKER COVER

PART NUMBER	TOOL NAME
SNAP-ON FRDH141	"DOG BONE" TORQUE ADAPTER

FASTENER	TORQUE VALUE	
Breather assembly screws	120-156 **in-lbs**	13.6-17.6 Nm
Rocker cover screws	15-18 ft-lbs	20.3-24.4 Nm

NOTE

For breather assembly service procedures, see 3.17 BREATHER ASSEMBLY.

1. To secure breather assembly, tighten two screws to 120-156 **in-lbs** (13.6-17.6 Nm).

NOTE

If the engine is in the chassis, final tighten the three rocker cover bolts on the left side of the rear cylinder using a 3/8 in. drive torque wrench with a 7/16 in. flank drive "DOG BONE" TORQUE ADAPTER (Part No. Snap-on FRDH141). Failure to properly use this combination will over-tighten the bolts causing distortion of the rocker cover.

2. Apply a drop of LOCTITE 243 MEDIUM STRENGTH THREADLOCKER AND SEALANT (blue) to threads of rocker cover screws.

3. See Figure 3-87. Install rocker cover and a **new** rocker cover gasket. Tighten screws following the sequence shown to 15-18 ft-lbs (20.3-24.4 Nm).

4. Complete motorcycle assembly.
   a. If engine was left in the chassis for service, see 3.13 ASSEMBLING MOTORCYCLE AFTER SERVICE.
   b. If engine was removed for service, see 3.15 INSTALLING ENGINE IN CHASSIS.

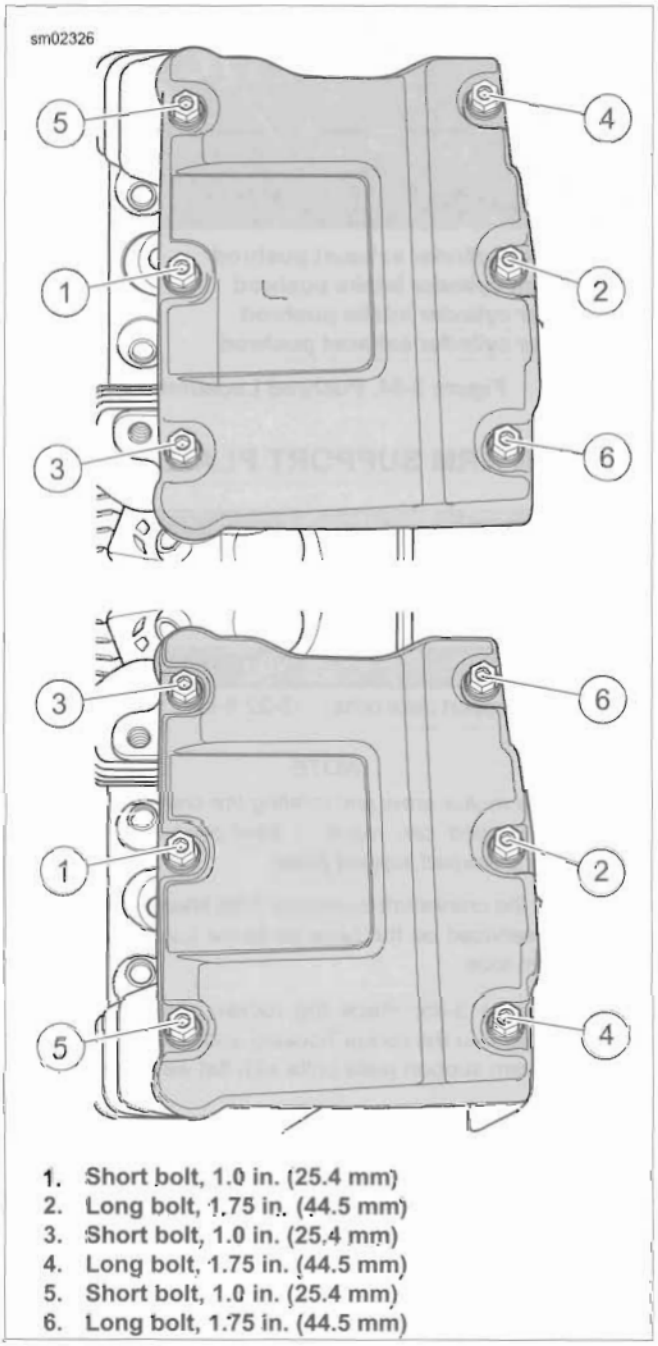

1. **Short bolt, 1.0 in. (25.4 mm)**
2. **Long bolt, 1.75 in. (44.5 mm)**
3. **Short bolt, 1.0 in. (25.4 mm)**
4. **Long bolt, 1.75 in. (44.5 mm)**
5. **Short bolt, 1.0 in. (25.4 mm)**
6. **Long bolt, 1.75 in. (44.5 mm)**

Figure 3-87. Rocker Cover Bolts Torque Sequence

CAM SUPPORT PLATE AND COVER REMOVAL

PART NUMBER	TOOL NAME
93979-10	SCREAMIN' EAGLE MAGNETIC LIFTER HOLDERS
HD-47941	CRANKSHAFT/CAMSHAFT SPROCKET LOCKING TOOL

Prepare Engine

NOTE

The following steps outline removal with the rest of the engine intact. If performing a complete engine overhaul, perform all steps under 3.16 TOP END OVERHAUL: DISASSEMBLY.

1. Remove breather assembly, rocker arm support plate, pushrods and pushrod covers. Do not remove lifters. See appropriate topics under 3.16 TOP END OVERHAUL: DISASSEMBLY.
2. See Figure 3-89. Support lifters using SCREAMIN' EAGLE MAGNETIC LIFTER HOLDERS (Part No. 93979-10).

NOTE

Label cam cover screws to aid during assembly.

3. See Figure 3-88. Remove the socket head screws to release the cam cover. Remove and discard the cam cover gasket.

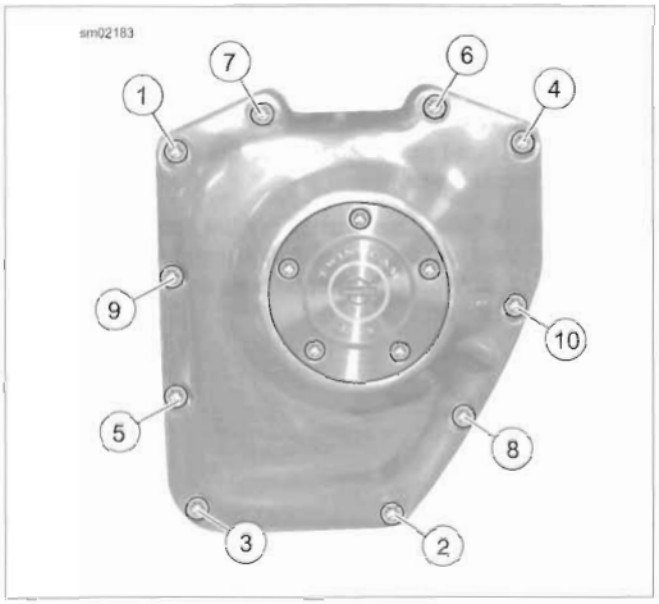

Figure 3-88. Cam Cover Screws

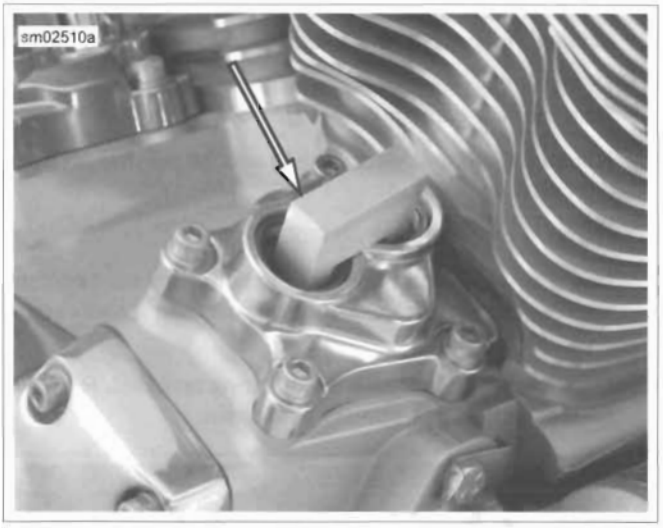

Figure 3-89. SCREAMIN' EAGLE Magnetic Lifter Holder

Cam Chain and Sprockets Removal

1. See Figure 3-90. Using a colored marker, mark one of the links (1) of the primary cam chain to identify the visible side. Maintaining the original direction of rotation during assembly may prolong service life.

NOTE

Use a piece of wire in retention hole (6) to keep cam chain tensioner components assembled.

2. Remove primary cam chain tensioner fasteners (4) and primary cam chain tensioner (3).

NOTE

Verify side of tool labeled "crank side" faces crankshaft sprocket.

3. See Figure 3-91. Install CRANKSHAFT/CAMSHAFT SPROCKET LOCKING TOOL (Part No. HD-47941) between cam sprocket (2) and crank sprocket (5).

⚠WARNING

Be sure to follow manufacturer's instructions when using propane torches. Failure to follow manufacturer's instructions can cause a fire, which could result in death or serious injury. (00465c)

- **Avoid directing heat toward any fuel system component. Extreme heat can cause fuel ignition/explosion resulting in death or serious injury.**
- **Avoid directing heat toward any electrical system component.**

NOTES

- *Only use approved methods for removing rear cam bolt. Other methods of removal, such as the use of a large*

breaker bar, may result in damage to chain drive and other components.

- *If necessary, soften threadlocker by using heat from a small propane torch. Apply flame evenly around bolt in a circular motion, but do not allow bolt to turn blue.*

4. Remove the rear cam sprocket bolt and flat washer (1) from the rear cam sprocket (2).
5. Remove the crank sprocket bolt and flat washer (4) from the crank sprocket (5).
6. Remove camshaft locking tool.
7. Use a small pry bar between rear cam sprocket and cam support plate to carefully ease off rear cam sprocket until loose on camshaft.
8. Use a small pry bar to ease off crank sprocket. Remove both sprockets and primary cam chain.

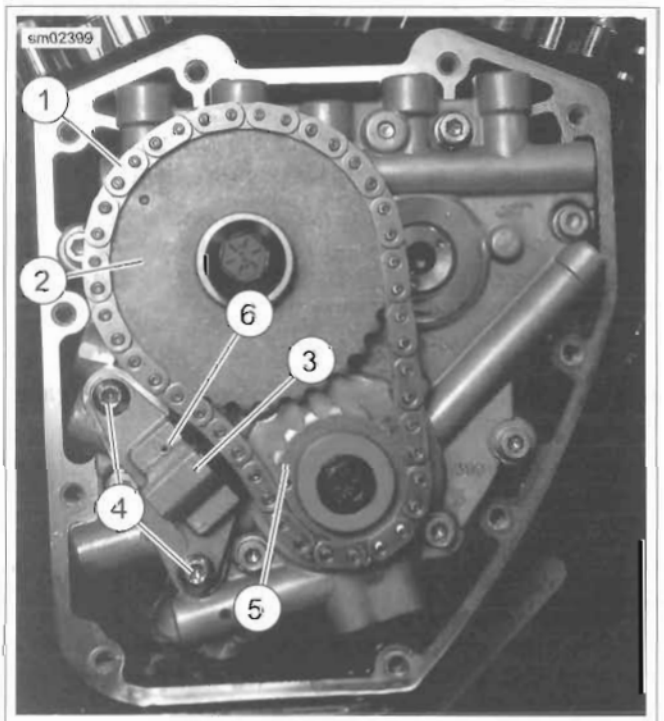

1. Link
2. Rear cam sprocket
3. Primary cam chain tensioner
4. Primary cam chain tensioner fasteners
5. Crank sprocket
6. Retention hole

Figure 3-90. Cam Support Plate Assembly

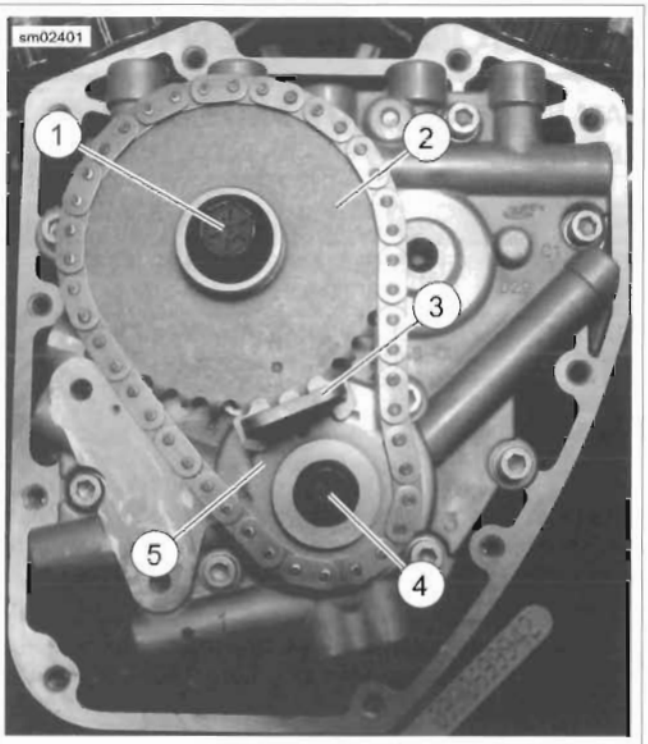

1. Rear cam sprocket bolt (large) and flat washer
2. Rear cam sprocket
3. Camshaft locking tool
4. Crank sprocket bolt (small) and flat washer
5. Crank sprocket

Figure 3-91. Cam Support Plate Assembly

Cam Support Plate Removal

1. See Figure 3-92. Following the sequence shown, remove four socket head screws.
2. See Figure 3-93. Following the sequence shown, remove six socket head screws to release the cam support plate from the crankcase.
3. See Figure 3-94. Use a small pry bar between the cam support plate and crankcase flange in areas near the ring dowels (2, 3). Work cam support plate and camshafts from end of crankshaft.

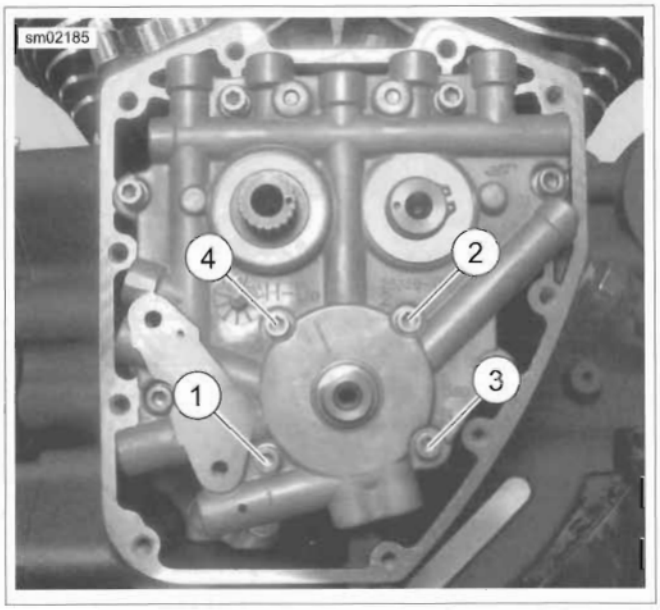

Figure 3-92. Oil Pump Torque Sequence

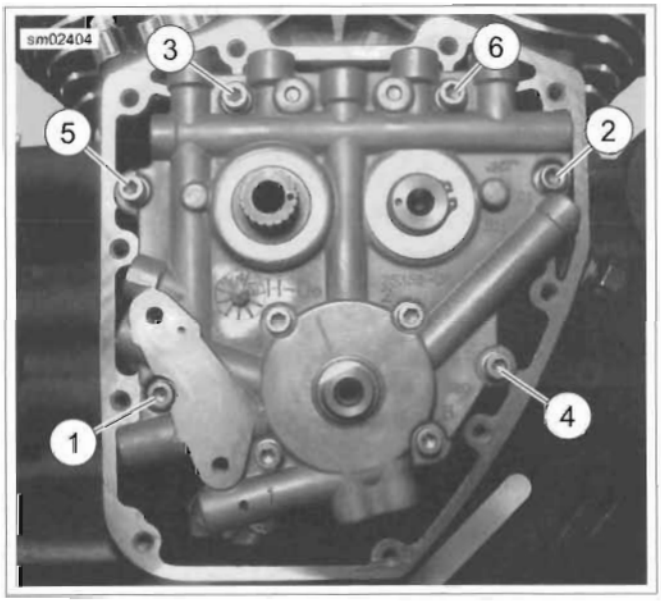

Figure 3-93. Cam Support Plate Torque Sequence

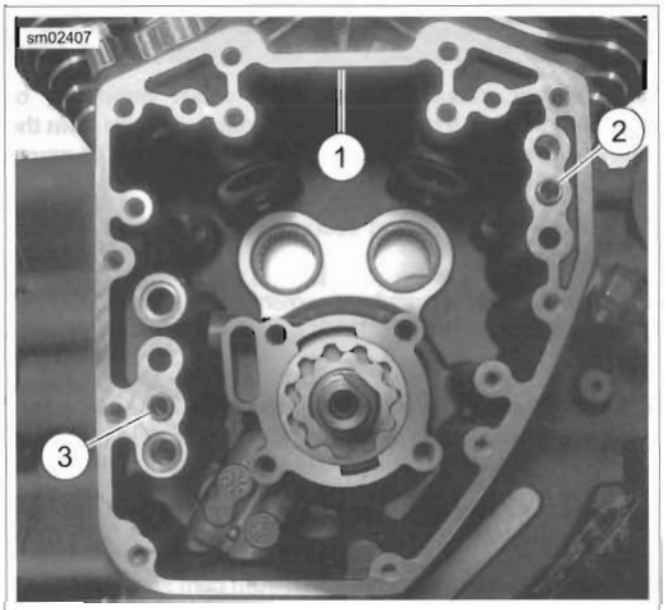

1. Right crankcase half
2. Forward ring dowel
3. Rear ring dowel

Figure 3-94. Ring Dowels

CAM SUPPORT PLATE CLEANING AND INSPECTION

Oil Pressure Valve

Inspect oil pressure valve. See 3.24 CAM COMPARTMENT AND COMPONENTS, Oil Pressure Relief Valve.

Cam Support Plate

1. Measure the diameters of the camshaft bores and crankshaft bore. See 3.3 SERVICE WEAR LIMITS, General.
2. Measure flatness of support plate. See 3.3 SERVICE WEAR LIMITS, General.
3. Inspect gerotor area for excessive wear or deep grooves.
4. Verify that all oil holes are clean and open.

NOTE

The oiling system is carefully designed for optimum efficiency. All oil holes and passageways are specially sized. Avoid enlarging oil holes during cleaning. Any modification of the oiling system will adversely affect oil pressure or cooling and lubrication efficiency.

CAMSHAFTS

PART NUMBER	TOOL NAME
HD-47956	CAMSHAFT ASSEMBLY TOOL

FASTENER	TORQUE VALUE	
Secondary cam chain tensioner fastener	90-120 **in-lbs**	10.2-13.6 Nm

Removal

1. See Figure 3-95. Remove screws (4) and remove secondary cam chain tensioner (3).

⚠WARNING

Wear safety glasses or goggles when removing or installing retaining rings. Retaining rings can slip from the pliers and could be propelled with enough force to cause serious eye injury. (00312a)

2. Remove retaining ring securing front camshaft. Discard retaining ring.
3. Remove spacer from front camshaft. Do not mix front and rear camshaft spacers. Front spacer is 0.100 in. (2.54 mm) thick.
4. Using a colored marker, mark one of the links of the secondary cam chain. Maintaining the original direction of rotation during assembly may prolong service life.
5. Slide camshafts and secondary cam chain out of cam support plate.
6. Remove secondary cam chain from cam sprockets.

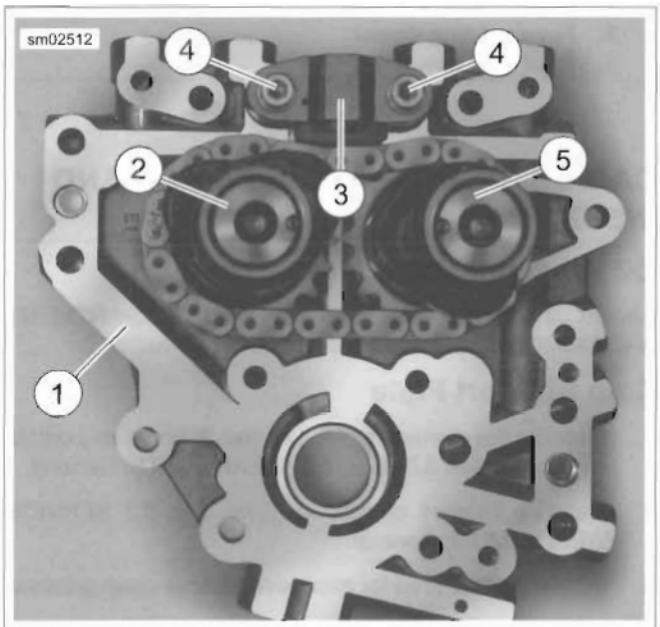

1. Cam support plate
2. Front cam
3. Secondary cam chain tensioner
4. Secondary cam chain tensioner fasteners
5. Rear cam

Figure 3-95. Camshafts

Installation

1. See Figure 3-96. Align timing marks on teeth of secondary cam sprockets.

NOTE

Do not mix camshafts during installation. The rear camshaft, identified by the splined shaft, must go into the hole at the rear of the cam support plate.

2. Place secondary cam chain around sprockets of both front and rear camshafts while keeping timing marks (3) in alignment. To maintain original direction of rotation, verify mark placed on chain link during disassembly is visible during installation.

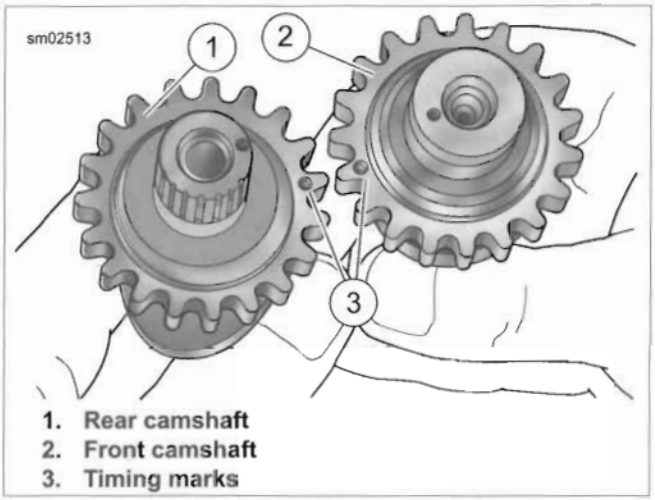

1. Rear camshaft
2. Front camshaft
3. Timing marks

Figure 3-96. Camshaft Timing Marks

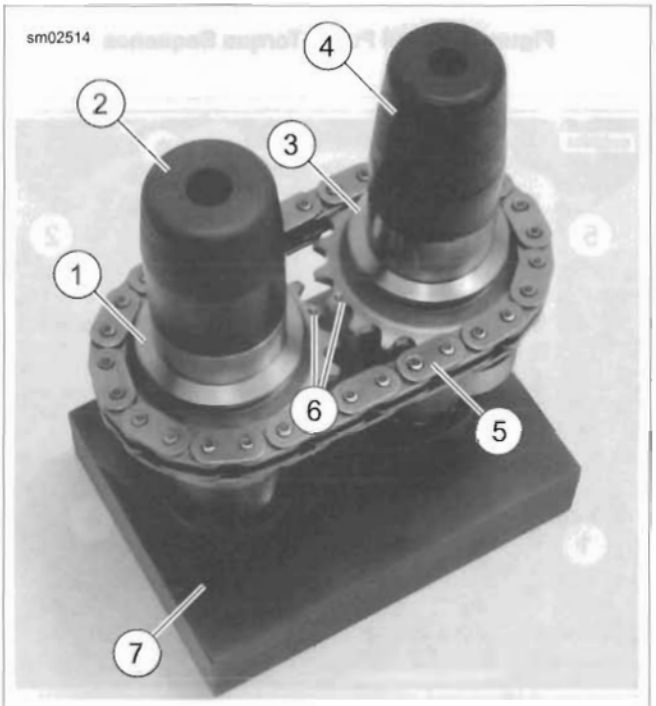

1. Rear camshaft
2. Small guide
3. Front camshaft
4. Large guide
5. Cam chain
6. Timing marks
7. Assembly tool base

Figure 3-97. Camshaft Assembly Tool

3. See Figure 3-97. Obtain CAMSHAFT ASSEMBLY TOOL (Part No. HD-47956). Place crankcase side of camshaft/cam chain assembly into assembly tool base (7) while maintaining cam timing mark (6) alignment.
4. Place small guide (2) on rear camshaft (1). Place large guide (4) on front camshaft (3).
5. Lubricate support plate camshaft cavities with SCREAMIN' EAGLE ASSEMBLY LUBE.
6. Install cam support plate over guides.

7. Remove guides and base.
8. See Figure 3-98. Using a straightedge, verify that the timing marks are in alignment. If they are not, then the camshafts must be removed, realigned and reinstalled.
9. Install 0.100 in. (2.54 mm) thick front camshaft spacer over end of front camshaft.

⚠WARNING

Wear safety glasses or goggles when removing or installing retaining rings. Retaining rings can slip from the pliers and could be propelled with enough force to cause serious eye injury. (00312a)

10. With the sharp edge out, install **new** retaining ring in groove at end of front camshaft.
11. Inspect primary and secondary cam chain tensioners.
    a. Inspect tensioners for wear. Replace tensioners if damaged or if chain contact portion of shoe material is less than 0.060 in. (1.52 mm) thick.
    b. See Figure 3-99. Be sure primary and secondary cam chain tensioners are assembled as shown. If assembled incorrectly, tensioners will not function properly.
12. Install secondary cam chain tensioner and fasteners. Tighten to 90-120 **in-lbs** (10.2-13.6 Nm).

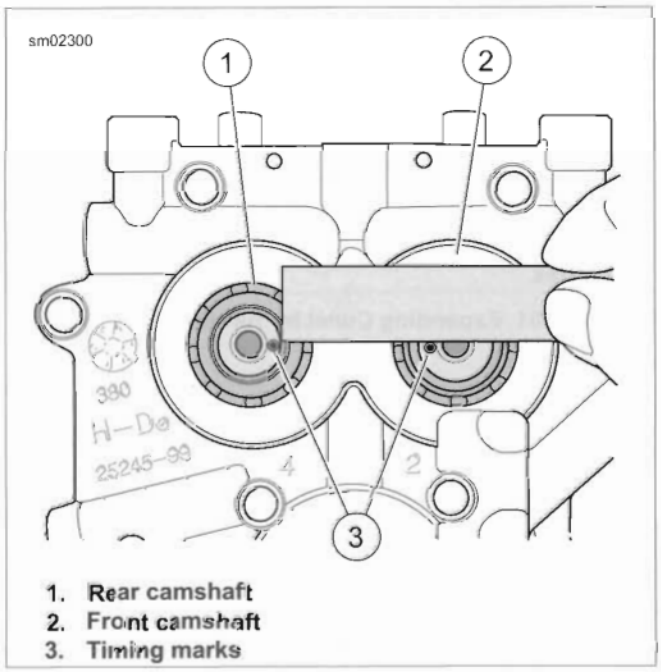

1. **Rear camshaft**
2. **Front camshaft**
3. **Timing marks**

Figure 3-98. Verify Alignment of Timing Marks

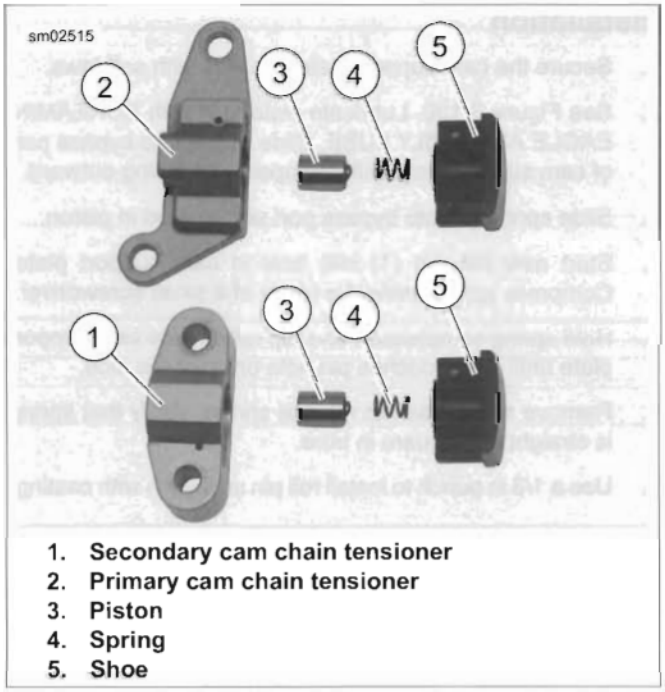

1. **Secondary cam chain tensioner**
2. **Primary cam chain tensioner**
3. **Piston**
4. **Spring**
5. **Shoe**

Figure 3-99. Cam Chain Tensioner Assemblies

OIL PRESSURE RELIEF VALVE

Removal

1. See Figure 3-100. Secure the cam support plate in a vise with soft jaws.
2. Measurement between piston and bore in cam support plate:
    a. With piston in place, insert straight stiff wire into bore until it bottoms in the piston.
    b. Mark wire at edge of bore in cam support plate.
    c. Remove wire and measure distance from the end to the mark. With piston fully seated in the bore, depth should be approximately 2.25 in (57.15 mm).
    d. If it is less than specified, the piston is not fully seated and a low oil pressure condition will likely be the result.
3. Use a 1/8 in punch to remove roll pin (1). Discard roll pin.
4. Remove spring (2) and piston (3) from bypass port.

Inspection

NOTE

A stretched spring or sticking piston can result in high oil pressure.

1. Inspect spring for stretching, kinks and distortion.
2. Inspect piston and bore for burrs, scoring or other damage. Look for steel particles or aluminum chips. Replace cam support plate and piston if any of these conditions are found.
3. Measure running clearance of piston in bore. If running clearance exceeds 0.003 in (0.076 mm), install **new** piston and measure again. Replace cam support plate if running clearance still exceeds specification.

Installation

1. Secure the cam support plate in a vise with soft jaws.
2. See Figure 3-100. Lubricate piston (3) with SCREAMIN' EAGLE ASSEMBLY LUBE. Slide piston into bypass port of cam support plate with the open side facing outward.
3. Slide spring (2) into bypass port until seated in piston.
4. Start **new** roll pin (1) into hole in cam support plate. Compress spring using the blade of a small screwdriver.
5. Hold spring compressed and tap roll pin into cam support plate until it approaches pin hole on opposite side.
6. Remove screwdriver to release spring. Verify that spring is straight and square in bore.
7. Use a 1/8 in punch to install roll pin until flush with casting.

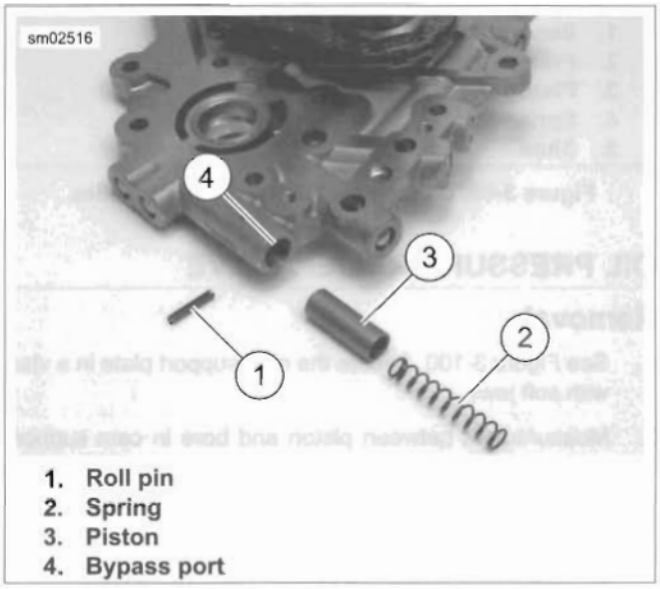

1. **Roll pin**
2. **Spring**
3. **Piston**
4. **Bypass port**

Figure 3-100. Oil Pressure Relief Valve Assembly

CAM NEEDLE BEARINGS

PART NUMBER	TOOL NAME
HD-42325-A	CAMSHAFT NEEDLE BEARING REMOVER/INSTALLER

Removal

1. Obtain the CAMSHAFT NEEDLE BEARING REMOVER/INSTALLER (Part No. HD-42325-A).
2. See Figure 3-102. Remove four thumb screws (1) from threaded holes in support plate (2), if installed.
3. Sparingly apply clean engine oil (9) to threads of collet (3) to prolong service life and verify smooth operation.
4. Slide collet through support plate so that threaded end exits stamped side of plate.
5. Aligning two large holes in support plate with needle bearing bores, hang right side of plate on ring dowel in crankcase flange.
6. Install thumb screws to secure support plate to crankcase.
7. Center expandable end of collet in bearing bore and slide bearing (7) and flat washer (5) on threaded end. Start hex nut (8) on threaded end.
8. Push expandable end of collet through bearing bore into flywheel compartment. Feel for inside edge of needle bearing using end of collet and then back off slightly.

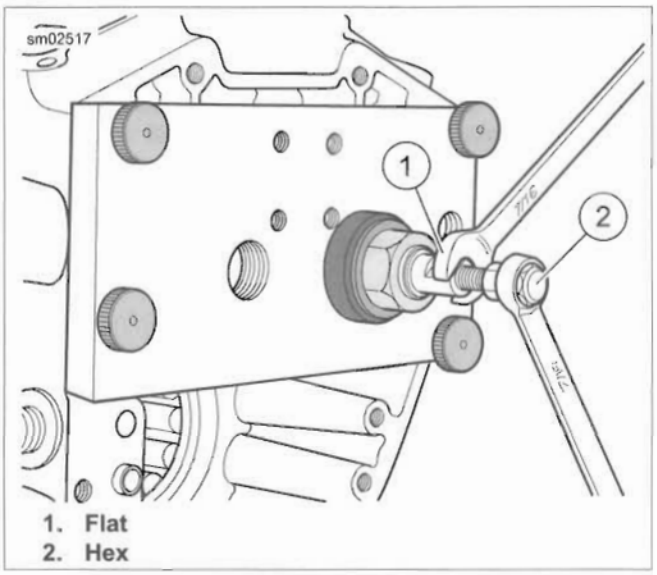

1. **Flat**
2. **Hex**

Figure 3-101. Expanding Collet by Turning Hex Clockwise

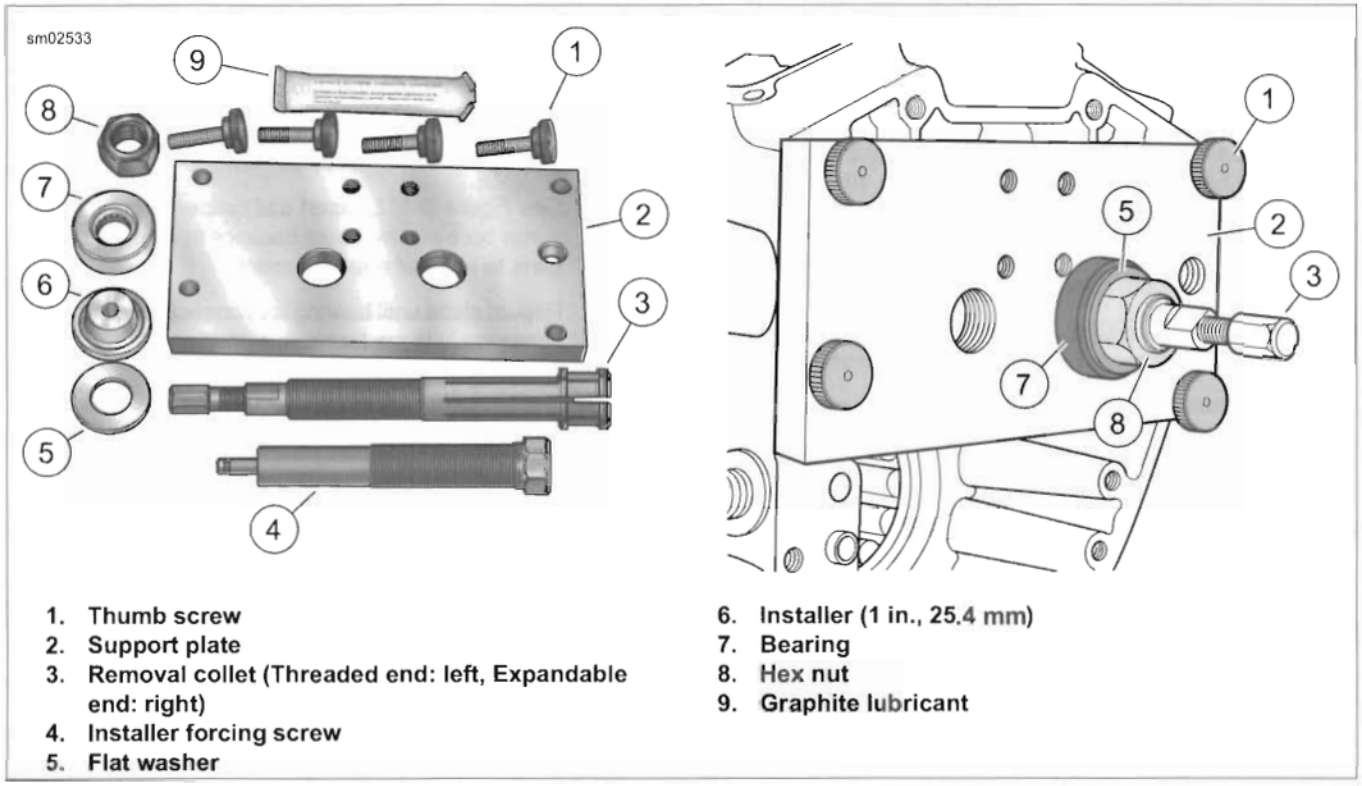

1. **Thumb screw**
2. **Support plate**
3. **Removal collet (Threaded end: left, Expandable end: right)**
4. **Installer forcing screw**
5. **Flat washer**
6. **Installer (1 in., 25.4 mm)**
7. **Bearing**
8. **Hex nut**
9. **Graphite lubricant**

Figure 3-102. Camshaft Needle Bearing Remover/Installer

9. Holding collet to prevent lateral movement, finger tighten hex nut until bearing contacts support plate.
10. See Figure 3-101. Hold flat on collet to prevent rotation and expand collet by turning hex at end of shaft clockwise. Expandable end of collet makes contact with needle bearing ID.
11. See Figure 3-103. Turn hex nut clockwise until bearing is free. If necessary, hold flat on collet to prevent rotation.
12. Remove four thumb screws and pull support plate from crankcase.
13. Holding flat on collet, turn hex at end of shaft counterclockwise to close collet. Remove and discard needle bearing.
14. Repeat procedure to remove second needle bearing.

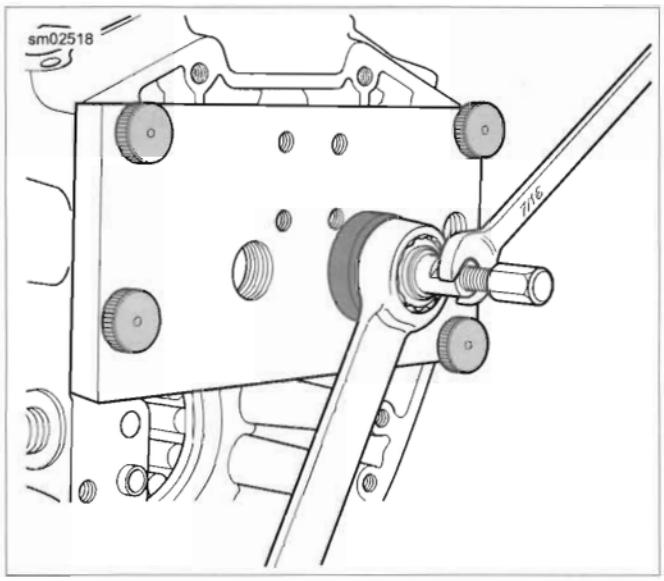

Figure 3-103. Bearing Removal

Installation

1. Obtain the CAMSHAFT NEEDLE BEARING REMOVER/INSTALLER (Part No. HD-42325-A).

NOTE

To avoid engine damage, install needle bearings to the correct depth.

2. See Figure 3-104. Using a dial caliper, measure thickness of support plate.
3. Determine the required distance from the top of the support plate to the edge of the installed needle bearing by adding

support plate thickness to 3.10 in. (78.7 mm). Record this value.

NOTE

For example, if the support plate is 0.50 in. (12.7 mm) thick, then the measurement from the top of the support plate to the edge of the needle bearing should be 3.60 in. (91.4 mm).

4. See Figure 3-102. Sparingly apply clean engine oil to threads of installer forcing screw (4) to prolong service life and verify smooth operation.
5. Thread installer forcing screw into stamped side of support plate (2) until threads begin to emerge from opposite side.
6. Place installer (6) at end of installer forcing screw.
7. Place **new** needle bearing on installer with lettered side facing shoulder of installer.
8. See Figure 3-105. Aligning two large holes in support plate with needle bearing bores, hang right side of plate on ring dowel in crankcase flange.
9. Install thumb screws to secure support plate to crankcase.

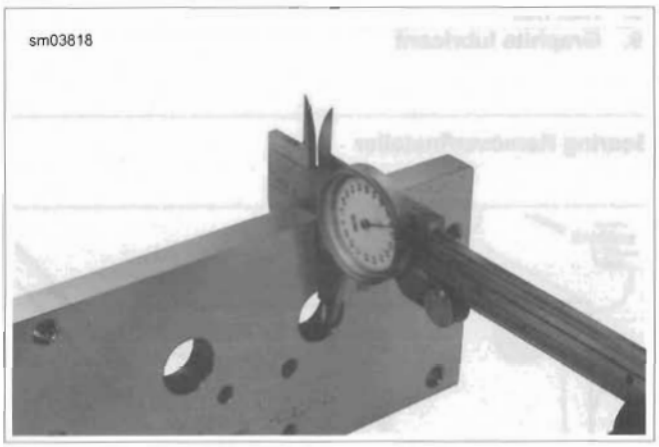

Figure 3-104. Measure Thickness of Support Plate

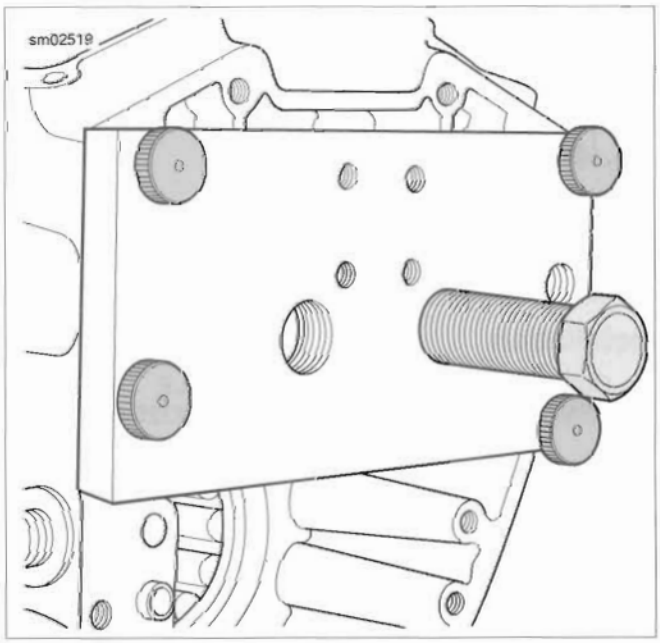

Figure 3-105. Installer Forcing Screw Installation

10. Install first needle bearing as follows:
    a. See Figure 3-106. Turn forcing screw clockwise to press needle bearing into bore.
    b. Back out forcing screw and remove installer. Remove forcing screw from support plate.
    c. See Figure 3-107. Insert dial caliper through forcing screw bore and measure distance from top of support plate to edge of needle bearing.
    d. Repeat steps until bearing is at correct installed depth. Temporarily leave tool in this position.
11. See Figure 3-108. Once the bearing is at correct depth, measure from head (top) of installer forcing screw to support plate. Record this measurement.
12. Remove forcing screw from support plate and install over second needle bearing bore. Place installer at end of forcing screw. Place **new** needle bearing on installer with lettered side facing shoulder of installer.
13. Turn forcing screw until distance from head (top) of forcing screw to support plate equals measurement obtained previously.

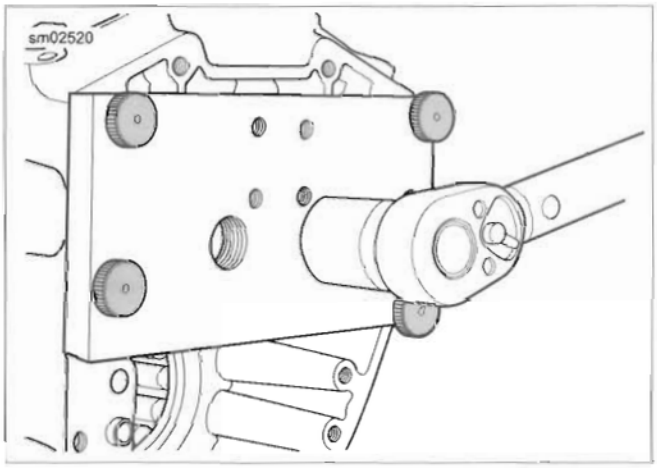

Figure 3-106. Bearing Installation

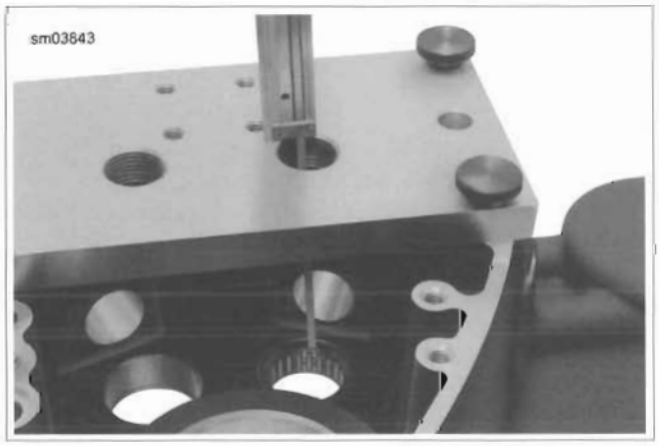

Figure 3-107. Measure from Top of Support Plate to Edge of Needle Bearing

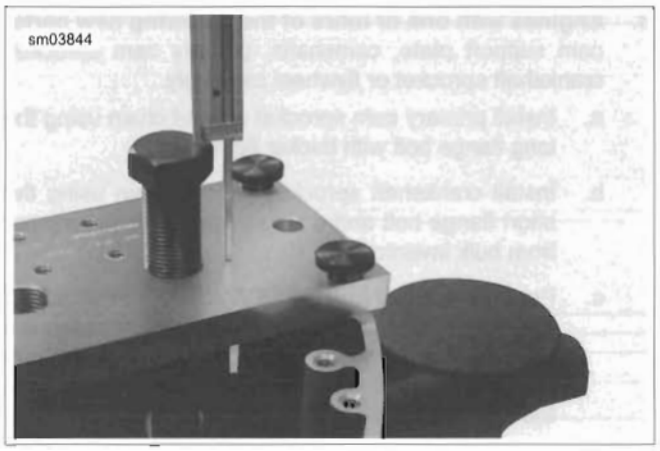

Figure 3-108. Measure from Top of Forcing Screw to Support Plate

CAM SUPPORT PLATE AND COVER INSTALLATION

PART NUMBER	TOOL NAME
HD-47941	CRANKSHAFT/CAMSHAFT SPROCKET LOCKING TOOL

FASTENER	TORQUE VALUE	
Cam support plate screws	100-120 **in-lbs**	11.3-13.6 Nm
Oil pump screws, 1st torque	40-45 **in-lbs**	4.5-5.1 Nm
Oil pump screws, final torque	90-120 **in-lbs**	10.2-13.6 Nm
Cam sprocket flange bolt, 1st torque	15 ft-lbs	20.3 Nm
Crankshaft sprocket bolt, 1st torque	15 ft-lbs	20.3 Nm
Cam sprocket flange bolt, final torque	34 ft-lbs	46.1 Nm
Crankshaft sprocket bolt, final torque	24 ft-lbs	32.5 Nm
Cam chain tensioner fasteners	100-120 **in-lbs**	11.3-13.6 Nm
Cam cover screws	125-155 **in-lbs**	14.1-17.5 Nm
Timer cover screws	20-30 **in-lbs**	2.3-3.4 Nm

1. See Figure 3-109. Apply a very thin film of SCREAMIN' EAGLE ASSEMBLY LUBE to **new** O-ring (1) and install in groove around oil feed hole.
2. Lubricate cam needle bearings with SCREAMIN' EAGLE ASSEMBLY LUBE.
3. See Figure 3-110. Verify that the timing marks on the ends of the front and rear camshafts are in alignment.

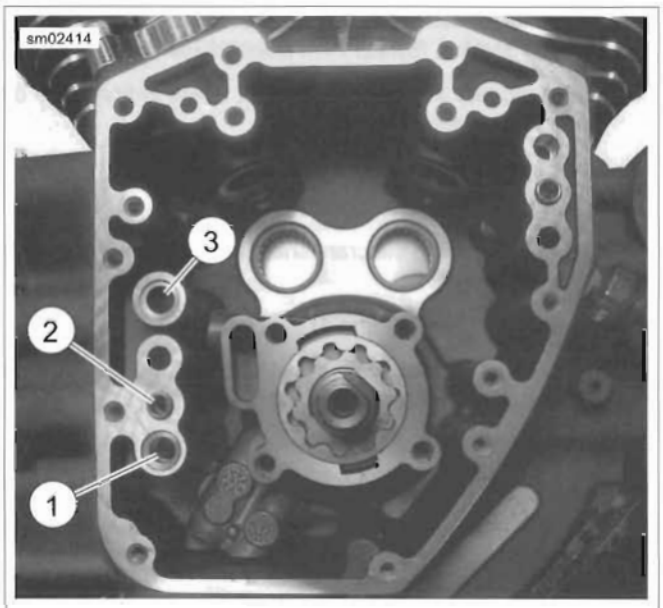

1. **Oil feed hole O-ring**
2. **Rear ring dowel**
3. **O-ring on crankcase post**

Figure 3-109. Oil Feed Hole

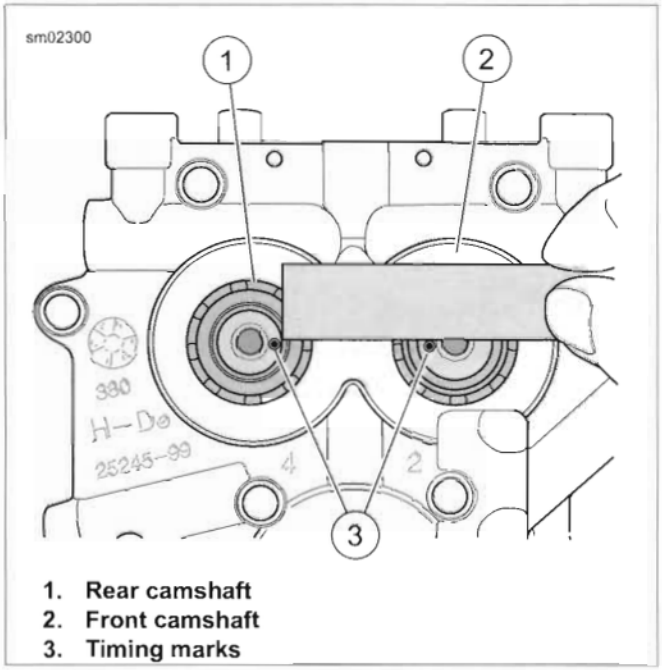

1. **Rear camshaft**
2. **Front camshaft**
3. **Timing marks**

Figure 3-110. Verify Alignment of Timing Marks

4. Slide cam support plate over crankshaft and onto two ring dowels in crankcase flange. Use a rubber mallet to fully seat cam support plate on ring dowels.
5. See Figure 3-111. Install cam support plate screws. Tighten to 100-120 **in-lbs** (11.3-13.6 Nm) in the sequence shown.

NOTES

- *Rotating the crankshaft while tightening screws will allow the oil pump to find its natural center. For methods of*

crankshaft rotation, see 3.16 TOP END OVERHAUL: DISASSEMBLY, Rocker Arm Support Plate.

- *Numbers cast adjacent to the bolt holes indicate the oil pump torque sequence.*

6. See Figure 3-112. Secure oil pump.
   a. Start four screws to secure oil pump.
   b. While rotating the crankshaft, install screws (1 and 2) until snug.
   c. Install screws (3 and 4) until snug.
   d. Tighten all four screws to 40-45 **in-lbs** (4.5-5.1 Nm) in the sequence shown.
   e. Final tighten all four screws to 90-120 **in-lbs** (10.2-13.6 Nm) in the sequence shown.
7. With the lettering facing inboard, install rear cam sprocket spacer onto the rear camshaft.

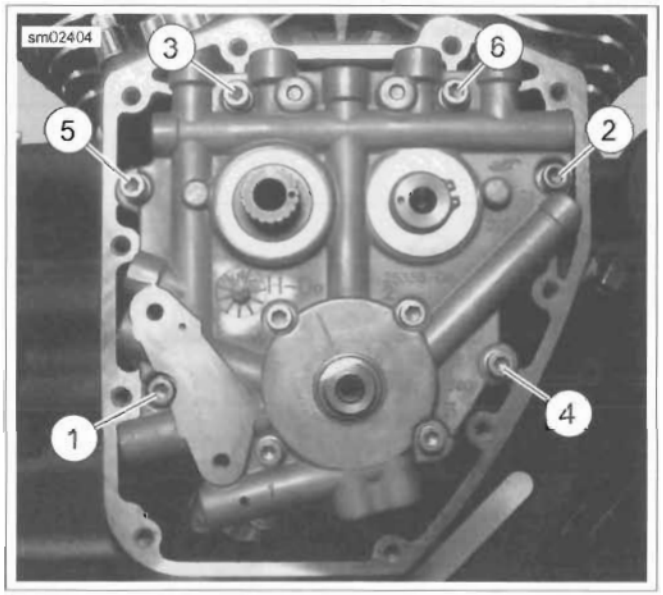

Figure 3-111. Cam Support Plate Torque Sequence

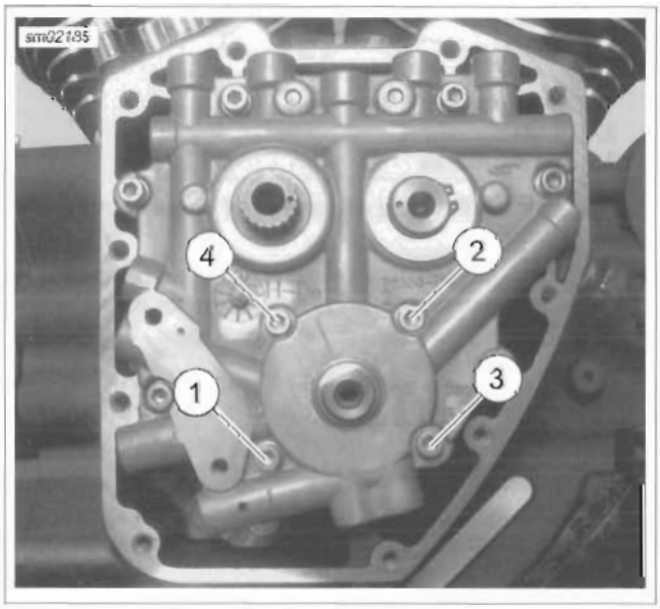

Figure 3-112. Oil Pump Torque Sequence

8. **Engines with one or more of the following new parts:** cam support plate, camshafts, primary cam sprocket, crankshaft sprocket or flywheel assembly.
   a. Install primary cam sprocket without chain using the long flange bolt with thicker flat washer.
   b. Install crankshaft sprocket without chain using the short flange bolt and a smaller diameter flat washer from bulk inventory.
   c. Position the CRANKSHAFT/CAMSHAFT SPROCKET LOCKING TOOL (Part No. HD-47941) between the crankshaft and primary cam sprockets. Tighten both sprocket flange bolts to 15 ft-lbs (20.3 Nm). Remove the sprocket locking tool.
   d. Rotate engine stand so cam compartment is pointing upward. Push on crankshaft and rear camshaft to eliminate endplay.
   e. If engine was not removed from motorcycle, install compensating sprocket assembly to pull the crankshaft to the left side of the engine. Push on crankshaft and rear camshaft to eliminate endplay.
   f. See Figure 3-113. Place a straightedge across the sprocket faces. Attempt to insert a 0.010 in. (0.254 mm) feeler gauge between the straightedge and each sprocket face. If the feeler gauge will not fit at either location, sprocket offset is within specification. Remove both sprockets and discard temporary small washer.
   g. If measurement is not within specification, replace the rear cam sprocket spacer using Table 3-41 as a guide.
   h. Repeat alignment inspection with the **new** spacer installed. Remove both sprockets when measurement is within specification and discard temporary small washer.

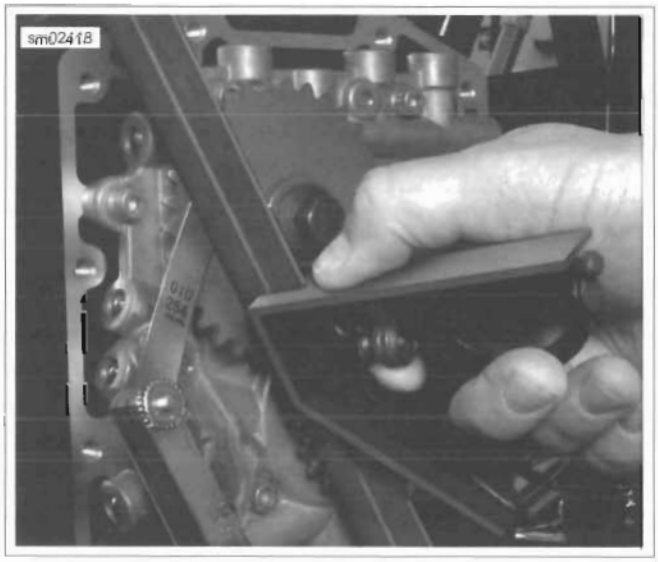

Figure 3-113. Check Alignment of Crank and Rear Cam Sprocket Faces

Table 3-41. Rear Cam Sprocket Spacers

PART NO.	IN	MM
25729-06	0.100	2.54
25731-06	0.110	2.79
25734-06	0.120	3.05
25736-06	0.130	3.30
25737-06	0.140	3.56
25738-06	0.150	3.81

9. See Figure 3-114. Apply a light film of SCREAMIN' EAGLE ASSEMBLY LUBE to splines on rear cam. Install the primary cam chain and sprocket assembly.
   a. Place both cam sprockets (2, 4) in the primary chain with the timing marks aligned. Verify that the colored mark placed on the chain link (7) is on the same side as the timing marks and is visible during installation.
   b. With the timing marks in alignment, start the rear cam sprocket onto the end of the rear camshaft. Note that the sprocket has an integral key that must be aligned with the keyway in the camshaft.
   c. Maintaining the position of the crankshaft sprocket on the chain, rotate the rear cam sprocket clockwise until the flat on the crankshaft sprocket is aligned with the flat on the crankshaft. Install the crankshaft sprocket.
10. Rotate the crankshaft clockwise until the timing marks on the sprockets are aligned and also aligned with alignment mark (5) on cam support plate.

NOTES

- *Both crank and rear cam sprocket flange bolts are specially hardened and the flat washers are of a special diameter.*
- *Use only genuine Harley-Davidson parts when replacement is necessary.*
- *If **new** flange bolts are not available, thoroughly clean both internal and external threads.*
- *Apply a **small** amount of LOCTITE 262 HIGH STRENGTH THREADLOCKER AND SEALANT (red) before installation.*
- *Both sprocket bolts must install freely by hand.*
- *The crankshaft and rear cam sprocket flange bolts and flat washers are **not** interchangeable.*
- *Refer to Table 3-41.*

11. Apply a film of oil to bottom of both sprocket bolt heads and washers. Loosely install to secure sprockets.
12. Position the CRANKSHAFT/CAMSHAFT SPROCKET LOCKING TOOL (Part No. HD-47941) between the crankshaft and rear cam sprockets to prevent rotation. The handle of the tool is stamped "Crank" and "Cam" to verify proper orientation.
   a. Tighten both sprocket bolts (1, 3) to 15 ft-lbs (20.3 Nm).
   b. Loosen both bolts one revolution (360 degrees).
   c. Final tighten the rear cam sprocket bolt (1) to 34 ft-lbs (46.1 Nm).
   d. Final tighten the crankshaft sprocket bolt (3) to 24 ft-lbs (32.5 Nm).
   e. Remove the sprocket locking tool.
13. Install primary cam chain tensioner. Tighten to 100-120 **in-lbs** (11.3-13.6 Nm).
14. Apply SCREAMIN' EAGLE ASSEMBLY LUBE to both sprockets.

NOTE

Inserting a screw into a blind hole with debris can damage the crankcase.

15. Clean all blind holes in crankcase.
16. See Figure 3-115. Install cam cover and **new** cam cover gasket.

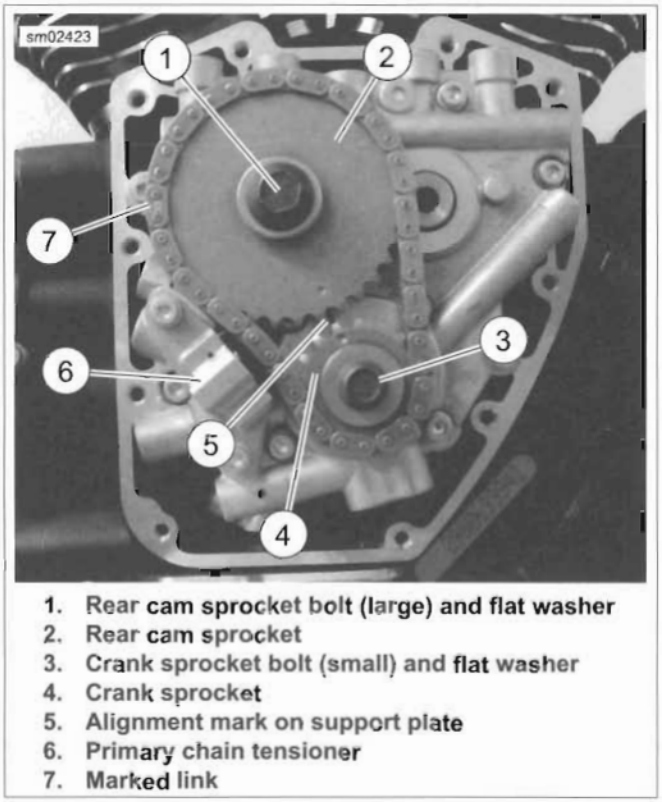

1. **Rear cam sprocket bolt (large) and flat washer**
2. **Rear cam sprocket**
3. **Crank sprocket bolt (small) and flat washer**
4. **Crank sprocket**
5. **Alignment mark on support plate**
6. **Primary chain tensioner**
7. **Marked link**

Figure 3-114. Primary Chain and Sprockets

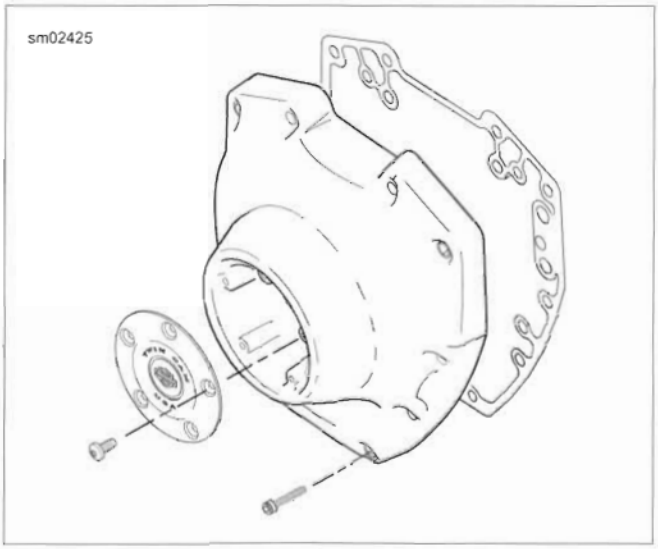

Figure 3-115. Cam Cover Gasket

17. See Figure 3-116. Secure cover with socket head screws. Following the sequence shown, tighten the screws to 125-155 **in-lbs** (14.1-17.5 Nm).
18. If removed, install timer cover with five screws. Tighten to 20-30 **in-lbs** (2.3-3.4 Nm).
19. Complete motorcycle assembly.
    a. If engine was completely overhauled, see 3.23 TOP END OVERHAUL: ASSEMBLY. Perform all steps.
    b. If only cam compartment components were serviced, install pushrod covers, pushrods, rocker arm support plate and breather assembly. See appropriate topics under 3.23 TOP END OVERHAUL: ASSEMBLY.

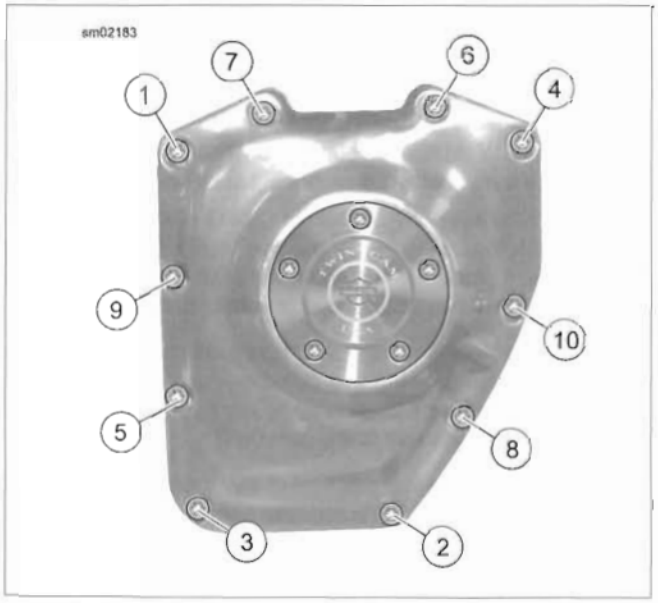

Figure 3-116. Cam Cover Screws

REMOVAL

PART NUMBER	TOOL NAME
93979-10	SCREAMIN' EAGLE MAGNETIC LIFTER HOLDERS

1. See 3.16 TOP END OVERHAUL: DISASSEMBLY.
   a. Remove breather assembly.
   b. Remove rocker arm support plate.
   c. Remove pushrods and pushrod covers. Do not remove lifters or lifter covers.
   d. Support hydraulic lifters from dropping into the cam compartment using SCREAMIN' EAGLE MAGNETIC LIFTER HOLDERS (Part No. 93979-10). See 3.24 CAM COMPARTMENT AND COMPONENTS.
2. Remove cover and cam support plate. See 3.24 CAM COMPARTMENT AND COMPONENTS.
3. Carefully remove oil pump assembly from crankshaft.
4. See Figure 3-117. Remove and discard O-rings (1, 2).
5. See Figure 3-118. Disassemble and inspect oil pump components.

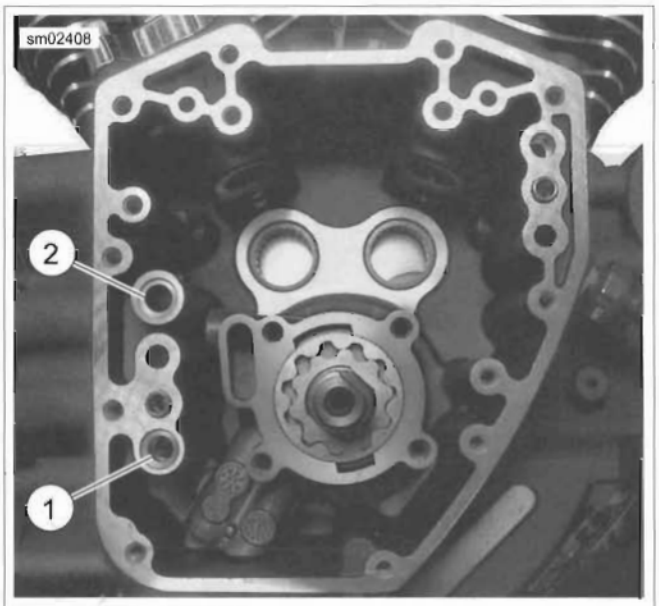

1. **Oil feed hole O-ring**
2. **O-ring on crankcase post**

Figure 3-117. Oil Pump O-rings

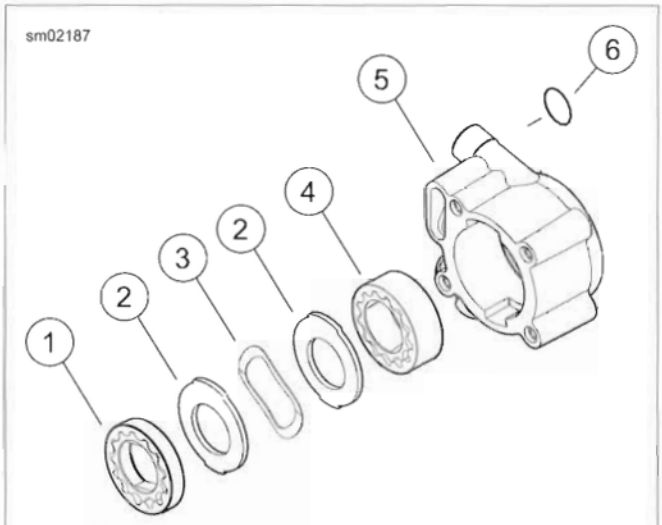

1. **Narrow gerotor set (feed)**
2. **Separator plate**
3. **Wave washer**
4. **Wide gerotor set (scavenge)**
5. **Oil pump housing**
6. **Scavenge port O-ring**

Figure 3-118. Assembling Oil Pump

CLEANING AND INSPECTION

1. Clean all parts in a non-volatile cleaning solution or solvent.

⚠WARNING

Compressed air can pierce the skin and flying debris from compressed air could cause serious eye injury. Wear safety glasses when working with compressed air. Never use your hand to check for air leaks or to determine air flow rates. (00061a)

2. Dry parts using low pressure compressed air. Verify that all oil passages are clean and open.
3. Inspect for scoring, gouging or cracking caused by foreign material.
4. Inspect for grooves or scratches on the cam support plate.
5. Check for excessive wear or damage on lobes of outer and inner gerotor gears.
6. See Figure 3-119. Check gerotor wear.
   a. Mesh rotors of one gerotor set together.
   b. Use a feeler gauge to determine clearance between tips of lobes on inner and outer gerotors.
   c. Replace gerotors as a set if clearance exceeds 0.004 in. (0.10 mm). Inspect second gerotor set in the same manner.
7. Measure and compare thickness of each rotor in both gerotor sets. Replace the gerotor set if the difference exceeds 0.001 in. (0.025 mm).

8. See Figure 3-118. Assemble the oil pump.
9. Verify that feed gerotors extend past the oil pump surface 0.015-0.025 in. (0.38-0.64 mm).
10. If measurement is less than 0.015 in. (0.38 mm), remove feed gerotor set and reassemble using **new** wave washer.
11. Repeat measurement and replace oil pump body if not within specification.

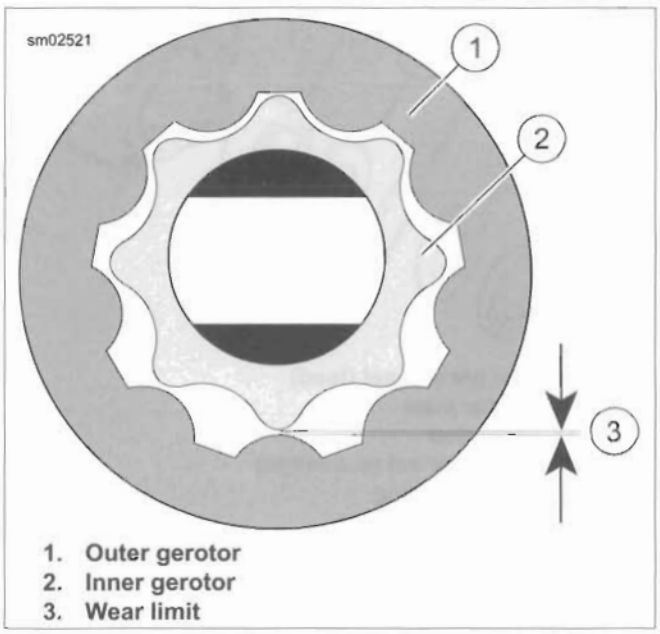

1. **Outer gerotor**
2. **Inner gerotor**
3. **Wear limit**

Figure 3-119. Measure Gerotor Sets for Wear

INSTALLATION

NOTE

Lubricate parts with SCREAMIN' EAGLE ASSEMBLY LUBE during assembly.

1. See Figure 3-118. Apply a very thin film of SCREAMIN' EAGLE ASSEMBLY LUBE to **new** scavenge port stub O-ring (6). Install O-ring on scavenge port stub of oil pump housing.
2. Slide oil pump housing (5) onto crankshaft while fitting O-ring on scavenge port stub into crankcase bore.
   a. Firmly push on scavenge port stub with thumb to verify that it is snug in bore.
   b. Inspect O-ring to verify that it is not pinched or distorted.
3. Assemble the wide gerotor set (4). Install on the crankshaft until it bottoms in the oil pump housing.
4. Install inside separator plate (2) on the crankshaft until it contacts the wide gerotor set (4). Install wave washer (3) and outside separator plate (2).
5. Assemble the narrow gerotor set (1). Install on the crankshaft until it contacts the outside separator plate (2).
6. See Figure 3-117. Apply a very thin film of SCREAMIN' EAGLE ASSEMBLY LUBE to **new** O-ring (3) for crankcase post. Install **new** O-ring in groove on crankcase post.
7. Complete engine assembly. See 3.24 CAM COMPARTMENT AND COMPONENTS and 3.23 TOP END OVERHAUL: ASSEMBLY.

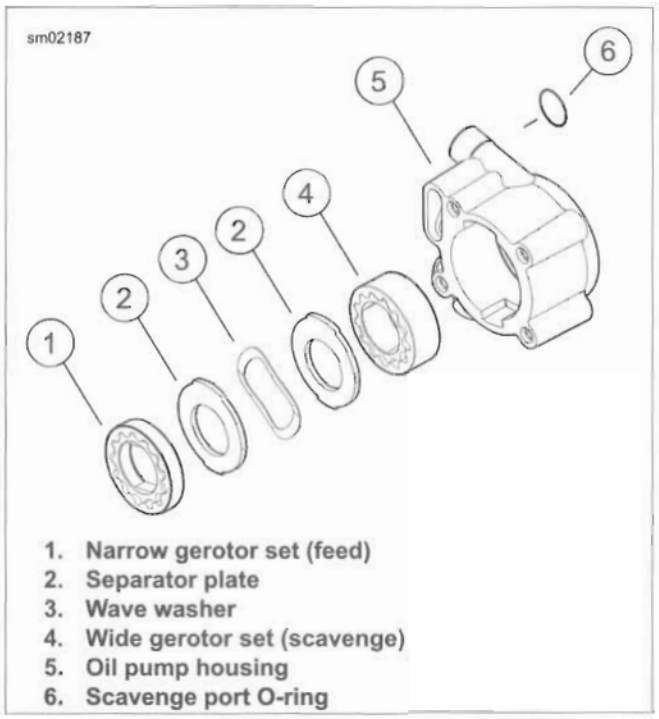

1. **Narrow gerotor set (feed)**
2. **Separator plate**
3. **Wave washer**
4. **Wide gerotor set (scavenge)**
5. **Oil pump housing**
6. **Scavenge port O-ring**

Figure 3-120. Assembling Oil Pump

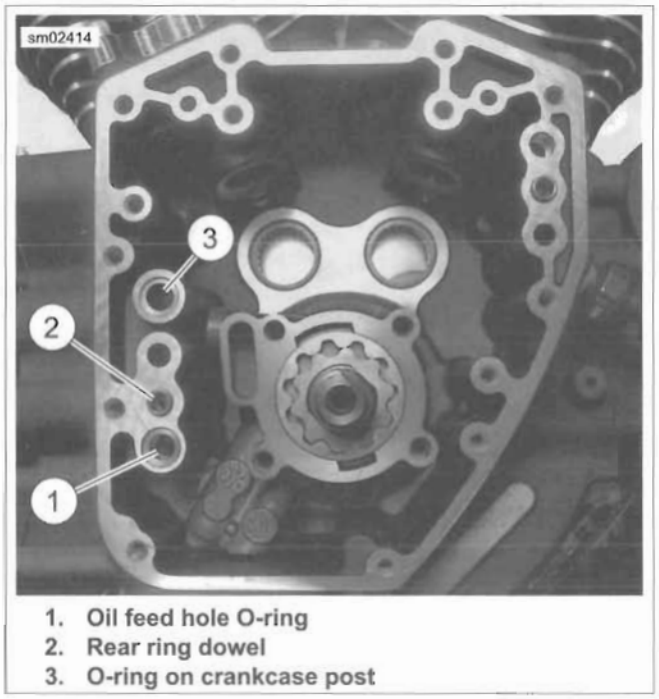

1. **Oil feed hole O-ring**
2. **Rear ring dowel**
3. **O-ring on crankcase post**

Figure 3-121. Oil Feed Hole

CRANKCASE DISASSEMBLY

PART NUMBER	TOOL NAME
HD-42310-25A	SOFTAIL ENGINE CRADLE

NOTE

Be sure engine is in SOFTAIL ENGINE CRADLE (Part No. HD-42310-25A).

1. Remove oil pump from crankshaft.
2. See Figure 3-122. Remove and discard O-rings (1, 2).

NOTE

Do NOT rotate left crankcase half in the engine stand so the flywheel sprocket shaft is facing up. The flywheel assembly will fall out of the case.

3. Rotate crankcase in the engine stand so that the cam cover flange is facing straight upward.
4. See Figure 3-123. Remove the twelve crankcase bolts in the sequence shown.

NOTE

Never move or lift the crankcase by grasping the cylinder studs. The crankcase is too heavy to be carried in this manner.

5. Separate crankcase halves.
6. See 3.26 CRANKCASE DISASSEMBLY AND REPAIR for inspection and repair information.

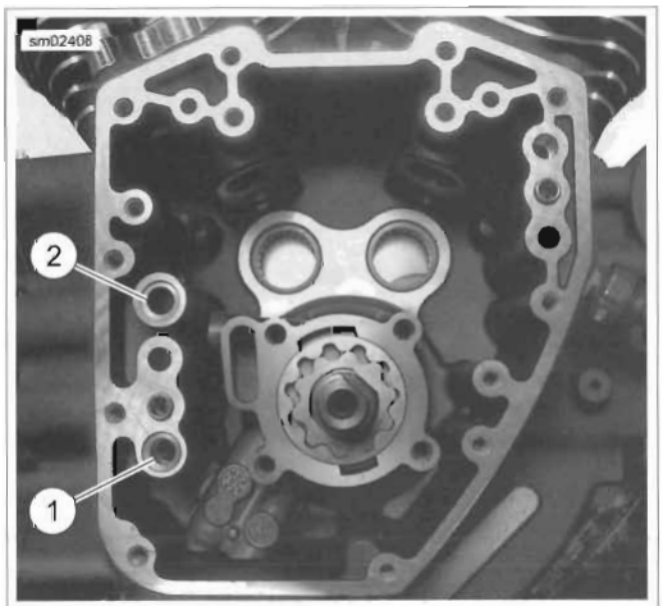

1. Oil feed hole O-ring
2. O-ring on crankcase post

Figure 3-122. Oil Pump O-rings

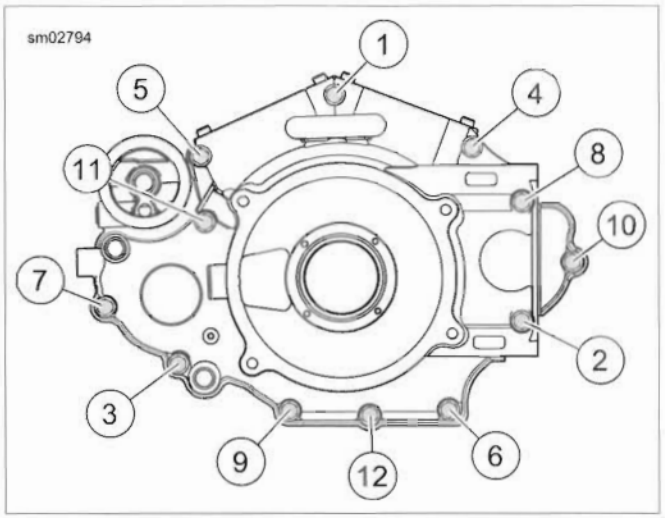

Figure 3-123. Crankcase Bolt Sequence

7. See Figure 3-124. Remove and discard rubber interconnect from balance shaft support assembly.
8. Remove and disassemble counterbalancer assembly. See 3.28 COUNTERBALANCER ASSEMBLY REPAIR.
9. Remove flywheel assembly from the crankcase. Inspect crankshaft/flywheel assembly. See 3.27 FLYWHEEL AND CONNECTING RODS.

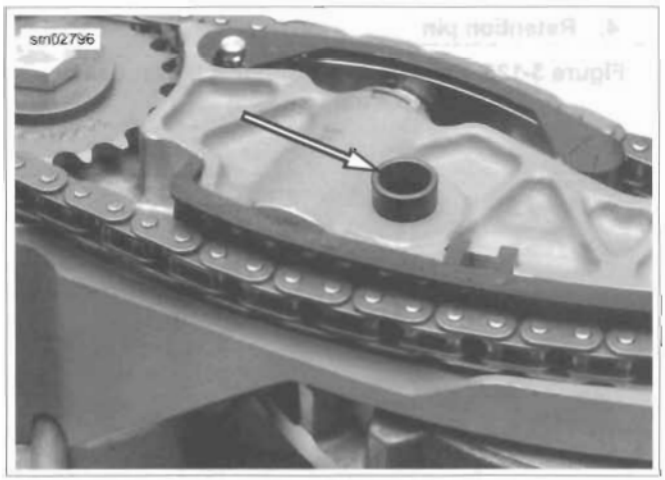

Figure 3-124. Rubber Interconnect

COUNTERBALANCER ASSEMBLY

PART NUMBER	TOOL NAME
HD-44062	BALANCE SHAFT RETENTION PINS
HD-44063	HYDRAULIC TENSIONER COMPRESSOR
HD-44408	HYDRAULIC TENSIONER RETAINERS

1. See Figure 3-125. Rotate flywheel assembly to align holes in balance shafts with holes in balance shaft housing (3).

2. Insert BALANCE SHAFT RETENTION PINS (Part No. HD-44062) inside front and rear shaft supports to lock balance shafts in place. Locking the balancers in this position times the balancers to the engine.

3. See Figure 3-126. Compress hydraulic tensioners using HYDRAULIC TENSIONER COMPRESSOR (Part No. HD-44063) (1). Slide HYDRAULIC TENSIONER RETAINERS (Part No. HD-44408) over lip of tensioner (3) and release tool.

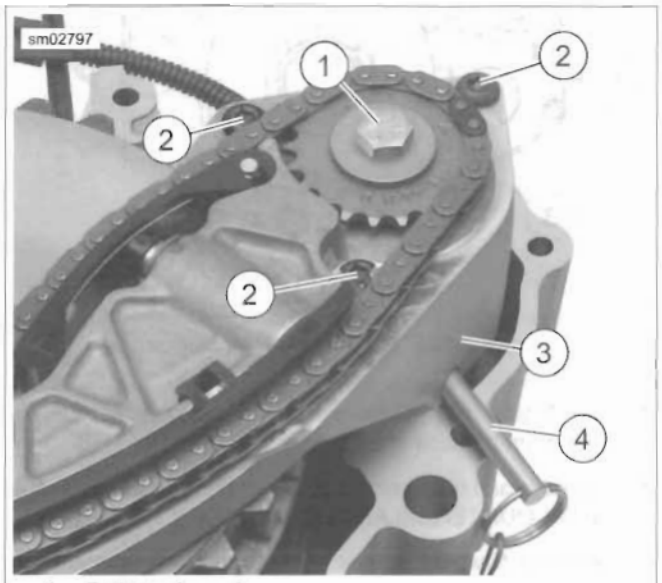

1. **Bolt and washer**
2. **Screws (6)**
3. **Balance shaft housing**
4. **Retention pin**

Figure 3-125. Balance Shaft Support (Front Balance Assembly Shown)

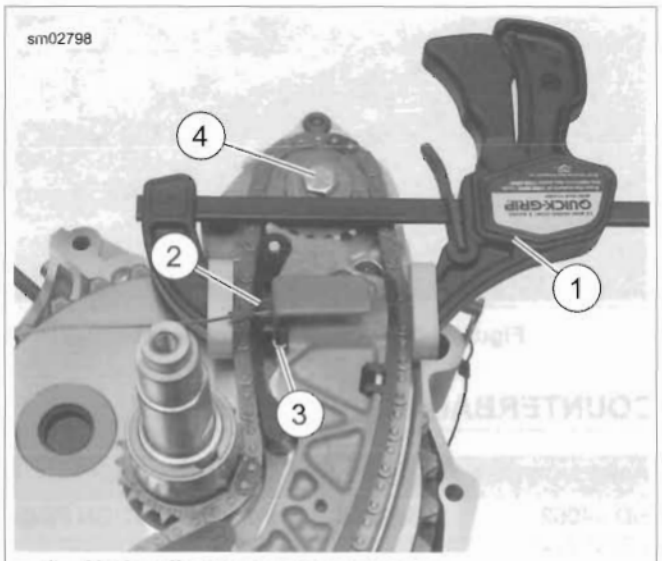

1. **Hydraulic tensioner compressor**
2. **Hydraulic tensioner retainers**
3. **Hydraulic tensioner**
4. **Bolt and washer**

Figure 3-126. Hydraulic Tensioner Tools (Front Tensioner Shown)

⚠WARNING

Be sure to follow manufacturer's instructions when using propane torches. Failure to follow manufacturer's instructions can cause a fire, which could result in death or serious injury. (00465c)

NOTE

If necessary, soften Loctite by using heat from a small propane torch. Apply flame evenly around bolt in a circular motion, but not for so long as to turn bolt blue.

4. Loosen the bolts (4) on the front and rear balance shafts.

5. See Figure 3-127. Pry tabs on front and rear tensioner guides (1, 2) clear of locking post and remove guides. Use a small screwdriver to pry guide upward from locking post.

6. Release retention tabs and pry lower chain tensioner guide (3) away from chain guide bracket assembly.

7. See Figure 3-126. Remove bolts and washers (4) on the front and rear balance shafts.

8. See Figure 3-127. Remove front (5) and rear (6) sprockets and balance chain (7). Remove spacers from balance shafts.

9. Remove six screws (8).

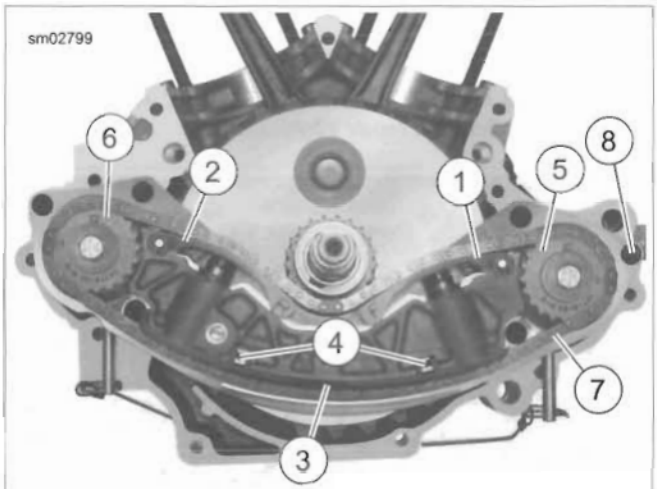

1. **Front tensioner guide**
2. **Rear tensioner guide**
3. **Lower guide**
4. **Retention tabs**
5. **Front sprocket**
6. **Rear sprocket**
7. **Balance chain**
8. **T40 TORX screws (6)**

Figure 3-127. Chain Tensioner Guides



Figure 3-128. Balance Shaft Retention Pin

NOTE

See Figure 3-128. Inspect tip of BALANCE SHAFT RETENTION PINS (Part No. HD-44062) after removal. If the ball at the end of the tool should separate and become loose in the engine assembly, severe engine damage could occur.

10. See Figure 3-128. Remove both balance shaft retention pins from front and rear shaft supports. Check that ball on tip of tool has not separated from pin.
11. See Figure 3-129. Remove balance shaft support housing (5) from left crankcase half.
12. Inspect and repair components as necessary.
    a. See 3.28 COUNTERBALANCER ASSEMBLY REPAIR for balance shaft support assembly and outer bearings (6).
    b. See 3.26 CRANKCASE DISASSEMBLY AND REPAIR for balance shaft bearings in left crankcase half.
    c. See 3.27 FLYWHEEL AND CONNECTING RODS for flywheel inspection and repair information.

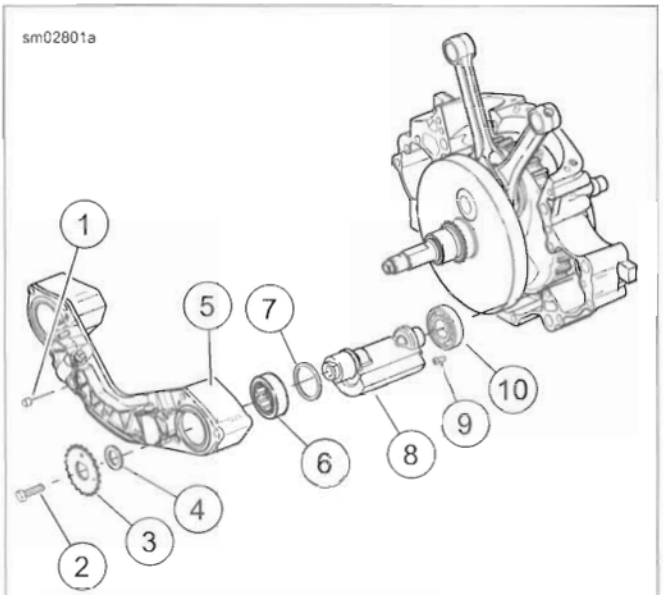

1. **Rubber interconnect**
2. **Screw**
3. **Sprocket**
4. **Spacer**
5. **Balance shaft support housing**
6. **Outer bearing**
7. **Washer**
8. **Balance shaft**
9. **Screw**
10. **Inner bearing**

Figure 3-129. Balance Shaft Assembly (Front Balance Assembly Shown)

CLEANING AND INSPECTION

1. Scrape old gasket material from the crankcase flanges. Old gasket material left on mating surfaces will cause leaks.
2. Clean all parts in a non-volatile cleaning solution or solvent.

⚠WARNING

Compressed air can pierce the skin and flying debris from compressed air could cause serious eye injury. Wear safety glasses when working with compressed air. Never use your hand to check for air leaks or to determine air flow rates. (00061a)

3. Dry parts with moisture free compressed air.
4. Verify that all oil holes and passageways are clean and open.
5. Check ring dowels for looseness, wear or damage. Replace as necessary.
6. Use a file to carefully remove any nicks or burrs from machined surfaces.
7. Clean out tapped holes and clean up damaged threads.
8. Check the top of the crankcase for flatness with a straightedge and feeler gauge. Replace if warped.
9. Spray all machined surfaces with clean engine oil.

10. Inspect crankshaft/flywheel assembly. See 3.27 FLYWHEEL AND CONNECTING RODS.

RIGHT CRANKCASE HALF

PART NUMBER	TOOL NAME
HD-42720-4	CRANKSHAFT (ROLLER) BEARING DRIVER SHIM
HD-44065-1	CRANKSHAFT (ROLLER) BEARING REMOVAL/INSTALL PILOT/DRIVER
HD-44065-4	CRANKSHAFT (ROLLER) BEARING REMOVAL/INSTALL SUPPORT TUBE

FASTENER	TORQUE VALUE	
Right main bearing retaining screws	40-70 in-lbs	4.5-7.9 Nm
Piston jet screw	25-35 in-lbs	2.8-3.9 Nm

Chain Guide Screen

See Figure 3-130. Remove, clean and install screen (3). Replace screen O-ring with each removal.

Main Bearing Removal

NOTE

Never move or lift the crankcase by grasping the cylinder studs. The crankcase is too heavy to be carried in this manner.

1. See Figure 3-130. Remove two main bearing retaining screws (5) from the cam compartment side.
2. See Figure 3-131. Obtain CRANKSHAFT (ROLLER) BEARING REMOVAL/INSTALL PILOT/DRIVER (Part No. HD-44065-1) and CRANKSHAFT (ROLLER) BEARING REMOVAL/INSTALL SUPPORT TUBE (Part No. HD-44065-4).
3. Place support tube (2) on press table with the REMOVAL end up. Note that the support tube is stamped to provide proper orientation.
4. With the cam compartment facing downward, position crankshaft bearing bore over support tube. Verify the curved edges on pilot/driver (1) match the curved edges of crankcase (4) or damage will result.
5. Slide pilot/driver (1) through bearing into support tube.
6. Center pilot/driver under ram (3) of press. Apply pressure to pilot/driver until bearing is free.
7. Remove crankcase, pilot/driver and bearing from support tube. Discard bearing.

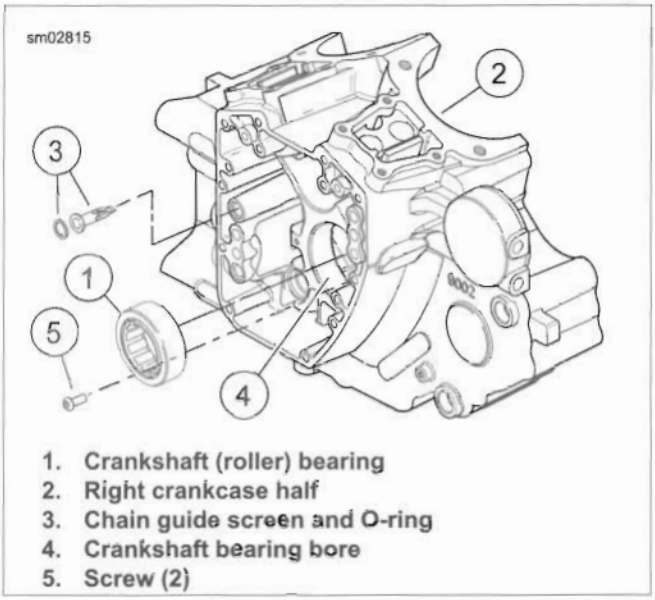

1. Crankshaft (roller) bearing
2. Right crankcase half
3. Chain guide screen and O-ring
4. Crankshaft bearing bore
5. Screw (2)

Figure 3-130. Right Main Bearing

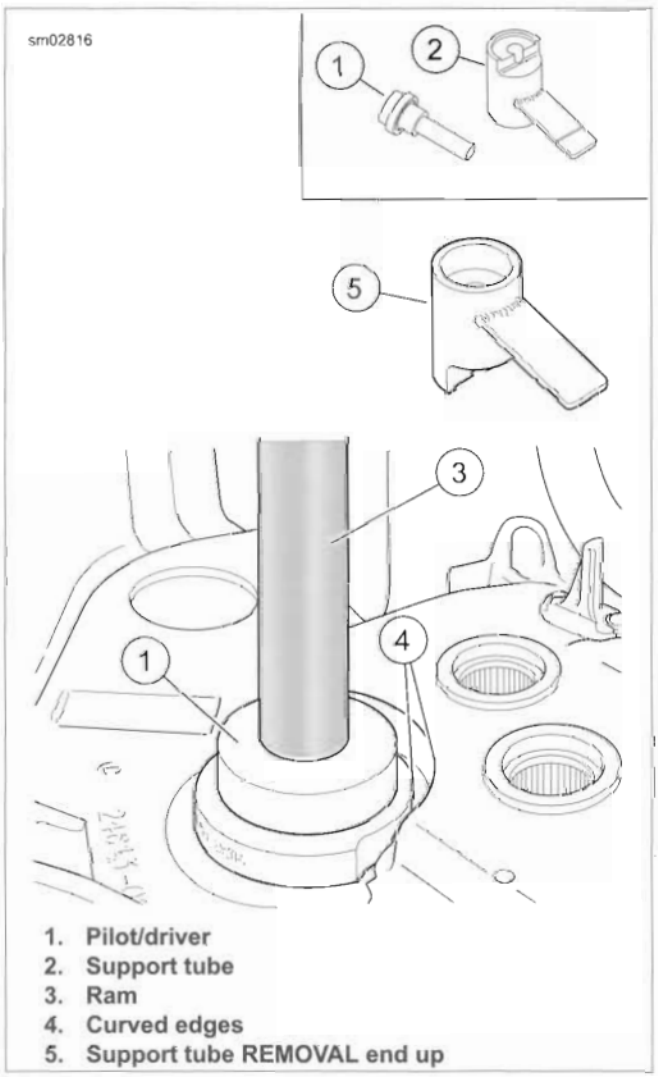

1. Pilot/driver
2. Support tube
3. Ram
4. Curved edges
5. Support tube REMOVAL end up

Figure 3-131. Right Main Bearing Removal

Main Bearing Installation

1. See Figure 3-132. Obtain CRANKSHAFT (ROLLER) BEARING REMOVAL/INSTALL PILOT/DRIVER (Part No. HD-44065-1), CRANKSHAFT (ROLLER) BEARING DRIVER SHIM (Part No. HD-42720-4) and CRANKSHAFT (ROLLER) BEARING REMOVAL/INSTALL SUPPORT TUBE (Part No. HD-44065-4).
2. Spread a thin film of clean H-D 20W50 engine oil on O.D. of **new** bearing (4).
3. Place support tube (2) on press table with the INSTALL end up. The support tube is stamped to provide proper orientation.
4. Place SHIM (Part No. HD-42720-4) on support tube (2).
5. With cam compartment side facing upward, position crankshaft bearing bore over support tube. Lip on support tube (5) must contact edge of crankcase as shown. This allows curved portion of inboard crankcase to contact top curved portion of support tube (2).
6. Start the **new** bearing in bearing bore with the lettering facing into the cam compartment (up).
7. Slide pilot/driver (1) through bearing into support tube.
8. Center pilot/driver under ram (3) of press. Apply pressure to pilot/driver until resistance is felt and bearing is bottomed on the support tube.
9. Remove pilot/driver and crankcase half from support tube.

NOTES

- *Verify that the bearing is flush or slightly below the surface of the crankcase. Never "pull" the bearing into position using the retaining screws.*
- *If **new** bearing fastener is not available, apply LOCTITE 243 MEDIUM STRENGTH THREADLOCKER AND SEALANT (blue) before installation.*

10. See Figure 3-130. Install two **new** main bearing retaining screws (5) from the cam compartment side. Tighten screws to 40-70 **in-lbs** (4.5-7.9 Nm).

Piston Jets Removal

1. See Figure 3-133. Remove two screws (1) to free piston jet (2) from crankcase.
2. Remove O-ring (3) from groove in mounting flange of jet. Discard O-ring.

Piston Jets Installation

1. See Figure 3-133. Apply a very thin film of clean H-D 20W50 engine oil to **new** O-ring (3) for piston jet. Install **new** O-ring in groove of jet mounting flange.
2. With jet pointed upward, start two screws (1) to secure piston jet (2) to crankcase. Tighten to 25-35 **in-lbs** (2.8-3.9 Nm).

NOTE

If piston jet is being reused, apply LOCTITE 222 LOW STRENGTH THREADLOCKER AND SEALANT (purple) to threads of screws before installation.

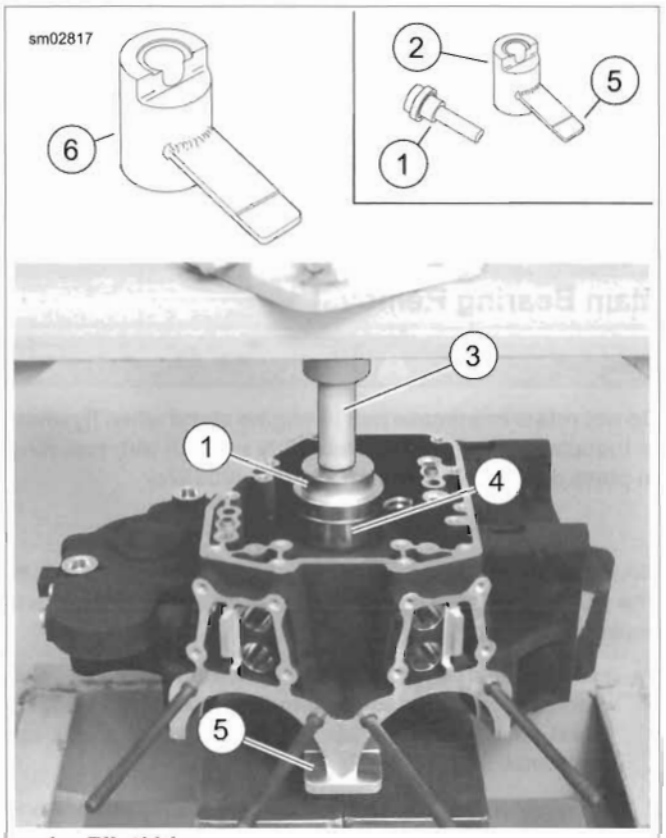

1. **Pilot/driver**
2. **Support tube**
3. **Ram**
4. **Crankshaft (roller) bearing**
5. **Support tube lip**
6. **Support tube INSTALL end up**

Figure 3-132. Right Crankshaft (Roller) Bearing Installation

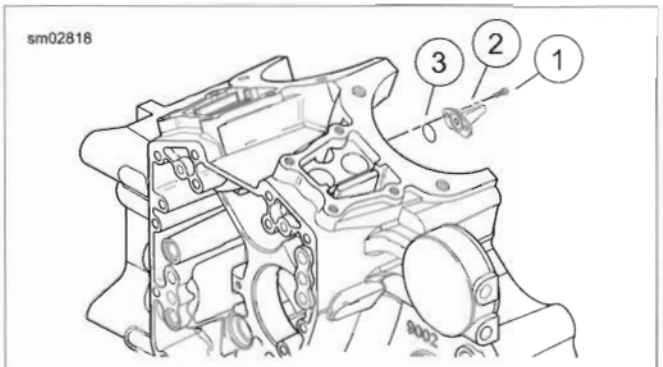

1. **Screw (4)**
2. **Piston jet (2)**
3. **O-ring (2)**

Figure 3-133. Piston Jets

LEFT CRANKCASE HALF

PART NUMBER	TOOL NAME
B-45655	CRANKCASE BEARING REMOVER/INSTALLER
HD-42720-5	REMOVER/INSTALLER SUPPORT TUBE

Main Bearing Removal

⚠CAUTION

Do not rotate crankcase half in engine stand when flywheel is installed. The flywheel assembly can fall out, resulting in parts damage or moderate injury. (00552c)

NOTE

Never move or lift the crankcase by grasping the cylinder studs. The crankcase is too heavy to be carried in this manner and could be dropped.

1. Hold flywheel assembly to prevent it from falling out of left crankcase half. Rotate bottom end assembly in engine stand so assembly is upright and flywheel shafts are horizontal.
2. Carefully slide flywheel assembly out of left crankcase and place it in a clean safe place.
3. Remove thrust washer from outboard side of crankcase half by pulling it past oil seal. Set thrust washer aside for inspection or reuse.
4. Remove oil seal from crankcase bore. Discard oil seal.
5. See Figure 3-134. Using a flat blade screwdriver, carefully lift edge of bearing retaining ring up out of its groove in crankcase.
6. Slide screwdriver tip around edge of bearing, lifting retaining ring up and out of groove. Do not damage lip of groove in crankcase.

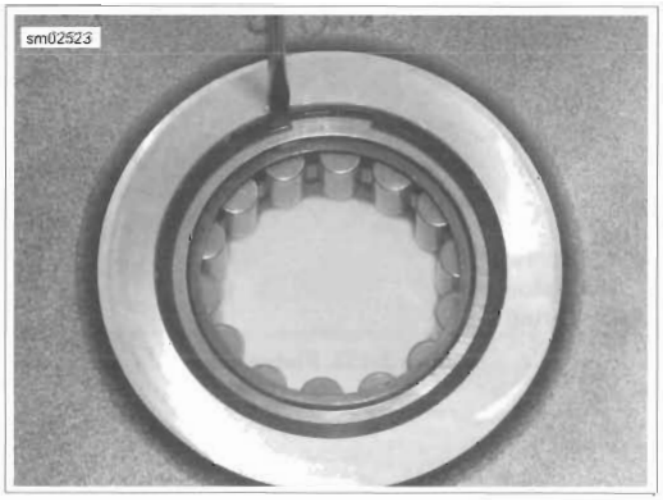

Figure 3-134. Removing Retaining Ring

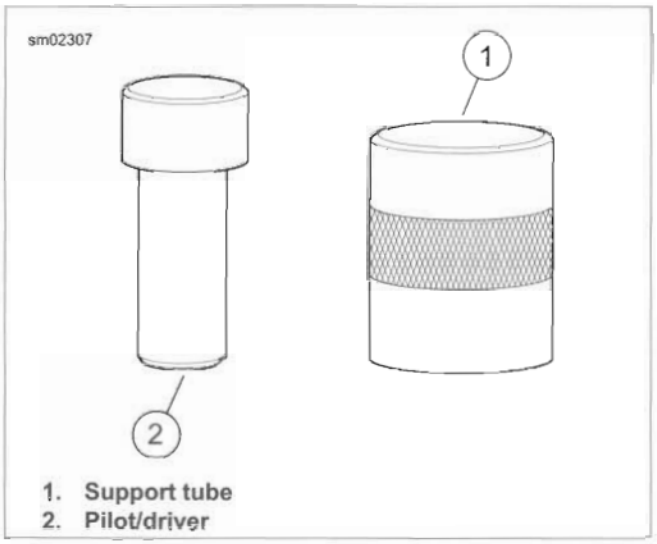

1. **Support tube**
2. **Pilot/driver**

Figure 3-135. Left Main Bearing Remover and Installer Tools

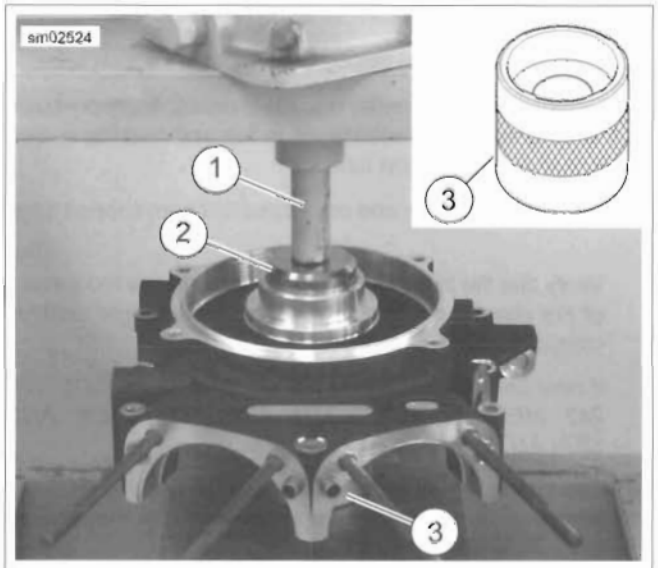

1. **Ram**
2. **Pilot/driver**
3. **Support tube ("A" end up)**

Figure 3-136. Left Main Bearing Removal

NOTE

See Figure 3-135. If the ram of the press is wider than the head of pilot/driver (2), a suitable press plug will be needed in order to remove the main bearing.

7. Obtain CRANKCASE BEARING REMOVER/INSTALLER (Part No. B-45655) and REMOVER/INSTALLER SUPPORT TUBE (Part No. HD-42720-5).
8. See Figure 3-136. Place support tube (3) on press table with "A" end up. Note that support tube is stamped "A" and "B" to provide proper orientation.
9. With the outboard side of the left crankcase half facing upward, position main bearing bore over support tube.
10. Slide pilot/driver (2) through the main bearing into support tube (3).

11. Center pilot/driver under ram (1) of press. Apply pressure to pilot/driver until bearing is free.
12. Remove crankcase half, pilot/driver and bearing from support tube. Discard bearing.

Main Bearing Installation

NOTES

- *Never move or lift the crankcase by grasping the cylinder studs. The crankcase is too heavy to be carried in this manner and could be dropped.*
- *Always replace sprocket shaft bearing inner race whenever left main bearing is replaced. See 3.26 CRANKCASE DISASSEMBLY AND REPAIR, Sprocket Shaft Bearing Inner Race.*

1. See Figure 3-135. Obtain CRANKCASE BEARING REMOVER/INSTALLER (Part No. B-45655) and REMOVER/INSTALLER SUPPORT TUBE (Part No. HD-42720-5).

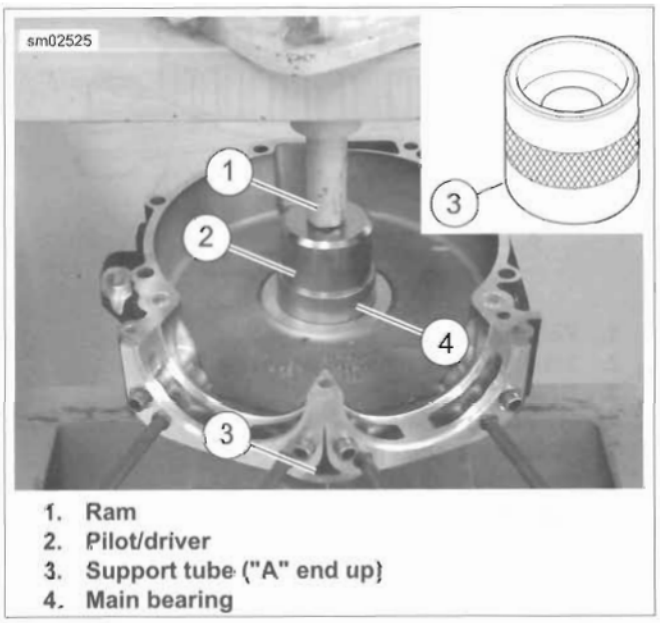

1. **Ram**
2. **Pilot/driver**
3. **Support tube ("A" end up)**
4. **Main bearing**

Figure 3-137. Left Main Bearing Installation

2. See Figure 3-137. Place a thin film of clean engine oil on outer diameter of **new** main bearing (4).
3. Place support tube (3) on hydraulic press table with the "A" end up.
4. With the inboard side of the left crankcase half facing upward, position main bearing bore over support tube.
5. Start **new** main bearing in bearing bore, letter side down.
6. Slide pilot/driver (2) through bearing into support tube.
7. Apply pressure to pilot/driver until bearing is lightly bottomed in main bearing bore.
8. Remove crankcase half and pilot/driver from support tube.
9. Install **new** retaining ring in bearing bore groove, being careful not to damage edges of groove. Make sure that retaining ring is fully seated in groove.

NOTE

If retaining ring will not fit into groove, the bearing may not be fully seated in the bore. Inspect bearing and bore. If necessary, remove bearing, clean bore and install bearing. Then install retaining ring.

SPROCKET SHAFT BEARING INNER RACE

PART NUMBER	TOOL NAME
HD-25070	ROBINAIR HEAT GUN
HD-34902-B	MAINSHAFT BEARING INNER RACE PULLER/INSTALLER
HD-44358	FLYWHEEL SUPPORT FIXTURE
HD-95637-46B	WEDGE ATTACHMENT
HD-97225-55C	SPROCKET SHAFT BEARING INSTALLER

Removal

If reusing flywheel, remove bearing inner race and thrust washer as follows:

1. See Figure 3-138. Install brass jaws or shop towels around teeth of vise to prevent damage to tool. Obtain FLYWHEEL SUPPORT FIXTURE (Part No. HD-44358). Clamp tool in vise with the round hole topside.
2. Insert crankshaft end through hole resting flywheel assembly on fixture. Slide knurled locating pin down slot in tool to engage crank pin hole. Hand tighten locating pin.
3. Slide hold-down clamp down slot to engage inboard side of right flywheel half, and then hand tighten knurled nut at bottom to secure. Repeat step to secure hold-down clamp on opposite side of flywheel.

NOTE

For proper clamping force, hold-down clamp must not be tilted. Rotate hex on outboard stud until clamp is level.

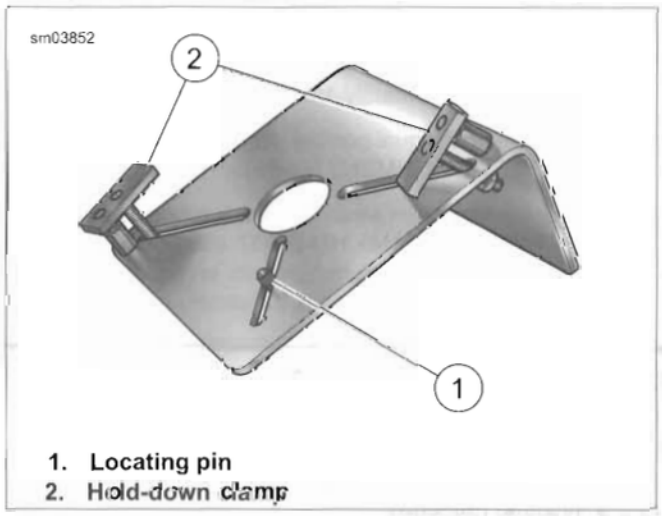

1. **Locating pin**
2. **Hold-down clamp**

Figure 3-138. Flywheel Holding Fixture

4. Position WEDGE ATTACHMENT (Part No. HD-95637-46B) on inboard side of thrust washer and turn hex nuts an equal number of turns to draw halves of wedge together.

NOTICE

Install wedge attachment only so far as necessary to ensure positive contact with bearing inner race. Installing tool with more contact than necessary will result in damage to the flywheel (00500b)

5. Obtain two 3/8-16 inch bolts 7-1/2 inches long (with flat washers). Install flat washers on bolts. Obtain bridge and forcing screw from MAINSHAFT BEARING INNER RACE PULLER/INSTALLER (Part No. HD-34902-B). Also obtain a suitable hardened washer to use between the puller screw and the end of the shaft.
6. Slide one bolt into channel on each side of bridge so that flat washer is between bridge and bolt head. Thread bolts into wedge attachment an equal number of turns.
7. Sparingly apply graphite lubricant to threads of forcing screw to prolong service life and verify smooth operation. Start forcing screw into center hole of bridge.

NOTE

Failure to use hardened washer may result in damage to forcing screw and/or sprocket shaft.

8. Place hardened washer against end of sprocket shaft. Thread forcing screw into bridge until the steel ball at the end of the screw makes firm contact with hardened washer.

⚠WARNING

Do not use heating devices with penetrating oil. Penetrating oil is flammable which could result in death or serious injury. (00375a)

9. Using the ROBINAIR HEAT GUN (Part No. HD-25070), uniformly heat the bearing inner race for about 30 seconds using a circular motion.

NOTE

To assist removal without heat, apply a light penetrating oil to shaft and leading edge of bearing inner race.

10. Turn forcing screw until thrust washer and bearing inner race move approximately 1/8 in. (3.2 mm).
11. Turn hex nuts an equal number of turns to separate halves of WEDGE ATTACHMENT (Part No. HD-95637-46B).
12. After bottoming thrust washer on shaft, reposition WEDGE ATTACHMENT (Part No. HD-95637-46B) on inboard side of bearing inner race. Turn hex nuts an equal number of turns to draw halves of wedge together.

NOTICE

Install wedge attachment only so far as necessary to ensure positive contact with bearing inner race. Installing tool with more contact than necessary will result in damage to the flywheel (00500b)

13. See Figure 3-139. Verify that the tool assembly is square, so that the bearing inner race is not cocked during removal.
14. Using the ROBINAIR HEAT GUN (Part No. HD-25070), uniformly heat the bearing inner race for about 30 seconds using a circular motion.

NOTE

To assist removal without heat, apply a light penetrating oil to shaft and leading edge of bearing inner race.

15. Turn forcing screw until bearing inner race is pulled free of sprocket shaft.
16. Remove thrust washer from sprocket shaft.

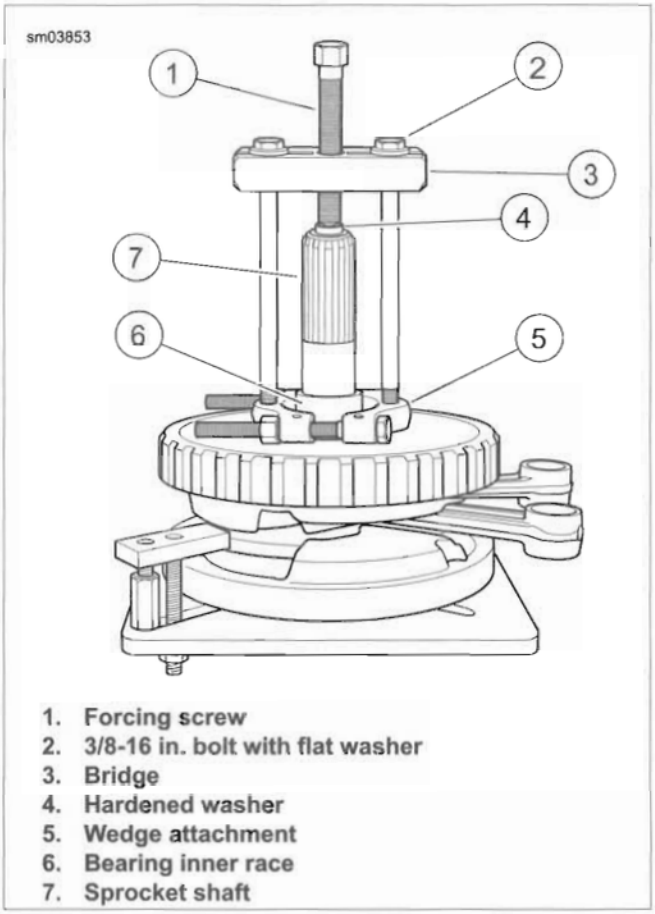

1. **Forcing screw**
2. **3/8-16 in. bolt with flat washer**
3. **Bridge**
4. **Hardened washer**
5. **Wedge attachment**
6. **Bearing inner race**
7. **Sprocket shaft**

Figure 3-139. Remove Inner Race from Sprocket Shaft

Installation

1. Place **new** thrust washer over sprocket shaft.
2. Place **new** bearing inner race on bench top. Using the ROBINAIR HEAT GUN (Part No. HD-25070), uniformly heat bearing inner race for about 60 seconds using a circular motion.
3. Wearing suitable gloves to protect hands from burns, place heated bearing inner race over sprocket shaft.

⚠WARNING

Do not use heating devices with penetrating oil. Penetrating oil is flammable which could result in death or serious injury. (00375a)

NOTE

To assist installation without heat, apply a light penetrating oil to shaft and leading edge of bearing inner race.

4. See Figure 3-140. Obtain the SPROCKET SHAFT BEARING INSTALLER (Part No. HD-97225-55C). Assemble tool as described below.
   a. See Figure 3-141. Thread pilot adapter into sprocket shaft.
   b. Thread pilot shaft onto pilot adapter.
   c. Slide long collar over pilot shaft until it contacts bearing inner race.
   d. Slide short collar over pilot shaft until it contacts long collar.
   e. Slide bearing and large flat washer over pilot shaft.
   f. Sparingly apply graphite lubricant to threads of pilot shaft to prolong service life and verify smooth operation.
   g. See Figure 3-142. Thread handle onto pilot shaft.
5. See Figure 3-143. Rotate handle of tool clockwise until bearing inner race makes firm contact with thrust washer. Verify that thrust washer cannot be rotated by hand.
6. Remove handle, flat washer, bearing, short collar, long collar, pilot shaft and pilot adapter from sprocket shaft.

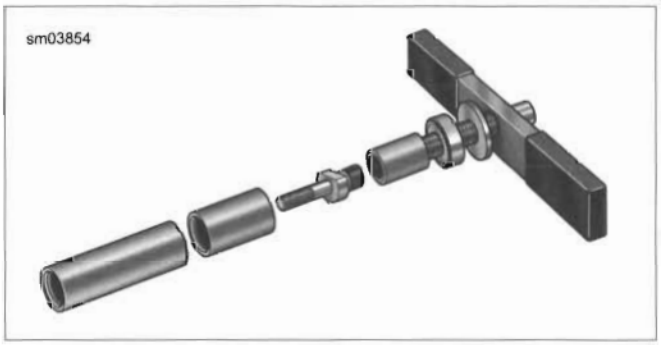

Figure 3-140. Sprocket Shaft Bearing Installer

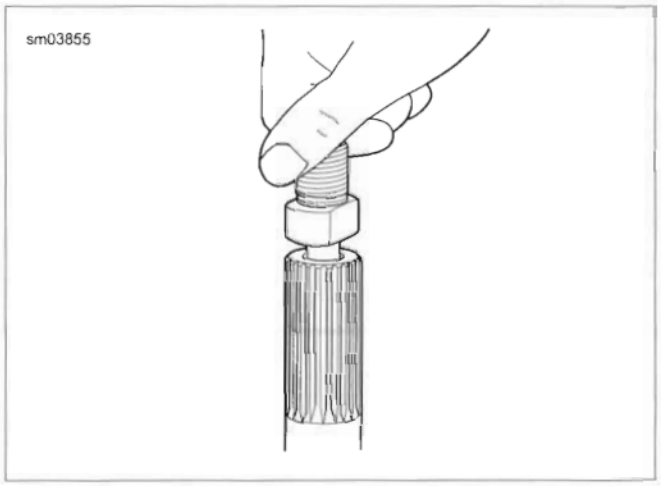

Figure 3-141. Thread Pilot Adapter into Sprocket Shaft

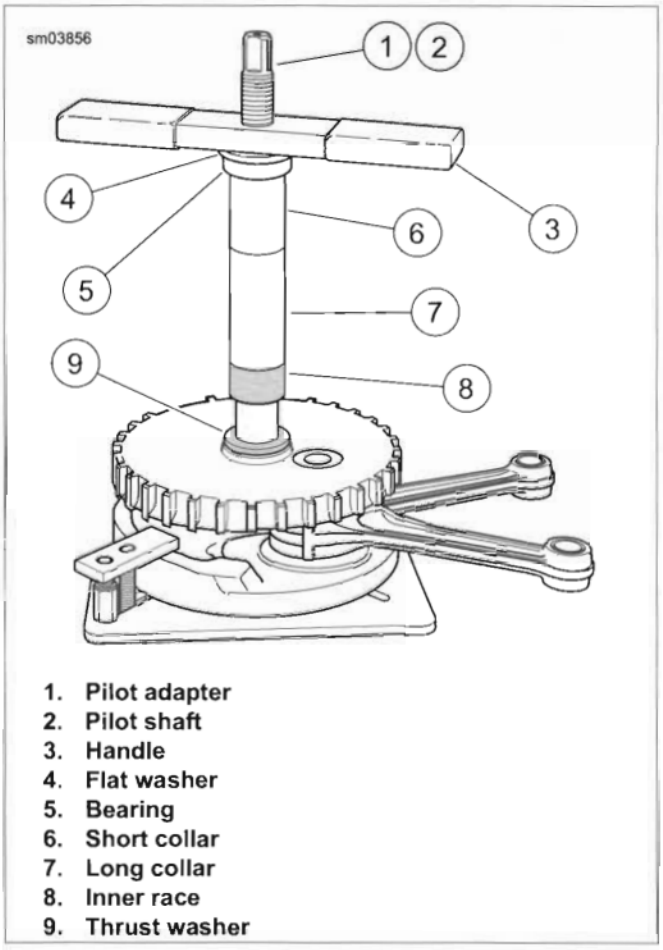

1. **Pilot adapter**
2. **Pilot shaft**
3. **Handle**
4. **Flat washer**
5. **Bearing**
6. **Short collar**
7. **Long collar**
8. **Inner race**
9. **Thrust washer**

Figure 3-142. Press Inner Race onto Sprocket Shaft: Setup

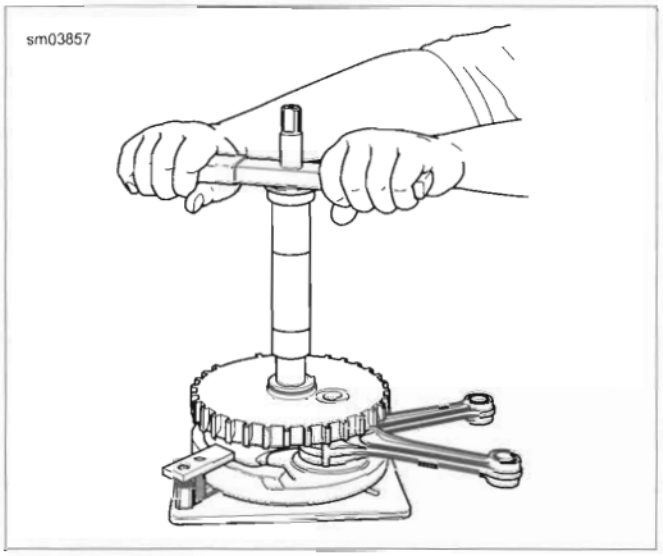

Figure 3-143. Press Inner Race onto Sprocket Shaft: Operation

CYLINDER STUDS

FASTENER	TORQUE VALUE	
Cylinder stud	120-240 **in-lbs**	13.6-27.1 Nm

Removal

1. Thread a nut onto cylinder stud.
2. Thread a second nut onto stud until it contacts the first.
3. Placing wrench on first nut installed, remove stud.

Installation

1. Place a steel ball inside a head screw. Put the head screw on the end of the cylinder stud without the collar.
2. Start the stud in the cylinder deck with the collar side down. Tighten using air gun until collar reaches crankcase.
3. Hand tighten stud to 120-240 **in-lbs** (13.6-27.1 Nm).

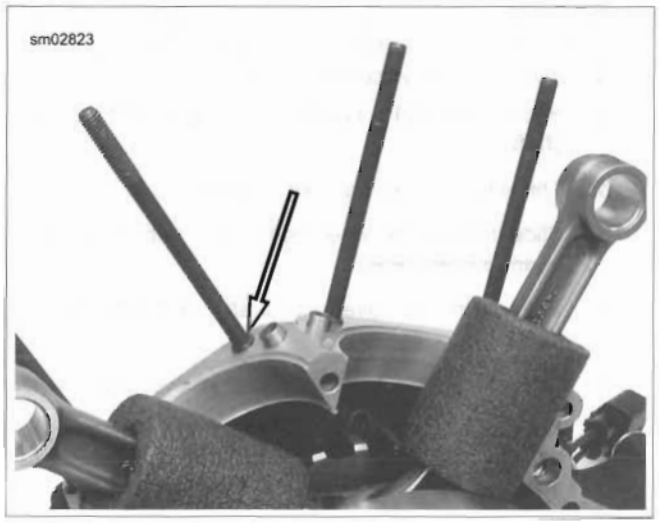

Figure 3-144. Collar Side Down

PIPE PLUGS AND OIL FITTINGS

FASTENER	TORQUE VALUE	
Crankcase oil fittings	120-168 **in-lbs**	13.6-19.0 Nm
Crankcase pipe plugs	120-144 **in-lbs**	13.6-16.3 Nm

Removal/Installation

NOTE

See 3.30 OIL TANK: ALL BUT FXSB or 3.31 OIL TANK: FXSB for information on replacing O-rings and retainers within oil tank fittings.

1. See Figure 3-145. Remove parts.
   a. Turn hex on oil fittings (1, 2, 3) counterclockwise until free.
   b. Turn pipe plugs (4, 5) counterclockwise until free.
2. Apply LOCTITE 565 THREAD SEALANT to fitting threads.
3. See Figure 3-145. Install parts.
   a. Turn hex on oil fittings (1, 2, 3) clockwise until snug. Tighten to oil fittings to 120-168 **in-lbs** (13.6-19.0 Nm).
   b. Install pipe plugs (4, 5). Tighten to 120-144 **in-lbs** (13.6-16.3 Nm).

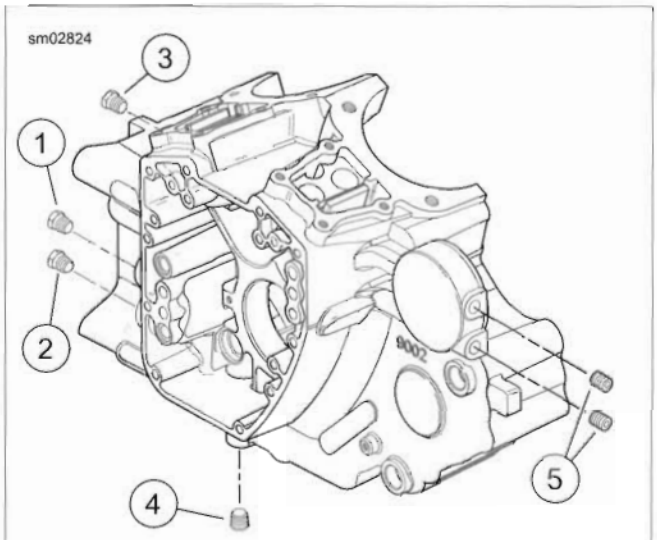

1. **Oil return fitting**
2. **Oil feed fitting**
3. **Oil vent fitting**
4. **Pipe plug**
5. **Pipe plugs (2)**

Figure 3-145. Oil Fittings and Pipe Plugs

GENERAL

Symptoms

Flywheels that shift out of true at the crank pin generally exhibit one of two symptoms: no oil pressure or vibration. This condition is also known as scissored flywheels.

No Oil Pressure

When the crankshaft shifts more than 0.015 in (0.381 mm), it can break the oil pump gerotors, resulting in a loss of oil pressure.

If a very low or no oil pressure condition is confirmed, inspect the oil pump and cam support plate. If the oil pump gerotors are bound or damaged, the cause is likely from a contaminant running through the pump or a shifted crankshaft. If this type of damage is found, always replace the oil lines and clean all debris from the oil pan or oil tank. See 1.23 TROUBLESHOOTING for general diagnostics of low oil pressure.

Vibration

Generally, left crankshaft runout must exceed 0.020 in. (0.508 mm) to be noticeable to the rider. It is much more likely that vibration issues will be resolved by following the checklist in 1.23 TROUBLESHOOTING.

If correct chassis set-up has been verified and other items in 1.23 TROUBLESHOOTING have been eliminated, checking left crankshaft runout is appropriate.

INSPECTION

NOTE

Do not attempt to straighten connecting rods. Straightening rods will damage both the upper bushing and lower bearing.

1. Replace the flywheel/connecting rod assembly if any of the following conditions are noted:
   a. Connecting rods are bent or twisted.
   b. Connecting rods do not fall under their own weight or are in a bind.
   c. Sprocket teeth are worn in an irregular pattern or chipped.
   d. The crankshaft (roller) bearing inner races are brinelled, burnt, scored, blued or damaged.
   e. The crankshaft runout exceeds specification.

NOTE

Bluing on connecting rods is part of the hardening process and is considered a normal condition.

2. Check connecting rod bearing clearance. Orient the assembly as shown in Figure 3-146.
   a. Holding the shank of each rod just above the bearing bore, pull up and down on the connecting rods.
   b. Any discernible up and down movement indicates excessive lower bearing clearance. Replace the flywheel/connecting rod assembly.
3. Measure crankshaft runout if the crankshaft is suspected of being out-of-true.

NOTE

If the flywheel, connecting rods or right side bearing inner race need to be replaced, then replace the entire flywheel assembly.

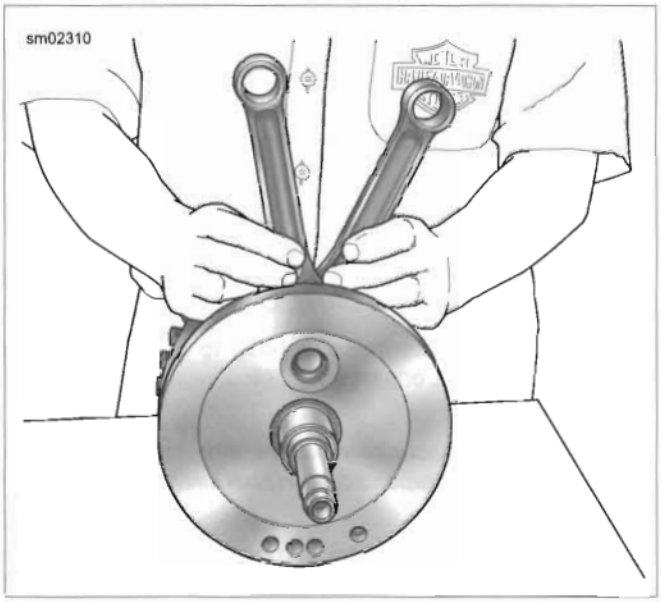

Figure 3-146. Connecting Rod Bearing Clearance

MEASURING CRANKSHAFT RUNOUT

Crankshaft Installed

NOTES

- *Perform the following checks during engine disassembly as a method to determine condition of crankshaft and whether crankshaft is suitable for reuse. The checks can be done with the engine either installed in the frame or removed.*
- *Dial indicators must be set up and zeroed **perpendicular to the shaft in both directions**. The indicator must be 90 degrees when viewed from the end and from the side.*
- *For a reliable reading, only measure on the cam support plate bushing machined surface of the crankshaft, never on a shaft adapter or the bolt holes.*
- *Never secure the dial indicator base to the vehicle frame. Movement within the engine mounts will result in a false reading.*
- *While rotating the crankshaft, the indicator needle may move to both the minus and plus sides of zero. The total indicator reading is the value to record.*

1. **Right Side**
   a. Remove spark plugs.
   b. Remove the cam support plate. See 3.11 CAM COMPARTMENT SERVICE.
   c. Secure a dial indicator base to a stable location (crankcase, engine stand, etc.).

NOTE

To obtain an accurate measurement, the dial indicator must be set up perpendicular in both directions to the shaft being measured.

d. Attach a dial indicator and set it up to measure runout at the cam plate bearing contact area of the crankshaft. Adjust the indicator to zero.

e. Slowly rotate the crankshaft one complete revolution and record the total needle movement.

f. Compare results of measurements. If the total indicator reading exceeds service wear limit, the crankshaft/flywheel assembly should be removed and checked on a truing stand. Refer to Table 3-42.

2. **Left Side**

a. Remove spark plugs.

b. Remove the primary cover and compensating sprocket. See 5.4 DRIVE COMPONENTS.

c. Secure a dial indicator base to a stable location (crankcase, engine stand, etc.).

NOTE

To obtain an accurate measurement, the dial indicator must be set up perpendicular in both directions to the shaft being measured.

d. Attach a dial indicator set up to measure runout near the end of the splined area of the crankshaft. Adjust the indicator to zero on the "high" part of one spline.

e. Mark the crankshaft and crankcase to use as reference for the amount of rotation.

NOTE

Pay attention to only the values from the "high" part of the splines.

f. Slowly rotate the crankshaft one complete revolution and record the total needle movement.

g. Compare results to Table 3-42. If the total indicator reading exceeds service wear limit, remove the crankshaft/flywheel assembly and check on a truing stand.

Crankshaft Removed

NOTES

- *The following procedure should be performed if the crankshaft/flywheel assembly is suspected of being out-of-true.*
- *The crankshaft must be supported by the bearing races during inspection. Never use centers as the holes may not be perfectly centered.*
- *Verify that the bearing races are in good condition and suitable for performing this inspection.*

1. See Figure 3-147. Mount crankshaft in truing stand so it is supported on the bearing races (1) by the roller supports (2).

2. Secure a dial indicator mount near each end of the crankshaft.

NOTE

Dial indicators must be perpendicular to the shaft in both directions.

3. Set up each indicator (3) to measure the machined surface (4) on one end and splines (5) on the other.

4. Adjust both indicators to zero.

5. Slowly rotate the crankshaft assembly while observing the total indicator reading.

NOTE

Twin Cam crankshaft/flywheel assemblies are not serviceable. Replace parts not within specifications.

6. Compare results of measurements. If the total indicator reading exceeds service wear limit, replace the crankshaft/flywheel assembly. Refer to Table 3-42.

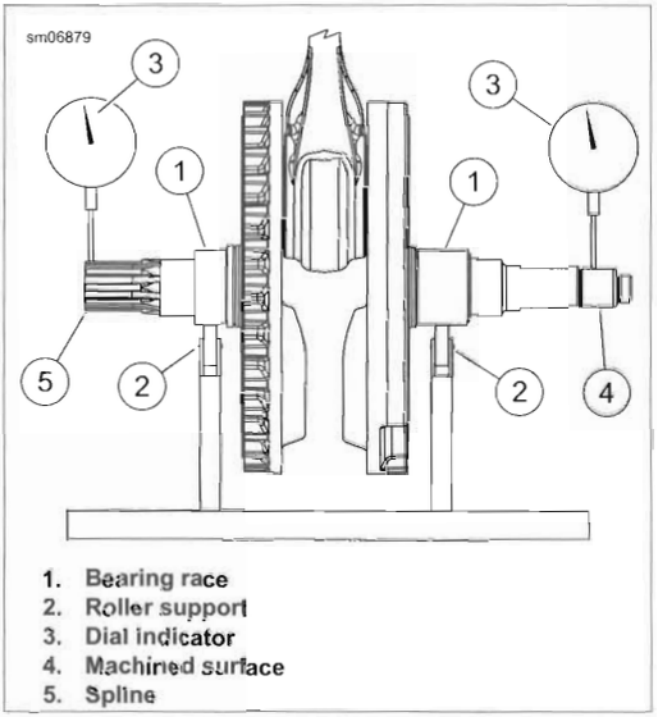

1. Bearing race
2. Roller support
3. Dial indicator
4. Machined surface
5. Spline

Figure 3-147. Checking Crankshaft Runout

Table 3-42. Flywheel

FLYWHEEL	REPLACE IF WEAR EXCEEDS	
	IN	MM
Runout (shaft measured in case)	0.012	0.305
Runout (measured in truing stand)	0.005	0.127
End play	0.013	0.330

CLEANING, INSPECTION, AND REPAIR

PART NUMBER	TOOL NAME
14900004	SCREAMIN? EAGLE® ENGINE CASE SUPPORT BLOCKS
HD-48309	BALANCER/BEARING INSTALLER
HD-48457-6	REMOVAL COLLET
HD-48457-A	BALANCER AND BEARING REMOVER
HD-48474	OUTER BALANCER BEARING REMOVER AND INSTALLER
HD-95635-46	ALL-PURPOSE CLAW PULLER
HD-95937-46B	WEDGE ATTACHMENT

FASTENER	TORQUE VALUE	
Counterbalance assembly bearing	40-70 in-lbs	4.5-7.9 Nm

General

1. Clean all parts except bearings in a non-volatile cleaning solution or solvent.

⚠WARNING

Compressed air can pierce the skin and flying debris from compressed air could cause serious eye injury. Wear safety glasses when working with compressed air. Never use your hand to check for air leaks or to determine air flow rates. (00061a)

2. Dry parts with low pressure compressed air.

Balance Shaft Removal

1. See Figure 3-148. Remove bearing fastener (4) from crankcase (1).
2. See Figure 3-149. Assemble BALANCER AND BEARING REMOVER (Part No. HD-48457-A).
   a. Sparingly apply clean engine oil to forcing screw (1) for smooth operation and to prolong service life.
   b. Install puller studs (3) in crankcase.
   c. Install plate (2) over puller stud with appropriate side marked "Front" or "Rear" facing up.
   d. Install forcing screw in balance shaft (4).
   e. Install washer, bearing and nut on forcing screw.

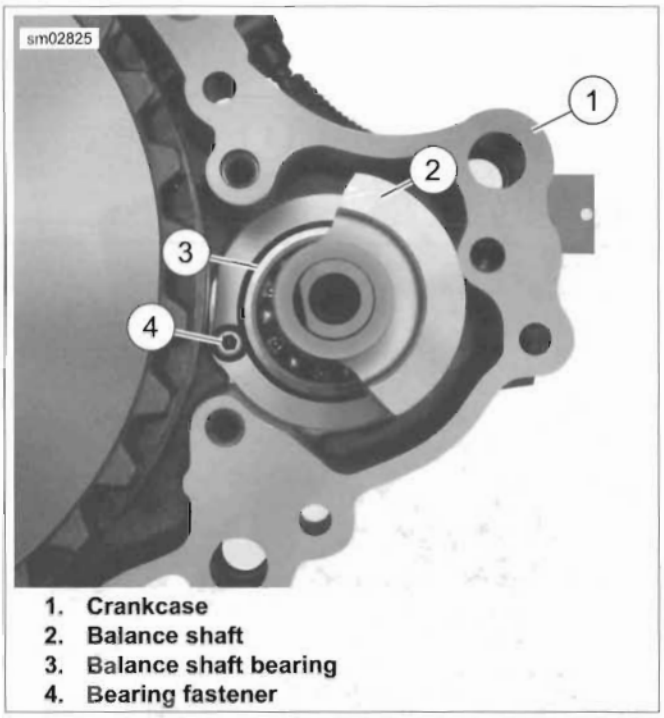

1. Crankcase
2. Balance shaft
3. Balance shaft bearing
4. Bearing fastener

Figure 3-148. Balance Shaft Bearing

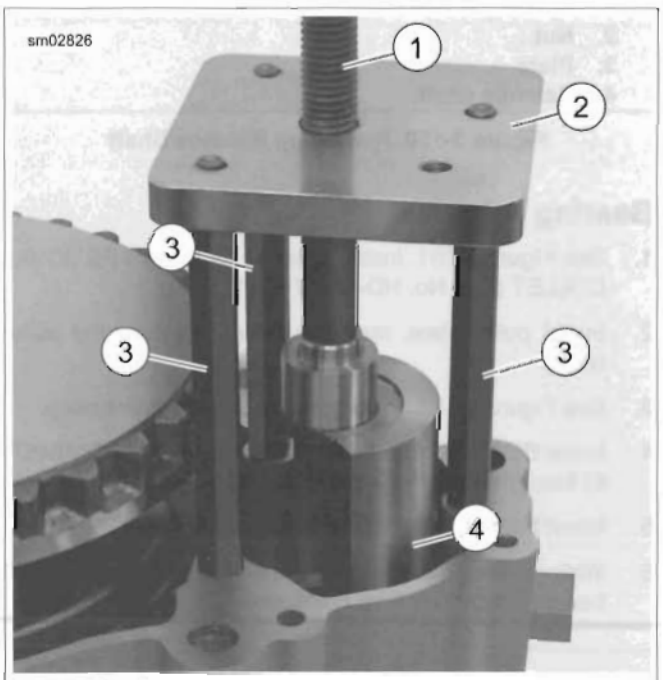

1. Forcing screw
2. Plate
3. puller stud (3)
4. Balance shaft

Figure 3-149. Balance Shaft Remover

3. See Figure 3-150. While holding forcing screw (1) from turning, turn nut (2) to remove balance shaft (4) and bearing from crankcase.

4. Using ALL-PURPOSE CLAW PULLER (Part No. HD-95635-46) and WEDGE ATTACHMENT (Part No. HD-95937-46B), remove bearing from balance shaft. Discard bearing.
5. Repeat removal on other shaft.

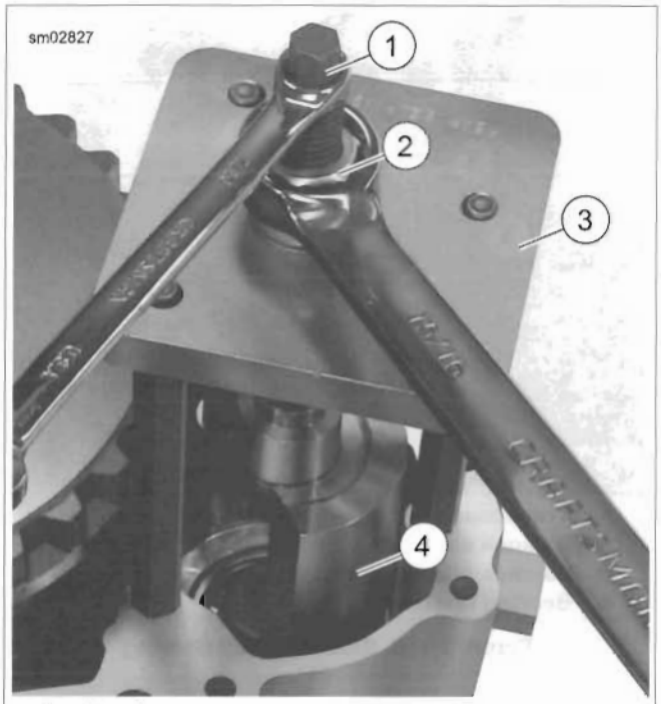

1. Forcing screw
2. Nut
3. Plate
4. Balance shaft

Figure 3-150. Removing Balance Shaft

Bearing Removal

1. See Figure 3-151. Install puller studs (2) and REMOVAL COLLET (Part No. HD-48457-6) (1).
2. Install puller plate, rear side facing up, onto the puller studs.
3. See Figure 3-152. Place washer (3) onto puller plate.
4. Insert BEARING PULLER SCREW (Part No. HD-48457-6) through washer (3) and puller plate.
5. Insert bearing puller screw into removal collet.
6. While holding bearing puller screw (1), rotate nut (2) until bearing separates from crankcase.

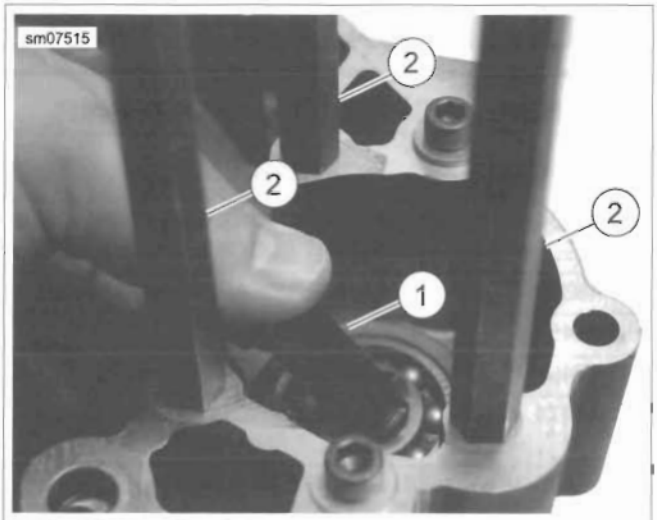

1. Removal collet
2. Puller stud (3)

Figure 3-151. Bearing Removal Collet

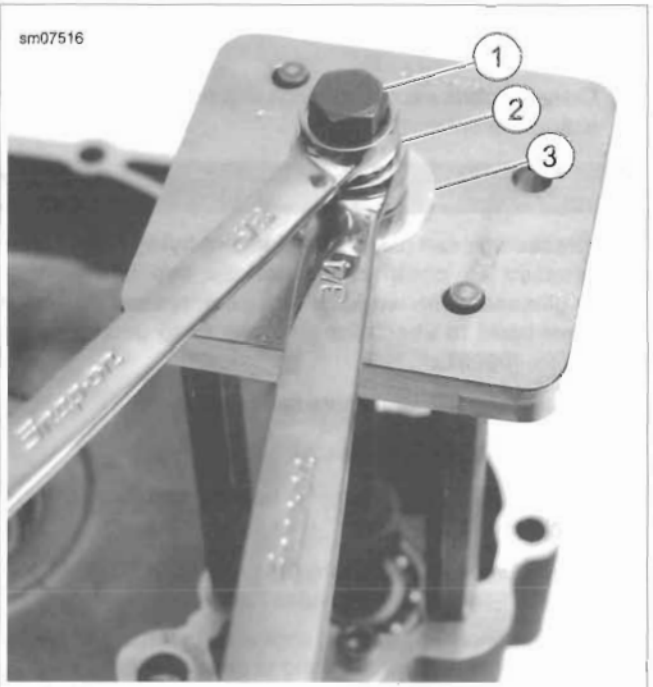

1. Bearing puller screw
2. Nut
3. Washer

Figure 3-152. Removing Bearing

Balance Shaft Installation

1. With lettering side facing up, press balancer shaft into new bearing.
2. See Figure 3-153. Place balancer shaft (3) and bearing in crankcase (4).
3. Place BALANCER/BEARING INSTALLER (Part No. HD-48309) (2) over balancer shaft.

NOTE

Use caution when supporting crankcase half. Failure to have adequate support may cause damage to crankcase.

4. Support crankcase half in a press using SCREAMIN? EAGLE® ENGINE CASE SUPPORT BLOCKS (Part No. 14900004).
5. With crankcase level and perpendicular to the balance shaft, press balance shaft and bearing into crankcase.

NOTE

*If **new** bearing fastener is not available, apply LOCTITE 243 MEDIUM STRENGTH THREADLOCKER AND SEALANT (blue) to threads of fastener before installation.*

6. See Figure 3-148. Install **new** bearing fastener (4). Tighten to 40-70 **in-lbs** (4.5-7.9 Nm).
7. Repeat installation on other shaft.

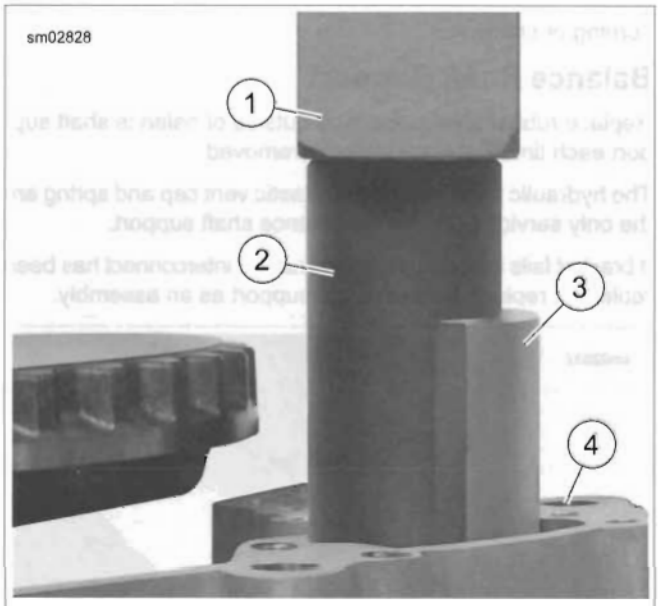

1. **Ram**
2. **Balancer shaft installer**
3. **Balancer shaft**
4. **Crankcase**

Figure 3-153. Balance Shaft Installation

Balance Shaft Support Bearings Removal

1. Inspect bearing for rough spots or binding. Always replace all four bearings (crankcase and housing, front and rear) during a complete bottom end overhaul.
2. See Figure 3-154. Remove retaining ring (3)
3. See Figure 3-155. Place housing (3) on a suitable support with top surface facing up.
4. Place bearing remover end of OUTER BALANCER BEARING REMOVER AND INSTALLER (Part No. HD-48474) (2) over bearing.
5. Center bearing remover under ram (1) of press. Slowly lower ram to remove bearing.
6. Discard retaining ring and bearing.

Balance Shaft Support Bearings Installation

1. See Figure 3-156. Place balance shaft support (4) upside down on a suitable support.
2. Set bearing on housing with letters on bearing facing up. Place bearing installer end of BALANCE SHAFT SUPPORT BEARING REMOVER/INSTALLER (Part No. HD-48474) (2) over bearing (3).
3. Center installer under ram (1) of press. Slowly lower ram to seat bearing until it fits flush against support.
4. See Figure 3-154. Install a **new** retaining ring (3).

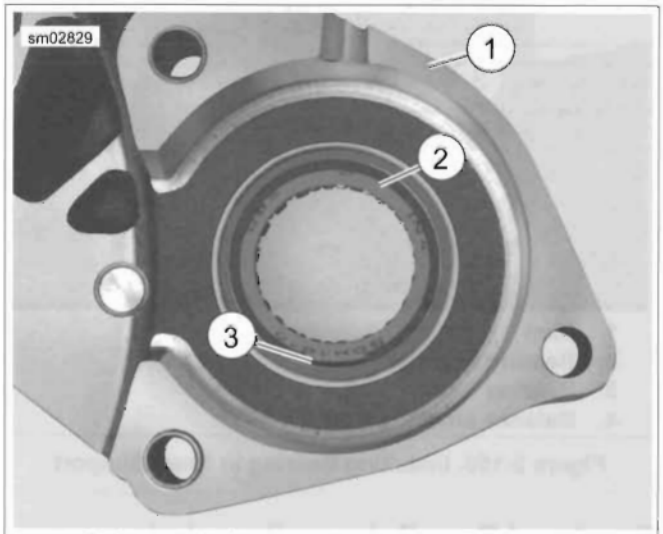

1. **Balance shaft support**
2. **Bearing**
3. **Retaining ring**

Figure 3-154. Balance Shaft Support Bearing

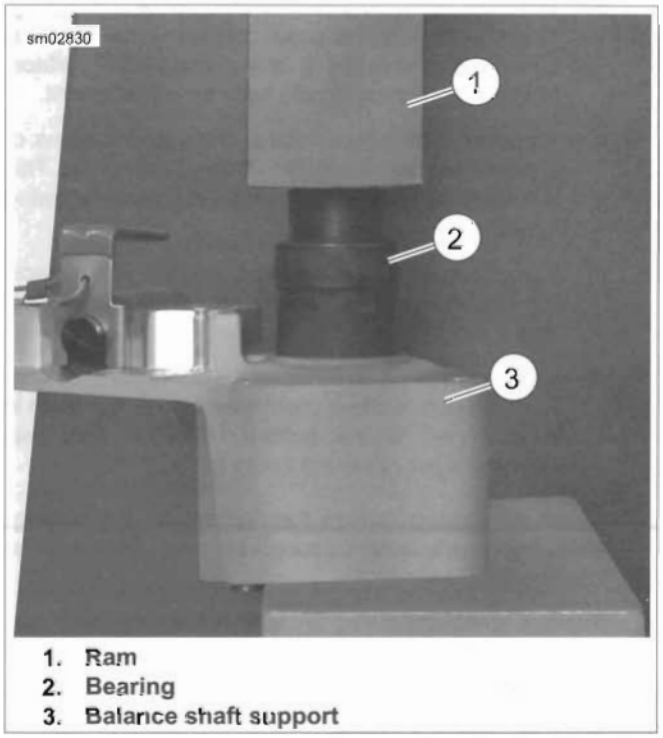

1. **Ram**
2. **Bearing**
3. **Balance shaft support**

Figure 3-155. Removing Bearing from Shaft Support

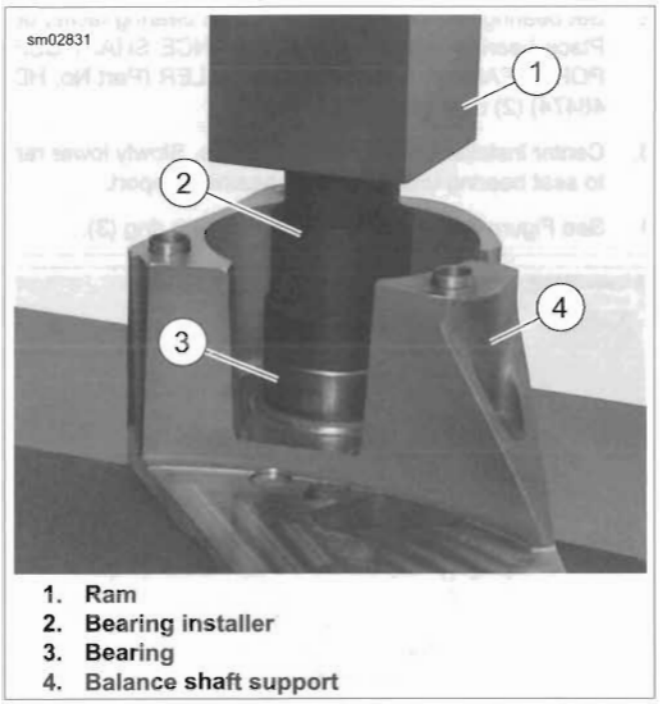

1. Ram
2. Bearing installer
3. Bearing
4. Balance shaft support

Figure 3-156. Installing Bearing in Shaft Support

Front and Rear Balance Sprockets

1. See Figure 3-157. Sprockets must be flat within 0.008 in. (0.203 mm).
2. Inspect sprocket teeth for any irregular wear patterns or chipping.
   a. The most common type of sprocket wear is polishing. This results from the chain contacting the sprocket surface and creating a shiny, mirror-like surface. Moderate polishing is not cause for replacement.
   b. Sprocket teeth may exhibit surface deformations or areas where the material has been compressed. This is known as brinelling. Replace sprockets showing brinelling.
   c. If small chunks of metal are removed from the surface, it is known as pitting. Replace sprockets showing pitting.
   d. Inspect base of each sprocket tooth for hooking. Hooking occurs when chain wears away the tooth in a scalloped shape pattern. Replace sprockets showing signs of severe hooking.
3. Check the mating surface that fits around the balance shaft. Improperly installed sprockets may show wear on inside edges.
4. Replace sprockets during a major bottom end overhaul. Always replace sprockets in sets, including the sprocket on the flywheel.

Hydraulic Tensioners

1. Test hydraulic tensioners using the leakdown test for the balance shaft support on an assembled engine. See 3.29 CRANKCASE ASSEMBLY.
2. Check if more air is flowing from the front or rear tensioner. Place your hand over the piston while applying compressed air to the interconnect passage.
3. See Figure 3-158. Disassemble components. Verify plastic vent cap (2) is on spring (3) and seated under tensioner piston (1). Minimum free length for spring (3) is 1.85 in. (47.0 mm).
4. Inspect exterior surface of piston (1) for damage. While some moderate amount of polishing is normal, surface pitting is cause for piston replacement.

Chain Tensioner Guides

Inspect tensioner guide surface. Replace any guide with grooves deeper than 0.080 in. (2.03 mm) or signs of melting, burning or cracking.

Balance Shaft Support

Replace rubber interconnect on outside of balance shaft support each time right crankcase is removed.

The hydraulic tensioner piston, plastic vent cap and spring are the only service parts for the balance shaft support.

If bracket fails leak down test and rubber interconnect has been replaced, replace balance shaft support as an assembly.

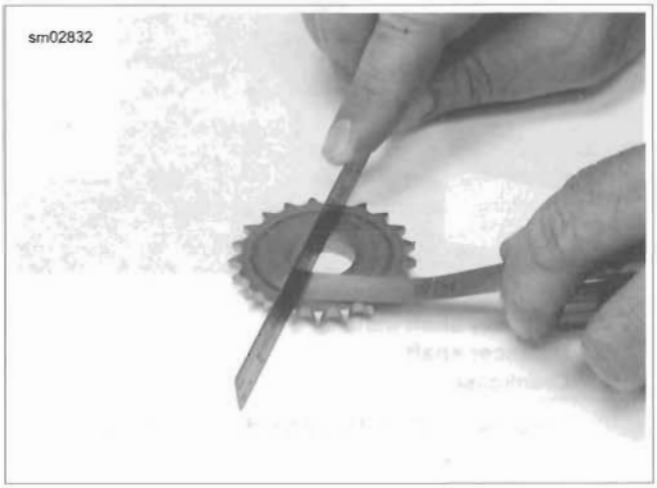

Figure 3-157. Sprocket Inspection

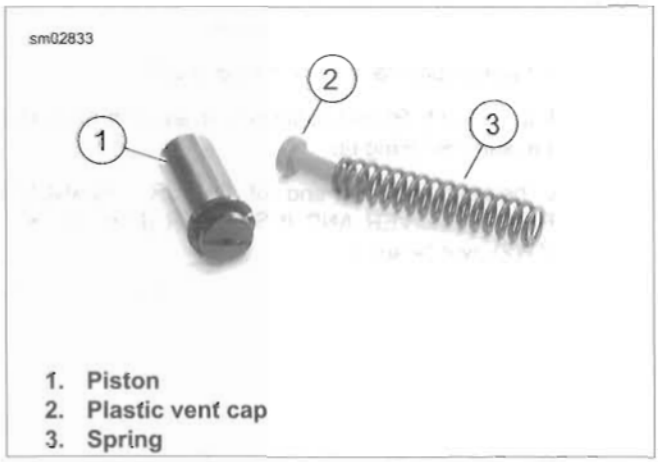

1. Piston
2. Plastic vent cap
3. Spring

Figure 3-158. Hydraulic Tensioners

Balance Chain

1. Check balance chain for missing bushings, side plates and turning marks. Inspect for tooth hooking or burn marks. Replace as necessary.
2. Chains will darken in color as the result of wear and exposure to engine oil. This darkening will almost always be some hue of brown. If the chain turns blue, it may be the result of heat exposure.
3. Replace balance chain any time the sprockets are replaced. Always apply a thin film of SCREAMIN' EAGLE ASSEMBLY LUBE before installation.

COUNTERBALANCER ASSEMBLY INSTALLATION

PART NUMBER	TOOL NAME
HD-42326-B	CRANKSHAFT GUIDE
HD-44062	BALANCE SHAFT RETENTION PINS
HD-44063	HYDRAULIC TENSIONER COMPRESSOR
HD-44408	HYDRAULIC TENSIONER RETAINERS
HD-48615	BALANCE SHAFT SPROCKET ALIGNMENT TOOL

FASTENER	TORQUE VALUE	
Balance shaft support screws	18-22 ft-lbs	24.4-29.8 Nm
Balance shaft bolts	42-47 ft-lbs	56.9-63.7 Nm

1. Install balance shafts and bearings. See 3.28 COUNTERBALANCER ASSEMBLY REPAIR for balancer shaft installation information.

NOTE

Never move or lift the crankcase by grasping the cylinder studs. The crankcase is too heavy to be carried in this manner.

2. If removed, install the flywheel assembly.
   a. Secure left crankcase half upright in engine stand.
   b. Slide CRANKSHAFT GUIDE (Part No. HD-42326-B) onto flywheel sprocket shaft.
   c. Slide flywheel assembly into left crankcase half. Remove guide.
3. Rotate left crankcase in the engine stand until the balance sprocket on the flywheel is facing straight upward

NOTE

Do not apply crankcase sealant to edge surface of balance shaft housing. Improper preparation of housing could cause balance sprocket misalignment and result in engine damage.

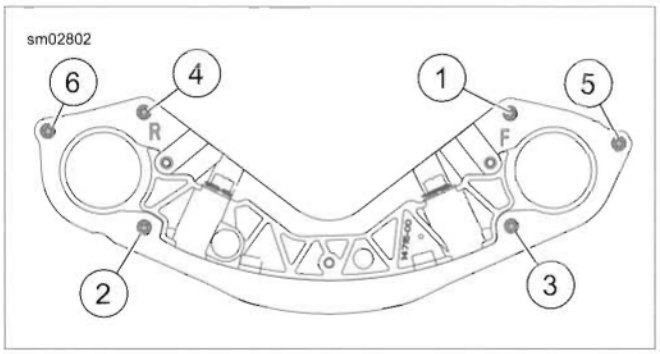

Figure 3-159. Balance Shaft Support Torque Sequence

4. With hydraulic tensioners compressed, slide balance shaft support assembly over front and rear balance shafts.
5. See Figure 3-159. Apply LOCTITE 262 HIGH STRENGTH THREADLOCKER AND SEALANT (red) to threads of screws for balance shaft housing. Insert screws and tighten to 18-22 ft-lbs (24.4-29.8 Nm) in the sequence shown.
6. See Figure 3-160. Rotate flywheel assembly to align the mark (1) on flywheel balance sprocket to the 6 o'clock position.
7. Insert BALANCE SHAFT RETENTION PINS (Part No. HD-44062) inside front and rear shaft supports to lock balance shafts in place.
8. Place spacer over front balance shaft.
9. Install front sprocket (labeled "F") and rear sprocket (labeled "R") over balance shafts with labels visible.
10. Loosely install a bolt and washer on each balance shaft.

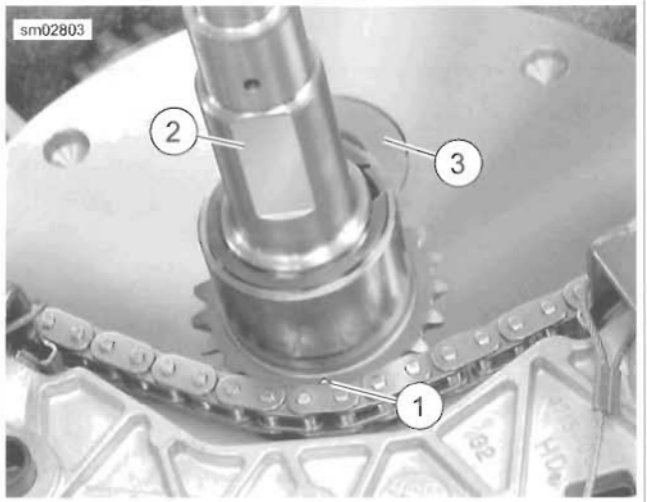

1. **Alignment mark location**
2. **Crankshaft flat**
3. **Crankpin hole**

Figure 3-160. Flywheel Alignment Mark

11. See Figure 3-161. Check alignment of flywheel sprocket to each balance shaft sprocket using BALANCE SHAFT SPROCKET ALIGNMENT TOOL (Part No. HD-48615).
    a. Slide tool over crankshaft and shoulder on timing chain gear. Tighten screw onto crankshaft until it bottoms on shoulder screw.
    b. Swing tool to each sprocket face.
    c. Alignment must be within 0.019 in. (0.48 mm) as indicated by the steps on the bottom of the tool.
    d. The tool's outside step must clear the top surface of the sprocket. The inside step must not pass over the sprocket edge.
    e. To adjust alignment, add or remove spacers behind front sprocket as necessary.
    f. Remove bolts, washers and front and rear sprockets from balance shafts.

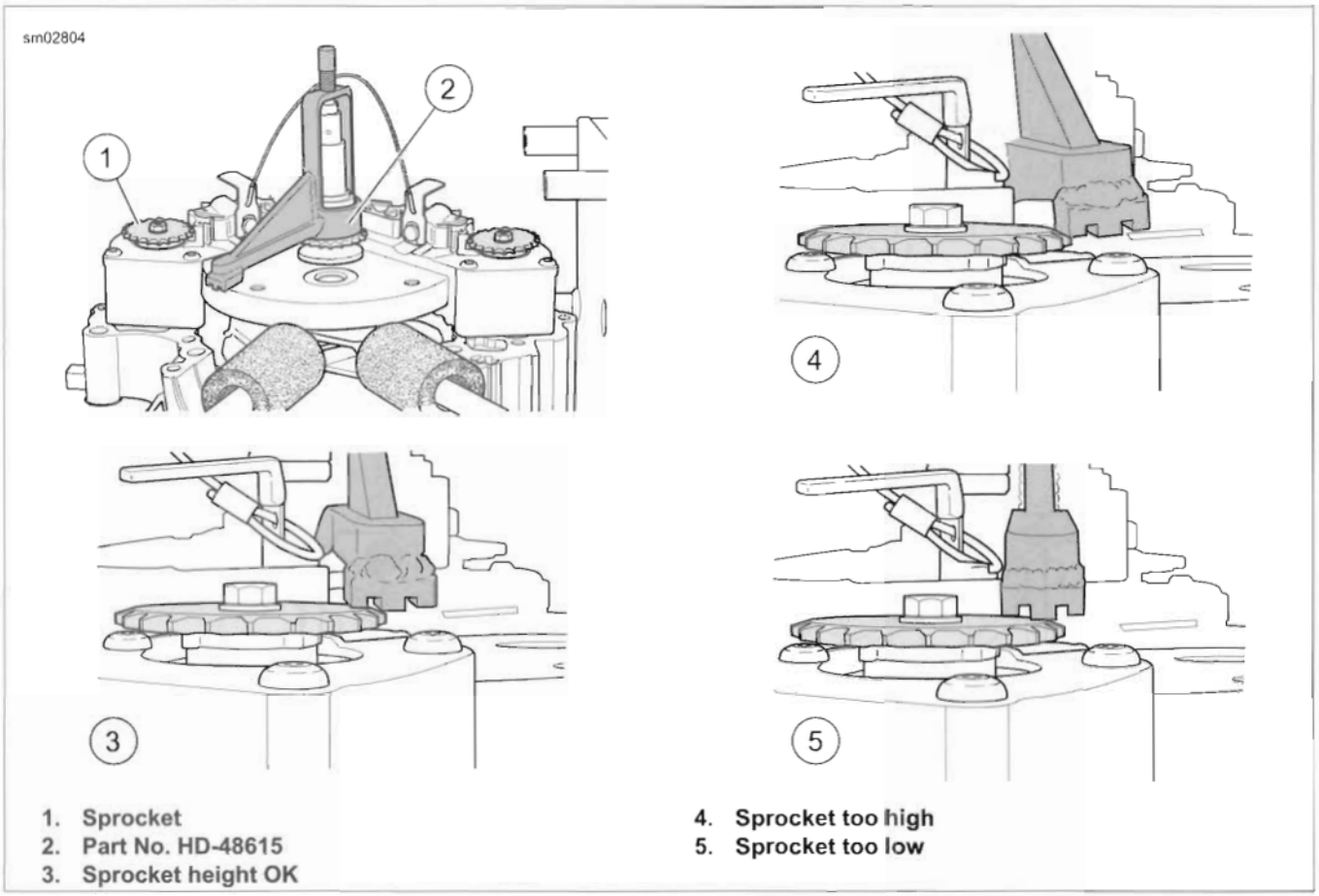

1. **Sprocket**
2. **Part No. HD-48615**
3. **Sprocket height OK**
4. **Sprocket too high**
5. **Sprocket too low**

Figure 3-161. Sprocket Alignment

12. See Figure 3-162. Install balance chain.
    a. Apply a very thin film of SCREAMIN' EAGLE ASSEMBLY LUBE to balance chain.
    b. Insert front sprocket (labeled "F") and rear sprocket (labeled "R") inside chain with colored links on chain aligned with timing marks on sprockets.
    c. Slide rear chain/sprocket assembly onto rear balance shaft with alignment marks visible. Align flywheel sprocket to mark on chain. Install front sprocket.
13. Install **new** bolt and washer in each balance shaft. Tighten to 42-47 ft-lbs (56.9-63.7 Nm).
14. Verify alignment of all three timing marks on chain and sprockets.

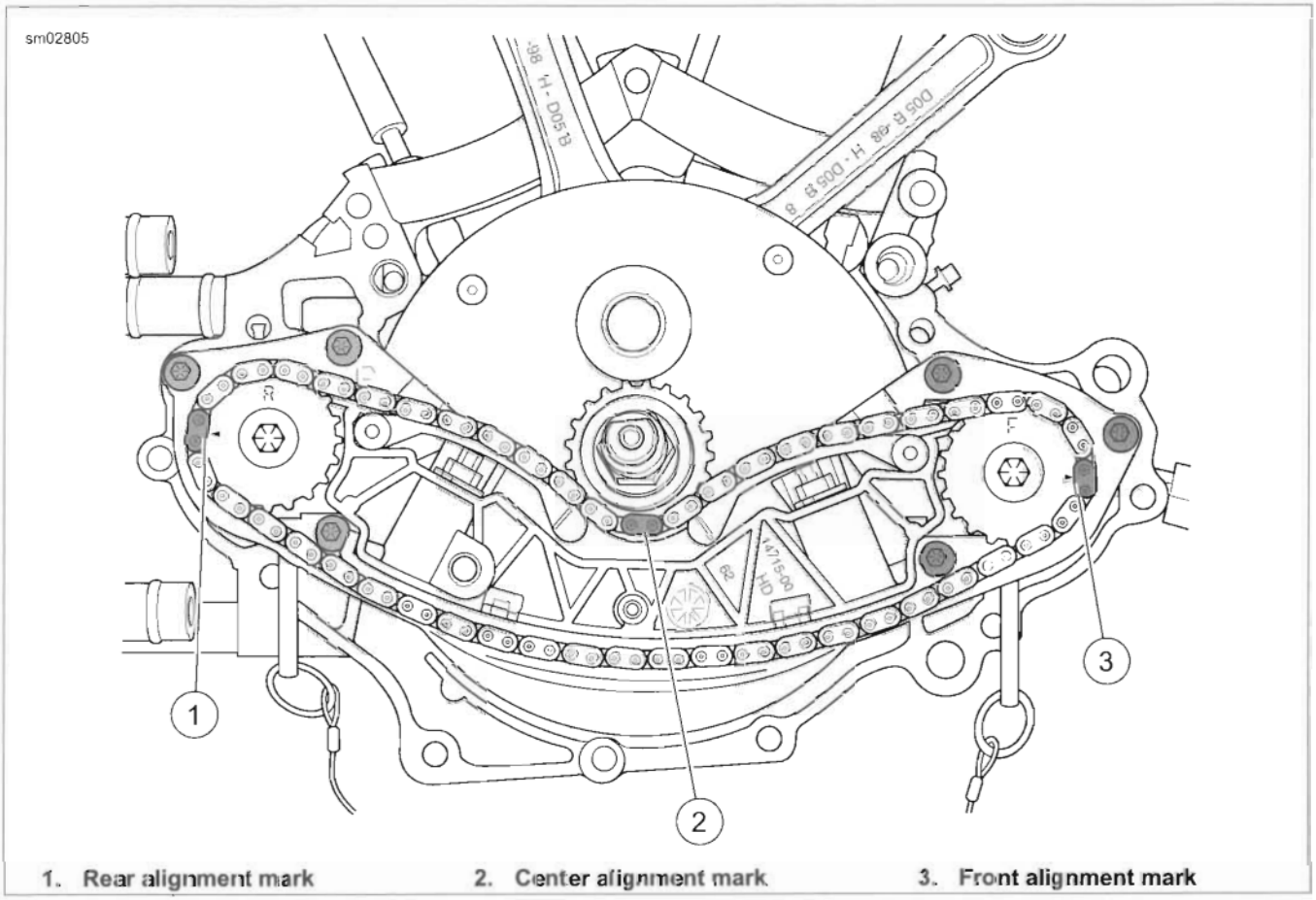

1. Rear alignment mark
2. Center alignment mark
3. Front alignment mark

Figure 3-162. Balance Chain

15. See Figure 3-163. Install chain tensioner guides. A small screwdriver may be used to aid installation.
    a. Install chain tensioner guide (1) (labeled "F" for front) with label visible. Push down on guide until it snaps into place on post.
    b. Install chain tensioner guide (2) (labeled "R" for rear) with label visible. Push down on guide until it snaps into place on post.
    c. Install lower chain tensioner guide (3) by snapping both retention tabs (4) into place on chain guide support assembly.
16. See Figure 3-164. Release both hydraulic tensioners using HYDRAULIC TENSIONER COMPRESSOR (Part No. HD-44063) (1).
    a. Pump handle on tool to compress hydraulic tensioner.
    b. Remove HYDRAULIC TENSIONER RETAINERS (Part No. HD-44408) (2) from lip of tensioner.
    c. Slowly release pressure on tool. Remove tool.
    d. Repeat procedure on remaining tensioner assembly.

NOTE

See Figure 3-165. If the ball at the end of the pin should separate and become loose in the engine assembly, severe engine damage could occur.

17. Remove both BALANCE SHAFT RETENTION PINS (Part No. HD-44062). Check that ball at tip of tool has not separated from pin.

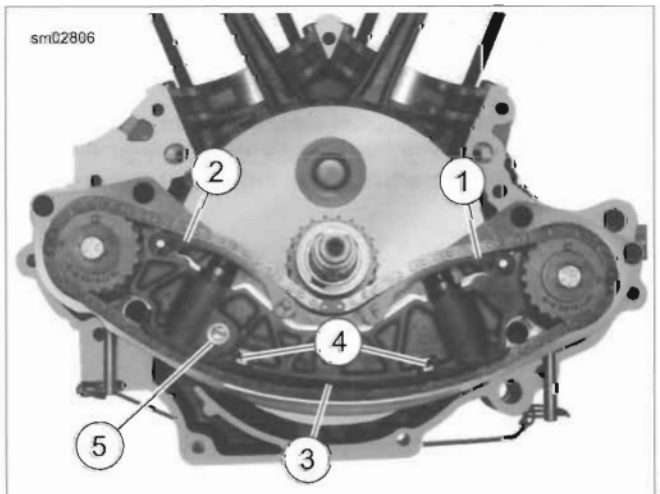

1. Front guide
2. Rear guide
3. Lower guide
4. Retention tabs
5. Rubber interconnect

Figure 3-163. Chain Tensioner Guides

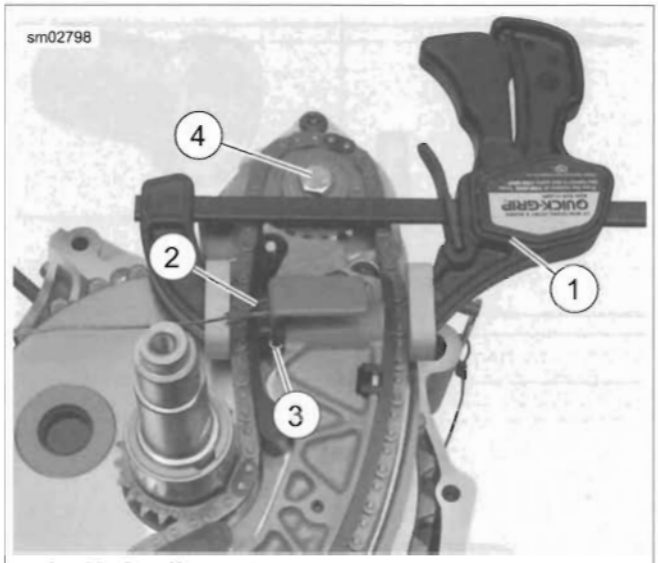

1. Hydraulic tensioner compressor
2. Hydraulic tensioner retainers
3. Hydraulic tensioner

Figure 3-164. Hydraulic Tensioner Tools (Front Tensioner Shown)

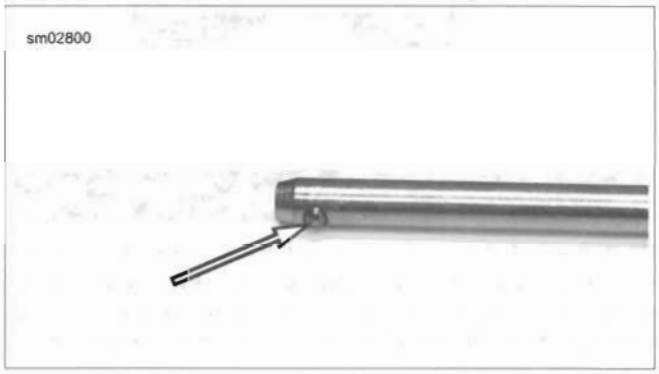

Figure 3-165. Balance Shaft Retention Pin

CRANKCASE

PART NUMBER	TOOL NAME
HD-35667-A	CYLINDER LEAKDOWN TESTER
HD-39361-B	SPROCKET SHAFT OIL SEAL INSTALLER
HD-42326-B	CRANKSHAFT GUIDE
HD-97225-55C	SPROCKET SHAFT BEARING INSTALLER

FASTENER	TORQUE VALUE	
Crankcase bolt, 1st torque	120 in-lbs	13.6 Nm
Crankcase bolt, final torque	15-19 ft-lbs	20.3-25.8 Nm

1. Secure left crankcase half in engine stand.
2. Rotate crankcase assembly so that flywheel pinion shaft is pointing straight up.
3. See Figure 3-163. Install **new** rubber interconnect (5) on balance shaft support assembly.
4. See Figure 3-162. Verify correct alignment of all three timing marks on chain and sprockets.
5. Apply a bead of HARLEY-DAVIDSON HIGH PERFORMANCE SEALANT - GRAY approximately 0.056 in. (1.42 mm) wide to the split line face of the right crankcase half.
6. See Figure 3-166. Place CRANKSHAFT GUIDE (Part No. HD-42326-B) (2) over end of crankshaft until it contacts shoulder on shaft.
7. Mate case halves. Remove tool.
8. See Figure 3-167. Start the twelve crankcase bolts and tighten in the following order.
   a. Finger-tighten each crankcase bolt.
   b. Tighten the crankcase bolts to 120 **in-lbs** (13.6 Nm) in the order shown.
   c. Following the same sequence, tighten each bolt to 15-19 ft-lbs (20.3-25.8 Nm).
9. Rotate crankcase assembly so that sprocket shaft is pointing straight up.
10. Apply a liberal amount of SCREAMIN' EAGLE ASSEMBLY LUBE into main bearing and rotate flywheel assembly to distribute.
11. Install thrust washer on sprocket shaft with "OUT" facing out (and the chamfer inboard). If using original part without markings, orient as required to preserve existing wear pattern.

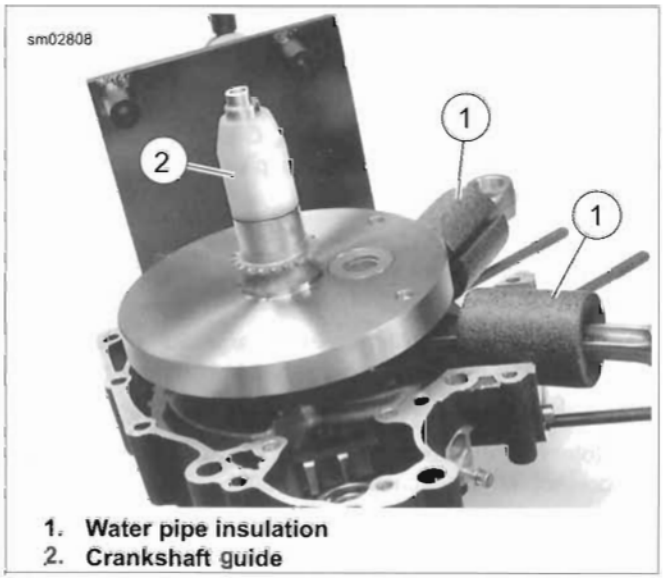

1. Water pipe insulation
2. Crankshaft guide

Figure 3-166. Crankshaft Guide (Part No. HD-42326-B)

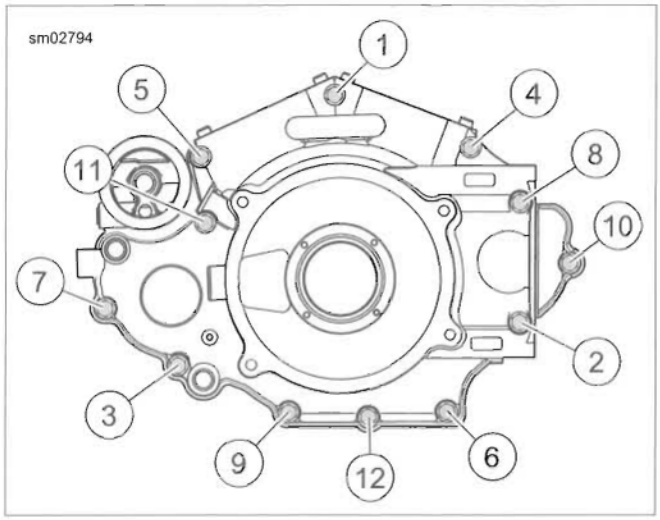

Figure 3-167. Tighten in Sequence Shown

12. See Figure 3-168. Install **new** oil seal into bearing bore. Obtain pilot adapter, pilot shaft, short collar, bearing, large flat washer and handle from SPROCKET SHAFT BEARING INSTALLER (Part No. HD-97225-55C).
    a. Thread pilot adapter into sprocket shaft.
    b. Thread pilot shaft onto pilot adapter.
    c. Verify that lip garter spring is in place on both sides of oil seal.
    d. Install sprocket shaft spacer in oil seal bore.
    e. With the lettering on the oil seal facing outward, slide sprocket shaft spacer and oil seal over pilot shaft until it contacts bearing bore.
    f. Slide SPROCKET SHAFT OIL SEAL INSTALLER (Part No. HD-39361-B) over pilot shaft until it contacts oil seal.

    NOTE

    Lightly apply clean engine oil to pilot shaft threads. This prolongs service life and provides smooth operation.

    g. Slide short collar, bearing, large flat washer, and thread handle onto pilot shaft to complete assembly of tool.
13. Rotate handle clockwise until oil seal installer makes firm contact with crankcase stator mount.
14. Remove tool components from sprocket shaft.

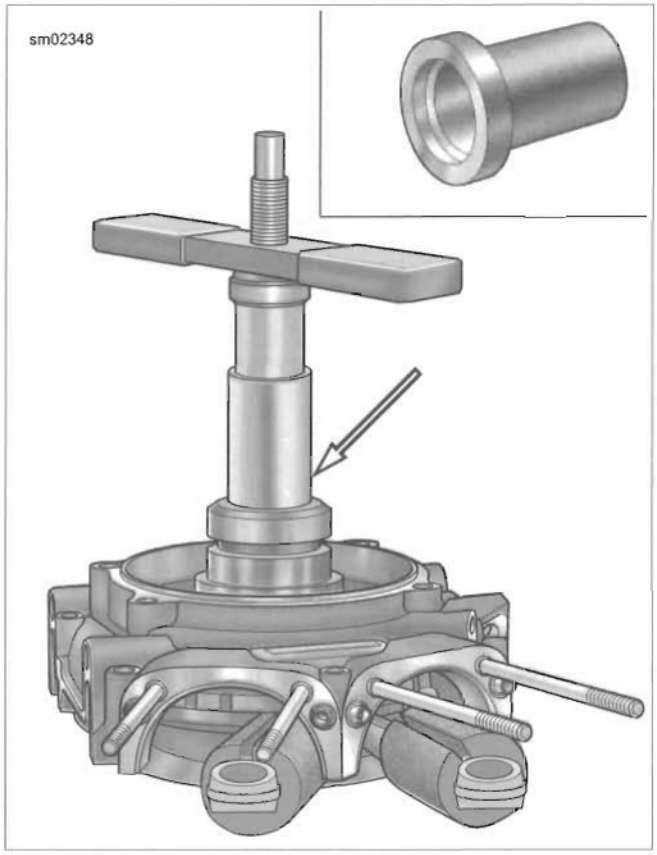

Figure 3-168. Sprocket Shaft Oil Seal Installer

⚠WARNING

Compressed air can pierce the skin and flying debris from compressed air could cause serious eye injury. Wear safety glasses when working with compressed air. Never use your hand to check for air leaks or to determine air flow rates. (00061a)

NOTES

- *Individuals not using MAC leakdown testers supplied by KENT-MOORE TOOLS must also calibrate line pressure to 35 PSI (241 kPa) using a remote pressure regulator if necessary.*
- *All SNAP-ON meters will use a baseline of a 50% change when outlet is plugged.*

15. See Figure 3-169. Remove screen and O-ring from chain guide oil passage (2). Perform leakdown test to verify proper assembly.
    a. Obtain CYLINDER LEAKDOWN TESTER (Part No. HD-35667-A) and a leakdown tester nipple which will fit inside the chain guide oil passage.
    b. Allow compressed air to run to discharge any water.
    c. Regulate air pressure to 35 PSI (241 kPa). Feed shop air into leakdown tester and test for calibration. Place your gloved thumb on and off the adapter outlet and watch the pressure change.
    d. Apply a light coat of SCREAMIN' EAGLE ASSEMBLY LUBE to nipple. Insert nipple into chain guide oil passage (2).
    e. Record the change in pressure. A typical system will read a 1-8 PSI (7-55 kPa) drop on a MAC meter or a 6-16% drop (SNAP-ON meter reads 56-66) from 35 PSI (241 kPa).
    f. If pressure drop is greater than 11 PSI (75 kPa) on a MAC meter [greater than 20% on a SNAP-ON meter (meter reads 70 or greater)], disassemble the engine and inspect the rubber interconnect. Replace if missing or damaged. If the interconnect is fine, replace the chain guide bracket.
    g. Install chain guide screen and O-ring.

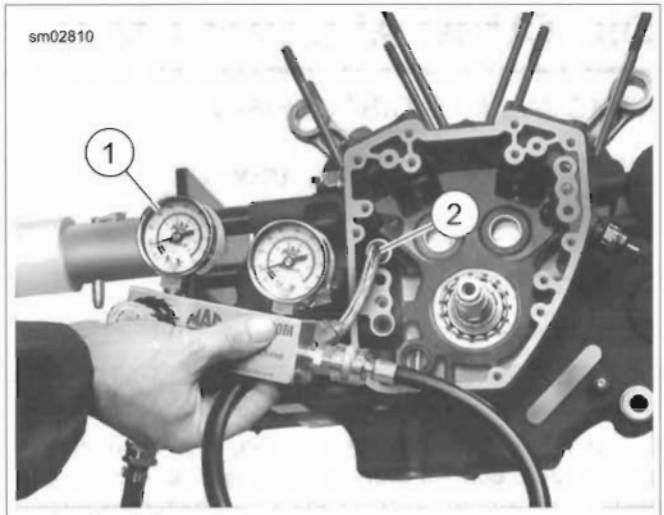

1. **Leakdown tester**
2. **Chain guide oil passage**

Figure 3-169. Leakdown Test

16. Rotate crankcase in engine stand so that cam cover flange is facing upward.
17. Apply a liberal amount of SCREAMIN' EAGLE ASSEMBLY LUBE into main bearing and rotate flywheel assembly to distribute.
18. Install oil pump and cam support plate. See 3.24 CAM COMPARTMENT AND COMPONENTS.
19. Complete engine assembly.

REMOVAL AND DISASSEMBLY

PART NUMBER	TOOL NAME
HD-44455	OIL LINE REMOVING TOOL

Oil Tank

1. Remove seat.

⚠WARNING

Disconnect negative (-) battery cable first. If positive (+) cable should contact ground with negative (-) cable connected, the resulting sparks can cause a battery explosion, which could result in death or serious injury. (00049a)

2. Disconnect both battery cables, negative cable first, and remove battery. See 1.19 BATTERY MAINTENANCE.
3. Remove battery caddy. See 7.12 BATTERY CABLES.
4. Remove rear exhaust pipe. See 4.17 EXHAUST SYSTEM.
5. Drain oil tank. See 1.6 ENGINE OIL AND FILTER.
6. Remove rear fender assembly.
7. Remove splash guard.
   a. Remove fastener securing bottom of splash guard.
   b. Pull bottom of splash guard from frame tabs.
   c. Detach top of splash guard from rear fork tube.

NOTE

To ease installation, make note of wire and hose routing before removing electrical panel and oil tank.

8. Remove EVAP hose and wiring from clip on left side of electrical panel.
9. Remove fasteners securing electrical panel. Move panel aside.
10. See Figure 3-171. Remove two bolts from behind main fuse.
11. See Figure 3-172. Remove two bolts (22).
12. Remove two bolts with washers (19) from top bracket (18).
13. Cut lower drain hose clamp (2) from frame.
14. Cut clamp (4) from either side of oil feed hose (5).
15. Remove positive battery cable from starter motor post.
16. See Figure 3-170. Detach vent (1) and return (2) oil lines at front of tank using OIL LINE REMOVING TOOL (Part No. HD-44455).
   a. Slide cover (3) away from oil line.
   b. Insert tool (4) inside retainer (5).
   c. Pull oil line straight out from tank leaving oil line retainer (5) inside tank.
17. Remove oil tank from right side of vehicle.

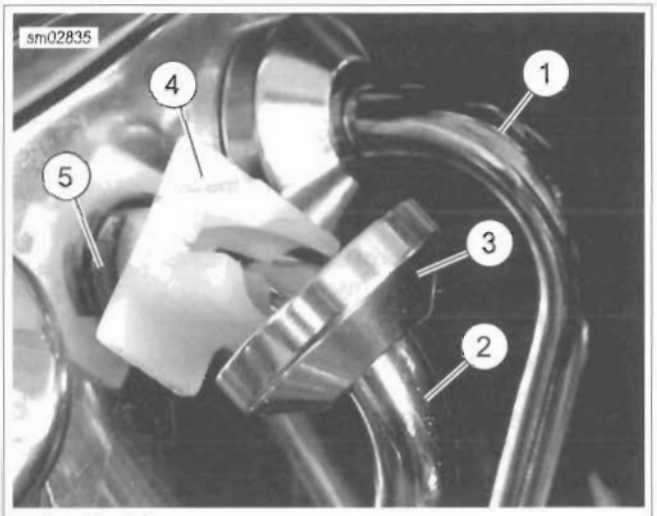

1. **Vent line**
2. **Return line**
3. **Cover**
4. **Oil line removing tool**
5. **Oil line retainer**

Figure 3-170. Line Cover

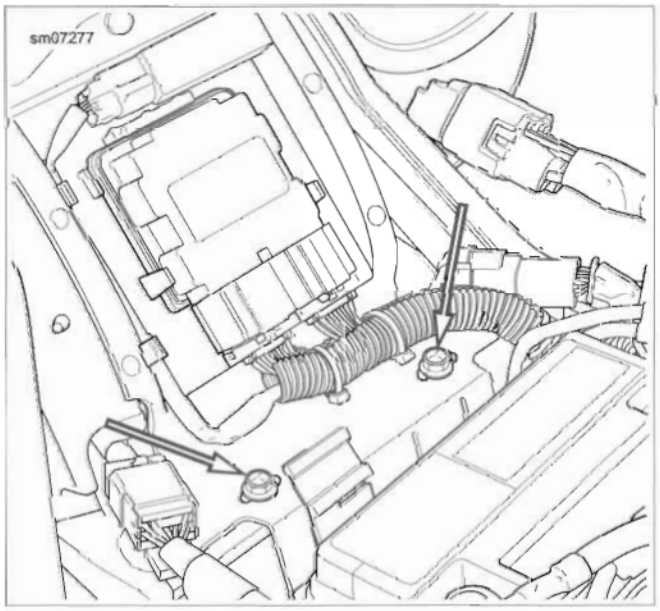

Figure 3-171. Wire Shield Fasteners

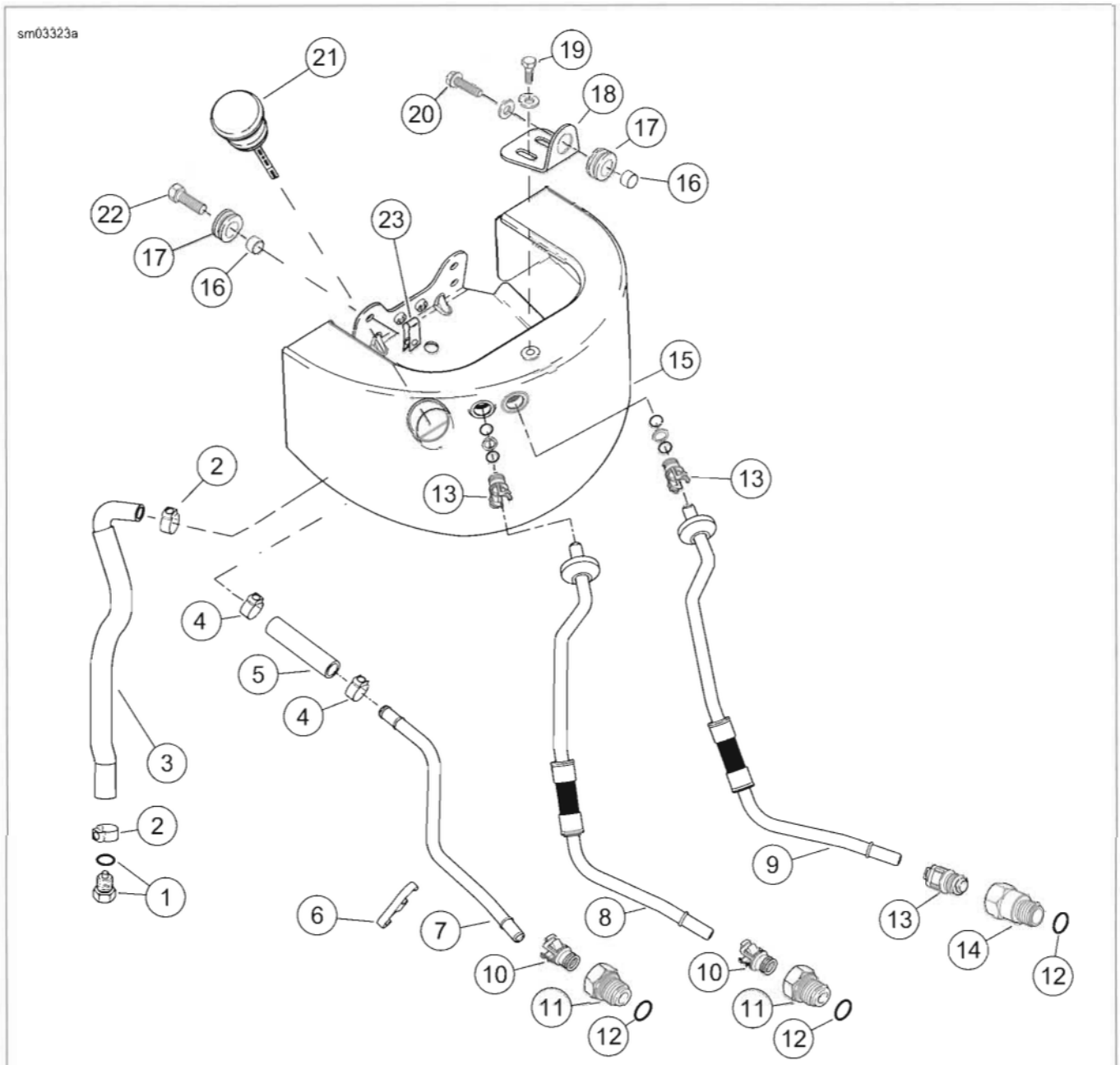

1. Drain plug and O-ring
2. Clamp (2)
3. Drain hose
4. Clamp (2)
5. Oil feed hose
6. Oil line clip
7. Feed line
8. Return line
9. Vent line
10. Oil line retainer (large) (2)
11. Oil line fiitting (large) (2)
12. O-ring (3)
13. Oil line retainer (small) (3)
14. Oil line fitting (small)
15. Oil tank
16. Spacer (3)
17. Grommet (3)
18. Top bracket
19. Bolt (2)
20. Bolt
21. Dipstick
22. Bolt (2)
23. Clip nut (2)

Figure 3-172. Oil Tank

Oil Line Fittings/Retainers

NOTES

- *There are two sizes of oil line retainers and fittings. Use the appropriate sized oil line tool for all service procedures. See Figure 3-173.*
- *See Figure 3-174. Small retainers connect the vent (1) and return lines (2) to the oil tank. A small retainer and fitting also connects the vent line (3) to the engine.*
- *Large retainers and fittings attach the return (4) and feed lines (5) to the engine.*
- *See Figure 3-175. Do not remove oil line retainers from engine fittings or oil tank unless retainers, O-rings, and/or spacers are damaged.*
- *See Figure 3-176. O-rings (1) and spacer (2) are not sold separately. If either O-rings or spacer are damaged, oil line retainer assembly must be replaced.*

1. Insert OIL LINE O-RING TOOL (Part No. HD-44455) (4) inside retainer (3).
2. Squeeze tabs on retainer and withdraw tool, retainer, both O-rings and spacer. Discard retainer, O-rings and spacer.
3. Insert tool (4) through **new** retainer (3).
4. Insert tool, retainer, spacer and O-rings into engine fitting or oil tank until tabs on retainer lock into place. Do not damage O-rings during installation.
5. Carefully withdraw tool leaving retainer assembly in place.

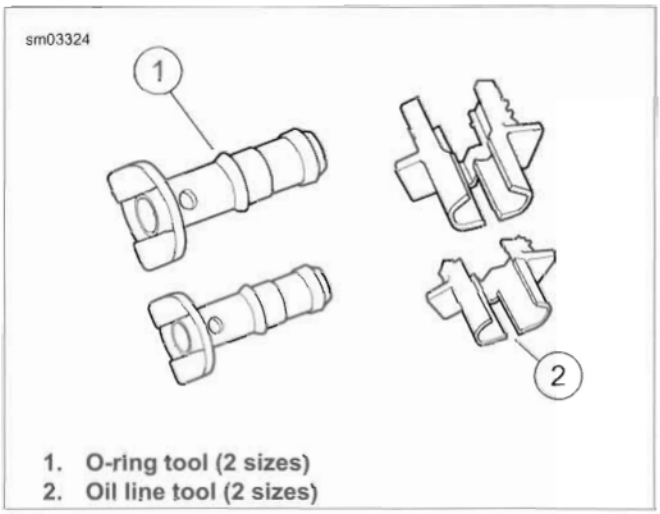

1. **O-ring tool (2 sizes)**
2. **Oil line tool (2 sizes)**

Figure 3-173. Oil Line Tools

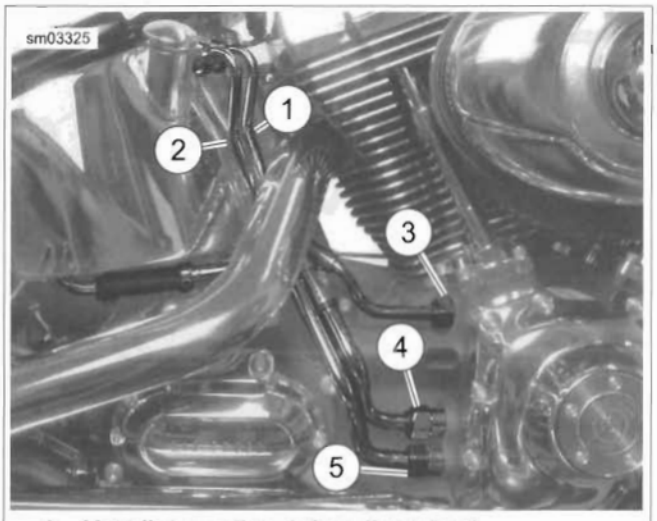

1. **Vent line to oil tank (small retainer)**
2. **Return line to oil tank (small retainer)**
3. **Vent line to engine (small retainer and fitting)**
4. **Return line to engine (large retainer and fitting)**
5. **Feed line to engine (large retainer and fitting)**

Figure 3-174. Oil Line Fittings/Retainers

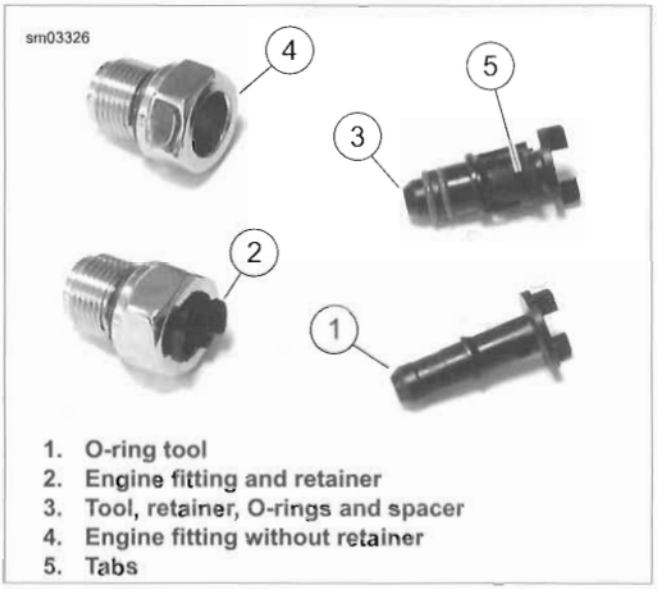

1. **O-ring tool**
2. **Engine fitting and retainer**
3. **Tool, retainer, O-rings and spacer**
4. **Engine fitting without retainer**
5. **Tabs**

Figure 3-175. Oil Line Retainers (Parts Removed From Engine for Clarity)

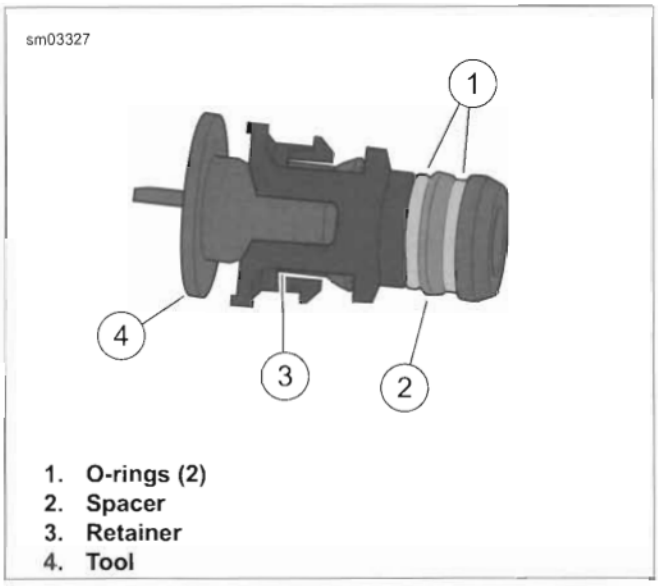

1. **O-rings (2)**
2. **Spacer**
3. **Retainer**
4. **Tool**

Figure 3-176. O-rings and Spacer

INSTALLATION

PART NUMBER	TOOL NAME
HD-97087-65B	HOSE CLAMP PLIERS

FASTENER	TORQUE VALUE	
Electrical panel fasteners: all but FXSB	36-60 **in-lbs**	4.1-6.8 Nm
Splash guard fastener: all but FXSB	36-48 **in-lbs**	4.1-5.4 Nm

1. See Figure 3-172. Slide oil tank into position within frame. Install two bolts (19) through top bracket to hold tank in place.
2. Install two bolts (22) from back side of tank.
3. Install **new** clamp (4) to attach oil feed hose (5) to oil tank.
4. Crimp clamp using HOSE CLAMP PLIERS (Part No. HD-97087-65B).
5. Position drain hose outboard of the electrical panel and inboard of the brake line and frame harness. Attach drain hose to frame.
6. Install **new** clamp (2) over oil drain line and install drain line.
7. Crimp clamp using HOSE CLAMP PLIERS (Part No. HD-97087-65B).
8. See Figure 3-170. Connect vent and return lines to tank. No tools are necessary for this step. Insert lines straight into fittings without digging or gouging O-rings. Remove any labels used to identify lines during removal process.

NOTE

In next step, make sure electrical box is located under wire shield.

9. See Figure 3-177. Install two bolts to attach wire shield to frame.
10. Install the three fasteners securing the electrical panel and tighten to 36-60 **in-lbs** (4.1-6.8 Nm).
11. Install EVAP hose and wiring into clip on left side of electrical panel.
12. Install splash guard.
    a. Attach top of splash guard to rear fork tube.
    b. Push in bottom of splash guard until it snaps into place over frame tabs.
    c. Install fastener securing bottom of splash guard and torque to 36-48 **in-lbs** (4.1-5.4 Nm).
13. Install rear fender.
14. Install exhaust system. See 4.17 EXHAUST SYSTEM.
15. Install positive battery cable to starter and install battery caddy. See 7.12 BATTERY CABLES.

⚠WARNING

Connect positive (+) battery cable first. If positive (+) cable should contact ground with negative (-) cable connected, the resulting sparks can cause a battery explosion, which could result in death or serious injury. (00068a)

16. Install battery and connect cables, positive cable first.

⚠WARNING

After installing seat, pull upward on seat to be sure it is locked in position. While riding, a loose seat can shift causing loss of control, which could result in death or serious injury. (00070b)

17. Install seat.
18. Fill oil tank and check oil level after running motorcycle on jiffy stand. See 1.6 ENGINE OIL AND FILTER.

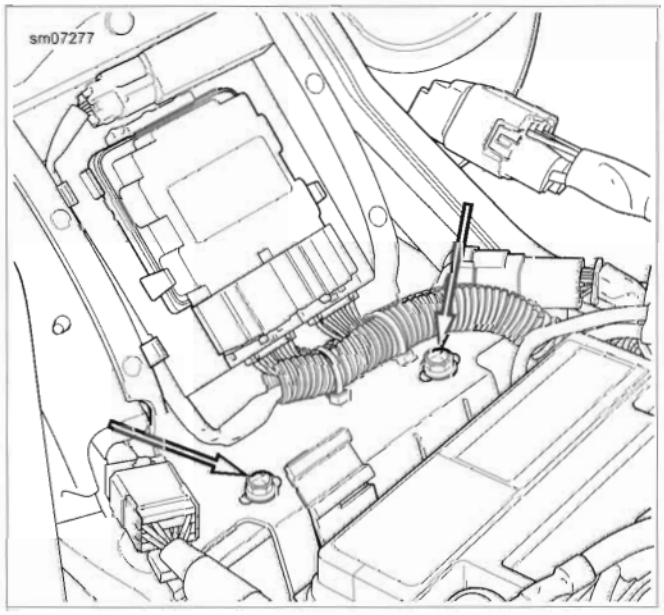

Figure 3-177. Wire Shield Fasteners

REMOVAL AND DISASSEMBLY

PART NUMBER	TOOL NAME
HD-44455	OIL LINE REMOVING TOOL

Oil Tank

1. Remove seat.

⚠WARNING

Disconnect negative (-) battery cable first. If positive (+) cable should contact ground with negative (-) cable connected, the resulting sparks can cause a battery explosion, which could result in death or serious injury. (00049a)

2. Remove battery. See 1.19 BATTERY MAINTENANCE.
3. Remove battery caddy.
4. Remove rear exhaust pipe. See 4.17 EXHAUST SYSTEM.
5. Drain oil tank. See 1.6 ENGINE OIL AND FILTER.
6. Remove rear fender assembly. See 2.35 REAR FENDER: FXSB.
7. Remove rear wheel. See 2.5 REAR WHEEL.
8. Remove two fasteners securing wire shield to frame.
9. Remove splash guard. See 2.23 REAR FORK.
10. Remove fasteners securing top of electrical panel to oil tank.
11. See Figure 3-179. Remove two bolts (21) securing rear of oil tank.
12. Remove two bolts with washers (18) on top front of oil tank.
13. Cut lower drain hose clamp (2) from frame.
14. See Figure 3-178. Detach feed line to engine (1), return line to oil tank (2), and vent line (3) using OIL LINE REMOVING TOOL (Part No. HD-44455).
    a. Insert oil line removing tool (4) inside retainer (5).
    b. Pull oil line straight out, leaving oil line retainer inside tank.
15. Remove oil tank from right side of vehicle.

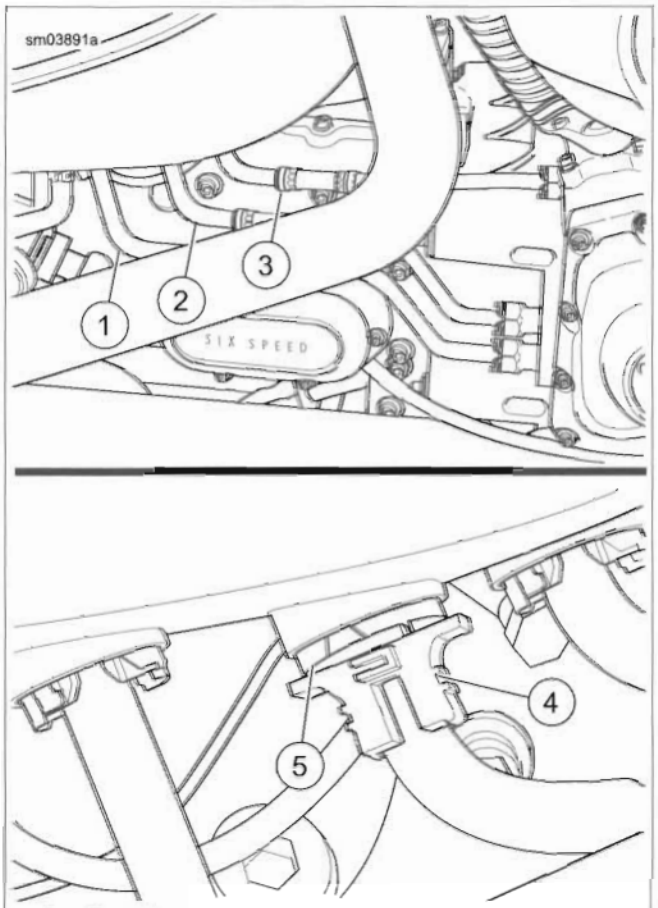

1. **Feed line to engine**
2. **Return line to oil tank**
3. **Vent line**
4. **Oil line removing tool**
5. **Retainer**

Figure 3-178. Oil Lines

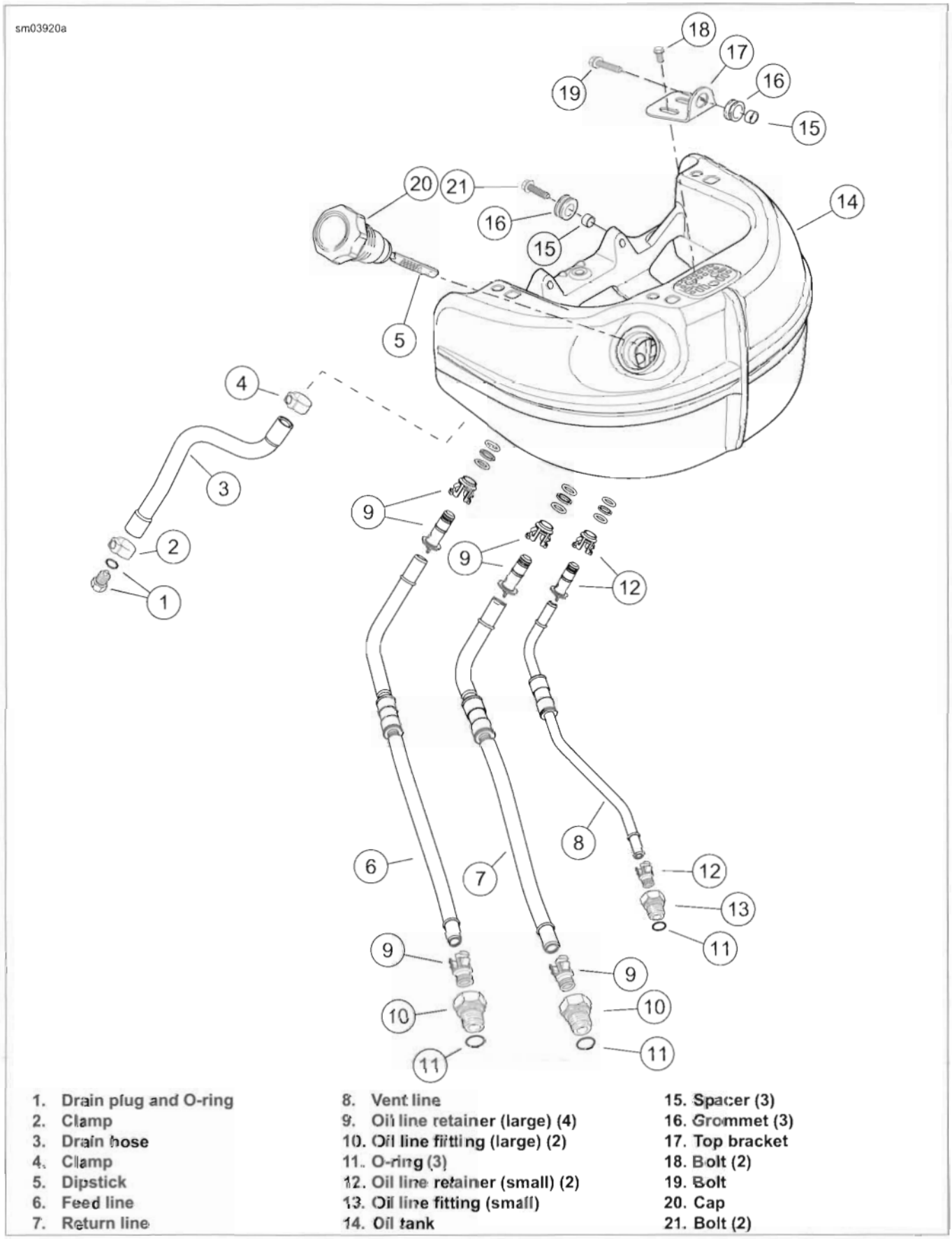

1. Drain plug and O-ring
2. Clamp
3. Drain hose
4. Clamp
5. Dipstick
6. Feed line
7. Return line
8. Vent line
9. Oil line retainer (large) (4)
10. Oil line fitting (large) (2)
11. O-ring (3)
12. Oil line retainer (small) (2)
13. Oil line fitting (small)
14. Oil tank
15. Spacer (3)
16. Grommet (3)
17. Top bracket
18. Bolt (2)
19. Bolt
20. Cap
21. Bolt (2)

Figure 3-179. Oil Tank

Oil Line Fittings/Retainers

NOTES

There are two sizes of oil line retainers and fittings. Use the appropriate sized oil line tool for all service procedures. See Figure 3-180.

- *See Figure 3-181. Small retainers connect the vent line (3) to the oil tank and to the engine.*
- *Large retainers connect the feel line to engine (1) and return line to oil tank (2) to the oil tank and to the engine.*
- *See Figure 3-182. Do not remove oil line retainers from engine fittings or oil tank unless retainers, O-rings, and/or spacers are damaged.*
- *See Figure 3-183. O-rings (1) and spacer (2) are not sold separately. If either O-rings or spacer are damaged, oil line retainer assembly must be replaced.*

1. Insert OIL LINE REMOVING TOOL (Part No. HD-44455) (4) inside retainer (3).
2. Squeeze tabs on retainer and withdraw tool, retainer, both O-rings and spacer. Discard retainer, O-rings and spacer.
3. Insert tool (4) through **new** retainer (3).
4. Insert tool, retainer, spacer and O-rings into engine fitting or oil tank until tabs on retainer lock into place. Do not damage O-rings during installation.
5. Carefully withdraw tool leaving retainer assembly in place.

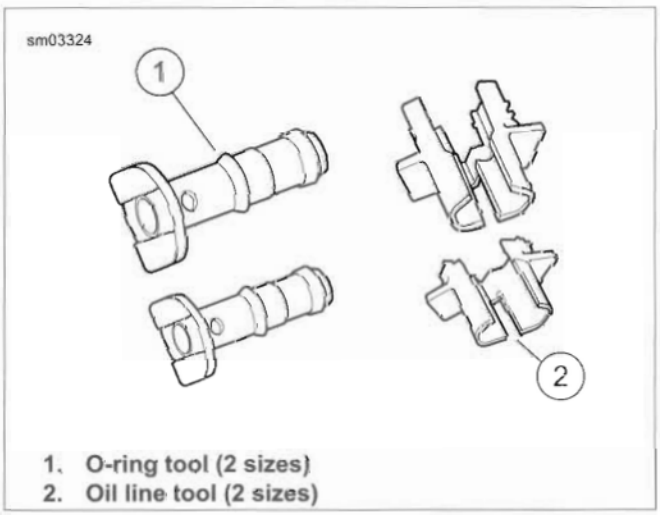

1. **O-ring tool (2 sizes)**
2. **Oil line tool (2 sizes)**

Figure 3-180. Oil Line Tools

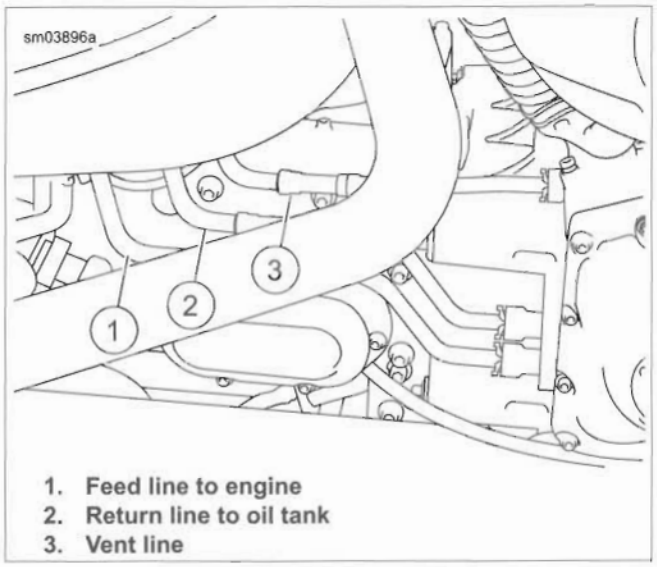

1. **Feed line to engine**
2. **Return line to oil tank**
3. **Vent line**

Figure 3-181. Oil Line Fittings/Retainers

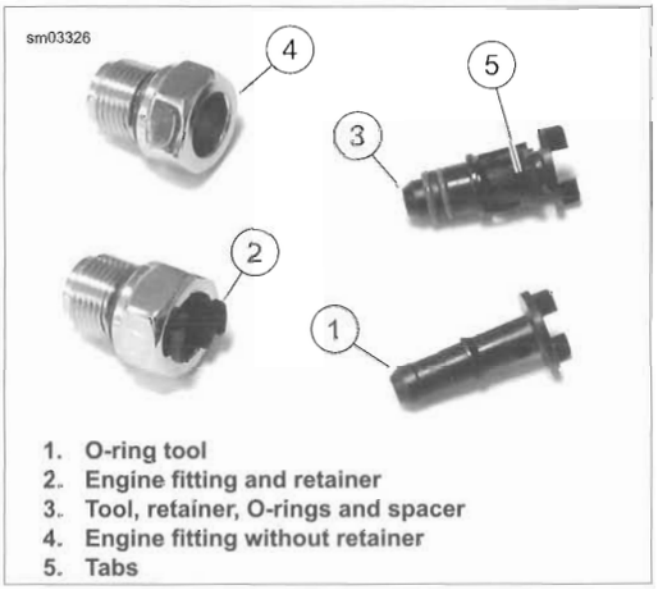

1. **O-ring tool**
2. **Engine fitting and retainer**
3. **Tool, retainer, O-rings and spacer**
4. **Engine fitting without retainer**
5. **Tabs**

Figure 3-182. Oil Line Retainers (Parts Removed From Engine for Clarity)

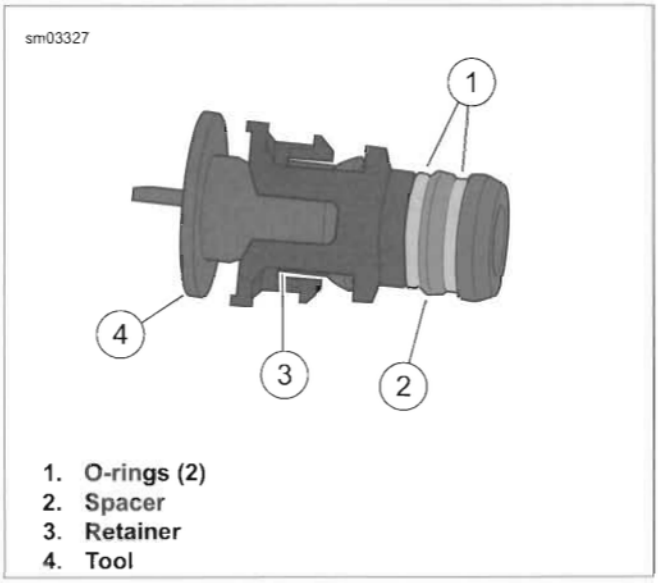

1. O-rings (2)
2. Spacer
3. Retainer
4. Tool

Figure 3-183. O-rings and Spacer

INSTALLATION

PART NUMBER	TOOL NAME
HD-97087-65B	HOSE CLAMP PLIERS

FASTENER	TORQUE VALUE	
Oil tank bolts: FXSB	12-15 ft-lbs	16.3-20.3 Nm
Electrical panel fastener: FXSB	36-60 **in-lbs**	4.1-6.8 Nm
Splash guard fasteners: FXSB	36-60 **in-lbs**	4.1-6.8 Nm

1. See Figure 3-179. Slide oil tank into position in frame.
2. Install bolts (18, 21). Tighten to 12-15 ft-lbs (16.3-20.3 Nm).
3. Attach drain hose and install **new** clamp (2) to frame. Crimp clamp using HOSE CLAMP PLIERS (Part No. HD-97087-65B).
4. Secure wire harness and rear brake line to drain at frame with a cable strap.
5. Secure wire shield to frame with both fasteners.
6. See Figure 3-178. Connect vent line, return line to oil tank, and feed line to engine.
7. Install fasteners securing top of electrical panel to oil tank. Tighten to 36-60 **in-lbs** (4.1-6.8 Nm).
8. Install splash guard. Tighten to 36-60 **in-lbs** (4.1-6.8 Nm).
9. Install rear wheel. See 2.5 REAR WHEEL.
10. Install rear fender. See 2.35 REAR FENDER: FXSB.
11. Install exhaust system. See 4.17 EXHAUST SYSTEM.
12. Install battery caddy. See 1.19 BATTERY MAINTENANCE.

⚠WARNING

Connect positive (+) battery cable first. If positive (+) cable should contact ground with negative (-) cable connected, the resulting sparks can cause a battery explosion, which could result in death or serious injury. (00068a)

13. Install battery and connect cables, positive cable first.

⚠WARNING

After installing seat, pull upward on seat to be sure it is locked in position. While riding, a loose seat can shift causing loss of control, which could result in death or serious injury. (00070b)

14. Install seat.
15. Fill oil tank and check oil level after running motorcycle on jiffy stand. See 1.6 ENGINE OIL AND FILTER.

NOTES

SUBJECT	PAGE NO.
4.1 FASTENER TORQUE VALUES	4-1
4.2 SPECIFICATIONS: FUEL SYSTEM	4-3
4.3 AIR CLEANER ASSEMBLY	4-4
4.4 FUEL SUPPLY LINE	4-6
4.5 FUEL PRESSURE TEST	4-7
4.6 FUEL TANK	4-9
4.7 CONSOLE: FXSB	4-12
4.8 THROTTLE POSITION SENSOR (TPS)	4-13
4.9 INTAKE AIR TEMPERATURE SENSOR (IAT)	4-14
4.10 ENGINE TEMPERATURE SENSOR (ET)	4-15
4.11 INDUCTION MODULE	4-16
4.12 IDLE AIR CONTROL (IAC)	4-18
4.13 MANIFOLD ABSOLUTE PRESSURE SENSOR (MAP)	4-19
4.14 OXYGEN (O2) SENSOR	4-20
4.15 FUEL INJECTORS	4-22
4.16 FUEL PUMP AND FUEL GAUGE SENDING UNIT	4-24
4.17 EXHAUST SYSTEM	4-29
4.18 INTAKE LEAK TEST	4-33
4.19 EVAPORATIVE EMISSIONS CONTROL SYSTEM	4-35

NOTES

FASTENER TORQUE VALUES IN THIS CHAPTER

The table below lists torque values for all fasteners presented in this chapter.

FASTENER	TORQUE VALUE		NOTES
Air cleaner bracket screws	40-60 **in-lbs**	4.5-6.8 Nm	4.3 AIR CLEANER ASSEMBLY, Installation
Air cleaner cover screw	36-60 **in-lbs**	4.1-6.8 Nm	4.3 AIR CLEANER ASSEMBLY, Installation
Breather bolts, cylinder head	22-24 ft-lbs	29.9-32.6 Nm	4.3 AIR CLEANER ASSEMBLY, Installation
Charcoal canister screws	90-114 **in-lbs**	10.2-12.9 Nm	4.19 EVAPORATIVE EMISSIONS CONTROL SYSTEM, Charcoal Canister
Console mounting nut, FXSB	30-50 **in-lbs**	3.4-5.7 Nm	4.7 CONSOLE: FXSB, Installation
Engine temperature (ET) sensor	120-180 **in-lbs**	13.6-20.3 Nm	4.10 ENGINE TEMPERATURE SENSOR (ET), Installation
Exhaust carriage bolt flange locknut: FLSTN, FLSTF/B, FLS	20-25 ft-lbs	27.1-33.9 Nm	4.17 EXHAUST SYSTEM, System: FLSTN, FLSTF/B, FLS
Exhaust interconnect clamp: FLSTC, FXST, FXSB	25-30 ft-lbs	33.9-40.7 Nm	4.17 EXHAUST SYSTEM, System: FLSTC, FXST, FXSB
Exhaust manifold clamp lower nut, 1st torque: FLSTC, FXST, FXSB	9-18 **in-lbs**	1.0-2.0 Nm	4.17 EXHAUST SYSTEM, System: FLSTC, FXST, FXSB
Exhaust manifold clamp lower nut, 1st torque: FLSTN, FLSTF/B, FLS	9-18 **in-lbs**	1.0-2.0 Nm	4.17 EXHAUST SYSTEM, System: FLSTN, FLSTF/B, FLS
Exhaust manifold clamp lower nut, final torque: FLSTN, FLSTF/B, FLS	100-120 **in-lbs**	11.3-13.6 Nm	4.17 EXHAUST SYSTEM, System: FLSTN, FLSTF/B, FLS
Exhaust manifold clamp lower nut final torque: FLSTC, FXST, FXSB	100-120 **in-lbs**	11.3-13.6 Nm	4.17 EXHAUST SYSTEM, System: FLSTC, FXST, FXSB
Exhaust manifold clamp upper nut: FLSTC, FXST, FXSB	100-120 **in-lbs**	11.3-13.6 Nm	4.17 EXHAUST SYSTEM, System: FLSTC, FXST, FXSB
Exhaust manifold clamp upper nut: FLSTN, FLSTF/B, FLS	100-120 **in-lbs**	11.3-13.6 Nm	4.17 EXHAUST SYSTEM, System: FLSTN, FLSTF/B, FLS
Exhaust pipe clamp locknut: FLSTN, FLSTF/B, FLS	20-25 ft-lbs	27.1-33.9 Nm	4.17 EXHAUST SYSTEM, Mufflers: FLSTN, FLSTF/B, FLS
Exhaust system interconnect tube fasteners: FLSTC, FXST, FXSB	20-25 ft-lbs	27.1-33.9 Nm	4.17 EXHAUST SYSTEM, System: FLSTC, FXST, FXSB
Fuel pump/fuel gauge sending unit screws	18-24 **in-lbs**	2.0-2.7 Nm	4.16 FUEL PUMP AND FUEL GAUGE SENDING UNIT, Installation
Fuel supply tube fastener	90-110 **in-lbs**	10.2-12.4 Nm	4.15 FUEL INJECTORS, Installation
Fuel tank screw, front	28-32 ft-lbs	38.0-43.4 Nm	4.6 FUEL TANK, Installation
Fuel tank screw, rear	18-22 ft-lbs	24.4-29.8 Nm	4.6 FUEL TANK, Installation
Fuel tank screw, rear, FXSB	18-22 ft-lbs	24.4-29.8 Nm	4.7 CONSOLE: FXSB, Installation
Instrument console acorn nut	30-50 **in-lbs**	3.4-5.7 Nm	4.5 FUEL PRESSURE TEST, Testing
Instrument console acorn nut	30-50 **in-lbs**	3.4-5.7 Nm	4.6 FUEL TANK, Installation
Instrument console acorn nut	30-50 **in-lbs**	3.4-5.7 Nm	4.10 ENGINE TEMPERATURE SENSOR (ET), Installation
Instrument console acorn nut	30-50 **in-lbs**	3.4-5.7 Nm	4.16 FUEL PUMP AND FUEL GAUGE SENDING UNIT, Installation
Intake air temperature sensor (IAT) fastener	15-20 **in-lbs**	1.7-2.3 Nm	4.9 INTAKE AIR TEMPERATURE SENSOR (IAT), Installation
Manifold mounting screws, 1st torque	16-20 **in-lbs**	1.8-2.3 Nm	4.11 INDUCTION MODULE, Installation

FASTENER	TORQUE VALUE		NOTES
Manifold mounting screws, final torque	96-156 **in-lbs**	10.9-17.6 Nm	4.11 INDUCTION MODULE, Installation
Muffler clamp: FLSTN, FLSTF/B, FLS	38-43 ft-lbs	51.6-58.4 Nm	4.17 EXHAUST SYSTEM, Mufflers: FLSTN, FLSTF/B, FLS
Muffler clamps: FLSTC, FXST, FXSB	38-43 ft-lbs	51.6-58.4 Nm	4.17 EXHAUST SYSTEM, Mufflers: FLSTC, FXST, FXSB
Muffler fasteners: FLSTC, FXST, FXSB	96-120 **in-lbs**	10.9-13.6 Nm	4.17 EXHAUST SYSTEM, Mufflers: FLSTC, FXST, FXSB
Muffler support fastener: FLSTN, FLSTF/B, FLS	96-120 **in-lbs**	10.9-13.6 Nm	4.17 EXHAUST SYSTEM, Mufflers: FLSTN, FLSTF/B, FLS
Oxygen sensor, front	14.0 ft-lbs	19.0 Nm	4.14 OXYGEN (O2) SENSOR, Installation
Oxygen sensor, rear	14.0 ft-lbs	19.0 Nm	4.14 OXYGEN (O2) SENSOR, Installation
Throttle cable bracket fasteners	20-35 **in-lbs**	2.3-4.0 Nm	4.12 IDLE AIR CONTROL (IAC), Installation
Throttle cable bracket fasteners	20-35 **in-lbs**	2.3-4.0 Nm	4.13 MANIFOLD ABSOLUTE PRESSURE SENSOR (MAP), Installation/Use new screws
Throttle position sensor fasteners	18 **in-lbs**	2.0 Nm	4.8 THROTTLE POSITION SENSOR (TPS), Installation
Vapor valve bracket nut	120-144 **in-lbs**	13.6-16.3 Nm	4.16 FUEL PUMP AND FUEL GAUGE SENDING UNIT, Vapor Valve
Voltage regulator bracket fasteners	70-100 **in-lbs**	7.9-11.3 Nm	4.14 OXYGEN (O2) SENSOR, Installation

SPECIFICATIONS

Table 4-1. Capacities

ITEM	U.S.	L
Fuel tank (total)	5.0 gal	18.9
Low fuel warning light on	1.0 gal	3.8

REMOVAL

1. See Figure 4-1. Remove screw (1) and air cleaner cover (2).
2. Remove three TORX screws (4) and bracket (5) from filter element (6).
3. Gently pull both rubber breather tubes (9) from the element. Remove filter element (6) and gasket (7).
4. Replace the filter element if damaged.
5. Gently pull breather tubes (9) from breather bolts (10) on the backplate.
6. Check filter element and clean as necessary. See 1.7 AIR CLEANER AND EXHAUST SYSTEM.
7. Inspect seal ring (3) for cracks or tears. Verify that it seals tightly to backplate. Replace as required.
8. Alternately back out both breather bolts (10) a few turns a time while pulling backplate (8) away from induction module.
9. Continue previous step until breather bolts are clear. Remove backplate (8) and gasket (11). Discard gasket.
10. Wipe inside of air cleaner cover (2) and backplate (8) with damp cloth to remove dust.

INSTALLATION

FASTENER	TORQUE VALUE	
Breather bolts, cylinder head	22-24 ft-lbs	29.9-32.6 Nm
Air cleaner bracket screws	40-60 **in-lbs**	4.5-6.8 Nm
Air cleaner cover screw	36-60 **in-lbs**	4.1-6.8 Nm

1. See Figure 4-1. Position **new** gasket (11) on backplate. Insert two breather bolts (10) into backplate. Thread bolts loosely into each cylinder head. Final tighten bolts to 22-24 ft-lbs (29.9-32.6 Nm).

NOTE

Always connect breather tubes. Loose or detached tubes will vent crankcase gases into the atmosphere. This violates legal emissions standards.

2. Insert two breather tubes (9) into the holes in the filter element. Place the element back into position and attach breather tubes to breather bolts.
3. Install air filter element (6) and bracket (5).
   a. Make sure gasket (7) holes are aligned with backplate holes.
   b. Use three TORX screws (4) to secure bracket and filter element. Tighten to 40-60 **in-lbs** (4.5-6.8 Nm).
4. Install air filter cover (2).
   a. Apply a drop of LOCTITE 243 MEDIUM STRENGTH THREADLOCKER AND SEALANT (blue) to threads of air cleaner cover screw (1).
   b. Install screw to secure air cleaner cover. Tighten to 36-60 **in-lbs** (4.1-6.8 Nm).

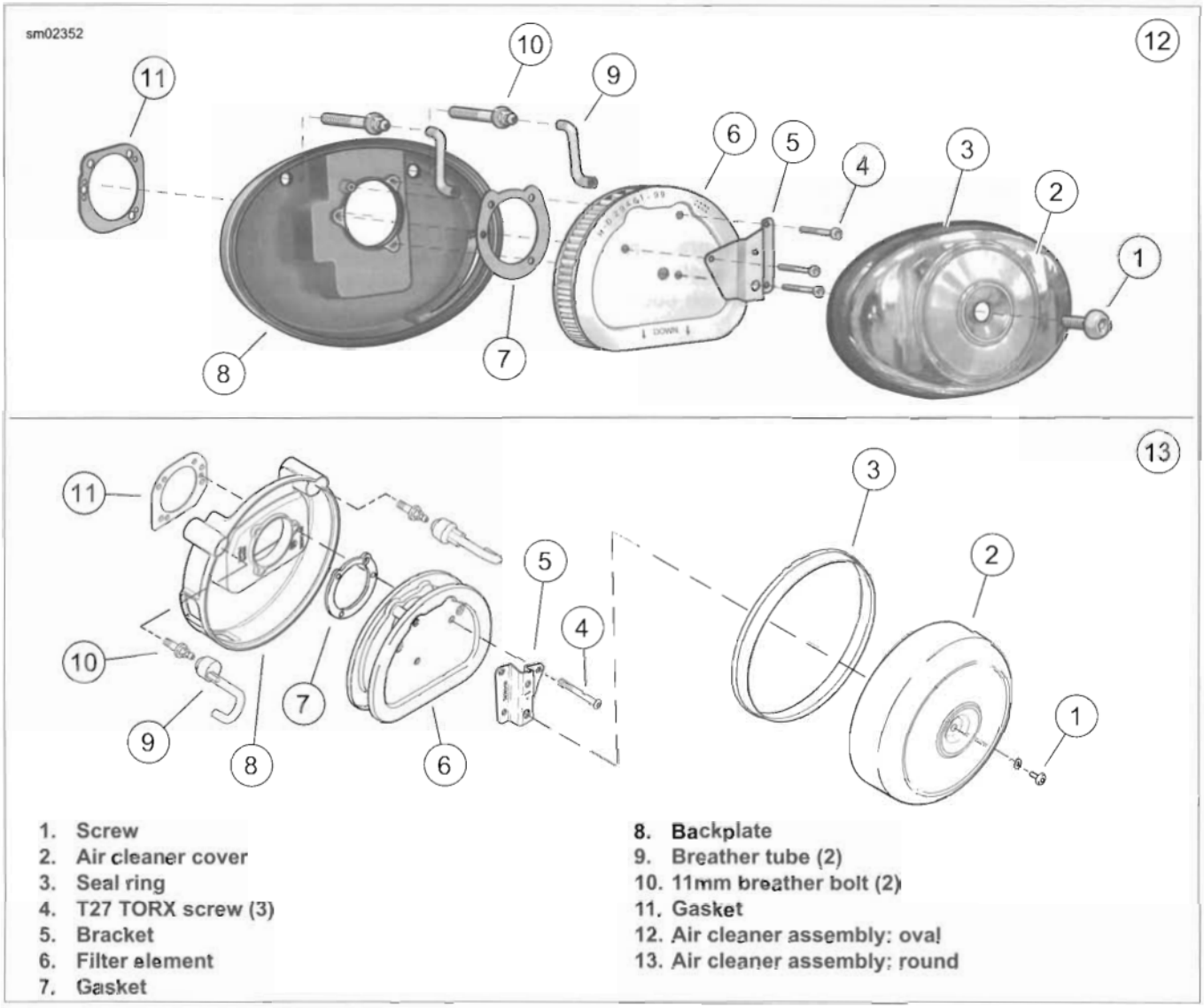

Figure 4-1. Air Cleaner Assembly

BACKPLATE ASSEMBLY: HDI MODELS

See Figure 4-2. HDI models have unique backplates. These parts may be distinguished by:

- A different intake with a solenoid-operated trap door assembly at the mouth of the intake.
- An intake solenoid connector (2) on the backplate.

Perform the same routine maintenance on HDI models, but also check that the trap door in the backplate operates properly.

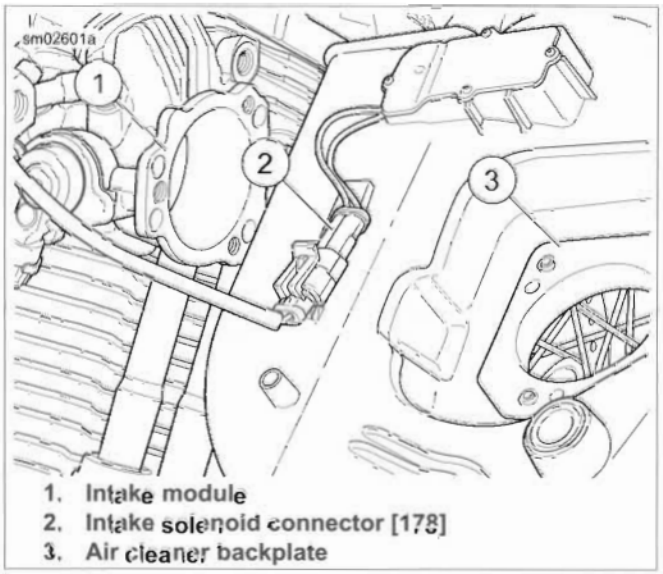

Figure 4-2. Backplate: HDI Models

PURGING FUEL SUPPLY LINE

1. Remove seat.

⚠WARNING

To prevent spray of fuel, purge system of high-pressure fuel before supply line is disconnected. Gasoline is extremely flammable and highly explosive, which could result in death or serious injury. (00275a)

2. Remove instrument console from fuel tank, but do not disconnect console wiring at this time.
   a. **All but FXSB:** see Figure 4-3. Remove acorn nut (1) and washer (2) on instrument console to separate console from fuel tank.
   b. **FXSB:** see 4.7 CONSOLE: FXSB.
3. Purge the fuel supply line of high pressure gasoline.
   a. See Figure 4-4. Unplug fuel pump module connector [86].
   b. Start the engine and allow the vehicle to run.
   c. When the engine stalls, operate the starter for 3 seconds to remove any remaining fuel from the fuel lines.

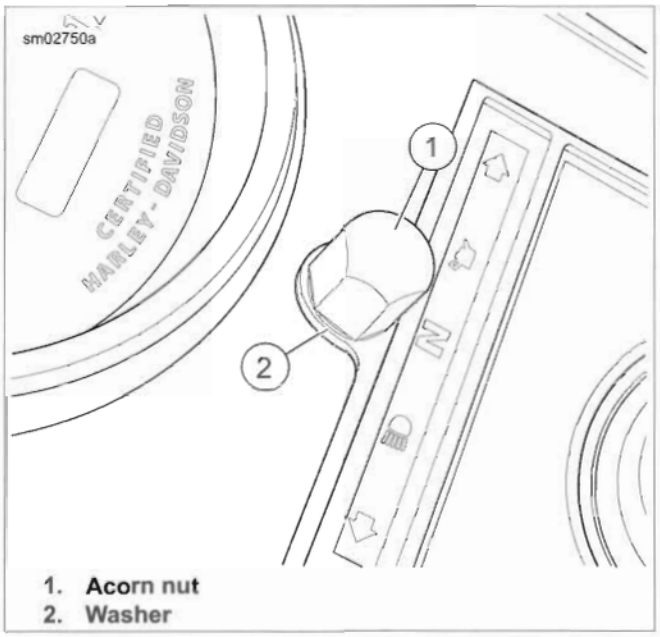

1. **Acorn nut**
2. **Washer**

Figure 4-3. Instrument Console

DISCONNECTING FUEL SUPPLY LINE

⚠WARNING

Gasoline can drain from quick-connect fitting when removing fuel line. Gasoline is extremely flammable and highly explosive, which could result in death or serious injury. Wipe up spilled fuel immediately and dispose of rags in a suitable manner. (00267a)

See Figure 4-5. Pull up on chrome sleeve of quick-connect fitting (1) and pull down on fuel supply line (2) to disconnect.

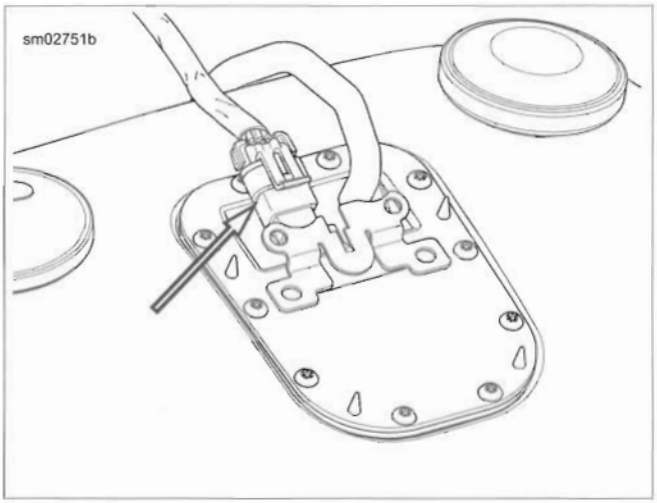

Figure 4-4. Fuel Pump Module Connector (Typical)

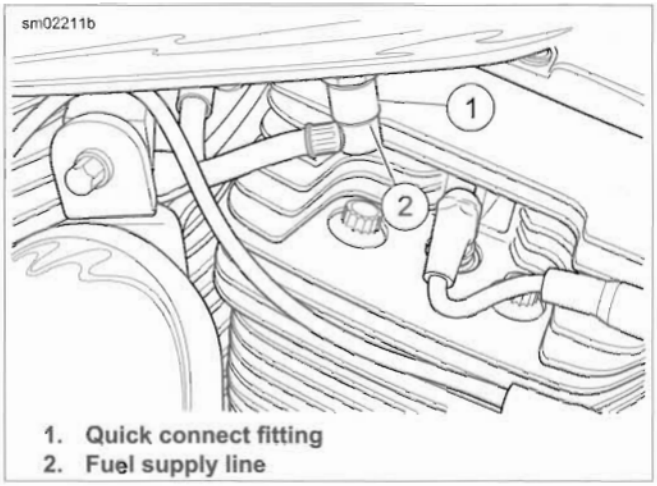

1. **Quick connect fitting**
2. **Fuel supply line**

Figure 4-5. Fuel Supply Line Fitting

GENERAL

The fuel pump delivers fuel through the fuel line to a cavity in the induction module. This cavity supplies the fuel injectors.

The fuel pressure regulator is located in the fuel tank. Excess fuel pressure is bypassed into the fuel tank.

Improper fuel system pressure may cause one of the following conditions:

- Cranks, but won't run.
- Cuts out (may feel like ignition problem).
- Hesitation, loss of power or poor fuel economy.

NOTE

See the electrical diagnostic manual for further information on the function and testing of the fuel system.

TESTING

PART NUMBER	TOOL NAME
HD-41182	FUEL PRESSURE GAUGE
HD-44061	FUEL PRESSURE GAUGE ADAPTER

FASTENER	TORQUE VALUE	
Instrument console acorn nut	30-50 **in-lbs**	3.4-5.7 Nm

The fuel pressure gauge allows for fuel injector and fuel system pressure diagnosis. A special adapter allows the gauge to be attached to the external fuel supply line.

NOTE

Avoid crimping of fuel line when installing/removing fuel pressure gauge and adapter.

1. Purge and disconnect fuel supply line. See 4.4 FUEL SUPPLY LINE.

NOTE

The next step requires two fuel pressure gauge adapters. Failure to use two adapters will cause the fuel line to twist. This may result in a damaged fuel line or fuel line fitting.

2. Attach fuel line to gauge assembly.
   a. See Figure 4-6. Install a second adapter in series with the first.
   b. See Figure 4-7. Pull up on chrome sleeve of quick-connect fitting. Insert neck of FUEL PRESSURE GAUGE ADAPTER (Part No. HD-44061) into fuel supply line.
   c. While pushing up on bottom of adapter, pull down on chrome sleeve until it "clicks" into the locked position. Tug on adapter to be sure that it will not come free.
   d. See Figure 4-8. In the same manner, install neck of second fuel supply line fitting into quick-connect fitting on fuel tank. Tug on fuel supply line to be sure that it will not come free.

⚠WARNING

To prevent spray of fuel, be sure quick-connect fittings are properly mated. Gasoline is extremely flammable and highly explosive, which could result in death or serious injury. (00268a)

3. Verify that the fuel valve and air bleed petcock on the FUEL PRESSURE GAUGE (Part No. HD-41182) are closed.
4. See Figure 4-6. Remove protective cap from free end of fuel pressure gauge adapter. Connect fuel pressure gauge to Schroeder valve.
5. Connect fuel pump module connector [86].
6. Install instrument console on fuel tank.
   a. **All but FXSB:** Attach acorn nut and washer to secure instrument console to fuel tank. Tighten to 30-50 **in-lbs** (3.4-5.7 Nm).
   b. **FXSB:** see 4.7 CONSOLE: FXSB.
7. Start and idle engine to pressurize the fuel system. Open the fuel valve to allow the flow of fuel down the hose of the pressure gauge.
8. Position the clear air bleed tube in a suitable container. Open and close the air bleed petcock to purge the gauge and hose of air. Repeat this step several times until only solid fuel (without bubbles) flows from the air bleed tube. Close the petcock.
9. Open and close throttle to change engine speed. Note the reading of the pressure gauge. Fuel pressure should remain steady at 55-62 psi (380-425 kPa).

NOTE

If fuel pressure gauge reading is not within specifications, see electrical diagnostic manual for further diagnosis.

10. Turn the engine off. Position the air bleed tube in a suitable container. Open the air bleed petcock to relieve the fuel system pressure and purge the pressure gauge of gasoline.

⚠WARNING

Gasoline can drain from the adapter when gauge is removed. Gasoline is extremely flammable and highly explosive, which could result in death or serious injury. Wipe up spilled fuel immediately and dispose of rags in a suitable manner. (00254a)

11. Remove fuel pressure gauge from the adapter. Install protective cap over Schroeder valve.



Figure 4-6. Fuel Pressure Gauge Adapters

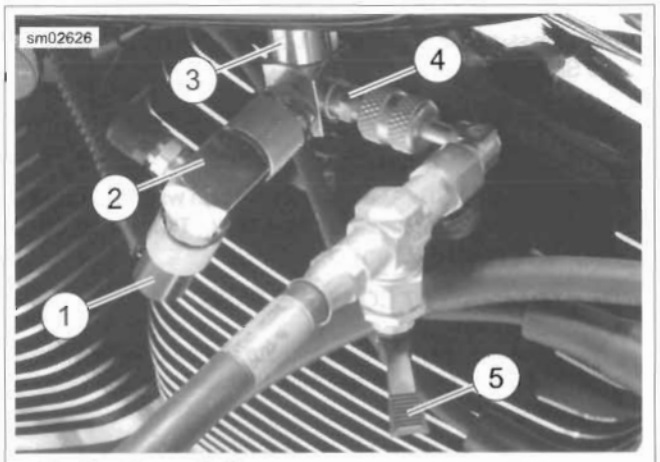

1. Fuel supply line
2. Adapter to fuel line
3. Adapter to fuel tank
4. Pressure adapter Schroeder valve union
5. Fuel valve (closed position)

Figure 4-7. Fuel Line

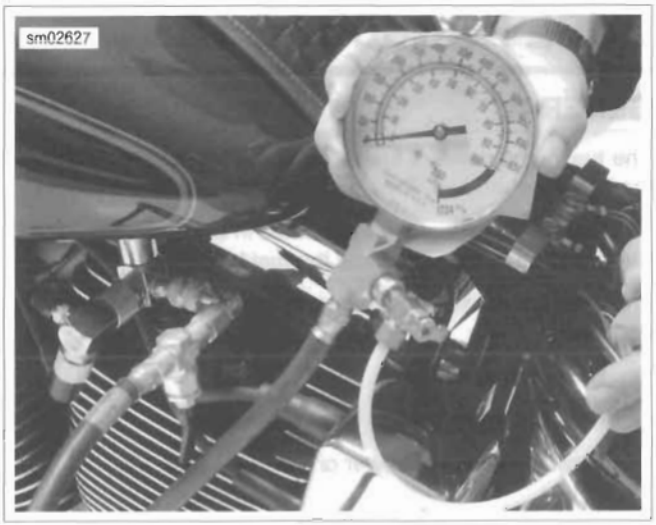

Figure 4-8. Fuel Pressure Gauge Installed (Typical)

⚠WARNING

Gasoline can drain from the fuel line and adapter when removed. Gasoline is extremely flammable and highly explosive, which could result in death or serious injury. Wipe up spilled fuel immediately and dispose of rags in a suitable manner. (00255a)

12. Pull up on sleeve of quick-connect fitting and remove fuel supply line from fuel pressure gauge adapter. Release adapter from fuel tank in the same manner.

⚠WARNING

To prevent spray of fuel, be sure quick-connect fittings are properly mated. Gasoline is extremely flammable and highly explosive, which could result in death or serious injury. (00268a)

13. Pull up on sleeve of quick-connect fitting. Insert neck of fuel supply line fitting. Push up on bottom of fuel supply line fitting and pull down on sleeve until it "clicks" into the locked position. Tug on fuel supply line to verify it is secure.
14. Clear any DTC that was set due to running the engine with fuel pump module connector [86] disconnected.

⚠WARNING

After installing seat, pull upward on seat to be sure it is locked in position. While riding, a loose seat can shift causing loss of control, which could result in death or serious injury. (00070b)

15. Install seat.

GENERAL

⚠WARNING

Stop the engine when refueling or servicing the fuel system. Do not smoke or allow open flame or sparks near gasoline. Gasoline is extremely flammable and highly explosive, which could result in death or serious injury. (00002a)

⚠WARNING

Do not use solvents or other products that contain chlorine on plastic fuel system components. Chlorine can degrade plastic fuel system components, which can cause a loss of fuel system pressure or engine stalling and could result in death or serious injury. (000621b)

The fuel tank is treated to resist rusting. However, long term storage requires special treatment, see 1.22 STORAGE.

For information on the tank-mounted fuel gauge, see the electrical diagnostic manual and 7.25 FUEL GAUGE.

REMOVAL

⚠WARNING

To prevent spray of fuel, purge system of high-pressure fuel before supply line is disconnected. Gasoline is extremely flammable and highly explosive, which could result in death or serious injury. (00275a)

1. Purge and disconnect fuel supply line. See 4.4 FUEL SUPPLY LINE.

⚠WARNING

To prevent accidental vehicle start-up, which could cause death or serious injury, remove main fuse before proceeding. (00251b)

2. Remove main fuse.
3. Disconnect instrument console wiring.

⚠WARNING

Gasoline can drain from the crossover line when disconnected from fuel tank. Gasoline is extremely flammable and highly explosive, which could result in death or serious injury. Wipe up spilled fuel immediately and dispose of rags in a suitable manner. (00259a)

4. Drain fuel tank.
   a. Obtain a short section of hose (5/16 inch I.D.). Insert bolt in one end of hose and install hose clamp to verify that end is securely plugged.
   b. Cut clamp from one end of crossover hose. Quickly replace crossover hose on fuel tank fitting with open end of short hose while directing flow of gasoline from free end of crossover hose into suitable container.
5. Remove fuel tank.
   a. See Figure 4-10. Remove the rear T40 TORX screw and washer (7).
   b. Remove the acorn nut (6), washers (2), and front mounting screw (1).
   c. Remove continuous vent line (12) from nipple on fuel tank top plate.
   d. **All but FXSB:** see Figure 4-9. Disconnect fuel gauge connector (3) and remove from clip.
   e. See Figure 4-10. Remove fuel tank. Remove rubber trim (13) to access connectors along frame. Remove bushings and grommets (3) if necessary.

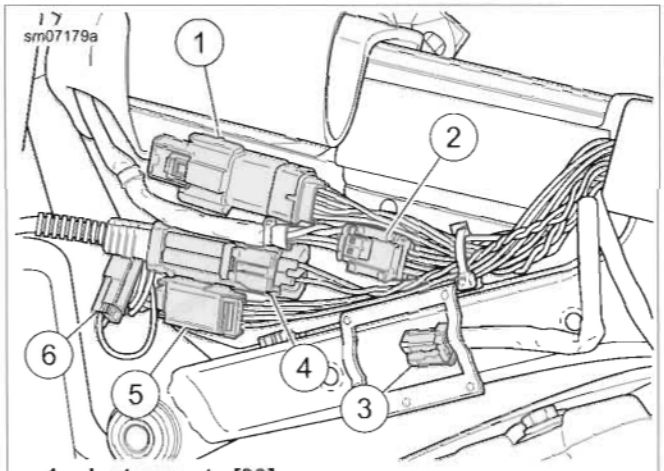

1. **Instruments [20]**
2. **Left hand control [24]**
3. **Fuel gauge [117]**
4. **Front wheel speed sensor [167]**
5. **Headlamp [38]**
6. **Front fender tip lamp [32]: FLSTC**

Figure 4-9. Under Fuel Tank Left Side

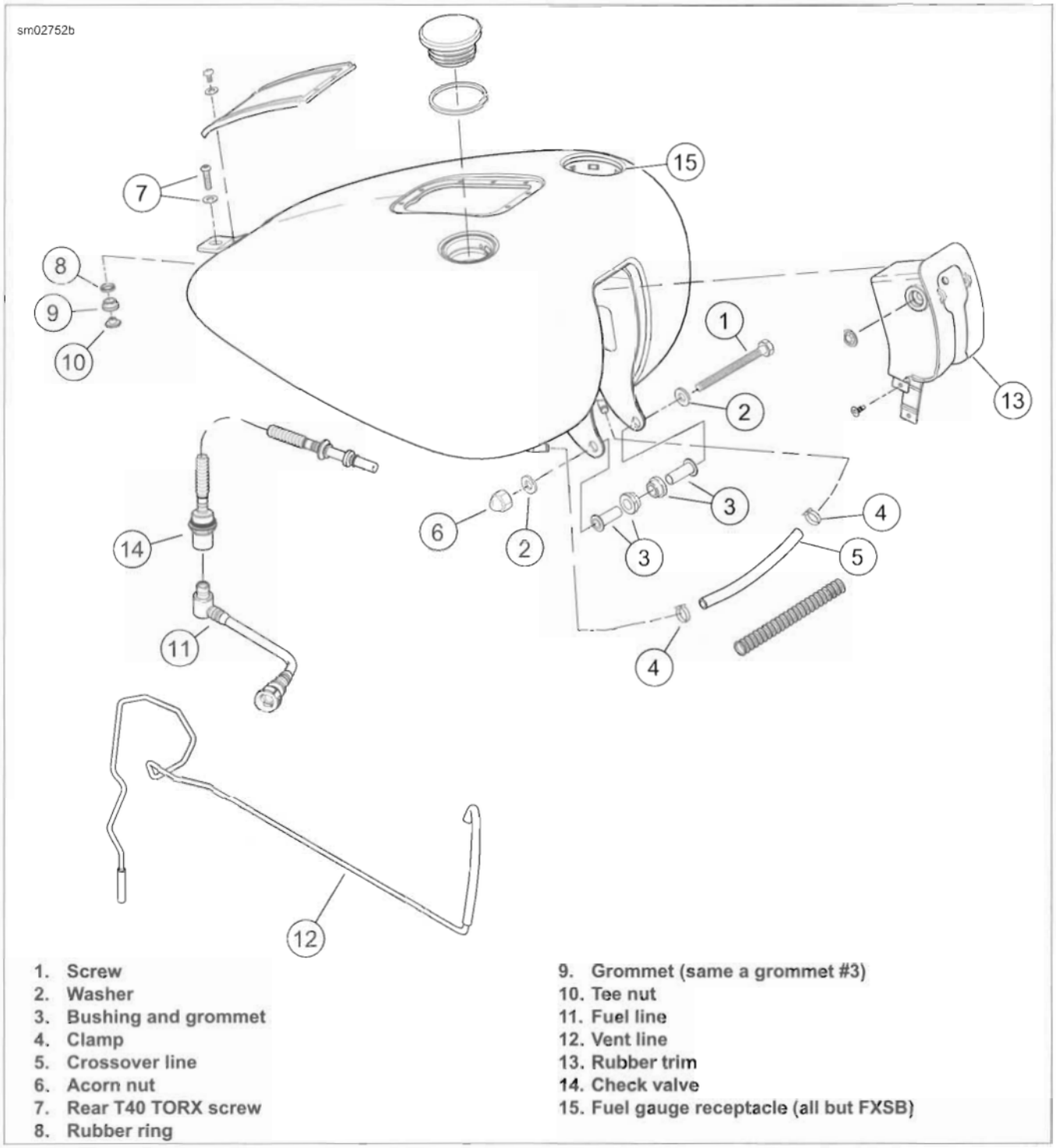

1. Screw
2. Washer
3. Bushing and grommet
4. Clamp
5. Crossover line
6. Acorn nut
7. Rear T40 TORX screw
8. Rubber ring
9. Grommet (same a grommet #3)
10. Tee nut
11. Fuel line
12. Vent line
13. Rubber trim
14. Check valve
15. Fuel gauge receptacle (all but FXSB)

Figure 4-10. Fuel Tank

CLEANING AND INSPECTION

1. Remove fuel pump. See 4.16 FUEL PUMP AND FUEL GAUGE SENDING UNIT.
2. Clean the tank interior with commercial cleaning solvent or a soap and water solution. Shake the tank to agitate the cleaning agent.
3. Flush the tank thoroughly after cleaning and allow it to air dry.
4. Inspect the interconnect lines, evaporative emissions system vent line (California models) and fuel line for cuts, cracks or holes. Replace lines as needed.
5. Inspect the tank for leaks and other damage. Repair or replace as necessary.
6. Install fuel pump. See 4.16 FUEL PUMP AND FUEL GAUGE SENDING UNIT.

INSTALLATION

FASTENER	TORQUE VALUE	
Fuel tank screw, rear	18-22 ft-lbs	24.4-29.8 Nm
Fuel tank screw, front	28-32 ft-lbs	38.0-43.4 Nm
Instrument console acorn nut	30-50 **in-lbs**	3.4-5.7 Nm

1. See Figure 4-10. Install continuous vent line (12) to nipple on fuel tank top plate. Make sure vent line runs along right side of frame backbone under rubber trim (13).
2. **All but FXSB:** see Figure 4-9. Connect the fuel gauge connector (3) and secure under clip.
3. Attach tank mounts.
   a. See Figure 4-10. Place a washer (2) over front screw (1). Starting on left side, loosely install screw and washer through tank, bushings and grommets (3) and frame. Place washer (2) and acorn nut (6) on right side.
   b. See Figure 4-11. Verify that rubber grommet (5) and metal insert (6) are protruding through frame (4). Metal insert has flats on bottom for positioning. Place rubber ring (3) around grommet/insert and lower fuel tank tab (2).
   c. Install washer and rear screw (1) through fuel tank tab. Tighten to 18-22 ft-lbs (24.4-29.8 Nm).
   d. Tighten the front screw to 28-32 ft-lbs (38.0-43.4 Nm).
4. See Figure 4-10. Connect crossover line (5) with **new** clamps (4).
5. Connect fuel supply line.
6. Connect fuel pump module connector [86].
7. Install instrument console wiring.
   a. **All but FXSB:** Install instrument console with acorn nut and washer. Tighten to 30-50 **in-lbs** (3.4-5.7 Nm).
   b. **FXSB:** see 4.7 CONSOLE: FXSB.
8. Install main fuse.
9. Fill tank with gasoline. Check for leaks.
10. Clear any DTC that was set due to running the engine with fuel pump module connector [86] disconnected.

⚠WARNING

After installing seat, pull upward on seat to be sure it is locked in position. While riding, a loose seat can shift causing loss of control, which could result in death or serious injury. (00070b)

11. Install seat.

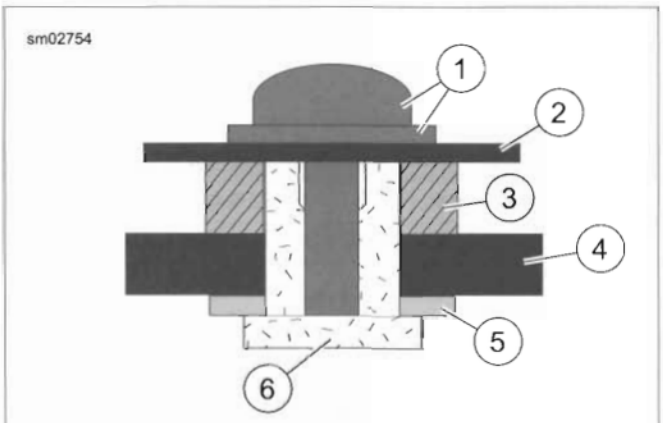

1. **T40 TORX screw and washer**
2. **Fuel tank tab**
3. **Rubber ring**
4. **Frame**
5. **Rubber grommet**
6. **Metal insert for grommet**

Figure 4-11. Rear Tank Screw

REMOVAL

1. Remove seat.

⚠WARNING

To prevent accidental vehicle start-up, which could cause death or serious injury, remove main fuse before proceeding. (00251b)

2. See Figure 4-12. Remove trim insert (1) from console (2).
3. Remove nut (3) from front of console.
4. Remove fastener (4) and washer (5) from rear of console.

INSTALLATION

FASTENER	TORQUE VALUE	
Fuel tank screw, rear, FXSB	18-22 ft-lbs	24.4-29.8 Nm
Console mounting nut, FXSB	30-50 **in-lbs**	3.4-5.7 Nm

NOTE

Be sure front console fastener (6) is installed in bracket in fuel tank.

1. Place console on fuel tank.
2. See Figure 4-12. Install washer (5) and screw (4) to rear of console. Tighten screw to 18-22 ft-lbs (24.4-29.8 Nm).
3. Install nut on front of console. Tighten to 30-50 **in-lbs** (3.4-5.7 Nm).
4. Install trim insert (1) on console (2).

⚠WARNING

After installing seat, pull upward on seat to be sure it is locked in position. While riding, a loose seat can shift causing loss of control, which could result in death or serious injury. (00070b)

5. Install seat.

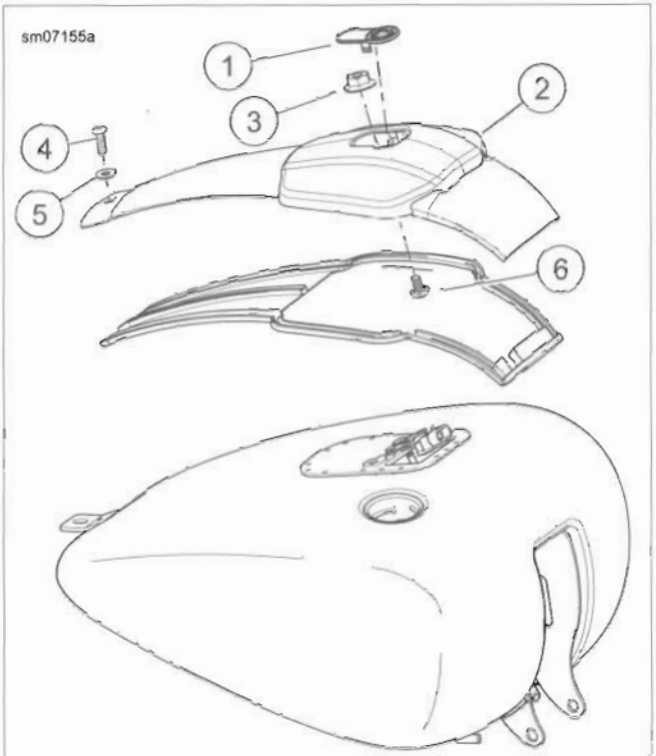

1. **Trim insert**
2. **Console**
3. **Nut**
4. **Screw**
5. **Washer**
6. **Front console fastener**

Figure 4-12. Console

GENERAL

See the electrical diagnostic manual for information on the function and testing of the throttle position sensor (TPS).

REMOVAL

1. Remove seat.

⚠WARNING

To prevent accidental vehicle start-up, which could cause death or serious injury, remove main fuse before proceeding. (00251b)

2. Remove main fuse.
3. Remove air cleaner assembly. See 4.3 AIR CLEANER ASSEMBLY.
4. See Figure 4-13. Unplug TP sensor connector [88].
5. Remove two fasteners to detach TP sensor from throttle body. Discard fasteners.

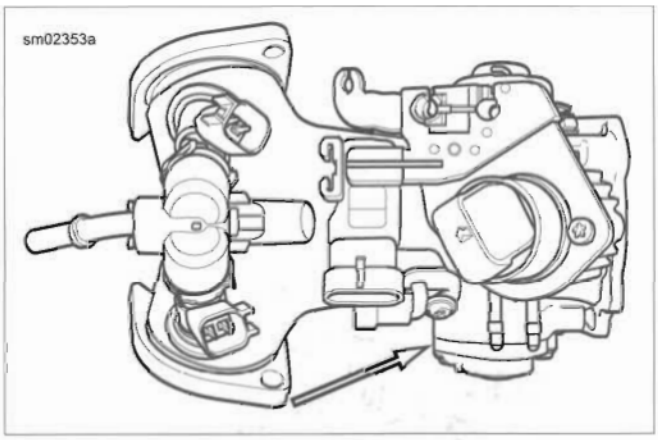

Figure 4-13. Throttle Position Sensor

INSTALLATION

FASTENER	TORQUE VALUE	
Throttle position sensor fasteners	18 in-lbs	2.0 Nm

NOTE

Close throttle for proper installation of throttle position sensor.

1. See Figure 4-14. Replace O-ring (2) if necessary.
2. Fit pocket (3) of throttle position sensor over throttle shaft while engaging index pin (1) with hole on machined flange of induction module.
3. Install two new fasteners (4) to fasten throttle position sensor to induction module. Tighten to 18 in-lbs (2.0 Nm).
4. Using the throttle lever mechanism, open and close the throttle plates to check for proper operation. Be sure that the mechanism operates smoothly without binding or sticking.
5. Connect TP sensor connector [88].
6. Install air cleaner assembly. See 4.3 AIR CLEANER ASSEMBLY.
7. Install main fuse.

⚠WARNING

After installing seat, pull upward on seat to be sure it is locked in position. While riding, a loose seat can shift causing loss of control, which could result in death or serious injury. (00070b)

8. Install seat.

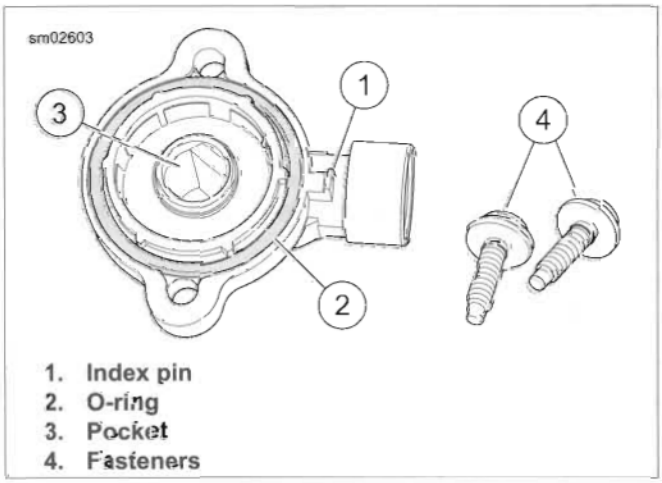

1. Index pin
2. O-ring
3. Pocket
4. Fasteners

Figure 4-14. Throttle Position Sensor Installation

GENERAL

See the electrical diagnostic manual for information on the function and testing of the intake air temperature sensor (IAT sensor).

REMOVAL

1. Remove seat.

⚠WARNING

To prevent accidental vehicle start-up, which could cause death or serious injury, remove main fuse before proceeding. (00251b)

2. Remove main fuse.
3. Remove air cleaner backplate. See 4.3 AIR CLEANER ASSEMBLY.
4. See Figure 4-15. Unplug IAT sensor connector [89].
5. Remove fastener to detach IAT sensor. Discard fastener.

INSTALLATION

FASTENER	TORQUE VALUE	
Intake air temperature sensor (IAT) fastener	15-20 **in-lbs**	1.7-2.3 Nm

1. See Figure 4-16. Inspect O-ring (1) in groove of intake air temperature sensor for cuts, tears or signs of deterioration. Install **new** O-ring if necessary.
2. See Figure 4-15. Insert sensor into induction module with electrical connector facing toward the left side of the motorcycle.
3. See Figure 4-16. Install fastener (2) and tighten to 15-20 **in-lbs** (1.7-2.3 Nm).
4. Connect IAT sensor connector [89].
5. Install air cleaner assembly. See 4.3 AIR CLEANER ASSEMBLY.
6. Install main fuse.

⚠WARNING

After installing seat, pull upward on seat to be sure it is locked in position. While riding, a loose seat can shift causing loss of control, which could result in death or serious injury. (00070b)

7. Install seat.

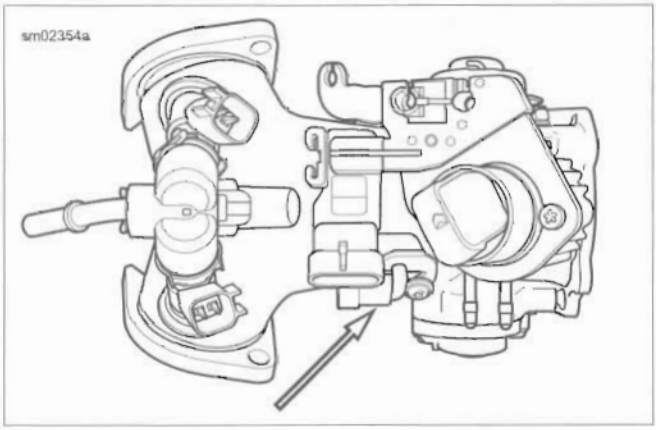

Figure 4-15. Intake Air Temperature Sensor Location

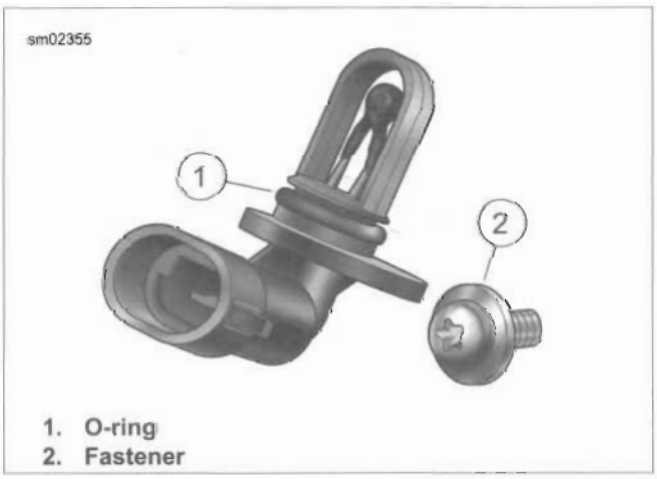

1. **O-ring**
2. **Fastener**

Figure 4-16. Intake Air Temperature Sensor

GENERAL

⚠WARNING

Stop the engine when refueling or servicing the fuel system. Do not smoke or allow open flame or sparks near gasoline. Gasoline is extremely flammable and highly explosive, which could result in death or serious injury. (00002a)

See the electrical diagnostic manual for information on the function and testing of the engine temperature sensor (ET sensor).

REMOVAL

1. Purge and disconnect fuel supply line. See 4.4 FUEL SUPPLY LINE.

⚠WARNING

To prevent accidental vehicle start-up, which could cause death or serious injury, remove main fuse before proceeding. (00251b)

2. Remove main fuse.

NOTE

On some models, removing horn may simplify procedure.

3. See Figure 4-17. Pull back boot to reveal ET sensor at back of front cylinder.
4. Unplug ET sensor connector [90] by pulling external latch outward and using rocking motion to remove.
5. See Figure 4-18. Loosen ET sensor using socket. When sensor starts to turn easily, finish removing by hand.

INSTALLATION

FASTENER	TORQUE VALUE	
Engine temperature (ET) sensor	120-180 **in-lbs**	13.6-20.3 Nm
Instrument console acorn nut	30-50 **in-lbs**	3.4-5.7 Nm

1. Hand start **new** ET sensor into cylinder head bore 2-3 turns.
2. Tighten sensor to 120-180 **in-lbs** (13.6-20.3 Nm).
3. Connect ET sensor connector [90].
4. Pull boot over connector.
5. Install fuel supply line.
6. Connect fuel pump module connector [86].
7. Install instrument console.
   a. **All but FXSB:** Install acorn nut and washer. Tighten acorn nut to 30-50 **in-lbs** (3.4-5.7 Nm).
   b. **FXSB:** see 4.7 CONSOLE: FXSB.
8. Install main fuse.
9. Clear any DTC that was set due to running the engine with fuel pump module connector [86] disconnected.

⚠WARNING

After installing seat, pull upward on seat to be sure it is locked in position. While riding, a loose seat can shift causing loss of control, which could result in death or serious injury. (00070b)

10. Install seat.

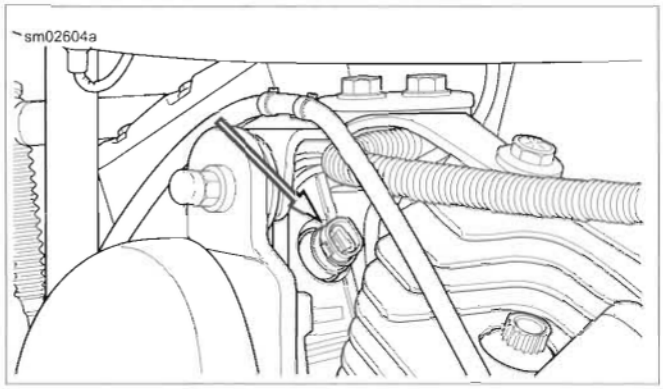

Figure 4-17. Engine Temperature Sensor

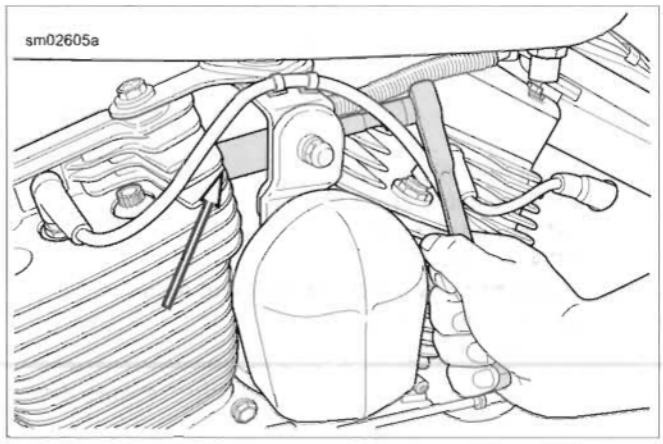

Figure 4-18. Engine Temperature Sensor Removal

REMOVAL

⚠WARNING

Stop the engine when refueling or servicing the fuel system. Do not smoke or allow open flame or sparks near gasoline. Gasoline is extremely flammable and highly explosive, which could result in death or serious injury. (00002a)

1. Gain access to the induction module by removing fuel tank mounting fasteners and fuel line. Carefully pivot tank upward and prop in position. See 4.6 FUEL TANK.
2. Loosen cable adjusters on throttle cables.
3. Remove air cleaner backplate. See 4.3 AIR CLEANER ASSEMBLY.
4. See Figure 4-19. Pull purge hose from fitting (5) at top of induction module (California and select models only).
5. See Figure 4-20. Pull idle cable barrel (1) from upper hole in throttle wheel. Pull throttle cable barrel (2) from lower hole. Using slots, release idle and throttle cables from guides in throttle cable bracket.
6. See Figure 4-19. Remove idle air control connector [87] (3) and manifold absolute pressure sensor connector [80] (7).

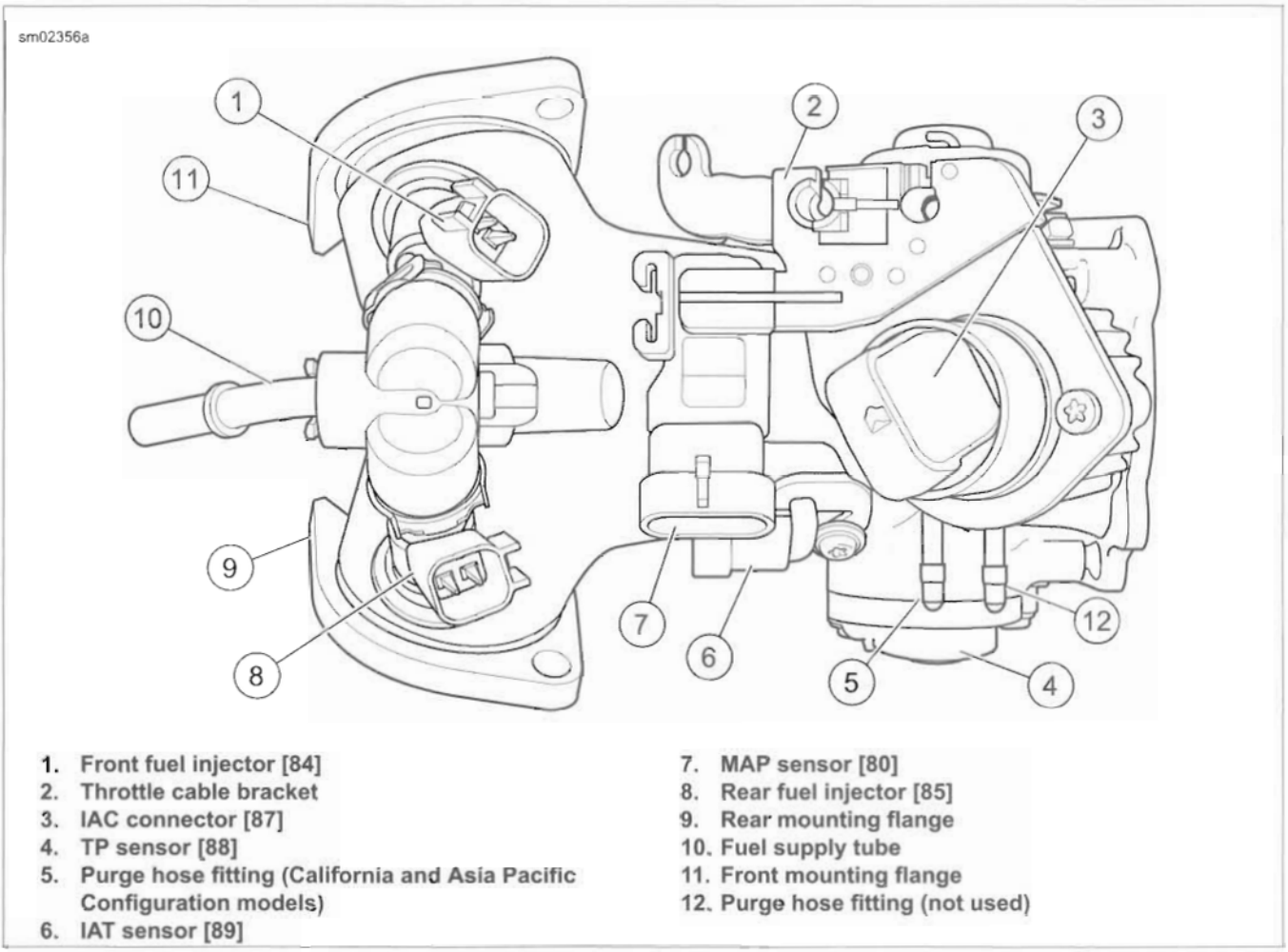

1. **Front fuel injector [84]**
2. **Throttle cable bracket**
3. **IAC connector [87]**
4. **TP sensor [88]**
5. **Purge hose fitting (California and Asia Pacific Configuration models)**
6. **IAT sensor [89]**
7. **MAP sensor [80]**
8. **Rear fuel injector [85]**
9. **Rear mounting flange**
10. **Fuel supply tube**
11. **Front mounting flange**
12. **Purge hose fitting (not used)**

Figure 4-19. Induction Module

7. Remove front fuel injector connector [84] (1) and rear fuel injector connector [85] (8).
8. Remove throttle position sensor connector [88] (4) and intake air temperature sensor connector [89] (6).
9. On left side of vehicle, loosen two screws holding front and rear mounting flanges (9, 11) to cylinder head.
10. On right side of vehicle, remove two screws holding front and rear mounting flanges to cylinder head. Remove induction module.

⚠WARNING

Gasoline can drain from the fuel line when disconnected from induction module. Gasoline is extremely flammable and highly explosive, which could result in death or serious injury. Wipe up spilled fuel immediately and dispose of rags in a suitable manner. (00269a)

11. See Figure 4-21. If replacing fuel supply line (2), squeeze ends of tab (1) and pull tab away from fuel supply line to release from fuel supply tube (3).
12. Remove seals from flange adapters. Discard seals. Remove flange adapters from outlet ports of induction module.

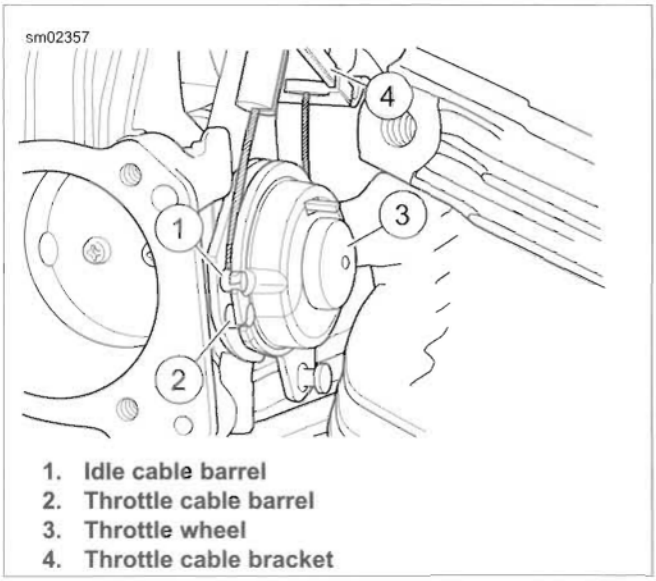

1. **Idle cable barrel**
2. **Throttle cable barrel**
3. **Throttle wheel**
4. **Throttle cable bracket**

Figure 4-20. Throttle/Idle Cables

INSTALLATION

FASTENER	TORQUE VALUE	
Manifold mounting screws, 1st torque	16-20 **in-lbs**	1.8-2.3 Nm
Manifold mounting screws, final torque	96-156 **in-lbs**	10.9-17.6 Nm

1. See Figure 4-19. Place a **new** seal in each mounting flange (9, 11) with the beveled side in against the counter-bore.

NOTE

When induction module is positioned on manifold mounting screws, verify that the mounting flanges are correctly installed on the manifold. Verify that the rubber seals are in place.

2. Place intake manifold seal, flanges and induction module in position. Install the manifold mounting screws finger-tight.
3. See Figure 4-21. Slide fuel supply line (2) onto fuel supply tube (3). Push in on tab until it locks the fuel supply line (2) on fuel supply tube (3). Tug on fuel supply line (2) to verify that it is locked in place.
4. See Figure 4-20. Install sleeve on throttle cable housing into cable guide at top of throttle cable bracket (4).
5. Drawing throttle cable downward, fit barrel end (2) into lower hole in throttle wheel (3).
6. Install sleeve and spring on idle cable housing into cable guide at bottom of throttle cable bracket. Insert barrel end (1) into upper hole in throttle wheel.
7. Adjust throttle cables. See 1.13 THROTTLE CABLES.
8. See Figure 4-19. On California and select models, attach purge hose to fitting (5) on throttle body.
9. Connect front (1) and rear (8) fuel injector connectors, IAC (3) connector, MAP sensor (7) connector, TP sensor (4) connector and IAT (6) sensor connector.
10. Install air cleaner backplate. See 4.3 AIR CLEANER ASSEMBLY.
11. Tighten manifold mounting screws to an initial torque of 16-20 **in-lbs** (1.8-2.3 Nm).
12. Tighten manifold mounting screws to a final torque of 96-156 **in-lbs** (10.9-17.6 Nm).
13. Turn the Ignition/Light Key Switch to ON and then back to OFF to reset idle air control to park position.
14. Install air cleaner filter and cover.
15. Install fuel tank. See 4.6 FUEL TANK.

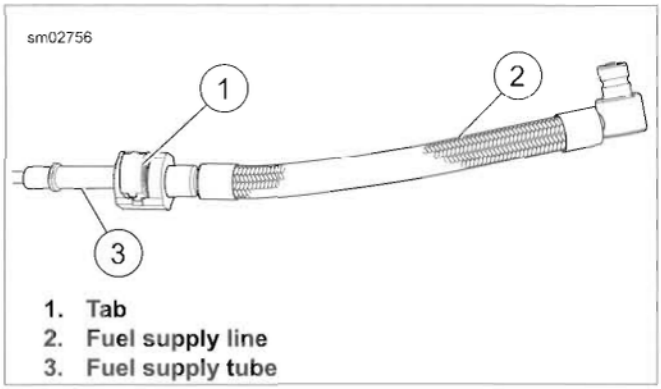

1. **Tab**
2. **Fuel supply line**
3. **Fuel supply tube**

Figure 4-21. Fuel Supply Line

GENERAL

⚠WARNING

Stop the engine when refueling or servicing the fuel system. Do not smoke or allow open flame or sparks near gasoline. Gasoline is extremely flammable and highly explosive, which could result in death or serious injury. (00002a)

See electrical diagnostic manual for information on the function and testing of the idle air control (IAC).

REMOVAL

1. Remove induction module. See 4.11 INDUCTION MODULE.
2. See Figure 4-22. Remove two fasteners (2) to release throttle cable bracket (1) from induction module. Discard fasteners.
3. See Figure 4-23. Pull IAC (1) and O-ring (2) from throttle body.

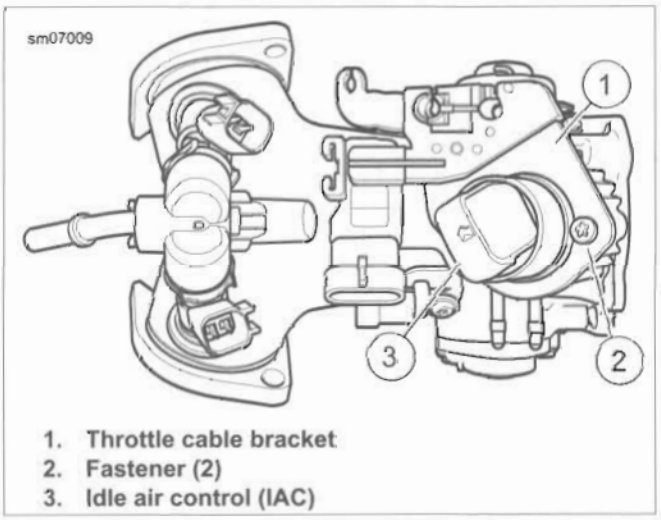

1. **Throttle cable bracket**
2. **Fastener (2)**
3. **Idle air control (IAC)**

Figure 4-22. Idle Air Control (IAC) Location

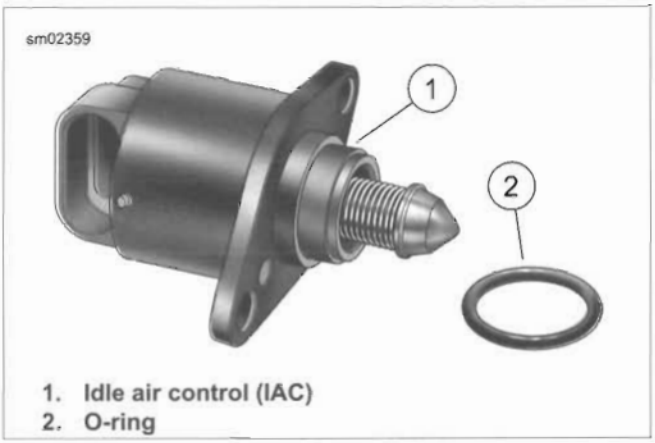

1. **Idle air control (IAC)**
2. **O-ring**

Figure 4-23. Idle Air Control (IAC)

INSTALLATION

FASTENER	TORQUE VALUE	
Throttle cable bracket fasteners	20-35 in-lbs	2.3-4.0 Nm

1. See Figure 4-23. Apply clean engine oil to IAC O-ring (2). Install O-ring in counterbore of induction module.
2. With the electrical connector facing the rear left side of the induction module, install idle air control into bore.
3. Place idle air control and O-ring into throttle body. Be sure O-ring is properly seated in throttle body groove.
4. See Figure 4-24. Insert index pin (2) at bottom of throttle cable bracket (1) into hole in boss at top of induction module.
5. See Figure 4-22. Install new throttle cable bracket fasteners (2). Tighten to 20-35 in-lbs (2.3-4.0 Nm).
6. Install induction module. See 4.11 INDUCTION MODULE.

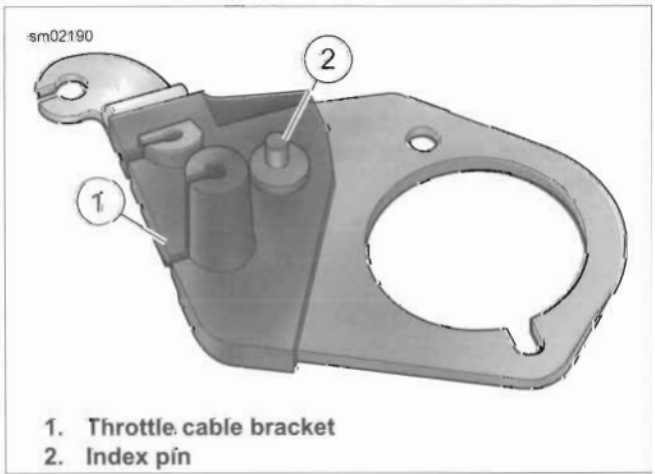

1. **Throttle cable bracket**
2. **Index pin**

Figure 4-24. Throttle Cable Bracket

REMOVAL

1. Remove induction module. See 4.11 INDUCTION MODULE.
2. See Figure 4-25. Remove two fasteners (2) to release throttle cable bracket (1) from induction module. Discard fasteners.
3. Gently push up on MAP sensor and attached seal to remove from intake manifold.

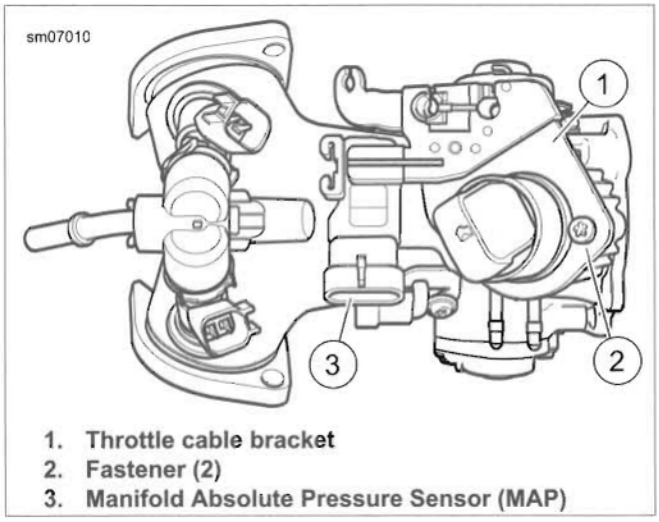

1. **Throttle cable bracket**
2. **Fastener (2)**
3. **Manifold Absolute Pressure Sensor (MAP)**

Figure 4-25. Throttle Cable Bracket Location

INSTALLATION

FASTENER	TORQUE VALUE	
Throttle cable bracket fasteners	20-35 **in-lbs**	2.3-4.0 Nm

NOTE

See Figure 4-26. Prior to installing the original sensor, inspect the seal (1). Worn or damaged seals could cause vacuum leaks. Install ***new*** *seal if necessary.*

1. Push MAP sensor and seal into intake manifold.
2. With the electrical connector facing toward the rear of the induction module (side opposite throttle wheel), insert MAP sensor into hole in induction module.
3. See Figure 4-24. Insert index pin (2) at bottom of throttle cable bracket into hole in boss at top of induction module.
4. See Figure 4-25. Install **new** throttle cable bracket fasteners (2). Tighten to 20-35 **in-lbs** (2.3-4.0 Nm).
5. Install induction module. See 4.11 INDUCTION MODULE.

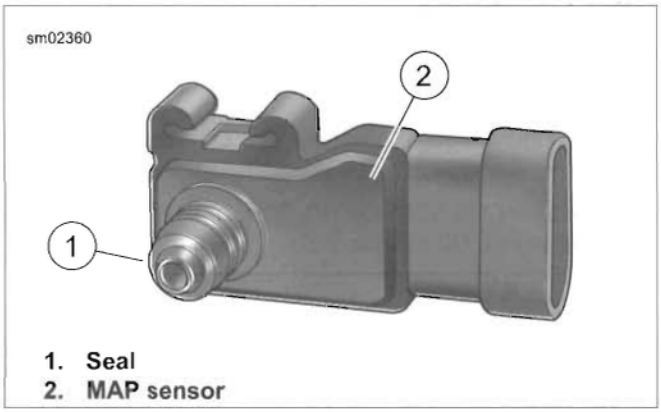

1. **Seal**
2. **MAP sensor**

Figure 4-26. MAP Sensor

GENERAL

See the electrical diagnostic manual for information on the function and testing of the heated oxygen sensor (HO2).

REMOVAL

PART NUMBER	TOOL NAME
FRX181	OXYGEN SENSOR SOCKET
HD-50652	OXYGEN SENSOR SOCKET

Front O2 Sensor

NOTE

See Figure 4-27. The O2 sensors are installed in threaded bosses on the inboard side of front and rear exhaust pipes.

1. Remove fasteners securing voltage regulator bracket to crankcase.
2. See Figure 4-28. Disconnect front O2 sensor connector (1).
3. Use OXYGEN SENSOR SOCKET (Part No. HD-50652) to remove front O2 sensor.

Rear O2 Sensor

1. Remove seat.
2. Remove battery.
3. See Figure 4-29. Disconnect rear O2 sensor connector (1).
4. Use OXYGEN SENSOR SOCKET (Part No. FRX181) to remove rear O2 sensor.

INSTALLATION

FASTENER	TORQUE VALUE	
Oxygen sensor, front	14.0 ft-lbs	19.0 Nm
Voltage regulator bracket fasteners	70-100 in-lbs	7.9-11.3 Nm
Oxygen sensor, rear	14.0 ft-lbs	19.0 Nm

NOTES

- *Do not install sensors that have been dropped or impacted by other components. Damage to the sensing element may have occurred.*
- *Replacement sensor assemblies have threads coated with ANTI-SEIZE LUBRICANT and new seal rings.*
- *If O2 sensor will be reused, replace the gasket. Use a high-quality professional grade side cutter for gasket removal. Make sure larger side of new gasket faces exhaust.*
- *If O2 sensor will be reused, apply a thin coat of ANTI-SEIZE LUBRICANT to threads of each oxygen sensor prior to installing in header. Do not use any other grease or sealant product on sensor threads.*
- *The electrical connector must be clean and free of any dielectric grease.*

Front O2 Sensor

1. If reusing oxygen sensor:
   a. Remove used seal and install a **new** one.
   b. Apply a light coating of ANTI-SEIZE LUBRICANT to threads.
2. Thread sensor into threaded boss on exhaust pipe. Tighten to 14.0 ft-lbs (19.0 Nm).
3. See Figure 4-28. Install front oxygen sensor connector (1).
4. Install voltage regulator bracket. Tighten to 70-100 **in-lbs** (7.9-11.3 Nm).

Rear O2 Sensor

1. If reusing oxygen sensor:
   a. Remove used seal and install a **new** one.
   b. Apply a light coating of ANTI-SEIZE LUBRICANT to threads.
2. Thread sensor into threaded boss on exhaust pipe and tighten to 14.0 ft-lbs (19.0 Nm).
3. See Figure 4-29. Install rear oxygen sensor connector (1) and place harness in battery caddy clip (2).
4. Install battery.
5. Install seat.

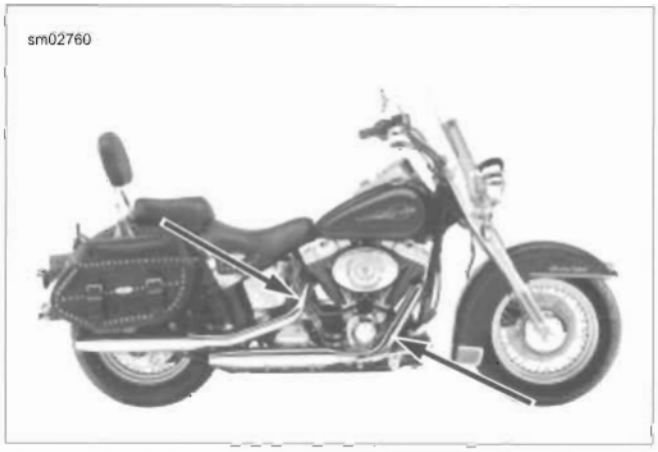

Figure 4-27. Oxygen Sensors (Inboard Side of Exhaust Pipes)

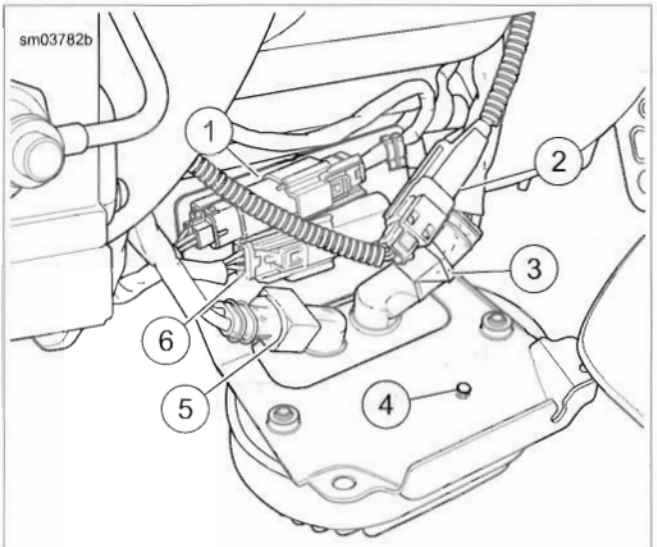

1. Front oxygen sensor connector
2. Crank position sensor connector
3. Stator connector lock
4. Crank position sensor connector stud
5. Voltage regulator connector lock
6. Jiffy stand interlock connector

Figure 4-28. Voltage Regulator Connectors

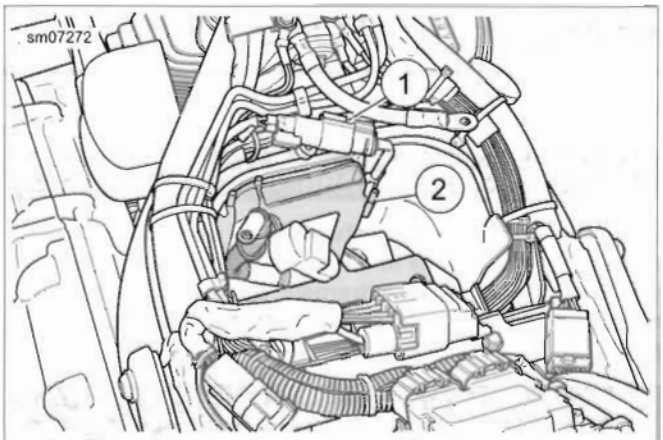

1. Rear oxygen sensor connector
2. Battery caddy clip

Figure 4-29. Rear O2 Sensor Connector

GENERAL

⚠WARNING

Stop the engine when refueling or servicing the fuel system. Do not smoke or allow open flame or sparks near gasoline. Gasoline is extremely flammable and highly explosive, which could result in death or serious injury. (00002a)

⚠WARNING

Do not use solvents or other products that contain chlorine on plastic fuel system components. Chlorine can degrade plastic fuel system components, which can cause a loss of fuel system pressure or engine stalling and could result in death or serious injury. (000621b)

See the electrical diagnostic manual for information on the function and testing of the fuel injectors.

REMOVAL

1. Remove induction module. See 4.11 INDUCTION MODULE.

NOTE

If not replacing fuel supply tube or O-rings, do not remove.

2. See Figure 4-30. Remove fastener (1) retaining fuel supply tube (2).
3. Pull fuel supply tube from fuel rail. Remove sealing washer (4) and O-ring (3) from fuel supply tube. Remove second O-ring from fuel rail bore. Discard sealing washer and O-rings.
4. See Figure 4-31. With a rocking motion, pull fuel injectors with attached fuel rail from the induction module.
5. See Figure 4-32. Remove spring clips (2) from fuel injectors. Pull fuel injectors from fuel rail. To overcome the resistance of the top O-ring, gently rock each fuel injector while pulling.
6. Remove O-rings (1) from fuel injectors. Discard O-rings.

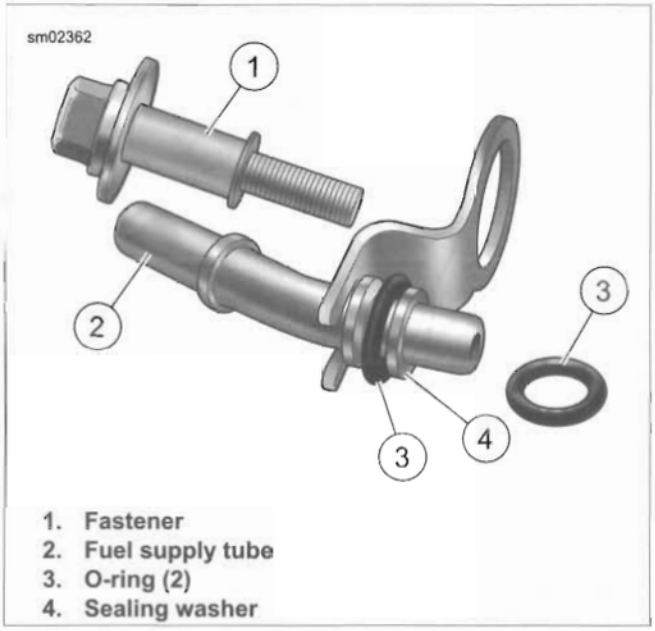

1. Fastener
2. Fuel supply tube
3. O-ring (2)
4. Sealing washer

Figure 4-30. Fuel Supply Tube

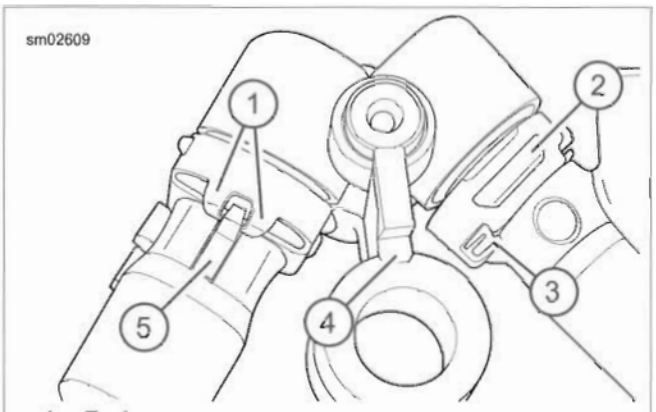

1. Fork
2. Lip
3. Opening
4. Rail tab
5. Injector tab

Figure 4-31. Fuel Rail

INSTALLATION

FASTENER	TORQUE VALUE	
Fuel supply tube fastener	90-110 in-lbs	10.2-12.4 Nm

1. See Figure 4-32. Apply a thin coat of clean engine oil to **new** fuel injector O-rings (1). Install on fuel injectors.
2. See Figure 4-31. Push electrical connector side of fuel injectors into fuel rail.
3. With the concave side toward the fuel rail, install spring clip into slot on fuel injector. In the installed position, openings (3) in sides of clip engage lip (2) on fuel rail, while fork (1) at back of clip captures rail tab (4) on fuel injector.

4. Rotate fuel injectors, so that the electrical connectors are on the outboard side. Push fuel injectors into induction module bores until tab on fuel rail engages machined slot at top of induction module.

5. See Figure 4-30. Slide **new** O-ring (3) down shorter neck of the fuel supply tube until it contacts the collar. Slide **new** sealing washer (4) down tube until it contacts O-ring. Install second O-ring (3) in fuel rail bore.

6. Push fuel supply tube (2) into fuel rail bore until clamp is seated on round step of fuel rail. Install fastener (1) and tighten to 90-110 **in-lbs** (10.2-12.4 Nm).

7. Install induction module. See 4.11 INDUCTION MODULE.

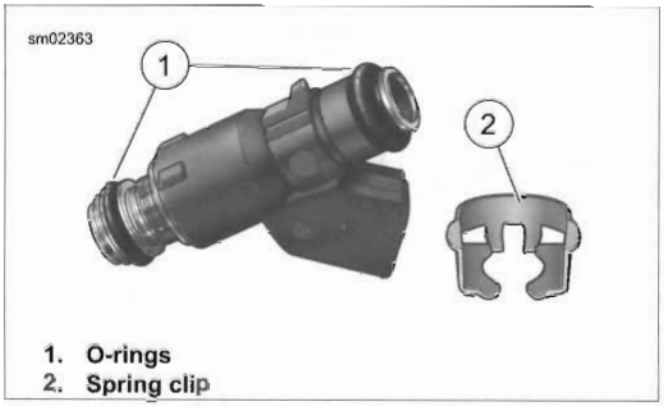

1. **O-rings**
2. **Spring clip**

Figure 4-32. Fuel injector

GENERAL

⚠WARNING

Stop the engine when refueling or servicing the fuel system. Do not smoke or allow open flame or sparks near gasoline. Gasoline is extremely flammable and highly explosive, which could result in death or serious injury. (00002a)

⚠WARNING

Do not use solvents or other products that contain chlorine on plastic fuel system components. Chlorine can degrade plastic fuel system components, which can cause a loss of fuel system pressure or engine stalling and could result in death or serious injury. (000621b)

See the electrical diagnostic manual for information on the function and testing of the fuel pump.

REMOVAL

1. Purge and disconnect fuel supply line. See 4.4 FUEL SUPPLY LINE.
2. Disconnect console wiring.

⚠WARNING

To prevent accidental vehicle start-up, which could cause death or serious injury, remove main fuse before proceeding. (00251b)

3. Remove main fuse.
4. Drain fuel tank.
   a. Obtain a short section of hose (5/16 inch I.D.). Insert bolt in one end of hose and install hose clamp to verify that end is securely plugged.
   b. See Figure 4-33. Cut clamp (1) from one end of crossover hose (2). Quickly replace crossover hose on fuel tank fitting with open end of short hose while directing flow of gasoline from free end of crossover hose into suitable container.
5. Remove screws securing top plate to fuel tank. Discard screws.

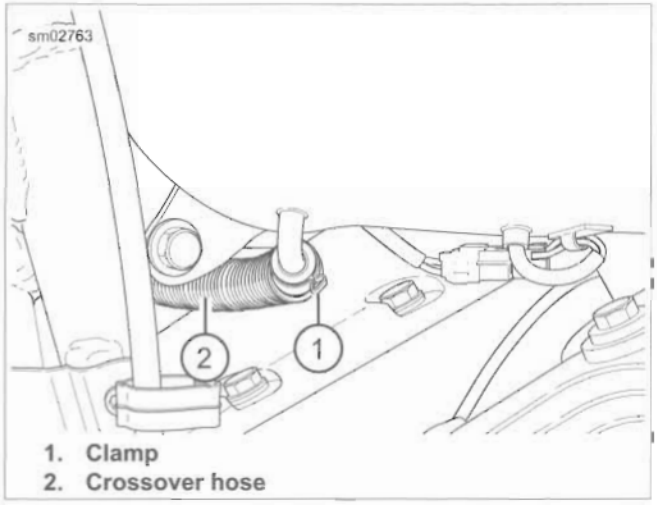

1. Clamp
2. Crossover hose

Figure 4-33. Crossover Hose

6. See Figure 4-34. Pull top plate out of fuel tank enough to expose fuel hoses (1, 3).
7. Disconnect hoses (1, 3) from filter housing (2).

⚠WARNING

Do not replace the special Teflon coated fuel pump wiring with ordinary bulk wire. Ordinary insulation materials can deteriorate when put in contact with gasoline and cause an explosion, which could result in death or serious injury. (00566b)

8. See Figure 4-35. Disconnect electrical connectors (2-4). Move top plate with filter and regulator out of the way.
9. See Figure 4-36. Pull up on bracket (2) and slide forward. Remove fuel pump assembly (1) from fuel tank.

NOTE

Do not bend float rod of fuel level sender. A bent float rod will result in erroneous gauge readings.

10. See Figure 4-37. Pull out and up on fuel sending unit and remove from fuel tank.

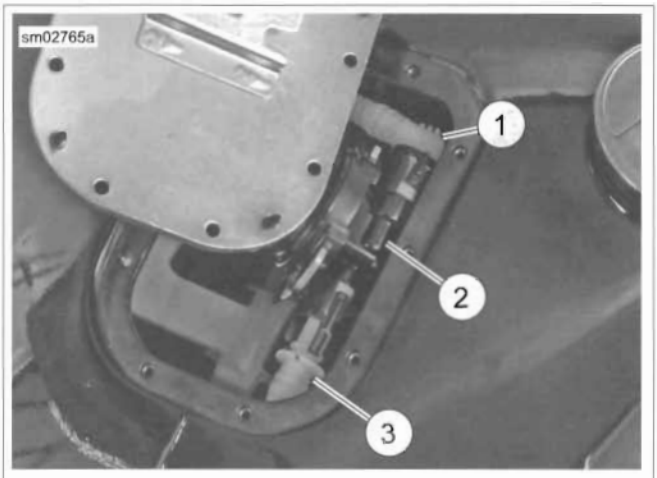

1. Hose
2. Filter housing
3. Hose

Figure 4-34. Fuel Pump Hoses

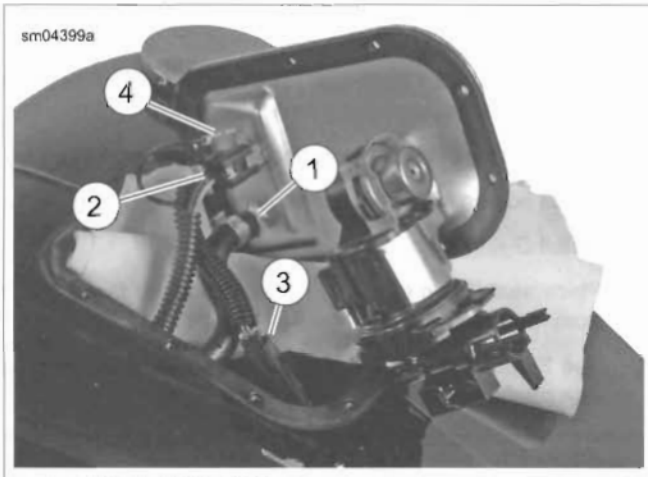

1. Vapor valve hose
2. Top plate connector
3. Fuel level sender connector
4. Ground connector

Figure 4-35. Fuel Pump and Sending Unit Wire Connectors

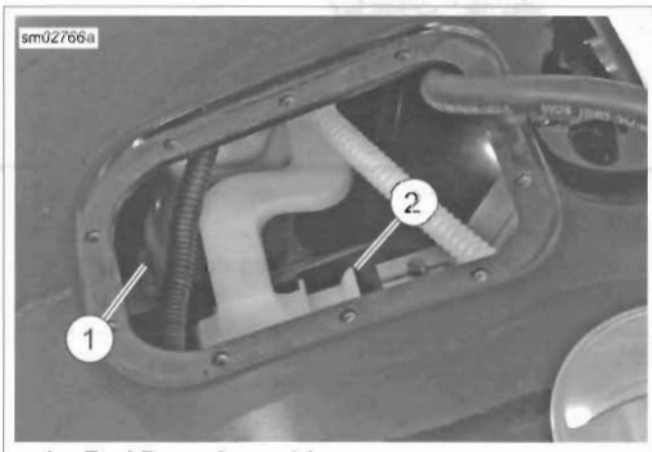

1. Fuel Pump Assembly
2. Bracket

Figure 4-36. Fuel Pump

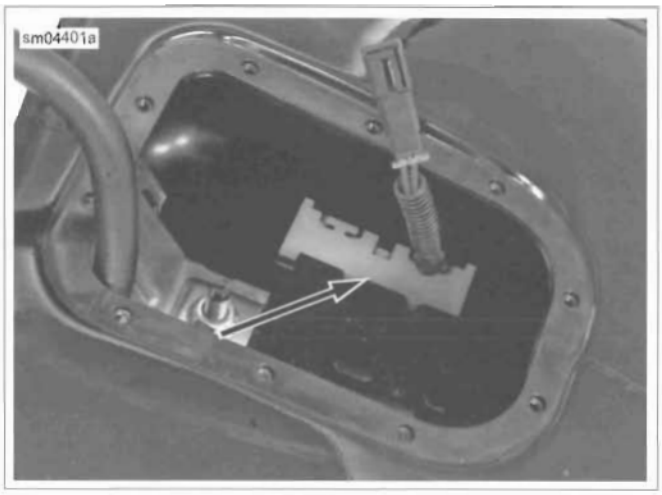

Figure 4-37. Fuel Sending Unit Removal

VAPOR VALVE

FASTENER	TORQUE VALUE	
Vapor valve bracket nut	120-144 in-lbs	13.6-16.3 Nm

1. See Figure 4-38. Remove nut.
2. Pull bracket with vapor valve from fuel tank.
3. See Figure 4-39. Cut clamp (1) and remove hose from vapor valve (2).
4. Cut cable strap securing vapor valve and replace. Secure with **new** cable strap.
5. Attach hose to vapor valve and secure with **new** hose clamp.
6. See Figure 4-38. Install bracket with nut. Tighten to 120-144 **in-lbs** (13.6-16.3 Nm).

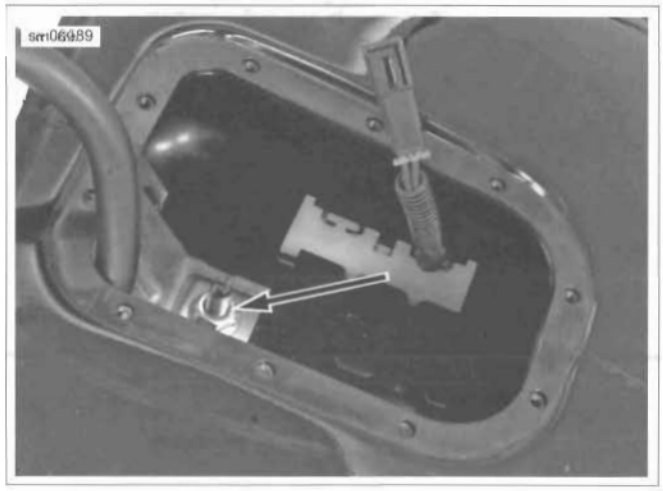

Figure 4-38. Vapor Valve Bracket

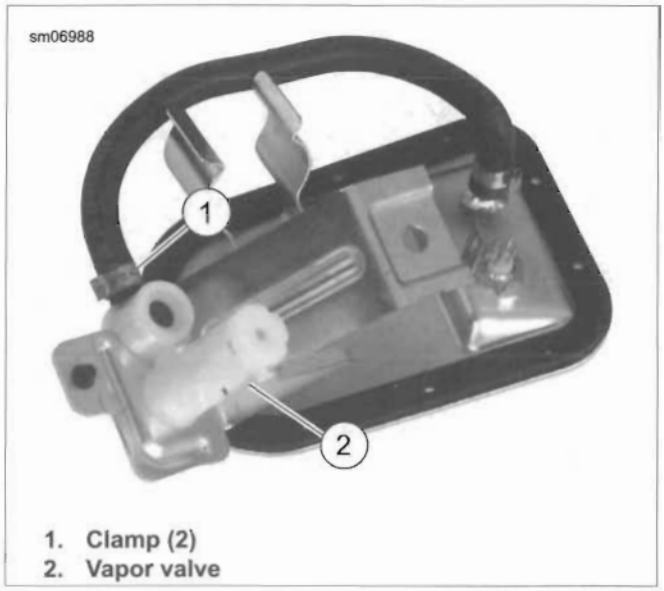

1. Clamp (2)
2. Vapor valve

Figure 4-39. Vapor Valve

DISASSEMBLY AND ASSEMBLY

Fuel Filter

1. See Figure 4-40. Remove retainer clip (1).
2. Separate filter manifold (2) from fuel filter housing.
3. See Figure 4-41. Remove O-ring (1) and fuel filter (2).
4. Install **new** fuel filter.
5. Install **new** O-ring.
6. See Figure 4-40. Install filter manifold (2) and retainer clip (1).

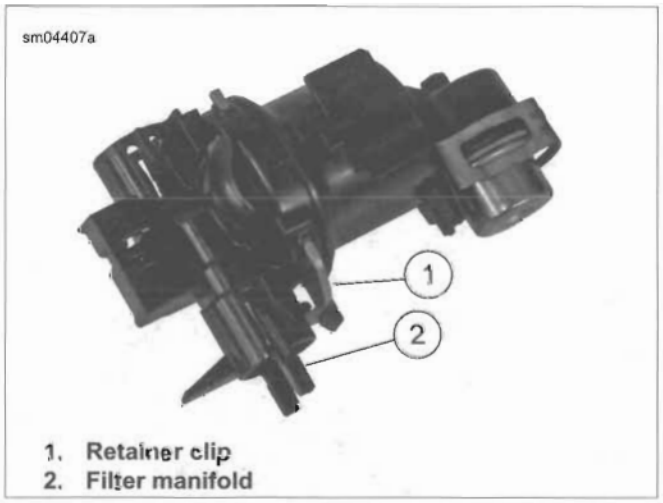

1. Retainer clip
2. Filter manifold

Figure 4-40. Fuel Filter Housing

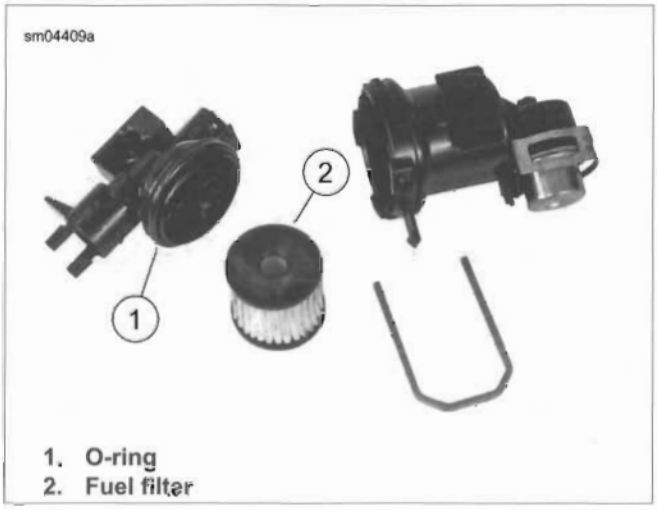

1. O-ring
2. Fuel filter

Figure 4-41. Fuel Filter

Regulator

1. See Figure 4-42. Remove retaining clip (1).
2. Remove regulator (2).
3. See Figure 4-43. Check seal (3), O-rings (4, 6), and screen (5) for damage. Replace if necessary.
4. Install O-ring (4) in regulator housing outlet port (1).
5. Install screen (5) with inner shoulder facing O-ring (4).
6. Install O-ring (6) in regulator housing.
7. Place seal (3) on regulator (2) with shoulder facing away from regulator.
8. See Figure 4-42. Place regulator in housing and secure with retaining clip (2).

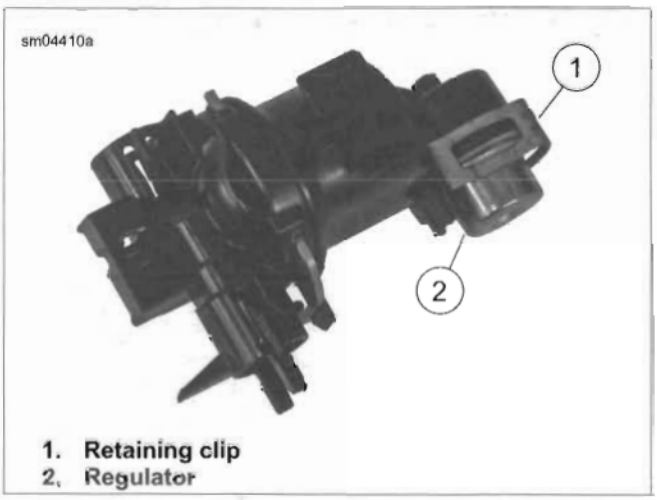

1. Retaining clip
2. Regulator

Figure 4-42. Fuel Regulator



1. Regulator housing outlet Port
2. Regulator
3. Seal
4. O-ring
5. Screen
6. O-ring

Figure 4-43. Regulator Assembly

Inlet sock

1. See Figure 4-44. Press tabs (2) securing inlet sock (1) to upper retainer (3).
2. Remove inlet sock from upper retainer.

NOTE

See Figure 4-45. In next step, be sure inlet sock (2) engages fuel pump inlet (1).

3. See Figure 4-44. Install inlet sock (1) on upper retainer (3). Be sure tabs (2) engage slots in body.

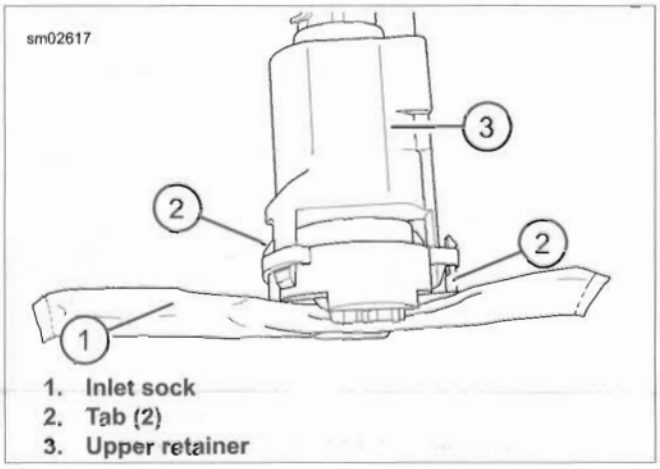

1. Inlet sock
2. Tab (2)
3. Upper retainer

Figure 4-44. Fuel Sock

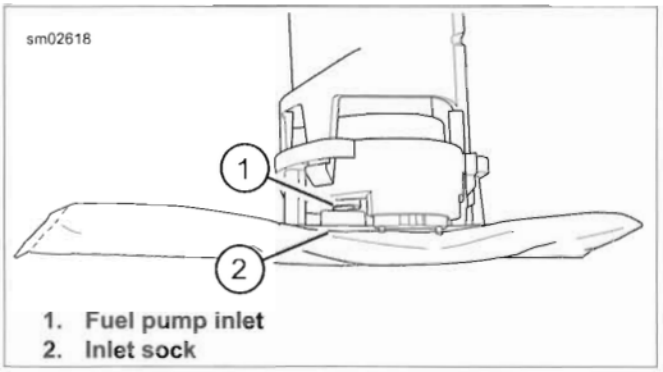

1. Fuel pump inlet
2. Inlet sock

Figure 4-45. Fuel Sock Installation

Fuel Pump

1. Disconnect electrical harness from fuel pump.
2. Remove mounting bracket.
3. See Figure 4-44. Remove fuel sock.
4. See Figure 4-46. Press tabs (3) and remove lower retainer (2) from upper retainer (1).
5. See Figure 4-47. Remove upper isolator (1) from fuel pump and replace pump.
6. Install upper isolator (1) onto fuel pump.
7. Install fuel pump into upper retainer.
8. Make sure lower isolator (3) is properly positioned in lower retainer. Groove in lower retainer (2) should be visible with lower isolator installed.
9. See Figure 4-46. Install lower retainer.
10. See Figure 4-44. Install fuel sock.
11. Install mounting bracket onto upper retainer.
12. Connect wiring harness to fuel pump.

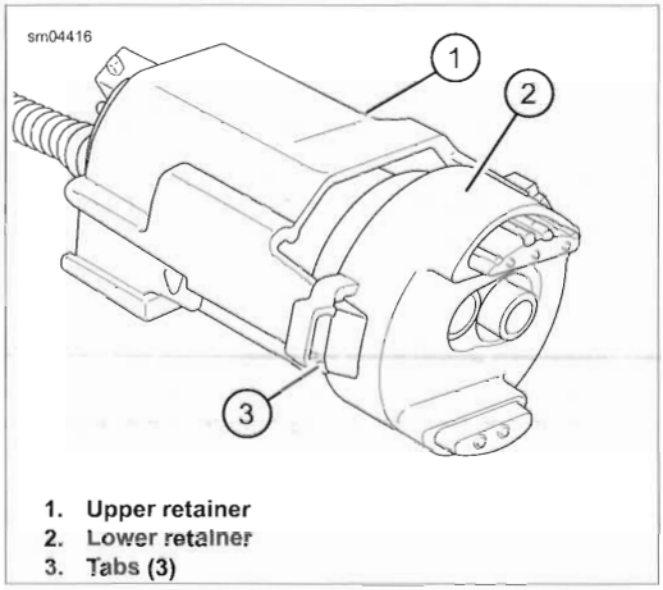

1. Upper retainer
2. Lower retainer
3. Tabs (3)

Figure 4-46. Fuel Pump

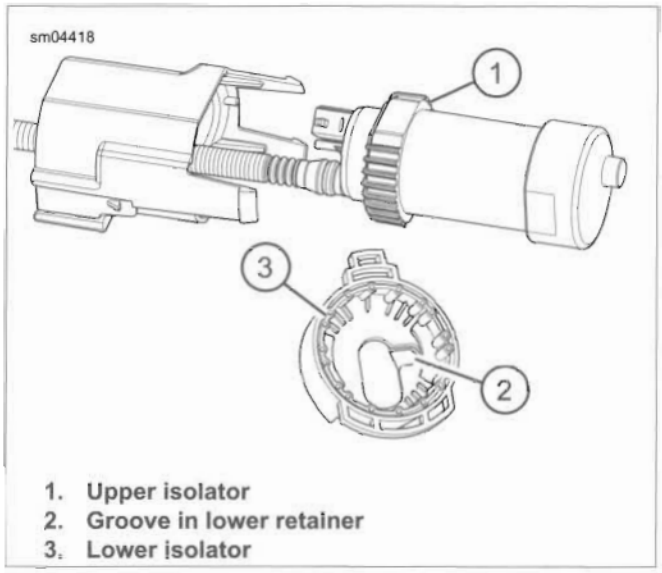

1. **Upper isolator**
2. **Groove in lower retainer**
3. **Lower isolator**

Figure 4-47. Fuel Pump Isolators

INSTALLATION

FASTENER	TORQUE VALUE	
Fuel pump/fuel gauge sending unit screws	18-24 **in-lbs**	2.0-2.7 Nm
Instrument console acorn nut	30-50 **in-lbs**	3.4-5.7 Nm

⚠WARNING

Do not replace the special Teflon coated fuel pump wiring with ordinary bulk wire. Ordinary insulation materials can deteriorate when put in contact with gasoline and cause an explosion, which could result in death or serious injury. (00566b)

NOTE

Do not bend float rod of fuel level sender. A bent float rod will result in erroneous gauge readings.

1. See Figure 4-37. Slide fuel sending unit down into welded bracket on right side of fuel tank until it snaps into position.
2. See Figure 4-36. Install fuel pump assembly (1) into fuel tank. Slide bracket (2) rearward into welded bracket until it snaps into place.

NOTE

Do not apply any type of sealant to gasket.

3. Install **new** gasket under top plate.
4. See Figure 4-35. Place top plate with filter housing and regulator on fuel tank. Connect electrical connectors (1-4).
5. See Figure 4-34. Install **new** O-rings on hoses (1,3).
6. Attach hoses (1, 3) to filter housing (2).
7. Install top plate on top of fuel tank.
8. See Figure 4-48. Install **new** screws and tighten using the pattern shown, to 18-24 **in-lbs** (2.0-2.7 Nm).
9. Connect fuel pump module connector [86].
10. Connect console wiring if present.
11. Install instrument console.
    a. **All but FXSB:** Install instrument console with acorn nut and washer. Tighten to 30-50 **in-lbs** (3.4-5.7 Nm).
    b. **FXSB:** see 4.7 CONSOLE: FXSB.
12. See Figure 4-33. Connect crossover hose (2) with **new** clamps (1).
13. Fill tank with gasoline. Check for leaks.
14. Install main fuse.
15. Check fuel system pressure. See 4.5 FUEL PRESSURE TEST.
16. Clear any DTC that was set due to running the engine with fuel pump module connector [86] disconnected.

⚠WARNING

After installing seat, pull upward on seat to be sure it is locked in position. While riding, a loose seat can shift causing loss of control, which could result in death or serious injury. (00070b)

17. Install seat.

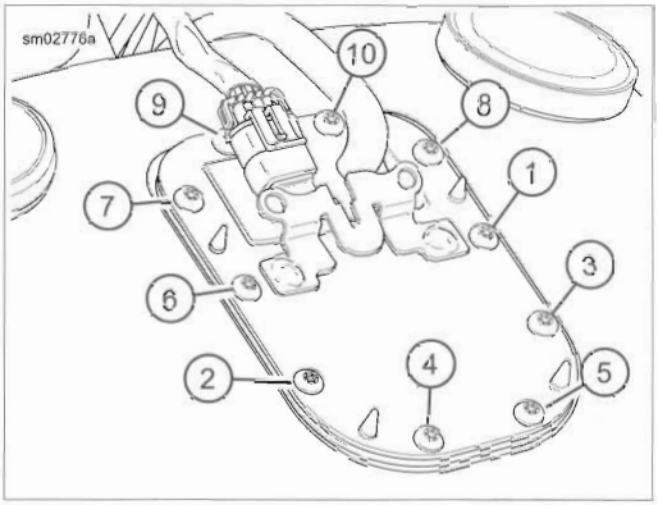

Figure 4-48. Top Plate Torque Sequence

MUFFLERS: FLSTC, FXST, FXSB

FASTENER	TORQUE VALUE	
Muffler clamps: FLSTC, FXST, FXSB	38-43 ft-lbs	51.6-58.4 Nm
Muffler fasteners: FLSTC, FXST, FXSB	96-120 in-lbs	10.9-13.6 Nm

Removal

1. See Figure 4-49. Apply penetrating oil to seams of mufflers and exhaust pipes (7, 23).
2. Remove muffler shield clamps (30) to detach muffler shields (29) from mufflers.
3. Remove muffler fasteners (24).
4. Remove and discard muffler clamps (3) to separate mufflers from exhaust pipes (7, 23).
5. Slide mufflers rearward off of pipes.

Assembly

1. Install **new** muffler clamps (3) to attach front (28) and rear (1) mufflers to exhaust pipes. Tighten clamps to 38-43 ft-lbs (51.6-58.4 Nm).
2. Install muffler fasteners (24). Tighten to 96-120 **in-lbs** (10.9-13.6 Nm).
3. Open muffler shield clamps (30) and install the muffler shields (29). Position clamps so the screws are on the outboard side in the most accessible position.

SYSTEM: FLSTC, FXST, FXSB

FASTENER	TORQUE VALUE	
Exhaust interconnect clamp: FLSTC, FXST, FXSB	25-30 ft-lbs	33.9-40.7 Nm
Exhaust manifold clamp lower nut, 1st torque: FLSTC, FXST, FXSB	9-18 in-lbs	1.0-2.0 Nm
Exhaust manifold clamp upper nut: FLSTC, FXST, FXSB	100-120 in-lbs	11.3-13.6 Nm
Exhaust manifold clamp lower nut final torque: FLSTC, FXST, FXSB	100-120 in-lbs	11.3-13.6 Nm
Exhaust system interconnect tube fasteners: FLSTC, FXST, FXSB	20-25 ft-lbs	27.1-33.9 Nm

Removal

1. Disconnect O2 sensor wiring. See 4.14 OXYGEN (O2) SENSOR.
2. See Figure 4-49. Remove heat shields (9, 22) by opening exhaust shield clamps (21).
3. Remove nuts (16) from front and rear cylinder head exhaust studs.
4. Remove two locknuts (25) attaching interconnect tube assembly (26) to frame.
5. Remove exhaust system as an assembly. Disengage rear pipe from port, then front pipe. Replace interconnect gaskets (27) and clamps (31) any time the connections are disassembled.

Installation

NOTE

Replacement cylinder head exhaust port gaskets (17) are tapered internally. Be sure the tapered side is facing exhaust pipes. Also check condition of retaining ring (18) before installation.

1. If either exhaust tube was removed from the interconnect tube, replace exhaust interconnect gasket (27) and exhaust interconnect clamp (31). Tighten **new** clamp to 25-30 ft-lbs (33.9-40.7 Nm).
2. Install **new** gaskets in both the front and rear cylinder heads with the tapered side facing exhaust pipes.
3. Position ends of exhaust pipes into front, then rear cylinder head exhaust ports placing holes in exhaust manifold clamp (19) over cylinder head exhaust studs. Loosely thread on flange nuts (16).
4. Loosely install locknuts (25) to attach interconnect tube assembly (26) to frame.
5. Tighten nuts (16) at cylinder studs as follows:
   a. Install upper nut and tighten finger-tight.
   b. Install lower nut and tighten to 9-18 **in-lbs** (1.0-2.0 Nm).
   c. Tighten upper nut to 100-120 **in-lbs** (11.3-13.6 Nm).
   d. Tighten lower nut to 100-120 **in-lbs** (11.3-13.6 Nm).
6. Align exhaust system and tighten all nuts and bolts; beginning at cylinder head exhaust ports and working backwards. Tighten interconnect fasteners to 20-25 ft-lbs (27.1-33.9 Nm).
7. Open the muffler shield clamps (21) and install front and rear heat shields (9, 22).
8. Connect O2 sensor wiring. See 4.14 OXYGEN (O2) SENSOR.

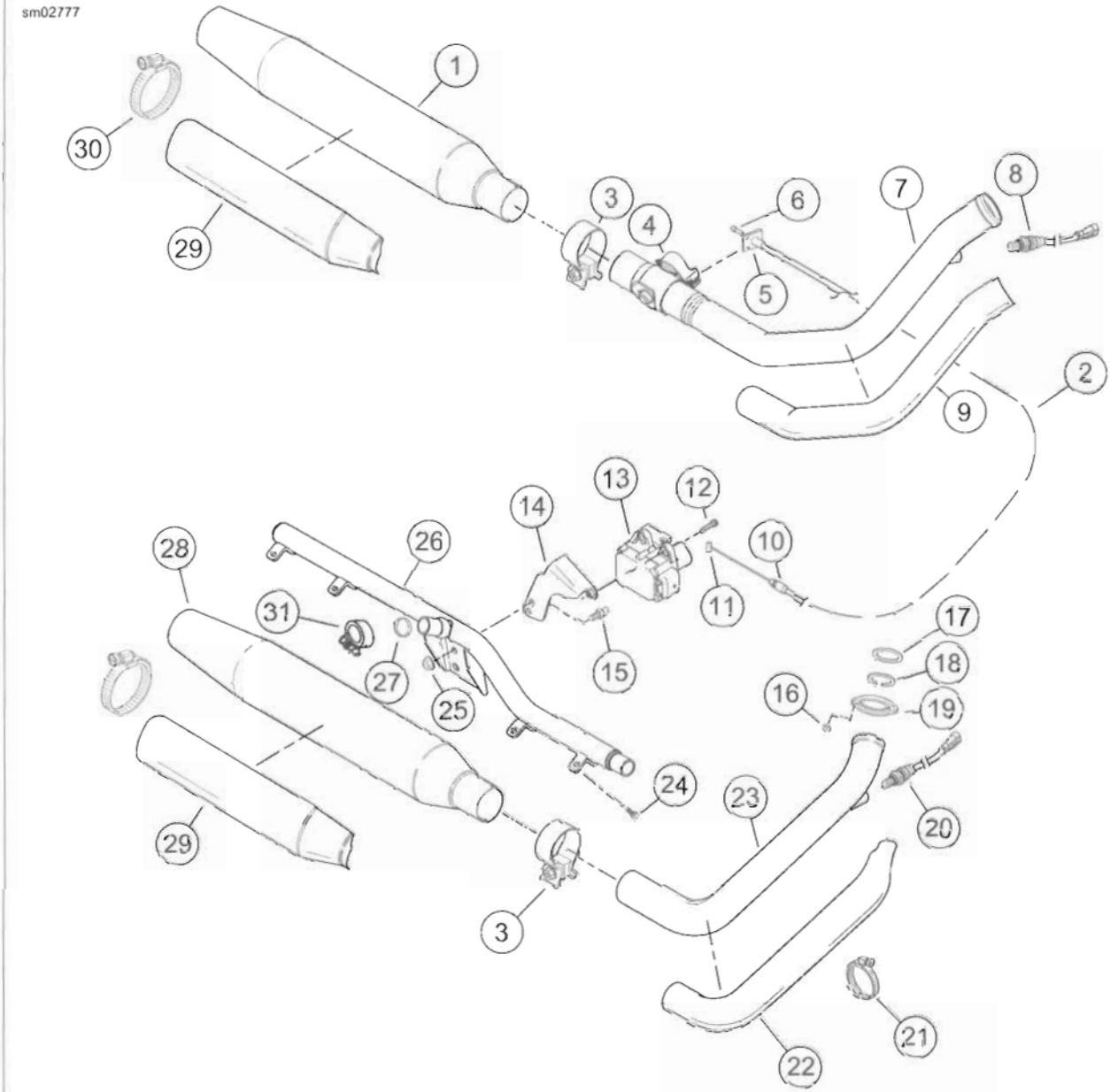

1. Rear muffler, typical (FLSTC shown)
2. Active exhaust cable
3. Muffler clamp (2)
4. Bellcrank
5. Cable retainer
6. Ferrule
7. Rear exhaust pipe
8. Rear oxygen sensor
9. Rear exhaust shield
10. Cable housing
11. Ferrule
12. Fastener
13. Active exhaust module
14. Active exhaust module bracket
15. Spacer stud (2)
16. Nut (4)
17. Exhaust port gasket (2)
18. Exhaust gasket retaining ring (2)
19. Exhaust manifold clamp (2)
20. Front oxygen sensor
21. Exhaust shield clamp (4)
22. Front exhaust shield
23. Front exhaust pipe
24. Fastener
25. Locknut (2)
26. Interconnect tube assembly
27. Exhaust interconnect gasket (2)
28. Front muffler, typical (FLSTC shown)
29. Muffler shield (2 on HDI vehicles)
30. Muffler shield clamp (2, 4 on HDI vehicles)
31. Exhaust interconnect clamp (2)

Figure 4-49. Exhaust System: FXST, FLSTC, FXSB

MUFFLERS: FLSTN, FLSTF/B, FLS

FASTENER	TORQUE VALUE	
Muffler clamp: FLSTN, FLSTF/B, FLS	38-43 ft-lbs	51.6-58.4 Nm
Exhaust pipe clamp locknut: FLSTN, FLSTF/B, FLS	20-25 ft-lbs	27.1-33.9 Nm
Muffler support fastener: FLSTN, FLSTF/B, FLS	96-120 **in-lbs**	10.9-13.6 Nm

Removal

1. See Figure 4-50. Loosen clamps (21).
2. Apply penetrating oil to seams of mufflers and exhaust pipe (2).
3. Loosen flange locknut (12) on carriage bolt (17).
4. Remove muffler fasteners (29) to detach mufflers from muffler support (30).
5. Remove muffler shield clamps (23) to detach muffler shields (22, 26) from mufflers.
6. Remove mufflers. Discard clamps.

Assembly

1. See Figure 4-50. Place **new** clamps (21) over exhaust pipe (2).
2. Slide mufflers (24, 25), onto exhaust pipe.
3. Loosely attach mufflers to muffler support (30) using muffler fasteners (29).
4. Loosely install flange locknut (12) on carriage bolt (17).
5. Tighten all muffler fasteners.
   a. Tighten muffler clamps to 38-43 ft-lbs (51.6-58.4 Nm).
   b. Tighten flange locknut (12) on carriage bolt (17) to 20-25 ft-lbs (27.1-33.9 Nm).
   c. Tighten muffler support fasteners to 96-120 **in-lbs** (10.9-13.6 Nm).
6. Open muffler shield clamps (23) and install the muffler shields (22, 26). Position clamps so the screws are on the outboard side in the most accessible position.

SYSTEM: FLSTN, FLSTF/B, FLS

FASTENER	TORQUE VALUE	
Exhaust manifold clamp lower nut, 1st torque: FLSTN, FLSTF/B, FLS	9-18 **in-lbs**	1.0-2.0 Nm
Exhaust manifold clamp upper nut: FLSTN, FLSTF/B, FLS	100-120 **in-lbs**	11.3-13.6 Nm
Exhaust manifold clamp lower nut, final torque: FLSTN, FLSTF/B, FLS	100-120 **in-lbs**	11.3-13.6 Nm
Exhaust carriage bolt flange locknut: FLSTN, FLSTF/B, FLS	20-25 ft-lbs	27.1-33.9 Nm

Removal

1. Disconnect O2 sensor wiring. See 4.14 OXYGEN (O2) SENSOR.
2. Remove two bolts and nuts to detach right side footboard from mount.
3. See Figure 4-50. Detach heat shields (1, 10, 13, 14, 15) from exhaust pipe (2) by removing clamps (9).
4. Remove all four exhaust header nuts (7).
5. Loosen flange locknut (12) from carriage bolt (17). Slide exhaust pipe clamp (16) from the exhaust bracket (11).
6. Remove two locknuts (27) and bolt (28) to detach exhaust system from frame.

Installation

NOTE

See Figure 4-50. Replacement cylinder head exhaust port gaskets (4) are tapered internally. Be sure the tapered side is facing exhaust pipes. Also check condition of retaining ring (5) before installation.

1. Install **new** gaskets (4) in both the front and rear cylinder heads with the tapered side facing exhaust pipes.
2. Position ends of exhaust pipes into front, then rear cylinder head exhaust ports placing holes in exhaust manifold clamp (6) over cylinder head exhaust studs. Loosely thread on flange nuts (7).
3. Loosely attach exhaust system to frame using locknuts (27).
4. Loosely attach exhaust pipe clamp (16) to exhaust bracket (11) using flange locknut (12) and carriage bolt (17).
5. Align exhaust system and tighten all nuts and bolts beginning at cylinder head exhaust ports and working backwards.
   a. Install upper nut and tighten finger-tight.
   b. Install lower nut and tighten to 9-18 **in-lbs** (1.0-2.0 Nm).
   c. Tighten upper nut to 100-120 **in-lbs** (11.3-13.6 Nm).
   d. Tighten lower nut to 100-120 **in-lbs** (11.3-13.6 Nm).

6. Tighten flange locknut (12) on carriage bolt (17) to 20-25 ft-lbs (27.1-33.9 Nm).
7. Open clamps (9) and install heat shields (1, 10, 13, 14, 15).
8. Install right side footboard with two bolts and nuts.
9. Connect O2 sensor wiring. See 4.14 OXYGEN (O2) SENSOR.

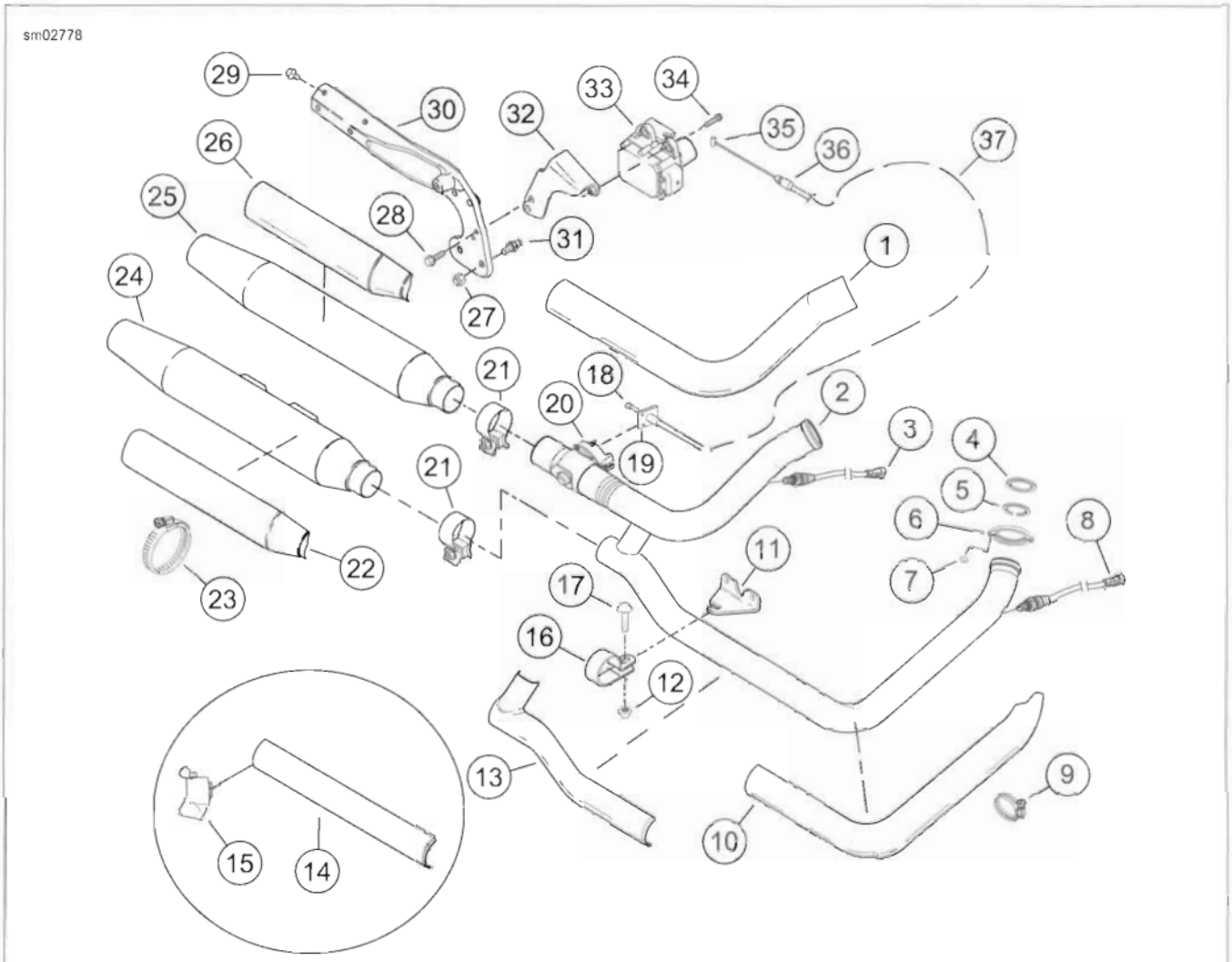

1. Rear cylinder exhaust pipe shield
2. Exhaust pipe
3. Rear oxygen sensor
4. Exhaust port gasket (2)
5. Exhaust gasket retaining ring (2)
6. Exhaust manifold clamp (2)
7. Nut (4)
8. Front oxygen sensor
9. Exhaust shield clamp (7)
10. Front exhaust shield
11. Exhaust bracket
12. Flange locknut
13. Crossover heat shield: FLSTF/B
14. Front exhaust shield extension: FLSTN
15. Interconnect shield: FLSTN
16. Exhaust pipe clamp
17. Carriage bolt
18. Ferrule
19. Cable retainer
20. Bellcrank
21. Clamp (2)
22. Front muffler shield
23. Muffler shield clamp
24. Front muffler
25. Rear muffler
26. Rear muffler shield
27. Locknut (2)
28. Muffler support fastener
29. Muffler fastener
30. Muffler support
31. Spacer stud (2)
32. Active exhaust module bracket
33. Active exhaust module
34. Fastener
35. Ferrule
36. Cable housing
37. Active exhaust cable

Figure 4-50. Exhaust System: FLSTF/B, FLSTN, FLS

GENERAL

⚠WARNING

Do not allow open flame or sparks near propane. Propane is extremely flammable, which could cause death or serious injury. (00521b)

⚠WARNING

Read and follow warnings and directions on propane bottle. Failure to follow warnings and directions can result in death or serious injury. (00471b)

NOTES

- *To prevent false readings, keep air cleaner cover installed when performing test.*
- *Do not direct propane into air cleaner. It will cause false readings.*
- *Be careful when testing vehicle with Screamin' Eagle air cleaner assembly. This type of air cleaner has an open backplate. Even with air cleaner cover on, directing nozzle too close to backplate can give false readings.*

LEAK TESTER

PART NUMBER	TOOL NAME
HD-41417	PROPANE ENRICHMENT KIT

Parts List

- Standard 14 oz propane cylinder.
- PROPANE ENRICHMENT KIT (Part No. HD-41417).

Tester Assembly

1. See Figure 4-51. Make sure valve knob (6) is closed (fully clockwise).
2. Install valve assembly (5) onto propane bottle (1).

Tester Adjustment

1. See Figure 4-51. Press and hold trigger button (8).
2. Slowly open valve knob (6) until pellet in flow gauge (7) rises 5-10 SCFH on gauge.
3. Release trigger button.

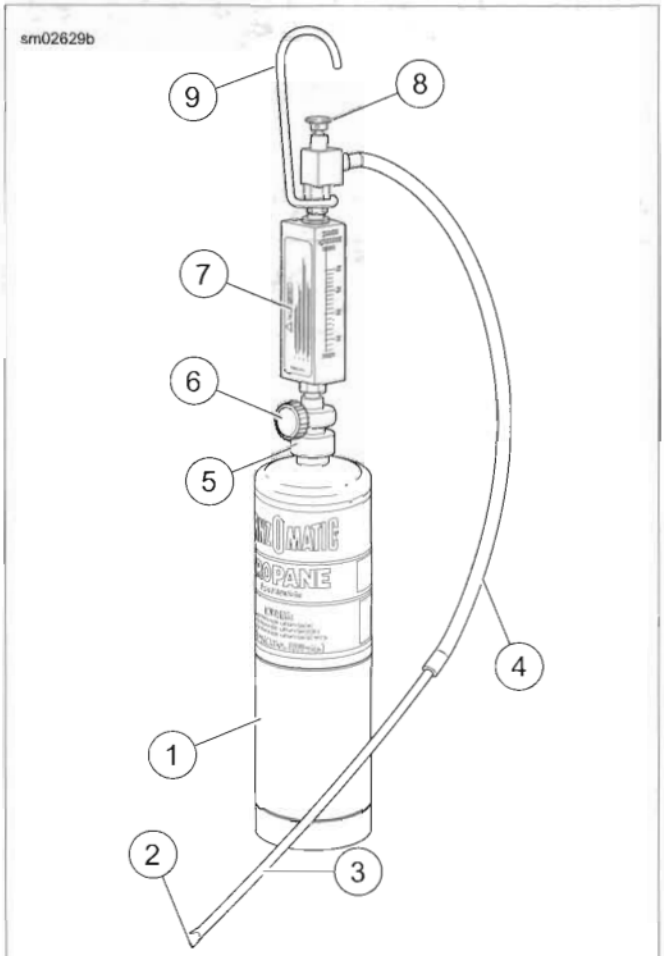

1. **Propane bottle**
2. **Nozzle**
3. **Copper tube**
4. **Hose**
5. **Valve assembly**
6. **Valve knob**
7. **Flow gauge**
8. **Trigger button**
9. **Hanger**

Figure 4-51. Leak Tester

PROCEDURE

1. Run motorcycle until engine is at normal operating temperature.

NOTE

Do not direct propane stream toward air cleaner. Propane in the air cleaner creates false indicators.

2. See Figure 4-52. Aim nozzle (3) toward possible sources of leak such as intake manifold mating surfaces.
3. Press and release trigger button (2) to dispense propane. The tone of the engine changes when propane enters source of leak. Repeat as necessary to detect leak.
4. When test is finished, close valve knob (turn knob fully clockwise).

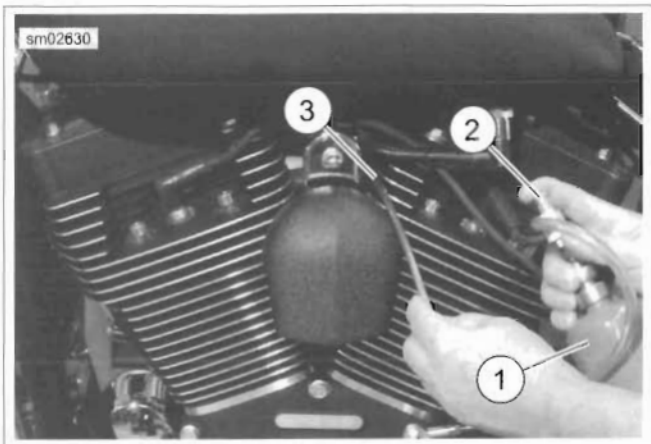

1. Propane bottle
2. Trigger button
3. Nozzle

Figure 4-52. Checking for Leaks

GENERAL

Motorcycles sold in some markets are equipped with an evaporative (EVAP) emissions control system. See Figure 4-53. The EVAP system functions as follows:

- The fuel vapor vent tube is connected to the vent tube on the fuel tank top plate. It allows fuel vapors in the fuel tank to be vented to the charcoal canister.
- Under certain engine conditions, the ECM (working in conjunction with the EFI system relay) opens the purge solenoid. Negative pressure (vacuum) draws the fuel vapors in the charcoal canister through the purge tube to the induction module. They are then burned as part of the normal combustion process.

⚠WARNING

Keep evaporative emissions vent lines away from exhaust and engine. Gasoline is extremely flammable and highly explosive, which could result in death or serious injury. (00266a)

NOTE

The EVAP system has been designed to operate with a minimum of maintenance. Check that all tubes are correctly routed and properly connected. Also, verify that the tubes are not pinched or kinked. Verify that there is no contact between the tubes and engine parts.

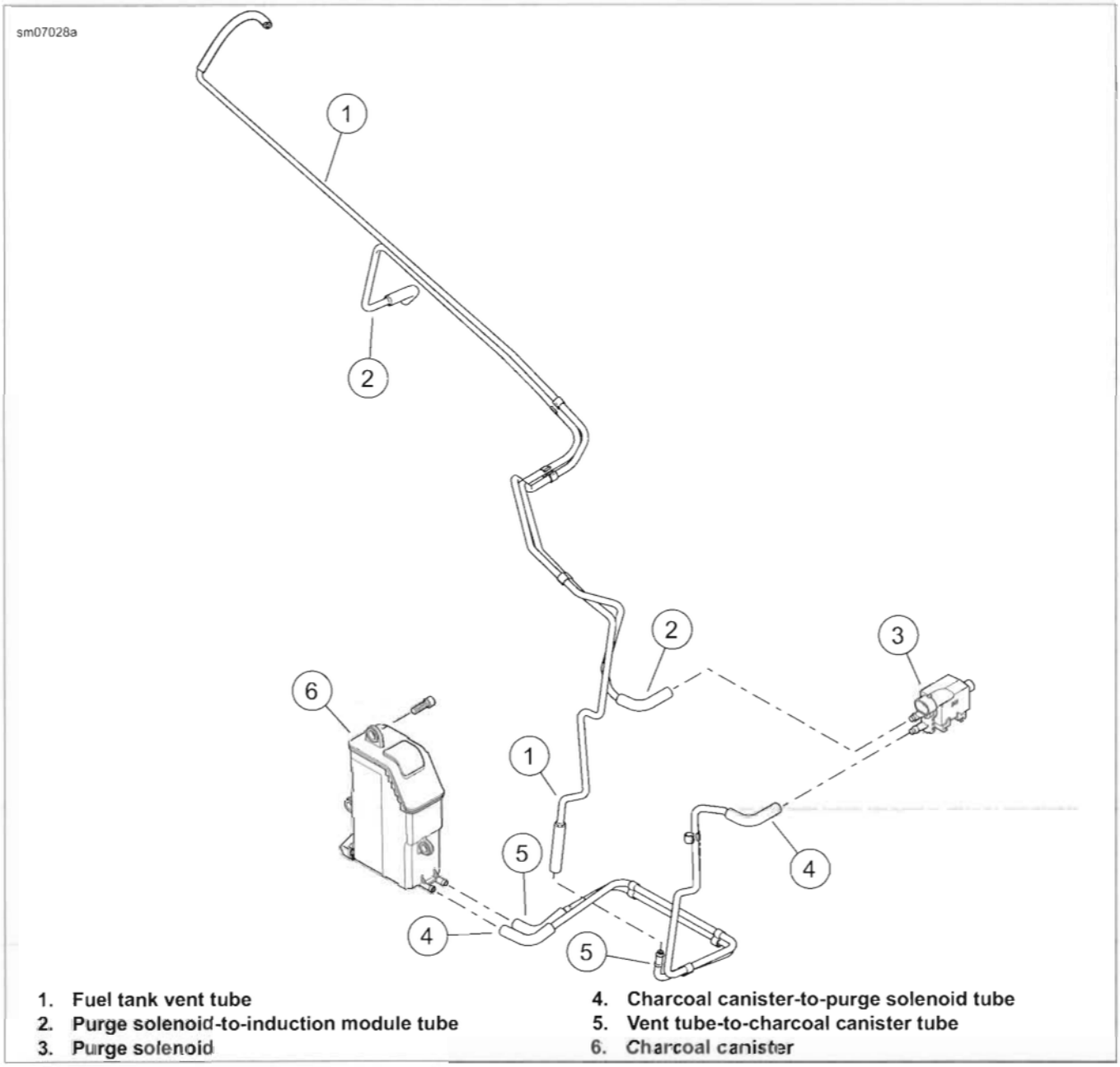

1. Fuel tank vent tube
2. Purge solenoid-to-induction module tube
3. Purge solenoid
4. Charcoal canister-to-purge solenoid tube
5. Vent tube-to-charcoal canister tube
6. Charcoal canister

Figure 4-53. Evaporative Emissions Control System

CHARCOAL CANISTER

FASTENER	TORQUE VALUE	
Charcoal canister screws	90-114 in-lbs	10.2-12.9 Nm

Removal

The EVAP charcoal canister is mounted on the side of the primary chaincase housing.

1. Remove primary chaincase housing. See 5.5 PRIMARY CHAINCASE HOUSING.
2. See Figure 4-53. Note the two hose connections on the canister. After hoses are marked, gently pull hoses off the canister.
3. Remove charcoal canister from primary chaincase housing.

Installation

1. Install charcoal canister to primary chaincase housing with screws. Tighten to 90-114 in-lbs (10.2-12.9 Nm).
2. See Figure 4-53. Attach hoses to charcoal canister.
3. Install primary chaincase housing. See 5.5 PRIMARY CHAINCASE HOUSING.

PURGE SOLENOID

Removal

1. Remove seat.

⚠WARNING

To prevent accidental vehicle start-up, which could cause death or serious injury, remove main fuse before proceeding. (00251b)

2. Remove main fuse.
3. Remove splash guard. See 2.23 REAR FORK.

NOTE

The purge solenoid is attached to the top of the rear electrical panel.

4. See Figure 4-53. Disconnect electrical connector from purge solenoid (3).

NOTE

Label evaporative emissions tube for ease of installation.

5. Remove tubes (2, 4) from purge solenoid.
6. Remove purge solenoid from electrical panel.

Installation

1. See Figure 4-53. Attach purge solenoid (3) to top of rear electrical panel.
2. Attach tubes (2, 4) to purge solenoid.
3. Connect electrical connector to purge solenoid (3).
4. Install splash guard. See 2.23 REAR FORK.
5. Install main fuse.

⚠WARNING

After installing seat, pull upward on seat to be sure it is locked in position. While riding, a loose seat can shift causing loss of control, which could result in death or serious injury. (00070b)

6. Install seat.

HOSE ROUTING/REPLACEMENT

NOTE

Record location of cable straps before removal. Install cable straps in same location when installing.

⚠WARNING

Stop the engine when refueling or servicing the fuel system. Do not smoke or allow open flame or sparks near gasoline. Gasoline is extremely flammable and highly explosive, which could result in death or serious injury. (00002a)

Fuel Tank Vent Hose

1. Remove console and fuel tank. See 4.6 FUEL TANK.
2. Remove splash guard. See 2.23 REAR FORK.
3. Route fuel tank vent tube.
   a. See Figure 4-53. If replacing fuel tank vent tube (1), add hose to end of vent tube.
   b. Route fuel tank vent tube (1) along right side of frame. Cross over to the left side just before the battery. Continue past the battery and then down between the wire harness and frame crossmember. The end of the vent tube should end just below the left side of the rear electrical panel.
   c. Attach the other end of the tube to the nipple on the fuel tank top plate.
   d. If equipped with a charcoal canister (6), connect the fuel tank vent tube, at the rear electrical panel, to the vent tube-to-charcoal canister tube (5).
4. Install splash guard. See 2.23 REAR FORK.
5. Install fuel tank and console. See 4.6 FUEL TANK.

Purge Solenoid-to-Induction Module Tube

1. Remove console and fuel tank. See 4.6 FUEL TANK.
2. Remove splash guard. See 2.23 REAR FORK.
3. Route purge solenoid-to-induction module tube.
   a. See Figure 4-53. Route purge solenoid-to-induction module tube (2) along right side of frame. Cross over to the left side just before the battery. Continue past the battery and then down between the wire harness and frame crossmember. The end of the vent tube will attach to the upper nipple on the purge solenoid (3).
   b. See Figure 4-19. Attach the other end of the tube to the inboard purge nipple on the induction module.
4. Install splash guard. See 2.23 REAR FORK.

5. Install fuel tank and console. See 4.6 FUEL TANK.

Charcoal Canister-to-Purge Solenoid Tube

1. Remove splash guard. See 2.23 REAR FORK.
2. See Figure 4-53. Route charcoal canister-to-purge solenoid tube (4) from the bottom nipple on the purge solenoid down between the shocks and over to the charcoal canister.
3. Attach the other end of the tube to the outer nipple on the charcoal canister.
4. Install splash guard. See 2.23 REAR FORK.

Vent Tube-to-Charcoal Canister Tube

1. Remove splash guard. See 2.23 REAR FORK.
2. See Figure 4-53. Route vent tube-to-charcoal canister tube (5) from vent tube (1) on left side of rear electrical panel down between the shocks and over to the charcoal canister.
3. Attach the other end of the tube to the inner nipple on the charcoal canister.
4. Install splash guard. See 2.23 REAR FORK.

NOTES

SUBJECT	PAGE NO.
5.1 FASTENER TORQUE VALUES	5-1
5.2 SPECIFICATIONS: DRIVE	5-2
5.3 PRIMARY CHAINCASE COVER	5-3
5.4 DRIVE COMPONENTS	5-4
5.5 PRIMARY CHAINCASE HOUSING	5-9
5.6 CLUTCH	5-13
5.7 TRANSMISSION SPROCKET	5-18
5.8 DRIVE BELT	5-21

FASTENER TORQUE VALUES IN THIS CHAPTER

The table below lists torque values for all fasteners presented in this chapter.

FASTENER	TORQUE VALUE		NOTES
Clutch diaphragm spring retainer bolts	70-100 **in-lbs**	7.9-11.3 Nm	5.6 CLUTCH, Clutch Pack Only
Clutch hub mainshaft nut	70-80 ft-lbs	94.9-108.5 Nm	5.4 DRIVE COMPONENTS, Installation
Compensating sprocket bolt, final torque	175 ft-lbs	237.3 Nm	5.4 DRIVE COMPONENTS, Installation
Compensating sprocket bolt, initial torque	100 ft-lbs	135.6 Nm	5.4 DRIVE COMPONENTS, Installation
Primary chaincase cover fasteners	12-13 ft-lbs	16.3-17.6 Nm	5.3 PRIMARY CHAINCASE COVER, Installation
Primary chaincase housing sealing fasteners	26-28 ft-lbs	35.3-38.0 Nm	5.5 PRIMARY CHAINCASE HOUSING, Installation
Primary chain tensioner fasteners	21-24 ft-lbs	28.5-32.6 Nm	5.4 DRIVE COMPONENTS, Installation
Transmission lockplate screws	90-120 **in-lbs**	10.2-13.6 Nm	5.7 TRANSMISSION SPROCKET, Installation/Lock patch, use 3-5 times
Transmission sprocket nut, final torque	35 ft-lbs	47.5 Nm	5.7 TRANSMISSION SPROCKET, Installation/plus 35-40 degrees
Transmission sprocket nut, initial torque	100 ft-lbs	135.6 Nm	5.7 TRANSMISSION SPROCKET, Installation/Right-hand threads, initial torque only, apply several drops of LOCTITE 271 HIGH STRENGTH THREADLOCKER (red) to last few threads.

SPECIFICATIONS

Table 5-1. Sprocket Specifications

SPROCKETS	NO. OF TEETH
	DOM/HDI
Compensating	34
Clutch	46
Transmission	32
Rear wheel	66

Table 5-2. Clutch Specifications

CLUTCH	DESCRIPTION
Type	Wet-multiple disc
Clutch lever free play (after internal adjustment)	1/16-1/8 in (1.6-3.2 mm)

Table 5-3. Gear Specifications

GEAR	OVERALL GEAR RATIO	
	DOM/HDI	Japan
First (low)	9.311	9.029
Second	6.454	6.259
Third	4.793	4.648
Fourth	3.882	3.764
Fifth	3.307	3.207
Sixth (high)	2.790	2.706

NOTE

Overall gear ratios indicate number of engine revolutions required to drive rear wheel one revolution.

GENERAL

The primary chaincase is a sealed housing containing the primary chain, chain tensioner, clutch, engine compensating sprocket and alternator.

For information on primary chain lubrication, see 1.9 PRIMARY CHAINCASE LUBRICANT.

REMOVAL

⚠WARNING

To prevent accidental vehicle start-up, which could cause death or serious injury, disconnect negative (-) battery cable before proceeding. (00048a)

1. Disconnect negative battery cable.
2. Remove shift lever.
3. Drain the primary chaincase lubricant. See 1.9 PRIMARY CHAINCASE LUBRICANT, Changing Primary Chaincase Lubricant.
4. See Figure 5-1. When lubricant has drained, remove short (1) and long (2) fasteners and primary chaincase cover.
5. Remove and discard cover gasket.

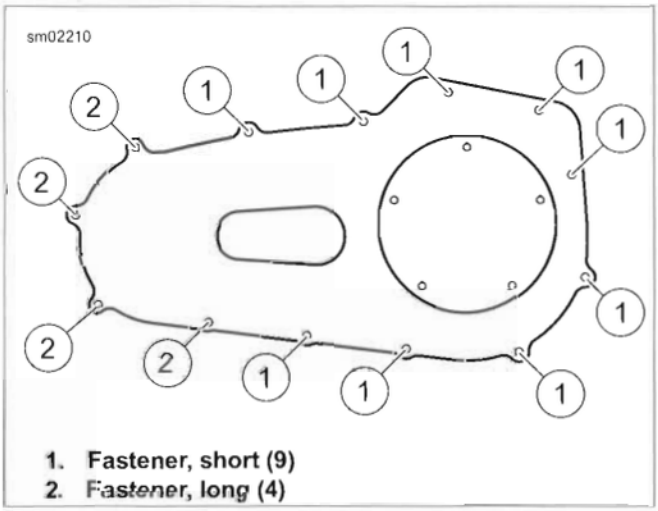

1. **Fastener, short (9)**
2. **Fastener, long (4)**

Figure 5-1. Primary Chaincase Cover and Fasteners

INSTALLATION

FASTENER	TORQUE VALUE	
Primary chaincase cover fasteners	12-13 ft-lbs	16.3-17.6 Nm

NOTE

Always install a new gasket between primary chaincase cover and chaincase. Failure to replace this gasket may cause primary chaincase leaks.

1. See Figure 5-2. Install **new** cover gasket (1).
2. See Figure 5-1. Apply a drop of LOCTITE 243 MEDIUM STRENGTH THREADLOCKER AND SEALANT (blue) to each primary cover fastener. Install short (1) and long (2) primary cover fasteners in positions shown. Snug fasteners.
3. See Figure 5-3. Tighten primary cover fasteners (1-13) to 12-13 ft-lbs (16.3-17.6 Nm) in the sequence shown.

NOTICE

Do not overfill the primary chaincase with lubricant. Overfilling can cause rough clutch engagement, incomplete disengagement, clutch drag and/or difficulty in finding neutral at engine idle. (00199b)

4. Place motorcycle in an upright position and fill primary chaincase. See 1.9 PRIMARY CHAINCASE LUBRICANT, Changing Primary Chaincase Lubricant.
5. Connect negative battery cable.

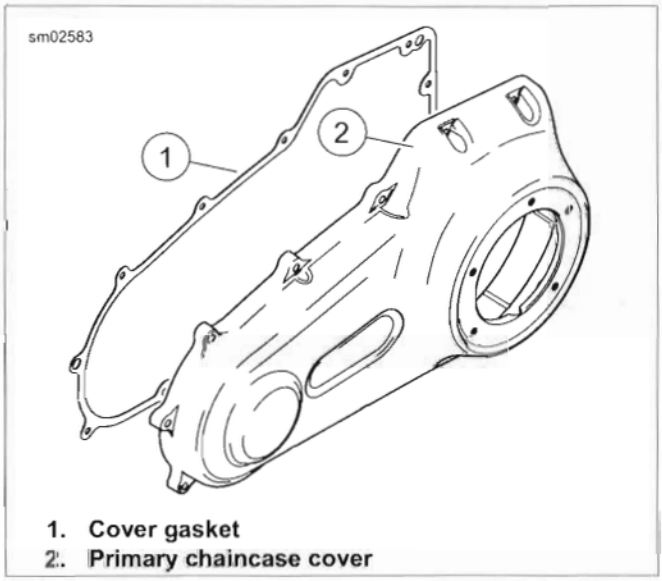

1. **Cover gasket**
2. **Primary chaincase cover**

Figure 5-2. Primary Chaincase Cover Gasket

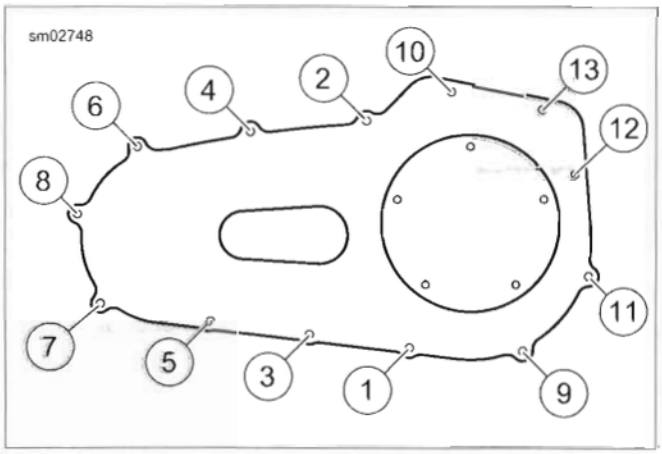

Figure 5-3. Primary Chaincase Cover Torque Sequence

REMOVAL

PART NUMBER	TOOL NAME
HD-47977	PRIMARY DRIVE LOCKING TOOL

NOTE

To remove the primary chain, remove compensating sprocket, clutch assembly and primary chain as an assembly.

⚠WARNING

To prevent accidental vehicle start-up, which could cause death or serious injury, disconnect negative (-) battery cable before proceeding. (00048a)

1. Remove primary chaincase cover. See 5.3 PRIMARY CHAINCASE COVER.
2. See Figure 5-4. Install cable strap (2) as shown. Exposed portion below cover will indicate need for removal before cover installation.
3. See Figure 5-18. Remove chain tensioner fasteners (2) and chain tensioner (1).
4. Using a colored marker, mark one of the outboard links of the primary chain. Maintaining the original direction of rotation during assembly may prolong service life.
5. See Figure 5-6. Loosen locknut (3).

⚠WARNING

Wear safety glasses or goggles when removing or installing retaining rings. Retaining rings can slip from the pliers and could be propelled with enough force to cause serious eye injury. (00312a)

6. Remove retaining ring (1) and release plate (2).
7. See Figure 5-7. Place the PRIMARY DRIVE LOCKING TOOL (Part No. HD-47977) between the teeth of the engine and clutch sprockets as shown.

NOTE

The clutch hub mainshaft nut has left-hand threads. Turn clockwise to remove.

8. Rotate clutch hub mainshaft nut in direction shown to remove.
9. See Figure 5-8. Place the PRIMARY DRIVE LOCKING TOOL (Part No. HD-47977) between the teeth of the engine and clutch sprockets as shown.
10. Rotate compensating sprocket bolt in direction shown to remove.
11. **FXSB:** see Figure 5-9. Remove oil spinner (11).
12. See Figure 5-9. Remove bolt (10), sprocket retainer (9), washers (7) and thrust bearing (8).
13. See Figure 5-10. Remove clutch assembly, primary chain and compensating sprocket as a single assembly.

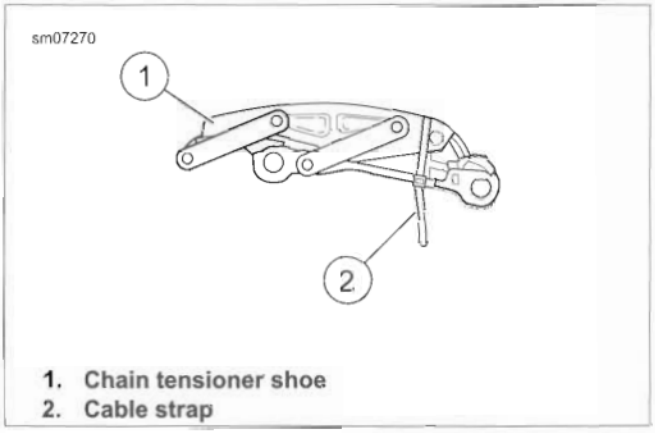

1. Chain tensioner shoe
2. Cable strap

Figure 5-4. Securing Chain Tensioner

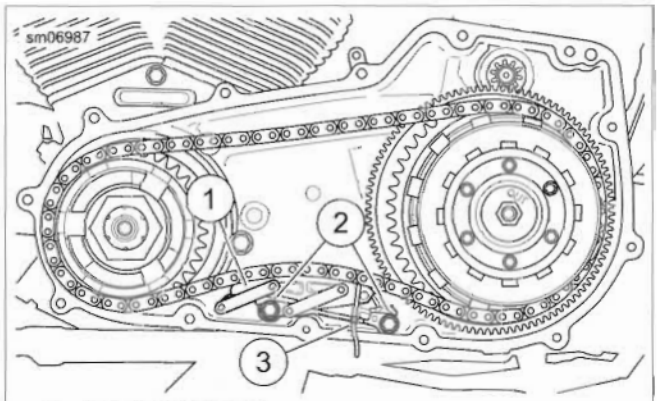

1. Chain tensioner
2. Chain tensioner fasteners
3. Cable strap

Figure 5-5. Chain Tensioner

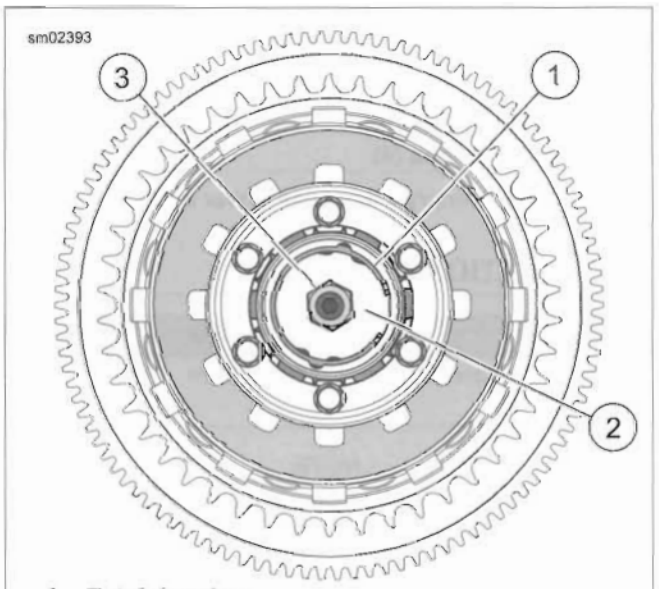

1. Retaining ring
2. Release plate
3. Locknut

Figure 5-6. Clutch

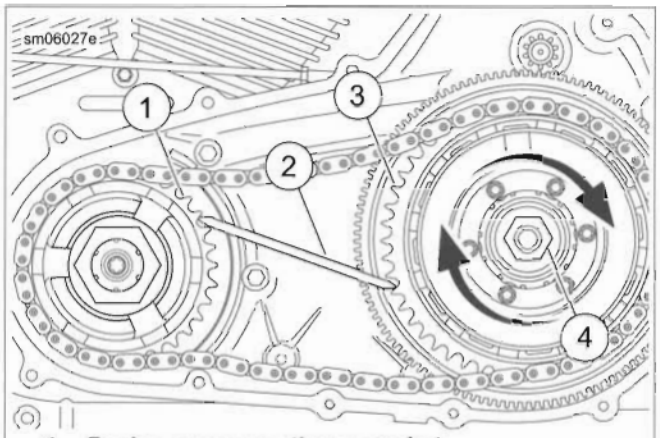

1. Engine compensating sprocket
2. Primary drive locking tool
3. Clutch sprocket
4. Clutch hub mainshaft nut

Figure 5-7. Removing Clutch Hub Mainshaft Nut

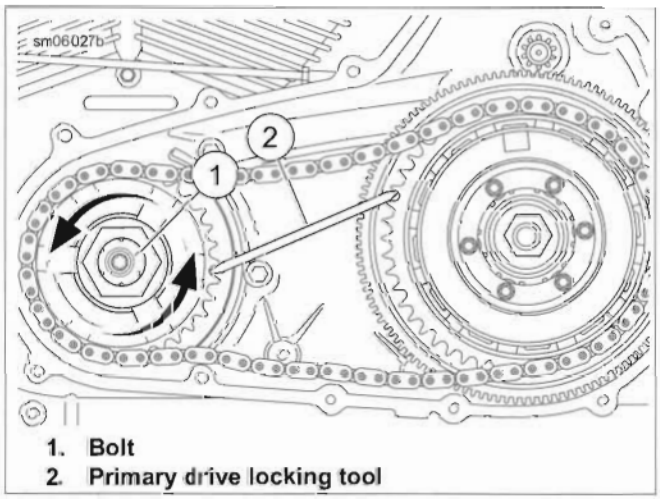

1. Bolt
2. Primary drive locking tool

Figure 5-8. Removing Engine Compensating Sprocket Bolt

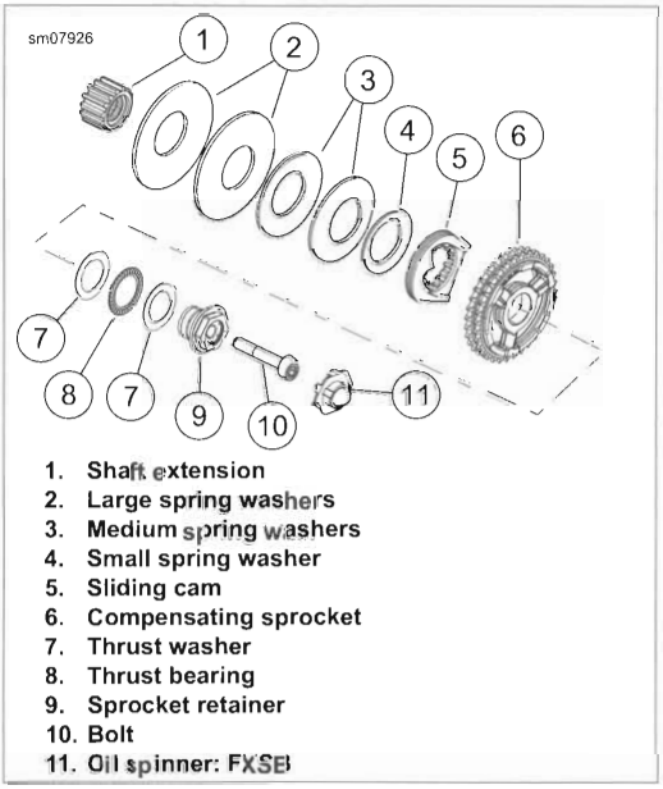

1. Shaft extension
2. Large spring washers
3. Medium spring washers
4. Small spring washer
5. Sliding cam
6. Compensating sprocket
7. Thrust washer
8. Thrust bearing
9. Sprocket retainer
10. Bolt
11. Oil spinner: FXSB

Figure 5-9. Engine Compensating Sprocket Assembly

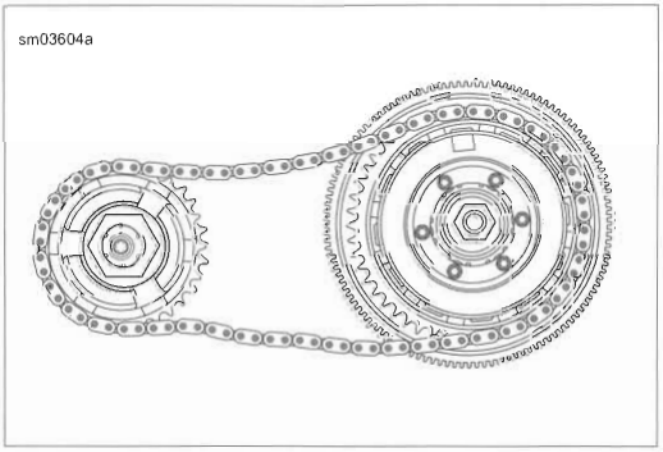

Figure 5-10. Remove Drive Components

INSTALLATION

PART NUMBER	TOOL NAME
HD-47977	PRIMARY DRIVE LOCKING TOOL

FASTENER	TORQUE VALUE	
Compensating sprocket bolt, initial torque	100 ft-lbs	135.6 Nm
Compensating sprocket bolt, final torque	175 ft-lbs	237.3 Nm
Clutch hub mainshaft nut	70-80 ft-lbs	94.9-108.5 Nm
Primary chain tensioner fasteners	21-24 ft-lbs	28.5-32.6 Nm

NOTES

- *Install the primary chain, compensating sprocket and clutch as an assembly.*
- *The O-ring inside the sprocket extension is for manufacturing assembly only. No replacement parts are necessary or available.*

1. See Figure 5-11. Install engine compensating sprocket.
   a. Apply a thin layer of primary chaincase oil to the inner diameter of the compensating sprocket (6).
   b. Apply a thin layer of primary chaincase oil to the splines of shaft extension (1).
   c. Assemble shaft extension, large spring washers (2) and medium spring washers (3).

NOTE

Outer diameter of spring washers will contact each other.

2. Install small spring washer (4). Outer diameter will contact sliding cam (5) once installed.
3. Install sliding cam (5).
4. Place drive components (primary chain, compensating sprocket, and clutch assembly) into position.
5. Install washers (7), thrust bearing (8), sprocket retainer (9), and **new** bolt (10). Tighten bolt finger tight.
6. **FXSB:** Install oil spinner (11).

NOTE

Clutch hub mainshaft nut has left-hand threads.

7. Clean and prime threads of clutch hub mainshaft nut. Apply two drops of LOCTITE 262 HIGH STRENGTH THREADLOCKER AND SEALANT (red) to the threads of the nut. Start nut onto mainshaft and tighten finger tight.

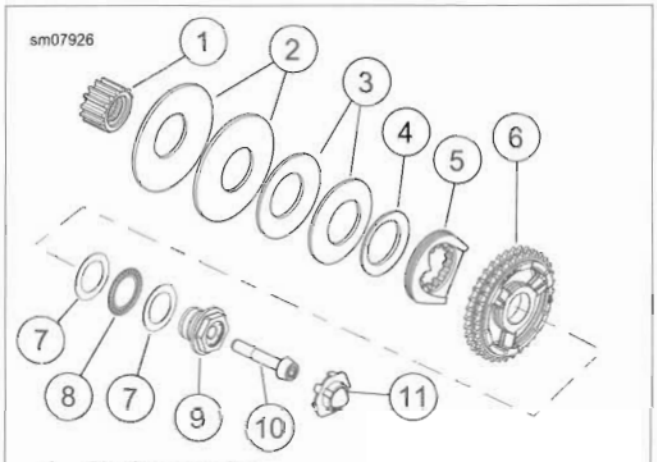

1. **Shaft extension**
2. **Large spring washers**
3. **Medium spring washers**
4. **Small spring washer**
5. **Sliding cam**
6. **Compensating sprocket**
7. **Thrust washer**
8. **Thrust bearing**
9. **Sprocket retainer**
10. **Bolt**
11. **Oil spinner: FXSB**

Figure 5-11. Engine Compensating Sprocket Assembly

NOTE

See Figure 5-12. Make sure the PRIMARY DRIVE LOCKING TOOL (Part No. HD-47977) is placed between the teeth of the engine and clutch sprockets as shown, when tightening the compensating sprocket bolt (1).

8. Tighten compensating sprocket nut to 100 ft-lbs (135.6 Nm).
9. Loosen compensating sprocket nut one full turn (360 degrees).
10. Tighten compensating sprocket nut to 175 ft-lbs (237.3 Nm).

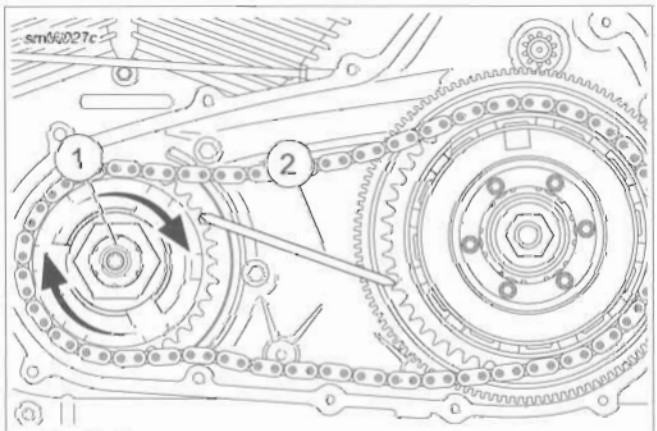

1. **Bolt**
2. **Primary drive locking tool**

Figure 5-12. Installing Engine Compensating Sprocket Bolt

NOTE

See Figure 5-13. When tightening the clutch hub mainshaft nut the PRIMARY DRIVE LOCKING TOOL (Part No. HD-47977) must be placed between the teeth of the engine and clutch sprockets as shown.

11. Install primary drive locking tool.
12. Tighten clutch hub mainshaft nut to 70-80 ft-lbs (94.9-108.5 Nm).

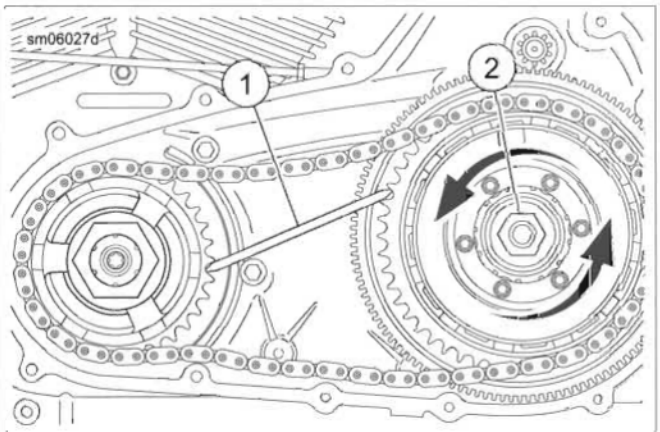

1. **Primary drive locking tool**
2. **Clutch hub mainshaft nut**

Figure 5-13. Installing Clutch Hub Mainshaft Nut

13. See Figure 5-14. Install release plate (2) with locknut (3) and adjuster screw into clutch hub bore. The word "OUT" stamped on the release plate should face outward.

⚠WARNING

Wear safety glasses or goggles when removing or installing retaining rings. Retaining rings can slip from the pliers and could be propelled with enough force to cause serious eye injury. (00312a)

14. Inspect retaining ring (1) and replace if necessary. Install retaining ring in clutch hub bore to lock release plate in position. Verify that the retaining ring is completely seated in the groove.
15. Adjust clutch. See 1.11 CLUTCH, Adjustment.

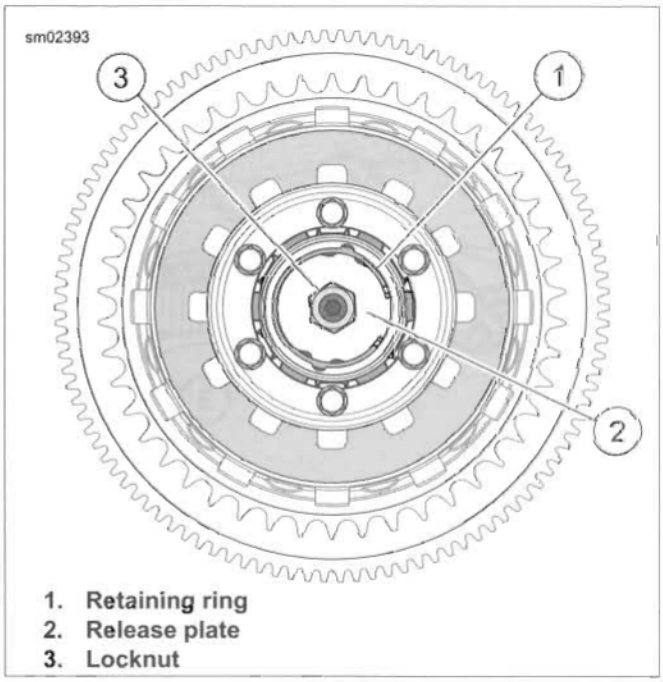

1. **Retaining ring**
2. **Release plate**
3. **Locknut**

Figure 5-14. Clutch

NOTES

- *Primary chain tensioner is non-repairable. Replace as an assembly.*
- *See Figure 5-15. Although primary chain tensioner is sold as an assembly, tensioner parts can be disassembled. If primary chain tensioner becomes disassembled, assemble in order shown.*

16. Locate end of spring rod (2) on roll pin (3).
17. See Figure 5-16. Slide wedge of primary chain tensioner in direction of arrow until all travel is removed.
18. See Figure 5-17. Push shoe (1) down until it contacts wedge. Keep tension on shoe so wedge stays in place.
19. Install cable strap (2) as shown. Exposed portion below cover will flag need for removal before cover installation.

NOTE

Primary chain tensioner will not complete chain adjustment until vehicle is ridden. After tensioner removal/installation procedure, test ride vehicle to verify adjustment.

20. See Figure 5-18. Install primary chain tensioner (1). Install chain tensioner fasteners (2) and tighten to 21-24 ft-lbs (28.5-32.6 Nm). Remove cable strap.

NOTE

Always install a new gasket between primary chaincase cover and chaincase. Failure to replace this gasket may cause primary chaincase leaks.

21. Install primary chaincase cover with **new** gasket and fill with lubricant. See 5.3 PRIMARY CHAINCASE COVER, Installation.

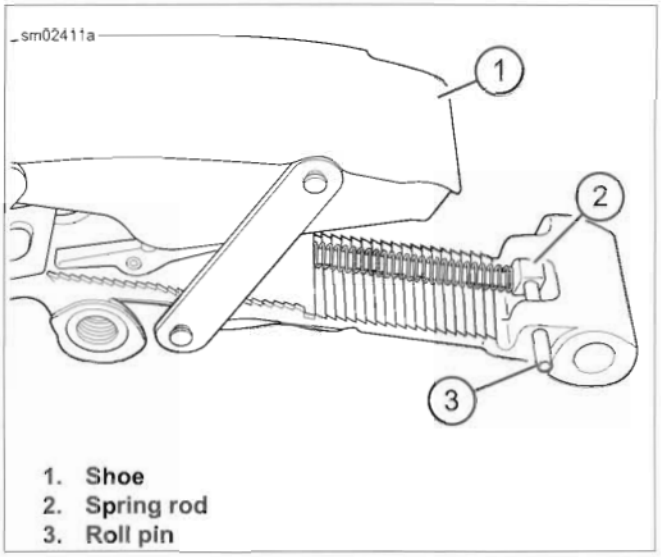

1. Shoe
2. Spring rod
3. Roll pin

Figure 5-15. Spring Rod Location

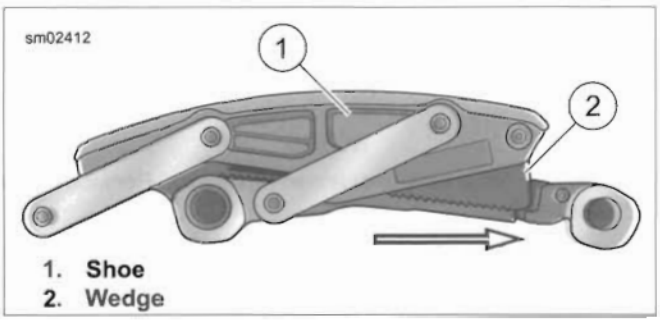

1. Shoe
2. Wedge

Figure 5-16. Primary Chain Tensioner

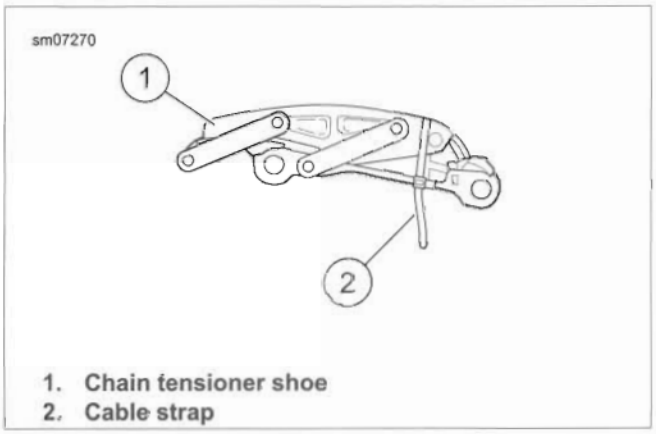

1. Chain tensioner shoe
2. Cable strap

Figure 5-17. Securing Chain Tensioner

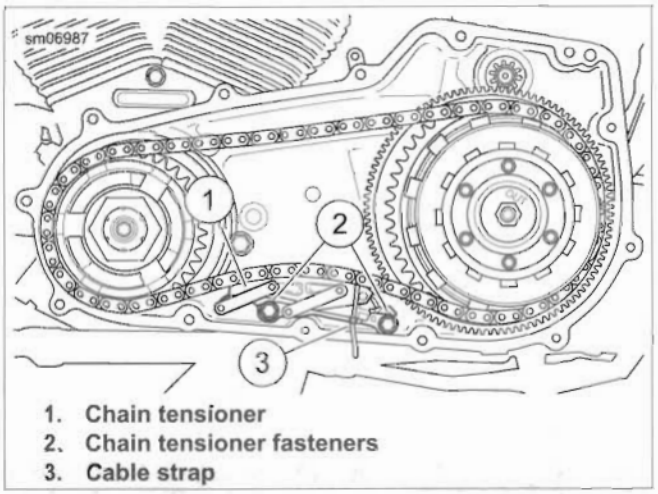

1. Chain tensioner
2. Chain tensioner fasteners
3. Cable strap

Figure 5-18. Chain Tensioner

REMOVAL

⚠WARNING

To prevent accidental vehicle start-up, which could cause death or serious injury, disconnect negative (-) battery cable before proceeding. (00048a)

1. Disconnect negative battery cable.
2. Remove primary chaincase cover. See 5.3 PRIMARY CHAINCASE COVER, Removal.
3. Remove starter. See 7.13 STARTER, Removal.
4. Remove primary chain, clutch, and compensating sprocket. See 5.4 DRIVE COMPONENTS, Removal.
5. See Figure 5-19. Remove sealing fasteners (5) securing primary chaincase housing (9) to crankcase and transmission. Discard the crankcase gasket (11) and sealing fasteners (5).

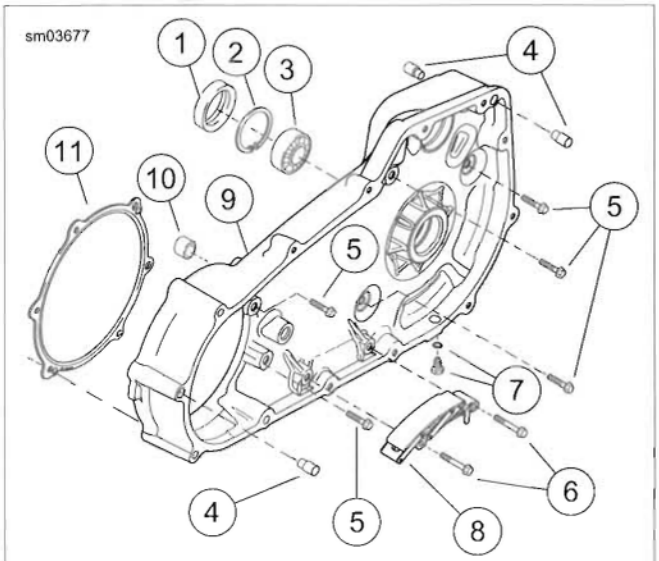

1. Seal
2. Lock ring
3. Bearing
4. Dowel pin
5. Sealing fastener
6. Chain tensioner fasteners
7. Drain plug and O-ring
8. Chain tensioner
9. Primary chaincase housing
10. Shifter shaft bushing
11. Crankcase gasket

Figure 5-19. Primary Chaincase Housing

INSPECTION

1. Inspect primary chaincase for cracks or damaged gasket surface.
2. Check the mainshaft bearing. Replace if bearing does not rotate freely. Replace the lip seal. See 5.5 PRIMARY CHAINCASE HOUSING, Mainshaft Bearing and Seal.

MAINSHAFT BEARING AND SEAL

Removal

⚠WARNING

Wear safety glasses or goggles when removing or installing retaining rings. Retaining rings can slip from the pliers and could be propelled with enough force to cause serious eye injury. (00312a)

1. See Figure 5-19. Remove seal (1). Use a seal remover or rolling head pry bar for best results.
2. Remove retaining ring (2).

NOTE

Support the bearing support area on the transmission side of the primary chaincase while pressing bearing out.

3. Place inner primary chaincase in an arbor press with clutch side up.
4. Press out bearing from clutch side applying pressure to the outer race.

Installation

1. Inspect the bearing bore to verify that it is clean and smooth.

NOTE

Support the bearing support area on the clutch side of the primary chaincase while pressing bearing in.

2. Place primary chaincase in arbor press with the transmission side up.
3. Apply a thin film of oil to outer diameter of bearing.
4. Applying pressure to the outer race, press **new** bearing letter side up until it makes solid contact with the bearing support area.
5. See Figure 5-20. Retaining ring (1) must be oriented as shown to prevent blocking of oil passage (2). Install retaining ring. Verify that the ring is fully seated in the groove and is properly oriented.

NOTES

- *The garter spring side of the oil seal is also identified by the words "OIL SIDE."*
- *Install oil seal with a seal driver that will press only against outer rim of oil seal, NOT against the inner area.*
- ***Minimum allowable depth:** Oil seal case is flush with machined surface of primary housing.*
- ***Maximum allowable depth:** Oil seal case contacts retaining ring.*

6. Install mainshaft oil seal:
   a. Lubricate the OD of the new seal with SCREAMIN' EAGLE ASSEMBLY LUBE. Place over bore with the lip garter spring side (stamped "OIL SIDE") facing toward the bearing.
   b. See Figure 5-21. Press the seal into bore until outer edge of seal is flush with machined surface of inner primary housing.
7. Lubricate the bearing and seal lip with multi-purpose grease or SCREAMIN' EAGLE ASSEMBLY LUBE.

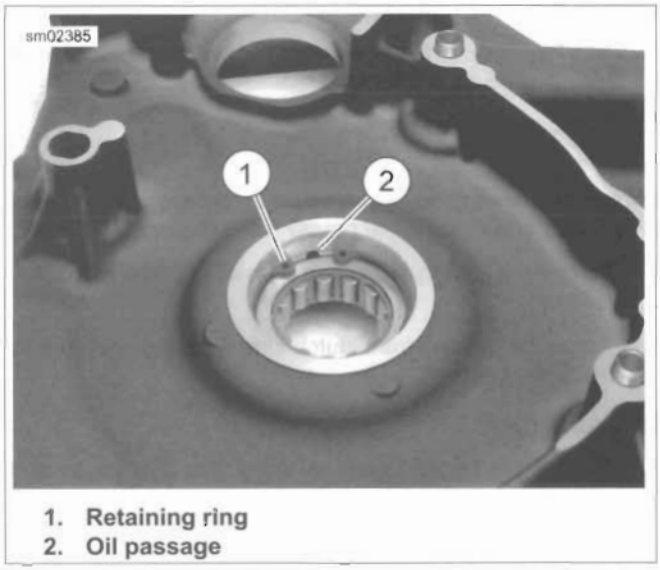

1. Retaining ring
2. Oil passage

Figure 5-20. Retaining Ring Orientation

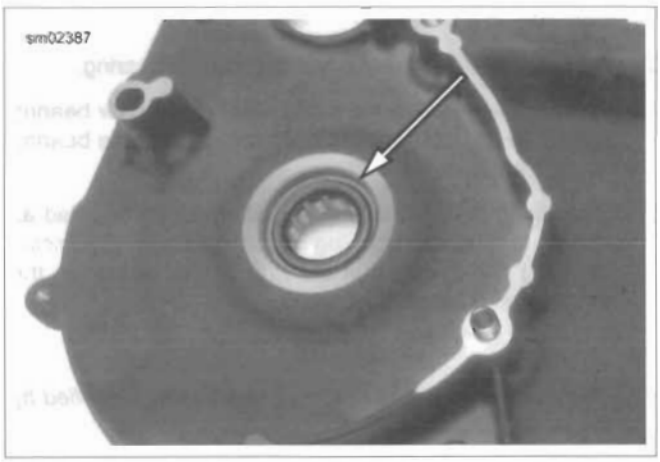

Figure 5-21. Oil Seal

MAINSHAFT BEARING INNER RACE

PART NUMBER	TOOL NAME
HD-34902-C	MAINSHAFT BEARING INNER RACE REMOVER/INSTALLER

Removal

NOTE

Bearing outer race installation requires properly aligned bearing inner race. Use the recommended tool, MAINSHAFT BEARING INNER RACE REMOVER/INSTALLER (Part No. HD-34902-C).

1. See Figure 5-22. Install end cap (2) into end of mainshaft.
2. Position puller (3) around mainshaft, under bearing inner race.
3. Turn forcing screw (4) clockwise while holding puller to remove bearing.

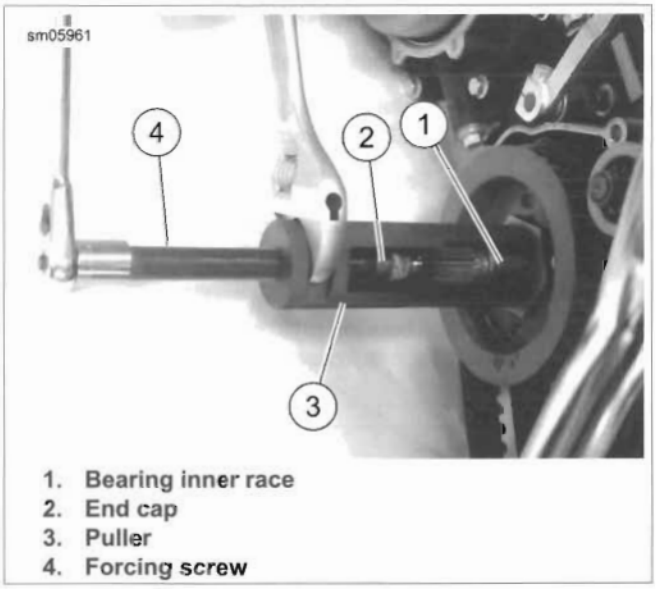

1. **Bearing inner race**
2. **End cap**
3. **Puller**
4. **Forcing screw**

Figure 5-22. Pulling Mainshaft Inner Bearing Race

Installation

1. See Figure 5-23. Slide bearing inner race (1) onto mainshaft.

NOTE

Extension shaft has left-hand threads.

2. Install extension shaft (2) onto end of mainshaft.
3. Position installer sleeve (4) over extension shaft and against bearing inner race. Apply graphite lubricant to threads of extension shaft.
4. Place two washers (5) over threaded portion of extension shaft and install nut.
5. Tighten nut (6) while holding extension shaft stationary with wrench on flats (3) at end of screw threads. Press race onto shaft until edge of race contacts step on shaft.
6. Lubricate race with SCREAMIN' EAGLE ASSEMBLY LUBE.

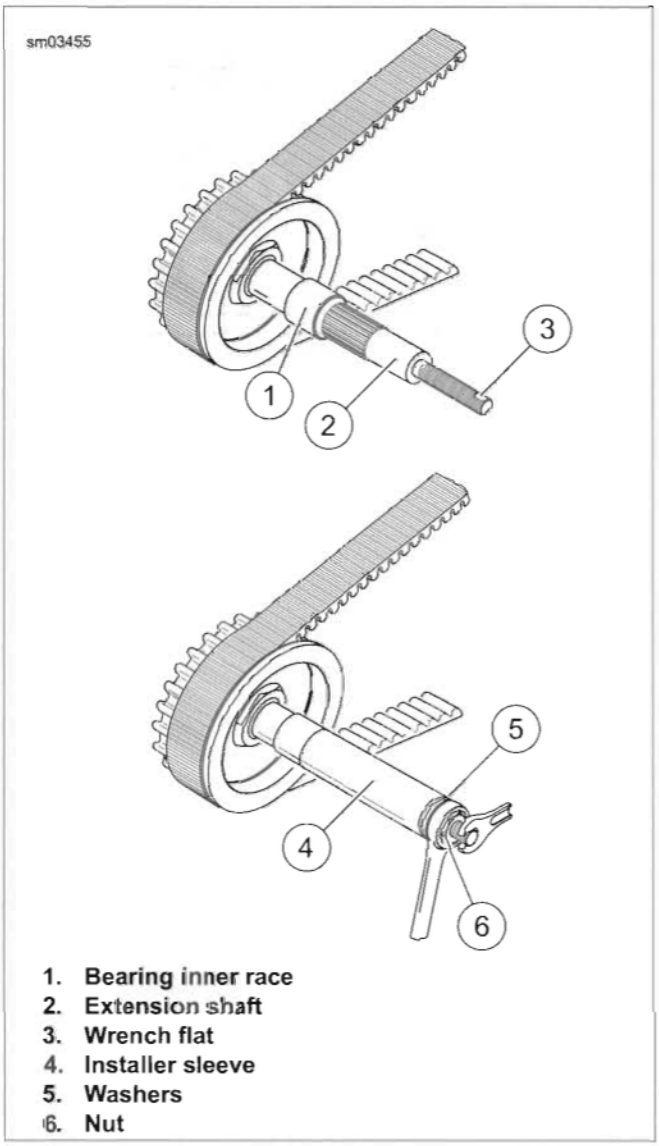

1. **Bearing inner race**
2. **Extension shaft**
3. **Wrench flat**
4. **Installer sleeve**
5. **Washers**
6. **Nut**

Figure 5-23. Installing Bearing Race

INSTALLATION

FASTENER	TORQUE VALUE	
Primary chaincase housing sealing fasteners	26-28 ft-lbs	35.3-38.0 Nm

NOTES

- *Cover mainshaft clutch hub splines with tape to prevent the splines from damaging the inner primary cover oil seal.*
- *See Figure 5-24. In next step, be sure dowels (1) in crankcase gasket (2) engage holes in crankcase.*

1. See Figure 5-25. Place crankcase gasket in place on gasket surface (2). Be sure dowels in gasket engage dowel holes (3).
2. Spread a thin film of oil on mainshaft oil seal lip and rubber portion of crankcase gasket. Be careful not to damage mainshaft seal when installing chaincase over the primary bearing inner race on the mainshaft.
3. See Figure 5-26. Insert **new** sealing fasteners.
4. See Figure 5-27. Tighten fasteners in sequence shown to 26-28 ft-lbs (35.3-38.0 Nm).
5. Install the primary chain, clutch, and compensating sprocket as an assembly. See 5.4 DRIVE COMPONENTS, Installation.
6. Install starter. See 7.13 STARTER, Installation.

NOTE

Always install a new gasket between primary chaincase cover and chaincase. Failure to replace this gasket may cause primary chaincase leaks.

7. Install primary chaincase cover. Fill with lubricant. See 5.3 PRIMARY CHAINCASE COVER, Installation.
8. Adjust drive belt tension.
9. Connect negative battery cable.

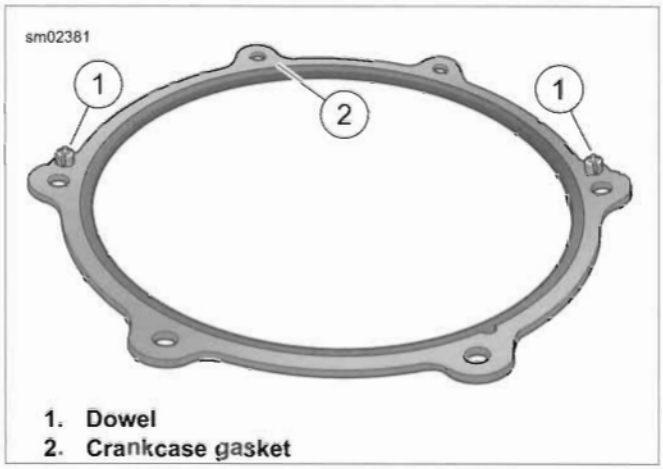

1. **Dowel**
2. **Crankcase gasket**

Figure 5-24. Crankcase Gasket

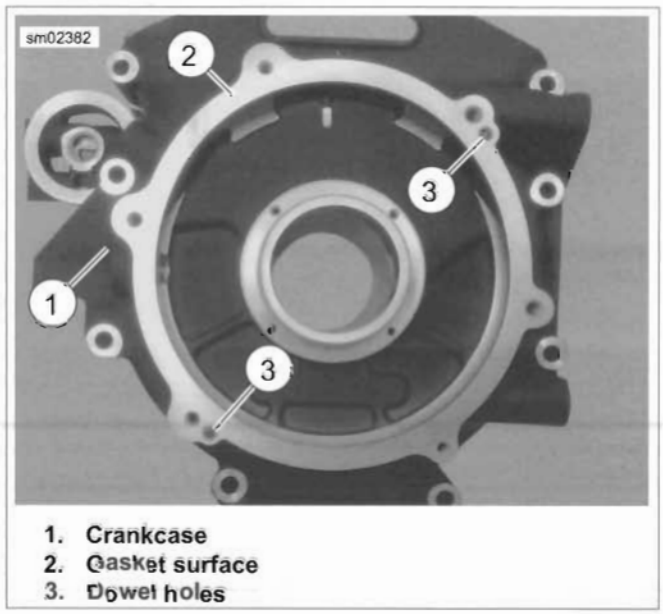

1. **Crankcase**
2. **Gasket surface**
3. **Dowel holes**

Figure 5-25. Crankcase

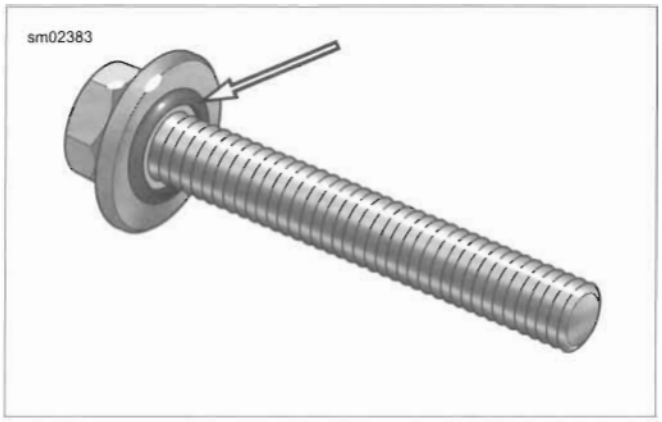

Figure 5-26. Primary Chaincase Sealing Fastener

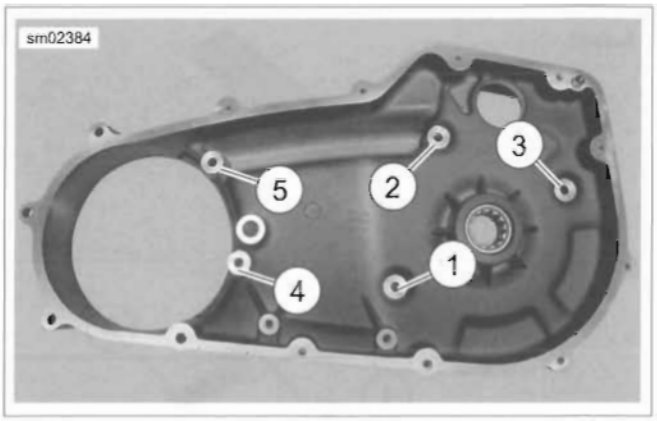

Figure 5-27. Primary Chaincase Sealing Fastener Torque Sequence

REMOVAL AND INSTALLATION

To remove the clutch without disassembly or for installation instructions, see 5.4 DRIVE COMPONENTS, Removal.

CLUTCH PACK ONLY

FASTENER	TORQUE VALUE	
Clutch diaphragm spring retainer bolts	70-100 **in-lbs**	7.9-11.3 Nm

Partial Disassembly

This procedure can be performed on the motorcycle without removing the clutch shell or hub.

1. Remove primary chaincase cover. See 5.3 PRIMARY CHAINCASE COVER, Removal.
2. See Figure 5-28. Remove six bolts (1) (metric) to release diaphragm spring retainer (2) from clutch hub. Loosen each bolt gradually and in a star sequence around the hub.
3. Remove diaphragm spring retainer, diaphragm spring (3) and pressure plate (4) from clutch hub.
4. Remove friction plates (5, 7), steel plates (6), damper spring (8) and damper spring seat (9) from clutch hub (11).

Cleaning And Inspection

⚠WARNING

Compressed air can pierce the skin and flying debris from compressed air could cause serious eye injury. Wear safety glasses when working with compressed air. Never use your hand to check for air leaks or to determine air flow rates. (00061a)

1. Wash all parts in cleaning solvent, except for friction plates and bearing, if removed. Dry parts with low pressure compressed air.
2. Check **friction plates**:
   a. Use compressed air to remove all lubricant from the friction plates. Do not wipe off with a rag.
   b. Measure the thickness of each plate with a dial caliper or micrometer.
   c. If the thickness of any plate is less than 0.143 in. (3.62 mm), discard all friction plates and replace with an entirely **new** set.
   d. Look for worn or damaged fiber surface material (both sides).

NOTE

*Replace all nine friction plates with an entirely **new** set if any individual plate shows evidence of wear or damage.*

3. Check the **steel plates**:
   a. Discard any plate that is grooved or bluish in color. Blue plates are likely warped or distorted.
   b. Check each plate for distortion. Lay the plate on a precision flat surface. Insert a feeler gauge between the plate and the flat surface in several places. Replace any steel plate that is warped more than 0.006 in. (0.15 mm).
4. Hold the clutch hub and rotate the clutch shell to check bearing for smooth operation. Replace the bearing if it runs rough, binds or has any end play.
5. Inspect the primary chain sprocket and the starter ring gear on the clutch shell. Replace the clutch shell if either are badly worn or damaged.
6. Check the slots that mate with the clutch plates on both the clutch shell and hub. Replace if slots are worn or damaged.

NOTE

Springs are identified by a dab of paint on one face. See the parts catalog to verify the correct spring is installed.

7. Check the diaphragm spring and diaphragm spring retainer for cracks or bent tabs. Replace part if either condition exists.

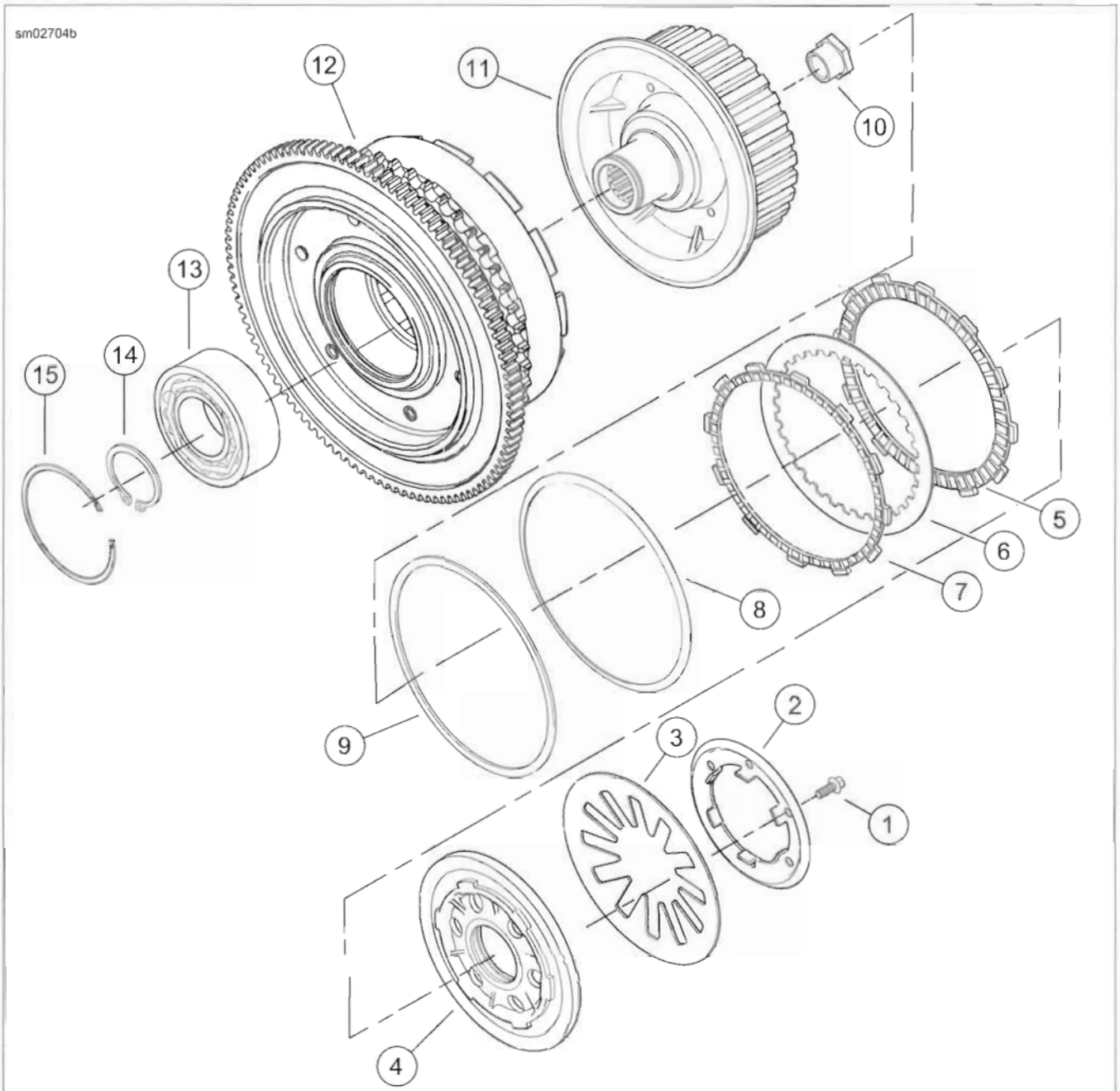

1. Bolt (6) (metric)
2. Diaphragm spring retainer
3. Diaphragm spring
4. Pressure plate
5. Friction plate (9)
6. Steel plate (8)
7. Narrow friction plate
8. Damper spring
9. Damper spring seat
10. Mainshaft nut (metric)
11. Clutch hub
12. Clutch shell
13. Bearing
14. Retaining ring
15. Retaining ring

Figure 5-28. Clutch Shell Assembly

Assembly

NOTE

Submerge and soak all friction plates in primary chaincase lubricant for at least five minutes.

1. See Figure 5-29. Install the narrow friction plate on the clutch hub.
2. See Figure 5-28. Install damper spring seat (9) on clutch hub (11). It must sit inboard of narrow friction plate (7).

NOTE

See Figure 5-34. Notice damper spring (4) orientation with respect to damper spring seat (3).

3. See Figure 5-28. Install damper spring (8) on clutch hub with the concave side facing away from damper spring seat.
4. Install a steel plate (6) with round edge outward and then a friction plate (5) on the clutch hub. Install seven remaining sets in the same manner, alternating between steel plates and friction plates.
5. Install pressure plate (4) on clutch hub aligning holes in plate with threaded bosses on hub.
6. Seat diaphragm spring (3) in recess of pressure plate with the concave side inward.
7. Align holes in diaphragm spring retainer (2) with threaded bosses on clutch hub. Tabs on spring retainer contact flats on inboard side of bosses.
8. Install six bolts (1) (metric) to secure diaphragm spring retainer to clutch hub. Alternately tighten to 70-100 **in-lbs** (7.9-11.3 Nm).

NOTE

*Always install a **new** gasket between primary chaincase cover and chaincase. Failure to replace this gasket may cause primary chaincase leaks.*

9. Install primary chaincase cover. Fill primary chaincase with lubricant. See 5.3 PRIMARY CHAINCASE COVER, Installation.

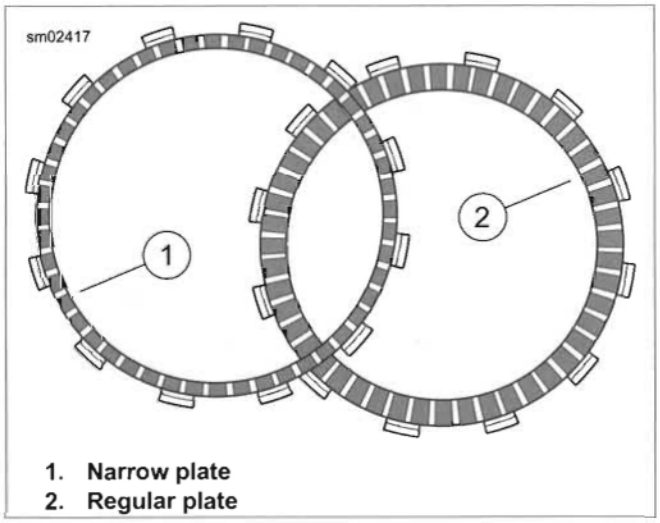

1. **Narrow plate**
2. **Regular plate**

Figure 5-29. Friction Plates

CLUTCH PACK AND BEARING

Complete Disassembly

1. Remove the primary chaincase cover. See 5.3 PRIMARY CHAINCASE COVER, Removal.
2. Remove clutch assembly. See 5.4 DRIVE COMPONENTS, Removal.
3. Follow all partial disassembly information under 5.6 CLUTCH, Clutch Pack Only.

⚠WARNING

Wear safety glasses or goggles when removing or installing retaining rings. Retaining rings can slip from the pliers and could be propelled with enough force to cause serious eye injury. (00312a)

NOTE

Do not disassemble the clutch shell and hub assembly unless the bearing, hub or shell require replacement. Replace the bearing if disassembled.

⚠WARNING

Wear safety glasses or goggles when removing or installing retaining rings. Retaining rings can slip from the pliers and could be propelled with enough force to cause serious eye injury. (00312a)

4. See Figure 5-30. Remove retaining ring.
5. See Figure 5-31. Support clutch shell in arbor press with ring gear side up. Use a suitable press plug to press hub from bearing in clutch shell.
6. See Figure 5-32. Remove retaining ring from groove in clutch shell bore.
7. See Figure 5-33. Support clutch shell in arbor press with ring gear side is down. Use a suitable press plug to remove bearing.
8. Clean and inspect components. See 5.6 CLUTCH, Clutch Pack Only.

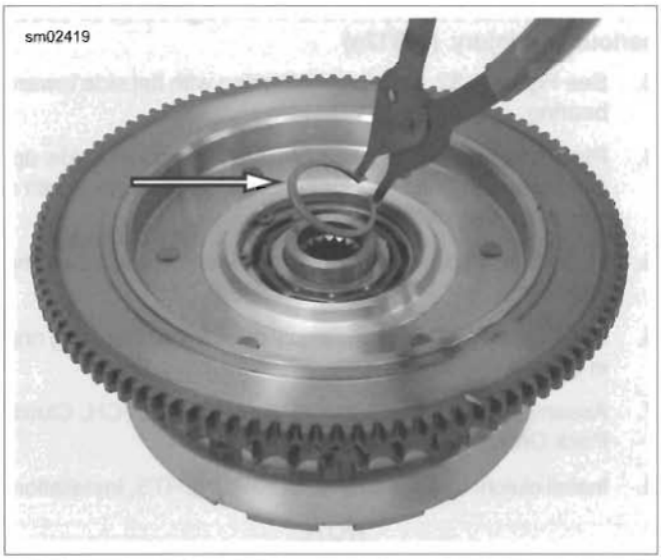

Figure 5-30. Clutch Hub Retaining Ring



Figure 5-31. Pressing Clutch Hub From Bearing

Assembly

1. Place clutch shell in arbor press with ring gear side up. Support clutch shell bore on sprocket side to avoid damage to ears on clutch basket.
2. Using a suitable press plug, press against outer race until bearing contacts shoulder in clutch shell bore.

⚠WARNING

Wear safety glasses or goggles when removing or installing retaining rings. Retaining rings can slip from the pliers and could be propelled with enough force to cause serious eye injury. (00312a)

3. See Figure 5-32. Install retaining ring with flat side toward bearing.
4. Place clutch shell in arbor press with sprocket side up. Center hub in bearing. Support bearing inner race with a sleeve on transmission side.
5. Press hub into bearing until shoulder contacts bearing inner race.
6. See Figure 5-30. Turn assembly over. Install retaining ring in groove of clutch hub.
7. Assemble clutch components. See 5.6 CLUTCH, Clutch Pack Only.
8. Install clutch. See 5.4 DRIVE COMPONENTS, Installation.

NOTE

*Always install a **new** gasket between primary chaincase cover and chaincase. Failure to replace this gasket may cause primary chaincase leaks.*

9. Install primary chaincase cover. Fill primary chaincase with lubricant. See 5.3 PRIMARY CHAINCASE COVER, Installation.



Figure 5-32. Install Clutch Shell Retaining Ring with Flat Side Against Bearing

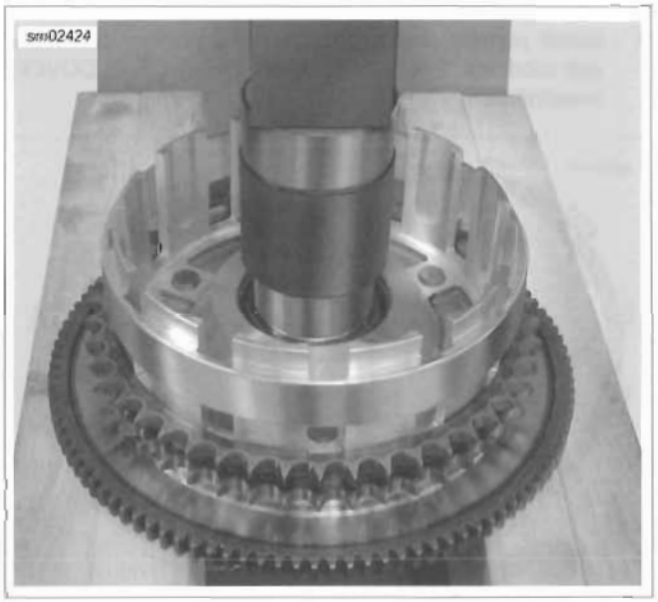

Figure 5-33. Pressing Bearing From Clutch Shell

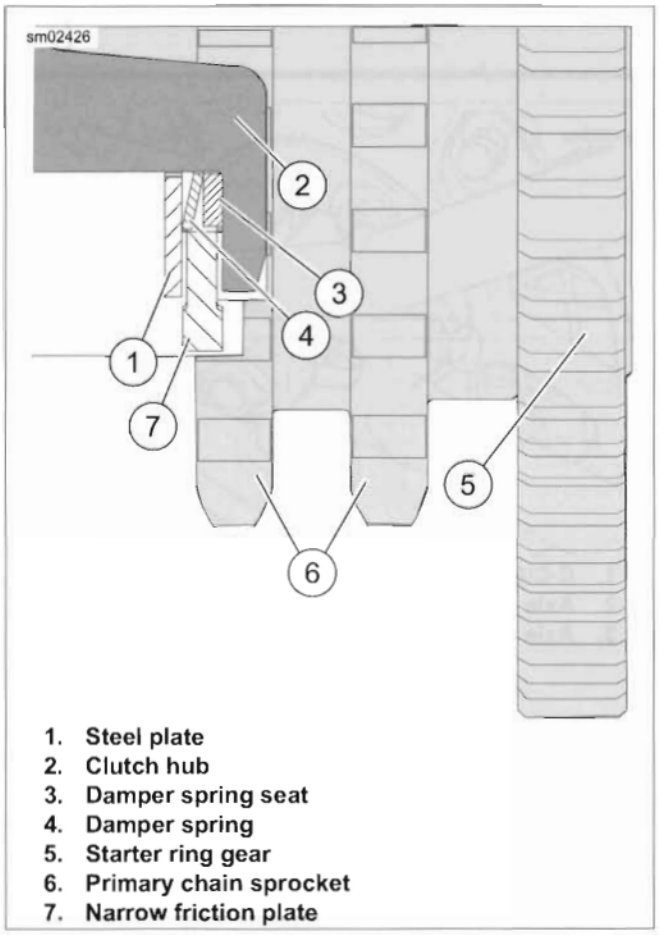

1. Steel plate
2. Clutch hub
3. Damper spring seat
4. Damper spring
5. Starter ring gear
6. Primary chain sprocket
7. Narrow friction plate

Figure 5-34. Clutch Stackup

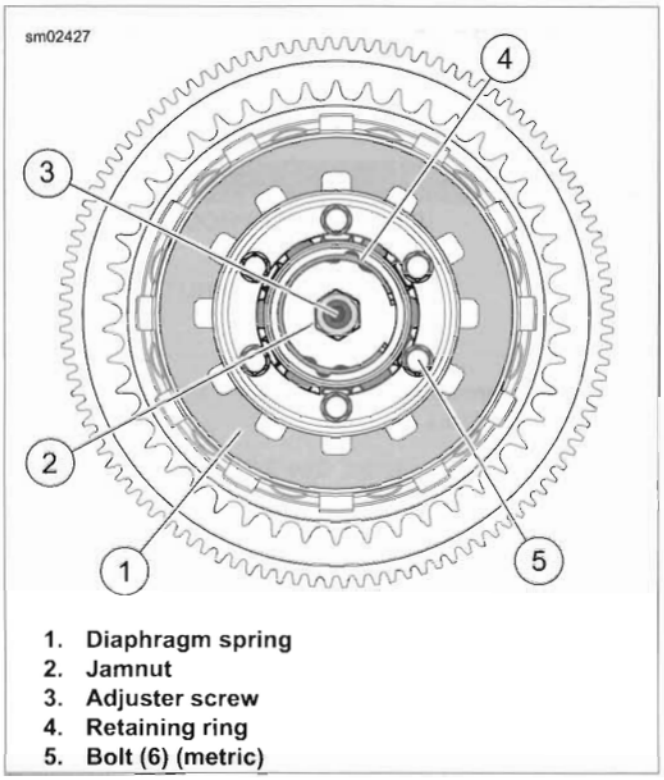

1. Diaphragm spring
2. Jamnut
3. Adjuster screw
4. Retaining ring
5. Bolt (6) (metric)

Figure 5-35. Assembled Clutch

REMOVAL

PART NUMBER	TOOL NAME
HD-46282-A	FINAL DRIVE SPROCKET LOCKING TOOL
HD-47910	MAINSHAFT LOCKNUT WRENCH
HD-94660-2	PILOT

1. Remove primary chaincase. See 5.5 PRIMARY CHAINCASE HOUSING, Removal.
2. Remove debris deflector. See 2.21 BELT GUARD AND DEBRIS DEFLECTOR.

NOTE

Loosen both axle adjusters an equal number of turns to maintain wheel alignment.

3. See Figure 5-36. Remove e-clip (1). Loosen rear axle nut (2). Loosen both axle adjusters (3) to release tension on the drive belt.

NOTE

Only remove sprocket nut while transmission is installed in frame. Failure to do so will result in damage to transmission and/or transmission stand.

4. Remove transmission sprocket.
   a. See Figure 5-37. Remove both screws (1) and lockplate (2).
   b. See Figure 5-38. Secure sprocket using FINAL DRIVE SPROCKET LOCKING TOOL (Part No. HD-46282-A) (3). Final drive sprocket locking tool must rest against lower portion of rear fork pivot nut (2).

NOTE

*Sprocket nut has a **right-hand** thread.*

   c. Install PILOT (Part No. HD-94660-2) on mainshaft.
   d. Remove the sprocket nut using MAINSHAFT LOCKNUT WRENCH (Part No. HD-47910) (1).
5. Remove belt from sprocket as sprocket is removed.

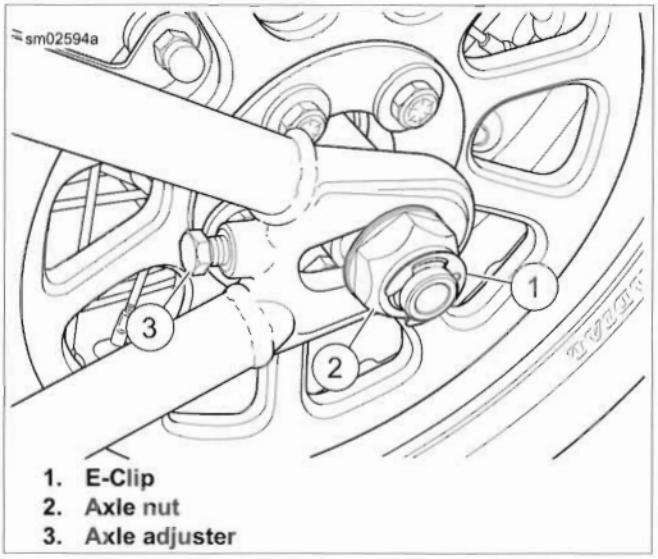

1. **E-Clip**
2. **Axle nut**
3. **Axle adjuster**

Figure 5-36. Axle Adjusters

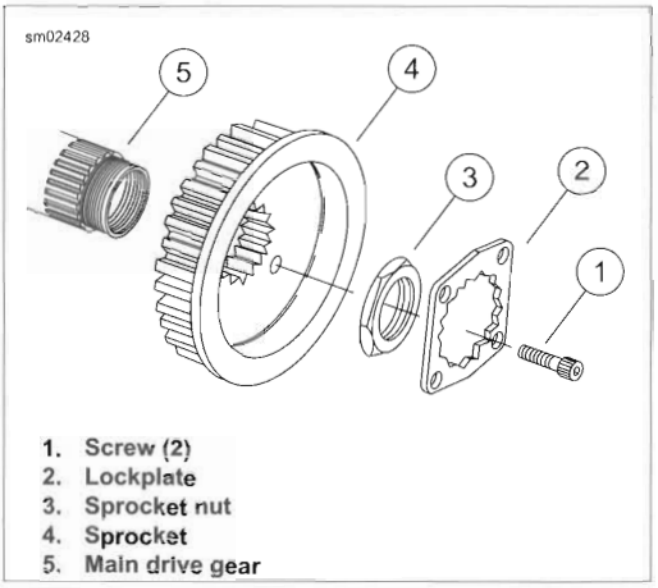

1. **Screw (2)**
2. **Lockplate**
3. **Sprocket nut**
4. **Sprocket**
5. **Main drive gear**

Figure 5-37. Transmission Sprocket

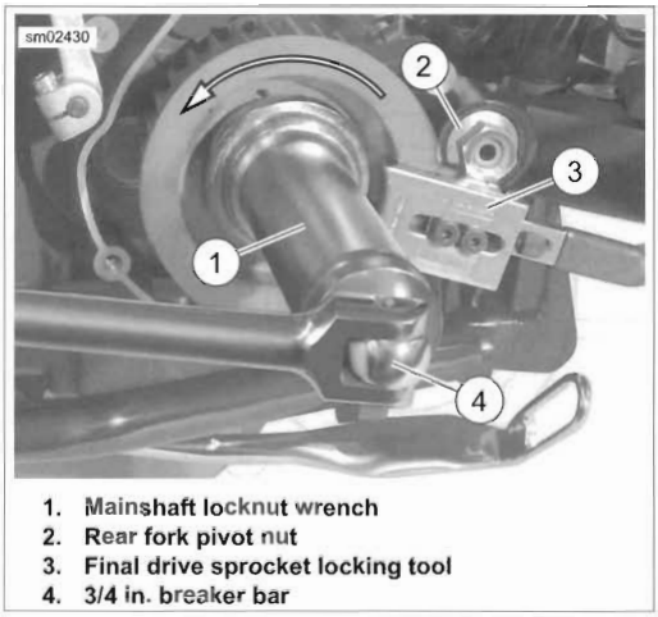

1. **Mainshaft locknut wrench**
2. **Rear fork pivot nut**
3. **Final drive sprocket locking tool**
4. **3/4 in. breaker bar**

Figure 5-38. Sprocket Nut Removal (Typical)

CLEANING AND INSPECTION

1. Using a non-volatile cleaning solvent, clean sprocket of all grease and dirt.
2. Inspect belt and sprocket. See 1.12 DRIVE BELT AND SPROCKETS, Inspection.
3. Inspect both main drive gear and mainshaft seals. Replace if damaged.

INSTALLATION

PART NUMBER	TOOL NAME
HD-46282A	FINAL DRIVE SPROCKET LOCKING TOOL
HD-47910	MAINSHAFT LOCKNUT WRENCH
HD-94660-2	PILOT
SNAP-ON TA360	TORQUE ANGLE GAUGE

FASTENER	TORQUE VALUE	
Transmission sprocket nut, initial torque	100 ft-lbs	135.6 Nm
Transmission sprocket nut, final torque	35 ft-lbs	47.5 Nm
Transmission lockplate screws	90-120 in-lbs	10.2-13.6 Nm

NOTE

Install sprocket nut only while transmission is installed in frame. Failure to do so will result in damage to transmission and/or transmission stand.

1. Place transmission sprocket in position. Install the belt on the sprocket as the sprocket is installed.
2. If reusing the sprocket nut, apply LOCTITE 271 HIGH STRENGTH THREADLOCKER (red) to the threads of the sprocket nut.

NOTES

- *Never get oil on the threads of the sprocket nut or the integrity of the lock patch may be compromised.*
- *The transmission sprocket nut has **right-hand** threads. Turn the nut **clockwise** to install.*

3. See Figure 5-37. Apply a thin film of clean engine oil to the mating surfaces of the sprocket nut (3) and the sprocket (4). Install the sprocket nut until finger-tight.
4. See Figure 5-39. Lock transmission sprocket with the FINAL DRIVE SPROCKET LOCKING TOOL (Part No. HD-46282A) (2). The locking tool must rest against the rear fork pivot (3).
5. Install PILOT (Part No. HD-94660-2) on mainshaft.
6. Using MAINSHAFT LOCKNUT WRENCH (Part No. HD-47910), tighten sprocket nut to 100 ft-lbs (135.6 Nm) initial torque.
7. Loosen sprocket nut one full turn.
8. Tighten to 35 ft-lbs (47.5 Nm).

NOTE

See Figure 5-40. To determine proper angles during final tightening, scribe lines (3) or use TORQUE ANGLE GAUGE (Part No. SNAP-ON TA360) after the 35 ft-lbs (47.5 Nm) torque is applied.

9. Continue turning sprocket nut an additional 35-40 degrees.

NOTE

The lockplate has four screw holes and can be turned to either side. This should provide screw hole alignment without having to additionally tighten the nut. If the screw holes cannot be properly aligned, tighten the nut slightly until the holes align. Do not exceed 45 degrees. Never LOOSEN nut to align the screw holes.

10. Install lockplate over transmission sprocket nut with two of lockplate's holes aligned with sprocket's two tapped holes.

NOTES

- ***New** screws have lock patches.*
- *Screws can be reused up to three times if LOCTITE 271 HIGH STRENGTH THREADLOCKER (red) is applied before installation.*
- *To confirm the lockplate security, install BOTH screws.*

11. See Figure 5-37. Install two screws (1) to secure lockplate (2) to sprocket (4). Tighten to 90-120 **in-lbs** (10.2-13.6 Nm).
12. Install primary chain assembly. See 5.4 DRIVE COMPONENTS.

NOTE

*Always install a **new** gasket between primary cover and housing. Not replacing this gasket may cause primary chaincase leaks.*

13. Install primary chaincase cover. Fill with lubricant. See 5.3 PRIMARY CHAINCASE COVER.
14. Verify pivot shaft torque. See 2.23 REAR FORK.
15. Adjust drive belt deflection. See 1.12 DRIVE BELT AND SPROCKETS.

16. Verify vehicle alignment and tighten rear axle. See 2.10 VEHICLE ALIGNMENT.
17. Install debris deflector. See 2.21 BELT GUARD AND DEBRIS DEFLECTOR.

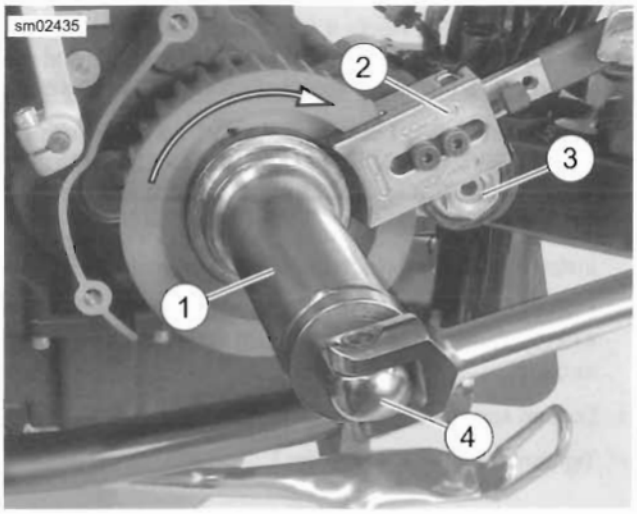

1. Mainshaft locknut wrench
2. Final drive sprocket locking tool
3. Rear fork pivot nut
4. 1/2 in. breaker bar

Figure 5-39. Sprocket Nut Installation (Typical)

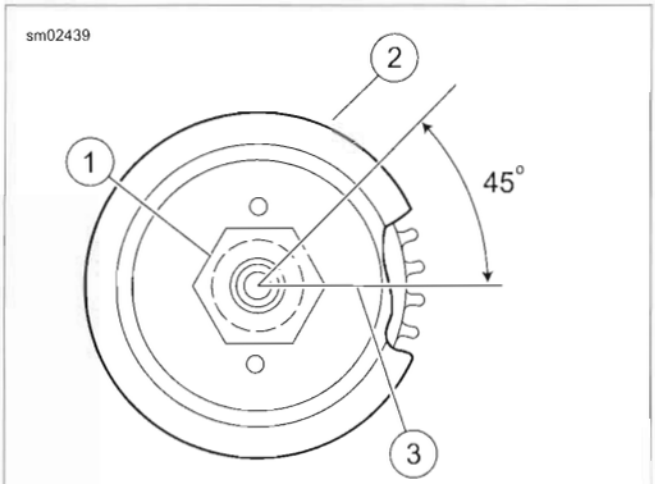

1. Sprocket nut
2. Transmission sprocket
3. Line scribed

Figure 5-40. Sprocket Nut Final Tightening

REMOVAL

1. Remove rear wheel. See 2.5 REAR WHEEL.
2. Remove primary chain, clutch, engine compensating sprocket, and chain adjuster as an assembly. See 5.4 DRIVE COMPONENTS.
3. Remove primary chaincase housing. See 5.5 PRIMARY CHAINCASE HOUSING, Removal.
4. Place a support under rear fork and engine. Remove pivot shaft and spacer. See 2.23 REAR FORK.
5. See Figure 5-41. Slip drive belt (2) from transmission sprocket (1).

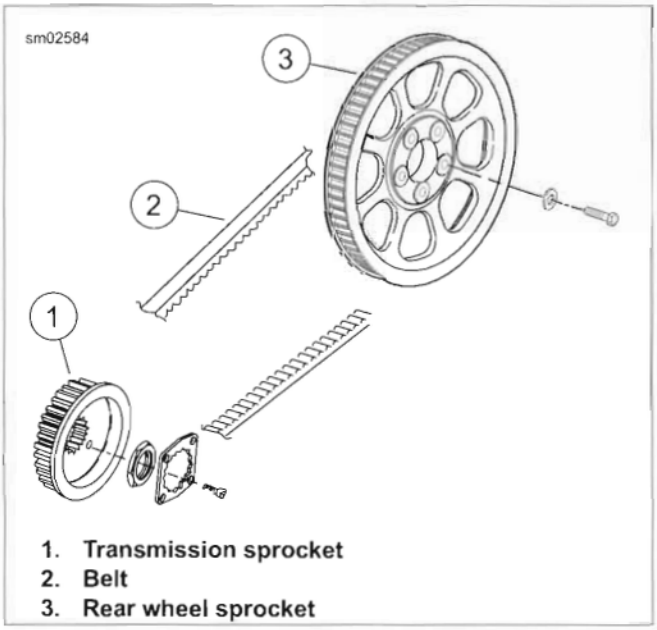

1. **Transmission sprocket**
2. **Belt**
3. **Rear wheel sprocket**

Figure 5-41. Belt and Transmission Sprocket

INSPECTION

See 1.12 DRIVE BELT AND SPROCKETS, Inspection.

INSTALLATION

⚠WARNING

Never bend belt forward into a loop smaller than the drive sprocket diameter. Never bend belt into a reverse loop. Over bending can damage belt resulting in premature failure, which could cause loss of control and death or serious injury. (00339a)

1. See Figure 5-41. Install belt (2) over transmission sprocket (1).
2. Install pivot shaft and spacer. Remove support holding engine and rear fork. See 2.23 REAR FORK.
3. Install the primary chaincase housing. See 5.5 PRIMARY CHAINCASE HOUSING.

NOTE

Always install a new gasket between primary chaincase cover and chaincase. Failure to replace this gasket may cause primary chaincase leaks.

4. Install primary chain assembly. See 5.4 DRIVE COMPONENTS.
5. Install primary chaincase cover. Fill with lubricant. See 5.3 PRIMARY CHAINCASE COVER.
6. Install rear wheel. See 2.5 REAR WHEEL.
7. Align vehicle. See 2.10 VEHICLE ALIGNMENT.
8. Adjust belt tension. See 1.12 DRIVE BELT AND SPROCKETS.

NOTES

SUBJECT	PAGE NO.
6.1 FASTENER TORQUE VALUES	6-1
6.2 SPECIFICATIONS: TRANSMISSION	6-2
6.3 TRANSMISSION	6-3
6.4 SHIFTER	6-5
6.5 CLUTCH RELEASE COVER	6-7
6.6 TRANSMISSION ASSEMBLY	6-9
6.7 MAIN DRIVE GEAR AND BEARING	6-22
6.8 TRANSMISSION CASE	6-29

NOTES

FASTENER TORQUE VALUES IN THIS CHAPTER

The table below lists torque values for all fasteners presented in this chapter.

FASTENER	TORQUE VALUE		NOTES
Clutch cable fitting	90-120 **in-lbs**	10.2-13.6 Nm	6.5 CLUTCH RELEASE COVER, Assembly and Installation
Clutch release cover screws	132-156 **in-lbs**	14.9-17.6 Nm	6.5 CLUTCH RELEASE COVER, Assembly and Installation
Mainshaft/countershaft nuts	85-95 ft-lbs	115.3-128.8 Nm	6.6 TRANSMISSION ASSEMBLY, Assembly
Shift drum detent arm fastener	120-150 **in-lbs**	13.6-17.0 Nm	6.6 TRANSMISSION ASSEMBLY, Assembly
Shift drum lock plate fasteners	57-63 **in-lbs**	6.4-7.1 Nm	6.6 TRANSMISSION ASSEMBLY, Assembly
Shifter pawl centering screw	18-23 ft-lbs	24.4-31.2 Nm	6.8 TRANSMISSION CASE, Assembly
Shifter peg	96-144 **in-lbs**	10.9-16.3 Nm	6.4 SHIFTER, Shift Lever Replacement
Shifter rod jam nut	80-120 **in-lbs**	9.0-13.6 Nm	6.4 SHIFTER, Shifter Rod Adjustment
Shifter rod lever pinch screw, transmission lever	18-22 ft-lbs	24.4-29.8 Nm	6.8 TRANSMISSION CASE, Assembly
Shifter rod to lever locknut	96-144 **in-lbs**	10.8-16.3 Nm	6.4 SHIFTER, Shifter Rod Adjustment
Shift lever pinch bolt: FXSB, FXST	13-16 ft-lbs	17.6-21.7 Nm	6.4 SHIFTER, Shift Lever Replacement
Shift lever pinch bolts: all but FXSB, FXST	18-22 ft-lbs	24.4-29.9 Nm	6.4 SHIFTER, Shift Lever Replacement
Transmission bearing housing screw	23-25 ft-lbs	31.2-33.9 Nm	6.6 TRANSMISSION ASSEMBLY, Installation
Transmission drain plug	14-21 ft-lbs	19.0-28.5 Nm	6.6 TRANSMISSION ASSEMBLY, Installation
Transmission drain plug	14-21 ft-lbs	19.0-28.5 Nm	6.8 TRANSMISSION CASE, Installation
Transmission mounting bolts, 1st torque	15 ft-lbs	20.3 Nm	6.8 TRANSMISSION CASE, Installation
Transmission mounting bolts, final torque	34-39 ft-lbs	46.1-52.9 Nm	6.8 TRANSMISSION CASE, Installation
Transmission top cover	90-120 **in-lbs**	10.2-13.6 Nm	6.6 TRANSMISSION ASSEMBLY, Installation

SPECIFICATIONS

Table 6-1. Transmission Specifications

TRANSMISSION	DATA
Type	6-speed forward constant mesh
FORMULA+ TRANSMISSION AND PRIMARY CHAINCASE LUBRICANT	Part No. 99851-05 (qt)
SYN3 20W50 Oil	Part No. 99824-03/00QT (qt)
Capacity (dry)	32 oz. (946.4 ml)

Table 6-2. Transmission Gear Ratios

GEAR	GEAR RATIO
First (low)	3.34
Second	2.31
Third	1.72
Fourth	1.39
Fifth	1.19
Sixth (high)	1.00

NOTE

Final gear ratios indicate the number of mainshaft revolutions required to drive the output sprocket one revolution.

SERVICE WEAR LIMITS

Table 6-3. Main Drive Gear Specifications

MAIN DRIVE GEAR (6th)	IN	MM
Bearing fit in transmission case (loose)	0.0003-0.0017	0.0076-0.043
Fit in bearing (press-fit)	0.001-0.003	0.025-0.076
End play	none	none

Table 6-4. Mainshaft Tolerance Specifications

MAINSHAFT TOLERANCE	IN.	MM
Mainshaft runout	0.000-0.003	0.00-0.08
Mainshaft end play	none	none
5th gear end play (axial)	0.002-0.026	0.05-0.66
5th gear clearance (radial)	0.0004-0.0020	0.009-0.052
Main drive gear (6th) fit	0.0009-0.0022	0.023-0.056

Table 6-5. Countershaft Tolerance Specifications

COUNTERSHAFT TOLERANCE	IN	MM
Countershaft runout	0.000-0.003	0.00-0.08
Countershaft end play	0.001-0.003	0.025-0.08
1st gear end play (axial)	0.001-0.023	0.03-0.58
1st gear clearance (radial)	0.0004-0.0020	0.010-0.052
2nd gear end play (axial)	0.001-0.40	0.03-1.02
2nd gear clearance (radial)	0.0004-0.0020	0.010-0.052
3rd gear end play (axial)	0.001-0.042	0.03-1.07
3rd gear clearance (radial)	0.0004-0.0020	0.010-0.052
4th gear end play (axial)	0.001-0.028	0.03-0.71
4th gear clearance (radial)	0.0004-0.0020	0.010-0.052

Table 6-6. Shifter Dog Clearance Specifications

SHIFTER DOG	IN	MM
1st	0.013-0.121	0.33-3.07
2nd	0.016-0.138	0.41-3.51
3rd	0.010-0.125	0.25-3.17
4th	0.018-0.129	0.46-3.28
5th	0.007-0.117	0.18-2.97
6th	0.022-0.131	0.56-3.33

Table 6-7. Bearing Housing Bearing Specifications

BEARING HOUSING BEARING	IN	MM
Fit in bearing housing (tight)	0.0001-0.0014	0.0025-0.0356
Fit on countershaft (tight)	-0.0004	-0.010
Fit on countershaft (loose)	+0.0012	+0.030
Fit on mainshaft (tight)	-0.0004	-0.010
Fit on mainshaft (loose)	+0.0012	+0.030

Table 6-8. Shifter Fork Specifications

SHIFTER FORKS	IN	MM
Shifter fork to cam groove end play	0.004-0.012	0.102-0.305
Shifter fork to dog ring end play	0.004-0.016	0.102-0.4060
First and second gear shift fork pad thickness wear limit	0.258	6.55
Third and fourth gear shift fork pad thickness wear limit	0.198	5.03
Fifth and sixth gear shift fork pad thickness wear limit	0.258	6.55

POWER FLOW

See Figure 6-1. The 6-speed transmission consists of two parallel shafts supporting six gears each. The longer, or mainshaft (7), also supports the clutch and serves as the input shaft. The shorter shaft is called the countershaft (8).

Each gear on the mainshaft is in constant mesh with a corresponding gear on the countershaft. Each of these six pairs of gears makes up a different speed in the transmission.

The transmission gears are divided into two types, gears that rotate with the shaft, and gears that spin freely on the shaft. A gear that rotates with the shaft always meshes with a freewheeling gear. Also, three dog rings are able to slide sideways on the shaft. These dog rings are used to change transmission speeds. The dogs on the sides of dog rings engage dogs on adjacent freewheeling gears, transmitting power through the transmission.

Gear shifting is accomplished by three forks which fit into grooves machined into the dog rings that slide on the guide hubs. The position of the shifter forks is controlled by a drum-shaped shifter cam located in the transmission bearing housing.

Neutral

Power is introduced to the transmission through the clutch. In neutral, with the clutch engaged, the mainshaft 1st, 2nd, 3rd and 4th gears are rotating. No power is transferred to the countershaft since countershaft 1st, 2nd, 3rd and 4th gears are freewheeling gears.

First Gear

When the transmission is shifted into first gear, the dog ring between countershaft 1st and 2nd, which rotates with the countershaft, engages countershaft 1st, which has been spinning freely on the countershaft driven by mainshaft 1st.

Now countershaft 1st is no longer freewheeling, but locked to the countershaft causing the countershaft and countershaft 6th to turn. Countershaft 6th transmits the power to the main drive gear and the sprocket as shown (1).

Second Gear

Second gear is engaged when the dog ring between countershaft 1st and 2nd is shifted out of countershaft 1st and engages countershaft 2nd. This locks countershaft 2nd to the countershaft to complete the power flow as shown (2).

Third Gear

Two shifter forks are used to make the shift from second to third. One fork moves the dog ring between countershaft 1st and 2nd to its neutral position. At the same time another fork engages the dog ring between countershaft 3rd and 4th with countershaft 3rd. This locks countershaft 3rd to the countershaft to complete the power flow as shown (3).

Fourth Gear

Fourth gear is engaged when the dog ring between countershaft 3rd and 4th is shifted out of countershaft 3rd and engages countershaft 4th. This locks countershaft 4th to the countershaft to complete the power flow as shown (4).

Fifth Gear

Two shifter forks are used to make the shift from fourth to fifth. One fork moves the dog ring between countershaft 3rd and 4th to its neutral position. At the same time another fork engages the dog ring between mainshaft 5th and 6th with mainshaft 5th. This locks mainshaft 5th to the mainshaft to complete the power flow as shown (5).

Sixth Gear

The shift from fifth to sixth gear occurs when the dog ring between mainshaft 5th and 6th is shifted out of mainshaft 5th. It is shifted directly into the main drive gear (6th gear). The main drive gear is locked to the mainshaft. this results in a direct one-to-one drive ratio from the clutch to the sprocket as shown (6).

sm00068a

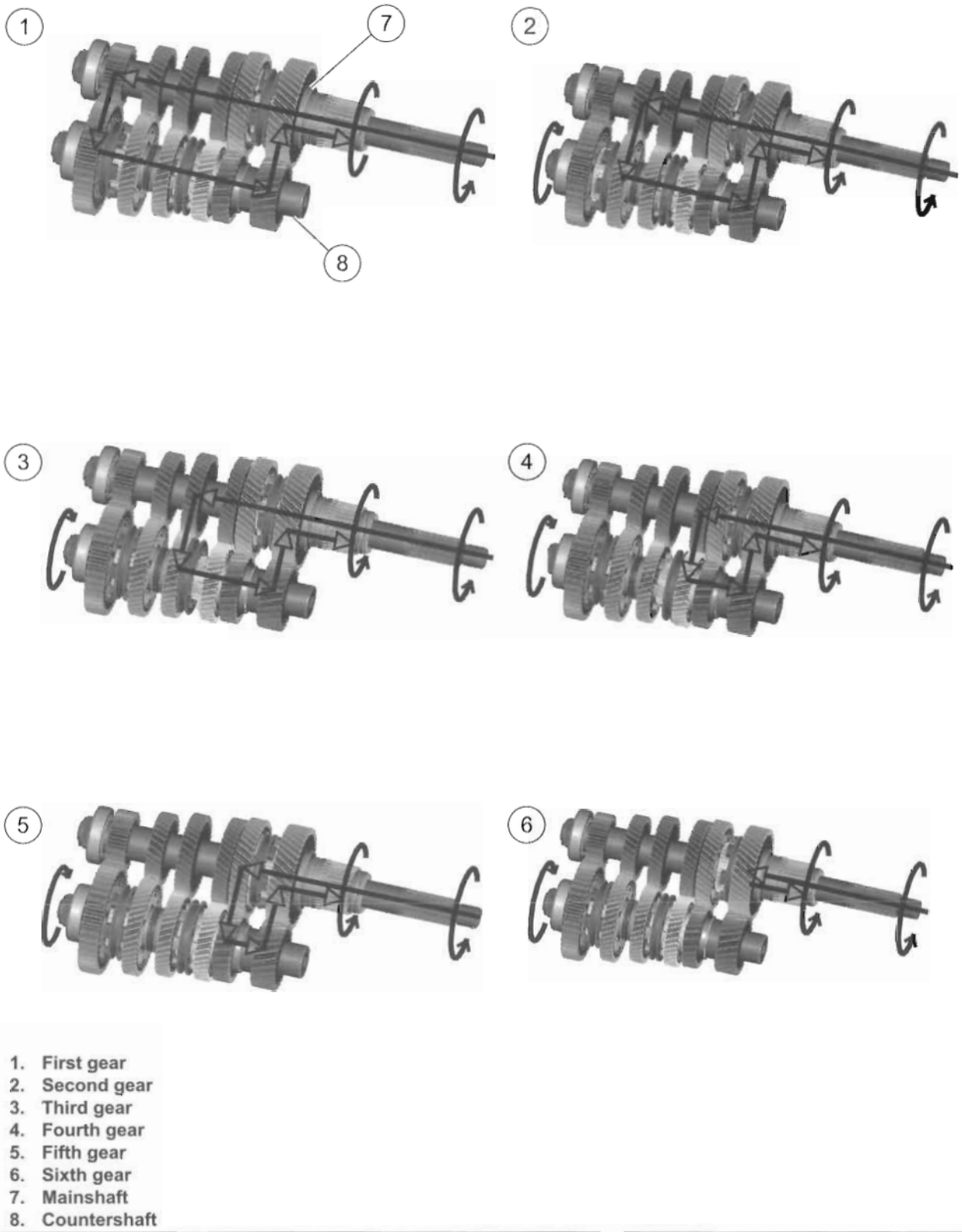

1. First gear
2. Second gear
3. Third gear
4. Fourth gear
5. Fifth gear
6. Sixth gear
7. Mainshaft
8. Countershaft

Figure 6-1. Transmission Power Flow

ADJUSTMENT

If operating problems exist, check the shift linkage for wear, interference or adjustment. Adjust if necessary.

SHIFTER ROD ADJUSTMENT

FASTENER	TORQUE VALUE	
Shifter rod to lever locknut	96-144 in-lbs	10.8-16.3 Nm
Shifter rod jam nut	80-120 in-lbs	9.0-13.6 Nm

The shifter rod length is set at the factory and should not require adjustment under normal circumstances. However, if full engagement or full lever travel is not achieved, adjust the shifter rod.

NOTE

Do not allow shift levers to contact footboard when shifting. This prevents proper gear engagement. Contact may also damage the transmission.

1. See Figure 6-2. Remove locknut, lockwasher and flat washer (3) to free front end of shifter rod from inner shift arm.
2. Loosen jamnuts (1) and adjust rod (2) as necessary.
3. Install flat washer, lockwasher and locknut to fasten shifter rod to inner shift arm.
4. Tighten locknut (3) with lockwasher and flat washer to 96-144 in-lbs (10.8-16.3 Nm).
5. Tighten jamnuts (1) to 80-120 in-lbs (9.0-13.6 Nm).

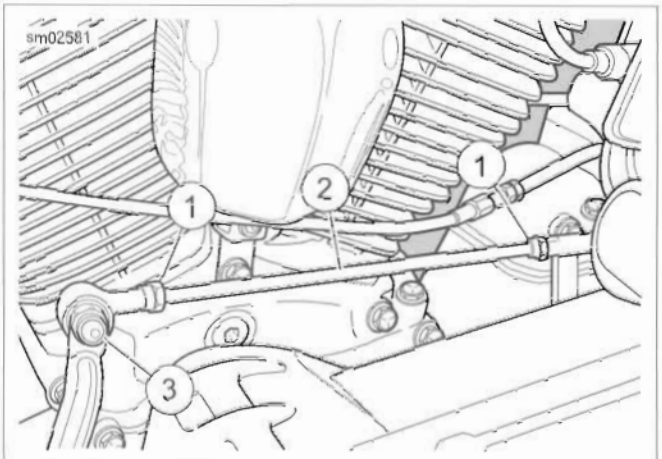

1. Jamnut (2)
2. Shifter rod
3. Locknut, lockwasher, flat washer

Figure 6-2. Shifter Rod

SHIFT LEVER REPLACEMENT

FASTENER	TORQUE VALUE	
Shift lever pinch bolts: all but FXSB, FXST	18-22 ft-lbs	24.4-29.9 Nm
Shift lever pinch bolt: FXSB, FXST	13-16 ft-lbs	17.6-21.7 Nm
Shifter peg	96-144 in-lbs	10.9-16.3 Nm

NOTE

After placing shift lever on pivot lever, make sure footboard does not interfere with shift lever range of motion.

- See Figure 6-3. Position shift levers for comfort.
- **All but FXSB, FXST:** tighten pinch bolts to 18-22 ft-lbs (24.4-29.9 Nm).
- **FXSB, FXST Only:** tighten pinch bolt to 13-16 ft-lbs (17.6-21.7 Nm).
- Tighten shifter peg to 96-144 in-lbs (10.9-16.3 Nm).

sm02280a

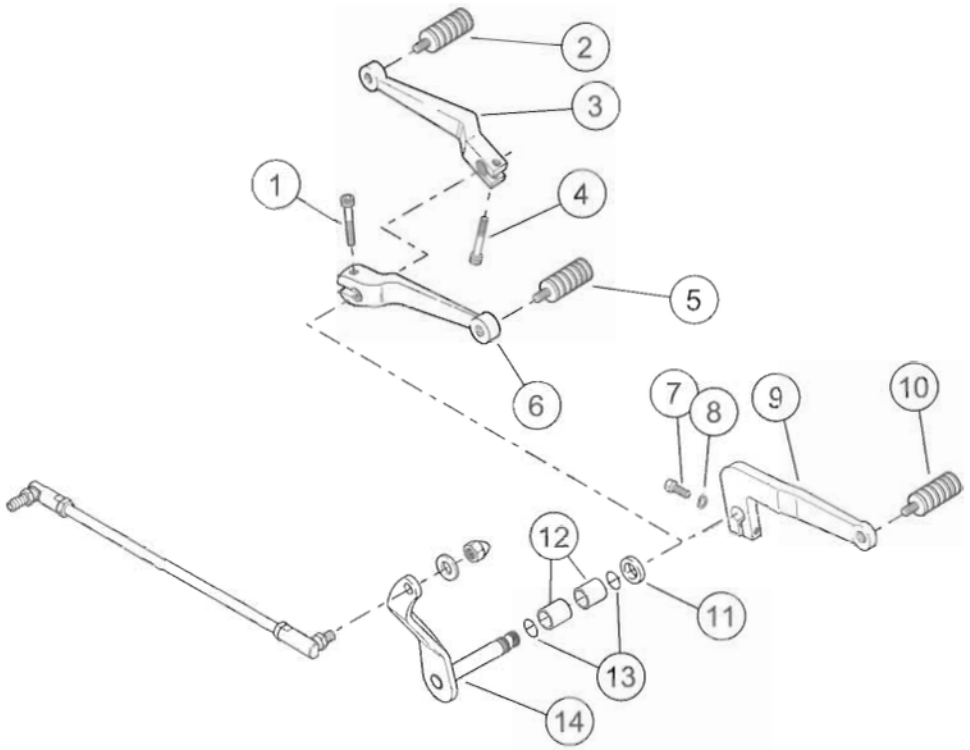

1. Pinch bolt, front (all but FXSB)
2. Shifter peg, rear (all but FXSB)
3. Shift lever, rear (all but FXSB)
4. Pinch bolt, rear (all but FXSB)
5. Shifter peg, front (all but FXSB)
6. Shift lever, front (all but FXSB)
7. Pinch bolt (FXSB)
8. Washer (FXSB)
9. Shift lever (FXSB)
10. Shifter peg (FXSB)
11. Spacer
12. Bushing (2)
13. O-ring (2)
14. Pivot lever

Figure 6-3. Shift Lever Assembly

REMOVAL AND DISASSEMBLY

1. Remove main fuse.
2. Remove exhaust system if needed. See 4.17 EXHAUST SYSTEM.
3. Drain transmission. See 1.10 TRANSMISSION LUBRICANT, Changing Transmission Lubricant.

NOTE

Actuate clutch hand lever, after removing the clutch release cover screws, to break the cover free.

4. See Figure 6-4. Remove the six screws that hold the clutch release cover in place. Remove the clutch release cover and discard the gasket.
5. Add freeplay to clutch cable. See 1.11 CLUTCH, Adjustment.

⚠WARNING

Wear safety glasses or goggles when removing or installing retaining rings. Retaining rings can slip from the pliers and could be propelled with enough force to cause serious eye injury. (00312a)

6. See Figure 6-5. Remove retaining ring (4). Lift inner ramp (5) and ramp coupling (3) out of clutch release cover. Disconnect clutch cable end (2) from the ball and ramp coupling.
7. See Figure 6-6. Remove balls (4) and outer ramp (2).
8. Unscrew clutch cable fitting from clutch release cover.

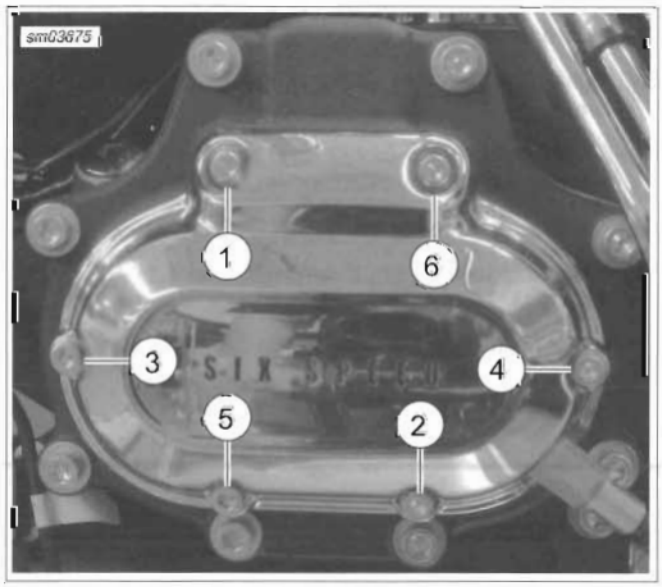

Figure 6-4. Cover Screws

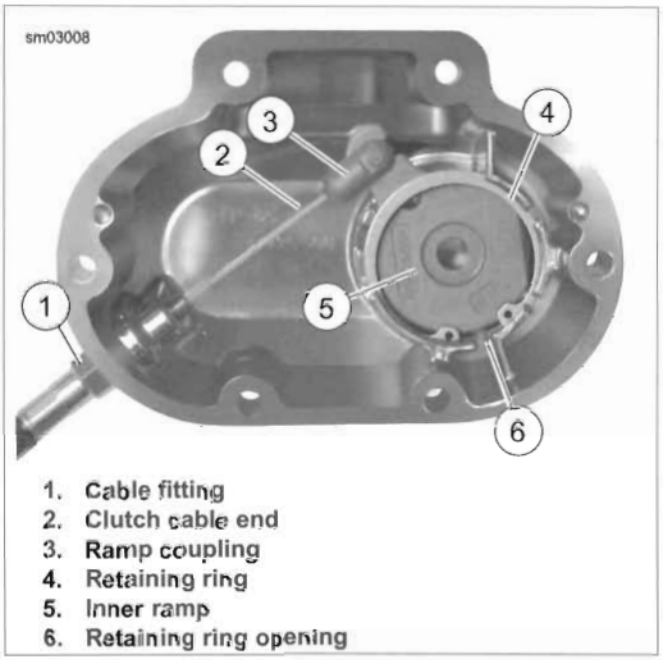

1. Cable fitting
2. Clutch cable end
3. Ramp coupling
4. Retaining ring
5. Inner ramp
6. Retaining ring opening

Figure 6-5. Clutch Cable Connection

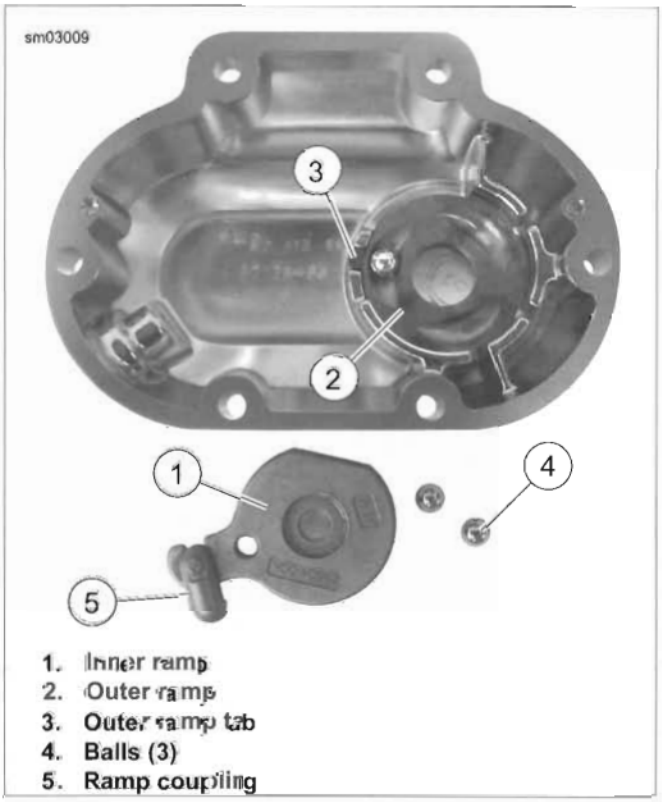

1. Inner ramp
2. Outer ramp
3. Outer ramp tab
4. Balls (3)
5. Ramp coupling

Figure 6-6. Coupling and Ramp Assembly

CLEANING AND INSPECTION

1. See Figure 6-7. Wash the ball and ramp mechanism components in cleaning solvent.

2. Inspect the three balls (2) and ball socket surfaces on ramps (1, 3) for wear, pitting, surface breakdown and other damage. Replace as necessary.
3. Check fit of the ramp coupling (4) on inner ramp (1). Replace both parts if there is excessive wear.
4. Inspect the retaining ring (6) for damage or distortion.
5. Check clutch cable end for frayed or worn ends. Replace cable if damaged or worn. Check cable fitting O-ring for damage.
6. Check the bore in the clutch release cover (5) where the ramps (1, 3) are retained. There should be no wear that would cause the ramps to tilt, causing improper clutch adjustment.

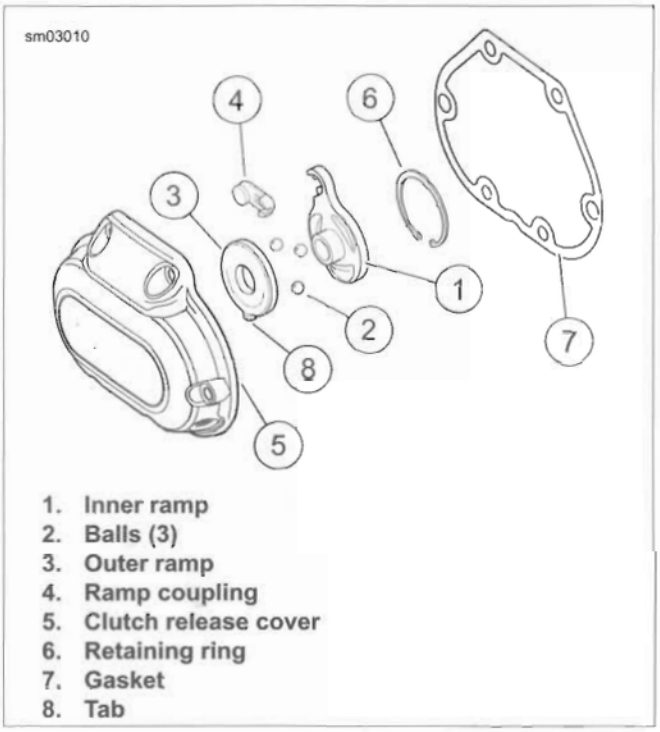

1. **Inner ramp**
2. **Balls (3)**
3. **Outer ramp**
4. **Ramp coupling**
5. **Clutch release cover**
6. **Retaining ring**
7. **Gasket**
8. **Tab**

Figure 6-7. Release Mechanism Assembly

ASSEMBLY AND INSTALLATION

FASTENER	TORQUE VALUE	
Clutch release cover screws	132-156 **in-lbs**	14.9-17.6 Nm
Clutch cable fitting	90-120 **in-lbs**	10.2-13.6 Nm

NOTE

Replace cable fitting O-ring if damaged or deformed.

1. See Figure 6-5. Apply a drop of LOCTITE 243 MEDIUM STRENGTH THREADLOCKER AND SEALANT (blue) to clutch cable fitting (1) and screw fitting into clutch release cover. Do not tighten at this time.
2. See Figure 6-7. Place outer ramp (3) with ball socket side up in clutch release cover. Be sure tab (8) is in clutch release cover slot.
3. Apply a multi-purpose grease to the balls (2) and outer ramp sockets. Place a ball in each of the outer ramp sockets.
4. Connect cable end to ramp coupling (4). Install coupling on inner ramp (1) and place inner ramp and coupling in position in clutch release cover (5).

⚠WARNING

Wear safety glasses or goggles when removing or installing retaining rings. Retaining rings can slip from the pliers and could be propelled with enough force to cause serious eye injury. (00312a)

NOTE

See Figure 6-5. Center retaining ring opening above the break in the ribbing at bottom of the clutch release cover.

5. Figure 6-7. Install retaining ring (6).
6. Verify that two dowel pins are in place on transmission bearing housing flange. Place a **new** gasket (7) on dowel pins.

NOTE

See Figure 6-4. Clutch release cover screws in positions (1) and (6) are shorter than the others.

7. See Figure 6-4. Install clutch release cover. Tighten all six screws to 132-156 **in-lbs** (14.9-17.6 Nm) in sequence shown.
8. Tighten clutch cable fitting to 90-120 **in-lbs** (10.2-13.6 Nm).
9. Fill transmission to proper level with fresh transmission fluid. See 1.10 TRANSMISSION LUBRICANT.
10. Adjust clutch cable. See 1.11 CLUTCH.
11. Install exhaust system if removed. See 4.17 EXHAUST SYSTEM.
12. Install main fuse.

REMOVAL

NOTE

Leave the transmission case in the frame unless the case itself requires replacement. For illustration purposes, some photographs may show the case removed. For information on case removal see 6.8 TRANSMISSION CASE.

1. Remove exhaust system. See 4.17 EXHAUST SYSTEM.
2. Remove oil tank. See 3.30 OIL TANK: ALL BUT FXSB or 3.31 OIL TANK: FXSB.
3. Relieve drive belt tension. See 1.12 DRIVE BELT AND SPROCKETS.
4. Remove primary chaincase cover, clutch assembly, primary chain, compensating sprocket assembly and primary chaincase. See 5.5 PRIMARY CHAINCASE HOUSING, Removal.
5. Remove the bearing inner race from the transmission mainshaft. See 5.5 PRIMARY CHAINCASE HOUSING, Mainshaft Bearing Inner Race.
6. Remove the clutch release cover from the transmission bearing housing. See 6.5 CLUTCH RELEASE COVER, Removal and Disassembly.
7. See Figure 6-8. Remove oil slinger assembly from mainshaft. Remove pushrod.
8. Remove transmission top cover, leaving the cover gasket in place.
9. See Figure 6-9. Place shifter cam pawl on top cover gasket.

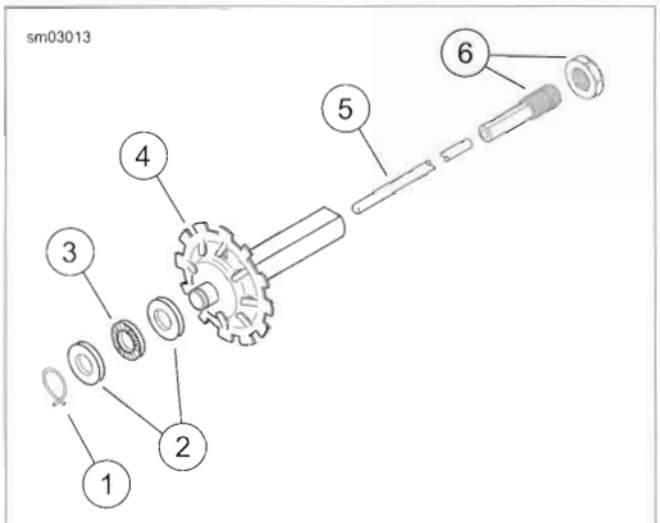

1. **Retaining ring**
2. **Thrust washer (2)**
3. **Throw out bearing**
4. **Oil slinger**
5. **Pushrod**
6. **Pushrod end, left side**

Figure 6-8. Pushrod Assembly: Cable Clutch

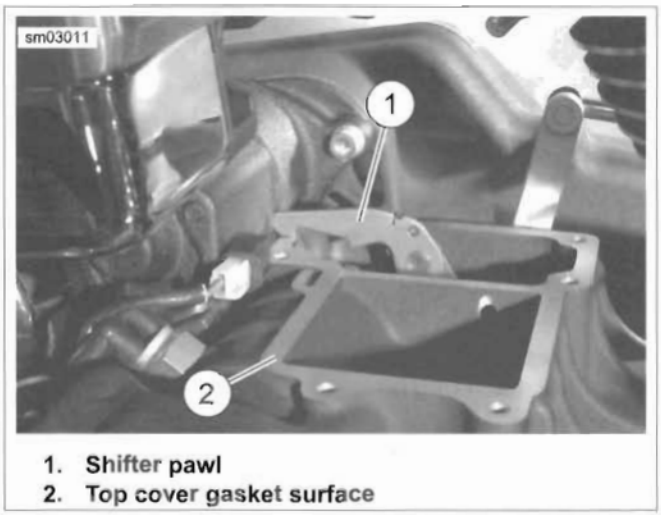

1. **Shifter pawl**
2. **Top cover gasket surface**

Figure 6-9. Set Shifter Pawl on Gasket

NOTE

Remove and install sprocket nut only while transmission is in vehicle frame. Trying to remove and install sprocket nut with transmission in transmission stand may cause damage to transmission or stand.

10. If main drive gear is to be removed, see 6.7 MAIN DRIVE GEAR AND BEARING, Removal.

NOTES

- *Replace the main drive gear bearing and retainer if the main drive gear is removed. The bearing will be damaged during the removal procedure.*
- *Never attempt to remove bearing housing by tapping on shafts from opposite side. Tapping them with a hammer will damage the bearing housing bearings. If the bearing housing sticks or binds on the ring dowels, pry loose using indents at each side of bearing housing.*

11. Cover mainshaft clutch hub splines with tape to prevent the splines from damaging the main drive gear bearings.
12. See Figure 6-11. Remove the transmission bearing housing:
    a. Remove the transmission bearing housing mounting hardware.
    b. Remove exhaust bracket, if equipped.
    c. Pry the bearing housing loose.
    d. Remove bearing housing, mainshaft, countershaft and shifter cam from transmission case as an assembly.
    e. Discard gasket.

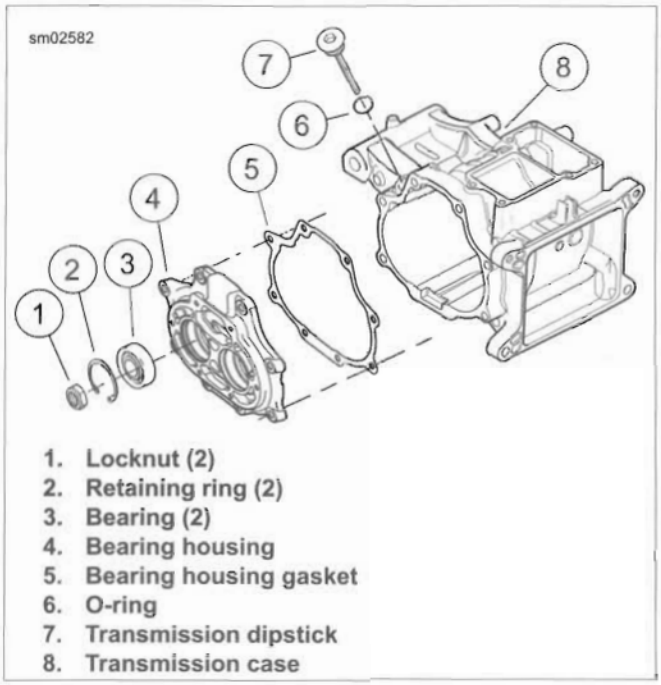

1. Locknut (2)
2. Retaining ring (2)
3. Bearing (2)
4. Bearing housing
5. Bearing housing gasket
6. O-ring
7. Transmission dipstick
8. Transmission case

Figure 6-10. Bearing Housing Bearings

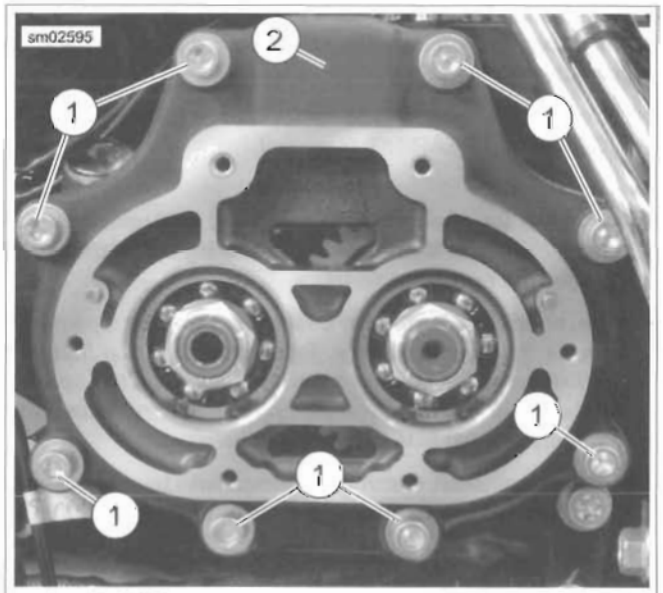

1. Bolt (8)
2. Bearing housing

Figure 6-11. Bearing Housing Hardware

DISASSEMBLY

PART NUMBER	TOOL NAME
J-5586A	TRANSMISSION SHAFT RETAINING RING PLIERS

Shifter Cam/Shifter Forks

1. See Figure 6-12. Disassemble bearing housing assembly:
   a. Place bearing housing on end (shafts pointing upward).
   b. Remove shift fork shafts using easy-out screw extractor (14) (non-flute design) or vise grips. Shafts have slight interference fit. Shafts can be reused; do not damage end of shaft.
   c. Mark end of shaft to aid during assembly.
2. Remove shift forks from dog rings.
3. See Figure 6-13. Remove lock plate fasteners (3) from lock plate (2). Discard fasteners.
4. See Figure 6-14. Insert screwdriver and gently pry back detent arm (4) to remove detent spring (3) tension from shift cam (5). Remove shift cam.
5. If servicing detent assembly, remove detent screw (2), detent arm (4), sleeve and detent spring (3). Discard detent screw.

NOTE

Many transmission parts can be installed in either direction. To prolong usable life, install used parts in same direction as when removed.

6. See Figure 6-15. Using dog rings, lock two gears in place. Temporarily place transmission assembly into transmission case.
7. Remove mainshaft and countershaft locknuts.
8. Remove transmission assembly from transmission case.

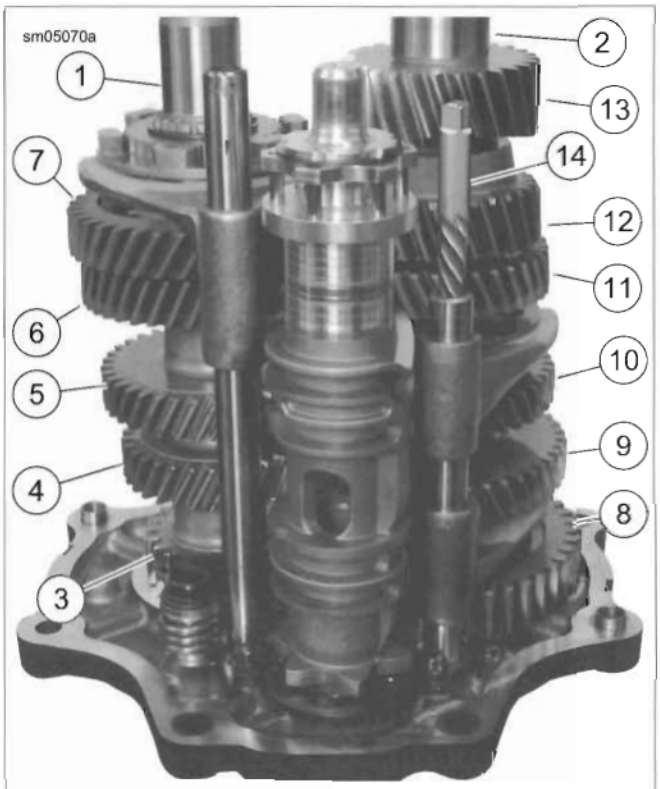

1. Mainshaft
2. Countershaft
3. Mainshaft 1st gear
4. Mainshaft 2nd gear
5. Mainshaft 3rd gear
6. Mainshaft 4th gear
7. Mainshaft 5th gear
8. Countershaft 1st gear
9. Countershaft 2nd gear
10. Countershaft 3rd gear
11. Countershaft 4th gear
12. Countershaft 5th gear
13. Countershaft 6th gear
14. Screw extractor

Figure 6-12. Gear Set

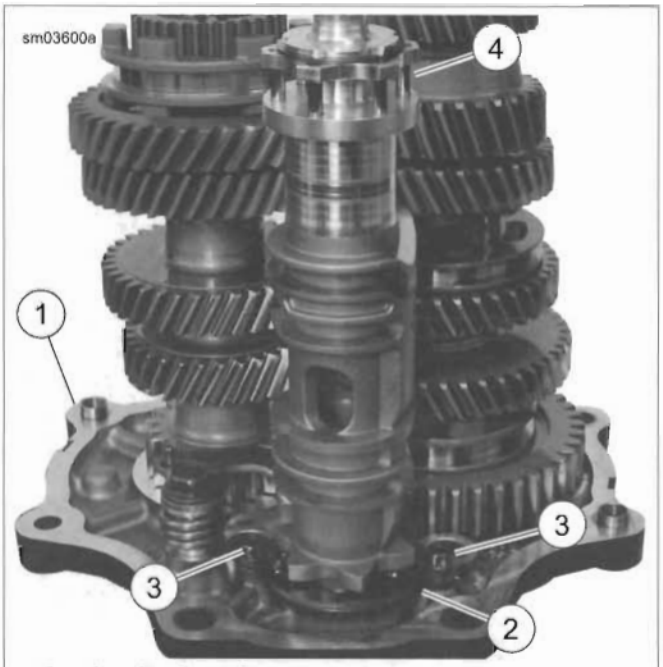

1. Bearing housing
2. Lock plate
3. Lock plate fastener (2)
4. Shift cam

Figure 6-13. Shift Drum

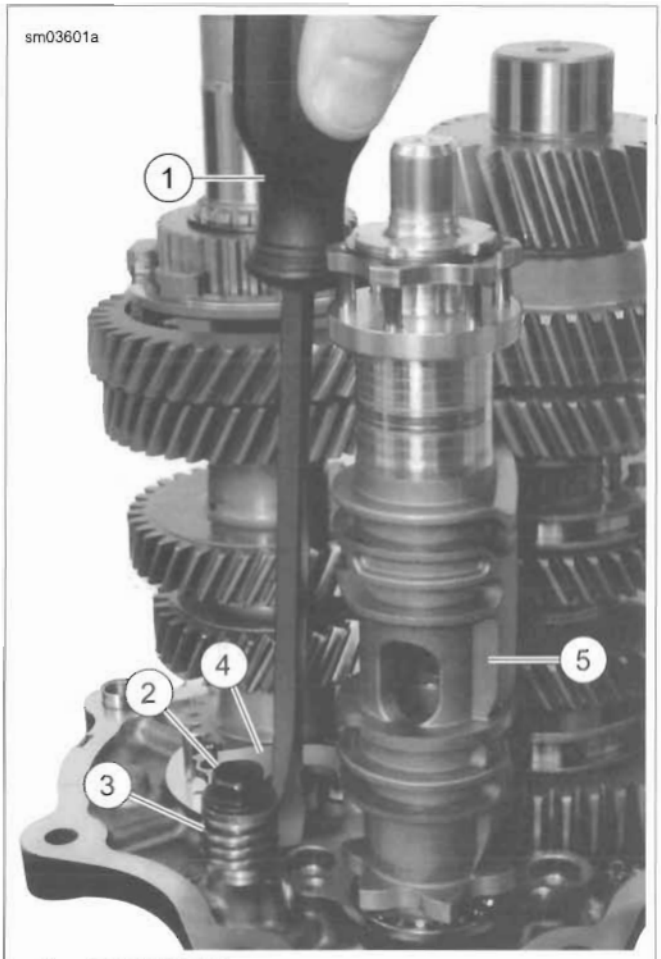

1. Screwdriver
2. Detent fastener
3. Detent spring
4. Detent arm
5. Shift cam

Figure 6-14. Detent Assembly

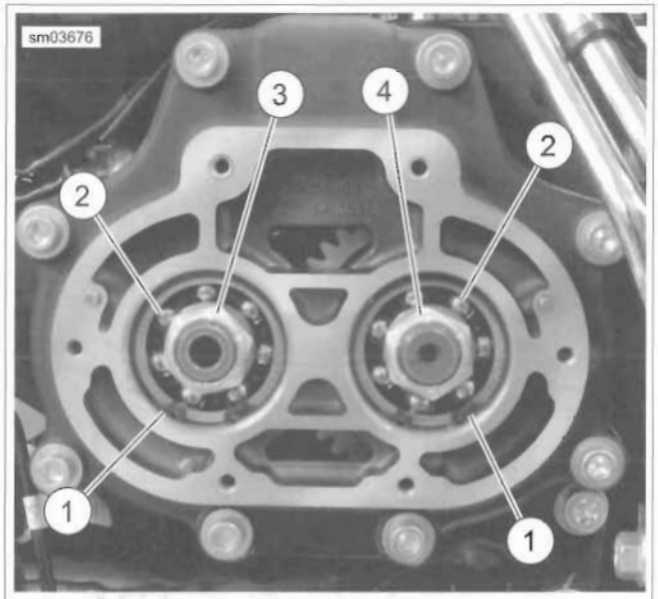

1. Retaining ring (2)
2. Bearing (2)
3. Mainshaft locknut
4. Countershaft locknut

Figure 6-15. Bearing Housing Locknuts

Mainshaft

⚠WARNING

Wear safety glasses or goggles when removing or installing retaining rings. Retaining rings can slip from the pliers and could be propelled with enough force to cause serious eye injury. (00312a)

NOTE

The mainshaft 4th gear, 3rd gear, 2nd gear and 1st gear are integral parts of the shaft. Damage to any gear requires mainshaft replacement.

1. See Figure 6-16. Using TRANSMISSION SHAFT RETAINING RING PLIERS (Part No. J-5586A), remove retaining ring. Remove dog ring (3), guiding hub (2), mainshaft 5th gear (4) and bearing.

NOTE

Do not press directly on the end of the mainshaft. Place a spacer such as a washer between the end of the mainshaft and the press ram.

2. Place transmission assembly in arbor press. Press mainshaft out of bearing housing bearings.

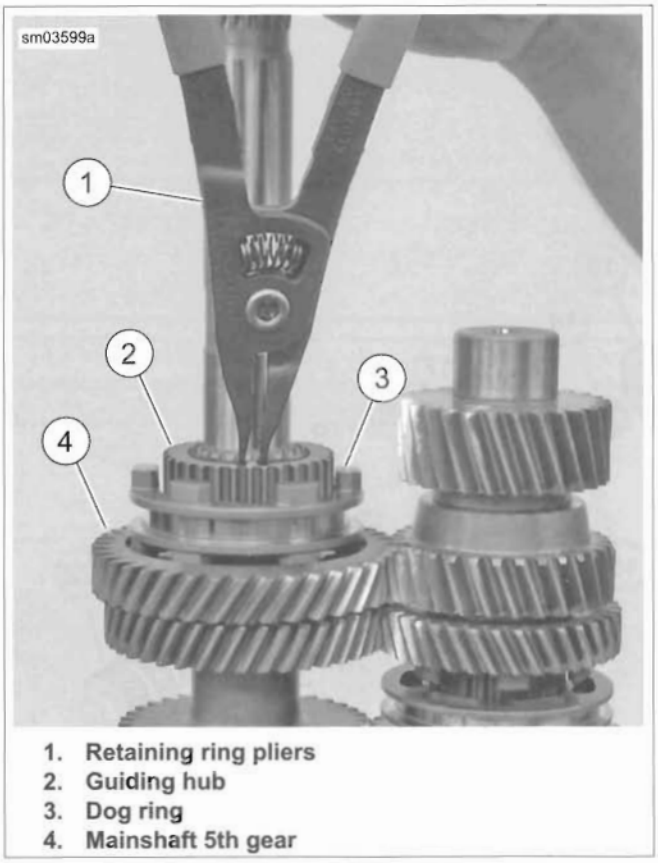

1. Retaining ring pliers
2. Guiding hub
3. Dog ring
4. Mainshaft 5th gear

Figure 6-16. Mainshaft Retaining Ring

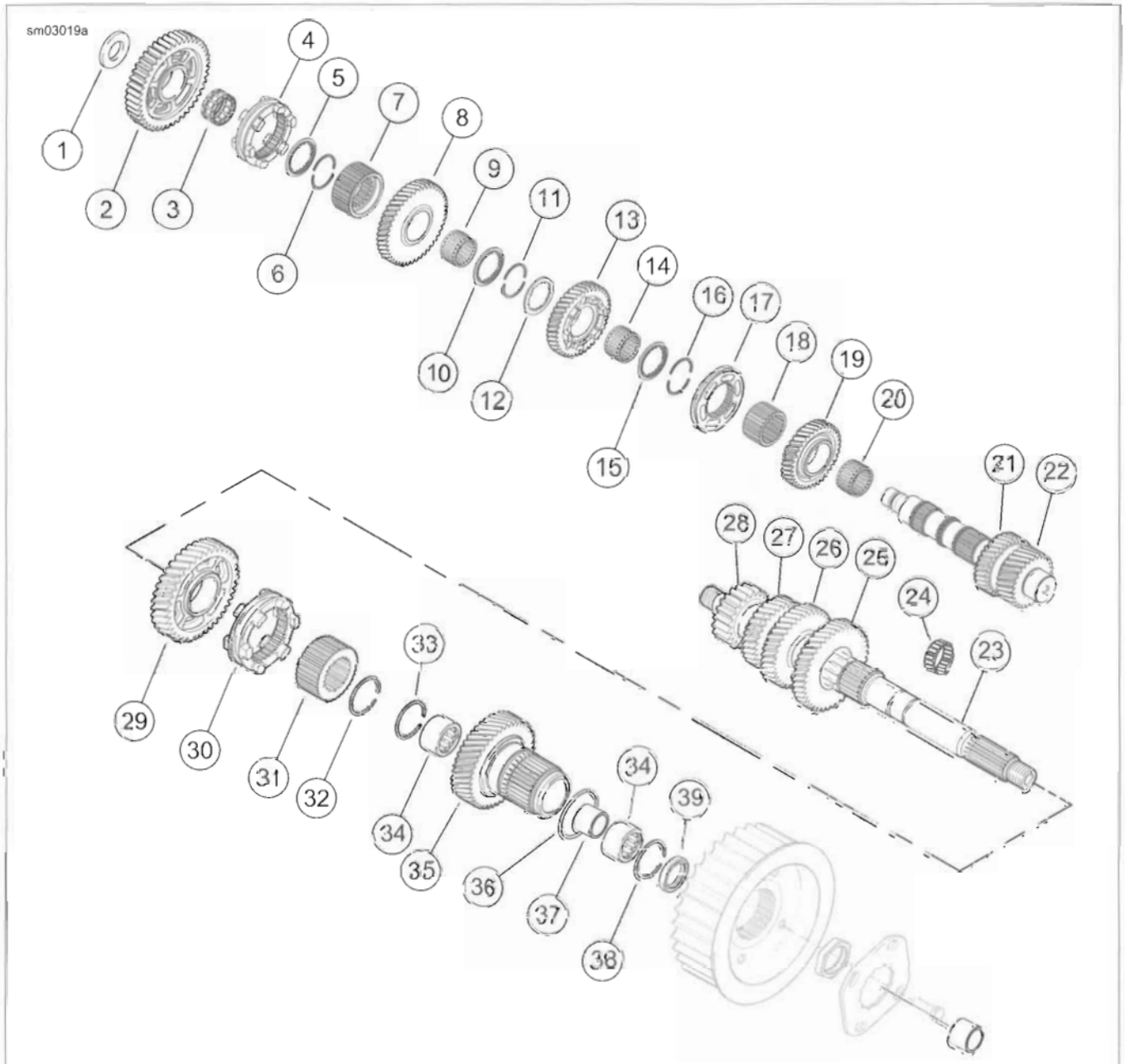

1. Spacer
2. Countershaft 1st gear
3. Bearing
4. Dog ring
5. Lock ring
6. Securing segment (2)
7. Guiding hub
8. Countershaft 2nd gear
9. Bearing
10. Lock ring
11. Securing segment (2)
12. Internal spline washer
13. Countershaft 3rd gear
14. Bearing
15. Lock ring
16. Securing segment (2)
17. Dog ring
18. Guiding hub
19. Countershaft 4th gear
20. Bearing
21. Countershaft 5th gear (part of countershaft)
22. Countershaft 6th gear (part of countershaft)
23. Mainshaft
24. Bearing
25. Mainshaft 4th gear
26. Mainshaft 3rd gear
27. Mainshaft 2nd gear
28. Mainshaft 1st gear
29. Mainshaft 5th gear
30. Dog ring
31. Guiding hub
32. Retaining ring
33. Retaining ring
34. Main drive gear bearing (2)
35. Main drive gear
36. O-ring
37. Bearing spacer
38. Retaining ring
39. Oil seal

Figure 6-17. Mainshaft and Countershaft Assembly

Countershaft

NOTES

- *If removing countershaft without removing the mainshaft, hold countershaft 3rd and 4th gear shift dog up while pressing countershaft out of bearing housing bearings.*
- *Do not press directly on the end of the countershaft. Place a spacer such as a washer between the end of the countershaft and the press ram.*

1. Press countershaft out of bearing housing bearings.
2. See 6.8 TRANSMISSION CASE for bearing housing bearing replacement.
3. See Figure 6-18. Remove washer (1), countershaft 1st gear (2) and bearing.

NOTE

See Figure 6-19. Note the direction that the 2nd gear locking ring is installed.

4. Remove countershaft 2nd gear lock ring.
5. See Figure 6-20. Remove securing segments (1). Remove dog ring (3), guiding hub (2), countershaft 2nd gear (4) and bearing.



1. **Washer**
2. **Countershaft 1st gear**

Figure 6-18. Countershaft 1st Gear



Figure 6-19. Lock Ring



1. **Securing segment**
2. **Guiding hub**
3. **Dog ring**
4. **Countershaft 2nd gear**

Figure 6-20. Securing Segment

NOTE

See Figure 6-21. Note the direction that the 3rd gear locking ring is installed.

6. Remove countershaft 3rd gear lock ring.
7. See Figure 6-22. Remove securing segments (1), internal spline washer (2), countershaft 3rd gear (3) and bearing.

NOTE

See Figure 6-23. Note the direction that the 4th gear locking ring is installed.

8. Remove 4th gear lock ring (1), securing segments, dog ring (3), guiding hub (2) and countershaft 4th gear (4) and bearing.

NOTE

The countershaft 5th gear and 6th gear are integral parts of the shaft. Damage to either gear requires countershaft replacement.



Figure 6-21. Third Gear Lock Ring

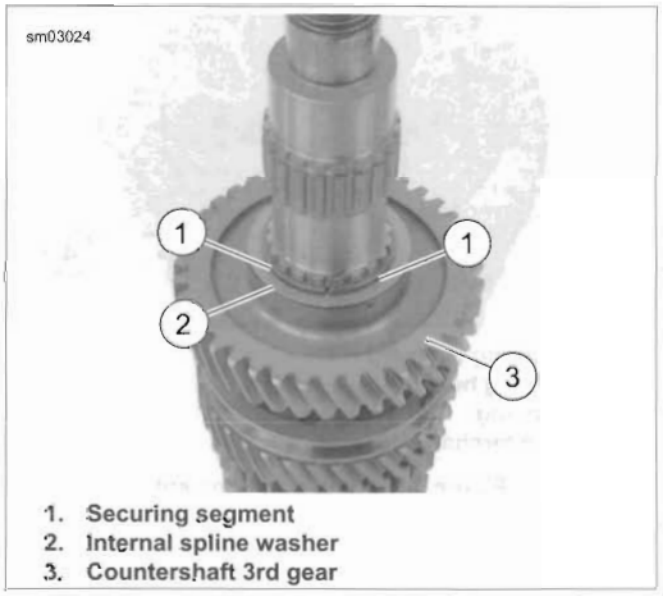

1. **Securing segment**
2. **Internal spline washer**
3. **Countershaft 3rd gear**

Figure 6-22. Countershaft Third Gear



1. **4th gear lock ring**
2. **Guiding hub**
3. **Dog ring**
4. **Countershaft 4th gear**

Figure 6-23. Countershaft Assembly

Removing Bearing Housing Bearings

⚠WARNING

Wear safety glasses or goggles when removing or installing retaining rings. Retaining rings can slip from the pliers and could be propelled with enough force to cause serious eye injury. (00312a)

NOTE

Always replace bearing housing bearing if the shaft is pressed out.

1. See Figure 6-24. Remove the retaining rings (2).
2. Press the bearings out of the bearing housing.

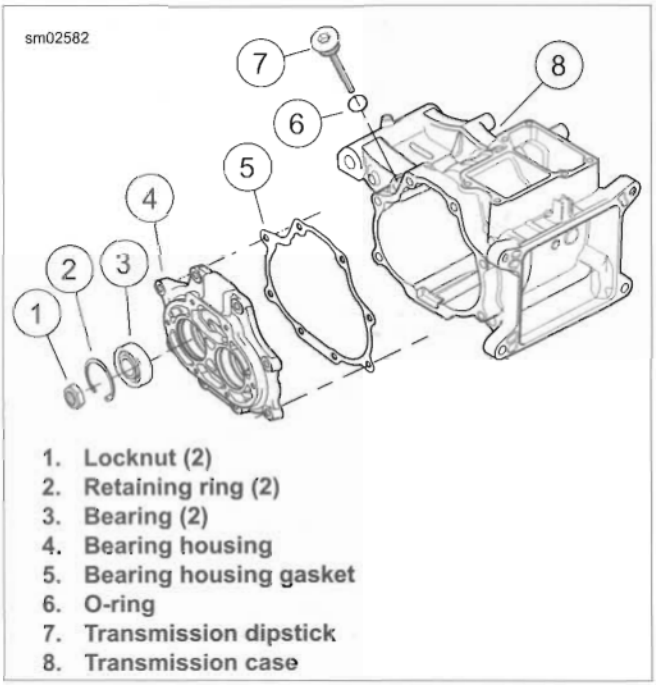

1. Locknut (2)
2. Retaining ring (2)
3. Bearing (2)
4. Bearing housing
5. Bearing housing gasket
6. O-ring
7. Transmission dipstick
8. Transmission case

Figure 6-24. Bearing Housing Bearings

CLEANING AND INSPECTION

⚠WARNING

Compressed air can pierce the skin and flying debris from compressed air could cause serious eye injury. Wear safety glasses when working with compressed air. Never use your hand to check for air leaks or to determine air flow rates. (00061a)

1. Clean all parts with solvent. Dry parts with low pressure compressed air.
2. Check gear teeth for damage. Replace gears that are pitted, scored, rounded, cracked or chipped.
3. Inspect the engaging dogs and pockets on the dog rings. Replace the dog rings if dogs and/or pockets are rounded, battered or chipped.
4. Inspect guiding hubs. Replace guiding hubs if splines are rounded, battered or chipped.
5. Inspect shift fork shafts. Replace if bent or damaged.
6. Inspect shift forks for wear or signs of overheating. Replace a shift fork if it is excessively worn or shows signs of overheating.
7. See Figure 6-25. Using a small square, verify the shift forks are square. If shift fork does not rest directly on the square, then it is bent and must be replaced.
8. Inspect shift drum and bearing. Replace shift drum assembly if drum or bearing are damaged.
9. Clean shift cam lock plate mounting holes in transmission bearing housing.
10. Inspect bearing housing bearings. Bearings must rotate freely without drag. Replace the bearings if pitted, grooved or if the shafts were removed.

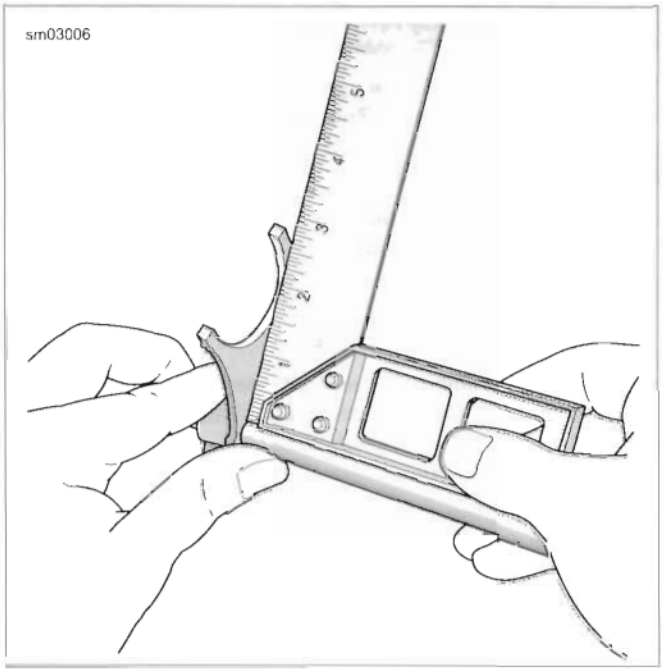

Figure 6-25. Checking Fork

ASSEMBLY

PART NUMBER	TOOL NAME
J-5586A	TRANSMISSION SHAFT RETAINING RING PLIERS

FASTENER	TORQUE VALUE	
Mainshaft/countershaft nuts	85-95 ft-lbs	115.3-128.8 Nm
Shift drum detent arm fastener	120-150 **in-lbs**	13.6-17.0 Nm
Shift drum lock plate fasteners	57-63 **in-lbs**	6.4-7.1 Nm

Installing Bearing Housing Bearings

NOTES

- *Always replace bearing housing bearing if the shaft was pressed out.*
- *Always use a plate to support the bearing housing when pressing in bearings.*
- *When pressing **new** bearings into bearing housing, press on the outside diameter of the bearing side with the numbers stamped on it.*

1. Support the bearing housing from the opposite side at the bearing bores with a flat plate.
2. Position **new** bearing over bore with number side UP.
3. Press the outer diameter of the bearing until the bearing seats in the bore.

⚠WARNING

Wear safety glasses or goggles when removing or installing retaining rings. Retaining rings can slip from the pliers and could be propelled with enough force to cause serious eye injury. (00312a)

4. See Figure 6-24. Install beveled retaining ring (1) with the flat side against the bearing.

Countershaft

NOTES

- *Replace retaining ring and all gear roller bearings with* **new** *parts during assembly. Lubricate needle bearings and races with SCREAMIN' EAGLE ASSEMBLY LUBE before installation.*
- *Install securing segments so the side with the rounded edge is facing up and the side with the straight edge is down. Verify segments fully engage grooves in countershaft.*
- *One side of the 2nd, 3rd and 4th gear lock rings have a waved, stepped face. The waved, stepped face always faces the securing segments.*

1. See Figure 6-23. Install **new** needle bearing, countershaft 4th gear (4), guiding hub (2), dog ring (3) securing segments and 4th gear lock ring (1) on countershaft.
2. See Figure 6-22. Install **new** needle bearing, countershaft 3rd gear (3), internal spline washer (2) and securing segments (1).
3. See Figure 6-21. Place countershaft 3rd gear lock ring over securing segments.

NOTES

- *In next step, the side of the guiding hub with the deeper counterbore faces countershaft 2nd gear.*
- *Countershaft 2nd gear bearing is wider than other bearings on the countershaft.*

4. See Figure 6-20. Install **new** needle bearing, countershaft 2nd gear (4), guiding hub (2), dog ring (3) and securing segments (1) on countershaft.
5. See Figure 6-19. Place lock ring over securing segments with the stepped face of the lock ring against the securing segments.
6. See Figure 6-18. Install **new** needle bearing, countershaft 1st gear (2) and washer (1).

NOTES

- *If installing countershaft only, hold countershaft 3rd and 4th gear shift dog up while pressing bearing housing bearing on to countershaft.*
- *Failure to press on inner bearing races while pressing bearings on the shafts will damage the bearings.*

7. See Figure 6-26. Place countershaft in an arbor press supporting countershaft 6th gear. Using a suitable sleeve, press on inner bearing race until bearing housing bearing contacts countershaft 1st gear washer.



Figure 6-26. Installing Countershaft

Mainshaft

NOTES

- *Failure to press on inner bearing race while pressing bearing on the shaft will damage the bearing.*
- *See Figure 6-27. Hold dog ring so that it is engaged with countershaft 3rd gear during the press procedure. Otherwise bearing and gear damage is possible.*

1. Place mainshaft in an arbor press, supporting mainshaft 4th gear.
2. Place rear bearing housing bearing over mainshaft. Using a suitable sleeve, press on inner bearing race until bearing housing bearing contacts mainshaft 1st gear.
3. See Figure 6-16. With bearing housing on end (shafts pointing upward), install **new** bearing and mainshaft 5th gear (4).
4. Verify guiding hub counterbore is facing mainshaft 5th gear. Install guiding hub (2) and dog ring (3).

⚠WARNING

Wear safety glasses or goggles when removing or installing retaining rings. Retaining rings can slip from the pliers and could be propelled with enough force to cause serious eye injury. (00312a)

5. Install **new** retaining ring using TRANSMISSION SHAFT RETAINING RING PLIERS (Part No. J-5586A) (1).

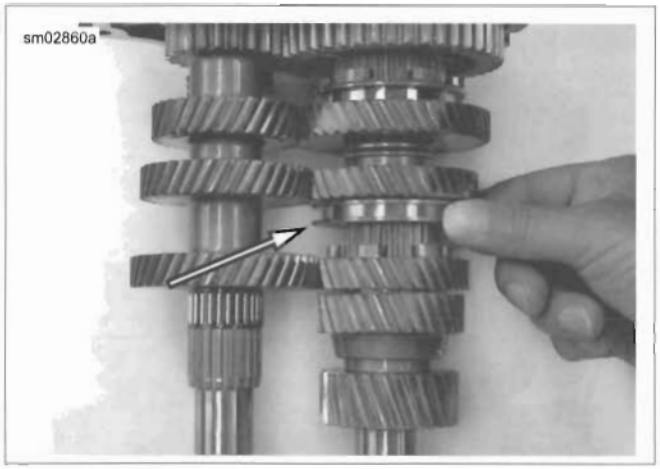

Figure 6-27. Raise and Hold Dog Ring

Shifter Cam/Shifter Forks

1. Using dog rings, lock two gears in place. Temporarily place transmission assembly into transmission case.
2. Install **new** nuts on mainshaft and countershaft. Tighten to 85-95 ft-lbs (115.3-128.8 Nm).
3. Remove transmission assembly from case.
4. Place bearing housing on bench with shafts pointing upward.
5. If removed, install detent arm assembly:
   a. See Figure 6-28. Clean detent screw mounting hole in transmission bearing housing.
   b. Assemble **new** detent screw, detent arm, sleeve and detent spring. Make certain to orient spring and detent arm as shown.
   c. Mount detent assembly in bearing housing as shown.
   d. Tighten to 120-150 **in-lbs** (13.6-17.0 Nm).
6. See Figure 6-29. Using screwdriver (1), pull detent arm back to allow installation of shift cam assembly.
7. Install shift cam assembly (5).
8. See Figure 6-30. Install lock plate (2) and **new** lock plate fasteners (3). Tighten to 57-63 **in-lbs** (6.4-7.1 Nm).

NOTE

See Figure 6-31. The forks are different from each other and are identified as shown.

9. See Figure 6-32. Insert shifter fork (2) into the slot of the dog ring in between mainshaft 5th and 6th gear.
10. Slide long shift shaft through 5th and 6th gear shifter fork. Install shaft in hole in bearing housing.
11. Install short shift shaft:
    a. Insert shifter fork (6) into the slot of the dog ring in between countershaft 3rd and 4th gear.
    b. Insert shifter fork (9) into the slot of the dog ring in between countershaft 1st and 2nd gear.
    c. Slide short shift shaft through countershaft shifter forks.
    d. Install shaft in hole in bearing housing.

NOTE

If main drive gear was removed, install it now. See 6.7 MAIN DRIVE GEAR AND BEARING.

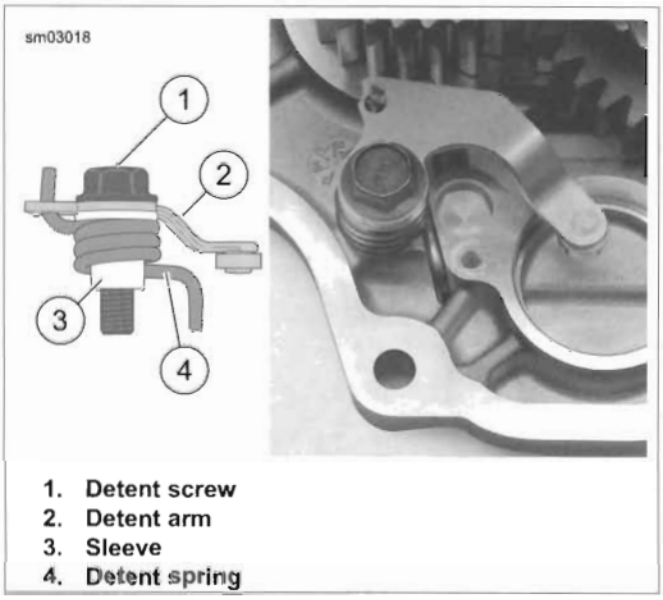

1. **Detent screw**
2. **Detent arm**
3. **Sleeve**
4. **Detent spring**

Figure 6-28. Detent Assembly

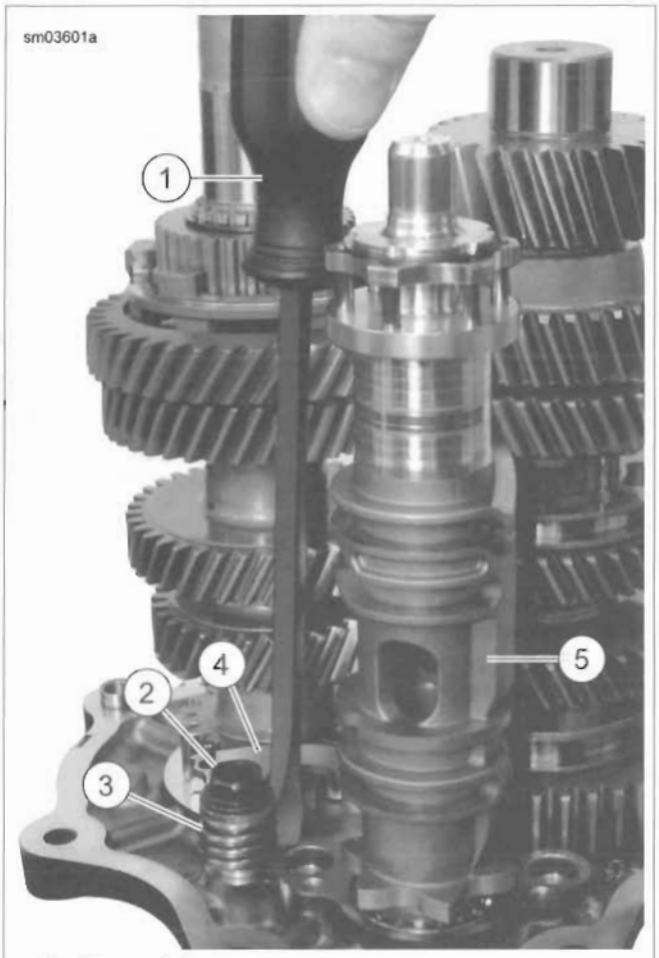

1. Screwdriver
2. Detent fastener
3. Detent spring
4. Detent arm
5. Shift cam

Figure 6-29. Detent Assembly

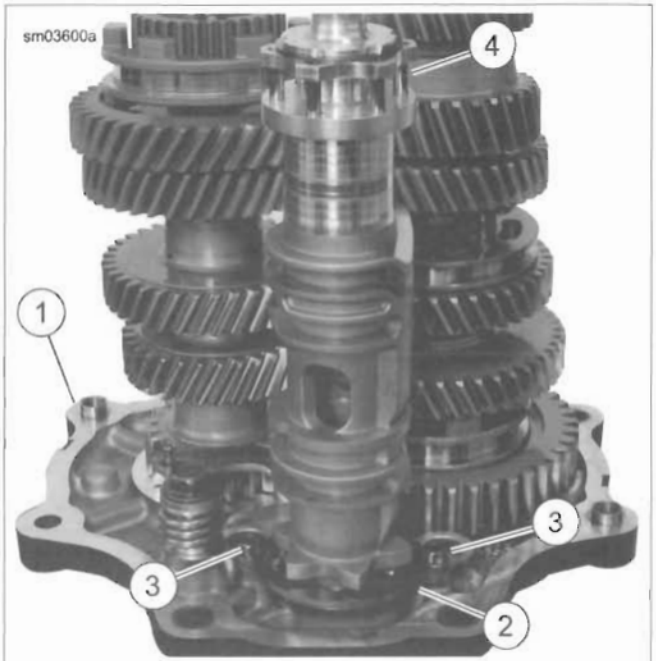

1. Bearing housing
2. Lock plate
3. Lock plate fastener (2)
4. Shift cam

Figure 6-30. Shift Drum

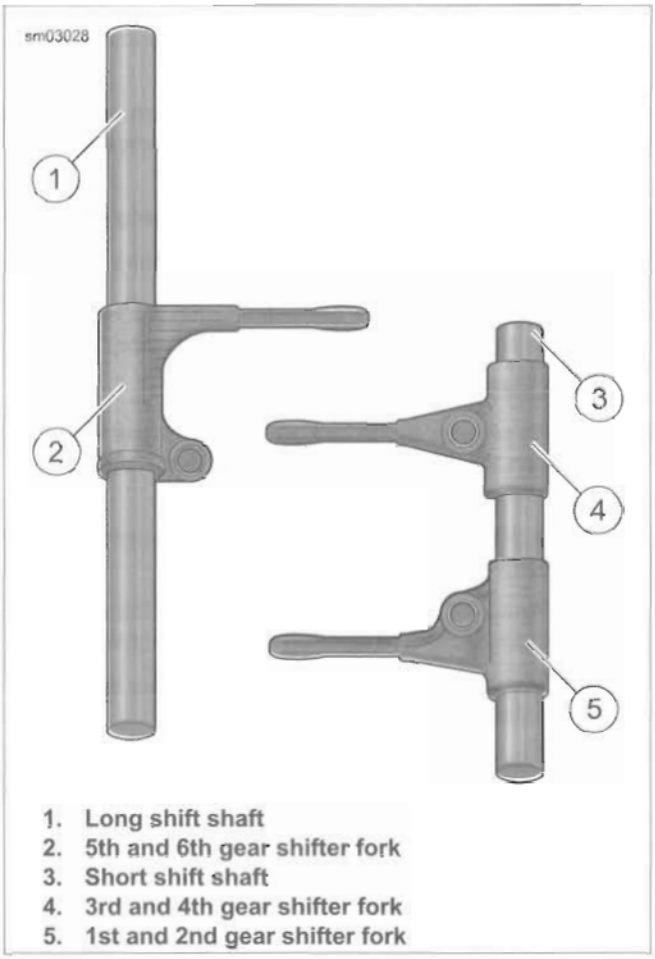

1. Long shift shaft
2. 5th and 6th gear shifter fork
3. Short shift shaft
4. 3rd and 4th gear shifter fork
5. 1st and 2nd gear shifter fork

Figure 6-31. Shifter Forks and Shafts

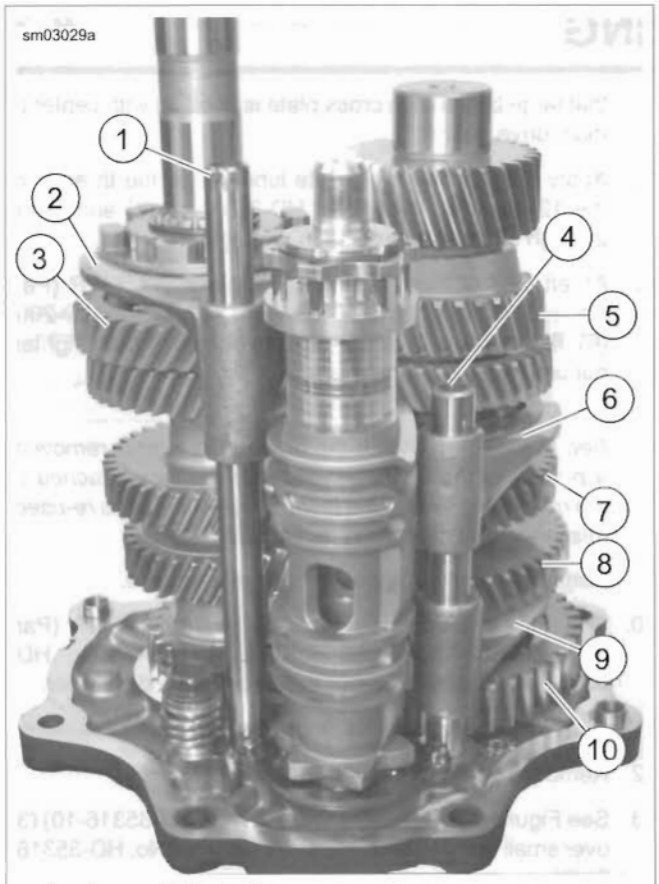

1. **Long shift shaft**
2. **5th and 6th gear shifter fork**
3. **5th gear**
4. **Short shift shaft**
5. **5th gear**
6. **3rd and 4th gear shifter fork**
7. **3rd gear**
8. **2nd gear**
9. **1st and 2nd gear shifter fork**
10. **1st gear**

Figure 6-32. Transmission Gears and Shifter Forks

INSTALLATION

FASTENER	TORQUE VALUE	
Transmission bearing housing screw	23-25 ft-lbs	31.2-33.9 Nm
Transmission top cover	90-120 **in-lbs**	10.2-13.6 Nm
Transmission drain plug	14-21 ft-lbs	19.0-28.5 Nm

1. Cover mainshaft clutch hub splines with tape to prevent the splines damaging the main drive gear oil seal.
2. Verify that two ring dowels are in place on bearing housing flange. Place a **new** gasket on the ring dowels.
3. Apply clean transmission lubricant to the main drive gear bearings.

NOTE

Be sure the transmission filler plug/dipstick is removed before installing transmission assembly. Contact with the filler plug/dipstick will prevent installation of transmission assembly.

4. Install the transmission assembly in the transmission case.
5. If equipped, place exhaust bracket into position. Install bearing housing fasteners.
6. See Figure 6-33. Tighten all bearing housing hardware in the sequence shown to 23-25 ft-lbs (31.2-33.9 Nm).

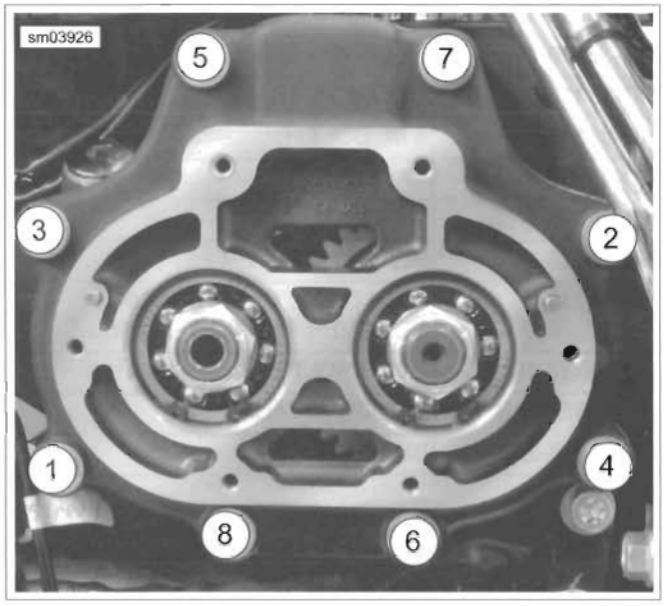

Figure 6-33. Bearing Housing Hardware Torque Sequence

7. Install mainshaft bearing inner race. See 5.7 TRANSMISSION SPROCKET.
8. See Figure 6-8. Install pushrod assembly (items 2-5) in mainshaft hole. Secure with **new** retaining ring (1) if removed.

NOTE

The two top side cover fasteners are shorter than the others.

9. Install the clutch release cover, using a **new** gasket. See 6.5 CLUTCH RELEASE COVER.
10. Remove shifter cam pawl from top cover gasket surface and place on shift cam. Install **new** transmission top cover gasket. Install transmission top cover. Install top cover fasteners and tighten to 90-120 **in-lbs** (10.2-13.6 Nm).
11. Install vent hose to top cover fitting, if removed.
12. Install transmission sprocket nut. See 5.7 TRANSMISSION SPROCKET.
13. Install primary chaincase, clutch assembly and primary cover. See 5.3 PRIMARY CHAINCASE COVER, Installation.
14. Replace O-ring on plug. Clean and install transmission drain plug. Tighten to 14-21 ft-lbs (19.0-28.5 Nm).
15. Fill transmission to proper level with fresh transmission fluid. See 1.10 TRANSMISSION LUBRICANT.
16. Install oil tank. See 3.30 OIL TANK: ALL BUT FXSB or 3.31 OIL TANK: FXSB.
17. Install exhaust system. See 4.17 EXHAUST SYSTEM.

REMOVAL

PART NUMBER	TOOL NAME
HD-35316-10	PILOT
HD-35316-11	RECEIVER CUP
HD-35316-3A	CROSS PLATE
HD-35316-4A	8 IN. BOLT
HD-35316-5	12 IN. BOLT
HD-35316-7	WASHER
HD-35316-9	BEARING DRIVER
HD-35316-C	MAIN DRIVE GEAR/BEARING REMOVER AND INSTALLER
HD-95637-10	LONG BOLTS
HD-95637-46B	WEDGE ATTACHMENT
RS-25100-200	BEARING

NOTE

Leave the transmission case in the frame unless the case itself must be replaced. For illustration purposes, some photographs may show the case removed.

1. Remove the exhaust system. See 4.17 EXHAUST SYSTEM.
2. Remove the primary chaincase cover, clutch assembly, primary chain, compensating sprocket and primary chaincase. See 5.5 PRIMARY CHAINCASE HOUSING.
3. Remove the bearing inner race from the transmission mainshaft. See 5.5 PRIMARY CHAINCASE HOUSING, Mainshaft Bearing Inner Race.
4. Remove the transmission bearing housing. See 6.6 TRANSMISSION ASSEMBLY.

NOTICE

Failure to use Main Drive Gear Remover and Installer can cause premature failure of bearing and related parts. (00540b)

NOTE

Main drive gear and bearing can be removed with the transmission case in the frame after removing bearing housing assembly. Use MAIN DRIVE GEAR/BEARING REMOVER AND INSTALLER (Part No. HD-35316-C).

5. Remove retaining ring.

NOTES

- *The main drive gear bearing and retaining ring must be replaced if the main drive gear is removed. The bearing will be damaged during the removal procedure.*
- *The CROSS PLATE (Part No. HD-35316-3A) is stamped, "UP 6 SPEED". Mount cross plate with this end pointing up.*

6. See Figure 6-34. Place CROSS PLATE (Part No. HD-35316-3A) (1) on right side of transmission case as shown, and secure with two screws (2). Position cross plate so that large bolt hole in cross plate is lined up with center of main drive gear (4).
7. Apply a light coat of graphite lubricant to the threads of the 12 IN. BOLT (Part No. HD-35316-5) (3) and insert through cross plate and main drive gear.
8. At left side of transmission case, place WASHER (Part No. HD-35316-7), BEARING (Part No. RS-25100-200) (6), flat washer (7) and nut (8) over end of bolt. Tighten nut until main drive gear is free.

NOTE

- *See Figure 6-35. When the main drive gear is removed, a portion of the bearing inner race remains attached to the main drive gear. If the main drive gear is to be re-used, this inner race must be removed first.*

9. Remove tool and remove gear from gearcase.
10. See Figure 6-35. Use WEDGE ATTACHMENT (Part No. HD-95637-46B) and LONG BOLTS (Part No. HD-95637-10) to remove inner race from main drive gear.
11. Remove large main drive gear oil seal.
12. Remove retaining ring from bearing bore.
13. See Figure 6-36. Slide PILOT (Part No. HD-35316-10) (3) over small end of BEARING DRIVER (Part No. HD-35316-9) (2).
14. Apply a light coat of graphite lubricant to the threads of the 8 IN. BOLT (Part No. HD-35316-4A) (1) and insert through bearing driver and pilot.
15. Insert bolt with bearing driver and pilot into right side of transmission case, through main drive gear bearing (4). Make sure bearing driver fits up against main drive gear bearing and pilot is centered in bearing bore.
16. At left side of case, slide RECEIVER CUP (Part No. HD-35316-11) (5) onto bolt and over main drive gear bearing. Install BEARING (Part No. RS-25100-200) (6), flat washer (7) and nut (8) over end of bolt.

NOTE

Support bearing remover assembly as you remove bearing in the following step. Entire assembly will fall out of transmission case when bearing comes free.

17. Tighten nut until main drive gear bearing is free.
18. Discard main drive gear bearing.

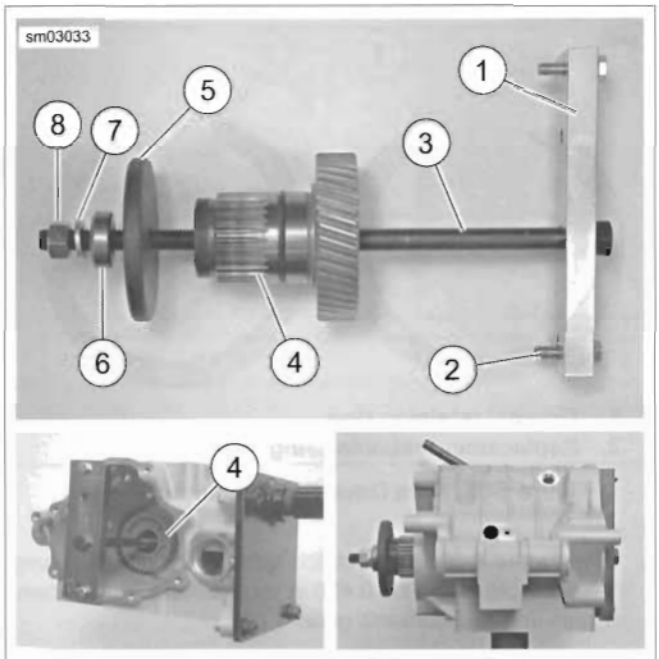

1. Cross plate
2. Screw (2)
3. 12 in. bolt
4. Main drive gear
5. Washer
6. Bearing
7. Flat washer
8. Nut

Figure 6-34. Removing Main Drive Gear

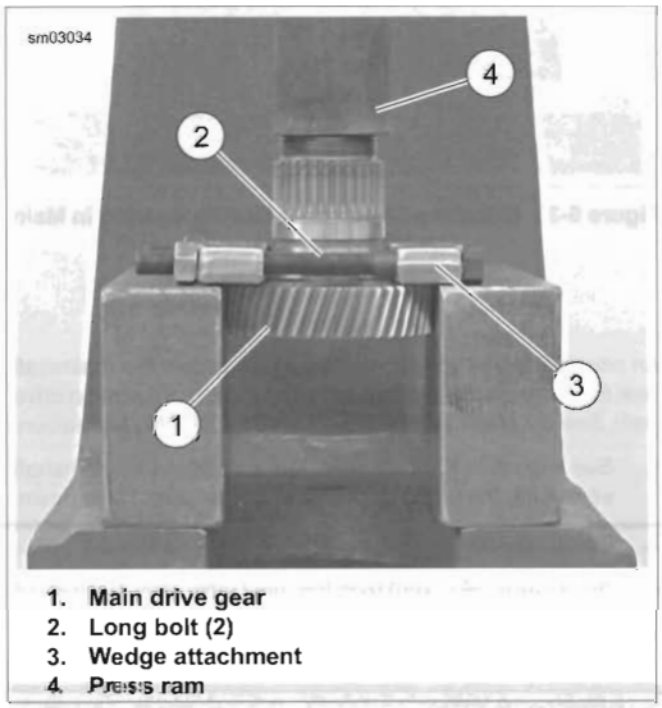

1. Main drive gear
2. Long bolt (2)
3. Wedge attachment
4. Press ram

Figure 6-35. Removing Inner Bearing Race From Main Drive Gear

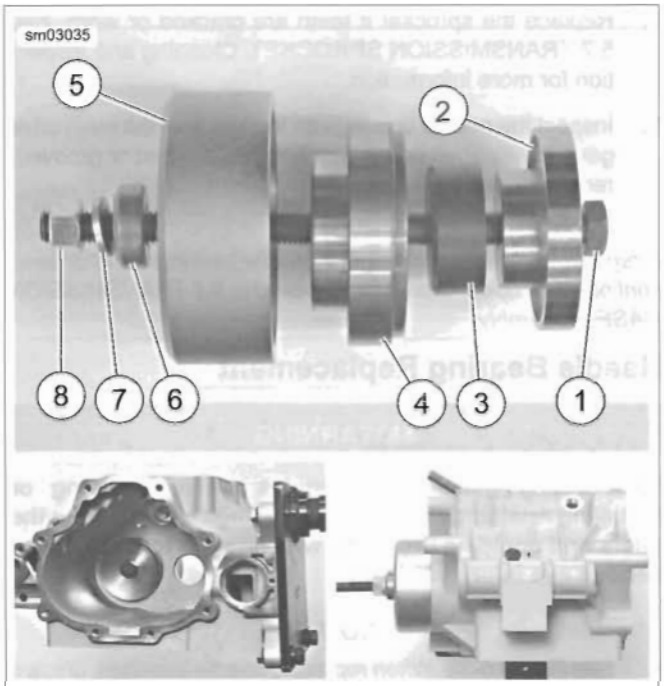

1. 8 in. Bolt
2. Bearing driver
3. Pilot
4. Main drive gear bearing
5. Receiver cup
6. Bearing
7. Flat washer
8. Nut

Figure 6-36. Removing Main Drive Gear Bearing

CLEANING AND INSPECTION

PART NUMBER	TOOL NAME
HD-47932	MAIN DRIVE GEAR BEARING AND SEAL INSTALLATION TOOL

⚠WARNING

Compressed air can pierce the skin and flying debris from compressed air could cause serious eye injury. Wear safety glasses when working with compressed air. Never use your hand to check for air leaks or to determine air flow rates. (00061a)

1. Clean all parts in solvent except the transmission case and needle bearings. Dry with compressed air.

NOTE

Never wash the transmission case and needle bearings with solvent unless replacing the needle bearings. Normal cleaning methods will wash dirt or other contaminants into the bearing case (behind the needles) and will lead to bearing failure.

2. Inspect the main drive gear for pitting and wear. Replace if necessary.
3. Inspect the needle bearings inside the main drive gear. Replace the needle bearings if the mainshaft race is pitted or grooved.

4. Replace the sprocket if teeth are cracked or worn. See 5.7 TRANSMISSION SPROCKET, Cleaning and Inspection for more information.

5. Inspect the needle bearings on the inside of the main drive gear. If mainshaft race surface appears pitted or grooved, replace these bearings.

NOTE

If replacing the main drive gear needle bearings and/or seal, continue as follows. Otherwise, proceed to 6.8 TRANSMISSION CASE, Assembly.

Needle Bearing Replacement

⚠WARNING

Wear safety glasses or goggles when removing or installing retaining rings. Retaining rings can slip from the pliers and could be propelled with enough force to cause serious eye injury. (00312a)

NOTES

- *See Figure 6-38. When replacing needle bearings, discard original retaining rings (1) and install replacement retaining rings (2).*
- *To install the inner main drive gear needle bearings and mainshaft seal, use MAIN DRIVE GEAR BEARING AND SEAL INSTALLATION TOOL (Part No. HD-47932).*

1. See Figure 6-37. Remove mainshaft seal (6). Remove retaining rings (1), needle bearings (2) and spacer (5) from main drive gear (3). Discard retaining rings.
2. Remove and discard O-ring (4).

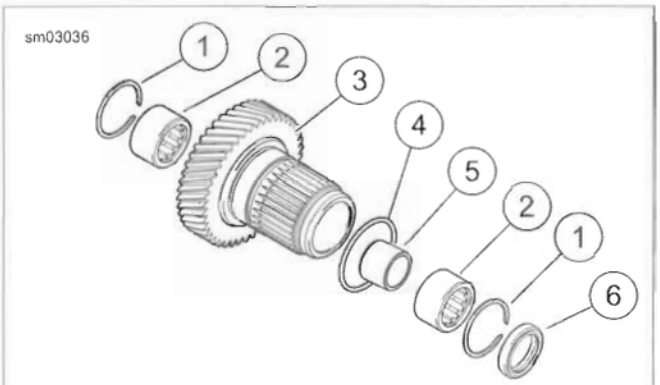

1. **Retaining ring (2)**
2. **Needle bearing (2)**
3. **Main drive gear**
4. **O-ring**
5. **Spacer**
6. **Mainshaft seal**

Figure 6-37. Main Drive Gear Assembly

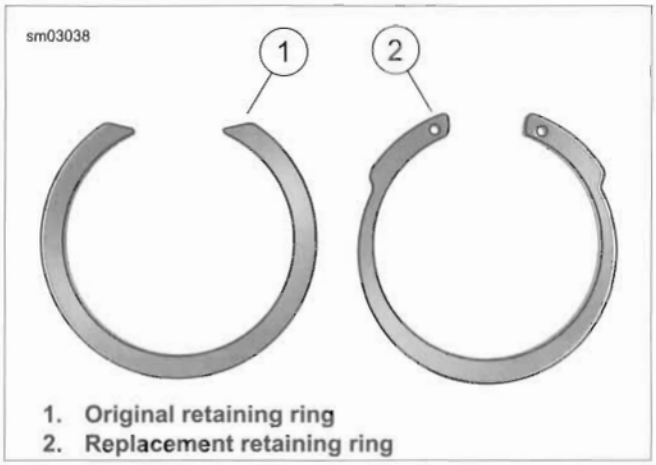

1. **Original retaining ring**
2. **Replacement retaining ring**

Figure 6-38. Main Drive Gear Retaining Rings

3. See Figure 6-39. Install clutch side needle bearing using an arbor press and the 0.400 in. step end of tool as shown. Press until tool contacts gear.

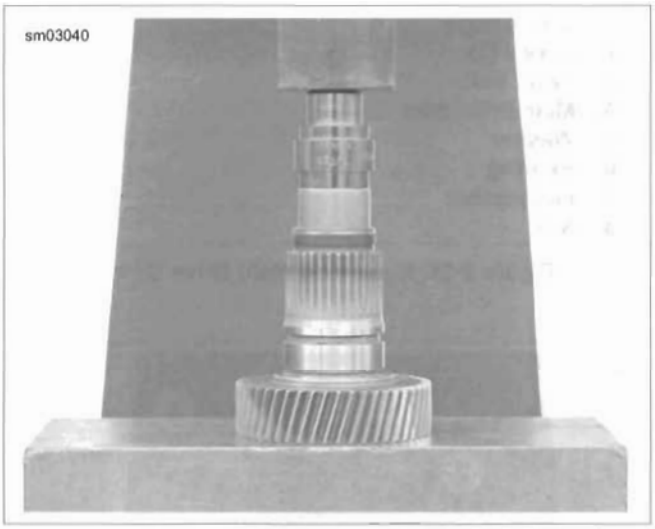

Figure 6-39. Installing Clutch Side Needle Bearing in Main Drive Gear

NOTE

An alternative method is provided which allows the mainshaft seal to be pressed into place after installation of the main drive gear. See 6.7 MAIN DRIVE GEAR AND BEARING, Installation.

4. See Figure 6-40. Turn over tool and press in mainshaft seal using the 0.090 in. step with garter spring side down.
5. Install spacer.
6. See Figure 6-41. Turn over the main drive gear in the arbor press. With the tool at the 0.188 in. step, press inner bearing until tool contacts gear.

⚠WARNING

Wear safety glasses or goggles when removing or installing retaining rings. Retaining rings can slip from the pliers and could be propelled with enough force to cause serious eye injury. (00312a)

7. See Figure 6-37. Install **new** retaining rings (1).

8. Install **new** O-ring (4) into groove in main drive gear.

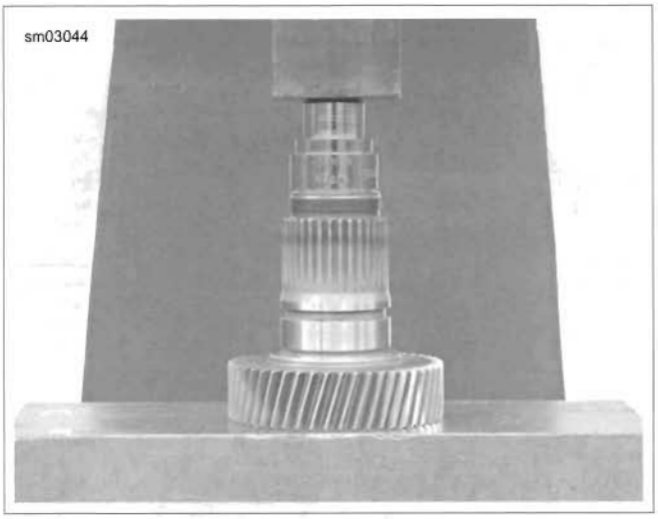

Figure 6-40. Pressing in Seal

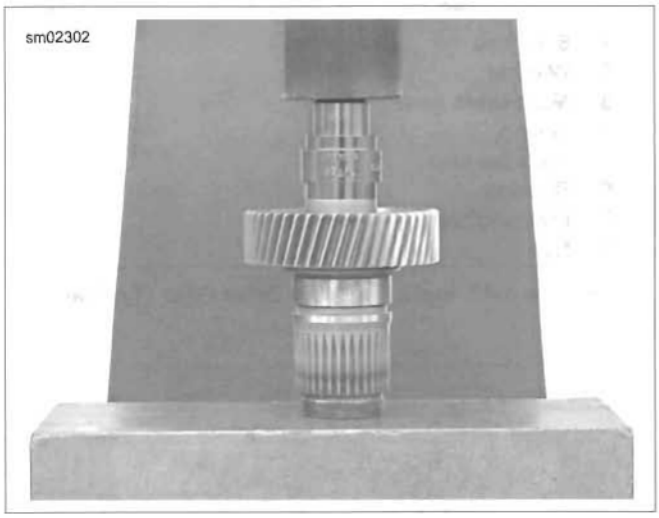

Figure 6-41. Installing Transmission Side Needle Bearing in Main Driver Gear

INSTALLATION

PART NUMBER	TOOL NAME
HD-35316-12	INSTALLER CUP
HD-35316-3A	CROSS PLATE
HD-35316-4A	8 IN. BOLT
HD-35316-5	12 IN. BOLT
HD-35316-7	WASHER
HD-35316-8	BEARING DRIVER
HD-47856-1	INSTALLER
HD-47856-2	PILOT
HD-47856-3	ADAPTER
HD-47856-6	NUT
HD-47856-7	CROW'S FOOT WRENCH

NOTICE

Improper tightening of sprocket nut can cause drive component damage. (00541b)

Installing Main Drive Gear Bearing

NOTE

CROSS PLATE (Part No. HD-35316-3A) will retrofit to earlier transmissions. Note that one end of cross plate is stamped, "UP 6 SPEED". Mount cross plate with this end pointing up for 6 speed transmissions.

1. See Figure 6-42. Place CROSS PLATE (Part No. HD-35316-3A) (2) on right side of transmission case as shown, and secure with two screws (3). Position cross plate with large bolt hole in cross plate aligned with main drive gear bearing bore.
2. Apply a light coat of graphite lubricant to the threads of 12 IN. BOLT (Part No. HD-35316-5) (1) and install through cross plate and main drive gear bearing bore.
3. At left side of case, place main drive gear bearing (4), BEARING DRIVER (Part No. HD-35316-8) (5), BEARING (6), FLAT WASHER (7) and NUT (8) over end of bolt.
4. Tighten nut until main drive gear bearing bottoms against lip cast into transmission case bearing bore.

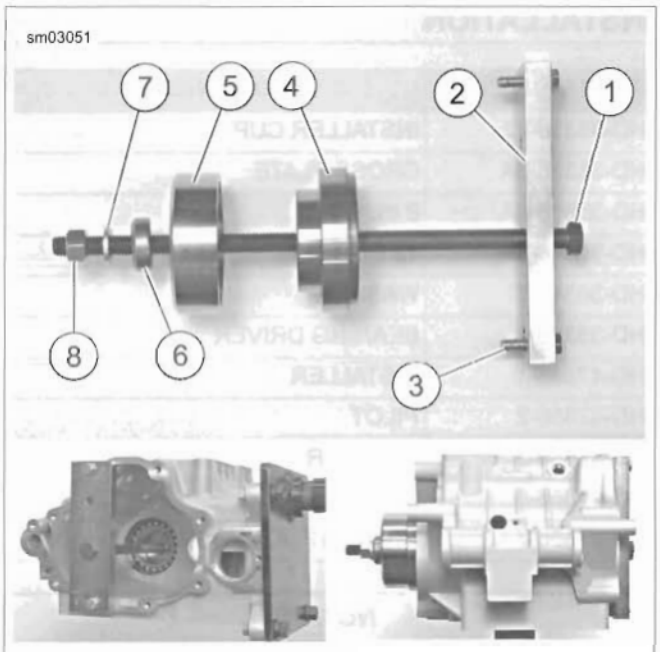

1. 12 in. bolt
2. Cross plate
3. Screw (2)
4. Main drive gear bearing
5. Bearing driver
6. Bearing
7. Flat washer
8. Nut

Figure 6-42. Installing Main Drive Gear Bearing (Typical)

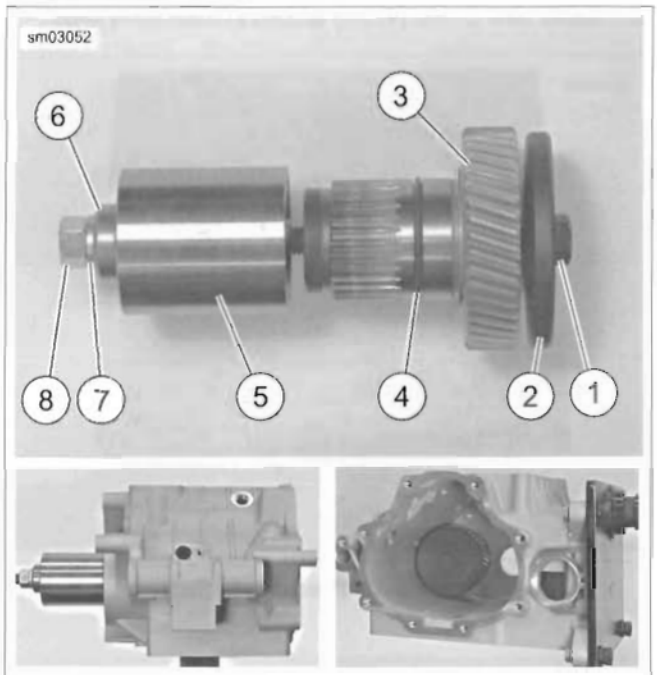

1. 8 in. bolt
2. Washer
3. Main drive gear
4. O-ring
5. Installer cup
6. Bearing
7. Flat washer
8. Nut

Figure 6-43. Installing Main Drive Gear (Typical)

Installing Main Drive Gear

NOTE

See Figure 6-43. Make sure new O-ring (4) is installed onto main drive gear (3). Lubricate O-ring with SCREAMIN' EAGLE ASSEMBLY LUBE before installing drive gear into transmission case.

1. See Figure 6-43. Apply a light coat of graphite lubricant to the threads of 8 IN. BOLT (Part No. HD-35316-4A) (1) and insert through WASHER (Part No. HD-35316-7) (2) and main drive gear (3). Insert assembly into transmission case, through main drive gear bearing.
2. At outside of case, place INSTALLER CUP (Part No. HD-35316-12) (5), BEARING (6), FLAT WASHER (7) and NUT (8) over end of bolt.
3. Tighten nut until main drive gear contacts main drive gear bearing.

NOTE

See Figure 6-44. In next step, bearing retaining ring must be installed with the flat side facing the bearing and the opening in the ninety degree range shown.

⚠WARNING

Wear safety glasses or goggles when removing or installing retaining rings. Retaining rings can slip from the pliers and could be propelled with enough force to cause serious eye injury. (00312a)

4. See Figure 6-45. Install new retaining ring (2).

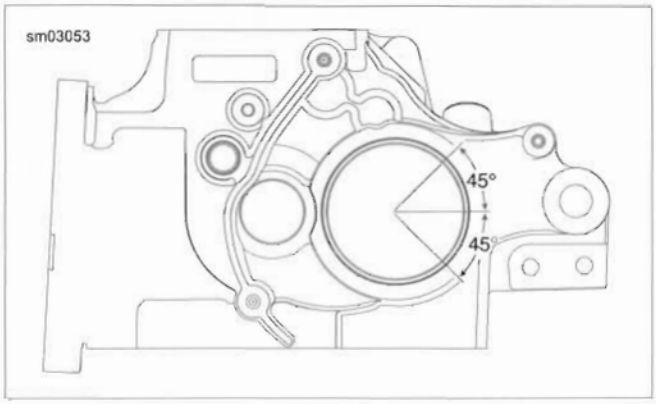

Figure 6-44. Retaining Ring Opening

Installing Main Drive Gear Large Seal

1. See Figure 6-45. From outside of crankcase, install PILOT (Part No. HD-47856-2) over end of main drive gear bearing inner race.
2. Coat lips of new main drive gear seal with FORMULA+ TRANSMISSION AND PRIMARY CHAINCASE LUBRICANT.
3. See Figure 6-46. Place seal over pilot with garter spring facing bearing, and position seal squarely in end of crankcase bore.

NOTE

ADAPTER (Part No. HD-47856-3) and main drive gear have right-hand threads.

4. See Figure 6-47. Thread ADAPTER (Part No. HD-47856-3) onto end of main drive gear until it contacts main drive gear.

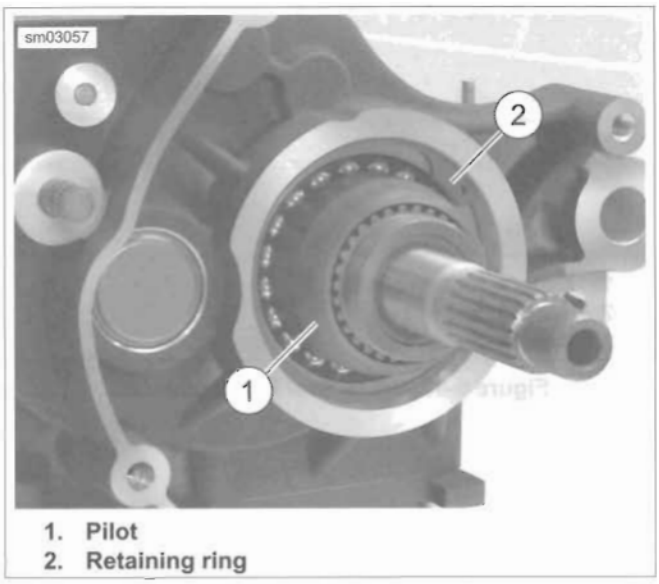

1. Pilot
2. Retaining ring

Figure 6-45. Install Pilot

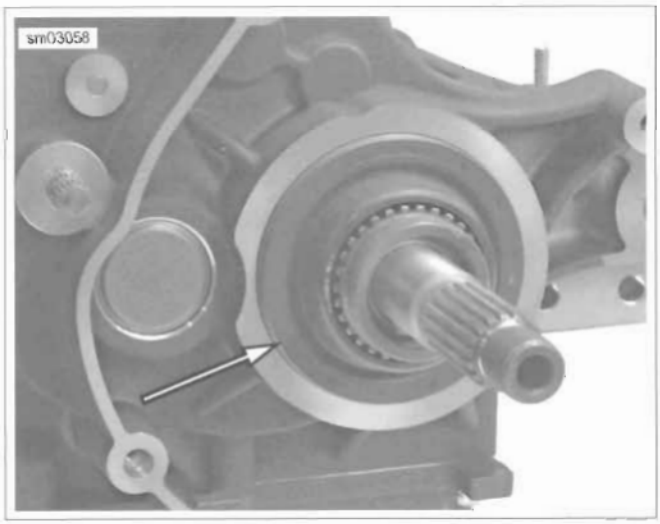

Figure 6-46. Place Main Drive Gear Seal Over Pilot

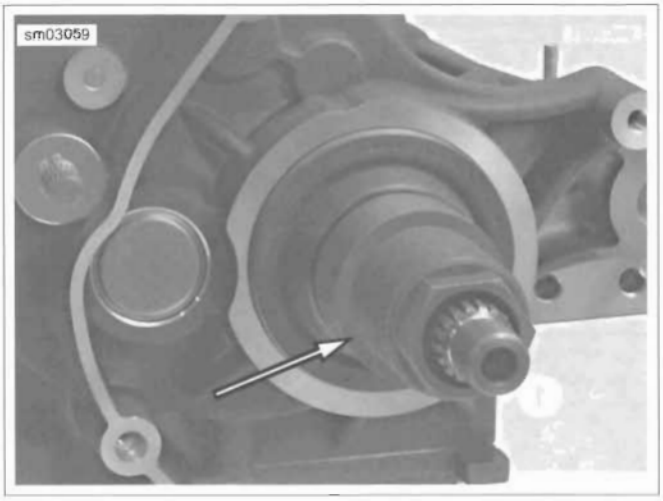

Figure 6-47. Install Adapter

5. See Figure 6-48. Slide INSTALLER (Part No. HD-47856-1) (1) over adapter until cupped end of installer is flat against seal.
6. Thread NUT (Part No. HD-47856-6) (2) onto end of adapter, until it tightens against installer.
7. See Figure 6-49. Place CROW'S FOOT WRENCH (Part No. HD-47856-7) (1) with 1/2 inch drive breaker bar (2) on large nut. Place an adjustable wrench (3) on flats of hex head cast into end of adapter.
8. Holding adjustable wrench, tighten large nut with crow's foot wrench until outer face of seal is flush with outer edge of transmission bore.

NOTE

It is acceptable to recess seal as much as 0.030 in. (0.762 mm) below outer edge of bore. Seal depth is controlled by tool.

9. Remove nut, installer, adapter and pilot.
10. Install bearing housing and transmission components. See 6.6 TRANSMISSION ASSEMBLY, Installation.
11. Install sprocket and drive belt. See 5.7 TRANSMISSION SPROCKET. Do not adjust belt at this time.
12. Install the bearing inner race on the transmission mainshaft. See 6.8 TRANSMISSION CASE, Assembly.
13. Install the primary chaincase housing. See 5.5 PRIMARY CHAINCASE HOUSING, Installation.
14. Install the clutch assembly, primary chain, chain tensioner assembly and compensating sprocket components See 5.4 DRIVE COMPONENTS, Installation.
15. Install the primary chaincase cover. See 5.3 PRIMARY CHAINCASE COVER, Installation.
16. Adjust the drive belt. See 1.12 DRIVE BELT AND SPROCKETS, Adjusting Belt Deflection.
17. Install exhaust system. See 4.17 EXHAUST SYSTEM, System: FLSTC, FXST, FXSB or 4.17 EXHAUST SYSTEM, System: FLSTN, FLSTF/B, FLS.

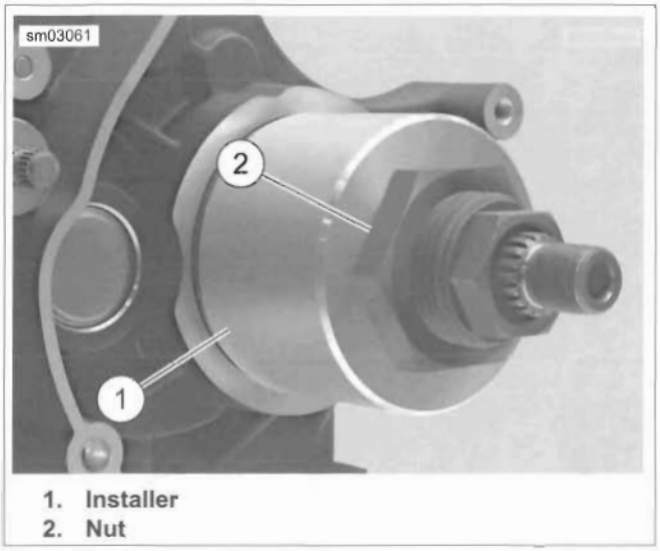

1. Installer
2. Nut

Figure 6-48. Installer and Nut

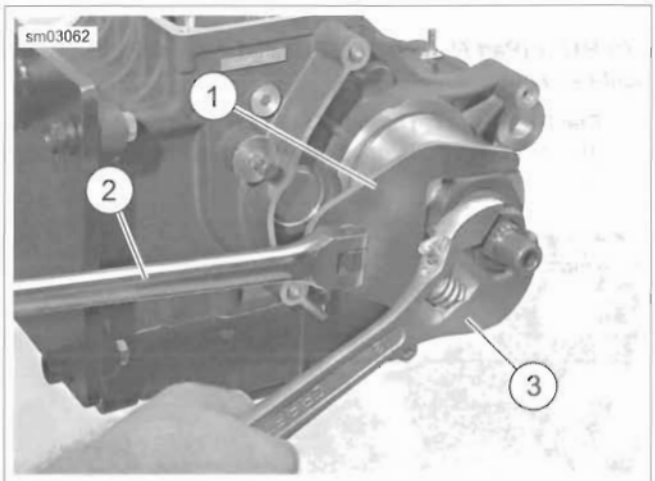

1. Crow's foot wrench
2. 1/2 in breaker bar
3. Adjustable wrench

Figure 6-49. Press Seal Into Crankcase

REMOVAL

For information on pulling transmission case from frame, see 3.14 REMOVING ENGINE FROM CHASSIS.

⚠WARNING

Disconnect negative (-) battery cable first. If positive (+) cable should contact ground with negative (-) cable connected, the resulting sparks can cause a battery explosion, which could result in death or serious injury. (00049a)

1. Disconnect battery, negative cable first. See 1.19 BATTERY MAINTENANCE, Battery Disconnection and Removal.
2. Drain engine oil. See 1.6 ENGINE OIL AND FILTER, Changing Oil and Filter.
3. Drain transmission lubricant. See 1.10 TRANSMISSION LUBRICANT, Changing Transmission Lubricant.
4. Remove starter. See 7.13 STARTER, Removal.
5. Remove upper and lower fasteners from seat post. Disconnect coil connector and remove the post with coil attached.
6. Remove transmission assembly. See 6.6 TRANSMISSION ASSEMBLY, Removal.
7. Position jack under lower frame crossmember to support rear of motorcycle. Slide wooden blocks beneath the crankcase to support the weight of the engine and transmission assembly.

NOTE

When removing pivot shaft, make note of spacer position on each side of transmission. Spacers differ slightly in length from each other and must be installed on the same side from which they were removed.

8. Remove pivot shaft. See 2.23 REAR FORK, Removal.
9. Disconnect vehicle speed sensor (VSS). See 7.27 VEHICLE SPEED SENSOR (VSS), Removal.
10. Disconnect neutral switch. See 7.30 NEUTRAL SWITCH, Removal.
11. Mark splines on shift arm and shift shaft to assist in assembly. Remove shift arm from shift shaft.
12. Remove four fasteners that connect transmission to engine.

NOTE

See Figure 6-50. Do not use a hammer to remove transmission. If the transmission sticks or binds on the ring dowels, gently pry away from crankcase using the pry point.

13. Move transmission rearward until two ring dowels in lower flange are free of crankcase. Remove transmission case from left side of the motorcycle.

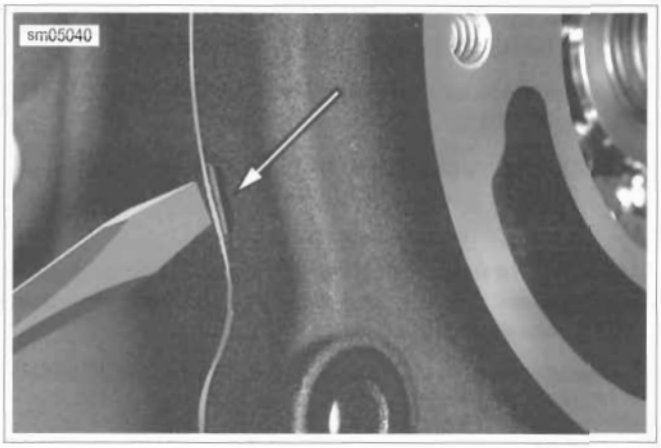

Figure 6-50. Bearing Housing Pry Point

INSTALLATION

FASTENER	TORQUE VALUE	
Transmission mounting bolts, 1st torque	15 ft-lbs	20.3 Nm
Transmission mounting bolts, final torque	34-39 ft-lbs	46.1-52.9 Nm
Transmission drain plug	14-21 ft-lbs	19.0-28.5 Nm

1. Install **new** ground post at top of transmission case. Tighten ground post until snug.

NOTE

*A **new** transmission case comes with the shifter shaft sleeve and seal, centering screw, countershaft needle bearing and main drive gear bearing and seal installed.*

2. Thoroughly wipe all engine oil from pockets in crankcase flange.
3. Install **new** gasket engaging two index pins in holes of transmission flange.
4. See Figure 6-51. Verify that transmission dowels are seated. Place transmission case into position behind crankcase. Mate engine and transmission flanges.

NOTE

*Use **new** transmission mounting bolts when installing transmission case. Do not reuse old bolts.*

5. Tighten fasteners.
   a. Using a crosswise pattern, **hand tighten** fasteners. Shorter bolts are installed at the top, longer bolts are installed at the bottom.
   b. Alternately tighten bolts to 15 ft-lbs (20.3 Nm) in the same crosswise pattern.
   c. Final tighten bolts to 34-39 ft-lbs (46.1-52.9 Nm).

NOTE

When installing pivot shaft, make sure spacers are installed on the same side from which they were removed. Spacers differ slightly in length from each other.

6. Install pivot shaft. See 2.23 REAR FORK, Installation.
7. Install shift shaft on shift arm.
8. Install transmission assembly and main drive gear. See 6.6 TRANSMISSION ASSEMBLY, Installation.
9. Adjust drive belt tension. See 1.12 DRIVE BELT AND SPROCKETS.
10. Install primary chaincase. See 5.5 PRIMARY CHAINCASE HOUSING.

NOTE

Always install a new gasket between primary chaincase cover and chaincase. Failure to replace this gasket may cause primary chaincase leaks.

11. Install primary chaincase cover. See 5.3 PRIMARY CHAINCASE COVER.
12. Install the exhaust system. See 4.17 EXHAUST SYSTEM.
13. Clean and install transmission drain plug. Tighten to 14-21 ft-lbs (19.0-28.5 Nm). Place motorcycle in an upright position. Fill transmission to proper level with fresh transmission fluid. See 1.10 TRANSMISSION LUBRICANT.

NOTICE

Do not overfill the primary chaincase with lubricant. Overfilling can cause rough clutch engagement, incomplete disengagement, clutch drag and/or difficulty in finding neutral at engine idle. (00199b)

14. Fill primary chaincase. See 1.9 PRIMARY CHAINCASE LUBRICANT.
15. Fill oil tank with engine oil. See 1.6 ENGINE OIL AND FILTER.

⚠WARNING

Connect positive (+) battery cable first. If positive (+) cable should contact ground with negative (-) cable connected, the resulting sparks can cause a battery explosion, which could result in death or serious injury. (00068a)

16. Connect battery cables, positive cable first.

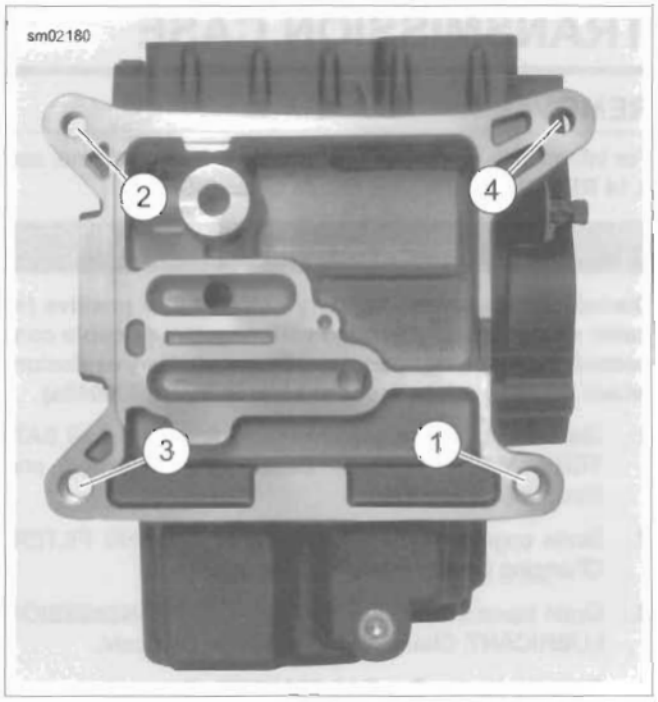

Figure 6-51. Transmission Housing to Crankcase Torque Sequence

DISASSEMBLY

Shifter Arm Assembly

1. See Figure 6-52. After removing bearing housing assembly, remove screw (8) and shifter rod lever (9) from the shifter pawl lever assembly (1).
2. Remove retaining ring (7), washer (6) and seal (5). Discard retaining ring and seal. Pull shifter pawl lever assembly out of the transmission case.
3. Inspect sleeve (2) inside transmission case.

CLEANING AND INSPECTION

⚠WARNING

Compressed air can pierce the skin and flying debris from compressed air could cause serious eye injury. Wear safety glasses when working with compressed air. Never use your hand to check for air leaks or to determine air flow rates. (00061a)

1. Clean all parts in solvent except the case and main drive gear needle bearings. Dry parts with low pressure compressed air.

NOTE

Never wash the transmission case and needle bearings with solvent. Normal cleaning methods will wash dirt or other contaminants into the bearing case (behind the needles) leading to bearing failure.

2. See Figure 6-52. Inspect the shifter pawl lever assembly (1) for wear. Replace assembly if pawl ends are damaged. Replace centering spring (3) if elongated.
3. Inspect the shifter spring (4). Replace if the spring fails to hold the pawl on the cam pins.

4. Thoroughly clean the oil pan with solvent.
5. Inspect preformed transmission top cover vent hose for damage. Replace as necessary. Use low-pressure compressed air to verify that hose and fitting are unobstructed.

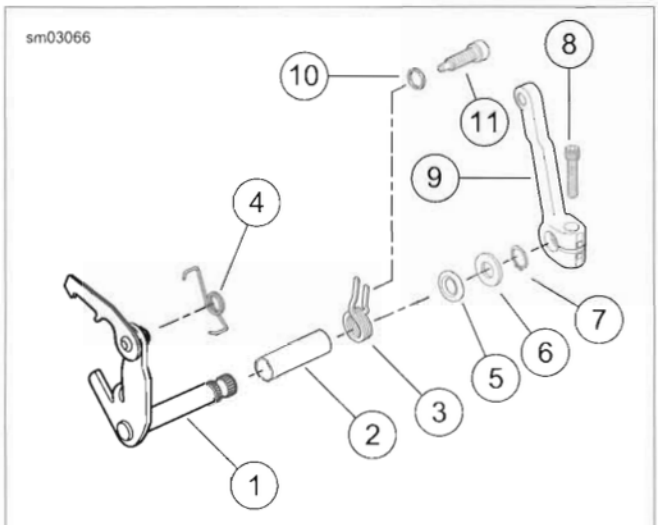

1. **Shifter pawl lever assembly**
2. **Sleeve (inside transmission case)**
3. **Shift lever centering spring**
4. **Shifter shaft lever spring**
5. **Seal**
6. **Washer**
7. **Retaining ring**
8. **Screw**
9. **Shifter rod lever**
10. **Washer**
11. **Screw**

Figure 6-52. Shifter Arm Assembly

ASSEMBLY

PART NUMBER	TOOL NAME
HD-51337	SHIFTER SHAFT SEAL INSTALLATION TOOL

FASTENER	TORQUE VALUE	
Shifter pawl centering screw	18-23 ft-lbs	24.4-31.2 Nm
Shifter rod lever pinch screw, transmission lever	18-22 ft-lbs	24.4-29.8 Nm

Countershaft Needle Bearing Replacement

1. Find a suitable bearing driver 1.25 in (31.75 mm) in diameter.
2. Check bearing position.
   a. From the outside of the transmission case place the needle bearing open end first next to the bearing bore.
   b. Hold the driver squarely against the closed end of the bearing and tap the bearing into place.
   c. The bearing is properly positioned when it is driven inward flush with the outside surface of the case or to a maximum depth of 0.030 in (0.76 mm).
3. Lubricate the bearing with SCREAMIN' EAGLE ASSEMBLY LUBE.

Shifter Pawl Lever Assembly

1. See Figure 6-52. Verify that sleeve (2) is inside transmission case.
2. Install screw (11) and washer (10) into side of transmission case. Tighten to 18-23 ft-lbs (24.4-31.2 Nm).
3. See Figure 6-53. Slide shifter lever centering spring (3) over shaft of shifter pawl lever assembly (2). Align opening on spring with tab on lever.
4. Place shifter shaft lever spring (4) on shifter pawl lever assembly.

NOTE

Do not bend shifter shaft lever spring more than necessary for assembly.

5. See Figure 6-54. Insert the assembly into the transmission case.
6. See Figure 6-55. Verify that pin sits inside shifter shaft lever spring.
7. See Figure 6-56. Using SHIFTER SHAFT SEAL INSTALLATION TOOL (Part No. HD-51337), install a **new** seal. Make sure the seal's garter spring faces the transmission. Drive the seal in until the tool bottoms out on the transmission case. This installs the seal to the correct depth.
8. See Figure 6-54. Install washer (1) and a **new** retaining ring (2).

NOTE

In next step, shifter rod lever must be installed so angle of lever is toward front of vehicle, one spline from vertical.

9. See Figure 6-52. Install shifter rod lever (9) on the shifter pawl lever assembly shaft end using screw (8). Tighten to 18-22 ft-lbs (24.4-29.8 Nm).

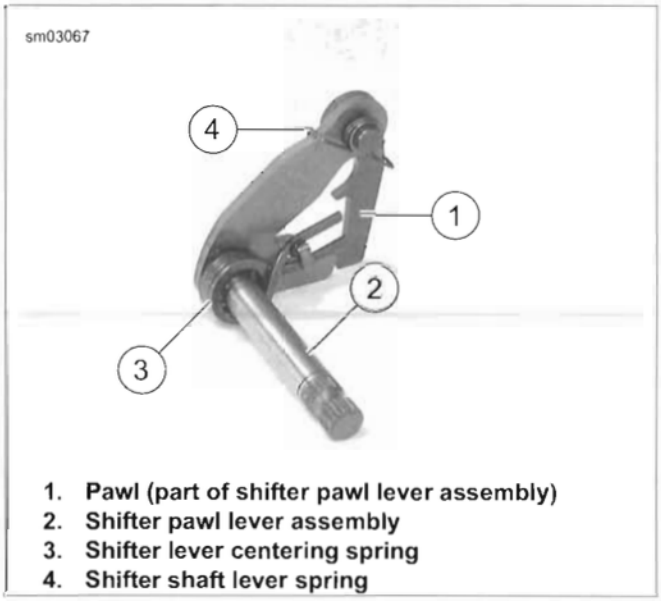

1. **Pawl (part of shifter pawl lever assembly)**
2. **Shifter pawl lever assembly**
3. **Shifter lever centering spring**
4. **Shifter shaft lever spring**

Figure 6-53. Shifter Pawl Lever Assembly

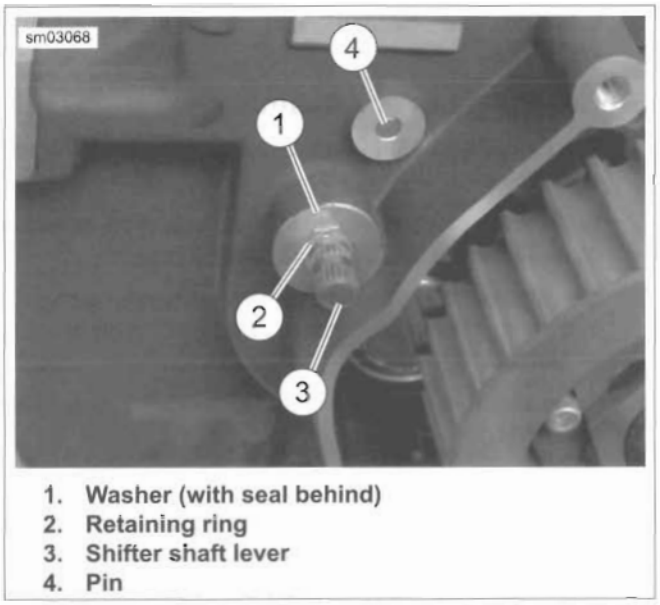

1. Washer (with seal behind)
2. Retaining ring
3. Shifter shaft lever
4. Pin

Figure 6-54. Shifter Shaft Lever, Exterior View

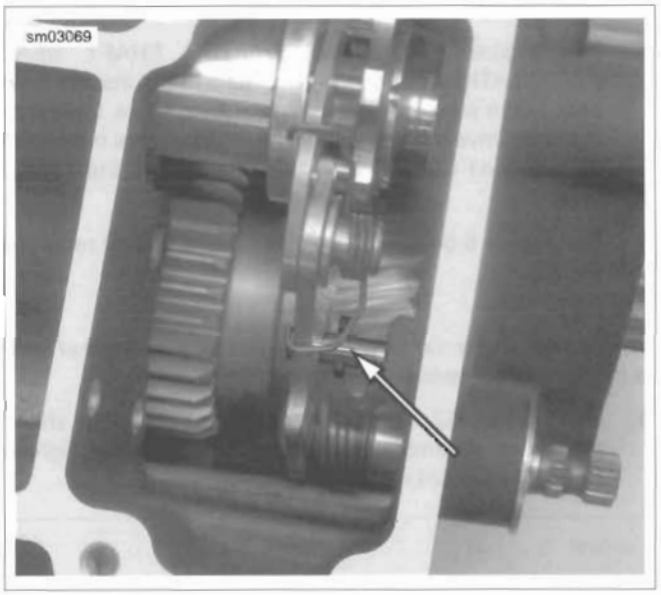

Figure 6-55. Shifter Shaft Lever Spring

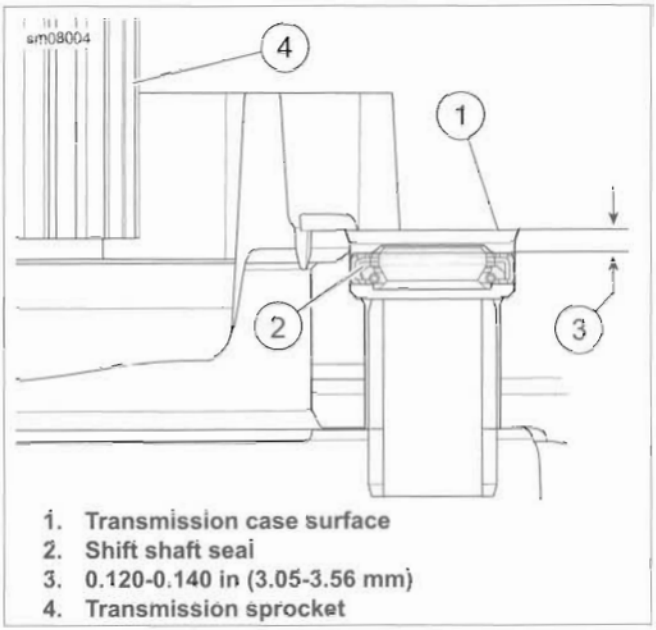

1. Transmission case surface
2. Shift shaft seal
3. 0.120-0.140 in (3.05-3.56 mm)
4. Transmission sprocket

Figure 6-56. Shift Shaft Seal Installation

SUBJECT	PAGE NO.
7.1 FASTENER TORQUE VALUES	7-1
7.2 SPECIFICATIONS: ELECTRICAL	7-4
7.3 ELECTRICAL PANEL	7-5
7.4 ELECTRONIC CONTROL MODULE (ECM)	7-8
7.5 BODY CONTROL MODULE (BCM)	7-9
7.6 H-DSSS ACTUATION	7-11
7.7 PERSONAL IDENTIFICATION NUMBER (PIN)	7-12
7.8 HD-SSS MAINTENANCE	7-14
7.9 SECURITY SIREN	7-15
7.10 FUSES	7-17
7.11 IGNITION AND LIGHT SWITCH	7-18
7.12 BATTERY CABLES	7-20
7.13 STARTER	7-22
7.14 HEADLAMP	7-26
7.15 TAIL LAMP: ALL BUT FLSTN	7-29
7.16 TAIL LAMP: FLSTN	7-31
7.17 AUXILIARY LAMPS: FLSTC, FLSTN	7-33
7.18 TURN SIGNALS AND RUNNING LIGHTS	7-40
7.19 CRANK POSITION SENSOR (CKP)	7-47
7.20 AUTOMATIC COMPRESSION RELEASE (ACR)	7-48
7.21 IGNITION COIL	7-50
7.22 SPARK PLUG CABLES	7-52
7.23 VOLTAGE REGULATOR	7-53
7.24 ALTERNATOR	7-54
7.25 FUEL GAUGE	7-55
7.26 SPEEDOMETER	7-57
7.27 VEHICLE SPEED SENSOR (VSS)	7-59
7.28 WHEEL SPEED SENSORS	7-60
7.29 INDICATOR LAMPS	7-64
7.30 NEUTRAL SWITCH	7-66
7.31 OIL PRESSURE SWITCH	7-67
7.32 REAR STOP LAMP SWITCH	7-68
7.33 HORN	7-69
7.34 ACTIVE EXHAUST	7-71
7.35 MAIN WIRING HARNESS	7-72
7.36 HANDLEBAR CONTROL MODULES	7-75
7.37 RIGHT HANDLEBAR CONTROL MODULE	7-76
7.38 LEFT HANDLEBAR CONTROL MODULE	7-79

NOTES

FASTENER TORQUE VALUES IN THIS CHAPTER

The table below lists torque values for all fasteners presented in this chapter.

FASTENER	TORQUE VALUE		NOTES
ACR	13-17 ft-lbs	17.6-23.0 Nm	7.20 AUTOMATIC COMPRESSION RELEASE (ACR), Installation/Apply three equally spaced dots of LOCTITE 246 MEDIUM STRENGTH/HIGH TEMPERATURE THREADLOCKER (blue) around lower third of threads
Active exhaust module fasteners	32-40 in-lbs	3.6-4.5 Nm	7.34 ACTIVE EXHAUST, Installation
Auxiliary lamp bracket: FLSTC	72-120 in-lbs	8.1-13.6 Nm	7.17 AUXILIARY LAMPS: FLSTC, FLSTN, FLSTC Models
Auxiliary lamp bracket: FLSTN	72-120 in-lbs	8.1-13.6 Nm	7.17 AUXILIARY LAMPS: FLSTC, FLSTN, FLSTN Models
Auxiliary lamp nut: FLSTC	15-18 ft-lbs	20.3-24.4 Nm	7.17 AUXILIARY LAMPS: FLSTC, FLSTN, Adjustment: FLSTC/FLSTN Models
Auxiliary lamp nut: FLSTN	15-18 ft-lbs	20.3-24.4 Nm	7.17 AUXILIARY LAMPS: FLSTC, FLSTN, Adjustment: FLSTC/FLSTN Models
Battery cable to battery fasteners	60-72 in-lbs	6.8-8.1 Nm	7.12 BATTERY CABLES, Routing Procedure
Battery cable to battery fasteners	60-72 in-lbs	6.8-8.1 Nm	7.12 BATTERY CABLES, Routing Procedure
Coil cover screw: all but FXSB	30-40 in-lbs	3.4-4.5 Nm	7.21 IGNITION COIL, Installation
Coil mounting screw: FXSB	96-120 in-lbs	10.9-13.6 Nm	7.21 IGNITION COIL, Installation
Crank position sensor (CKP)	90-120 in-lbs	10.2-13.6 Nm	7.19 CRANK POSITION SENSOR (CKP), Installation
Electrical panel fasteners: all but FXSB	36-60 in-lbs	4.1-6.8 Nm	7.3 ELECTRICAL PANEL, Installation: All But FXSB
Handlebar clamp to clutch lever bracket screws	60-80 in-lbs	6.8-9.0 Nm	7.38 LEFT HANDLEBAR CONTROL MODULE, Installation
Handlebar clamp to master cylinder screws	60-80 in-lbs	6.8-9.0 Nm	7.37 RIGHT HANDLEBAR CONTROL MODULE, Installation
Handlebar switch assembly retainer screws	8-10 in-lbs	0.9-1.1 Nm	7.37 RIGHT HANDLEBAR CONTROL MODULE, Installation
Handlebar switch assembly retainer screws	8-10 in-lbs	0.9-1.1 Nm	7.37 RIGHT HANDLEBAR CONTROL MODULE, Front Brake Switch Replacement
Handlebar switch assembly retainer screws	8-10 in-lbs	0.9-1.1 Nm	7.38 LEFT HANDLEBAR CONTROL MODULE, Installation
Handlebar switch assembly retainer screws	8-10 in-lbs	0.9-1.1 Nm	7.38 LEFT HANDLEBAR CONTROL MODULE, Clutch Switch Replacement
Handlebar switch housing screws	35-45 in-lbs	4.0-5.1 Nm	7.37 RIGHT HANDLEBAR CONTROL MODULE, Installation
Handlebar switch housing screws	35-45 in-lbs	4.0-5.1 Nm	7.38 LEFT HANDLEBAR CONTROL MODULE, Installation
Headlamp circuit board/pin housing screw: All but FLSTN	40-48 in-lbs	4.5-5.4 Nm	7.15 TAIL LAMP: ALL BUT FLSTN, Base Replacement
Headlamp lens base screws: All but FLSTN	20-24 in-lbs	2.3-2.7 Nm	7.15 TAIL LAMP: ALL BUT FLSTN, Base Replacement
Horn bracket clamp: All but FXSB	80-100 in-lbs	9.0-11.3 Nm	7.33 HORN, Removal and Installation: All But FXSB
Horn bracket mounting bolt: FXSB	13-15 ft-lbs	17.6-20.4 Nm	7.33 HORN, Removal and Installation: FXSB
Horn bracket nut: All but FXSB	80-100 in-lbs	9.0-11.3 Nm	7.33 HORN, Removal and Installation: All But FXSB

FASTENER	TORQUE VALUE		NOTES
Horn bracket screws: All but FXSB	35-55 in-lbs	4.0-6.2 Nm	7.33 HORN, Removal and Installation: All But FXSB
Ignition/light switch nut: FXSB	140-160 in-lbs	15.8-18.1 Nm	7.11 IGNITION AND LIGHT SWITCH, Removal and Installation: FXSB
Ignition coil screws: all but FXSB	120-180 in-lbs	13.6-20.3 Nm	7.21 IGNITION COIL, Installation
Ignition switch nut: FXSB	140-160 in-lbs	15.8-18.1 Nm	7.21 IGNITION COIL, Installation
Indicator lamp screws: FXSB	20-30 in-lbs	2.3-3.4 Nm	7.29 INDICATOR LAMPS, Installation: FXSB
Instrument panel acorn nut: all but FXSB	84-132 in-lbs	9.5-14.9 Nm	7.11 IGNITION AND LIGHT SWITCH, Removal and Installation: All But FXSB
License plate bracket fasteners: FLSTN	30-50 in-lbs	3.4-5.6 Nm	7.16 TAIL LAMP: FLSTN, Tail Lamp Replacement
License plate support fasteners: FLSTN	60-90 in-lbs	6.8-10.2 Nm	7.16 TAIL LAMP: FLSTN, Tail Lamp Replacement
Neutral switch	120-180 in-lbs	13.6-20.3 Nm	7.30 NEUTRAL SWITCH, Installation
Oil pressure switch	96-144 in-lbs	10.8-16.3 Nm	7.31 OIL PRESSURE SWITCH, Installation
Rear electrical panel fasteners: FXSB	36-60 in-lbs	4.1-6.8 Nm	7.3 ELECTRICAL PANEL, Installation: FXSB
Rear fender support to fender fasteners: FLS	21-27 ft-lbs	28.5-36.6 Nm	7.18 TURN SIGNALS AND RUNNING LIGHTS, Lamp Replacement
Rear stop lamp switch	12-15 ft-lbs	16.3-20.3 Nm	7.32 REAR STOP LAMP SWITCH, Installation
Rear turn signal housing fastener	12-16 ft-lbs	16.3-21.7 Nm	7.18 TURN SIGNALS AND RUNNING LIGHTS, Lamp Replacement
Rear turn signal housing fastener: FLS	12-16 ft-lbs	16.3-21.7 Nm	7.18 TURN SIGNALS AND RUNNING LIGHTS, Lamp Replacement
Signal lamp mounting bracket screws: FLSTC	36-60 in-lbs	4.1-6.8 Nm	7.17 AUXILIARY LAMPS: FLSTC, FLSTN, Adjustment: FLSTC/FLSTN Models
Signal lamp mounting bracket screws: FLSTN	36-60 in-lbs	4.1-6.8 Nm	7.17 AUXILIARY LAMPS: FLSTC, FLSTN, Adjustment: FLSTC/FLSTN Models
Solenoid contact post jamnut	65-80 in-lbs	7.3-9.0 Nm	7.13 STARTER, Solenoid
Solenoid terminal post nut	70-90 in-lbs	7.9-10.2 Nm	7.13 STARTER, Drive Assembly
Speedometer console nut: all but FXSB	84-132 in-lbs	9.5-14.9 Nm	7.26 SPEEDOMETER, Installation: All But FXSB
Speedometer fasteners: FXSB	12-17 in-lbs	1.4-1.9 Nm	7.26 SPEEDOMETER, Installation: FXSB
Splash guard screw	36-48 in-lbs	4.1-5.4 Nm	7.28 WHEEL SPEED SENSORS, Rear Wheel Speed Sensor
Splash guard screw: all but FXSB	36-48 in-lbs	4.1-5.4 Nm	7.3 ELECTRICAL PANEL, Installation: All But FXSB
Splash guard screw: all but FXSB	36-48 in-lbs	4.1-5.4 Nm	7.5 BODY CONTROL MODULE (BCM), Installation: All But FXSB
Splash guard screw: all but FXSB	36-48 in-lbs	4.1-5.4 Nm	7.9 SECURITY SIREN, Installation: All But FXSB
Starter end cover screw	90-110 in-lbs	10.2-12.4 Nm	7.13 STARTER, Drive Assembly
Starter mounting bolts	25-27 ft-lbs	33.9-36.6 Nm	7.13 STARTER, Installation
Starter nut	70-90 in-lbs	7.9-10.2 Nm	7.12 BATTERY CABLES, Routing Procedure
Starter ring terminal hex nut	60-80 in-lbs	6.8-9.0 Nm	7.13 STARTER, Solenoid
Starter through bolts	39-65 in-lbs	4.4-7.3 Nm	7.13 STARTER, Drive Assembly
Stator screws	55-75 in-lbs	6.2-8.4 Nm	7.24 ALTERNATOR, Installation/TORX screws, use only once
Tail lamp connector cover fastener: FLSTN	8-30 in-lbs	0.9-3.4 Nm	7.16 TAIL LAMP: FLSTN, Tail Lamp Replacement
Tail lamp fastener: FLSTN	8-30 in-lbs	0.9-3.4 Nm	7.18 TURN SIGNALS AND RUNNING LIGHTS, Lamp Replacement
Tail lamp fasteners: FLSTN	60-90 in-lbs	6.8-10.2 Nm	7.16 TAIL LAMP: FLSTN, Tail Lamp Replacement
Tail lamp lens screws	20-24 in-lbs	2.3-2.7 Nm	7.15 TAIL LAMP: ALL BUT FLSTN, Bulb Replacement

FASTENER	TORQUE VALUE		NOTES
Turn signal bar screws: FLSTN	15-19 ft-lbs	20.4-25.8 Nm	7.18 TURN SIGNALS AND RUNNING LIGHTS, Lamp Replacement
Upper handlebar clamp fasteners: FXSB	12-16 ft-lbs	16.3-21.7 Nm	7.29 INDICATOR LAMPS, Installation: FXSB
Voltage regulator	50-80 **in-lbs**	5.7-9.0 Nm	7.23 VOLTAGE REGULATOR, Installation
Voltage regulator bracket to crankcase fasteners	70-100 **in-lbs**	7.9-11.3 Nm	7.23 VOLTAGE REGULATOR, Installation
VSS mounting bolt	84-108 **in-lbs**	9.5-12.2 Nm	7.27 VEHICLE SPEED SENSOR (VSS), Installation

SPECIFICATIONS

Table 7-1. Ignition System Specifications

IGNITION	DATA
Idle speed	950-1050 RPM
Spark plug size	12 mm
Spark plug gap	0.038-0.043 in.
	0.97-1.09 mm
Spark plug type	Harley-Davidson No. 6R12 (no substitute)
Ignition coil primary resistance	0.5-0.7 ohms
Ignition coil secondary resistance	5500-7500 ohms

Table 7-2. Circuit Breaker/Fuses

CIRCUIT BREAKER/FUSES	RATING (AMPERES)
Main fuse	40
P&A fuse	15
Battery fuse	15

Table 7-3. Charging System

CHARGING SYSTEM	DATA
Battery	19 A hour/315 CCA
Alternator AC voltage output	16-23 VAC per 1000 rpm
Alternator stator coil resistance	0.1-0.2 ohms
Regulator voltage output @ 3600 rpm	14.3-14.7 VDC @ 75 °F (24 °C)
Regulator amperes @ 3000 rpm	35-50 A

Table 7-4. Starter Specifications

STARTER DATA	
Free speed	3000 rpm (min) @ 11.5 V
Free current	90 A (max) @ 11.5 V
Cranking current	200 A (max) @ 68 °F (20 °C)
Stall torque	8.0 ft-lbs (10.8 Nm) @ 2.4 V

GENERAL

All Softail models use a panel under the rear fender to mount important electrical components. This electrical panel contains:

- Body control module (BCM).
- Security siren, if equipped.
- ABS ECU, if equipped.
- **FXSB:** ECM

REMOVAL: ALL BUT FXSB

1. Remove seat.

⚠WARNING

To prevent accidental vehicle start-up, which could cause death or serious injury, remove main fuse before proceeding. (00251b)

2. Remove main fuse.
3. Remove right side saddlebag if present.

NOTE

Rear wheel may have to be raised slightly to allow for splash guard removal.

4. Remove bolt from lower end of splash guard. Lift up on tabs and pull lower end of splash guard toward rear tire.
5. Pull upper end of splash guard off rear fork and move splash guard from motorcycle.
6. See Figure 7-1. Remove BCM (1).
7. Remove wheel speed sensor connector (4) from electrical panel.
8. If installed, remove security siren (5). If not installed, disconnect security siren connector [142] from receptacle (3) in electrical panel.
9. If installed, remove purge solenoid from top of electrical panel. If not installed, disconnect purge solenoid connector [95] from receptacle (2) on top of electrical panel.
10. See Figure 7-2. If equipped with ABS, remove ECU (1) from electrical panel.
11. Remove electrical panel fasteners (2) and remove electrical panel.

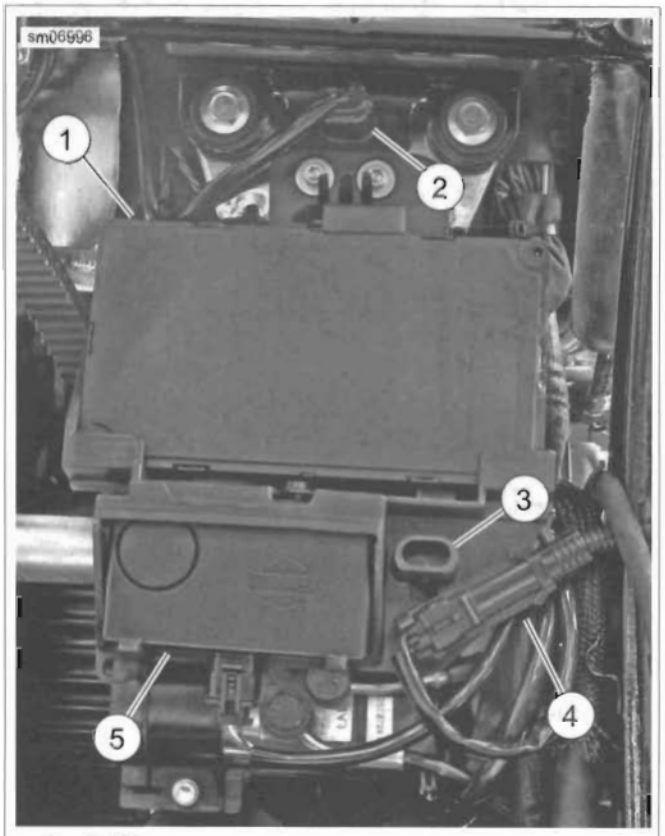

1. **BCM**
2. **Purge solenoid connector receptacle**
3. **Security siren connector receptacle**
4. **Wheel speed sensor connector**
5. **Security siren**

Figure 7-1. Body Control Module (BCM): All But FXSB

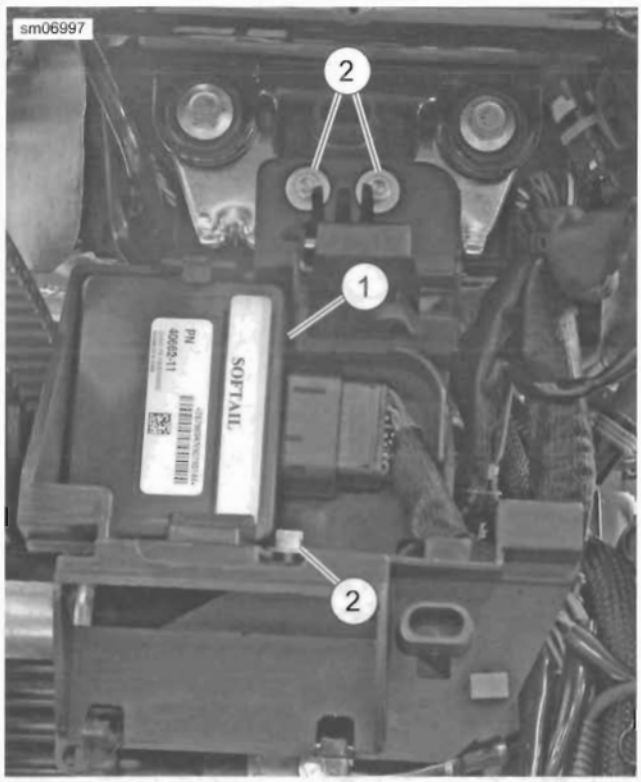

1. **Electronic control unit (ECU)**
2. **Electrical panel fasteners**

Figure 7-2. Electrical Panel

INSTALLATION: ALL BUT FXSB

FASTENER	TORQUE VALUE	
Electrical panel fasteners: all but FXSB	36-60 **in-lbs**	4.1-6.8 Nm
Splash guard screw: all but FXSB	36-48 **in-lbs**	4.1-5.4 Nm

1. See Figure 7-2. Place electrical panel into position and install fasteners (2). Tighten to 36-60 **in-lbs** (4.1-6.8 Nm).
2. **ABS equipped:** install ECU (1).
3. See Figure 7-1. Install purge solenoid to top of electrical panel, if equipped. If not equipped, connect purge solenoid connector [95] to receptacle (2) on top of electrical panel.
4. Install security siren (5), if equipped. If not equipped, connect security siren connector [142] to receptacle (3) in electrical panel.
5. Install BCM (1).
6. Attach wheel speed sensor connector (4) to electrical panel.
7. Place splash guard into position and snap upper end onto rear fork.
8. Press lower end against rear fork until the tabs snap into place.
9. Install screw to secure splash guard. Tighten to 36-48 **in-lbs** (4.1-5.4 Nm).
10. Install right side saddlebag if removed.
11. Install main fuse.

⚠WARNING

After installing seat, pull upward on seat to be sure it is locked in position. While riding, a loose seat can shift causing loss of control, which could result in death or serious injury. (00070b)

12. Install seat.

REMOVAL: FXSB

1. Remove main fuse.
2. Remove rear wheel. See 2.5 REAR WHEEL.
3. Remove splash guard.
4. See Figure 7-3. Press in on tab and pull ECM panel away from latch.
5. See Figure 7-4. Remove security siren (2), BCM (3), ECU (4) and ECM with panel (5).
6. Detach purge solenoid (1) from rear electrical panel.
7. See Figure 7-5. Remove three fasteners securing rear electrical panel to frame.
8. Remove rear electrical panel.

INSTALLATION: FXSB

FASTENER	TORQUE VALUE	
Rear electrical panel fasteners: FXSB	36-60 **in-lbs**	4.1-6.8 Nm

1. Install rear electrical panel.
2. See Figure 7-5. Install three fasteners securing rear electrical panel to frame. Tighten to 36-60 **in-lbs** (4.1-6.8 Nm).
3. See Figure 7-4. Attach purge solenoid (1) to rear electrical panel.
4. Install BCM (3), security siren (2), ECU (4) and ECM (5) with panel.
5. See Figure 7-3. Push ECM panel forward and engage latch.
6. Install splash guard.
7. Install rear wheel. See 2.5 REAR WHEEL.
8. Install main fuse.

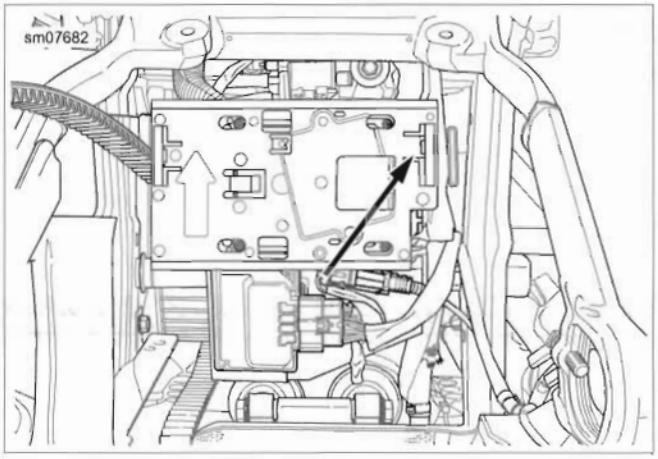

Figure 7-3. ECM

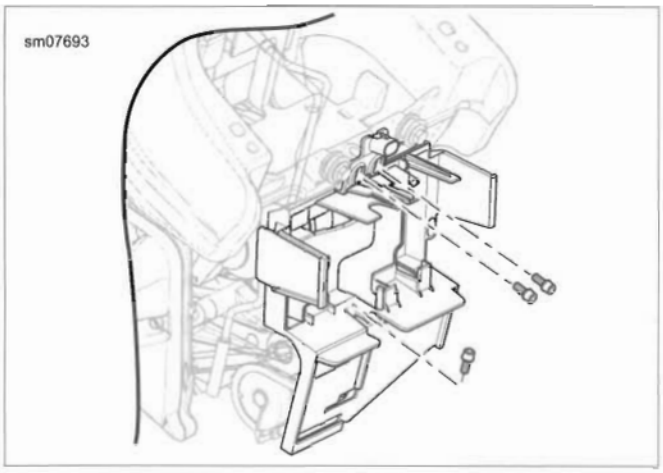

Figure 7-5. Rear Electrical Panel Fasteners

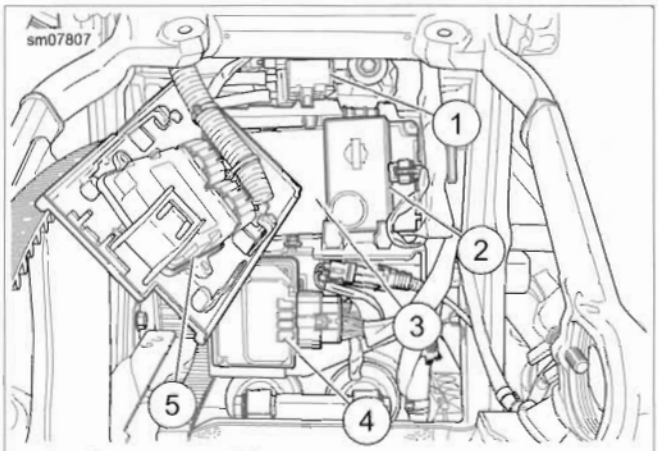

1. Purge solenoid
2. Security siren
3. BCM
4. ECU
5. ECM

Figure 7-4. Rear Electrical Panel

GENERAL

PART NUMBER	TOOL NAME
HD-48650	DIGITAL TECHNICIAN II

All But FXSB: the ECM is mounted under the seat.

FXSB: the ECM is mounted on the rear electrical panel.

See the electrical diagnostic manual for information on the function and testing of the ECM.

NOTES

- *The ECM cannot be repaired. Replace the unit if it fails.*
- *If replacing the ECM, perform calibration using DIGITAL TECHNICIAN II (Part No. HD-48650).*

REMOVAL: ALL BUT FXSB

1. Remove seat.

⚠WARNING

To prevent accidental vehicle start-up, which could cause death or serious injury, remove main fuse before proceeding. (00251b)

2. Remove main fuse.
3. See Figure 7-6. Pull ECM from mount.
4. Detach connectors [78-1, 78-2].

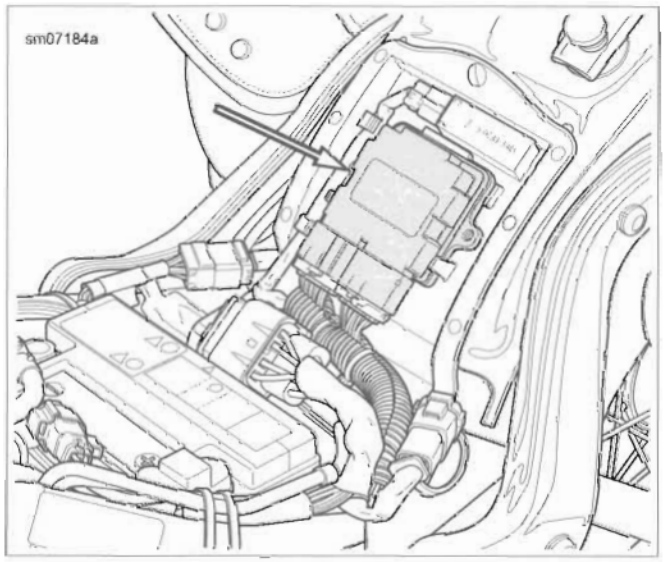

Figure 7-6. ECM Location

INSTALLATION: ALL BUT FXSB

PART NUMBER	TOOL NAME
HD-48650	DIGITAL TECHNICIAN II

1. Figure 7-6. Attach connectors [78-1, 78-2] to ECM.
2. Install ECM on mount.
3. Install main fuse.
4. If **new** ECM was installed, calibrate ECM and perform password learn procedure using DIGITAL TECHNICIAN II (Part No. HD-48650).

⚠WARNING

After installing seat, pull upward on seat to be sure it is locked in position. While riding, a loose seat can shift causing loss of control, which could result in death or serious injury. (00070b)

5. Install seat.

REMOVAL: FXSB

1. Remove main fuse.
2. Remove rear wheel. See 2.5 REAR WHEEL.
3. Remove splash guard.
4. See Figure 7-7. Press in on tab and pull ECM panel away from latch.
5. Disconnect ECM connector.
6. Remove ECM from panel.

INSTALLATION: FXSB

1. Install ECM onto panel.
2. Connect ECM connector.
3. See Figure 7-7. Push ECM panel forward and engage latch.
4. Install splash guard.
5. Install rear wheel. See 2.5 REAR WHEEL.
6. Install main fuse.

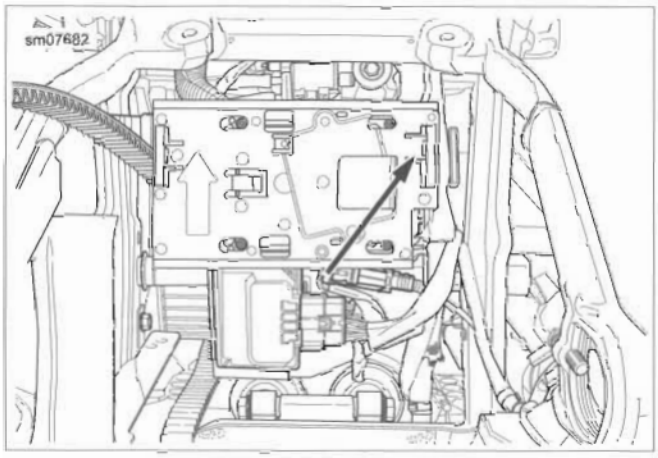

Figure 7-7. ECM

GENERAL

The BCM is located in front of the rear tire. The BCM supplies ignition and accessory power to most of the vehicle. It controls the lighting and other functions by using the switches as inputs, and the power circuits for the lights as outputs. The BCM is also connected to the CAN bus and shares information with the other modules on the vehicle. See the electrical diagnostic manual for more information.

BCM CONFIGURATION

PART NUMBER	TOOL NAME
HD-48650	DIGITAL TECHNICIAN II

After replacing BCM, perform configuration/password learn using DIGITAL TECHNICIAN II (Part No. HD-48650).

REMOVAL: ALL BUT FXSB

1. Remove seat.

⚠WARNING

To prevent accidental vehicle start-up, which could cause death or serious injury, remove main fuse before proceeding. (00251b)

2. Remove main fuse.
3. Remove right side saddlebag, if present.

NOTE

Rear wheel may have to be raised slightly to allow for splash guard removal.

4. Remove bolt from lower end of splash guard. Lift up on tabs and pull lower end of splash guard toward rear tire.
5. Pull upper end of splash guard off rear fork and move splash guard from motorcycle.
6. See Figure 7-8. Detach body control module (BCM) (1) from electrical panel and remove both electrical connectors.

INSTALLATION: ALL BUT FXSB

FASTENER	TORQUE VALUE	
Splash guard screw: all but FXSB	36-48 in-lbs	4.1-5.4 Nm

NOTE

All replacement BCMs are configured for keyless ignition. If the battery is reconnected with the run/stop switch in the run position, the vehicle will enable all ignition functions and not respond to the ignition switch. If this situation occurs, turn the ignition and run/stop switches off. Then turn the ignition on.

1. Verify ignition and run/stop switches are in the OFF position.
2. See Figure 7-8. Connect both BCM connectors and install BCM (1) onto electrical panel.
3. Place splash guard into position and snap upper end onto rear fork.
4. Press lower end against rear fork until the tabs snap into place.
5. Install screw to secure splash guard. Tighten to 36-48 **in-lbs** (4.1-5.4 Nm).
6. Install right side saddlebag, if removed.
7. Install main fuse.
8. Turn ignition switch on to configure BCM for keyed ignition operation.

⚠WARNING

Be sure that all lights and switches operate properly before operating motorcycle. Low visibility of rider can result in death or serious injury. (00316a)

NOTE

If ignition is cycled on when BCM is not secured in rear electrical panel, the lights may cycle on for 2 seconds and the word "tip" will be displayed on the odometer.

9. Test for correct operation.
10. Configure BCM. See 7.5 BODY CONTROL MODULE (BCM), BCM Configuration.

⚠WARNING

After installing seat, pull upward on seat to be sure it is locked in position. While riding, a loose seat can shift causing loss of control, which could result in death or serious injury. (00070b)

11. Install seat.

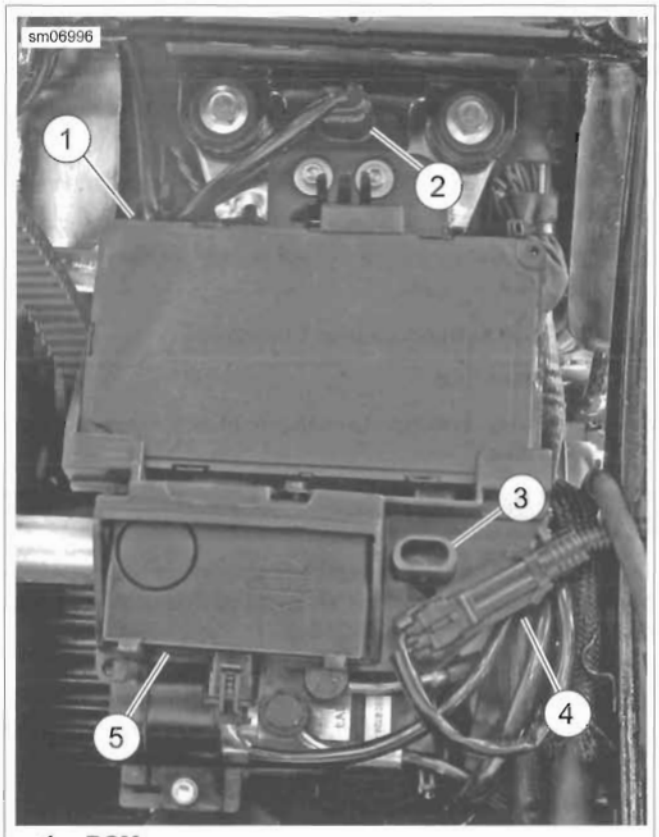

1. BCM
2. Purge solenoid connector receptacle
3. Security siren connector receptacle
4. Wheel speed sensor connector
5. Security siren

Figure 7-8. Body Control Module (BCM): All But FXSB

REMOVAL: FXSB

1. Remove main fuse.
2. Remove rear wheel. See 2.5 REAR WHEEL.
3. Remove splash guard.
4. See Figure 7-9. Press in on tab and pull ECM panel away from latch.
5. See Figure 7-10. Move security siren (1) out of the way.
6. Remove BCM (2).

INSTALLATION: FXSB

1. See Figure 7-10. Install BCM (2).
2. See Figure 7-11. Install BCM connectors with harness routed as shown.
3. Install security siren (1).
4. See Figure 7-9. Push ECM panel forward and engage latch.
5. Install splash guard.
6. Install rear wheel. See 2.5 REAR WHEEL.
7. Install main fuse.

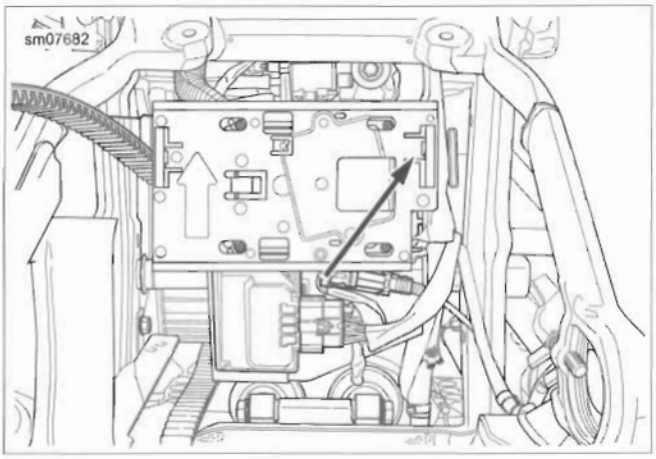

Figure 7-9. ECM

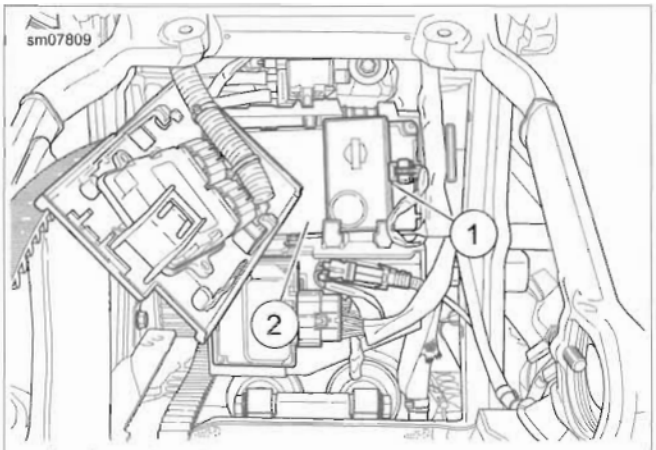

1. Security siren
2. BCM

Figure 7-10. BCM

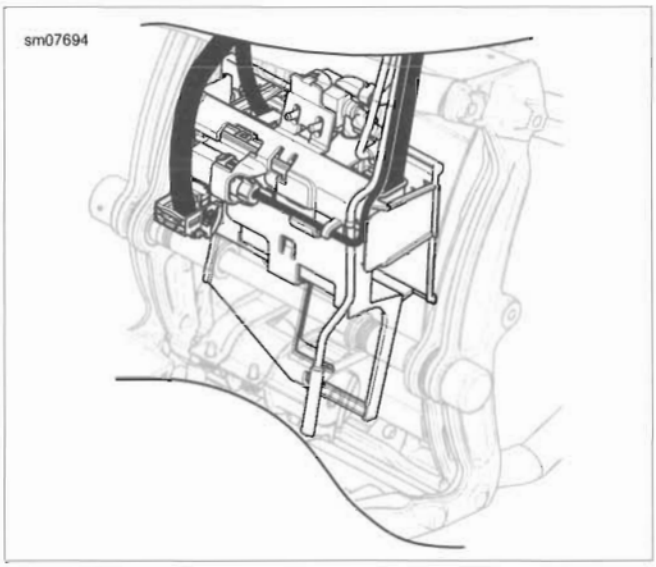

Figure 7-11. BCM Wire Routing

SIDECAR CONFIGURATION

⚠WARNING

Do not add sidecar to this motorcycle. Operating motorcycle with sidecar can cause loss of vehicle control, which could result in death or serious injury. (00590d)

ACTUATION

Activation consists of assigning two fobs to the system and entering an initial PIN. The PIN can be changed by the owner. See 7.7 PERSONAL IDENTIFICATION NUMBER (PIN), Changing The PIN.

1. Configure vehicles by assigning both fobs to the vehicle.
2. Configure vehicles by entering a PIN picked by the owner. The personal PIN allows the owner to operate the system if the fob is lost or inoperable. Record the PIN in the owner's manual. Instruct the customer to carry a copy (use the wallet card found in the owner's manual). See 7.7 PERSONAL IDENTIFICATION NUMBER (PIN).

Once the system has been activated, it "arms" within 5 seconds of switching the OFF/RUN switch to OFF and no motorcycle motion.

FOB ASSIGNMENT

PART NUMBER	TOOL NAME
HD-48650	DIGITAL TECHNICIAN II

Use DIGITAL TECHNICIAN II (Part No. HD-48650) to assign both fobs to the H-DSSS. Follow the menu prompts to scan the fob serial number with the bar code reader. Alternatively, enter the number using the keyboard. The initial PIN entry should be performed using DIGITAL TECHNICIAN II (Part No. HD-48650) in conjunction with fob assignment.

NOTE

Each fob has a unique serial number. Attach fob label to a blank NOTES page in the owner's manual for reference.

GENERAL

The PIN consists of five digits. Each digit can be any number from 1 through 9. There can be no zeros (0) in the PIN. Use the PIN to disarm the security system in case the fob becomes unavailable.

CHANGING THE PIN

The rider can change the PIN at any time. Refer to Table 7-5.

Modifying an Existing PIN

If a PIN was previously entered, the odometer will display the equivalent digit. Each additional press of the left turn switch will increment the digit.

Examples:

- To advance from 5 to 6, press and release the left turn switch 1 time.
- To advance from 8 to 2, press and release the left turn switch 3 times (9-1-2).

Table 7-5. Changing the PIN

STEP NO.	ACTION	WAIT FOR CONFIRMATION	NOTES
1	Select a 5-digit (1 thru 9) PIN and record on the wallet card from owner's manual.		
2	With an assigned fob present, turn the OFF/RUN switch to **OFF**.		
3	Turn the ignition switch to **IGN**.		
4	Cycle the OFF/RUN switch twice: **RUN - OFF - RUN - OFF - RUN**.		
5	Press **left** turn signal switch **2 times**.	ENTER PIN will scroll through the odometer window.	
6	Press **right** turn signal switch **1 time** and release.	Turn signals will flash 3 times. Current PIN will appear in odometer. The first digit will be flashing.	
7	Enter first digit of new PIN by pressing and releasing the **left** turn signal switch until the selected digit appears.		
8	Press **right** turn signal switch **1 time** and release.	The new digit will replace the current in odometer window.	
9	Enter second digit of selected PIN by pressing and releasing the **left** turn signal switch until the selected digit is present.		
10	Press **right** turn signal switch **1 time** and release.	The new digit will replace the current in odometer window.	
11	Enter third digit of the selected PIN by pressing and releasing the **left** turn signal switch until the selected digit is present.		
12	Press **right** turn switch **1 time** and release.	The new digit will replace the current in odometer window.	
13	Enter fourth digit of new PIN by pressing and releasing the **left** turn signal switch until the selected digit is present.		
14	Press **right** turn switch **1 time** and release.	The new digit will replace the current in odometer window.	
15	Enter fifth digit of the new PIN by pressing and releasing the **left** turn signal switch until the selected digit is present.		

Table 7-5. Changing the PIN

STEP NO.	ACTION	WAIT FOR CONFIRMATION	NOTES
16	Press **right** turn switch **1 time** and release.	The new digit will replace the current in odometer window.	
17	Turn the OFF/RUN switch **OFF**, then turn the ignition switch to **OFF**.		Pushing the OFF/RUN switch to **OFF** stores the new PIN in the module.

FOB BATTERY

Battery Replacement Schedule

Replace the fob battery every year.

Battery Replacement

1. Open the fob case.
   a. See Figure 7-12. Place a thin blade in the thumbnail slot (1) between the two halves of the case.
   b. Slowly twist the blade.

NOTE

Use a CR2032 or equivalent battery.

2. Replace the battery.
   a. Remove the original battery.
   b. Install a new battery with the positive side down.
3. Close the case.
   a. See Figure 7-12. With O-ring (3) in place, align case halves.
   b. Snap case halves together.



1. Thumbnail slot
2. Battery (CR2032)
3. O-ring

Figure 7-12. Open Fob

SMART SIREN (IF INSTALLED)

Battery Replacement Schedule

The siren's internal 9V battery is rechargeable and does not require replacement on a regular basis. Battery life under normal conditions is approximately three to six years.

NOTE

The internal siren battery may not charge if the motorcycle's battery is less than 12.5V.

Battery Replacement

1. Disarm system and remove siren.
2. See Figure 7-13. With a small screwdriver or pick, push the catches (1) in through the two slots (2) in the end of the siren to release the battery cover (3).

NOTES

- *For protection against corrosion, battery terminals and battery clip are covered with a special grease. Do not wipe away this substance. Apply all available existing grease to terminals on new battery.*
- *Use only a 9V nickel metal hydride battery in the siren.*

3. Replace battery (4) by removing old battery from polarized battery clip.
4. Recharge and install or install a new 9V nickel metal hydride battery.
5. Install battery cover (3).
   a. Carefully replace the rubber seal (5) on the cover.
   b. Align battery cover with case placing round corners on cover away from connector [142A] (6).
   c. Snap cover into place.
6. Install siren and check operation. Two chirps after an arming command indicate a working siren.

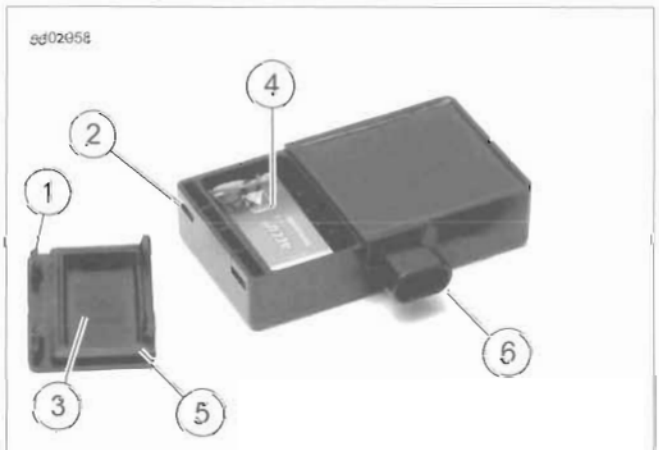

1. Catch (2)
2. Slot (2)
3. Cover
4. 9 Volt battery
5. Rubber seal
6. Connector [142A]

Figure 7-13. Battery Compartment

REMOVAL: ALL BUT FXSB

1. Remove seat.

⚠WARNING

To prevent accidental vehicle start-up, which could cause death or serious injury, remove main fuse before proceeding. (00251b)

2. Remove main fuse.
3. Remove right side saddlebag, if present.

NOTE

Rear wheel may have to be raised slightly to allow for splash guard removal.

4. Remove bolt from lower end of splash guard. Lift up on tabs and pull lower end of splash guard toward rear tire.
5. Pull upper end of splash guard off rear fork and move splash guard from motorcycle.

NOTES

- *Anti-theft units see Figure 7-15. The anti-theft tracking module is combined with the security siren. An antenna is hard wired to the anti-theft module and needs to be detached from its mounting position.*
- *Cutting antenna wire will activate anti-theft device. See the electrical diagnostic manual for more information.*
- *Note the routing of the anti-theft module antenna wire for installation.*

6. See Figure 7-14. Detach security siren (5) from electrical panel and remove electrical connector.

INSTALLATION: ALL BUT FXSB

FASTENER	TORQUE VALUE	
Splash guard screw: all but FXSB	36-48 in-lbs	4.1-5.4 Nm

1. See Figure 7-14. Connect security siren connector and install security siren (5) onto electrical panel.
2. Place splash guard into position and snap upper end onto rear fork.
3. Press lower end against rear fork until the tabs snap into place.
4. Install screw to secure splash guard. Tighten to 36-48 **in-lbs** (4.1-5.4 Nm).
5. Install right side saddlebag, if removed.
6. Install main fuse.

⚠WARNING

After installing seat, pull upward on seat to be sure it is locked in position. While riding, a loose seat can shift causing loss of control, which could result in death or serious injury. (00070b)

7. Install seat.

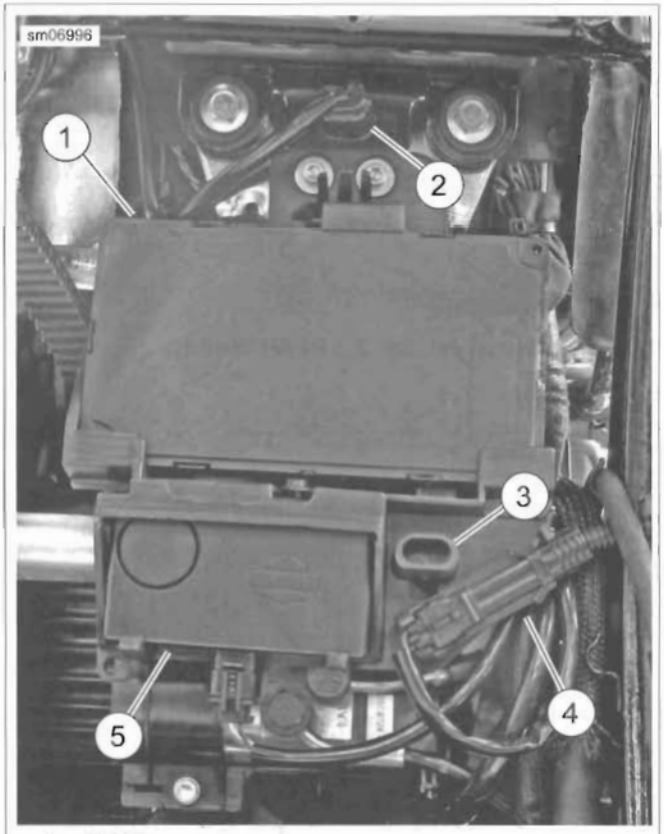

1. **BCM**
2. **Purge solenoid connector receptacle**
3. **Security siren connector receptacle**
4. **Wheel speed sensor connector**
5. **Security siren**

Figure 7-14. Body Control Module (BCM): All But FXSB

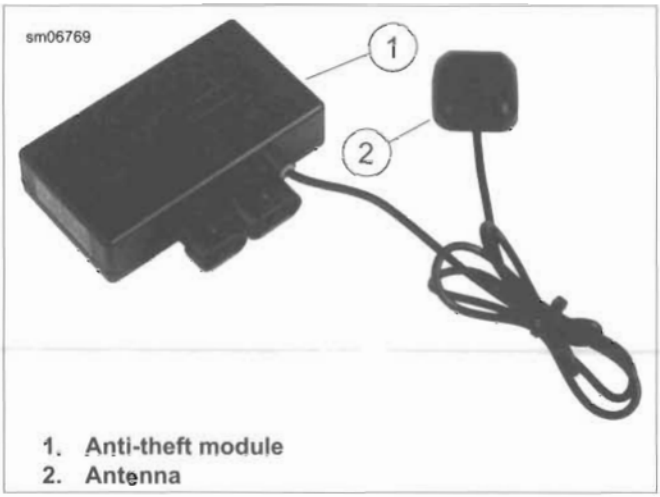

1. **Anti-theft module**
2. **Antenna**

Figure 7-15. Anti-Theft Module (Brazil market)

REMOVAL: FXSB

1. Remove main fuse.
2. Remove rear wheel. See 2.5 REAR WHEEL.
3. Remove splash guard.

4. See Figure 7-16. Press in on tab and pull ECM panel away from latch.
5. See Figure 7-17. Disconnect electrical connector.
6. Remove security siren.

INSTALLATION: FXSB

1. See Figure 7-17. Install security siren.
2. Connect electrical connector.
3. See Figure 7-16. Push ECM panel forward and engage latch.
4. Install splash guard.
5. Install rear wheel. See 2.5 REAR WHEEL.
6. Install main fuse.

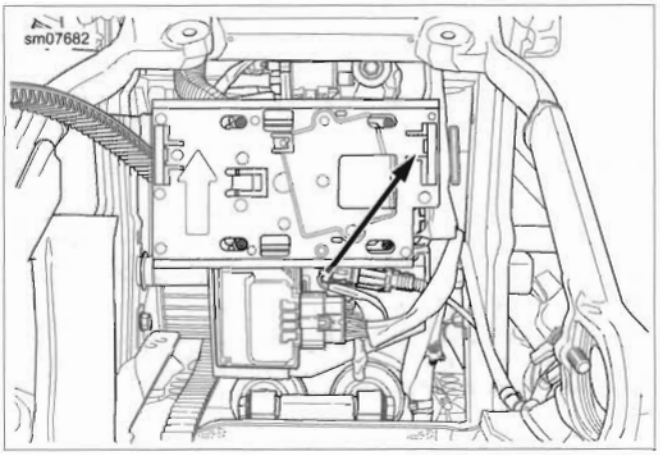

Figure 7-16. ECM

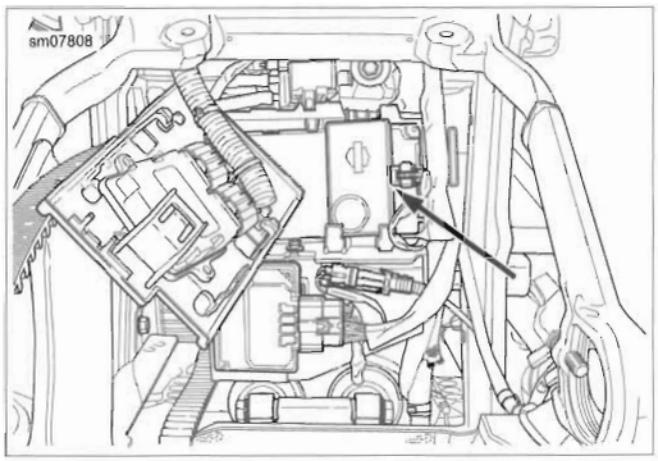

Figure 7-17. Security Siren

REMOVAL

1. Remove seat.
2. See Figure 7-18. Pull fuse block away from cover.
3. See Figure 7-19. Replace suspect fuse.

INSTALLATION

1. Place fuse block back into cover and make sure cover is secured to frame.

⚠WARNING

After installing seat, pull upward on seat to be sure it is locked in position. While riding, a loose seat can shift causing loss of control, which could result in death or serious injury. (00070b)

2. Install seat.

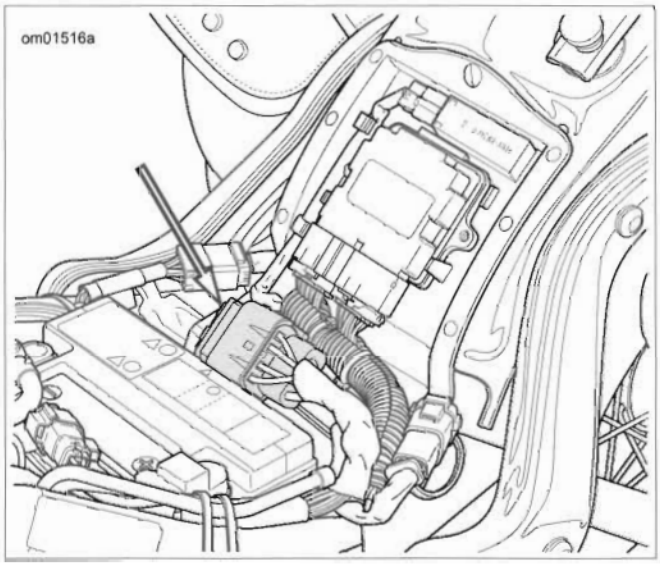

Figure 7-18. Fuse Block Location

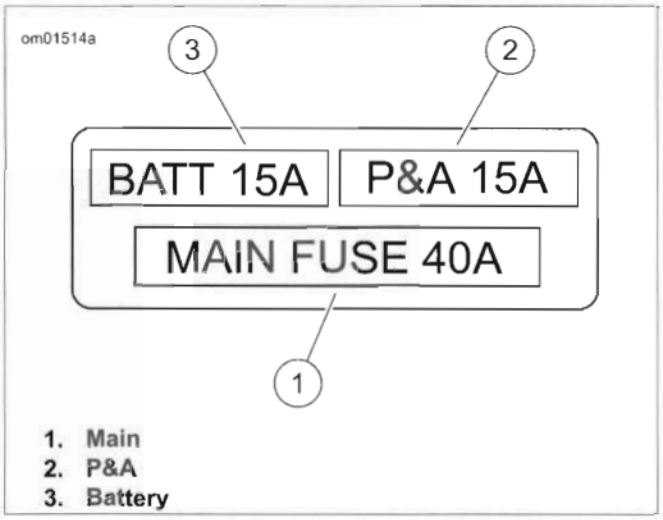

1. Main
2. P&A
3. Battery

Figure 7-19. Fuse Block

GENERAL

⚠WARNING

The automatic-on headlamp feature provides increased visibility of the rider to other motorists. Be sure headlamp is on at all times. Poor visibility of rider to other motorists can result in death or serious injury. (00030b)

Softail model ignition/light/key switches are non-repairable. If a switch is damaged, it must be replaced. Key switch functions and locations are listed in Table 7-6.

REMOVAL AND INSTALLATION: ALL BUT FXSB

FASTENER	TORQUE VALUE	
Instrument panel acorn nut: all but FXSB	84-132 in-lbs	9.5-14.9 Nm

1. Remove seat.

⚠WARNING

To prevent accidental vehicle start-up, which could cause death or serious injury, remove main fuse before proceeding. (00251b)

2. Remove main fuse.
3. See Figure 7-20. Remove acorn nut and washer (1) from panel (2 or 5) and remove panel.
4. Remove electrical connector from switch.
5. Remove mounting screws (4). Replace switch.
6. Install mounting screws (4).
7. Install electrical connector to switch.
8. Install instrument panel using acorn nut and washer. Tighten to 84-132 **in-lbs** (9.5-14.9 Nm).
9. Install main fuse.

⚠WARNING

After installing seat, pull upward on seat to be sure it is locked in position. While riding, a loose seat can shift causing loss of control, which could result in death or serious injury. (00070b)

10. Install seat.

⚠WARNING

Be sure that all lights and switches operate properly before operating motorcycle. Low visibility of rider can result in death or serious injury. (00316a)

11. Test vehicle operation. Refer to Table 7-6.

NOTE

Harley-Davidson recommends removing key from lock before operating motorcycle. Keys left in the ignition switch can fall out while riding.

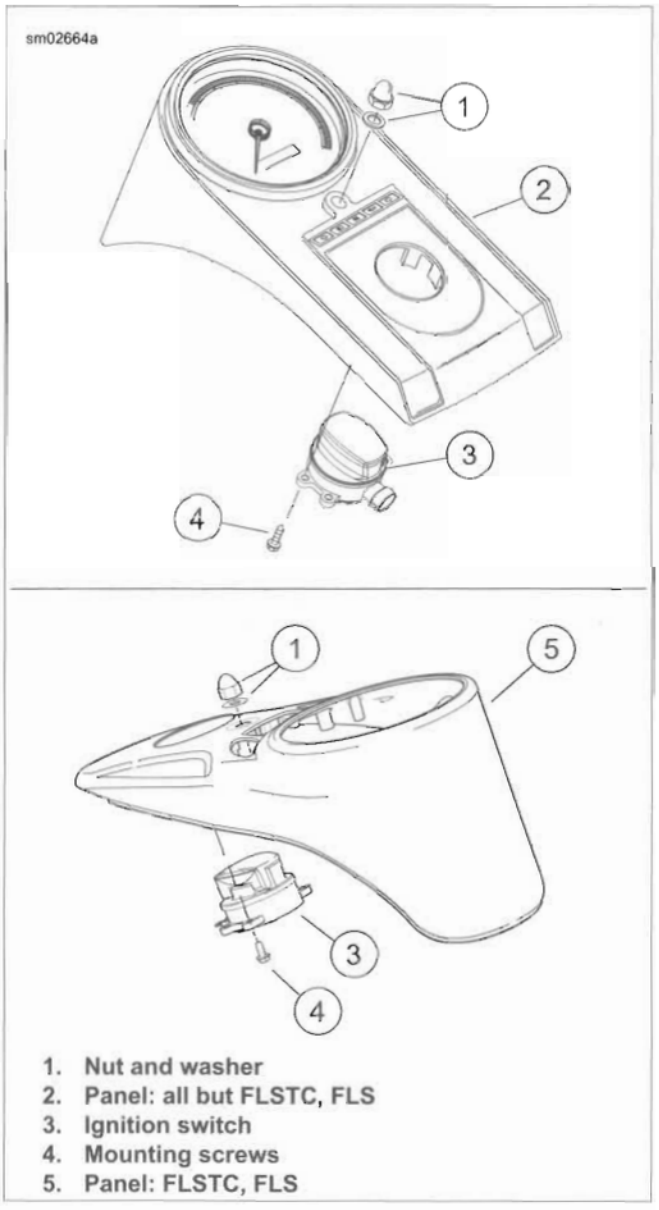

1. **Nut and washer**
2. **Panel: all but FLSTC, FLS**
3. **Ignition switch**
4. **Mounting screws**
5. **Panel: FLSTC, FLS**

Figure 7-20. Ignition Switch: All But FXSB

Table 7-6. Key Switch Functions and Positions

MODEL AND LOCATION	DOMESTIC SWITCH	HDI SWITCH
All but FXSB: tank console. **FXSB:** left side of engine.	OFF - Ignition and lights are off.	Same
	ACC. - Instrument lights are on. Brake light and horn can be activated.	Same; in addition, position lamp, tail lamp are ON.
	IGNITION - Hazard warning flasher can be turned on. Ignition, lights and accessories are on.	Same; in addition, position lamp is ON.

REMOVAL AND INSTALLATION: FXSB

PART NUMBER	TOOL NAME
HD-50988	IGNITION SWITCH SPANNER WRENCH

FASTENER	TORQUE VALUE	
Ignition/light switch nut: FXSB	140-160 in-lbs	15.8-18.1 Nm

1. Remove seat.

⚠WARNING

To prevent accidental vehicle start-up, which could cause death or serious injury, remove main fuse before proceeding. (00251b)

2. Remove main fuse.
3. Turn ignition/light switch to ON position.
4. See Figure 7-21. Loosen set screw (6) and remove knob (5).
5. Remove nut (4) using IGNITION SWITCH SPANNER WRENCH (Part No. HD-50988).
6. Disconnect ignition/light switch electrical connector.
7. Replace ignition/light switch (1).
8. Connect ignition/light switch electrical connector.
9. Clean threads of nut (4). Apply LOCTITE 243 MEDIUM STRENGTH THREADLOCKER AND SEALANT (blue).
10. Install nut (4) using IGNITION SWITCH SPANNER WRENCH (Part No. HD-50988). Tighten nut to 140-160 in-lbs (15.8-18.1 Nm).
11. Install knob (5) and tighten set screw (6).
12. Install main fuse.

⚠WARNING

After installing seat, pull upward on seat to be sure it is locked in position. While riding, a loose seat can shift causing loss of control, which could result in death or serious injury. (00070b)

13. Install seat.

⚠WARNING

Be sure that all lights and switches operate properly before operating motorcycle. Low visibility of rider can result in death or serious injury. (00316a)

14. Test vehicle operation. Refer to Table 7-6.

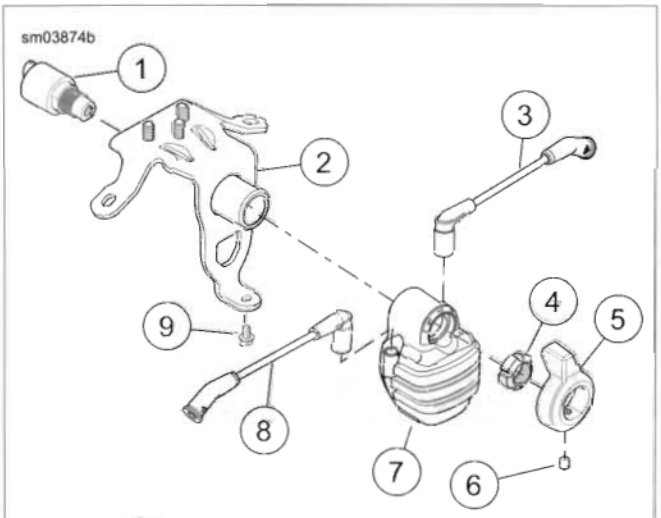

1. **Ignition/light switch**
2. **Bracket**
3. **Rear cylinder spark plug cable**
4. **Nut**
5. **Knob**
6. **Set screw**
7. **Coil**
8. **Front cylinder spark plug cable**
9. **Screw**

Figure 7-21. Ignition/Light Switch: FXSB

ROUTING PROCEDURE

FASTENER	TORQUE VALUE	
Starter nut	70-90 in-lbs	7.9-10.2 Nm
Battery cable to battery fasteners	60-72 in-lbs	6.8-8.1 Nm
Battery cable to battery fasteners	60-72 in-lbs	6.8-8.1 Nm

1. See Figure 7-22. Position positive battery cable properly at starter. Cable end must face 35 degrees +/-10 degrees forward from left side of vehicle.

⚠WARNING

Be sure rubber boot covers starter solenoid terminal connected to positive (+) battery cable. An uncovered terminal can short and cause sparks, which could result in a battery explosion and death or serious injury. (00463c)

2. Tighten starter nut to 70-90 **in-lbs** (7.9-10.2 Nm) and cover with boot.
3. See Figure 7-23. Place battery caddy into position and install battery caddy clip (1) under front of battery tray (3). Make sure tabs (2) of battery caddy fit over rear of battery tray.
4. See Figure 7-24. Install positive battery cable (1) into clip (3) in caddy.
5. Route rear oxygen sensor harness (2) through clip (3).

NOTICE

Connect the cables to the correct battery terminals. Failure to do so could result in damage to the motorcycle electrical system. (00215a)

⚠WARNING

Connect positive (+) battery cable first. If positive (+) cable should contact ground with negative (-) cable connected, the resulting sparks can cause a battery explosion, which could result in death or serious injury. (00068a)

6. See Figure 7-25. Install battery. Tighten positive battery terminal fastener to 60-72 **in-lbs** (6.8-8.1 Nm).
7. Install negative battery cable (2) at battery frame ground (1) before any accessory ground wires.
8. Install negative battery cable (2) at battery. Tighten negative battery terminal fastener to 60-72 **in-lbs** (6.8-8.1 Nm).

⚠WARNING

After installing seat, pull upward on seat to be sure it is locked in position. While riding, a loose seat can shift causing loss of control, which could result in death or serious injury. (00070b)

9. Install seat.

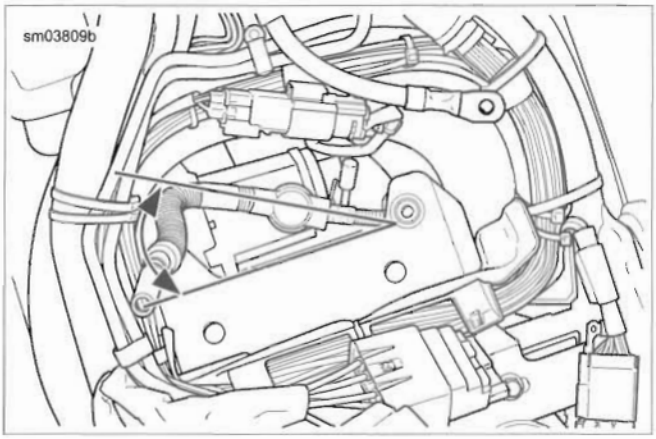

Figure 7-22. Positive Battery Cable Routing

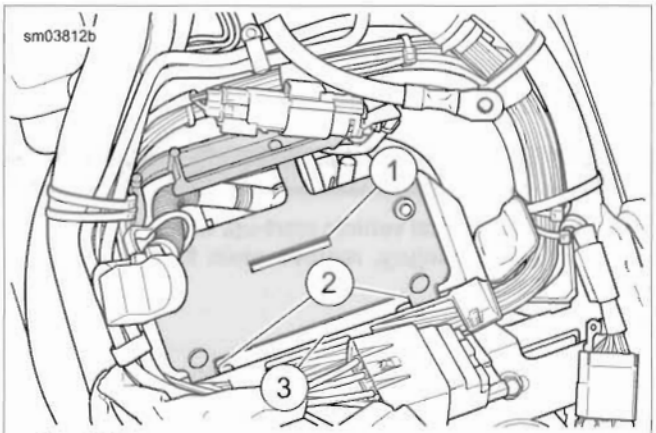

1. Clip
2. Tabs
3. Battery tray

Figure 7-23. Battery Caddy

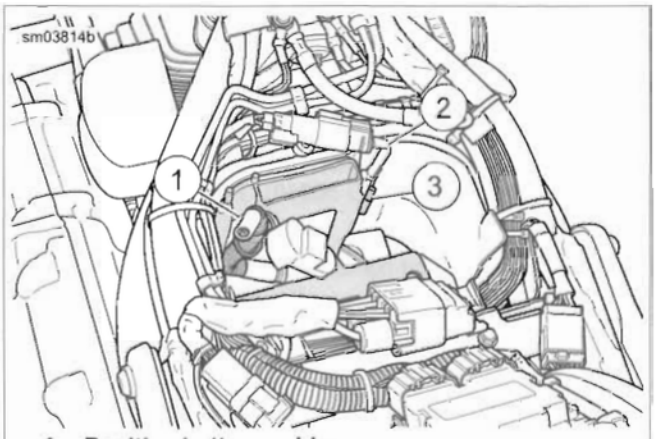

1. Positive battery cable
2. Rear oxygen sensor harness
3. Clip

Figure 7-24. Battery Caddy Wire Routing

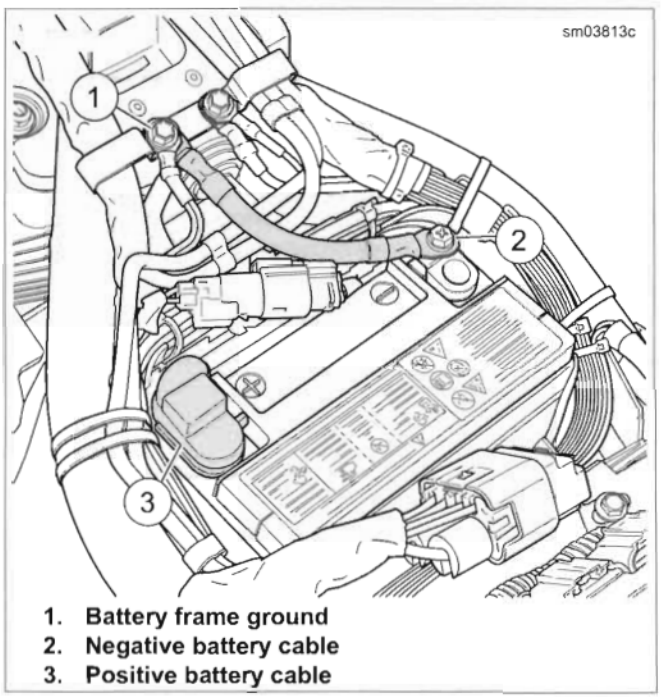

1. Battery frame ground
2. Negative battery cable
3. Positive battery cable

Figure 7-25. Battery Connections

GENERAL

The starter assembly includes a field coil, solenoid and drive assembly.

NOTES

- *For troubleshooting and diagnostic information see the electrical diagnostic manual.*
- *Use touch-up paint as necessary prior to installation. Paint flaking does not require starter replacement.*

REMOVAL

⚠WARNING

To prevent accidental vehicle start-up, which could cause death or serious injury, disconnect negative (-) battery cable before proceeding. (00048a)

1. Remove rear wheel. See 2.5 REAR WHEEL.
2. Remove electrical panel. See 7.3 ELECTRICAL PANEL.
3. Remove battery.
4. Remove positive cable from starter.
5. See Figure 7-30. Detach solenoid wire (4).
6. Remove both starter mounting fasteners (2).
7. Remove starter.
8. Before disassembling the starter, perform diagnostics listed in the electrical diagnostic manual.

DRIVE ASSEMBLY

FASTENER	TORQUE VALUE	
Starter through bolts	39-65 in-lbs	4.4-7.3 Nm
Solenoid terminal post nut	70-90 in-lbs	7.9-10.2 Nm
Starter end cover screw	90-110 in-lbs	10.2-12.4 Nm

Disassembly

1. Remove end cover, if equipped.
2. Remove two nuts to release end cover bracket from through bolts, if equipped.
3. See Figure 7-26. Pull up rubber boot (1). Remove hex nut with captive lockwasher. Release field wire from terminal post on solenoid housing.
4. Loosen two through bolts (2) to release field coil housing from solenoid housing.

NOTE

Do not remove armature and brush plate from housing. No replacement parts are available.

5. Remove armature housing (3) keeping all contents together for reassembly.
6. Remove two screws to release drive housing from solenoid housing. Use a rubber mallet to separate drive and solenoid housings, if necessary.
7. Remove idler gear (5) from bearing cage in drive housing. Remove bearing cage with five roller bearings (6) from shaft in drive housing.
8. Push on end of drive shaft to remove clutch starter sub assembly (7) from drive housing.
9. Remove solenoid spring and ball from the output shaft of the clutch starter sub assembly.

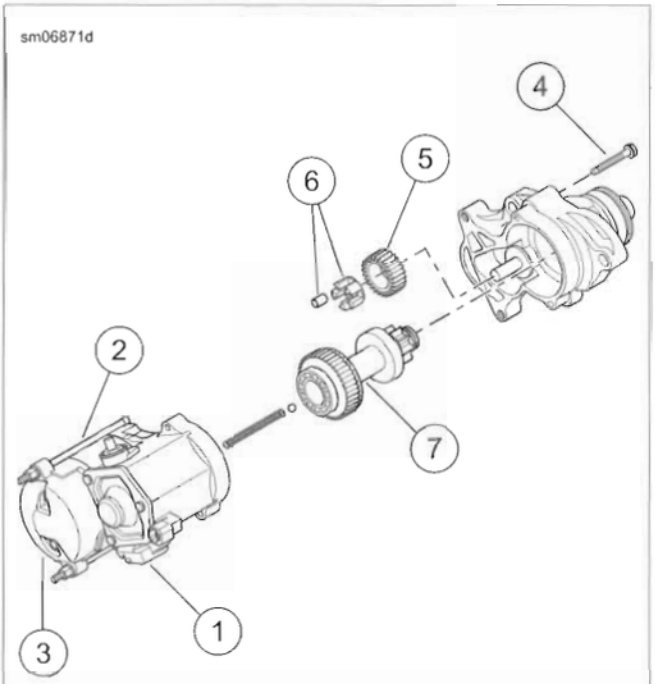

1. **Rubber boot**
2. **Field coil housing through bolts**
3. **Armature housing**
4. **Screws (2)**
5. **Idler gear**
6. **Bearing cage with roller bearings (5)**
7. **Clutch starter sub-assembly**

Figure 7-26. Clutch Starter Sub-Assembly and Housing

Inspection

1. Inspect two O-rings on drive housing for damage. Replace if necessary.
2. See Figure 7-26. Verify that the idler gear (5) rotates freely without drag or sticking.
3. Remove and inspect idler gear. Replace starter motor if the gear is damaged.
4. Inspect roller bearings (6). Bearings must rotate freely without drag or sticking. Replace starter motor if the bearings are pitted or grooved.
5. Inspect the steel ball for damage. Replace if necessary.

NOTE

Replace entire starter motor if solenoid return spring fails.

Assembly

1. See Figure 7-26. Assemble starter.
   a. Lubricate parts with high temperature grease such as LUBRIPLATE 110 during assembly.
   b. Install bearing cage with five roller bearings (6) onto shaft in drive housing.
   c. Confirm that all five roller bearings are installed in grooves of bearing cage and install idler gear (5) over bearing cage.
2. Lubricate bearings with LUBRIPLATE 110 before installation. Install **new** clutch starter sub assembly (7) in drive housing seating the larger bearing in the counterbore.
3. Apply a light film of LUBRIPLATE 110 to solenoid plunger shaft. Install return spring on solenoid plunger shaft.

NOTE

Before mating the solenoid and drive housings, apply a thin layer of HARLEY-DAVIDSON HIGH PERFORMANCE SEALANT - GRAY to drive housing between the two housings.

4. Mate the solenoid and drive housings with two screws. Alternately tighten until snug.
5. Install through bolts to fasten field coil to solenoid housing. Tighten to 39-65 **in-lbs** (4.4-7.3 Nm).
6. Secure field wire ring terminal to short post on solenoid housing with hex nut with captive lockwasher. Tighten to 70-90 **in-lbs** (7.9-10.2 Nm). Cover field wire ring terminal with rubber boot (1).
7. Install end cover bracket onto through bolts, if equipped. Orient longest end of bracket on the field wire side. Install two nuts. Tighten until snug.
8. Install end cover, if equipped. Tighten to 90-110 **in-lbs** (10.2-12.4 Nm).

SOLENOID

FASTENER	TORQUE VALUE	
Solenoid contact post jamnut	65-80 **in-lbs**	7.3-9.0 Nm
Starter ring terminal hex nut	60-80 **in-lbs**	6.8-9.0 Nm

Cover and Plunger Removal

1. See Figure 7-27. Remove fasteners (1), cover (2) and gasket (3).
2. Remove the plunger (4) with spring (5).

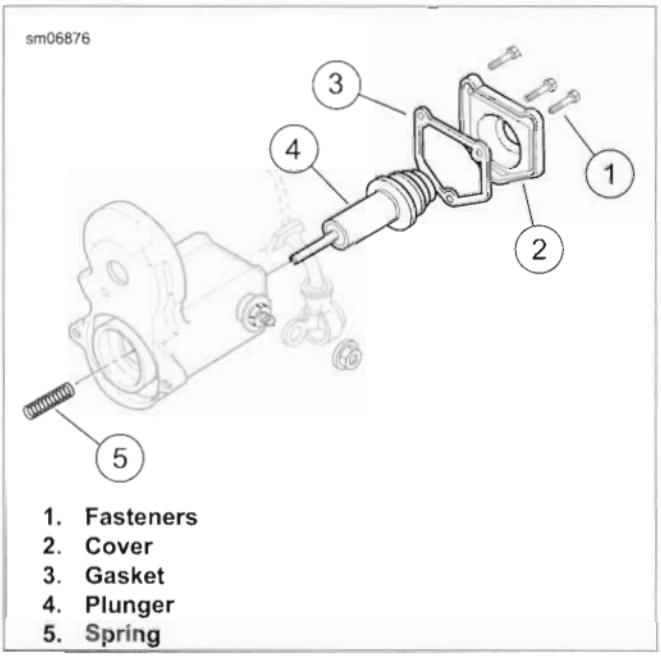

1. **Fasteners**
2. **Cover**
3. **Gasket**
4. **Plunger**
5. **Spring**

Figure 7-27. Solenoid Plunger

Short Post Contact: Starter

1. Disassemble the short post contact:
   a. Remove the hex nut and the ring terminal from the post.
   b. See Figure 7-28. Remove jamnut (8), wave washer (7), O-ring (6) and round bushing (5).
   c. Remove the post bolt (1).
   d. Remove the hold-in terminal (2) from the post bolt.
   e. Remove the contact plate (3) and the square bushing (4).
2. Assemble the short post contact:
   a. Insert the square bushing into the housing.
   b. Install the contact plate with the 90 degree part of the contact plate against the solenoid winding.
   c. Install the post bolt through the hold-in terminal, the contact plate and the square bushing.
   d. Install the round bushing, O-ring, wave washer and jamnut.

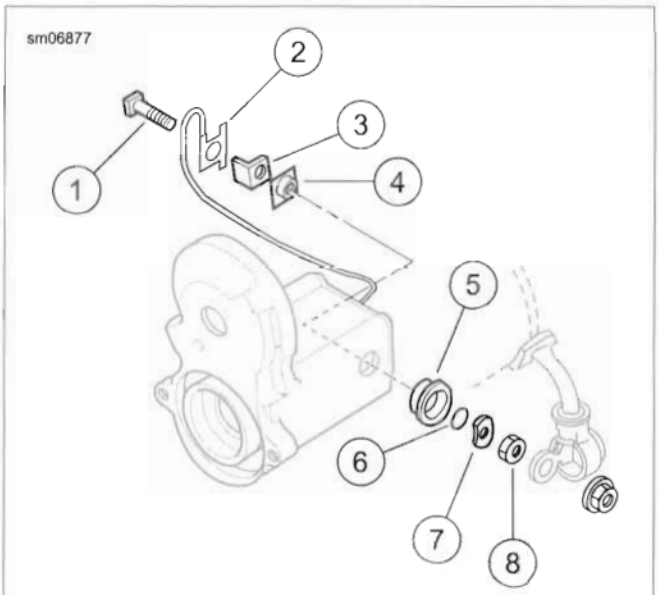

1. Post bolt
2. Hold-in terminal
3. Contact plate
4. Square bushing
5. Round bushing
6. O-ring
7. Wave washer
8. Jamnut

Figure 7-28. Short Post Contact (starter)

Long Post Contact: Battery Positive

1. See Figure 7-29. Remove the long post contact:
   a. Remove hex nut (9).
   b. Remove jamnut (8), wave washer (7), O-ring (6) and the round bushing (5).
   c. Remove post bolt (4), contact plate (3), square bushing (2) and paper insulator (1).
2. Install the long post contact:
   a. Insert the square bushing through the paper insulator into the housing.
   b. Install the contact plate with the foot against the solenoid winding.
   c. Install the post bolt.

   NOTE

   Check that the index pin on the round bushing fits the blind hole in the housing.

   d. Install the round bushing, O-ring, wave washer and jamnut.

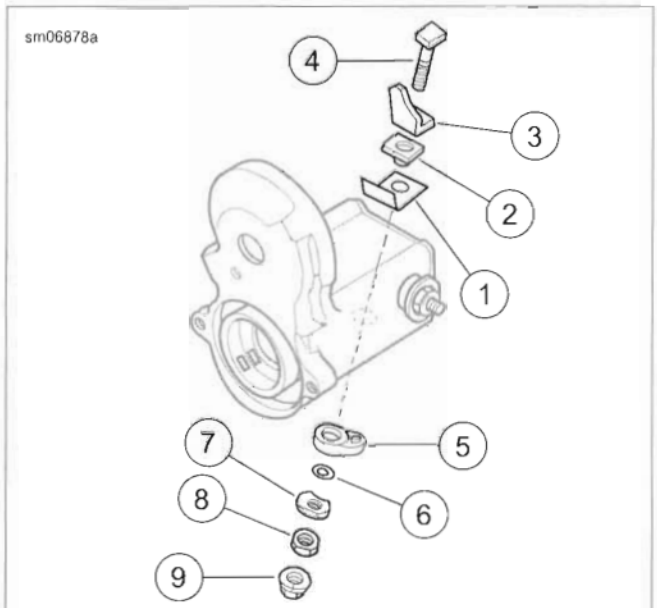

1. Paper insulator
2. Square bushing
3. Contact plate
4. Post bolt
5. Round bushing
6. O-ring
7. Wave washer
8. Jamnut
9. Hex nut

Figure 7-29. Long Post Contact (battery)

Plunger and Cover Installation

1. Apply LUBRIPLATE 110 to the plunger shaft. Install the spring.
2. Install the plunger and spring in the housing.
3. While compressing the plunger, alternately tighten the contact post jamnuts to 65-80 **in-lbs** (7.3-9.0 Nm).
4. Check that the contact plates are aligned to the solenoid winding.
5. Install the cover:
   a. Install a **new** gasket on the cover.
   b. Install the cover.
   c. Install the fasteners until snug.
6. Install the starter positive ring terminal.
7. Install the hex nut. Tighten to 60-80 **in-lbs** (6.8-9.0 Nm).

INSTALLATION

FASTENER	TORQUE VALUE	
Starter mounting bolts	25-27 ft-lbs	33.9-36.6 Nm

1. Install starter.
2. See Figure 7-30. Apply LOCTITE 243 MEDIUM STRENGTH THREADLOCKER AND SEALANT (blue) to threads of both starter mounting fasteners (2). Install and tighten to 25-27 ft-lbs (33.9-36.6 Nm).

3. Attach solenoid wire (4).
4. Install positive battery cable to starter. Make sure cable is angled properly. See 7.12 BATTERY CABLES.
5. Install electrical panel. See 7.3 ELECTRICAL PANEL.
6. Install rear wheel. See 2.5 REAR WHEEL.
7. Install battery. See 1.19 BATTERY MAINTENANCE.

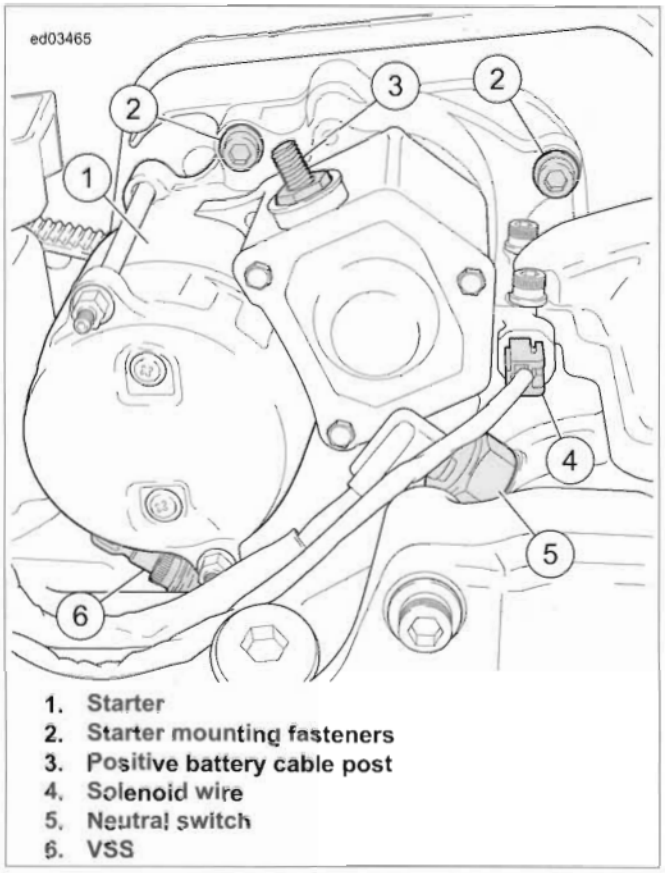

1. Starter
2. Starter mounting fasteners
3. Positive battery cable post
4. Solenoid wire
5. Neutral switch
6. VSS

Figure 7-30. Starter Components

GENERAL

NOTICE

When replacement is required, use only the specified sealed beam unit or bulb, available from a Harley-Davidson dealer. An improper wattage sealed beam or bulb, can cause charging system problems. (00209a)

If either headlamp bulb filament burns out, replace the bulb. Use only direct replacement bulbs as specified in the parts catalog and 1.4 BULB REQUIREMENTS.

NOTE

Align slots and tabs in headlamp, mounting ring and trim ring during assembly.

⚠WARNING

Be sure that all lights and switches operate properly before operating motorcycle. Low visibility of rider can result in death or serious injury. (00316a)

HEADLAMP ASSEMBLY REMOVAL AND INSTALLATION

Removal

NOTE

Fuel tank crossover hose does not need to be disconnected. Fuel tank can be slid back enough to remove required connectors.

1. Slide fuel tank rearward. See 4.6 FUEL TANK.
2. See Figure 7-31. Disconnect headlamp connector (5).
3. **Fender tip lamp equipped:** disconnect front fender tip lamp connector (6).
4. **Auxiliary lamps equipped:** disconnect headlamp connector at auxiliary switch connector.
5. See Figure 7-32. Remove horizontal adjusting bolt (2) and headlamp assembly.

Installation

1. See Figure 7-32. Install headlamp assembly with horizontal adjusting bolt (2).
2. **Auxiliary lamps equipped:** connect headlamp connector to auxiliary switch connector.
3. **Fender tip lamp equipped:** see Figure 7-31. Connect front fender tip lamp connector (6).
4. Connect headlamp connector (5).
5. Install fuel tank. See 4.6 FUEL TANK.
6. Adjust headlamp alignment. See 1.20 HEADLAMP ALIGNMENT.

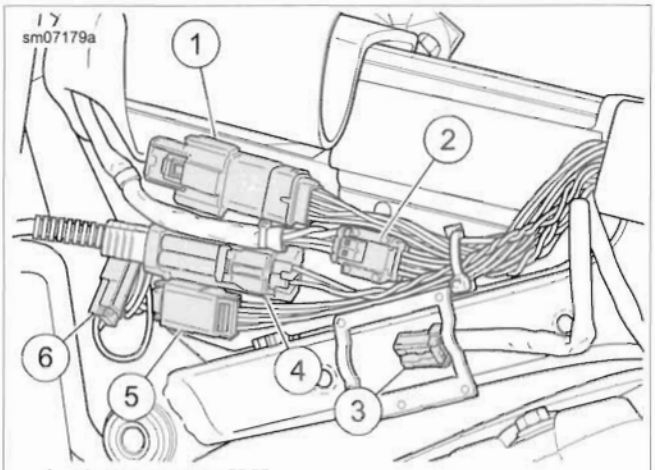

1. **Instruments [20]**
2. **Left hand control [24]**
3. **Fuel gauge [117]**
4. **Front wheel speed sensor [167]**
5. **Headlamp [38]**
6. **Front fender tip lamp [32]: FLSTC**

Figure 7-31. Under Fuel Tank Left Side

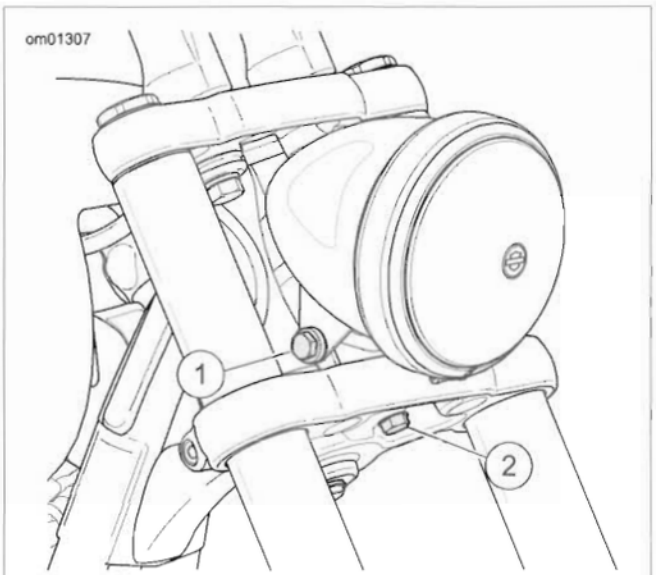

1. **Vertical adjusting bolt**
2. **Horizontal adjusting bolt**

Figure 7-32. Headlamp Adjustment (typical)

BULB REMOVAL AND INSTALLATION

NOTICE

Never touch the quartz bulb. Fingerprints will etch the glass and decrease bulb life. Handle the bulb with paper or a clean, dry cloth. Failure to do so could result in bulb damage. (00210b)

⚠WARNING

Handle bulb carefully and wear eye protection. Bulb contains gas under pressure, which, if not handled carefully, could cause serious eye injury. (00062b)

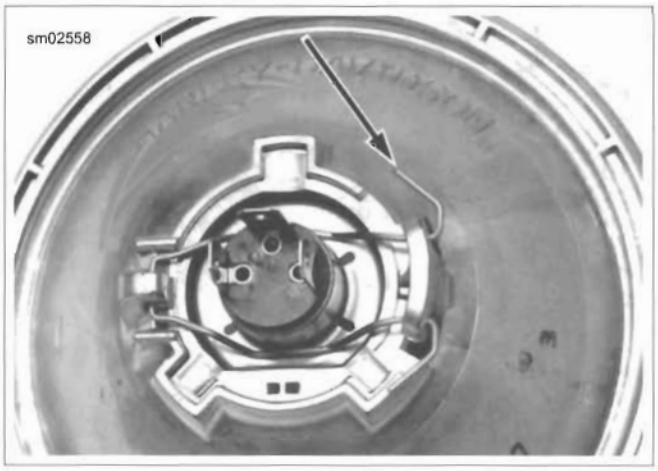

Figure 7-33. Wire Retaining Clip

FXST, FXSB Models

1. See Figure 7-34. Loosen trim ring screw (4). Remove trim ring (3).
2. Pull wiring connector block from bulb prongs.
3. Remove rubber boot (7) from back of headlamp (5).
4. See Figure 7-33. Squeeze wire retaining clip ends to unhook them from notches in headlamp assembly.
5. Pivot wire retaining clip away from bulb. Replace old bulb with **new** bulb.
6. Assemble headlight components. See 1.20 HEADLAMP ALIGNMENT to adjust light beam.

FLSTC, FLSTF/B, FLSTN and FLS Models

1. See Figure 7-34. Remove trim ring screw (4) and trim ring (3). Be careful not to bend the two tabs that hold the top of the trim ring in place.
2. Remove mounting ring screws (16) and mounting ring that holds sealed beam headlamp in place.
3. Pull wiring connector block from bulb prongs.
4. Remove rubber boot (7) from back of headlamp (5).
5. See Figure 7-33. Squeeze wire retaining clip ends to unhook them from notches in headlamp assembly.
6. Pivot wire retaining clip away from bulb. Replace old bulb with **new** bulb.
7. Assemble headlight components. See 1.20 HEADLAMP ALIGNMENT to adjust light beam.

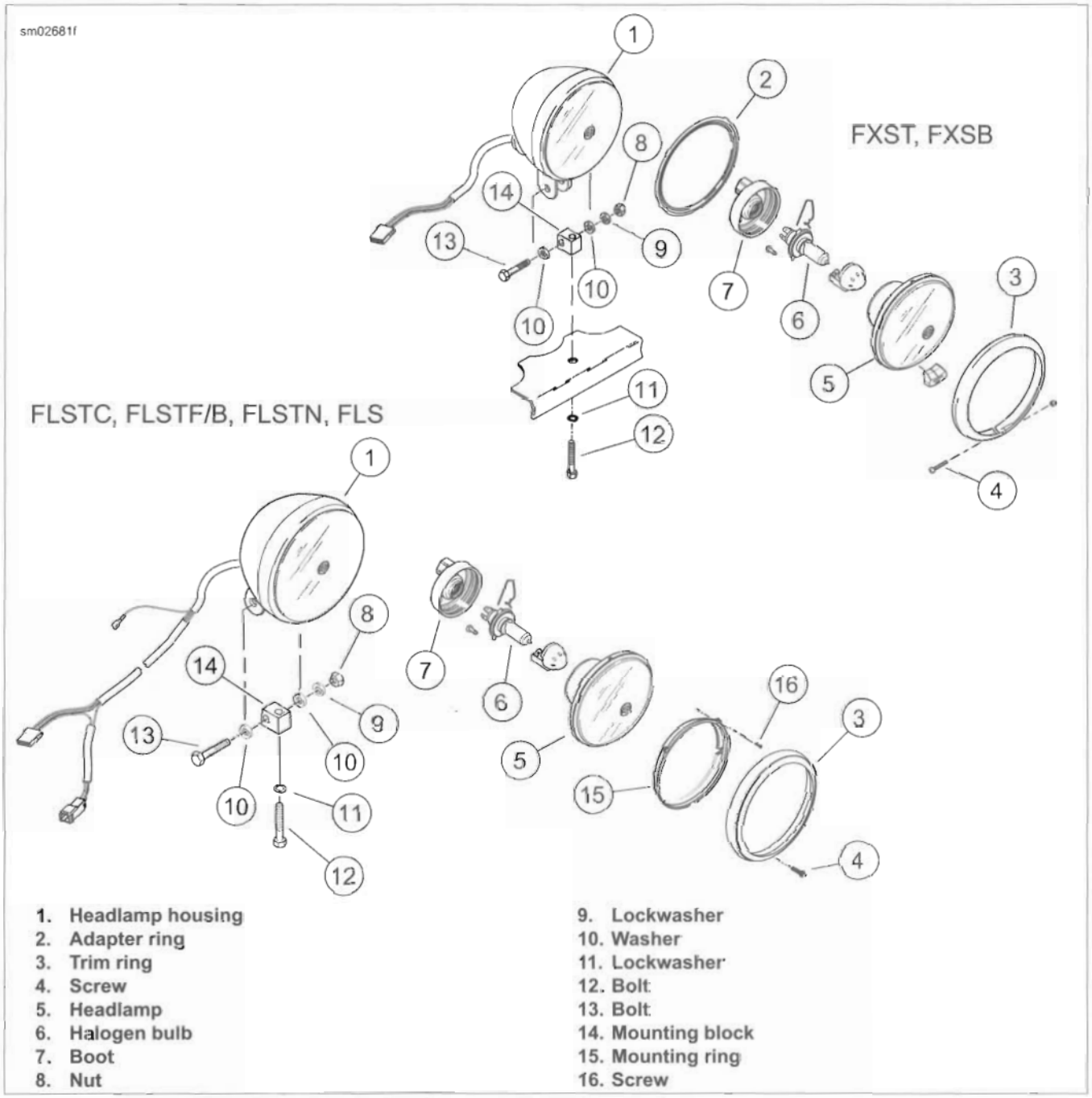

1. Headlamp housing
2. Adapter ring
3. Trim ring
4. Screw
5. Headlamp
6. Halogen bulb
7. Boot
8. Nut
9. Lockwasher
10. Washer
11. Lockwasher
12. Bolt
13. Bolt
14. Mounting block
15. Mounting ring
16. Screw

Figure 7-34. Headlamps

GENERAL

FXSB (with tail lamp for Canada) and FLS (all but Domestic and California) license plate lamp use a non-replaceable LED bulb. The entire lamp assembly must be replaced. See 7.18 TURN SIGNALS AND RUNNING LIGHTS, Lamp Replacement for license plate lamp (with tail lamp for Canada) replacement.

FLSTC and FLSTF/B models are equipped with a tail lamp that uses a mini harness and circuit board to simplify replacement.

The FXST uses the same type assembly, but the lens and base are oriented 180 degrees opposite from the other models. These models also use a different mini-harness than the other models.

BULB REPLACEMENT

FASTENER	TORQUE VALUE	
Tail lamp lens screws	20-24 **in-lbs**	2.3-2.7 Nm

1. See Figure 7-35. Remove two screws and lens (1) from base.
2. Press locking tab and remove 4-Pin multilock connector (3) from circuit board.
3. Rotate bulb socket 1/4 turn counterclockwise and remove from tail lamp assembly. Gently pull bulb from socket.
4. Coat base of **new** bulb with ELECTRICAL CONTACT LUBRICANT. Install **new** bulb into socket.
5. Insert socket into tail lamp assembly and rotate 1/4 turn clockwise.
6. Connect 4-Pin multilock connector to circuit board.
7. Install lens to base with two screws. Tighten to 20-24 **in-lbs** (2.3-2.7 Nm).

⚠WARNING

Be sure that all lights and switches operate properly before operating motorcycle. Low visibility of rider can result in death or serious injury. (00316a)

8. Turn ignition on. Test for proper tail lamp operation.

BASE REPLACEMENT

PART NUMBER	TOOL NAME
HD-41475-100	FLAT BLADE L-HOOK

FASTENER	TORQUE VALUE	
Headlamp circuit board/pin housing screw: All but FLSTN	40-48 **in-lbs**	4.5-5.4 Nm
Headlamp lens base screws: All but FLSTN	20-24 **in-lbs**	2.3-2.7 Nm

1. Remove two screws and lens from base.
2. Press locking tab and remove 4-Pin multilock connector from circuit board.
3. See Figure 7-36. Using a FLAT BLADE L-HOOK (Part No. HD-41475-100), press locking tabs and remove two 2-Pin turn signal connectors and 6-Pin Power In connector from circuit board.
4. See Figure 7-37. Remove screw, pin housing (1) and circuit board (2) from base.
5. Remove base from rear fender.

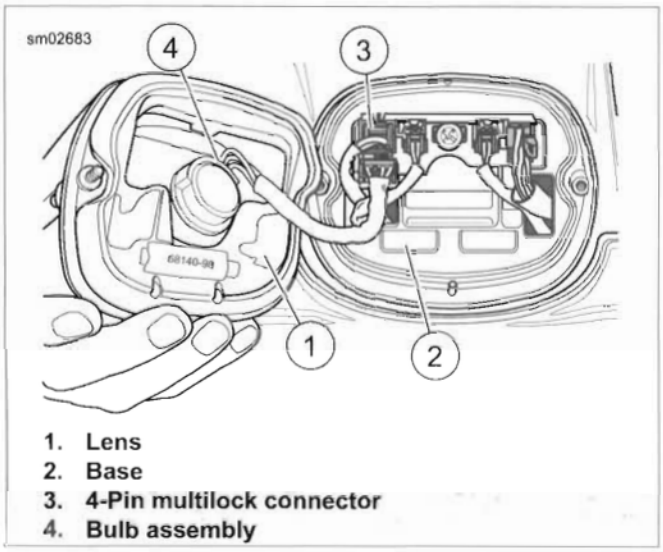

1. **Lens**
2. **Base**
3. **4-Pin multilock connector**
4. **Bulb assembly**

Figure 7-35. Tail Lamp: FLSTC, FLSTF/B

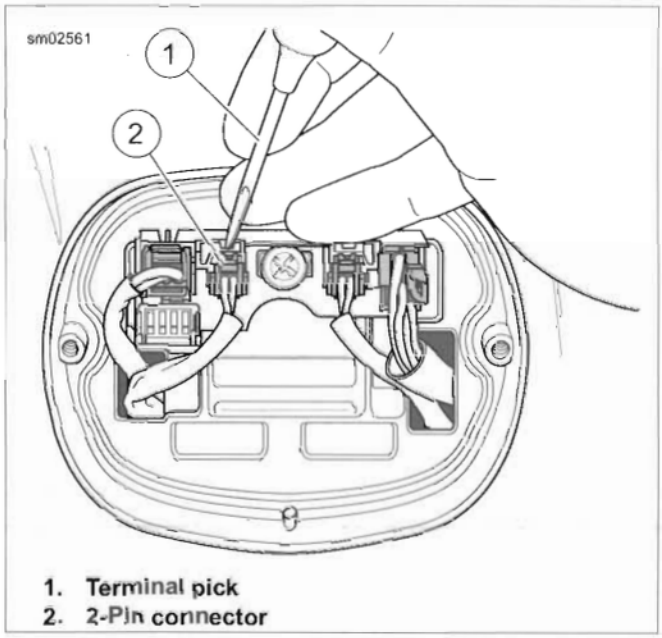

1. **Terminal pick**
2. **2-Pin connector**

Figure 7-36. Removing 2-Pin Connectors

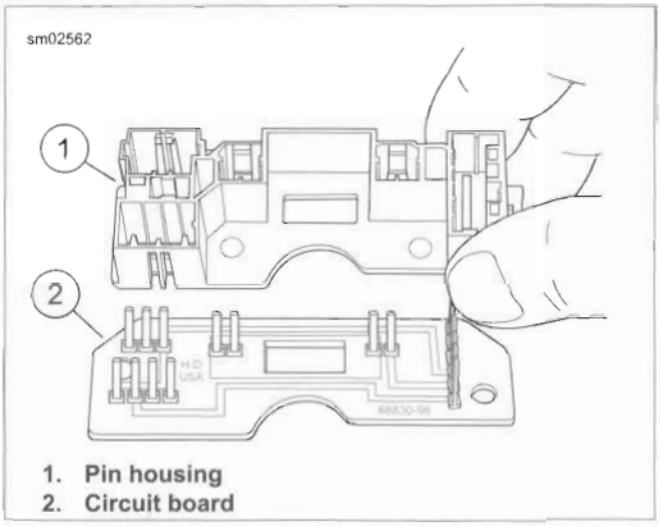

1. **Pin housing**
2. **Circuit board**

Figure 7-37. Pin Housing and Circuit Board

6. Install **new** base to rear fender. Install circuit board/pin housing to base with screw, nut and washer. Tighten to 40-48 **in-lbs** (4.5-5.4 Nm).
7. See Figure 7-38. Install connectors to circuit board.
8. Install lens to base with two screws. Tighten to 20-24 **in-lbs** (2.3-2.7 Nm).

⚠WARNING

Be sure that all lights and switches operate properly before operating motorcycle. Low visibility of rider can result in death or serious injury. (00316a)

9. Turn ignition on. Test for proper tail lamp and turn signal operation.

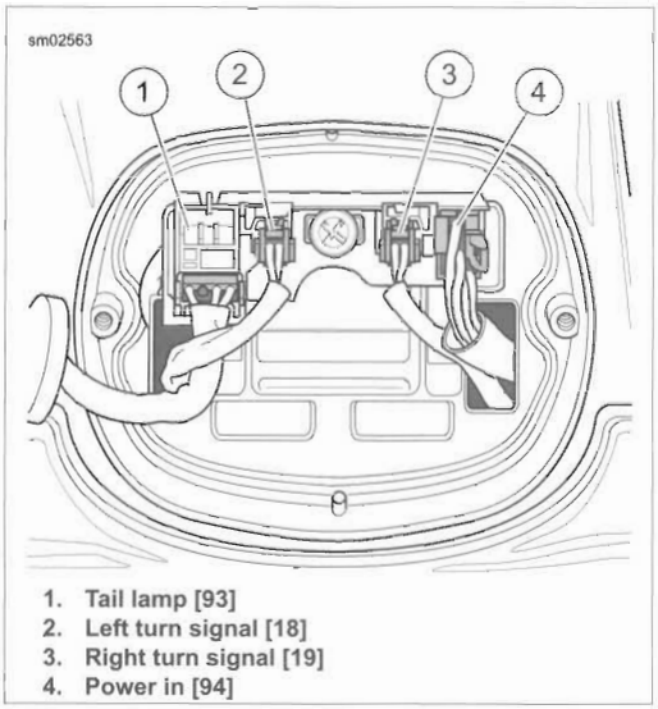

1. **Tail lamp [93]**
2. **Left turn signal [18]**
3. **Right turn signal [19]**
4. **Power in [94]**

Figure 7-38. Wire Location at Connectors

NOTE

Refer to Table 7-7. Cavity numbers are on back side of secondary locks. All FXST components are oriented 180 degrees from above and the turn signal connectors are reversed.

Table 7-7. Tail Lamp Wires

FUNCTION	NO.	TYPE	WIRE COLOR	CAVITY
Right turn signal	[18]	2-pin Multilock	V	1
			BK	2
Left turn signal	[19]	2-pin Multilock	V	1
			BK	2
Tail lamp	[93]	4-pin Multilock	BE	1
			HDI only-O/W or open in U.S. Markets	2
			R/Y	3
			BK	4
Power in	[40]	6-pin Multilock	O/W	1
			BN (V on FXST)	2
			BE	3
			R/Y	4
			V (BN on FXST)	5
			BK	6

BULB REPLACEMENT

See Figure 7-39. To change a bulb, remove the lens (4), turn the bulb 1/4 turn counterclockwise while pressing the bulb into the lamp housing (3), and remove the bulb. Replace the bulb and install the lens.

TAIL LAMP REPLACEMENT

FASTENER	TORQUE VALUE	
License plate support fasteners: FLSTN	60-90 in-lbs	6.8-10.2 Nm
Tail lamp fasteners: FLSTN	60-90 in-lbs	6.8-10.2 Nm
Tail lamp connector cover fastener: FLSTN	8-30 in-lbs	0.9-3.4 Nm
License plate bracket fasteners: FLSTN	30-50 in-lbs	3.4-5.6 Nm

1. Remove rear fender. See 2.36 REAR FENDER: FLSTN.
2. See Figure 7-40. Remove reflector (1). Remove license plate bracket fasteners (6).
3. Remove bolt (2), washer (4) and nut (5) securing clamp to license plate bracket.
4. See Figure 7-41. Remove fastener (1). Disengage tail lamp connector cover (2) from clip (3).

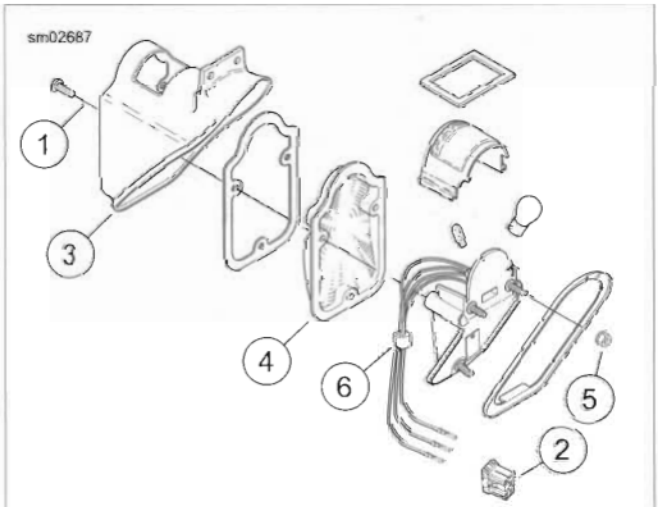

1. Screws (3)
2. Tail lamp connector
3. Lamp housing
4. Lens
5. Nuts (3)
6. Rubber grommet

Figure 7-39. Tail Lamp Assembly

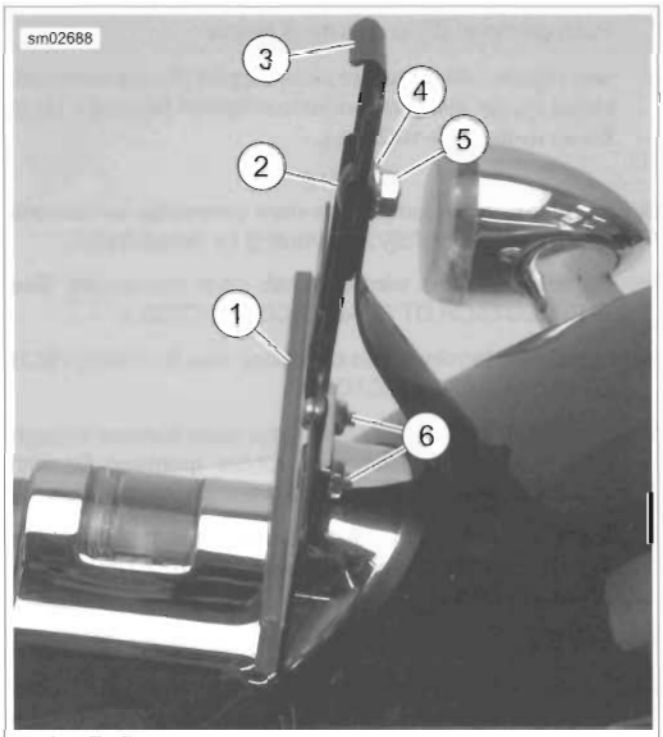

1. Reflector
2. Bolt
3. Clamp
4. Washer
5. Nut
6. Fasteners (2)

Figure 7-40. License Plate Bracket

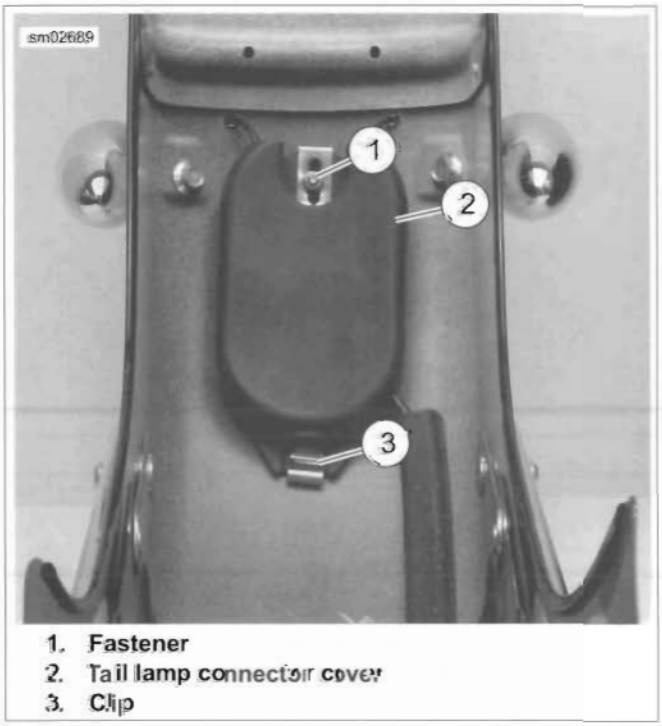

1. Fastener
2. Tail lamp connector cover
3. Clip

Figure 7-41. Tail Lamp Connector Cover

5. See Figure 7-42. Disconnect tail lamp connector (2).
6. See Figure 7-43. Remove plastic covers (3) from tail lamp threads. Remove fasteners (1).
7. Push grommet (2) to outside of fender.
8. See Figure 7-44. If license plate support (1) was removed, install clip on inside of fender and tighten fasteners (2) to 60-90 **in-lbs** (6.8-10.2 Nm).

NOTE

Before removing tail lamp wires from connector, or harness from fender clips, carefully note routing for reinstallation.

9. Remove tail lamp wire terminals from connectors. See A.13 DEUTSCH DT SEALED CONNECTORS.
10. Install **new** terminals into connector. See A.13 DEUTSCH DT SEALED CONNECTORS.
11. See Figure 7-43. To install tail lamp, route harness through hole in fender and lubricate rubber grommet (2) with alcohol or glass cleaner. Place grommet into position.
12. Place tail lamp into position and install fasteners (1). Tighten fasteners to 60-90 **in-lbs** (6.8-10.2 Nm). Install plastic covers (3).
13. See Figure 7-42. Connect tail lamp connector (2).
14. Figure 7-41. Slide tail lamp connector cover (2) into clip (3). Install fastener (1) and tighten to 8-30 **in-lbs** (0.9-3.4 Nm).
15. See Figure 7-40. Place license plate bracket in place on tail lamp. Install but do not tighten license plate bracket fasteners (6). Install clamp (3). Install bolt (2), washer (4) and nut (5).
16. Tighten license plate bracket fasteners to 30-50 **in-lbs** (3.4-5.6 Nm).

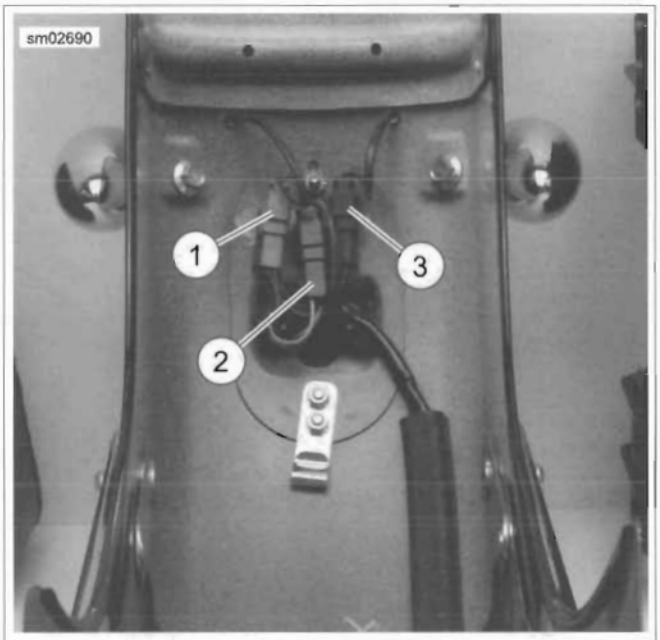

1. **Left turn signal connector [19]**
2. **Tail lamp connector [93]**
3. **Right turn signal connector [18]**

Figure 7-42. Tail Lamp Connector

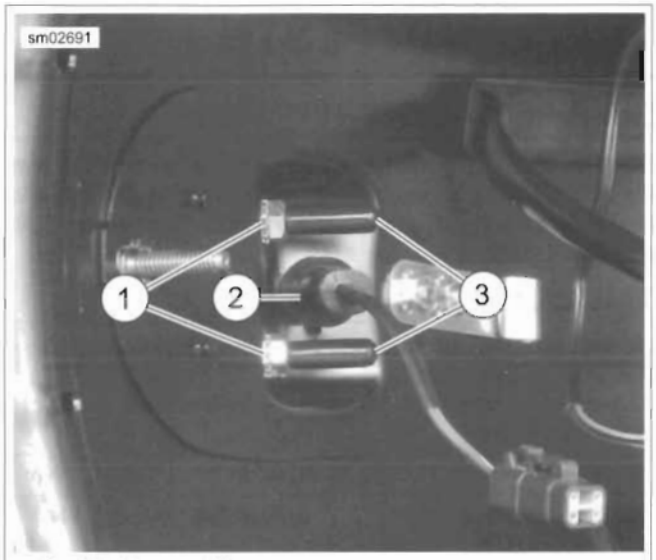

1. **Fasteners (2)**
2. **Grommet**
3. **Plastic covers**

Figure 7-43. Tail Lamp

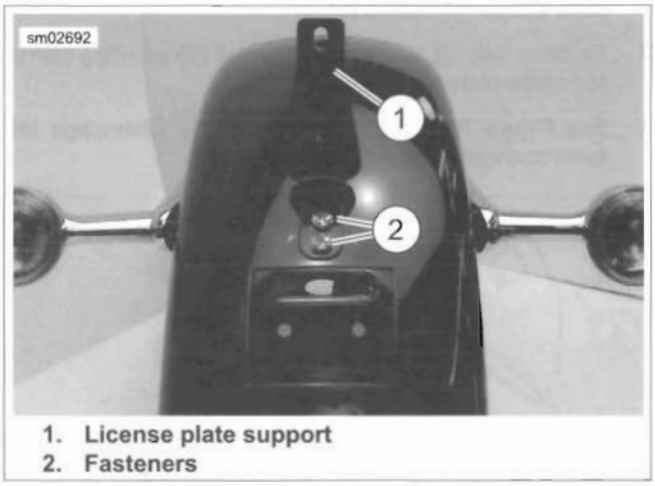

1. **License plate support**
2. **Fasteners**

Figure 7-44. License Plate Support

AUXILIARY LAMP BULB

Removal

1. See Figure 7-45. Loosen trim ring fastener (1) as required to pull trim ring (2) from lip of auxiliary lamp housing (5).
2. Disconnect auxiliary lamp connector (4) from bulb (6).
3. Remove nesting ring (7) at back of auxiliary lamp (8).

⚠WARNING

Handle bulb carefully and wear eye protection. Bulb contains gas under pressure, which, if not handled carefully, could cause serious eye injury. (00062b)

4. See Figure 7-46. Rotate bulb/pin housing 1/4 turn counterclockwise and remove from auxiliary lamp. Discard bulb/pin housing.

Installation

NOTICE

Never touch the quartz bulb. Fingerprints will etch the glass and decrease bulb life. Handle the bulb with paper or a clean, dry cloth. Failure to do so could result in bulb damage. (00210b)

1. See Figure 7-46. Install **new** bulb/pin housing in auxiliary lamp and rotate 1/4 turn clockwise.
2. See Figure 7-45. Place nesting ring (7) at back of auxiliary lamp (8) with the concave side up.
3. Connect auxiliary lamp connector (4) to bulb (6).
4. Place nesting ring over edge of lamp housing (5). Rotate nesting ring until index tab engages slot at bottom of lamp housing.
5. Holding nesting ring in place, rotate auxiliary lamp so that index tabs at back engage slots in nesting ring.
6. Install trim ring (2) over lip of lamp housing. Rotate trim ring so that fastener (1) is centered at bottom, and then tighten fastener until snug.

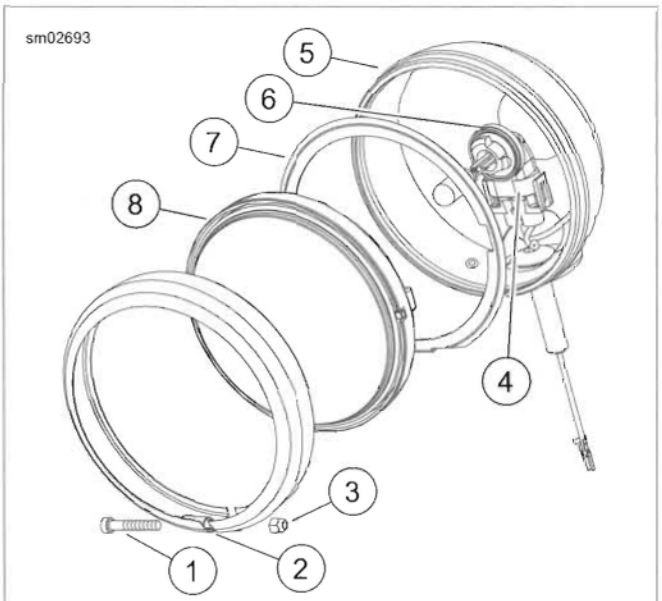

1. **Trim ring fastener**
2. **Trim ring**
3. **Nut**
4. **Connector**
5. **Auxiliary lamp housing**
6. **Bulb**
7. **Nesting ring**
8. **Auxiliary lamp**

Figure 7-45. Auxiliary Lamp Bulb: Typical



Figure 7-46. Auxiliary Lamp Bulb/Pin Housing

FLSTC MODELS

FASTENER	TORQUE VALUE	
Auxiliary lamp bracket: FLSTC	72-120 **in-lbs**	8.1-13.6 Nm

Auxiliary Lamp Bracket Removal

1. Detach quick release windshield. See 2.46 WINDSHIELD: FLSTC.

2. Detach wiring.
   a. Remove fuel tank fasteners and slide tank back to reveal connectors. See 4.6 FUEL TANK.
   b. Disconnect 2-place Multilock auxiliary lamp connector [73] under fuel tank, left side.
   c. Disconnect 6-place Multilock front turn signal connector [31] under fuel tank.
3. See Figure 7-47. Remove upper and lower bracket hardware (6, 7) and spacer (8). Remove auxiliary lamp bracket (9).

Auxiliary Lamp Bracket Installation

1. See Figure 7-47. Place auxiliary lamp bracket (9) in position. Loosely install upper and lower bracket hardware (6, 7). Verify that spacers (8) are installed on upper fasteners.
2. Attach auxiliary lamp housings (11) to bracket if necessary. See Auxiliary Lamp Housing Installation later in this section.
3. Connect wiring for front turn signals [31] and auxiliary lamps [73].
4. Tighten the auxiliary lamp bracket hardware (6, 7) to 72-120 **in-lbs** (8.1-13.6 Nm).
5. Slide fuel tank into position and install fasteners. See 4.6 FUEL TANK.
6. Place windshield in position. Adjust windshield height so that top of windshield is at rider's eye level while seated on motorcycle and fasten securely. See 2.46 WINDSHIELD: FLSTC.

Auxiliary Lamp Housing Removal

1. See Figure 7-47. Remove screws (5) that secure the turn signal lamps (1) to the mounting bracket (3).
2. Detach auxiliary lamp connector [73].
   a. Remove fuel tank fasteners and slide tank back to reveal connectors. See 4.6 FUEL TANK.
   b. Disconnect 2-place Multilock auxiliary lamp connector [73] under fuel tank, left side.
   c. Remove auxiliary lamp terminals. See A.21 TYCO 070 MULTILOCK UNSEALED CONNECTOR.
3. Remove appropriate terminal(s) from socket housing.
4. Use a flare nut socket to remove the nuts (2) that secure the auxiliary lamp housings (11) to bracket. Remove auxiliary lamp and pull wires through vinyl conduit.

Auxiliary Lamp Housing Installation

1. See Figure 7-47. Place auxiliary lamp housings (11) in position. Use a flare nut socket to snug the nut (2) that secures the lamp to the bracket.
2. Push lamp wires back into the vinyl conduit. Insert wire terminals into connector. Route the harness back into position and mate connectors.
3. Aim auxiliary lamps. See 7.17 AUXILIARY LAMPS: FLSTC, FLSTN, Adjustment: FLSTC/FLSTN Models.
4. Install the screws (5) that secure the turn signal lamps to the mounting bracket (3).

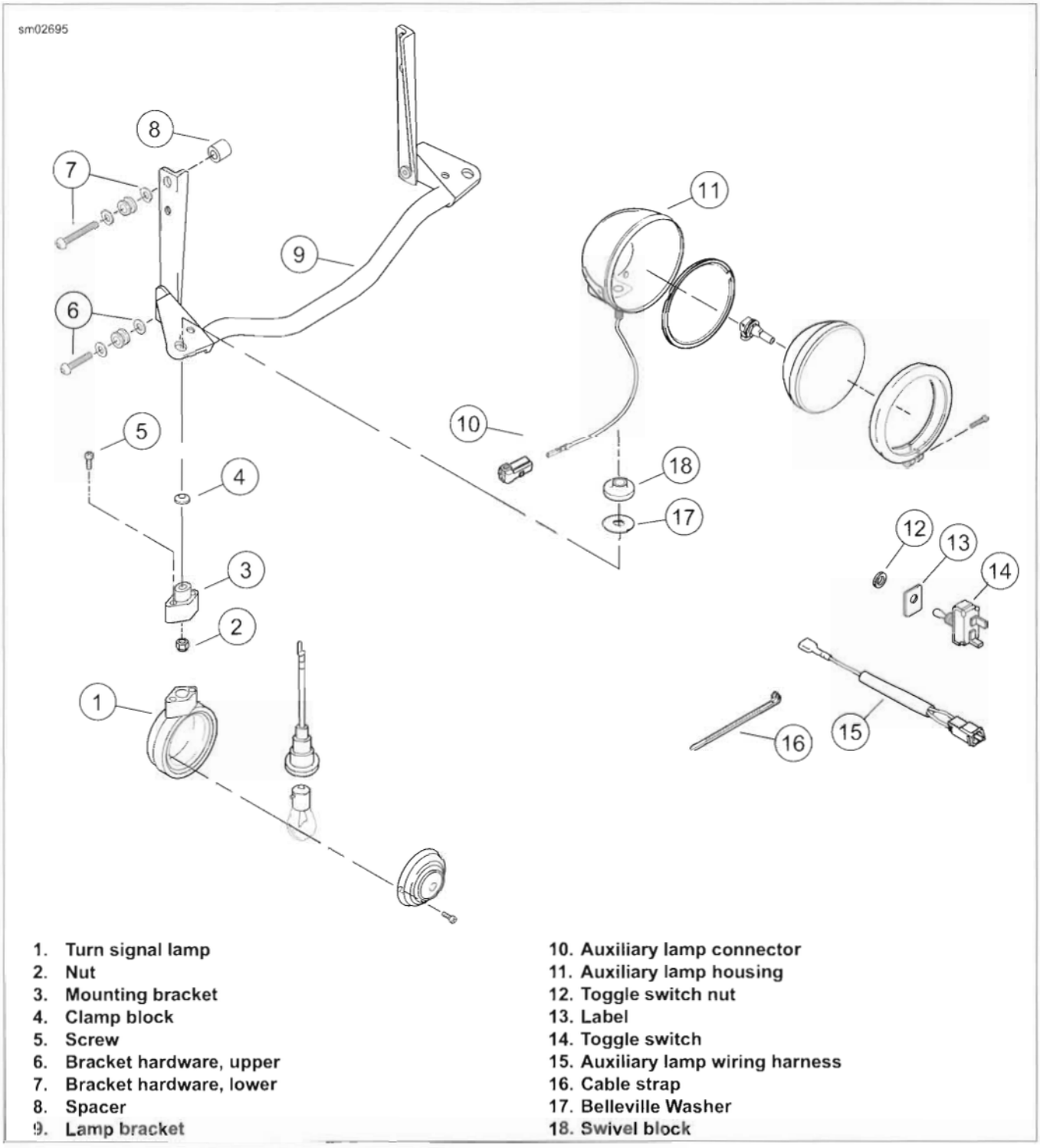

1. Turn signal lamp
2. Nut
3. Mounting bracket
4. Clamp block
5. Screw
6. Bracket hardware, upper
7. Bracket hardware, lower
8. Spacer
9. Lamp bracket
10. Auxiliary lamp connector
11. Auxiliary lamp housing
12. Toggle switch nut
13. Label
14. Toggle switch
15. Auxiliary lamp wiring harness
16. Cable strap
17. Belleville Washer
18. Swivel block

Figure 7-47. Auxiliary Lamp Bracket: FLSTC

FLSTN MODELS

FASTENER	TORQUE VALUE	
Auxiliary lamp bracket: FLSTN	72-120 **in-lbs**	8.1-13.6 Nm

Auxiliary Lamp Bracket Removal

1. Detach wiring.
   a. Remove fuel tank fasteners and slide tank back to reveal connectors. See 4.6 FUEL TANK.
   b. Disconnect 2-place Multilock auxiliary lamp connector [73] under fuel tank, left side.
   c. Disconnect 6-place Multilock front turn signal connector [31] under fuel tank.
2. See Figure 7-49. Remove upper and lower bracket hardware (8, 9). Remove auxiliary lamp bracket.

Auxiliary Lamp Bracket Installation

1. See Figure 7-49. Place auxiliary lamp bracket (5) in position. Loosely install upper and lower bracket hardware (8, 9).
2. Attach auxiliary lamps to bracket if necessary. See 7.17 AUXILIARY LAMPS: FLSTC, FLSTN, FLSTN Models.
3. Connect wiring for front turn signals [31] and auxiliary lamps [73].
4. See Figure 7-49. Tighten the auxiliary lamp bracket hardware (8, 9) to 72-120 **in-lbs** (8.1-13.6 Nm).
5. Slide fuel tank into position and install fasteners. See 4.6 FUEL TANK.

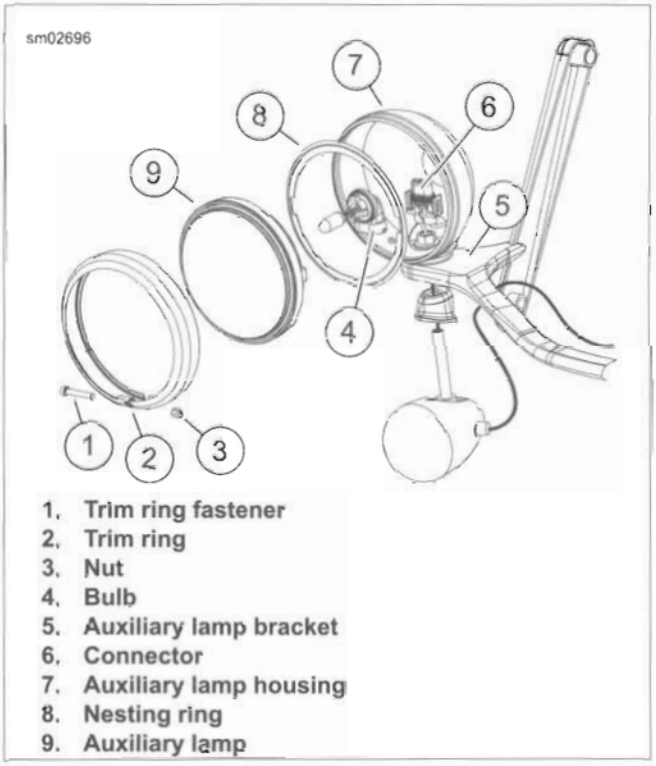

1. **Trim ring fastener**
2. **Trim ring**
3. **Nut**
4. **Bulb**
5. **Auxiliary lamp bracket**
6. **Connector**
7. **Auxiliary lamp housing**
8. **Nesting ring**
9. **Auxiliary lamp**

Figure 7-48. Auxiliary Lamp Bracket: Typical

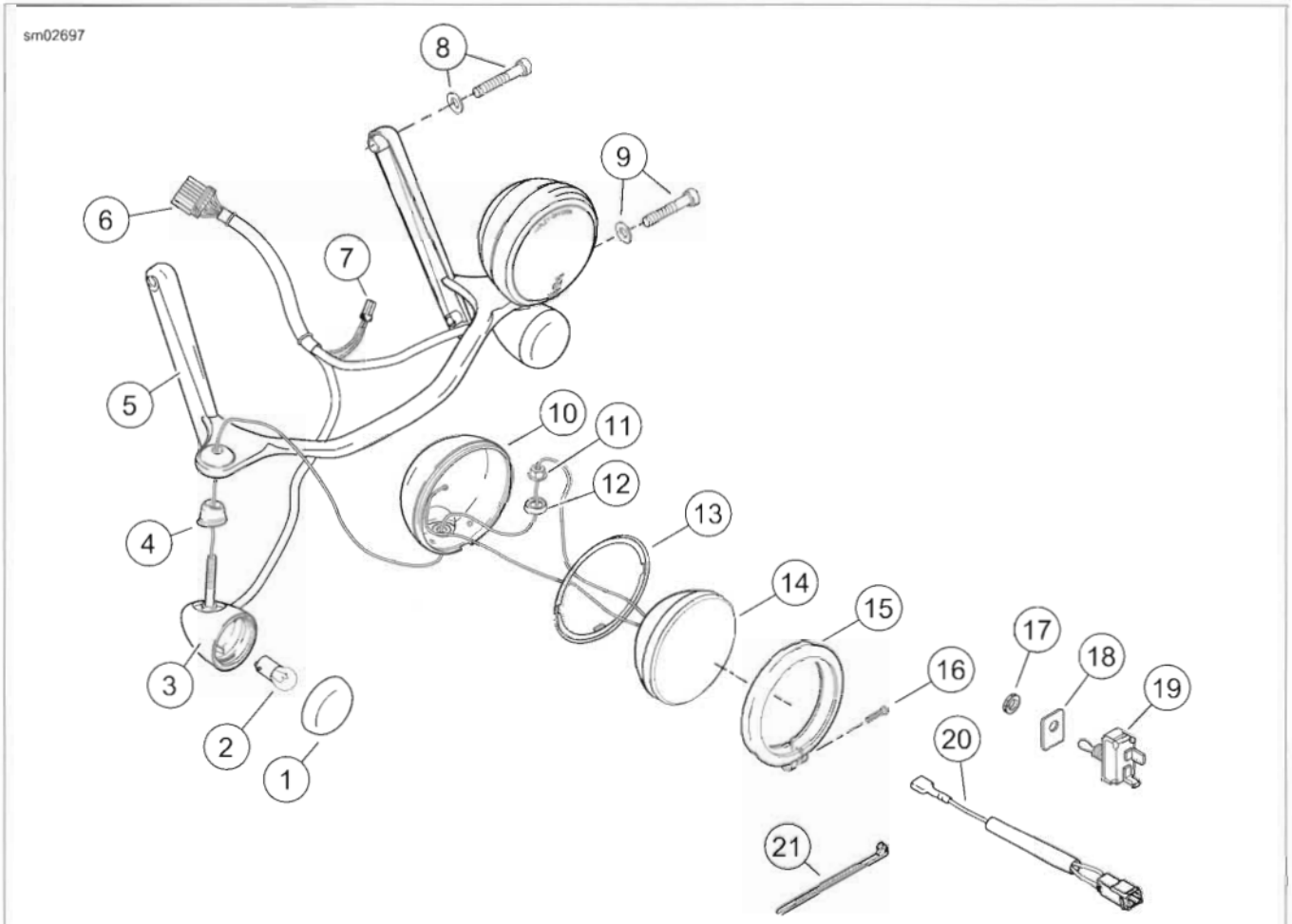

1. **Turn signal lens**
2. **Turn signal bulb**
3. **Turn signal lamp**
4. **Adapter (2)**
5. **Auxiliary lamp bracket**
6. **Main harness connector [31]**
7. **Auxiliary lamp connector [73]**
8. **Bracket hardware, upper (2)**
9. **Bracket hardware, lower (2)**
10. **Auxiliary lamp housing**
11. **Nut (2)**
12. **Collar (2)**
13. **Nesting ring (2)**
14. **Auxiliary lamp**
15. **Trim ring**
16. **Trim ring fastener**
17. **Toggle switch nut**
18. **Label**
19. **Toggle switch**
20. **Auxiliary lamp wiring harness**
21. **Cable strap**

Figure 7-49. Auxiliary Lamp Bracket: FLSTN

Auxiliary Lamp Housing Removal

1. Remove auxiliary lamp bulb. See 7.17 AUXILIARY LAMPS: FLSTC, FLSTN, Auxiliary Lamp Bulb.
2. Detach auxiliary lamp connector [73].
   a. Remove fuel tank fasteners and slide tank back to reveal connectors. See 4.6 FUEL TANK.
   b. Disconnect 2-place Multilock auxiliary lamp connector [73] under fuel tank, left side.
   c. Remove auxiliary lamp terminals. See A.21 TYCO 070 MULTILOCK UNSEALED CONNECTOR.
3. Remove appropriate terminal(s) from auxiliary lamp bulb socket housing.
4. See Figure 7-49. Remove nut (11) that secures auxiliary lamp housing (10) and turn signal lamp (3) to auxiliary lamp bracket (5). Remove auxiliary lamp and turn signal lamp.
5. Remove adapter (4) from turn signal lamp.

Auxiliary Lamp Housing Installation

1. See Figure 7-49. Install adapter (4) on turn signal lamp (3). Install turn signal lamp in auxiliary lamp bracket (5).
2. Install auxiliary lamp housing (10) over turn signal lamp threads.

NOTE

See Figure 7-50. In next step, be sure top of collar (1) is facing up.

3. See Figure 7-49. Install collar (12) and nut (11) over turn signal lamp wire. Tighten nut finger tight. Do not fully tighten nut at this time.

4. Place auxiliary lamp ring at back of **new** lamp with the concave side up.
5. Install terminals into auxiliary lamp bulb socket housing.
6. Install lamp fitting auxiliary lamp ring over edge of lamp housing. Rotate auxiliary lamp ring so that index tab engages slot at bottom of lamp housing.
7. Holding auxiliary lamp ring in place, rotate lamp so that index tab at back engages slot in auxiliary lamp ring.
8. Install lamp door over lip of lamp housing. Rotate lamp door so that screw is centered at bottom, and then tighten door screw until snug.
9. Adjust auxiliary lamps. See 7.17 AUXILIARY LAMPS: FLSTC, FLSTN, Adjustment: FLSTC/FLSTN Models.

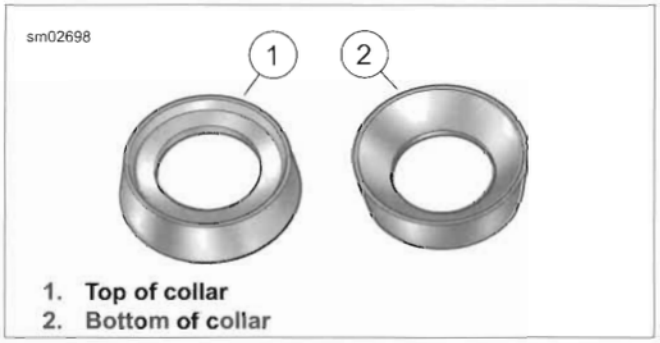

1. **Top of collar**
2. **Bottom of collar**

Figure 7-50. Collar

ADJUSTMENT: FLSTC/FLSTN MODELS

FASTENER	TORQUE VALUE	
Auxiliary lamp nut: FLSTC	15-18 ft-lbs	20.3-24.4 Nm
Signal lamp mounting bracket screws: FLSTC	36-60 **in-lbs**	4.1-6.8 Nm
Auxiliary lamp nut: FLSTN	15-18 ft-lbs	20.3-24.4 Nm
Signal lamp mounting bracket screws: FLSTN	36-60 **in-lbs**	4.1-6.8 Nm

1. Check headlamp alignment. Adjust if necessary. See 1.20 HEADLAMP ALIGNMENT.
2. With a rider seated on the motorcycle and the front wheel pointed straight ahead, turn on the headlamp high beam.
3. See Figure 7-51. Mark the center of the headlamp high beam by making a vertical line through the horizontal line already drawn on the wall. Properly adjusted, the beam should project an equal area of light to the left and right of the vertical centerline (1).
4. Turn the headlamp off.
5. Measure the distance from the headlamp horizontal centerline down to the horizontal centerline of the left auxiliary lamp. Now measure the distance from the headlamp vertical centerline out to the vertical centerline of the same lamp.
6. Repeat measurements performed in previous step on right auxiliary lamp.
7. From the headlamp high beam centerlines, perform the measurements taken in previous steps to locate the left and right auxiliary lamp centerlines on the wall (2, 3).
8. Turn on the headlamp high beam again. With a rider seated on the motorcycle, verify that it is still aligned with the horizontal and vertical centerlines.
9. Turn on the headlamp low beam and cover both the headlamp and the right auxiliary lamp. Adjust the left auxiliary lamp so the entire high intensity zone is both below and to the right of the centerlines (4).
10. Leave the headlamp covered. Remove cover from right auxiliary lamp and place over left auxiliary lamp. Adjust the right auxiliary lamp so the entire high intensity zone is both below and to the right of the centerlines (5).
11. **FLSTC models: tighten auxiliary lamps.**
    a. See Figure 7-47. Loosen screws (5) to detach turn signal lamps (1) from mounting bracket (3).
    b. Insert flare nut socket at bottom of turn signal mounting bracket and tighten locknut to 15-18 ft-lbs (20.3-24.4 Nm).
    c. Start two screws to secure turn signal lamp to mounting bracket. Verify that conduit fits in slot at back of bracket and is not pinched. Alternately tighten screws to 36-60 **in-lbs** (4.1-6.8 Nm).
12. **FLSTN:** Tighten auxiliary lamps.
    a. See Figure 7-49. Loosen trim ring fastener (16) and remove trim ring (15) from auxiliary lamp housing (10).

    NOTE

    Minimize auxiliary lamp movement while tightening to maintain alignment.

    b. While holding auxiliary lamp steady, tighten nut (11) to 15-18 ft-lbs (20.3-24.4 Nm).
    c. Install lamp fitting auxiliary lamp ring over edge of lamp housing. Rotate auxiliary lamp ring to engage index tab with slot at bottom of lamp housing.
    d. Start two screws securing turn signal lamp to mounting bracket. Verify that conduit fits in slot at back of bracket and is not pinched. Tighten screws to 36-60 **in-lbs** (4.1-6.8 Nm).
13. Verify auxiliary lamp alignment.

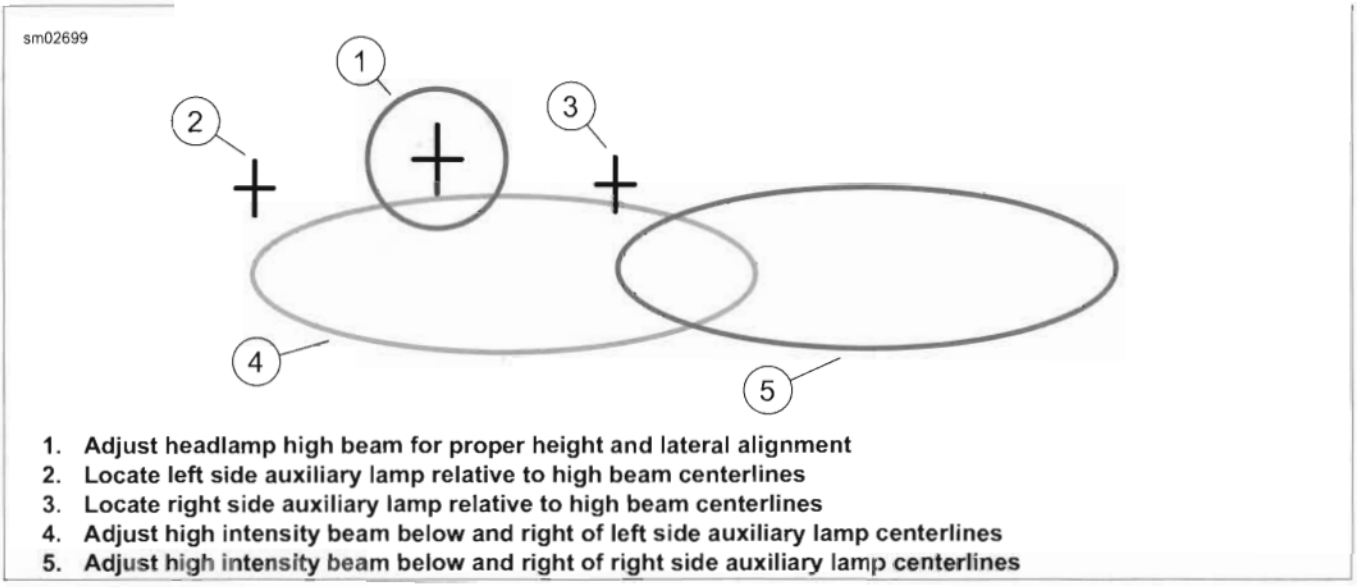

1. Adjust headlamp high beam for proper height and lateral alignment
2. Locate left side auxiliary lamp relative to high beam centerlines
3. Locate right side auxiliary lamp relative to high beam centerlines
4. Adjust high intensity beam below and right of left side auxiliary lamp centerlines
5. Adjust high intensity beam below and right of right side auxiliary lamp centerlines

Figure 7-51. Auxiliary Lamp Aiming

BULB REPLACEMENT: BULLET STYLE

1. Locate latch slot on circumference of turn signal lamp lens. Insert a small flat blade screw driver or coin and turn 1/4 turn to remove lens.
2. Push bulb in and rotate 1/4 turn counterclockwise to remove.
3. Inspect contacts in socket. If necessary, clean contacts with a small wire brush and electrical contact cleaner.
4. Evenly apply dielectric grease to the contacts and bottom of the new bulb.
5. Push and rotate new bulb into socket.
6. Snap in and rotate lens to position latch slot on bottom.

BULB REPLACEMENT: FLAT LENS STYLE

To change a bulb, remove the lens, turn the bulb 1/4 turn counterclockwise while pressing the bulb into the housing, and remove the bulb. Replace the bulb and install the lens.

NOTE

If after replacing a bulb, the turn signal or running lamp will not light, check the wiring, the ground at the socket and/or the switch.

LAMP REPLACEMENT

FASTENER	TORQUE VALUE	
Rear turn signal housing fastener: FLS	12-16 ft-lbs	16.3-21.7 Nm
Rear fender support to fender fasteners: FLS	21-27 ft-lbs	28.5-36.6 Nm
Rear turn signal housing fastener	12-16 ft-lbs	16.3-21.7 Nm
Turn signal bar screws: FLSTN	15-19 ft-lbs	20.4-25.8 Nm
Tail lamp fastener: FLSTN	8-30 in-lbs	0.9-3.4 Nm

All Models

NOTE

See 7.17 AUXILIARY LAMPS: FLSTC, FLSTN for front turn signal replacement on FLSTC and FLSTN models. For all other models, follow the instructions below.

1. Remove seat.

⚠WARNING

To prevent accidental vehicle start-up, which could cause death or serious injury, remove main fuse before proceeding. (00251b)

2. Remove main fuse.
3. Change turn signal lamp following the steps outlined in one of the procedures which follow.
4. Install main fuse.

⚠WARNING

After installing seat, pull upward on seat to be sure it is locked in position. While riding, a loose seat can shift causing loss of control, which could result in death or serious injury. (00070b)

5. Install seat.

⚠WARNING

Be sure that all lights and switches operate properly before operating motorcycle. Low visibility of rider can result in death or serious injury. (00316a)

6. Turn ignition on. Test for proper turn signal operation.

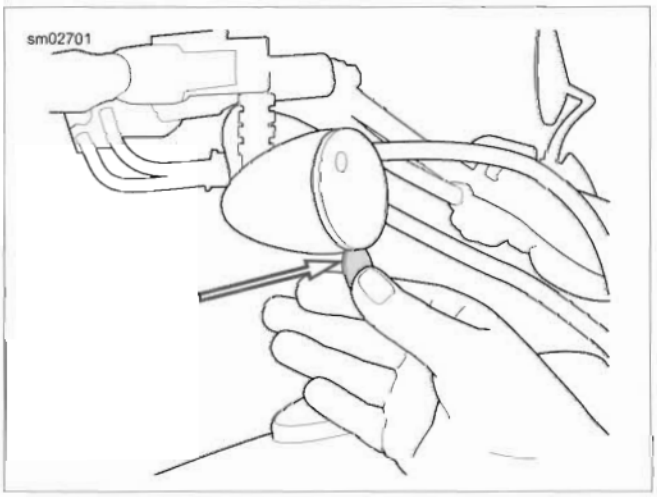

Figure 7-52. Lens Cap Removal

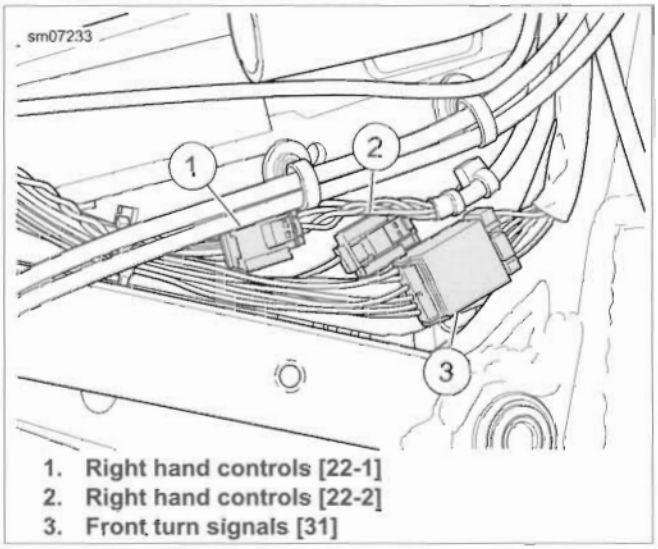

1. **Right hand controls [22-1]**
2. **Right hand controls [22-2]**
3. **Front turn signals [31]**

Figure 7-53. Under Fuel Tank Right Side

Front Turn Signals

NOTE

Before removing turn signal wires, carefully note routing and cable strap locations.

1. **All but FLSTC, FLSTN:** The turn signal wiring is hard wired to the handlebar switch assemblies. Remove switch assembly. See 7.36 HANDLEBAR CONTROL MODULES or 2.28 HANDLEBAR: FLSTF/B.
2. **FLSTC, FLSTN:** Remove fuel tank to reveal front turn signal connector [31]. See 4.6 FUEL TANK.
3. **FLSTC, FLSTN:** Disconnect [31] and remove terminals from turn signal connector.
4. **All but FLSTC, FLSTN:** Detach front turn signals from mounting point.
   a. See Figure 7-54. On right side, hold retainer (6) and loosen ball stud clamp (4) to remove turn signal.
   b. On left side, remove nut (5) from mirror, loosen jamnut and remove ball stud clamp (4) to detach turn signal.
5. **All but FLSTC, FLSTN:** Detach front turn signals from mounting point.
   a. Hold retainer (6) and loosen ball stud clamp (4) to remove turn signal.
   b. See Figure 7-55. On left side, loosen locknut (3) from turn signal bracket (2), remove ball stud (6) to detach turn signal.
6. Install **new** front turn signal.
   a. Attach signal to mounting point as appropriate to model being serviced.
   b. **FLSTC, FLSTN:** Route wiring to connector [31] location and install terminals in connector. Attach connectors.
   c. Verify that turn signal points straight ahead.
7. **All but FLSTC, FLSTN:** Install handlebar switch assembly, handlebars, switch housing.
8. Slide fuel tank into position and install fasteners. See 4.6 FUEL TANK.

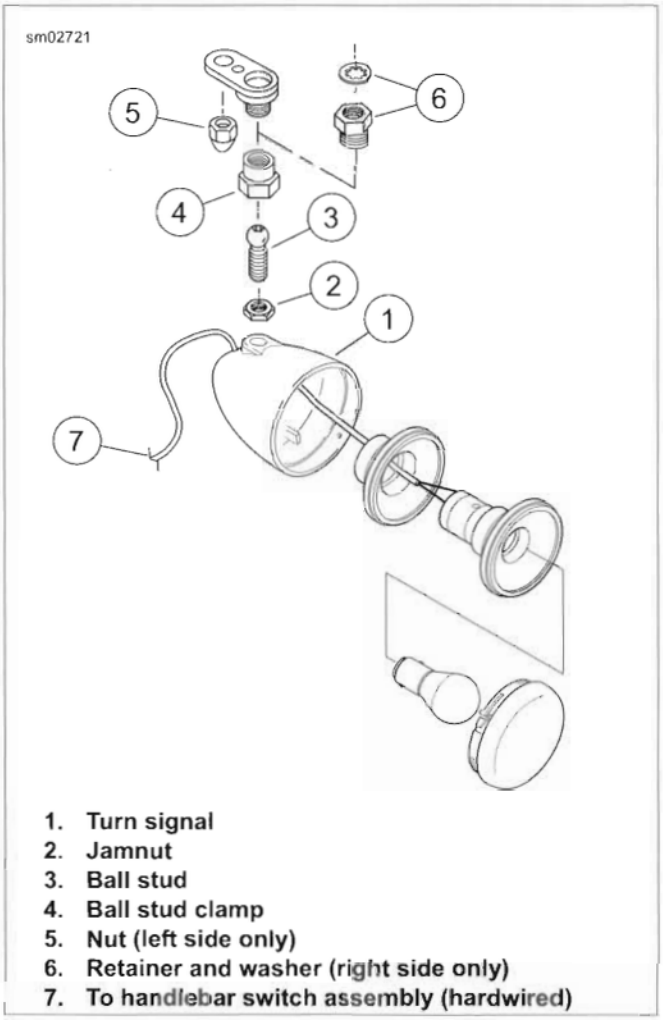

1. **Turn signal**
2. **Jamnut**
3. **Ball stud**
4. **Ball stud clamp**
5. **Nut (left side only)**
6. **Retainer and washer (right side only)**
7. **To handlebar switch assembly (hardwired)**

Figure 7-54. Front Turn Signals: FXST, FLSTF/B

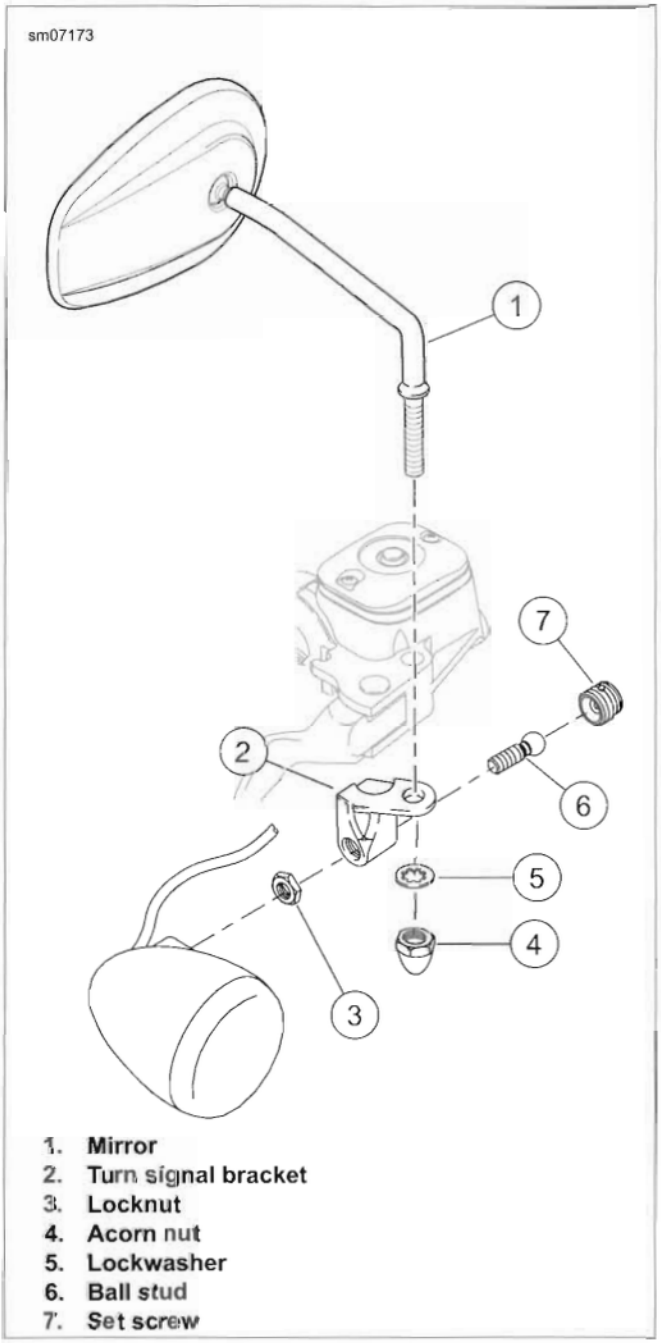

1. **Mirror**
2. **Turn signal bracket**
3. **Locknut**
4. **Acorn nut**
5. **Lockwasher**
6. **Ball stud**
7. **Set screw**

Figure 7-55. Front Turn Signals: FLS, FLSTFB

Front Turn Signals: FLSTC, FLSTN

For lamp replacement of FLSTC, and FLSTN models, see 7.17 AUXILIARY LAMPS: FLSTC, FLSTN.

Rear Turn Signals: All But FLSTN, FLS, FXSB

NOTE

Before removing turn signal wires, carefully note routing and cable strap locations.

1. Disconnect turn signal wiring.
   a. Disconnect right turn signal [18] and left turn signal [19] connectors from within tail lamp. See 7.15 TAIL LAMP: ALL BUT FLSTN.
   b. Remove wire terminals from turn signal connectors.
2. Detach turn signal from mount.
   a. **FLSTC:** see Figure 7-56. Remove the screw (1) to detach turn signal from mount (2).
   b. **All but FLSTC:** see Figure 7-57. Detach fender support hardware. See 2.33 REAR FENDER: FXST. Remove screw and washer (1) from inside fender support to detach turn signal from mount (2).
3. Install **new** rear turn signal.
   a. Attach signal to mounting point as appropriate to model being serviced.
   b. **All but FLSTC:** install rear fender support.
   c. Route wiring to connector location and install terminals in connector. Attach connectors.
   d. Verify that turn signal points straight behind.

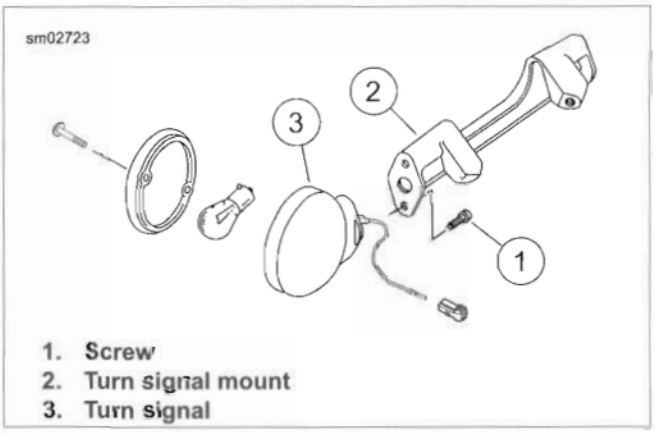

1. **Screw**
2. **Turn signal mount**
3. **Turn signal**

Figure 7-56. Rear Turn Signals: FLSTC

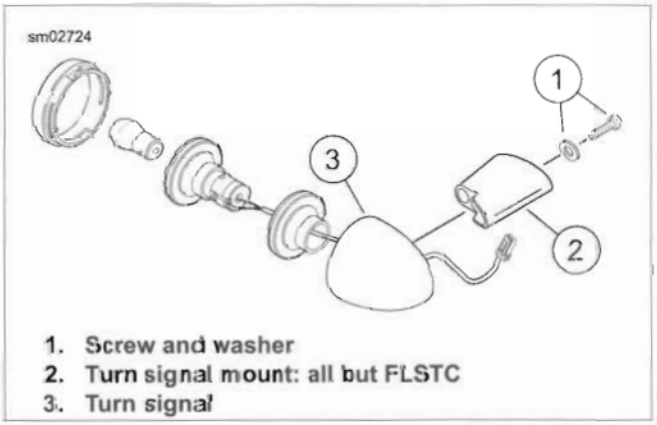

1. **Screw and washer**
2. **Turn signal mount: all but FLSTC**
3. **Turn signal**

Figure 7-57. Rear Turn Signals: All but FLSTC

Rear Turn Signals: FLS

1. Remove rear fender. See 2.34 REAR FENDER: FLS.
2. See Figure 7-58. Remove fasteners (2) securing fender support to fender.
3. Disconnect pins from 4-Pin connector [18, 19] (1) as needed. Refer to Table 7-8 or Table 7-9. See A.16 DEUTSCH DTM SEALED SOLID BARREL MINI TERMINAL REPAIR.

4. See Figure 7-59. Carefully remove wire from retainer clips (2).
5. Remove fastener and washer (1) securing lamp assembly to fender support.
6. See Figure 7-60. If equipped with side mount license plate bracket, separate turn signal from license plate bracket.
7. When installing **new** turn signal lamp assembly, install side mount license plate bracket if equipped.
8. See Figure 7-59. Install fastener and washer (1) securing lamp assembly to fender support. Tighten fastener to 12-16 ft-lbs (16.3-21.7 Nm).

NOTE

Make sure retainer clips are securely fastened to fender. if installing ***new*** *retainer clips, clean affected surface with isopropyl alcohol. Remove protective paper and press on surface for 1-3 minutes.*

9. Route wires of **new** lamp along fender support. Make sure **new** wires are properly positioned in the retaining clips (2).
10. Refer to Table 7-8 or Table 7-9. Attach **new** wires to 4-pin connector [18, 19]. See A.16 DEUTSCH DTM SEALED SOLID BARREL MINI TERMINAL REPAIR.
11. See Figure 7-58. Clean threadlocking compound from fasteners (2) and threaded holes prior to assembly.
12. Apply LOCTITE 243 MEDIUM STRENGTH THREADLOCKER AND SEALANT (blue) to fasteners (2) and install fender support to fender using fasteners (2). Tighten fasteners to 21-27 ft-lbs (28.5-36.6 Nm).
13. Install rear fender. See 2.34 REAR FENDER: FLS.

Table 7-8. FLS Turn Signal Lighting Connector Pin Location (Domestic and Canada)

PIN	COLOR	FUNCTION
1	W	Tail
2	R	Brake/Turn
3	-	Not used
4	BK	Ground

Table 7-9. Turn Signal Lighting Connectors Pin Location (HDI)

PIN	COLOR	FUNCTION
1	W	Tail
2	GN	Turn
3	R	Brake
4	BK	Ground

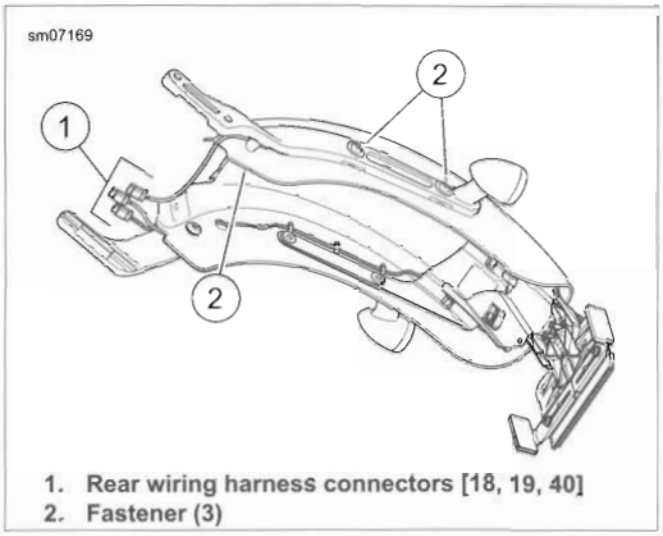

1. **Rear wiring harness connectors [18, 19, 40]**
2. **Fastener (3)**

Figure 7-58. Turn Signal Housing: FLS

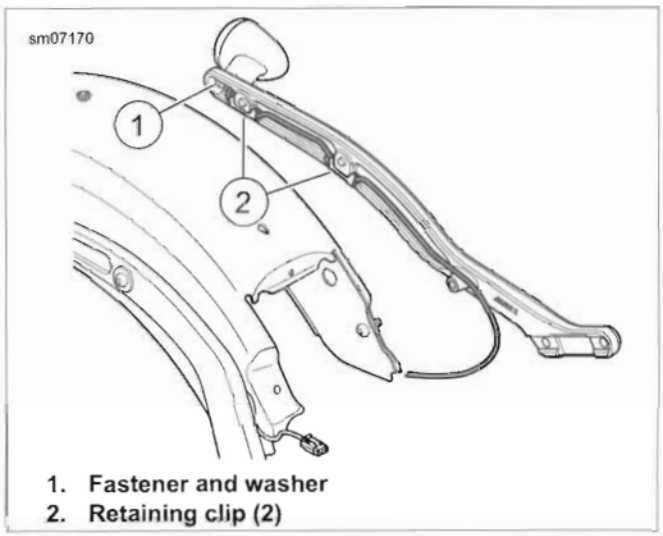

1. **Fastener and washer**
2. **Retaining clip (2)**

Figure 7-59. Turn Signal Wire Routing: FLS

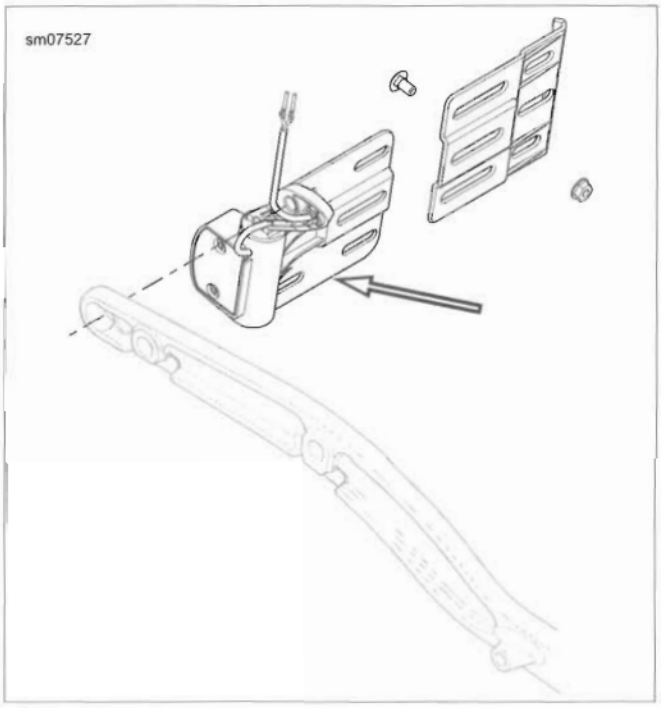

Figure 7-60. License Plate Bracket (Domestic and California Models)

Rear Turn Signals: FXSB

1. Remove and disassemble rear fender. See 2.35 REAR FENDER: FXSB.
2. Disconnect pins from 4-Pin connector [18, 19] as needed. Refer to Table 7-10 or Table 7-11. See A.16 DEUTSCH DTM SEALED SOLID BARREL MINI TERMINAL REPAIR.
3. Carefully remove wire from retainer clips along fender support.
4. Remove fastener and washer securing lamp assembly to fender support.
5. See Figure 7-62. If equipped with side mount license plate bracket, separate turn signal from license plate bracket.
6. **Canada and HDI models:** See Figure 7-61. If needed, remove harness retainer (4) and tail lamp (1) or license plate lamp (2).
7. **Canada and HDI models:** If installing tail lamp (1) or license plate lamp (2), secure harness with a **new** harness retainer (4).
8. When installing **new** turn signal lamp assembly, install side mount license plate bracket if equipped.
9. Install fastener and washer securing lamp assembly to fender support. Tighten to 12-16 ft-lbs (16.3-21.7 Nm).

NOTE

*Make sure retainer clips are securely fastened to fender. If installing **new** retainer clips, clean affected surface with isopropyl alcohol. Remove protective paper and press on surface for 1-3 minutes.*

10. Route wires of lamp along fender support. Make sure wires are properly positioned in the retaining clips.
11. Refer to Table 7-10 or Table 7-11. Attach wires to 4-pin connector [18, 19]. See A.16 DEUTSCH DTM SEALED SOLID BARREL MINI TERMINAL REPAIR.
12. Install rear fender. See 2.35 REAR FENDER: FXSB.

Table 7-10. Turn Signal Lighting Connector Pin Location (Domestic and Canada)

PIN	COLOR	FUNCTION
1	BE	Tail
2	V	Brake/Turn
3	-	Not used
4	BK	Ground

Table 7-11. Turn Signal Lighting Connectors Pin Location (HDI)

PIN	COLOR	FUNCTION
1	W	Tail
2	GN	Turn
3	R	Brake
4	BK	Ground

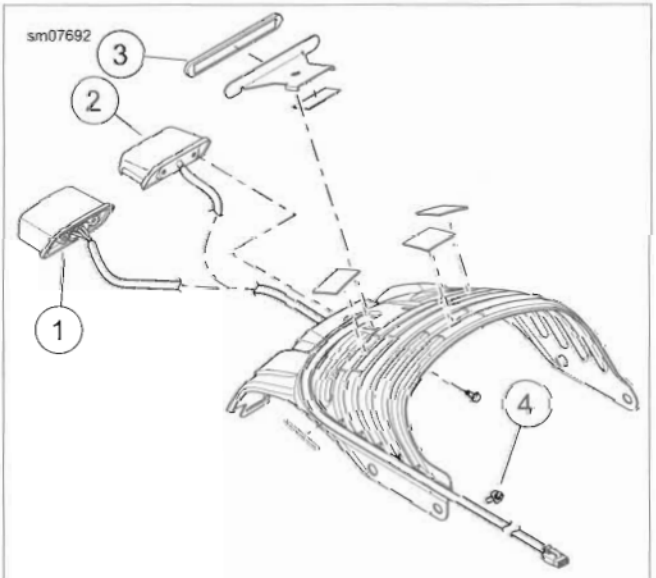

1. **Tail lamp (Canada)**
2. **License plate lamp (HDI)**
3. **Reflector (U.S.)**
4. **Harness retainer (Canada, HDI)**

Figure 7-61. Rear Lighting

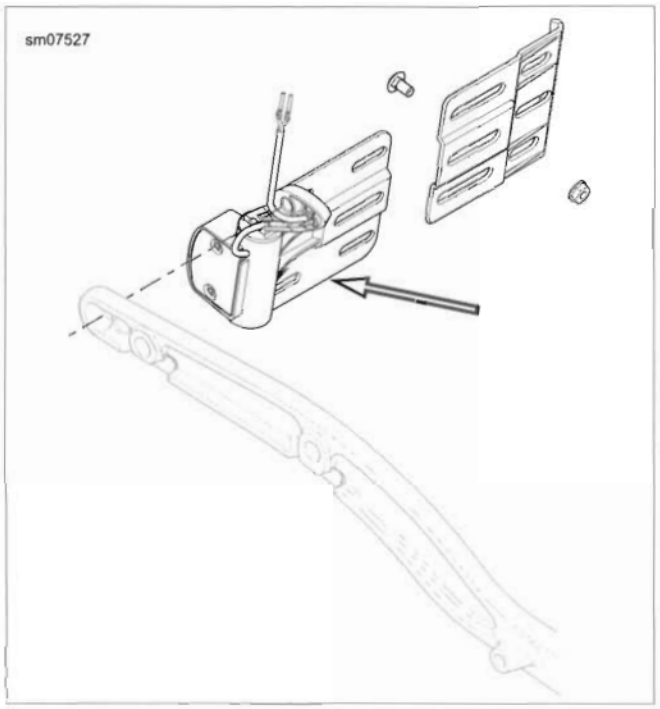

Figure 7-62. License Plate Bracket (Domestic and California Models)

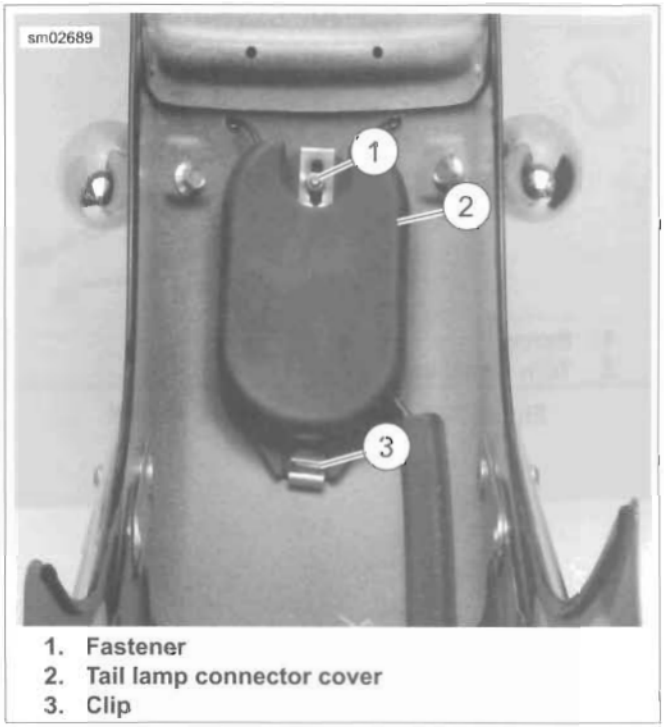

1. Fastener
2. Tail lamp connector cover
3. Clip

Figure 7-63. Tail Lamp Connector Cover

Rear Turn Signals: FLSTN

1. Remove rear fender. See 2.36 REAR FENDER: FLSTN.
2. See Figure 7-63. Remove fastener (1). Disengage tail lamp connector cover (2) from clip (3).
3. See Figure 7-64. Disconnect left [19] (1) and right [18] (3) turn signal connectors.
4. Remove wire terminals from turn signal connectors. See A.13 DEUTSCH DT SEALED CONNECTORS for connector disassembly.
5. See Figure 7-65. Remove screws (1) to release turn signal bar (2) from fender.
6. Install **new** turn signal bar. Tighten screws (1) to 15-19 ft-lbs (20.4-25.8 Nm).
7. Install wire terminals into turn signal connectors. See A.13 DEUTSCH DT SEALED CONNECTORS for connector assembly.
8. See Figure 7-64. Connect left [19] (1) and right [18] (3) turn signal connectors.
9. See Figure 7-63. Slide tail lamp connector cover (2) into clip (3). Install fastener (1) and tighten to 8-30 **in-lbs** (0.9-3.4 Nm).

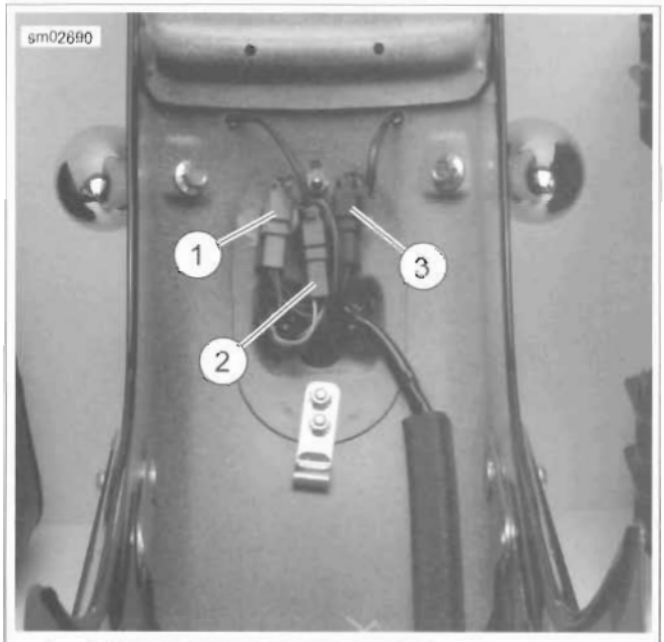

1. Left turn signal connector [19]
2. Tail lamp connector [93]
3. Right turn signal connector [18]

Figure 7-64. Turn Signal Connectors

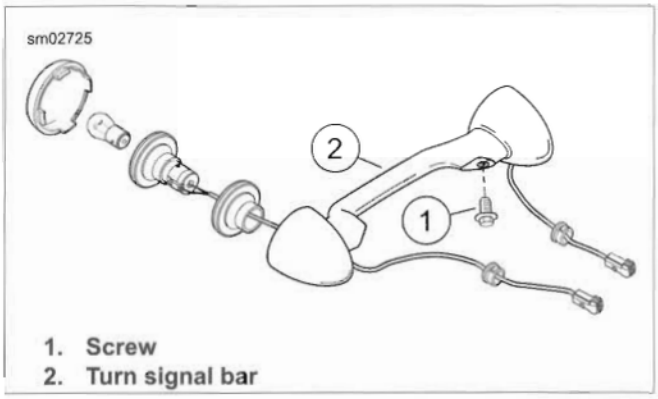

1. Screw
2. Turn signal bar

Figure 7-65. Rear Turn Signals: FLSTN

GENERAL

The crank position sensor (CKP) is a variable reluctance (VR) sensor. It generates an AC signal by sensing the passing of the 30 teeth machined in the left side flywheel. Two consecutive teeth are missing in the flywheel to establish a reference point. The CKP sends a signal to the electronic control module which references engine position (TDC) and engine speed.

NOTE

CKP sensor connector is not serviceable. Replace the entire assembly if it fails.

REMOVAL

1. Remove seat.

⚠WARNING

To prevent accidental vehicle start-up, which could cause death or serious injury, remove main fuse before proceeding. (00251b)

2. Remove main fuse.
3. Detach wiring behind regulator bracket.
   a. Disengage connector from bracket.
   b. See Figure 7-66. Disconnect the 2-place Mini-Deutsch CKP connector [79A] (3).
4. Remove screw and captive washer (2) to detach CKP sensor and O-ring (1) from crankcase. Carefully remove crank position sensor.

NOTE

Before removing wiring, carefully note wire routing. In particular, pay close attention to the locations of cable straps which must be replaced.

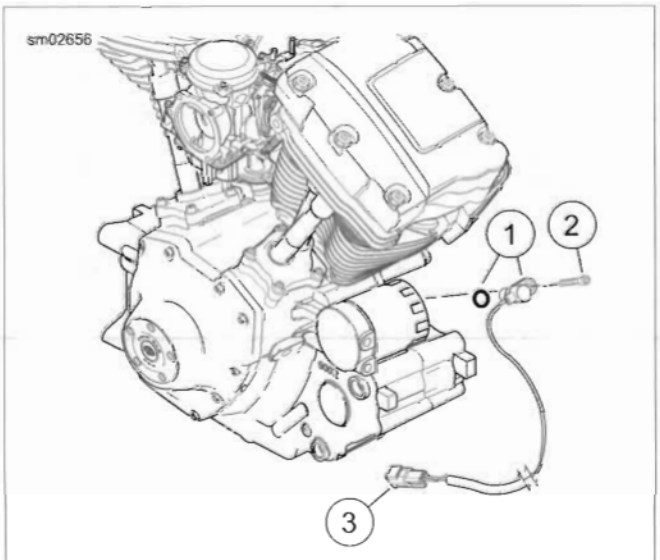

1. **CKP sensor and O-ring**
2. **Screw and captive washer**
3. **CKP connector [79A]**

Figure 7-66. CKP Sensor Assembly

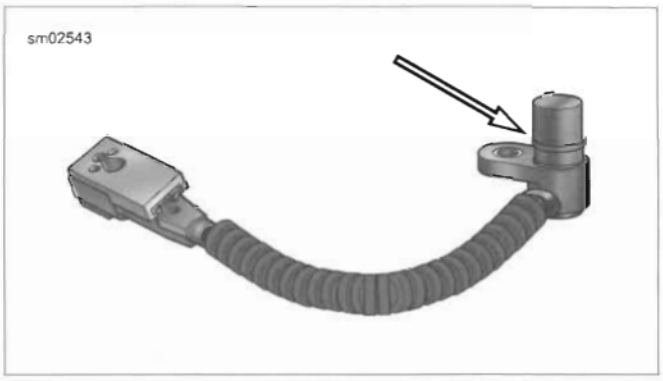

Figure 7-67. CKP Sensor O-Ring

INSTALLATION

FASTENER	TORQUE VALUE	
Crank position sensor (CKP)	90-120 **in-lbs**	10.2-13.6 Nm

1. See Figure 7-66. Lubricate CKP sensor O-ring (1) with clean engine oil.
2. See Figure 7-68. Install **new** CKP sensor with screw and captive washer. Tighten to 90-120 **in-lbs** (10.2-13.6 Nm).
3. Route wiring to connector behind regulator bracket.
4. Attach wiring.
   a. Mate connector [79].
   b. Attach connector to bracket.
5. Install main fuse.

⚠WARNING

After installing seat, pull upward on seat to be sure it is locked in position. While riding, a loose seat can shift causing loss of control, which could result in death or serious injury. (00070b)

6. Install seat.



Figure 7-68. Installed CKP Sensor

GENERAL

NOTE

ACR is used only on 103 cu. in. and larger engines.

See Figure 7-69. The ACR is opened and closed by the ECM to assist starting.

See Figure 7-70. When open, compressed gases are released through the exhaust port.

REMOVAL

PART NUMBER	TOOL NAME
HD-48498-A	ACR SOLENOID SOCKET

1. Remove the rocker cover and the rocker box. See 3.10 TOP END SERVICE.
2. Separate the ACR rear [203R] or front [203F] connector from the main wiring harness and remove connectors from retainer clip.
3. See Figure 7-74. Use ACR SOLENOID SOCKET (Part No. HD-48498-A) to remove the ACR from the cylinder head.

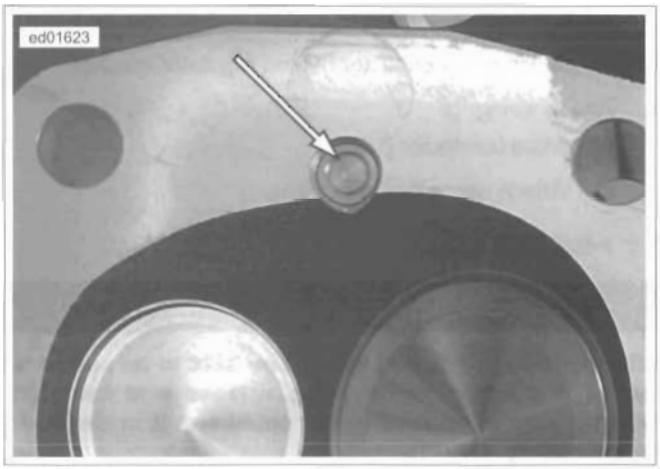

Figure 7-69. ACR Valve in Combustion Chamber

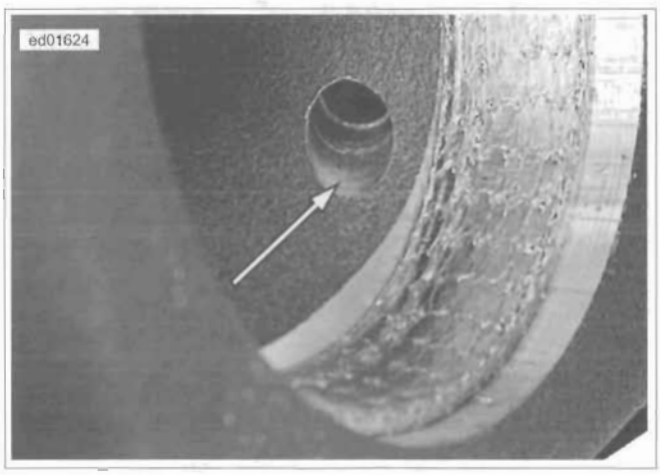

Figure 7-70. ACR Exhaust Port Release

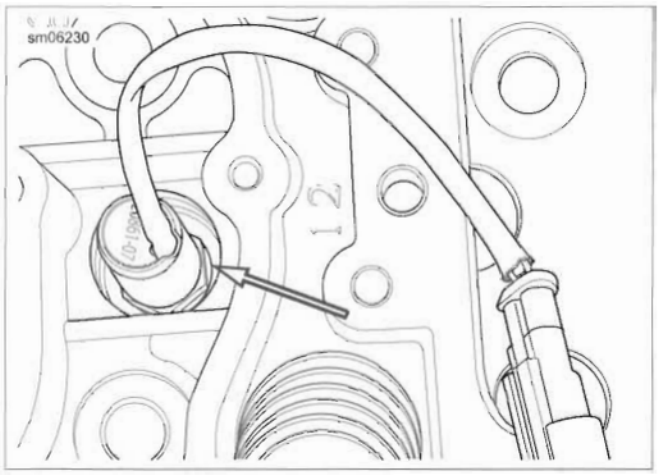

Figure 7-71. ACR in Head

INSTALLATION

PART NUMBER	TOOL NAME
HD-48498-A	ACR SOLENOID SOCKET

FASTENER	TORQUE VALUE	
ACR	13-17 ft-lbs	17.6-23.0 Nm

1. Verify that the copper seal washer is in place on the ACR.
2. See Figure 7-72. Identify a location around the threads of the ACR approximately 1/3 of the way up from the end.
3. See Figure 7-73. Apply three equally spaced dots of LOCTITE 246 MEDIUM STRENGTH/HIGH TEMPERATURE THREADLOCKER (blue) on threads.
4. To prevent cross threading, install and finger tighten.
5. See Figure 7-74. Using ACR SOLENOID SOCKET (Part No. HD-48498-A), tighten to 13-17 ft-lbs (17.6-23.0 Nm).
6. Route the wire harness between the cylinders.
7. Install rocker box and rocker cover. See 3.10 TOP END SERVICE.
8. Mate the ACR connectors [203R] and [203F] to the main wiring harness. Secure connectors to retaining clip.

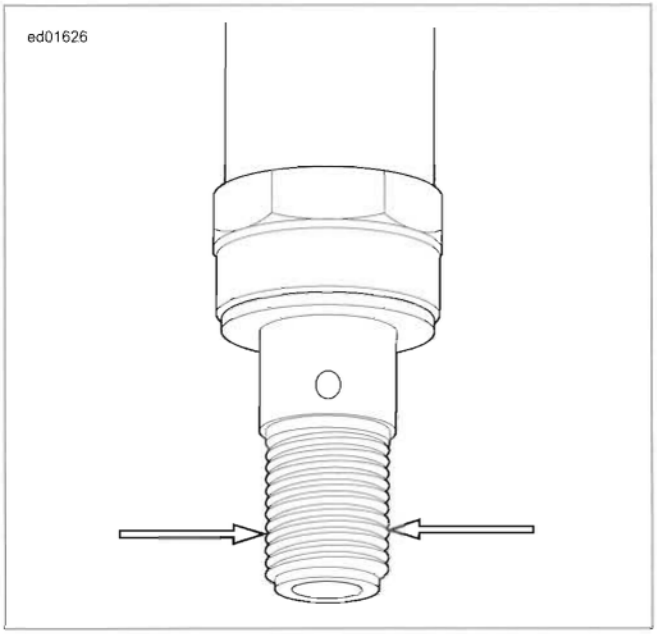

Figure 7-72. Bottom Third

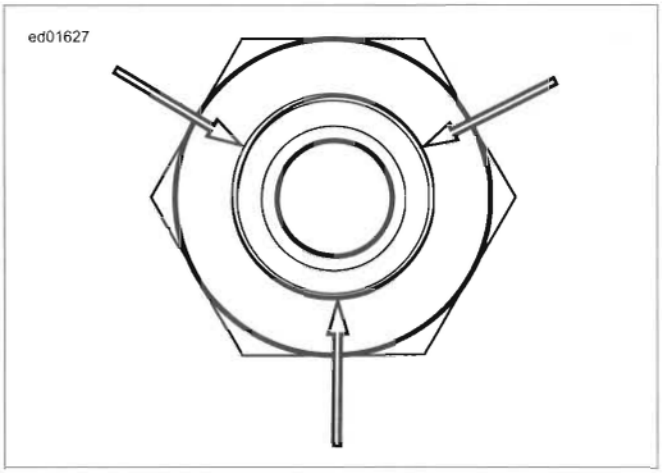

Figure 7-73. Three Dots of LOCTITE 246 MEDIUM STRENGTH/HIGH TEMPERATURE THREADLOCKER (blue)

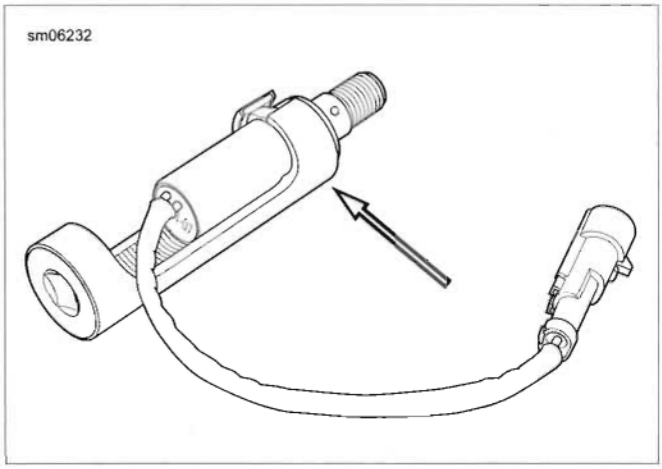

Figure 7-74. ACR Solenoid Socket and ACR

REMOVAL

PART NUMBER	TOOL NAME
HD-48904	IGNITION SWITCH SPANNER WRENCH

All But FXSB

1. Remove seat.

⚠WARNING

To prevent accidental vehicle start-up, which could cause death or serious injury, remove main fuse before proceeding. (00251b)

2. Remove main fuse.

NOTE

Remove spark plug cable by pulling on rubber boot at end of cable. Do not pull on cable or damage may result.

3. See Figure 7-75. Remove spark plug cables from coil.
4. Remove screw (4) to detach cover (5) from coil (1).
5. Remove two mounting screws (2) to detach coil from seat post.
6. Detach connector [83] from backside of coil.

FXSB

1. Remove seat.

⚠WARNING

To prevent accidental vehicle start-up, which could cause death or serious injury, remove main fuse before proceeding. (00251b)

2. Remove main fuse.
3. See Figure 7-76. Remove spark plug cables (3, 8) from coil.
4. Loosen set screw (6) and remove knob (5).
5. Remove nut (4) using IGNITION SWITCH SPANNER WRENCH (Part No. HD-48904).
6. Remove screw (9).
7. Detach connector [83] from backside of coil.

INSTALLATION

PART NUMBER	TOOL NAME
HD-48904	IGNITION SWITCH SPANNER WRENCH

FASTENER	TORQUE VALUE	
Ignition coil screws: all but FXSB	120-180 **in-lbs**	13.6-20.3 Nm
Coil cover screw: all but FXSB	30-40 **in-lbs**	3.4-4.5 Nm
Coil mounting screw: FXSB	96-120 **in-lbs**	10.9-13.6 Nm
Ignition switch nut: FXSB	140-160 **in-lbs**	15.8-18.1 Nm

All But FXSB

1. Attach connector [83] to backside of coil.
2. See Figure 7-75. Position coil (1) on seat post. Install two screws (2). Tighten to 120-180 **in-lbs** (13.6-20.3 Nm).
3. Fasten cover (5) to coil with screw (4). Tighten to 30-40 **in-lbs** (3.4-4.5 Nm).
4. Attach spark plug cables to coil. Rear cylinder spark plug cable attaches to upper coil tower.
5. Install main fuse.

⚠WARNING

After installing seat, pull upward on seat to be sure it is locked in position. While riding, a loose seat can shift causing loss of control, which could result in death or serious injury. (00070b)

6. Install seat.

FXSB

1. Attach connector [83] to backside of coil.
2. See Figure 7-76. Position coil (7) on bracket (2). Install screw (9). Tighten to 96-120 **in-lbs** (10.9-13.6 Nm).
3. Clean threads of nut (4). Apply LOCTITE 243 MEDIUM STRENGTH THREADLOCKER AND SEALANT (blue).
4. Install nut (4) using IGNITION SWITCH SPANNER WRENCH (Part No. HD-48904). Tighten nut to 140-160 **in-lbs** (15.8-18.1 Nm).
5. Install knob (5). Tighten set screw (6).
6. Attach spark plug cables to coil.
7. Install main fuse.

⚠WARNING

After installing seat, pull upward on seat to be sure it is locked in position. While riding, a loose seat can shift causing loss of control, which could result in death or serious injury. (00070b)

8. Install seat.

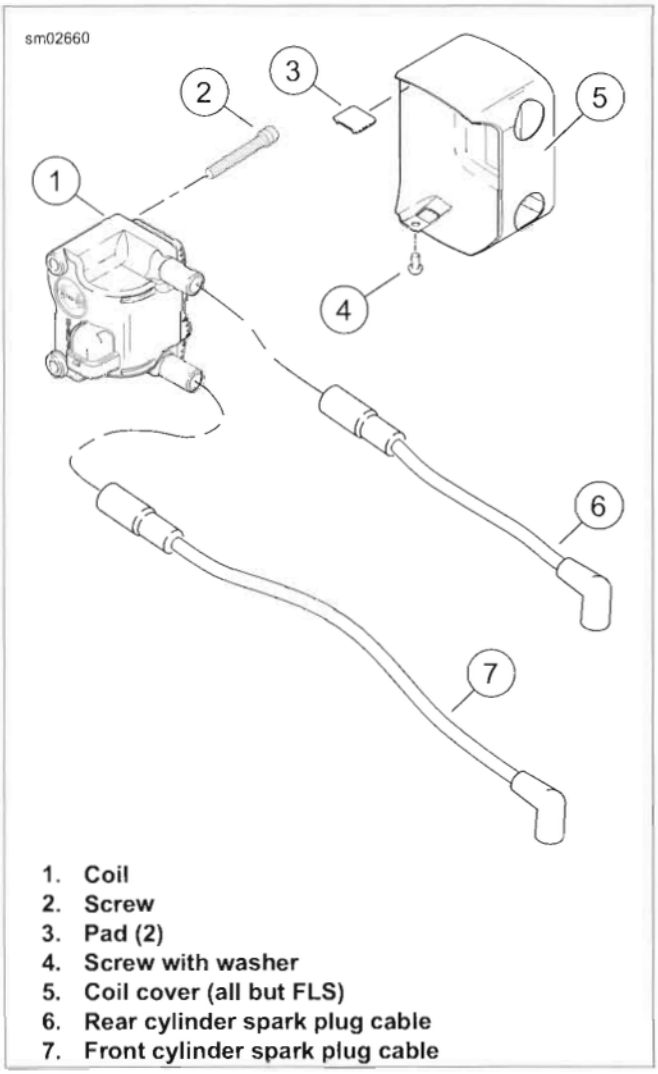

1. Coil
2. Screw
3. Pad (2)
4. Screw with washer
5. Coil cover (all but FLS)
6. Rear cylinder spark plug cable
7. Front cylinder spark plug cable

Figure 7-75. Coil (All But FXSB)

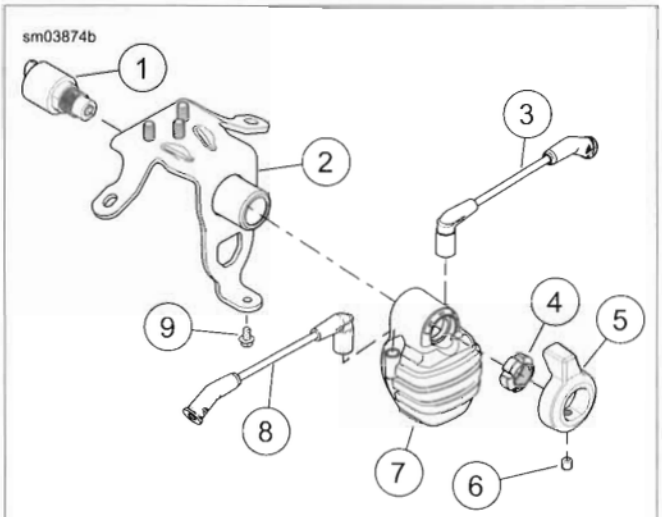

1. Ignition/light switch
2. Bracket
3. Rear cylinder spark plug cable
4. Nut
5. Knob
6. Set screw
7. Coil
8. Front cylinder spark plug cable
9. Screw

Figure 7-76. Ignition/Light Switch: FXSB

GENERAL

Resistor-type high-tension spark plug cables have a carbon-impregnated fabric core, instead of solid wire, for radio noise suppression and improved reliability of electronic components. Use the exact replacement cable for best results.

NOTE

See 1.17 SPARK PLUGS for spark plug information.

REMOVAL

⚠WARNING

Disconnecting spark plug cable with engine running can result in electric shock and death or serious injury. (00464b)

NOTE

Remove spark plug cable by pulling on rubber boot at end of cable. Do not pull on cable or damage may result.

1. Disconnect spark plug cables from ignition coil and spark plug terminals. Inspect all removed cables for damage.
2. **All but FXSB:** see Figure 7-77. Remove cable straps on horn bracket for front spark plug cable.

INSTALLATION

1. See Figure 7-77 (all but FXSB) or Figure 7-78 (FXSB). Connect spark plug cables to ignition coil and spark plugs. Fasten boots/caps securely. Tight connections provide the necessary moisture-proof environment for the ignition coil and spark plug terminals.
   a. **All but FXSB:** rear cylinder plug cable connects to top coil terminal.
   b. **FXSB:** front cylinder plug cable connects to front coil terminal.
2. **All but FXSB:** secure front spark plug cable to horn bracket with **new** cable straps.

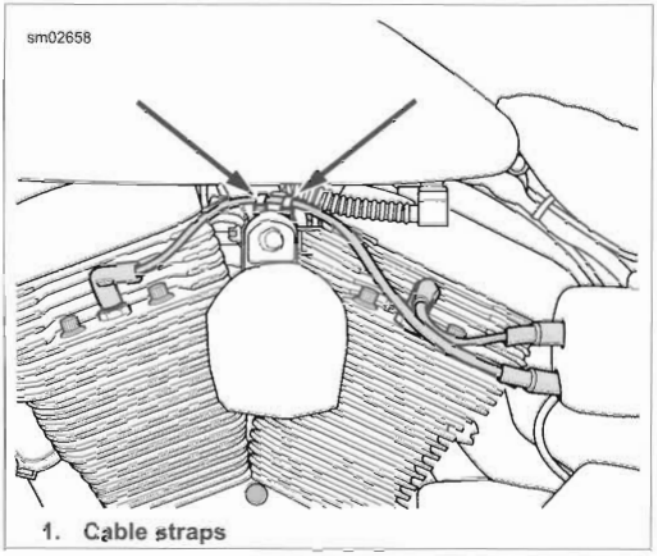

Figure 7-77. Spark Plug Cable Routing (All But FXSB)

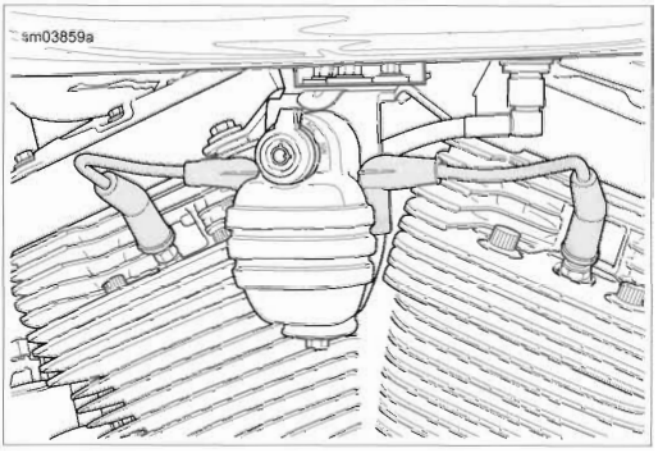

Figure 7-78. Spark Plug Cable Routing (FXSB)

DISASSEMBLY

1. Remove seat.

⚠WARNING

To prevent accidental vehicle start-up, which could cause death or serious injury, remove main fuse before proceeding. (00251b)

2. Remove main fuse. See 7.10 FUSES.
3. See Figure 7-79. Loosen fasteners (1) securing voltage regulator.
4. Remove fasteners (2) securing voltage regulator bracket to crankcase.
5. See Figure 7-80. Rotate connector locks (3, 5) out of the way and disconnect voltage regulator connectors.
6. Remove voltage regulator.

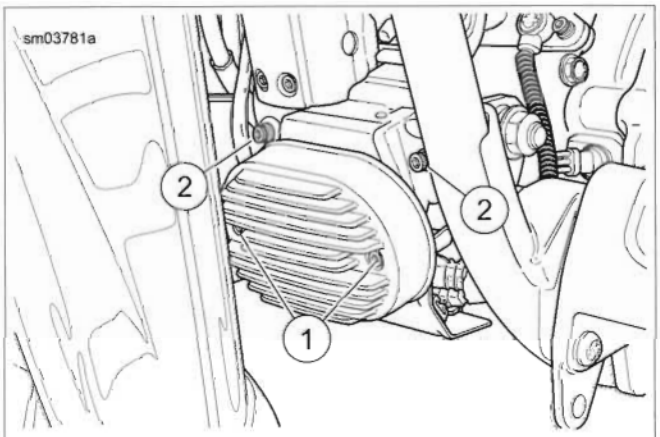

1. **Voltage regulator fasteners**
2. **Bracket fasteners**

Figure 7-79. Voltage Regulator

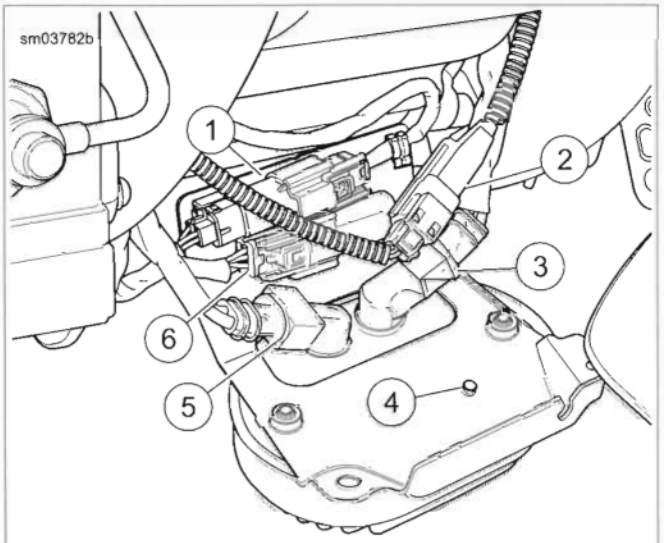

1. **Front oxygen sensor connector**
2. **Crank position sensor connector**
3. **Stator connector lock**
4. **Crank position sensor connector stud**
5. **Voltage regulator connector lock**
6. **Jiffy stand interlock connector**

Figure 7-80. Voltage Regulator Connectors

INSTALLATION

FASTENER	TORQUE VALUE	
Voltage regulator bracket to crankcase fasteners	70-100 **in-lbs**	7.9-11.3 Nm
Voltage regulator	50-80 **in-lbs**	5.7-9.0 Nm

1. See Figure 7-79. Install voltage regulator to regulator bracket with fasteners (1). Do not tighten fasteners at this time.
2. See Figure 7-80. Connect voltage regulator connectors and rotate connector locks (3, 5) down into position to secure connections.
3. See Figure 7-79. Install fasteners (2) securing voltage regulator bracket to crankcase. Tighten fasteners to 70-100 **in-lbs** (7.9-11.3 Nm).
4. Tighten fasteners (1) securing voltage regulator to regulator bracket to 50-80 **in-lbs** (5.7-9.0 Nm).
5. Install main fuse. See 7.10 FUSES.

⚠WARNING

After installing seat, pull upward on seat to be sure it is locked in position. While riding, a loose seat can shift causing loss of control, which could result in death or serious injury. (00070b)

6. Install seat.

REMOVAL

⚠WARNING

To prevent accidental vehicle start-up, which could cause death or serious injury, disconnect negative (-) battery cable before proceeding. (00048a)

1. Disconnect negative battery cable.
2. Remove primary chaincase housing. See 5.5 PRIMARY CHAINCASE HOUSING.
3. Disconnect stator connector from voltage regulator. See 7.23 VOLTAGE REGULATOR.
4. See Figure 7-81. Remove alternator rotor (4). Two bolts can be inserted through the holes in the rotor face to aid during removal.

NOTE

See Figure 7-81. Use contact cleaner, alcohol or glass cleaner in the next step as a lubricant.

5. Move grommet (3) to one side and spray lubricant into gap to lubricate grommet and ease removal. Repeat for other side.
6. Remove TORX screws (2) and discard.
7. Remove stator (1) while pulling rubber grommet (3) and wires through crankcase hole.

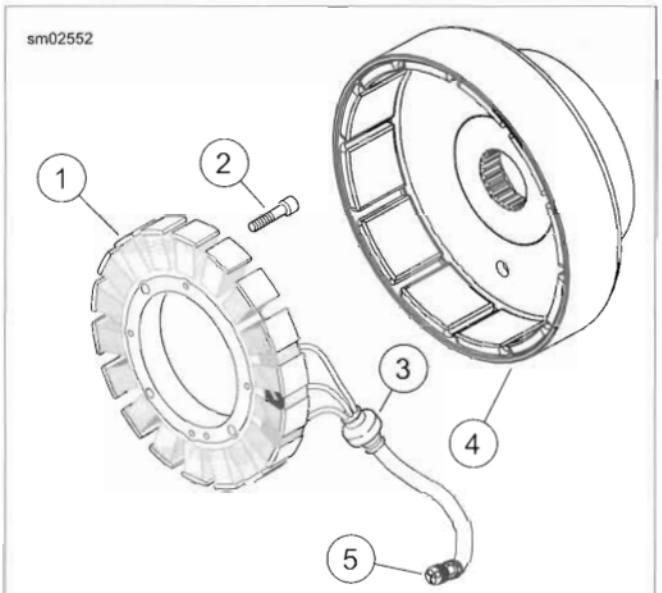

1. **Stator**
2. **Screw (4)**
3. **Grommet**
4. **Rotor**
5. **Connector [47B]**

Figure 7-81. Rotor and Stator (Typical)

CLEANING AND INSPECTION

1. Remove debris from rotor magnets. Clean rotor by wiping thoroughly with a clean cloth.
2. Check rotor for:
   a. Loose or cracked magnets.
   b. Stator bolt contact with rotor.
   c. Spline damage to rotor center mounting bolt hole.
3. Clean stator, stator leads and grommet thoroughly with a clean cloth.
4. Check stator for:
   a. Contact with rotor.
   b. Damaged or cracked insulation.
   c. Electrical failures. See the electrical diagnostic manual.

INSTALLATION

FASTENER	TORQUE VALUE	
Stator screws	55-75 **in-lbs**	6.2-8.4 Nm

NOTE

Discard and replace stator Torx screws after each removal.

1. Insert wires through crankcase hole.
2. See Figure 7-81. Push rubber grommet (3) with wires through crankcase hole. If necessary, apply the same lubricant used during removal.
3. Install the stator (1) on the crankcase and fasten in place using **new** TORX screws. Tighten to 55-75 **in-lbs** (6.2-8.4 Nm).
4. Mate connector [47] (5) onto voltage regulator and engage latch to secure. See 7.23 VOLTAGE REGULATOR.
5. Install rotor (4) on the sprocket shaft.
6. Install primary chaincase housing, clutch, primary drive and primary cover. See 5.5 PRIMARY CHAINCASE HOUSING and 5.4 DRIVE COMPONENTS.
7. Connect negative battery cable.

GENERAL

- See Figure 7-82. The fuel gauge is mounted in the left fuel tank cap. Remove by gently pulling upward. Do not twist.
- Three wires attach to the bottom of the gauge (1).
- The fuel gauge sending unit is under the console in the middle of the tank.

REMOVAL

1. Remove seat.

⚠WARNING

To prevent accidental vehicle start-up, which could cause death or serious injury, remove main fuse before proceeding. (00251b)

2. Remove main fuse.

NOTE

The gauge wires are routed through a tube in the tank and are secured at the bottom of the tank.

⚠WARNING

Stop the engine when refueling or servicing the fuel system. Do not smoke or allow open flame or sparks near gasoline. Gasoline is extremely flammable and highly explosive, which could result in death or serious injury. (00002a)

3. Remove fuel tank fasteners and slide tank back to reveal fuel gauge connector [117]. See 4.6 FUEL TANK.
4. See Figure 7-83. Disconnect fuel gauge connector [117] (3) and remove terminals. See B.1 CONNECTORS.
5. Remove fuel gauge wiring from clamp at bottom of fuel tank.

NOTE

Do not twist gauge and wiring during removal.

6. See Figure 7-82. Pull up on gauge (1). Remove gauge, gasket (2) and wiring from fuel tank. Discard gasket.

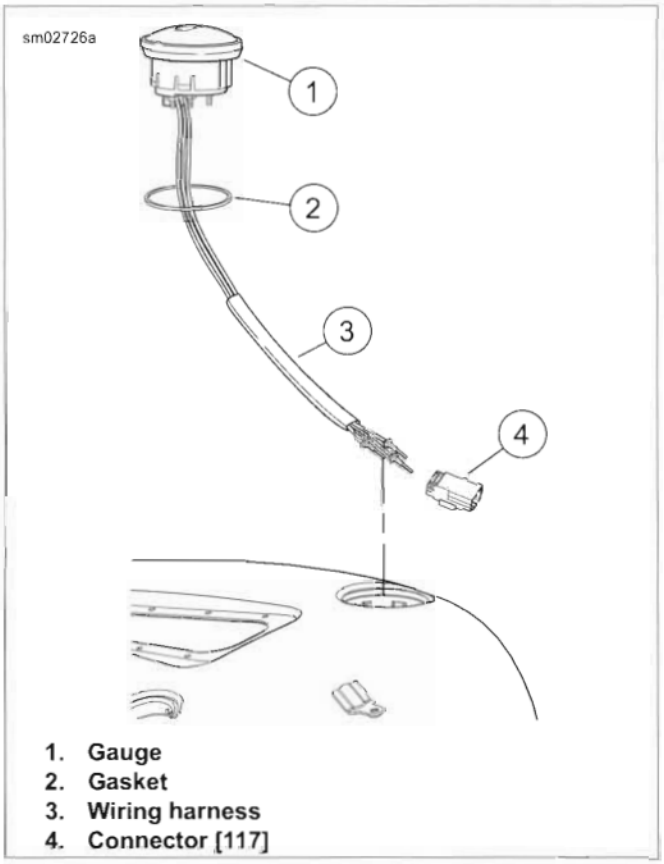

1. **Gauge**
2. **Gasket**
3. **Wiring harness**
4. **Connector [117]**

Figure 7-82. Fuel Gauge

INSTALLATION

1. See Figure 7-82. Install wiring harness (3) through **new** gasket (2).
2. Push wiring harness through tube in fuel tank.
3. While gently pulling on wiring harness, install gauge (1) and gasket by carefully moving gauge back and forth while pushing down at the same time.
4. See Figure 7-83. Install wiring into fuel gauge connector [117] (3). Mate connector halves and secure connector into clip as shown.
5. Slide fuel tank into position and install fasteners. See 4.6 FUEL TANK.
6. Secure wire to clip at bottom of fuel tank.
7. Install main fuse.

⚠WARNING

After installing seat, pull upward on seat to be sure it is locked in position. While riding, a loose seat can shift causing loss of control, which could result in death or serious injury. (00070b)

8. Install seat.

NOTE

The low fuel lamp will not turn off until there is sufficient fuel in the tank, the ignition switch has been turned off and back on, and the vehicle has begun forward speed.

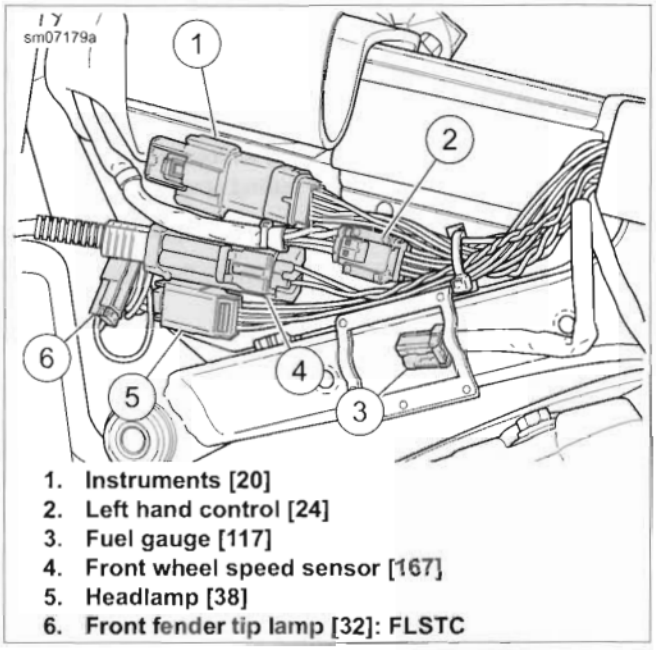

1. Instruments [20]
2. Left hand control [24]
3. Fuel gauge [117]
4. Front wheel speed sensor [167]
5. Headlamp [38]
6. Front fender tip lamp [32]: FLSTC

Figure 7-83. Under Fuel Tank Left Side

GENERAL

- Both the ECM and the speedometer retain the odometer value. If the speedometer is replaced, the new speedometer will display the odometer value stored in the ECM. The new speedometer will lock to the mileage stored in the ECM after 31.1 mi (50 km) have been accumulated. The trip B odometer will display the countdown mileage.
- If the speedometer is installed on another vehicle after it has locked to the ECM, the odometer will display "VIN ERR" on the new vehicle. If the speedometer is removed from the vehicle before the countdown reaches zero, it will reset the mileage countdown to 31.1 mi (50 km). This mileage countdown allows for a road test to verify that speedometer replacement was the proper repair.

REMOVAL: ALL BUT FXSB

1. See Figure 7-84. Remove nut and washer (4) and lift console (5) from fuel tank.
2. Position clean shop rags on fuel tank and flip console over to expose underside.
3. Press on connector tab and disconnect connector [39] (2) from speedometer under console.
4. See Figure 7-85. Pry between three tabs and speedometer with a screwdriver to raise and release back clamp from speedometer. Remove back clamp from speedometer.
5. See Figure 7-84. Remove speedometer from console.
6. Remove gasket (3) from speedometer.

INSTALLATION: ALL BUT FXSB

FASTENER	TORQUE VALUE	
Speedometer console nut: all but FXSB	84-132 **in-lbs**	9.5-14.9 Nm

1. See Figure 7-84. Install gasket (3) to speedometer.
2. Position speedometer in console (5).
3. See Figure 7-85. Press on back clamp (3) until three tabs engage on back of speedometer.
4. See Figure 7-84. Connect connector [39] (2) to speedometer under console.
5. Remove shop rags. Attach console to fuel tank with nut and washer (4). Tighten to 84-132 **in-lbs** (9.5-14.9 Nm).
6. Test speedometer for proper operation.

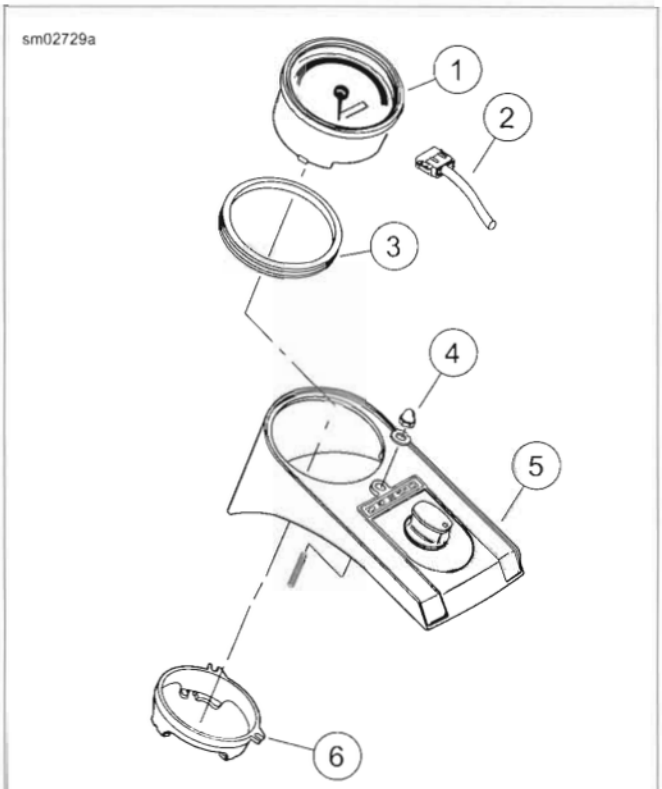

1. **Speedometer**
2. **Connector [39]**
3. **Gasket**
4. **Nut and washer**
5. **Console**
6. **Back clamp**

Figure 7-84. Speedometer: All But FXSB (Typical)

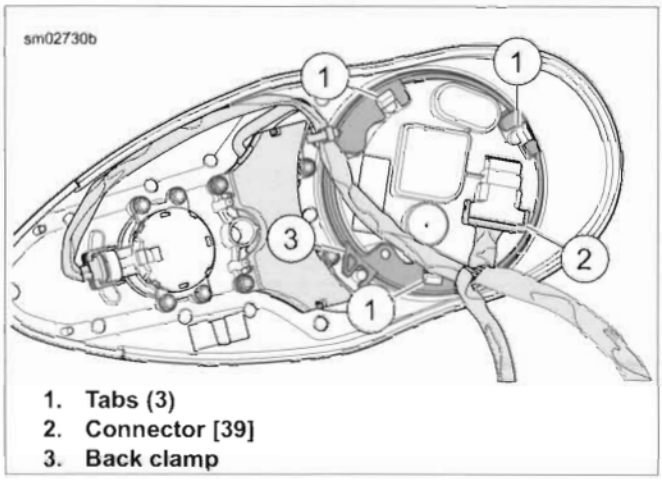

1. **Tabs (3)**
2. **Connector [39]**
3. **Back clamp**

Figure 7-85. Connector [39] (Typical)

REMOVAL: FXSB

1. See Figure 7-86. Remove fasteners (3).
2. Disconnect speedometer wire connector.
3. Remove speedometer.

INSTALLATION: FXSB

FASTENER	TORQUE VALUE	
Speedometer fasteners: FXSB	12-17 **in-lbs**	1.4-1.9 Nm

1. See Figure 7-86. Install speedometer (1) with seal (2).
2. Connect speedometer wire connector.
3. Install fasteners (3). Tighten to 12-17 **in-lbs** (1.4-1.9 Nm).

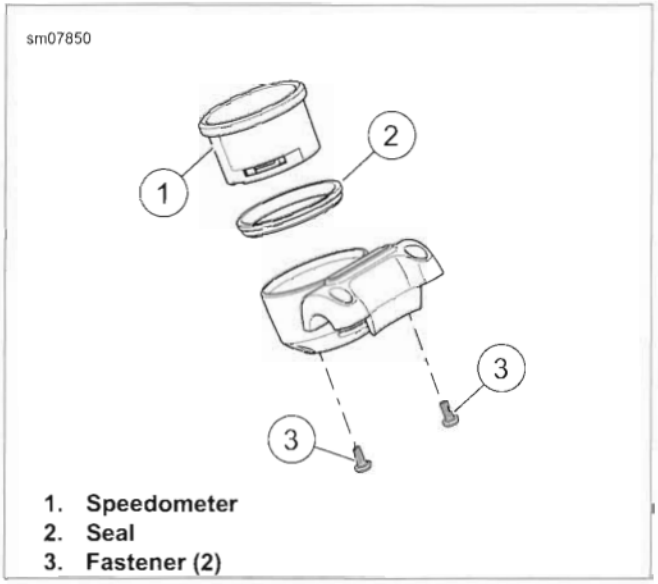

1. **Speedometer**
2. **Seal**
3. **Fastener (2)**

Figure 7-86. Speedometer: FXSB

GENERAL

The vehicle speed sensor is powered and monitored by the ECM. The ECM processes the vehicle speed signal and transmits this signal to the BCM and speedometer through serial data.

The vehicle speed sensor is located on the transmission just behind the transmission top cover.

REMOVAL

1. Remove seat.

⚠WARNING

To prevent accidental vehicle start-up, which could cause death or serious injury, remove main fuse before proceeding. (00251b)

2. Remove main fuse.
3. Remove electrical panel. See 7.3 ELECTRICAL PANEL.
4. See Figure 7-87. Disconnect 3-place vehicle speed sensor connector [65].
5. Remove sensor mounting bolt and lift sensor from transmission case.

INSTALLATION

FASTENER	TORQUE VALUE	
VSS mounting bolt	84-108 **in-lbs**	9.5-12.2 Nm

1. See Figure 7-87. Install sensor into transmission case using mounting bolt. Tighten to 84-108 **in-lbs** (9.5-12.2 Nm).
2. Mate 3-place vehicle speed sensor connector [65].
3. Install electrical panel. See 7.3 ELECTRICAL PANEL.
4. Install main fuse.

⚠WARNING

After installing seat, pull upward on seat to be sure it is locked in position. While riding, a loose seat can shift causing loss of control, which could result in death or serious injury. (00070b)

5. Install seat.

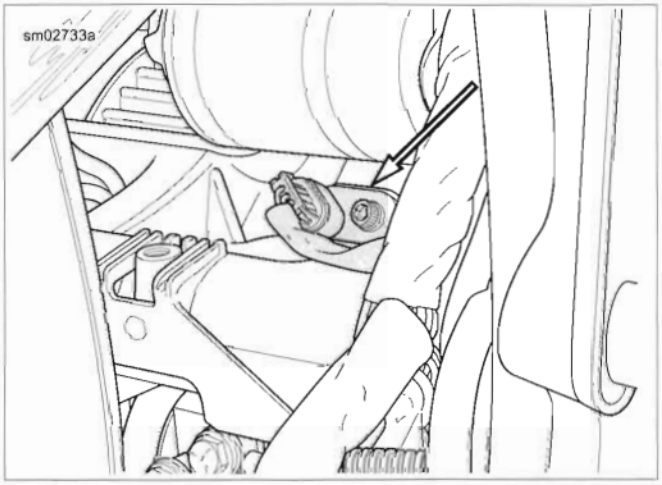

Figure 7-87. Vehicle Speed Sensor

FRONT WHEEL SPEED SENSOR

Removal

NOTE

Fuel tank crossover hose does not need to be disconnected. Fuel tank can be slid back enough to reveal handlebar switch assembly connectors.

1. Slide fuel tank rearward. See 4.6 FUEL TANK.
2. See Figure 7-88 or Figure 7-89. Disconnect front WSS connector (1).
3. See Figure 7-90. Cut cable straps (1) and remove clips (3) to release front wheel speed sensor cable from brake hose.
4. **All but FLSTC:** Remove clip (2).
5. **FLSTC:** Cut cable straps (4).
6. See Figure 7-91. Remove front wheel speed sensor clip.
7. Retract axle until front wheel speed sensor is free. See 2.4 FRONT WHEEL.

NOTE

The wheel speed sensor works in conjunction with the ABS encoder bearing installed in the wheel hub. If necessary, see 2.8 SEALED WHEEL BEARINGS for removal and installation instructions.

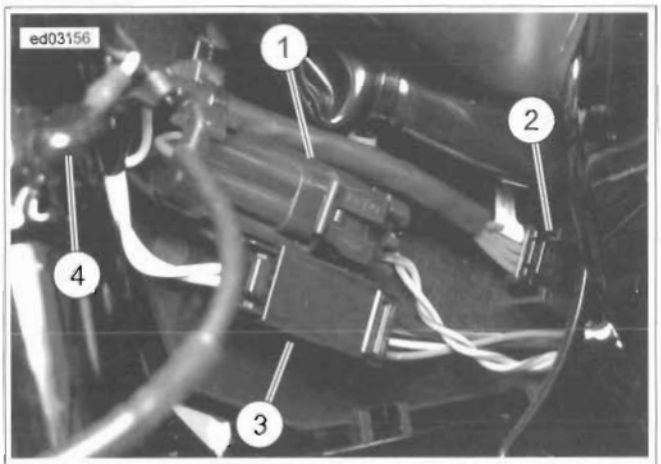

1. Front WSS [167]
2. Left hand control [24]
3. Headlamp [38]
4. Auxiliary lamp switch [109]

Figure 7-88. Under Fuel Tank Left Side: FXSB

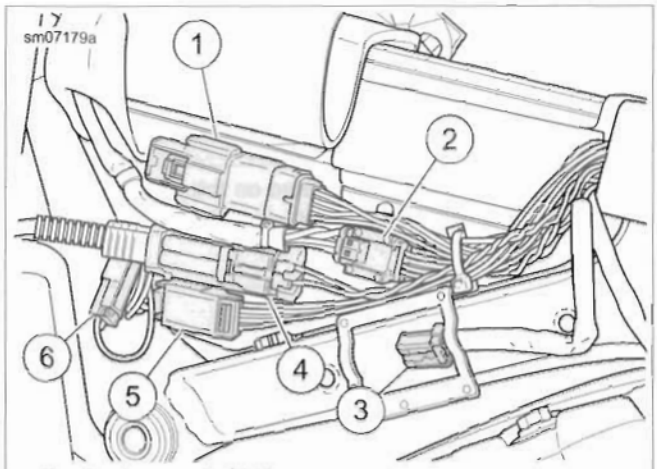

1. Instruments [20]
2. Left hand control [24]
3. Fuel gauge [117]
4. Front wheel speed sensor [167]
5. Headlamp [38]
6. Front fender tip lamp [32]: FLSTC

Figure 7-89. Under Fuel Tank Left Side

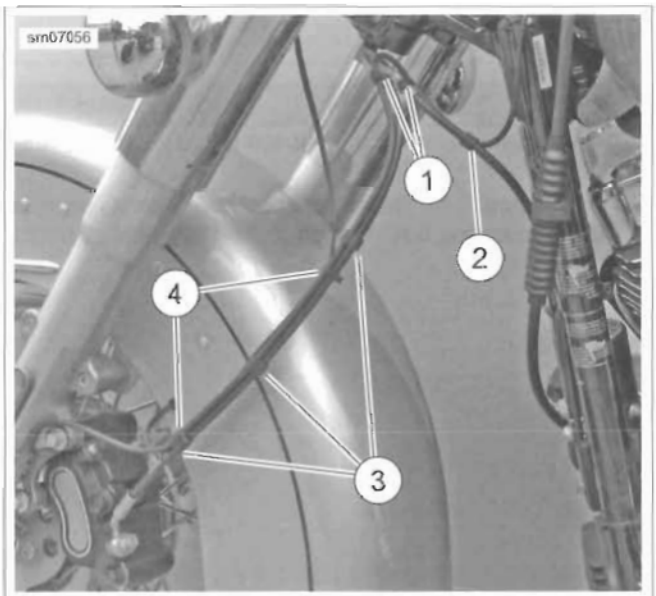

1. Cable strap (2)
2. Clip: all but FLSTC
3. Clip (3)
4. Cable strap: FLSTC (2)

Figure 7-90. WSS Cable Rounting



Figure 7-91. Front Wheel Speed Sensor Cable Clip

Installation

NOTES

- *Always keep the wheel speed sensor and ABS encoder bearing away from magnetic fields. Items such as magnetic parts trays, magnetic base dial indicators, alternator rotors, etc. will damage sensor. Never pull wheel speed sensor cable taut or use to retain wheel, axle or other components.*
- *Install wheel speed sensor with index pin on the outboard side or sensor will be damaged during installation.*

1. Push axle through **new** front wheel speed sensor and left fork slider.
2. Secure front wheel. See 2.4 FRONT WHEEL. Be sure to rotate front wheel speed sensor until index pin makes contact with shoulder on fork slider as shown in Figure 7-92.
3. See Figure 7-88 or Figure 7-89. Connect front WSS connector (1).
4. See Figure 7-90. Install **new** cable straps (1) to crimped ends of fitting and install clips (3) to secure front wheel speed sensor cable to brake hose.
5. **All but FLSTC:** Install clip (2).
6. **FLSTC:** Install **new** cable straps (4).
7. See Figure 7-91. Install front wheel speed sensor clip.
8. Install fuel tank. See 4.6 FUEL TANK.



Figure 7-92. Front Wheel Speed Sensor Index Pin (ABS Models)

REAR WHEEL SPEED SENSOR

FASTENER	TORQUE VALUE	
Splash guard screw	36-48 **in-lbs**	4.1-5.4 Nm

Removal

1. Remove right saddlebag, if installed.
2. Remove splash guard.
3. See Figure 7-93. Disconnect rear wheel speed sensor connector (4).
4. See Figure 7-95. Remove cable strap (1) and both clips (3).
5. Remove axle. See 2.5 REAR WHEEL.

NOTE

The wheel speed sensor works in conjunction with the ABS encoder bearing installed in the wheel hub. If necessary, see 2.8 SEALED WHEEL BEARINGS for removal and installation instructions.

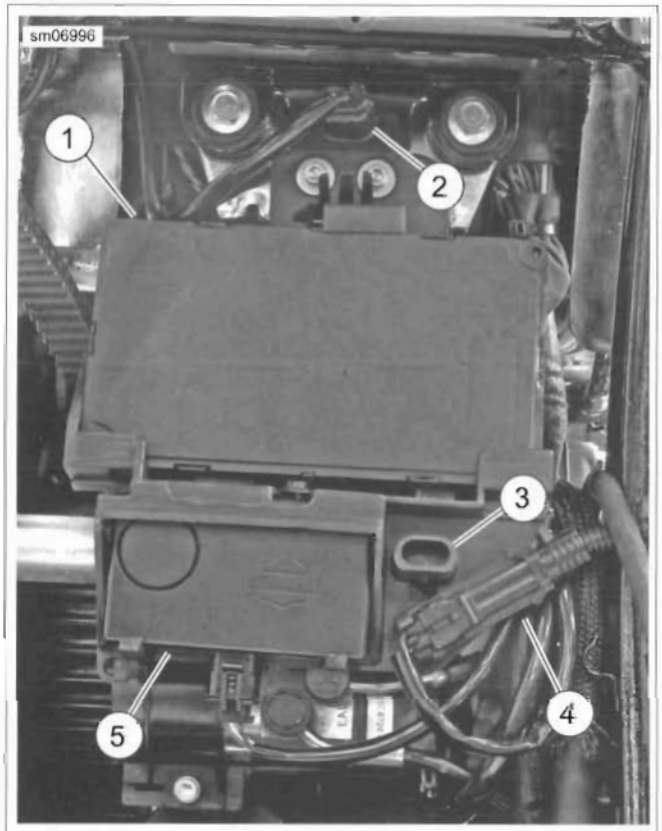

1. BCM
2. Purge solenoid connector receptacle
3. Security siren connector receptacle
4. Wheel speed sensor connector
5. Security siren

Figure 7-93. Body Control Module (BCM): All But FXSB

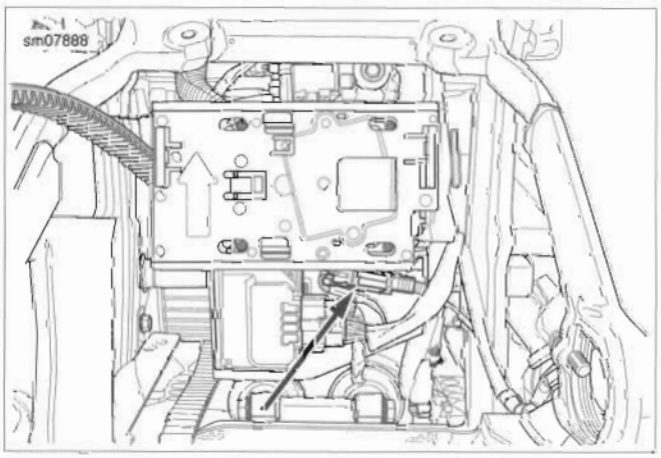

Figure 7-94. Speed Sensor Connector: FXSB

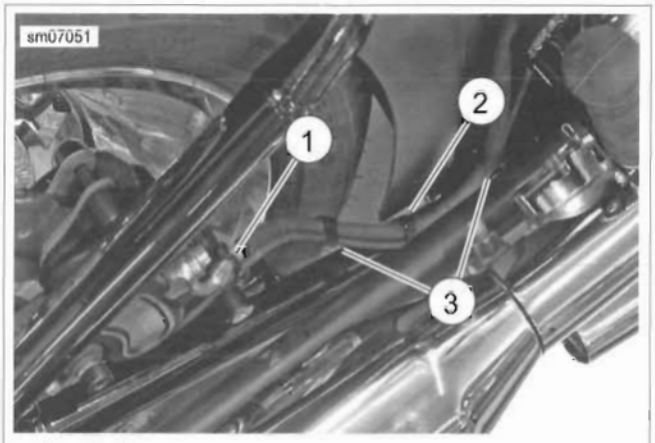

1. Cable strap
2. Weldment
3. Clip (2)

Figure 7-95. WSS cable Routing

Installation

NOTES

- *Always keep the wheel speed sensor and ABS encoder bearing away from magnetic fields. Items such as magnetic parts trays, magnetic base dial indicators, alternator rotors, etc. will damage sensor. Never pull wheel speed sensor cable taut or use to retain wheel, axle or other components.*
- *Install wheel speed sensor with index pin on the outboard side or sensor will be damaged during installation.*

1. See 2.5 REAR WHEEL and Figure 7-96. Install axle with **new** rear wheel speed sensor in place. Make sure index pin is pointed outboard toward rear fork. Rotate wheel speed sensor so that the index pin is against the lower edge of the rear caliper mounting bracket.
2. See Figure 7-95. Install cable strap (1) and both clips (3).
3. See Figure 7-93. Connect rear wheel speed sensor connector (4).
4. Install splash guard.
5. Tighten splash guard screw to 36-48 **in-lbs** (4.1-5.4 Nm).
6. Install right saddlebag, if equipped.

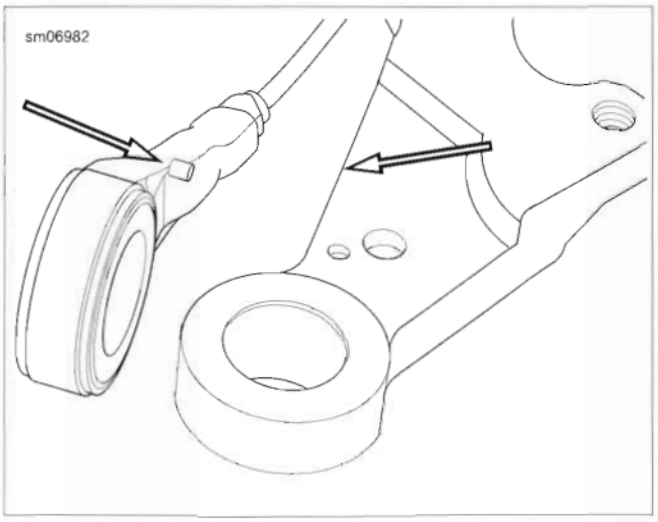

Figure 7-96. Rear Wheel Speed Sensor Index Pin (ABS Equipped)

GENERAL

The indicator lamp assembly is equipped with Light Emitting Diode (LED) indicators. The indicator lamp assembly is not serviceable. If one LED is bad, the entire assembly must be replaced.

See the electrical diagnostic manual for troubleshooting procedures.

REMOVAL: ALL BUT FXSB

1. Perform steps to remove fuel tank. Do not remove crossover tube. See 4.6 FUEL TANK.
2. See Figure 7-97. Slide fuel tank rearward and disconnect instruments harness connector [20] (1).
3. See Figure 7-98. Remove connectors (1-3).
4. See Figure 7-99. Remove indicator lamp assembly.
   a. **All but FLSTC, FLS:** Squeeze clips of bezel (3) together and gently pry indicator lamp assembly (4) out of console.
   b. **FLSTC, FLS:** Remove screws (5) and gently pull indicator lamp assembly (4) out of console.

INSTALLATION: ALL BUT FXSB

1. See Figure 7-99. Attach indicator lamp assembly to console.
   a. **All but FLSTC, FLS:** Make sure clips of bezel (3) engage to secure assembly in place.
   b. **FLSTC, FLS:** Install screws (5).
2. See Figure 7-98. Install connectors (1-3).
3. See Figure 7-97. Connect instruments harness connector [20] (1).
4. Install fuel tank. See 4.6 FUEL TANK.

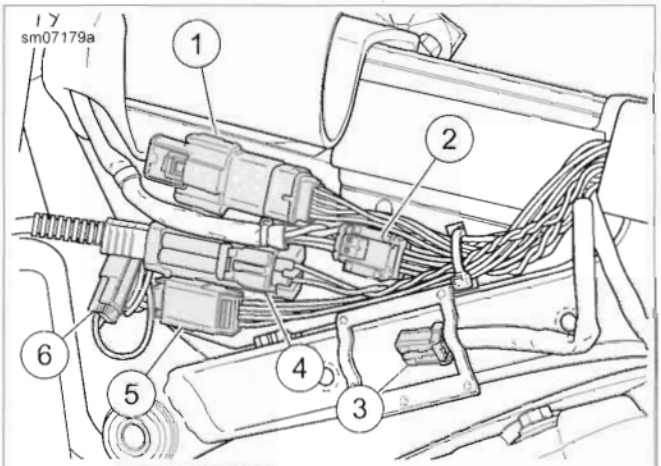

1. Instruments [20]
2. Left hand control [24]
3. Fuel gauge [117]
4. Front wheel speed sensor [167]
5. Headlamp [38]
6. Front fender tip lamp [32]: FLSTC

Figure 7-97. Under Fuel Tank Left Side

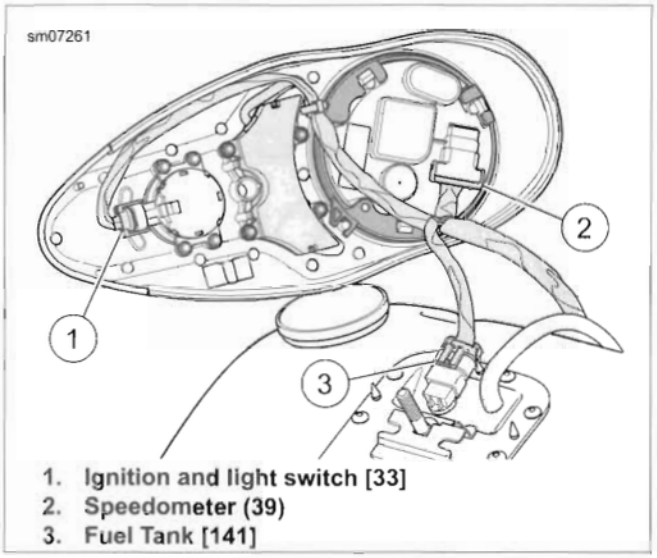

1. Ignition and light switch [33]
2. Speedometer (39)
3. Fuel Tank [141]

Figure 7-98. Instruments Harness Connectors

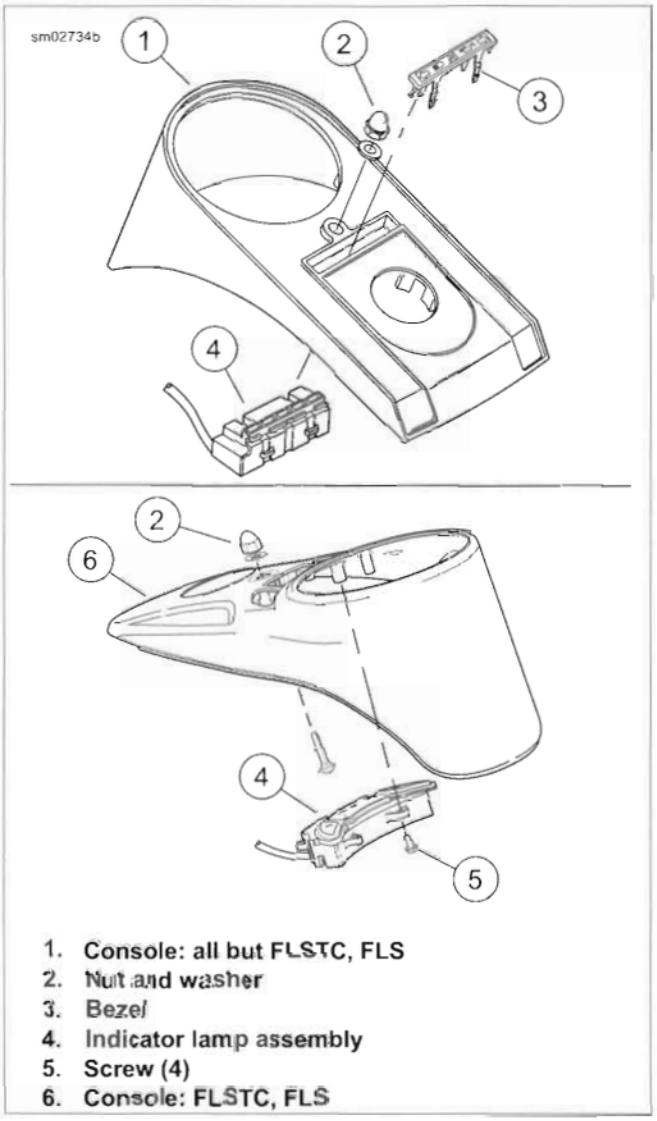

1. Console: all but FLSTC, FLS
2. Nut and washer
3. Bezel
4. Indicator lamp assembly
5. Screw (4)
6. Console: FLSTC, FLS

Figure 7-99. Indicator Lamp Assembly

REMOVAL: FXSB

1. Slide fuel tank back to access instrumentation connector. See 4.6 FUEL TANK.
2. Disconnect instrumentation connector.
3. Disconnect speedometer connector.

NOTE

Support handlebar in position.

4. See Figure 7-100. Remove fasteners (2).
5. Remove both screws (4) securing indicator lamp assembly (3) to upper handlebar clamp (1).
6. Remove indicator lamp assembly.

INSTALLATION: FXSB

FASTENER	TORQUE VALUE	
Indicator lamp screws: FXSB	20-30 **in-lbs**	2.3-3.4 Nm
Upper handlebar clamp fasteners: FXSB	12-16 ft-lbs	16.3-21.7 Nm

1. See Figure 7-100. Attach indicator lamp assembly (3) to upper handlebar clamp (1) with screws (4). Tighten to 20-30 **in-lbs** (2.3-3.4 Nm).

NOTE

The slight gap between upper and lower handlebar clamps should face the rider.

2. Loosely install upper handlebar clamp (1) with fasteners (2).
3. See Figure 7-101. Align marks with seam of clamps.
4. Tighten forward fasteners then rear fasteners to 12-16 ft-lbs (16.3-21.7 Nm).
5. Route indicator lamp wiring to instrumentation and speedometer connectors. Connect connectors.
6. Install fuel tank. See 4.6 FUEL TANK.

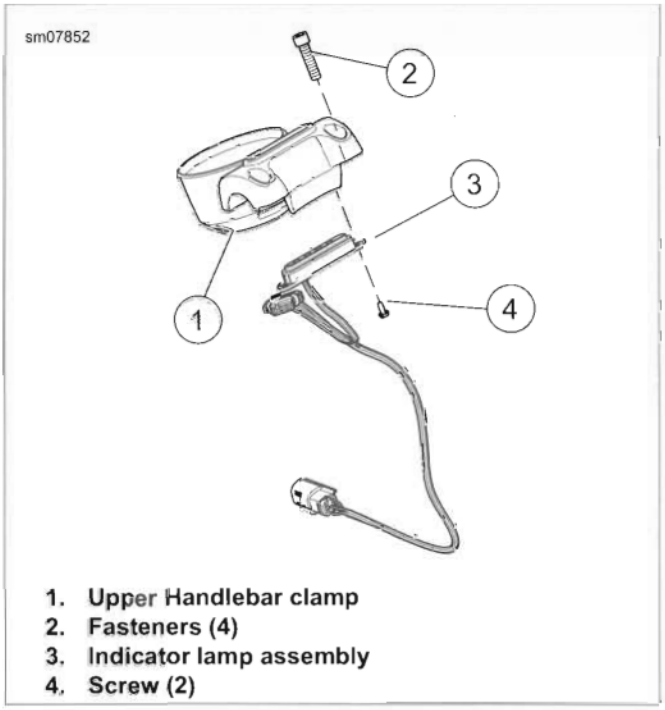

1. **Upper Handlebar clamp**
2. **Fasteners (4)**
3. **Indicator lamp assembly**
4. **Screw (2)**

Figure 7-100. Indicator Lamp

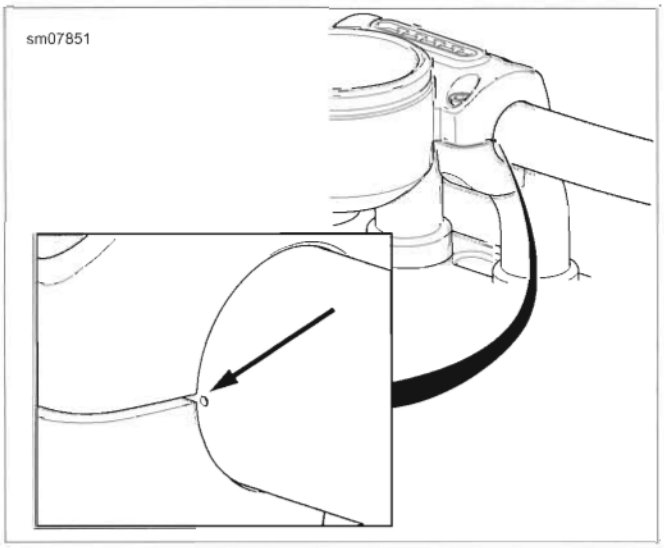

Figure 7-101. Alignment Marks

GENERAL

See Figure 7-102. The neutral switch is located on the transmission top cover. The two terminal switch is normally open. When the transmission shifter is in neutral and the ignition switch is in the IGNITION position, the switch causes the NEUTRAL indicator light to illuminate.

REMOVAL

1. Remove battery and battery caddy. See 1.19 BATTERY MAINTENANCE, Battery Disconnection and Removal.
2. Make sure transmission shifter is in NEUTRAL.
3. See Figure 7-103. Remove connectors from switch studs.
4. Remove neutral switch and O-ring from transmission top cover.

NOTE

To replace connectors, use heat-sealed butt splice connectors. See A.24 SEALED SPLICE CONNECTORS.

INSTALLATION

FASTENER	TORQUE VALUE	
Neutral switch	120-180 **in-lbs**	13.6-20.3 Nm

1. Place transmission in NEUTRAL.
2. See Figure 7-103. Lubricate O-ring with transmission oil.
3. Install switch with O-ring to transmission top cover. Tighten to 120-180 **in-lbs** (13.6-20.3 Nm).

NOTE

The neutral switch is not polarity sensitive. The connectors can be attached to either stud.

4. Install connectors to switch studs.
5. Install battery caddy and battery. See 1.19 BATTERY MAINTENANCE, Battery Installation and Connection.

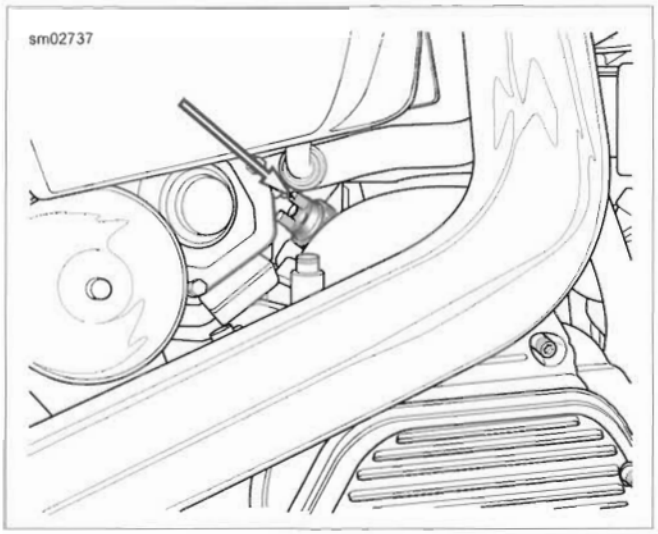

Figure 7-102. Neutral Switch Location

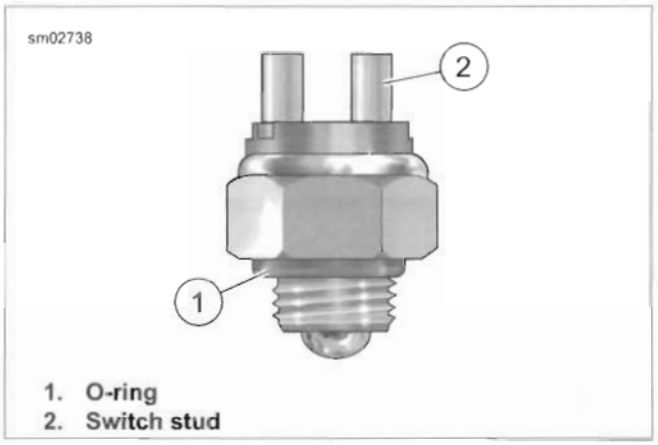

1. **O-ring**
2. **Switch stud**

Figure 7-103. Neutral Switch

6. Test neutral switch for proper operation.
   a. Turn ignition switch to IGNITION position.
   b. Verify that transmission shifter is in NEUTRAL.
   c. Check to see that NEUTRAL indicator light illuminates.

GENERAL

See Figure 7-104. The oil pressure switch monitors oil pressure in the crankcase. If the oil pressure drops below 3 psi (20.6 kPa), the oil pressure switch is tripped and illuminates the low oil pressure indicator light. The oil pressure switch is located on the right side of the crankcase.

REMOVAL

1. See Figure 7-104. Remove connector (2) from oil pressure switch (1).
2. Remove oil pressure switch from crankcase.

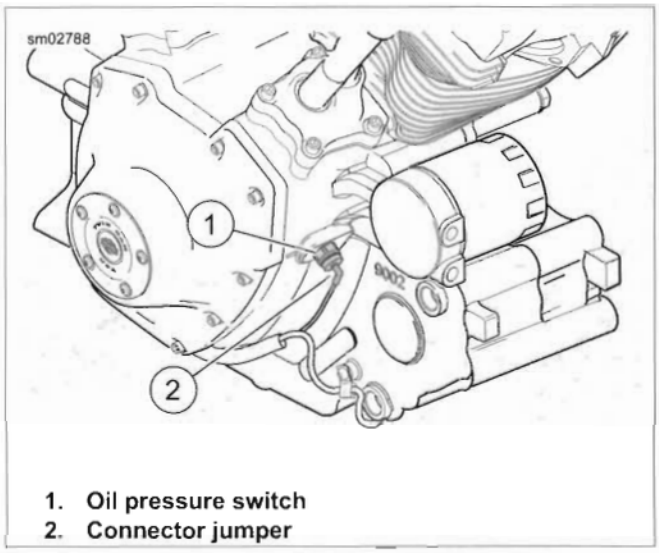

1. **Oil pressure switch**
2. **Connector jumper**

Figure 7-104. Oil Pressure Switch

INSTALLATION

FASTENER	TORQUE VALUE	
Oil pressure switch	96-144 **in-lbs**	10.8-16.3 Nm

1. Coat threads of oil pressure switch with LOCTITE 565 THREAD SEALANT.
2. See Figure 7-104. Install oil pressure switch (1) to crankcase. Tighten to 96-144 **in-lbs** (10.8-16.3 Nm).
3. Attach connector (2) to oil pressure switch.
4. Test oil pressure switch for proper operation.

NOTE

If connector (2) requires replacement, see A.24 SEALED SPLICE CONNECTORS.

GENERAL

See Figure 7-105. The rear stop lamp switch monitors brake fluid pressure in the rear brake line. When pressure in the line reaches a preset level, the rear stop lamp switch is tripped and illuminates the tail light/stop lamp.

REMOVAL

NOTICE

D.O.T. 4 brake fluid will damage painted and body panel surfaces it comes in contact with. Always use caution and protect surfaces from spills whenever brake work is performed. Failure to comply can result in cosmetic damage. (00239b)

1. See Figure 7-105. Remove both connectors (2) from rear stop lamp switch (1).
2. Place a clean container under the rear stop lamp switch and brake line to catch escaping fluid.
3. Remove rear stop lamp switch.

INSTALLATION

FASTENER	TORQUE VALUE	
Rear stop lamp switch	12-15 ft-lbs	16.3-20.3 Nm

1. Coat threads of stop lamp switch with LOCTITE 565 THREAD SEALANT. Do not allow thread sealant to make contact with end of switch.
2. See Figure 7-105. Install rear stop lamp switch (1). Tighten to 12-15 ft-lbs (16.3-20.3 Nm).
3. Install both switch connectors (2).

⚠WARNING

After repairing the brake system, test brakes at low speed. If brakes are not operating properly, testing at high speeds can cause loss of control, which could result in death or serious injury. (00289a)

4. Bleed brake system. See 2.18 BLEEDING BRAKES.

⚠WARNING

Be sure that all lights and switches operate properly before operating motorcycle. Low visibility of rider can result in death or serious injury. (00316a)

5. Check stop lamp for proper operation.

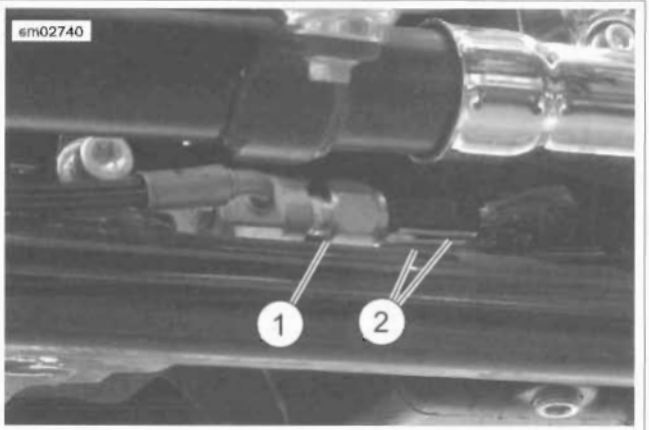

1. **Stoplight switch**
2. **Connectors**

Figure 7-105. Rear Stoplight Switch

INSPECTION

If the horn fails to sound or does not sound satisfactorily, check for loose, frayed or damaged wires leading to horn terminal, discharged battery or corroded ground.

The horn cannot be repaired or adjusted for tone. Only the mounting hardware is replaceable.

REMOVAL AND INSTALLATION: ALL BUT FXSB

FASTENER	TORQUE VALUE	
Horn bracket screws: All but FXSB	35-55 **in-lbs**	4.0-6.2 Nm
Horn bracket clamp: All but FXSB	80-100 **in-lbs**	9.0-11.3 Nm
Horn bracket nut: All but FXSB	80-100 **in-lbs**	9.0-11.3 Nm

1. See Figure 7-106. Remove acorn nut (4) and washer (5) to detach horn bracket (6) from vehicle.
2. Disconnect wires from posts on back side of horn.
3. Remove screws (8) and nut (10) to detach horn from bracket. Free wires from clamp (9).
4. Install **new** horn on bracket.
   a. Secure with screws (8), and push nuts (3). Tighten screws to 35-55 **in-lbs** (4.0-6.2 Nm).
   b. Install nut (10) and tighten to 80-100 **in-lbs** (9.0-11.3 Nm). Fold wires under clamp (9).
5. Attach wiring.
6. Attach horn bracket to vehicle using washer (5) and acorn nut (4). Tighten nut to 80-100 **in-lbs** (9.0-11.3 Nm). When tightening fasteners, be sure the horn does not contact the horn cover or other parts.

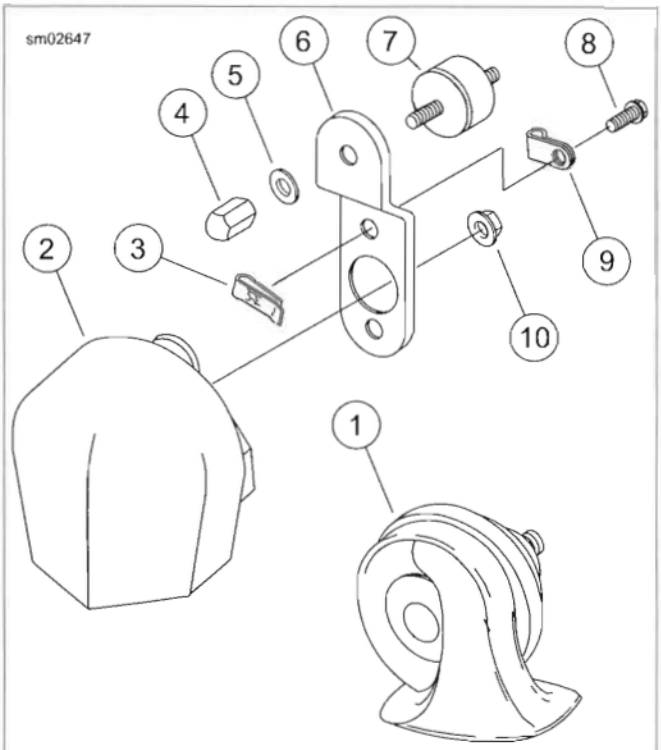

1. **Horn**
2. **Cover**
3. **Push nut (2)**
4. **Acorn nut**
5. **Washer**
6. **Bracket**
7. **Rubber mount**
8. **Screw (2)**
9. **Clamp**
10. **Nut**

Figure 7-106. Horn: All But FXSB

REMOVAL AND INSTALLATION: FXSB

FASTENER	TORQUE VALUE	
Horn bracket mounting bolt: FXSB	13-15 ft-lbs	17.6-20.4 Nm

1. See Figure 7-107. Remove bolt (3) and washer (2) to detach horn bracket (1).
2. Disconnect wires from posts on back side of horn.
3. Remove locknut (5) to detach horn from bracket.
4. Replace horn.
5. Attach horn to bracket with **new** locknut (5).
6. Attach wiring.
7. Attach horn bracket using washer (2) and bolt (3). Tighten to 13-15 ft-lbs (17.6-20.4 Nm).

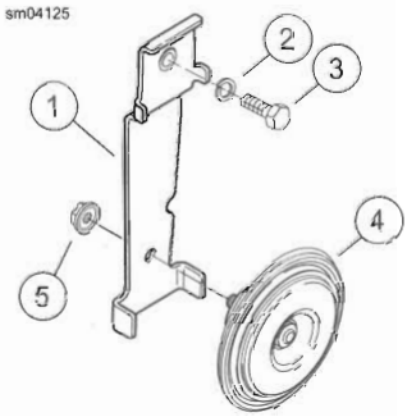

1. **Bracket**
2. **Washer**
3. **Bolt**
4. **Horn**
5. **Locknut**

Figure 7-107. Horn: FXSB

GENERAL

The active exhaust system utilizes an actuator valve located in the rear exhaust pipe which is connected to a servo motor via a cable. The valve position automatically adjusts to enhance engine performance.

The active exhaust module is located on the exhaust bracket. The attached cable is routed to a bellcrank located on the rear exhaust pipe.

REMOVAL

1. Remove exhaust system. See 4.17 EXHAUST SYSTEM.
2. See Figure 7-108. Disconnect active exhaust module connector [179] (5).
3. Remove active exhaust cable housing (1) from notch in shroud (2). Remove ferrule (3) from active exhaust module to free cable (4).
4. See Figure 7-109. Remove module fasteners (4) from active exhaust module bracket (2).

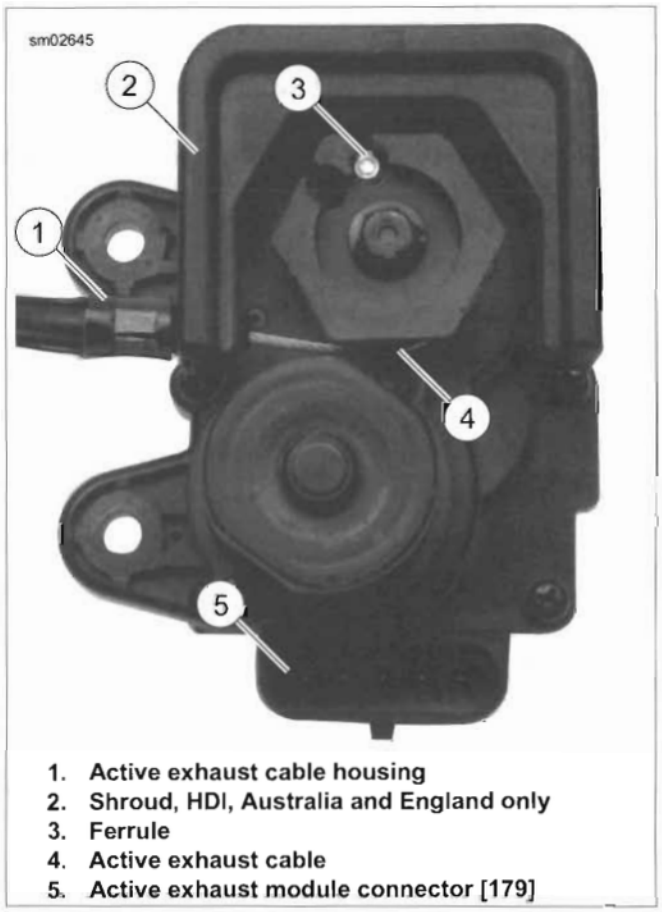

1. **Active exhaust cable housing**
2. **Shroud, HDI, Australia and England only**
3. **Ferrule**
4. **Active exhaust cable**
5. **Active exhaust module connector [179]**

Figure 7-108. Active Exhaust Module

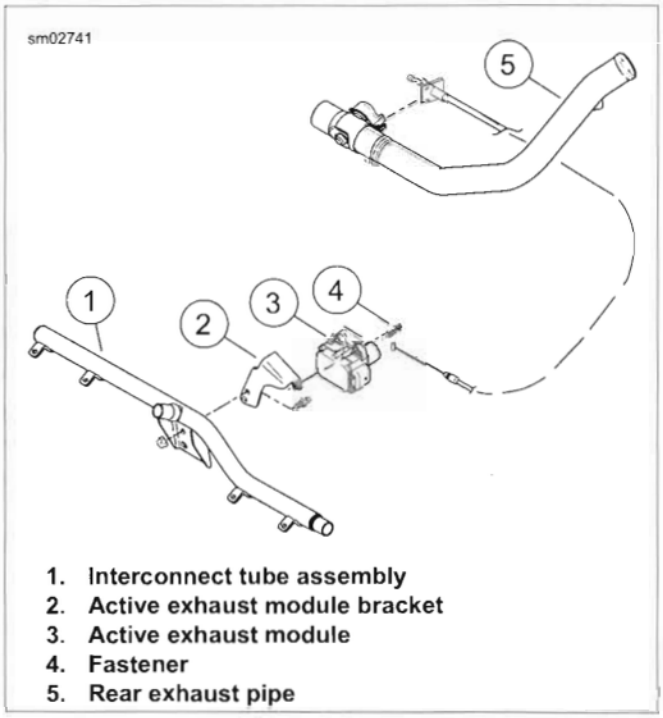

1. **Interconnect tube assembly**
2. **Active exhaust module bracket**
3. **Active exhaust module**
4. **Fastener**
5. **Rear exhaust pipe**

Figure 7-109. Active Exhaust Module Mounting

REPAIR

NOTE

See Figure 7-108. Active exhaust module shroud (2) can be replaced. Replace shroud if active exhaust cable housing (1) is a loose fit in shroud.

1. Remove fasteners securing shroud.
2. Replace shroud. Replace fasteners and tighten securely.

INSTALLATION

FASTENER	TORQUE VALUE	
Active exhaust module fasteners	32-40 **in-lbs**	3.6-4.5 Nm

1. See Figure 7-109. Install active exhaust module (3) to bracket (2) using fasteners (4). Tighten to 32-40 **in-lbs** (3.6-4.5 Nm).
2. See Figure 7-108. Install ferrule (3) into slot shown. Wrap cable around active exhaust module shroud as shown.
3. Clip active exhaust cable housing (1) into shroud (2).
4. Connect active exhaust module connector [179] (5).
5. Install exhaust system. See 4.17 EXHAUST SYSTEM.

REMOVAL

NOTES

- *See Appendix B for the main wiring harness schematic and a description of all connector locations.*
- *Disarm security system before removal.*
- *Note position of all clamps and cable straps before removal to aid during installation.*

1. Remove seat.

⚠WARNING

Disconnect negative (-) battery cable first. If positive (+) cable should contact ground with negative (-) cable connected, the resulting sparks can cause a battery explosion, which could result in death or serious injury. (00049a)

2. Disconnect battery cables, negative cable first. Remove battery. See 7.12 BATTERY CABLES.
3. Remove battery caddy.
4. Disconnect harness grounds (just forward of battery).
5. Remove right saddlebag if present.

NOTE

Rear wheel may have to be raised slightly to allow for splash guard removal.

6. Remove rear splash guard to access electrical panel.
7. Remove rear electrical panel. See 7.3 ELECTRICAL PANEL.
8. Remove vehicle speed sensor connector [65] located on transmission case.
9. Disconnect rear oxygen sensor connector [137] located between battery and ground terminals.
10. Remove fuel tank. See 4.6 FUEL TANK. This includes detaching fuel gauge connector [117] (not present on FXSB) and fuel pump and sender [141].
11. Remove voltage regulator and connectors located behind regulator. See 7.23 VOLTAGE REGULATOR.
    a. Voltage regulator [77].
    b. Stator [47].
    c. Front oxygen sensor connector [138].
    d. Crank position sensor [79].
    e. Front HCU connector [254].
    f. Jiffy stand interlock connector [133].
12. Disconnect front wheel speed sensor (WSS) [167].
13. Remove active exhaust connector [179] from active exhaust module if equipped, or remove cable straps securing connector to frame.
14. Remove air cleaner and disconnect active intake solenoid connector [179]. See 4.3 AIR CLEANER ASSEMBLY.

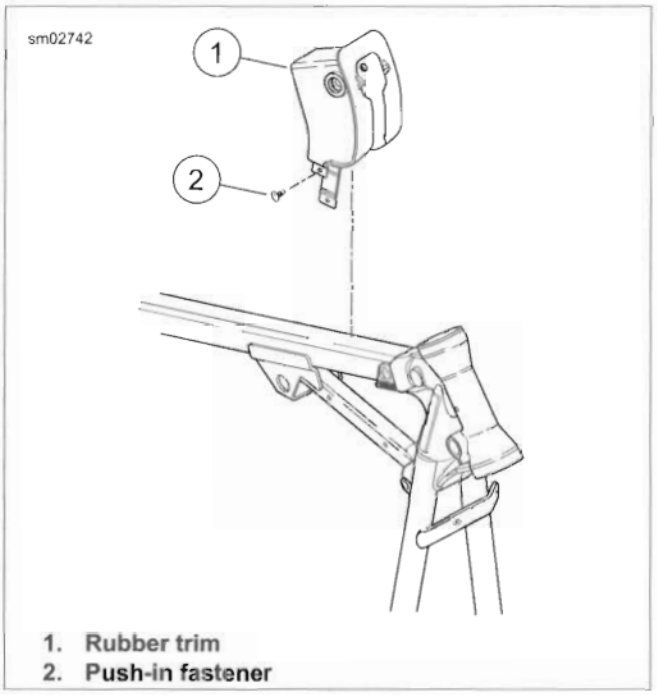

1. **Rubber trim**
2. **Push-in fastener**

Figure 7-110. Rubber Trim

15. See Figure 7-110. Remove push-in fastener (2) from rubber trim (1) on frame. Disconnect connectors:
    a. MAP sensor [80].
    b. Right handlebar controls [22].
    c. Left handlebar controls [24].
    d. Instruments [20].
    e. Front turn signals [31].
    f. Front fender tip lamp [32] (FLSTC only).
    g. Headlamp [38].
    h. Spotlamp switch (if present).
    i. Horn wires [122].
    j. IAT sensor [89].
    k. ET sensor [90].
    l. IAC [87].
    m. TP sensor [88].
    n. front and rear ACRs [203F, 203R], if equipped.
    o. Front [84] and rear [85] fuel injectors.

16. Disconnect connectors:
    a. Electronic control module [78].
    b. Stop lamp switch.
    c. Oil pressure switch [121].
    d. Main harness power wire from starter stud.
    e. Starter solenoid [128].
    f. Tail lamp [7].
    g. Rear HCU [255].
    h. Neutral switch wiring [131].
17. Disconnect coil connector [83].
18. Slowly remove harness from frame taking note of wire routings.

INSTALLATION

NOTE

Securely attach ground terminals to their proper frame locations. Replace all cable straps.

1. Place harness wires into their original positions.
2. Attach the following connectors:
    a. Neutral switch wiring [131].
    b. **ABS equipped:** rear HCU [255].
    c. Tail lamp [7].
    d. Starter solenoid [128].
    e. Main harness power wire from starter stud.
    f. Oil pressure switch [121].
    g. Stop lamp switch.
    h. Electronic control module [78].
3. Attach connectors under fuel tank trim.
    a. front and rear ACRs [203F, 203R], if equipped.
    b. Front [84] and rear [85] fuel injectors.
    c. TP sensor [88].
    d. IAC [87].
    e. ET sensor [90].
    f. IAT sensor [89].
    g. Horn wires.
    h. Spotlamp switch (if present).
    i. Headlamp [38].
    j. Front fender tip lamp [32] (FLSTC only).
    k. Front turn signals [31].
    l. Instruments [20].
    m. Left handlebar controls [24].
    n. Right handlebar controls [22].
    o. MAP sensor [80].
4. See Figure 7-110. Install push-in fastener (2) to rubber trim (1) on frame.
5. Connect active intake solenoid connector [179] and install air cleaner. See 4.3 AIR CLEANER ASSEMBLY.
6. Connect active exhaust connector [179] to active exhaust module, if equipped. Or secure connector to frame with cable straps.
7. **ABS equipped:** connect front wheel speed sensor (WSS) [167] and secure wire with clips and cable straps. See 7.28 WHEEL SPEED SENSORS, Front Wheel Speed Sensor.
8. Install voltage regulator and connectors located behind regulator. See 7.23 VOLTAGE REGULATOR.
    a. Jiffy stand interlock connector [133].
    b. **ABS equipped:** connect front HCU connector [254].
    c. Crank position sensor [79].
    d. Front oxygen sensor connector [138].
    e. Stator [47].
    f. Voltage regulator [77].
9. Install fuel tank. This includes attaching fuel gauge connector [117] and fuel pump and sender [141]. See 4.6 FUEL TANK.
10. Connect connectors and install instrument console. See 7.26 SPEEDOMETER.
    a. Ignition key switch [33].
    b. Indicator lamp connector [21].
    c. Speedometer connector [39].
11. Install vehicle speed sensor (VSS) connector [65]. VSS is located on the transmission case.
12. Install electrical panel, connectors and splash guard. See 7.3 ELECTRICAL PANEL.
    a. **ABS equipped:** ECU [166].
    b. Purge solenoid [95].
    c. Security siren [142].
    d. BCM [242].
    e. **ABS equipped:** rear wheel speed sensor [168].
    f. **FXSB:** ECM
13. See Figure 7-111. Attach connectors under seat.
    a. Secure main fuse connector (4) in cover.
    b. Secure data link connector [91A] to frame.
    c. Rear oxygen sensor connector [137].
    d. **All But FXSB:** ECM.

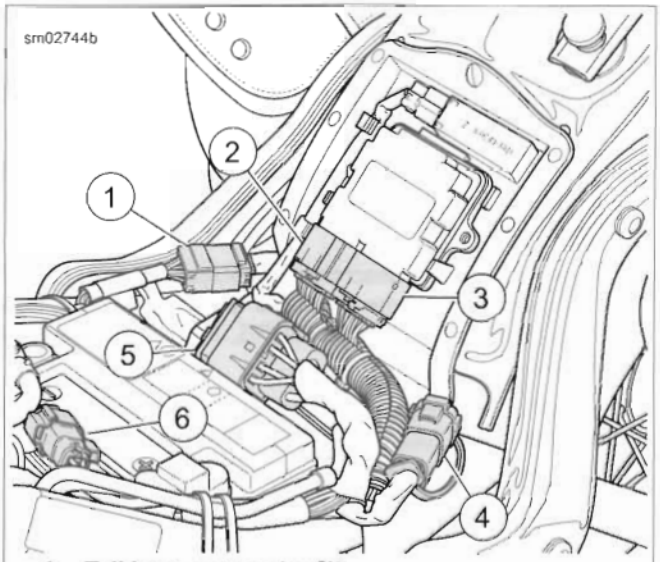

1. Tail lamp connector [7]
2. ECM [78-1] (all but FXSB)
3. ECM [78-2] (all but FXSB)
4. Data link connector [91A]
5. Main fuse connector [64]
6. Rear O2 sensor connector [137]

Figure 7-111. Connectors Under Seat

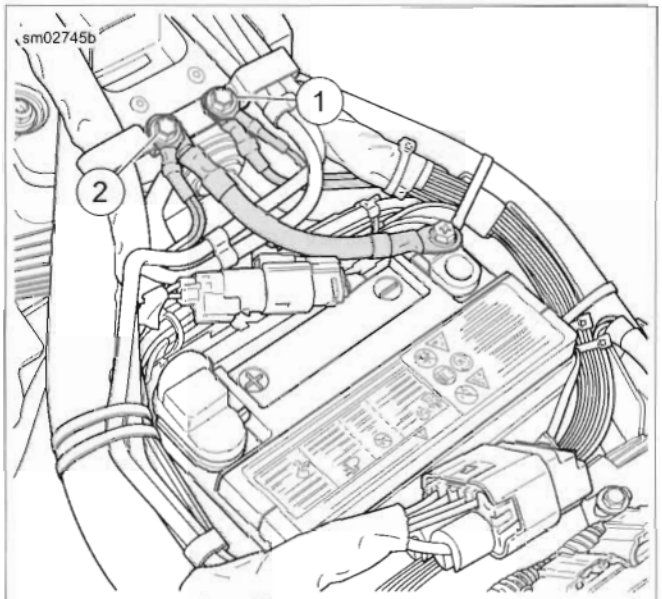

1. Ground wires (2)
2. Ground wire and negative battery cable

Figure 7-112. Ground Wires and Negative Battery Cable

14. See Figure 7-112. Attach ground wires to frame in front of battery. Negative battery cable attaches to right side post (2). See 7.12 BATTERY CABLES.

⚠WARNING

Connect positive (+) battery cable first. If positive (+) cable should contact ground with negative (-) cable connected, the resulting sparks can cause a battery explosion, which could result in death or serious injury. (00068a)

15. Install battery caddy, battery, and connect battery cables, positive cable first. See 7.12 BATTERY CABLES.
16. Install right saddlebag, if removed.

⚠WARNING

After installing seat, pull upward on seat to be sure it is locked in position. While riding, a loose seat can shift causing loss of control, which could result in death or serious injury. (00070b)

17. Install seat.

⚠WARNING

Be sure that all lights and switches operate properly before operating motorcycle. Low visibility of rider can result in death or serious injury. (00316a)

18. Turn ignition ON. Test switches for correct operation.
    a. Left and right turn signals, front and rear.
    b. Four-way hazard warning flashers.
    c. Rear brake lamp.
    d. Headlamp.
    e. Horn.
    f. Indicator lamps.
    g. Starter.
    h. Speedometer.

GENERAL

The left hand control module includes headlamp HI - LO, horn, trip and left turn signal functions. The right hand control module includes engine start, RUN - OFF, right turn signal and flasher functions. The left and right hand control modules are non-repairable.

NOTES

- *On certain models, the turn signal wiring is hard wired to the hand control modules.*
- *To replace the right or left hand control modules, see 7.37 RIGHT HANDLEBAR CONTROL MODULE or 7.38 LEFT HANDLEBAR CONTROL MODULE.*

REPAIR PROCEDURES

PART NUMBER	TOOL NAME
HD-25070	ROBINAIR HEAT GUN
HD-39969	ULTRA TORCH
HD-41183	HEAT SHIELD ATTACHMENT

1. Push conduit back to better access wires and avoid damaging conduit with radiant heating device. Secure conduit with extra 7.0 in (177.8 mm) cable strap in kit.
2. Strip 0.5 in (12.7 mm) of insulation off switch wires. Twist stripped ends of switch wires until all strands are tightly coiled.
3. Cut dual wall heat shrink tubing, supplied in repair kit into 1.0 in (25.4 mm) segments. Slide tubing over each wire of **new** switch assembly.
4. Splice existing and **new** switch wires, matching wire colors. Solder the spliced connections. For best results, splice one wire at a time.
5. Center the heat shrink tubing over the soldered splices.

⚠WARNING

Be sure to follow manufacturer's instructions when using the UltraTorch UT-100 or any other radiant heating device. Failure to follow manufacturer's instructions can cause a fire, which could result in death or serious injury. (00335a)

- Avoid directing heat toward any fuel system component. Extreme heat can cause fuel ignition/explosion resulting in death or serious injury.
- Avoid directing heat toward any electrical system component other than the connectors on which heat shrink work is being performed.
- Always keep hands away from tool tip area and heat shrink attachment.

6. See Figure 7-113. Use ULTRA TORCH (Part No. HD-39969) or ROBINAIR HEAT GUN (Part No. HD-25070) with HEAT SHIELD ATTACHMENT (Part No. HD-41183) or equivalent. Uniformly heat the heat shrink tubing to insulate and seal the soldered connections. Apply heat just until the meltable sealant exudes out both ends of tubing and assumes a smooth cylindrical appearance.
7. Inspect solder connection.
   a. Inspect the melted sealant for solder beads.
   b. Excess solder or heat may force some solder out with the melted sealant.
   c. Remove any solder found.
   d. Briefly heat the connection to reseal the tubing if solder beads were removed.
   e. Use less solder or reduce heating time or intensity when doing subsequent splices.

⚠WARNING

Be sure that all lights and switches operate properly before operating motorcycle. Low visibility of rider can result in death or serious injury. (00316a)

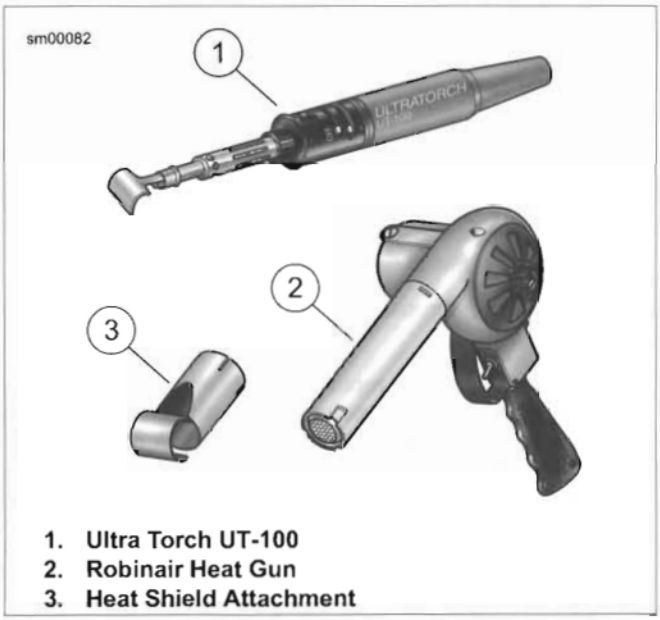

1. **Ultra Torch UT-100**
2. **Robinair Heat Gun**
3. **Heat Shield Attachment**

Figure 7-113. Radiant Heating Devices

REMOVAL

⚠WARNING

To prevent accidental vehicle start-up, which could cause death or serious injury, remove main fuse before proceeding. (00251b)

1. Remove main fuse.

NOTE

Fuel tank crossover hose does not need to be disconnected. Once all other connections to fuel tank have been removed, fuel tank can be slid back enough to reveal handlebar switch assembly connectors.

2. Remove fuel tank. See 4.6 FUEL TANK.
3. See Figure 7-114. Disconnect right hand control connectors (1, 2).
4. Loosen the upper handlebar clamp-to-master cylinder housing screw. Remove the lower handlebar clamp-to-master cylinder housing screw.
5. Remove the upper and lower switch housing screws.
6. Remove the friction shoe from the end of the tension adjuster screw.

NOTE

The friction shoe is a loose fit. It may fall out or become dislodged if the lower switch housing is turned upside down or shaken.

7. Loosen cable adjusters. See 1.13 THROTTLE CABLES.
8. See Figure 7-115. Remove the brass ferrules (4) from the notches on the inboard side of the throttle control grip. Remove the ferrules from the cable end fittings.
9. Remove the throttle control grip from the end of the handlebar.
10. See Figure 7-116. If replacing lower switch housing, pull inserts (1, 2) from lower switch housing. Use a rocking motion while pulling. Place a drop of light oil on the retaining rings, if necessary. Remove the cables from the switch housing.
11. See Figure 7-117. Remove screws (3) and retainer (1).

NOTE

Record wire routing before removal.

12. Carefully remove brake switch (2) and switch assembly from lower switch housing. Remove switch assembly.

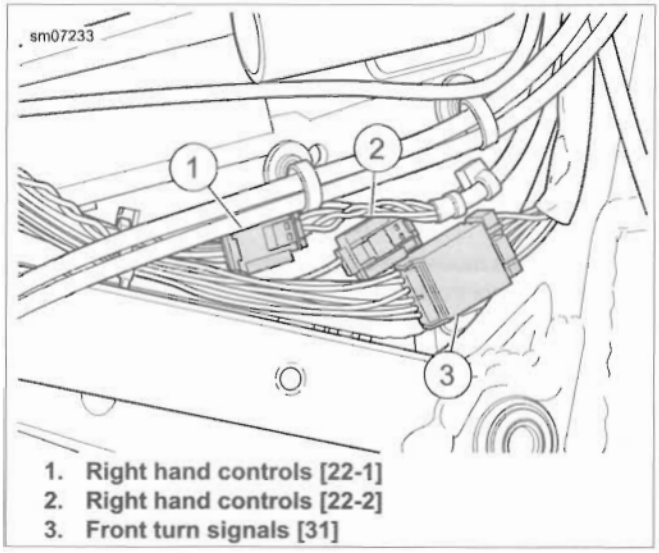

1. **Right hand controls [22-1]**
2. **Right hand controls [22-2]**
3. **Front turn signals [31]**

Figure 7-114. Under Fuel Tank Right Side

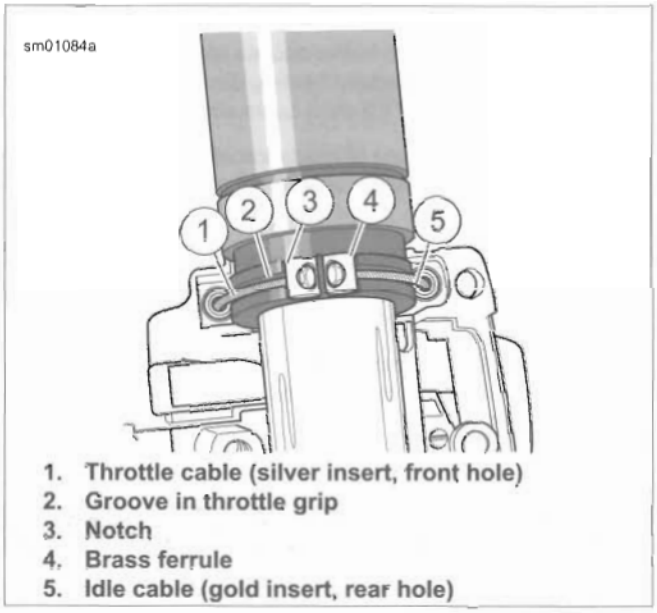

1. **Throttle cable (silver insert, front hole)**
2. **Groove in throttle grip**
3. **Notch**
4. **Brass ferrule**
5. **Idle cable (gold insert, rear hole)**

Figure 7-115. Throttle Cable Attachment

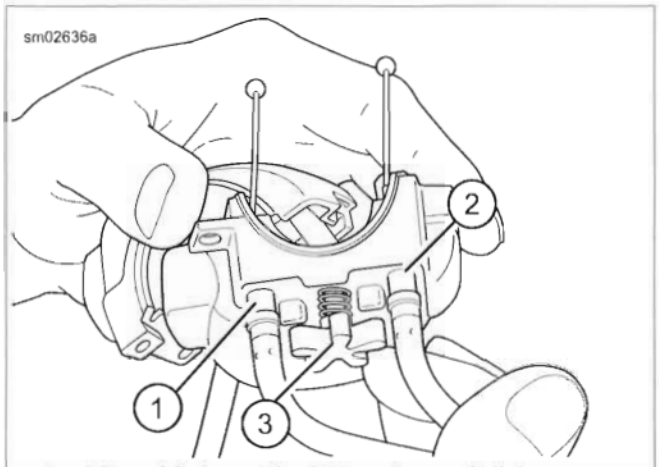

1. Idle cable insert (gold insert, rear hole)
2. Throttle cable insert (silver insert, front hole)
3. Tension adjuster screw

Figure 7-116. Right Lower Module Housing

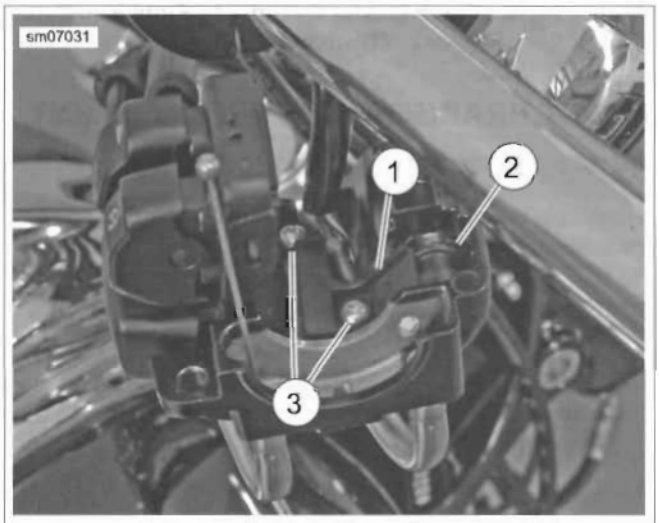

1. Retainer
2. Brake switch
3. Screw (2)

Figure 7-117. Right Control Module and Brake Switch Retainer

INSTALLATION

FASTENER	TORQUE VALUE	
Handlebar switch assembly retainer screws	8-10 in-lbs	0.9-1.1 Nm
Handlebar clamp to master cylinder screws	60-80 in-lbs	6.8-9.0 Nm
Handlebar switch housing screws	35-45 in-lbs	4.0-5.1 Nm

NOTE

When installing switch assembly and retainer, verify wires do not get pinched. Check that the rubber grommet on the wire harness is properly placed on the switch housing.

1. See Figure 7-117. Place switch assembly into position on lower switch housing and carefully install brake switch (2).
2. Install retainer (1) with screws (3). Tighten screws to 8-10 **in-lbs** (0.9-1.1 Nm).
3. See Figure 7-116. If previously removed from lower switch housing, push the throttle and idle control cables into the lower switch housing until they snap in place. Note the different diameter inserts crimped into the end of the throttle and idle cable housings.
   a. Push the silver insert (2) of throttle cable housing into the hole in front of tension adjuster screw (3).
   b. Push the gold insert (1) of idle cable housing into the hole at the rear of tension adjuster screw (3).

NOTE

To aid assembly, place a drop of light oil on the retaining rings of the crimped inserts. Always replace the retaining rings if damaged or distorted.

4. Slide the throttle control grip over the end of the right handlebar until it bottoms against the closed end. Rotate the grip so that the ferrule notches are at the top. To prevent binding, pull the grip back about 1/8 in (3.2 mm).
5. With the concave side facing upward, install the friction shoe so that the pin hole is over the point of the adjuster screw.

NOTE

The friction shoe is a loose fit. It may fall out or become dislodged if the lower switch housing is turned upside down or shaken.

6. See Figure 7-115. Position lower switch housing beneath the throttle control grip. Install the brass ferrules (4) onto the cable so that the end fittings seat in the ferrule recess. Seat the ferrules in their respective notches (3) on the throttle control grip. Verify that the cables are captured in the grooves (2) molded into the grip.

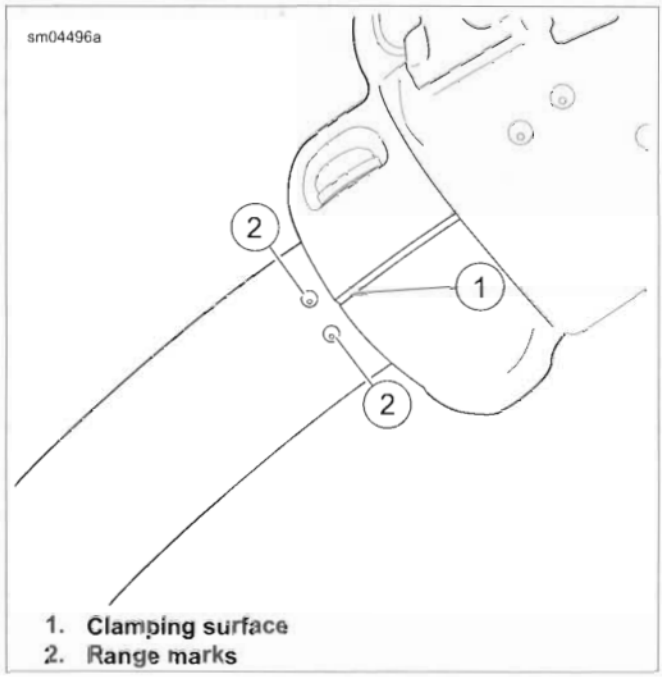

1. Clamping surface
2. Range marks

Figure 7-118. Right Hand Control Assembly to Handlebar Alignment

NOTE

See Figure 7-118. When installing right handlebar switch assembly for motorcycles with internally wired handlebars, make sure the clamping surface (1) stays within the range marks (2) or damage to the wires will occur.

7. Position the upper switch housing over the handlebar and lower switch housing.
8. Start the upper and lower switch housing screws. Do not tighten.
9. See Figure 7-119. Position the brake lever/master cylinder assembly inboard of the switch housing assembly, engaging the tab (2) on the lower switch housing in the groove (3) at the top of the brake lever bracket.
10. Install the lower handlebar clamp-to-master cylinder housing screw (with flat washer). Position for rider comfort. Beginning with the top screw, tighten to 60-80 **in-lbs** (6.8-9.0 Nm).
11. Tighten lower and upper switch housing screws to 35-45 **in-lbs** (4.0-5.1 Nm).

NOTE

Always tighten the lower switch housing screw first so that any gap between the upper and lower housings is at the front of the switch.

12. Adjust throttle cables. See 1.13 THROTTLE CABLES.
13. See Figure 7-114. Connect right hand control connectors (1, 2).
14. Secure harness with clamps and cable strap as noted during removal.
15. Install fuel tank. See 4.6 FUEL TANK.
16. Install main fuse. See 7.10 FUSES.

⚠WARNING

Be sure that all lights and switches operate properly before operating motorcycle. Low visibility of rider can result in death or serious injury. (00316a)

17. Test the switches for proper operation.

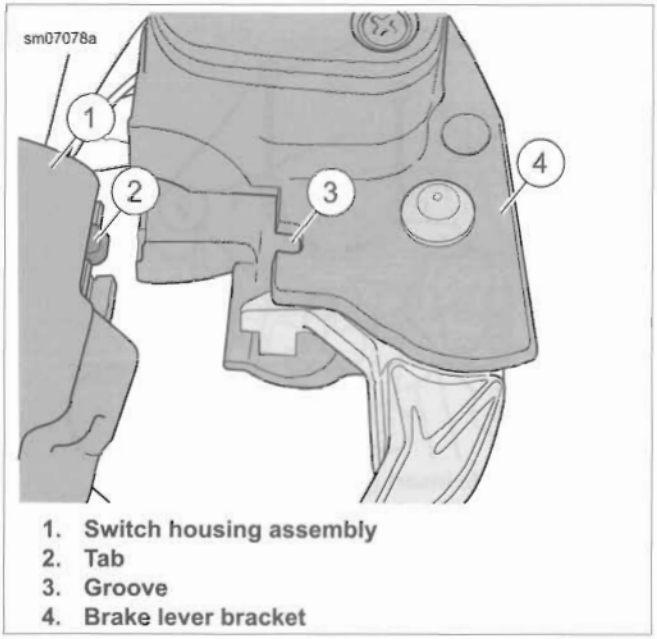

1. **Switch housing assembly**
2. **Tab**
3. **Groove**
4. **Brake lever bracket**

Figure 7-119. Attach Master Cylinder to Right Handlebar Switches

FRONT BRAKE SWITCH REPLACEMENT

FASTENER	TORQUE VALUE	
Handlebar switch assembly retainer screws	8-10 in-lbs	0.9-1.1 Nm

1. Remove upper switch housing cover. See 7.37 RIGHT HANDLEBAR CONTROL MODULE, Removal.
2. See Figure 7-117. From inside the switch housing, remove screws (3) and retainer (1). Remove brake switch (2) from housing.
3. Cut wires flush at inoperative brake switch.
4. If **new** brake switch wires have terminals installed, cut wires at terminal end.
5. Remove 0.25-0.3125 in. (6.4-7.9 mm) of insulation from each wire end.
6. Cut two pieces of dual wall heat-shrink tubing to a length of 0.5 in. (12.7 mm).
7. Solder wires together and cover with heat-shrink tubing. See 7.36 HANDLEBAR CONTROL MODULES, Repair Procedures.
8. See Figure 7-117. Install brake switch (2) into housing. Install retainer (1) and screws (3). Tighten screws to 8-10 **in-lbs** (0.9-1.1 Nm).
9. Assemble right handlebar switch housing. See 7.37 RIGHT HANDLEBAR CONTROL MODULE, Installation.

REMOVAL

⚠WARNING

To prevent accidental vehicle start-up, which could cause death or serious injury, remove main fuse before proceeding. (00251b)

1. Remove main fuse.

NOTE

Fuel tank crossover hose does not need to be disconnected. Once all other connections to fuel tank have been removed, fuel tank can be slid back enough to reveal handlebar switch assembly connectors.

2. Remove fuel tank. See 4.6 FUEL TANK.
3. See Figure 7-120. Disconnect left hand control connector (2).
4. Loosen the upper handlebar clamp-to-clutch lever screw. Remove the lower handlebar clamp-to-clutch lever screw.
5. Remove the upper and lower switch housing screws. Remove upper switch housing.
6. See Figure 7-121. Remove screws (3) and retainer (1).
7. Carefully remove clutch switch (2) and switch assembly from lower switch housing.

NOTE

Record wire routing along with clamp and cable strap locations before removal.

8. Remove switch assembly from motorcycle.

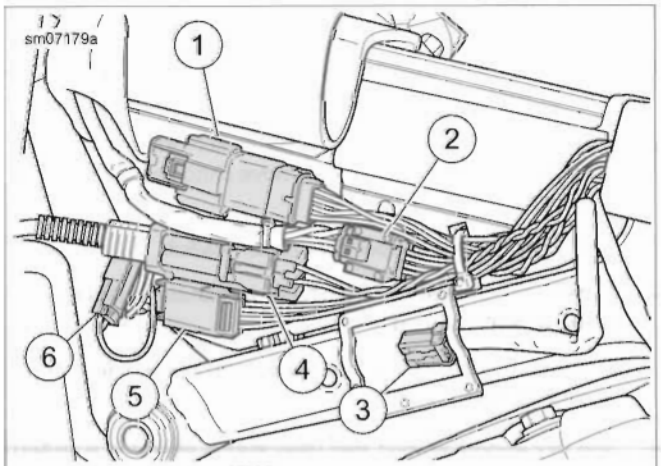

1. **Instruments [20]**
2. **Left hand control [24]**
3. **Fuel gauge [117]**
4. **Front wheel speed sensor [167]**
5. **Headlamp [38]**
6. **Front fender tip lamp [32]: FLSTC**

Figure 7-120. Under Fuel Tank Left Side

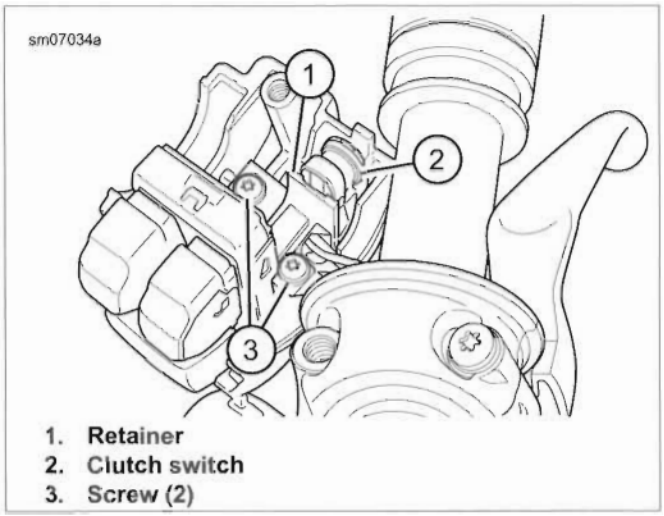

1. **Retainer**
2. **Clutch switch**
3. **Screw (2)**

Figure 7-121. Left Handlebar Control Module and Clutch Switch Retainer

INSTALLATION

FASTENER	TORQUE VALUE	
Handlebar switch assembly retainer screws	8-10 **in-lbs**	0.9-1.1 Nm
Handlebar clamp to clutch lever bracket screws	60-80 **in-lbs**	6.8-9.0 Nm
Handlebar switch housing screws	35-45 **in-lbs**	4.0-5.1 Nm

NOTE

When installing switch assembly and retainer, make sure wires do not get pinched and that the rubber grommet on the wire harness is properly placed on the switch housing.

1. See Figure 7-121. Place switch assembly into position on lower switch housing and carefully install clutch switch (2).



1. Clamping surface
2. Range marks

Figure 7-122. Left Hand Control Assembly to Handlebar Alignment

NOTE

See Figure 7-122. When installing left handlebar switch assembly for motorcycles with internally wired handlebars, make sure the clamping surface (1) stays within the range marks (2) or damage to the wires will occur.

2. Install retainer (1) with screws (3). Tighten to 8-10 **in-lbs** (0.9-1.1 Nm).
3. Position the upper switch housing over the handlebar and lower switch housing.
4. Start the upper and lower switch housing screws, but do not tighten.
5. See Figure 7-123. Position the clutch hand lever assembly inboard of the switch housing assembly, engaging the tab (3) on the lower switch housing in the groove (2) at the bottom of the clutch lever bracket.
6. Secure the handlebar switch clamp to the clutch lever bracket with two screws (with flat washers). Position for rider comfort. Beginning with the top screw, tighten to 60-80 **in-lbs** (6.8-9.0 Nm).
7. Tighten switch housing screws to 35-45 **in-lbs** (4.0-5.1 Nm).

NOTE

Always tighten the lower switch housing screw first. Any gap between the upper and lower housings is at the front of the switch.

8. See Figure 7-120. Connect left hand control connector (2).
9. Secure harness with clamps and cable strap as noted during removal.
10. Install fuel tank. See 4.6 FUEL TANK.
11. Install main fuse. See 7.10 FUSES.

⚠WARNING

Be sure that all lights and switches operate properly before operating motorcycle. Low visibility of rider can result in death or serious injury. (00316a)

12. Test the switches for proper operation.

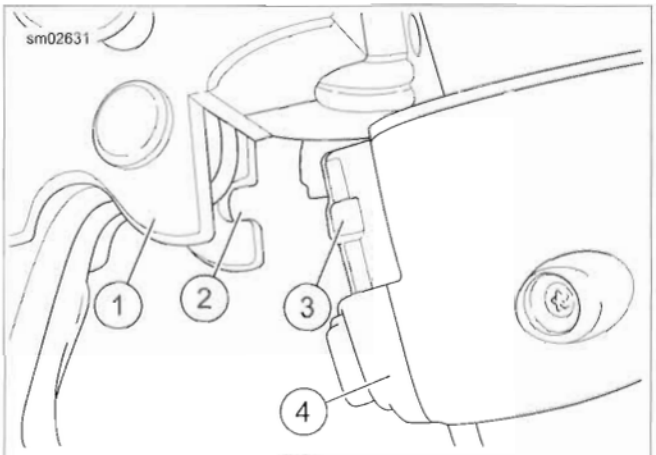

1. Clutch lever bracket
2. Groove
3. Tab
4. Switch housing assembly

Figure 7-123. Clutch Lever Bracket

CLUTCH SWITCH REPLACEMENT

FASTENER	TORQUE VALUE	
Handlebar switch assembly retainer screws	8-10 **in-lbs**	0.9-1.1 Nm

1. Remove upper switch housing cover. See 7.38 LEFT HANDLEBAR CONTROL MODULE, Removal.
2. See Figure 7-121. From inside the switch housing, remove screws (3) and retainer (1). Remove clutch switch (2) from housing.
3. Cut wires flush at inoperative clutch switch.
4. If **new** clutch switch wires have terminals installed, cut wires at terminal end.
5. Remove 0.25-0.3125 in. (6.4-7.9 mm) of insulation from each wire end.
6. Cut two pieces of dual wall heat-shrink tubing to a length of 0.5 in. (12.7 mm).
7. Solder wires together and cover with heat-shrink tubing. See 7.36 HANDLEBAR CONTROL MODULES, Repair Procedures.
8. See Figure 7-121. Install clutch switch (2) into housing. Install retainer (1) and screws (3). Tighten screws to 8-10 **in-lbs** (0.9-1.1 Nm).
9. Assemble left handlebar switch housing. See 7.38 LEFT HANDLEBAR CONTROL MODULE, Installation.

SUBJECT	PAGE NO.
A.1 AUTOFUSE UNSEALED ELECTRICAL CONNECTORS	A-1
A.2 BOSCH COMPACT 1.1M CONNECTOR	A-2
A.3 BOSCH BTC SEALED CONNECTOR	A-3
A.4 DELPHI 100W MICRO-PACK SEALED CONNECTOR	A-6
A.5 DELPHI 150 METRI-PACK SEALED CONNECTORS	A-8
A.6 DELPHI 280 METRI-PACK UNSEALED CONNECTORS	A-10
A.7 DELPHI 480 METRI-PACK UNSEALED CONNECTORS	A-11
A.8 DELPHI 630 METRI-PACK UNSEALED CONNECTORS	A-12
A.9 DELPHI 800 METRI-PACK SEALED MAIN FUSE HOUSING	A-13
A.10 DELPHI METRI-PACK TERMINAL REPAIR	A-14
A.11 DELPHI MICRO 64 SEALED CONNECTORS	A-16
A.12 DELPHI GT 150 SEALED CONNECTORS	A-19
A.13 DEUTSCH DT SEALED CONNECTORS	A-21
A.14 DEUTSCH DT SEALED TERMINAL REPAIR	A-25
A.15 DEUTSCH DTM SEALED MINI TERMINAL REPAIR	A-26
A.16 DEUTSCH DTM SEALED SOLID BARREL MINI TERMINAL REPAIR	A-27
A.17 JAE MX19 SEALED CONNECTORS	A-29
A.18 MOLEX CMC SEALED CONNECTORS	A-30
A.19 MOLEX MX 150 SEALED CONNECTORS	A-32
A.20 TYCO 040 MULTILOCK UNSEALED CONNECTOR	A-36
A.21 TYCO 070 MULTILOCK UNSEALED CONNECTOR	A-38
A.22 TYCO GET 64 SEALED CONNECTOR	A-41
A.23 TYCO MCP SEALED CONNECTOR	A-43
A.24 SEALED SPLICE CONNECTORS	A-45

NOTES

AUTOFUSE UNSEALED CONNECTOR REPAIR

PART NUMBER	TOOL NAME
GA500A	SNAP-ON TERMINAL PICK

General

Autofuse Unsealed connector terminals are found in ignition switches and some fuse blocks.

Disassembly

1. See Figure A-1 or Figure A-2. Insert smallest pair of pins on the SNAP-ON TERMINAL PICK (Part No. GA500A) into chamber on mating end of socket housing to press tangs on each side of terminal simultaneously.
2. Gently pull on wire to remove terminal from wire end of socket housing.
3. If necessary, crimp **new** terminals on wires.

Assembly

1. Carefully bend tang on each side of terminal outward away from terminal body. Use the thin flat blade from a hobby knife.
2. With the open side of the terminal facing rib on wire end of socket housing, insert terminal into chamber until it locks in place.

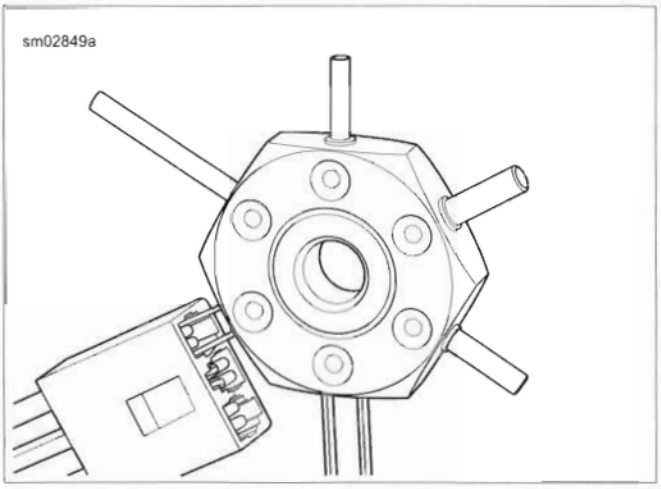

Figure A-1. Removing Autofuse Unsealed Terminal from Ignition Switch

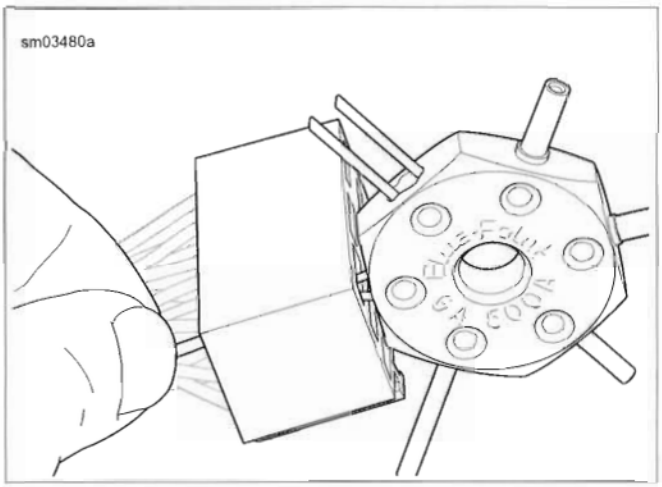

Figure A-2. Removing Autofuse Unsealed Terminal from Fuse Block

BOSCH COMPACT 1.1M CONNECTOR

PART NUMBER	TOOL NAME
GA500A	SNAP-ON TERMINAL PICK

General

See Figure A-3. The Bosch Compact 1.1M connector is found on MAP and TMAP sensors.

Housings

Separate: Snap back the secondary lock. Press on the latch while pulling the socket connector from the sensor.

Join: Align the sockets and press the housings together until the latch snaps. Snap in the secondary lock.

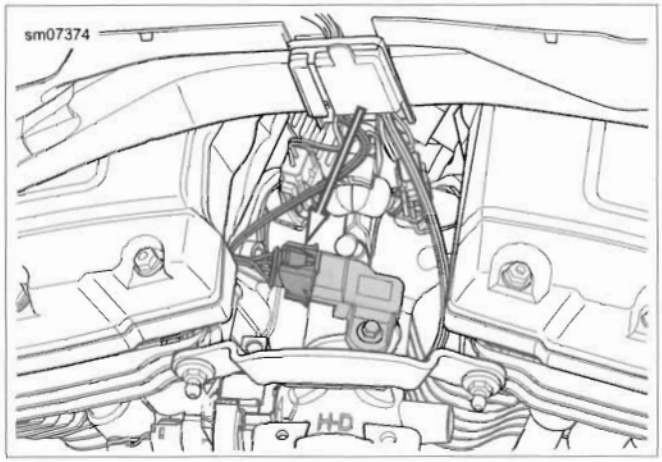

Figure A-3. Bosch Compact 1.1M Connector

Removing Socket Terminal

1. See Figure A-4. Slide the locking bar off the terminal housing.
2. Insert the smallest pins of the SNAP-ON TERMINAL PICK (Part No. GA500A) into the gaps on each side of the socket to compress the tangs on each side of the terminal.
3. Gently pull on the wire to remove the terminal.

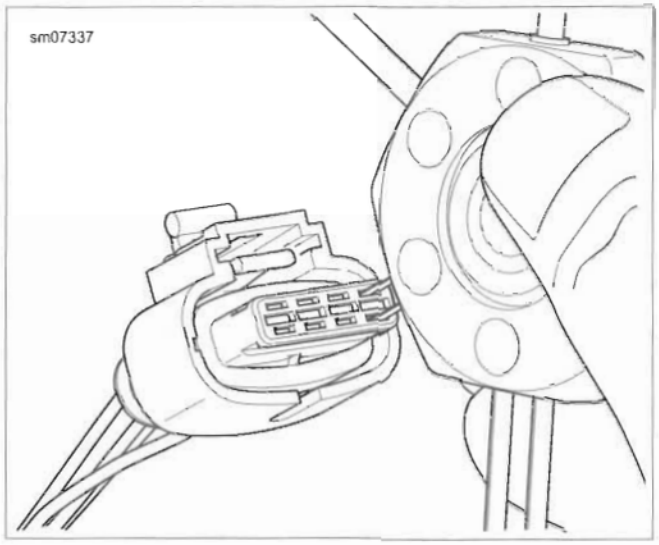

Figure A-4. Terminal Removal: Bosch Compact 1.1M Connector

Installing Socket Terminal

1. See Figure A-5. Use a hobby knife to bend the tangs on each side of the terminal outward.
2. Align terminal to socket housing. Press terminal into housing until it snaps.

NOTE

The teeth on the locking bar face down.

3. Slide the locking bar onto the connector.

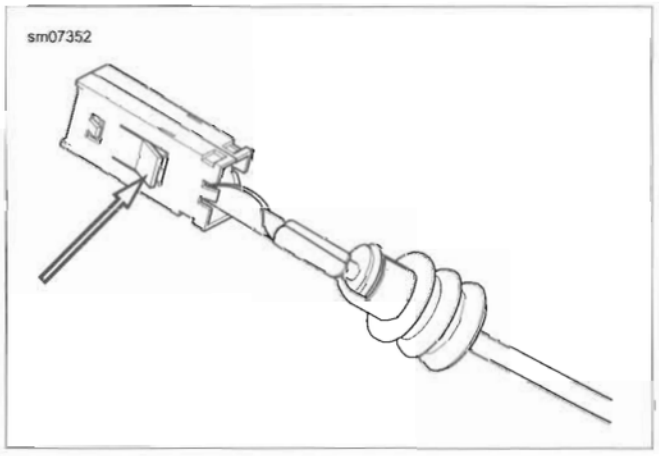

Figure A-5. Tangs: Bosch Compact 1.1M Socket Terminal

BOSCH BTC SEALED CONNECTOR REPAIR

PART NUMBER	TOOL NAME
B-50085	TERMINAL EXTRACTOR
HD-50120-A	BOSCH TERMINAL REPAIR KIT

The Bosch BTC sealed connector is used to connect the ABS module to the wire harness on Touring models.

Plugging and Unplugging Connector

1. See Figure A-6. To unplug connector:
   a. While pressing latch lock (1), lift latch handle (2).
   b. See Figure A-7. Raise latch handle into the full upward (open) position (1).
   c. Pull connector straight out of socket.

NOTE

Do not attempt to close latch handle while connector is out of socket. Damage to latch mechanism could result.

2. To plug in connector:
   a. Insert connector. Press gently into socket.
   b. Pull latch handle down (closed) until it clicks.

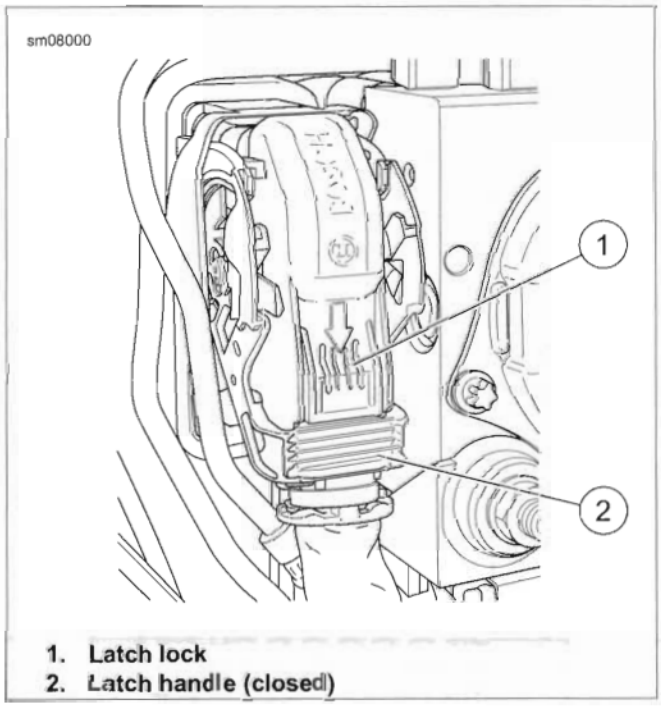

1. **Latch lock**
2. **Latch handle (closed)**

Figure A-6. Bosch BTC Sealed Connector (Latched)

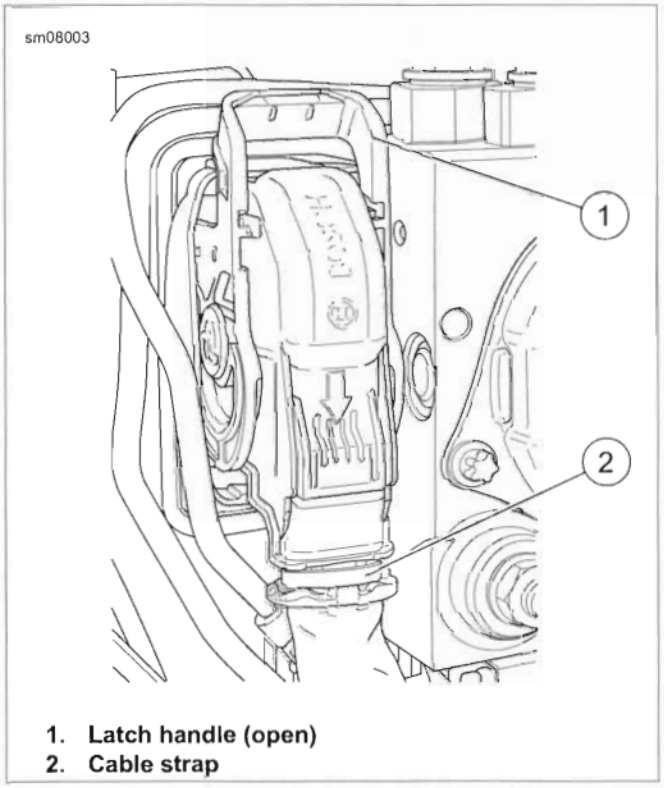

1. **Latch handle (open)**
2. **Cable strap**

Figure A-7. Bosch BTC Sealed Connector (Unlatched)

Removing and Installing Connector Cover

1. To remove connector cover:
   a. See Figure A-7. Remove and discard cable strap (2).
   b. See Figure A-8. Insert the blade of a small screwdriver into cover release latch (1) slot.
   c. Gently pry the cover away from the tab on the body of the connector. Repeat for other release latch slot.
   d. Grasp cover and pivot up (2) and away from connector.
2. To install connector cover:
   a. See Figure A-8. Start cover into connector body at an angle. Engage tabs (4) in slots (5).
   b. Rotate cover down onto body until an audible click is heard, indicating that cover is locked in place.
   c. See Figure A-7. Install **new** cable strap (2).

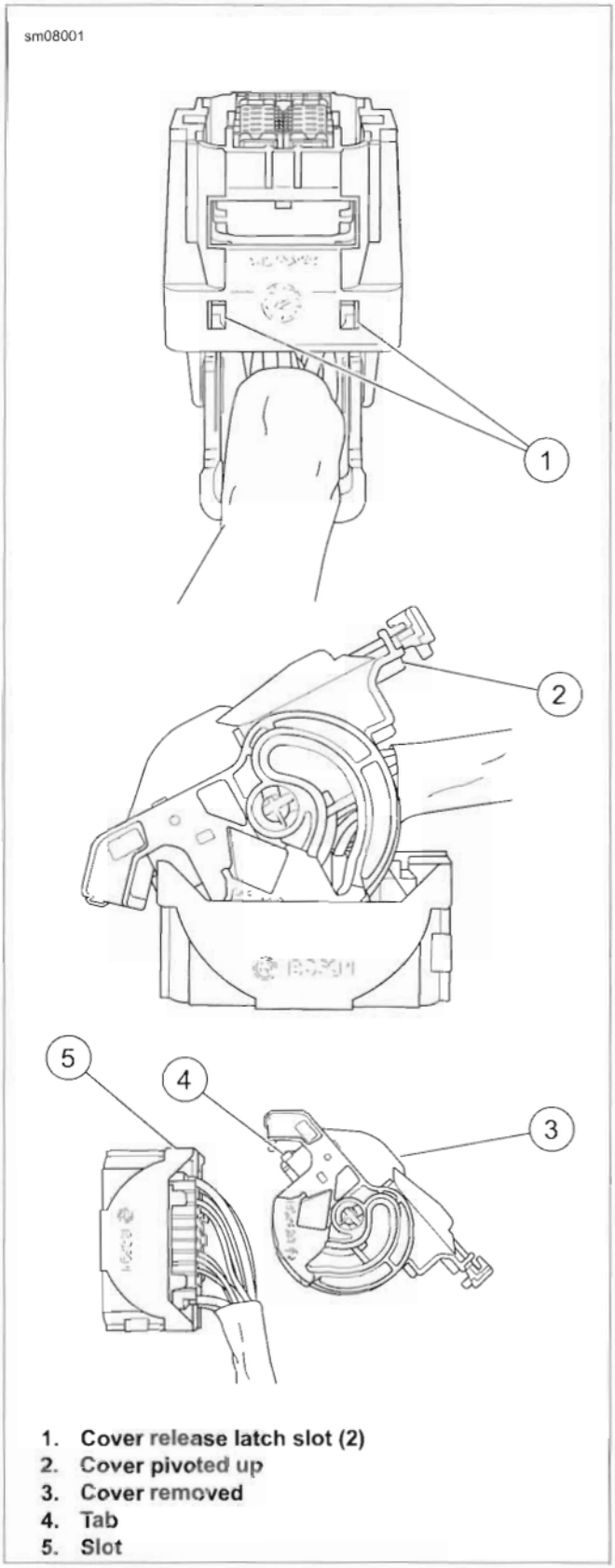

1. Cover release latch slot (2)
2. Cover pivoted up
3. Cover removed
4. Tab
5. Slot

Figure A-8. Removing Bosch BTC Sealed Connector Cover

Removing and Installing Wire Terminals

NOTE

See Figure A-10. The Bosch BTC Sealed connector has three sizes of terminals: 12 gauge, 14 gauge and 20 gauge.

1. To remove terminals from connector:
   a. See Figure A-9. With the blade of a small screwdriver, gently pry the terminal lock (1) open (2).
   b. See Figure A-10. Insert TERMINAL EXTRACTOR (Part No. B-50085) into cavity next to terminal being removed. Carefully pry terminal latch back. Grasp wire and gently pull terminal from terminal cavity.
2. To install terminals in connector:
   a. Carefully insert terminal with wire lead into appropriate terminal cavity.
   b. Gently push terminal into cavity until it clicks, indicating that it is locked in place.
   c. When all terminals are in place, use the blade of a small flat screwdriver to pry the terminal lock closed (1).

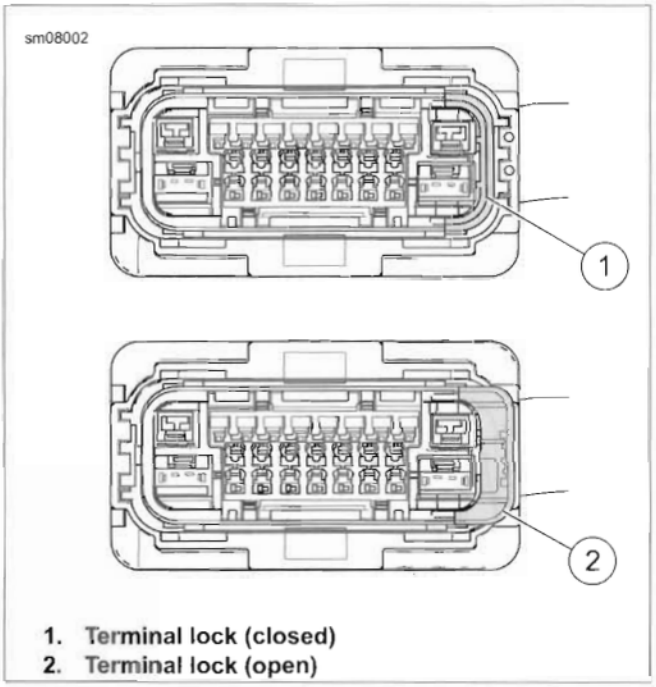

1. Terminal lock (closed)
2. Terminal lock (open)

Figure A-9. Bosch BTC Sealed Connector Terminal Lock

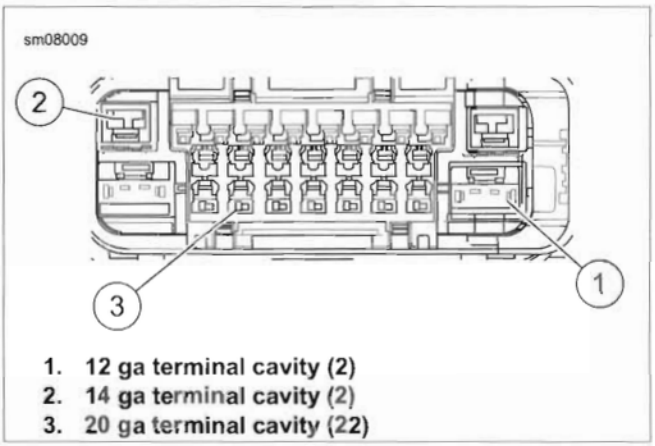

1. 12 ga terminal cavity (2)
2. 14 ga terminal cavity (2)
3. 20 ga terminal cavity (22)

Figure A-10. Bosch BTC Sealed Connector Terminals

Crimping Terminals to Leads

The BOSCH TERMINAL REPAIR KIT (Part No. HD-50120-A) contains the crimper tool, dies and all terminals necessary to repair the Bosch BTC sealed connector. For the correct terminal crimping procedure, refer to the instruction sheet provided with the tool or available through h-dnet.com.

DELPHI 100W MICRO-PACK SEALED CONNECTOR REPAIR

General

A Delphi 100W Micro-Pack Sealed connector connects the electronic control module (ECM) to the main harness.

Separating Socket Housing From ECM

See Figure A-11. While pressing the connector into the ECM, press the thumb lever (1) against the connector until the latch (2) pops out of the catch (3) on the ECM.

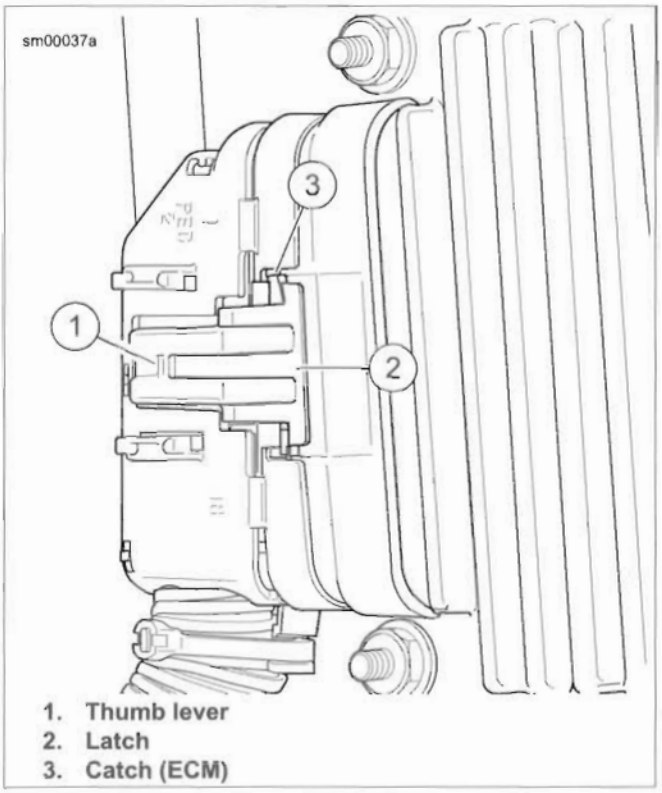

1. Thumb lever
2. Latch
3. Catch (ECM)

Figure A-11. Delphi 100W Micro-Pack Sealed Connector to ECM

Mating Socket Housing To ECM

Push the connector into the ECM until the latch is captured by the catch on the ECM.

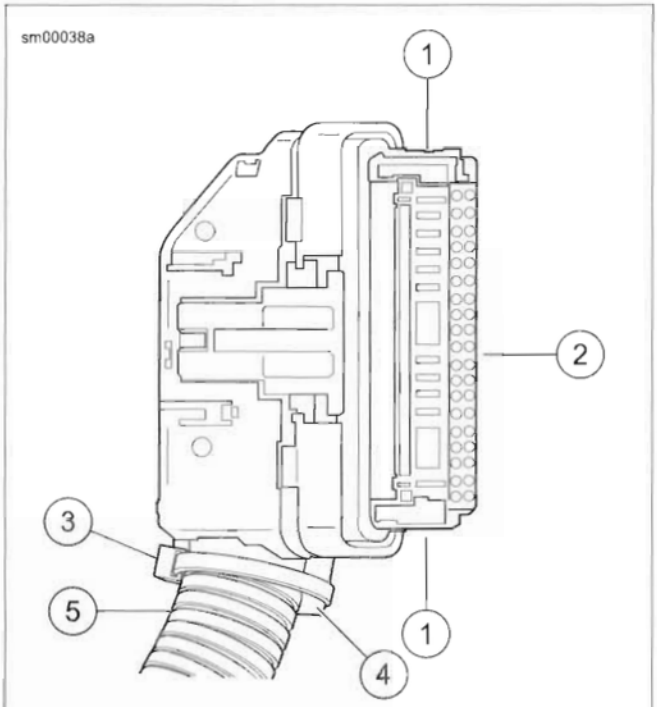

1. Latch
2. Secondary lock
3. Cable strap
4. Strain relief collar
5. Conduit

Figure A-12. Delphi 100W Micro-Pack Sealed Connector

Removing Socket Terminal

1. See Figure A-12. To remove, gently press latch (1) on each side of the clear plastic secondary lock (2). For best results, release one side at a time.
2. Carefully cut cable strap (3) to free strain relief collar (4) from conduit (5).
3. See Figure A-13. Using a thin blade, gently pry at seam at back of socket housing to release three plastic pins (1) from slots in housing. Separate and spread halves of socket housing.
4. Push on wire lead to free terminal from chamber.

Installing Socket Terminal

1. From inside socket housing, gently pull on wire to draw terminal into chamber.
2. Exercising caution to avoid pinching wires, press halves of socket housing together until three plastic pins fully engage slots in housing.
3. Install **new** cable strap in groove of strain relief collar capturing cable conduit.
4. With the two ribs on the secondary lock on the same side as the external latch, install over terminals until latches lock in place.

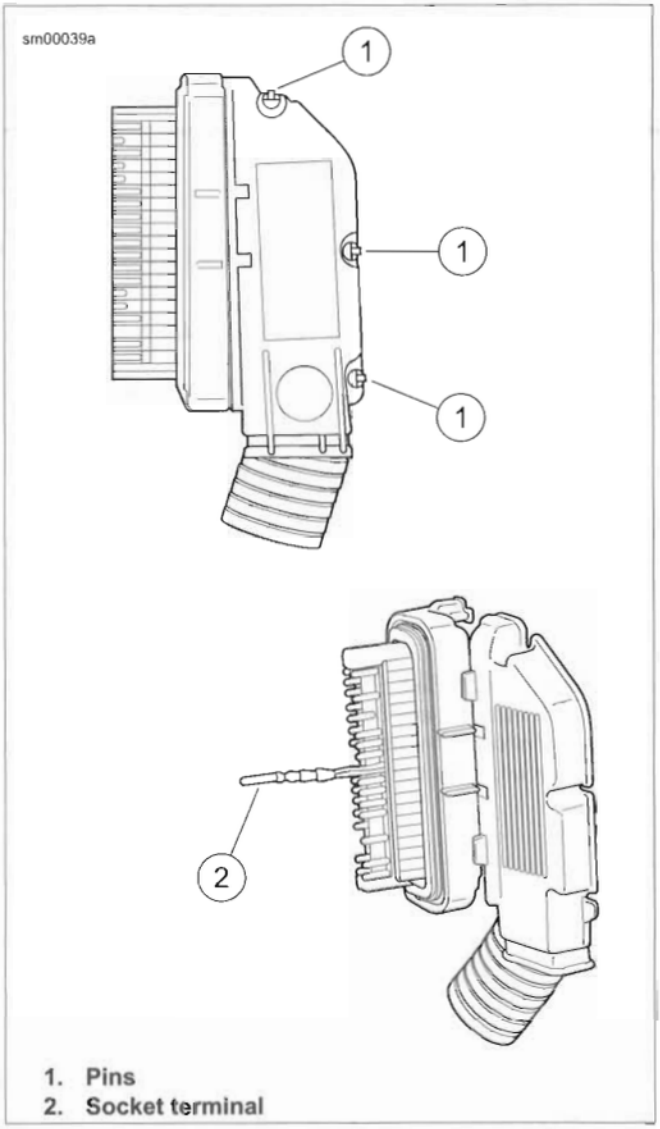

1. Pins
2. Socket terminal

Figure A-13. Delphi 100W Micro-Pack Sealed Connector: Separate Halves of Socket Housing

CRIMPING TERMINALS

PART NUMBER	TOOL NAME
HD-50120	UNIVERSAL CRIMPER SET
HD-50120-2	HAND CRIMP FRAME
HD-50120-7	TYCO AND DELPHI TERMINAL CRIMP DIE

1. Strip the wire insulation to specification. Refer to Table A-1.
2. Install the TYCO AND DELPHI TERMINAL CRIMP DIE (Part No. HD-50120-7) in the handle of the HAND CRIMP FRAME (Part No. HD-50120-2) of the UNIVERSAL CRIMPER SET (Part No. HD-50120).
3. Place the **new** terminal in the specified nest.
4. Insert the wire to the wire stop. Crimp the terminal.
5. Inspect the crimped terminal.

Table A-1. Delphi 100W Micro-Pack Crimper Die (Part No. HD-50120-7)

TERMINAL	PART NO.	STRIP LENGTH		NEST
		in	mm	
Socket: 18 AWG	72076-00	0.200	5.1	B
Socket: 20-22 AWG	72568-08	0.200	5.1	C

DELPHI 150 METRI-PACK SEALED CONNECTOR REPAIR

General

Delphi 150 Metri-Pack Sealed connectors are embossed with the initials (P.E.D.).

There are two types of connectors in this series:

- Pull-to-Seat
- Push-to-Seat

Separating Pin and Socket Housings

Bend back the external latch slightly and separate the pin and socket halves of the connector.

Mating Pin and Socket Housings

Align the wire colors. Push the pin and socket halves of the connector together.

Removing Socket Terminal

1. See Figure A-14 for pull-to-seat connector or Figure A-15 for push to seat connector. Remove wire lock (1) from wire end of socket housing on push-to-seat type connectors.

NOTE

For best results, free one side of wire lock first and then release the other side.

2. Find the locking tang in the mating end of the connector.

NOTE

The tangs are always positioned in the middle of the chamber. The tangs are on the same side as the external latch.

3. Gently insert a small diameter straight pin into the chamber about 1/8 in (3.2 mm).
   a. **For pull-to-seat:** Stay between the terminal and the chamber wall and pivot the end of the pin toward the terminal body.
   b. **For push-to-seat:** There is a small opening for the pin.
4. When a click is heard, remove the pin and repeat the procedure.

NOTE

The click is the sound of the tang returning to the locked position as it slips from the point of the pin.

5. Pick at the tang until the clicking stops and the pin seems to slide in deeper. This indicates the tang is pressed in.

NOTE

After repeated terminal extractions, the click may not be heard, but pivot the pin as if the click was heard at least three times.

6. Remove the pin.
   a. **For pull-to-seat:** Push on the lead to extract the terminal from the mating end of the connector.
   b. **For push-to-seat:** Pull on the lead to draw the terminal out the wire end.

Inserting Socket Terminal

NOTE

For wire location purposes, alpha characters are stamped into the socket housings.

1. See Figure A-14 for pull-to-seat connector or Figure A-15 for push to seat connector. Carefully bend tang on each side of terminal outward away from terminal body. Use the thin flat blade from a hobby knife.
2. Gently pull or push on the lead to install the terminal back into the chamber. A click is heard when the terminal is properly seated.
3. Gently pull or push on the lead to verify that the terminal is locked in place.

NOTE

For push-to-seat: *See Figure A-15. Seat wires in separate channels of wire lock and then push channels inside chambers at wire end of socket housing. Fully installed, slot on each side of wire lock engages ear on socket housing.*

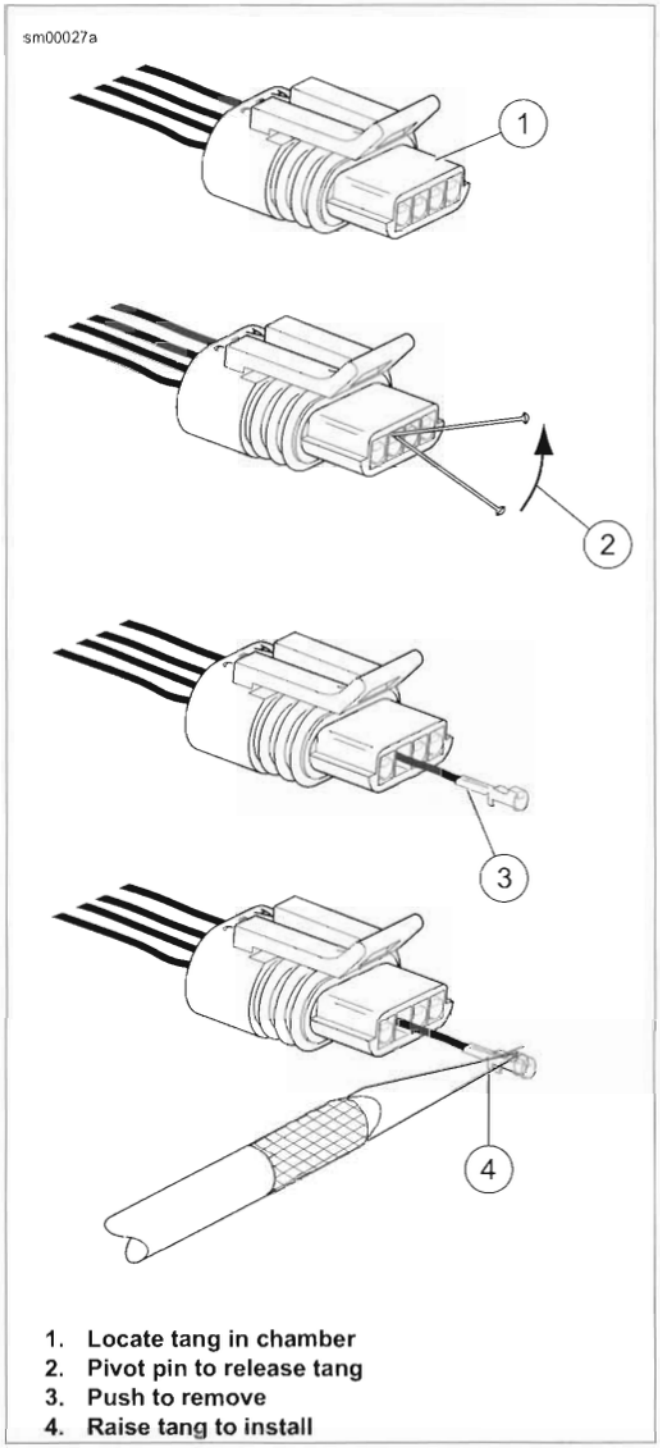

1. Locate tang in chamber
2. Pivot pin to release tang
3. Push to remove
4. Raise tang to install

Figure A-14. Delphi 150 Metri-Pack Sealed Connector: Pull-to-Seat

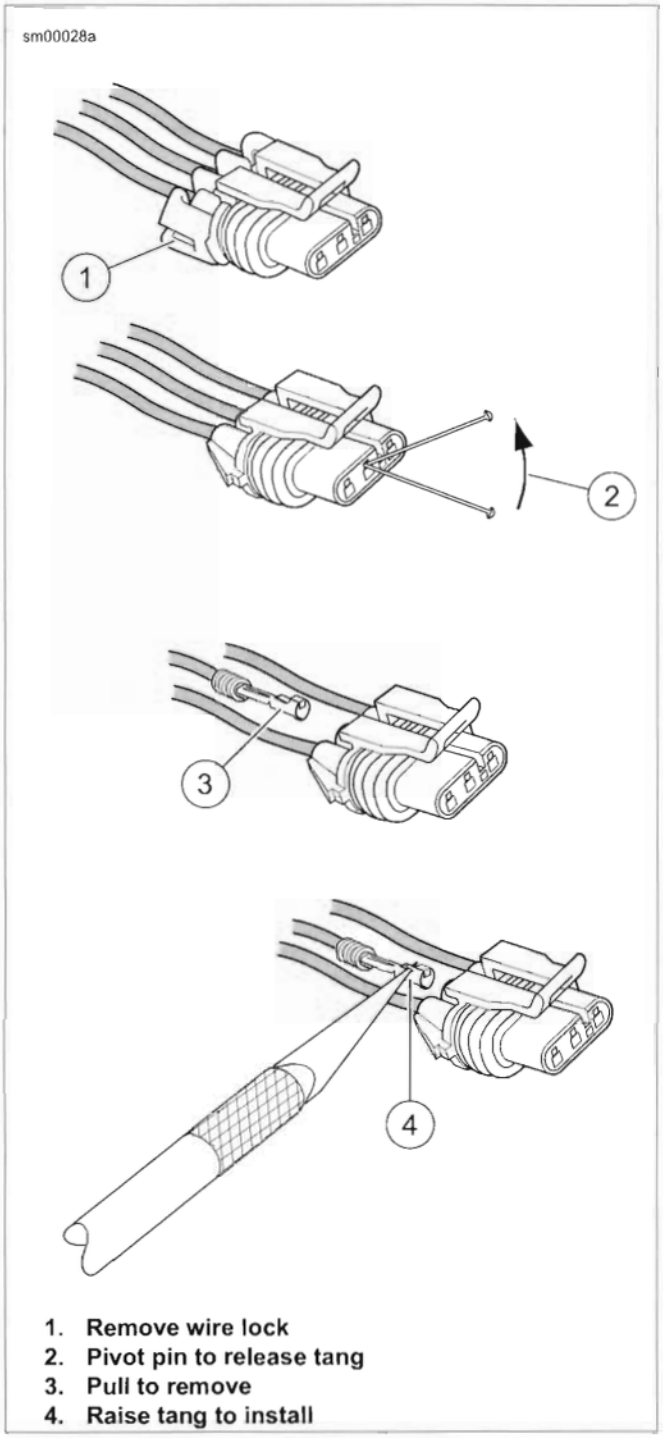

1. Remove wire lock
2. Pivot pin to release tang
3. Pull to remove
4. Raise tang to install

Figure A-15. Delphi 150 Metri-Pack Sealed Connector: Push-to-Seat

FUSE BLOCK REPAIR

Removing Socket Terminals

1. See Figure A-16. To remove secondary locks, insert end of small flat blade screwdriver (1) under lip of locking wedge (2) and gently pry up secondary lock.

NOTE

For best results, start with locking wedge on outboard side of secondary lock.

2. Looking into chamber at top of fuse block, note the tang next to each socket terminal.
3. Use the thin flat blade from a hobby knife. Gently push tang away from terminal and tug on wire to back terminal out.

Installing Socket Terminals

1. Match the wire lead color to the fuse block terminal cavity.

NOTES

- *Refer to the main harness wiring diagram for wire lead color codes.*
- *See Figure A-17. Alpha (1) and numeric (2) coordinates identify the main fuse block terminal cavity. Refer to the main harness wiring diagram.*

2. With the open side of the socket terminal facing the tang, push lead into chamber at the wire end of the fuse block. A click is heard when the terminal is properly engaged.
3. Gently tug on wire ends to verify that all terminals are locked.
4. Install the secondary locks. With the locking wedges positioned above the tangs in each chamber, slide flat side of secondary lock into slot between rows. Push down until it bottoms.

Crimping Terminals

Terminals are crimped twice: once over the wire core and a second time over the insulation/seal.

A correctly crimped terminal can require different crimping dies found on separate crimpers.

NOTE

The wiring diagram indicates when one socket terminal is being crimped to two wire leads.

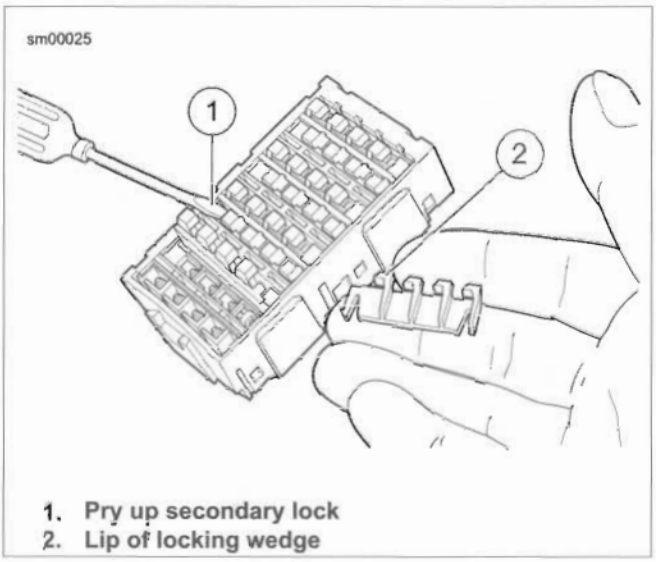

1. **Pry up secondary lock**
2. **Lip of locking wedge**

Figure A-16. Fuse Block: Remove Secondary Locks

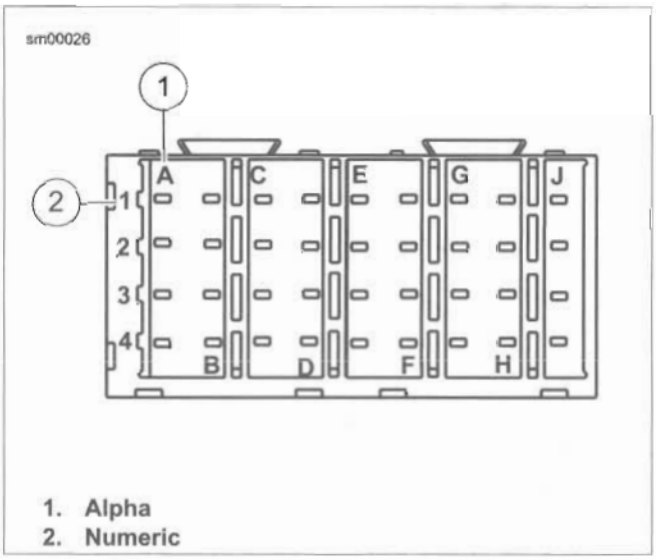

1. **Alpha**
2. **Numeric**

Figure A-17. Fuse Block: Coordinates (typical)

DELPHI 480 METRI-PACK UNSEALED CONNECTOR REPAIR

General

A 480 Metri-Pack connector is frequently used for the B+ (battery voltage) connector to power P&A accessories.

See Figure A-18. An AFL housing (5) is used on many ignition/light switches. The secondary lock (4) must be opened before removing the terminal from the housing.

Separating Pin and Socket Housings

NOTES

- *Record position of cable straps anchoring wire conduits of the pin and socket housing before removing them.*
- *Cut any cable strap anchoring the wire conduits of the pin (accessory connector housing) and the socket (B+) housing.*

See Figure A-18. Using small flat blade screwdriver, press button (1) on pin housing (red wire) side of the connector and pull apart the pin and socket housings.

Mating Pin and Socket Housings

Orient the latch on the socket housing to the button catch on the pin housing and press the housings together.

Removing Socket Terminals

1. See Figure A-18. Bend back the latch (2) slightly and free one side of secondary lock, then repeat to release the opposite side. Rotate the secondary lock outward on hinge to access terminal in chamber of connector housing.
2. On the mating end of the connector, note the tang in the square shaped opening centered next to the terminal. Gently insert the point of a stick pin or large safety pin into the opening (3) between the tang and the chamber wall until it stops.
3. Pivot the end of the pin toward the terminal body to press the tang.
4. Remove the pin and then pull terminal out of the wire end of connector housing.
5. If necessary, crimp **new** terminals on wires. See A.10 DELPHI METRI-PACK TERMINAL REPAIR.

Installing Socket Terminals

1. Carefully bend the tang outward away from the terminal body.
2. With the tang on the same side as the square shaped opening in the mating end of the connector housing, feed terminal into wire end of connector housing until it clicks in place.
3. Verify that terminal will not back out of the chamber. A slight tug on the cable will confirm that it is locked.
4. Rotate the hinged secondary lock inward until latches fully engage tabs on both sides of connector housing.

NOTE

*If removed, install **new** anchored cable strap in original equipment location. Tighten cable strap to capture conduit of both accessory connector and B+ connector approximately 1.0 in (25.4 mm) from housings.*

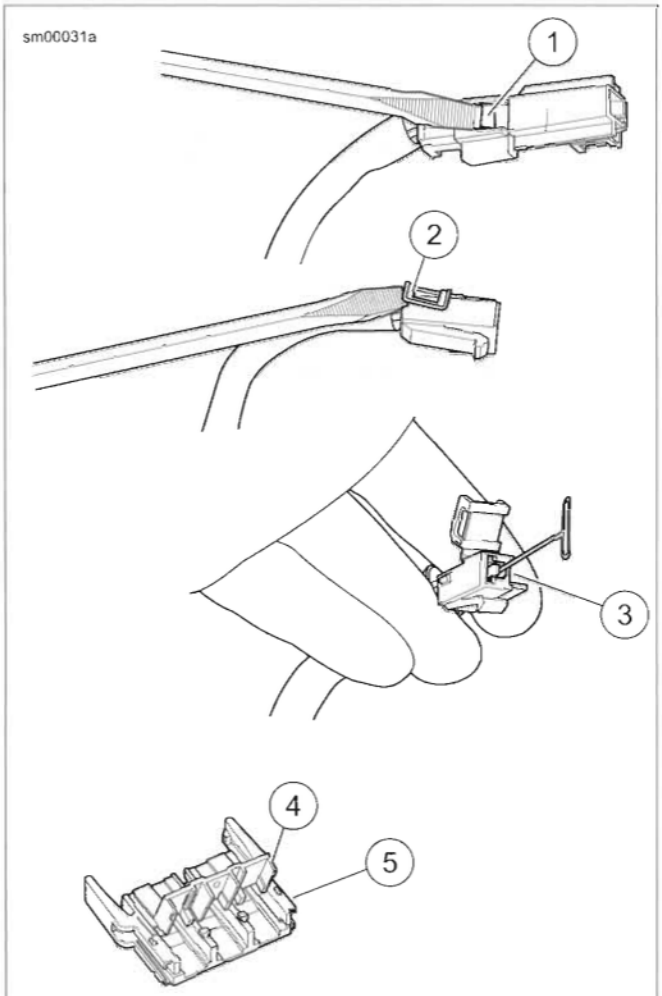

1. **Button on pin housing**
2. **Secondary lock latch**
3. **Opening between tang and chamber wall**
4. **Secondary lock (shown open)**
5. **AFL housing**

Figure A-18. Delphi 480 Metri-Pack Unsealed Connector: Remove Socket Terminal

DELPHI 630 METRI-PACK UNSEALED CONNECTOR REPAIR

PART NUMBER	TOOL NAME
TT600-3	SNAP-ON PICK

Separating Pin and Socket Housings

NOTE

If necessary, remove connector from barbed anchor or other retaining device.

Bend back the external latch slightly and separate pin and socket halves of the connector.

Mating Pin and Socket Housings

Orient the latch to the catch. Push the pin and socket halves of the connector together until the latch "clicks".

NOTE

If removed, install connector on barbed anchor or other OE retaining device.

Removing Socket Terminal

1. Bend back the latch slightly and free one side of the secondary lock. Repeat the step to unlatch the other side.
2. Rotate the secondary lock outward on hinge to view the terminals in the chambers of the connector housing. The locking tang is on the side opposite the crimp tails. It engages a rib in the chamber wall to lock the terminal in place.
3. Moving to the mating end of the connector, find the small opening on the chamber wall side of each terminal.
4. Insert SNAP-ON PICK (Part No. TT600-3) into opening until it stops. Pivot the end of the pick toward the terminal to press the locking tang.
5. Remove the pick and gently tug on the wire to pull the terminal from the wire end of the connector. Repeat steps if the terminal is still locked in place.
6. If necessary, crimp **new** terminals on wires. See A.10 DELPHI METRI-PACK TERMINAL REPAIR.

Installing Socket Terminal

NOTE

Refer to the wiring diagrams to match wire lead colors to alpha characters molded into the secondary locks of each connector housing.

1. Carefully bend tang on each side of terminal outward away from terminal body. Use the thin flat blade from a hobby knife.
2. With the tang facing the chamber wall, push the lead into the chamber at the wire end of the connector. A click is heard when the terminal is properly seated.
3. Gently tug on wire ends to verify that all terminals are locked.
4. Rotate the hinged secondary lock inward until tabs fully engage latches on both sides of connector.

DELPHI 800 METRI-PACK SEALED MAIN FUSE HOUSING REPAIR

Removing Socket Terminals

⚠WARNING

Disconnect negative (-) battery cable first. If positive (+) cable should contact ground with negative (-) cable connected, the resulting sparks can cause a battery explosion, which could result in death or serious injury. (00049a)

1. Disconnect battery.
2. See Figure A-19. Disengage slots (1) on secondary lock (2) from tabs (3) and remove secondary lock.
3. Insert flat blade of pick or small screwdriver into opening (4) until it stops.
4. Tug on cable to pull socket from connector housing. Pivot the pick toward the terminal body to release the latch if necessary.
5. Repeat to remove remaining socket terminal.

NOTE

The battery positive cable and power wire for the main fuse are crimped together at the starter ring terminal. Replace both as an assembly if either requires replacement.

Installing Socket Terminals

1. See Figure A-20. Carefully bend tang outward away from the terminal body.
2. Properly orient terminal to the cavity in the housing. Push terminal into connector housing until it clicks in place. Verify that socket will not back out of chamber.
3. Push rubber seal into connector housing.
4. Repeat to install remaining socket terminal.
5. Install secondary lock onto connector housing. Verify slots engage tabs on sides of connector housing.

⚠WARNING

Connect positive (+) battery cable first. If positive (+) cable should contact ground with negative (-) cable connected, the resulting sparks can cause a battery explosion, which could result in death or serious injury. (00068a)

6. Connect battery cables.

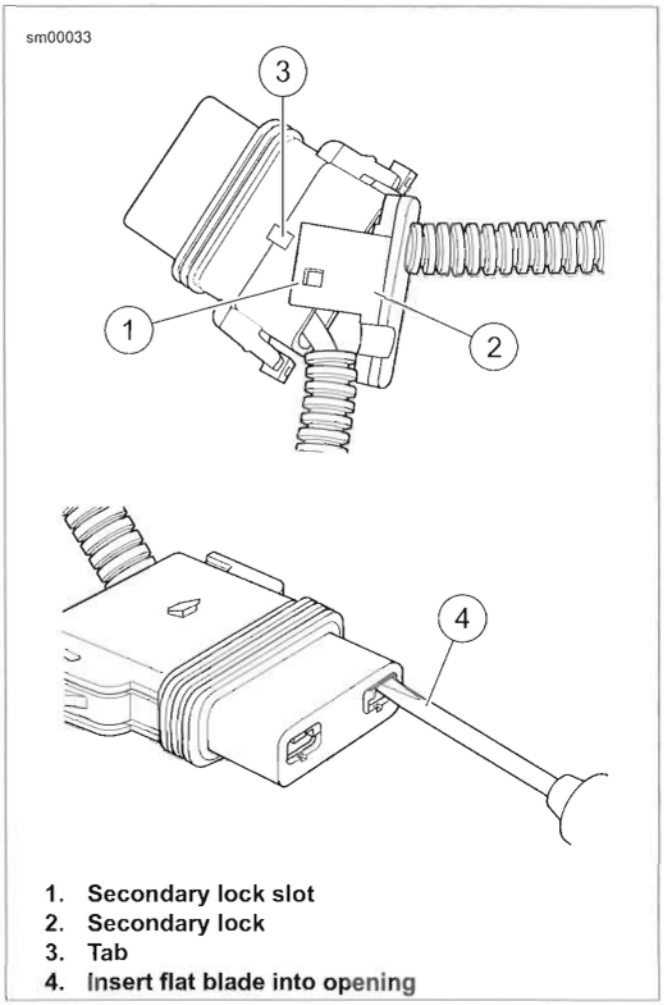

1. **Secondary lock slot**
2. **Secondary lock**
3. **Tab**
4. **Insert flat blade into opening**

Figure A-19. Delphi 800 Metri-Pack Sealed Main Fuse Housing: Remove Socket Terminals

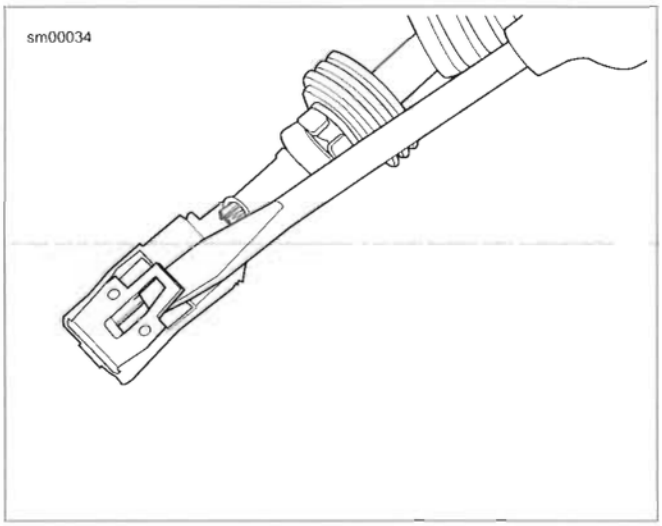

Figure A-20. Delphi 800 Metri-Pack Sealed Main Fuse Housing: Bend Tang

METRI-PACK TERMINAL CRIMPS

PART NUMBER	TOOL NAME
HD-38125-6	PACKARD TERMINAL CRIMPER
HD-38125-7	PACKARD TERMINAL CRIMPER
HD-38125-8	PACKARD TERMINAL CRIMPER

Matching Terminal To Crimper

Metri-Pack connectors embossed with the initials P.E.D. require Packard crimp tools to crimp terminals to wire leads.

Terminals are crimped twice to a wire lead: once over the wire core and a second time over the insulation/seal.

See Figure A-21. A crimp can require two crimping dies. The dies are found on the PACKARD TERMINAL CRIMPER (Part No. HD-38125-6) and the PACKARD TERMINAL CRIMPER (Part No. HD-38125-7). The terminal and the wire gauge determine the core crimp die and the insulator/seal die.

NOTE

The PACKARD TERMINAL CRIMPER (Part No. HD-38125-8) also crimps sealed splice connectors in wire gauge sizes 18-20, 14-16 and 10-12.

Preparing Wire Lead

Strip 5/32 in (4.0 mm) of insulation from the wire lead.

Crimping Wire Core

NOTE

*Metri-Pack terminal crimps require two steps. Always perform **Crimping Wire Core** before **Crimping Insulation/Seal**.*

1. Squeeze and release handles until ratchet automatically opens.
2. Identify the corresponding sized nest for the core crimp.
3. Position the core crimp in the die. Make sure that the core crimp tails are facing the forming jaws.
4. Gently squeeze the handles only until crimpers secure the core crimp tails.
5. Insert stripped wire between crimp tails. Verify that wire is positioned so that short pair of crimp tails squeezes core wire strands, while long pair is positioned over the insulation or seal material.
6. Squeeze handles tightly closed. Release grip and the tool automatically opens.

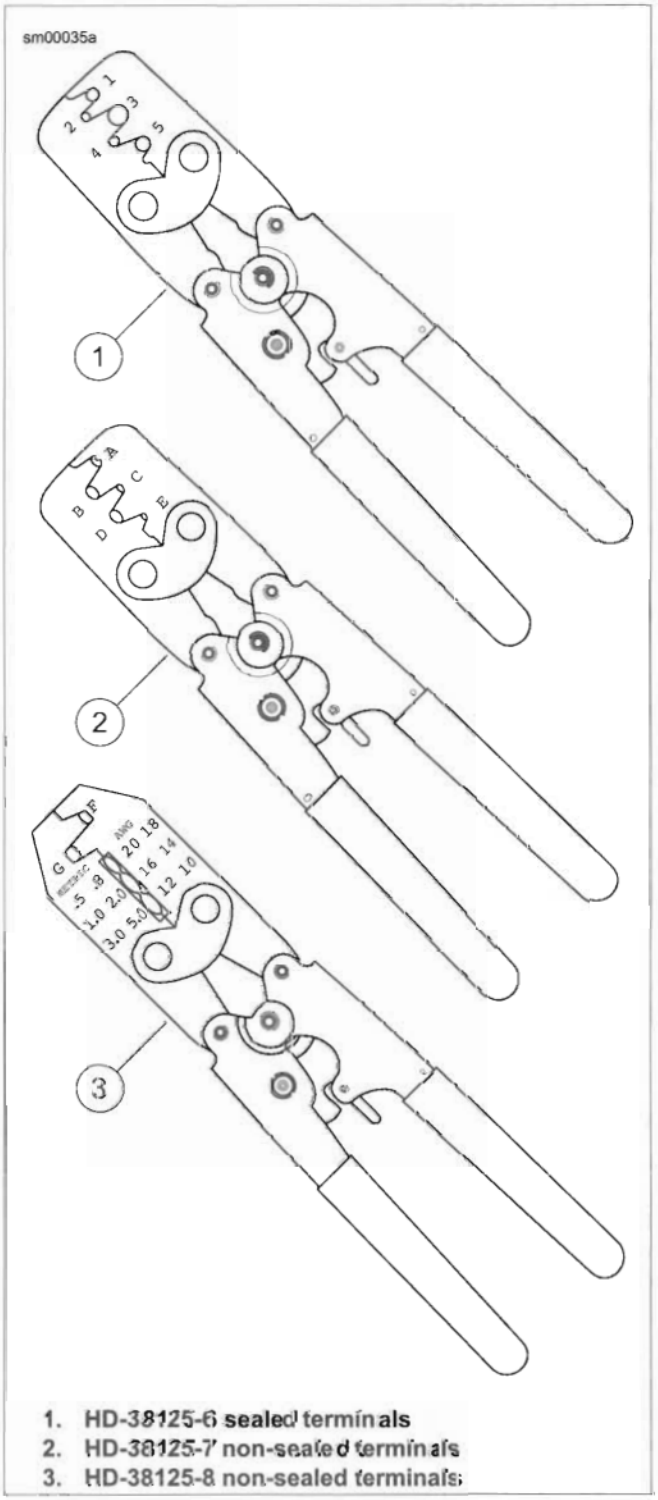

1. HD-38125-6 sealed terminals
2. HD-38125-7 non-sealed terminals
3. HD-38125-8 non-sealed terminals

Figure A-21. Metri-Pack Terminal Crimp Tools

Crimping Insulation/Seal

NOTE

Always perform ***Crimping Wire Core*** *before* ***Crimping Insulation/Seal.***

1. See Figure A-22. Identify the correct die for the insulation/seal crimp (2).
2. Position the insulation/seal crimp in the nest. Make sure that the core crimp tails are facing the forming jaws.
3. Squeeze handle of crimp tool until tightly closed. Tool automatically opens when the crimp is complete.

Inspecting Crimps

1. See Figure A-22. Inspect the wire core crimp (1). Make sure that the tails are folded in on the wire core without any distortion or excess wire strands.
2. Inspect the insulation (2) or seal (3) crimp. Make sure that the tails of the terminal are wrapped around the insulation without distortion.

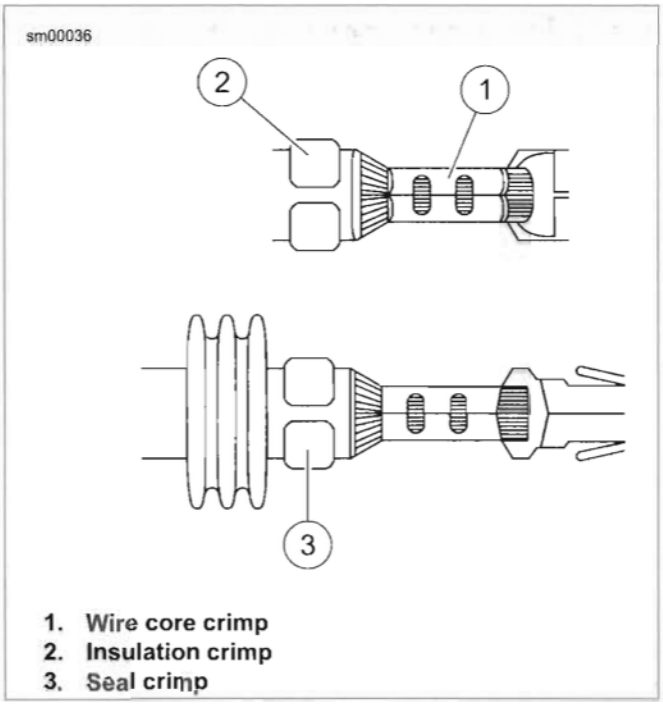

1. **Wire core crimp**
2. **Insulation crimp**
3. **Seal crimp**

Figure A-22. Metri-Pack Connector: Inspect Core and Insulation/Seal Crimps

DELPHI MICRO 64 SEALED CONNECTOR REPAIR

PART NUMBER	TOOL NAME
HD-45928	TERMINAL REMOVER
HD-45929	TERMINAL CRIMPER

General

Delphi Micro 64 Sealed connectors are frequently found on speedometers, tachometers and the ECM of Touring Models.

Separating Pin and Socket Housings

Bend back the external latches slightly and separate the pin and socket housings.

Mating Pin and Socket Housings

Orient the wire lead colors. Align pin and socket housings. Push the pin and socket housings of the connector together until the latches click.

Removing Terminal

1. See Figure A-23. Locate the head of the secondary lock (1) on one side of the connector housing.
2. Insert the blade of a small screwdriver between the center ear of the lock and the connector housing and gently pry out lock. When partially removed, pull lock from connector housing.
3. Locate pin hole (2) between terminals on mating end of connector.

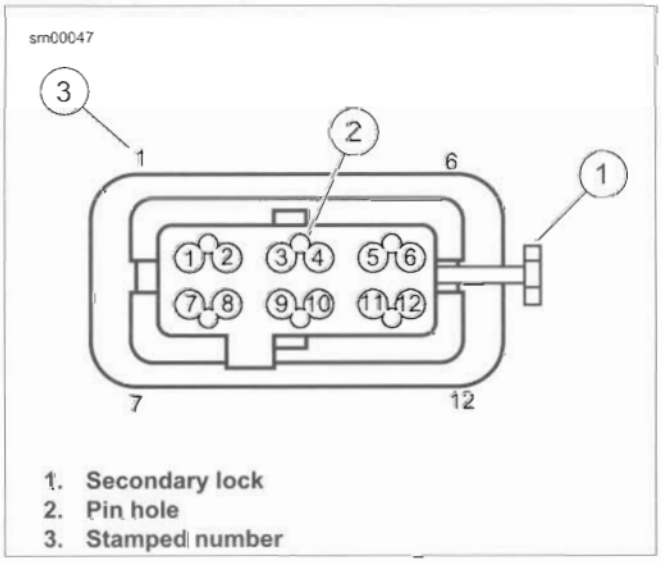

1. Secondary lock
2. Pin hole
3. Stamped number

Figure A-23. Delphi Micro-64 Sealed Connector: Housing

4. See Figure A-24. Obtain the TERMINAL REMOVER (Part No. HD-45928).
5. See Figure A-25. Push the adjacent terminals all the way into the connector housing and then insert tool into hole until it bottoms.
6. Leaving the tool installed, gently tug on wires to pull either one or both terminals from wire end of connector. Remove tool.



Figure A-24. Terminal Remover (HD-45928)

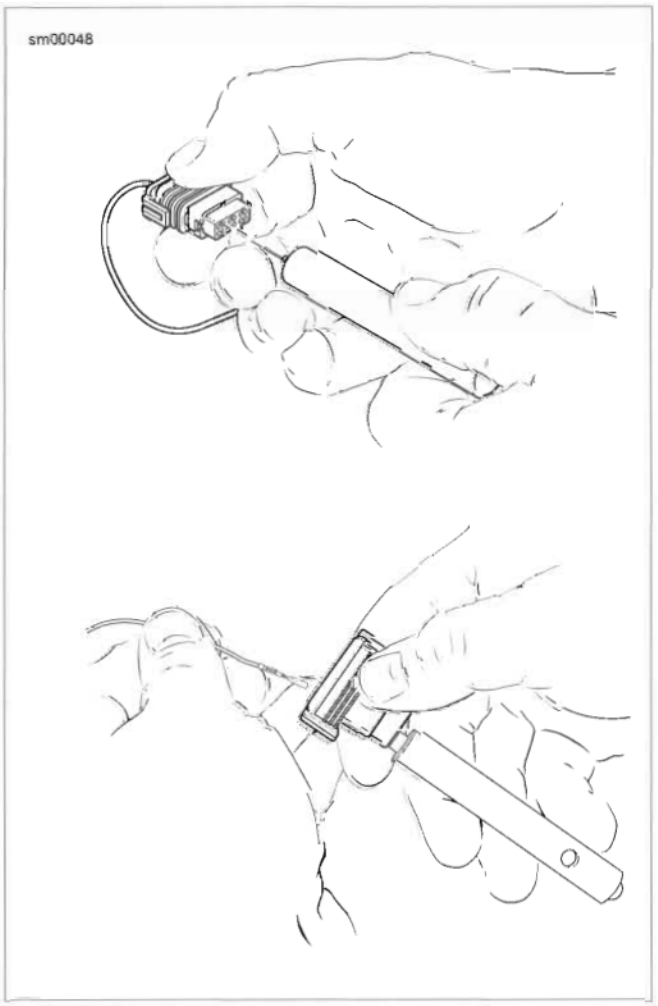

Figure A-25. Delphi Micro-64 Sealed Connector: Insert Tool and Remove Terminal

Installing Terminal

1. Insert terminal into its respective numbered chamber on wire end of connector. No special orientation of the terminal is necessary.

NOTE

See Figure A-23. For wire location purposes, the corners of the socket housing are stamped (3) with the numbers 1, 6, 7 and 12, representing terminals 1-6 on one side, and 7-12 on the other.

2. Bottom the terminal in the chamber and then gently tug on the wire to verify that it is locked in place.

NOTE

Once removed, the terminal may not lock in place when first installed. Until the lock engages, move the terminal back and forth slightly while wiggling the lead.

3. Since the terminal remover tool releases two terminals simultaneously, repeat step 2 on the adjacent terminal even if it was not pulled from the connector housing.

4. With the center ear on the head of the secondary lockpin facing the mating end of the connector, push secondary lock in until head is flush with the connector housing.

Preparing Wire Leads for Crimping

Strip 1/8 in (3.0 mm) of insulation from the wire lead.

Crimping Terminals

1. Inspect **new** socket terminal for bent or deformed contact and crimp tails. Replace as necessary.

2. See Figure A-27. Squeeze the handles of the TERMINAL CRIMPER (Part No. HD-45929) to cycle the tool to the fully open position (1).

3. Raise locking bar and barrel holder by pushing up on bottom tab with index finger (2).

4. With the crimp tails facing upward, insert terminal through locking bar into front hole in barrel holder (20-22 gauge wire) (3).

5. Release locking bar to lock position of contact. When correctly positioned, the locking bar fits snugly in the space at the front of the core crimp tails and the closed side of the terminal rests on the outer nest of the crimp tool.

6. Insert wires between crimp tails until ends make contact with locking bar. Position wire that the wide pair of crimp tails squeeze bare wire strands, while the narrow pair folds over the insulation material.

7. Squeeze handle of crimp tool until tightly closed (4). Tool automatically opens when the crimping sequence is complete.

8. Raise locking bar and barrel holder to remove contact.

Inspecting Crimps

Inspect the quality of the core and insulation crimps. Distortion should be minimal.

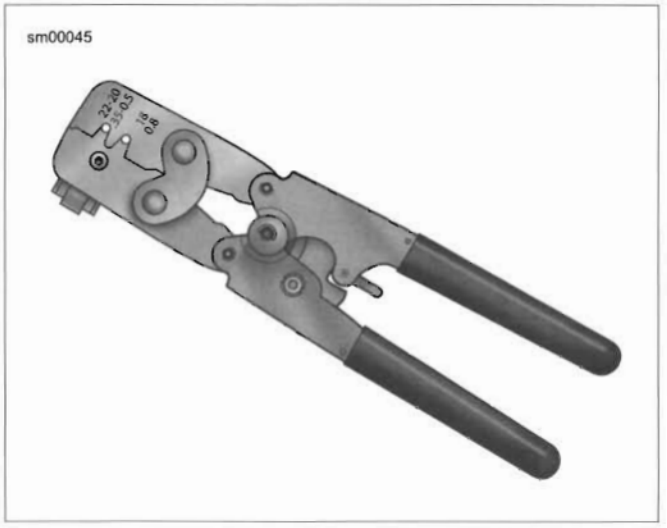

Figure A-26. Terminal Crimper (HD-45929)

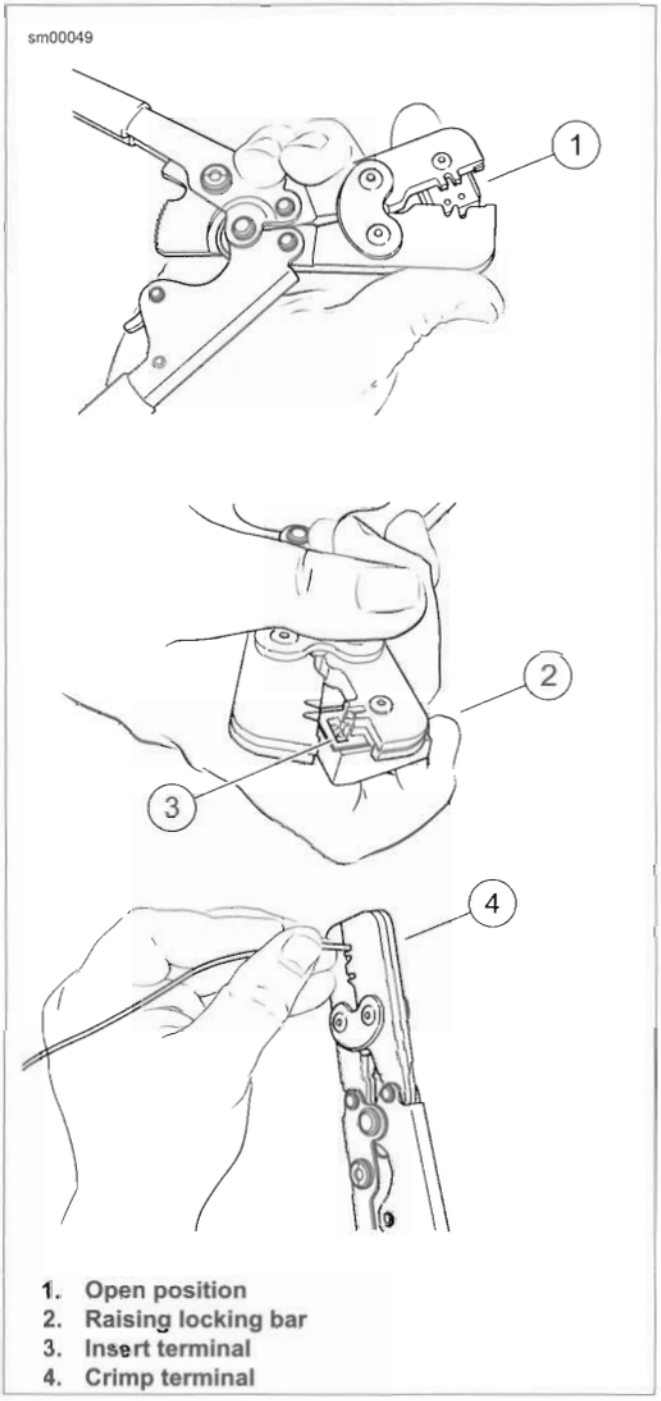

1. Open position
2. Raising locking bar
3. Insert terminal
4. Crimp terminal

Figure A-27. Delphi Micro-64 Sealed Connector: Terminal in Crimper

DELPHI GT 150 SEALED CONNECTOR REPAIR

General

Delphi connectors are embossed with the brand name, Delphi, on the housing latch or terminal block.

Separating Pin and Socket Housings

See Figure A-28. Bend back the external latch(es) slightly and separate pin and socket halves of the connector.

Mating Pin and Socket Housings

Push pin and socket halves of connector together until external latch(es) engage.

Removing Socket Terminals

NOTE

Although the parts of the different Delphi connectors vary in appearance, these instructions are universal.

1. See Figure A-29. If present, free one side of wire lock (1) from ear on wire end of socket housing. Release the other side if necessary. Release wires from channels in wire lock. Remove appropriate terminals from housing.
2. Use a fingernail to pry colored terminal lock (2) loose. Remove from mating end of socket housing.
3. Use the thin flat blade from a hobby knife. Gently pry tang (3) outward away from terminal. Tug on wire to back terminal out wire end of chamber. Do not pull on wire until tang is released or terminal will be difficult to remove.

Installing Socket Terminals

NOTE

For wire location purposes, alpha or numeric characters are stamped into the wire end of each socket housing.

1. Gently push tang on socket housing inward toward chamber. With the open side of the terminal facing the tang, push terminal into chamber at wire end of socket housing.
2. Gently tug on wire to verify that terminal is locked, preventing it from backing out of chamber. If necessary, use fingernail to push tang into engagement with terminal.
3. Install colored terminal lock onto mating end of socket housing.
4. If present, seat wires in separate channels of wire lock and then push channels **inside** chambers at wire end of socket housing. Fully installed, slot on each side of wire lock engages ear on socket housing.

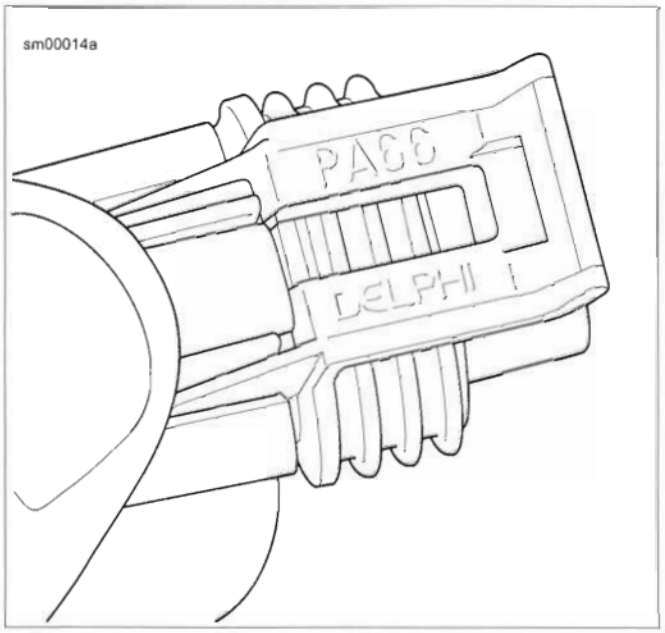

Figure A-28. Delphi GT 150 Sealed Connector: Socket Housing Latch

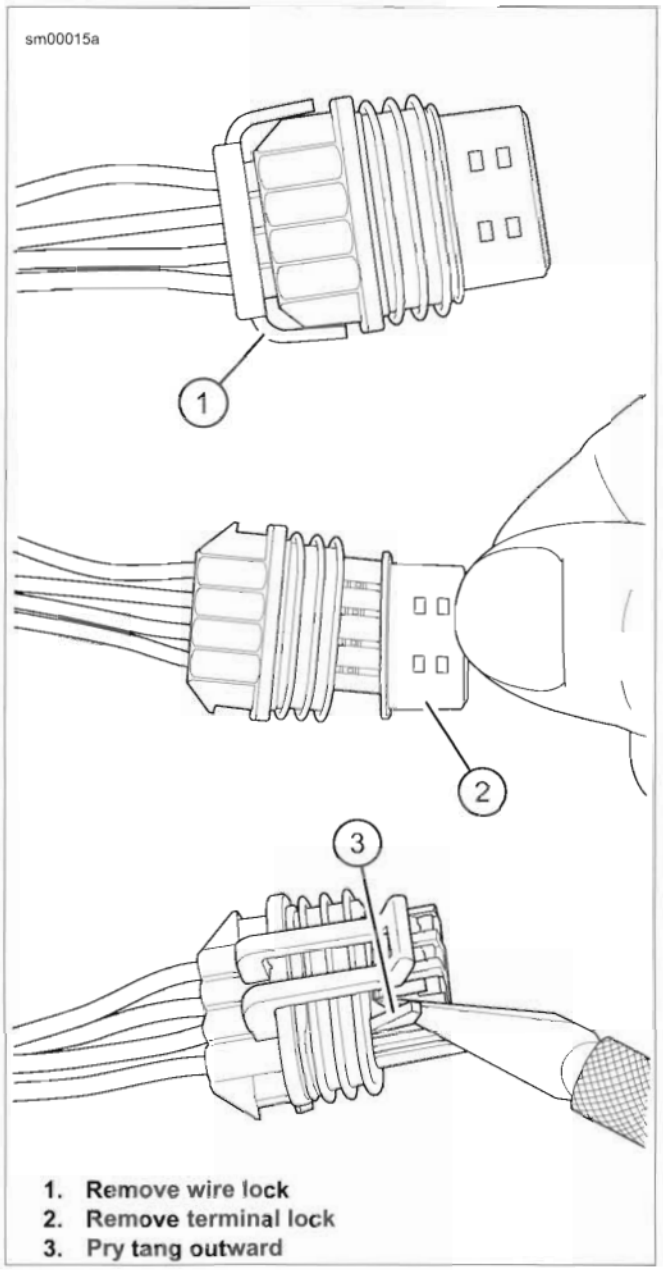

Figure A-29. Delphi GT 150 Sealed Connector: Removing Socket Terminals

DEUTSCH DT SEALED CONNECTOR REPAIR

PART NUMBER	TOOL NAME
HD-41475	DEUTSCH TERMINAL REPAIR KIT
HD-41475-100	FLAT BLADE L-HOOK

General

Deutsch DT sealed connectors are colored coded for location purposes. DT connectors associated with **left** side accessories, such as the front and rear **left** turn signals, are **gray**. All other DT connectors are **black**.

NOTES

- *A DEUTSCH TERMINAL REPAIR KIT (Part No. HD-41475) contains a selection of seals and seal plugs, locking wedges, attachment clips and terminals.*
- *Also included is a FLAT BLADE L-HOOK (Part No. HD-41475-100) used to remove locking wedges, compartmented storage box and carrying case.*

Separating Pin and Socket Housings

See Figure A-30. To separate the connector halves, Press the external latch(es) (1) on the socket housing (2) while rocking the pin (3) and socket housings.

NOTES

- *Generally, the socket housing is found on the accessory side, while the pin housing is attached to the wiring harness.*
- *Six-place and smaller Deutsch connectors have one latch on the connector.*
- *Eight- and twelve-place connectors have a latch on each side. Simultaneously press both latches to separate the connector.*

Mating Pin and Socket Housings

1. Align the connectors to match the wire lead colors.
   a. **For One External Latch:** Six-place and smaller Deutsch connectors have one external latch on the socket housing. To join the housings, align the latch on the socket side with the latch cover on the pin side.
   b. **For Two External Latches:** Align the tabs on the socket housing with the grooves on the pin housing.
2. Insert socket housing into pin housing until it snaps or clicks into place.

NOTE

For Two External Latches: *If latches do not click (latch), press on one side of the connector until that latch engages then press on the opposite side to engage the other latch.*

3. If necessary, fit the attachment clip to the pin housing.
4. Place large end of slot on attachment clip over T-stud on frame. Push assembly forward to engage small end of slot.

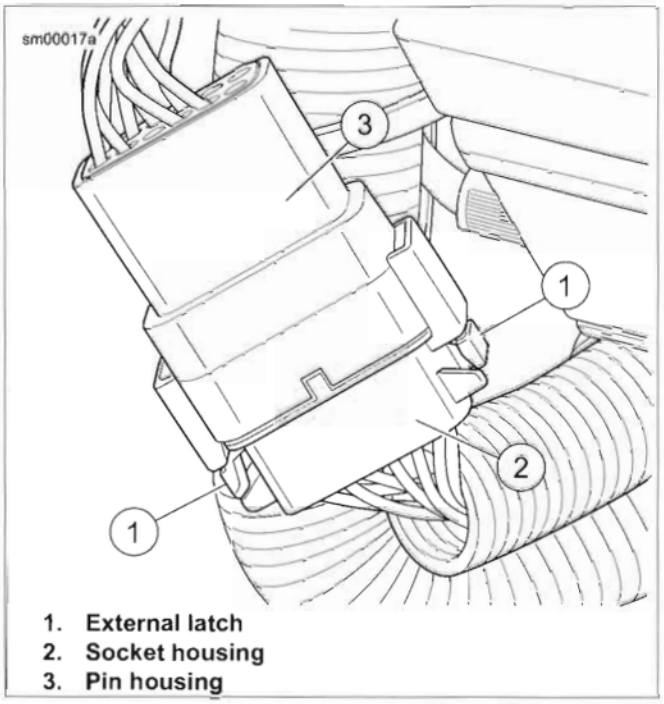

1. **External latch**
2. **Socket housing**
3. **Pin housing**

Figure A-30. Deutsch DT Sealed Connector

Removing Socket Terminals

1. See Figure A-31. Insert a small screwdriver between the socket housing and locking wedge in-line with the groove (in-line with the pin holes if the groove is absent). Turn the screwdriver 90 degrees to pop the wedge up and remove the secondary locking wedge.
2. See Figure A-34. Use a pick or small screwdriver to press terminal latches inside socket housing and back out sockets through holes in rear wire seal.

NOTE

*If wire leads require **new** terminals, see the instructions for crimping terminals.*

Installing Socket Terminals

1. Match wire lead color to connector cavity.
2. See Figure A-33. Fit rear wire seal (1) into back of socket housing (2), if removed.
3. Grasp wire lead (3) approximately 1.0 in (25.4 mm) behind the socket terminal. Gently push socket through hole in wire seal into its chambers until it clicks in place.
4. A tug on the wire will confirm that it is properly locked in place.

NOTE

Install seal plugs (6) into unused chambers. If removed, seal plugs must be replaced to seal the connector.

5. Install internal seal (4) on lip of socket housing, if removed.
6. Insert tapered end of secondary locking wedge (5) into socket housing and press down until it snaps in place. The wedge fits into the center groove within the socket housing and holds the terminal latches tightly closed.

NOTES

- *See Figure A-32. While rectangular wedges do not require a special orientation, align arrow (1) on conical secondary locking wedge towards external latch for three-place connectors.*
- *If the secondary locking wedge does not slide into position easily, check the installation of all the terminals. Unseated terminals prevent the locking wedge from proper installation.*

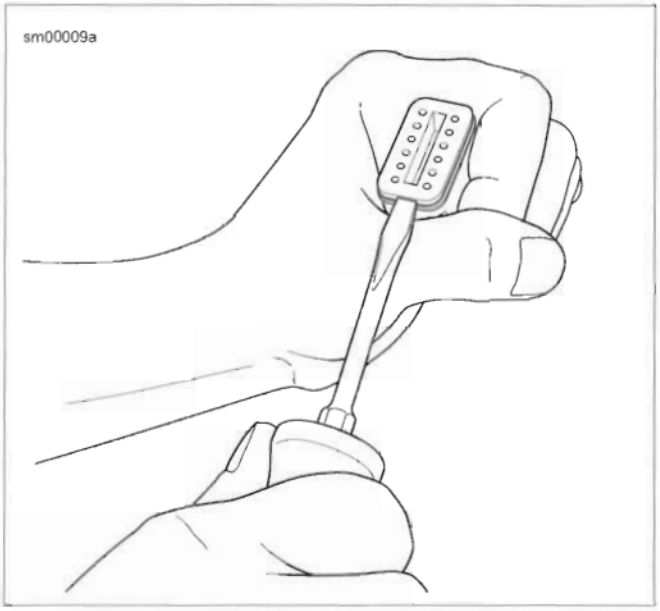

Figure A-31. Deutsch DT Sealed Connector: Remove Secondary Locking Wedge

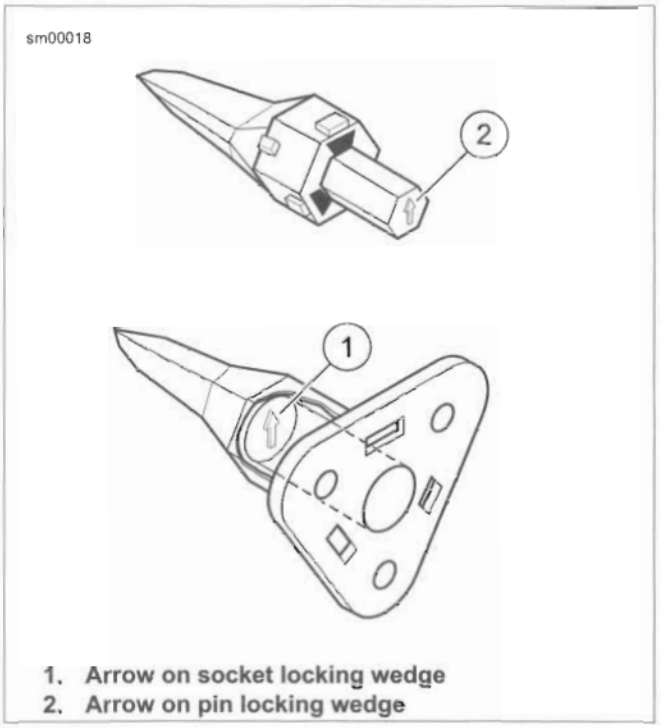

1. **Arrow on socket locking wedge**
2. **Arrow on pin locking wedge**

Figure A-32. Deutsch DT Sealed Connector: 3-Place Locking Wedges

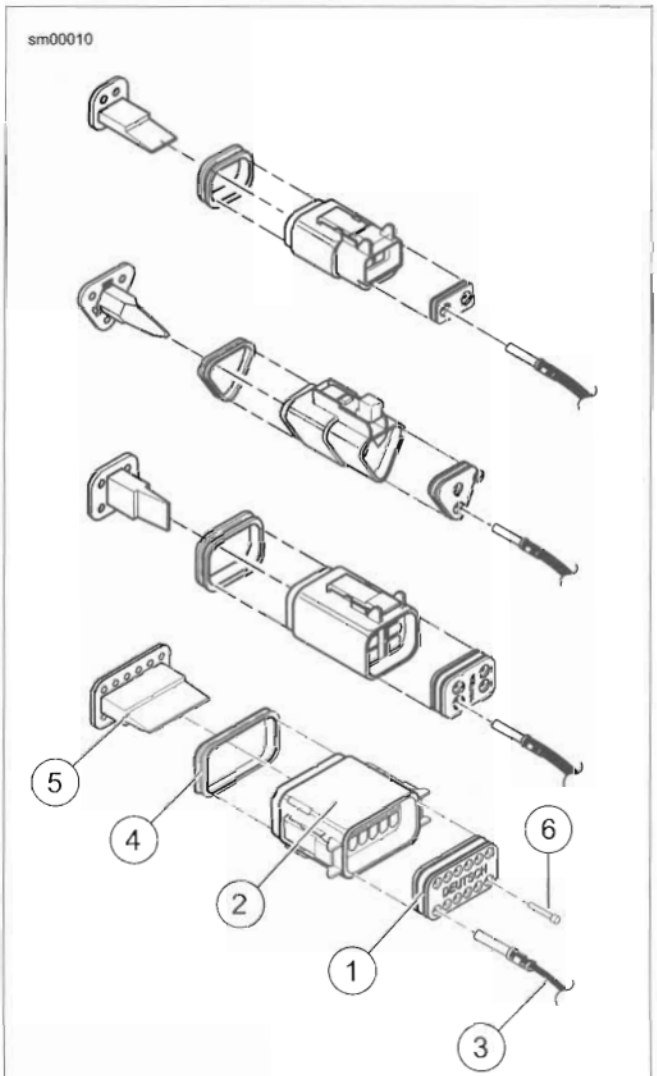

1. **Wire seal**
2. **Socket housing**
3. **Wire lead**
4. **Internal seal**
5. **Secondary locking wedge**
6. **Seal plug**

Figure A-33. Deutsch DT Sealed Connector: 2, 3, 4 and 12-Place Socket Housings

Removing Pin Terminals

1. Use the hooked end of a stiff piece of mechanics wire, a needle nose pliers or the FLAT BLADE L-HOOK (Part No. HD-41475-100) to remove the secondary locking wedge.
2. Gently press terminal latches inside pin housing and back out pins through holes in wire seal.

NOTES

- *If wire leads require new terminals, see the instructions for crimping terminals.*
- *The 8-place and 12-place gray and black connectors are not interchangeable. If replacing both the socket and pin housings, the black may be substituted for the gray.*
- *The socket and pin housings of all other connectors are interchangeable. Black may be mated with the gray since the alignment tabs are absent and the orientation of the external latch is the same.*

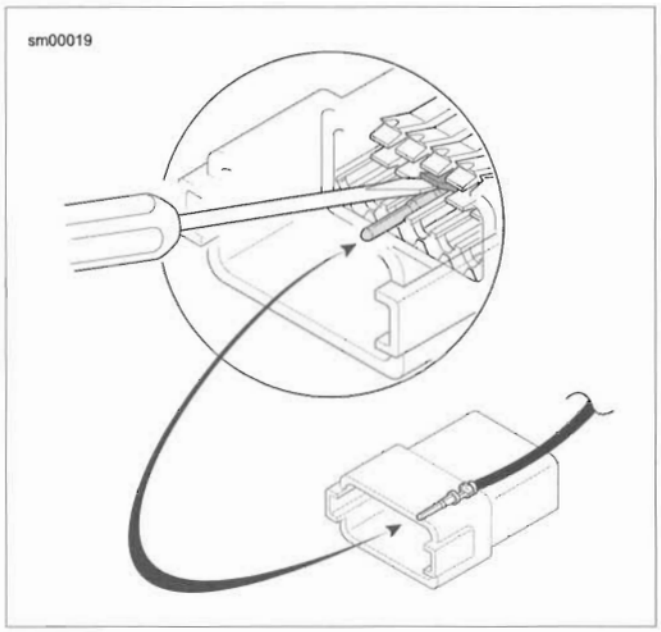

Figure A-34. Deutsch DT Sealed Connector: Press Terminal Latch and Back Out Pin

Installing Pin Terminals

1. See Figure A-35. Fit wire seal (1) into back of pin housing (2).
2. Grasp wire lead approximately 1.0 in (25.4 mm) behind the pin terminal (3). Gently push pin through holes in wire seal into its respective numbered chamber until it "clicks" in place.

NOTE

A tug on the wire lead will confirm that a pin is locked in place.

3. Insert tapered end of secondary locking wedge (4) into pin housing. Press down until it snaps in place.

NOTES

- *The wedge fits in the center groove of the pin housing and holds the terminal latches tightly closed.*
- *See Figure A-32. While rectangular wedges do not require a special orientation, align arrow (1) on conical secondary locking wedge towards external latch for three-place connectors.*
- *If the secondary locking wedge does not slide into position easily, check the installation of all the terminals. Unseated terminals prevent the locking wedge from proper installation.*

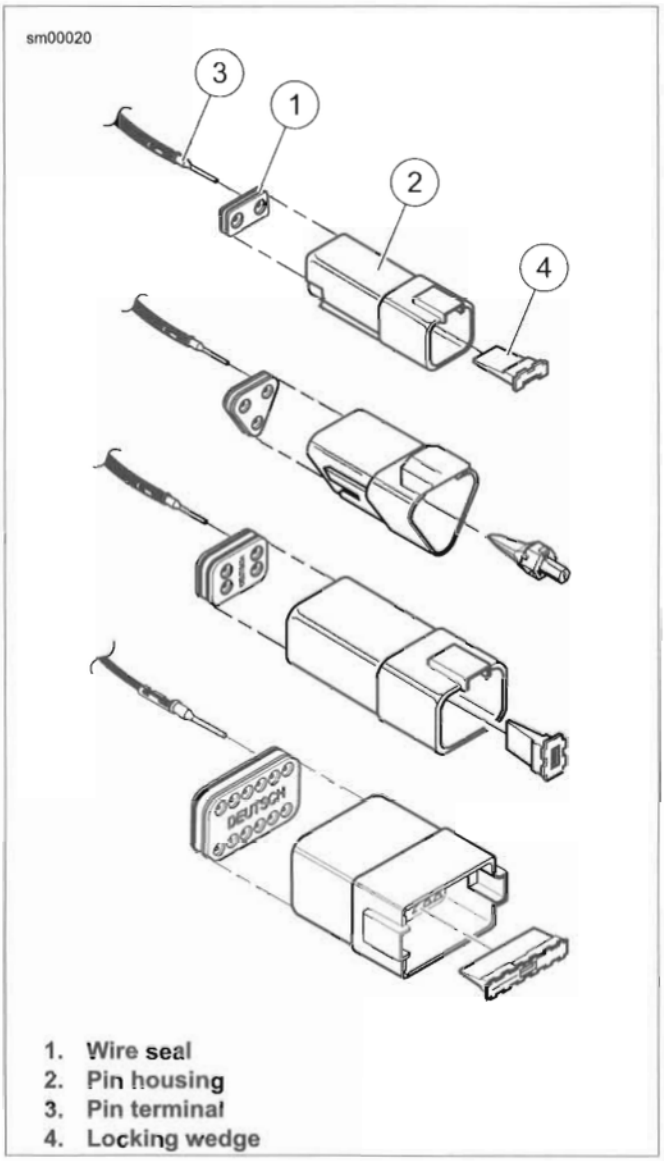

1. **Wire seal**
2. **Pin housing**
3. **Pin terminal**
4. **Locking wedge**

Figure A-35. Deutsch DT Sealed Connector: 2, 3, 4 and 12-Place Pin Housings

Crimping Terminals

Identify which of the types of Deutsch terminals are used with the connector. Follow the corresponding crimping instructions. Refer to Table A-2.

Table A-2. Deutsch Connector: Terminal Crimping Instructions

TYPE	CRIMPING INSTRUCTIONS
DT Sealed (with crimp tails)	A.14 DEUTSCH DT SEALED TERMINAL REPAIR
DTM Mini Sealed Terminal (solid barrel)	A.16 DEUTSCH DTM SEALED SOLID BARREL MINI TERMINAL REPAIR
DTM Mini Sealed Terminal (with crimp tails)	A.15 DEUTSCH DTM SEALED MINI TERMINAL REPAIR

DEUTSCH DT SEALED TERMINAL CRIMPS

PART NUMBER	TOOL NAME
HD-39965-A	DEUTSCH TERMINAL CRIMP TOOL

Preparing Wire Leads for Crimping

1. Use a shop gauge to determine gauge of wire lead.
2. Strip 5/32 in (4.0 mm) of insulation from the wire lead.

Crimping Terminal to Lead

1. See Figure A-36. Squeeze the handles of the DEUTSCH TERMINAL CRIMP TOOL (Part No. HD-39965-A) to open the jaws. Push the locking bar (1) up.
2. Match the wire gauge to the crimp tool die. Refer to Table A-3.

NOTE

Rest the rounded side of the contact barrel in the nest (concave split level area) with the crimp tails facing up.

3. Insert (2) terminal (socket/pin) through hole of the locking bar.
4. Release locking bar to lock terminal in die.

NOTE

If the crimp tails are slightly out of alignment, the crimp tool rotates the terminal to face the tails upward. When positioned, the locking bar fits snugly in the space between the contact band and the core crimp tails.

5. Insert stripped wire core between crimp tails until ends make contact with locking bar. Position wire that the wide pair of crimp tails squeeze bare wire strands, while the narrow pair folds over the insulation material.
6. Squeeze handle of crimp tool until tightly closed. Tool automatically opens after the terminal is crimped.
7. Raise locking bar up to remove wire lead and terminal.

Inspecting Crimps

Inspect the wire core and insulation crimps. Distortion should be minimal.

Table A-3. Deutsch DT Sealed Terminal Crimp: Wire Gauge To Die

WIRE GAUGE (AWG)	CRIMP TOOL DIE
20	Front
16-18	Middle

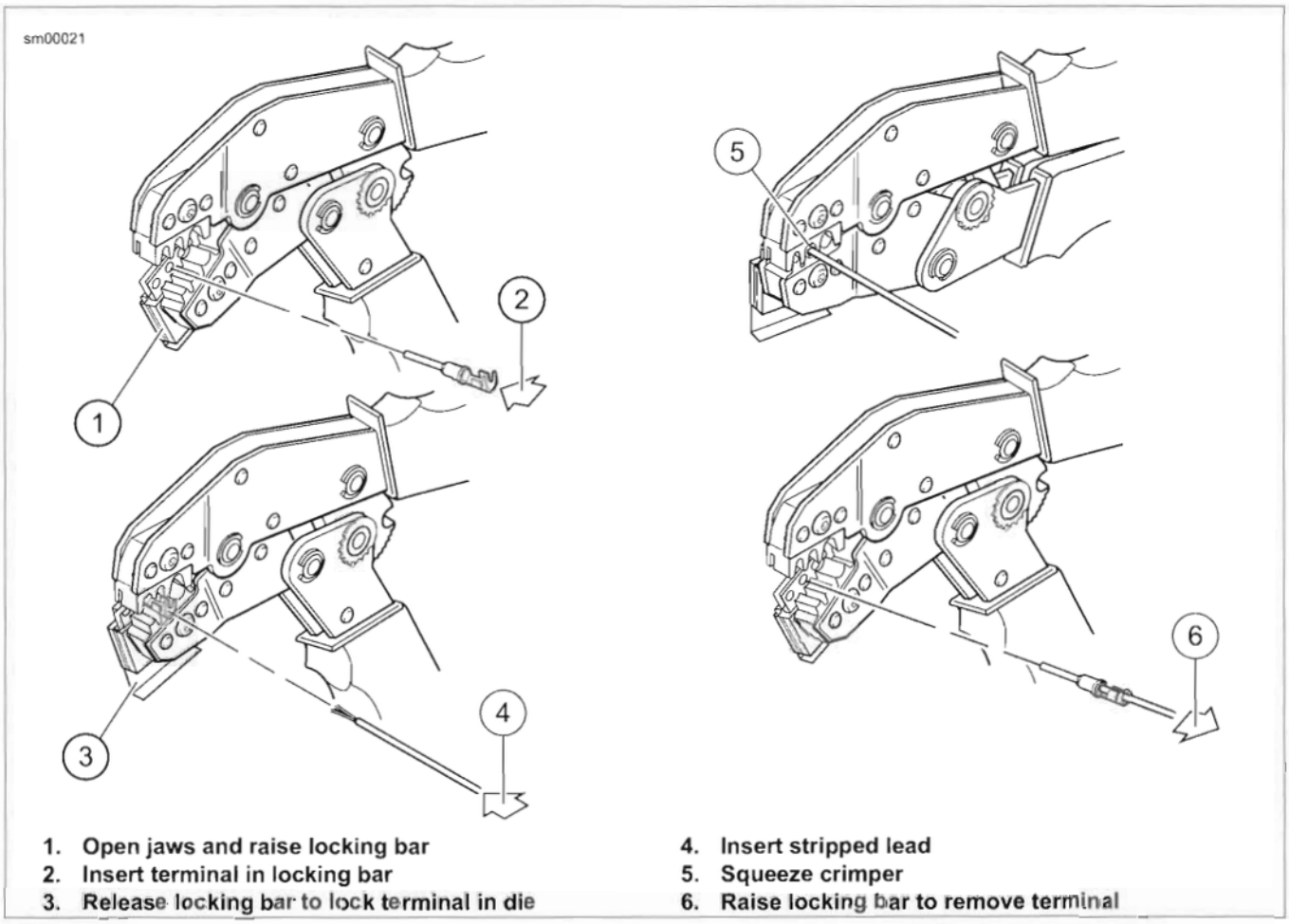

1. Open jaws and raise locking bar
2. Insert terminal in locking bar
3. Release locking bar to lock terminal in die
4. Insert stripped lead
5. Squeeze crimper
6. Raise locking bar to remove terminal

Figure A-36. Crimping a Deutsch DT Sealed Terminal

DEUTSCH DTM SEALED MINI TERMINAL CRIMPS

PART NUMBER	TOOL NAME
HD-38125-7	PACKARD TERMINAL CRIMPER

Preparing Wire Leads for Crimping

Strip 5/32 in (4.0 mm) of insulation from the wire lead.

Crimping a Mini Terminal to Wire Lead

1. See Figure A-37. Compress the handles of PACKARD TERMINAL CRIMPER (Part No. HD-38125-7) until the ratchet (2) automatically opens.

NOTE

Always perform core crimp before insulation crimp.

2. Position the core crimp on die E (1) of the crimper. Verify the core crimp tails are facing the forming jaws.
3. Gently apply pressure to handles of tool until crimpers just secure the core crimp tails.
4. Insert stripped wire core stands between crimp tails. Position wire that the short pair of crimp tails squeeze bare wire strands, while long pair squeeze over the insulation.
5. Squeeze handle of crimper until tightly closed. Tool automatically opens when the crimping sequence is complete.

NOTE

If the crimper does not open, squeeze the ratchet trigger (2).

6. Position the insulation crimp on nest C of the crimper. Verify the insulation crimp tails are facing the forming jaws.
7. Squeeze handle of crimp tool until tightly closed. Tool automatically opens when the crimping sequence is complete.

Inspecting Crimps

Inspect the core and insulation crimps. Distortion should be minimal.

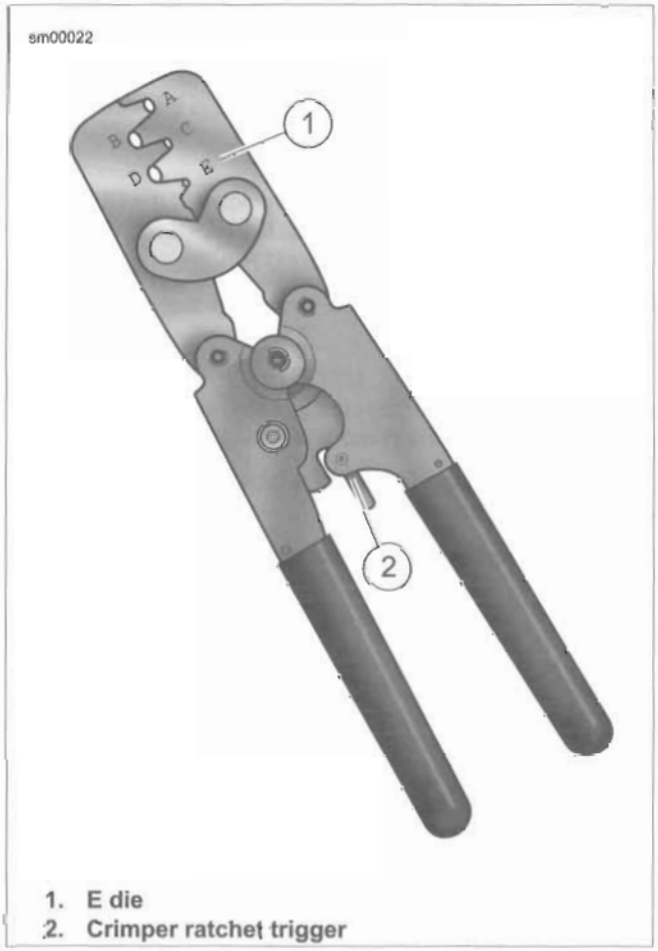

1. **E die**
2. **Crimper ratchet trigger**

Figure A-37. Packard Terminal Crimper (HD-38125-7)

DEUTSCH DTM SEALED SOLID BARREL TERMINAL CRIMPS

PART NUMBER	TOOL NAME
HD-42879	ELECTRICAL CRIMPER TOOL

Preparing Wire Leads For Crimping

For size 20, 16 and 12 contacts, wire ranges 26-12 AWG.

Strip 1/4 in (6.4 mm) of insulation from the wire lead.

Adjusting Crimper Tool

1. See Figure A-38. Squeeze the ELECTRICAL CRIMPER TOOL (Part No. HD-42879) handles to cycle the crimp tool to open.
2. Remove locking pin (1) from selector knob (2).
3. Raise selector knob. Rotate knob until selected wire size stamped on wheel is aligned with "SEL. NO." arrow (3).
4. Loosen knurled locknut (4) and turn adjusting screw (5) clockwise (in) until it stops.

Crimping a Barrel Contact To Wire Lead

1. See Figure A-39. Turn tool over and drop contact barrel (1) into indentor cover (2) hole with the wire end out.
2. Turn adjusting screw counterclockwise (out) until contact is flush with bottom of recess in indentor cover. Tighten knurled locknut.
3. Slowly squeeze handles of crimp tool until contact centers between the four indentor points (3).
4. Insert bare wire core strands of stripped wire lead (4) into contact barrel. Squeeze handle of crimp tool until tightly closed. Tool automatically opens when the crimping sequence is complete.
5. Remove wire lead with crimped contact from indentor.

NOTE

Adjust the crimper tool for each contact/wire size.

6. Install pin to lock selector knob.

Inspecting Crimps

Inspect the crimp. All core wire strands are to be crimped in the barrel.

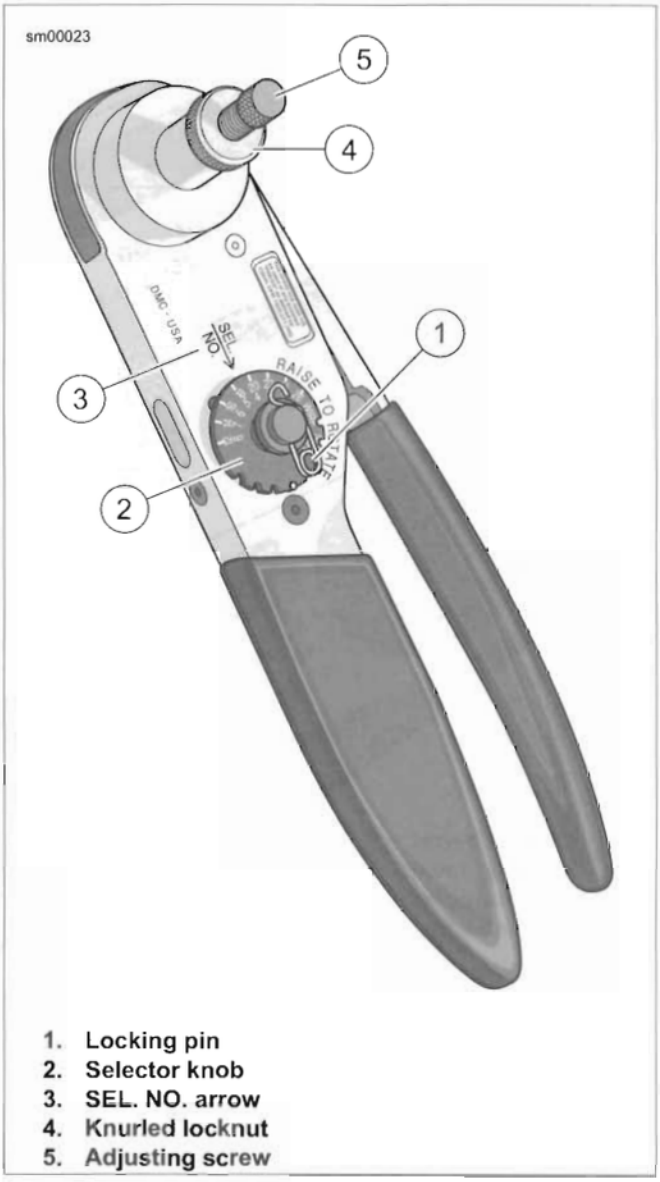

1. **Locking pin**
2. **Selector knob**
3. **SEL. NO. arrow**
4. **Knurled locknut**
5. **Adjusting screw**

Figure A-38. Electrical Crimper Tool (HD-42879)

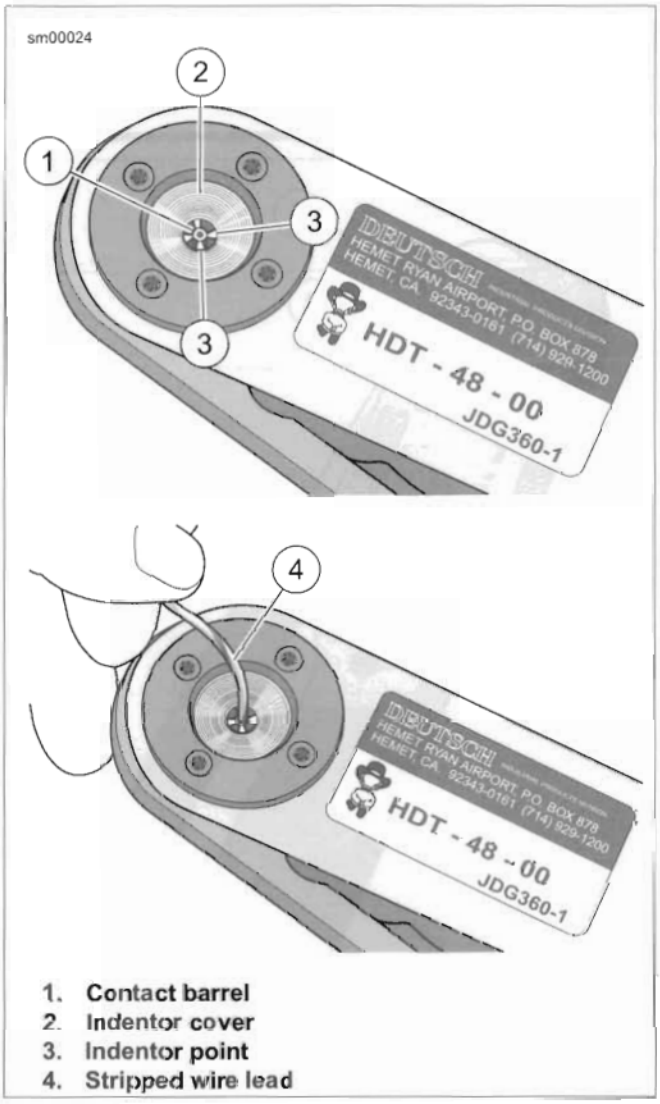

1. Contact barrel
2. Indentor cover
3. Indentor point
4. Stripped wire lead

Figure A-39. Deutsch Solid Barrel

JAE MX19 SEALED CONNECTORS

PART NUMBER	TOOL NAME
B-50085	TERMINAL EXTRACTOR

Connector Housings

Separate Housings: See Figure A-40. Press the two release buttons on each side of the housing to separate the connector.

Connect Housings: Align housings. Press together until the locking tabs click.

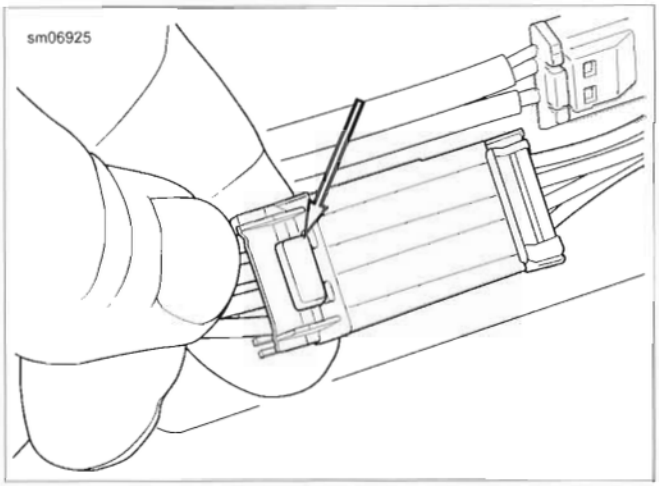

Figure A-40. Release Buttons: JAE MX19 Sealed Connector

Removing Terminals

1. Modify a TERMINAL EXTRACTOR (Part No. B-50085) by filing the front edge to 45 degrees.
2. See Figure A-41. Insert the extractor (1) into the opening above the terminal and press the plastic molding (2) up and out of the way.
3. Pull the wire lead and terminal out of the back of the housing.

Installing Terminals

1. Inspect the plastic molding and replace the connector housing if necessary.
2. Orient the terminal to the housing. Push terminal into housing until it clicks into place.

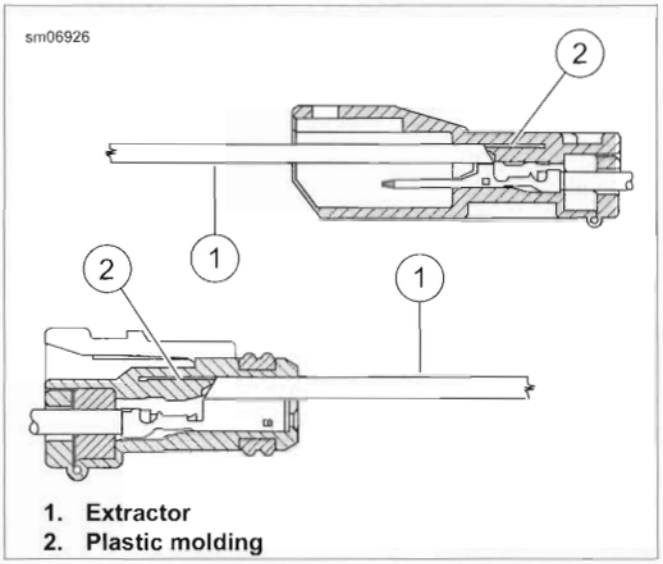

1. **Extractor**
2. **Plastic molding**

Figure A-41. JAE MX19 Terminal Removal

CRIMPING TERMINALS

PART NUMBER	TOOL NAME
HD-50120	UNIVERSAL CRIMPER SET
HD-50120-2	HAND CRIMP FRAME
HD-50120-6	JAE DIE

1. Strip the wire insulation to specification. Refer to Table A-4.
2. Install the JAE DIE (Part No. HD-50120-6) in the handle of the HAND CRIMP FRAME (Part No. HD-50120-2) of the UNIVERSAL CRIMPER SET (Part No. HD-50120).
3. Place the **new** terminal in the specified nest.
4. Insert the wire to the wire stop. Crimp the terminal.
5. Inspect the crimped terminal.

Table A-4. JAE MX19 Crimper Die (Part No. HD-50120-6)

TERMINAL	PART NO.	STRIP LENGTH		NEST
		in	mm	
Socket	72910-11	0.051-0.098	2.0-2.5	B
Pin	72909-11	0.051-0.098	2.0-2.5	A

MOLEX CMC SEALED CONNECTORS

PART NUMBER	TOOL NAME
HD-50423	0.6 MM TERMINAL EXTRACTOR TOOL
HD-50424	1.5 MM TERMINAL EXTRACTOR TOOL

Separating the Connector

Release: See Figure A-42. Press the catch and rotate the lever arm down.

Connect: Press on the front guard to release the latch and rotate the lever arm up until the catch clicks in place.

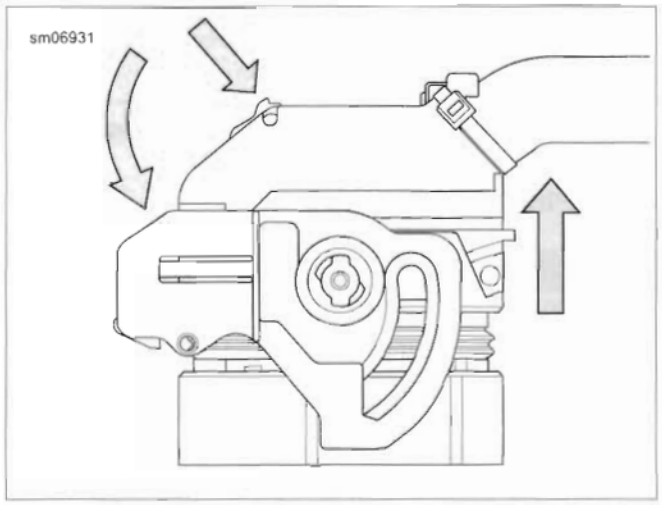

Figure A-42. Release

Removing Terminals

1. With the lever arm open, cut the cable strap around the wire bundle.
2. See Figure A-43. Open a wire cap latch (1) with a small screwdriver.
3. Maintain pressure on the cap and open the opposite latch (2) with the screwdriver.
4. Slide the cap off (3).
5. See Figure A-44. Use the screwdriver to open the secondary lock. Pull the locking bar all the way out.
6. See Figure A-45. Locate the wire lead cavity by the alpha-numeric coordinates.
7. Identify the size of the terminal and select either the CMC extractor 0.6 MM TERMINAL EXTRACTOR TOOL (Part No. HD-50423) or the 1.5 MM TERMINAL EXTRACTOR TOOL (Part No. HD-50424).
8. See Figure A-46. Insert the pins of the CMC extractor tool (1) into the access slots (2) of the terminal cavity and retract the lead and terminal.

Installing Terminals

1. Orient the terminal to the housing cavity. Snap the terminal in place.
2. Slide the cap over the lead bundle. Snap the cap in place.
3. Install a cable strap through the guide and around the lead bundle.

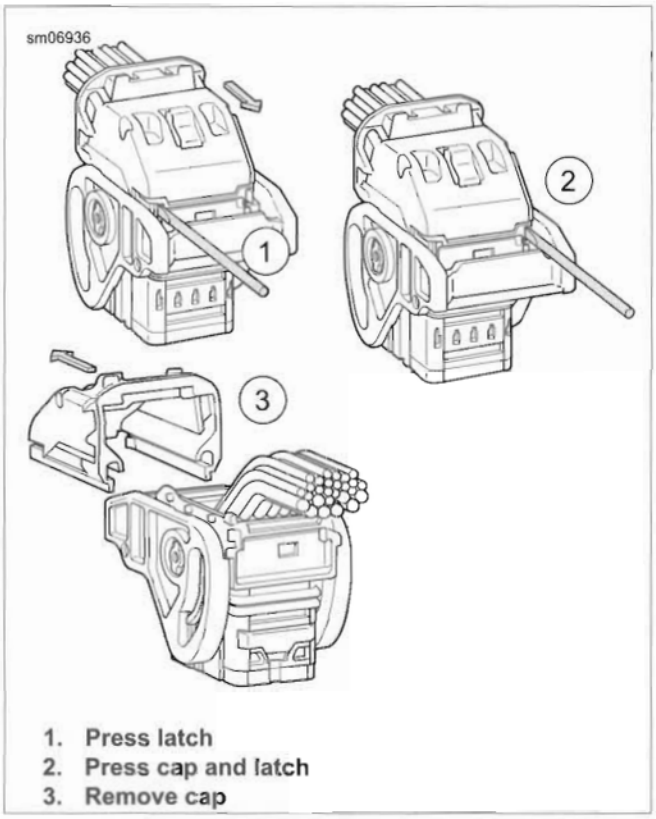

1. **Press latch**
2. **Press cap and latch**
3. **Remove cap**

Figure A-43. Remove the Wire Lead Cap

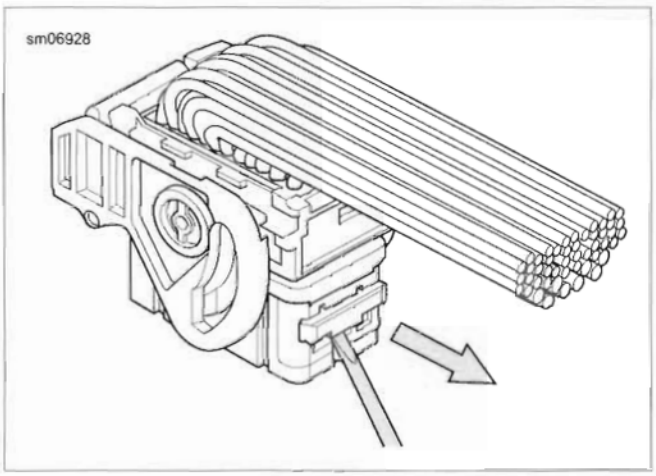

Figure A-44. Molex CMC Sealed Connector Secondary Lock

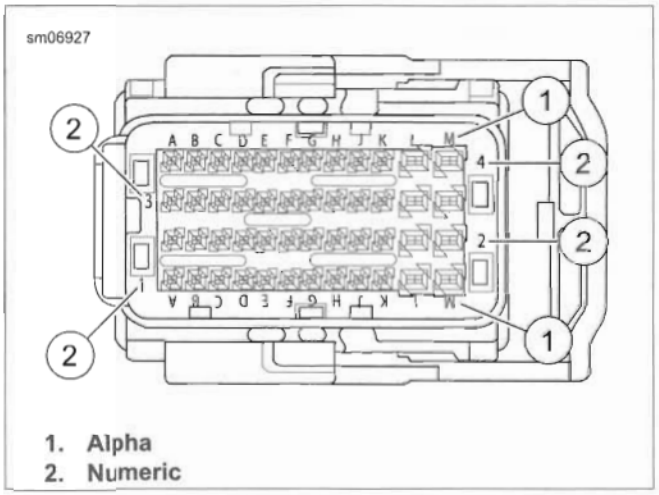

1. Alpha
2. Numeric

Figure A-45. Alpha-Numeric Coordinates

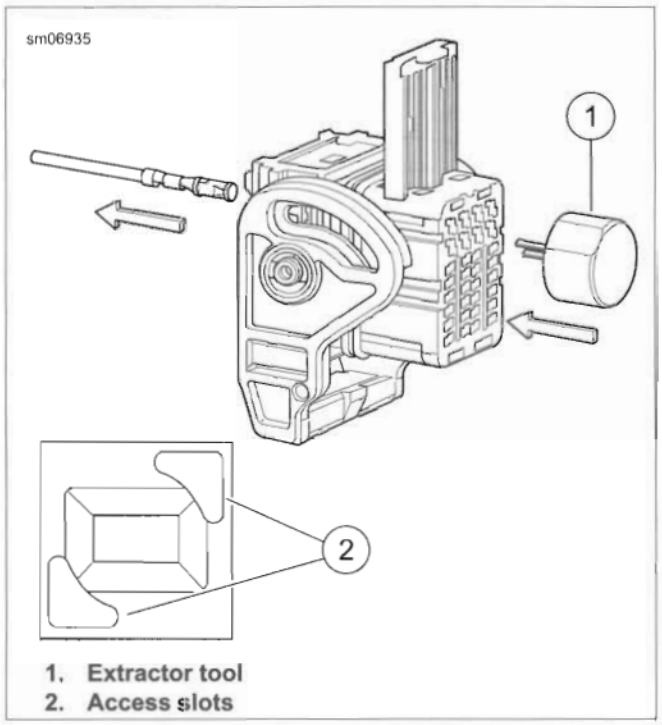

1. Extractor tool
2. Access slots

Figure A-46. Terminal Removal

CRIMPING TERMINALS

PART NUMBER	TOOL NAME
HD-50120	UNIVERSAL CRIMPER SET
HD-50120-2	HAND CRIMP FRAME
HD-50120-3	JAE DIE
HD-50120-4	JAE DIE

1. Select the crimper die according to the terminal part number from the UNIVERSAL CRIMPER SET (Part No. HD-50120).
2. Strip the wire insulation to specification. Refer to Table A-5 or Table A-6.
3. Install the JAE DIE (Part No. HD-50120-3) or JAE DIE (Part No. HD-50120-4) in the handle of the HAND CRIMP FRAME (Part No. HD-50120-2).
4. Place the new terminal in the specified nest.
5. Insert the wire to the wire stop. Crimp the terminal.
6. Inspect the crimped terminal.

Table A-5. Molex CMC Sealed Crimper Die (Part No. HD-50120-3)

PART NO.	TERMINAL: WIRE GAUGE	STRIP LENGTH		NEST
		in	mm	
72226-11	Socket: 16 AWG	0.177	4.5	B
72227-11	Socket: 18 AWG	0.177	4.5	A

Table A-6. Molex CMC Sealed Crimper Die (Part No. HD-50120-4)

PART NO.	TERMINAL: WIRE GAUGE	STRIP LENGTH		NEST
		In	mm	
72222-11	Socket: 18 AWG	0.138	3.5	B
72222-11	Socket: 20 AWG	0.138	3.5	A

MOLEX MX 150 SEALED CONNECTOR REPAIR

PART NUMBER	TOOL NAME
HD-48114	TERMINAL REMOVER

Separating Pin and Socket Housings

See Figure A-47. Press the latch while pulling the pin and socket housings apart.

Mating Pin and Socket Housings

1. Orient the latch on the pin housing to the latch pocket on the socket housing so the rails on the outside of the pin housings lines up with the tunnels on the socket housing.
2. Press the housings together until the latch clicks.

Removing Terminals

1. Pull the secondary lock up, approximately 3/16 in (4.8 mm), until it stops.
   a. **Socket Housing:** See Figure A-48. Use a small screwdriver in the pry slot. The slot next to the external latch provides a pivot point.
   b. **Pin Housing:** See Figure A-49. Use needle nose pliers to engage the D-holes in the center of the secondary lock.

NOTE

Do not remove the secondary lock from the connector housing.

2. See Figure A-50. Insert TERMINAL REMOVER (Part No. HD-48114) into the pin hole next to the terminal until the tool bottoms.
   a. **Socket Housing:** The pin holes are inside the terminal openings.
   b. **Pin Housing:** The pin holes are outside the pins.
3. Pressing the terminal remover to the bottom of the pin hole, gently pull on the wire to remove wire terminal from its cavity.

Installing Terminals

1. See Figure A-51. From the wiring diagram, match the wire color to its numbered terminal cavity.

NOTE

Cavity numbers (1) are stamped on the housing at the ends of the cavity rows. Determine the cavity number by counting the cavities up or down along the row from each stamped number.

2. Orient the terminal that the tang (2) opposite the open crimp engages the slot (3) in the cavity.
3. Push the terminal into the cavity.
4. Gently tug on wire to verify that the terminal is captured by the secondary lock.
5. With all terminals installed, push the secondary lock into the socket housing to lock the wire terminals into the housing.

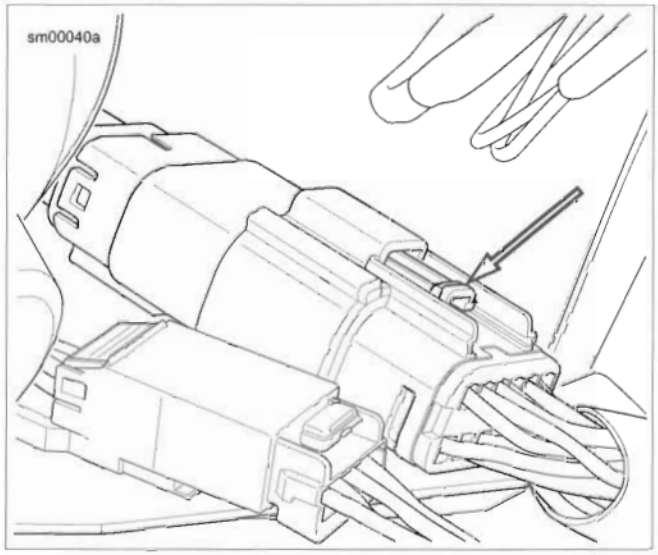

Figure A-47. Molex MX 150 Sealed Connector: Latch

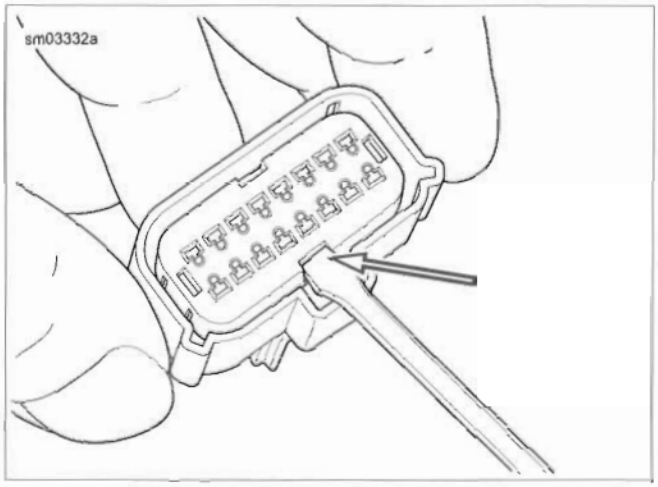

Figure A-48. Secondary Lock Pry Slot (Socket Housing)

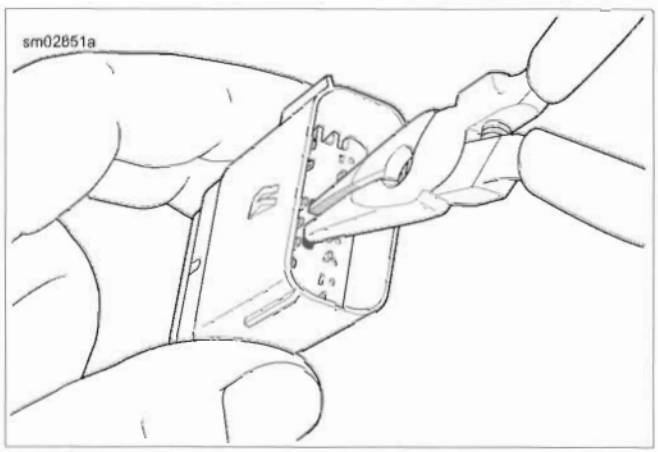

Figure A-49. Pull Up Secondary Lock

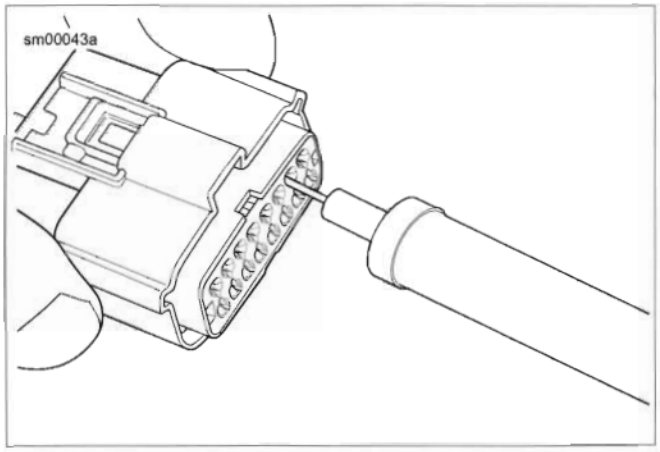

Figure A-50. Molex MX 150 Sealed Connector: Terminal Remover (HD-48114)

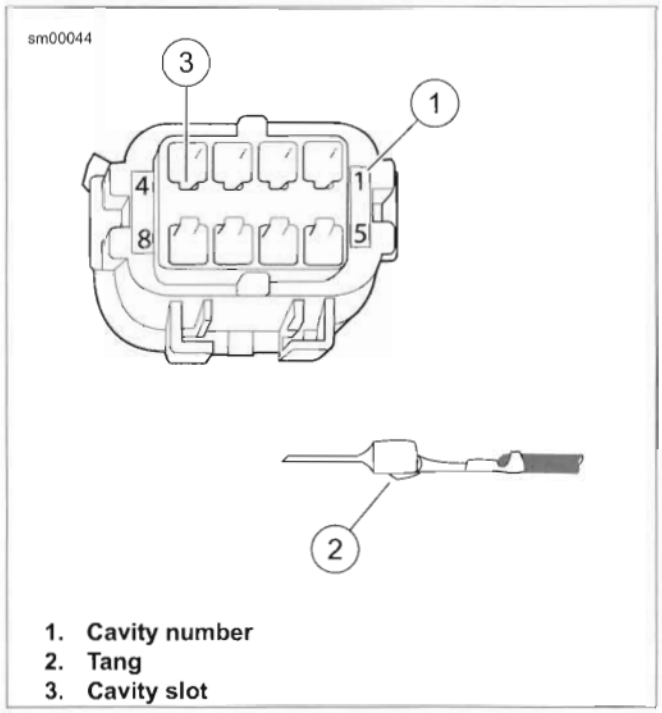

1. **Cavity number**
2. **Tang**
3. **Cavity slot**

Figure A-51. Molex MX 150 Sealed Connector: Pin Cavities and Wire Terminal

CRIMP TERMINAL TO LEAD

PART NUMBER	TOOL NAME
HD-48119	TERMINAL CRIMPER

Prepare Lead

1. Cut the damaged terminal close to the back of the terminal to leave as much wire length as possible.
2. Strip wire lead removing 3/16 in (4.70-5.60 mm) of insulation.

NOTE

The strip length is the same for both pin and socket terminals and for wire gauges from 22 to 14.

Prepare Tool

1. Identify the punch/die in the jaws of the TERMINAL CRIMPER (Part No. HD-48119) for the wire gauge. Refer to Table A-7.
2. Squeeze and release the handles to open the tool.

NOTE

The crimp tool automatically opens when the handles are released.

3. See Figure A-52. Hold fully open tool at approximately 45 degrees.

NOTE

Do NOT tighten the locknut holding the locator bars. The bars must float to accommodate the different terminal gauges.

Table A-7. Crimp Tool Wire Gauge Punch/Die

AWG (WIRE GAUGE)	PUNCH/DIE
22	Left
18-20	Middle
14-16*	Right
* Crimp 16 AWG pin terminals in the 18-20 middle die.	

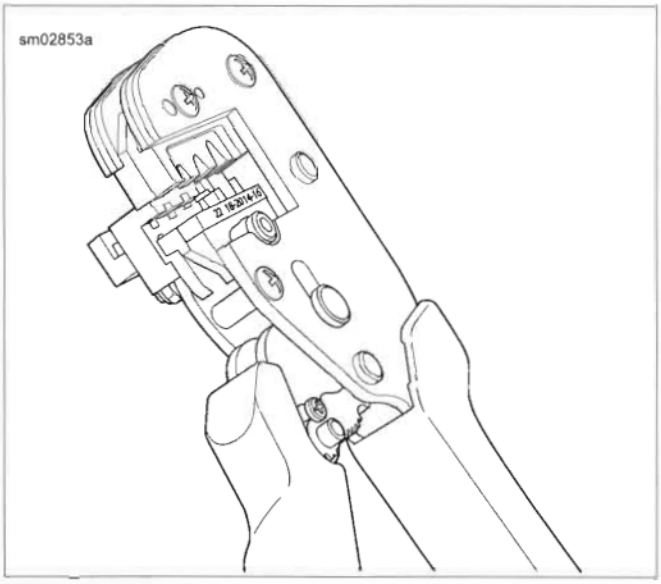

Figure A-52. Open Terminal Crimper (HD-48119) at 45 Degrees

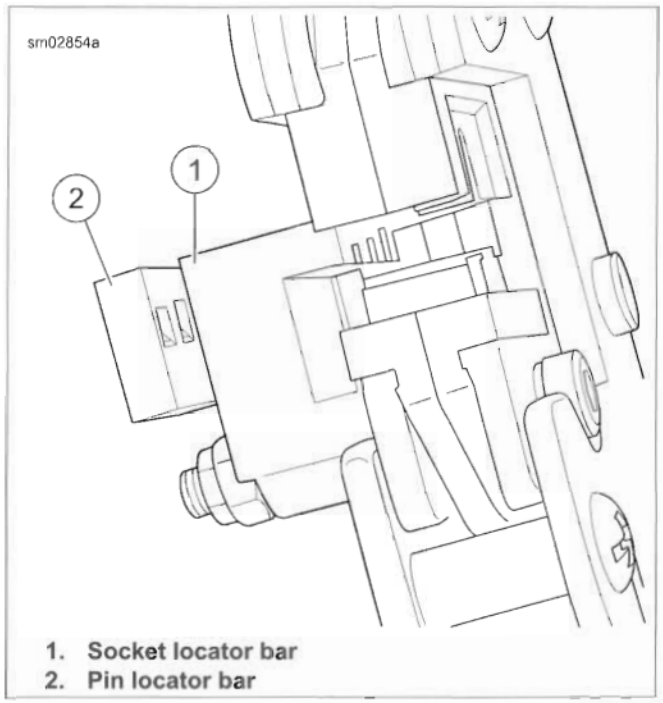

1. **Socket locator bar**
2. **Pin locator bar**

Figure A-53. Terminal Locator Bars

Position Terminal in the Punch/Die

1. See Figure A-54. With the crimp tails up, place the terminal through the punch/die into the square opening in the socket locator bar.
   a. **Socket Terminal:** See Figure A-53. A socket terminal stops against the back face of the socket locator bar (1).
   b. **Pin Terminal:** See Figure A-55. The tip of a pin terminal passes through the socket locator bar and stops in the notch in the face of the pin locator bar.
2. See Figure A-56. Ratchet the handles together until the crimp tails are held in vertical alignment between the punch and the die.

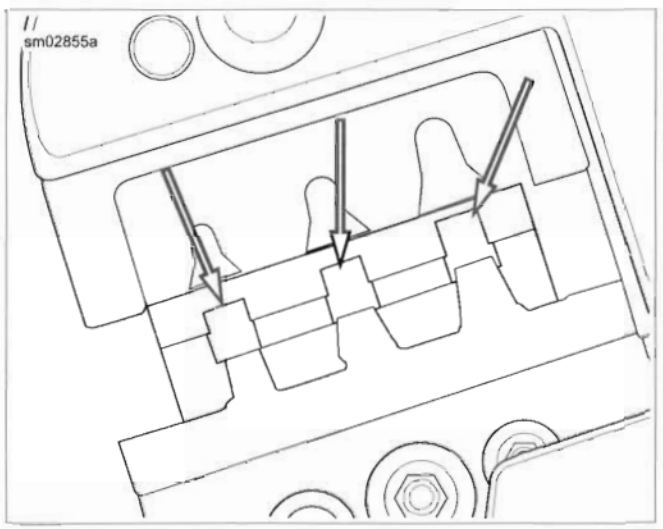

Figure A-54. Square Openings in Socket Locator Bar

Insert Stripped Lead

See Figure A-57. Insert the stripped end (wire core) between the crimp tails at an up angle until the wire core touches the face of the socket locator bar above the square opening.

NOTES

- *The insulation must extend through the insulation crimp tails.*
- *Insert the wire with little or no pressure. Pressing on the lead will bend the wire core.*

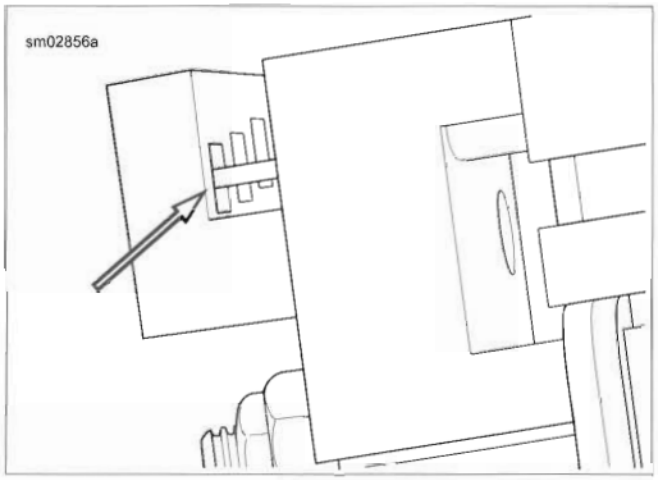

Figure A-55. Pin Terminal against Pin Locator Bar

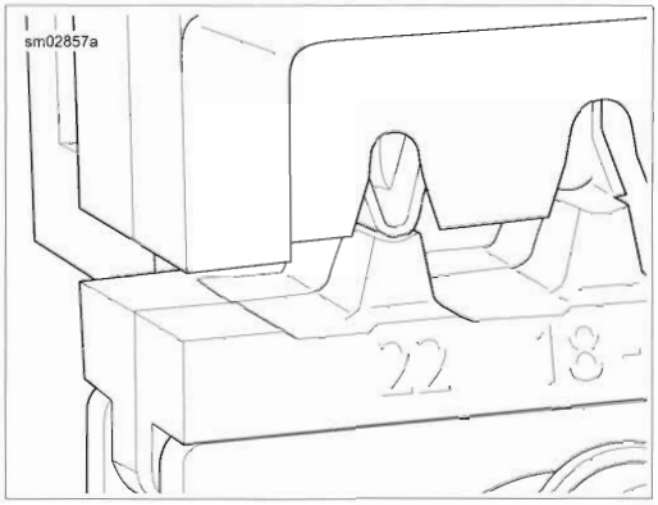

Figure A-56. Crimp Tails in Vertical Alignment between Punch and Die

Crimp Terminal to Lead

1. Holding the wire lead in position touching the locator face at an angle, quickly and smoothly squeeze the crimp tool closed.
2. Final squeeze the handles to open the tool and release the terminal.

NOTE

Open a stuck or jammed tool by pressing the ratchet release lever found between the handles. Do ***not*** *force the handles open or closed.*

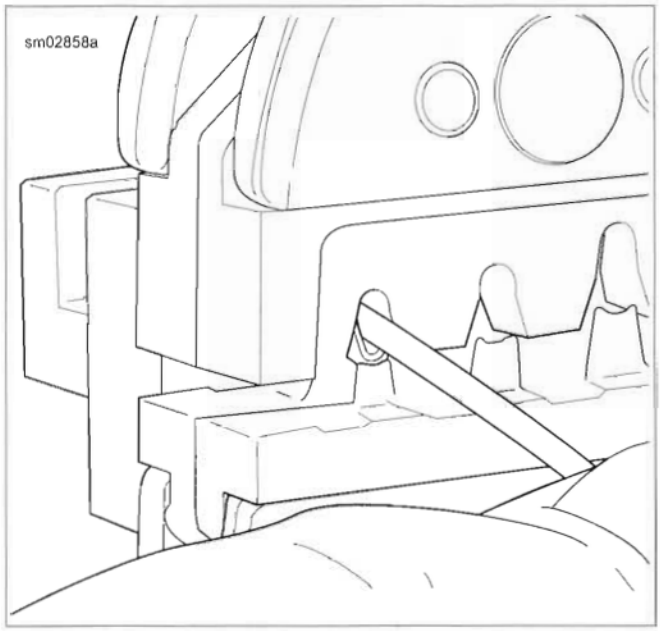

Figure A-57. Stripped Lead at Up Angle

Inspect Crimp

1. **Inspect Crimp:** Inspect the core and insulation crimp.
   a. See Figure A-58. The core tails should be creased into the wire strands at the core crimp (1).
   b. Strands (2) of wire should be visible beyond the core crimp but not forward into the terminal shell.
   c. The insulation tails should be folded into the insulation (3) without piercing or cutting the insulation.
   d. Distortion should be minimal.
2. **Test Crimp:** Hold the terminal. Pull the lead.

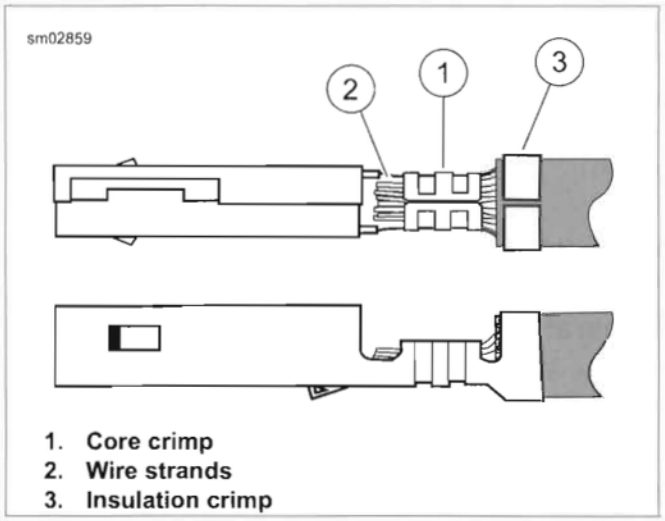

1. **Core crimp**
2. **Wire strands**
3. **Insulation crimp**

Figure A-58. Terminal Crimp

TYCO 040 MULTILOCK UNSEALED CONNECTOR REPAIR

PART NUMBER	TOOL NAME
B-50085	TERMINAL EXTRACTOR
HD-44695-A	MULTI-LOCK CRIMPER

General

Tyco 040 Multilock Unsealed connectors are found between wire harnesses and component wiring.

See Figure A-59. To maintain serviceability, always return connectors to OE locations after service.

Obtain the necessary tools to repair the connector and terminals.

NOTE

Use the MULTI-LOCK CRIMPER (Part No. HD-44695-A) for terminal crimping.

Separating Pin and Socket Housings

1. See Figure A-59. Press the release button (1) on the socket terminal side of the connector.
2. Pull the socket housing (2) out of the pin housing (3).

Mating Pin and Socket Housings

1. Hold the housings to match wire color to wire color.
2. Insert the socket housing into the pin housing until it clicks in place.

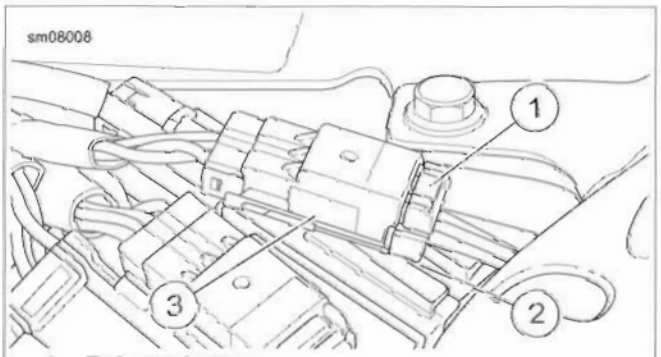

1. **Release button**
2. **Socket housing**
3. **Pin housing**

Figure A-59. Tyco 040 Multilock Unsealed Connector

Removing Terminals from Housing

1. See Figure A-60. Bend back the latch (1) to free one end of secondary lock (2) then repeat on the opposite end. Hinge the secondary lock outward.
2. Look in the terminal side of the connector (opposite the secondary lock) and note the cavity next to each terminal.
3. Using TERMINAL EXTRACTOR (Part No. B-50085), press the tang in the housing to release the terminal.
   a. **Socket:** Lift the socket tang (8) up.
   b. **Pin:** Press the pin tang (7) down.

NOTE

If the tang is released, a click is heard.

4. Gently tug on wire to pull wire and terminal from cavity.

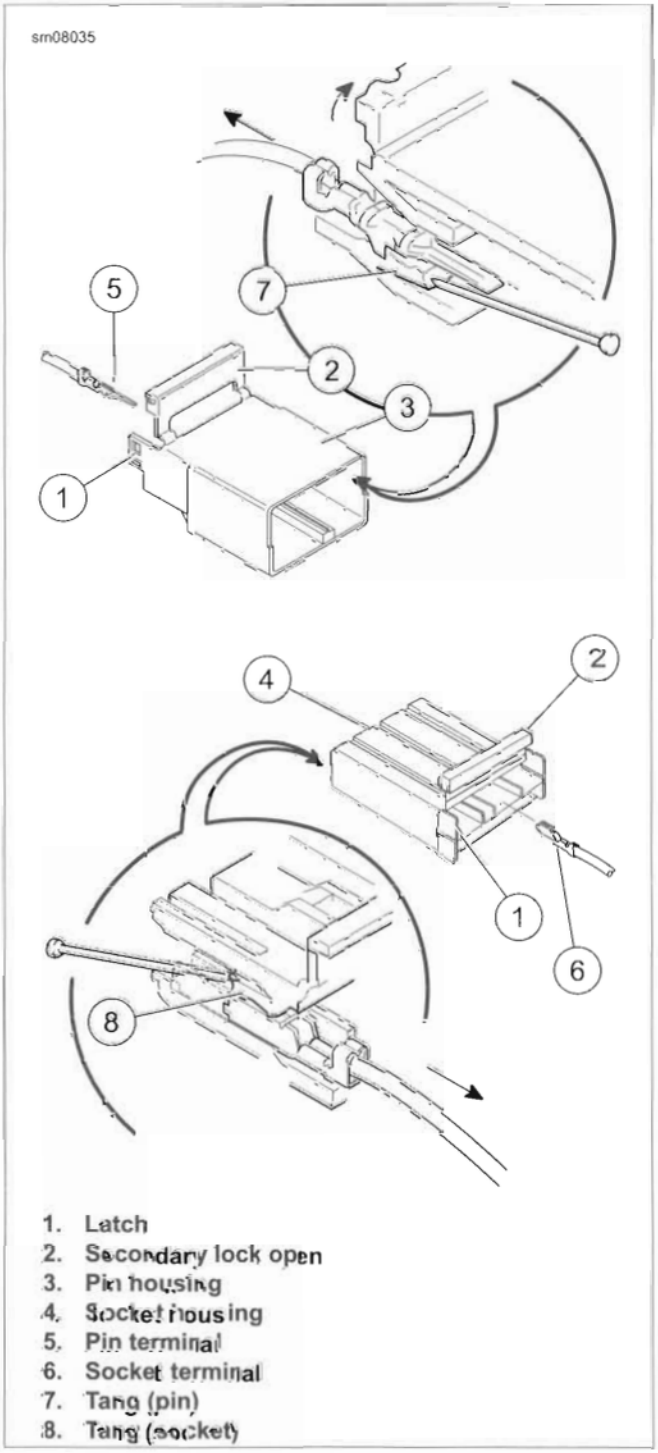

1. **Latch**
2. **Secondary lock open**
3. **Pin housing**
4. **Socket housing**
5. **Pin terminal**
6. **Socket terminal**
7. **Tang (pin)**
8. **Tang (socket)**

Figure A-60. Tyco 040 Multilock Unsealed Connector: Socket and Pin Housings

Inserting Terminals into Housing

NOTE

See Figure A-61. Match the wire color to the cavity number found on the wiring diagram.

1. Hold the terminal so the catch faces the tang in the chamber. Insert the terminal into its cavity until it snaps in place.

NOTES

- *The release button is always on the top of the connector.*
- *On the pin side of the connector, tangs are positioned at the bottom of each cavity. Therefore, the slot in the pin terminal (on the side opposite the crimp tails) must face downward.*
- *On the socket side, tangs are at the top of each cavity. Therefore, the socket terminal slot (on the same side as the crimp tails) must face upward.*

2. Gently tug on wire ends to verify that all terminals are locked.
3. Rotate the hinged secondary lock inward until tabs fully engage latches on both sides of connector.

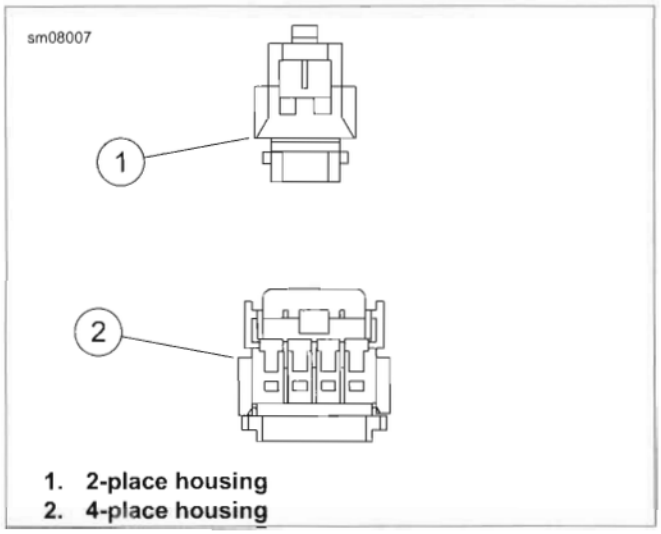

1. **2-place housing**
2. **4-place housing**

Figure A-61. Tyco 040 Multilock Unsealed Connector (socket housings shown)

Crimping Terminals to Leads

Terminals are crimped twice: once over the wire core and a second time over the insulation tails. For the correct terminal crimping procedure, refer to the instruction sheet provided with the MULTI-LOCK CRIMPER (Part No. HD-44695-A) or available through h-dnet.com.

Inspecting Crimped Terminals

See Figure A-62. Inspect the wire core crimp (2) and insulation crimp (1). Distortion should be minimal.

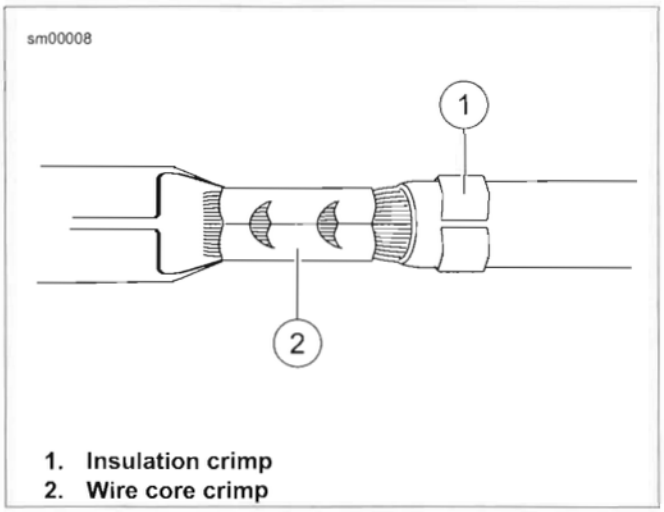

1. **Insulation crimp**
2. **Wire core crimp**

Figure A-62. Tyco 040 Multilock Unsealed Connector: Terminal Crimp

TYCO 070 MULTILOCK UNSEALED CONNECTOR REPAIR

PART NUMBER	TOOL NAME
B-50085	TERMINAL EXTRACTOR
HD-41609	AMP MULTI-LOCK CRIMPER

General

Tyco 070 Multilock Unsealed connectors are found between wire harnesses and component wiring. They are either floating or anchored to the frame with attachment clips.

See Figure A-63. Attachment clips (1) on the pin housings are fitted to T-studs on motorcycle frame. The T-studs identify OE connector locations. To maintain serviceability, always return connectors to OE locations after service.

Obtain the necessary tools to repair the connector and terminals.

NOTE

Use the AMP MULTI-LOCK CRIMPER (Part No. HD-41609) for terminal crimping.

Separating Pin and Socket Housings

1. If necessary, slide connector attachment clip so T-stud is in the large end of the clip opening. Remove connector from T-stud.
2. See Figure A-63. Press the release button (2) on the socket terminal side of the connector.
3. Pull the socket housing (3) out of the pin housing (4).

Mating Pin and Socket Housings

1. Hold the housings to match wire color to wire color.
2. Insert the socket housing into the pin housing until it clicks in place.
3. If OE location is a T-stud, fit large opening end of attachment clip over T-stud. Slide connector to engage T-stud to small end of opening in clip.

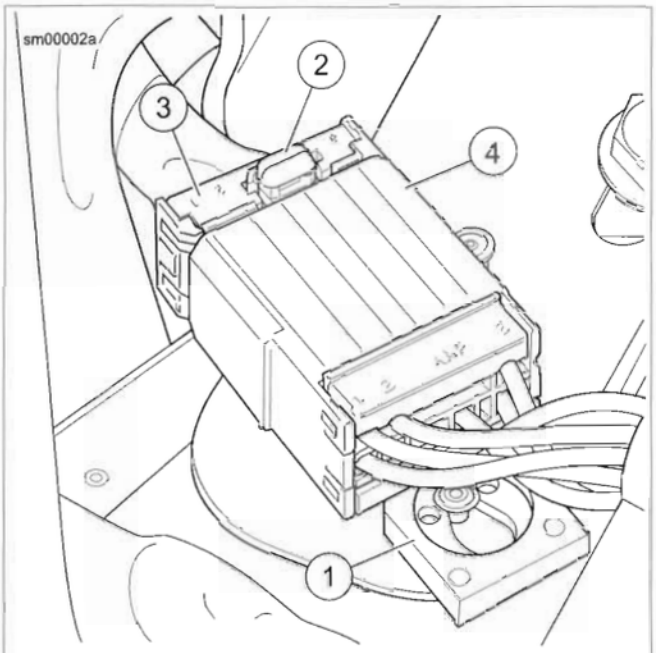

1. Attachment clip
2. Release button
3. Socket housing
4. Pin housing

Figure A-63. Tyco 070 Multilock Unsealed Connector

Removing Terminals from Housing

1. See Figure A-64. Bend back the latch (1) to free one end of secondary lock (2) then repeat on the opposite end. Hinge the secondary lock outward.
2. Look in the terminal side of the connector (opposite the secondary lock) and note the cavity next to each terminal.
3. Using TERMINAL EXTRACTOR (Part No. B-50085), press the tang in the housing to release the terminal.
   a. **Socket:** Lift the socket tang (8) up.
   b. **Pin:** Press the pin tang (7) down.

NOTE

If the tang is released, a click is heard.

4. Gently tug on wire to pull wire and terminal from cavity.

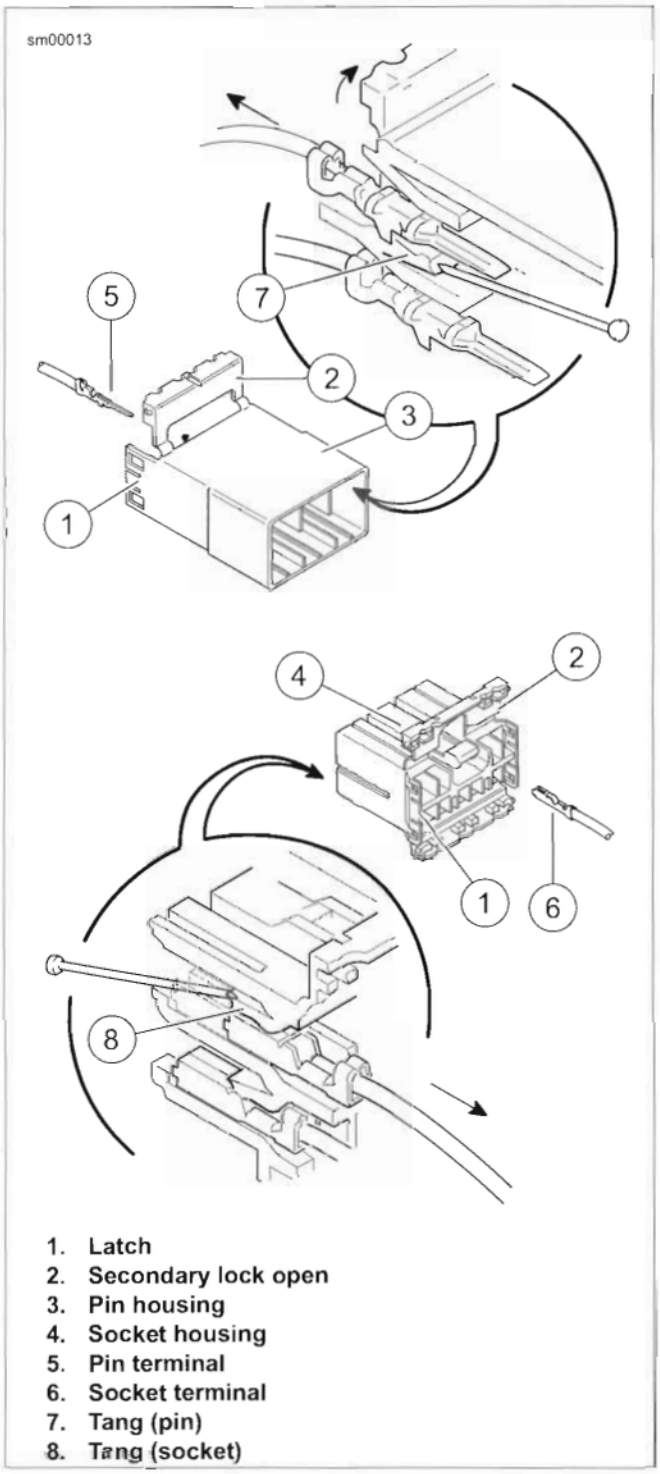

1. Latch
2. Secondary lock open
3. Pin housing
4. Socket housing
5. Pin terminal
6. Socket terminal
7. Tang (pin)
8. Tang (socket)

Figure A-64. Tyco 070 Multilock Unsealed Connector: Socket and Pin Housings

Inserting Terminals into Housing

NOTE

See Figure A-65. Cavity numbers are stamped into the secondary locks of both the socket and pin housings. Match the wire color to the cavity number found on the wiring diagram.

1. Hold the terminal so the catch faces the tang in the chamber. Insert the terminal into its numbered cavity until it snaps in place.

NOTES

- *The release button is always on the top of the connector.*
- *On the pin side of the connector, tangs are positioned at the bottom of each cavity. Therefore, the slot in the pin terminal (on the side opposite the crimp tails) must face downward.*
- *On the socket side, tangs are at the top of each cavity. Therefore, the socket terminal slot (on the same side as the crimp tails) must face upward.*

2. Gently tug on wire ends to verify that all terminals are locked.
3. Rotate the hinged secondary lock inward until tabs fully engage latches on both sides of connector.

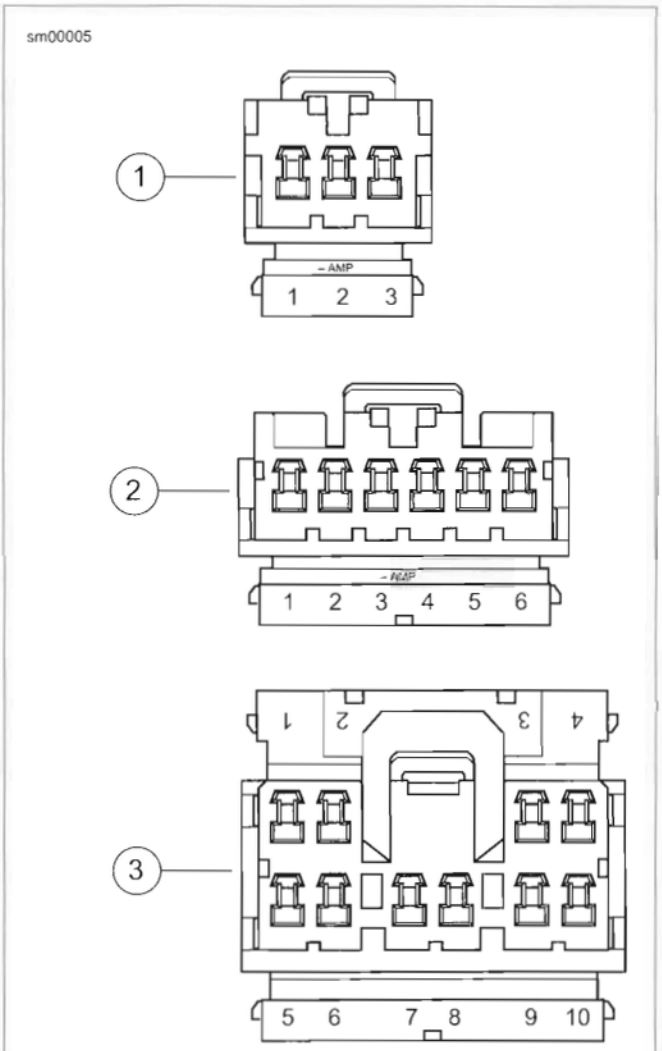

1. 3-place housing
2. 6-place housing
3. 10-place housing

Figure A-65. Tyco 070 Multilock Unsealed Connector: Cavity Numbers on Secondary Locks (socket housings shown)

Crimping Terminals to Leads

NOTE

Crimping with the AMP Multi-lock Crimper is a one-step operation. One squeeze crimps both the wire core and the insulation tails.

For the correct terminal crimping procedure, refer to the instruction sheet provided with the AMP MULTI-LOCK CRIMPER (Part No. HD-41609) or available through h-dnet.com.

Inspecting Crimped Terminals

See Figure A-66. Inspect the wire core crimp (2) and insulation crimp (1). Distortion should be minimal.

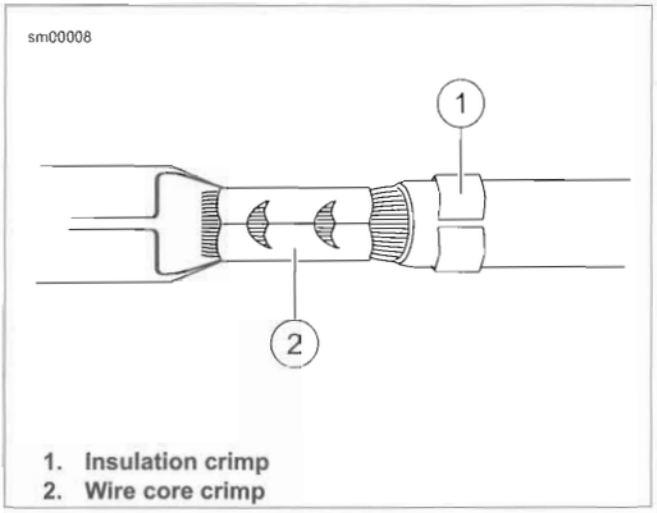

1. **Insulation crimp**
2. **Wire core crimp**

Figure A-66. Tyco 070 Multilock Unsealed Connector: Terminal Crimp

TYCO GET 64 SEALED CONNECTOR REPAIR

PART NUMBER	TOOL NAME
B-50085	TERMINAL EXTRACTOR

General

See Figure A-67. The Tyco GET 64 Sealed connector is found on the ECM of most models.

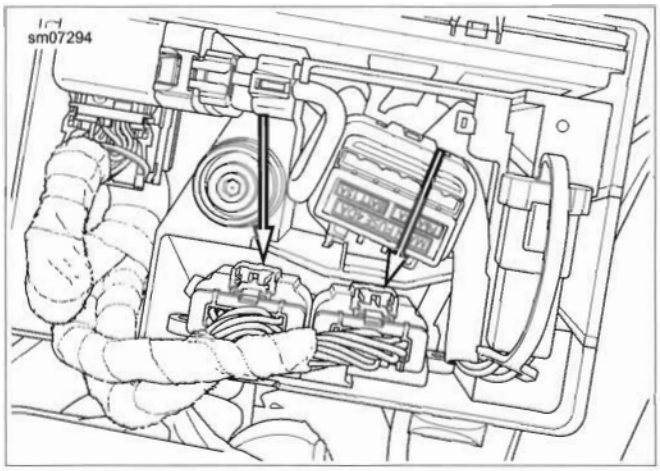

Figure A-67. Tyco GET 64 Sealed Connector Latch

Housings

See Figure A-68. **Separate:** Lift the latch lock to open (1). Press the latch (3). Pull the socket housing off the ECM.

Join: Align the socket housing latch with the catch on the ECM. Press housing onto ECM. Press down the latch lock to close (2).

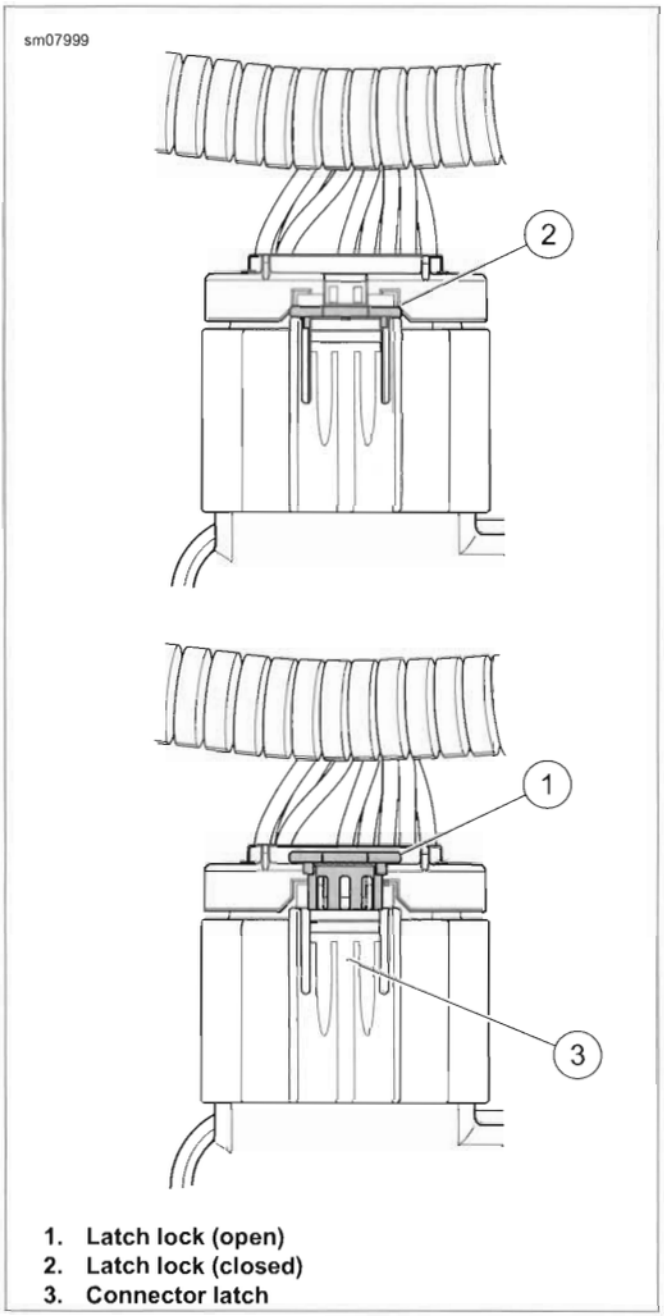

1. **Latch lock (open)**
2. **Latch lock (closed)**
3. **Connector latch**

Figure A-68. Tyco GET 64 Sealed Connector Latch and Lock

Removing Socket Terminals

1. Remove the black wrap to access the back of the connector.
2. See Figure A-69. Use needle nose pliers to pull the secondary lock out of the housing.
3. See Figure A-70. Orient the bevel of the TERMINAL EXTRACTOR (Part No. B-50085) (1) to the upper or lower terminal row. Insert the extractor into the slot next to the terminal.

4. Rotate the extractor to release the retention beam and simultaneously pull on the wire lead to remove the terminal.

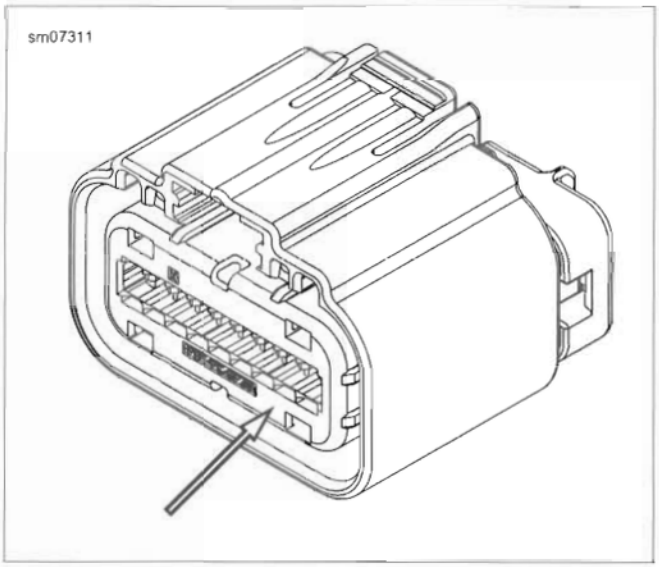

Figure A-69. Tyco GET 64 Secondary Lock

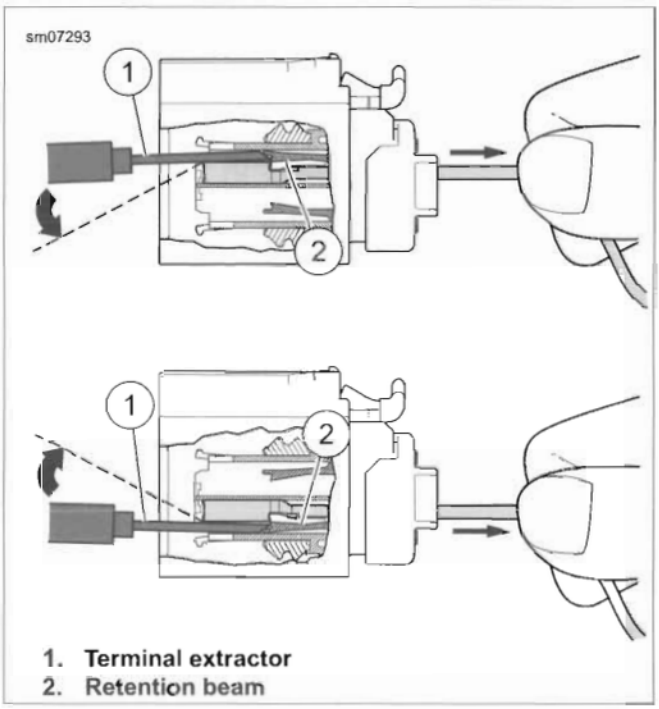

1. Terminal extractor
2. Retention beam

Figure A-70. Removing Terminals: Tyco GET 64 Sealed Connector

Installing Socket Terminals

1. See Figure A-71. Locate the wire lead cavity by number.
2. See Figure A-72. Orient the open side of the crimp to the lower or the upper terminal row.
3. Press the terminal in through the rear cover and the seal until it clicks.
4. Press the secondary lock into the locked position.
5. Black wrap the wire lead bundle.

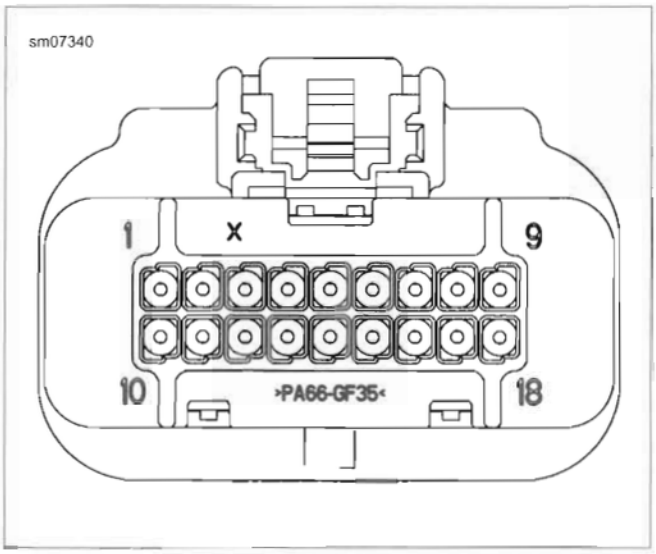

Figure A-71. Cavity Numbers

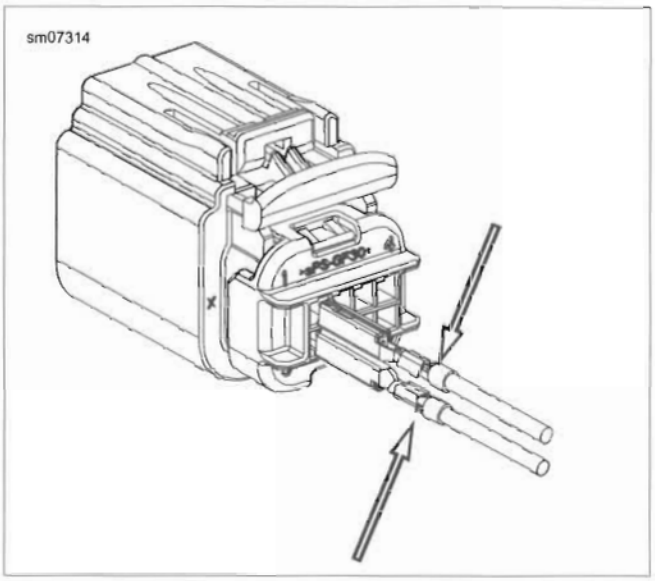

Figure A-72. Socket Terminal Orientation: Crimp Open Side

CRIMPING TERMINALS

PART NUMBER	TOOL NAME
HD-50120	UNIVERSAL CRIMPER SET
HD-50120-2	HAND CRIMP FRAME
HD-50120-7	TYCO AND DELPHI TERMINAL CRIMP DIE

Crimping Tyco GET 64 terminals requires the use of the TYCO AND DELPHI TERMINAL CRIMP DIE (Part No. HD-50120-7) in the HAND CRIMP FRAME (Part No. HD-50120-2). These items are included in the UNIVERSAL CRIMPER SET (Part No. HD-50120).

For the correct terminal crimping procedure, refer to the instruction sheet provided with the tool or available on h-dnet.com.

TYCO MCP SEALED CONNECTOR

PART NUMBER	TOOL NAME
B-50085	TERMINAL EXTRACTOR
GA500A	SNAP-ON TERMINAL PICK

General

The Tyco MCP sealed connector is used on certain ABS modules.

Housing

Separate: See Figure A-73. Press and hold the lock tab. Pulling on both ends of the lever, open the lever.

Join: Gently mate the pins to the socket. Press and hold the lock tab. Pressing on both ends of the lever, close the lever.

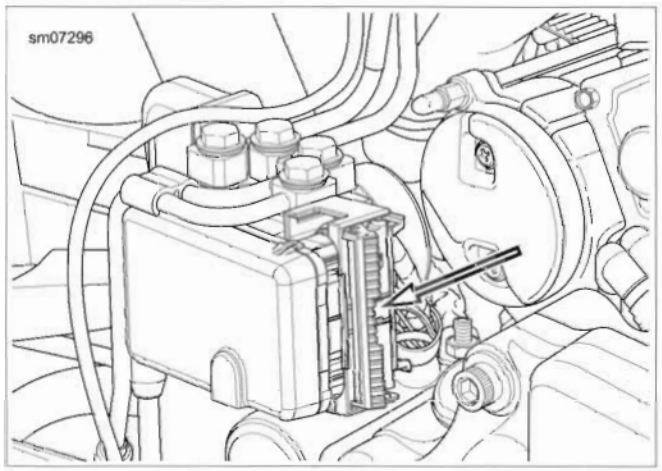

Figure A-73. Tyco MCP Connector Release Bar

Removing the Large Terminals

1. Snap the wire harness cover off of the back of the connector

NOTE

Insert a thin flat bladed screwdriver all the way to the bottom behind the tab of the secondary lock.

2. See Figure A-74. Gently slide the secondary lock out of the connector with a screwdriver.
3. See Figure A-75. Insert the smallest pins of the SNAP-ON TERMINAL PICK (Part No. GA500A) into the gaps on each side of the socket to compress the tangs on each side of the terminal.
4. Gently pull on the wire to remove the terminal.

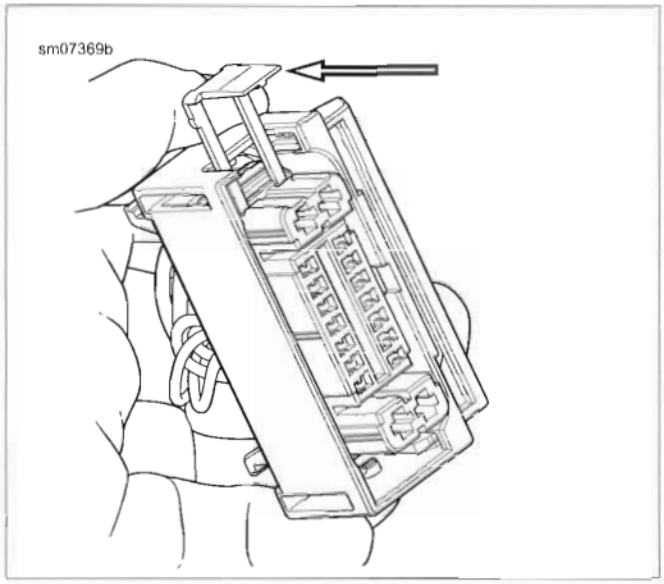

Figure A-74. Tyco MCP Connector Secondary Lock

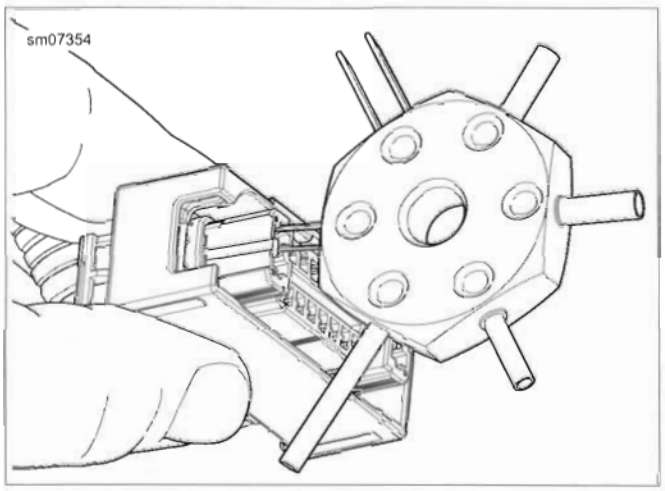

Figure A-75. Removing Large Socket Terminals: Tyco MCP Connector

Removing the Small Terminals

1. Snap the wire harness cover off of the back of the connector

NOTE

Insert a thin flat bladed screwdriver all the way to the bottom behind the tab of the secondary lock.

2. See Figure A-74. Gently slide the secondary lock out of the connector with a screwdriver.
3. See Figure A-76. Insert the TERMINAL EXTRACTOR (Part No. B-50085) into the cavity on the outside of the terminal.
4. Tilt the extractor to lift the molding latch and release the terminal.
5. Gently pull on the wire to remove the terminal.

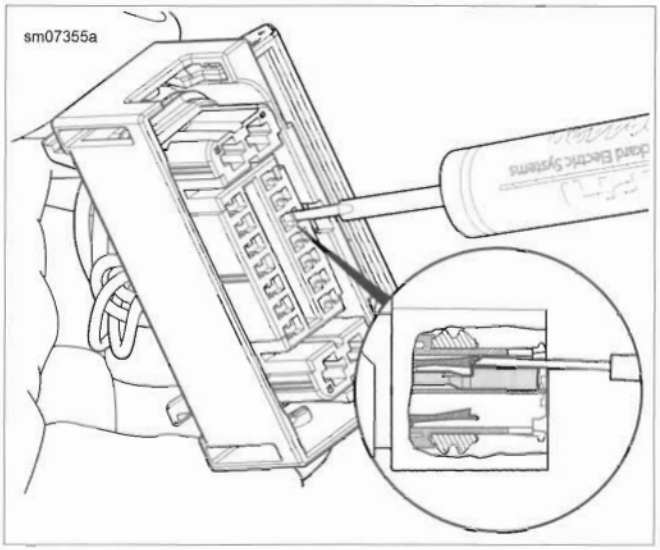

Figure A-76. Removing Small Socket Terminal: Tyco MCP Connector

Installing Terminals

1. See Figure A-77. Locate the wire lead cavity by number.
2. Use a hobby knife to bend the tangs on each side of the terminal outward.
3. Align the socket.
4. Push the socket in until it clicks.
5. Press the secondary lock back into the connector.
6. Snap the wire cover in place.

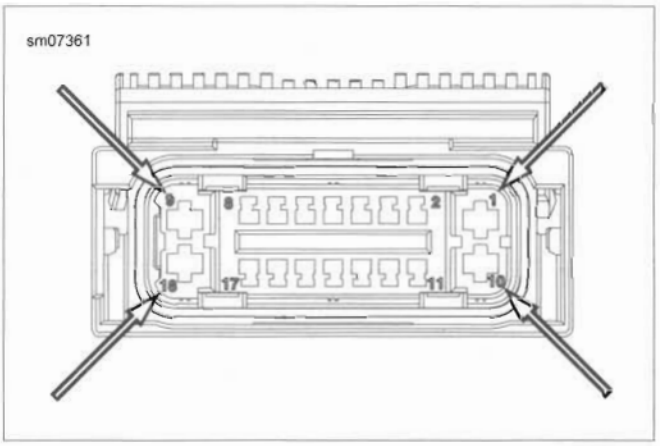

Figure A-77. Tyco MCP Sealed Connector Cavity Numbers

CRIMPING TERMINALS

PART NUMBER	TOOL NAME
HD-50120	UNIVERSAL CRIMPER SET
HD-50120-8	TYCO MCP DIE

1. Strip the wire insulation to specification. Refer to Table A-8.
2. Install the TYCO MCP DIE (Part No. HD-50120-8) in the handle of the UNIVERSAL CRIMPER SET (Part No. HD-50120).
3. Place the **new** terminal in the specified nest.
4. Insert the wire to the wire stop.
5. Crimp the terminal.
6. Inspect the crimped terminal.

Table A-8. Tyco MCP Crimper Die (Part No. HD-50120-8)

TERMINAL	PART NO.	STRIP LENGTH		NEST
		in	mm	
Large socket: 14 AWG	72579-12	0.165-0.189	4.2-4.8	A
Large socket: 16 AWG	72579-12	0.165-0.189	4.2-4.8	B
Small socket: 20 AWG	72580-12	0.130-0.153	3.3-3.9	C

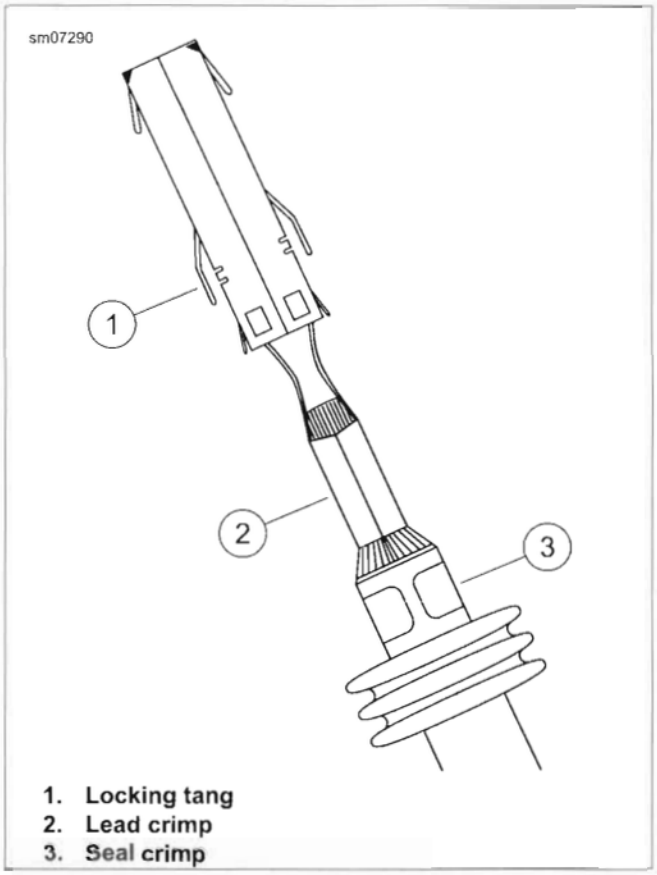

1. **Locking tang**
2. **Lead crimp**
3. **Seal crimp**

Figure A-78. Tyco MCP Socket Terminal Crimp

SEALED SPLICE CONNECTOR REPAIR

PART NUMBER	TOOL NAME
HD-25070	ROBINAIR HEAT GUN
HD-38125-8	PACKARD TERMINAL CRIMPER
HD-39969	ULTRA TORCH
HD-41183	HEAT SHIELD ATTACHMENT

General

Splice connectors and several OE ring terminal connectors use heat shrink covering to seal the connection.

Preparing Wire Leads

NOTE

When splicing adjacent wires, stagger the splices that the sealed splice connectors will not touch each other.

1. Using a shop gauge, identify the gauge of the wire.
2. Match the wire gauge to a sealed splice connector by color and part number. Refer to Table A-9.
3. Strip insulation off the wire lead. Refer to Table A-9.

Table A-9. Sealed Splice Connectors

WIRE GAUGE	COLOR	PART NO.	STRIP LENGTH	
			in	mm
18-20 (0.5-0.8 mm)	Red	70585-93	3/8	9.5
14-16 (1.0-2.0 mm)	Blue	70586-93	3/8	9.5
10-12 (3.0-5.0 mm)	Yellow	70587-93	3/8	9.5

NOTE

If any copper wire strands are cut off of the wire core, trim the end and strip the wire again in a larger gauge stripper.

Splicing Wire Leads

NOTE

See Figure A-80. The connector is crimped on one side and then the other.

1. See Figure A-79. Open the PACKARD TERMINAL CRIMPER (Part No. HD-38125-8) ratchet by squeezing the handles closed.
2. Match the connector color to the wire gauge crimp die in the jaws. Insert one end of the sealed connector.
3. Gently squeeze the handles until the connector is held in the jaws.
4. See Figure A-80. Feed the stripped end of a wire into the connector until the wire stops inside the metal insert (1).
5. Squeeze the handles tightly closed to crimp the lead in the insert (2). The tool automatically opens when the crimping is complete.
6. Slide the connector to the other half of the metal insert. Insert the stripped wire lead (1) until it stops. Crimp the lead in the insert (2).

⚠WARNING

Be sure to follow manufacturer's instructions when using the UltraTorch UT-100 or any other radiant heating device. Failure to follow manufacturer's instructions can cause a fire, which could result in death or serious injury. (00335a)

- Avoid directing heat toward any electrical system component that is not being serviced.
- Always keep hands away from tool tip area and heat shrink attachment.

7. Use an ULTRA TORCH (Part No. HD-39969), or a ROBINAIR HEAT GUN (Part No. HD-25070) with a HEAT SHIELD ATTACHMENT (Part No. HD-41183), to heat the connector from the center of the crimp (3) out to each end.

NOTE

It is acceptable for the splice to rest against the heat shrink tool attachment.

Inspecting Seals

See Figure A-80. Allow the splice to cool and inspect the seal. The insulation should appear smooth and cylindrical. Melted sealant will have extruded out the ends (4) of the insulation.

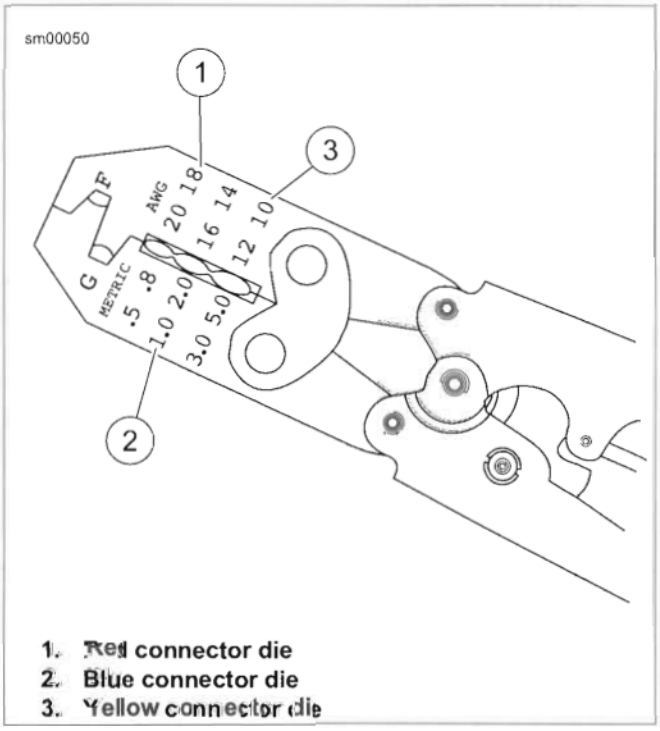

1. Red connector die
2. Blue connector die
3. Yellow connector die

Figure A-79. Packard Crimping Tool (HD-38125-8)

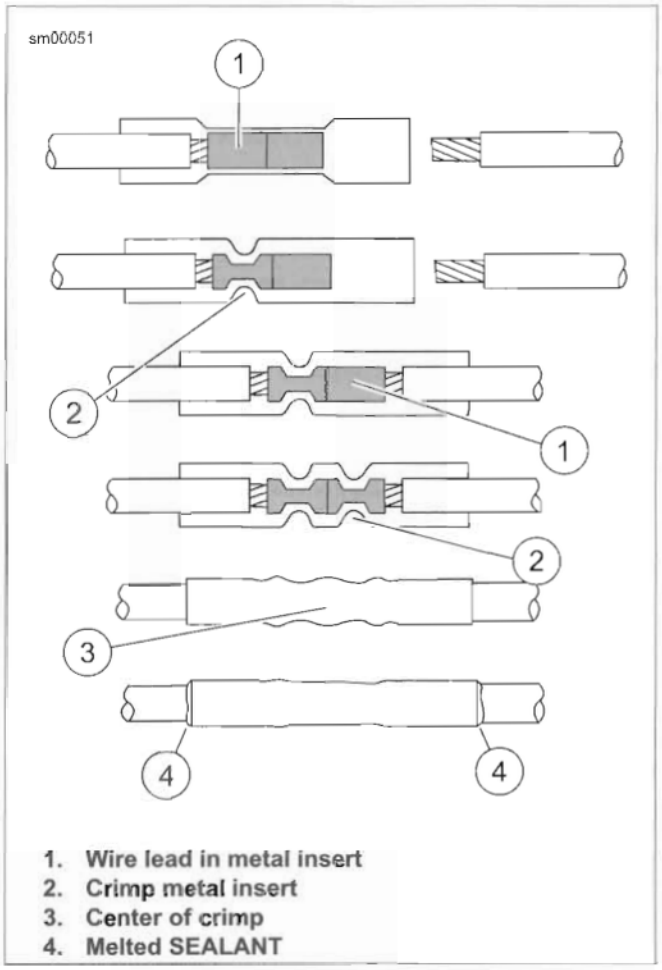

1. Wire lead in metal insert
2. Crimp metal insert
3. Center of crimp
4. Melted SEALANT

Figure A-80. Sealed Splice Connector

SUBJECT	PAGE NO.
B.1 CONNECTORS	B-1
B.2 WIRING DIAGRAMS	B-5

CONNECTOR LOCATIONS

Function/Location

All vehicle connectors are identified by their function and location. Refer to Table B-1.

Place and Color

The place (number of wire cavities of a connector housing) and color of the connector can also aid identification.

Connector Number

On wiring diagrams and in service/repair instructions, connectors are identified by a number in brackets.

Repair Instructions

The repair instructions in Appendix A are by connector type. Refer to Table B-1.

Table B-1. Softail Connector Locations

NO.	DESCRIPTION	TYPE	TERMINAL PROBE COLOR	LOCATION
[7]	Tail lamp harness to main harness	8-place Tyco 070 Multilock Unsealed (BK) (except FXSB)	Gray	Under seat
[13]	Fuel tank harness	4-place Tyco 070 Multilock Unsealed (BK) (FXSB)	Gray	Behind fuel tank (under seat)
[18]	Right rear stop, tail and turn assembly	2-place Tyco 070 Multilock Unsealed (except FLSTN, FXSB, FLS) (BK) 2-place Deutsch DTM Sealed (FLSTN) 4-place Deutsch DTM Sealed (FXSB, FLS) (GY)	Gray/Brown	Inside tail lamp lens (except FXSB, FLS) Under seat (FXSB and FLS)
[19]	Left rear stop, tail and turn assembly	2-place Tyco 070 Multilock Unsealed (except FLSTN, FXSB, FLS) (BK) 2-place Deutsch DTM Sealed (FLSTN) 4-place Deutsch DTM Sealed (FXSB, FLS) (BK)	Gray/Brown	Inside tail lamp lens (except FXSB, FLS) Under seat (FXSB and FLS)
[20]	Console harness	6-place Molex MX 150 Sealed (FXSB and FLS) (BK) 8-place Molex MX 150 Sealed (Except FXSB and FLS) (BK)	Gray	Under console
[21]	Indicator lamps	6-place Molex MX 150 Sealed (BK)	Gray	Under console
[22-1]	Right hand controls	4-place JAE MX19 Sealed (BK)	Yellow	Under fuel tank, right side
[22-2]	Right hand controls	2-place JAE MX19 Sealed (BK)	Yellow	Under fuel tank, right side
[24]	Left hand controls	4-place JAE MX19 Sealed (BK)	Yellow	Under fuel tank, left side
[31]	Front turn signals	6-place Tyco 070 Multilock Unsealed (BK)	Gray	Under fuel tank, right side
[32]	Front fender tip lamp	2-place Tyco 070 Multilock Unsealed (BK)	Gray	Under fuel tank, left side
[33]	Ignition switch	2-place Delphi GT 150 Sealed (GY)	Gray	Under fuel tank console (except FXSB) Behind ignition coil (FXSB)
[38]	Headlamp	4-place Tyco 070 Multilock Unsealed (BK)	Gray	Under fuel tank, left side
[39]	Speedometer	12-place Delphi Micro 64 Sealed (GY)	BOB	Back of speedometer

Table B-1. Softail Connector Locations

NO.	DESCRIPTION	TYPE	TERMINAL PROBE COLOR	LOCATION
[40]	LP, stop and tail lamp	4-place Deutsch DTM Sealed (FLSTN) (BK) 3-place Deutsch DTM Sealed (FXSB, FLS) (BK)	Brown	Inside tail lamp lens (except FXSB, FLS) Under seat (FXSB and FLS)
[45]	Rear fender tip lamp	3-place Tyco 070 Multilock Unsealed (BK)	Gray	Inside tail lamp lens
[47]	Voltage regulator to stator	3-place Dekko (BK)	Green	Back of voltage regulator
[64]	Fuse block	Delphi 280 Metri-pack Sealed Delphi 800 Metri-pack Sealed (main fuse)	Purple/Red	Under seat
[65]	VSS	3-place Delphi GT 150 3.5 Sealed (BK)	Gray	Top of transmission case
[73]	Auxiliary lamps	2-place Tyco 070 Multilock Unsealed (BK)	Gray	Behind front fork panel
[77]	Voltage regulator	2-place Dekko (BK)	Green	Back of voltage regulator
[78-1]	ECM	18-place Tyco (BK)	BOB	Under seat in front of rear fender (except FXSB) Electrical panel behind fender extension (FXSB)
[78-2]	ECM	18-place Tyco (GY)	BOB	Under seat in front of rear fender (except FXSB) Electrical panel behind fender extension (FXSB)
[79]	CKP sensor	2-place Deutsch DTM Sealed (BK)	Brown	Back of voltage regulator bracket
[80]	MAP sensor	3-place Delphi 150 Metri-pack Sealed (GY)	Gray	Top of induction module
[83]	Ignition coil	4-place Delphi GT 150 Sealed (BK)	Gray	Back of coil
[84]	Front fuel injector	2-place Delphi GT 150 3.5 Sealed (GY)	Gray	Beneath fuel tank
[85]	Rear fuel injector	2-place Delphi GT 150 3.5 Sealed (GY)	Gray	Beneath fuel tank
[87]	IAC	4-place Delphi GT 150 3.5 Sealed (BK)	Gray	Beneath fuel tank
[88]	TPS	3-place Delphi GT 150 Sealed (BK)	Gray	Behind air cleaner backing plate
[89]	IAT sensor	2-place Delphi GT 150 3.5 Sealed (GY)	Gray	Behind air cleaner backing plate
[90]	ET sensor	2-place Delphi GT 150 Sealed (BK)	Gray	Back of front cylinder, left side
[91]	DLC	6-place Deutsch DT Sealed (GY)	Black	Under seat
[93]	Tail lamp	4-place Tyco 070 Multilock Unsealed (BK)	Gray	Inside tail lamp lens
[94]	Rear fender lights harness in circuit board	6-place Tyco 070 Multilock Unsealed (BK)	Gray	Circuit board under tail lamp assembly
[95]	Purge solenoid	2-place Delphi 150 Metri-pack Sealed (BK)	Gray	Electrical panel behind fender extension
[109]	Auxiliary lamp switch	Tyco Insulated Spade terminal	Gray	Fork back panel

Table B-1. Softail Connector Locations

NO.	DESCRIPTION	TYPE	TERMINAL PROBE COLOR	LOCATION
[117]	Fuel gauge	4-place Tyco 040 Unsealed (BK)		Left front side of fuel tank
[120]	Oil pressure switch	Right Angle Push On Molded (BK)		Front right crankcase
[121]	Rear stop lamp switch	Tyco Insulated Spade terminal (BK)	Red	Right side of transmission
[122]	Horn	Flag terminals (BK)	Red	Between cylinders, left side (except FXSB) Front of frame above voltage regulator (FXSB)
[128]	Starter solenoid	Tyco Insulated Spade terminal (W)	Red	Top of starter
[131]	Neutral switch	Right Angle Push On Molded (BK)		Top of transmission
[133]	JSS	3-place Molex MX 150 Sealed (BK)	Gray	Back of voltage regulator bracket
[137]	HO2 sensor (rear)	4-place Molex MX 150 Sealed (BK)	Gray	Under seat in front of battery
[138]	HO2 sensor (front)	4-place Molex MX 150 Sealed (BK)	Gray	Behind voltage regulator
[141]	Fuel pump and sender	4-place Delphi GT 150 Sealed (BK)	Gray	Top of fuel tank
[142]	Security siren (optional)	3-place Delphi GT 150 3.5 Sealed (BK)	Gray	Electrical panel behind fender extension
[143]	Front fender tip lamp	2-place Tyco 070 Multilock Unsealed (BK)	Gray	In front fender tip lamp
[166]	ABS ECU	20-place Molex MX 150 Sealed (BK)	BOB	Electrical panel behind fender extension
[167]	Front WSS	2-place Delphi 150 Metri-pack Sealed (BK)	Gray	Under fuel tank, left side
[168]	Rear WSS	2-place Delphi 150 Metri-pack Sealed (BK)	Gray	Electrical panel behind fender extension
[178]	Active intake solenoid	2-place Tyco Superseal 1.5 Sealed (BK)	Gray	Air cleaner backing plate
[179]	Active exhaust	5-place Tyco Superseal 1.5 Sealed (BK)	Gray	Exhaust bracket
[200]	Resistor assembly	3-place Molex MX 150 Sealed (GY)	Gray	Under seat
[203F]	ACR (front)	2-place Tyco Superseal 1.5 Sealed	Gray	Bracket attached to the throttle body
[203R]	ACR (rear)	2-place Tyco Superseal 1.5 Sealed	Gray	Bracket attached to the throttle body
[209]	Security antenna	2-place Molex MX 64 Unsealed (BK)	Light Blue	Under seat
[242]	BCM	48-place Molex CMC Sealed (BK)	BOB	Electrical panel behind fender extension
[254]	Front HCU	4-place Delphi GT 150 Sealed (BK)	Gray	Front of frame above voltage regulator
[255]	Rear HCU	4-place Delphi GT 150 Sealed (BK)	Gray	Below electrical panel behind fender extension

Table B-1. Softail Connector Locations

NO.	DESCRIPTION	TYPE	TERMINAL PROBE COLOR	LOCATION
[259]	BCM battery power	1-place Delphi 800 Metri-pack Sealed (BK)	Red	Electrical panel behind fender extension
[266]	Anti-theft Tracking Module	4-place Delphi GT 150 Sealed (BK)	Gray	Electrical panel behind fender extension
[GND1] [GND2] [GND2A]	Left side ground stud Right side ground stud (Regulator) Right side ground stud	Ring terminals		Under seat

WIRING DIAGRAM INFORMATION

Wire Color Codes

Wire traces on wiring diagrams are labeled with alpha codes. Refer to Table B-2.

For Solid Color Wires: See Figure B-1. The alpha code identifies wire color.

For Striped Wires: The code is written with a slash (/) between the solid color code and the stripe code. For example, a trace labeled GN/Y is a green wire with a yellow stripe.

Wiring Diagram Symbols

See Figure B-1. On wiring diagrams and in service/repair instructions, connectors are identified by a number in brackets [ ]. The letter inside the brackets identifies whether the housing is a socket or pin housing.

A=Pin: The letter A and the pin symbol after a connector number identifies the pin side of the terminal connectors.

B=Socket: The letter B and the socket symbol after a connector number identifies the socket side of the terminal connectors. Other symbols found on the wiring diagrams include the following:

Diode: The diode allows current flow in one direction only in a circuit.

Wire break: The wire breaks are used to show option variances or page breaks.

No Connection: Two wires crossing over each other in a wiring diagram that are shown with no splice indicating they are not connected together.

Circuit to/from: This symbol indicates a more complete circuit diagram on another page. The symbol is also identifying the direction of current flow.

Splice: Splices are where two or more wires are connected together along a wiring diagram. The indication of a splice only indicates that wires are spliced to that circuit. It is not the true location of the splice in the wiring harness.

Ground: Grounds can be classified as either clean or dirty grounds. Clean grounds are identified by a (BK/GN) wire and are normally used for sensors or modules.

NOTE

Clean grounds usually do not have electric motors, coils or anything that may cause electrical interference on the ground circuit.

Dirty grounds are identified by a (BK) wire and are used for components that are not as sensitive to electrical interference.

Twisted pair: This symbol indicates the two wires are twisted together in the harness. This minimizes the circuit's electromagnetic interference from external sources. If repairs are necessary to these wires they should remain as twisted wires.

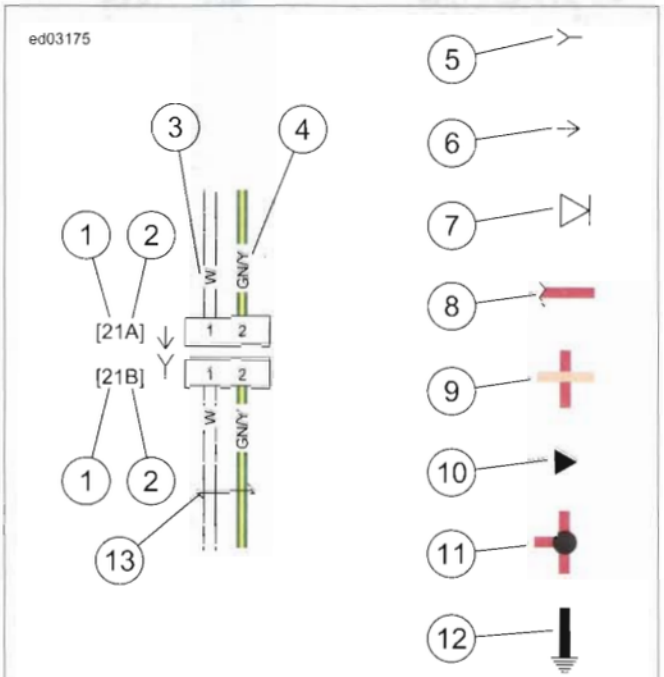

1. Connector number
2. Terminal code (A=pin, B=socket)
3. Solid wire color
4. Striped wire color
5. Socket symbol
6. Pin symbol
7. Diode
8. Wire break
9. No connection
10. Circuit to/from
11. Splice
12. Ground
13. Twisted pair

Figure B-1. Connector/Wiring Diagram Symbols

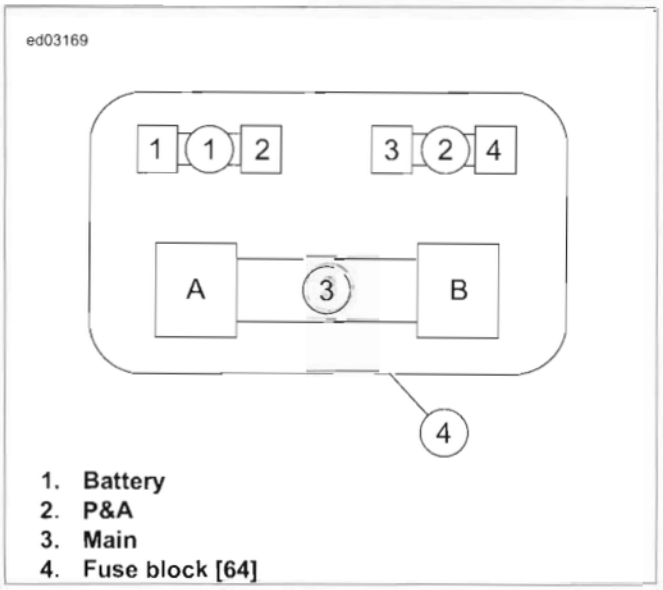

1. Battery
2. P&A
3. Main
4. Fuse block [64]

Figure B-2. Fuse Block and Socket Terminals

Table B-2. Wire Color Codes

ALPHA CODE	WIRE COLOR
BE	Blue
BK	Black
BN	Brown
GN	Green
GY	Gray
LBE	Light Blue
LGN	Light Green
O	Orange
PK	Pink
R	Red
TN	Tan
V	Violet
W	White
Y	Yellow

Refer to the table below for wiring diagram information.

Wiring Diagram List

DIAGRAM	LOCATION
Battery Power Distribution	Figure B-3
Ignition and Accessory Power Distribution: Except FXSB and FLS	Figure B-4
Ignition and Accessory Power Distribution: FXSB	Figure B-5
Ignition and Accessory Power Distribution: FLS	Figure B-6
Sensor Grounds	Figure B-7
Ground Circuit: Except FXSB and FLS	Figure B-8
Ground Circuit: FXSB and FLS	Figure B-9
Front Lighting and Hand Controls: 2015 Softail	Figure B-10
Main Harness 1 of 2: 2015 Softail (Except FXSB and FLS)	Figure B-11
Main Harness 2 of 2: 2015 Softail (Except FXSB and FLS)	Figure B-12
Main Harness 1 of 3: 2015 Softail (FXSB)	Figure B-13
Main Harness 2 of 3: 2015 Softail (FXSB and FLS)	Figure B-14
Main Harness 3 of 3: 2015 Softail (FXSB and FLS)	Figure B-15
Rear Lighting: 2015 Softail	Figure B-16

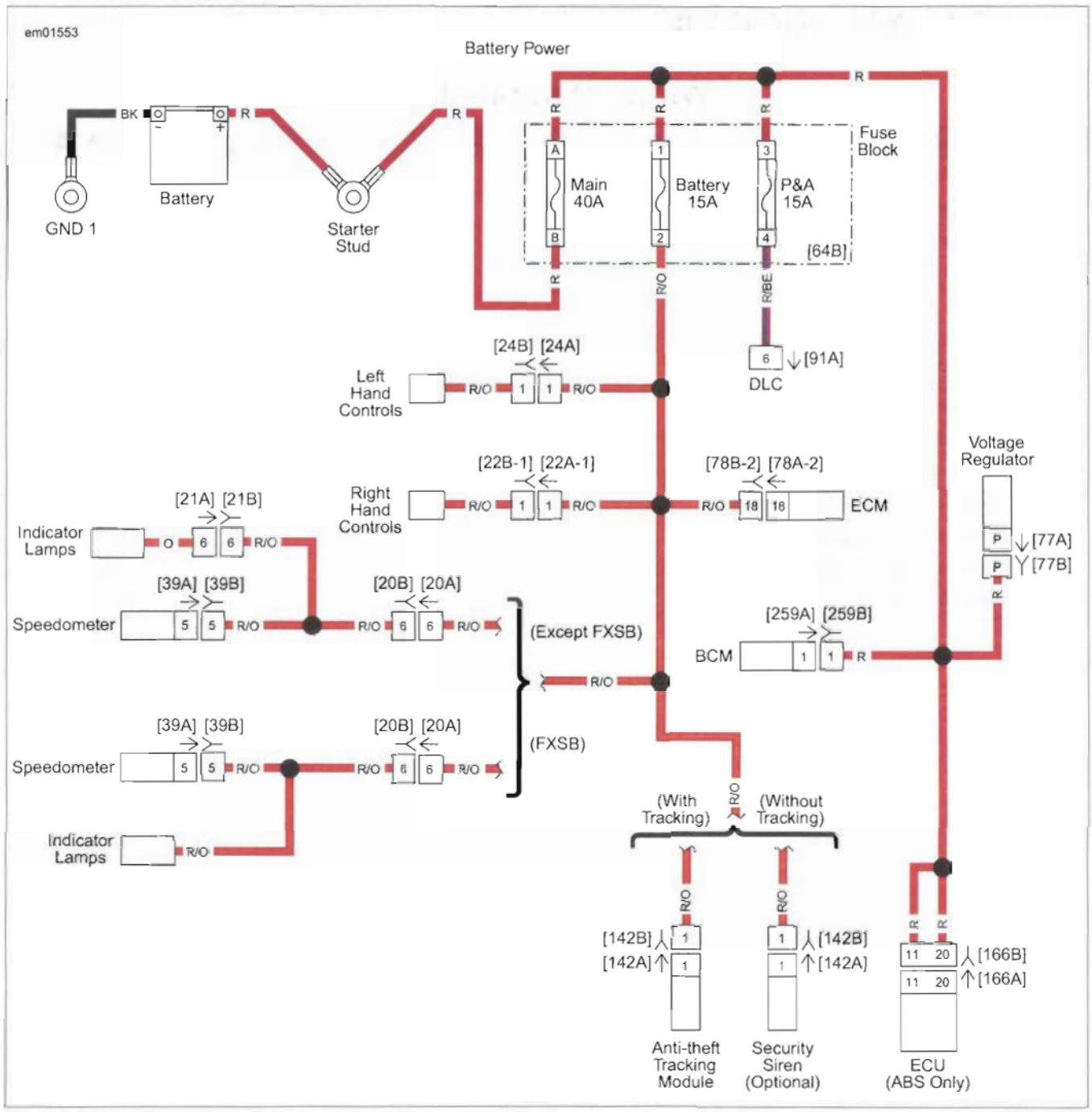

Figure B-3. Battery Power Distribution

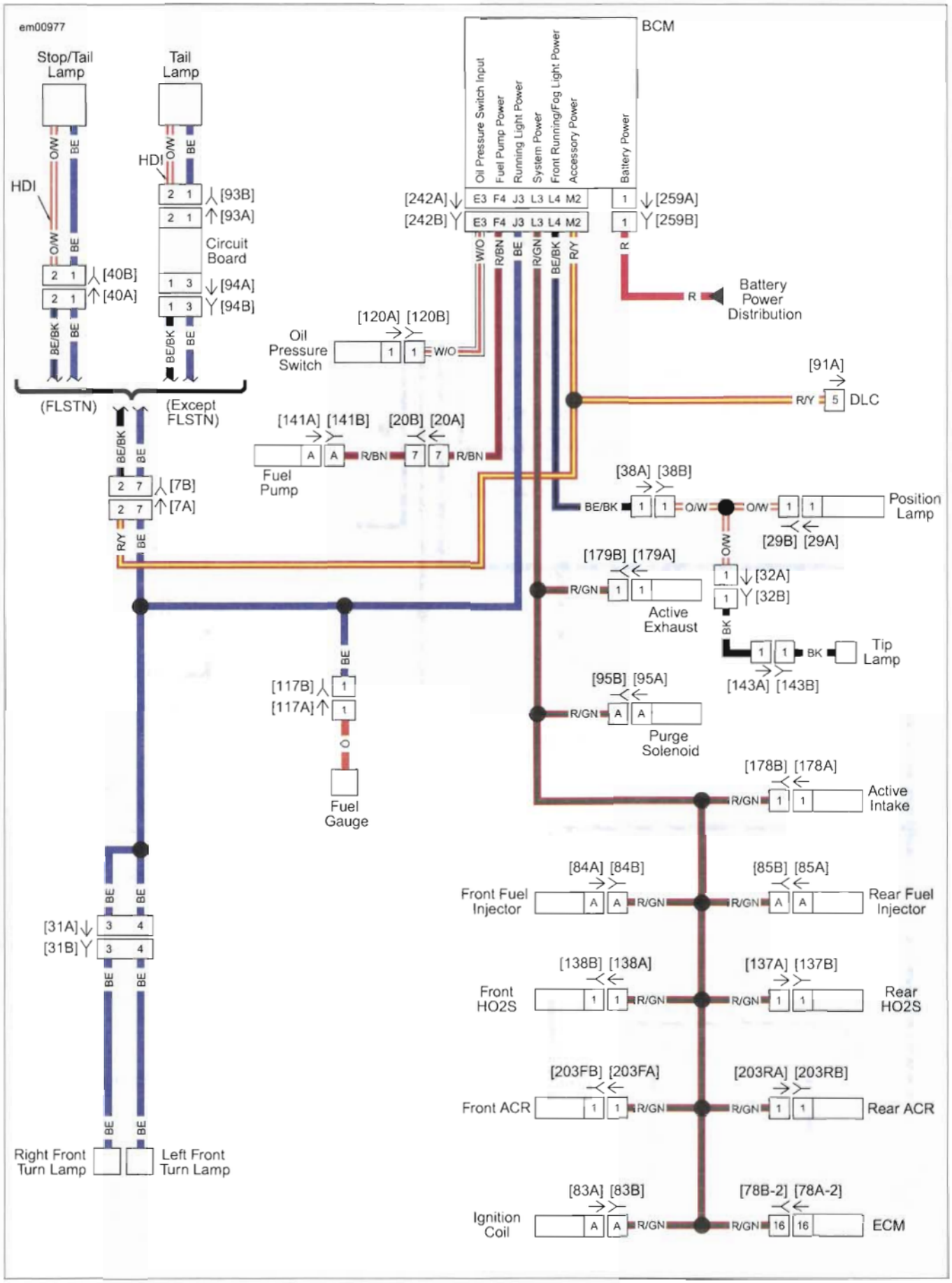

Figure B-4. Ignition and Accessory Power Distribution: Except FXSB and FLS

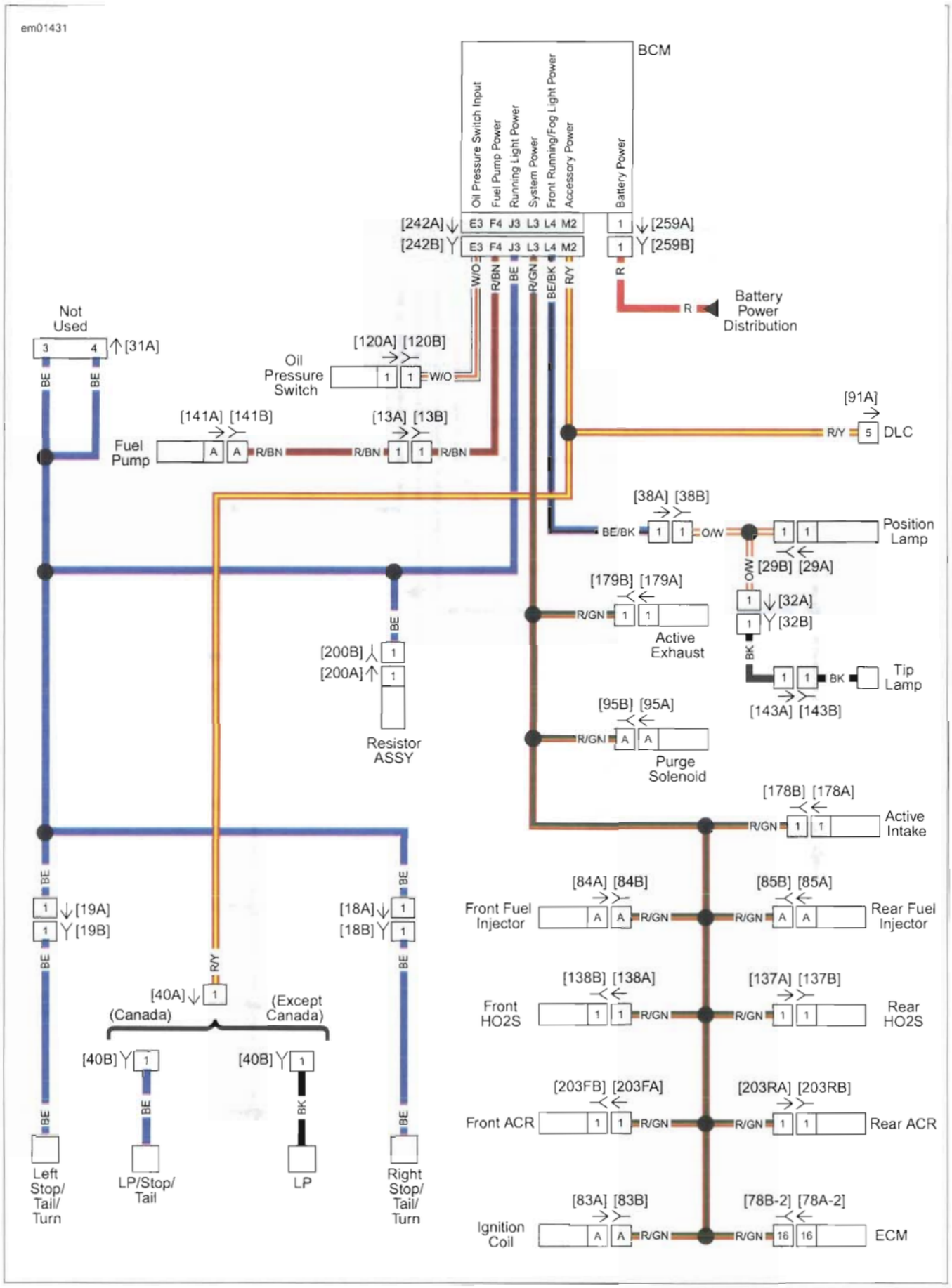

Figure B-5. Ignition and Accessory Power Distribution: FXSB

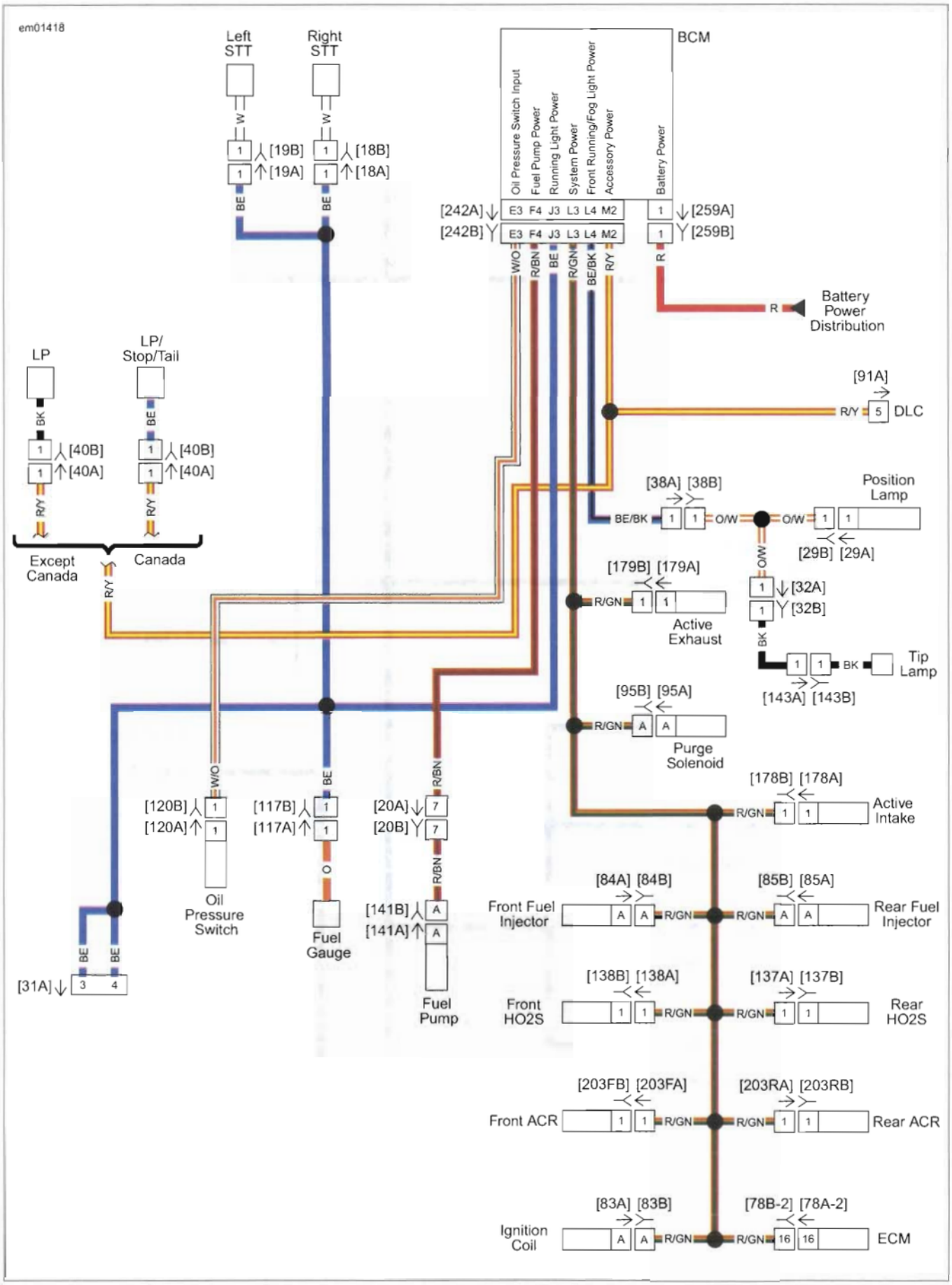

Figure B-6. Ignition and Accessory Power Distribution: FLS

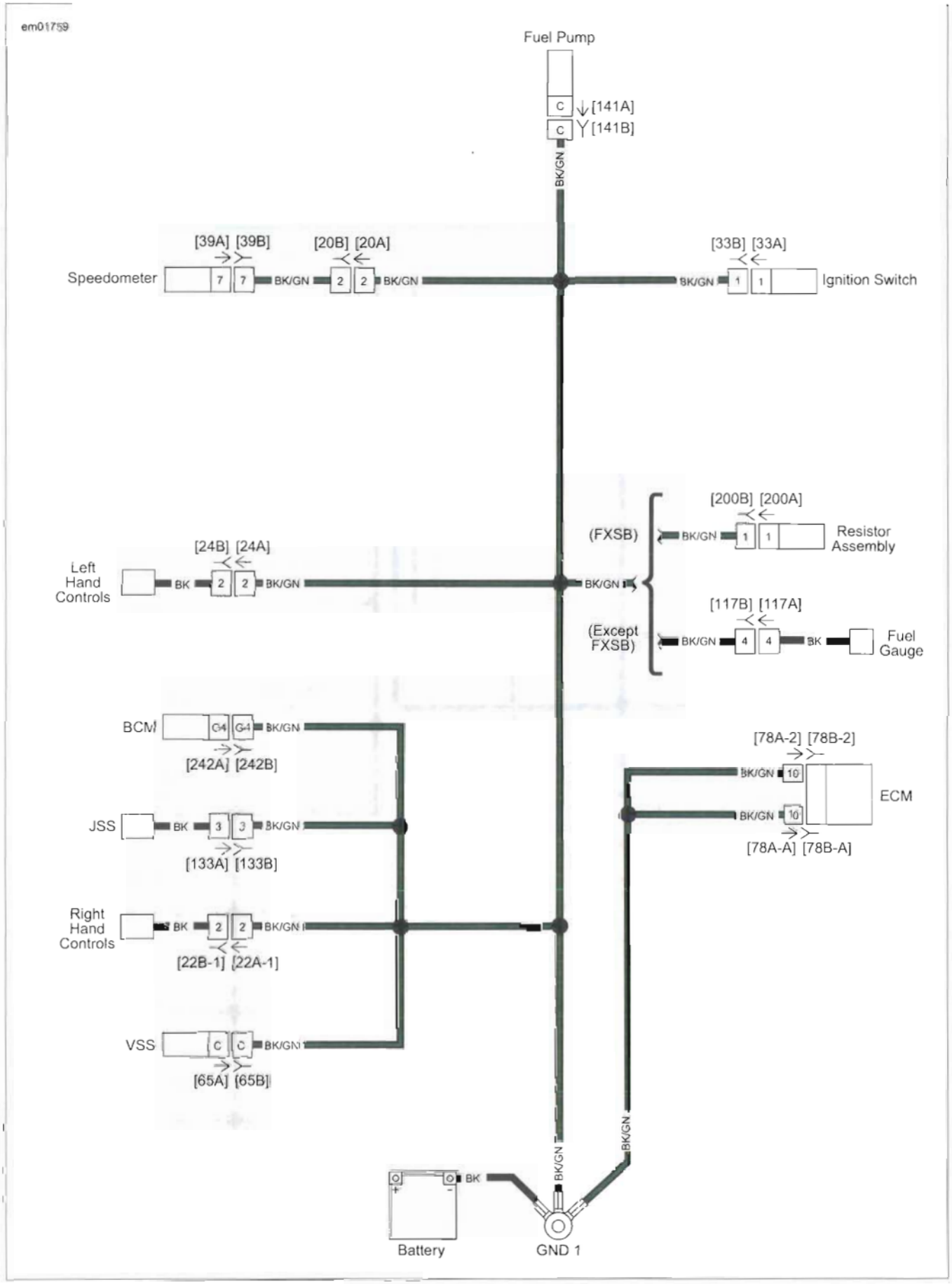

Figure B-7. Sensor Grounds

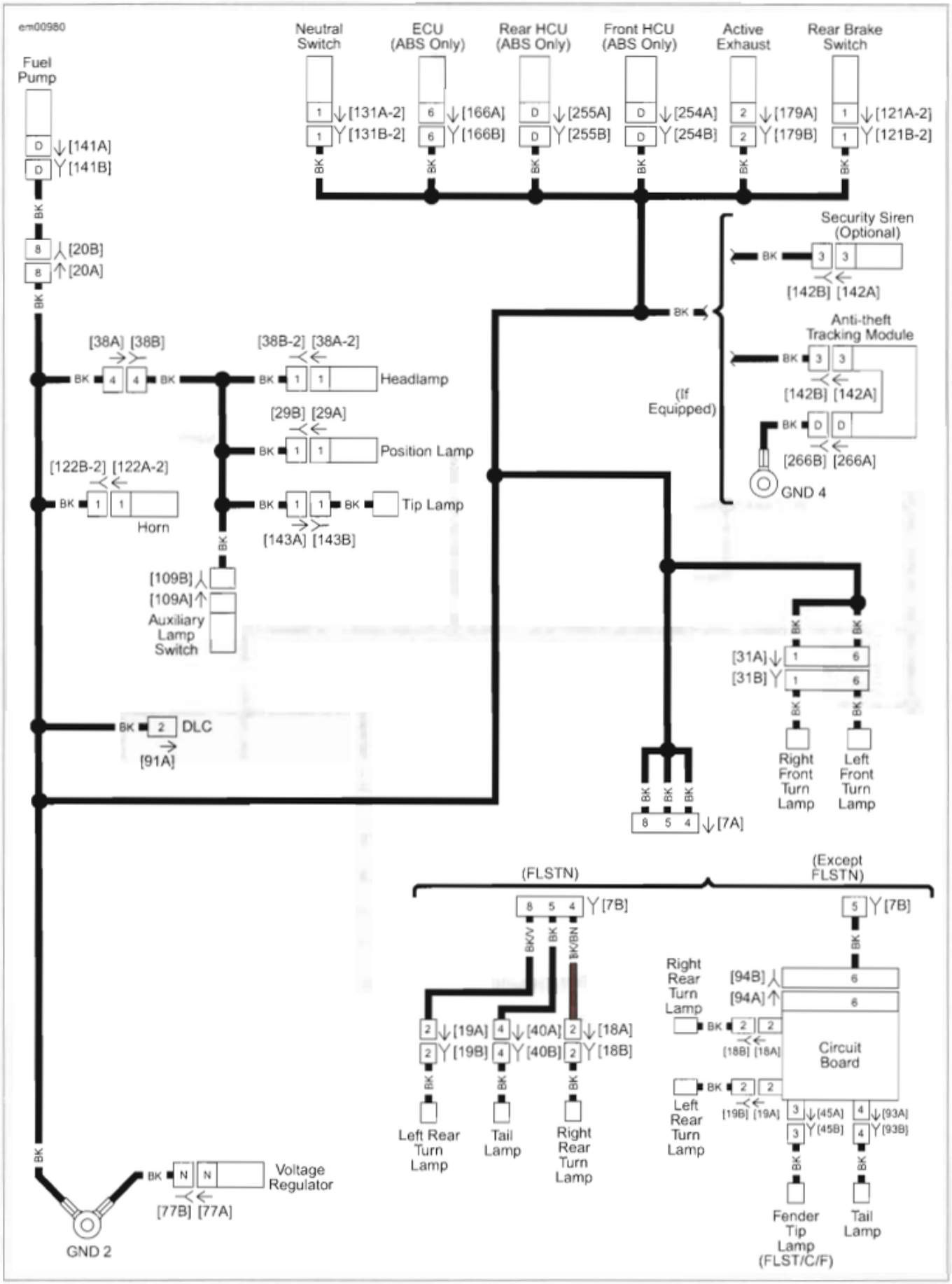

Figure B-8. Ground Circuit: Except FXSB and FLS

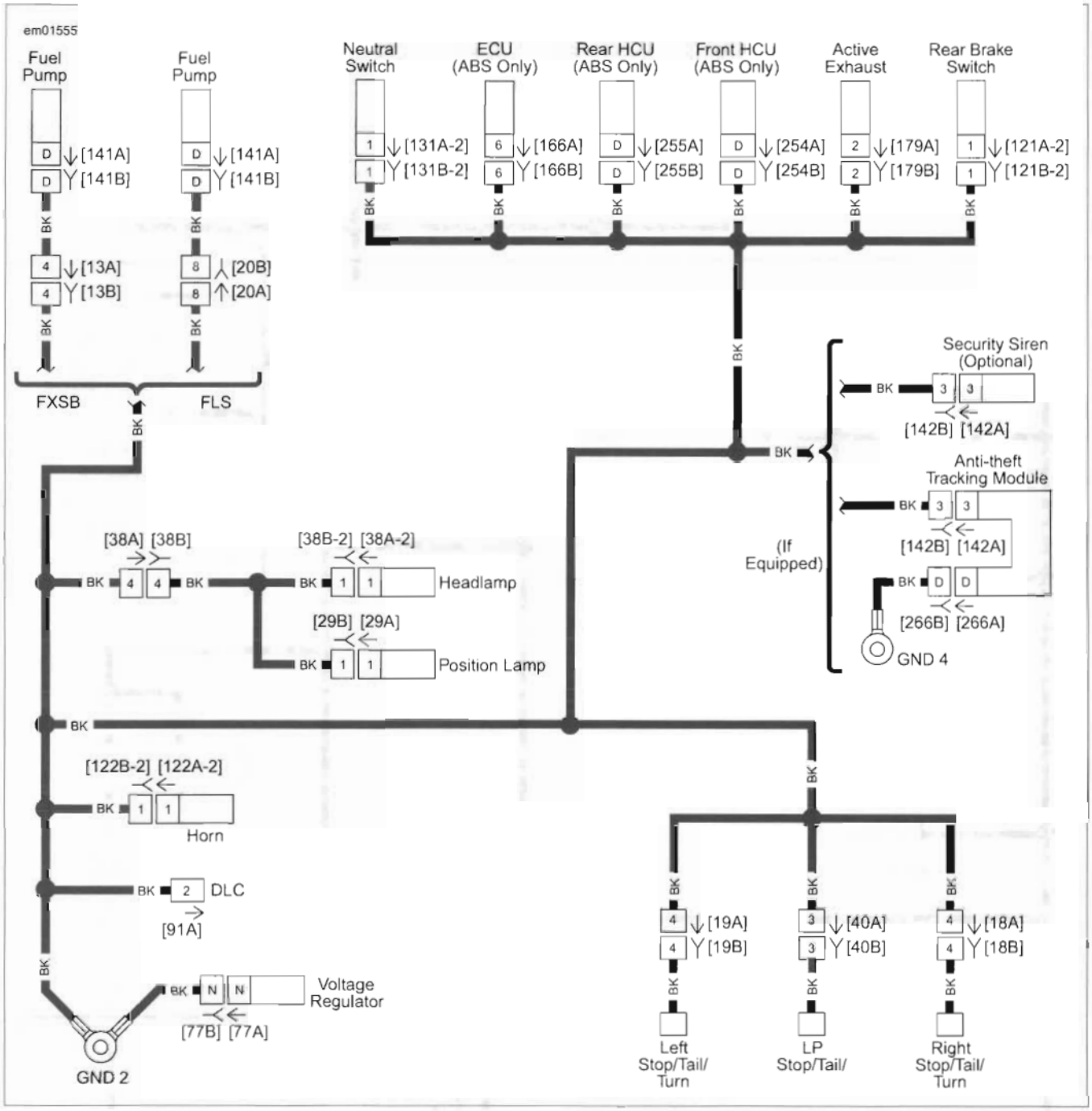

Figure B-9. Ground Circuit: FXSB and FLS

et00550

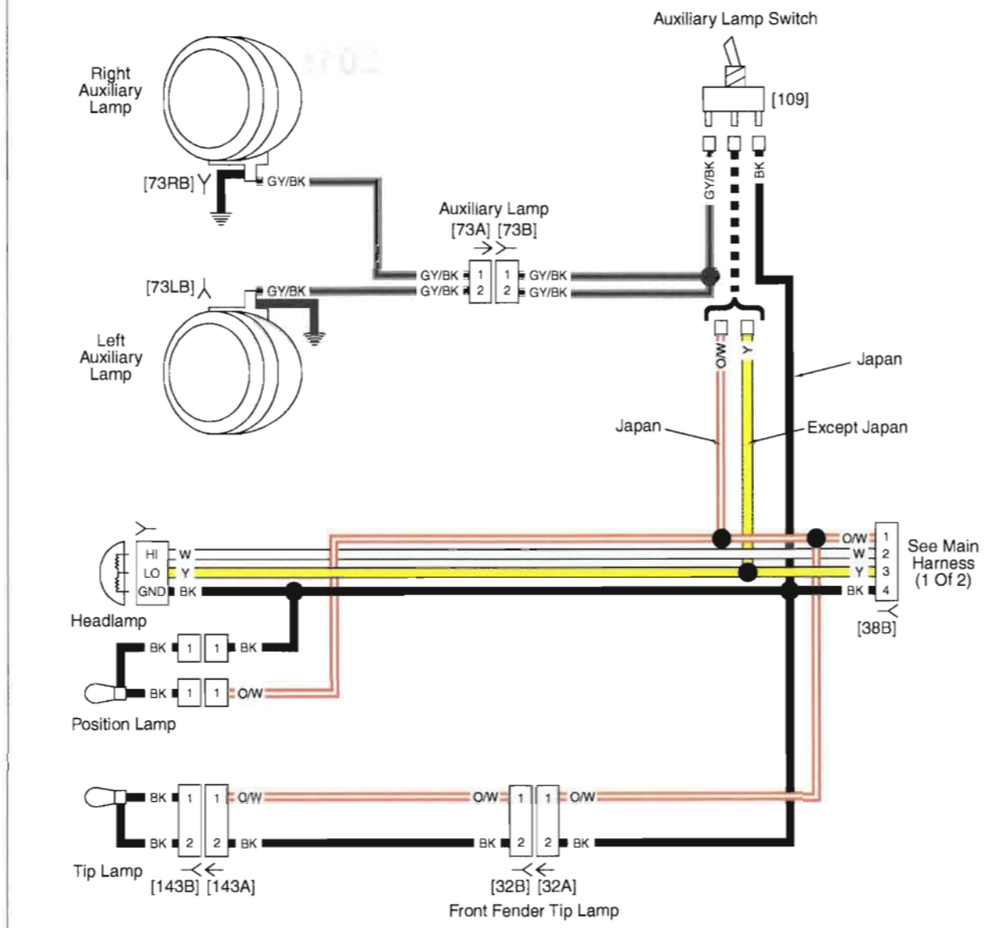

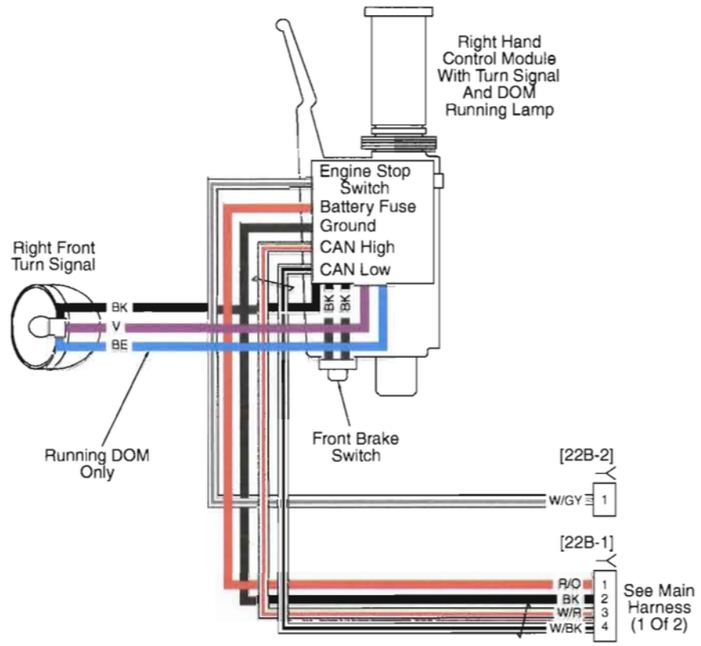

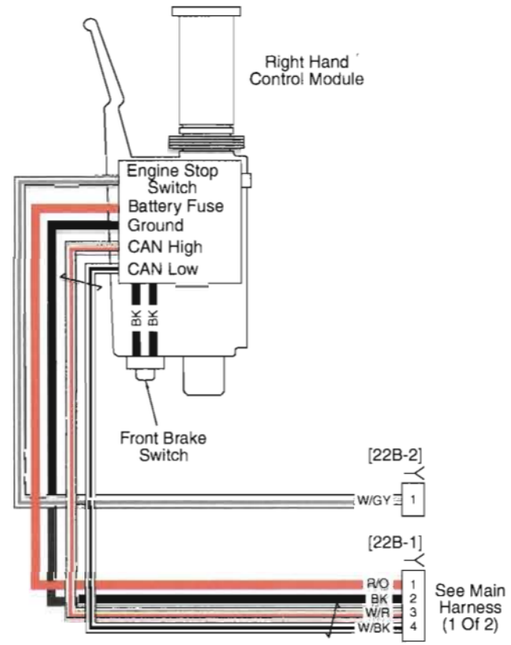

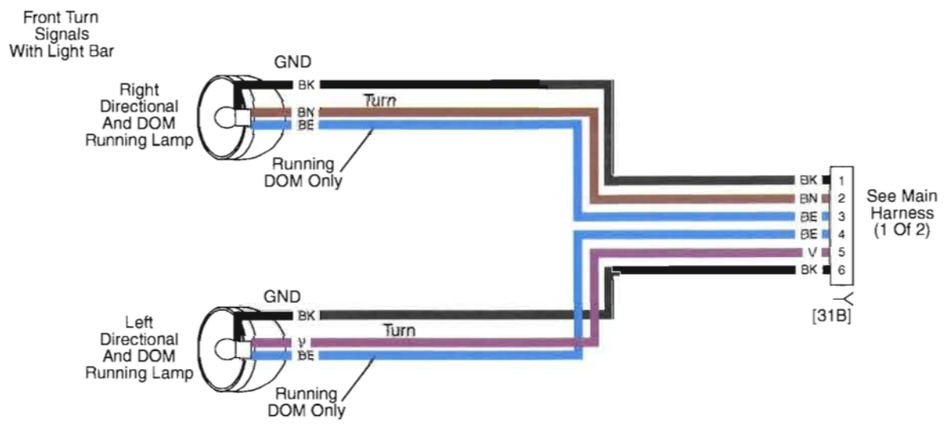

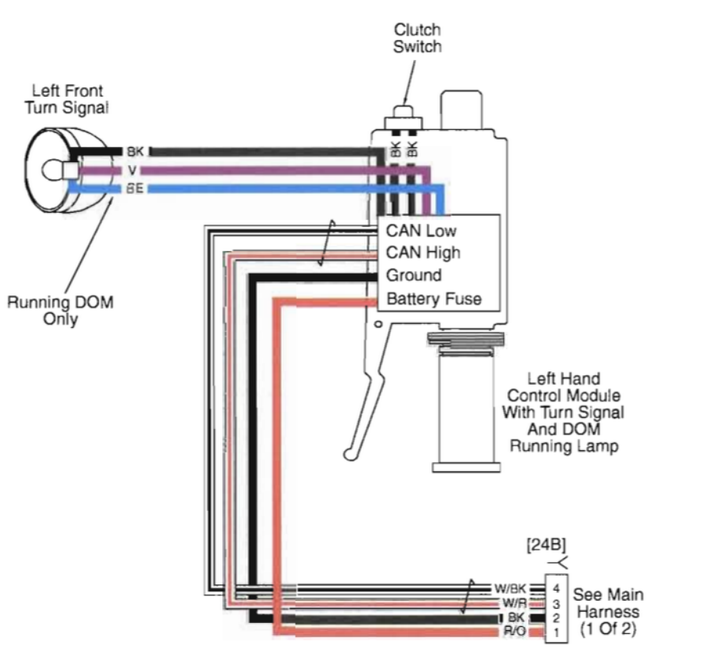

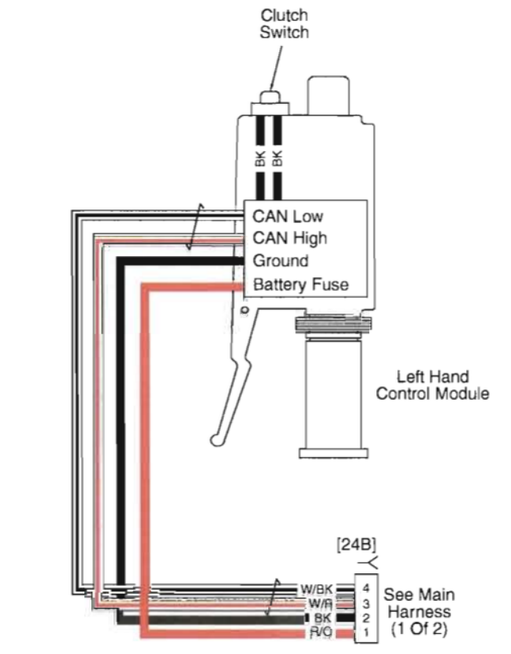

Figure B-10. Front Lighting and Hand Controls: 2015 Softail

Figure B-10.
Front Lighting and Hand Controls: 2015 Softail

Figure B-10.
Front Lighting and Hand Controls: 2015 Softail

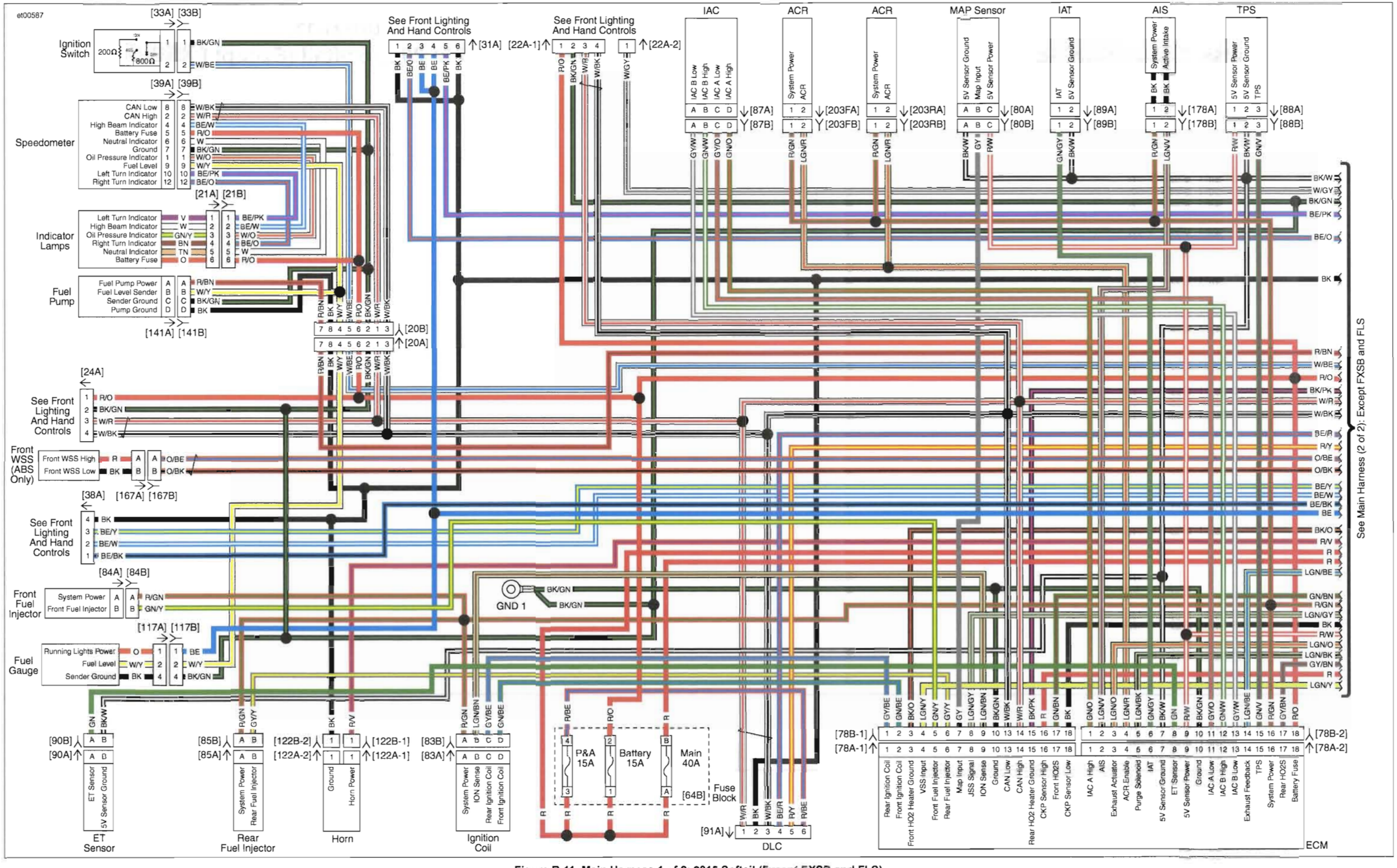

Figure B-11. Main Harness 1 of 2: 2015 Softail (Except FXSB and FLS)

Figure B-11.
Main Harness 1 of 2: 2015 Softail (Except FXSB and FLS)

Figure B-11.
Main Harness 1 of 2: 2015 Softail (Except FXSB and FLS)

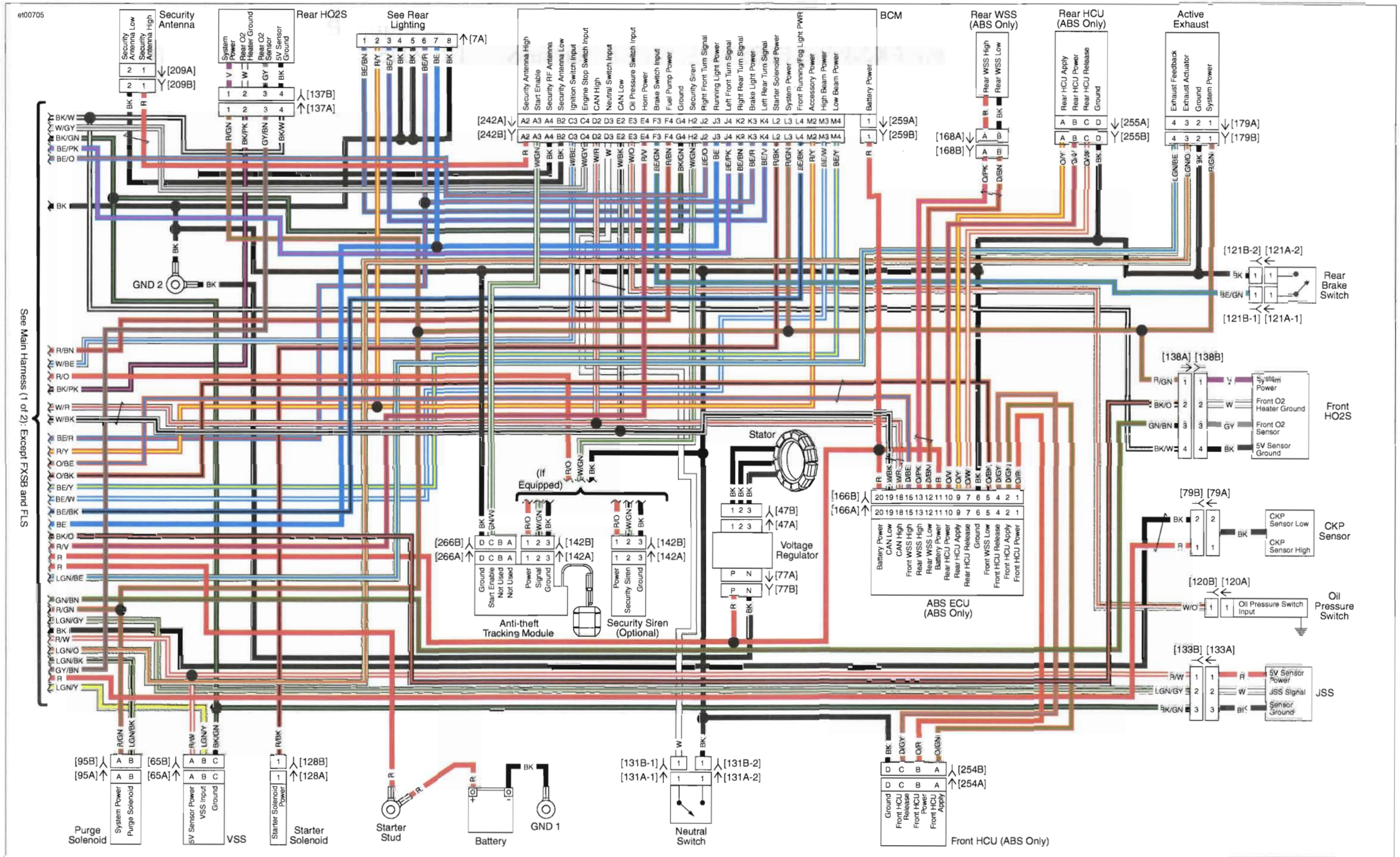

Figure B-12. Main Harness 2 of 2: 2015 Softail (Except FXSB and FLS)

Figure B-12.
Main Harness 2 of 2: 2015 Softail (Except FXSB and FLS)

Figure B-12.
Main Harness 2 of 2: 2015 Softail (Except FXSB and FLS)



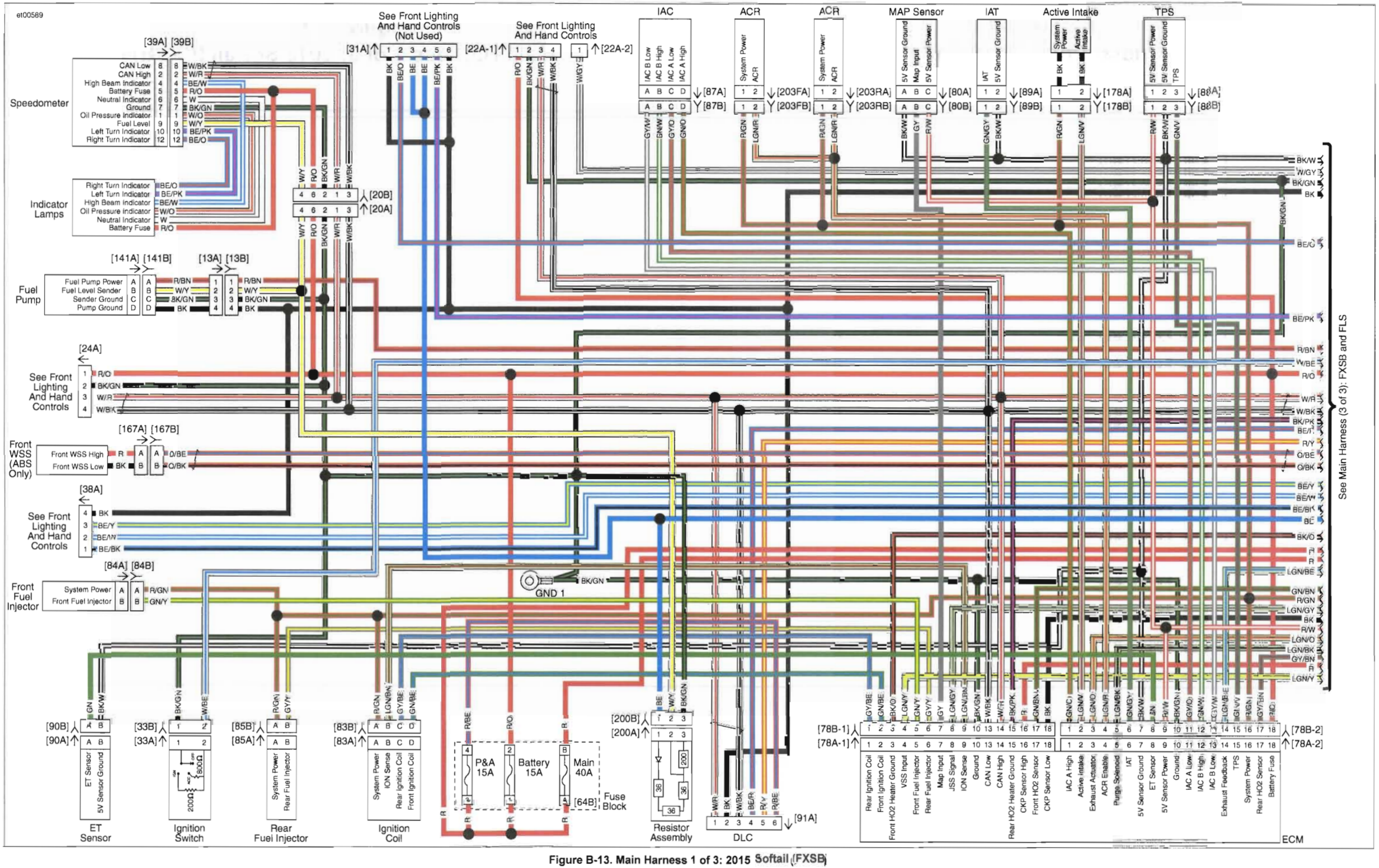

Figure B-13. Main Harness 1 of 3: 2015 Softail (FXSB)

Figure B-13.
Main Harness 1 of 3: 2015 Softail (FXSB)

Figure B-13.
Main Harness 1 of 3: 2015 Softail (FXSB)

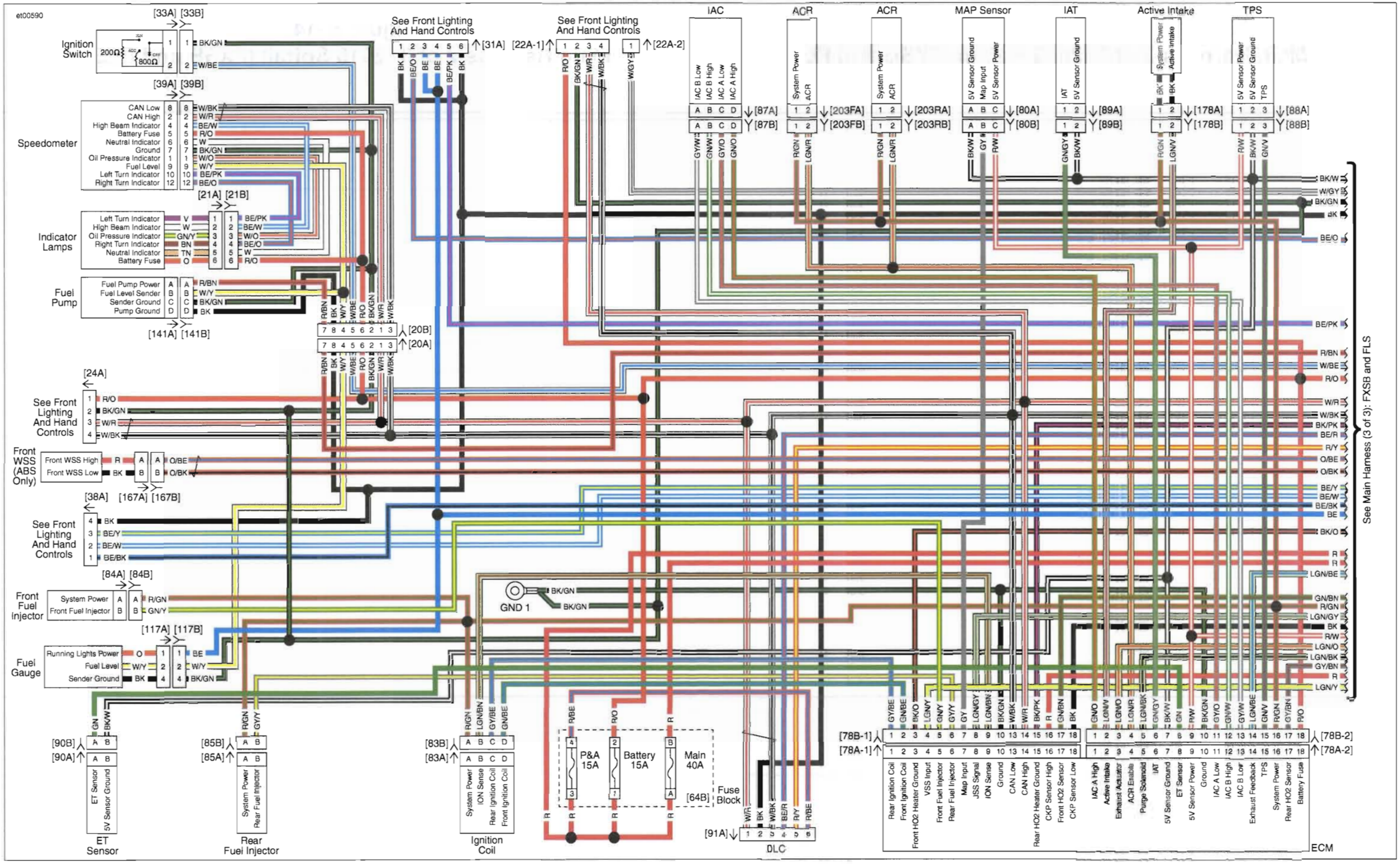

Figure B-14. Main Harness 2 of 3: 2015 Softail (FXSB and FLS)

Figure B-14.
Main Harness 2 of 3: 2015 Softail (FXSB and FLS)

Figure B-14.
Main Harness 2 of 3: 2015 Softail (FXSB and FLS)

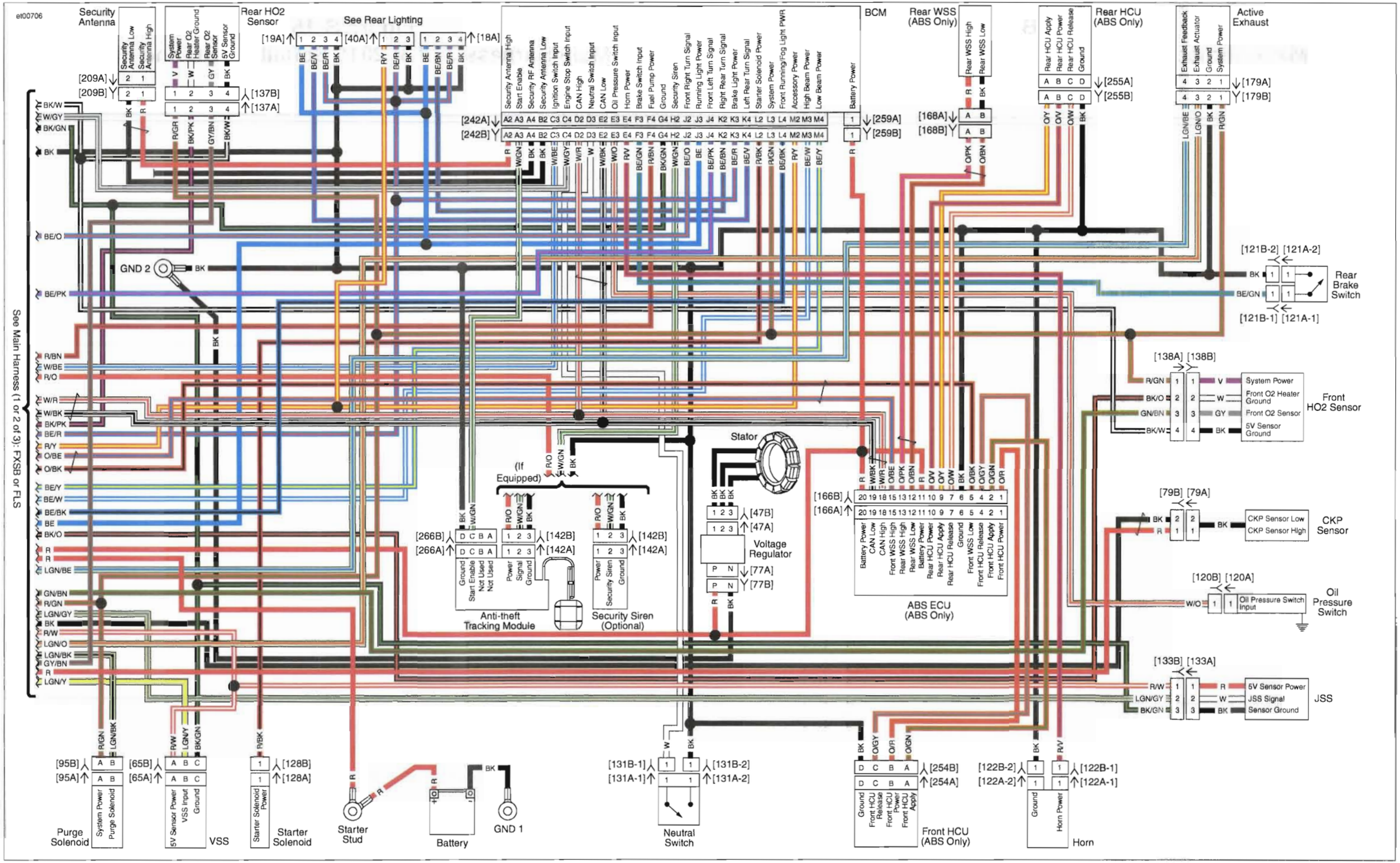

Figure B-15. Main Harness 3 of 3: 2015 Softail (FXSB and FLS)

Figure B-15.
Main Harness 3 of 3: 2015 Softail (FXSB and FLS)

Figure B-15.
Main Harness 3 of 3: 2015 Softail (FXSB and FLS)

et00707

[18B] & [19B] - FLS

Left & Right Rear STT

[40B]

LP

[18B] & [19B] - FXSB

Left & Right Rear STT

DOM

[18B]

Right Rear LED STT

[40B]

LP

[19B]

Left Rear LED STT

HDI

[18B] & [19B] - FLS

Left & Right Rear STT

[40B]

LP/ Stop/Tail

[18B] & [19B] - FXSB

Left & Right Rear STT

Canada

Rear Lighting

[7B]

See Main Harness (2 Of 2)

Right Rear Directional Lamp

Brake Light

Tail HDI Only

Tail DOM Only

Tail Lamp

[94B] [94A]

[18B] [18A]

[19B] [19A]

[45B] [45A] [93A] [93B]

Fendertip Lamp Only Available On DOM FLSTC

Left Rear Directional Lamp

FLSTC, FLSTF/B

[7B]

See Main Harness (2 Of 2)

Right Rear Directional Lamp

[18A] [18B]

HDI Only

Stop/Tail Lamp

[40A] [40B]

Left Rear Directional Lamp

[19A] [19B]

FLSTN

[7B]

See Main Harness (2 Of 2)

Right Rear Directional Lamp

Brake Light

[94B] [94A]

[19B] [19A]

[18B] [18A]

Tail HDI Only

Tail DOM Only

Tail Lamp

[93A] [93B]

Left Rear Directional Lamp

FXST

Figure B-16. Rear Lighting: 2015 Softail

Figure B-16.
Rear Lighting: 2015 Softail

Figure B-16.
Rear Lighting: 2015 Softail

SUBJECT	PAGE NO.
C.1 LENGTH CONVERSION	C-1
C.2 FLUID CONVERSION	C-2
C.3 TORQUE CONVERSION	C-3
C.4 GLOSSARY	C-4

NOTES

CONVERSION TABLE

Table C-1. Metric Conversions

MILLIMETERS to INCHES (MM x 0.03937 = IN)								INCHES to MILLIMETERS (IN x 25.40 = MM)							
mm	in	mm	in	mm	in	mm	in	in	mm	in	mm	in	mm	in	mm
.1	.0039	25	.9842	58	2.283	91	3.582	.001	.025	.6	15.240	1-15/16	49.21	3-5/16	84.14
.2	.0078	26	1.024	59	2.323	92	3.622	.002	.051	5/8	15.875	2	50.80	3-3/8	85.72
.3	.0118	27	1.063	60	2.362	93	3.661	.003	.076	11/16	17.462	2-1/16	52.39	3.4	86.36
.4	.0157	28	1.102	61	2.401	94	3.701	.004	.102	.7	17.780	2.1	53.34	3-7/16	87.31
.5	.0197	29	1.142	62	2.441	95	3.740	.005	.127	3/4	19.050	2-1/8	53.97	3-1/2	88.90
.6	.0236	30	1.181	63	2.480	96	3.779	.006	.152	.8	20.320	2-3/16	55.56	3-9/16	90.49
.7	.0275	31	1.220	64	2.519	97	3.819	.007	.178	13/16	20.638	2.2	55.88	3.6	91.44
.8	.0315	32	1.260	65	2.559	98	3.858	.008	.203	7/8	22.225	2-1/4	57.15	3-5/8	92.07
.9	.0354	33	1.299	66	2.598	99	3.897	.009	.229	.9	22.860	2.3	58.42	3-11/16	93.66
1	.0394	34	1.338	67	2.638	100	3.937	.010	.254	15/16	23.812	2-5/16	58.74	3.7	93.98
2	.0787	35	1.378	68	2.677	101	3.976	1/64	.397	1	25.40	2-3/8	60.32	3-3/4	95.25
3	.1181	36	1.417	69	2.716	102	4.016	.020	.508	1-1/16	26.99	2.4	60.96	3.8	96.52
4	.1575	37	1.456	70	2.756	103	4.055	.030	.762	1.1	27.94	2-7/16	61.91	3-13/16	96.84
5	.1968	38	1.496	71	2.795	104	4.094	1/32	.794	1-1/8	28.57	2-1/2	63.50	3-7/8	98.42
6	.2362	39	1.535	72	2.834	105	4.134	.040	1.016	1-3/16	30.16	2-9/16	65.09	3.9	99.06
7	.2756	40	1.575	73	2.874	106	4.173	.050	1.270	1.2	30.48	2.6	66.04	3-15/16	100.01
8	.3149	41	1.614	74	2.913	107	4.212	.060	1.524	1-1/4	31.75	2-5/8	66.67	4	101.6
9	.3543	42	1.653	75	2.953	108	4.252	1/16	1.588	1.3	33.02	2-11/16	68.26	4-1/16	102.19
10	.3937	43	1.693	76	2.992	109	4.291	.070	1.778	1-5/16	33.34	2.7	68.58	4.1	104.14
11	.4331	44	1.732	77	3.031	110	4.331	.080	2.032	1-3/8	34.92	2-3/4	69.85	4-1/8	104.77
12	.4724	45	1.772	78	3.071	111	4.370	.090	2.286	1.4	35.56	2.8	71.12	4-3/16	106.36
13	.5118	46	1.811	79	3.110	112	4.409	.1	2.540	1-7/16	36.51	2-13/16	71.44	4.2	106.68
14	.5512	47	1.850	80	3.149	113	4.449	1/8	3.175	1-1/2	38.10	2-7/8	73.02	4-1/4	107.95
15	.5905	48	1.890	81	3.189	114	4.488	3/16	4.762	1-9/16	39.69	2.9	73.66	4.3	109.22
16	.6299	49	1.929	82	3.228	115	4.527	.2	5.080	1.6	40.64	2-15/16	74.61	4-5/16	109.54
17	.6693	50	1.968	83	3.268	116	4.567	1/4	6.350	1-5/8	41.27	3	76.20	4-3/8	111.12
18	.7086	51	2.008	84	3.307	117	4.606	.3	7.620	1-11/16	42.86	3-1/16	77.79	4.4	111.76
19	.7480	52	2.047	85	3.346	118	4.645	5/16	7.938	1.7	43.18	3.1	78.74	4-7/16	112.71
20	.7874	53	2.086	86	3.386	119	4.685	3/8	9.525	1-3/4	44.45	3-1/8	79.37	4-1/2	114.30
21	.8268	54	2.126	87	3.425	120	4.724	.4	10.160	1.8	45.72	3-3/16	80.96	4-9/16	115.89
22	.8661	55	2.165	88	3.464	121	4.764	7/16	11.112	1-13/16	46.04	3.2	81.28	4.6	116.84
23	.9055	56	2.205	89	3.504	122	4.803	1/2	12.700	1-7/8	47.62	3-1/4	82.55	4-5/8	117.47
24	.9449	57	2.244	90	3.543	123	4.842	9/16	14.288	1.9	48.26	3.3	83.82	4-11/16	119.06

UNITED STATES SYSTEM

Unless otherwise specified, all fluid volume measurements in this manual are expressed in United States (U.S.) units-of-measure. See below:

- 1 pint (U.S.) = 16 fluid ounces (U.S.)
- 1 quart (U.S.) = 2 pints (U.S.) = 32 fl. oz. (U.S.)
- 1 gallon (U.S.) = 4 quarts (U.S.) = 128 fl. oz. (U.S.)

METRIC SYSTEM

Fluid volume measurements in this manual include the metric system equivalents. In the metric system, 1 liter (L) = 1,000 milliliters (mL). To convert between U.S. units-of-measure and metric units-of-measure, refer to the following:

- fluid ounces (U.S.) x 29.574 = milliliters
- pints (U.S.) x 0.473 = liters
- quarts (U.S.) x 0.946 = liters
- gallons (U.S.) x 3.785 = liters
- milliliters x 0.0338 = fluid ounces (U.S.)
- liters x 2.114 = pints (U.S.)
- liters x 1.057 = quarts (U.S.)
- liters x 0.264 = gallons (U.S.)

BRITISH IMPERIAL SYSTEM

Fluid volume measurements in this manual do not include the British Imperial (Imp.) system equivalents. The following conversions exist in the British Imperial system:

- 1 pint (Imp.) = 20 fluid ounces (Imp.)
- 1 quart (Imp.) = 2 pints (Imp.)
- 1 gallon (Imp.) = 4 quarts (Imp.)

Although the same unit-of-measure terminology as the U.S. system is used in the British Imperial (Imp.) system, the actual volume of each British Imperial unit-of-measure differs from its U.S. counterpart. The U.S. fluid ounce is larger than the British Imperial fluid ounce. However, the U.S. pint, quart, and gallon are smaller than the British Imperial pint, quart, and gallon, respectively. To convert between U.S. units and British Imperial units, refer to the following:

- fluid ounces (U.S.) x 1.042 = fluid ounces (Imp.)
- pints (U.S.) x 0.833 = pints (Imp.)
- quarts (U.S.) x 0.833 = quarts (Imp.)
- gallons (U.S.) x 0.833 = gallons (Imp.)
- fluid ounces (Imp.) x 0.960 = fluid ounces (U.S.)
- pints (Imp.) x 1.201 = pints (U.S.)
- quarts (Imp.) x 1.201 = quarts (U.S.)
- gallons (Imp.) x 1.201 = gallons (U.S.)

UNITED STATES SYSTEM

The U.S. units of torque, foot pounds and inch pounds, are used in this manual. To convert units, use the following equations:

- foot pounds (ft-lbs) X 12.00000 = inch pounds (**in-lbs**)
- inch pounds (**in-lbs**) X 0.08333 = foot pounds (ft-lbs)

METRIC SYSTEM

All metric torque specifications are written in Newton-meters (Nm). To convert metric to United States units and United States to metric, use the following equations:

- Newton meters (Nm) X 0.737563 = foot pounds (ft-lbs)
- Newton meters (Nm) X 8.85085 = inch pounds (**in-lbs**)
- foot pounds (ft-lbs) X 1.35582 = Newton meters (Nm)
- inch pounds (**in-lbs**) X 0.112985 = Newton meters (Nm)

ACRONYMS AND ABBREVIATIONS

Table C-2. Acronyms and Abbreviations

ACRONYM OR ABBREVIATION	DESCRIPTION
A	Amperes
AAT	Ambient air temperature
ABS	Anti-lock braking system
AC	Alternating current
ACC	Accessory position on ignition switch
ACR	Automatic compression release
AGM	Absorbed glass mat (battery)
Ah	Ampere-hour
AIS	Active intake solenoid
AWG	American wire gauge
B+	Battery voltage
bar	Bar
BAS	Bank angle sensor
BCM	Body control module
BOB	Breakout box
BTDC	Before top dead center
°C	Celsius (Centigrade)
CA	California
CAL	Calibration
CAN	Controller area network
CB Tx	CB send transmission
CB Rx	CB receive transmission
cc	Cubic centimeters
CCA	Cold cranking amps
CCW	Counterclockwise
CKP	Crankshaft position
cm	Centimeters
cm^3	Cubic centimeters
CW	Clockwise
DC	Direct current
DLC	Data link connector
DOM	Domestic
DOT	Department of Transportation
DTC	Diagnostic trouble code
DVOM	Digital volt ohm meter
ECM	Electronic control module
ECT	Engine coolant temperature
ECU	Electronic control unit
EEPROM	Electrically erasable programmable read only memory
EFI	Electronic fuel injection
EHCU	Electro hydraulic control unit

Table C-2. Acronyms and Abbreviations

ACRONYM OR ABBREVIATION	DESCRIPTION
ET	Engine temperature
ETC	Electronic throttle control
EVAP	Evaporative emissions control system
°F	Fahrenheit
fl oz	Fluid ounce
FPS	Fuel pressure sensor
ft	Feet
ft-lbs	Foot pounds
FTP	Flash to pass
g	Gram
gal	Gallon
GAWR	Gross axle weight rating
GND	Ground (electrical)
GPS	Global positioning system
GVWR	Gross vehicle weight rating
HCU	Hydraulic control unit
HDI	Harley-Davidson International
HD-Link	Networking system
H-DSSS	Harley-Davidson smart security system
HFM	Hands-free mode
HFSM	Hands-free security module
Hg	Mercury
H02S	Heated oxygen sensor
hp	Horsepower
hr	Hour
IAC	Idle air control
IAT	Intake air temperature
IC	Instrument cluster
ID	Inside diameter
IGN	Ignition light/key switch position
in	inch
in^3	Cubic inch
INJ PW	Injector pulse width
INTCM	Intercom
in-lbs	Inch pounds
JSS	Jiffy stand sensor
kg	Kilogram
km	Kilometer
km/h	Kilometers per hour
kPa	Kilopascal
kW	Kilowatt
L	Liter
lb	Pounds
LCD	Liquid crystal display

Table C-2. Acronyms and Abbreviations

ACRONYM OR ABBREVIATION	DESCRIPTION
LED	Light emitting diode
LH	Left hand
LHCM	Left hand control module
LP	License plate
LT	Left
mA	Milliampere
MAP	Manifold absolute pressure
max	Maximum
mi	Mile
min	Minimum
mL	Milliliter
mm	Millimeter
mph	Miles per hour
ms	Millisecond
Nm	Newton-meter
NIM	Navigation interface module
NiMH	Nickel metal hydride
N/A	Not applicable
O2	Oxygen
OD	Outside diameter
OEM	Original equipment manufacturer
oz	Ounce
P&A	Parts and Accessories
Part No.	Part number
PIN	Personal identification number
PND	Personal navigation device
psi	Pounds per square inch
PWM signal	Pulse width modulated signal
qt	Quart
RAD	Radio
RCM	Reverse control module
RDS	Radio data system
RES	Reserve mark on fuel supply valve
RH	Right hand
RHCM	Right hand control module
rpm	Revolutions per minute
RT	Right
s	Seconds
SCFH	Cubic feet per hour at standard conditions
SDARS	Satellite digital audio radio service
SPDO	Speedometer
SPKR	Speaker
STT	Stop/tail/turn
TA	Traffic announcement

Table C-2. Acronyms and Abbreviations

ACRONYM OR ABBREVIATION	DESCRIPTION
TCA	Throttle control actuator
TDC	Top dead center
TGS	Twist grip sensor
TPS	Throttle position sensor
TSM	Turn signal module
TSSM	Turn signal/security module
USB	Universal serial bus
V	Volt
VAC	Volts of alternating current
VDC	Volts of direct current
VIN	Vehicle identification number
VR	Voice recognition
VSS	Vehicle speed sensor
W	Watt
WA	Weather alert
WSS	Wheel speed sensor

NOTES

Tools Used in This Manual

PART NUMBER	TOOL NAME	NOTES
14900004	SCREAMIN? EAGLE® ENGINE CASE SUPPORT BLOCKS	3.28 COUNTERBALANCER ASSEMBLY REPAIR, Cleaning, Inspection, and Repair
93979-10	SCREAMIN' EAGLE MAGNETIC LIFTER HOLDERS	3.24 CAM COMPARTMENT AND COMPONENTS, Cam Support Plate and Cover Removal
93979-10	SCREAMIN' EAGLE MAGNETIC LIFTER HOLDERS	3.25 OIL PUMP, Removal
94448-82B	SHOCK ADJUSTMENT SPANNER	1.21 SUSPENSION ADJUSTMENTS, Shock Absorbers
B-45523	VALVE GUIDE REAMER	3.20 CYLINDER HEAD, Valve Guide Replacement
B-45524-1	VALVE GUIDE DRIVER	3.20 CYLINDER HEAD, Valve Guide Replacement
B-45524-2A	VALVE GUIDE INSTALLER SLEEVE	3.20 CYLINDER HEAD, Valve Guide Replacement
B-45525	VALVE GUIDE HONE	3.20 CYLINDER HEAD, Inspection
B-45525	VALVE GUIDE HONE	3.20 CYLINDER HEAD, Valve Guide Replacement
B-45655	CRANKCASE BEARING REMOVER/INSTALLER	3.26 CRANKCASE DISASSEMBLY AND REPAIR, Left Crankcase Half
B-45655	CRANKCASE BEARING REMOVER/INSTALLER	3.26 CRANKCASE DISASSEMBLY AND REPAIR, Left Crankcase Half
B-50085	TERMINAL EXTRACTOR	A.3 BOSCH BTC SEALED CONNECTOR, Bosch BTC Sealed Connector Repair
B-50085	TERMINAL EXTRACTOR	A.17 JAE MX19 SEALED CONNECTORS, JAE MX19 Sealed Connectors
B-50085	TERMINAL EXTRACTOR	A.20 TYCO 040 MULTILOCK UNSEALED CONNECTOR, Tyco 040 Multilock Unsealed Connector Repair
B-50085	TERMINAL EXTRACTOR	A.21 TYCO 070 MULTILOCK UNSEALED CONNECTOR, Tyco 070 Multilock Unsealed Connector Repair
B-50085	TERMINAL EXTRACTOR	A.22 TYCO GET 64 SEALED CONNECTOR, Tyco GET 64 Sealed Connector Repair
B-50085	TERMINAL EXTRACTOR	A.23 TYCO MCP SEALED CONNECTOR, Tyco MCP Sealed Connector
FRDH161	SNAP-ON "DOG BONE" TORQUE ADAPTER	3.23 TOP END OVERHAUL: ASSEMBLY, Rocker Arm Support Plate
FRX181	OXYGEN SENSOR SOCKET	4.14 OXYGEN (O2) SENSOR, Removal
GA500A	SNAP-ON TERMINAL PICK	A.1 AUTOFUSE UNSEALED ELECTRICAL CONNECTORS, Autofuse Unsealed Connector Repair
GA500A	SNAP-ON TERMINAL PICK	A.23 TYCO MCP SEALED CONNECTOR, Tyco MCP Sealed Connector
HD-25070	ROBINAIR HEAT GUN	3.26 CRANKCASE DISASSEMBLY AND REPAIR, Sprocket Shaft Bearing Inner Race
HD-25070	ROBINAIR HEAT GUN	3.26 CRANKCASE DISASSEMBLY AND REPAIR, Sprocket Shaft Bearing Inner Race
HD-25070	ROBINAIR HEAT GUN	7.36 HANDLEBAR CONTROL MODULES, Repair Procedures
HD-25070	ROBINAIR HEAT GUN	A.24 SEALED SPLICE CONNECTORS, Sealed Splice Connector Repair
HD-33223-1	CYLINDER COMPRESSION GAUGE	3.8 TROUBLESHOOTING, Compression Test
HD-33416	UNIVERSAL DRIVER HANDLE	2.20 STEERING HEAD, Disassembly
HD-34634	FORK SEAL INSTALLER	2.19 FRONT FORK, Assembly
HD-34736-B	VALVE SPRING COMPRESSOR	3.20 CYLINDER HEAD, Disassembly
HD-34736-B	VALVE SPRING COMPRESSOR	3.20 CYLINDER HEAD, Assembly
HD-34751	VALVE GUIDE CLEANING BRUSH	3.20 CYLINDER HEAD, Inspection
HD-34751	VALVE GUIDE CLEANING BRUSH	3.20 CYLINDER HEAD, Valve Guide Replacement
HD-34751	VALVE GUIDE CLEANING BRUSH	3.20 CYLINDER HEAD, Valve Guide Replacement

Tools Used in This Manual

PART NUMBER	TOOL NAME	NOTES
HD-34751	VALVE GUIDE CLEANING BRUSH	3.20 CYLINDER HEAD, Valve and Seat Refacing
HD-34751	VALVE GUIDE CLEANING BRUSH	3.20 CYLINDER HEAD, Assembly
HD-34902-B	MAINSHAFT BEARING INNER RACE PULLER/INSTALLER	3.26 CRANKCASE DISASSEMBLY AND REPAIR, Sprocket Shaft Bearing Inner Race
HD-34902-C	MAINSHAFT BEARING INNER RACE REMOVER/INSTALLER	5.5 PRIMARY CHAINCASE HOUSING, Mainshaft Bearing Inner Race
HD-35316-10	PILOT	6.7 MAIN DRIVE GEAR AND BEARING, Removal
HD-35316-11	RECEIVER CUP	6.7 MAIN DRIVE GEAR AND BEARING, Removal
HD-35316-12	INSTALLER CUP	6.7 MAIN DRIVE GEAR AND BEARING, Installation
HD-35316-3A	CROSS PLATE	6.7 MAIN DRIVE GEAR AND BEARING, Removal
HD-35316-3A	CROSS PLATE	6.7 MAIN DRIVE GEAR AND BEARING, Installation
HD-35316-4A	8 IN. BOLT	6.7 MAIN DRIVE GEAR AND BEARING, Removal
HD-35316-4A	8 IN. BOLT	6.7 MAIN DRIVE GEAR AND BEARING, Installation
HD-35316-5	12 IN. BOLT	6.7 MAIN DRIVE GEAR AND BEARING, Removal
HD-35316-5	12 IN. BOLT	6.7 MAIN DRIVE GEAR AND BEARING, Installation
HD-35316-7	WASHER	6.7 MAIN DRIVE GEAR AND BEARING, Removal
HD-35316-7	WASHER	6.7 MAIN DRIVE GEAR AND BEARING, Installation
HD-35316-8	BEARING DRIVER	6.7 MAIN DRIVE GEAR AND BEARING, Installation
HD-35316-9	BEARING DRIVER	6.7 MAIN DRIVE GEAR AND BEARING, Removal
HD-35316-C	MAIN DRIVE GEAR/BEARING REMOVER AND INSTALLER	6.7 MAIN DRIVE GEAR AND BEARING, Removal
HD-35381-A	BELT TENSION GAUGE	1.12 DRIVE BELT AND SPROCKETS, Checking Drive Belt Deflection
HD-35667-A	CYLINDER LEAKDOWN TESTER	3.8 TROUBLESHOOTING, Cylinder Leakdown Test
HD-35667-A	CYLINDER LEAKDOWN TESTER	3.29 CRANKCASE ASSEMBLY, Crankcase
HD-35758-C	NEWAY VALVE SEAT CUTTER SET	3.20 CYLINDER HEAD, Valve and Seat Refacing
HD-38125-6	PACKARD TERMINAL CRIMPER	A.10 DELPHI METRI-PACK TERMINAL REPAIR, Metri-Pack Terminal Crimps
HD-38125-7	PACKARD TERMINAL CRIMPER	A.10 DELPHI METRI-PACK TERMINAL REPAIR, Metri-Pack Terminal Crimps
HD-38125-7	PACKARD TERMINAL CRIMPER	A.15 DEUTSCH DTM SEALED MINI TERMINAL REPAIR, Deutsch DTM Sealed Mini Terminal Crimps
HD-38125-8	PACKARD TERMINAL CRIMPER	A.10 DELPHI METRI-PACK TERMINAL REPAIR, Metri-Pack Terminal Crimps
HD-38125-8	PACKARD TERMINAL CRIMPER	A.24 SEALED SPLICE CONNECTORS, Sealed Splice Connector Repair
HD-39301A	STEERING HEAD BEARING RACE REMOVER	2.20 STEERING HEAD, Disassembly
HD-39302	STEERING HEAD BEARING RACE INSTALLER	2.20 STEERING HEAD, Assembly
HD-39361-B	SPROCKET SHAFT OIL SEAL INSTALLER	3.29 CRANKCASE ASSEMBLY, Crankcase
HD-39782-B	CYLINDER HEAD SUPPORT STAND KIT	3.20 CYLINDER HEAD, Valve Guide Replacement
HD-39786	CYLINDER HEAD HOLDING FIXTURE	3.20 CYLINDER HEAD, Disassembly
HD-39786	CYLINDER HEAD HOLDING FIXTURE	3.20 CYLINDER HEAD, Valve Guide Replacement
HD-39786	CYLINDER HEAD HOLDING FIXTURE	3.20 CYLINDER HEAD, Valve and Seat Refacing

Tools Used in This Manual

PART NUMBER	TOOL NAME	NOTES
HD-39786	CYLINDER HEAD HOLDING FIXTURE	3.20 CYLINDER HEAD, Assembly
HD-39847	REAMER T-HANDLE	3.20 CYLINDER HEAD, Valve Guide Replacement
HD-39964	REAMER LUBRICANT	3.20 CYLINDER HEAD, Valve Guide Replacement
HD-39965-A	DEUTSCH TERMINAL CRIMP TOOL	A.14 DEUTSCH DT SEALED TERMINAL REPAIR, Deutsch DT Sealed Terminal Crimps
HD-39969	ULTRA TORCH	7.36 HANDLEBAR CONTROL MODULES, Repair Procedures
HD-39969	ULTRA TORCH	A.24 SEALED SPLICE CONNECTORS, Sealed Splice Connector Repair
HD-41182	FUEL PRESSURE GAUGE	4.5 FUEL PRESSURE TEST, Testing
HD-41183	HEAT SHIELD ATTACHMENT	7.36 HANDLEBAR CONTROL MODULES, Repair Procedures
HD-41183	HEAT SHIELD ATTACHMENT	A.24 SEALED SPLICE CONNECTORS, Sealed Splice Connector Repair
HD-41417	PROPANE ENRICHMENT KIT	4.18 INTAKE LEAK TEST, Leak Tester
HD-41475	DEUTSCH TERMINAL REPAIR KIT	A.13 DEUTSCH DT SEALED CONNECTORS, Deutsch DT Sealed Connector Repair
HD-41475-100	FLAT BLADE L-HOOK	7.15 TAIL LAMP: ALL BUT FLSTN, Base Replacement
HD-41475-100	FLAT BLADE L-HOOK	A.13 DEUTSCH DT SEALED CONNECTORS, Deutsch DT Sealed Connector Repair
HD-41609	AMP MULTI-LOCK CRIMPER	A.21 TYCO 070 MULTILOCK UNSEALED CONNECTOR, Tyco 070 Multilock Unsealed Connector Repair
HD-41609	AMP MULTI-LOCK CRIMPER	A.21 TYCO 070 MULTILOCK UNSEALED CONNECTOR, Tyco 070 Multilock Unsealed Connector Repair
HD-42310-25A	SOFTAIL ENGINE CRADLE	3.26 CRANKCASE DISASSEMBLY AND REPAIR, Crankcase Disassembly
HD-42311	OIL FILTER WRENCH	1.6 ENGINE OIL AND FILTER, Changing Oil and Filter
HD-42317-A	PISTON PIN RETAINING RING INSTALLER	3.16 TOP END OVERHAUL: DISASSEMBLY, Piston
HD-42317-A	PISTON PIN RETAINING RING INSTALLER	3.23 TOP END OVERHAUL: ASSEMBLY, Piston
HD-42320-B	PISTON PIN REMOVER	3.16 TOP END OVERHAUL: DISASSEMBLY, Piston
HD-42322	PISTON SUPPORT PLATE	3.23 TOP END OVERHAUL: ASSEMBLY, Cylinder
HD-42324-A	CYLINDER TORQUE PLATES	3.16 TOP END OVERHAUL: DISASSEMBLY, Cylinder Head
HD-42324-A	CYLINDER TORQUE PLATES	3.20 CYLINDER HEAD, Inspection
HD-42324-A	CYLINDER TORQUE PLATES	3.21 CYLINDER, Inspection
HD-42325-A	CAMSHAFT NEEDLE BEARING REMOVER/INSTALLER	3.24 CAM COMPARTMENT AND COMPONENTS, Cam Needle Bearings
HD-42326-B	CRANKSHAFT GUIDE	3.29 CRANKCASE ASSEMBLY, Counterbalancer Assembly Installation
HD-42326-B	CRANKSHAFT GUIDE	3.29 CRANKCASE ASSEMBLY, Crankcase
HD-42720-4	CRANKSHAFT (ROLLER) BEARING DRIVER SHIM	3.26 CRANKCASE DISASSEMBLY AND REPAIR, Right Crankcase Half
HD-42720-5	REMOVER/INSTALLER SUPPORT TUBE	3.26 CRANKCASE DISASSEMBLY AND REPAIR, Left Crankcase Half
HD-42720-5	REMOVER/INSTALLER SUPPORT TUBE	3.26 CRANKCASE DISASSEMBLY AND REPAIR, Left Crankcase Half

Tools Used in This Manual

PART NUMBER	TOOL NAME	NOTES
HD-42879	ELECTRICAL CRIMPER TOOL	A.16 DEUTSCH DTM SEALED SOLID BARREL MINI TERMINAL REPAIR, Deutsch DTM Sealed Solid Barrel Terminal Crimps
HD-44060-10A	25MM BEARING REMOVER (NON-ABS)	2.8 SEALED WHEEL BEARINGS, Removal
HD-44060-10A	25MM BEARING REMOVER (NON-ABS)	2.8 SEALED WHEEL BEARINGS, Removal
HD-44060-11A	25MM BEARING REMOVER (ABS)	2.8 SEALED WHEEL BEARINGS, Removal
HD-44060-11A	25MM BEARING REMOVER (ABS)	2.8 SEALED WHEEL BEARINGS, Removal
HD-44060C	WHEEL BEARING INSTALLER/REMOVER	2.8 SEALED WHEEL BEARINGS, Removal
HD-44060C	WHEEL BEARING INSTALLER/REMOVER	2.8 SEALED WHEEL BEARINGS, Installation
HD-44061	FUEL PRESSURE GAUGE ADAPTER	4.5 FUEL PRESSURE TEST, Testing
HD-44062	BALANCE SHAFT RETENTION PINS	3.26 CRANKCASE DISASSEMBLY AND REPAIR, Counterbalancer Assembly
HD-44062	BALANCE SHAFT RETENTION PINS	3.26 CRANKCASE DISASSEMBLY AND REPAIR, Counterbalancer Assembly
HD-44062	BALANCE SHAFT RETENTION PINS	3.29 CRANKCASE ASSEMBLY, Counterbalancer Assembly Installation
HD-44062	BALANCE SHAFT RETENTION PINS	3.29 CRANKCASE ASSEMBLY, Counterbalancer Assembly Installation
HD-44063	HYDRAULIC TENSIONER COMPRESSOR	3.26 CRANKCASE DISASSEMBLY AND REPAIR, Counterbalancer Assembly
HD-44063	HYDRAULIC TENSIONER COMPRESSOR	3.29 CRANKCASE ASSEMBLY, Counterbalancer Assembly Installation
HD-44065-1	CRANKSHAFT (ROLLER) BEARING REMOVAL/INSTALL PILOT/DRIVER	3.26 CRANKCASE DISASSEMBLY AND REPAIR, Right Crankcase Half
HD-44065-1	CRANKSHAFT (ROLLER) BEARING REMOVAL/INSTALL PILOT/DRIVER	3.26 CRANKCASE DISASSEMBLY AND REPAIR, Right Crankcase Half
HD-44065-4	CRANKSHAFT (ROLLER) BEARING REMOVAL/INSTALL SUPPORT TUBE	3.26 CRANKCASE DISASSEMBLY AND REPAIR, Right Crankcase Half
HD-44065-4	CRANKSHAFT (ROLLER) BEARING REMOVAL/INSTALL SUPPORT TUBE	3.26 CRANKCASE DISASSEMBLY AND REPAIR, Right Crankcase Half
HD-44067	OIL FILTER WRENCH	1.6 ENGINE OIL AND FILTER, Changing Oil and Filter
HD-44358	FLYWHEEL SUPPORT FIXTURE	3.26 CRANKCASE DISASSEMBLY AND REPAIR, Sprocket Shaft Bearing Inner Race
HD-44408	HYDRAULIC TENSIONER RETAINERS	3.26 CRANKCASE DISASSEMBLY AND REPAIR, Counterbalancer Assembly
HD-44408	HYDRAULIC TENSIONER RETAINERS	3.29 CRANKCASE ASSEMBLY, Counterbalancer Assembly Installation
HD-44455	OIL LINE REMOVING TOOL	3.30 OIL TANK: ALL BUT FXSB, Removal and Disassembly
HD-44455	OIL LINE REMOVING TOOL	3.31 OIL TANK: FXSB, Removal and Disassembly
HD-44695-A	MULTI-LOCK CRIMPER	A.20 TYCO 040 MULTILOCK UNSEALED CONNECTOR, Tyco 040 Multilock Unsealed Connector Repair
HD-44695-A	MULTI-LOCK CRIMPER	A.20 TYCO 040 MULTILOCK UNSEALED CONNECTOR, Tyco 040 Multilock Unsealed Connector Repair
HD-45928	TERMINAL REMOVER	A.11 DELPHI MICRO 64 SEALED CONNECTORS, Delphi Micro 64 Sealed Connector Repair
HD-45929	TERMINAL CRIMPER	A.11 DELPHI MICRO 64 SEALED CONNECTORS, Delphi Micro 64 Sealed Connector Repair

Tools Used in This Manual

PART NUMBER	TOOL NAME	NOTES
HD-46282A	FINAL DRIVE SPROCKET LOCKING TOOL	5.7 TRANSMISSION SPROCKET, Installation
HD-46282-A	FINAL DRIVE SPROCKET LOCKING TOOL	5.7 TRANSMISSION SPROCKET, Removal
HD-47856-1	INSTALLER	6.7 MAIN DRIVE GEAR AND BEARING, Installation
HD-47856-2	PILOT	6.7 MAIN DRIVE GEAR AND BEARING, Installation
HD-47856-3	ADAPTER	6.7 MAIN DRIVE GEAR AND BEARING, Installation
HD-47856-6	NUT	6.7 MAIN DRIVE GEAR AND BEARING, Installation
HD-47856-7	CROW'S FOOT WRENCH	6.7 MAIN DRIVE GEAR AND BEARING, Installation
HD-47910	MAINSHAFT LOCKNUT WRENCH	5.7 TRANSMISSION SPROCKET, Removal
HD-47910	MAINSHAFT LOCKNUT WRENCH	5.7 TRANSMISSION SPROCKET, Installation
HD-47932	MAIN DRIVE GEAR BEARING AND SEAL INSTALLATION TOOL	6.7 MAIN DRIVE GEAR AND BEARING, Cleaning and Inspection
HD-47941	CRANKSHAFT/CAMSHAFT SPROCKET LOCKING TOOL	3.24 CAM COMPARTMENT AND COMPONENTS, Cam Support Plate and Cover Removal
HD-47941	CRANKSHAFT/CAMSHAFT SPROCKET LOCKING TOOL	3.24 CAM COMPARTMENT AND COMPONENTS, Cam Support Plate and Cover Installation
HD-47956	CAMSHAFT ASSEMBLY TOOL	3.24 CAM COMPARTMENT AND COMPONENTS, Camshafts
HD-47977	PRIMARY DRIVE LOCKING TOOL	5.4 DRIVE COMPONENTS, Removal
HD-48114	TERMINAL REMOVER	A.19 MOLEX MX 150 SEALED CONNECTORS, Molex MX 150 Sealed Connector Repair
HD-48119	TERMINAL CRIMPER	A.19 MOLEX MX 150 SEALED CONNECTORS, Crimp Terminal to Lead
HD-48283	CRANKSHAFT ROTATING WRENCH	3.16 TOP END OVERHAUL: DISASSEMBLY, Rocker Arm Support Plate
HD-48309	BALANCER/BEARING INSTALLER	3.28 COUNTERBALANCER ASSEMBLY REPAIR, Cleaning, Inspection, and Repair
HD-48457-6	REMOVAL COLLET	3.28 COUNTERBALANCER ASSEMBLY REPAIR, Cleaning, Inspection, and Repair
HD-48457-A	BALANCER AND BEARING REMOVER	3.28 COUNTERBALANCER ASSEMBLY REPAIR, Cleaning, Inspection, and Repair
HD-48474	OUTER BALANCER BEARING REMOVER AND INSTALLER	3.28 COUNTERBALANCER ASSEMBLY REPAIR, Cleaning, Inspection, and Repair
HD-48498-A	ACR SOLENOID SOCKET	7.20 AUTOMATIC COMPRESSION RELEASE (ACR), Removal
HD-48615	BALANCE SHAFT SPROCKET ALIGNMENT TOOL	3.29 CRANKCASE ASSEMBLY, Counterbalancer Assembly Installation
HD-48648	BRAKE CALIPER PISTON REMOVER	2.14 REAR BRAKE CALIPER, Disassembly
HD-48650	DIGITAL TECHNICIAN II	2.15 BRAKE LINES, Front Master Cylinder to Front HCU
HD-48650	DIGITAL TECHNICIAN II	2.17 ABS: HYDRAULIC CONTROL UNIT (HCU), Front Hydraulic Control Unit (HCU)
HD-48650	DIGITAL TECHNICIAN II	2.17 ABS: HYDRAULIC CONTROL UNIT (HCU), Rear Hydraulic Control Unit (HCU)
HD-48650	DIGITAL TECHNICIAN II	2.18 BLEEDING BRAKES, Procedure
HD-48650	DIGITAL TECHNICIAN II	7.4 ELECTRONIC CONTROL MODULE (ECM), General
HD-48856-A	AXLE ALIGNMENT PLUGS	2.10 VEHICLE ALIGNMENT, Axle Alignment
HD-48904	IGNITION SWITCH SPANNER WRENCH	7.21 IGNITION COIL, Removal

Tools Used in This Manual

PART NUMBER	TOOL NAME	NOTES
HD-48985	SPOKE TORQUE WRENCH	1.8 TIRES AND WHEELS, Wheel Spokes
HD-48985	SPOKE TORQUE WRENCH	2.7 CHECKING AND TRUING WHEELS, Truing Laced Wheels
HD-50120	UNIVERSAL CRIMPER SET	A.4 DELPHI 100W MICRO-PACK SEALED CONNECTOR, Crimping Terminals
HD-50120	UNIVERSAL CRIMPER SET	A.17 JAE MX19 SEALED CONNECTORS, Crimping Terminals
HD-50120	UNIVERSAL CRIMPER SET	A.18 MOLEX CMC SEALED CONNECTORS, Crimping Terminals
HD-50120	UNIVERSAL CRIMPER SET	A.22 TYCO GET 64 SEALED CONNECTOR, Crimping Terminals
HD-50120	UNIVERSAL CRIMPER SET	A.23 TYCO MCP SEALED CONNECTOR, Crimping Terminals
HD-50120-2	HAND CRIMP FRAME	A.4 DELPHI 100W MICRO-PACK SEALED CONNECTOR, Crimping Terminals
HD-50120-2	HAND CRIMP FRAME	A.17 JAE MX19 SEALED CONNECTORS, Crimping Terminals
HD-50120-2	HAND CRIMP FRAME	A.18 MOLEX CMC SEALED CONNECTORS, Crimping Terminals
HD-50120-2	HAND CRIMP FRAME	A.22 TYCO GET 64 SEALED CONNECTOR, Crimping Terminals
HD-50120-3	JAE DIE	A.18 MOLEX CMC SEALED CONNECTORS, Crimping Terminals
HD-50120-4	JAE DIE	A.18 MOLEX CMC SEALED CONNECTORS, Crimping Terminals
HD-50120-6	JAE DIE	A.17 JAE MX19 SEALED CONNECTORS, Crimping Terminals
HD-50120-7	TYCO AND DELPHI TERMINAL CRIMP DIE	A.4 DELPHI 100W MICRO-PACK SEALED CONNECTOR, Crimping Terminals
HD-50120-7	TYCO AND DELPHI TERMINAL CRIMP DIE	A.22 TYCO GET 64 SEALED CONNECTOR, Crimping Terminals
HD-50120-8	TYCO MCP DIE	A.23 TYCO MCP SEALED CONNECTOR, Crimping Terminals
HD-50120-A	BOSCH TERMINAL REPAIR KIT	A.3 BOSCH BTC SEALED CONNECTOR, Bosch BTC Sealed Connector Repair
HD-50423	0.6 MM TERMINAL EXTRACTOR TOOL	A.18 MOLEX CMC SEALED CONNECTORS, Molex CMC Sealed Connectors
HD-50424	1.5 MM TERMINAL EXTRACTOR TOOL	A.18 MOLEX CMC SEALED CONNECTORS, Molex CMC Sealed Connectors
HD-50652	OXYGEN SENSOR SOCKET	4.14 OXYGEN (O2) SENSOR, Removal
HD-50988	IGNITION SWITCH SPANNER WRENCH	7.11 IGNITION AND LIGHT SWITCH, Removal and Installation: FXSB
HD-51337	SHIFTER SHAFT SEAL INSTALLATION TOOL	6.8 TRANSMISSION CASE, Assembly
HD-94660-2	PILOT	5.7 TRANSMISSION SPROCKET, Removal
HD-94660-2	PILOT	5.7 TRANSMISSION SPROCKET, Installation
HD-94681-80	SPOKE NIPPLE WRENCH	1.8 TIRES AND WHEELS, Wheel Spokes
HD-94681-80	SPOKE NIPPLE WRENCH	1.8 TIRES AND WHEELS, Wheel Spokes

Tools Used in This Manual

PART NUMBER	TOOL NAME	NOTES
HD-94681-80	SPOKE NIPPLE WRENCH	2.7 CHECKING AND TRUING WHEELS, Laced Wheel Rim Offset
HD-94681-80	SPOKE NIPPLE WRENCH	2.7 CHECKING AND TRUING WHEELS, Truing Laced Wheels
HD-95635-46	ALL-PURPOSE CLAW PULLER	3.28 COUNTERBALANCER ASSEMBLY REPAIR, Cleaning, Inspection, and Repair
HD-95637-10	LONG BOLTS	6.7 MAIN DRIVE GEAR AND BEARING, Removal
HD-95637-46B	WEDGE ATTACHMENT	3.26 CRANKCASE DISASSEMBLY AND REPAIR, Sprocket Shaft Bearing Inner Race
HD-95637-46B	WEDGE ATTACHMENT	3.26 CRANKCASE DISASSEMBLY AND REPAIR, Sprocket Shaft Bearing Inner Race
HD-95637-46B	WEDGE ATTACHMENT	6.7 MAIN DRIVE GEAR AND BEARING, Removal
HD-95937-46B	WEDGE ATTACHMENT	3.28 COUNTERBALANCER ASSEMBLY REPAIR, Cleaning, Inspection, and Repair
HD-95952-1	THREADED CYLINDERS	3.23 TOP END OVERHAUL: ASSEMBLY, Cylinder
HD-95952-33C	CONNECTING ROD CLAMPING TOOL	3.23 TOP END OVERHAUL: ASSEMBLY, Cylinder
HD-96333-51F	PISTON RING COMPRESSOR	3.23 TOP END OVERHAUL: ASSEMBLY, Cylinder
HD-96921-52D	OIL PRESSURE GAUGE SET	3.7 OIL PRESSURE, Checking Oil Pressure
HD-97087-65B	HOSE CLAMP PLIERS	3.30 OIL TANK: ALL BUT FXSB, Installation
HD-97087-65B	HOSE CLAMP PLIERS	3.31 OIL TANK: FXSB, Installation
HD-97225-55C	SPROCKET SHAFT BEARING INSTALLER	3.26 CRANKCASE DISASSEMBLY AND REPAIR, Sprocket Shaft Bearing Inner Race
HD-97225-55C	SPROCKET SHAFT BEARING INSTALLER	3.29 CRANKCASE ASSEMBLY, Crankcase
HD-99500-80	WHEEL TRUING AND BALANCING STAND	2.7 CHECKING AND TRUING WHEELS, Checking Wheel Runout
HD-99500-80	WHEEL TRUING AND BALANCING STAND	2.7 CHECKING AND TRUING WHEELS, Truing Laced Wheels
HD-99500-80	WHEEL TRUING AND BALANCING STAND	2.7 CHECKING AND TRUING WHEELS, Truing Laced Wheels
J-5586A	TRANSMISSION SHAFT RETAINING RING PLIERS	6.6 TRANSMISSION ASSEMBLY, Disassembly
RS-25100-200	BEARING	6.7 MAIN DRIVE GEAR AND BEARING, Removal
RS-25100-200	BEARING	6.7 MAIN DRIVE GEAR AND BEARING, Removal
SNAP-ON BB200A	BASIC VACUUM BRAKE BLEEDER	2.18 BLEEDING BRAKES, Procedure
SNAP-ON BB200A	BASIC VACUUM BRAKE BLEEDER	2.17 ABS: HYDRAULIC CONTROL UNIT (HCU), Front Hydraulic Control Unit (HCU)
SNAP-ON BB200A	BASIC VACUUM BRAKE BLEEDER	2.17 ABS: HYDRAULIC CONTROL UNIT (HCU), Rear Hydraulic Control Unit (HCU)
SNAP-ON FRDH141	"DOG BONE" TORQUE ADAPTER	3.23 TOP END OVERHAUL: ASSEMBLY, Breather and Rocker Cover
SNAP-ON PRS8	PISTON RING EXPANDER	3.22 PISTON, Disassembly
SNAP-ON TA360	TORQUE ANGLE GAUGE	5.7 TRANSMISSION SPROCKET, Installation
SRES24	SNAP-ON-ADAPTER	2.22 REAR SHOCK ABSORBERS, Removal
SS-306G	SNAP-ON TORQUE COMPUTER	2.22 REAR SHOCK ABSORBERS, Installation
TA360	SNAP-ON TORQUE ANGLE GAUGE	3.21 CYLINDER, Inspection
TA360	SNAP-ON TORQUE ANGLE GAUGE	3.23 TOP END OVERHAUL: ASSEMBLY, Cylinder Head

Tools Used in This Manual

PART NUMBER	TOOL NAME	NOTES
TT600-3	SNAP-ON PICK	A.8 DELPHI 630 METRI-PACK UNSEALED CONNECTORS, Delphi 630 Metri-Pack Unsealed Connector Repair

FASTENER	TORQUE VALUE		NOTES
ABS front brake line 90 degree fitting bolt	36-48 **in-lbs**	4.1-5.4 Nm	2.15 BRAKE LINES, HCU to Front Brake Caliper
ACR	13-17 ft-lbs	17.6-23.0 Nm	7.20 AUTOMATIC COMPRESSION RELEASE (ACR), Installation/Apply three equally spaced dots of LOCTITE 246 MEDIUM STRENGTH/HIGH TEMPERATURE THREADLOCKER (blue) around lower third of threads
Active exhaust module fasteners	32-40 **in-lbs**	3.6-4.5 Nm	7.34 ACTIVE EXHAUST, Installation
Air cleaner bracket screws	40-60 **in-lbs**	4.5-6.8 Nm	1.7 AIR CLEANER AND EXHAUST SYSTEM, Installation
Air cleaner bracket screws	40-60 **in-lbs**	4.5-6.8 Nm	4.3 AIR CLEANER ASSEMBLY, Installation
Air cleaner cover screw	36-60 **in-lbs**	4.1-6.8 Nm	1.7 AIR CLEANER AND EXHAUST SYSTEM, Installation
Air cleaner cover screw	36-60 **in-lbs**	4.1-6.8 Nm	4.3 AIR CLEANER ASSEMBLY, Installation
Auxiliary lamp bracket: FLSTC	72-120 **in-lbs**	8.1-13.6 Nm	7.17 AUXILIARY LAMPS: FLSTC, FLSTN, FLSTC Models
Auxiliary lamp bracket: FLSTN	72-120 **in-lbs**	8.1-13.6 Nm	7.17 AUXILIARY LAMPS: FLSTC, FLSTN, FLSTN Models
Auxiliary lamp nut: FLSTC	15-18 ft-lbs	20.3-24.4 Nm	7.17 AUXILIARY LAMPS: FLSTC, FLSTN, Adjustment: FLSTC/FLSTN Models
Auxiliary lamp nut: FLSTN	15-18 ft-lbs	20.3-24.4 Nm	7.17 AUXILIARY LAMPS: FLSTC, FLSTN, Adjustment: FLSTC/FLSTN Models
Axle nut, front	70-75 ft-lbs	95.0-101.8 Nm	2.4 FRONT WHEEL, Installation
Axle nut, rear	95-105 ft-lbs	128.8-142.4 Nm	1.12 DRIVE BELT AND SPROCKETS, Adjusting Belt Deflection
Axle nut, rear	95-105 ft-lbs	129-142 Nm	2.10 VEHICLE ALIGNMENT, Axle Alignment
Axle slider cap fasteners, front	132-180 **in-lbs**	14.9-20.3 Nm	2.4 FRONT WHEEL, Installation
Balance shaft bolts	42-47 ft-lbs	56.9-63.7 Nm	3.29 CRANKCASE ASSEMBLY, Counterbalancer Assembly Installation
Balance shaft support screws	18-22 ft-lbs	24.4-29.8 Nm	3.29 CRANKCASE ASSEMBLY, Counterbalancer Assembly Installation
Banjo bolts to front HCU	120-144 **in-lbs**	13.6-16.3 Nm	2.17 ABS: HYDRAULIC CONTROL UNIT (HCU), Front Hydraulic Control Unit (HCU)
Banjo bolts to rear HCU	120-144 **in-lbs**	13.6-16.3 Nm	2.17 ABS: HYDRAULIC CONTROL UNIT (HCU), Rear Hydraulic Control Unit (HCU)
Banjo bolt to front caliper	17-22 ft-lbs	23.1-29.9 Nm	2.15 BRAKE LINES, HCU to Front Brake Caliper
Banjo bolt-to-front master cylinder	17-22 ft-lbs	23.1-29.9 Nm	2.15 BRAKE LINES, Front Master Cylinder to Front HCU
Banjo bolt to HCU	120-144 **in-lbs**	13.6-16.3 Nm	2.15 BRAKE LINES, Front Master Cylinder to Front HCU
Banjo bolt to HCU	120-144 **in-lbs**	13.6-16.3 Nm	2.15 BRAKE LINES, HCU to Front Brake Caliper
Banjo bolt to HCU	120-144 **in-lbs**	13.6-16.3 Nm	2.15 BRAKE LINES, Rear HCU to Rear Brake Caliper
Banjo bolt to rear caliper	17-22 ft-lbs	23.1-29.9 Nm	2.15 BRAKE LINES, Rear HCU to Rear Brake Caliper
Banjo bolt to rear HCU	120-144 **in-lbs**	13.6-16.3 Nm	2.15 BRAKE LINES, Rear Master Cylinder to Rear HCU
Banjo bolt to rear master cylinder	17-22 ft-lbs	23.1-29.9 Nm	2.15 BRAKE LINES, Rear Master Cylinder to Rear HCU
Battery cable to battery fasteners	60-72 **in-lbs**	6.8-8.1 Nm	7.12 BATTERY CABLES, Routing Procedure
Battery cable to battery fasteners	60-72 **in-lbs**	6.8-8.1 Nm	7.12 BATTERY CABLES, Routing Procedure
Battery terminal fasteners	60-72 **in-lbs**	6.8-8.1 Nm	1.19 BATTERY MAINTENANCE, Battery Installation and Connection

FASTENER	TORQUE VALUE		NOTES
Battery terminal fasteners	60-72 in-lbs	6.8-8.1 Nm	1.19 BATTERY MAINTENANCE, Battery Installation and Connection
Belt sprocket screws, final torque	67-73 ft-lbs	90.9-99.0 Nm	2.5 REAR WHEEL, Assembly
Belt sprocket screws, first torque	50 ft-lbs	67.8 Nm	2.5 REAR WHEEL, Assembly/After initial torque, loosen screws 1/2 turn (180 degrees)
Brake caliper, front, banjo bolt	14-18 ft-lbs	19.0-24.4 Nm	2.12 FRONT BRAKE CALIPER, Installation
Brake caliper, front, bleeder valve	35-61 in-lbs	3.9-6.9 Nm	2.18 BLEEDING BRAKES, Procedure
Brake caliper, front, bridge bolt	14.5-18.0 ft-lbs	19.6-24.5 Nm	2.12 FRONT BRAKE CALIPER, Assembly
Brake caliper, front, mounting bolts	28-38 ft-lbs	38.0-51.5 Nm	2.12 FRONT BRAKE CALIPER, Installation
Brake caliper, rear, bleeder valve	80-100 in-lbs	9.0-11.3 Nm	2.18 BLEEDING BRAKES, Procedure
Brake caliper, rear, mounting fasteners	16-20 ft-lbs	21.7-27.1 Nm	1.16 BRAKE PADS AND DISCS, Brake Pad Replacement
Brake caliper, rear, pad pin	80-120 in-lbs	9.0-13.6 Nm	1.16 BRAKE PADS AND DISCS, Brake Pad Replacement
Brake caliper/master cylinder banjo bolt	14-18 ft-lbs	19.0-24.4 Nm	2.11 FRONT BRAKE MASTER CYLINDER, Assembly and Installation
Brake caliper bleeder screw	35-61 in-lbs	4.0-6.9 Nm	2.12 FRONT BRAKE CALIPER, Assembly
Brake caliper bleeder screw	80-100 in-lbs	9.0-11.3 Nm	2.14 REAR BRAKE CALIPER, Assembly
Brake caliper mounting bolt, front	28-38 ft-lbs	38.0-51.5 Nm	2.4 FRONT WHEEL, Installation
Brake caliper mounting bolt, rear	16-20 ft-lbs	21.7-27.1 Nm	2.14 REAR BRAKE CALIPER, Installation
Brake caliper mounting bolts, front	28-38 ft-lbs	38.0-51.5 Nm	1.16 BRAKE PADS AND DISCS, Brake Pad Replacement
Brake disc screws, front	16-24 ft-lbs	21.7-32.5 Nm	2.4 FRONT WHEEL, Assembly
Brake disc screws, front	16-24 ft-lbs	21.7-32.5 Nm	2.4 FRONT WHEEL, Assembly
Brake disc screws, rear	30-45 ft-lbs	40.7-61.0 Nm	2.5 REAR WHEEL, Assembly
Brake hose bracket bolt, front	96-120 in-lbs	10.8-13.6 Nm	2.20 STEERING HEAD, Installation
Brake hose bracket bolt, front	96-120 in-lbs	10.8-13.6 Nm	2.20 STEERING HEAD, Installation
Brake hose bracket bolt, front	96-120 in-lbs	10.8-13.6 Nm	2.20 STEERING HEAD, Installation
Brake master cylinder, front, reservoir cover screws	8.9-17.7 in-lbs	1.0-2.0 Nm	2.18 BLEEDING BRAKES, Procedure
Brake master cylinder, rear, reservoir cover screws	6-8 in-lbs	0.7-0.9 Nm	2.18 BLEEDING BRAKES, Procedure
Brake pad pin, rear caliper	80-120 in-lbs	9.0-13.6 Nm	2.14 REAR BRAKE CALIPER, Assembly
Brake pad screws, front	130.1-173.5 in-lbs	14.7-19.6 Nm	1.16 BRAKE PADS AND DISCS, Brake Pad Replacement
Brake pedal screw, rear	12-16 ft-lbs	16.3-21.7 Nm	1.15 BRAKES, Rear Brake Pedal
Breather assembly screws	120-156 in-lbs	13.6-17.6 Nm	3.23 TOP END OVERHAUL: ASSEMBLY, Breather and Rocker Cover
Breather bolts, cylinder head	22-24 ft-lbs	29.9-32.6 Nm	4.3 AIR CLEANER ASSEMBLY, Installation
Cam chain tensioner fasteners	100-120 in-lbs	11.3-13.6 Nm	3.24 CAM COMPARTMENT AND COMPONENTS, Cam Support Plate and Cover Installation
Cam cover screws	125-155 in-lbs	14.1-17.5 Nm	3.24 CAM COMPARTMENT AND COMPONENTS, Cam Support Plate and Cover Installation
Cam sprocket flange bolt, 1st torque	15 ft-lbs	20.3 Nm	3.24 CAM COMPARTMENT AND COMPONENTS, Cam Support Plate and Cover Installation

FASTENER	TORQUE VALUE		NOTES
Cam sprocket flange bolt, final torque	34 ft-lbs	46.1 Nm	3.24 CAM COMPARTMENT AND COMPONENTS, Cam Support Plate and Cover Installation
Cam support plate screws	100-120 **in-lbs**	11.3-13.6 Nm	3.24 CAM COMPARTMENT AND COMPONENTS, Cam Support Plate and Cover Installation
Charcoal canister screws	90-114 **in-lbs**	10.2-12.9 Nm	4.19 EVAPORATIVE EMISSIONS CONTROL SYSTEM, Charcoal Canister
Clutch adjuster screw jamnut	72-120 **in-lbs**	8.1-13.6 Nm	1.11 CLUTCH, Adjustment
Clutch cable adjuster jamnut	120 **in-lbs**	13.6 Nm	1.11 CLUTCH, Adjustment
Clutch cable fitting	90-120 **in-lbs**	10.2-13.6 Nm	6.5 CLUTCH RELEASE COVER, Assembly and Installation
Clutch diaphragm spring retainer bolts	70-100 **in-lbs**	7.9-11.3 Nm	5.6 CLUTCH, Clutch Pack Only
Clutch hub mainshaft nut	70-80 ft-lbs	94.9-108.5 Nm	5.4 DRIVE COMPONENTS, Installation
Clutch inspection cover screws	84-108 **in-lbs**	9.5-12.2 Nm	1.9 PRIMARY CHAINCASE LUBRICANT, Changing Primary Chaincase Lubricant/Torque sequence
Clutch inspection cover screws	84-108 **in-lbs**	9.5-12.2 Nm	1.11 CLUTCH, Adjustment
Clutch release cover screws	132-156 **in-lbs**	14.9-17.6 Nm	6.5 CLUTCH RELEASE COVER, Assembly and Installation
Coil cover screw: all but FXSB	30-40 **in-lbs**	3.4-4.5 Nm	7.21 IGNITION COIL, Installation
Coil mounting screw: FXSB	96-120 **in-lbs**	10.9-13.6 Nm	7.21 IGNITION COIL, Installation
Compensating sprocket bolt, final torque	175 ft-lbs	237.3 Nm	5.4 DRIVE COMPONENTS, Installation
Compensating sprocket bolt, initial torque	100 ft-lbs	135.6 Nm	5.4 DRIVE COMPONENTS, Installation
Console mounting nut, FXSB	30-50 **in-lbs**	3.4-5.7 Nm	4.7 CONSOLE: FXSB, Installation
Counterbalance assembly bearing	40-70 **in-lbs**	4.5-7.9 Nm	3.28 COUNTERBALANCER ASSEMBLY REPAIR, Cleaning, Inspection, and Repair
Crankcase bolt, 1st torque	120 **in-lbs**	13.6 Nm	3.29 CRANKCASE ASSEMBLY, Crankcase
Crankcase bolt, final torque	15-19 ft-lbs	20.3-25.8 Nm	3.29 CRANKCASE ASSEMBLY, Crankcase
Crankcase oil fittings	120-168 **in-lbs**	13.6-19.0 Nm	3.26 CRANKCASE DISASSEMBLY AND REPAIR, Pipe Plugs and Oil Fittings
Crankcase pipe plugs	120-144 **in-lbs**	13.6-16.3 Nm	3.26 CRANKCASE DISASSEMBLY AND REPAIR, Pipe Plugs and Oil Fittings
Crank position sensor (CKP)	90-120 **in-lbs**	10.2-13.6 Nm	7.19 CRANK POSITION SENSOR (CKP), Installation
Crankshaft sprocket bolt, 1st torque	15 ft-lbs	20.3 Nm	3.24 CAM COMPARTMENT AND COMPONENTS, Cam Support Plate and Cover Installation
Crankshaft sprocket bolt, final torque	24 ft-lbs	32.5 Nm	3.24 CAM COMPARTMENT AND COMPONENTS, Cam Support Plate and Cover Installation
Cylinder headbolts, 1st torque	120-144 **in-lbs**	13.6-16.3 Nm	3.23 TOP END OVERHAUL: ASSEMBLY, Cylinder Head/ See procedure to tighten
Cylinder headbolts, 2nd torque	15-17 ft-lbs	20.3-23.0 Nm	3.23 TOP END OVERHAUL: ASSEMBLY, Cylinder Head
Cylinder headbolts, final torque	90 degrees	90 degrees	3.23 TOP END OVERHAUL: ASSEMBLY, Cylinder Head
Cylinder head bracket bolts	35-40 ft-lbs	47.5-54.2 Nm	3.13 ASSEMBLING MOTORCYCLE AFTER SERVICE, Procedure

FASTENER	TORQUE VALUE		NOTES
Cylinder head bracket bolts	35-40 ft-lbs	47.5-54.2 Nm	3.15 INSTALLING ENGINE IN CHASSIS, Procedure
Cylinder stud	120-240 in-lbs	13.6-27.1 Nm	3.26 CRANKCASE DISASSEMBLY AND REPAIR, Cylinder Studs
Cylinder torque plate bolts, 1st torque	120-144 in-lbs	13.6-16.3 Nm	3.21 CYLINDER, Inspection/ See procedure to tighten
Cylinder torque plate bolts, 2nd torque	15-17 ft-lbs	20.3-23.0 Nm	3.21 CYLINDER, Inspection
Cylinder torque plate bolts, final torque	90 degrees	90 degrees	3.21 CYLINDER, Inspection
Electrical panel fastener: FXSB	36-60 in-lbs	4.1-6.8 Nm	3.31 OIL TANK: FXSB, Installation
Electrical panel fasteners: all but FXSB	36-60 in-lbs	4.1-6.8 Nm	3.30 OIL TANK: ALL BUT FXSB, Installation
Electrical panel fasteners: all but FXSB	36-60 in-lbs	4.1-6.8 Nm	7.3 ELECTRICAL PANEL, Installation: All But FXSB
Engine/transmission bracket bolts	30-35 ft-lbs	40.7-47.5 Nm	3.15 INSTALLING ENGINE IN CHASSIS, Procedure
Engine mount bolt, top	45-50 ft-lbs	61.0-67.8 Nm	3.15 INSTALLING ENGINE IN CHASSIS, Procedure
Engine mount bracket nuts, top	20-25 ft-lbs	27.1-33.9 Nm	3.15 INSTALLING ENGINE IN CHASSIS, Procedure
Engine mounting bolt, upper	45-50 ft-lbs	61.0-67.8 Nm	3.13 ASSEMBLING MOTORCYCLE AFTER SERVICE, Procedure
Engine mounting bolts, front	70-80 ft-lbs	94.9-108.5 Nm	3.15 INSTALLING ENGINE IN CHASSIS, Procedure
Engine oil drain plug	14-21 ft-lbs	19.0-28.5 Nm	1.6 ENGINE OIL AND FILTER, Changing Oil and Filter
Engine temperature (ET) sensor	120-180 in-lbs	13.6-20.3 Nm	4.10 ENGINE TEMPERATURE SENSOR (ET), Installation
Exhaust carriage bolt flange locknut: FLSTN, FLSTF/B, FLS	20-25 ft-lbs	27.1-33.9 Nm	4.17 EXHAUST SYSTEM, System: FLSTN, FLSTF/B, FLS
Exhaust interconnect clamp: FLSTC, FXST, FXSB	25-30 ft-lbs	33.9-40.7 Nm	4.17 EXHAUST SYSTEM, System: FLSTC, FXST, FXSB
Exhaust manifold clamp lower nut, 1st torque: FLSTC, FXST, FXSB	9-18 in-lbs	1.0-2.0 Nm	4.17 EXHAUST SYSTEM, System: FLSTC, FXST, FXSB
Exhaust manifold clamp lower nut, 1st torque: FLSTN, FLSTF/B, FLS	9-18 in-lbs	1.0-2.0 Nm	4.17 EXHAUST SYSTEM, System: FLSTN, FLSTF/B, FLS
Exhaust manifold clamp lower nut, final torque: FLSTN, FLSTF/B, FLS	100-120 in-lbs	11.3-13.6 Nm	4.17 EXHAUST SYSTEM, System: FLSTN, FLSTF/B, FLS
Exhaust manifold clamp lower nut final torque: FLSTC, FXST, FXSB	100-120 in-lbs	11.3-13.6 Nm	4.17 EXHAUST SYSTEM, System: FLSTC, FXST, FXSB
Exhaust manifold clamp upper nut: FLSTC, FXST, FXSB	100-120 in-lbs	11.3-13.6 Nm	4.17 EXHAUST SYSTEM, System: FLSTC, FXST, FXSB
Exhaust manifold clamp upper nut: FLSTN, FLSTF/B, FLS	100-120 in-lbs	11.3-13.6 Nm	4.17 EXHAUST SYSTEM, System: FLSTN, FLSTF/B, FLS
Exhaust pipe clamp locknut: FLSTN, FLSTF/B, FLS	20-25 ft-lbs	27.1-33.9 Nm	4.17 EXHAUST SYSTEM, Mufflers: FLSTN, FLSTF/B, FLS
Exhaust system interconnect tube fasteners: FLSTC, FXST, FXSB	20-25 ft-lbs	27.1-33.9 Nm	4.17 EXHAUST SYSTEM, System: FLSTC, FXST, FXSB
Fender, rear, support fasteners, lower-front, 1st torque: FLSTC	30-35 ft-lbs	40.7-47.5 Nm	2.31 REAR FENDER: FLSTC, Installation/Initial torque

FASTENER	TORQUE VALUE		NOTES
Fender, rear, support fasteners, lower-front, 1st torque: FLSTF/B	30-35 ft-lbs	40.7-47.5 Nm	2.32 REAR FENDER: FLSTF/B, Installation/Initial torque
Fender, rear, support fasteners, lower-front, 1st torque: FLSTN	30-35 ft-lbs	40.7-47.5 Nm	2.36 REAR FENDER: FLSTN, Installation/Initial torque
Fender, rear, support fasteners, lower-front, 1st torque: FXST	30-35 ft-lbs	40.7-47.5 Nm	2.33 REAR FENDER: FXST, Installation/Initial torque
Fender, rear, support fasteners, lower-front, final torque: FLSTC	38-42 ft-lbs	51.5-56.9 Nm	2.31 REAR FENDER: FLSTC, Installation/Final torque
Fender, rear, support fasteners, lower-front, final torque: FLSTF/B	38-42 ft-lbs	51.5-56.9 Nm	2.32 REAR FENDER: FLSTF/B, Installation/Final torque
Fender, rear, support fasteners, lower-front, final torque: FLSTN	38-42 ft-lbs	51.5-56.9 Nm	2.36 REAR FENDER: FLSTN, Installation/Final torque
Fender, rear, support fasteners, lower-front, final torque: FXST	38-42 ft-lbs	51.5-56.9 Nm	2.33 REAR FENDER: FXST, Installation/Final torque
Fender, rear, support fasteners, upper: FLSTC	21-27 ft-lbs	28.5-36.6 Nm	2.31 REAR FENDER: FLSTC, Installation
Fender, rear, support fasteners, upper: FLSTF/B	21-27 ft-lbs	28.5-36.6 Nm	2.32 REAR FENDER: FLSTF/B, Installation
Fender, rear, support fasteners, upper: FLSTN	21-27 ft-lbs	28.5-36.6 Nm	2.36 REAR FENDER: FLSTN, Installation
Fender, rear, support fasteners, upper: FXST	21-27 ft-lbs	28.5-36.6 Nm	2.33 REAR FENDER: FXST, Installation
Fender fasteners, front	15-21 ft-lbs	20.3-28.5 Nm	2.30 FRONT FENDER, Installation
Fender support fasteners, rear, 1st torque: FLS	30-35 ft-lbs	40.7-47.5 Nm	2.34 REAR FENDER: FLS, Installation/Initial torque
Fender support fasteners, rear, final torque: FLS	38-42 ft-lbs	51.5-56.9 Nm	2.34 REAR FENDER: FLS, Installation/Final torque
Fender support fasteners - final torque	38-42 ft-lbs	51.5-56.9 Nm	2.47 SAREE GUARD: INDIA MODELS, Upper Saree Guards: All but FXSB
Fender support fasteners - first torque	30-35 ft-lbs	40.7-47.5 Nm	2.47 SAREE GUARD: INDIA MODELS, Upper Saree Guards: All but FXSB
Fender support studs: FLSTC	21-27 ft-lbs	28.5-36.6 Nm	2.45 SADDLEBAGS: FLSTC, Installation
Fender support to fender fasteners, rear: FLS	21-27 ft-lbs	28.5-36.6 Nm	2.34 REAR FENDER: FLS, Installation/Rear mount license plate.
Footrest support screw, passenger	25-30 ft-lbs	33.9-40.7 Nm	2.38 FOOTBOARDS AND FOOTRESTS, Passenger Footrest
Footrest support screw, passenger, left-side: FLSTN	25-30 ft-lbs	33.9-40.7 Nm	2.38 FOOTBOARDS AND FOOTRESTS, Passenger Footrest
Fork bracket pinch bolt, lower	30-35 ft-lbs	40.7-47.5 Nm	1.18 STEERING HEAD BEARINGS, Adjustment: FXSB
Fork bracket pinch bolt, lower	30-35 ft-lbs	40.7-47.5 Nm	1.18 STEERING HEAD BEARINGS, Adjustment: FXSB
Fork bracket pinch bolt, lower, FXST	55-60 ft-lbs	74.6-81.4 Nm	1.18 STEERING HEAD BEARINGS, Adjustment: FXST
Fork bracket pinch bolt, lower, FXST	55-60 ft-lbs	74.6-81.4 Nm	1.18 STEERING HEAD BEARINGS, Adjustment: FXST
Fork bracket pinch screw, upper, FLSTC, FLSTF/B, FLSTN, FLS	25-30 ft-lbs	33.9-40.7 Nm	1.18 STEERING HEAD BEARINGS, Adjustment: FLSTC, FLSTF/B, FLSTN, FLS

FASTENER	TORQUE VALUE		NOTES
Fork bracket pinch screws, lower, FLSTC, FLSTF/B, FLSTN, FLS	55-60 ft-lbs	74.6-81.4 Nm	1.18 STEERING HEAD BEARINGS, Adjustment: FLSTC, FLSTF/B, FLSTN, FLS
Fork damper tube screw, front	130-216 in-lbs	14.7-24.5 Nm	2.19 FRONT FORK, Assembly
Fork drain screw	52-78 in-lbs	5.9-8.9 Nm	2.19 FRONT FORK, Replacing Fork Oil
Fork lock set screw	10-12 in-lbs	1.1-1.4 Nm	2.40 FORK LOCK, Installation
Fork stem nut, FXSB	70-80 ft-lbs	94.9-108.4 Nm	1.18 STEERING HEAD BEARINGS, Adjustment: FXSB
Fork stem nut, FXSB	70-80 ft-lbs	94.9-108.4 Nm	1.18 STEERING HEAD BEARINGS, Adjustment: FXSB
Fork stem nut, FXST	70-80 ft-lbs	94.9-108.4 Nm	1.18 STEERING HEAD BEARINGS, Adjustment: FXST
Fork stem nut, FXST	70-80 ft-lbs	94.9-108.4 Nm	1.18 STEERING HEAD BEARINGS, Adjustment: FXST
Fork stem nut: FXSB	70-80 ft-lbs	94.9-108.4 Nm	2.20 STEERING HEAD, Installation
Fork stem nut: FXST	70-80 ft-lbs	94.9-108.4 Nm	2.20 STEERING HEAD, Installation
Fork stem pinch bolts, lower: all but FXSB	55-60 ft-lbs	74.6-81.3 Nm	2.19 FRONT FORK, Installation
Fork stem pinch bolts, upper and lower: FXSB	30-35 ft-lbs	40.7-47.5 Nm	2.19 FRONT FORK, Installation
Fork stem upper bracket pinch bolt: FLSTC, FLSTF/B, FLSTN, FLS	25-30 ft-lbs	33.9-40.7 Nm	2.20 STEERING HEAD, Installation
Fork tube cap	60-70 ft-lbs	81.3-95.0 Nm	2.19 FRONT FORK, Replacing Fork Oil
Fuel pump/fuel gauge sending unit screws	18-24 in-lbs	2.0-2.7 Nm	4.16 FUEL PUMP AND FUEL GAUGE SENDING UNIT, Installation
Fuel supply tube fastener	90-110 in-lbs	10.2-12.4 Nm	4.15 FUEL INJECTORS, Installation
Fuel tank screw, front	28-32 ft-lbs	38.0-43.4 Nm	4.6 FUEL TANK, Installation
Fuel tank screw, rear	18-22 ft-lbs	24.4-29.8 Nm	4.6 FUEL TANK, Installation
Fuel tank screw, rear, FXSB	18-22 ft-lbs	24.4-29.8 Nm	4.7 CONSOLE: FXSB, Installation
Handlebar clamp fasteners, lower: FLSTC, FLSTN, FLS, FXST	30-40 ft-lbs	40.7-54.3 Nm	2.27 HANDLEBAR: FLSTC, FLSTN, FLS, FXST, Installation
Handlebar clamp front fasteners	12-16 ft-lbs	16.3-21.7 Nm	2.29 HANDLEBAR: FXSB, Installation
Handlebar clamp front fasteners: FLSTC, FLSTN, FLS, FXST	12-15 ft-lbs	16.3-20.3 Nm	2.27 HANDLEBAR: FLSTC, FLSTN, FLS, FXST, Installation
Handlebar clamp rear fasteners	12-16 ft-lbs	16.3-21.7 Nm	2.29 HANDLEBAR: FXSB, Installation
Handlebar clamp rear fasteners: FLSTC, FLSTN, FLS, FXST	12-15 ft-lbs	16.3-20.3 Nm	2.27 HANDLEBAR: FLSTC, FLSTN, FLS, FXST, Installation
Handlebar clamp to clutch lever bracket screws	60-80 in-lbs	6.8-9.0 Nm	7.38 LEFT HANDLEBAR CONTROL MODULE, Installation
Handlebar clamp to master cylinder screws	60-80 in-lbs	6.8-9.0 Nm	7.37 RIGHT HANDLEBAR CONTROL MODULE, Installation
Handlebar lower clamp fastener; FLSTF/B	30-40 ft-lbs	40.7-54.2 Nm	2.28 HANDLEBAR: FLSTF/B, Installation
Handlebar switch assembly retainer screws	8-10 in-lbs	0.9-1.1 Nm	7.37 RIGHT HANDLEBAR CONTROL MODULE, Installation
Handlebar switch assembly retainer screws	8-10 in-lbs	0.9-1.1 Nm	7.37 RIGHT HANDLEBAR CONTROL MODULE, Front Brake Switch Replacement

FASTENER	TORQUE VALUE		NOTES
Handlebar switch assembly retainer screws	8-10 **in-lbs**	0.9-1.1 Nm	7.38 LEFT HANDLEBAR CONTROL MODULE, Installation
Handlebar switch assembly retainer screws	8-10 **in-lbs**	0.9-1.1 Nm	7.38 LEFT HANDLEBAR CONTROL MODULE, Clutch Switch Replacement
Handlebar switch clamp screw	60-80 **in-lbs**	6.8-9.0 Nm	2.11 FRONT BRAKE MASTER CYLINDER, Assembly and Installation
Handlebar switch housing screws	35-45 **in-lbs**	4.0-5.1 Nm	1.13 THROTTLE CABLES, Cable Inspection, Lubrication and Adjustment
Handlebar switch housing screws	35-45 **in-lbs**	4.0-5.1 Nm	7.37 RIGHT HANDLEBAR CONTROL MODULE, Installation
Handlebar switch housing screws	35-45 **in-lbs**	4.0-5.1 Nm	7.38 LEFT HANDLEBAR CONTROL MODULE, Installation
Handlebar upper clamp fasteners; FLSTF/B	12-18 ft-lbs	16.3-24.4 Nm	2.28 HANDLEBAR: FLSTF/B, Installation
HCU, rear, bracket screws	36-72 **in-lbs**	5.0-10.0 Nm	2.17 ABS: HYDRAULIC CONTROL UNIT (HCU), Rear Hydraulic Control Unit (HCU)
HCU, rear, clamp screw	24-42 **in-lbs**	2.7-4.7 Nm	2.17 ABS: HYDRAULIC CONTROL UNIT (HCU), Rear Hydraulic Control Unit (HCU)
HCU screws, lower front	54-84 **in-lbs**	6.1-9.5 Nm	2.17 ABS: HYDRAULIC CONTROL UNIT (HCU), Front Hydraulic Control Unit (HCU)
HCU screws, rear cover to front	24-36 **in-lbs**	2.7-4.1 Nm	2.17 ABS: HYDRAULIC CONTROL UNIT (HCU), Front Hydraulic Control Unit (HCU)
HCU screws, upper front	48-72 **in-lbs**	5.4-8.1 Nm	2.17 ABS: HYDRAULIC CONTROL UNIT (HCU), Front Hydraulic Control Unit (HCU)
Headlamp circuit board/pin housing screw: All but FLSTN	40-48 **in-lbs**	4.5-5.4 Nm	7.15 TAIL LAMP: ALL BUT FLSTN, Base Replacement
Headlamp horizontal adjustment fastener	30-35 ft-lbs	40.7-47.5 Nm	1.20 HEADLAMP ALIGNMENT, Headlamp Adjustment
Headlamp lens base screws: All but FLSTN	20-24 **in-lbs**	2.3-2.7 Nm	7.15 TAIL LAMP: ALL BUT FLSTN, Base Replacement
Headlamp vertical adjusting bolt	25-30 ft-lbs	33.9-40.7 Nm	1.20 HEADLAMP ALIGNMENT, Headlamp Adjustment
Horn bracket clamp: All but FXSB	80-100 **in-lbs**	9.0-11.3 Nm	7.33 HORN, Removal and Installation: All But FXSB
Horn bracket mounting bolt: FXSB	13-15 ft-lbs	17.6-20.4 Nm	7.33 HORN, Removal and Installation: FXSB
Horn bracket nut: All but FXSB	80-100 **in-lbs**	9.0-11.3 Nm	7.33 HORN, Removal and Installation: All But FXSB
Horn bracket screws: All but FXSB	35-55 **in-lbs**	4.0-6.2 Nm	7.33 HORN, Removal and Installation: All But FXSB
Ignition/light switch nut: FXSB	140-160 **in-lbs**	15.8-18.1 Nm	7.11 IGNITION AND LIGHT SWITCH, Removal and Installation: FXSB
Ignition coil screws: all but FXSB	120-180 **in-lbs**	13.6-20.3 Nm	7.21 IGNITION COIL, Installation
Ignition switch nut: FXSB	140-160 **in-lbs**	15.8-18.1 Nm	7.21 IGNITION COIL, Installation
Indicator lamp screws: FXSB	20-30 **in-lbs**	2.3-3.4 Nm	7.29 INDICATOR LAMPS, Installation: FXSB
Instrument console acorn nut	30-50 **in-lbs**	3.4-5.7 Nm	4.5 FUEL PRESSURE TEST, Testing
Instrument console acorn nut	30-50 **in-lbs**	3.4-5.7 Nm	4.6 FUEL TANK, Installation
Instrument console acorn nut	30-50 **in-lbs**	3.4-5.7 Nm	4.10 ENGINE TEMPERATURE SENSOR (ET), Installation
Instrument console acorn nut	30-50 **in-lbs**	3.4-5.7 Nm	4.16 FUEL PUMP AND FUEL GAUGE SENDING UNIT, Installation

FASTENER	TORQUE VALUE		NOTES
Instrument panel acorn nut: all but FXSB	84-132 **in-lbs**	9.5-14.9 Nm	7.11 IGNITION AND LIGHT SWITCH, Removal and Installation: All But FXSB
Intake air temperature sensor (IAT) fastener	15-20 **in-lbs**	1.7-2.3 Nm	4.9 INTAKE AIR TEMPERATURE SENSOR (IAT), Installation
Jiffy stand bracket assembly screws	25-30 ft-lbs	33.9-40.7 Nm	2.39 JIFFY STAND, Installation
Jiffy stand sensor screw	96-144 **in-lbs**	10.8-16.3 Nm	2.39 JIFFY STAND, Sensor: HDI Models
License plate bracket fasteners: FLSTN	30-50 **in-lbs**	3.4-5.6 Nm	7.16 TAIL LAMP: FLSTN, Tail Lamp Replacement
License plate bracket to mounting bracket lower fasteners: FLS	12-18 **in-lbs**	1.4-2.0 Nm	2.34 REAR FENDER: FLS, Installation/Rear mount license plate.
License plate bracket to mounting bracket upper fasteners: FLS	60-80 **in-lbs**	6.8-9.0 Nm	2.34 REAR FENDER: FLS, Installation/Rear mount license plate.
License plate support fasteners: FLSTN	60-90 **in-lbs**	6.8-10.2 Nm	7.16 TAIL LAMP: FLSTN, Tail Lamp Replacement
Lifter cover screws	100-120 **in-lbs**	11.3-13.6 Nm	3.23 TOP END OVERHAUL: ASSEMBLY, Push-rods, Lifters and Covers
Lower handlebar clamp fasteners	30-40 ft-lbs	40.7-54.3 Nm	2.29 HANDLEBAR: FXSB, Installation
Luggage rack front fasteners: FLSTN	96-120 **in-lbs**	10.8-13.6 Nm	2.44 LUGGAGE RACK: FLSTN, Removal and Installation
Luggage rack rear fasteners: FLSTN	12-14 ft-lbs	16.3-19.0 Nm	2.44 LUGGAGE RACK: FLSTN, Removal and Installation
Mainshaft/countershaft nuts	85-95 ft-lbs	115.3-128.8 Nm	6.6 TRANSMISSION ASSEMBLY, Assembly
Manifold mounting screws, 1st torque	16-20 **in-lbs**	1.8-2.3 Nm	4.11 INDUCTION MODULE, Installation
Manifold mounting screws, final torque	96-156 **in-lbs**	10.9-17.6 Nm	4.11 INDUCTION MODULE, Installation
Muffler clamp: FLSTN, FLSTF/B, FLS	38-43 ft-lbs	51.6-58.4 Nm	4.17 EXHAUST SYSTEM, Mufflers: FLSTN, FLSTF/B, FLS
Muffler clamps: FLSTC, FXST, FXSB	38-43 ft-lbs	51.6-58.4 Nm	4.17 EXHAUST SYSTEM, Mufflers: FLSTC, FXST, FXSB
Muffler fasteners: FLSTC, FXST, FXSB	96-120 **in-lbs**	10.9-13.6 Nm	4.17 EXHAUST SYSTEM, Mufflers: FLSTC, FXST, FXSB
Muffler support fastener: FLSTN, FLSTF/B, FLS	96-120 **in-lbs**	10.9-13.6 Nm	4.17 EXHAUST SYSTEM, Mufflers: FLSTN, FLSTF/B, FLS
Neutral switch	120-180 **in-lbs**	13.6-20.3 Nm	7.30 NEUTRAL SWITCH, Installation
Oil pressure switch	96-144 **in-lbs**	10.8-16.3 Nm	7.31 OIL PRESSURE SWITCH, Installation
Oil pump screws, 1st torque	40-45 **in-lbs**	4.5-5.1 Nm	3.24 CAM COMPARTMENT AND COMPONENTS, Cam Support Plate and Cover Installation
Oil pump screws, final torque	90-120 **in-lbs**	10.2-13.6 Nm	3.24 CAM COMPARTMENT AND COMPONENTS, Cam Support Plate and Cover Installation
Oil tank bolts: FXSB	12-15 ft-lbs	16.3-20.3 Nm	3.31 OIL TANK: FXSB, Installation
Oxygen sensor, front	14.0 ft-lbs	19.0 Nm	4.14 OXYGEN (O2) SENSOR, Installation
Oxygen sensor, rear	14.0 ft-lbs	19.0 Nm	4.14 OXYGEN (O2) SENSOR, Installation
Piston jet screw	25-35 **in-lbs**	2.8-3.9 Nm	3.26 CRANKCASE DISASSEMBLY AND REPAIR, Right Crankcase Half
Pivot shaft nut	90-110 ft-lbs	122.1-149.3 Nm	2.23 REAR FORK, Installation
Pivot shaft nut	90-110 ft-lbs	122-149.1 Nm	3.15 INSTALLING ENGINE IN CHASSIS, Procedure
Primary chaincase cover fasteners	12-13 ft-lbs	16.3-17.6 Nm	5.3 PRIMARY CHAINCASE COVER, Installation
Primary chaincase drain plug	14-21 ft-lbs	19.0-28.5 Nm	1.9 PRIMARY CHAINCASE LUBRICANT, Changing Primary Chaincase Lubricant

FASTENER	TORQUE VALUE		NOTES
Primary chaincase housing sealing fasteners	26-28 ft-lbs	35.3-38.0 Nm	5.5 PRIMARY CHAINCASE HOUSING, Installation
Primary chain tensioner fasteners	21-24 ft-lbs	28.5-32.6 Nm	5.4 DRIVE COMPONENTS, Installation
Rear back panel screw	20-30 **in-lbs**	2.3-3.4 Nm	1.18 STEERING HEAD BEARINGS, Adjustment: FLSTC, FLSTF/B, FLSTN, FLS
Rear brake master cylinder retainer fastener	29-34 ft-lbs	39.4-46.1 Nm	2.13 REAR BRAKE MASTER CYLINDER, Installation
Rear caliper banjo bolt	17-22 ft-lbs	23.1-29.9 Nm	2.14 REAR BRAKE CALIPER, Installation
Rear electrical panel fasteners: FXSB	36-60 **in-lbs**	4.1-6.8 Nm	7.3 ELECTRICAL PANEL, Installation: FXSB
Rear fender support to fender, FXSB	21-27 ft-lbs	28.5-36.6 Nm	2.35 REAR FENDER: FXSB, Installation
Rear fender support to fender fasteners: FLS	21-27 ft-lbs	28.5-36.6 Nm	7.18 TURN SIGNALS AND RUNNING LIGHTS, Lamp Replacement
Rear fender support to frame fasteners: 1st torque, FXSB	30-35 ft-lbs	40.7-47.5 Nm	2.35 REAR FENDER: FXSB, Installation
Rear fender support to frame fasteners: final torque, FXSB	38-42 ft-lbs	51.6-57.0 Nm	2.35 REAR FENDER: FXSB, Installation
Rear master cylinder banjo bolt	17-22 ft-lbs	23.1-29.9 Nm	2.13 REAR BRAKE MASTER CYLINDER, Installation
Rear master cylinder nut	30-40 ft-lbs	40.7-54.2 Nm	2.13 REAR BRAKE MASTER CYLINDER, Installation
Rear stop lamp switch	12-15 ft-lbs	16.3-20.3 Nm	7.32 REAR STOP LAMP SWITCH, Installation
Rear turn signal housing fastener	12-16 ft-lbs	16.3-21.7 Nm	7.18 TURN SIGNALS AND RUNNING LIGHTS, Lamp Replacement
Rear turn signal housing fastener: FLS	12-16 ft-lbs	16.3-21.7 Nm	7.18 TURN SIGNALS AND RUNNING LIGHTS, Lamp Replacement
Rider footboard screws	60-80 **in-lbs**	6.8-9.0 Nm	2.38 FOOTBOARDS AND FOOTRESTS, Rider Footboards
Rider footrest support screws	32-37 ft-lbs	43.4-50.2 Nm	2.38 FOOTBOARDS AND FOOTRESTS, Rider Footrest
Right main bearing retaining screws	40-70 **in-lbs**	4.5-7.9 Nm	3.26 CRANKCASE DISASSEMBLY AND REPAIR, Right Crankcase Half
Rocker arm support plate bolts	18-22 ft-lbs	24.4-29.8 Nm	3.23 TOP END OVERHAUL: ASSEMBLY, Rocker Arm Support Plate
Rocker cover screws	15-18 ft-lbs	20.3-24.4 Nm	3.23 TOP END OVERHAUL: ASSEMBLY, Breather and Rocker Cover
Rocker housing bolts	120-168 **in-lbs**	13.6-19.0 Nm	3.23 TOP END OVERHAUL: ASSEMBLY, Cylinder Head
Saddlebag flange nuts: FLSTC	120-144 **in-lbs**	13.6-16.3 Nm	2.45 SADDLEBAGS: FLSTC, Installation
Saddlebag lower bracket acorn nut: FLSTC	120-144 **in-lbs**	13.6-16.3 Nm	2.45 SADDLEBAGS: FLSTC, Installation
Saree guard, lower, fasteners	21-27 ft-lbs	28.5-36.6 Nm	2.47 SAREE GUARD: INDIA MODELS, Lower Saree Guard
Saree guard, upper, fasteners: all but FXSB	21-27 ft-lbs	28.5-36.6 Nm	2.47 SAREE GUARD: INDIA MODELS, Upper Saree Guards: All but FXSB
Saree guard, upper, fasteners: FXSB	21-27 ft-lbs	28.5-36.6 Nm	2.47 SAREE GUARD: INDIA MODELS, Upper Saree Guards: FXSB
Saree guard, upper, nut: all but FXSB	21-27 ft-lbs	28.5-36.6 Nm	2.47 SAREE GUARD: INDIA MODELS, Upper Saree Guards: All but FXSB

FASTENER	TORQUE VALUE		NOTES
Secondary cam chain tensioner fastener	90-120 in-lbs	10.2-13.6 Nm	3.24 CAM COMPARTMENT AND COMPONENTS, Camshafts
Shift drum detent arm fastener	120-150 in-lbs	13.6-17.0 Nm	6.6 TRANSMISSION ASSEMBLY, Assembly
Shift drum lock plate fasteners	57-63 in-lbs	6.4-7.1 Nm	6.6 TRANSMISSION ASSEMBLY, Assembly
Shifter pawl centering screw	18-23 ft-lbs	24.4-31.2 Nm	6.8 TRANSMISSION CASE, Assembly
Shifter peg	96-144 in-lbs	10.9-16.3 Nm	6.4 SHIFTER, Shift Lever Replacement
Shifter rod jam nut	80-120 in-lbs	9.0-13.6 Nm	6.4 SHIFTER, Shifter Rod Adjustment
Shifter rod lever pinch screw, transmission lever	18-22 ft-lbs	24.4-29.8 Nm	6.8 TRANSMISSION CASE, Assembly
Shifter rod to lever locknut	96-144 in-lbs	10.8-16.3 Nm	6.4 SHIFTER, Shifter Rod Adjustment
Shift lever pinch bolt: FXSB, FXST	13-16 ft-lbs	17.6-21.7 Nm	6.4 SHIFTER, Shift Lever Replacement
Shift lever pinch bolts: all but FXSB, FXST	18-22 ft-lbs	24.4-29.9 Nm	6.4 SHIFTER, Shift Lever Replacement
Shock bolt, rear	121-136 ft-lbs	164.0-184.4 Nm	2.22 REAR SHOCK ABSORBERS, Installation
Shock locknut, rear	32-39 ft-lbs	43.4-52.9 Nm	2.22 REAR SHOCK ABSORBERS, Installation
Signal lamp mounting bracket screws: FLSTC	36-60 in-lbs	4.1-6.8 Nm	7.17 AUXILIARY LAMPS: FLSTC, FLSTN, Adjustment: FLSTC/FLSTN Models
Signal lamp mounting bracket screws: FLSTN	36-60 in-lbs	4.1-6.8 Nm	7.17 AUXILIARY LAMPS: FLSTC, FLSTN, Adjustment: FLSTC/FLSTN Models
Slider tube cap	60-70 ft-lbs	81.3-95.0 Nm	2.19 FRONT FORK, Installation
Solenoid contact post jamnut	65-80 in-lbs	7.3-9.0 Nm	7.13 STARTER, Solenoid
Solenoid terminal post nut	70-90 in-lbs	7.9-10.2 Nm	7.13 STARTER, Drive Assembly
Spark plug	12-18 ft-lbs	16.3-24.4 Nm	1.17 SPARK PLUGS, Installation
Spark plug	12-18 ft-lbs	16.3-24.4 Nm	3.8 TROUBLESHOOTING, Compression Test
Speedometer console nut: all but FXSB	84-132 in-lbs	9.5-14.9 Nm	7.26 SPEEDOMETER, Installation: All But FXSB
Speedometer fasteners: FXSB	12-17 in-lbs	1.4-1.9 Nm	7.26 SPEEDOMETER, Installation: FXSB
Splash guard fastener: all but FXSB	36-48 in-lbs	4.1-5.4 Nm	3.30 OIL TANK: ALL BUT FXSB, Installation
Splash guard fasteners: FXSB	36-60 in-lbs	4.1-6.8 Nm	3.31 OIL TANK: FXSB, Installation
Splash guard screw	36-48 in-lbs	4.1-5.4 Nm	7.28 WHEEL SPEED SENSORS, Rear Wheel Speed Sensor
Splash guard screw: all but FXSB	36-48 in-lbs	4.1-5.4 Nm	2.16 ABS: ELECTRONIC CONTROL UNIT (ECU), Installation: All But FXSB
Splash guard screw: all but FXSB	36-48 in-lbs	4.1-5.4 Nm	7.3 ELECTRICAL PANEL, Installation: All But FXSB
Splash guard screw: all but FXSB	36-48 in-lbs	4.1-5.4 Nm	7.5 BODY CONTROL MODULE (BCM), Installation: All But FXSB
Splash guard screw: all but FXSB	36-48 in-lbs	4.1-5.4 Nm	7.9 SECURITY SIREN, Installation: All But FXSB
Spoke nipple	55 in-lbs	6.2 Nm	1.8 TIRES AND WHEELS, Wheel Spokes
Spoke nipple	55 in-lbs	6.2 Nm	2.7 CHECKING AND TRUING WHEELS, Truing Laced Wheels
Starter end cover screw	90-110 in-lbs	10.2-12.4 Nm	7.13 STARTER, Drive Assembly
Starter mounting bolts	25-27 ft-lbs	33.9-36.6 Nm	7.13 STARTER, Installation
Starter nut	70-90 in-lbs	7.9-10.2 Nm	1.19 BATTERY MAINTENANCE, Battery Installation and Connection
Starter nut	70-90 in-lbs	7.9-10.2 Nm	7.12 BATTERY CABLES, Routing Procedure

FASTENER	TORQUE VALUE		NOTES
Starter ring terminal hex nut	60-80 **in-lbs**	6.8-9.0 Nm	7.13 STARTER, Solenoid
Starter through bolts	39-65 **in-lbs**	4.4-7.3 Nm	7.13 STARTER, Drive Assembly
Stator screws	55-75 **in-lbs**	6.2-8.4 Nm	7.24 ALTERNATOR, Installation/TORX screws, use only once
Stoplight switch, rear	12-15 ft-lbs	16.3-20.3 Nm	2.15 BRAKE LINES, Rear Master Cylinder to Rear HCU/Use LOCTITE 565 THREAD SEALANT
Stoplight switch bracket fastener	30-35 ft-lbs	40.6-47.4 Nm	2.15 BRAKE LINES, Rear Master Cylinder to Rear HCU
Tail lamp connector cover fastener: FLSTN	8-30 **in-lbs**	0.9-3.4 Nm	7.16 TAIL LAMP: FLSTN, Tail Lamp Replacement
Tail lamp fastener: FLSTN	8-30 **in-lbs**	0.9-3.4 Nm	7.18 TURN SIGNALS AND RUNNING LIGHTS, Lamp Replacement
Tail lamp fasteners: FLSTN	60-90 **in-lbs**	6.8-10.2 Nm	7.16 TAIL LAMP: FLSTN, Tail Lamp Replacement
Tail lamp lens screws	20-24 **in-lbs**	2.3-2.7 Nm	7.15 TAIL LAMP: ALL BUT FLSTN, Bulb Replacement
Throttle cable bracket fasteners	20-35 **in-lbs**	2.3-4.0 Nm	4.12 IDLE AIR CONTROL (IAC), Installation
Throttle cable bracket fasteners	20-35 **in-lbs**	2.3-4.0 Nm	4.13 MANIFOLD ABSOLUTE PRESSURE SENSOR (MAP), Installation/Use new screws
Throttle control housing screws	35-45 **in-lbs**	4.0-5.1 Nm	2.24 THROTTLE CONTROL, Assembly/Installation
Throttle position sensor fasteners	18 **in-lbs**	2.0 Nm	4.8 THROTTLE POSITION SENSOR (TPS), Installation
Timer cover screws	20-30 **in-lbs**	2.3-3.4 Nm	3.24 CAM COMPARTMENT AND COMPONENTS, Cam Support Plate and Cover Installation
Transmission bearing housing screw	23-25 ft-lbs	31.2-33.9 Nm	6.6 TRANSMISSION ASSEMBLY, Installation
Transmission drain plug	14-21 ft-lbs	19.0-28.5 Nm	1.10 TRANSMISSION LUBRICANT, Changing Transmission Lubricant
Transmission drain plug	14-21 ft-lbs	19.0-28.5 Nm	6.6 TRANSMISSION ASSEMBLY, Installation
Transmission drain plug	14-21 ft-lbs	19.0-28.5 Nm	6.8 TRANSMISSION CASE, Installation
Transmission filler plug/dipstick	25-75 **in-lbs**	2.8-8.5 Nm	1.10 TRANSMISSION LUBRICANT, Checking Transmission Lubricant
Transmission filler plug/dipstick	25-75 **in-lbs**	2.8-8.5 Nm	1.10 TRANSMISSION LUBRICANT, Changing Transmission Lubricant
Transmission lockplate screws	90-120 **in-lbs**	10.2-13.6 Nm	5.7 TRANSMISSION SPROCKET, Installation/Lock patch, use 3-5 times
Transmission mounting bolts, 1st torque	15 ft-lbs	20.3 Nm	3.15 INSTALLING ENGINE IN CHASSIS, Procedure
Transmission mounting bolts, 1st torque	15 ft-lbs	20.3 Nm	6.8 TRANSMISSION CASE, Installation
Transmission mounting bolts, final torque	34-39 ft-lbs	46.1-52.9 Nm	3.15 INSTALLING ENGINE IN CHASSIS, Procedure
Transmission mounting bolts, final torque	34-39 ft-lbs	46.1-52.9 Nm	6.8 TRANSMISSION CASE, Installation
Transmission sprocket nut, final torque	35 ft-lbs	47.5 Nm	5.7 TRANSMISSION SPROCKET, Installation/plus 35-40 degrees
Transmission sprocket nut, initial torque	100 ft-lbs	135.6 Nm	5.7 TRANSMISSION SPROCKET, Installation/Right-hand threads, initial torque only, apply several drops of LOCTITE 271 HIGH STRENGTH THREADLOCKER (red) to last few threads.
Transmission top cover	90-120 **in-lbs**	10.2-13.6 Nm	6.6 TRANSMISSION ASSEMBLY, Installation

FASTENER	TORQUE VALUE		NOTES
Turn signal bar screws: FLSTN	15-19 ft-lbs	20.4-25.8 Nm	7.18 TURN SIGNALS AND RUNNING LIGHTS, Lamp Replacement
Upper handlebar clamp fasteners: FXSB	12-16 ft-lbs	16.3-21.7 Nm	7.29 INDICATOR LAMPS, Installation: FXSB
Valve stem nut	12-15 **in-lbs**	1.4-1.7 Nm	2.9 TIRES, Installation
Vapor valve bracket nut	120-144 **in-lbs**	13.6-16.3 Nm	4.16 FUEL PUMP AND FUEL GAUGE SENDING UNIT, Vapor Valve
Voltage regulator	50-80 **in-lbs**	5.7-9.0 Nm	7.23 VOLTAGE REGULATOR, Installation
Voltage regulator bracket fasteners	70-100 **in-lbs**	7.9-11.3 Nm	4.14 OXYGEN (O2) SENSOR, Installation
Voltage regulator bracket to crankcase fasteners	70-100 **in-lbs**	7.9-11.3 Nm	7.23 VOLTAGE REGULATOR, Installation
VSS mounting bolt	84-108 **in-lbs**	9.5-12.2 Nm	7.27 VEHICLE SPEED SENSOR (VSS), Installation
Windshield mounting screw	96-120 **in-lbs**	10.8-13.6 Nm	1.18 STEERING HEAD BEARINGS, Adjustment: FLSTC, FLSTF/B, FLSTN, FLS

A

Acronyms and Abbreviations. C-4
Active Exhaust Module
General. 7-71
Installation. 7-71
Repair. 7-71
Active Exhaust Module
Removal. 7-71
Air Cleaner
Backplate Assembly: HDI Models. 4-5
Installation. 4-4
Removal. 4-4
Air Cleaner Filter
Installation. 1-18
Removal. 1-17
Alignment
Axle. 2-33
Checking. 2-33
Alternator
Installation. 7-54
Removal. 7-54
Assembling Motorcycle After Service
Procedure. 3-25
Autofuse Electrical Connector. A-1
Assembly. A-1
Disassembly. A-1
Automatic Compression Release (ACR). 7-48
Installation. 7-48
Removal. 7-48
Auxiliary Lamps
Adjustment: FLSTC/FLSTN Models. 7-38
Auxiliary Lamp Bulb. 7-33
FLSTC Models. 7-33
FLSTN Models. 7-36

B

Badges. 2-128
Battery
Charging. 1-49
Cleaning. 1-49
Disconnection and Removal. 1-50
Inspection. 1-49
Installation and Connection. 1-51
Maintenance. 1-48
Storage. 1-50
Voltmeter Test. 1-49
Battery Cables
Routing Procedure. 1-51
Routing Procedure. 7-20
Belt Guard/Debris Deflector
Installation. 2-77
Removal. 2-77
Body Control Module (BCM)
Configuration. 7-9
General. 7-9
Body Control Module (BCM): All But FXSB
Installation. 7-9
Removal. 7-9
Body Control Module (BCM): FXSB
Installation. 7-10
Removal. 7-10
Bosch BTC Sealed Connector Repair. A-3
Bosch Compact 1.1M Connector. A-2
Bottom End Overhaul: Assembly
Counterbalancer Assembly. 3-100
Crankcase. 3-103
Bottom End Overhaul: Disassembly
Counterbalancer Assembly. 3-83
Crankcase. 3-83
Bottom End Overhaul (Assembly)
Cam Support Plate and Cover. 3-77
Bottom End Overhaul (Disassembly)
Cam Support Plate. 3-69
Bottom End Service
Engine in Chassis (Cam Compartment Service). . . 3-22
Engine Removed (Flywheel Compartment Service or
Complete Engine Overhaul). 3-23
Brake Caliper, Front
Assembly. 2-40
Cleaning, Inspection and Repair: XR 1200X. 2-39
Disassembly. 2-38
Brake Line
Front HCU-to-Front Caliper. 2-53
Front Master Cylinder-to-Front HCU. 2-52
Rear HCU to Rear Caliper. 2-56
Rear Master Cylinder to Rear HCU. 2-54
Brake Line Routing, Rear. 2-50
Brake Pads and Discs
Brake Pad Replacement. 1-38
Inspection. 1-38
Brakes
Bleeding. 2-63
Fluid Inspection. 1-36
Rear Brake Pedal: Pedal Height. 1-36
Rear Brake Pedal: Pedal Lubrication. 1-36
Rear Brake Pedal: Pedal Pad. 1-36
Breather Assembly
Cleaning and Inspection. 3-35
Disassembly. 3-35
Operation. 3-14
Bulb Requirements
General. 1-9

C

Cable and Chassis Lubrication. 1-35
Jiffy Stand. 1-35
Steering Head Bearings. 1-35
Cam Support Plate
Cam Needle Bearings. 3-74
Camshafts. 3-71
Cleaning and Inspection. 3-71
Installation. 3-77
Oil Pressure Relief Valve. 3-73
Removal. 3-69
Capacities
Engine Oil (Table). 2-5
Engine Oil (Table). 4-3
Fuel (Table). 2-5
Fuel (Table). 4-3
Low Fuel Level (Table). 2-5
Low Fuel Level (Table). 4-3
Primary Chaincase (Table). 2-5
Primary Chaincase (Table). 4-3
Transmission (Table). 2-5
Transmission (Table). 4-3
Carrying Capacity. 1-55
Cleaning
Bearings. 1-5
Cleaning Process. 1-5
Part Protection. 1-5
Rust or Corrosion Removal. 1-5
Clutch
Adjustment. 1-27
Clutch Pack and Bearing. 5-15

Conventional Clutch Pack Only. 5-13
Removal and Installation. 5-13
Clutch Hand Control
Installation. 2-86
Removal. 2-86
Clutch Release Cover
Assembly and Installation. 6-8
Clutch Release Cover, Cable Clutch
Cleaning and Inspection. 6-7
Clutch Switch
Replacement. 7-80
Compression Test. 3-17
Connectors
Autofuse Unsealed. A-1
Bosch Compact 1.1M. A-2
Connector Number. B-1
Delphi 100W Micro-Pack Sealed. A-6
Delphi 150 Metri-Pack Sealed. A-8
Delphi 280 Metri-Pack Unsealed. A-10
Delphi 480 Metri-Pack Unsealed. A-11
Delphi 630 Metri-Pack Unsealed. A-12
Delphi 800 Metri-Pack Sealed. A-13
Delphi GT 150 Sealed. A-19
Delphi Micro 64 Sealed. A-16
Description. B-1
Deutsch DTM Sealed Mini. A-26
Deutsch DTM Sealed Solid Barrel. A-27
Deutsch DT Sealed. A-21
Function. B-1
General Information. B-1
JAE MX19 Sealed. A-29
Location Table. B-1
Metri-Pack Terminal Crimps. A-14
Molex CMC Sealed. A-30
Molex MX 150 Sealed. A-32
Repair Instruction. B-1
Sealed Splice. A-45
Tyco 040 Multilock Unsealed. A-36
Tyco 070 Multilock Unsealed. A-38
Tyco GET 64 Sealed Connector Repair. A-41
Tyco MCP. A-43
Console: FXSB
Installation. 4-12
Removal. 4-12
Conversions
Fluid. C-2
Length. C-1
Torque. C-3
Counterbalancer Assembly
Cleaning, Inspection and Repair. 3-95
Crankcase
Cleaning and Inspection. 3-85
Cylinder Studs. 3-92
Left Crankcase Half. 3-88
Pipe Plugs and Oil Fittings. 3-92
Right Crankcase Half. 3-86
Sprocket Shaft Bearing Inner Race. 3-89
Crank Position Sensor (CKP). 7-47
Installation. 7-47
Removal. 7-47
Crankshaft Runout, Measuring
Crankshaft Installed. 3-93
Crankshaft Removed. 3-94
Cylinder
Boring and Honing. 3-53
Cleaning. 3-51
Deglazing. 3-53
Inspection. 3-51
Cylinder Head
Assembly. 3-49
Cleaning. 3-42
Disassembly. 3-41
Inspection. 3-42
Inspection: Tapered Keepers. 3-43
Inspection: Valve Guides. 3-43
Inspection: Valves. 3-43
Inspection: Valve Seats. 3-43
Inspection: Valve Springs. 3-43
Valve and Seat Refacing. 3-47
Valve Guide Installation. 3-44
Valve Guide Removal. 3-43

D

Delphi 100W Sealed Connector
Repair. A-6
Delphi 150 Metri-Pack Connector
Repair. A-8
Delphi 280 Metri-Pack Unsealed Connectors. A-10
Delphi 480 Metri-Pack Unsealed Connector
Repair. A-11
Delphi 630 Metri-Pack Unsealed Connector. A-12
Delphi 800 Metri-Pack Sealed Connectors
Repair. A-13
Delphi GT 150 Sealed Connector
Repair. A-19
Delphi Micro-64 Sealed Connector
Repair. A-16
Deutsch Connector
Crimping Standard Terminals. A-25
Deutsch DTM Sealed Mini Connector
Crimping Terminals. A-26
Deutsch DTM Sealed Solid Barrel Connector
Crimping Terminals. A-27
Deutsch DT Sealed Connector
Repair. A-21
Drive Belt
Cleaning. 1-29
Deflection. 1-30
Inspection. 5-21
Installation. 5-21
Removal. 5-21
Drive Belt and Sprockets
Adjusting Belt Deflection. 1-32
Inspection. 1-29
Drive Components
Installation. 5-6
Removal. 5-4

E

Electrical Panel
General. 7-5
Electrical Panel:All But FXSB
Installation. 7-6
Electrical Panel: All But FXSB
Removal. 7-5

Electronic Control Module
General. 7-8
Electronic Control Module: All But FXSB
Installation. 7-8
Removal. 7-8
Electronic Control Module: FXSB
Installation. 7-8
Removal. 7-8
Electronic Control Unit (ECU): All But FXSB
Installation. 2-58
Removal. 2-58
Electronic Control Unit (ECU): FXSB
Installation. 2-59
Removal. 2-59
Engine
Compression Test. 3-17
Symptoms For Engine Repair. 3-19
Engine Oil
Capacity (Table). 2-5
Capacity (Table). 4-3
Checking. 1-15
Recommended Engine Oils. 1-7
Winter Lubrication. 1-8
Engine Oil and Filter
Changing Oil and Filter. 1-15
Engine Oil Flow
Bottom End. 3-9
Chain Guide Bracket. 3-11
Oil Feed. 3-7
Oil Return. 3-11
Top End. 3-8
Engine Temperature Sensor (ET). 4-15
Installation. 4-15
Removal. 4-15
Evaporative Emissions Control. 4-35
Charcoal Canister. 4-36
Hose Routing/Replacement. 4-36
Purge Solenoid. 4-36
Exhaust System
Exhaust System Leak Check. 1-19
Leakage Repair Procedures. 1-19
Exhaust System: FLSTC, FXST, FXSB
Installation. 4-29
Mufflers. 4-29
Removal. 4-29
Exhaust System: FLSTN, FLSTF/B, FLS
Installation. 4-31
Mufflers. 4-31
Removal. 4-31

F

Fluid Conversions. C-2
Flywheel/Connecting Rod
General. 3-93
Inspection. 3-93
FOB
Assignment. 7-11
Footboards and Footrests
Passenger Footrests. 2-114
Rider Footboards. 2-114
Rider Footrests. 2-114
Fork, Front
Cleaning and Inspection. 2-71
Fork Oil Leak Check. 2-65
Fork Lock
Installation. 2-118
Removal. 2-118
Front Brake Caliper
Installation. 2-40
Removal. 2-38
Front Brake Master Cylinder
Assembly and Installation. 2-36
Assembly and Installation. 2-36
Cleaning and Inspection. 2-36
Removal and Disassembly. 2-35
Front Brake Switch
Replacement. 7-78
Front Fender
Installation. 2-99
Removal. 2-98
Front Fork Oil
Replacing Fork Oil. 2-65
Front Forks
Assembly. 2-71
Disassembly. 2-66
General. 2-65
Installation. 2-71
Removal. 2-66
Front HCU-to-Front Caliper
Removal and Installation. 2-53
Front Master Cylinder-to-Front HCU
Removal and Installation. 2-52
Front Wheel
Assembly: Disc Wheel. 2-13
Assembly: Laced Wheel. 2-14
Cleaning and Inspection. 2-13
Disassembly: Disc Wheel. 2-11
Disassembly: Laced Wheel. 2-11
Installation. 2-14
Removal. 2-11
Fuel
Capacities (Table). 2-5
Capacities (Table). 4-3
Gasoline Blends. 1-7
Low Fuel Level (Table). 2-5
Low Fuel Level (Table). 4-3
Recommended Fuel. 1-7
Fuel Gauge
General. 7-55
Installation. 7-55
Removal. 7-55
Fuel Injectors. 4-22
Installation. 4-22
Removal. 4-22
Fuel Pressure Test. 4-7
Testing. 4-7
Fuel Pump/Fuel Gauge Sending Unit
Installation. 4-28
Fuel Pump/Fuel Guage Sending Unit
Disassembly/Assembly. 4-26
General. 4-24
Fuel Supply Line
Disconnect. 4-6
Purge. 4-6
Fuel Tank
Cleaning and Inspection. 4-10

General. 4-9
Installation. 4-11
Removal. 4-9
Fuses
Fuse Block Repair. A-10
Installation. 7-17
Removal. 7-17

G

Glossary
Acronyms and Abbreviations. C-4

H

Hand Grip, Left
Installation. 2-88
Removal. 2-88
Handlebars
Installation. 2-95
Lower Clamps. 2-95
Handlebars: FLSTC/FLSTN
Installation. 2-90
Removal. 2-89
Handlebars: FLSTF
Removal. 2-91
Handlebars: FLSTF/B
Installation. 2-92
Handlebar Switch Assembly, Left
Installation. 7-79
Removal. 7-79
Handlebar Switch Assembly, Right
Installation. 7-77
Removal. 7-76
Handlebar Switches
General. 7-75
Repair Procedures. 7-75
Headlamp
Adjustment. 1-53
Alignment. 1-53
Assembly Removal and Installlation. 7-26
Bulb Removal and Installation. 7-27
Bulbs (Table). 1-9
General. 7-26
Horn
Inspection. 7-69
Horn: All But FXSB
Removal and Installation. 7-69
Horn: FXSB
Removal and Installation. 7-70
Hydraulic Control Unit (Front)
Installation. 2-60
Removal. 2-60
Hydraulic Control Unit (Rear)
Installation. 2-61
Removal. 2-61

I

Idle Air Control. 4-18
Installation. 4-18
Removal. 4-18
Ignition/Light Switch. 7-18
Ignition/Light Switch: All But FXSB
Removal and Installation. 7-18
Ignition/Light Switch: FXSB
Removal and Installation. 7-19
Ignition Coil
Installation. 7-50
Removal. 7-50
Indicator Lamp: FXSB
Installation. 7-65
Removal. 7-65
Indicator Lamps: All But FXSB
General. 7-64
Installation. 7-64
Removal. 7-64
Induction Module
Installation. 4-17
Removal. 4-16
Installing engine in chassis
Procedure. 3-27
Intake Air Temperature Senor (IAT)
Installation. 4-14
Intake Air Temperature Sensor (IAT). 4-14
Removal. 4-14
Intake Leak Test. 4-33

J

JAE MX19 Sealed Connectors
Crimping Terminals. A-7
Crimping Terminals. A-29
Housings. A-29
Installing Terminals. A-29
Removing Terminals. A-29
Jiffy Stand
Cleaning. 2-116
Installation. 2-117
Removal. 2-117
Sensor (HDI Models). 2-116

L

Laced Wheel Rim Offset. 2-21
License Plate Bracket
Front - India Only. 2-127
LOCTITE. . . . . i-II
Luggage Rack: FLSTN
Removal/Installation. 2-122

M

Main Drive Gear and Bearing
Cleaning and Inspection. 6-23
Installation. 6-25
Needle Bearing Replacement. 6-24
Removal. 6-22
Maintenance
Brake Line Inspection (Table). 1-37
Drive Belt. 1-30
Recommended Engine Oils. 1-7
Transmission Lubricant Change. 1-25
Main Wiring Harness
Installation. 7-73
Removal. 7-72
Manifold Absolute Pressure Sensor (MAP)
Installation. 4-19
Removal. 4-19
Medallions. 2-128
Metric System. C-2

Metri-Pack Terminal Crimps. A-14
Molex CMC Sealed Connectors
Crimping Terminals. A-31
Housings. A-30
Installing Terminals. A-30
Removing Terminals. A-30
Molex MX 150 Sealed Connector
Repair. A-32
Terminal Crimps. A-33

N

Neutral Switch
General. 7-66
Installation. 7-66
Removal. 7-66

O

Oil. . . . . See Engine Oil
Oil Pressure
Indicator Lamp. 3-15
Testing. 3-15
Oil Pressure Relief Valve
Remove, Inspect, and Install. 3-73
Oil Pressure Switch
General. 7-67
Installation. 7-67
Removal. 7-67
Oil Pump
Cleaning and Inspection. 3-81
Installation. 3-82
Operation. 3-12
Removal. 3-81
Oil Tank
Installation. 3-109
Installation. 3-113
Removal and Disassembly. 3-106
Removal and Disassembly. 3-110
Oxygen Sensor. 4-20
Installation. 4-20
Removal. 4-20

P

Piston
Assembly. 3-57
Cleaning. 3-55
Disassembly. 3-55
Inspection. 3-55
Primary Chain
Automatic Chain Adjuster. 1-23
Primary Chaincase. 5-3
Changing Lubricant. 1-23
Installation. 5-11
Lubricant Capacity (Table). 2-5
Lubricant Capacity (Table). 4-3
Mainshaft Bearing and Lip Seal. 5-9
Primary Chaincase Cover
Installation. 5-3
Removal. 5-3
Primary Chaincase Housing
Inspection. 5-9
Mainshaft Bearing Inner Race. 5-10
Removal. 5-9
Purge Solenoid
Evaporative Emissions Control. 4-36
Pushrods, Lifters and Covers
Assembly. 3-40
Cleaning and Inspection. 3-39
Disassembly. 3-39
Lifter Inspection. 3-39

R

Rear Brake Caliper
Assembly. 2-49
Cleaning, Inspection and Repair. 2-49
Disassembly. 2-47
Installation. 2-50
Removal. 2-47
Rear Brake Master Cylinder
Assembly. 2-42
Cleaning and Inspection. 2-42
Disassembly. 2-41
Installation. 2-43
Removal. 2-41
Rear Electrical Panel: FXSB
Installation. 7-6
Removal. 7-6
Rear Fender
Installation. 2-109
Removal. 2-108
Rear Fender: FLS
Installation. 2-105
Removal. 2-105
Rear Fender: FLSTC
Installation. 2-100
Removal. 2-100
Rear Fender: FLSTF
Installation. 2-102
Removal. 2-102
Rear Fender: FLSTN
Assembly. 2-111
Disassembly. 2-110
Installation. 2-112
Removal. 2-110
Rear Fender: FXST
Installation. 2-103
Removal. 2-103
Rear Fender Wire Conduit
Installation. 2-113
Rear Fork
Cleaning and Inspection. 2-82
Installation. 2-83
Pivot Bearing Replacement. 2-82
Removal. 2-81
Rear HCU-to-Rear Caliper
Removal and Installation. 2-56
Rear Master Cylinder-to-Rear HCU
Removal and Installation. 2-54
Rear Shock Absorbers
General. 2-78
Installation. 2-78
Removal. 2-78
Rear stop lamp Switch
General. 7-68
Rear Stop Lamp Switch
Installation. 7-68

Removal. 7-68
Rear Wheel
Assembly. 2-16
Cleaning and Inspection. 2-16
Disassembly. 2-15
Installation. 2-17
Removal. 2-15
Removing Engine From Chassis
Procedure. 3-26
Repair and Replacement Procedures
Bearings. 1-4
Bushings. 1-4
Gaskets. 1-4
Gears. 1-5
Hardware and Threaded Parts. 1-4
Lip Type Seals. 1-4
O-Rings. 1-5
Part Replacement. 1-5
Shafts. 1-5
Threadlocking Agents. 1-4
Wiring, Hoses and Lines. 1-4
Rocker Arms
Install Bushings. 3-37
Remove Bushings. 3-37
Shaft to Bushing. 3-37
Shaft to Support Plate. 3-36
Rocker Arm Support Plate. 3-38
Disassembly. 3-36
Inspection. 3-36

S

Saddlebags: FLSTC
Installation. 2-123
Removal. 2-123
Safe Operating Maintenance. 1-3
Saree Guard
Lower. 2-126
Upper: All But FXSB. 2-126
Upper: FXSB. 2-126
Sealed Splice Connectors. A-45
Sealed Wheel Bearings
Check End Play. 2-25
Installation. 2-27
Removal. 2-25
Seat: FLSTN/FLSTF/FLSTC
Removal/Installation. 2-121
Seat/Strap Retention Unit
Replacement. 2-119
Seats: FXST
Installation. 2-120
Removal. 2-120
Security Siren: All But FXSB
Installation. 7-15
Removal. 7-15
Security Siren: FXSB
Installation. 7-16
Removal. 7-15
Security System
Fob Battery. 7-14
Service Bulletins. . . . . i-I
Service Preparation. . . . . i-I
Service Wear Limits
Engine. 3-5
Transmission. 6-2
Servicing a New Motorcycle. 1-3
Shift Lever
Replacement. 6-5
Shift Linkage
Adjustment. 6-5
Shifter Rod. 6-5
Shock Absorber
Disposal. 2-79
Shock Absorbers
Adjustment. 1-55
Shop Practices. 1-3
Checking Torques. 1-4
Cleaning. 1-3
Disassembly and Assembly. 1-4
Disposal and Recycling. 1-3
Magnetic Parts Trays. 1-4
Removing Parts. 1-3
Safety. 1-3
Sidecar Configuration. 7-11
Solenoid
Long Post Contact. 7-24
Plunger. 7-23
Short Post Contact. 7-23
Spark Plug Cables
General. 7-52
Inspection. 1-43
Installation. 7-52
Spark Plugs
Cleaning. 1-42
Inspection. 1-42
Installation. 1-42
Removal. 1-42
Special Tools. . . . . i-II
Specifications
Dimensions (Table). 2-5
Drive. 5-2
Engine. 3-3
Fuel System. 4-3
Height (Table). 2-5
Length (Table). 2-5
Tires (Table). 1-20
Tires (Table). 2-7
Transmission. 6-2
Weight (Table). 2-6
Width (Table). 2-5
Speedometer
General. 7-57
Speedometer: All But FXSB
Installation. 7-57
Removal. 7-57
Speedometer: FXSB
Installation. 7-58
Removal. 7-57
Spokes
Adjustment. 1-22
Starter. 7-22
Drive Assembly. 7-22
Installation. 7-24
Removal. 7-22
Solenoid. 7-23
Steer Head Bearings
Adjustment. 1-44

Adjustment. 1-46
Lubrication. 1-47
Steering Head
Assembly. 2-75
Disassembly. 2-74
Inspection: All Models. 2-74
Installation. 2-75
Removal. 2-73
Steering Head Bearing Race Removal. 2-74
Steering Head Bearings
Adjustment. 1-45
Storage
Placing In Storage. 1-56
Removal from Storage. 1-56
Stripping Motorcycle for Service
Procedure. 3-24
Switch Assembly, Handlebar, Left
Installation. 7-79
Removal. 7-79
Switch Assembly, Handlebar, Right
Installation. 7-77
Removal. 7-76

T

Tail Lamp
Bulb (Table). 1-9
Tail Lamp: All But FLSTN
Base Replacement. 7-29
Bulb Replacement. 7-29
General. 7-29
Tail Lamp: FLSTN
Bulb Replacement. 7-31
Tail Lamp Replacement. 7-31
Tank Emblems. 2-128
Throttle Cables
Inspection, Lubrication and Adjustment. 1-33
Throttle Control
Assembly/Installation. 2-84
Cleaning and Inspection. 2-84
Removal/Disassembly. 2-84
Throttle Position Sensor (TP)
General. 4-13
Installation. 4-13
Removal. 4-13
Tires. 2-29
Checking Runout. 2-31
Cleaning, Inspection and Repair. 2-29
Inspection. 1-21
Installation. 2-30
Pressure (Table). 1-20
Pressure (Table). 2-7
Removal. 2-29
Specifications (Table). 1-20
Specifications (Table). 2-7
Wear Bar Indicators. 1-21
Wheel Balancing. 2-31
When To Replace. 1-21
Tool Safety
Air Tools. 1-5
Hammers. 1-6
Pliers/Cutters/Pry bars. 1-5
Punches/Chisels. 1-6
Ratchets and Handles. 1-6
Screwdrivers. 1-6
Sockets. 1-6
Storage Units. 1-6
Wrenches. 1-5
Top End Overhaul
Cylinder. 3-60
Disassembly. 3-29
Pushrods, Lifters and Covers. 3-66
Top End Overhaul: Assembly. 3-59
Breather Assembly. 3-68
Piston. 3-59
Rocker Arm Support Plate. 3-67
Top End Overhaul: Disassembly
Cylinder. 3-32
Cylinder Head. 3-31
Piston. 3-33
Pushrods, Lifters and Covers. 3-31
Rocker Arm Support Plate. 3-29
Rocker Covers. 3-29
Top End Service
Engine in Chassis. 3-20
Engine Removed from Chassis. 3-21
Torque Conversion. C-3
Trademarks
Harley-Davidson. . . . . i-II
Referenced Products. . . . . i-II
Transmission
Assembly. 6-17
Changing Lubricant. 1-25
Checking Lubricant Level. 1-25
Cleaning and Inspection. 6-17
Disassembly. 6-10
Lubricant Capacity (Table). 2-5
Lubricant Capacity (Table). 4-3
Theory of Operation. 6-3
Transmission Assembly
Installation. 6-21
Removal. 6-9
Transmission Case
Assembly. 6-31
Cleaning and Inspection. 6-30
Disassembly. 6-30
Installation. 6-29
Removal. 6-29
Transmission Clutch Release Cover
Removal and Disassembly. 6-7
Transmission Sprocket
Cleaning and Inspection. 5-19
Installation. 5-19
Removal. 5-18
Troubleshooting
Brakes. 1-60
Compression Test. 3-17
Cylinder Leakdown Test. 3-17
Diagnosing Smoking Engine or High Oil Consumption. 3-18
Diagnosing Valve Train Noise. 3-17
Electrical System. 1-60
Engine. 1-58
Handling. 1-60
Lubrication System. 1-59
Transmission. 1-60

Truing Laced Wheels
Lateral Runout. 2-23
Radial Runout. 2-23
Turn Signals
Bulbs (Table). 1-9
Turn Signals/Running Lights
Bulb Replacement: Bullet Style. 7-40
Bulb Replacement: Flat Lens Style. 7-40
Lamp Replacement. 7-40
Tyco 040 Multilock Unsealed Connector
Repair. A-36
Tyco 070 Multilock Unsealed Connector
Repair. A-38
Tyco GET 64 Sealed Connector. A-41
Crimping Terminals. A-42
Tyco MCP Connectors
Crimping Terminals. A-44
Installing Terminals. A-44
Removing Large Socket Terminals. A-43
Removing Small Socket Terminals. A-43

V

V.I.N.
Vehicle Identification Number. 2-9
Vapor Valve
Removal and Installation. 4-25
Vehicle Identification Number (V.I.N.). 2-9
Vehicle Speed Sensor (VSS)
General. 7-59
Installation. 7-59
Removal. 7-59
Voltage Regulator
Installation. 7-53
Removal. 7-53

W

Weight Limits (Table). 2-6
Wheel Lacing
Angle Flange Hub. 2-18
Wheel Runout
Checking. 2-20
Lateral. 2-20
Radial. 2-20
Wheels
Balancing. 2-31
Laced Wheel Rim Offset. 2-21
Spokes. 1-22
Truing Laced Wheels. 2-23
Weights. 2-32
Wheel Bearings. 1-21
Wheel Speed Sensor (Front)
Installation. 7-61
Removal. 7-60
Wheel Speed Sensor (Rear)
Installation. 7-62
Removal. 7-61
Windshield: FLSTC
Installation. 2-125
Removal. 2-125
Winter Lubrication. 1-8
Wiring
Color Codes. B-5
Diagram Symbols. B-5
Wiring Diagram List. B-7