de rechange parts catalog DERBI catalogo piezas recambio

catalogo piezas recambio-catalogue pieces

catalogue pieces de rechange parts catalog

1F.

MODELOS VARIANT MOTOR AUTOMATICO START
MODELES VARIANT MOTEUR AUTOMATIQUE START
VARIANT MODELS NEW AUTOMATIC ENGINE

NACIONAL MOTOR S.A. DERBI c. BARCELONA s/n MARTORELLES (Barcelona) ESPAÑA
Tel.: 593 09 00 Telex 94184 DEBI E

catalogo piezas recambio-catalogue pieces de rechange-parts catalog

DOWNLOADED FROM THE PUBLIC SCOOTERHULP LIBRARY
Www.ScooterHulp.com

NACIONAL MOTOR S.A. DERBI
MARTORELLES C/ BARCELONA S/N (ESPAÑA).
Telex 94184 DEBI E

CATALOGO PIEZAS DE RECAMBIOS
MODELOS: AUTOMATICOS "VARIANT"

IDENTIFICACION DE MODELOS REPRESENTADOS EN ESTE CATALOGO, SEGUN LOS DIGITOS SIGUIENTES:

Modelo N° 1 = VARIANT START 14 NEGRO.
Modelo N° 2 = VARIANT SPORT ROJO K
Modelo N° 3 = VARIANT SPORT BLANCO
Modelo N° 4 = VARIANT SPORT BLANCO (FRANCIA)
Modelo N° 5 = VARIANT SPORT GRIS METALIZADO
Modelo N° 6 = VARIANT START NEGRO CON INTERMITENTES
Modelo N° 7 = VARIANT START ROJO-K
Modelo N° 8 = VARIANT SPORT GRIS METALIZADO CON INTERMITENTES
Modelo N° 9 = VARIANT SPORT ROJO-K CON INTERMITENTES
Modelo A = VARIANT SPORT ROJO-K USA
Modelo B = VARIANT SPORT BLANCO USA
Modelo C = VARIANT SLE-X NEGRO
Modelo D = VARIANT SPORT AMERICA ROJO K USA-88
Modelo E = VARIANT SPORT AMERICA GRIS USA-88
Modelo F = VARIANT SLE-X NEGRO BERMUDAS.

DOWNLOADED FROM THE PUBLIC SCOOTERHULP LIBRARY
Www.ScooterHulp.com

MODO DE UTILIZACION DE ESTE CATALOGO PARA SOLICITAR CORRECTAMENTE LAS PIEZAS DE RECAMBIO.

1° - Identifique exactamente el modelo del cuál desea obtener el recambio; según la tabla de dígitos indicada anteriormente (apartado indicado con el nombre de modelo).

2° - Identifique el número de motor o de chasis del ciclomotor para el cuál solicita el recambio.

3° - Con estos datos Vd. debe mirar la lámina correspondiente al grupo en que se encuentra reflejado el dibujo de la pieza que Vd. desea obtener el recambio. Dicha pieza dibujo estará indicada por unos números los cuales le indicarán en el casillero donde dice "figura" la referencia exacta de la pieza de recambio, teniendo en cuenta como hemos indicado anteriormente el modelo y el número de motor o de chasis.

El departamento técnico de DERBI, remitirá periodicamente las variaciones de piezas y mejoras introducidas en cualquiera de los modelos de que consta este catálogo. Estas variaciones estaran indicadas entre el casillero correspondiente a la figura y el código por medio del signo de un asterisco (*) el cuál determina a partir de que número de motor o de chasis se aplica la nueva pieza, quedando memorizada en la parte superior la pieza que se montaba anteriormente a la modificación.

- Si aparece un asterisco (*) en el apartado de la figura y no hay ningún número de referencia a continuación, esto indica:

a) Caso de no coincidir ambos números de motor o chasis significa que a partir del número de motor o de chasis indicado por el asterisco (*) se ha dejado de montar dicha pieza.

DOWNLOADED FROM THE PUBLIC SCOOTERHULP LIBRARY
Www.ScooterHulp.com

INDICE DE LAMINAS

LAMINA	DENOMINACION
1	CUADRO - BASCULANTE - CABALLETE - PORTAPAQUETES.
2	HORQUILLA DIRECTRIZ.
3	DEPOSITO - SILLIN - MONTAJE CHASIS.
4	GUARDABARROS DELANTERO - GUARDABARROS TRASERO
5	MANILLAR Y MANDOS.
6	INSTALACION ELECTRICA.
7	RUEDA DELANTERA - TAPA FRENO DELANTERO.
8	RUEDA TRASERA - TAPA FRENO TRASERO.
9	INSTRUMENTOS DE CONTROL.
10	CIGUEÑAL BIELA - CILINDRO PISTON - CULATA Y DESCOMPRESOR.
11	VARIADOR.
12	REDUCTOR.
13	CARTERS.
14	CARBURADOR.
15	VOLANTE MAGNETICO Y ENCENDIDO.
16	ESCAPE Y SILENCIOSO.
17	PEDALIER.
18	ACCESORIOS NORMALES.
19	ACCESORIOS AGENCIA.
20	INTERMITENTES.

DOWNLOADED FROM THE PUBLIC SCOOTERHULP LIBRARY
Www.ScooterHulp.com

Figura Figure Figr.	CODIGO Nº PIECE CODE Nr.	MODELO MODELE MODEL	Nº CHASIS Nº CHASSIS FRAME NUM.	DENOMINACION	DESIGNATION	NAME
01	0F01900601	1	E016205	CTO. CUADRO NEGRO START	CHASSIS NOIR A/ADHESIFS	CHASSIS ASSY./BLACK W/DECALS
★	0F01900602	1	E018009	CTO. CUADRO NEGRO START	CHASSIS NOIR A/ADHESIFS	CHASSIS ASSY./BLACK W/DECALS
02	0F01950601	2	E	CTO. CUADRO NEG.C/CALC.V.SPORT	CADRE COMPLET AVEC ADHESIF	FRAME CHASSIS ASSY. W/DECALS
03	0008215350	123	E016205	ADORNO SUP. CUERPO DTRO.CUADRO	ENJOLIVEUR SUP. CHASSIS	CHROME-TRIM
04	0A02200211	123	E016205	ADORNO INF. CUERPO TRAS.CUADRO	ENJOLIVEUR INF. CHASSIS	CHROME-TRIM
05	0A01500733	1	E016205	CALCA VARIANT ROJA START NEG.	ADHESIF VARIANT ROUGE START	DECAL VARIANT RED START
06	0F01500781	2	E	CALCA"DERBI"NARJ.V.SPORT NEGRO	ADHESIF"DERBI"ROUGE V.SPORT	DECAL"DERBI"RED V. SPORT
07	0F01510732	1	E016205	CALCA"DERBI"START ROJA	ADHESIF"DERBI" START ROUGE	DECAL"DERBI" START RED
08	0F01520731	2	E	CALCA V. SPORT NARJ. FONDO NEG.	ADHESIF VARIANT SPORT ROUGE	DECAL VARIANT SPORT RED
09	0F01800941	23	E018491	CALCA DTRA. DCHA.CHASIS V.SPORT	ADHESIF AV. DROIT CHASSIS	DECAL FRONT RIGHT CHASSIS
10	0F01800921	23	E018491	CALCA DTRA. IZQD.CHASIS V.SPORT	ADHESIF AV. GAUCHE CHASSIS	DECAL FRONT LEFT CHASSIS
		23	E018491	CALCA DTRA. IZQD.CHASIS V.SPORT	ADHESIF AV. GAUCHE CHASSIS	DECAL FRONT LEFT CHASSIS
11	0F01800961	23	E018491	CALCA CENTR.DCH.CHASIS V.SPORT	ADHESIF CENTR.DROITE CHASSIS	DECAL CENTER RIGHT CHASSIS
★		23	E018502	CALCA CENTR.DCH.CHASIS V.SPORT	ADHESIF CENTR.DROITE CHASSIS	DECAL CENTER RIGHT CHASSIS

(a) Se ha dejado de montar dicha pieza 0.F.018.0.096.1

A partir de este numero de motor ó chasis se monta la nueva pieza 0.F.019.0.060.2 y en estos modelos

A partir de este número de motor ó chasis y en estos modelos se montaba la pieza 0.F.019.0.060.1

DOWNLOADED FROM THE PUBLIC SCOOTERHULP LIBRARY
Www.ScooterHulp.com

CUADRO.- BASCULANTE.- CABALLETE.- PORTAPAQUETES. CADRE.- BRAS OSCILLANT.- BEQUILLE.- PORTE BAGAGES. FRAME.- SWINGARM.- KICK STAND.- LUGGAGE CARRIER.	3-6-88 LAMINA FEUILLE DIAGRAM	1 F 1 START 14

Ejemplo

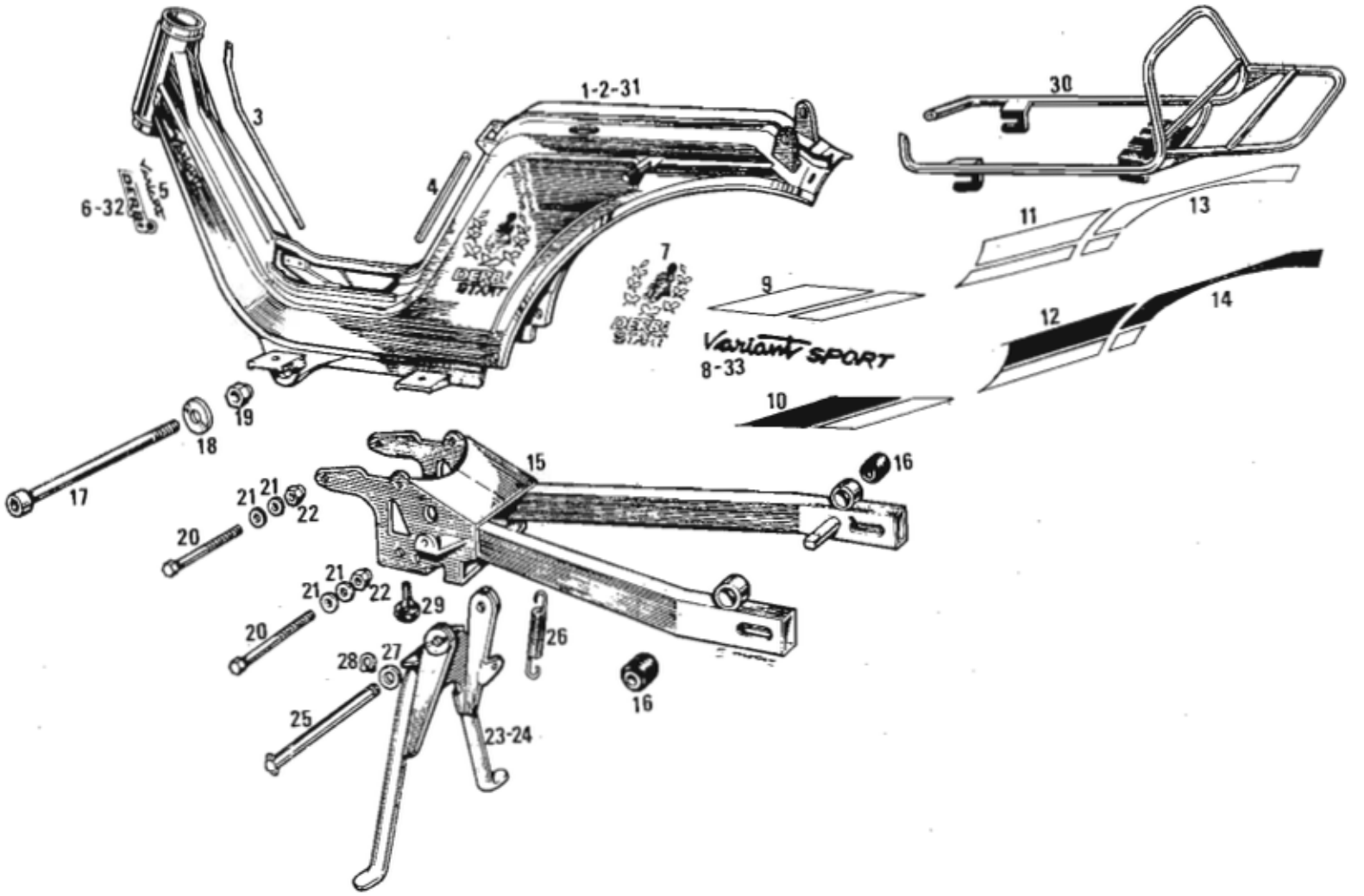

Ejemplo

DOWNLOADED FROM THE PUBLIC SCOOTERHULP LIBRARY
Www.ScooterHulp.com

DOWNLOADED FROM THE PUBLIC SCOOTERHULP LIBRARY
Www.ScooterHulp.com

CATALOGUE PIECES DETACHEES

MODELES: GAMME VARIANT (AUTOMATIQUES)

TABLE DES MODELES REPRESENTES SUR CE CATALOGUE:

Modele N° 1 = VARIANT START 14 NEGRO
Modele N° 2 = VARIANT SPORT ROJO K
Modele N° 3 = VARIANT SPORT BLANCO
Modele N° 4 = VARIANT SPORT BLANCO (FRANCIA)
Modele N° 5 = VARIANT SPORT GRIS METALIZADO
Modele N° 6 = VARIANT START NEGRO CON INTERMITENTES
Modele N° 7 = VARIANT START ROJO K CON INTERMITENTES
Modele N° 8 = VARIANT SPORT GRIS METALIZADO CON INTERMITENTES
Modele N° 9 = VARIANT SPORT ROJO K CON INTERMITENTES
Modele A = VARIANT SPORT ROJO K USA
Modele B = VARIANT SPORT BLANCO USA
Modele C = VARIANT SLE-X NEGRO
Modele D = VARIANT SPORT AMERICA ROJO K USA-88
Modele E = VARIANT SPORT AMERICA GRIS USA-88
Modele F = VARIANT SLE-X NEGRO BERMUDAS.

DOWNLOADED FROM THE PUBLIC SCOOTERHULP LIBRARY
Www.ScooterHulp.com

MODE D´EMPLOI DE CE CATALOGUE, POUR SOLLICITER CORRECTEMENT LES PIECES DE RECHANGE:

1° - Identifiez exactement, par le moyen de la table signalee "Modèle",le modèle pour lequel vous désirez des pièces.

2° - Identifiez le numéro de référence du moteur ou du chassis de la machine pour laquelle vous commandez des pièces.

3° - Avec cette information cherchez la planche correspondant au groupe ou se trouve le dessin de la pièce désirée. Ce dessin est signalé par un numéro sur la colonne marquée "figure", dont á la suite vous trouverez le code de la pièce en tenant en compte du modèle et du numéro de moteur et de chassis, comme signale plus haut.

Le departament technique de DERBI SE RESERVE le droit d´introduire les modifications et améliorations nécessaires san avis préalable.
Ces modifications seront indiquées par un astérisque (*) entre le casier "figure" et celui de "Code", qui determine à partir de quel numéro de moteur et de chassis est valable la nouvelle pièce et sur la partie superieure sera rappellée la pièce montée antérieurement à la modification .

- Si vouz voyez un astérisque (*) sur le casier de "Figure" et il n´y a aucun numéro a la suite, cela veut dire:

a) S´il nÿ a pas de coincidence, cela veut dire qu´a partir du numéro de moteur ou chassis signalé par un astérisque (*), cette piece n´est plus montée.

DOWNLOADED FROM THE PUBLIC SCOOTERHELP LIBRARY
Www.ScooterHelp.com

TABLE DES MATIERES

PLANCHES	DENOMINATION
1	CADRE - BRAS OSCILLANT - BEQUILLE - PORTE BAGAGES.
2	FOURCHE AVANT.
3	RESERVOIR - BOITE OUTILS - SELLE - CHASSIS.
4	GARDE BOUES AV. ET AR.
5	GUIDON AVEC COMMANDES.
6	ECLATE ELECTRIQUE.
7	ROUE AVANT - FLASQUE DE FREIN AV.
8	ROUE ARRIERE - FLASQUE DE FREIN AR.
9	TABLEAU DE BORD.
10	VILEBREQUIN BIELLE - CYLINDRE PISTON - CULASSE.ET DECOMPRESSEUR.
11	VARIATEUR.
12	REDUCTEUR.
13	CARTERS.
14	CARBURATEUR.
15	VOLANT MAGNETIQUE.
16	ECHAPPEMENT ET SILENCIEUX.
17	PEDALIER.
18	OUTILS FOURNIS.
19	OUTILS D'ATELIER.
20	CLIGNOTEURS.

DOWNLOADED FROM THE PUBLIC SCOOTERHULP LIBRARY
Www.ScooterHulp.com

Figura Figure Figr.	CODIGO Nº PIECE CODE Nr.	MODELO MODELE MODEL	Nº CHASIS Nº CHASSIS FRAME NUM.	DENOMINACION	DESIGNATION	NAME
01	0F01900601	1	E016205	CTO. CUADRO NEGRO START	CHASSIS NOIR A/ADHESIFS	CHASSIS ASSY./BLACK W/DECALS
★	0F01900602	1	E018009	CTO. CUADRO NEGRO START	CHASSIS NOIR A/ADHESIFS	CHASSIS ASSY./BLACK W/DECALS
02	0F01950601	2	E	CTO. CUADRO NEG.C/CALC.V.SPORT	CADRE COMPLET AVEC ADHESIF	FRAME CHASSIS ASSY. W/DECALS
03	0008215350	123	E016205	ADORNO SUP. CUERPO DTRO.CUADRO	ENJOLIVEUR SUP. CHASSIS	CHROME-TRIM
04	0A02200211	123	E016205	ADORNO INF. CUERPO TRAS.CUADRO	ENJOLIVEUR INF. CHASSIS	CHROME-TRIM
05	0A01500733	1	E016205	CALCA VARIANT ROJA START NEG.	ADHESIF VARIANT ROUGE START	DECAL VARIANT RED START
06	0F01500781	2	E	CALCA"DERBI"NARJ.V.SPORT NEGRO	ADHESIF"DERBI"ROUGE V.SPORT	DECAL"DERBI"RED V. SPORT
07	0F01510732	1	E016205	CALCA"DERBI"START ROJA	ADHESIF"DERBI" START ROUGE	DECAL"DERBI" START RED
08	0F01520731	2	E	CALCA V. SPORT NARJ. FONDO NEG.	ADHESIF VARIANT SPORT ROUGE	DECAL VARIANT SPORT RED
09	0F01800941	23	E018491	CALCA DTRA. DCHA.CHASIS V.SPORT	ADHESIF AV. DROIT CHASSIS	DECAL FRONT RIGHT CHASSIS
10	0F01800921	23	E018491	CALCA DTRA. IZQD.CHASIS V.SPORT	ADHESIF AV. GAUCHE CHASSIS	DECAL FRONT LEFT CHASSIS
		23	E018491	CALCA DTRA. IZQD.CHASIS V.SPORT	ADHESIF AV. GAUCHE CHASSIS	DECAL FRONT LEFT CHASSIS
11	0F01800961	23	E018491	CALCA CENTR.DCH.CHASIS V.SPORT	ADHESIF CENTR.DROITE CHASSIS	DECAL CENTER RIGHT CHASSIS
★		23	E018502	CALCA CENTR.DCH.CHASIS V.SPORT	ADHESIF CENTR.DROITE CHASSIS	DECAL CENTER RIGHT CHASSIS

(a) Cette pièce 0.F.018.0.096.1 n'est plus montée.

A partir de ce numéro de moteur ou de chassis et sur ces modèles est montée la nouvelle piece 0.F.019.0.060.2

A partir de ce numéro de moteur ou de chassis et sur ces modeles, était montée la pièce 0.F.019.0.060.1

DOWNLOADED FROM THE PUBLIC SCOOTERHULP LIBRARY
Www.ScooterHulp.com

CUADRO.- BASCULANTE.- CABALLETE.- PORTAPAQUETES. CADRE.- BRAS OSCILLANT.- BEQUILLE.- PORTE BAGAGES. FRAME.- SWINGARM.- KICK STAND.- LUGGAGE CARRIER.	3-6-88 LAMINA FEUILLE DIAGRAM	1 F 1 START 14

Exemple

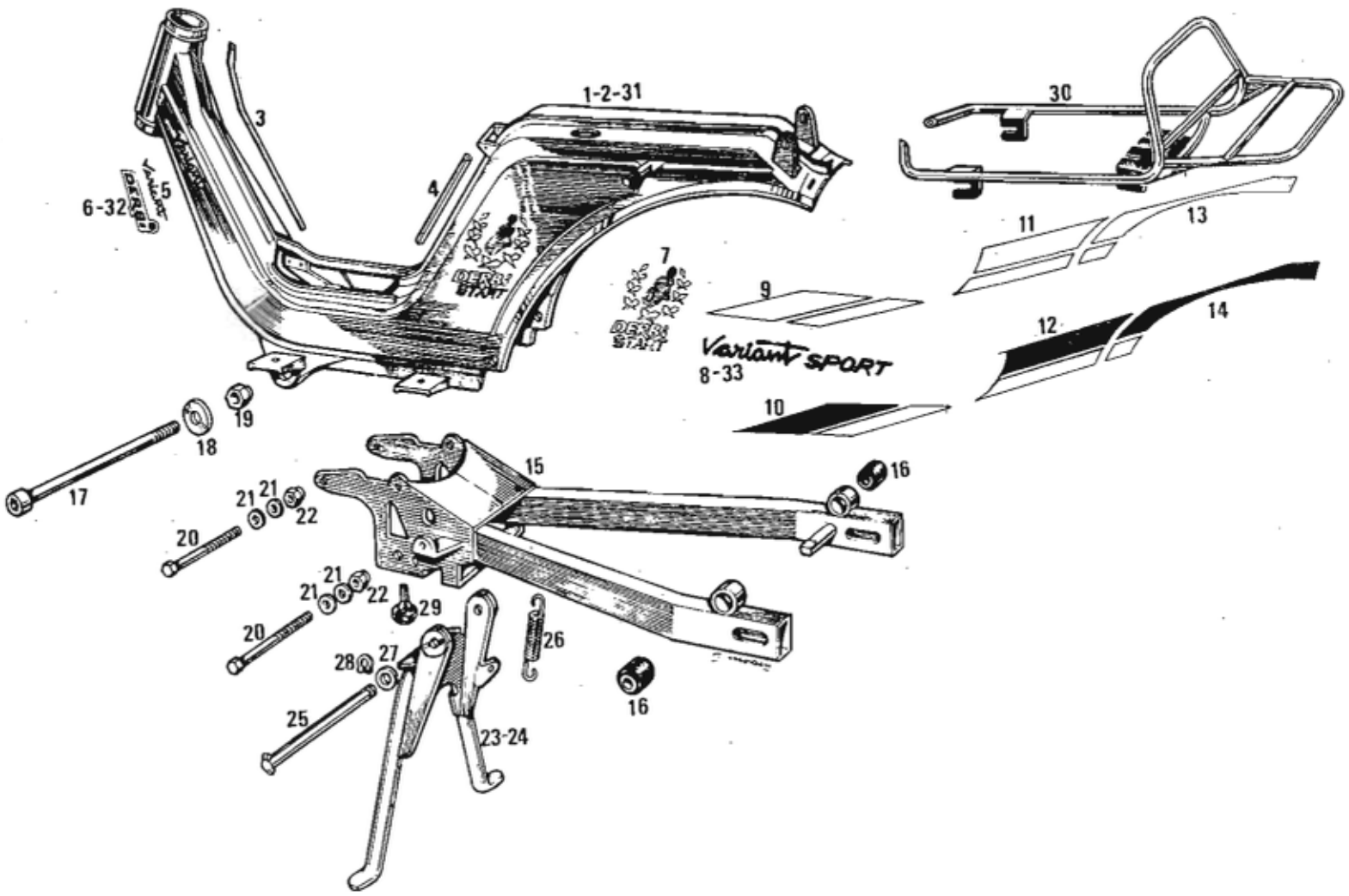

Exemple

DOWNLOADED FROM THE PUBLIC SCOOTERHULP LIBRARY
Www.ScooterHulp.com

DOWNLOADED FROM THE PUBLIC SCOOTERHULP LIBRARY
Www.ScooterHulp.com

PARTS CATALOG

Models: "VARIANT" AUTOMATIC TRANSMISSION

TABLE OF MODELS REPRESENTED IN THIS CATALOG:

Model N° 1 = VARIANT START 14 NEGRO
Model N° 2 = VARIANT SPORT ROJO K
Model N° 3 = VARIANT SPORT BLANCO
Model N° 4 = VARIANT SPORT BLANCO (FRANCIA)
Model N° 5 = VARIANT SPORT GRIS METALIZADO
Model N° 6 = VARIANT START NEGRO C
Model N° 7 = VARIANT START ROJO K CON INTERMITENTES
Model N° 8 = VARIANT SPORT GRIS METALIZADO CON INTERMITENTES
Model N° 9 = VARIANT SPORT ROJO K CON INTERMITENTES
Model A = VARIANT SPORT ROJO K USA
Model B = VARIANT SPORT BLANCO USA
Model C = VARIANT SLE-X NEGRO
Model D = VARIANT SPORT AMERICA ROJO K USA-88
Model E = VARIANT SPORT AMERICA GRIS USA-88
Model F = VARIANT SLE-X NEGRO BERMUDAS.

DOWNLOADED FROM THE PUBLIC SCOOTERHULP LIBRARY
Www.ScooterHulp.com

HOW TO USE THIS CATALOG TO FIND THE CORRECT REPLACEMENT PART:

1°- Identify the exact model for wich you wish to obtain the replacement part by the means of the table "Model".

2°- Identify the engine or frame serial number from the machine for which you need the replacement part.

3°- With this information, refer to the diagram which contains the part you need "Figure" column will be used to determine the correct "Code" number, having in mind the model and engine or frame number.

The technical department of DERBI reserves the right to make modifications and improvements to their machines without prior notice.
These variations will be indicated on the parts diagram by an asterisk (*)between the"figure" and "code" columns, with the serial numbers that begin the new variation; above will be signaled the part before mounted and we will periodically remit updates of the latest improvements with their corresponding numbers.

- If not any code number follows the asterisk (*) in the "Figure" column, this means:

a)If they do not coincide, this means that from the serial engine or frame number signaled by an asterisk (*),the part is no more mounted.

DOWNLOADED FROM THE PUBLIC SCOOTERHELP LIBRARY
Www.ScooterHelp.com

INDEX OF DIAGRAMS

DIAGRAM	DESCRIPTION
1	FRAME - SWINGARM - KICKSTAND - LUGGAGE CARRIER.
2	FORK.
3	GASTANK - SEAT - CHASSIS COMPONENTS.
4	FENDERS, FRONT AND REAR.
5	HANDLEBAR AND CONTROLS.
6	LIGHTING EQUIPMENT.
7	FRONT WHEEL AND BRAKE SYSTEM.
8	REAR WHEEL AND BRAKE SYSTEM.
9	SPEEDOMETER AND COMPONENTS.
10	CRANKSHAFT ASSY. - CYLINDER AND PISTON - CYL. HEAD DECOMPRESSOR.
11	TORQUE CONVERTOR.
12	REDUCTION GEARING.
13	CRANKCASES.
14	CARBURETOR.
15	FLYWHEEL MAGNETO.
16	EXHAUST SYSTEM.
17	PEDAL SHAFT.
18	TOOL KIT.
19	DEALER ACCESSORIES.
20	TURN SIGNALS.

DOWNLOADED FROM THE PUBLIC SCOOTERHELP LIBRARY
Www.ScooterHelp.com

Figura Figure Figr.	CODIGO Nº PIECE CODE Nr.	MODELO MODELE MODEL	Nº CHASIS Nº CHASSIS FRAME NUM.	DENOMINACION	DESIGNATION	NAME
01	0F01900601	1	E016205	CTO. CUADRO NEGRO START	CHASSIS NOIR A/ADHESIFS	CHASSIS ASSY./BLACK W/DECALS
★	0F01900602	1	E018009	CTO. CUADRO NEGRO START	CHASSIS NOIR A/ADHESIFS	CHASSIS ASSY./BLACK W/DECALS
02	0F01950601	2	E	CTO. CUADRO NEG.C/CALC.V.SPORT	CADRE COMPLET AVEC ADHESIF	FRAME CHASSIS ASSY. W/DECALS
03	0008215350	123	E016205	ADORNO SUP. CUERPO DTRO.CUADRO	ENJOLIVEUR SUP. CHASSIS	CHROME-TRIM
04	0A02200211	123	E016205	ADORNO INF. CUERPO TRAS.CUADRO	ENJOLIVEUR INF. CHASSIS	CHROME-TRIM
05	0A01500733	1	E016205	CALCA VARIANT ROJA START NEG.	ADHESIF VARIANT ROUGE START	DECAL VARIANT RED START
06	0F01500781	2	E	CALCA"DERBI"NARJ.V.SPORT NEGRO	ADHESIF"DERBI"ROUGE V.SPORT	DECAL"DERBI"RED V. SPORT
07	0F01510732	1	E016205	CALCA"DERBI"START ROJA	ADHESIF"DERBI" START ROUGE	DECAL"DERBI" START RED
08	0F01520731	2	E	CALCA V. SPORT NARJ. FONDO NEG.	ADHESIF VARIANT SPORT ROUGE	DECAL VARIANT SPORT RED
09	0F01800941	23	E018491	CALCA DTRA. DCHA.CHASIS V.SPORT	ADHESIF AV. DROIT CHASSIS	DECAL FRONT RIGHT CHASSIS
10	0F01800921	23	E018491	CALCA DTRA. IZQD.CHASIS V.SPORT	ADHESIF AV. GAUCHE CHASSIS	DECAL FRONT LEFT CHASSIS
		23	E018491	CALCA DTRA. IZQD.CHASIS V.SPORT	ADHESIF AV. GAUCHE CHASSIS	DECAL FRONT LEFT CHASSIS
11	0F01800961	23	E018491	CALCA CENTR.DCH.CHASIS V.SPORT	ADHESIF CENTR.DROITE CHASSIS	DECAL CENTER RIGHT CHASSIS
★		23	E018502	CALCA CENTR.DCH.CHASIS V.SPORT	ADHESIF CENTR.DROITE CHASSIS	DECAL CENTER RIGHT CHASSIS

(a) This part 0.F.018.0.096.1 is no more mounted

From this engine or frame serial number and for theses models, fit the new part number 0.F.019.0.060.2

From this engine or frame serial number and for theses models, was fitted the part number 0.F.019.0.060.1

DOWNLOADED FROM THE PUBLIC SCOOTERHULP LIBRARY
Www.ScooterHulp.com SPAIN

CUADRO.- BASCULANTE.- CABALLETE.- PORTAPAQUETES. CADRE.- BRAS OSCILLANT.- BEQUILLE.- PORTE BAGAGES. FRAME.- SWINGARM.- KICK STAND.- LUGGAGE CARRIER.	3-6-88	1 F
	LAMINA FEUILLE DIAGRAM	1
		START 14

Example

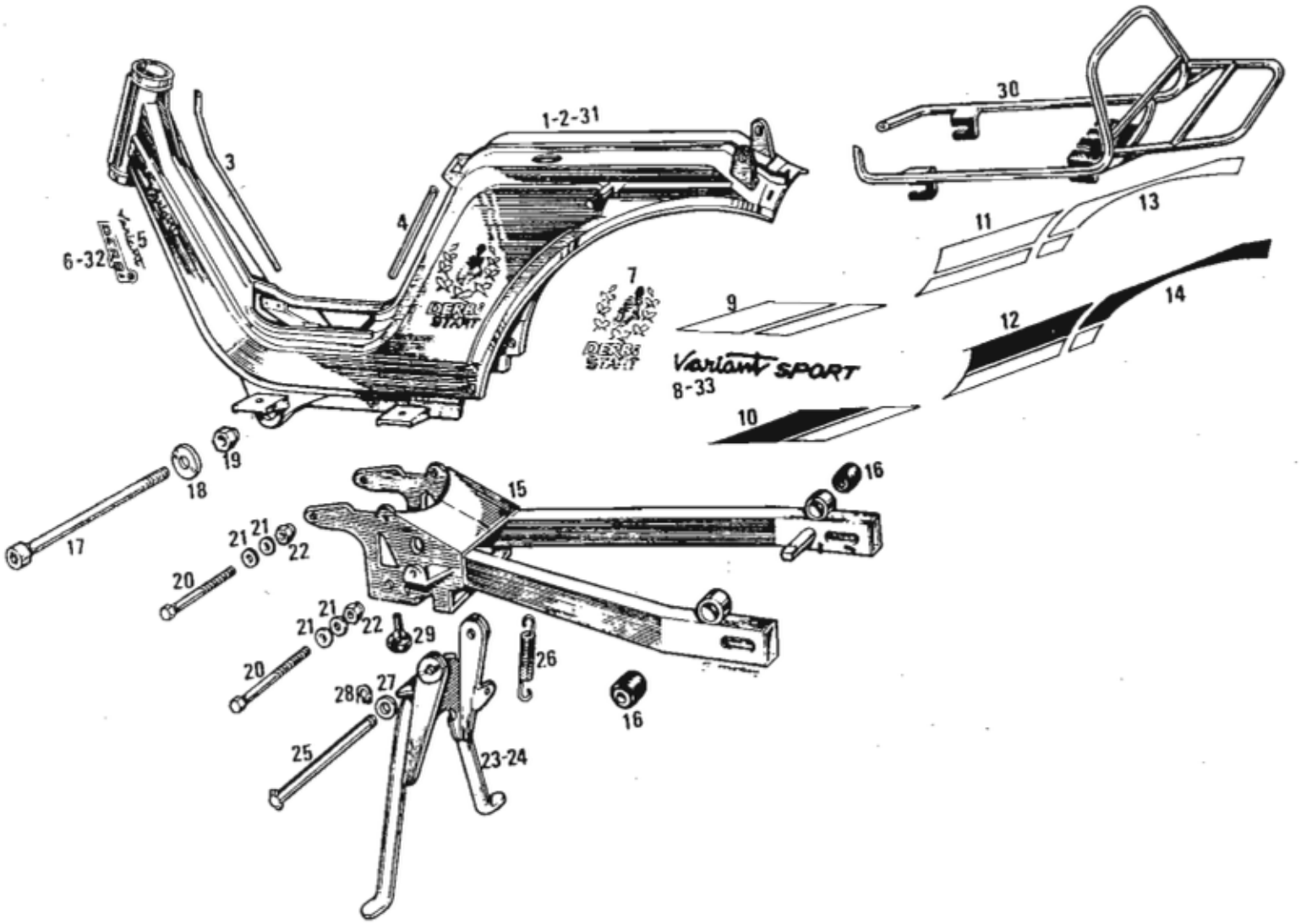

Example

DOWNLOADED FROM THE PUBLIC SCOOTERHULP LIBRARY
Www.ScooterHulp.com

Figura Figure Figr.	CODIGO Nº PIECE CODE Nr.	MODELO MODELE MODEL	Nº CHASIS Nº CHASSIS FRAME NUM.	DENOMINACION	DESIGNATION	NAME
001	0F01900604	1	E016205	CTO.CUADRO NEG.C/CALC.START-14	CHASSIS NOIR AVEC ADHESIF	CHASSIS ASSY, BLACK
002	0F01950601	2 9	E026868	CTO.CUADRO,V.SPORT,ROJO-K	CADRE COMPLET AVEC ADHESIF	FRAME CHASSIS ASSY.W/DECALS
003	0008215350	123456789ABCDEF	E016205	ADORNO SUP.CUERPO DTRO.CUADRO.	ENJOLIVEUR SUP. CHASSIS	CHROME-TRIM
004	0A02200211	123456789ABCDEF	E016205	ADORNO INF.CUERPO.TRAS.CUADRO.	ENJOLIVEUR INF. CHASSIS	CHROME-TRIM
005	0A01500733	1 6	E016205	CALCA VARIANT,ROJA. START NEG.	ADHESIF VARIANT, ROUGE, START	DECAL, VARIAND, RED. START
006	0F01500784	2 9A D	E026868	CALCA DERBI BLANCA.V.SPORT.R-K	ADHESIF "DERBI"	DECAL"DERBI"
007	0F01510732	1 6	E016205	CALCA "DERBI START", ROJA	ADHESIF "DERBI START" ROUGE	DECAL, DERBI START, RED
008	0F01520733	2 9A D	E026868	CALCA"V.SPORT"BLAN.V.SPORT.R-K	ADHESIF "VARIANT SPORT"	DECAL "VARIANT SPORT"
009	0F01800941	345 8 B E	E018491	CALCA DTRA.DCHA.CHASIS V.SPORT	ADHESIF AV. DROIT CHASSIS	DECAL, FRONT RIGHT CHASSIS
010	0F01800921	345 8 B E	E018491	CALCA DTRA.IZQD.CHASIS V.SPORT	ADHESIF AV, GAUCHE CHASSIS	DECAL, FRONT LEFT CHASSIS
011	0F01800961	345 8 B E	E018491	CALCA CENTR.DCH.CHASIS V.SPORT	ADHESIF CENTR.DROITE CHASSIS	DECAL, CENTER RIGHT CHASSIS
012	0F01500401	345 8 B E	E018491	CALCA CENTR.IZQ.CHASIS V.SPORT	ADHESIF CENTR.GAUCHE CHASSIS	DECAL CENTER LEFT CHASSIS
013	0F01800951	345 8 B E	E018491	CALCA POST.DCHA.CHASIS(V.SPORT	ADHESIF AR. DROITE CHASSIS	DECAL, REAR RIGHT CHASSIS
014	0F01800931	345 8 B E	E018491	CALCA POST.IZQD.CHASIS V.SPORT	ADHESIF AR. GAUCHE CHASSIS	DECAL, REAR LEFT CHASSIS
015	0F00310011	123456789ABCDEF	E016205	SCTO.BASCTE.V.START.	BRAS OSCILLANT "START"	V. START, SWINGARM
016	0003125260	123456789ABCDEF	E016205	SCTO.SILENT.CARTER-CULATA.	SILENT-BLOC EXTERIEUR DE CART	BUSHING, LOWER SHOCK MOUNT
017	0F03010271	123456789ABCDEF	E016205	TORN.FIJ.DTRA.MOTOR.SCOOTER-50	AXE FIX. AV. MOT.	ENGINE FRONT FIXING AXLE
018	0F02500981	123456789ABCDEF	E016205	ARAND.FIJ.DTRA.MOTOR.START.	RONDELLE INF.MOTEUR	WASHER, ENGINE FIX.
019	0000023100	123456789ABCDEF	E016205	TCA.AUTOBLOC. 10M150. DIN-	ECROU IDESSERABLE	NUT, SELF LOCKING 10MM1.5
020	0008225270	123456789ABCDEF	E016205	TOR.FIJ.MOTOR.8M125X110.	BOULON FIXAT.MOTEUR 8M 125X11	HEX. HEAD SCREW 8M125X110
021	0000031080	123456789ABCDEF	E016205	ARAND.PLANA MECANIZ.D.8.DIN125	RONDELLE D8	MACHINED FLAT WASHER, O 8
022	0000023080	123456789ABCDEF	E016205	TCA.AUTOBLOC. 8M125. DIN-	ECROU INDESSERABLE	SELF-LOCKING NUT 8M125
023	0F00820011	1	E016205	SCTO.CABALLETE. START-14	BEQUILLE, V.SPORT	VARIANT SPORT, KICKSTAND
024	0F00810011	23456789ABCDEF	E018491	SCTO.CABALLETE.V.START	BEQUILLE	KICKSTAND
025	0F00800071	123456789ABCDEF	E016205	EJE CABALLETE V.START	AXE DE BEQUILLE "VARIANT STAR	V. START PIVOT PIN KICKSTAND
026	0F00800081	123456789ABCDEF	E016205	MUELLE CABALLETE.V.START.	RESSORT DE BEQUILLE	SPRING KICKSTAND
027	0000031100	123456789ABCDEF	E016205	ARAND.PLANA MECANIZ. D.10.	RONDELLE PLATE D10	MACHINED FLAT WASHER O 10
028	0000047110	123456789ABCDEF	E016205	ANILLO SEG.EJES D10.DIN-471.	CIRCLIP POUR AXE D10	CIRCLIP, BRAKE SHOE RETENTION
029	0004322460	123456789ABCDEF	E016205	TOPE PALCA.ARRQ.COPPA.	BUTEE CAOUTCHOUC, KICK	GROMMET,KICK STARTER
030	0F01400191	12345 ABCDEF	E016205	STO.PORTAPAQ.TRAS.V.START.	PORTEBAG. AR. "START"	START REAR BASKET HOLDER
031	0F01950602	34	E018491	CTO.CUADRO BLANCO. V.SPORT	CHASSIS BLANC AVEC. ADHESIFS	CHASSIS ASSY. BLACK,SINGLE SEA
032	0F01500782	345 8 B E	E018491	CALCA"DERBI"NARJ.V.SPORT.BLCO.	ADHESIF "DERBI", ROUGE	DECAL "DERBI", RED
033	0F01520732	345 8 B E	E018491	CALCA"V.SPORT"NARJ.FONDO TPRTE	ADHESIF V.SPORT, ROUGE	DECAL V.SPORT, RED
034	0D04600142	12 6789 C F	E016205	CALCA PRES.NEUMAT.BLAN.START14	ADHESIF	DECAL
035	0D04600141	345	E018491	CALCA PRES.NEUMAT.NEGR.FDT/FT	ADHESIF	DECAL
036	0F01800101	1 67	E016205	PLACA FABRICANTE "V.START"	PLAQUE CONSTRUCTEUR	MANOFACTURER'S LABEL
037	0F01840101	2345 89	E018491	PLACA FABRICANTE. V.SPORT	PLAQUE CONSTRUCTEUR	MANOFACTURER'S LABEL
038	0F01500402	2 9A D	E026868	CALCA ANT.IZQ.CHAS.V.SPORT.R-K	ADHESIF CENT. GAUCHE CHASSIS	DECAL, CENTER LEFT CHASSIS
039	0F01800962	2 9A D	E026868	CALCA CENT.DCH.CHA.V.SPORT.R-K	ADHESIF CENT. DROITE CHASSIS	DECAL, CENTER RIGHT CHASSIS
040	0F01800922	2 9A D	E026868	CALCA DTR.IZQ.CHAS.V.SPORT.R-K	ADHESIF AR, GAUCHE CHASSIS	DECAL, FRONT LEFT CHASSIS
041	0F01800942	2 9A D	E026868	CALCA DTR.DCH.CHAS.V.SPORT.R-K	ADHESIF AR, DROITE CHASSIS	DECAL, FRONT RIGHT CHASSIS
042	0F01800932	2 9A D	E026868	CALCA POST.IZQ.CHA.V.SPORT.R-K	ADHESIF AR, GAUCHE CHASSIS	DECAL, REAR LEFT CHASSIS
043	0F01800952	2 9A D	E026868	CALCA POST.DCH.CHA.V.SPORT.R-K	ADHESIF AR, DROITE CHASSIS	DECAL, REAR RIGHT CHASSIS
044	0F01950603	5 8	E027035	CTO.CUADRO,V.SPORT,GRIS METAL.	CHASSIS GRIS AVEC ADHESIF	CHASSIS ASSY , GREY
045	0F04600321	123456789 C F	E016205	CALCA CASCO.BLCA.START-INTTES.	ADHESIF CASCO	DECAL, HELMET, WHITE.
046	0E04600251	123456789ABCD F	E016205	GUIA BASCTE.SCOOTER-50.	GUIDE BRAS OSCILLANT	SWINGARM GUIDE
047	0E04600331	123456789ABCD F	E016205	PLATINA.REFZ.GUIA BCTE.SCO/USA	RENFORT GUIDE BRAS OSCILL.	SWINGARM GUIDE BRACKET
048	0000002620	123456789ABCD F	E016205	TOR.C/EXAG. 6M100X20.DIN-	ECROU 6M100X20	HEXAGONAL HEAD SCREW 6M100X20
049	0000023060	123456789ABCD F	E016205	TCA.AUTOBLOC. 6M100. DIN-	ECROU INDESSERABLE	SELF-LOCKING NUT 6M100
050	0000031060	123456789ABCD F	E016205	ARAND.PLANA MECANIZ.D.6.	RONDELLE PLATE D6	MACHINED FLAT WASHER O 6
051	0F01900602	6	E035090	CTO.CUADRO NEGRO.START	CHASSIS NOIR A/ ADHESIFS	CHASSIS ASSY.,BLACK W/ DECALS
052	0F01900603	7	E040710	CTO.CUADRO C/CAL.START-ROJO K	CHASSIS COMPLET ROUGE	FRAME CHASSIS ASSY, RED

DOWNLOADED FROM THE PUBLIC SCOOTERHULP LIBRARY
Www.ScooterHulp.com

DERBI	3-6-88	1 F
CUADRO.- BASCULANTE.- CABALLETE.- PORTAPAQUETES. CADRE.- BRAS OSCILLANT.- BEQUILLE.- PORTE BAGAGES. FRAME.- SWINGARM.- KICK STAND.- LUGGAGE CARRIER.	LAMINA FEUILLE DIAGRAM	1 START 14

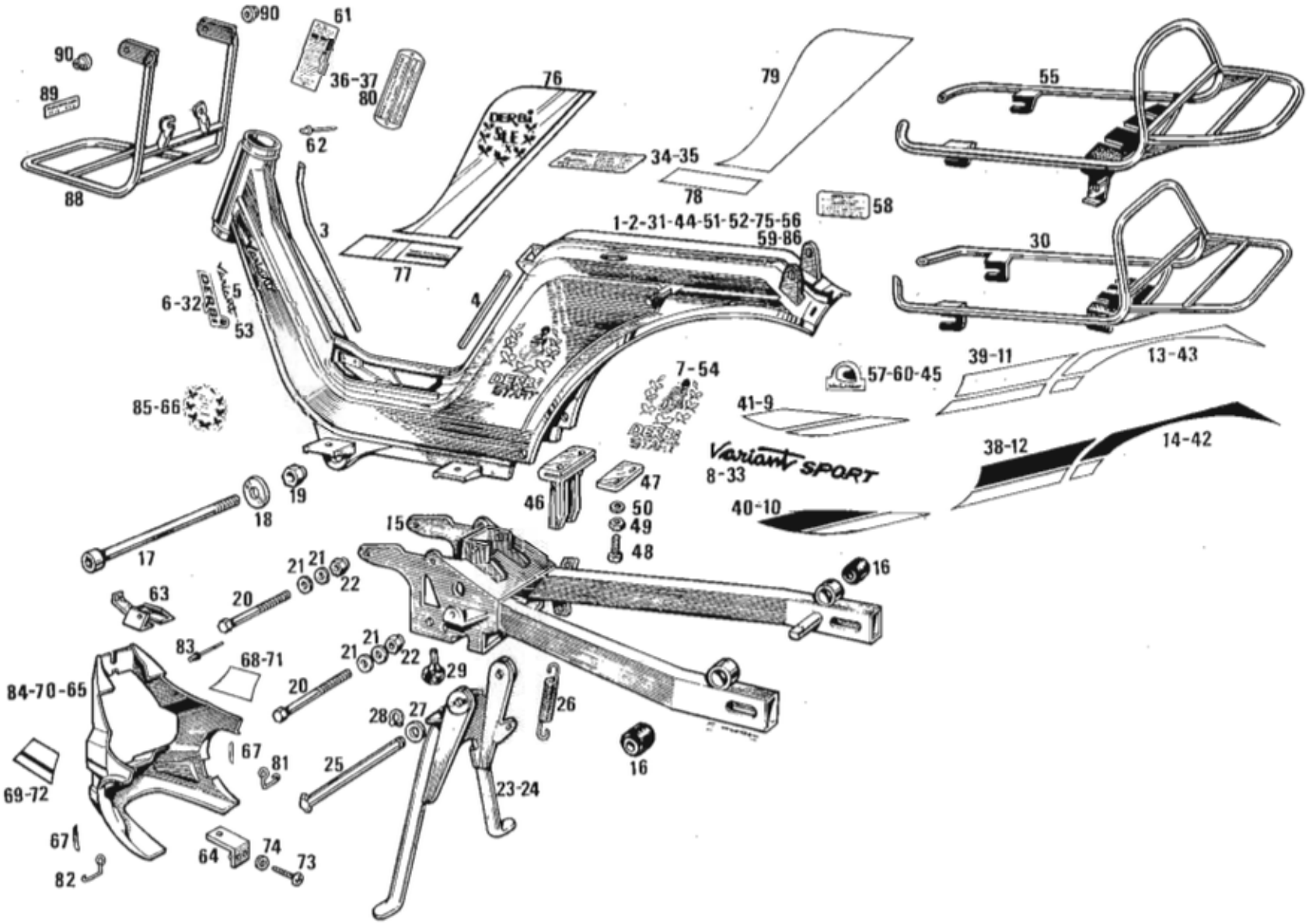

DOWNLOADED FROM THE PUBLIC SCOOTERHULP LIBRARY
Www.ScooterHulp.com

Figura Figure Figr.	CODIGO Nº PIECE CODE Nr.	MODELO MODELE MODEL	Nº CHASIS Nº CHASSIS FRAME NUM.	DENOMINACION	DESIGNATION	NAME
053	0008715730	7	E040710	CALCA VARIANT ORO	ADHESIF VARIANT (OR)	VARIANT DECAL(GOLD)
054	0F01510731	7	E040710	CALCA "DERBI START"	ADHESIF "DERBI START"	DERBI START DECAL
055	0F01410191	6789	E035090	SCTO.PORTAPQ.TRAS.START C/INTT	PORTEBAGAJES ARRIERE	START REAR BASKET HOLDER
075	0F01901601	C F	E048721	CTO.CUADRO NEG.SLE-X.C/CALCAS.	CHASSIS NOIR AVEC ADHESIF	CHASSIS ASSY,BLACK W/DECALS
076	0F01510401	C F	E048721	CALCA LAT.SUP.IZQ.CH.SLE-X.NEG	ADHESIF LAT.GAUCHE CHASSIS	DECAL LEFT
077	0F01800923	C F	E048721	CALCA DTRA.INF.IZQ.CH.SLE-X.NG	ADHESIF AV.GAUCHE CHASSIS	DECAL, FRONT LEFT CHASSIS
078	0F01800943	C F	E048721	CALCA DTRA.INF.DCH.CH.SLE-X.NG	ADHESIF AV.DROIT CHASSIS	DECAL, FRONT RIGHT CHASSIS
079	0F01810961	C F	E048721	CALCA LAT.SUP.DCH.CH.SLE-X.NEG	ADHESIF LAT.DROITE CHASSIS	DECAL RIGHT
080	0F01860101	C F	E048721	PLACA FABRICANTE.SLE-X.	PLAQUE CONNSTRUCTEUR	MANOFACTURER'S LABEL
087*	0F01500783	C E	E048721	CALCA "DERBI",ROJA,PLACA FR.FT	ADHESIF "DERBI" PLAQUE FRONT	FRIRING "DERBI" DECAL

PIEZAS ESPECIALES EXPORTACION MODELLE EXPORTATION (SEULEMENT) EXPORT MODEL (ONLY)

056	0F01910931	A D	E041616	R-CTO.CUADRO.ROJO-K SPORT USA	CADRE COMPLET ROUGE	FRAME CHASSIS W/DECAL, RED
057	0E04600321	A D	E041616	CALCA CASCO.SCOOT-50.USA	ADHESIF "CASQUE"	DECAL "HELMET"
058	0F00400524	AB DE	E041616	CALCA DEPTO.NEGRA.SCOOT-50.USA	ADHESIF NOIRE	BLACK DECAL
059	0F01910932	B	E041664	R-CTO CUADR.BLANCO V.SPORT USA	CHASSIS BLANC AVEC.ADHESIF	CHASSIS ASSY.BLACK,SINGLE SEA
060	0F04600322	B E	E041661	CALCA CASCO NEGRA.SCOOT-BLCA.	DECAL CASQUE	DECAL, "HELMET"
061	0F01850101	AB DE	E041616	PLACA CARACT.V.SPORT.USA.	PLAQUE CARACTERISTIQUES	CHARACTERISTIC PLATE
062	0E01800231	AB DE	E041616	RMCHE.PCA.FCTE.SCO-50.70102405	RIVET FIX.PLAQUE CONSTR.	RIVET
063	0F01500261	AB DE	E041616	SOPTE.DTRO.SPOILER.SPORT.USA.	SUPPORT ARR. SPOILER	SUPPORT
064	0F01500701	AB DE	E041616	OREJA LAT.FIJ.SPOIL.SPORT.USA.	SUPPORT INF. SPOILER	SUPPORT
065	0F04600081	A D	E041616	SCTO.SPOIL.R.K.C/CAL.SPORT.USA	SOUS-ENSEMBLE SPOILER ROUGE	SPOILER SUB-ASSEMBLY, RED
066	0F03000905	AB D	E041616	CALCA SCANIMET NEGRA,SCO USA	ADHESIF "SCANIMET"	DECAL "SCANIMET"
067	0F04600091	AB DE	E041616	CALCA INF.NEG.SPOIL.SPORT.USA.	ADHESIF INF.NOIRE SPOILER	BLACK DECAL LOWER
068	0F04600111	A D	E041616	CALCA SUP.DCH.SPOIL.SPORT USA.	ADHESIF SUP.DROITE SPOILER	RIGHT DECAL UPPER SPOILER
069	0F04600121	A D	E041616	CALCA SUP.IZQ.SPOIL.SPORT USA.	ADHESIF SUP GAUCHE SPOILER	LEFT DECAL UPPER SPOILER
070	0F04600082	B	E041664	SCTO.SPOILER BCO.C/C.SPORT.USA	SOUS-ENSEMBLE SPOILER BLANCHE	SPOILER SUB-ASSEMBLY, WHITE
071	0F04600112	B E	E041664	CALCA SUP.DCH.SPOIL.SP.BCO.USA	ADHESIF SUP. DROITE SPOILER	RIGHT DECAL UPPER SPOILER
072	0F04600122	B E	E041664	CALCA SUP.IZQ.SPOIL.SP.BCO.USA	ADHESIF SUP. GAUCHE SPOILER	LEFT DECAL UPPER SPOILER
073	0000012515	AB D	E041616	TOR.C/RED.CRUZ.5M80X15.DIN7985	VIS CRUCIFORME	SCREW
074	0000031050	AB D	E041616	ARAND.PLANA MECANIZ.D.5.	RONDELLE PLATE MECA.Ø 5	WASHER, 5MM I.D.
081	0F01510701	AB D	E041616	MUELLE DCH.ANCL.SPOIL.V.SP.USA	RESSORT SPOILER	SPOILER SPRING
082	0F01500691	AB D	E041616	MUELLE IZQ.ANCL.SPOIL.V.SP.USA	RESSORT SPOILER	SPOILER SPRING
083	0F00700351	AB D	E041616	RMCHE.4X12.FIJ.SUPMT.GUAD.T.(P	RIVET	RIVET
084	0F04600083	E	E056182	SCTO.SPOILER GRIS.SPORT.AM.USA	SOUS-ENS. SPOILER GRIS	SPOILER SUB-ASSEMBLY, GREY
085	0F03000906	E	E056182	CALCA SCANIMET.BLCA.SP.AM.USA.	ADHESIF "SCANIMET"	DECAL "SCANIMET"
086	0F01910933	E	E056182	R-CTO.CUADRO GRIS V.SP.AM.USA	CADRE COMPLET GRIS	CHASSIS ASSY, GREY
088*	0F01400011	F	E064706	SCTO.PORTAPAQ.DTROP.SLE-X.BMD.	PORTE-BAGAGES AVANT	BASKET HOLDER
089*	0F04400351	F	E064706	CALCA PESO PORTAPAQ.SLE-X BERM	ADHESIF PORTE-BAGAGES	DECAL BASKET HOLDER
090*	0F04600551	F	E064706	CASQ.FIJ.SUP.PORTAPAQ.SLE-X.B.	ENTRETOISE FIX.PORTE-BAGAGES	SPACER

DOWNLOADED FROM THE PUBLIC SCOOTERHULP LIBRARY
Www.ScooterHulp.com

DERBI	CUADRO.- BASCULANTE.- CABALLETE.- PORTAPAQUETES. CADRE.- BRAS OSCILLANT.- BEQUILLE.- PORTE BAGAGES. FRAME.- SWINGARM.- KICK STAND.- LUGGAGE CARRIER.	3-6-88 / LAMINA / FEUILLE / DIAGRAM / 1 F / 1 / START 14

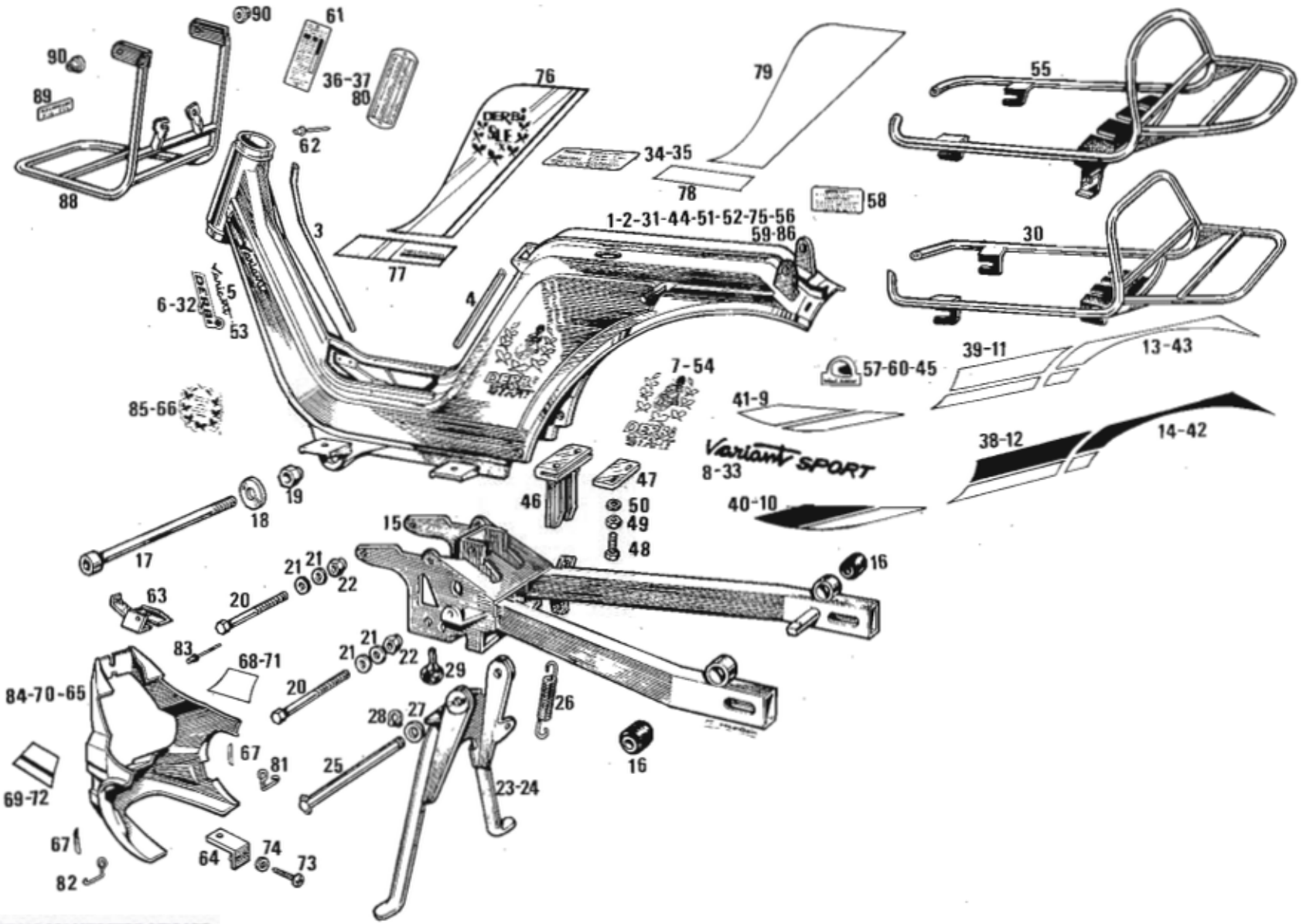

DOWNLOADED FROM THE PUBLIC SCOOTERHULP LIBRARY
Www.ScooterHulp.com

Figura Figure Figr.	CODIGO Nº PIECE CODE Nr.	MODELO MODELE MODEL	Nº CHASIS Nº CHASSIS FRAME NUM.	DENOMINACION	DESIGNATION	NAME
001	0F02010711	1	E016205	R-CTO.HORQ.DIRECT.NEG.START-14	FOURCHE COMPLETE	FORK ASSY.
002	0F02000711	2 A	E026868	R-CTO.HORQ.DIR.V.SPORT ROJO K	FOURCHE COMPLETE	FORK ASSY.
003	0F02000712	34	E018491	R-CTO.HORQ.DIRECT.V.SPORT BLAN	FOURCHE COMPLETE	FORK ASSY.
004	0A00240092	1 6	E016205	PLATINA SUPERIOR,NEGRA,V.START	PLETINE SUPERIEURE, NOIRE	TRIPLE CLAMP, UPPER, BLACK
005	0F00200091	2345 89ABCDEF	E018491	SCTO.PLATINA SUP.NEGRA.V.SPORT	PLETINE SUPERIEURE, NOIRE	TRIPLE CLMP, UPPER, BLACK
006	0A00210111	1 67	E016205	TCA.FIJ.TIJA.V.START.	ECROU FIX TUBE	CAP, FORK STEM
007	0003102111	2345 89AB	E018491	TCA.CIEGA FIJ.TIJA HORQ.ANTOR.	ECROU BORGNE FIX TUBE	CAP,FORK STEM
008	0003102260	123456789AB DE	E016205	ARAND.SUP.SOPTE.FARO.	RONDELLE SUPPORT PHARE	HEADLIGHT SUPPORT WASHER
009	0008202260	123456789ABCDEF	E016205	TOPE SOPTE.FARO.	JOINT DE SUPPORT DE PHARE	SEAL HEADLIGHT SUPPORT TUBE
010	0F00210871	1 6	F016205	TUBO SEPARAD.PLTNA.NEGRO,START	TUBE SEPARATEUR	SPACER, BLACK
011	0F00200231	2 56789A CDEF	E026868	GUARDAP.HORQ.CROMADO.START	CACHE POUSSIERE CHROME	DUST PROTECTOR, UPPER FORK
012	0F00200233	34 B	E018491	GUARDAP.HORQ.BLANCO.V.SPORT	CACHE POUSSIERE	DUST PROTECTOR, UPPER FORK
013	0F00210131	1 34 B	E016205	PIERNA HORQ.DCHA.GRIS V.SPORT	JAMBE DE FOURCHE, DROITE, GRI	FORK TUBE, LOWER, RIGHT, GREY
014	0F00220131	2 7 9A D	E026868	PIERNA HORQ.DCH.START.ROJO K.	JAMBE FOURCHE, DROITE	FORK TUBE,LOWER,RIGHT
015	0F00210121	1 34 B	E016205	PIERNA HORQ.IZQD.GRIS V.SPORT	JAMBE DE FOURCHE, GAUCHE, GRI	FORK TUBE, LOWER, LEFT, GREY
016	0F00220121	2 7 9A D	E026868	PIERNA HORQ.IZQ.START-ROJO K.	JAMBE FOURCHE,GAUCHE	FORK TUBE,LOWER,LEFT
017	0008202170	123456789ABCDEF	E016205	MUELLE HORQ.	RESSORT DE FOURCHE	SPRING,FORK
018	0000061040	123456789ABCDEF	E016205	BOLA.D.4,76.	BILLES D.4,76	BALL, D,4,76
019	0003102060	123456789ABCDEF	E016205	CAZLTA.DIRECC.GUIA EXTER.	CUVETTE DE DIRECTION	OUTER GUIDE BALL BEARING
020	0005602100	123456789AB	E016205	ARAND.FIJ.TIJA.SPORT/START/SLE	RONDELLE FIX TUBE	WASHER,FORK STEM CAP
022	0006129050	123456789AB	E016205	ARAND.SECTOR ARRQ.	RONDELLE DE BOUCHON	WASHER
023	0003102270	123456789AB	E016205	TAPON TUBO PIERNA.ANTORCHA.	BOUCHON	CAP,FORK TUBE UPPER
024	0008202010	123456789ABCDEF	E016205	SCTO.TIJA-PLTNA.NEG.VARIANT.	PLATINE INFERIEURE + TIGE	TRIPLE CLAMP,LOWER W-PIN ASSEM
025	0003102070	123456789ABC F	E016205	CAZLTA.DIRECC.INF.	CUVETTE DE DIRECTION INF.	LOWER BALL BEARING RACE
026	0008202190	123456789ABCDEF	E016205	TUBO PRINCIPAL.VARIANT.	TUBE DE FOURCHE	FORK TUBE,UPPER
027	0000002855	123456789ABCDE	E016205	TOR.C/EXAG.8M125X55.DIN- /8.8	BOULON 8M125X55	HEXAGONAL HEAD SCREW 8M125X55
028	0000021080	123456789ABCDEF	E016205	TCA.EXAG. 8M125. DIN-	ECROU 8M125	HEXAGONAL NUT 8M125
029	0000031080	123456789ABCDEF	E016205	ARAND.PLANA MECANIZ.D.8.DIN125	RONDELLE D8	MACHINED FLAT WASHER, O 8
030	0A00210201	123456789ABCDEF	E016205	TOPE HORQUILLA	CAOUT. BUTEE FOURCHE	RUBBER GUIDE, FORK ASSY.
032	0008502080	123456789ABCDEF	E016205	TCA.REGULAC.DIRECC.	ECROU REGLAG DIRECTION	NUT,STEM
033	0003102071	123456789ABCDEF	E016205	CAZLTA.DIRECC.SUPER.	CUVETTE DE DIRECTION SUP.	UPPER BALLA BEARING
034	0A02000562	1 6	E016205	CUBREPLATINA INF.NEGRA - START	COUVRE PLETINE INF. NOIR	TRIPLE CLAMP COVER,LOWER,BLACK
035	0A02000563	34	E018491	CUBREPLAT.INF.BLANCO.V.SPORT	CACHE PLETINE INF. BLANC	TRIPLE CLAMP,COVER,LOWER,WHITE
036	0003102161	1	E016205	TUBO FIJ.MUELLE HORQ.ANTORCHA.	TUBE DE RESSORT FOURCHE	SPRING TUBE
037	0008302160	23456789ABCDEF	E018491	TUBO FIJ.MUELLE HORQ.	TUBE FIXATION RESSORT	ROD,SPRING ATTACHMENT LOWER
038	0F00200241	2 A D	E026868	SCTO.SOPTE.DCH.FARO.V.SPORT RK	SUPPORT DE PHARE, DROIT	HEADLIGHT SUPPORT, RIGHT
039	0F00200251	2 A D	E026868	SCTO.SOPTE.IZQ.FARO.V.SPORT RK	SUPPORT DE PHARE, GAUCHE	HEADLIGHT SUPPORT, LEFT
040	0F00200242	34 B	E018491	SCTO.SOPTE.DCH.FARO.BL.V.SPORT	SUPPORT DE PHARE, DROIT	HEADLIGHT SUPPORT,RIGHT
041	0F00200252	34 B	E018491	SCTO.SOPTE.IZQ.FARO.BL.V.SPORT	SUPPORT DE PHARE, GAUCHE	HEADLIGHT SUPPORT, LEFT
042	0D03700071	123456789ABCDEF	E016205	JUNTA TORICA TAPON DEP.Y NIVEL	JOINT BOUCHON RESERVOIR	"O" RING, FUEL CAP
043	0003102470	123456789ABCDEF	E016205	RETEN PIERNA HORQ.24.32.7.	JOINT SPI JAMBE FOURCHE	SEAL,FORK ASSEMBLY
044	0008202500	123456789ABCDEF	E016205	TOR.FIJ.TUBO HORQ.VARIANT.	VIS FIX TUBE	SCREW, FORK TUBE
045	0008202260	2345	E018491	TOPE SOPTE.FARO.	JOINT DE SUPPORT DE PHARE	SEAL HEADLIGHT SUPPORT TUBE
046	0A00200981	2345 89AB	E018491	R-CTO.PTE.FIJ.MANILL.CALIF.SPO	SUPPORT FIX. GUIDON	SUP.FIX HANDLEBAR
047	0A01550021	1	E016205	PASACABLES PLATINA SUP.V.STAR	CAOUTCH.GUIDE CABLE PLETINE	RUBBER GUIDE,TRIPLE-CLAMP UPP.
		1	E027412	PASACABLES PLATINA SUP.V.STAR	CAOUTCH.GUIDE CABLE PLETINE	RUBBER GUIDE,TRIPLE-CLAMP UPP.
048	0A02000564	2 7 9A D	E026868	CUBREPLATINA. START-ROJO K	CACHE PLETINE	COVER TRIPLE CLAMP LOWER
049	0F02000713	5	E027035	R-CTO.HORQ.V.SPORT,GRIS METAL.	FOURCHA COMPLETE	FORK ASSY
050	0A02000565	5 8 E	E027035	CUBREPLATINA,V.SPORT,GRIS MET.	CACHE, PLETINE INF.	TRIPLE CLAMP, COVER, LOWER
051	0F00200243	5 E	E027035	SCTO.SPTE.DCH.FARO,V.SPORT GRI	SUPPORT DE PHARE DROIT	HEADLIGHT, SUPPORT, RIGHT
052	0F00200253	5 E	E027035	SCTO.SPTE.IZQ.FARO.V.SPORT GRI	SUPPORT DE PHARE, GAUCHE	HEADLEGHT SUPPORT, LEFT

DOWNLOADED FROM THE PUBLIC SCOOTERHELP LIBRARY
Www.ScooterHelp.com

DERBI	3-6-88	1 F
HORQUILLA DIRECTRIZ FOURCHE AVANT FORK	LAMINA FEUILLE DIAGRAM	2 START 14

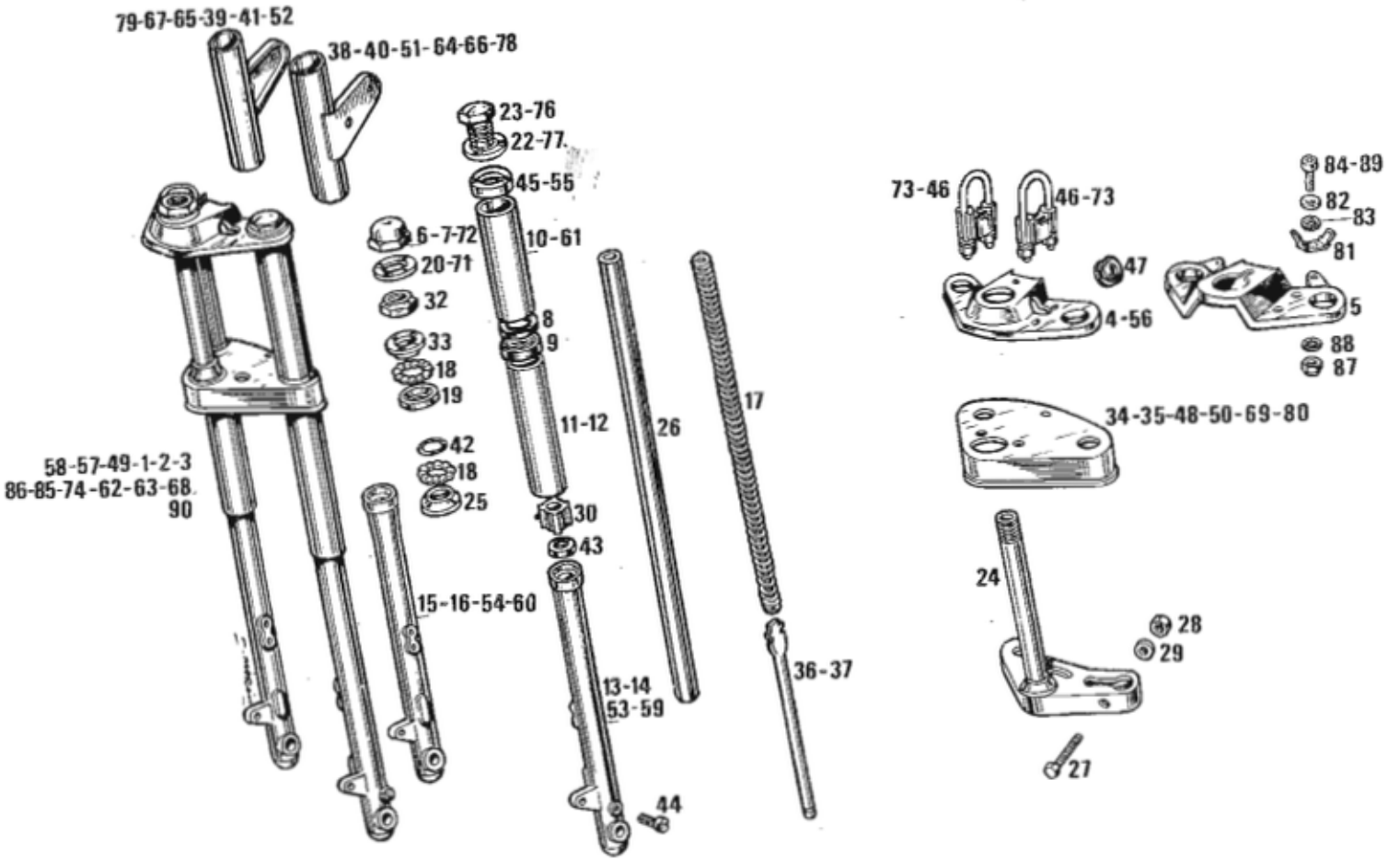

DOWNLOADED FROM THE PUBLIC SCOOTERHULP LIBRARY
Www.ScooterHulp.com

Figura Figure Figr.	CODIGO Nº PIECE CODE Nr.	MODELO MODELE MODEL	Nº CHASIS Nº CHASSIS FRAME NUM.	DENOMINACION	DESIGNATION	NAME
053	0F00210132	5 8 E	E027035	PIERNA HORQ. DCH. V. SPORT, GRIS M	JAMBRE DE FOURCHE, DROITE	FORK TUBE, LOWER, RIGHT
054	0F00210122	5 8 E	E027035	PIERNA HORQ. IZQ. V. SPORT. GRIS M	JAMBRE DE FOURCHE, GAUCHE	FORK TUBE, LOWER, LEFT
055	0004302400	1 67	E016205	TOPE SOPTE. FARO.	BUTEE CAOUTCHOUC	RUBBER, HEADLIGHT SUP
056	0A00240093	7	E040710	PLTNA. SUPER. V. START-ROJO "K".	PLETINE SUPERIEURE	TRIPLE CLAMP, UPPER.
057	0F02010713	6	E035090	R-CTO. HORQ. DIRECT. V. START-NEGR	FOURCHE COMPLETE	FORK ASSEMBLY
058	0F02000714	7	E040710	R-CTO. HORQ. DIRECT. START-ROJO K	FOURCHE COMPLETE	FORK ASSY.
059	0B00210136	6 C F	E035090	PIERNA HORQ. DCHA. NEGRA. V. SLE	JAMBE DE FOURCHE, DROITE NOIR	FORK TUBE LOWER, RIGHT BLACK
060	0B00220124	6 C F	E040710	PIERNA HORQ. IZQD. NEGRA. V. SLE	JAMBE DE FOURCHE, GAUCHE NOIR	FORK TUBE LOWER, LEFT BLACK
061	0F00210872	7	E040710	TUBO SEP. PLAT. ROJO K, V. START	TUBE SEPARATEUR	SPACER, RED
062	0F02040712	8	E039876	R-CTO. HORQ. DIREC. SPORT. GR. C/IT	FOURCHE COMPLETE	FORK ASSY.
063	0F02040711	9	E049343	R-CTO. HORQ. DIREC. SPORT. R-K. C/I	FOURCHE COMPLETE	FORK ASSY
064	0F00210242	8	E039876	SCTO. SOPTE. DCHO. FARO, GR. C/ITT.	SUPPORT DE PHARE, DROIT	HEADLIGHT SUPPORT, RIGHT
065	0F00210252	8	E039876	SCTO. SOPTE. IZQ. FARO. GRIS. C/ITT	SUPPORT DE PHARE, GAUCHE	HEADLIGHT SUPPORT, LEFT
066	0F00210241	9	E048721	SCTO. SOPTE. DCHO. FARO, R-K. C/ITT	SUPPORT DE PHARE, DROIT	HEADLIGHT SUPPORT, RIGHT
067	0F00210251	9	E048721	SCTO. SOPTE. IZQ. FARO. R-K. C/ITT.	SUPPORT DE PHARE, GAUCHE	HEADLIGHT SUPPORT, LEFT
071	0F00200101	CDEF	E048721	ARAND. NEGRA FIJ. TIJA. SLE-X.	RONDELLE FIX. TUBE NOIRE	WASHER, FORK STEM CAP.
072	0F00200111	CDEF	E048721	TCA. CIEGA NEG. FIJ. TIJA. SLE-X.	ECROU BORGNE FIX. TUBE NOIRE	CAP, FORK STEM
073	0A00200982	CDEF	E048721	R-CTO. PTE. FIJ. MANILL. V. SLE-X	SUPPORT FIX. GUIDON	SUP. FIX HADLEBAR
074	0F02060711	C	E048721	R-CTO. HORQ. DIRECT. SLE-X	FOURCHE COMPLETE	FORK ASSY
076	0F00200271	CDEF	E048721	TAPON NEGRO TUBO PIERNA. SLE-X.	BOUCHON NOIRE	CAP, FORK TUBE UPPER
077	0F00200631	CDEF	E048721	ARAND. NEG. TAPON TUBO PNA. SLE-X	RONDELLE	WASHER
078	0F00220241	C F	E048721	SCTO. SOPTE. DCH. FARO. NEG. SLE-X.	SUPPORT DE PHARE, DROIT NOIR	HEAD LIGHT SUPPORT, RIGHT BLACK
079	0F00220251	C F	E048721	SCTO. SOPTE. IZQ. FARO NEG. SLE-X.	SUPPORT DE PHARE, GAUCHE NOIR	HEAD LIGHT SUPPORT, LEFT BLACK
080	2A02000562	C F	E048721	CUBREPLATINA INF. NEG. P/PINTAR	CACHE PLETINE INF. NOIRE	BLACK COVER TRIPLE CLAMP LOWER
081	0005510620	CDEF	E048721	TERM. CABLE MACHO 6,35 MASA	FICHE MALE	TERMINAL, DOUBLE
082	0000031060	CDEF	E048721	ARAND. PLANA MECANIZ. D. 6.	RONDELLE PLATE D6	MACHINED FLAT WASHER 0 6
083	0000035070	CDEF	E048721	ARAND. ESTRELL. EXT. D7. DIN6798-A	RONDELLE D7	OUTER STAR WASHER 0 7 DIN 6798
084	0000004610	C F	E048721	TOR. C/ALLEN. 6M100X10. DIN-	VIS DE COUVERCLE	BOLT, ALLEN 6MM1.00X10

PIEZAS ESPECIALES EXPORTACION MODELLE EXPORTATION (SEULEMENT) EXPORT MODEL (ONLY)

068	0F02050711	B	E041664	R-CT. HORQ. DIR. BLCO. V. SPORT. USA	FOURCHE COMPLETE	FORK ASSY
069	0F02000561	B	E041664	CUBREPLAT. BLCA. SPORT. USA,	CACHE PLETINE INF. BLANCHE	TRIPLE CLAMP, COVER, LOWER, WHITE
085	0F02000715	D	E056062	R-CTO. HORQ. DIREC. R. K. SP. AM. USA	FOURCHE COMPLET	FORK ASSY
086	0F02000716	E	E056182	R-CTO. HORQ. DIREC. GR. SP. AM. USA.	FOURCHE COMPLET	FORK ASSY
087	0000023060	DE	E056062	TCA. AUTOBLOC. 6M100. DIN-	ECROU INDESSERABLE	SELF-LOCKING NUT 6M100
088	0000034060	DE	E056062	ARAND. ESTRELL. INT. D6-DIN6797-J	RONDELLE EVENTAIL D 6	INNER STAR WASHER 0 6
089*	0000004635	DE	E056062	TOR. C/ALLEN. 6M100X35. D-912/8.8	BOULON ALLEN 6 M 100X35	ALLEN SCREW 6M100X35
090*	0F02041711	F	E064706	R-CTO. HORQ. DIREC. SLE-X. BERMUDA	FOURCHE COMPLET	FORK ASSY

DOWNLOADED FROM THE PUBLIC SCOOTERHULP LIBRARY
Www.ScooterHulp.com

DERBI	HORQUILLA DIRECTRIZ. FOURCHE AVANT FORK.	3-6-88 LAMINA FEUILLE DIAGRAM	1 F 2 START 14

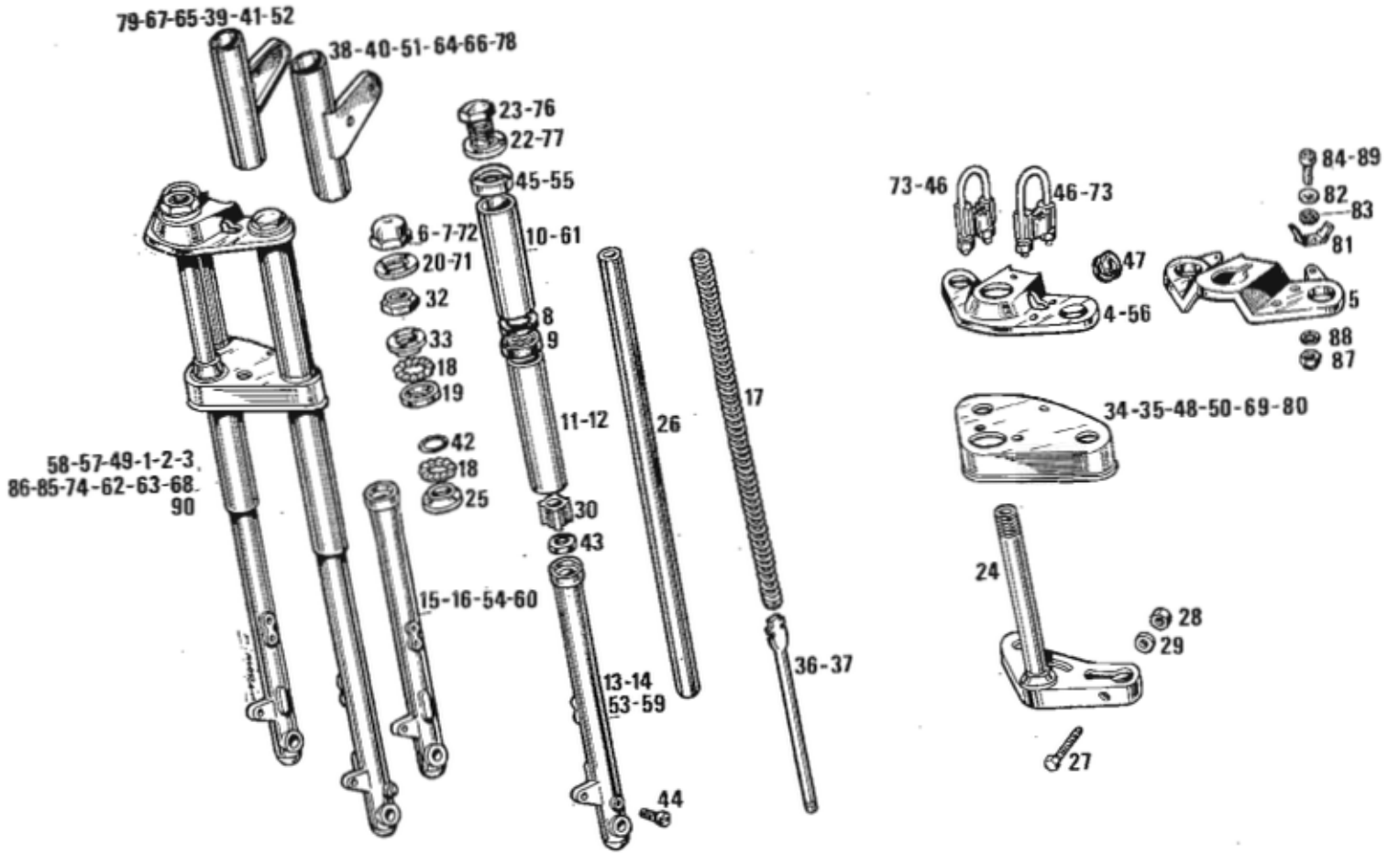

DOWNLOADED FROM THE PUBLIC SCOOTERHULP LIBRARY
Www.ScooterHulp.com

Figura Figure Figr.	CODIGO Nº PIECE CODE Nr.	MODELO MODELE MODEL	Nº CHASIS Nº CHASSIS FRAME NUM.	DENOMINACION	DESIGNATION	NAME
001	0008204010	123456789ABCDEF	E016205	DEPOSITO.	RESERVOIR	FUEL TANK
002	0008204180	123456789ABCDEF	E016205	CTO. GRIFO GASOLINA. VARIANT.	VANNE D'ARRIVEE ESSENCE	FUEL VALVE ASSEMBLY
003	0008204500	123456789ABCDEF	E016205	ABRAZ. FIJ. GRIFO GASOL. VARIANT	COLLIER FIXE ROBINET ESSENCE	CLAMP, AUX. MUFFLER SLEEVE
004	0A00440321	123456789ABCDEF	E016205	TUBO GASOLINA D6X12 (VAR-LAMINA	DURITE ESSENCE	FUEL LINE
005	0008204640	123456789ABCDEF	E016205	TCA. FIJ. DEPOSITO. VARIANT	ECROU FIX. RESERVOIR	NUT, FUEL TANK
006	0008204140	123456789ABCDEF	E016205	TAPON DEPOSITO. VARIANT.	BOUCHON DE RESERVOIR	CAP, FUEL TANK
007	0008204050	123456789ABCDEF	E016205	PLACA FIJ. DEPOSITO	PLAQUE FIX. RESERVOIR	PLATE, SUPPORT
008	0A00630781	1 67	E016205	CTO. SILLIN C/CRRJE. CERRD. START	SELLE A SERRURE, V. START	SEAT W/LOCK, V. START
009	0F00600781	23 5 89	E018491	CTO. SILLIN C/CERRDURA. V. SPORT	SELLE A SERRURE,	SET W/LOCK
010	0A00600261	123456789ABCDEF	E016205	EJE ARTIC. SILLIN. VARIANT.	AXE DE CHARNIERE DE SELLE	PIVOT PIN, SEAT
011	0A00600691	123456789ABCDEF	E016205	MUELLE TRAS. SILLIN. VARIANT.	RESSORT ARRIERE SELLE	SPRING REAR SEAT
012	0D00400691	123456789AB DE	E016205	REMACH. FIJ. CARC. DEPTO. YUM. POP.	RIVET FIX. CARCASSE	RIVET, FIX. NACELLE
013	0008106190	23456789AB DE	E018491	REMACHE SOPTE. CERRD. SILLIN. POP	SUP. SERRURE SELLE	PIVOT PIN, LOCK
015	0A00600751	123456789AB DE	E016502	CTO. CERRAD. SILLIN. VARIANT.	SERRURE COMPLETE SELLE VARIAN	SEAT LOCK ASSY. VARIANT
016	0000047110	123456789ABCDEF	E016205	ANILLO SEG. EJES D10. DIN-471.	CIRCLIP POUR AXE D10	CIRCLIP, BRAKE SHOE RETENTION
017	0000031050	123456789AB DE	E016205	ARAND. PLANA MECANIZ. D. 5.	RONDELLE PLATE MECA. 0 5	WASHER, 5MM I.D.
018	0004322460	123456789ABCDEF	E016205	TOPE PALCA. ARRQ. COPPA.	BUTEE CAOUTCHOUC, KICK	GROMMET, KICK STARTER
019	0A01550951	123456789ABCDEF	E016205	APOYO SILLIN. VARIANT.	CAOUTCHOUC D'APPUI DE SELLE	GROMME, SEAT
020	0A01820221	123456789ABCDEF	E016205	SCTO. ADORNO SUP. CHASIS-V. START	COUVERCLE SUP. CHASSIS V. STAR	COVER, UPPER CHASSIS V. START
021	0A00410281	123456789ABCDEF	E016205	R-BOTON MAND. GRIF. GAS. 15529. V.	COMMANDE ROBINET ASSENCE	FUEL VALVE CAP
022	0008715100	123456789ABCDEF	E016205	REPOSAPIES DCHO. VARIANT	REPOSE PIED DROIT	FOOTREST, RIGHT
023	0008715500	123456789ABCDEF	E016205	REPOSAPIES IQDO. VARIANT	REPOSE PIED GAUCHE	FOOTREST, LEFT
024	0011062000	123456789ABCDEF	E016205	TOR. AUTR. C/CRUZ. 6'3X20. D-7981B	VIS CRUCIFORME	SCREW PHILLIPS
026	0D01200171	123456789ABCDEF	E016205	ARAND. EJE LEVA-FIJ. CUBRECAD.	RONDELLE	WASHER
027	0F01500191	123456789ABCDEF	E016205	CTO. AMORTIGUADOR (VARIANT START	AMORTISSEUR VARIANT START	SHOCK ABSORBER, VARIANT START
028	0003115410	123456789ABCDEF	E016205	TCA. CIEGA FIJ. AMORTIGD. ANTOR.	ECROU BORGNE FIX. AMORTISSEUR	NUT, SHOCK ABSORBER MOUNT
029	0003115420	123456789ABCDEF	E016205	ARAND. FIJ. AMORTGD. ANTORCHA.	RONDELLE	SWING ARM LOCK WASHER
030	0000023060	1234	E016205	TCA. AUTOBLOC. 6M100. DIN-	ECROU INDESSERABLE	SELF-LOCKING NUT. 6M100
		1234	E023805	TCA. AUTOBLOC. 6M100. DIN-	ECROU INDESSERABLE	SELF-LOCKING NUT 6M100
	0000023060	ABC	E041616	TCA. AUTOBLOC. 6M100. DIN-	ECROU INDESSERABLE	SELF-LOCKING NUT 6M100
	0000023060	123456789 DEF	E045711	TCA. AUTOBLOC. 6M100. DIN-	ECROU INDESSERABLE	SELF-LOCKING NUT 6M100
031	0000031060	1234	E016205	ARAND. PLANA MECANIZ. D. 6.	RONDELLE PLATE D6	MACHINED FLAT WASHER 0 6
		1234	E023805	ARAND. PLANA MECANIZ. D. 6.	RONDELLE PLATE D6	MACHINED FLAT WASHER 0 6
	0000031060	ABC	E041616	ARAND. PLANA MECANIZ. D. 6.	RONDELLE PLATE D6	MACHINED FLAT WASHER 0 6
	0000031060	123456789 DEF	E045711	ARAND. PLANA MECANIZ. D. 6.	RONDELLE PLATE D6	MACHINED FLAT WASHER 0 6
032	0F01500411	1234 ABC	E016205	TOR. FIJ. INF. AMORTIGD. START.	ECROU FIX. INF. AMORTIS. START	SCREW FIX. INF. SHOCK START
	0000004835	123456789	E023805	TOR. C/ALLEN. 8M125X35. DIN-	VIS D8X125X36X23MM	ALLEN SCREW 8M125X35
	0F01500411	123456789 DE	E045711	TOR. FIJ. INF. AMORTIGD. START.	ECROU FIX. INF. AMORTIS. START	SCREW FIX. INF. SHOCK START
033	0008218910	123456789ABCDEF	E016205	CASQ. SEPARD. IZQ. AMORTIGD.	ENTRETOISE SEPAR AMORT GAUCHE	SPACER, LEFT UPPER SHOCK MOUNT
034	0A01510201	123456789ABCDEF	E016205	CAD. SEC. 106P. DR7, 75. PM12, 7.	CHAINE SECONDAIRE	CHAIN
035	0003115210	123456789ABCDEF	E016205	ENGANCHE CAD. SEC.	ATTACHE RAPIDE	MASTER LINK
036	0F01800831	1 67	E016205	SCTO. CUBRECAD. NEG. C/CALC. START	COUVRE CHAINE, NOIR. V. START	CHAIN GUARD BLACK. V. START
037	0F01520181	2345 89ABCDE	E018491	CUBRECAD. NEGRO. V. START.	COUVRE CHAINE NOIR V. START	CHAIN GUARD BLACK, V. START
038	0A00710262	1 67	E016205	CALCA ROJA, GUARDAB. TRS. START N	ADHESIF ROUGE, GARDEBOUE	DECAL, RED, REAR FENDER
039	0003515370	1234	E016205	ARAND. FIJ. CUBRECAD.	RONDELLE CARTER DE CHAINE	WASHER, COVER MOUNTING
		1234	E026868	ARAND. FIJ. CUBRECAD.	RONDELLE CARTER DE CHAINE	WASHER, COVER MOUNTING
040	0008215700	1234	E016205	TOR. FIJ. CUBRECADENAS.	BOULON FIXATION REPOSE-PIEDS-	SCREW FIX. CHAIN GUARD.
	0012061500	123456789ABCDEF	E026868	TOR. C/RED. CRUZ 6M100X15 D-7985	ECROU 6M100X13	SCREW 6M100X13
042	0F02200551	1 67	E016205	SCTO. CUBREBCTE. NEG. C/CALC. STAR	COUVRE BRAS OSCILLANT, NOIR	SWING ARM GUARD, BLACK
043	0F02210221	2345 89ABCDE	E018491	CUBREBCTE. NEGRO. V. START.	COUVRE BRAS OSCILLANT NOIR	SWING ARM GUARD BLACK
045	0A01510352	1 6	E016205	SCTO. ADORNO CUBRECAB. NEG. START	CACHE CABLES AVANT, NOIR	COVER FRONT FORK, BLACK

DOWNLOADED FROM THE PUBLIC SCOOTERHELP LIBRARY
Www.ScooterHulp.com

DERBI	DEPOSITO.-SILLIN.-MONTAJE CHASIS. RESERVOIR.- SELLE.- CHASSIS. GAS TANK.-SEAT.-CHASSIS COMPONENTS.	3-6-88	1 F
		LAMINA FEUILLE DIAGRAM	3
			STAR 14

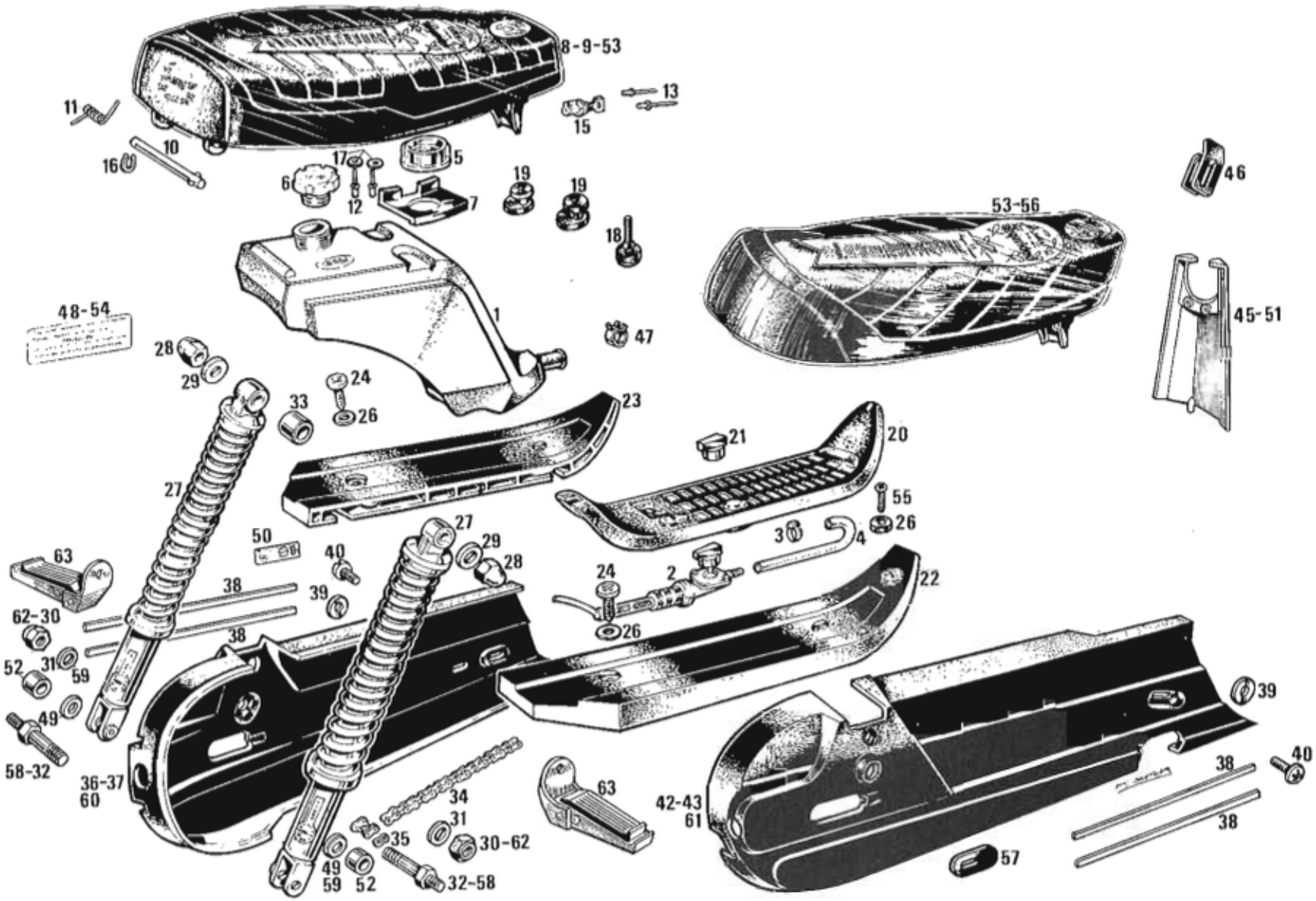

DOWNLOADED FROM THE PUBLIC SCOOTERHULP LIBRARY
Www.ScooterHulp.com

Figura Figure Figr.	CODIGO Nº PIECE CODE Nr.	MODELO MODELE MODEL	Nº CHASIS Nº CHASSIS FRAME NUM.	DENOMINACION	DESIGNATION	NAME
046	0A01560021	123456789ABCDE	E016205	PASACAB.LAT.DTROS.CHAS.VARIANT	PASSE CABLES VARIANT	RUBBER GUIDE VARIANT
047	0D03720211	123456789ABCDE	E016205	ABRAZ.MUELLE.12.201408-4.FDS87	COLLIER	CLAMP
048	0F04420991	123456789 C F	E016205	CALCA PUNTO MUERTO V.START	ADHESIF POINT MORT	NEUTRAL INDICATOR DECAL
049	0000031080	123456789 F	E026868	ARAND.PLANA MECANIZ.D.8.DIN125	RONDELLE D8	MACHINED FLAT WASHER, Ø 8
		123456789	E045711	ARAND.PLANA MECANIZ.D.8.DIN125	RONDELLE D8	MACHINED FLAT WASHER, Ø 8
050	0F04600362	123456789 C F	E016205	CALCA CADENA BLCA.START/SCOOT.	ADHESIF CHAINE	CHAIN DECAL,WHITE
051	0A01500353	7	E040710	SCTO.ADORNO CUBRECAB.START-R.K	CACHE CABLES AVANT	COVER FRONT FORK
052	0F02200471	6789	E035090	CASQ.INF.FIJ.AMORTIGD.V.START.	ENTRETOISE FIX. AMORTISSEUR	BUSHING, UPPER SHOCK
		6789	E045711	CASQ.INF.FIJ.AMORTIGD.V.START.	ENTRETOISE FIX. AMORTISSEUR	BUSHING, UPPER SHOCK
056	0F00640781	C F	E048721	CTO.SILLIN.SLE-X.	SELLE	SEAT

PIEZAS ESPECIALES EXPORTACION MODELLE EXPORTATION (SEULEMENT) EXPORT MODEL (ONLY)

053	0F00610781	4	AB DE	E024098	CTO.SILLIN C/CERRD.V.SPORT.EXP	SELLE A SERRURE	SEAT W/LOCK
054	0F04420992		AB DE	E041616	CALCA PTO.MTO.VARIANT/SCO USA	ADHESIF POINT MORT	NEUTRAL INDICATOR DECAL
055	0000012620		AB DE	E041616	TOR.C/RED.CRUZ.6M100X20.DIN-	VIS CRUCIFORME	SCREW PHILLIPS
057	0F04400881		DE	E056062	ARAND.FIJ.CUBREBCTE.NEG.START	RONDELLE COUVRE BRAS OSCILL.	WASHER, SWING ARM GUARD
058*	0F01510411		F	E064706	TOR.FIJ.INF.AMORTIGD.START-ISR	BOULON FIX AMORTISSEUR	SCREW SHOCK ABSORB.MOUNT
059*	0F01550371		F	E064706	ARAND.FIJ.CUBRECAD.SPORT.MALI.	RONDELLE	WASHER
060*	0F01830831		F	E064706	R-SCTO.CUBRECAD.NEG.SPORT.MALI	COUVRE CHAINE, NOIR	CHAIN GUARD. BLACK
061*	0F02230221		F	E064706	CUBREBASCTE.NEGRO.V.SPORT-MALI	COUVRE BRAS OSCILLANT	SWING ARM GUARD,BLACK
062*	0000023080		F	E064706	TCA.AUTOBLOC. 8M125. DIN-	ECROU INDESSERABLE	SELF-LOCKING NUT 8M125
063*	0001815090		F	E064706	SCTO.ESTRIB.PASAJERO.74CC-TT.	REPOSE-PIED PASSAGER	PASSENGER FOOT REST

DOWNLOADED FROM THE PUBLIC SCOOTERHELP LIBRARY
Www.ScooterHelp.com

DERBI	DEPOSITO.- SILLIN.- MONTAJE CHASIS. RESERVOIR.- SELLE.- CHASSIS. GAS TANK.- SEAT.- CHASSIS COMPONENTS.	3-6-88 / LAMINA / FEUILLE / DIAGRAM	1 F / 3 / START 14

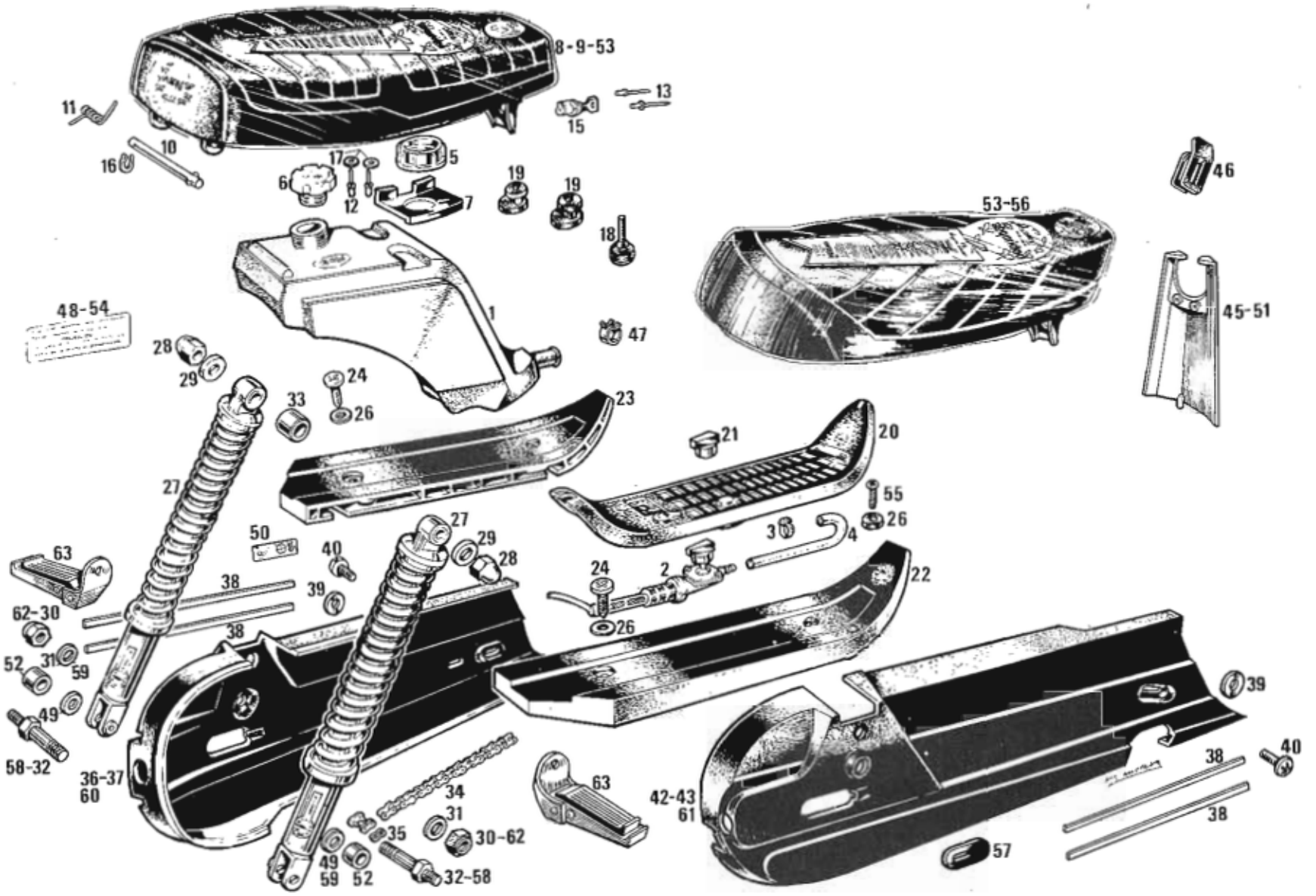

DOWNLOADED FROM THE PUBLIC SCOOTERHULP LIBRARY
Www.ScooterHulp.com

Figura Figure Figr.	CODIGO Nº PIECE CODE Nr.	MODELO MODELE MODEL	Nº CHASIS Nº CHASSIS FRAME NUM.	DENOMINACION	DESIGNATION	NAME
001	0F00710011	1	E016205	SCTO.GUARD.D.NG,C/CALC.START14	GARDE BOUE AVANT, NOIR	FRONT FENDER, BLACK
003	0F00720141	1	E016205	SCTO.GUARD.T.NG.C/CALC.START14	GARDE BOUE ARRIERE, NOIR	REAR FENDER, BLACK
004	0F00710141	2 9	E026868	SCTO.GUARDAB.TR.V.SPORT,ROJO-K	GARDE BOUE ARRIERE, NOIR	REAR FENDER, BLACK
005	0F00700341	123456789ABCDEF	E016205	SUPLMTO.GUARDAB.TRAS.V.START.	SUPL.GARDE BOUE AR. START	SUPPLEM. REAR FENDER, V. START
006	0A00710252	1 6	E016205	CALCA ROJA GUARDAB.DTR.START N	ADHESIF GARDE BOUE AVANT ROUG	DECAL FENDER, FRONT RED
007	0F00700251	345 8 B E	E018491	CALCA ANT.GUARDAB.DTRO.V.SPORT	ADHESIF GARDE BOUE AVANT	DECAL FENDER, FRONT
008	0F00700451	345 8 B E	E018491	CALCA POST.GUARDAB.DTRO.SPORT.	ADHESIF GARDE BOUE AVANT	DECAK FENDER, FRONT
009	0A00710262	1 6	E016205	CALCA ROJA,GUARDAB.TRS.START N	ADHESIF ROUGE, GARDEBOUE	DECAL, RED, REAR FENDER
010	0F00700261	345 8 B E	E018491	CALCA POST.GUARDAB.TRAS.SPORT.	ADHESIF GARDE BOUE ARRIERE	DECAL FENDER, REAR
011	0F00700461	345 8 B E	E018491	CALCA LAT.GUARDAB.TRAS.SPORT.	ADHESIF GARDE BOUE ARRIERE	DECAL FENDER, REAR
014	0F02210591	1 67	E016205	GUIA CABLES GUARDAB.START-14.	GUIDE CABLES	GUIDE, CABLES
015	0F02200591	2345 89 DE	E018491	GUIA CABLES GUARDAB.DT.V.SPORT	GRUIDE CABLES	GUIDE, CABLES
016	0000002810	1 67 C F	E016205	TOR.C/EXAG. 8M125X10.DIN-	BOULON 8 M 125X10	HEX HEAD SCREW 8M125X10
017	0000031080	123456789ABCDEF	E016205	ARAND.PLANA MECANIZ.D.8.DIN125	RONDELLE D8	MACHINED FLAT WASHER, O 8
018	0000034080	1234567 C F	E016205	ARAND.ESTRELL.INT.D8-DIN6797-J	RONDELLE GROWER D8	INNER STAR WASHER O 8
019	0000002620	123456789ABCDEF	E016205	TOR.C/EXAG. 6M100X20.DIN-	ECROU 6M100X20	HEXAGONAL HEAD SCREW 6M100X20
020	0000021060	123456789ABCDEF	E016205	TCA.EXAG. 6M100. DIN-	ECROU DE 6M100	HEXAGONAL NUT 6M100
021	0000031060	123456789ABCDEF	E016205	ARAND.PLANA MECANIZ.D.6.	RONDELLE PLATE D6	MACHINED FLAT WASHER O 6
022	0000034060	123456789ABCDEF	E016205	ARAND.ESTRELL.INT.D6-DIN6797-J	RONDELLE EVENTAIL D 6	INNER STAR WASHER O 6
024	0003110610	123456789ABCDEF	E016205	ARAND.REFZO.CLAXON.	RONDELLE FIX.RESERVOIR	CLAMP LOCK WASHER TO FUEL TANK
025	0000002630	12345 89ABCDEF	E016205	TOR.C/EXAG. 6M100X30.DIN-	VIS PEDALE DE KICK D6X100X27X	HEX HEAD SCREW 6M100X30
026	0000002812	2345 89AB	E018491	TOR.C/EXAG. 8M125X12.DIN-	BOULON 8MM.1,25X12	HEX HEAD SCREW 8MM.1,25X12
027	0000035060	12345 89 C F	E016205	ARAND.ESTRELL.EXT.D6.DIN6798-A	RONDELLE EVENTAIL	STARWASHER
029	0F00710432	34	E018491	R-SCTO.GUARDAB.DT.V.SPORT.BLC.	GARDE BOUE, AVANT,BLANC	FENDER,FRONT,WHITE
030	0F00710142	34	E018491	SCTO.GUARDAB.TRAS.BLAN.V.SPORT	GARDE BOUE ARRIERE, BLANC	REAR FENDER, WHITE
032	0F00700252	2 9A D	E026868	CALCA ANT.GUARD.DT.V.SPORT.R-K	ADHESIF GARDE BOUE AVANT	DECAL FENDER, FRONT
033	0F00700452	2 9A D	E026868	CALCA POST.GUAR.DT.V.SPORT,R-K	ADHESIF GARDE BOUE AVANT	DECAL FENDER, FRONT
034	0F00700262	2 9A D	E026868	CALCA POST.GUAR.TR.V.SPORT.R-K	ADHESIF BOUE ARRIERE	DECAL FENDER, REAR
035	0F00700462	2 9A D	E026868	CALCA LAT.GUARD.TR.V.SPORT.R-K	ADHESIF BOUE ARRIERE	DECAL, FENDER, REAR
036	0F00710433	5 8	E027035	R-SCTO.GUARDAB.DT.V.SPORT.GRIS	GARDE BOUE AVANT,GRIS	FRONT FENDER,GREY
037	0F00710143	5 8	E027035	SCTO.GUARDAB.TR.V.SPORT,GRIS M	GARDE BOUE ARRIERE, GRIS	REAR FENDER, GREY
038	0D01200171	123456789ABCDEF	E016205	ARAND.EJE LEVA-FIJ.CUBRECAD.	RONDELLE	WASHER
039	0F00700431	6	E035090	SCTO.GUARDB.DT.NG.C/CALC.START	GARDE BOUE AVANT NOIR	FENDER, FRONT BLACK
040	0F00710012	7	E040710	SCTO.GUARDAB.DTRO.START-ROJO K	GARDE BOUE AVANT	FENDER, FRONT RED K
042	0F00730141	6	E035090	SCTO.GUARD.TR.C/CAL.START-INTT	GARDE BOUE ARRIERE	REAR FENDER
043	0F00701121	7	E040710	GUARDAB.TRAS.START R-K.C/INTT.	GARDE BOUE ARRIERE	REAR FENDER
044	0000012620	67	E035090	TOR.C/RED.CRUZ.6M100X20.DIN-	VIS CRUCIFORME	SCREW PHILLIPS
050	0F00730011	C F	E048721	SCTO.GUARDAB.DTRO.NEGRO.SLE-X.	GARDE BOUE AVANT, NOIR	FRONT FENDER, BLACK
051	0F00750121	C F	E048721	GUARDAB.TRAS.NEGRO,START-14.	GARDE BOUR ARR. NOIR	REAR FENDER,BLACK
052	0F02220591	C F	E048721	GUIA CABLES GUARDAB.DTRO.SLE-X	GUIDE CABLES	GUIDE, CABLES
053	0F00720431	2 9	E026868	R-SCTO.GUARDAB.DTRO.SPORT-R.K.	GARDE BOUE AVANT	FRONT FENDER

DOWNLOADED FROM THE PUBLIC SCOOTERHULP LIBRARY
Www.ScooterHulp.com

DERBI	GUARDABARROS DELANTERO.- GUARDABARROS TRASERO. GARDE BOUES AVANT ET ARRIERE. FENDERS FRONT AND REAR.	3-6-88 LAMINA FEUILLE DIAGRAM	1 F 4 START 14

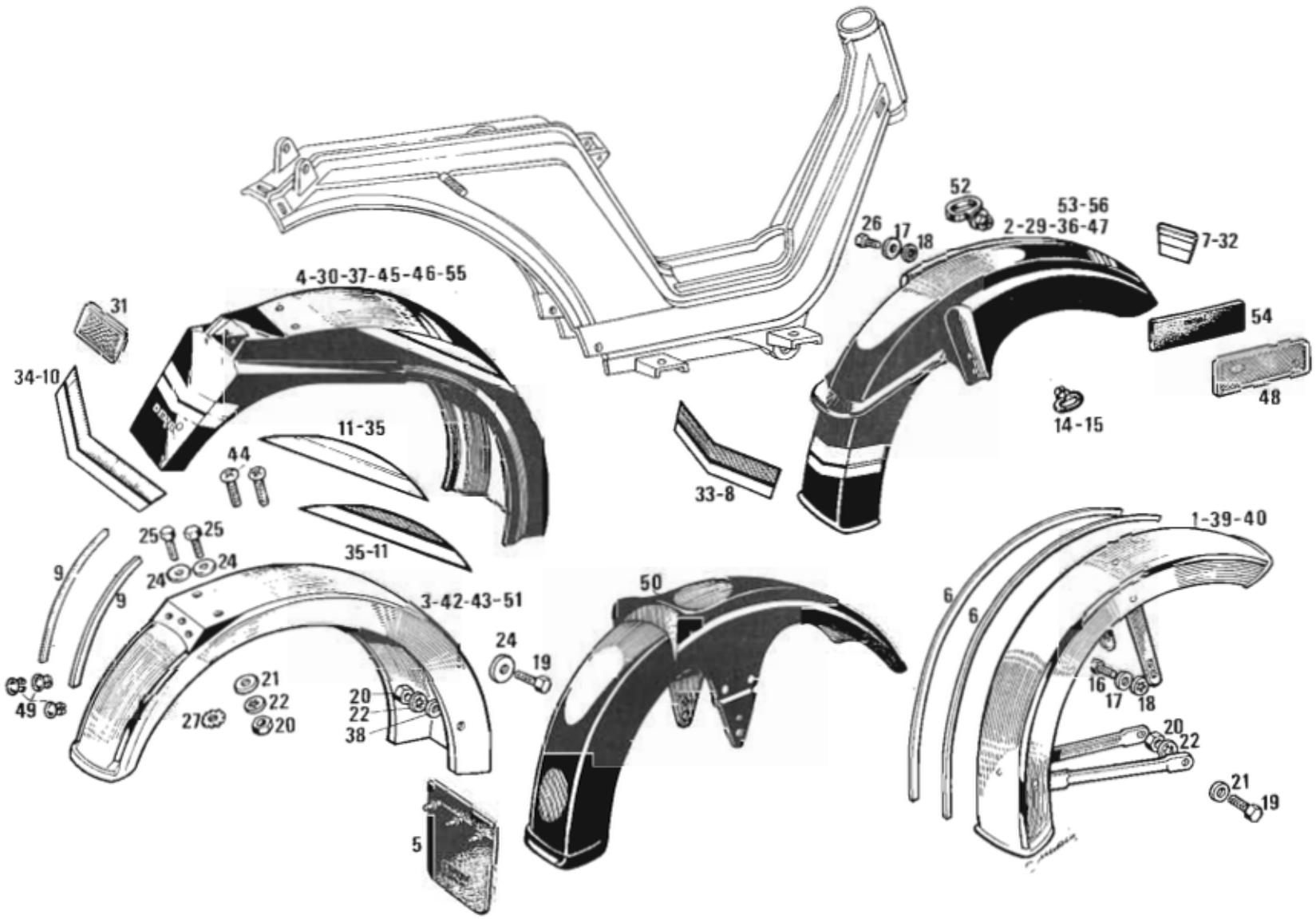

DOWNLOADED FROM THE PUBLIC SCOOTERHULP LIBRARY
Www.ScooterHulp.com

Figura Figure Figr.	CODIGO Nº PIECE CODE Nr.	MODELO MODELE MODEL	Nº CHASIS Nº CHASSIS FRAME NUM.	DENOMINACION	DESIGNATION	NAME

PIEZAS ESPECIALES EXPORTACION MODELLE EXPORTATION (SEULEMENT) EXPORT MODEL (ONLY)

002	0F00710431		A D	E026868	R-SCTO.GUARD.DT.SPORT.R-K.USA.	GARDE BOUE AVANT, ROUGE	FRONT FENDER, RED
031	0E01800081	4		E024098	CATADIOPTRICOS FRANCIA-4521006	CATADIOPTRE	REFLECTOR
045	0F00740141		A D	E041616	SCTO.GUARD.TRAS.ROJO.SPORT.USA	GARDE BOUE ARRIERE	REAR FENDER
046	0F00740142		B	E041664	SCTO.GUARDB.TRAS.BCO.SPORT.USA	GARDE BOUE ARRIERE	REAR FENDER
047	0F00720011		B	E041664	SCTO.GUARD.DT.BL.C/C.SPORT.USA	GARDE BOUE AVANT§	FRONT FENDER
048	0E01810081		AB DE	E041616	CATAD.DT.AMBAR.SCO USA(2005201	CATADIOPTRE ARR.	FRONT REFLECTOR
049	0F04600151		AB DE	E041616	TAPTAL.PILOT.NG.SPORT-USA.0380	BOUCHON DE FEU ARR.	TAILLIGHT PLUG
054	0F04600421		AB DE	E041616	SOPTE.CATADIOPTR.SPORT/SCO.USA	SUPPORT DE CATADIOPTRE	REFLECTOR SUPPORT
055	0F00740143		E	E056182	SCTO.GUARDAB.TR.GRIS.SP.AM.USA	GARDE BOUE ARRIERE	REAR FENDER
056	0F00720012		E	E056182	SCTO.GUARDAB.DT.GRIS.SP.AM.USA	GARDE BOUE AVANT	FRONT FENDER

DOWNLOADED FROM THE PUBLIC SCOOTERHELP LIBRARY
Www.ScooterHelp.com

GUARDABARROS DELANTERO.- GUARDABARROS TRASERO. GARDE BOUES AVANT ET ARRIERE. FENDERS FRONT AND REAR.	3-6-88 LAMINA FEUILLE DIAGRAM	1 F 4 START 14

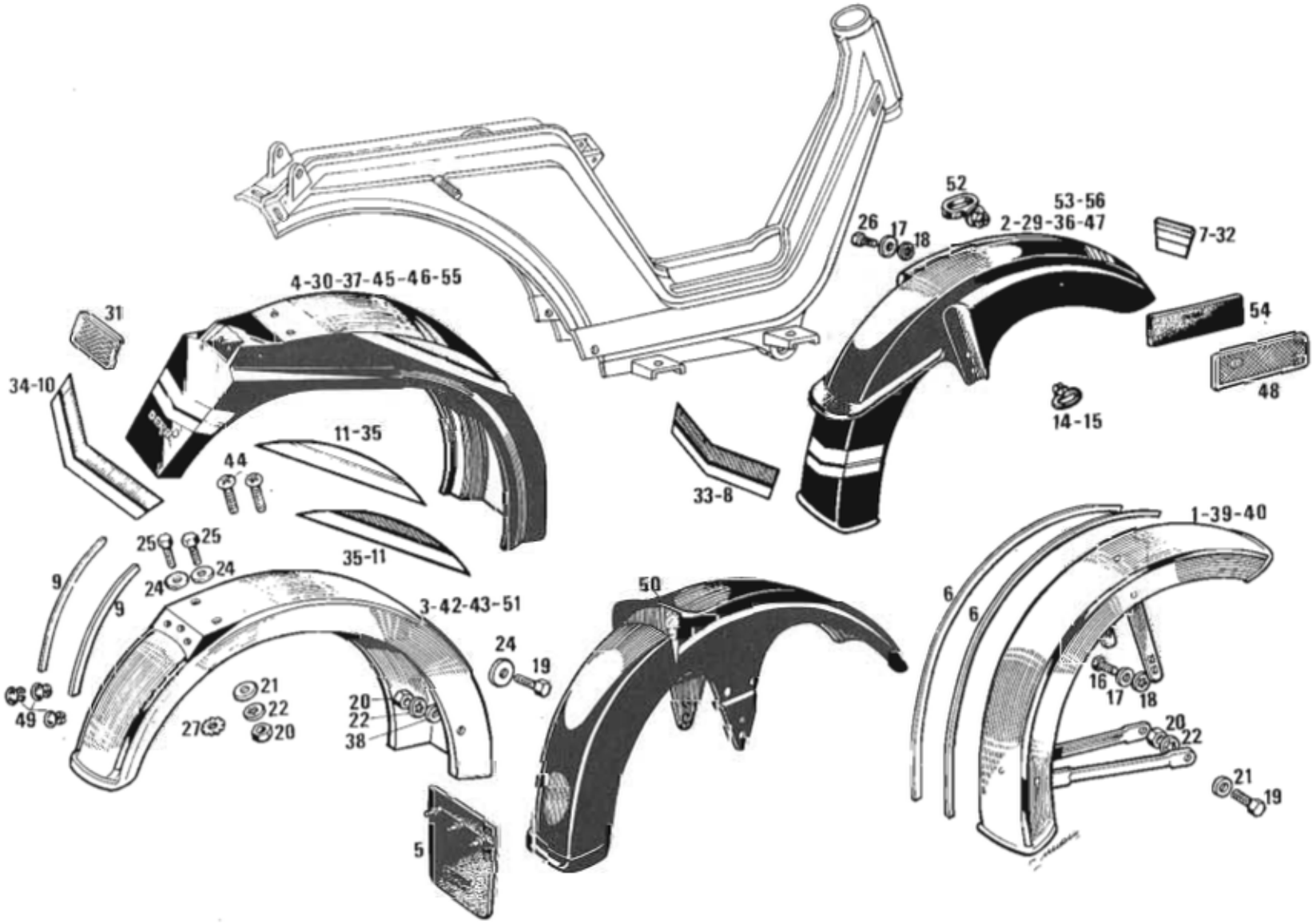

DOWNLOADED FROM THE PUBLIC SCOOTERHULP LIBRARY
Www.ScooterHulp.com

Figura Figure Figr.	CODIGO Nº PIECE CODE Nr.	MODELO MODELE MODEL	Nº CHASIS Nº CHASSIS FRAME NUM.	DENOMINACION	DESIGNATION	NAME
001	0F00930011	1 67	E016205	SCTO.MANILLAR. STAR-14	GUIDON	ANDLEBAR ASSY.
002	0008209020	2345 89ABCDEF	E018491	TUBO MANILLAR.V.SPORT.	GRUIDON	HANDLEBAR
003	0E00900201	123456789AB DE	E016205	MANETA FRENO DTRO.80002779.	LEVIER FREIN AVANT	LEVER, FRONT BRAKE
004	0E00900291	123456789AB DE	E016205	MANETA FRENO TRAS.81102778.	LEVIER FREIN ARRIERE	LEVER, REAR BRAKE
005	0E00900071	123456789	E016205	EMPUÑ.LADO FR.TRS.SCO.11602768	CAOUT. DE PIGNEE GAUCHE SCOOT	GRIP, LH
006	0E00900091	123456789	E016205	EMPUÑADURA GAS.SCOOT.10102769.	CAOUT. DE PIGNEE GAZ SCOOTER	GRIP, THROTTLE
007	0F00910821	123456789	E016205	SOPTE.MANETA AIRE.V.START.	SUPP. LEVIER AIR	BRACKET,AIR
		123456789	E048011	SOPTE.MANETA AIRE.V.START.	SUPP. LEVIER AIR	BRACKET,AIR
008	0F02110601	123456789	E016205	SOPTE.MANETA DESCOMPR.V.START.	SUPP. LEVIER DECOMPRESSEUR	BRACKET, DECOMP.LEVER
		123456789	E048011	SOPTE.MANETA DESCOMPR.V.START.	SUPP. LEVIER DECOMPRESSEUR	BRACKET, DECOMP.LEVER
009	0008209390	123456789	E016205	MANETA DESCOMPR.VARIANT.	LEVIER DECOMPRESSEUR	LEVER, DECOMPRESSION
		123456789	E048011	MANETA DESCOMPR.VARIANT.	LEVIER DECOMPRESSEUR	LEVER, DECOMPRESSION
010	0003109210	123456789	E016205	EJE ARTICUL.MANETA.ANTORCHA.	AXE DU LEVIER DE DECOMPRESSEU	PIVOT PIN, DECOMPRESSION LEVER
		123456789	E048011	EJE ARTICUL.MANETA.ANTORCHA.	AXE DU LEVIER DE DECOMPRESSEU	PIVOT PIN, DECOMPRESSION LEVER
011	0000023051	123456789 C F	E016205	TCA.AUTOBLOC. 5M80. DIN-982.	ECROU INDESSERABLE 5M80	NUT, SELF LOCKING 5MM.80
		123456789	E048011	TCA.AUTOBLOC. 5M80. DIN-982.	ECROU INDESSERABLE 5M80	NUT, SELF LOCKING 5MM.80
012	0F00910231	1	E016205	SCTO.CABLE FRE.DTRO.START 14	CABLE ET GAINE FREIN AV.	CABLE ASSY., FRONT BLKE
013	0F00900231	2345 89ABCDEF	E018491	SCTO.CABLE-FUNDA FRENO DTRO.	CABLE ET GAINE FREIN AV.	CABLE ASSY., FRONT BLAKE
014	0A00980431	123456789ABCDEF	E016205	SCTO.CABLE FRENO TRAS.START	CABLE ET GAINE FREIN AR.	CABLE ASSY., REAR BRAKE
015	0A00930401	123456789ABCDEF	E016205	SCTO.CABLE-FUNDA DESCPR.START.	CABLE ET GAINE DECOMP. V.STAR	CABLE ASSY. DECOMP. V. START
016	0A00940171	123456789ABCDEF	E016205	CTO.CABLE-FUNDA GAS.V.START.	CABLE ET GAINE GAZ, V. START	CABLE ASSY., THROTTLE
017	0F00900651	1 6789ABCDEF	E016205	SCTO.CABLE-FUNDA AIRE.START.	CABLE ET GAINE AIR, V. START	CABLE ASSY, CHOKE V. START
018	0003111110	1 6789	E016205	RODILLO PALANCA TRAS.ANTORCHA.	GALET LEVIER ARRIERE	REAR LEVER ROLLER
019	0003111120	123456789ABCDEF	E016205	PALOMILLA REGULAC.FRENO.ANTOR.	BOULON REGLAGE FREIN AR.	ADJUSTER,REAR BRAKE
020	0A02100551	1 67	E016205	TOR.FIJ.MANILLAR.8M125X160.ST.	VIS FIX. GRUIDON	SCREW FIX. HANDLEBAR
021	0A02100571	1 67	E016205	SCTO.TUBO INFER.FIJ.MANILLAR	TUBE INF. FIX. GUIDON	LOWER TUBE, FIX. HANDLEBAR
022	0A02100591	1 67	E016205	ARAND.TOPE TOR.FIJ.MANIL.START	RONDELLE VIS FIX. GUIDON	WASHER SCREW FIX, HANDLEBAR
023	0F0090008I	12345	E016205	CTO.PUÑO GAS.VARIANT START.	POIGNEE DE GAZ COMPLETE	TWIST GRIP ASSY.
024	0A00900531	23 56789ABCDEF	E018491	BRIDA UNECABLES NEGRA.ITWE0119	COLLIER	BLACK CABLE TIE
025	0000033060	1 67	E016205	ARAND.MUELLE. D.6.DIN-127.	RONDELLE DE RESSORT	SPRING WASHER 0 6
026	0008902500	1 67	E016205	TOR.FIJ.TUBO MUELLE HORQU.	BOULON ALLEN FIX DU TUBE DE F	SCREW, DAMPER TUBE HOLDING
027	0D00900532	1234	E016205	BRIDA UNECAB.NEG.UNEX.2244.0.	COLLIER	CABLE TIE
028	0E00900551	123456789AB DE	E016205	CTO.TENSOR CABLES FRENO.	TENDEUR DE CABLE DU FREIN	ADJUSTER,CABLE,FRONT/REAR BRAK
029	0A00930231	67	E035090	SCTO.CABLE FRENO DTRO.START	CABLE ET GAINE FREIN AV.	CABLE ASSY., FRONT BRAKE
030	0005010760	6789AB DE	E035090	CAPCHN.INTRPT.STOP NGR(VAR.USA	CAPUCHON	RUBBER COVER,STOP LIGHT SWITCH
031	0005023200	6789AB DE	E035090	CTO.INTERRUPTOR STOP-100934200	CONTACTEUR DE STOP	SWITCH,STOP LIGHT
032	0F00910081	6789	E035090	CTO.PUÑO GAS.V.START C/INTTE.	POIGNEE DE GAZ COMPLETE	TWIST GRIP ASSY
033	0F00900271	123456789AB DE	E016205	MUELLE RECUP.MANETA.800.02.693	RESSORT DE LEVIER	SPRING
034	0F00900151	123456789AB DE	E016205	CASQ.FIJ.PUÑO GAS.10102018.SP.	ENTRETOISE	BUSHING
035	0F02100871	123456789AB DE	E016205	TOR.FIJ.PUÑO GAS.10102017.SPOR	ECROU FIX.POIGNEE GAZ	SCREW
036	0F00900211	123456789AB DE	E016205	CTO.TOR.ARTIC.MANETA.97403.SP.	VIS AVEC ECROU	SCREW AND NUT
037	0F00900161	123456789AB DE	E016205	TOR.GUIA PUÑO GAS.10702060.SP.	VIS	SCREW
038	0F00900111	123456789AB DE	E016205	CTO.CORRED.PUÑO GAS.97400.SPOR	TIROIR POIGNEE GAZ	THROTTLE SLIDER
039	0F02100881	123456789AB DE	E016205	R-MUELLE REC.PUÑO GAS.51802597	RESSORT	SPRING
042	0011020900	12345 AB DE	E016205	TOR.AUTR.C/CRUZ 2,9X9,5DIN7981	VIS CRUCIFORME	SCREW PHILLIPS
043	0012030800	6789	E035090	TOR.C/RED.CRUZ.3M50X8.DIN-7985	VIS CRUCIFORME	SCREW PHILLIPS
048	0F00920071	C F	E048721	EMPUÑAD.FRE.TR.NG.SLE-X 20961	CAOUT.DE POIGNEE GAUCHE	GRIP, LH
049	0F00930081	C F	E048721	CTO.PUÑO GAS.SLE-X.30708.	POIGNEE DE GAZ COMPLETE	TWIST GRIP ASSY
050	0F00920091	C F	E048721	R-EMPUÑAD.GAS.20960.SLE-X.	CAOUT.DE POIGNEE GAZ	GRIP, THOTTLE
051	0F00900201	C F	E048721	R-MANETA FRE.DTRO.20988.SLE-X.	LEVIER FREIN AVANT	LEVER,FRONT BRAKE
052	0F00910211	C F	E048721	R-TOR.FIJ.MANET.FR.13815.SLE-X	VIS DE LEVIER FREIN	SCREW
053	0F00900661	C F	E048721	R-MANETA AIRE.20987.SLE-X.	LEVIER	LEVER
054	0F00910111	C F	E048721	CORREDERA PUÑO GAS.11069.SLE-X	TIROIR POIGNEE GAZ	THROTTLE SLIDER

DOWNLOADED FROM THE PUBLIC SCOOTERHELP LIBRARY
Www.ScooterHelp.com

DERBI	MANILLAR Y MANDOS. GUIDON AVEC COMMANDES. HANDLEBAR AND CONTROLS.	3-6-88	1 F
		LAMINA FEUILLE DIAGRAM	5
			START 14

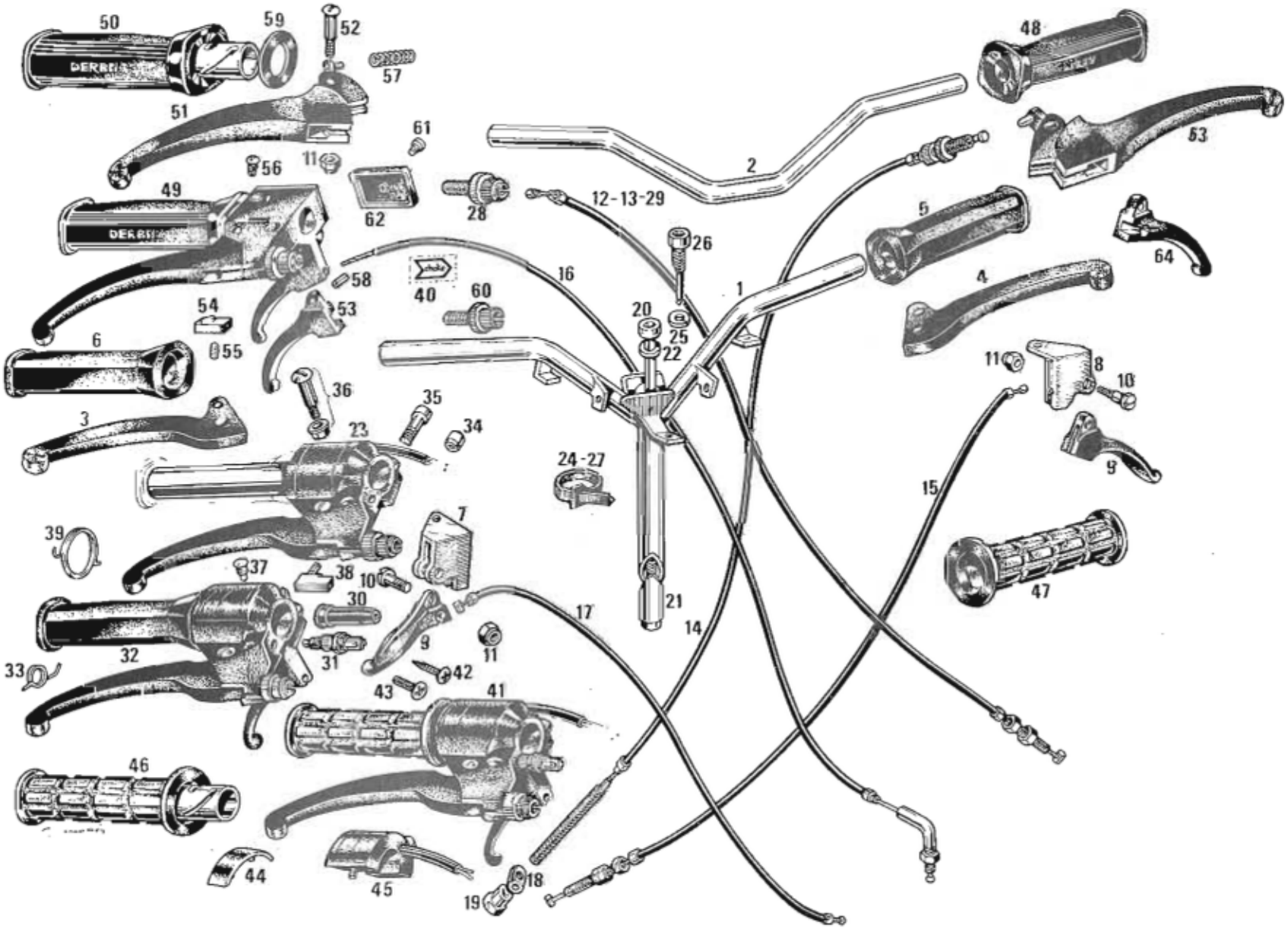

DOWNLOADED FROM THE PUBLIC SCOOTERHULP LIBRARY
Www.ScooterHulp.com

Figura Figure Figr.	CODIGO Nº PIECE CODE Nr.	MODELO MODELE MODEL	Nº CHASIS Nº CHASSIS FRAME NUM.	DENOMINACION	DESIGNATION	NAME
055	0F00900141	C	F E048721	R-TOR.CORRD.PUÑO.G.13859.SLE-X	VIS DE TIROIR P. GAZ	SCREW
056	0F00910161	C	F E048721	R-TOR.GUIA.PUÑO G.13785.SLE-X.	VIS	SCREW
057	0F00910271	C	F E048721	R-MUELLE RECUP.MAN.14270.SLE-X	RESSORT DE LEVIER	SPRING
058	0053040000	C	F E048721	PASAD.SUJ.ESPIRAL.4X12.D-7343.	GOUDILLE	FORK PIN
059	0F00900121	C	F E048721	R-ARAND.TOPE EMPUÑ.20771.SLE-X	RONDELLE DE CAOUT DE P.GAZ	WASHER
060	000A109550	C	F E048721	CTO TENSOR CABLE GAS	TENDEUR CABLE DE GAZ	CLUTCH CABLE TIGHTENING DEVICE
061	0003030501	C	F E048721	TOR.C/CILIND.BIS.3M70X5.DIN-84	VIS	SCREW
062	0F02100501	C	F E048721	R-TAPETA ALOJMTO.INTERRP.20985	COUVRE POIGNEE GAZ	TWIST GRIP COVER
063	0F00900291	C	F E048721	R-MANETA FRENO.TRA.20989.SLE-X	LEVIER FREIN ARRIERE	LEVER, REARBRAKE
064	0F00900391	C	F E048721	R.MANETA DESCOMP.20991.SLE-X.	LEVIER DESCOMPRESSEUR	LEVER, DECOMPRESSION

PIEZAS ESPECIALES EXPORTACION MODELLE EXPORTATION (SEULEMENT) EXPORT MODEL (ONLY)

040	0A02100801	AB DE	E041616	CALCA CHOKE,VARIANT/SCO USA	ADHESIF AIR	DECAL CHOKE
041	0F00920081	AB DE	E041616	CTO.PUÑO GAS.SPORT.USA.	POIGNEE DE GAZ COMPLETE	TWIST GRIP ASSY.
044	0E02100841	AB DE	E041616	TPTA.DISPTVO.ARRQ.ELEC.SCO-USA	COUVRE POIGNEE DE GAZ	TWIST GRIP COVER
045	0F02300301	AB DE	E041616	R-CTO.CNMUT.PARO/CBL.SPORT USA	CONMUTATEUR ALLUMAGE	IGNITION SWITCH
046	0F00910091	AB DE	E041616	EMPUÑAD.GAS.SPORT.USA.(I)	CAOUT.DE PIGNEE GAZ	GRIP, THROTTLE
047	0F00910071	AB DE	E041616	EMPUÑAD.LADO FRE.SPORT.USA.(I)	CAOUT.DE PIGNEE GAUCHE	GRIP, LH

DOWNLOADED FROM THE PUBLIC SCOOTERHULP LIBRARY
Www.ScooterHulp.com

DERBI

MANILLAR Y MANDOS. GUIDON AVEC COMMANDES. HANDLEBAR AND CONTROLS.	3-6-88	1 F
	LAMINA FEUILLE DIAGRAM	5
		START 14

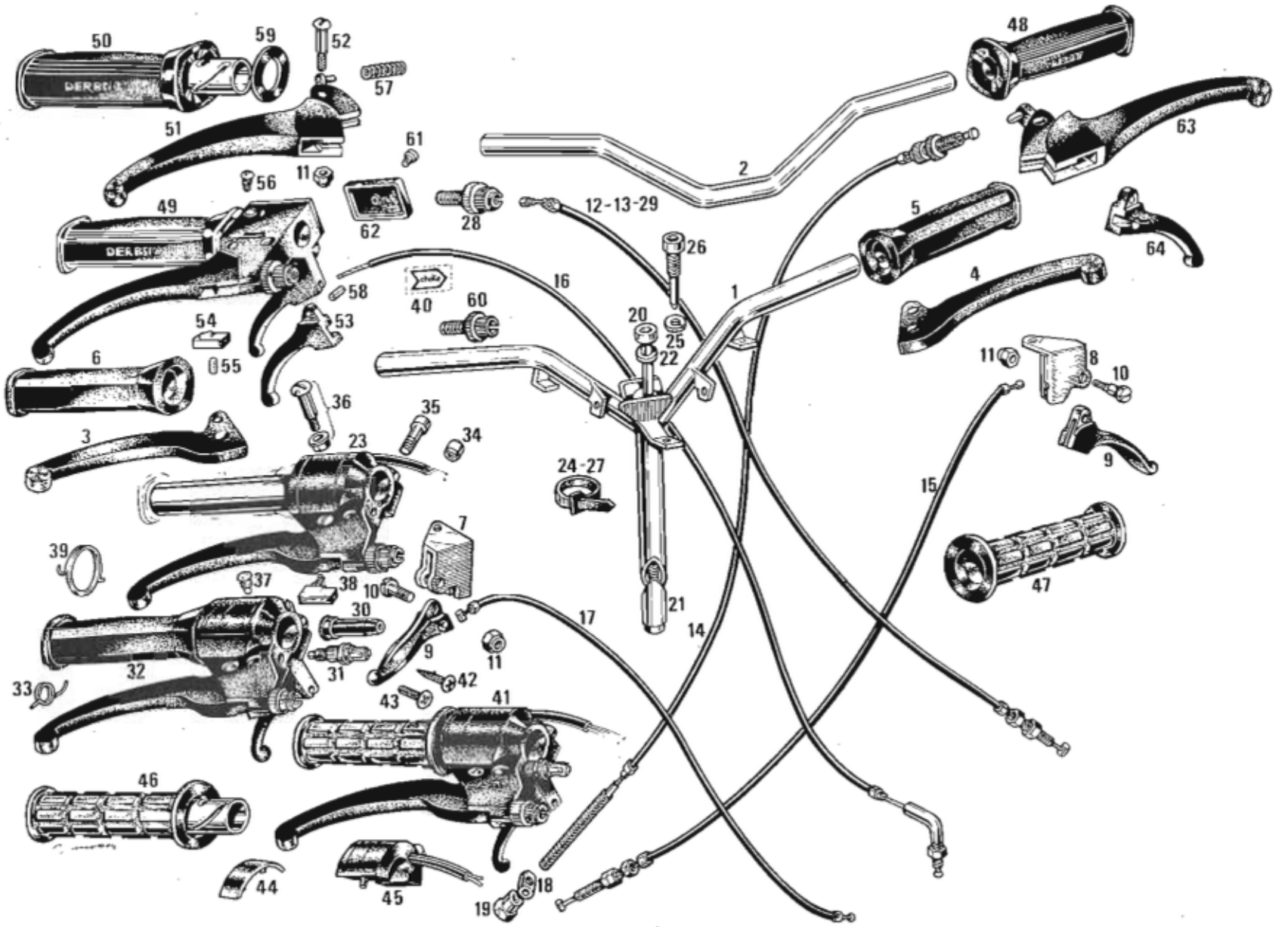

DOWNLOADED FROM THE PUBLIC SCOOTERHULP LIBRARY
Www.ScooterHulp.com

Figura Figure Figr.	CODIGO Nº PIECE CODE Nr.	MODELO MODELE MODEL	Nº CHASIS Nº CHASSIS FRAME NUM.	DENOMINACION	DESIGNATION	NAME
001	0E01000011	123 56789AB DE	E016205	CTO.FARO.REF.312.1.	PHARE COMPLET	HEADLIGHT ASSEMBLY
002	0E01000071	123 56789AB DE	E016205	ARO FARO 10.08.SCOOTER.74.LUXE	PORTIERE DE PHARE	HEADLIGHT TRIM RING
003	0E01000551	123 56789AB DE	E016205	SCTO.OPTICA FARO REF.96.23	OPTIQUE COMPLETE	HEADLIGHT LENS SUB-ASSEMBLY
004	0E01010101	123 56789AB DE	E016205	TOR.FIJ.ARO FARO.R-16.36.SCO.	VIS FIX OPTIQUE	SCREEW, HADLIGHT TIM RING
005	0E02300531	1 67	E016205	SCTO.TOR.FIJ.ARO FARO.	ENSEMBLE VIS FIX: OPTIQUE	CLIP, ELECT. CABLE
006	0E01000041	123 56789AB DE	E016205	MUELLE CRISTAL FARO.19.19.SCO.	RESSORT DE VERRE DE PHARE	HEADLIGHT GLASS SPRING
007	0A01030131	123 56789 C F	E016205	LAMPARA FARO 6V15/15WDIN M-2	LAMPE	HEADLIGHT BULB, 6V. 15/15W.
008	0003710110	123 56789AB DE	E016205	PORTALAMPARAS.14.70.	PORTE-LAMPES	SOCKET, BULB
009	0F01000512	1 6	E016205	SCTO.CARCASA SUP.NEGRA - START	BOITIER SUP. DE PHARE, NOIR	UPPER HOUSING, HEADLIGHT,BLACK
010	0F02300282	1	E016205	SCTO.CARC.INF.NEG.C/CALC.START	CARCASE INF.NOIRE AVEC ADHESI	NACELLE, HANDLEBAR LOWER BLACK
011	0000004510	1 67	E016205	TOR.C/ALLEN.5M80X10.DIN-	BOULON ALLEN 5M80X10	SCREW, ALLEN 5MM80X10
012	0000004515	1 67	E016205	TOR.C/ALLEN. 5M80X15.D-912/8.8	BOULON ALLEN 5 M 80X15	SCREW, ALLEN 5MM0.8X15
013	0000023051	1 6789AB DE	E016205	TCA.AUTOBLOC. 5M80. DIN-982.	ECROU INDESSERABLE 5M80	NUT, SELF LOCKING 5MM.80
014	0000031050	123456789ABCDEF	E016205	ARAND.PLANA MECANIZ.D.5.	RONDELLE PLATE MECA.0 5	WASHER, 5MM I.D.
015	0000034050	1 67	E016205	ARAND.ESTRELL.INT.D5-DIN6797-J	RONDELLE EVENTAIL D5	INNER STARWASHER, 5MM I.D.
016	0E01500691	1 67	E016205	TCA.FJ.CARC.FARO.213006-0.SCO.	ECROU FIX CARCASSE	NUT, NACELLE ATTACHMENT
017	0005510620	1 67	E016205	TERM.CABLE MACHO 6,35 MASA	FICHE MALE	TERMINAL, DOUBLE
018	0E02300591	1 67	E016205	TOR.C/CUADRADA FJ.CARCASA FARO	VIS FIX. CARCASSE	SCREW, SQUARE HEAD
019	0E02300521	1 67	E016205	TCA.FIJ.FARO.	ECROU FIX. PHARE	NUT, CABLE CLIP
020	0003710120	123 56789ABCDEF	E016205	MUELLE PORTLAMP.19.07.MONTREAL	RESSORT PORTE-LAMPES	SPRING,SOCKET BULB
021	0E04400451	1 67	E016205	PASCABLES CARCASA FARO.132109V	CAOUT. PASSE CABLES	RUBBER
022	0F00400522	1 67	E016205	CALCA DPTO.LETRAS BLANC.SCO-50	ADHESIF	DECAL
023	0E02300511	1 67	E016205	OREJA FIJ.OPTICA FARO.	FIX. OPTIQUE	FIX. LENS
024	0D00400691	1 67	E016205	REMACH.FIJ.CARC.DEPTO.YUM.POP.	RIVET FIX. CARCASSE	RIVET, FIX. NACELLE
025	0F01000141	1 67	E016205	CTO.PURO LUZ.V.START.	COMMANDE COMPLETE LUMIERE	LIGHT SWINTCH ASSY V. START
	0F01010141	23 5 89	E018491	CTO.PURO LUZ.V.SPORT.	COMMANDE COMPLETE LUMIERE	LIGHT SWINTCH ASSY V.SPORT
026	0008010300	12345 C F	E016205	CTO.INSTAL.ELECTRICA,VARIANT.	FAISCEAU ELECTRIQUE	WIRING HARNESS
027	0A01020971	12345 C F	E016205	CABLE MASA FARO PILOTO	CABLE MASSE FEU ARRIERE	GROUND CABLE, TAIL LIGAT
028	0008223051	123456789ABCDEF	E016205	CABLE MASA MOTOR TERM.CERRADO	CABLE MASSE MOTEUR	CLOSED TERM.ENGINE GROUND CAB.
029	0A01070311	1 67	E016205	CTO.CLAXON 6V.18W. V. START	KLAXON V. START	HORN, VARIANT START
030	0F01010311	2345 89ABCDEF	E018491	CTO.CLAXON. V.SPORT	AVERTISSEUR	HORN ASSEMBLY
031	0A01010371	123 56789 C F	E016205	LAMP.PLAF.PILOTO.6V3W.V/FD/FDT	LAMPE 6V 3W	UPPER LIGHT, 6V. 3W.
032	0F01000321	1 345	E016205	CTO.FARO PILOTO,275.9(V.START)	FEU ARRIERE V. START	TAILLIGHT ASSY. VARIANT START
033	0003710330	12345 89 C F	E016205	JUNTA PLAST.PILOTO.13.03.MARZ.	JOINT DE SUPPORT DE FEU AR.	GASKET ,TAIL LIGTH SUPPORT
034	0A04400441	1	E016205	TAPATALAD.DCH.CABLE STOP(START	BOUCHON DE TARIERE CABLE STAR	DRILL COVER,STOP CABLE,V/START
035	0A04400451	1	E016205	TAPATALAD.IZQ.CABLE STOP.START	BOUCHON DE TARIERE CABLE	DRILL COVER,STOP CABLE
036	0003710340	12345 C F	E016205	CRISTAL FARO PILOTO.12.39.	CABOCHON DU FEU ARRIERE	LENS, TAILLIGHT
037	0003710570	12345 C F	E016205	TOR.FIJ.FARO PILOTO.16.73.	VIS DE FIX.DU CABOCHON	LOCK SCREW OF TAILLIGHT LENS
038	0012031200	1 67	E016205	TOR.C/RED.CRUZ.3M50X12.DIN7985	VIS CRUCIFORME	SCREW
039	0000002615	1234567 AB DE	E016205	TOR.C/EXAG. 6M100X15.DIN-	BOULON 6M100X15	HEXAGONAL HEAD SCREW 6M100X15
040	0000023060	1 67 AB DE	E016205	TCA.AUTOBLOC. 6M100. DIN-	ECROU INDESSERABLE	SELF-LOCKING NUT 6M100
041	0000031060	123 567 ABCDEF	E016205	ARAND.PLANA MECANIZ.D.6.	RONDELLE PLATE D6	MACHINED FLAT WASHER 0 6
042	0003110610	1 67 AB DE	E016205	ARAND.REFZO.CLAXON.	RONDELLE FIX.RESERVOIR	CLAMP LOCK WASHER TO FUEL TANK
043	0003515370	1 67	E016205	ARAND.FIJ.CUBRECAD.	RONDELLE CARTER DE CHAINE	WASHER, COVER MOUNTING
044	0000031070	1 67	E016205	ARAND.PLANA MECANIZ.D.7.	RONDELLE PLATE D7,3X13,8MM	WASHER, PLAIN 7MM ID
045	0000023051	2345 C F	E018491	TCA.AUTOBLOC. 5M80. DIN-982.	ECROU INDESSERABLE 5M80	NUT, SELF LOCKING 5MM.80
048	0F01500371	2	E026868	SCTO.PLAC.FRONT.R-K.C/C.V.SPOR	PLAQUE FRONT V.SPORT	FRONT PLATE
049	0F01500251	345 8 B E	E018491	CALCA DCH.PLCA.FRTA.V.SPORT.BL	ADHESIF DROIT PLAQUE FRONT	FRONT PLATE DECAL L-H

DOWNLOADED FROM THE PUBLIC SCOOTERHULP LIBRARY
Www.ScooterHulp.com

DERBI	INSTALACION ELECTRICA. ECLATE ELECTRIQUE. LIGHTING EQUIPMENT.	3-6-88	1 F
	LAMINA FEUILLE DIAGRAM	6
		START 14

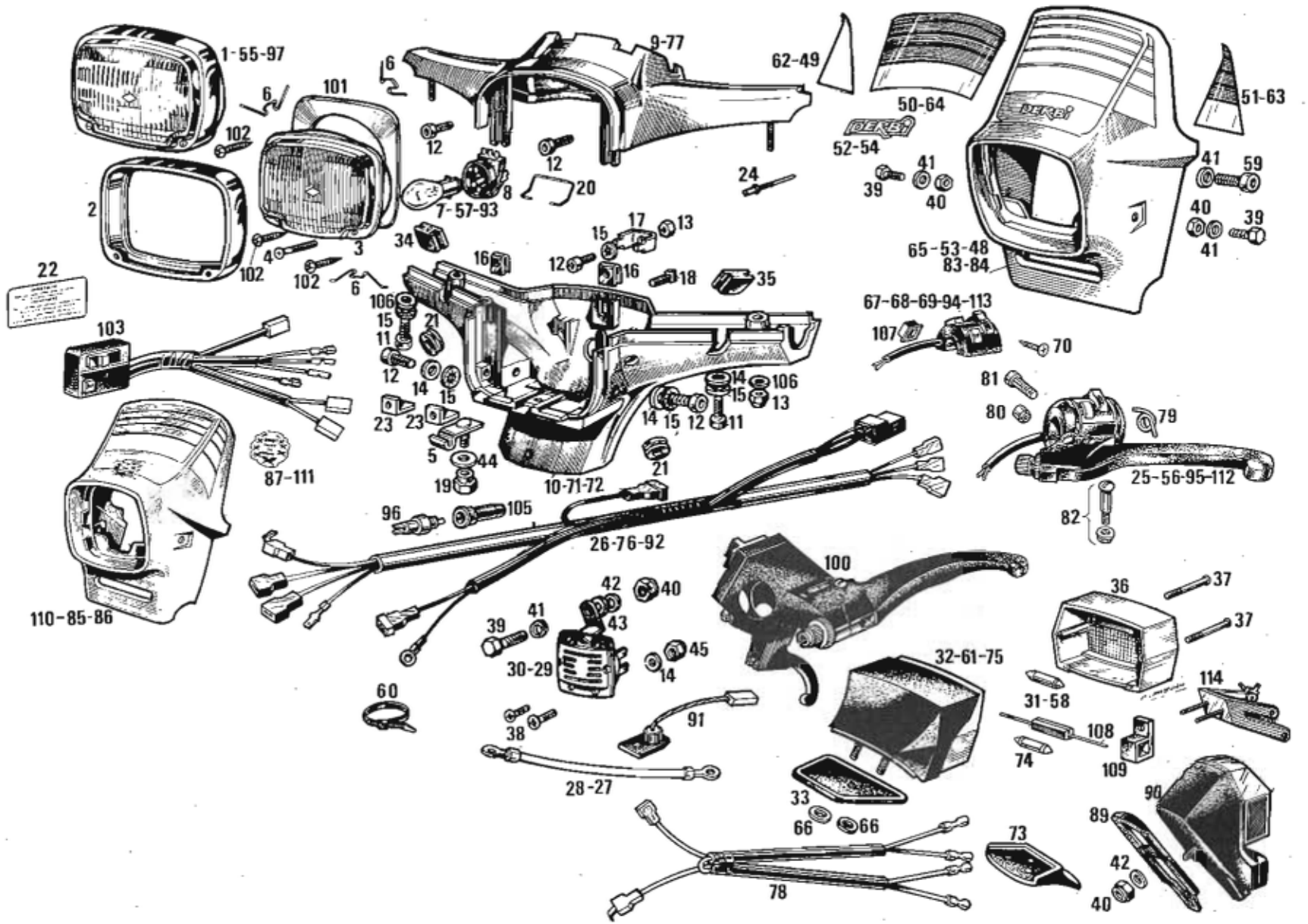

DOWNLOADED FROM THE PUBLIC SCOOTERHULP LIBRARY
Www.ScooterHulp.com

Figura Figure Figr.	CODIGO Nº PIECE CODE Nr.	MODELO MODELE MODEL	Nº CHASIS Nº CHASSIS FRAME NUM.	DENOMINACION	DESIGNATION	NAME
050	0F01500321	345 8 B E	E018491	CALCA CTR.PLCA.FTAL.V.SPORT.BL	ADHESIF PLAQUE FRONT	FRONT PLATE DECAL
051	0F01500331	345 8 B E	E018491	CALCA IZQ.PLCA.FRTA.V.SPORT.BL	ADHESIF PLAQUE FRONT GAUCHE	FRONT PLATE DECAL R-H
052	0F01500784	2 9	E026868	CALCA DERBI BLANCA.V.SPORT.R-K	ADHESIF "DERBI"	DECAL"DERBI"
053	0F01500372	34	E018491	SCTO.PLAC.FRONT.BL.C/CAL.SPORT	PLAQUE FRONT, BLANCHE	FRONT PLATE, WHITE
054	0F01500782	345 8	E018491	CALCA"DERBI"NARJ.V.SPORT.BLCO.	ADHESIF "DERBI", ROUGE	DECAL "DERBI", RED
060	0A00900531	23 56789AB DE	E018491	BRIDA UNECABLES NEGRA.ITWE0119	COLLIER	BLACK CABLE TIE
061	0008110320	2 C F	E026868	CTO.FARO PILOTO(CROMADO) 276.1	FEU ARRIERE	TAIL LIGHT
062	0F01500252	2 9A D	E026868	CALCA DCH.PLCA.FRTAL.V.SPORT.K	ADHESIF DROIT PLAQUE FRONT	FRONT PLATE DECAL
063	0F01500332	2 9A D	E026868	CALCA IZQ.PLCA.FRTAL.V.SPORT,K	ADHESIF PLASQUE FRONT GAUCHE	FRONT PLATE DECAL
064	0F01500322	2 9A D	E026868	CALCA CENT.PLCA.FRTA.V.SPORT,K	ADHESIF PLAQUE FRONT GAUCHE	FRONT PLATE DECAL
065	0F01500373	5	E027035	SCTO.PLAC.FRONT.G.M.C/C.V.SPOR	PLAQUE FRONT, GRIS	FRONT PLATE, GREY
066	0000031040	123456789 C F	E016205	ARAND.PLANA MECANIZ.D.4.	RONDELLE PLATE D 4	WASHER, 4MMI.D.
067	0F02300381	1 67	E016205	R-CTO.CONMUT.C/CABL.START/SCO	INVERSEUR AVEC CABLE	SWITCH
068	0F02310381	23 5 89	E018491	R-CTO.CONMUT.C/CABLES V.SPORT	INVERSEUR AVEC CABLE	SWITCH
070	0012030800	123456789AB DE	E016205	TOR.C/RED.CRUZ.3M50X8.DIN-7985	VIS CRUCIFORME	SCREW PHILLIPS
071	0F02310283	6	E035090	SCTO.CARC.INF.NEG.V.START C/IN	CARCASE INF.NOIRE AVEC ADH.	NACELLE,HANDLEBAR LOWER BLACK
072	0F02320281	7	E040710	SCTO.CARCASA INF.ST.R-K.C/INTT	CARCASE INF.ROUGE	NACELLE,HANDLEBAR LOWER,RED
073	000AC10330	6	E035070	JUNTA SOPTE.FARO PILOTO.	JOINT SUPPROT FEU ARRIERE	GASKET, TAIL LIGHT SUPPORT
074	0D01030681	6789	E035070	LAMP.PLAF.STOP.6V10W.C5-Y.S.IS	LAMPE STOP 6V 10W C-5 YUMBO	BULB, STOP LIGHT 6V 10W C-5
075	0F01020321	6789	E035070	CTO.F.PILOTO.START C/INT.276.2	FEU ARRIERE V.START	TAILLIGHT ASSY
076	0F01030301	6789	E035070	CTO.INST.,ELECT.V.START C/INTT	FAISCEAU ELECTRIQUE	WIRING HARNESS
077	0E01000516	7	E040710	SCTO.CARCASA SUP.FARO,ROJO-K	CARCASSE SUP.PHARE ROUGE	NACELLE, HANDLEBAR UPPER REED
078	0005023140	6789AB DE	E035070	CTO.INSTALAC.STOP,V-USA	CONTACTEUR DE STOP V. USA	SWITCH, STOP LIGHT, V. USA
079	0F00900271	123456789AB DE	E016205	MUELLE RECUP.MANETA.800.02.693	RESSORT DE LEVIER	SPRING
080	0F00900151	123456789AB DE	E016205	CASQ.FIJ.PUNO GAS.10102018.SP.	ENTRETOISE	BUSHING
081	0F02100871	123456789AB DE	E016205	TOR.FIJ.PUNO GAS.10102017.SPOR	ECROU FIX.POIGNEE GAZ	SCREW
082	0F00900211	123456789AB DE	E016205	CTO.TOR.ARTIC.MANETA.97403.SP.	VIS AVEC ECROU	SCREW AND NUT
083	0F01510372	8	E039876	R-SCTO.PLACA FRONT.GR.SPORT.IT	PLAQUE FRONT V.SPORT	FRONT PLATE
084	0F01510371	9	E049343	R-SCTO.PLACA FRONT.RJ-K.C/ITT.	PLAQUE FRONT V.SPORT	FRONT PLATE
096	0005023200	6789AB DE	E041616	CTO.INTERRUPTOR STOP-100934200	CONTACTEUR DE STOP	SWITCH,STOP LIGHT
097	0F01000011	C F	E048721	CTO.FARO.VARIANT.SLE-X.R.302.1	OPTIQUE COMPLETE	HEADLIGHT LENS SUB-ASSEMBLY
100	0F01050141	C F	E048721	CTO.PUNO LUZ.SLE-X.	COMMANDE COMPLETE LUMIERE	LIGHT SWITCH ASSY
101	0F02300651	C F	E048721	R-JUNTA FARO DTRO.SLE-87.	JOINT DE OPTIQUE PHARE	GASKET
102	0011131600	C F	E048721	TOR.AUT.NG.C/CR.3,5X16.D-7981B	VIS FIX. OPTIQUE	SCREW
103	0F02350381	C F	E048721	R-CTO.CONMUT.C/CABLES.SLE-X.	INVERSEUR AVEC CABLE	SWITCH
105	0005010760	6789AB DE	E035090	CAPCHN.INTRPT.STOP NGR(VAR.USA	CAPUCHON	RUBBER COVER,STOP LIGHT SWITCH
106	0D01200171	1 67	E016205	ARAND.EJE LEVA-FIJ.CUBRECAD.	RONDELLE	WASHER
107	0D02300861	123456789	E016205	TAPA NEGRA CONMUT.3019777.	DIP. SWITCH SIDE COVER	CACHE, NOIR
108	0A01010781	6789	E035070	RESIST.COMP.PILT.R948CA.6,20HM	RESISTENCE DU FEU ARRIERE	RESISTOR, TAIL LIGHT
109	0F02300941	6789	E035070	ABRAZ.FIJ.RESIS.PILOTO R.2317	COLLIER	CABLE TIE
114*	0F01010361	6789	E035070	SCTO.PORTT.PILOTO-STOP ST/INTT	PORTE-LAMPES	COCKET BULB

DOWNLOADED FROM THE PUBLIC SCOOTERHULP LIBRARY
Www.ScooterHulp.com

DERBI	INSTALACION ELECTRICA. ECLATE ELECTRIQUE. LIGHTING EQUIPMENT.	3-6-88 / LAMINA / FEUILLE / DIAGRAM	1 F / 6 / START 14

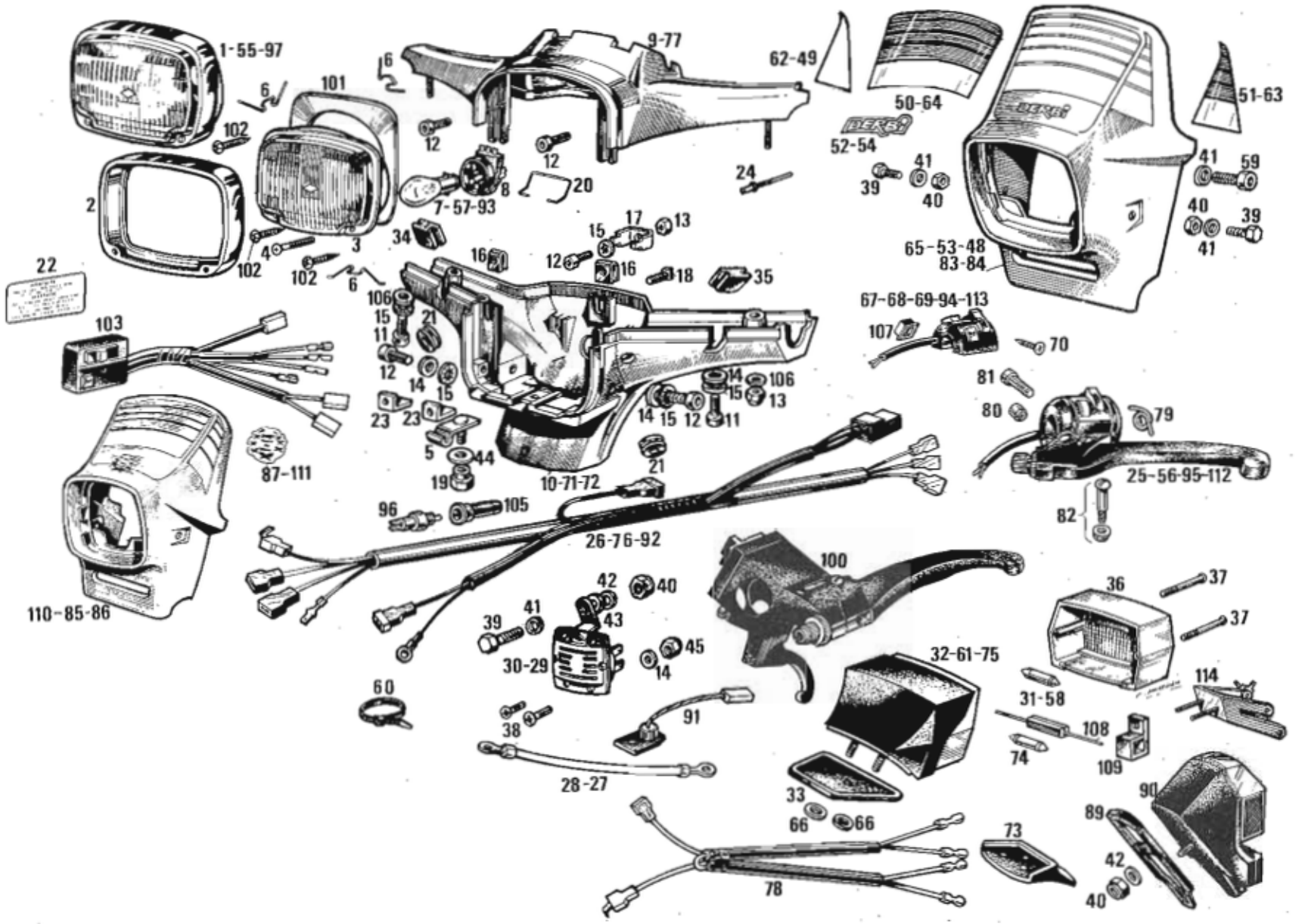

DOWNLOADED FROM THE PUBLIC SCOOTERHULP LIBRARY
Www.ScooterHulp.com

Figura Figure Figr.	CODIGO Nº PIECE CODE Nr.	MODELO MODELE MODEL	Nº CHASIS Nº CHASSIS FRAME NUM.	DENOMINACION	DESIGNATION	NAME

PIEZAS ESPECIALES EXPORTACION MODELLE ESPORTATION (SEULEMENT) EXPORT MODEL (ONLY)

055	0E01020011	4		E024098	CTO.FARO LUXOR2096-SCOOT-50/FR	PHARE COMPLET	HEADLIGHT ASSEMBLY
056	0F01020141	4		E024098	CTO.PUÑO LUZ.V.SPORT.FRANCIA.	COMMANDE COMPLETE LUMIERE	LIGHT SWINTCH ASSY START
057	0E01000131	4		E024098	LAMPARA FARO.6V15WDIN.AMARILLA	LAMPE PHARE	HEADLIGHT BULB
058	0007910370	4		E024098	LAMPARA PLAF.6V.4W.DIN.C5-FRAN	LAMPE NAVETTE 6V 4W.	BULB 6V. 4W.
059	0004044000	4		E024098	TOR.C/ALLEN.4M70X40.DIN-	BOULON ALLEN 4M70X40	SCREW, ALLEN 4M70X40
069	0F02320381	4		E024098	R-CTO.CONMUT.C/CAB.V.SPORT FR.	INVERSEUR AVEC CABLE	SWITCH
085	0F01520371		A D	E041616	SCTO.PLAC.FRONT.R.K.C/CAL.USA.	PLAQUE FRONT	FRONT PLATE
086	0F01530371		B	E041664	SCTO.PLAC.FRONT.BCO.C/C.SP.USA	PLAQUE FRONT.	FRONT PLATE
087	0F01800321		AB D	E041616	CALCA"MADE IN SPAIN"NEG.SP.USA	ADHESIF "MADE IN SPAIN"	DECAL, "MADE IN SPAIN"
089	0A01040351		AB DE	E041616	JUNTA SPTE.FARO PILOTO-3040377	JOINT SUPPORT FEU ARRIERE	GASKET,TAIL,LIGHT SUPPORT
090	0A01070321		AB DE	E041616	CTO.FARO PILOTO-100941702-USA.	FEU ARRIERE	TAIL LIGHT USA
091	0D02300341		AB DE	E041616	R-CTO.ZENER REGULAD.TENSION.	ENSEMBLE REGULATEUR TENSION Z	ZENER DIODE ASSY.
092	0F01040301		AB DE	E041616	CTO.INSTAL.ELECT.SPORT.USA.	FAISCEAU ALECTRIQUE	WIRING HARNESS
093	0001810130		AB DE	E041616	LAMPARA FARO.6V.25/25W.	LAMPE PHARE 6V 25/25W	BULB, HEADLAMP 6V. 25/25W.
094	0F02340381		AB	E041616	R-CTO.CONMUT.C/CABL.SPORT.USA.	INVERSEUR AVEC CABLE	LIGHT SWITCH
095	0F01040141		AB	E041616	CTO.PUÑO LUZ.SPORT-USA.	COMMANDE COMPLETE LUMIERE	LIGHT SWINTCH ASSY
110	0F01530372		E	E056182	SCTO.PLACA FRONT.GR.SP.AM.USA.	PLAQUE FRONT, GRIS	FRONT PLATE, GREY
111	0F01800322		E	E056182	CALCA"MADE IN SPAIN"BCA.SP.USA	ADHESIF "MADE IN SPAIN"	DECAL "MADE IN SPAIN"
112	0F01060141		DE	E056062	CTO.PUÑO LUZ.SPORT-AM.ESP./USA	COMMANDE COMPLETE LUMIERE	LIGHT SWINTCH ASSY
113	0F02360381		DE	E056062	R-CTO.CONMUT.LUZ C/CAB.V.SP.AM	INVERSEUR AVEC CABLE	SWITCH

DOWNLOADED FROM THE PUBLIC SCOOTERHULP LIBRARY
Www.ScooterHulp.com

DERBI	INSTALACION ELECTRICA. ECLATE ELECTRIQUE. LIGHTING EQUIPMENT.	3-6-88 LAMINA FEUILLE DIAGRAM	1 F 6 START 14

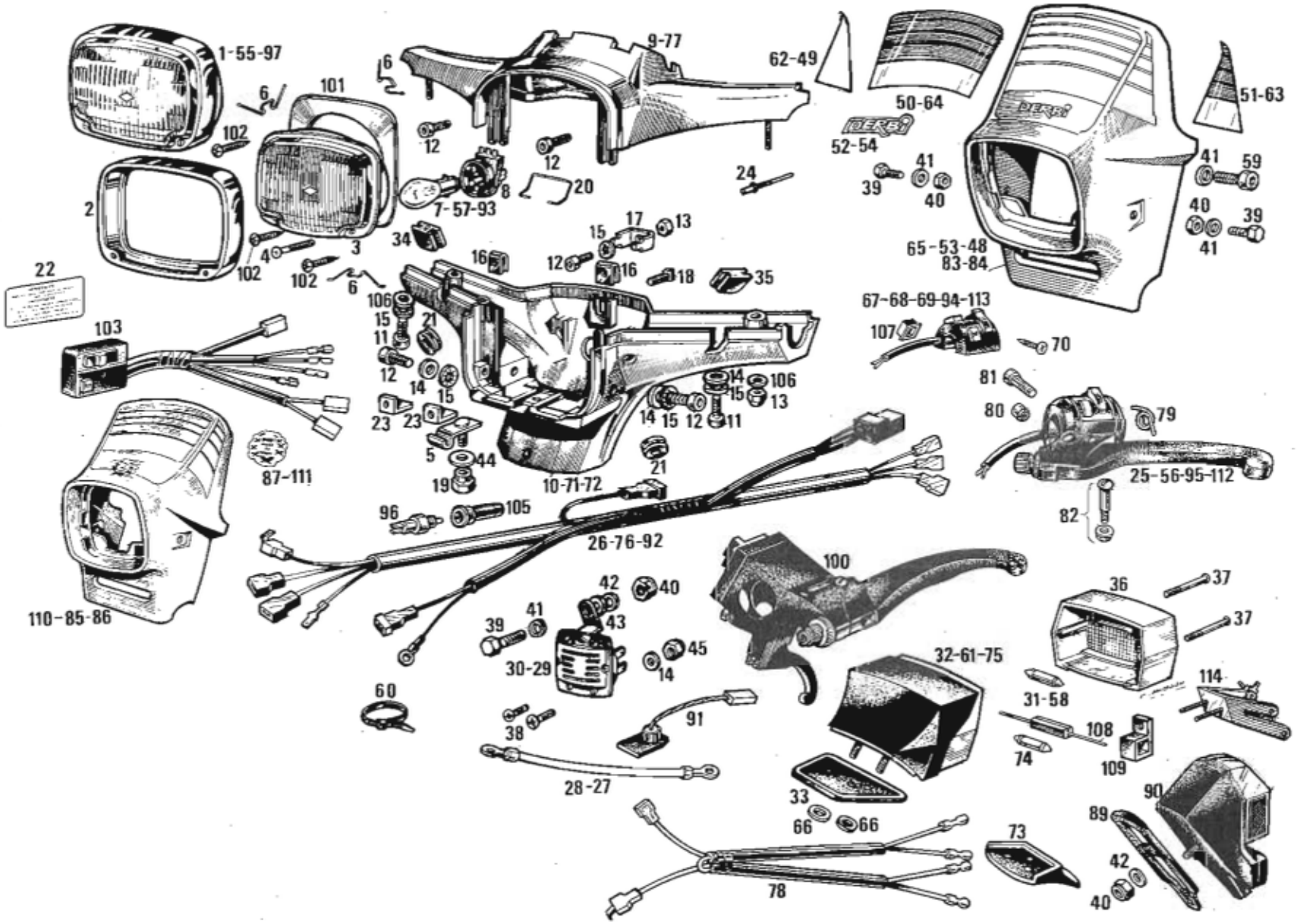

DOWNLOADED FROM THE PUBLIC SCOOTERHULP LIBRARY
Www.ScooterHulp.com

Figura Figure Figr.	CODIGO Nº PIECE CODE Nr.	MODELO MODELE MODEL	Nº CHASIS Nº CHASSIS FRAME NUM.	DENOMINACION	DESIGNATION	NAME
001	0003112330	123456789ABCDEF	E016205	TCA.EJE RUEDA.ANTORCHA.	ECROU D'AXE DE BRAS D12X150X2	WHEEL AXLE NUT
002	0006512310	123456789ABCDEF	E016205	ARAND.PROTEC.PIERNAS.	RONDELLE PROTECTEUR FOURCHE	LEG PROTECTION WASHER
003	0004312320	12345	E016205	ARAND.EJE RUEDA.2'5MM.	RONDELLE ESSIEU DE ROUE 2.3MM	WASHER, WHEEL AXLE
	0003112310	12345	E035727	ARAND.EJE RUEDA DTRA.P.PIERNAS	RONDELLE D'AXE DE ROUE	WASHER, AXLE
	0004312320	12345	E035828	ARAND.EJE RUEDA.2'5MM.	RONDELLE ESSIEU DE ROUE 2.5MM	WASHER, WHEEL AXLE
	0003112310	12345 89AB DE	E043054	ARAND.EJE RUEDA DTRA.P.PIERNAS	RONDELLE D'AXE DE ROUE	WASHER, AXLE
004	0A01200291	12345	E016205	GRUESO SEPARD.CARRET.DTRO.VAR.	ENTRETOISE DE MOYEU AV.	SPACER, HUB
	0D01220301	12345	E035727	CASQ.REENVIO.YUMBO.S.84.	ENTRETOISE	SPEEDOMETER DRIVE UNIT BUSHING
	0A01200291	12345	E035828	GRUESO SEPARD.CARRET.DTRO.VAR.	ENTRETOISE DE MOYEU AV.	SPACER, HUB
	0D01220301	12345 89AB DE	E043054	CASQ.REENVIO.YUMBO.S.84.	ENTRETOISE	SPEEDOMETER DRIVE UNIT BUSHING
005	0A01200321	1 67 C F	E016205	GRUESO EJE RUEDA DTRA.VARIANT.	RONDELLE SUPPLEM. AXE ROUE	SPACER, WHEEL AXLE
006	0E01200121	12345 89AB DE	E016205	TAPACB.CARRT.DTRO.NEG.BRILLTE.	CACHE POUSSIEE MOYEU AV. NOIR	HUB CAP, FRONT
007	0D01200341	123456789ABCDEF	E016205	RETEN CARRETE.20X32X4.48003.	JOINT SPI DU MOYEU AV.	BEARING SEAL 20X32X4
008	0056020101	123456789ABCDEF	E016205	COJINETE NACHI 6201.12-32-10.	ROULEMENT 6201	BEARING 6201
009	0F01200951	1 345 8 B E	E016205	CTO.LLANTA DTRA.V.SPORT	JANTE COMPLETE	MAGWHEEL FRONT
010	0E01210031	12345 89AB DE	E016205	SCTO.SEPARADOR COJINETES.SC050	SEPARATEUR DES ROULEMENTS	SPACER, BEARING
011	0A01210101	12345 89AB DE	E016205	CAMARA 6M16	CHAMBRE A AIR	TUBE
012	0F01200111	1	E016205	CUBIERTA 2 1/2X16"MV80.START16	PNEU 2 1/2X16"	TIRE 2 1/2X16"
013	0F01210111	2345 89AB DE	E018491	CUBTA.2 3/4X16" TRIAL.V.SPORT	PNEU 2 3/4X16"	TIRE 2 3/4X16"
014	0002112260	123456789ABCDEF	E016205	SCTO.EJE RUEDA DTRA.	AXE ROUE AVANT	FRONT WHEEL AXLE
015	0008212180	12345 89AB DE	E016205	SCTO.PALANCA FRENO, VARIANT	LEVIER DE CAME	LEVER, F & R BRAKE PANEL
016	0E01210401	12345 89AB DE	E016205	CTO.TAPA FRE.DTRO.SCO.50.ESPAR	FLASQUE FREIN AVEC MACHOIRES	BRAKE PANEL, FRONT W/SHOES
017	0A01230141	12345 89AB DE	E016205	SCTO.TAPA FRENO DTRO.SCO-50.	FLASQUE DE FREIN AV.	BRAKE PANEL, FRONT
018	0000047110	123456789ABCDEF	E016205	ANILLO SEG.EJES D10.DIN-471.	CIRCLIP POUR AXE D10	CIRCLIP, BRAKE SHOE RETENTION
019	0003112240	123456789ABCDEF	E016205	MUELLE MORDAZAS.D6.ANTORCHA.	RESSORT DE RAPPEL DES MACHOIR	SPRING, BRAKE SHOE RETURN
020	0D01210211	123456789ABCDEF	E016205	R-SCTO.MORDAZA C/FORRO.4V.	MACHOIRE AVEC GARNITURE	BRAKE SHOE
021	0002112350	123456789ABCDEF	E016205	REFZD.MORDAZAS.COPPA-4V.	REFORT MACHOIRES	SHOES REINFORCEMENT
022	0E01200771	12345 89AB DE	E016205	SCTO.EJE LEVA MORDAZAS.SCO-50.	CAME DE FREIN AV. ET AR.	CAM, BRAKE SHOE
023	0000033100	123456789ABCDEF	E016205	ARAND.MUELLE. D.10.DIN-127.	RONDELLE D10	LOCKWASHER 10MM ID
024	0003113150	123456789ABCDEF	E016205	TCA.EJE LEVA... 10M100.CINCADA	ECROU DE LEVIER DE FREIN 10M1	NUT, CRANKSHAFT 10MMX1.00
025	0F01220951	2 9A D	E026868	CTO.LLANTA DTRA.V.SPORT ROJO-K	JANTE COMPLETE	MAGWHEEL FRONT
026	0008912290	67	E035090	CASQ.SEPARAD.CARRETE.COYOTE.	ENTRETOISE DE MOYEU AV.	SPACER, HUB
	0D01210291	67 C F	E043468	CASQ.SEPARD.LADO DISCO-YUMB-84	ENTRETOISE D'EPAISSEUR	DISC SIDE SPACER BUSHING
027	0004312310	67 C F	E035090	ARAND.EJE RUEDA.4MM.COPPA.	RONDELLE ESSIEU DE ROUE	WASHER, WHEEL AXLE
028	0008212110	67 C F	E035090	CUBIERTA 2 1/2X17"	PNEU 2 1/2X17"	TIRE 2 1/2X17"DOT
029	0008512100	67 C F	E035090	CAMARA 2'25X17"	CHAMBRE A AIR 2'25X17"	TUBE 21-2X17"
030	0008712120	67 C F	E035090	TAPACUB.CARRETE DTRO.NEG.V.SLE	CACHE POUSSIEE MOYEU AV. NOIR	WHEEL COVER FRONT, BLACK
031	0008712130	67 C F	E035090	REMACHE FIJ.TAPACUBOS 5X8	RIVET FIX. CACHE	RIVET COVER
032	0A01200951	67 C F	E035090	CTO.LLANTA DTR.7B ORO,V.SLE.	JANTE COMPLETE, OR, V/SLE	MAGWHEEL, FONT, SLE GOLD
033	0003112030	67 C F	E035070	SCTO.SEPARADOR COJNTES.ANTOR.	SEPARATEUR DES ROULEMENTS	SPACER, BEARING
034	0003112180	67 C F	E035070	SCTO.PALANCA FRENO DTRO.MECAN.	LEVIER DE FREIN AV.	LEVER ARM, FRONT BRAKE
035	0008712400	67 C F	E035070	CTO.TAPA FR.DTR.NEG.C/MORD.VAR	FLASQUE FREIN AV. AVEC MACHOI	BRAKE PANEL, FRONT, W/SHOES
036	0A04700061	67 C F	E035070	R-SCTO.TPA.FRE.DT.C/PLCA.CENT.	FLASQUE DE FREIN AV.	BRAKE PANEL, FRONT
037	0004312770	67 C F	E035070	SCTO.EJE LEVA MORDAZAS.COPPA	CAME DE FREIN AV. ET AR.	CAM, BRAKE SHOE
039	0E01200721	123456789ABCDEF	E035070	FLECHA SEÑALZ.DESGT.FERODO.USA	FLECHE SIGNALATRICE	INDICATOR

DOWNLOADED FROM THE PUBLIC SCOOTERHULP LIBRARY
Www.ScooterHulp.com

DERBI	RUEDA DELANTERA.– TAPA FRENO DELATERO. ROUE AVANT. – FLASQUE DE FREIN AVANT. FRONT WHEEL. – BRAKE PLATE FRONT.	3-6-88 LAMINA FEUILLE DIAGRAM	1 F 7 START 14

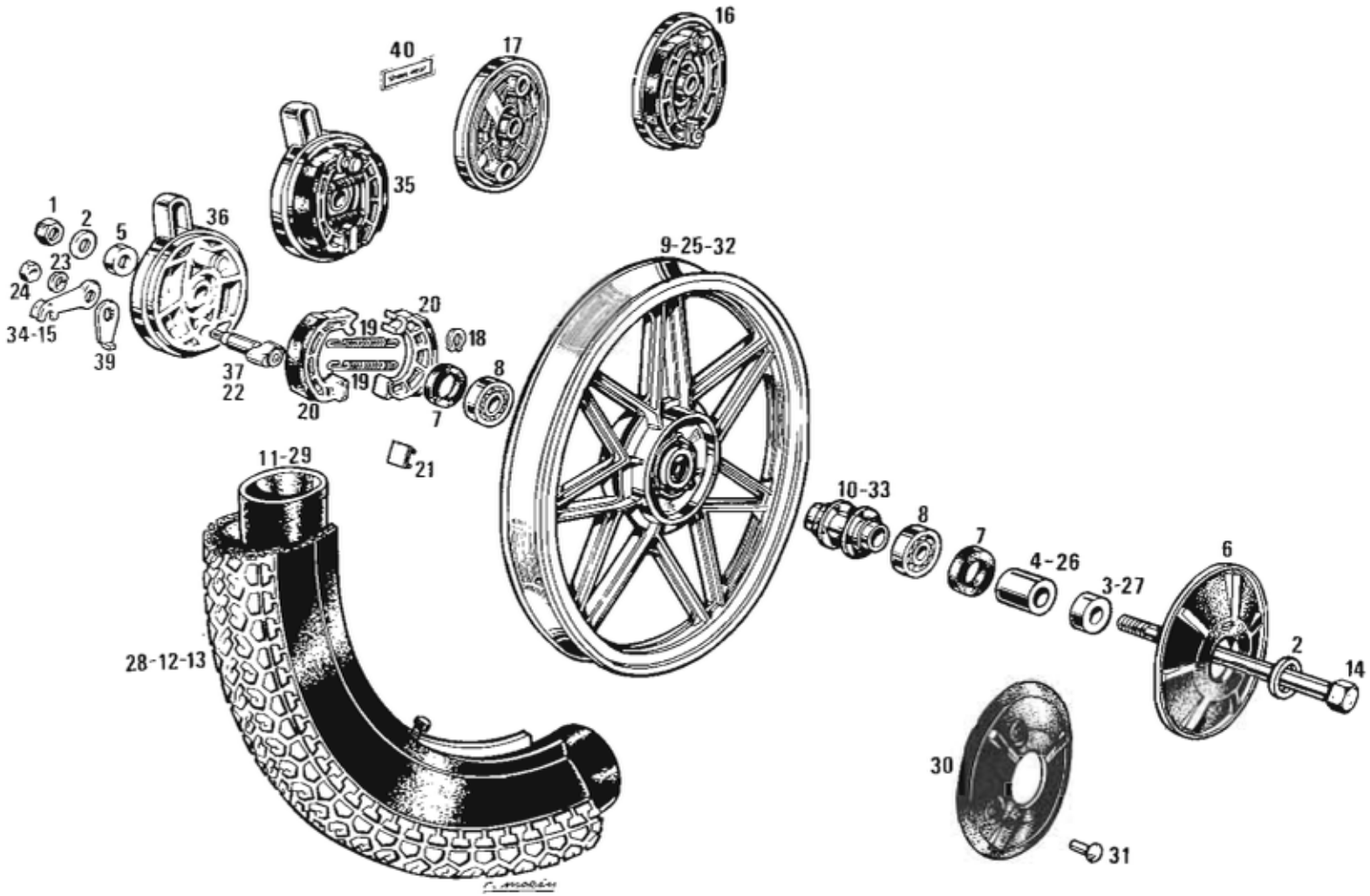

DOWNLOADED FROM THE PUBLIC SCOOTERHULP LIBRARY
Www.ScooterHulp.com

Figura Figure Figr.	CODIGO Nº PIECE CODE Nr.	MODELO MODELE MODEL	Nº CHASIS Nº CHASSIS FRAME NUM.	DENOMINACION	DESIGNATION	NAME

PIEZAS ESPECIALES EXPORTACION MODELLE EXPORTATION (SEULEMENT) EXPORT MODEL (ONLY)

040	0E04600301	AB DE	E041616	CALCA SHOES WEAR.SCOOT-50.USA	ADHESIF "SHOES WEAR"	DECAL"SHOES WEAR"

DOWNLOADED FROM THE PUBLIC SCOOTERHULP LIBRARY
Www.ScooterHulp.com

DERBI	RUEDA DELANTERA.– TAPA FRENO DELATERO. ROUE AVANT. – FLASQUE DE FREIN AVANT. FRONT WHEEL. – BRAKE PLATE FRONT.	3-6-88	1 F
		LAMINA FEUILLE DIAGRAM	7
			START 14

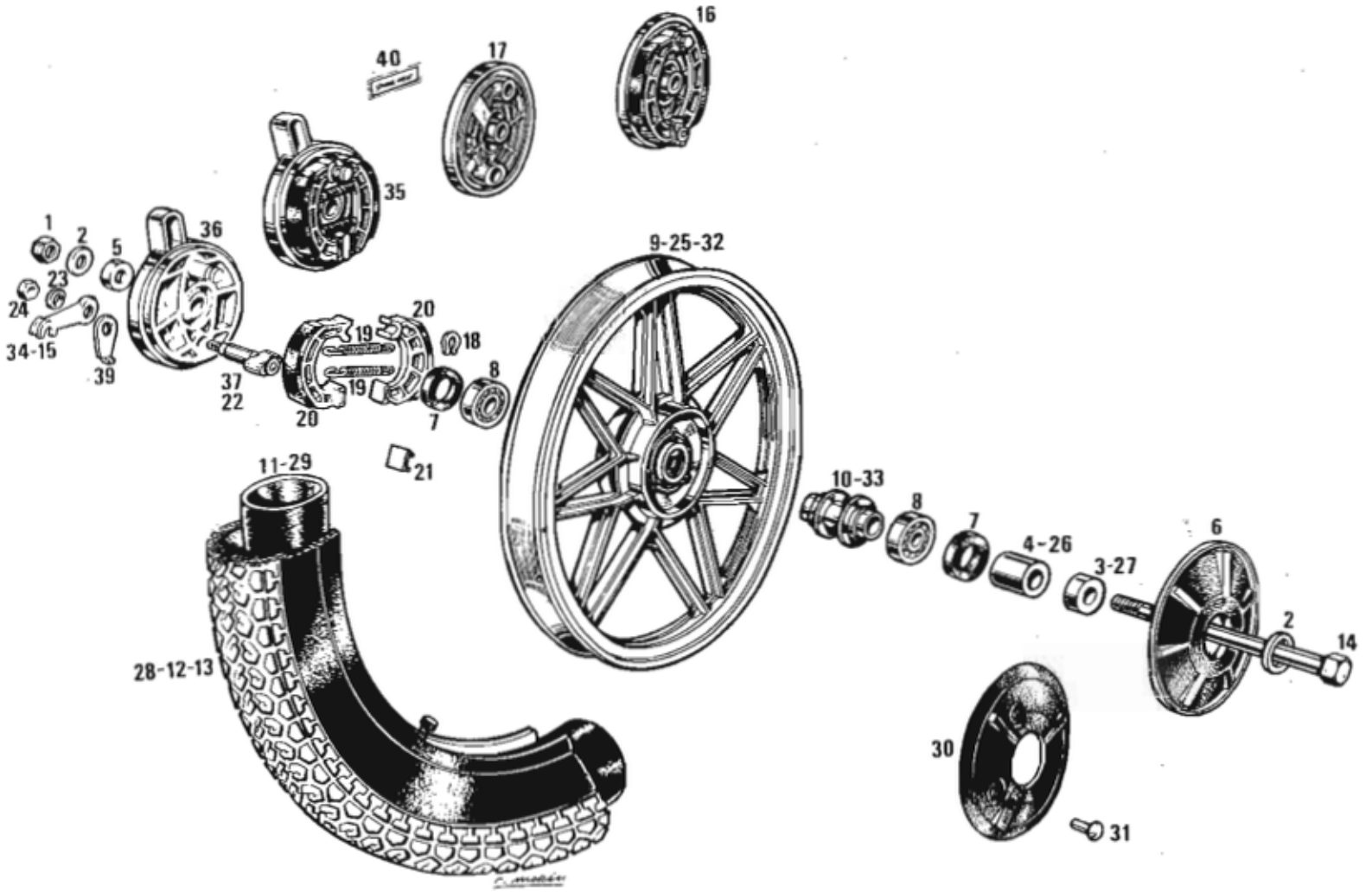

DOWNLOADED FROM THE PUBLIC SCOOTERHULP LIBRARY
Www.ScooterHulp.com

Figura Figure Figr.	CODIGO N° PIECE CODE Nr.	MODELO MODELE MODEL	N° CHASIS N° CHASSIS FRAME NUM.	DENOMINACION	DESIGNATION	NAME
001	0A01310201	123456789ABCDEF	E016205	SCTO.EJE RUEDA TRAS.VARIANT.	AXE ROUE ARRIERE	AXLE, REAR WHEEL
002	0D01300191	123456789ABCDEF	E016205	ARAND.EJE RUEDA TRAS.	RONDELLE D12,5X30X2MM	WHEEL AXLE WASHER
003	0D01300171	123456789ABCDEF	E016205	CTO.TENSOR RUEDA.	TENDEUR DE ROUE	ADJUSTER, REAR WHEEL
005	0D01300481	123456789ABCDEF	E016205	TOPE TENSOR RUEDA.	BUTEE TENDEUR DE ROUE	ADJUSTER STOP, REAR WHEEL
006	0000023060	123456789ABCDEF	E016205	TCA.AUTOBLOC. 6M100. DIN-	ECROU INDESSERABLE	SELF-LOCKING NUT 6M100
007	0000031060	123456789ABCDEF	E016205	ARAND.PLANA MECANIZ.D.6.	RONDELLE PLATE D6	MACHINED FLAT WASHER 0 6
008	0008213290	12345 89AB DE	E016205	CASQ.SEPARD.LADO FRENO.	ENTRETOISE DE MOYEU	SPACER,WHEEL BEARING
009	0000033120	123456789ABCDEF	E016205	ARAND.MUELLE. D.12.DIN-127.	ENTRETOISE DE BROCHE D12,5X26	SPRING WASHER 0 12
010	0003112330	123456789ABCDEF	E016205	TCA.EJE RUEDA.ANTORCHA.	ECROU D'AXE DE BRAS D12X150X2	WHEEL AXLE NUT
011	0D01200341	123456789ABCDEF	E016205	RETEN CARRETE.20X32X4.48003.	JOINT SPI DU MOYEU AV.	BEARING SEAL 20X32X4
012	0056020101	123456789ABCDEF	E016205	COJINETE NACHI 6201.12-32-10.	ROULEMENT 6201	BEARING 6201
013	0008213090	123456789ABCDEF	E016205	SCTO.SEPARD.COJNTE.TRS.VARIANT	SEPARATEUR ROULEMENTS MOYEU A	SPACER, REAR HUB BEARING
014	0E01310521	12345 89AB DE	E016205	CTO.TAPA FRE.TRS.C/MORD.SCO-50	FLASQUE FREIN AR.	BRKE PANEL, REAR W/SHOES
015	0A01330141	12345 89AB DE	E016205	SCTO.TAPA FRENO TRAS.SCOOT-50.	FLASQUE DE FREIN AR.	BRAKE SIDE PANEL
016	0006513050	123456789ABCDEF	E016205	PREÇTO.TOR.PLATO ARRTRE.CROSS.	ARRETOIR DES BOULONS COURONNE	REAR SPROKET RETAINER
017	0000002825	123456789ABCDEF	E016205	TOR.C/EXAG.8M125X25.D-558/8.8.	BOULON 8M125X25	HEXAGONAL HEAD SCREW 8M125X25
018	0F02400151	1 345 8 B E	E016205	CTO.LLANTA TR.V.SPORT-START-14	JANTE ARRIERE COMPLETE	MAGWHEEL REAR
019	0F01300031	1 67 C F	E016205	PLATO ARRAST.Z-35.V.START.	COURONNE AR Z-35 V. START	SPROKET, 35 TOOTH V. START
020	0F01310031	2345 89AB DE	E018491	PLATO ARRSTRE.Z-33.V.SPORT.	COURONNE AR. Z-33. V. SPORT	SPROKET; 33 TOOTH. V. SPORT
021	0A01210101	12345 89AB DE	E016205	CAMARA 6M16	CHAMBRE A AIR	TUBE
022	0F01200111	1	E016205	CUBIERTA 2 1/2X16"MV80.START16	PNEU 2 1/2X16"	TIRE 2 1/2X16"
023	0F01210111	2345 89AB DE	E018491	CUBTA.2 3/4X16" TRIAL.V.SPORT	PNEU 2 3/4X16"	TIRE 2 3/4X16"
024	0000033100	123456789ABCDEF	E016205	ARAND.MUELLE. D.10.DIN-127.	RONDELLE D10	LOCKWASHER 10MM ID
025	0003113150	123456789ABCDEF	E016205	TCA.EJE LEVA... 10M100.CINCADA	ECROU DE LEVIER DE FREIN 10M1	NUT, CRANKSHAFT 10MMX1.00
026	0A01310111	123456789ABCDEF	E016205	SCTO.PALANCA FRENO TRAS.	LEVIER DU FREIN AR.	BRAKE LEVER, REAR
027	0000047110	123456789ABCDEF	E016205	ANILLO SEG.EJES D10.DIN-471.	CIRCLIP POUR AXE D10	CIRCLIP, BRAKE SHOE RETENTION
028	0003112240	123456789ABCDEF	E016205	MUELLE MORDAZAS.D6.ANTORCHA.	RESSORT DE RAPPEL DES MACHOIR	SPRING, BRAKE SHOE RETURN
029	0D01210211	123456789ABCDEF	E016205	R-SCTO.MORDAZA C/FORRO.4V.	MACHOIRE AVEC GARNITURE	BRAKE SHOE
030	0002112350	123456789ABCDEF	E016205	REFZO.MORDAZAS.COPPA-4V.	REFORT MACHOIRES	SHOES REINFORCEMENT
031	0E01200771	12345 89AB DE	E016205	SCTO.EJE LEVA MORDAZAS.SCO-50.	CAME DE FREIN AV. ET AR.	CAM, BRAKE SHOE
032	0F02400152	2 9A D	E026868	CTO.LLANTA TRAS.V.SPORT ROJO K	JANTE ARRIERE COMPLETE	MAGWHEEL REAR
033	0A01350291	67 C F	E035090	GRUESO CARRETE TRAS.VARIAMT.	RONDELLE SUPPLEM. MOYEUR AR.	SPACER, REAR HUB
034	0008212110	67 C F	E035090	CUBIERTA 2 1/2X17"	PNEU 2 1/2X17"	TIRE 2 1/2X17"DOT
035	0008512100	67 C F	E035090	CAMARA 2'25X17"	CHAMBRE A AIR 2'25X17"	TUBE 21-2X17"
036	0A02400151	67 C F	E035090	CTO.LLANTA TRAS.7B.ORO.VAR.SLE	JANTE AR. OR, V/SLE	MAGWHEEL REAR, V/SLE GOLD
037	0003111110	123456789ABCDEF	E016205	RODILLO PALANCA TRAS.ANTORCHA.	GALET LEVIER ARRIERE	REAR LEVER ROLLER
038	0A02400251	67 C F	E035090	R-SCTO.TPA.FRE.TR.C/PLCA.CENT.	FLASQUE DE FREIN AV.	BRAKE SIDE PANEL
039	0A11350522	67 C F	E035090	CTO.TAPA FRE.TRS.NEG.C/MOR.VAR	FLASQUE FREIN AR. NOIR A. MAC	BRAKE PANEL,REAR BLACK W/SHOES
040	0004312770	67 C F	E035090	SCTO.EJE LEVA MORDAZAS.COPPA	CAME DE FREIN AV. ET AR.	CAM, BRAKE SHOE
042	0E01200721	123456789ABCDEF	E035090	FLECHA SEÑALZ.DESGT.FERODO.USA	FLECHE SIGNALATRICE	INDICATOR
043	0008213190	67 C F	E035090	CASQ.SEPARD.LADO PLATO.	ENTRETOISE COTE FLASQUE	SPACER, REAR WHEEL

DOWNLOADED FROM THE PUBLIC SCOOTERHULP LIBRARY
Www.ScooterHulp.com

DERBI	RUEDA TRASERA. – TAPA FRENO TRASERO. ROUE ARRIERE. – FLASQUE DE FREIN ARRIERE. REAR WHEEL. – BRAKE PLATE REAR.	3-6-88 LAMINA FEUILLE DIAGRAM	1 F 8 START 14

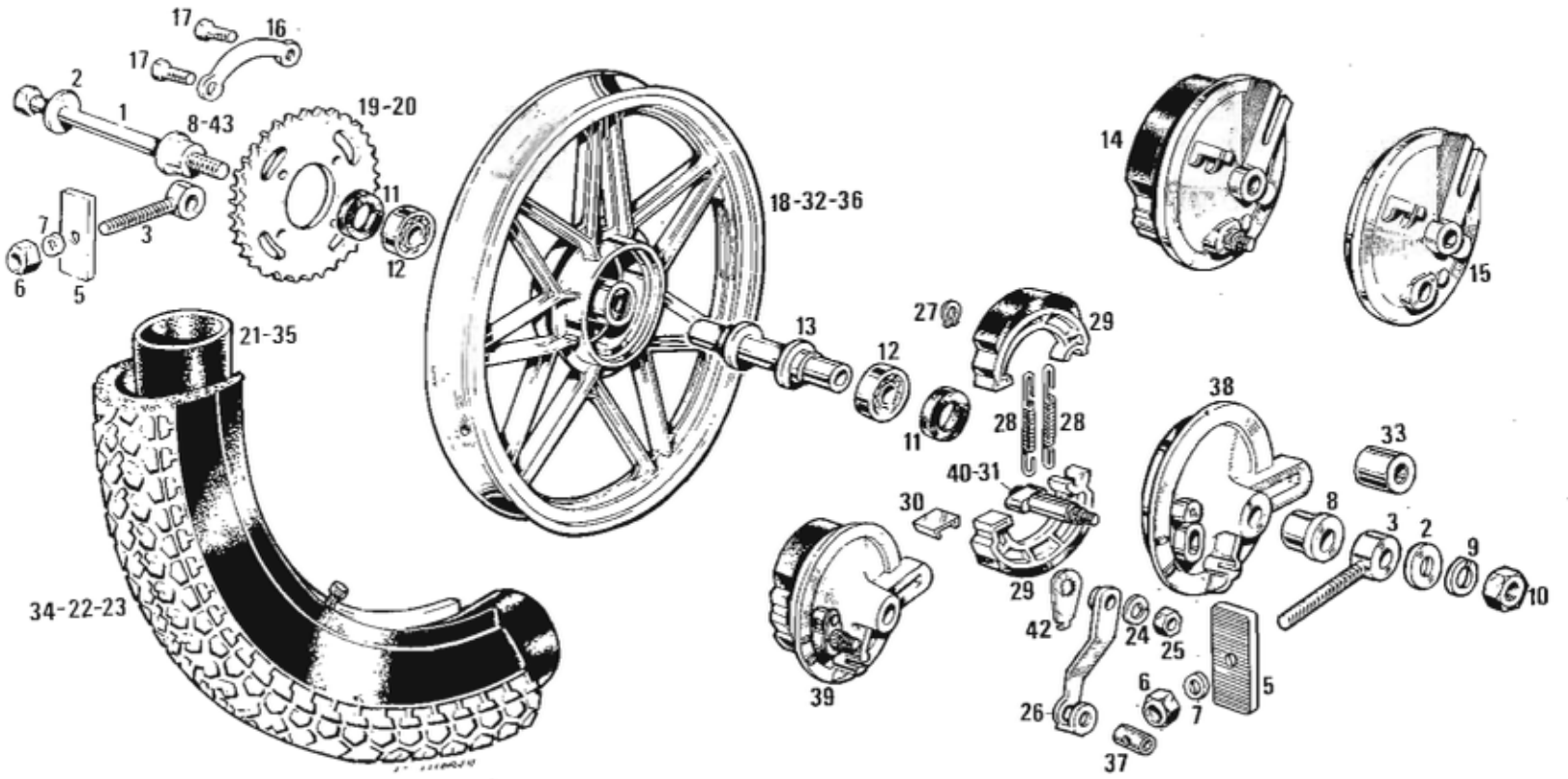

DOWNLOADED FROM THE PUBLIC SCOOTERHULP LIBRARY
Www.ScooterHulp.com

Figura Figure Figr.	CODIGO Nº PIECE CODE Nr.	MODELO MODELE MODEL	Nº CHASIS Nº CHASSIS FRAME NUM.	DENOMINACION	DESIGNATION	NAME
001	0F04300031	1 67	E016205	CTO.TABLIER PORTAINS.START	TABLEAU DE BORD	DASH ASSY.
002	0F01600221	2345 89	E018491	TABLIER PORTAINST. V.SPORT	TABLEAU DE BORD	DASH ASSY
003	0D01601011	2345 89	E018491	CTO.CTA.KMS. COPPA "FDT"	COMPTE-KILOMETRES	SPEEDOMETER, KILOMETERS
004	0D01610021	1	E016205	CTO.TRANSM.FLEX.CTA.KMS(MOTOBE	FLEXIBLE DU TACHYMETRE	CABLE, SPEEDOMETER DRIVE
	0D01630021	1 67	E035090	CTO.CAB.-FUNDA CTA.KMS.FDS.	FLEXIBLE DU TACHYMETRE	CABLE, SPEEDOMETER DRIVE
005	0008216020	2345	E018491	CTO.TRANS.FLEX.CTA.KMS.VARIANT	FLEXIBLE COMPTEUR C/KMS.	CABLE,SPEEDOMETER
	0A01650021	2345 AB	E035727	CTO.CAB.-FUNDA CTA.KMS.VARIANT	FLEXIBLE COMPTEUR C/KMS	CABLE, SPEEDOMETER DRIVE
	0008216020	2345	E035828	CTO.TRANS.FLEX.CTA.KMS.VARIANT	FLEXIBLE COMPTEUR C/KMS.	CABLE,SPEEDOMETER
	0A01650021	2345 89 C F	E043054	CTO.CAB.-FUNDA CTA.KMS.VARIANT	FLEXIBLE COMPTEUR C/KMS	CABLE, SPEEDOMETER DRIVE
006	0A01620051	12345	E016205	CTO.REENVIO.(16")807725.	RENVOI DE ROUE	DRIVE UNIT, SPEEDOMETER
	0F01620051	12345	E035727	CTO.REENV.(16")100748600.SPORT	RENVOI DE ROUE	DRIVE UNIT, SPEEDOMETER
	0A01620051	12345	E035828	CTO.REENVIO.(16")807725.	RENVOI DE ROUE	DRIVE UNIT, SPEEDOMETER
	0F01620051	12345 89AB DE	E043054	CTO.REENV.(16")100748600.SPORT	RENVOI DE ROUE	DRIVE UNIT, SPEEDOMETER
007	0E01600571	1 67	E016205	PORTALAMPARAS TABLIER 3011759	PORTE LAMPES TABLEAU	SOCKET, LIGHT BULB
008	0E01600871	123456789AB	E016205	LAMP.ILUMIN.CTA.KM 6V1,2W-2701	LAMPE COMPTEUR	BULB, INSTRU. 6V 1.2W
009	0E01600961	1 67	E016205	BRIDA FIJ.TABLIER.SCOOTER-74.	COLLIER FIX. TABLEAU DE BORD	CLAMP, DASH ASSY
010	0000031050	123456789AB	E016205	ARAND.PLANA MECANIZ.D.5.	RONDELLE PLATE MECA.0 5	WASHER, 5MM I.D.
011	0000023051	123456789AB	E016205	TCA.AUTOBLOC. 5M80. DIN-982.	ECROU INDESSERABLE 5M80	NUT, SELF LOCKING 5MM.80
012	0004061600	2345 89AB	E018491	TOR.C/ALLEN.6M100X16.D-912/8.8	VIS ALLEN 6 M 100X16	BOLT, ALLEN 6MM1.00X16
013	0000031060	2345 89AB	E018491	ARAND.PLANA MECANIZ.D.6.	RONDELLE PLATE D6	MACHINED FLAT WASHER 0 6
015	0E04300231	1 67	E016205	SCTO.ARO Y CRISTAL TABLIER(SCO	PLASTIC TABLEAU DE BORD	COVER SPEEDOMETER
016	0008216030	2345	E018491	CABLE TRANSM.FLEX.CTA.KMS.	CABLE COMTEUR C/KMS	CABLE, SPEEDOMETER
	0A01620031	2345 AB	E035727	R-CTO.CABLE CTA.KMS.SPORT/FDT.	CABLE COMTEUR C/KMS	CABLE, SPEEDOMETER
	0008216030	2345	E035828	CABLE TRANSM.FLEX.CTA.KMS.	CABLE COMTEUR C/KMS	CABLE, SPEEDOMETER
	0A01620031	2345 89 C F	E043054	R-CTO.CABLE CTA.KMS.SPORT/FDT.	CABLE COMTEUR C/KMS	CABLE, SPEEDOMETER
017	0D01610031	1	E016205	R-CABLE CTA.KMS.MOTOB./EUROPA.	CABLE COMPTEUR C/KMS	CABLE, SPEEDOMETER
	0D01620031	1 67	E035090	R-CABLE CTA.KMS.FDS-EXP/START.	CABLE COMPTEUR C/KMS	CABLE, SPEEDOMETER
018	0D01600861	2345 89AB	E018491	R-PORTALMP.RELOJES.MOTBEC.FR.	PORTELAMPES TABLEAU	SOCKET, LIGHT BULB
019	0000034050	2345	E018491	ARAND.ESTRELL.INT.D5-DIN6797-J	RONDELLE EVENTAIL D5	INNER STARWASHER, 5MM I.D.
020	0005510620	23456789AB	E018491	TERM.CABLE MACHO 6,35 MASA	FICHE MALE	TERMINAL, DOUBLE
021	0D01600981	2345 89AB	E018491	CASQ.SILENT.PLATINA HORQ.CX-6.	ENTRETOISE AR.DU SILEMBLOC DU	FORK PLATE SILENTBLOCK BUSHING
022	0D01600941	2345 89AB	E018491	SILENTB.FIJ.RELOJES.	SILENBLOC	BUSHING
023	0000023060	2345 89AB	E018491	TCA.AUTOBLOC. 6M100. DIN-	ECROU INDESSERABLE	SELF-LOCKING NUT 6M100
024	0A01630051	67	E035090	CTO.REENVIO(17")807525-I.	RENVOI DE ROUE	DRIVE UNIT, SPEEDOMETER
	0F01610051	67 C F	E043468	CTO.REENVIO.(17").100748800-I.	RENVOI DE ROUE	DRIVE UNIT, SPEEDOMETER
025	0000035070	2345 89AB	E018491	ARAND.ESTRELL.EXT.D7.DIN6798-A	RONDELLE D7	OUTER STAR WASHER 0 7 DIN 6798
029	0008216010	C F	E048721	CTO.CTA.KMS.VARIANT-SL.	COMPTEUR C/KMS	SPEEDOMETER, KMS
030	0F01600991	C F	E048721	SUPLMTO.FIJ.CTA.KMS-CT.VTAS.	SUPLEMENT FIX.COMPTE.KMS	SUPL.SPEEDOMETER
031	0F01600911	C F	E048721	REMACHE.FIJ.TABLIER.ITWE-0043.	RIVET FIX TABLEAU DE BORD	RIVET
032	0000031100	C F	E048721	ARAND.PLANA MECANIZ. D.10.	RONDELLE PLATE D10	MACHINED FLAT WASHER 0 10
033	0A01620071	C F	E048721	R-CRISTAL CTA.KMS.CUADR.SL/SLE	VERRE DE COMPTEUR	LENS, SPEEDOMETER
034	0F01610231	C	E048721	R-CTO.TABL.C/PLACA FRONT.SLE-X	FRONT PLATE W.INSTR.DEASHB.	TABLIER AVEC PLAQUE FONT.
035	0012161600	C F	E048721	TOR.C/CRUZ.NG.6M100X16.D-7985	VIS CRUCIFORME	SCREW PHILLIPS
036	0F04400451	C F	E048721	PASACABLES PLACA FRONT.SLE-X.	PASSE CABLES	RUBBER GUIDE
037*	0F01500783	C F	E048721	CALCA "DERBI",ROJA,PLACA FR.FT	ADHESIF "DERBI" PLAQUE FRONT	FRIRING "DERBI" DECAL

DOWNLOADED FROM THE PUBLIC SCOOTERHULP LIBRARY
Www.ScooterHulp.com

DERBI	INSTRUMENTOS DE CONTROL. TABLEAU DE BORD. SPEEDOMETER AND COMPONENTS.	3-6-88 LAMINA FEUILLE DIAGRAM	1 F 9 START 14

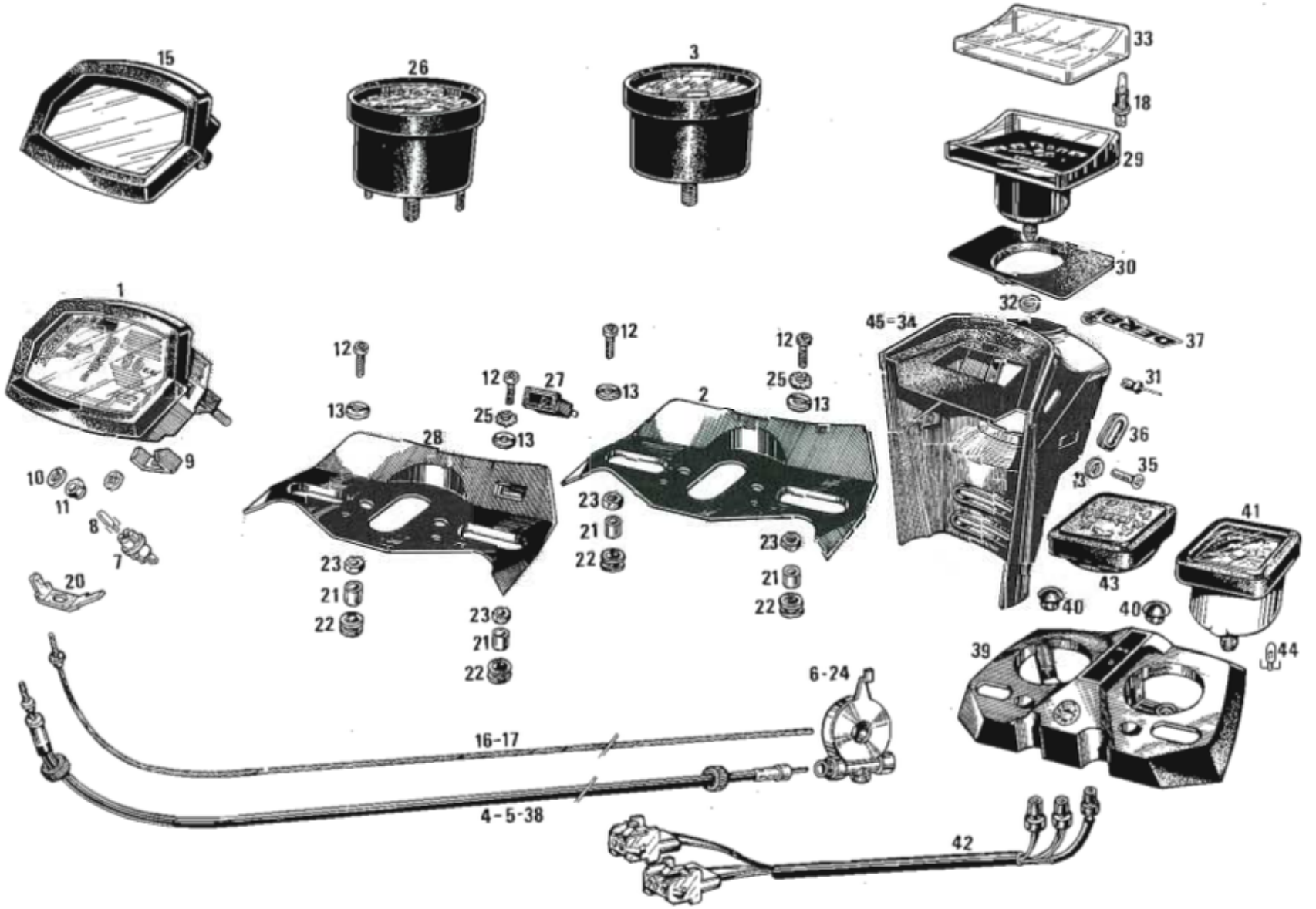

DOWNLOADED FROM THE PUBLIC SCOOTERHULP LIBRARY
Www.ScooterHulp.com

Figura Figure Figr.	CODIGO Nº PIECE CODE Nr.	MODELO MODELE MODEL	Nº CHASIS Nº CHASSIS FRAME NUM.	DENOMINACION	DESIGNATION	NAME

PIEZAS ESPECIALES EXPORTACION MODELLE ESPORTATION (SEULEMENT) EXPORT MODEL (ONLY)

026	0F01610011	AB	E041616	CTO.CTA.KMS./MILLAS.SPORT.USA.	COMPTE KILOMETRES	SPEEDOMETER, KILOMETERS
027	0D01610371	AB	E041616	CTO.OPTICA.AZ.HI.6V1,2WDIN EXP	PHARE	LENS, HEADLIGHT
028	0F01620221	AB	E041616	TABLIER PORTAINSTR.SPORT.USA.	TABLAU DE BORD	DASH ASSY
038	0F01600021	DE	E056062	CTO.CABLE CTA.KMS.SPORT-AMER.	FLEXIBLE DU TACHYMETRE	CABLE, SPEEDOMETER DRIVE
039	0D01650231	DE	E056062	R-SCTO.TABLIER PORTAINSTR.FDX.	TABLEAU DE BORD	DASH ASSY
040	0D04310691	DE	E056062	R-TAPON FIJ.TABL.FDX.3043127.	BOUCHON VIS FIX.TABLIER	DASH SCREW CAP
041	0D01621011	DE	E056062	CTO.CTA.MILLAS.FDX.107000509.	COMPTE KILOMETRES	SPEEDOMETER, KILOMETERS
042	0F01600791	DE	E056062	R-CTO.INSTAL.TABL.SPORT.AM.USA	ENSEMBLE CABLES TABLIER	DASH WIRING ASSY
043	0D01630881	DE	E056062	TAPON ALOJ.CT.VTAS.FDS.3043128	COUVRE SUPPORT CINOTEUR	SPEEDOMETER HOUSING COVER
044*	0E01600871	DE	E056062	LAMP.ILUMIN.CTA.KM 6V1,2W-2701	LAMPE COMPTEUR	BULB, INSTRU. 6V 1.2W
045*	0F01600351	F	E064706	R-CTO.TABL.C/PLACA FR.SLE-X B.	FRONT PLATE W.INSTR.DEASHB.	TABLIER AVEC PLAQUE FRONT.

DOWNLOADED FROM THE PUBLIC SCOOTERHULP LIBRARY
Www.ScooterHulp.com

DERBI	INSTRUMENTOS DE CONTROL. TABLEAU DE BORD. SPEEDOMETER AND COMPONENTS.	3-6-88 LAMINA FEUILLE DIAGRAM	1 F 9 START 14

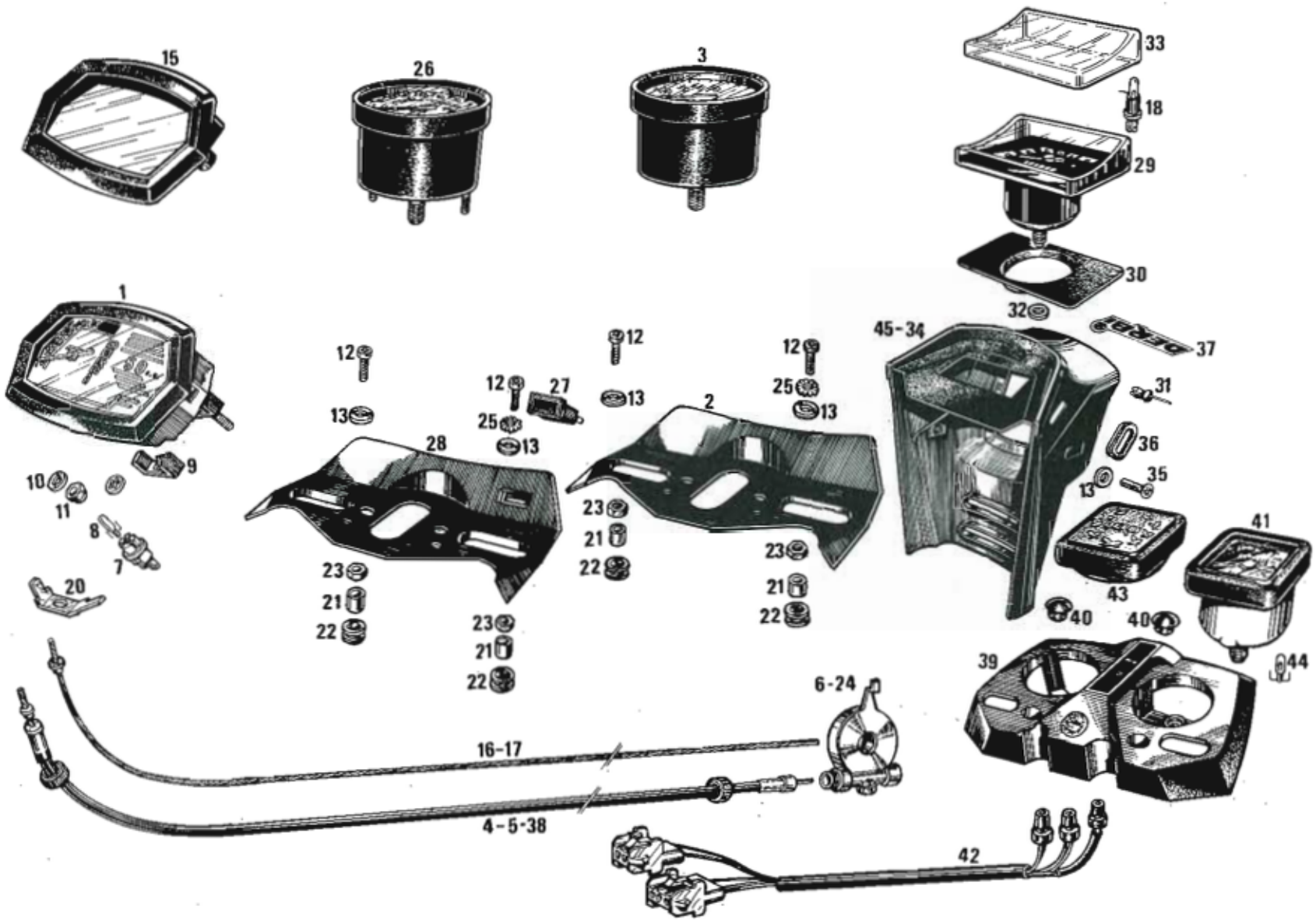

DOWNLOADED FROM THE PUBLIC SCOOTERHULP LIBRARY
Www.ScooterHulp.com

Figura Figure Figr.	CODIGO Nº PIECE CODE Nr.	MODELO MODELE MODEL	Nº MOTOR Nº MOTEUR ENGINE NUM	DENOMINACION	DESIGNATION	NAME
001	0F02500141	123456789ABCDEF	E015554	CTO.CIGUENAL BIELA (V.START)	VILLEBREGQUIN COMPLET	CRANKSHFT/CONECTING ROD ASSY
002	0003125180	123456789ABCDEF	E015554	RODAMTO.C/BIELA KZK16.22.12.	CAGE A AIGUILLE DE TETE DE BI	BEARING, LOWER CON ROD
003	0002125170	123456789ABCDEF	E015554	JAULA PIE BIELA.KBK-12.15.15.	CAGE A AIGUILLE DE PIED DE BI	BEARING, PISTON PIN
004	0059120300	123456789ABCDEF	E015554	COJINETE 6203 C4 17.40.12-V.E.	ROULEMENT	BEARING
005	0059020400	123456789ABCDEF	E015554	COJINETE 6204 C4 20.47.14NACHI	ROULEMENT	BEARING
006	0F02500191	123456789ABCDEF	E015554	EJE CUELLO CIGÑAL.V.START.	AXE DE VILLEBREQUIN START	CRANKSHAFT PIN VARIANT START
007	0F02500231	123456789ABCDEF	E015554	RETEN CIGUEÑAL 17.30.7.(START)	JOINT SPI DU VILLEBREQUIN	SEAL; CRANKSHAFT VARIANT START
008	0F05000011	123456789ABCDEF	E015554	CTO.BIELA C/JAULA Y BUL.-START	BIELLE AVEC CAGE ET AXE	CONNECTING ROD W/BEARING AND P
009	0F05000121	123456789ABCDEF	E015554	CTO.CILINDRO Y PISTON-V.START	CYLINDRE ET PISTON COMPLET	CYLINDER AND PISTON ASSY.
010	0F02500091	123456789ABCDEF	E015554	CTO.PISTON D39,9 (V.START)	PISTON	PISTON
011	0003125120	123456789ABCDEF	E015554	BULON PISTON.B12/8X30.	AXE PISTON	PISTON PIN
012	0003125130	123456789ABCDEF	E015554	ANILLO BULON.D73130/PN101BA-12	CLIPS AXE PISTON	CIRCLIP, PISTON PIN
013	0F02500111	123456789ABCDEF	E015554	ARO PISTON.SC.39X1/4.STD.	SEGMENT DE PISTON	PISTON RING
014	0F02500041	123456789ABCDEF	E015554	JUNTA CILINDRO	JOINT DE CYLINDRE	GASKET, CYLINDER
015	0F05000171	123456789ABCDEF	E015554	R-CTO.CULATA-DESCO.S/PAL.START	CULASSE	CYLINDER HEAD
016	0F02500021	123456789ABCDEF	E015554	JUNTA CULATA.V.START.	JOINT DE CULASSE	GASKET, CYLINDER HEAD
017	0003125280	123456789ABCDEF	E015554	ARAND.FIJ.CULATA.	RONDELLE FIXE CULASSE	WASHER,CYLINDER HEAD
018	0008202730	123456789ABCDEF	E015554	TCA.FIJ.MANILLAR-CULATA.	ECROU DE FIXATION DU GUIDON	HANDLEBAR LOCK NUT
019	0008231020	123456789ABCDEF	E015554	VALVULA DESCOMPRESOR.	SOUPAPE DECOMPRESSEUR	VALVE, DECOMP.
020	0008231090	123456789ABCDEF	E015554	ANILLO TORICO VALV.DESCOMP.	JOINT DE DECOMPRESSEUR	GASKET, DECOMP.
021	0008231100	123456789ABCDEF	E015554	CAZLTA.GUIA MUELLE.	CUVETTE GUIDE RESSORT	SPRING SEAT, DECOMP.
022	0008231040	123456789ABCDEF	E015554	MUELLE DESCOMPRESOR.CINCADO.	RESSORT DE DECOMPRESSEUR	SPRING, DECOMP
023	0000047304	123456789ABCDEF	E015554	ANILLO SEG.EJES D4-5.DIN-6799	CIRCLIPS D'AXE DE D4	CIR-CLIP, 4 MM.
024	0000004510	123456789ABCDEF	E015554	TOR.C/ALLEN.5M80X10.DIN-	BOULON ALLEN 5M80X10	SCREW, ALLEN 5MM80X10
025	0000034050	123456789ABCDEF	E015554	ARAND.ESTRELL.INT.D5-DIN6797-J	RONDELLE EVENTAIL D5	INNER STARWASHER, 5MM I.D.
026	0008231050	123456789ABCDEF	E015554	PALANCA EMPUJE VALVULA.VARIANT	POUSSOIR DE SOUPAPE DE DECOMP	BRACKET, DECOMP
027	0008231120	123456789ABCDEF	E015554	PASAD.ELST.DSCOMP.2X16-DIN1481	CLAVETTE DE DECOMPRESSEUR	ROLL PIN, DECOMP
028	0008231110	123456789ABCDEF	E015554	PALANCA FIJ.CABLE DESCOMP.VAR.	LEVIER DE FIX CABLE DE DECOMP	LEVER, DECOMP. CYL. HD
029	0008231000	123456789ABCDEF	E015554	CTO.DESCOMPRESOR.	ENSEMBLE DECOMPRESSEUR	DECOMPRESSOR ASSY
030	0F02500971	12345 C F	E015554	R-CTO.MOTOR.START NEGRO.	MOTEUR COMPLET, START NOIR	ENGINE ASSEMBLY, V/START BLACK
031	0000031040	123456789ABCDEF	E015554	ARAND.PLANA MECANIZ.D.4.	RONDELLE PLATE D 4	WASHER, 4MMI.D.
032	0F02550971	6789	E035090	R-CTO.MOTOR.START C/INTERMITT.	MOTEUR COMPLET	ENGINE ASSEMBLY

PIEZAS ESPECIALES EXPORTACION MODELLE EXPORTATION (SEULEMENT) EXPORT MODEL (ONLY)

033	0F02560971	AB	E041740	R-CTO.MOTOR.V.SPORT.USA.	MOTEUR COMPLET	ENGINR ASSEMBLY
034	0F02501971	DE	E055851	R-CTO.MOTOR.V.SPORT-AMER.USA.	MOTEUR COMPLET	ENGINE ASSEMBLY

DOWNLOADED FROM THE PUBLIC SCOOTERHULP LIBRARY
Www.ScooterHulp.com

CIGUEÑAL BIELA.-CILINDRO PISTON.-CULATA Y DESCOMPRESOR. VILEBREQUIN BIELLE.-CYLINDRE PISTON.-CULASSE ET DECOMPRE. CRANKSHAFT ASSY.- CYLINDER AND PISTON.- CYLHEAD.	3-6-88 LAMINA FEUILLE DIAGRAM	1 F 10 START 14

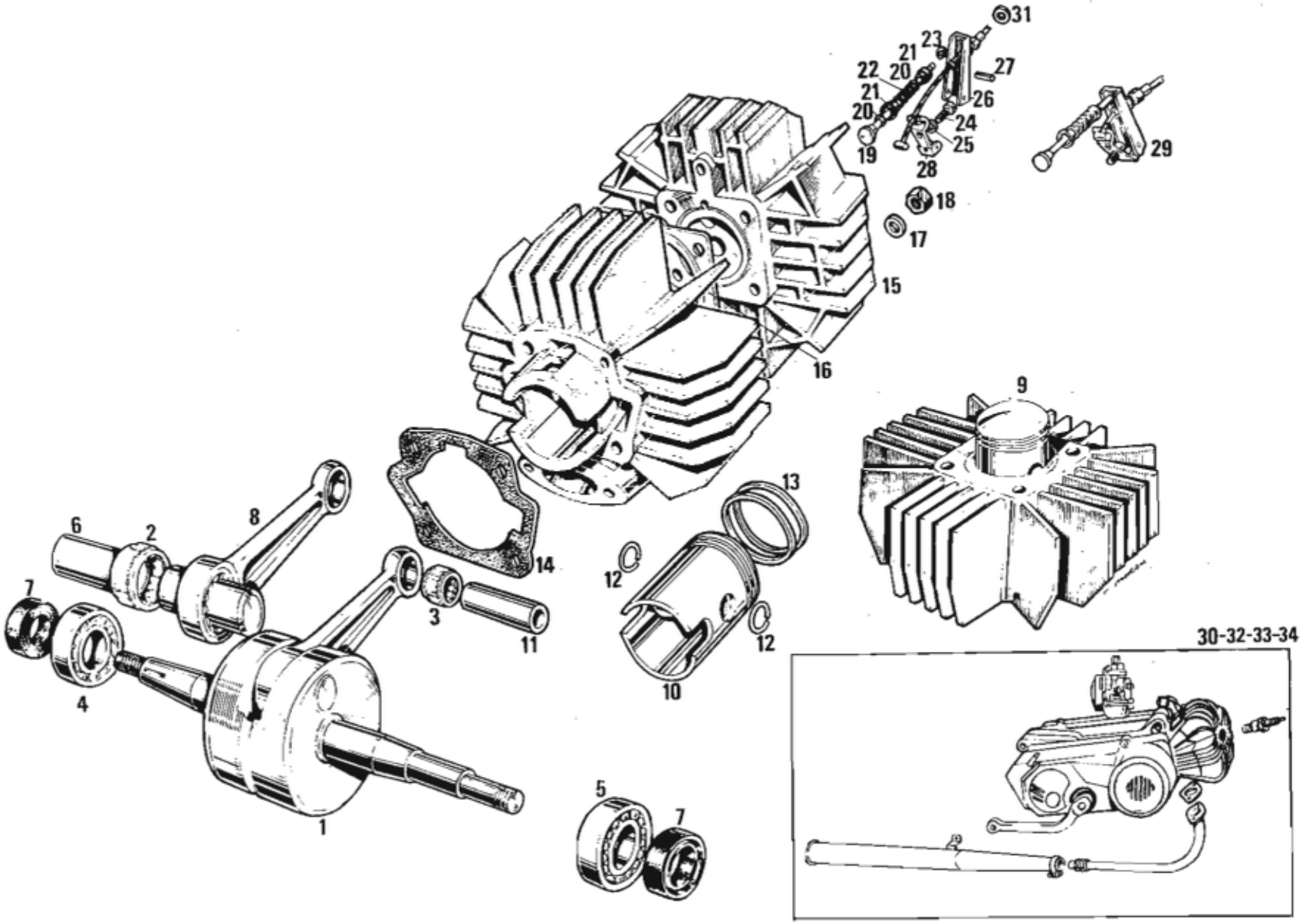

DOWNLOADED FROM THE PUBLIC SCOOTERHULP LIBRARY
Www.ScooterHulp.com

Figura Figure Figr.	CODIGO Nº PIECE CODE Nr.	MODELO MODELE MODEL	Nº MOTOR Nº MOTEUR ENGINE NUM.	DENOMINACION	DESIGNATION	NAME
001	0M02600411	123456789ABCDEF	E015554	PRECTO.SOPTE.MORD.EMBR.LIG/SCO	ARRETOIR MACHOIRES	SUPPORT PLATE, CLUTCH
002	0000047308	123456789ABCDEF	E015554	ANILLO SEG.EJES D7-9.DIN-6799	CIRCLIPS	CIRCLIP
003	0F02600821	123456789ABCDEF	E015554	CTO.CAMP.ARRQ.C/MORD.EMB.START	CLOCHE COMPL. AVEC MACH. EMB.	CKUTCH DRUM SUB-ASSY W/SHOES
004	0008226440	123456789ABCDEF	E015554	GOMA AMORTIGD.MORDAZAS EMBRAG.	CAOUTCHOUC AMORT. EMBRAYAGE	BUSHING, RUBBER
005	0M02600811	123456789ABCDEF	E015554	MUELLE MORDAZA EMBRAGUE 2M/M	RESSORT MASSELOTTE EMBRAYAGE	SPRING, DRIVE CLUTCH
006	0F03600271	123456789ABCDEF	E015554	R-CTO.MORD.EMBRG.C/MUELLE-GOMA	MACHOIRES EMBRAYAGE	CLUTCH SHOES W/SPRING
007	0000047232	123456789ABCDEF	E015554	ANILLO SEG.AGUJ.D32.DIN-472.	SUPPORT MOLETTE EMBRAYAGE	CIRCLIP, BEARING RETAINING
008	0000057201	123456789ABCDEF	E015554	COJNTE.12.32.10/6201RS1/C3.SKF	COUSSINET BLINDE	BEARING 12X32X10
009	0008226730	123456789ABCDEF	E015554	CASQ.TOPE COJNTE.CIGR.DCH.VAR.	ENTRETOISE	SPACER, BEARING INNER
010	0008239450	123456789ABCDEF	E015554	TOPE MORDAZAS.	BUTOIR MACHOIRES DE DEMARRAGE	BUMPER, CLUTCH SHOE
011	0F02610771	123456789ABCDEF	E015554	MUELLE MORDAZA ARRQ.D.0,6.STAR	RESSORT DE MACHOIRES DEMARRAG	SPRING, STARTING CLUTCH SHOE
012	0F02610151	123456789ABCDEF	E015554	CTO.MORDAZAS ARRANQ.SCOOTER-50	MACHOIRES DEMARRAGE SCOOTER-5	STARTING CLUTCJ SHOES, SCOOTER
013	0F02610041	123456789ABCDEF	E015554	CTO.CAMP.EMBR.C/MOR.ARRQ(SCO50	CLOCHE COMPL. AIMACH. DEM.	CLUTCH ASSY.
014	0008226480	123456789ABCDEF	E015554	CASQ.SUPLMTO.TOPE COJNTE.	ENTRETOISE	SPACER, BEARING OUTER
015	0008226720	123456789ABCDEF	E015554	JAULA CIGUE.POLEA MOTRIZ 34660	CAGE POUR POULIE MOTRICE	BEARING, OUTER DRIVE PULLY
016	0M02600651	123456789ABCDEF	E015554	ARAND.CIGNAL.DCH.	RONDELLE PLATE	WASHER RHT. CRANKSHAFT
017	0F02600461	123456789ABCDEF	E015554	SCTO.CAMP.DESLZMTO.MASAS.START	ENSEMBLE CLOCHE PORTE-GALETS	OUTER DRIVE PULLY SUB-ASSY.
018	0F03600111	123456789ABCDEF	E015554	SCTO.RODILLO MASA CENTRIF.V.EC	GALET COMPLET	CENTRIFICAL WEIGHT
019	0008236090	123456789ABCDEF	E015554	GUIA DESLIZMTO.TAPA CENTRIFUG.	AMOETISSEUR DE CLOCHE	GUIDE, WT. COVER
020	0M02600831	123456789ABCDEF	E015554	PLACA DESLIZAMIENTO MASAS	COUVERCLE CENTRIFUGE	CENTRIFICAL WEIGHT COVER
021	0E02600311	123456789ABCDEF	E015554	JUNTA CAMPANA DESLIZMTO.	JOINT DE CULASSE	"O" RING, COVER
022	0M02600931	123456789ABCDEF	E015554	ARO TAPA MASAS CENTRIF.D-50-L.	PLAQUE GLISSEMENT	COVER, CLUTCH
023	0F02610401	123456789ABCDEF	E015554	TCA.CIGNAL.TURBINA.START.	ECROU FIX. TURBINE	NUT, FAN RETAINING
024	0F02600881	123456789ABCDEF	E015554	ANILLO TOR.RETENC.GRASA14X20X3	JOINT	"O" RING
025	0008226241	123456789ABCDEF	E015554	PRECTO.TAPA MASAS.D-28.	ARRETOIR	WASHER, TAB OVER
026	0E00200111	123456789ABCDEF	E015554	TCA.FIJ.TIJA.SCOOTER-50.	ECROU FIX TUBE	NUT, LOCK, TOP FORK STEM
027	0008226370	123456789ABCDEF	E015554	CORREA TRAPEZOIDAL	COURROIE TRAPEZOIDALE	BELT, DRIVE
028	0F02600331	123456789ABCDEF	E015554	TURBINA. NEGRO.VARIANT START.	TURBINE, NOIR, V. START	FAN, BLACK VARIANT START
029	0000004615	123456789ABCDEF	E015554	TOR.C/ALLEN.6M100X15.DIN-	VIS CHC M6X15	SCREW, ALLEN 6MM1.00X15
030	0000034060	123456789ABCDEF	E015554	ARAND.ESTRELL.INT.D6-DIN6797-J	RONDELLE EVENTAIL D 6	INNER STAR WASHER 0 6
031	0000012410	123456789ABCDEF	E015554	TOR.C/RED.CRUZ.4M70X10.DIN7985	VIS CRUXIFORME 4M70X10	SCREW, CONDENSER 4MM-.7X10
032	0000034040	123456789ABCDEF	E015554	ARAND.ESTRELL.INT.D4-DIN6797-J	RONDELLE EVENTAIL	STARWASHER
033	0F02600361	123456789ABCDEF	E015554	CASQ.POLEA CONDUCIDA.V.START.	ENTRETOISE POULIE	BUSHING
034	0000047125	123456789ABCDEF	E015554	ANILLO SEG.EJES D25.DIN-471.	ARRETOIR	WASHER, RETAINING
035	0F02600621	123456789ABCDEF	E015554	BUJE ARRASTRD.POLEA.V.START.	MOYEU D'ENTRAINEUR DE POULIE	BUSHING, CAM. TORQUE CONVERTER
036	0F02600131	123456789ABCDEF	E015554	ARRASTD.POLEA.V.START.	ENTRAINEUR DE POULIE	CAM, TORQUE CONVERTER
037	0F02600211	123456789ABCDEF	E015554	MUELLE POLEA VARIADOR.V.START.	RESSORT DE POULIE VARIATEUR	SPRING, DRIVEN PULLEY
038	0F02600121	123456789ABCDEF	E015554	SCTO.POLEA CONDUC.INT.-V,START	POULIE INT. ARR. V/START	DRIVEN PULLEY INSIDE ASSY.
039	0F03600161	123456789ABCDEF	E015554	STO.POLEA EXTER.CONDUC(V,START	POULIE EXT. ARR. V/START	DRIVEN PULLEY AUTSIDE ASSY.
040	0066108000	123456789ABCDEF	E015554	RODILLO D5X8, EJE POLEAS START	CLAVETTE	WOODRUFF KEY
042	0F03600611	123456789ABCDEF	E015554	CTO.CAMP.DESLZMTO.MASAS-START-	ENSEMBLE DE CLOCHE	DRIVE PULLEY ASSY.
043	0F02600401	123456789ABCDEF	E015554	TUERCA CIGUENAL DCHO.(V.START)	ECROU DE POULIE	HUT, DRIVEN PULLEY
044	0A02600281	123456789ABCDEF	E015554	PASADOR.ELASTI.2,5X12 DIN-1481	TOURILLON ELASTIQUE	ROLL PIN 22.5X12

DOWNLOADED FROM THE PUBLIC SCOOTERHULP LIBRARY
Www.ScooterHulp.com

DERBI	VARIADOR. VARIATEUR. TORQUE CONVERTOR.	3-6-88 LAMINA FEUILLE DIAGRAM	1 F 11 START 14

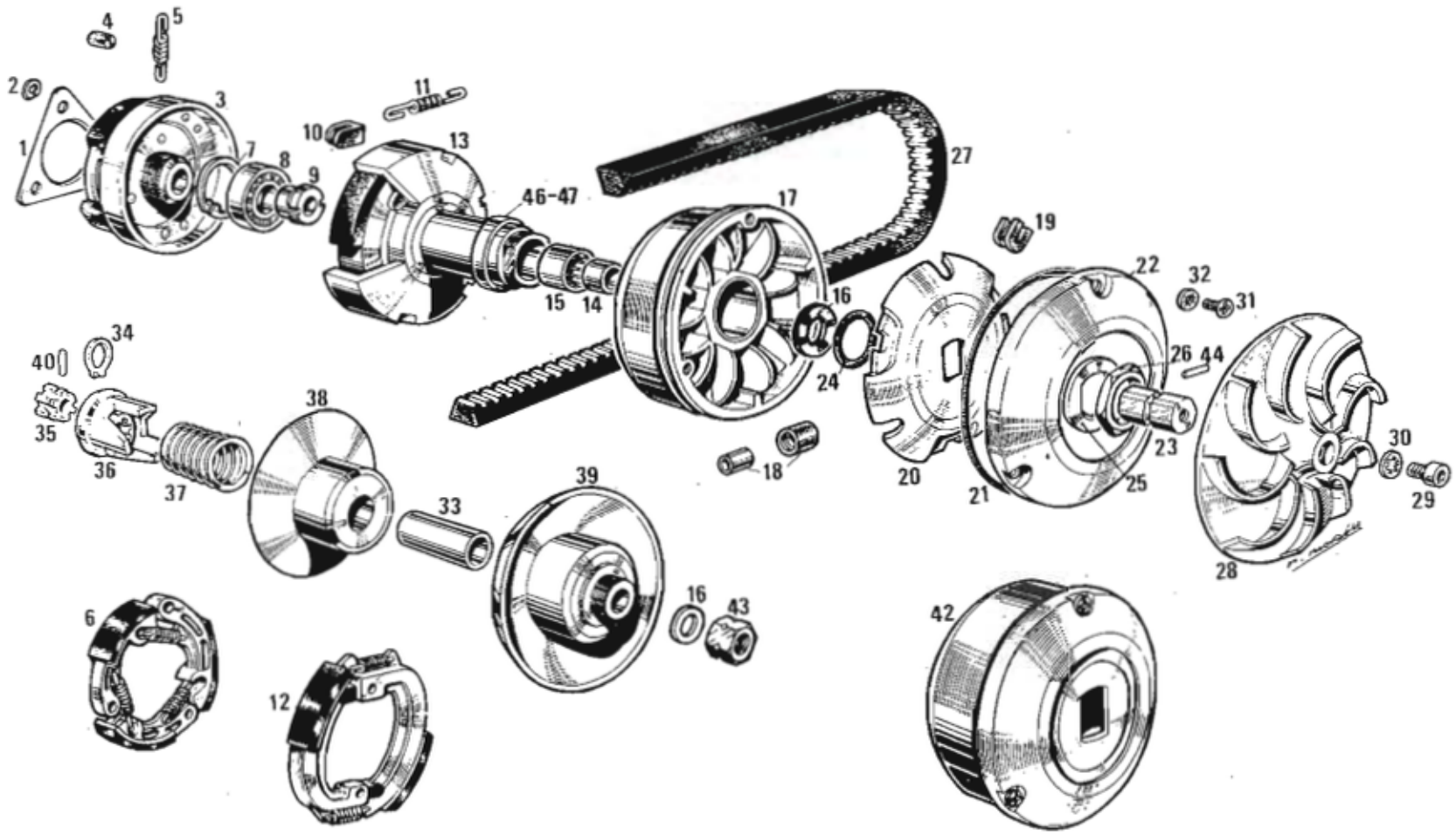

DOWNLOADED FROM THE PUBLIC SCOOTERHULP LIBRARY
Www.ScooterHulp.com

Figura Figure Figr.	CODIGO N° PIECE CODE Nr.	MODELO MODELE MODEL	Nº MOTOR Nº MOTEUR ENGINE NUM.	DENOMINACION	DESIGNATION	NAME

PIEZAS ESPECIALES EXPORTACION MODELLE EXPORTATION (SEULEMF' | EXPORT MODEL (ONLY)

046	0F03610191	AB	E041740	ARAND. INTERM. POLEA MOTRIZ. 8MM.	RONDELLE INTERMED.	WASHER
047	0F03600191	DE	E055851	ARAND. INTERM. POLEA MOTRIZ. 5MM.	RONDELLE	INTERMEDIATE WASHER

DOWNLOADED FROM THE PUBLIC SCOOTERHELP LIBRARY
Www.ScooterHelp.com

DERBI	VARIADOR. VARIATEUR. TORQUE CONVERTOR	3-6-88 LAMINA FEUILLE DIAGRAM	1 F 11 START 14

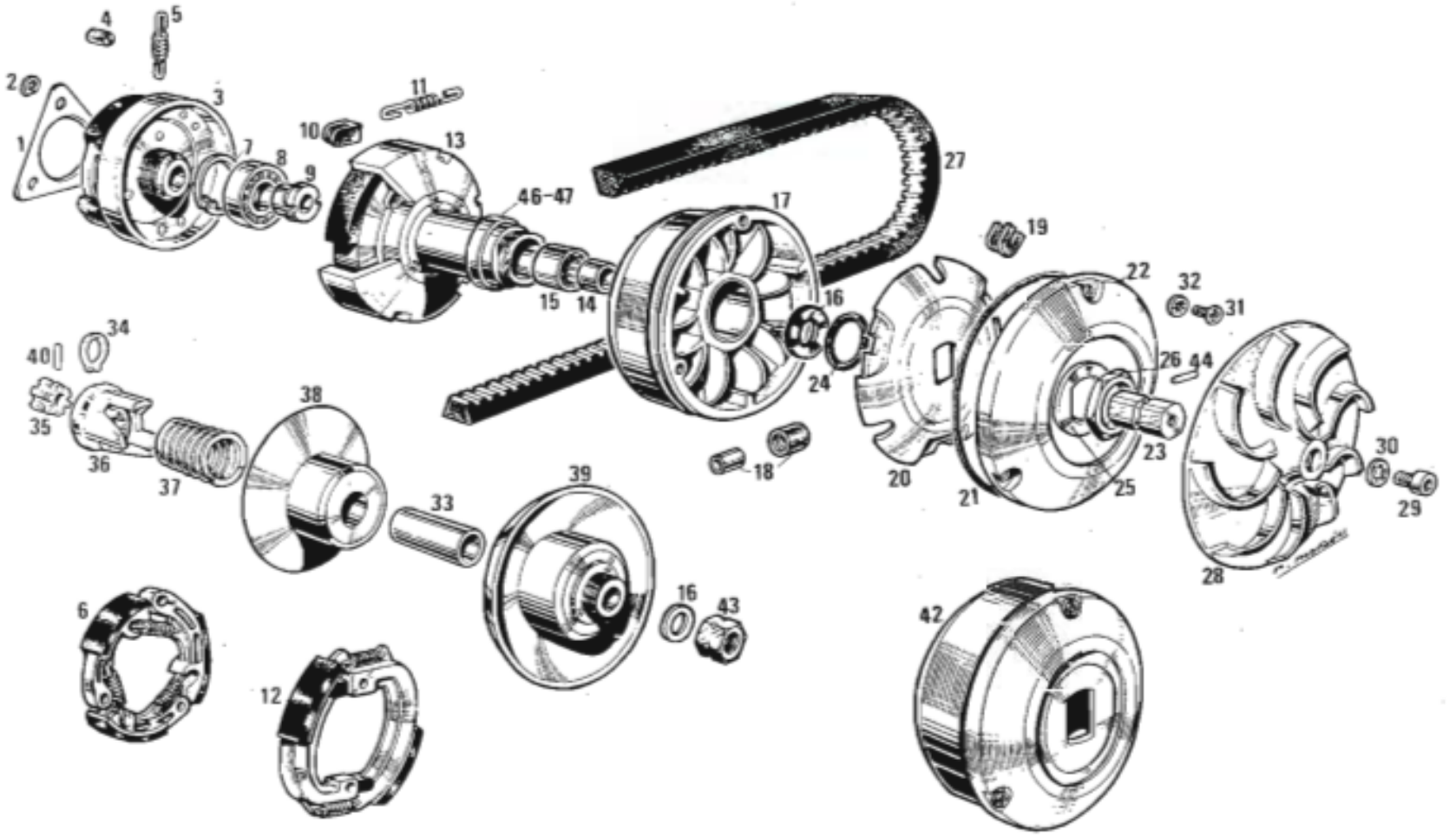

DOWNLOADED FROM THE PUBLIC SCOOTERHULP LIBRARY
Www.ScooterHulp.com

Figura Figure Figr.	CODIGO N° PIECE CODE Nr.	MODELO MODELE MODEL	Nº MOTOR Nº MOTEUR ENGINE NUM.	DENOMINACION	DESIGNATION	NAME
001	0057030100	123456789ABCDEF	E015554	COJINETE 6301-C3 12.37.12.FAG	ROULEMNT	BEARING
002	0000057302	123456789ABCDEF	E015554	COJINETE.15-42-13./6302-C3.	ROULEMENT 6.302 C-3	BEARING, LH 6302C3
003	0F02800471	123456789ABCDEF	E015554	RETEN EJE POLEAS SC050,20.35.7	JOINT SPI AXE DU VARIATEUR	SEAL
004	0F02800301	123456789ABCDEF	E015554	EJE INTERM.POLEAS,Z-12.START.	AXE DU VARIATEUR ARRIERE	DRIVEN PULLEY SHAFT; TAPPERED
005	0F02820991	123456789ABCDEF	E015554	ARAND.EJE POLEAS.2MM.V.START.	RONDELLE AXE POULIES	WASHER, PULLEY SHAFT
006	0F02810251	123456789ABCDEF	E015554	ARAND.TOPE PIÑ.EJE POL.2M/M	RONDELLE	WASHER
007	0F02810252	123456789ABCDEF	E015554	ARAND.TOPE PIÑON PED.1,5MM.	RONDELLE	WASHER
008	0008226720	123456789ABCDEF	E015554	JAULA CIGUE.POLEA MOTRIZ 34660	CAGE POUR POULIE MOTRICE	BEARING, OUTER DRIVE PULLY
009	0F02800191	123456789ABCDEF	E015554	SCTO.RODMTO.AXI.NADELLA-AX1730	ROULEMENT AXIAL	THRUST BEARING
010	0F03520581	123456789ABCDEF	E015554	SCTO.PIÑON PEDAL.Y RUEDA ARRQ.	PIGNON PRDALIER ET ROUE	SPROCKET
011	0F02820992	123456789ABCDEF	E015554	ARAND.EJE POLEAS,1,9.SCOOT-50.	RONDELLE AXE POULIES	WASHER, PULEY SHAFT
012	0F02820993	123456789ABCDEF	E015554	ARAND.EJE POLEAS,2,1.SCOOT-50.	RONDELLE AXE POULIES	WASHER, PULLEY SHAFT
013	0F04010311	123456789ABCDEF	E015554	CASQ.TOPE BUJE ARRASTRAD.START	ENTRETOISE	BUSHING
014	0F02800131	123456789ABCDEF	E015554	CTO.EJE INTER.POLEAS (V.START)	AXE DU VARIATEUR ARRIERE	DRIVEN PULLEY SHAFT.TAPPERED

DOWNLOADED FROM THE PUBLIC SCOOTERHELP LIBRARY
Www.ScooterHulp.com

DERBI	3-6-88	1 F
REDUCTOR REDUCTEUR. REDUCTION GEARING.	LAMINA FEUILLE DIAGRAM	12
		START 14

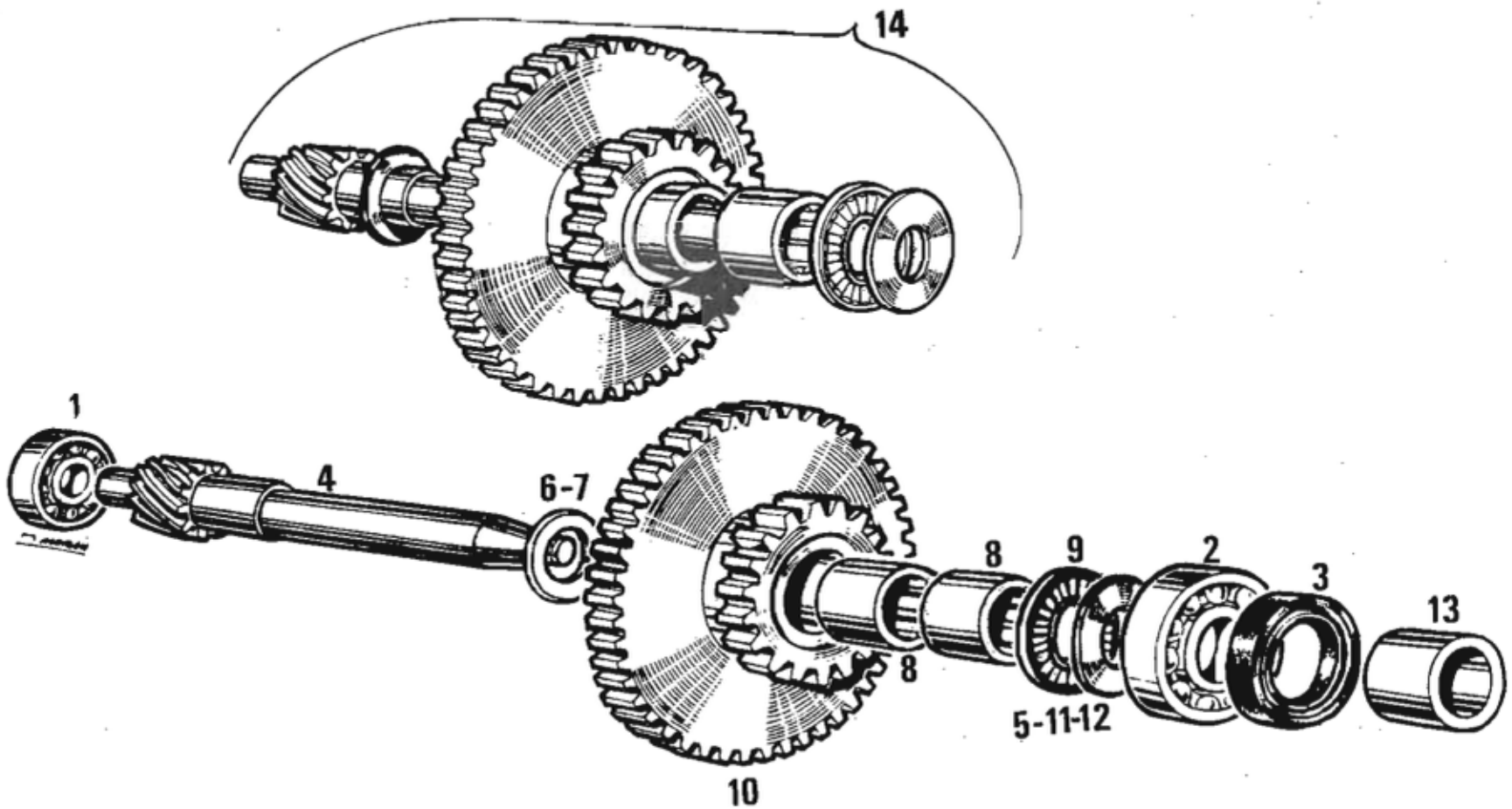

DOWNLOADED FROM THE PUBLIC SCOOTERHULP LIBRARY
Www.ScooterHulp.com

Figura Figure Figr.	CODIGO Nº PIECE CODE Nr.	MODELO MODELE MODEL	Nº MOTOR Nº MOTEUR ENGINE NUM.	DENOMINACION	DESIGNATION	NAME
001	0F03020631	123456789ABCDEF	E015554	CTO.CARTERS. SCOOTER-50/START	ENSEMBLE CARTERS MOTEUR	CRANKCASE ASSY.
002	0A03010021	123456789ABCDEF	E015554	PASADOR UNION CARTERS.VARIANT.	PION D'ASSEMBLAGE CARTER	DOWEL PIN, CRANKCASE
003	0F03000151	123456789ABCDEF	E015554	SCTO.TAPA CARTER DCH.V.START.	COUVERCECLE CARTER DROIT	CRANKCASE COVER, RIGHT
004	0F03000201	123456789ABCDEF	E015554	TAPA CARTER IZQ.V.START.	COUVERCLE CARTER GAUCHE	CRANKCASE COVER, LEFT
005	0F03000031	123456789ABCDEF	E015554	JUNTA CARTERS, VARIANT START	JOINT CARTER	GASKET, CRANKCASE
006	0F03000051	123456789ABCDEF	E015554	ESPARRG.FIJ.CILINDRO.START.	GOUJON FIS. CYLINDRE	STUD CYLINDER
007	0F02210711	123456789ABCDEF	E015554	STO.SILENT.MOTOR.5766/11.SC050	SILEMBLOC MOTEUR	SILENTBLOCK
008	0F03010071	123456789ABCDEF	E015554	TUBO TOPE SILENT.SCOOT-50.	ENTRETOISE SILEMBLOC	BUSHING, SILENTBLOCK
009	0004011600	123456789ABCDEF	E015554	TOR.C/ALLEN.10M150X16.DIN-	VIS ALLEN	ALLEN SCREW
010	0A03000121	123456789ABCDEF	E015554	ARAND.VACDO.ACTE.VARIANT.	RONDELLE FIBRE D10	GASKET, DRAIN PLUG
011	0000002650	123456789ABCDEF	E015554	TOR.C/EXAG.6M100X50.DIN- /8.8	VIS TETE HEXAGONALE	HEX HEAD SCREW
012	0000002670	123456789ABCDEF	E015554	TOR.C/EXAG.6M100X70.DIN- /8.8	VIS TETE HEXAGONALE	HEX HEAD SCREW
013	0M03000771	123456789ABCDEF	E015554	TCA.FIJ.CARTERS.6M100.8.8.D50L	ECROU FIXE CARTER	NUT
014	0000004630	123456789ABCDEF	E015554	TOR.C/ALLEN.6M100X30.D-912/8.8	VIS D6X100X30X18MM	ALLEN SCREW
015	0000004610	123456789ABCDEF	E015554	TOR.C/ALLEN.6M100X10.DIN-	VIS DE COUVERCLE	BOLT, ALLEN 6MM1.00X10
016	0003102280	123456789ABCDEF	E015554	ARAND.NIVEL ACEITE.D.6.	RONDELLE FIBRE D 6	WASHER, SEALING
017	0A03000421	123456789ABCDEF	E015554	CTO.TOR.VACDO.ACTE.VARIANT.	BOUCHON DE VIDANGE	DRAIN PLUG W/MAGNET
018	0F02500641	123456789ABCDEF	E015554	CTO.SOPTE.VALV.ADMIS.,START.	BOITE A CLAPETS	REED VALVE HOLDER
019	0000033030	123456789ABCDEF	E015554	ARAND.MUELLE. D.3.DIN-127.	RONDELLE D.3	LOCKWASHER 3MM ID
020	0012030800	123456789ABCDEF	E015554	TOR.C/RED.CRUZ.3M50X8.DIN-7985	VIS CRUCIFORME	SCREW PHILLIPS
021	0F02500631	123456789ABCDEF	E015554	TOPE LAMINA ADMIS.V.START.	ARRET CLAPET ADMISSION	REED VALVE STOP
022	0F02500651	123456789ABCDEF	E015554	LAMINA VALV.ADMIS.START.	CLAPET ADMISSION	REED VALVE
023	0F02500711	123456789ABCDEF	E015554	BOQ.CARB.P/MEMBR,V.START.	PIPE ADMISSION A CLAPET	INTAKE MANIFOLD W/REED VALVE
024	0F02500811	123456789ABCDEF	E015554	JUNTA SOPT.VALV.ADMISION,START	JOINT DSADMISSION	GASKET, REED VALVE
025	0000004620	123456789ABCDEF	E015554	TOR.C/ALLEN.6M100X20.D-912/8.8	VIS ALLEN 6M100X20	SCREW, ALLEN 6M1.00X20
026	0000033060	123456789ABCDEF	E015554	ARAND.MUELLE. D.6.DIN-127.	RONDELLE DE RESSORT	SPRING WASHER O 6
027	0F03000901	123456789 C F	E015554	CALCA "SCANIMET"TAPA CART.DCH.	ADHESIF "SCANIMET"	DECAL, "SCANIMET"

PIEZAS ESPECIALES EXPORTACION MODELLE EXPORTATION (SEULEMENT) EXPORT MODEL (ONLY)

028	0F02500581	AB	E041740	CASQ.BOQ.CARBUR.START.USA.	ENTRETOISE PIPE CARBU.	BUSSING INTAKE MANIFOLD, USA

DOWNLOADED FROM THE PUBLIC SCOOTERHELP LIBRARY
Www.ScooterHelp.com

DERBI	CARTERS. CARTERS. CRANKCASES.	3-6-88 LAMINA FEUILLE DIAGRAM	1 F 13 START 14

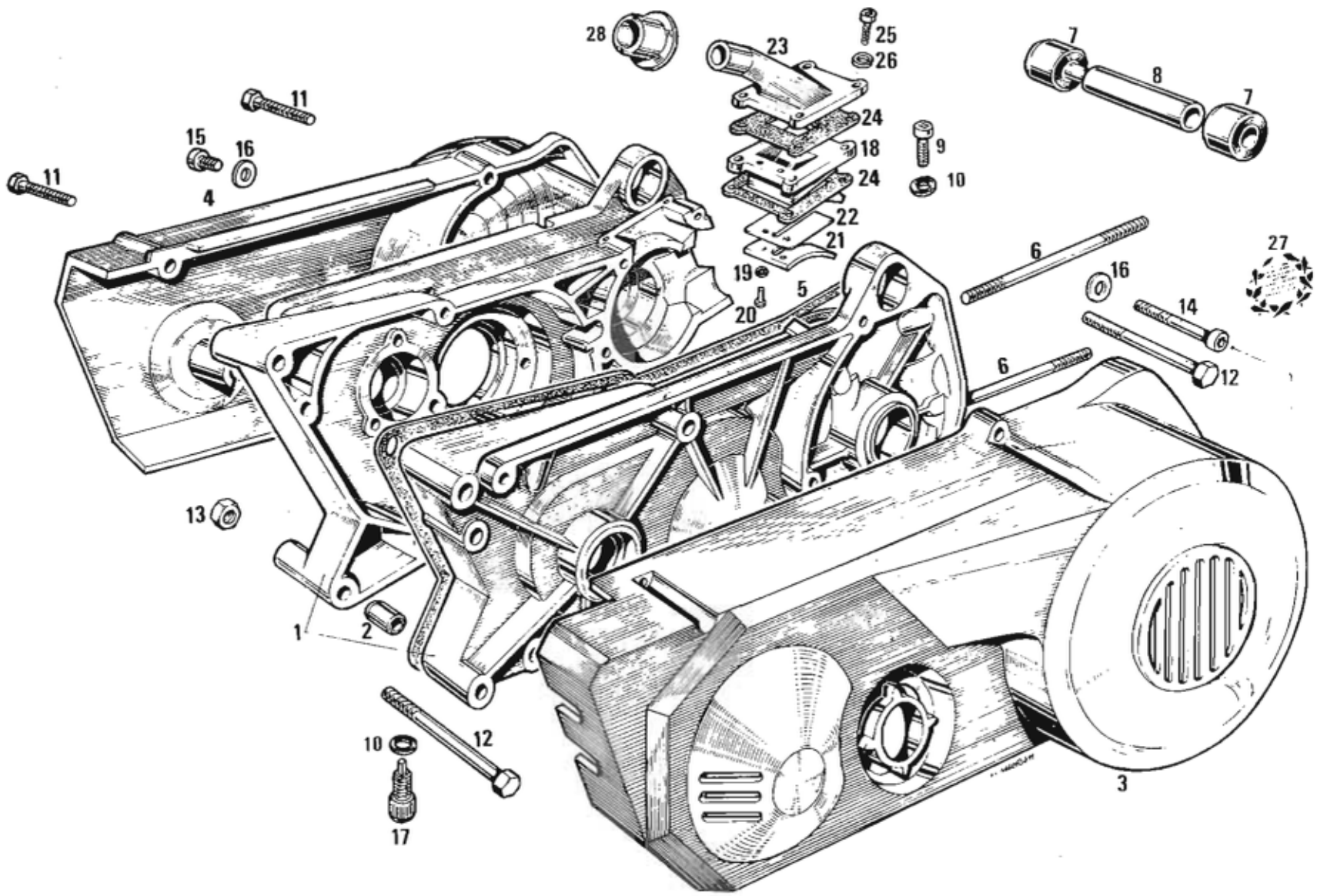

DOWNLOADED FROM THE PUBLIC SCOOTERHULP LIBRARY
Www.ScooterHulp.com

Figura Figure Figr.	CODIGO N° PIECE CODE Nr.	MODELO MODELE MODEL	Nº Motor Nº Moteur Engine num.	DENOMINACION	DESIGNATION	NAME
001	0F03200011	123456789ABCDEF	E016205	CTO.CARBUR.12-12.D.56.200449.	CARBURATEUR	CARBURETOR
002	0008032800	123456789ABCDEF	E016205	REJILLA FILTRO.VARIANT.	GRILLE DU FILTRE A AIR	SCREEN FILTER
003	0008032250	123456789ABCDEF	E016205	ESPUMA FILTRO AIRE.VARIANT.	FILTRE A AIR	AIR FILTER
004	0008018540	123456789ABCDEF	E016205	CAJA FILTRO.VARIANT.	BOITE A FILTRE	FILTER BOX
005	0003532270	123456789ABCDEF	E016205	BRIDA FIJ.SILENCIADOR.	COLLIER	CLAMP, AIR BOOT
006	0003132032	123456789ABCDEF	E016205	SURTIDOR MAX.54.439.ANTORCHA.	GICLEUR PRINCIPAL	MAIN,FUEL JET N 54
007	0003132050	123456789ABCDEF	E016205	CTO.AGUJA FLOTADOR.2838.	POINTEAU	INLET NEEDLE
008	0003132060	123456789ABCDEF	E016205	TOR.FIJ.TAPA CAMARA MEZC.3318.	BOULON FIX COUVERCLE DU BOISS	SCREW, CARB TOP CAP
009	0003132070	123456789ABCDEF	E016205	MUELLE COMPUERTA.3346.ANTORCHA	RESSORT DU BOISSEAU	SPRING, SLIDE RETURN
010	0003132080	123456789ABCDEF	E016205	JUNTA PIPA.3385.ANTORCHA.	JOINT D'ARRIVEE D'ESSENCE	GASKET, INLET BANJO SCREW
011	0003132090	123456789ABCDEF	E016205	TOR.FIJ.VASO.3598.ANTORCHA.	BOULON	SCREW, FLOAT BOWL
012	0003132100	123456789ABCDEF	E016205	MUELLE TOR.REGULAC.COMPTA.3606	RESSORT REGLAGE RALENTI	SPRING, IDLE ADJUSTMENT SCREW
013	0003132110	123456789ABCDEF	E016205	TOR.FIJ.PIPA.GASOL.4190.ANTOR.	BOULON FIX PIPE ARRIBE ESSENC	SCREW, INLET BANJO
014	0003132120	123456789ABCDEF	E016205	PASADOR EJE FLOTADOR.4560.ANT.	AXE DU FLOTEUR	PIN, FLOAT PIVOT
015	0003132190	123456789ABCDEF	E016205	PIPA GASOLINA TANGENCIAL.20586	PIPE ARRIVE ESSENCE	INLET BANJO
016	0003132200	123456789ABCDEF	E016205	VASO GASOLINA.6107.ANTORCHA.	CUVE DU CARBURATEUR	FLOAT BOWL
017	0003132210	123456789ABCDEF	E016205	COMPUERTA GAS.6108.ANTORCHA.	BOISSEAU	SLIDE
018	0003132220	123456789ABCDEF	E016205	FILTRO GASOLINA.6109.ANTORCHA.	FILTRE ESSENCE	SCREEN, INLET FILTER
019	0F03200231	123456789ABCDEF	E016205	TAPA CAMARA MEZCLA.V.START.	COUVERCLE, VARIANT START	SLIDE COVER, VARIANT START
020	0003132280	123456789ABCDEF	E016205	FLOTADOR.6122.ANTORCHA.	FLOTEUR	FLOAT
021	0003132290	123456789ABCDEF	E016205	JUNTA VASO GASOLINA.6123.ANT.	JOINT DE CUBE	GASKET, FLOAT BOWL "O-RING"
022	0003132300	123456789ABCDEF	E016205	CUERPO CARBUR.REF.200338.ANT.	CORPS DU CARBURATEUR	BODY, CARBURETOR
023	0003132310	123456789ABCDEF	E016205	TORN.REGULAC.COMPUERTA.6140.	VIS DE RALENTI	SCREW, IDLE ADJUSTMENT
024	0003132340	123456789ABCDEF	E016205	TOR.ABRAZAD.CARBUR.6305.ANTOR.	BOULON DE BRIDE	BOLT, CLAMP
025	0003132330	123456789ABCDEF	E016205	TCA.ABRAZ.CARBUR.D.8-20840	ECROU DE BRIDE	NUT, CLAMP
026	0003132350	123456789ABCDEF	E016205	CASQ.BOQ.ADMISION.6448.ANTOR.	JOINT DE PIPE	GASKET, MANIFOLD BUSHING
027	0003132722	123456789ABCDEF	E016205	MUELLE VALV.AIRE.6105.ANTORCHA	RESSORT DU STARTER	SPRING, CHOKE BLADE RETURN
028	0003132732	123456789ABCDEF	E016205	TOR.FIJ.VALV.AIRE.4517.ANTOR.	BOULON FIX DU STARTER	SCREW, CHOKE BLADE
029	0F03200711	123456789ABCDEF	E016205	VALV.AIRE MANDO MANUAL.	VANNE DU STARTER MANUEL	CHOKE LOCK
030	0003132240	123456789ABCDEF	E016205	JUNTA TAPA CAMARA MEZCLA.6111.	JOINT COUVERCLE CARBURATEUR	GASKET, TOP CARB. COVER
031	0003132250	123456789ABCDEF	E016205	CTO.FILTRO.6117.ANTORCHA.	FILTRE A AIR METAL	FILTER, STEEL MESH
032	0F04100451	123456789ABCDEF	E016205	CAPUCHON TOR.TENSOR CABLE.	CAPUCHON DE VIS DE RALENTI	CAP, IDLE ADJUST. SCREW
033	0003132020	123456789ABCDEF	E016205	TOR.TENS.DTRO.CABLE.1104.ANT.	VIS, TENDEUR CABLE	SCREW, CABLE ADJUSTER
034	0003132040	123456789ABCDEF	E016205	TCA.TENS.CABLE.1691.ANTORCHA.	ECROU, TENDEUR CABLE	NUT, CABLE ADJUSTER
035	0F02100781	123456789ABCDEF	E016205	CASQ.TOPE FUNDA CAB.AIRE 6051	ENTRETOISE DE BOUT DE GAINE	BUSHING, CABLE COVER END

DOWNLOADED FROM THE PUBLIC SCOOTERHELP LIBRARY
Www.ScooterHelp.com

DERBI

CARBURADOR. CARBURATEUR. CARBURETOR.	3-6-88	1 F
	LAMINA FEUILLE DIAGRAM	14
		START 14

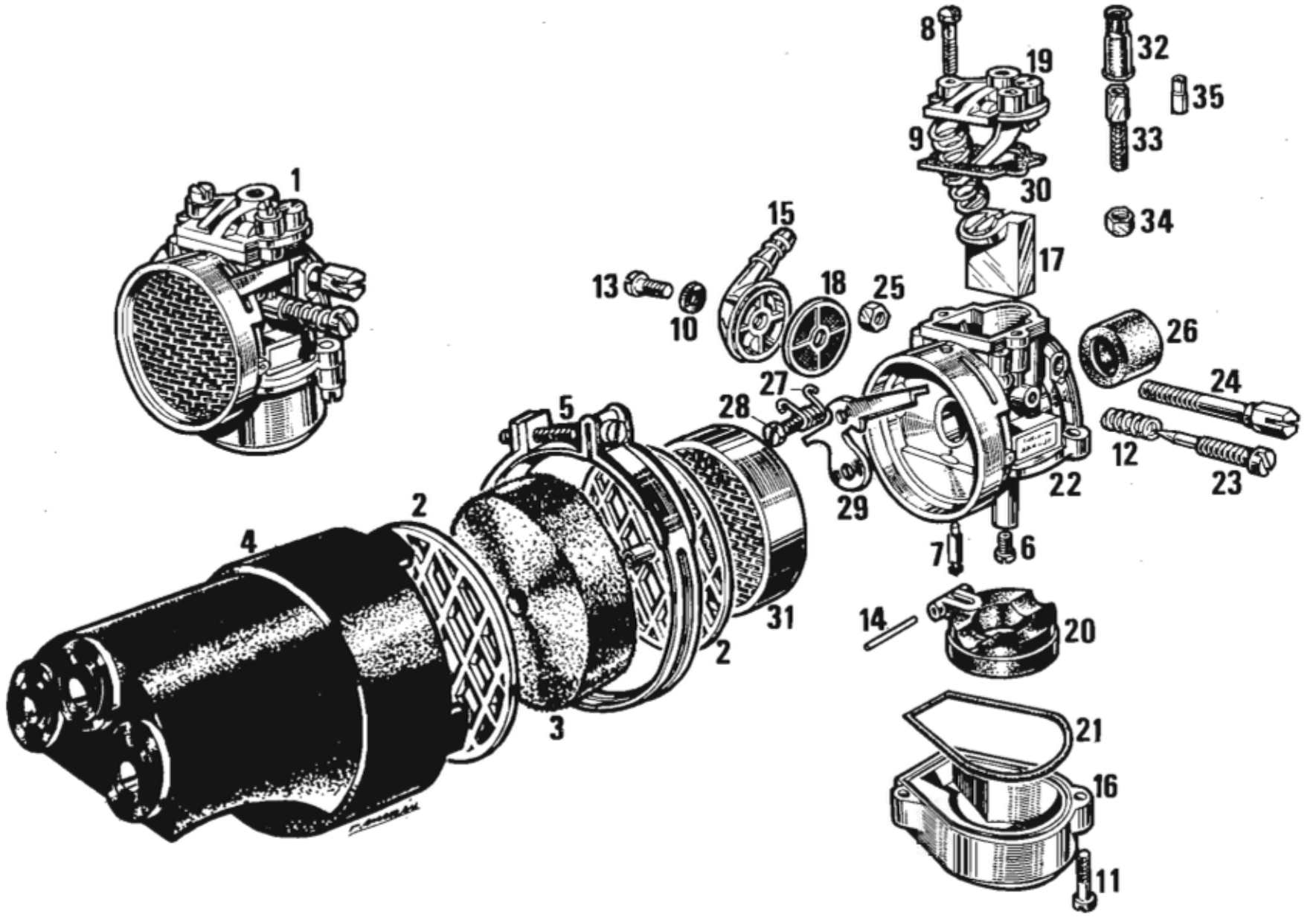

DOWNLOADED FROM THE PUBLIC SCOOTERHULP LIBRARY
Www.ScooterHulp.com

Figura Figure Figr.	CODIGO Nº PIECE CODE Nr.	MODELO MODELE MODEL	Nº MOTOR Nº MOTEUR ENGINE NUM.	DENOMINACION	DESIGNATION	NAME
001	0F03300011	12345 C F	E015554	CTO.VOLTE.MAGN.0602036.V.START	VOLANT MAGNETIQUE, V. START	MAGNETO ASSY. VARIANT START
002	0003133230	123456789ABCDEF	E015554	CHAVETA VOLTE.MAGN.P.REC.MCH.	CLAVETTE VOLANT MAGNETIQUE	KEY, FLYWHEEL
003	0003133271	123 56789 C	E015554	CTO.PIPA BUJIA C/MUELLE.	PIPE DE BOUGIE	SPARK PLUG CAP
004	0005233210	123456789ABCDEF	E015554	BUJIA.	BOUGIE	SPARK PLUG
005	0008833171	123456789ABCDEF	E015554	CTO.BOBINA.SCOOT-50.RF.9610301	BOBINE HAUTE TENSION BLINDEE	COIL, EXT. H.V. COIL
006	0F02600401	12345 ABCDEF	E015554	TUERCA CIGUENAL DCHO.(V.START)	ECROU DE POULIE	HUT, DRIVEN PULLEY
007	0M02600651	123456789ABCDEF	E015554	ARAND.CIGNAL.DCH.	RONDELLE PLATE	WASHER RHT. CRANKSHAFT
008	0003133260	123456789ABCDEF	E015554	TOR.FIJ.VOLTE.MAGN.5M80X10.	VIS FIX VOLANT	SCREW, STATOR PLATE
009	0011061300	123456789ABCDEF	E015554	TOR.AUTR.C/CRUZ.6,3X13,D-7981B	VIS	SCREW
010	0F03300161	12345 C F	E015554	R-CTO.PLATO BASE,P/VOLTE.ESPAÑ	PLATEAU SUPPORT VOLANT	STATOR PLATE, SPAIN
011	0F0330028I	123456789ABCDEF	E015554	PASACABLES VOLTE.MAGN.5673048.	CAOUTCHUC PROTEC. FILS	RUBBER, MAGNETO GROMMET
012	0F03310281	123456789ABCDEF	E015554	PASACABLES VOLTE.MAGN.5673061.	CAOUTCHUC PROTEC. FILS	RUBBER, MAGNETO GROMMET
013	0A03330041	12345 C F	E015554	BOBINA ILUMINAC. 6607008	BOBINE PRODUCTION LUMIERE	LIGHTING COIL
014	0A03330071	12345 C F	E015554	BOBINA ALIMENT.EXTER.	BOBINE ALIMENTATION HAUTE TEN	COIL, PRIMARY IGNITION
015	0004333080	123456789ABCDEF	E015554	JUEGO RUPTOR.6620009.	RUPTEUR	POINTS, CONTACT
016	0003133060	12345 C F	E015554	CONDENSD.ANTORCHA.6600010.	CONDENSATEUR	CONDENSER
017	0F03300121	12345 C F	E015554	R.ROTOR C/LEVA,ESP.0602036.	ROTOR AVEC CAME	FLYWHEEL$ ROTOR
018	0000012410	12345 C F	E015554	TOR.C/RED.CRUZ.4M70X10.DIN7985	VIS CRUXIFORME 4M70X10	SCREW, CONDENSER 4MM-.7X10
019	0000012420	12345 C F	E015554	TOR.C/RED.CRUZ.4M70X20,DIN-	VIS CRUXIFORME 4M70X20	SCREW, COIL MT. 4MM-.7X20
020	0000031040	123456789ABCDEF	E015554	ARAND.PLANA MECANIZ.D.4.	RONDELLE PLATE D 4	WASHER, 4MMI.D.
022	0011062000	6789AB DE	E035090	TOR.AUTR.C/CRUZ.6'3X20.D-7981B	VIS CRUCIFORME	SCREW PHILLIPS
023	0F03330011	6789AB DE	E035090	CTO.VOLTE.MAGNET.0602062(SC050	VOLANT MAGNETIQUE	MAGNETO, ASSY
024	0F03320161	6789AB DE	E035090	CTO.PLATO BASE.6801082.SCO-50.	PLATEAU SUPPORT VOLANT	STATOR PLATE
025	0F03300041	6789AB DE	E035090	BOBINA ILUM.ALMT.INTTS.6607075	BOBINE PRODUCTION LUMIERE	LIGHTING COIL
026	0F03300071	6789AB DE	E035090	BOBINA ALIMENT.6606030.SCO-50.	BOBINE ALIMENTATION HAUTE TEN	COIL, PRIMARY IGNITION
027	0F03300061	6789AB DE	E035090	CONDENSD.P/VOLTE.D.116.6600027	CONDENSATEUR	CONDENSER
028	0F03320121	6789ABCDEF	E035090	ROTOR C/LEVA.SCOOTER-50.	ROTOR AVEC CAME	FLYWHEEL ROTOR
029	0012042500	6789AB DE	E035090	TOR.C/RED.CRUZ 4M70X25DIN7985	VIS CRUXIFORME 4M70X25	SCREW, COIL MT.4MM7X25

PIEZAS ESPECIALES EXPORTACION MODELLE EXPORTATION (SEULEMENT) EXPORT MODEL (ONLY)

021	0D03300271	4 AB DEF	E024098	CTO.PIPA BUJIA ANTPAR.SAFI-M88	PIPE DE BOUGIE ANTIPARASITEE	COVER, SPARK PLUG

DOWNLOADED FROM THE PUBLIC SCOOTERHULP LIBRARY
Www.ScooterHulp.com

DERBI	VOLANTE MAGNETICO. VOLANT MAGNETIQUE. FLYWHEEL MAGNETO	3-6-88 LAMINA FEUILLE DIAGRAM	1 F 15 START 14

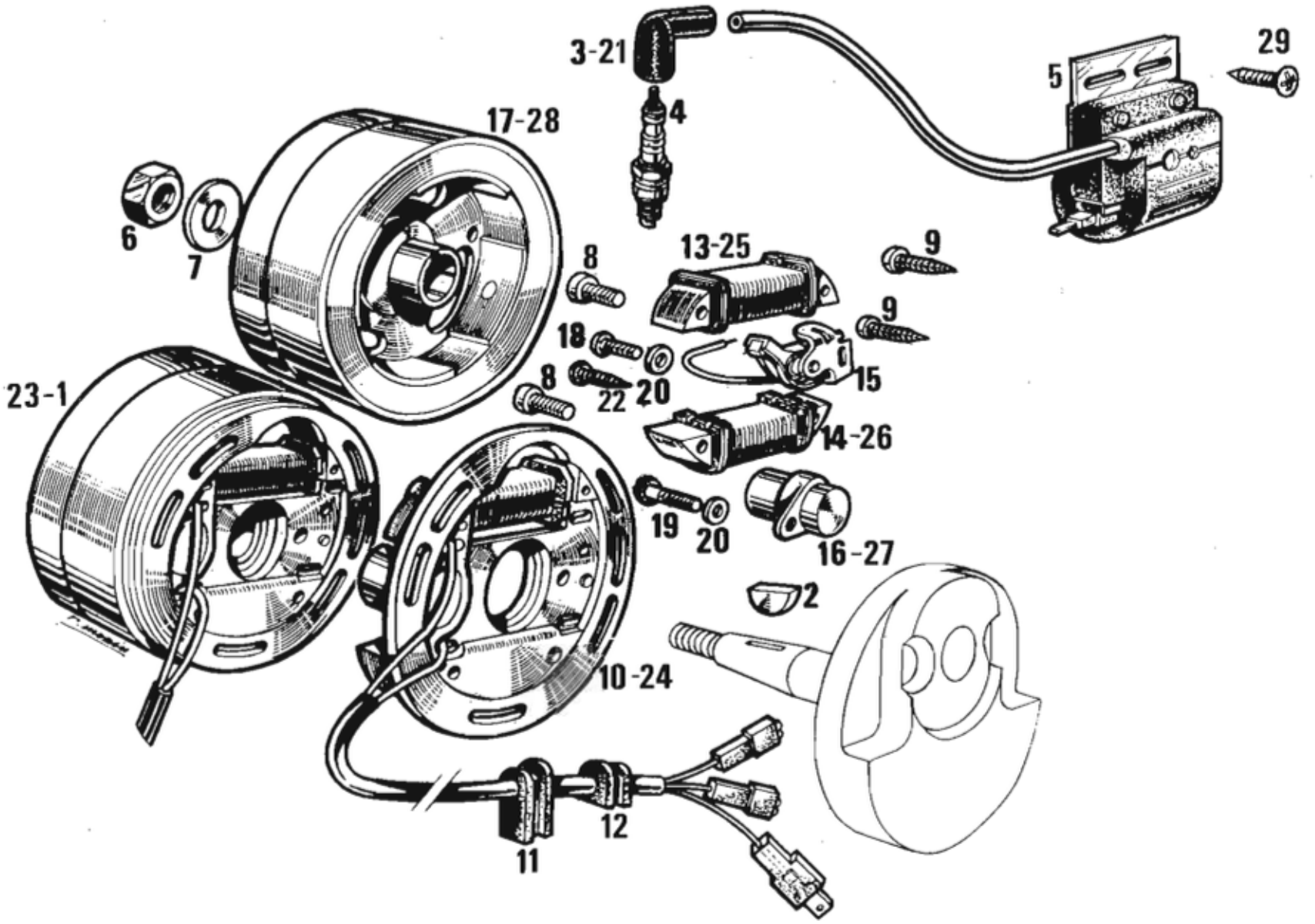

DOWNLOADED FROM THE PUBLIC SCOOTERHULP LIBRARY
Www.ScooterHulp.com

Figura Figure Figr.	CODIGO Nº PIECE CODE Nr.	MODELO MODELE MODEL	Nº CHASIS Nº CHASSIS FRAME NUM.	DENOMINACION	DESIGNATION	NAME
001	0E03430011	123456789ABCDEF	E016205	SCTO.TUBO ESCAPE.SCOOTER-50.	TUBE D'ECHAPPEMENT	EXHAUST PIPE
002	0008234040	123456789ABCDEF	E016205	JUNTA TUBO ESCAPE	JOINT ECHAPEMENT	GASKET, EXHAUST
003	0000004620	123456789ABCDEF	E016205	TOR.C/ALLEN.6M100X20.D-912/8.8	VIS ALLEN 6M100X20	SCREW, ALLEN 6M1.00X20
004	0003134320	123456789ABCDEF	E016205	JUNTA TORICA SILENC.ANTORCHA.	JOINT TORIQUE SILENCIEUX	"O" RING, SILENCER
005	0E03410081	1 67 C F	E016205	CTO.SILENCIOSO.SCOOTER-50.	SILENCIEUX COMPLET	MUFFLER ASSY.
006	0F03400081	23 5 89	E018491	CTO.SILENC.NEGRO.V.SPORT.	SILENCIEUX COMPLET,NOIR	MUFFLER ASSY,BLACK
007	0008234120	1 67 C F	E016205	SCTO.LABERTO.SILENC.VARIANT.	ENSEMBLE CHICANES	SILENCER
008	0F03400121	2345	E018491	SCTO.LABERTO.SILENC.NEG.SPORT.	ENSEMBLE CHICANES	SILENCER
009	0000023060	1234567 C F	E016205	TCA.AUTOBLOC. 6M100. DIN-	ECROU INDESSERABLE	SELF-LOCKING NUT 6M100
010	0000031060	1234567 C F	E016205	ARAND.PLANA MECANIZ.D.6.	RONDELLE PLATE D6	MACHINED FLAT WASHER O 6
011	ZD03400061	123456789ABCDEF	E016205	CTO.ABRAZAD.SILENC.	COLLIER	CLAMP, SILENCER
012	0000002820	123456789ABCDEF	E016205	TOR.C/EXAG. 8M125X20.DIN-	VIS FIX FILTRE A AIR D8X125X2	HEXAGONAL HEAD SCREW 8MM125X20
013	0000031080	123456789ABCDEF	E016205	ARAND.PLANA MECANIZ.D.8.DIN125	RONDELLE D8	MACHINED FLAT WASHER, O 8
014	0F01800391	2345 89AB DE	E018491	PROTECTOR SILENC.V.SPORT.	PROTECTEUR DE SILENCIEUX	SILENCER PROTECTOR
015	0012061000	2345 89AB DE	E018491	TOR.C/RED.CRUZ 6M100X10DIN7985	VIS CRUXIFORME 6M100X10	SCREW 6M100X10
016	0000034060	2345 89AB DE	E018491	ARAND.ESTRELL.INT.D6-DIN6797-J	RONDELLE EVENTAIL D 6	INNER STAR WASHER O 6
018	0000034080	123456789ABCDEF	E016205	ARAND.ESTRELL.INT.D8-DIN6797-J	RONDELLE GROWER D8	INNER STAR WASHER O 8
019	0F04600012	123456789 C F	E016205	CALCA SILENC.START/SCOOT.	ADHESIF ECHAPPEMENT	DECAL, SXHAUST PIPE
020	0008915020	123456789ABCDEF	E016205	PROTECCION CABLES	PASSE-CABLE	RUBBER,CABLE PROTECTOR
021	0D00500331	123456789ABCDEF	E016205	CASQ.POST.TAPAS LAT.EUROPA 75	ENTRETOISE.	BUSHING.
031*	000AB34680	123456789ABC F	E016205	CASQ.SALIDA GASES.	BAGUE SORTIE GAZ	RESTRICTOR, MUFFLER
033*	0005230370	123456789ABCDEF	E016205	ANILLO TOR.TAPON NIVEL ACEITE.	JOINT TORIQUE RED.PASSAGE GAZ	"O"RING,RESTRICTOR MUFFLER
034*	0047021900	123456789ABCDEF	E016205	ANILLO SEG.AGUJ.D19.	CIRCLIP REDUCTEUR PASS.GAZ	CIRCLIP,RESTRICTOR MUFFLER

PIEZAS ESPECIALES EXPORTACION MODELLE ESPORTATION (SEULEMENT) EXPORT MODEL (ONLY)

017	0F03420611	4	E024098	CTO.TUBO ESC-SILENC.V.SPORT FR	ENS.TUBE D'ECHAPPEM.ET SILENC	EXHAUST PIPE AND MUFFLER ASSY
022	0E03400841	AB DE	E041616	PLACA IDENT.SILENC.SCOOT-USA.	PLAQUE IDENT. SILENCIEUX	PLATE
023	0E01800231	AB DE	E041616	RMCHE.PCA.FCTE.SCO-50.70102405	RIVET FIX.PLAQUE CONSTR.	RIVET
024	0F03410081	AB	E041616	CTO.SILENC.NEGRO/ORO,SPORT USA	SILENCIEUX COMPLET	MUFFLER ASSY
025	0D01510781	AB	E041616	CALCA DERBI PLACA FRONTAL.FDS.	ADHESIF "DERBI"	DECAL "DERBI"
026	0F03420081	DE	E056062	CTO.SILENCIOSO.V.SPORT-AMERICA	SILENCIEUX COMPLET	MUFFLER ASSY
027*	0010062000	DE	E056062	TOR.C/CRUZ.6M100X20.NEG.DIN966	VIS CRUXIFORME 6M100X20	SCREW 6M100X20
028*	0035200600	DE	E056062	ARAND.ESTRELL.EXT.D6.DIN6798-V	RONDELLE	WASHER
029*	0F03400201	DE	E056062	CAZLTA.FINAL SIL.SPORT.AM.USA.	CUVETTE DE SILENCIEUX	BEARING
030*	0F03400231	DE	E056062	JUNTA LAB.SILEC.V.SPORT AM.USA	JOINT	"O" RING
032*	0F03400671	DE	E056062	CASQ.SAL.GASES.V.SPORT-AMERICA	ENTRETOISE	BUSHING

DOWNLOADED FROM THE PUBLIC SCOOTERHULP LIBRARY
Www.ScooterHulp.com

DERBI	3-6-88	1 F
ESCAPE Y SILENCIOSO. ECHAPPEMENT SILENCI. EXHAUST SYSTEM.	LAMINA FEUILLE DIAGRAM	16 START 14

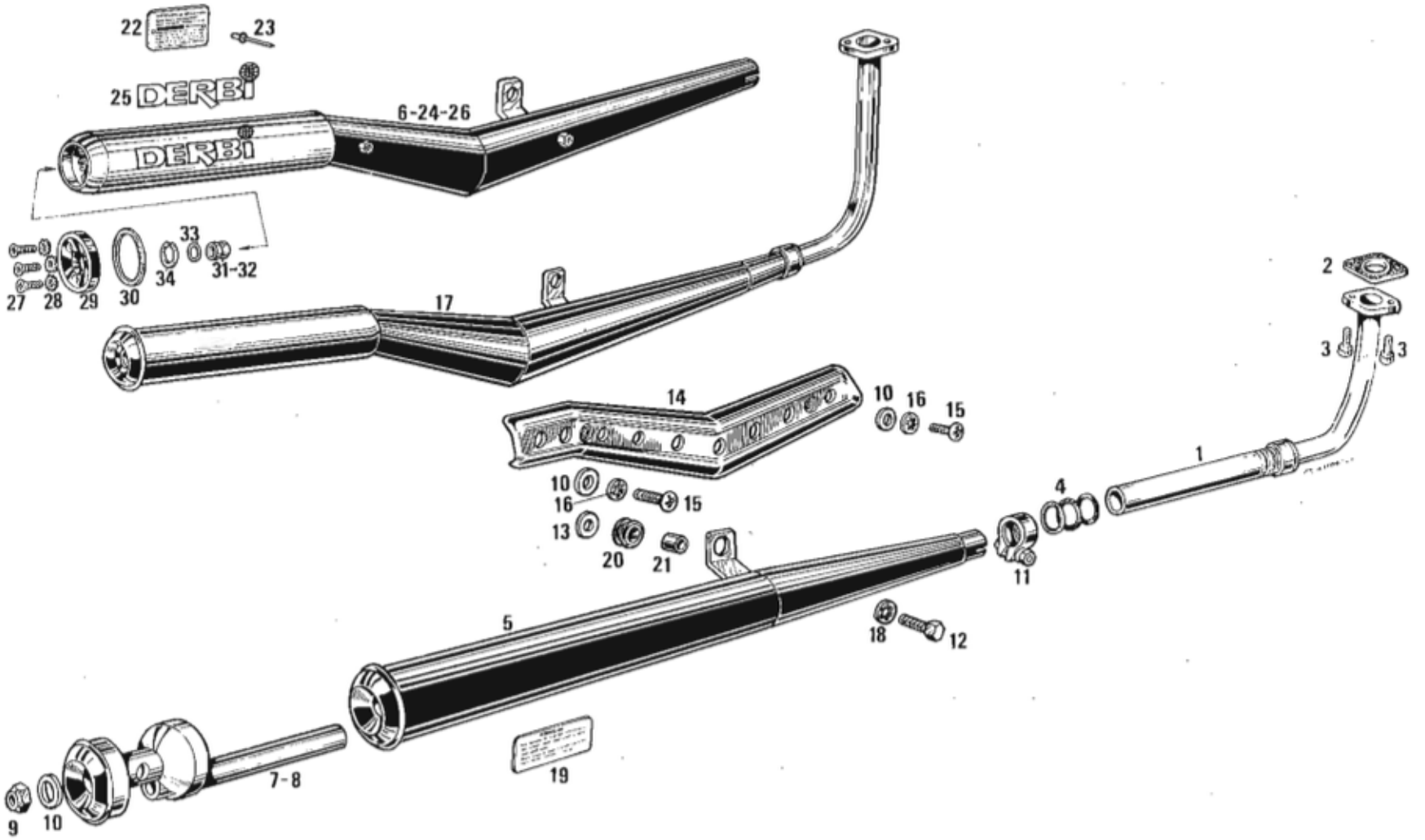

DOWNLOADED FROM THE PUBLIC SCOOTERHULP LIBRARY
Www.ScooterHulp.com

Figura Figure Figr.	CODIGO Nº PIECE CODE Nr.	MODELO MODELE MODEL	Nº MOTOR Nº MOTEUR ENGINE NUM.	DENOMINACION	DESIGNATION	NAME
001	0F03530521	123456789ABCDEF	E015554	SCTO.EJE PEDALIER - V.START	AXE DE PEDALIER	PEDAL SHAFT
002	0F03500031	123456789ABCDEF	E015554	BIELA PEDAL IZQ.V.START.	LEVIER GAUCHE VARIANT START	PEDAL CRANK, LEFT
003	0008235021	12345	E015554	PEDAL IZQ.NEGRO	PEDALE GAUCHE NOIRE	PEDAL,LEFT
004	0008235040	123456789ABCDEF	E015554	CHAVETA FIJ.PEDALES.VARIANT	CLAVETTE	BOLT, TAPERED 7M X1.00
005	0000033070	123456789ABCDEF	E015554	ARAND.MUELLE. D.7.DIN-127.	RONDELLE D7	WASHER, LOCK 7M ID
006	0000021070	123456789ABCDEF	E015554	TCA.EXAG. 7M100.DIN-	ECROU 7M100	NUT 7MX1.00
007	0008235300	123456789ABCDEF	E015554	RETEN EJE PEDALIER 16.24.4.	JOINT SPI DE PEDALIER	SEAL, PEDAL SHAFT
008	0008226720	123456789ABCDEF	E015554	JAULA CIGUE.POLEA MOTRIZ 34660	CAGE POUR POULIE MOTRICE	BEARING, OUTER DRIVE PULLY
009	0F02800391	123456789ABCDEF	E015554	TCA.FIJ.PIÑ.SALID.CAMB.START.	ECROU FIX. PIGNON SORTIE	NUT
010	0F02800421	123456789ABCDEF	E015554	PRECTO.TCA.PIÑON SALIDA CAMB.	RONDELLE D'ARRETOIR PEDALIER	WASHER, RETAINING
011	0F02800371	123456789ABCDEF	E015554	PIÑON SALIDA CAMB.Z-13.START.	PIGNON DE SORTIE	SPROCKET, COUNTERSHAFT
012	0F02800381	123456789ABCDEF	E015554	CASQ.SEPAR.PIÑ.SAL.CAMB.START.	ENTRETOISE PIGNON	SPACER, SPROCKET
013	0F04000411	123456789ABCDEF	E015554	SCTO.BUJE REDUCTOR C/JAULAS	MOYEU REDUCTEUR AVEC BAGES	REDUCER BUSHING W/NEEDLE BEAR.
014	0056000600	123456789ABCDEF	E015554	COJINETE 6006 30.55.13.NACHI	ROULEMENT	BEARING
015	0F02800401	123456789ABCDEF	E015554	RET.PIÑON SALIDA CAMB.35.50.7.	JOINT SPI PIGNON	SEAL SSPROCKET
016	0F02800281	123456789ABCDEF	E015554	PRECTO.COJNTE.PIÑON SAL.CAMB.	ARRETOIR ROULEMENT PIGNON	RETAINER, SPROCKET BEARING
017	0000013510	123456789ABCDEF	E015554	TOR.C/PL.AVELL.ALL.5M80X10.	VIS TETE FRAISEE FIX BUTEE	SCREW CROSS
018	0F02800081	123456789ABCDEF	E015554	PASAD.HORQ.DESPLAZ.2X8-DIN1481	CLAVETTE AXE MISE A VELO	PIN, SHIFTER
019	0F04000401	123456789ABCDEF	E015554	CTO.DESPLAZAB.REDUCTOR-V.START	ENTRAINEUR DEBOITEMENT AVEL C	SHIFTER DOG WITH PIN
020	0F04000371	123456789ABCDEF	E015554	MUELLE FIJ.HORQ.ARRASTRADOR.	RESSORT FOURCHETTE MISE A VEL	SPRING, SHIFTER FORK
021	0000061040	123456789ABCDEF	E015554	BOLA.D.4,76.	BILLES D.4,76	BALL, D,4,76
022	0F04000361	123456789ABCDEF	E015554	SCTO.HORQ.DESPLAZB.V.START.	FOURCHETTE DE MISE A VELO	SHIFTER FORK
023	0F02810361	123456789ABCDEF	E015554	RETEN EJE HORQ.DESPL.10.16.4	JOINT SPI AXE MISE A VELO	SEAL, SHIFTER SHAFT
024	0F02800051	123456789ABCDEF	E015554	BOTON MANDO DESPLAZB.V.START.	BOUTON DE MISE A VELO	PUSH BUTTON, SHIFTER
025	0000023060	123456789ABCDEF	E015554	TCA.AUTOBLOC. 6M100. DIN-	ECROU INDESSERABLE	SELF-LOCKING NUT 6M100
026	0000031060	123456789ABCDEF	E015554	ARAND.PLANA MECANIZ.D.6.	RONDELLE PLATE D6	MACHINED FLAT WASHER 0 6
027	0F04020281	123456789ABCDEF	E015554	SCTO.RUEDA REDUCTOR,V.START.	ENGRANAGE	GREAR, TRANSMISSION
028	0F03500631	123456789ABCDEF	E015554	ARAND.TOPE PIÑ.ARRASTD.	RONDELLE	WASHER
029	0F03500531	123456789ABCDEF	E015554	CASQ.SEPARAD.EJE PEDAL.START.	ENTRETOISE AXE PEDALIER	BUSHING, PEDAL SHAFT
030	0F03520261	123456789ABCDEF	E015554	PIÑON ARRASTRD.PEDAL.Z-26.	PIGNON CRANTE DE PEDALIER	PEDAL DRIVER
031	0F03500321	123456789ABCDEF	E015554	MUELLE ARRASTRAD.PEDAL.START.	RESSORT MAINTIENT PIGNON CRAN	SPRING, PEDAL DRIVER
032	0003128251	123456789ABCDEF	E015554	ARAND.REG.EJE SEC.16'2X22X1.	RONDELLE	WASHER
033	0006128280	123456789ABCDEF	E015554	ARAND.COJNTE.ROD.DCHA.	RONDELLE	WASHER
034	0000061080	123456789ABCDEF	E015554	BOLA.D.8.	BILLES D8	BALL BEARING 8MM DIA
035	0F03500751	123456789ABCDEF	E015554	CARCASA FIJ.EJE PEDALES.START.	CARCASE FIXATION PEDALES	CASING, FIX PEDALS
036	0F03500771	123456789ABCDEF	E015554	MUELLE PRESION BOLA -V.START-	RESSORT	SPRING
037	0000004512	123456789ABCDEF	E015554	TOR.C/ALLEN 5M80X12	BOULON ALLEN 5M80X12	SCREW, ALLEN 5M80X12
038	0A03510131	123456789ABCDEF	E015554	BIELA PEDAL DCH.NEGRA.START.	LEVIER DROIT	PEDAL CRANK, RIGHT
039	0008235121	12345	E015554	PEDAL DCHO.NEGRO	PEDALE DROITE NOIRE	PEDAL,RIGHT
040	0000047132	123456789ABCDEF	E015554	ANILLO SEG.EJES D32.DIN-471.	CIRCLIP	SNAP RING
041	0B02800282	123456789ABCDEF	E015554	ARAND.COJNTE.ROD.DCHA.0,9MM.	RONDELLE	WASHER
042	0B02800283	123456789ABCDEF	E015554	ARAND.COJNTE.ROD.DCHA.1,1MM.	RONDELLE	WASHER
043	0F03500121	6789ABCDEF	E035090	PEDAL DCH.NEG.C/CAPTAF.ST.INT.	PEDALE DROITE	PEDAL, RIGHT
044	0F03510021	6789ABCDEF	E035090	PEDAL IZQ.NEG.C/CAPTAF.ST.INT.	PEDALE GAUCHE	PEDAL, LEFT

DOWNLOADED FROM THE PUBLIC SCOOTERHULP LIBRARY
Www.ScooterHulp.com

DERBI	PEDALIER. PEDALIER. PEDAL SHAFT.	3-6-88 LAMINA FEUILLE DIAGRAM	1 F 17 START 14

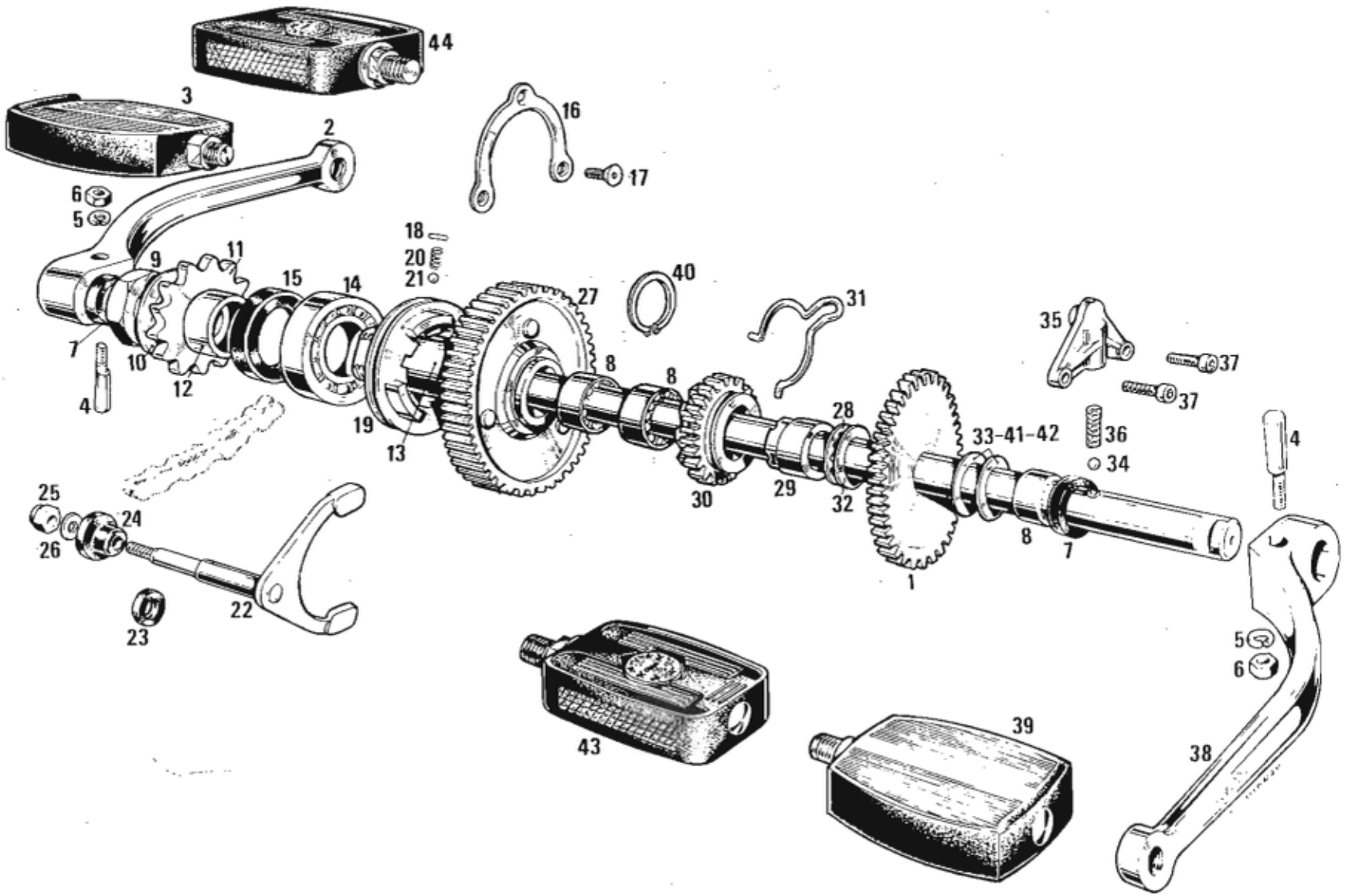

DOWNLOADED FROM THE PUBLIC SCOOTERHULP LIBRARY
Www.ScooterHulp.com

Figura Figure Figr.	CODIGO Nº PIECE CODE Nr.	MODELO MODELE MODEL	Nº CHASIS Nº CHASSIS FRAME NUM.	DENOMINACION	DESIGNATION	NAME
001	0A05100561	123456789ABCDEF	E016205	CTO.BOLSA HERRAMTAS.	TROUSE A OUTILS	TOOL POUCH
002	0B05110231	123456789ABCDEF	E016205	LLAVE 4 USOS.VARIANT/COPPA.	CLE MULTIPLE, VARIANT/COPPA	BOX WRENCH, VARIANT/COPPA
003	0E05100021	123456789ABCDEF	E016205	TUBO LLAVE BUJIA.SCOOT-VARIANT	CLE A BOUGIE, SCOOT/VARIANT	SPARK PLUG WRENCH
004	0003551030	123456789ABCDEF	E016205	DESTORNILLADOR	TOURNEVIS	SCREWDRIVER

PIEZAS ESPECIALES EXPORTACION MODELLE EXPORTATION (SEULEMENT) EXPORT MODEL (ONLY)

005	0E02210671	AB DE	E041616	CTO.ESPEJO RETROVISOR(SCOOTER)	RETROVISEUR	REAR MIRROR
006	0F03600191	AB	E041616	ARAND.INTERM.POLEA MOTRIZ.5MM.	RONDELLE	INTERMEDIATE WASHER
007	0E01500571	DE	E056062	SOPTE.PLACA MATRIC.NEG.SCO-USA	SUPPORT PLAQUE MINERALOGIQUE	HOLDER, LICENCE PLATE
008	0000004615	DE	E056062	TOR:C/ALLEN.6M100X15.DIN-	VIS CHC M6X15	SCREW, ALLEN 6MM1.00X15
009	0000023060	DE	E056062	TCA.AUTOBLOC. 6M100. DIN-	ECROU INDESSERABLE	SELF-LOCKING NUT 6M100
010	0000031060	DE	E056062	ARAND.PLANA MECANIZ.D.6.	RONDELLE PLATE D6	MACHINED FLAT WASHER O 6
011	0F03610191	DE	E056062	ARAND.INTERM.POLEA MOTRIZ.8MM.	RONDELLE INTERMED.	WASHER

DOWNLOADED FROM THE PUBLIC SCOOTERHULP LIBRARY
Www.ScooterHulp.com

DERBI	ACCESORIOS NORMALES. OUTILS FOURNIS. TOOL KIT.	3-6-88 LAMINA FEUILLE DIAGRAM	1 F 18 START 14

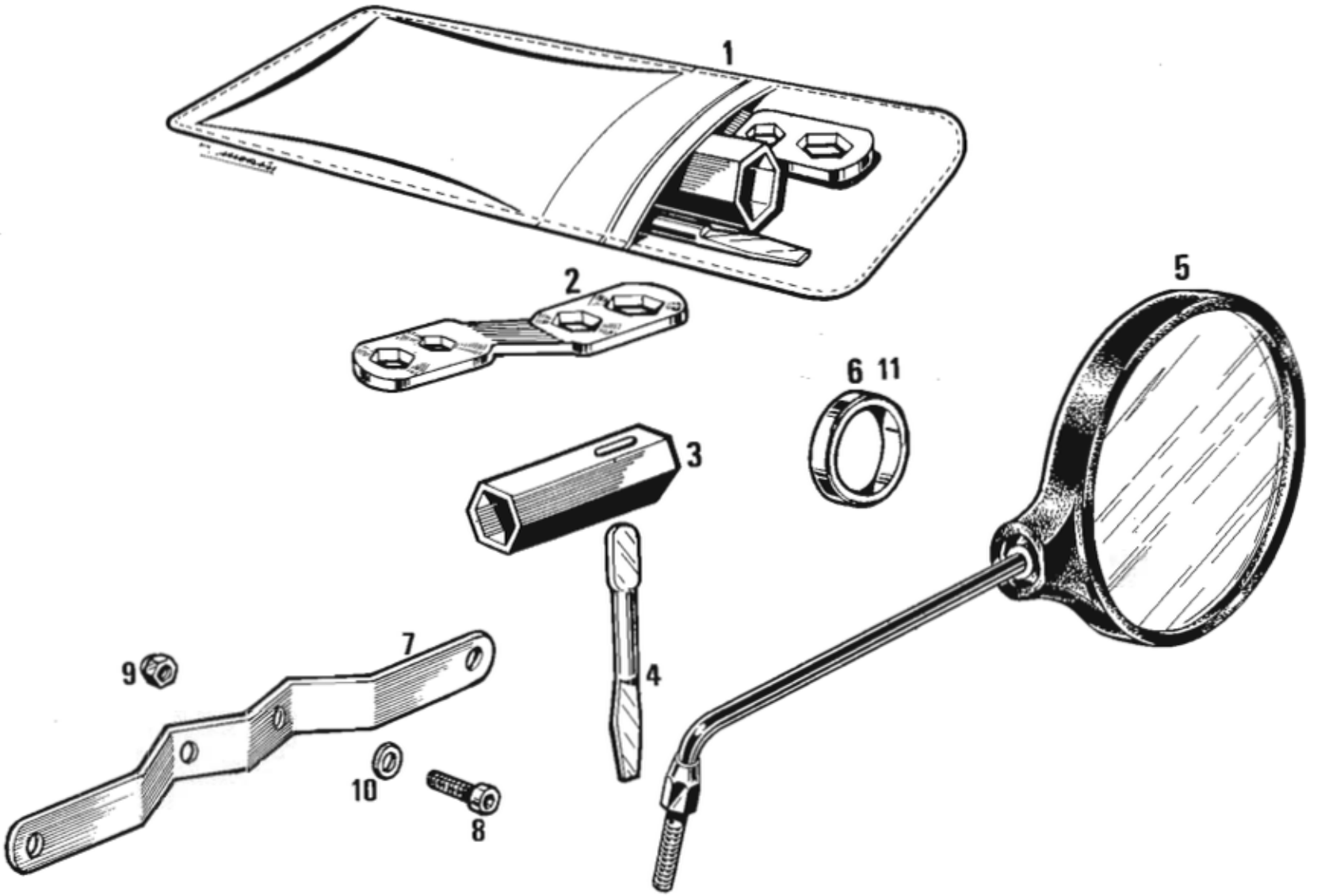

DOWNLOADED FROM THE PUBLIC SCOOTERHULP LIBRARY
Www.ScooterHulp.com

Figura Figure Figr.	CODIGO N° PIECE CODE Nr.	MODELO MODELE MODEL	Nº CHASIS Nº CHASSIS FRAME NUM.	DENOMINACION	DESIGNATION	NAME
001	0005253240	123456789ABCDEF	E016205	SCTO.SUJETADOR VOLANTE MAGNET.	CLE A SANGLE	FLYWHEEL MAGNETO CALMP
002	0008253010	123456789ABCDEF	E016205	CTO.ESTRACTOR VOLANTE MAGNET.	EXTRACTEUR DE VOLANT	FLYWHEEL MAGNETO EXTRACTOR
003	0008253290	123456789ABCDEF	E016205	SCTO.LLAVE FIJ.VOLANTE MAGNET.	CLE MAINTIENT VOLANT	FLYWHEEL MAGNETO WRENCH
004	0008254740	123456789ABCDEF	E016205	CTO.EXTRACT.CAMP.ARQ.MORD.EMB.	EXTRACTEUR DE POULIE	PULLEY CLAMP

DOWNLOADED FROM THE PUBLIC SCOOTERHULP LIBRARY
Www.ScooterHulp.com

DERBI	ACCESORIOS AGENCIA. OUTILS D'ATELIERS. DEALER ACCESSORIES.	3-6-88 LAMINA FEUILLE DIAGRAM	1 F 19 START 14

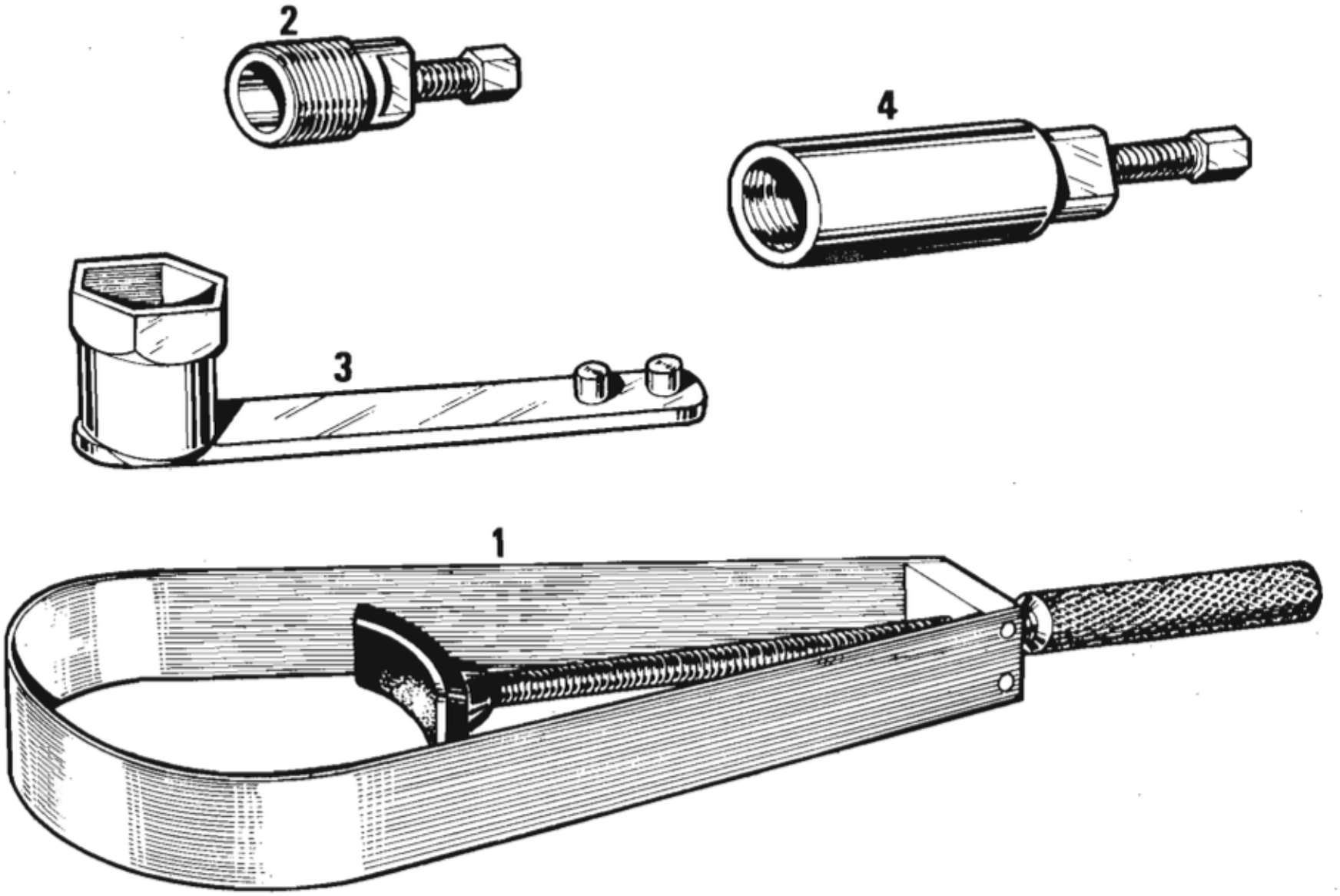

DOWNLOADED FROM THE PUBLIC SCOOTERHULP LIBRARY
Www.ScooterHulp.com

Figura Figure Figr.	CODIGO Nº PIECE CODE Nr.	MODELO MODELE MODEL	Nº CHASIS Nº CHASSIS FRAME NUM.	DENOMINACION	DESIGNATION	NAME
001	0F01700021	67	E035090	CTO.FARO INTTE.DT.DCHO.V.START	GLIGNOTEURS AV.DROIT	TURN SIGNAL LIGHT FRONY RH
002	0F01700311	67	E035090	CTO.FARO INTTE.DTRO.IZQ.START	GLIGNOTEURS AV.GAUCHE	TURN SIGNAL LIGHT FRONT LEFT
003	0F01700301	6789	E035090	CTO.FARO INTTE.TRA.DCH.V.START	GLIGNOTEURS AV,DROIR	TURN SIGNAL LIGHT REAR RH
004	0F01700391	6789	E035090	CTO.FARO INTTE.TRA.IZQ.V.START	GLIGNOTEURS AR.GAUCHE	TURN SIGNAL LIGHT REAR LEFT
005	0000004620	67	E035090	TOR.C/ALLEN.6M100X20.D-912/8.8	VIS ALLEN 6M100X20	SCREW, ALLEN 6M1.00X20
006	0004154000	67	E035090	TOR.C/ALLEN.5M80X40.NEGRO.DIN-	VIS ALLEN 5M80X40 NOIR	BOLT, ALLEN 5MM0.8X40
007	0000031050	67	E035090	ARAND.PLANA MECANIZ.D.5.	RONDELLE PLATE MECA.0 5	WASHER, 5MM I.D.
008	0000034050	67	E035090	ARAND.ESTRELL.INT.D5-DIN6797-J	RONDELLE EVENTAIL D5	INNER STARWASHER, 5MM I.D.
009	0F01700401	6789	E035090	CTO.CENTRAL INTTE.V.START INTT	CENTRALE CLIGNOTEURS	TURN SIGNAL LIGHT CONTROL
011	0D01710011	6789	E035090	LAMPARA FARO INTERM.6V 10W	LAMPE 6V 10W-B A 15 S	BULB, 6V 10W
012	0E01700031	6789	E035090	CTO.CONMUTADOR INTERMT.SCO-50	COMMODO LUMIERES	SWITCH
013	0F01710021	89	E039343	CTO.FARO INTTE.DTRO.DCH.SPORT.	CLIGNOTEURS AV.DROIT	TURN SIGNAL LIGHT FRONT RH
014	0F01710311	89	E039343	CTO.FARO INTTE.DTRO.IZQ.SPORT.	CLIGNOTEURS AV,GAUCHE	TURN SIGNAL LIGHT FRONT LEFT
015	0E01700191	67	E035090	SPTE.INTTE.DTRO.DCHO.(SCO 74)	SUPPORT CLIGNOTEUR AV. DROIT	SUPPORT, SIGNAL FRONT RIGHT
016	0E01700201	67	E035090	SOPTE.INTTE.DTRO.IZQD.(SCO 74)	SUPPORT CLIGNOTEUR AV. GAUCHE	SUPPORT, SIGNAL FRONT LEFT
017	0D01710091	6789	E035090	TOR.FIJ.CRISTAL INTTES.SCOOTER	VIS, VERRE CLIGNOTANT	SCREW, LENS
018	0D01710071	6789	E035090	CRISTAL INTTES.3040319.	VERRE CLIGNOTANT	LENS, TURN SIGNAL

DOWNLOADED FROM THE PUBLIC SCOOTERHELP LIBRARY
Www.ScooterHelp.com

DERBI	INTERMITENTES. CLIGNOTEURS. TURN SIGNALS.	3-6-88 LAMINA FEUILLE DIAGRAM	1 F 20 START 14

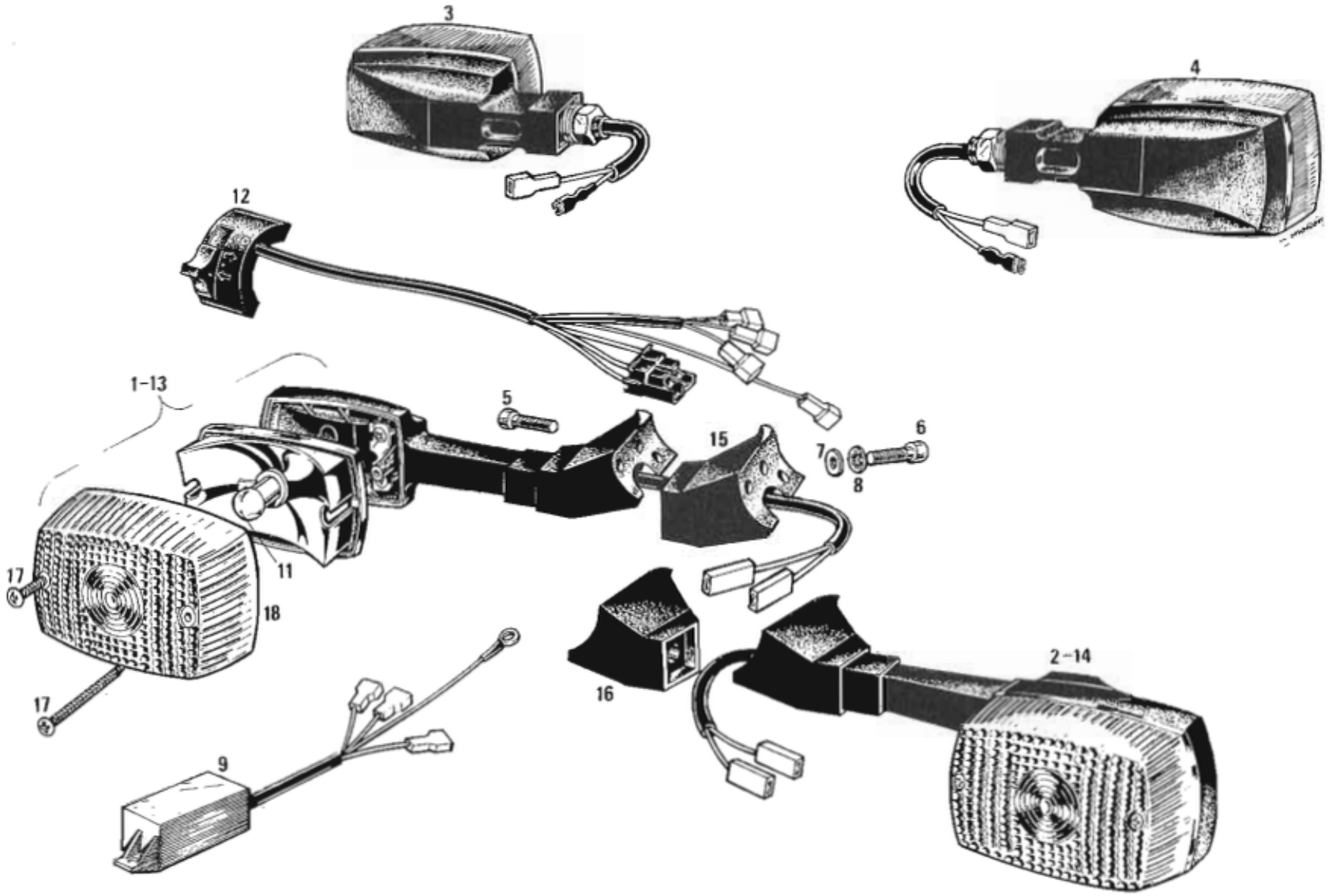

DOWNLOADED FROM THE PUBLIC SCOOTERHULP LIBRARY
Www.ScooterHulp.com

DERBI PRODUCT
EXCLUSIVE U.S.A. IMPORTERS
Marina Mobili, Inc., P.O. Box 347
Moonachie, New Jersey 07074 USA
Telephone (201) 438-5700
Telefax (201) 438-0110
Telex 133496 MMOBILI MOON

DOWNLOADED FROM THE PUBLIC SCOOTERHELP LIBRARY

NACIONAL MOTOR, S.A.

Oficina Técnica N.M **213.64** Mollet-Martorelles-Barcelona.

Depósito Legal B-27937-87

DOWNLOADED FROM THE PUBLIC SCOOTERHULP LIBRARY
Www.ScooterHulp.com