VENOX 250i Wiring Diagram

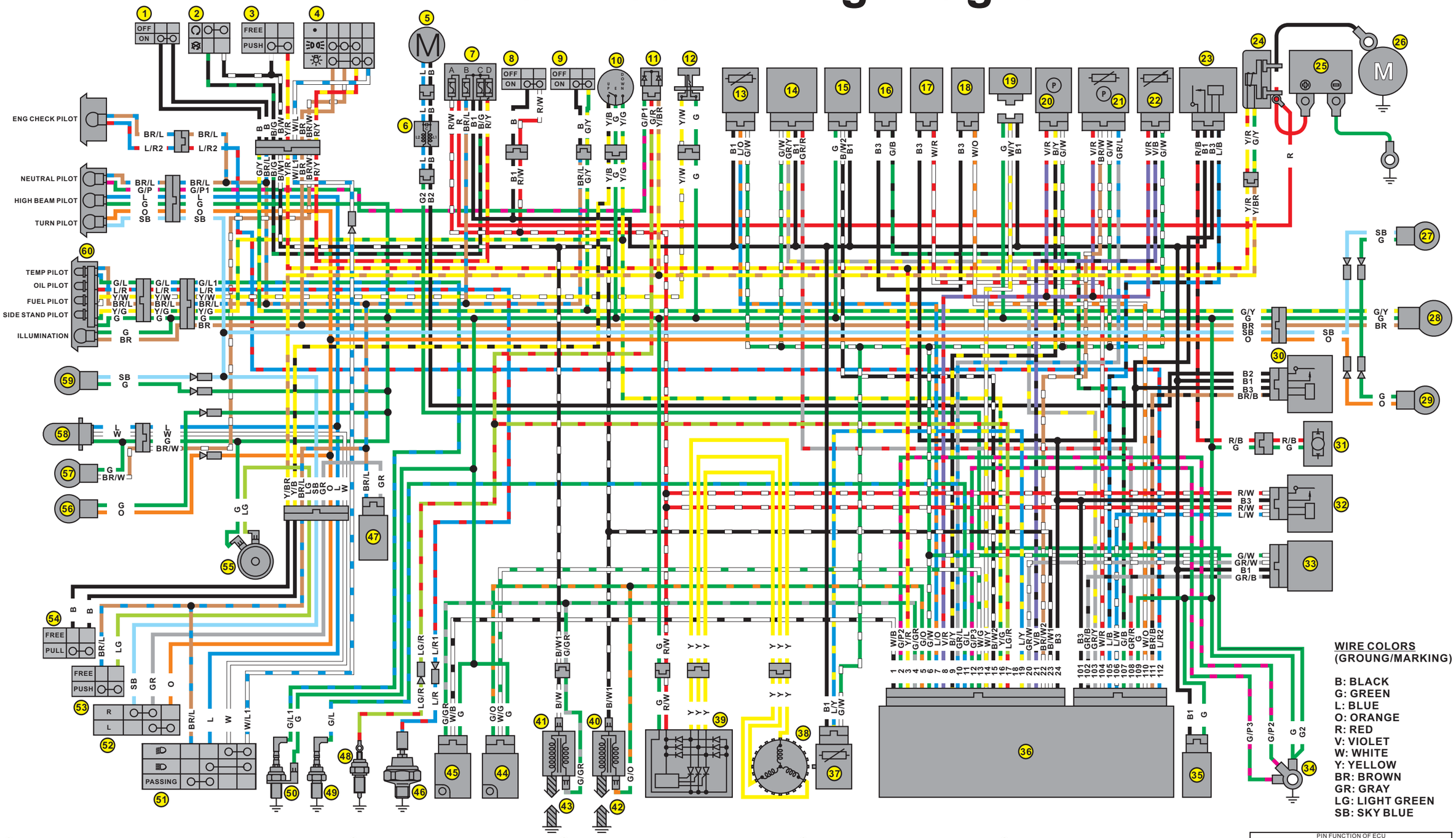

1. FRONT BRAKE LIGHT SWITCH
2. ENGINE STOP SWITCH
3. STARTER SWITCH
4. HEADLIGHT SWITCH
5. COOLING FAN MOTOR
6. EMI FILTER
7. FUSE BOX
   FUSE A: 30A (CHARGING)
   FUSE B: 15A (WINKER, FR/RR BRAKE LIGHT, COOLING FAN MOTOR)
   FUSE C: 10A (IGNITION, IGN. COIL, STARTER)
   FUSE D: 15A (HEADLIGHT, TAILLIGHT, METER LIGHT)
8. IGNITION SWITCH
9. REAR BRAKE LIGHT SWITCH
10. SIDE STAND SWITCH
11. CLUTCH DIODE
12. FUEL DETECTION SWITCH
13. CAM PHASE SENSOR
14. O2 SENSOR (FR)
15. ANGLE DETECT SENSOR
16. ISC VALVE
17. FUEL INJ #1 (FR)
18. FUEL INJ #2 (RR)
19. DIAGNOSTIC TOOL
20. MAP
21. TMAP
22. TPS
23. FP RELAY
24. START MAG
25. BATTERY 12V 8AH
26. STARTER MOTOR
27. RIGHT REAR TURN SIGNAL LIGHT
28. TAILLIGHT/BRAKE LIGHT
29. LEFT REAR TURN SIGNAL LIGHT
30. COOLING FAN MOTOR RELAY
31. FUEL PUMP
32. ECU RELAY
33. O2 SENSOR (RR)
34. POWER/CASE/SYSTEM GND
35. FILTER CAPACITOR
36. TWIN CYLINDER ECU
37. CRANK POSITION SENSOR
38. ACG
39. REGULATOR/RECTIFIER
40. IGN. COIL #2 (RR)
41. IGN. COIL #1 (FR)
42. SPARK PLUG
43. SPARK PLUG
44. IG #2 DRIVER (RR)
45. IG #1 DRIVER (FR)
46. OIL PRESSURE SWITCH
47. FLASHING RELAY
48. NEUTRAL SWITCH
49. THERMO UNIT (ECU)
50. THERMO UNIT (METER)
51. DIMMER/PASSING SWITCH
52. TURN SIGNAL LIGHT SWITCH
53. HORN SWITCH
54. CLUTCH SWITCH
55. HORN
56. LEFT FRONT TURN SIGNAL LIGHT
57. POSITION LIGHT
58. HEADLIGHT
59. RIGHT FRONT TURN SIGNAL LIGHT
60. METER

PIN FUNCTION OF ECU

PIN NO.	NAME	PIN NO.	NAME
1	IG. #1 SIGNAL (FR)	101	ISC(H)
2	CASE GND	102	O2 HEATER (RR)
3	START SW	103	O2 SIGNAL (FR)
4	IG#1 CHECK (FR)	104	INJ. #1 (FR)
5	IG#2 CHECK (RR)	105	PUMP RELAY
6	SENSOR GND	106	ECU REALY
7	CAM SIGNAL	107	ISC(L)
8	VREF (5V)	108	O2 HEATER (FR)
9	MAP SIGNAL	109	POWER GND
10	A.T. SIGNAL	110	INJ. #2 (RR)
11	W.T. SIGNAL	111	COOLING FAN RELAY
12	SYSTEM GND	112	ENGINE CHECK LAMP
13	IG. #2 SIGNAL (RR)		
14	K-LINE		
15	TILT SW		
16	SIDE STAND SW		
17	NEUTRAL SW		
18	IMMS		
19	CRANK SIGNAL		
20	O2 SIGNAL (RR)		
21	TVO SIGNAL		
22	BAP SIGNAL		
23	IGN. SW		
24	VB		