HUSQVARNA COMPETITION MOTORCYCLES

'87

USE 76 U30 AUTO FOR ENGINE

Gäller från ram CP, WP, XP nr 20.000
Valid from frame CP, WP, XP no. 20.000

Reservdelskatalog
Spare Parts Manual

Dimensioner och beteckningar

Skruvar:	Gängdimension x längd (M6 x 30)
Muttrar:	Gängdimension (M8)
Brickor:	Typ, inre Ø x yttre Ø x tjocklek (FBB 6,4 x 10 x 1)
	Typer: FBB = Fjäderbricka, öppen
	FA = Fjäderbricka
	LI = Låsbricka, innertandad
Kullager:	Fabrikantens beteckning (SKF 6301)
Tätringar:	Inre Ø x yttre Ø x tjocklek (25 x 42 x 7)

L = Längd

z = Antal kuggar

N = Ny reservdel

Rätt till ändringar förbehålles.

Dimensions and descriptions

Screws:	Thread dimensions x length
Nuts:	Thread dimension
Washer:	Type, inner Ø x exterior Ø x thickness
	Types: FBB = Spring washer open
	FA = Spring washer
	LI = Lock washer, inside indent
Ball bearings:	Manufacturers description
Sealing rings:	Inner Ø x exterior Ø x thickness

L = Length

z = Number of cogs

N = New spare part

Specifications subject to change without notice.

Innehålls-förteckning
Index

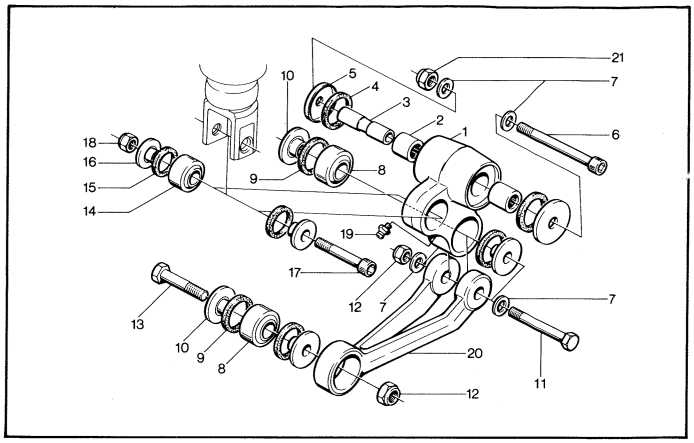

Stötdämparlänkage. *Shocklinkage.* **11**

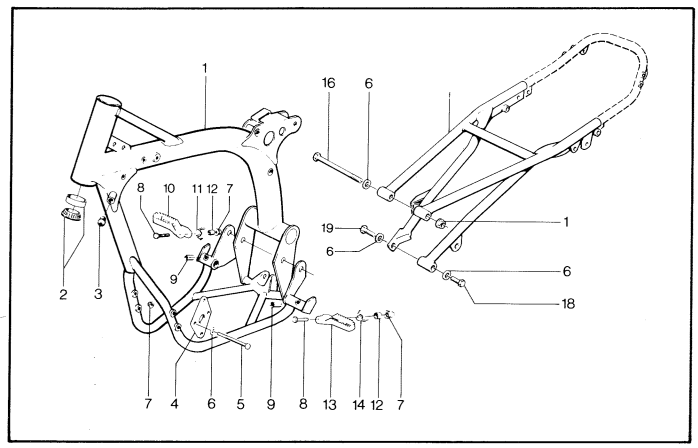

Ram. *Frame.* **6**

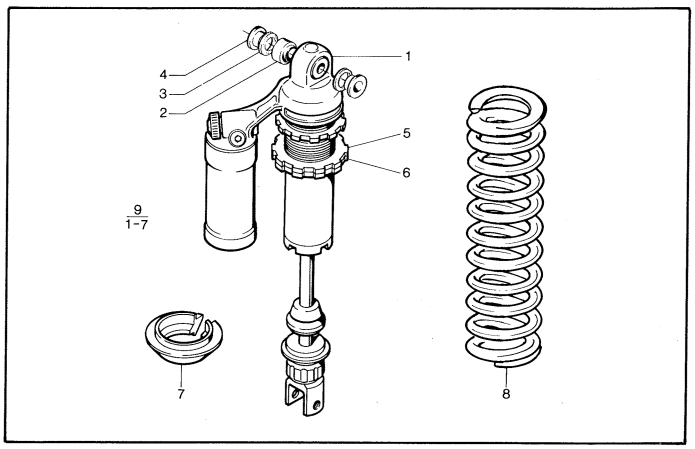

Stötdämpare. *Shockabsorber.* **12**

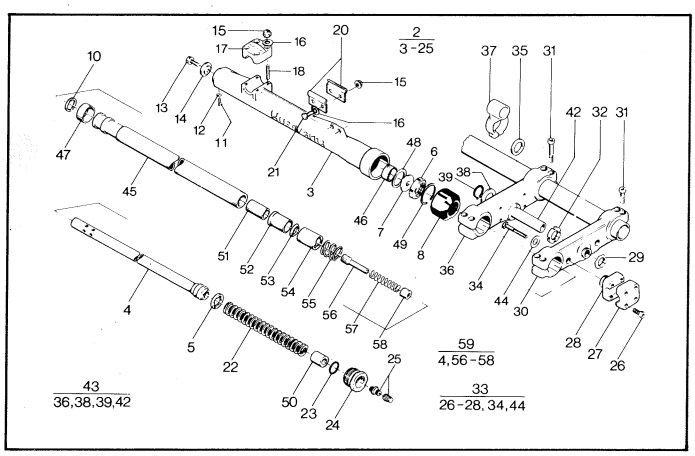

Framgaffel. *Frontfork.* **7**

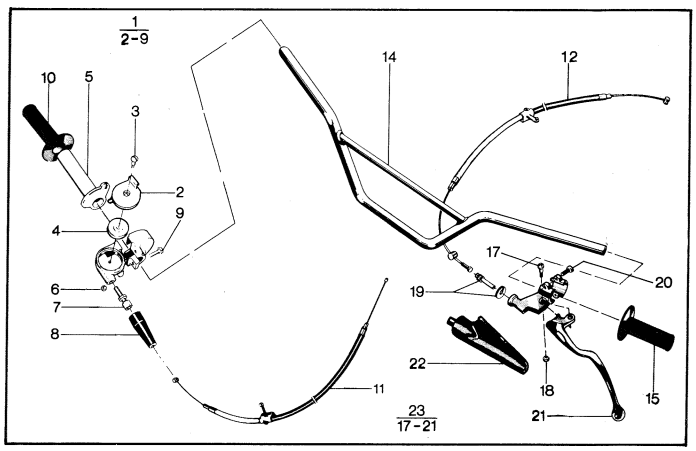

Styre. *Handlebar.* **13**

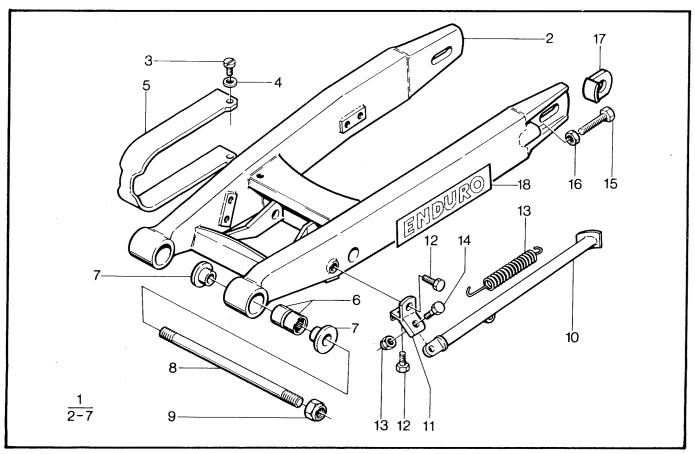

Sving. *Swingarm.* **10**

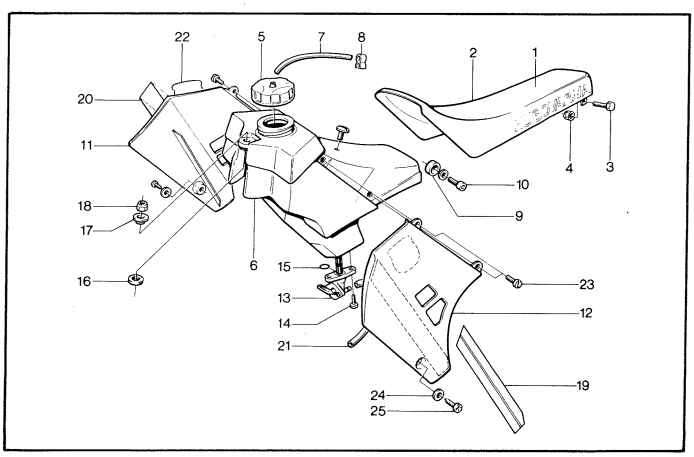

Tank och sadel. *Tank and seat.* **14**

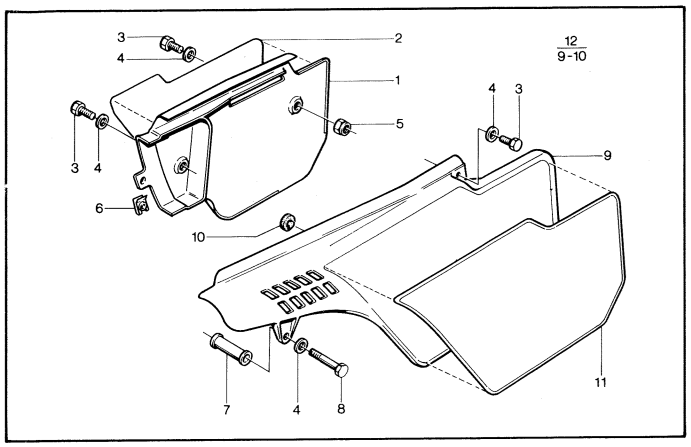

Sidopaneler. *Sidecovers.* **15**

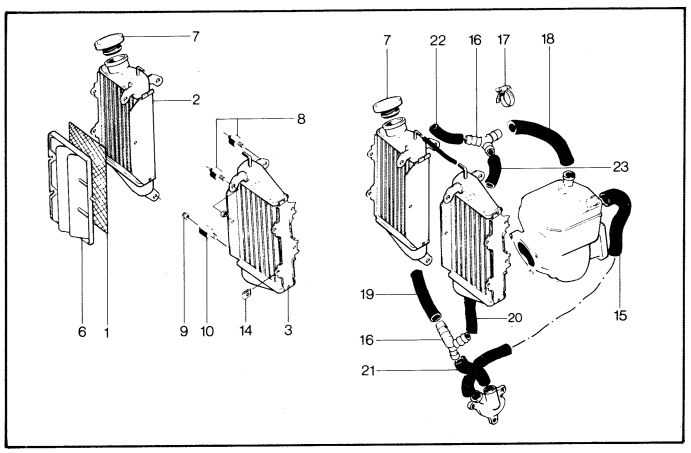

Kylare. *Radiators.* **16**

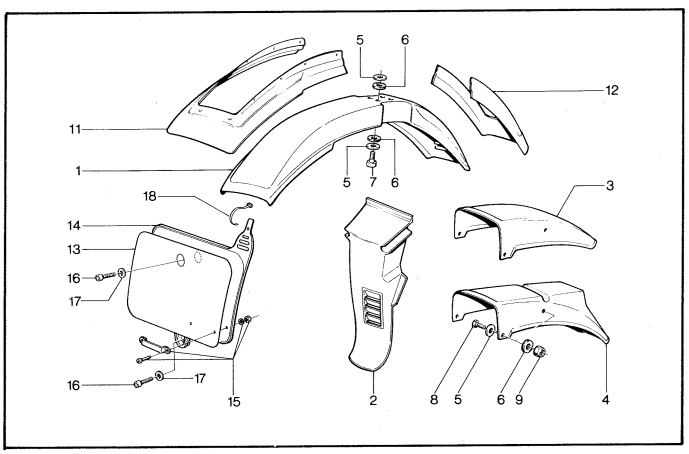

Stänkskärmar. *Fenders.* **17**

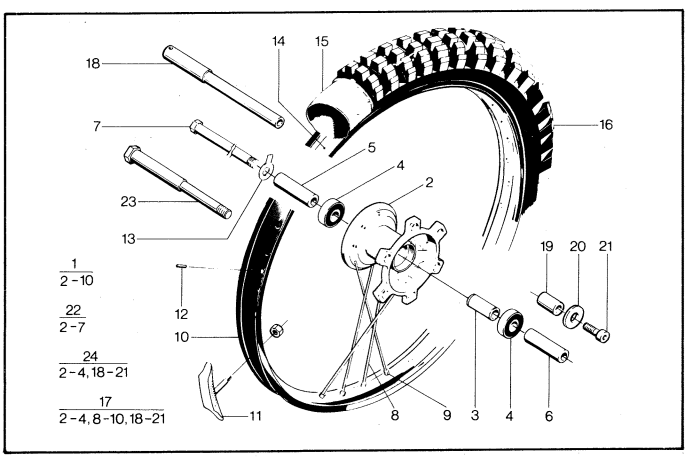

Framhjul. *Frontwheel.* **18**

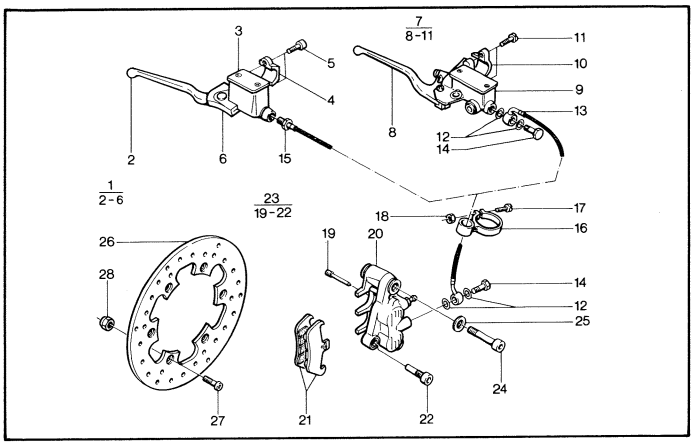

Frambroms. *Frontbrake.* **19**

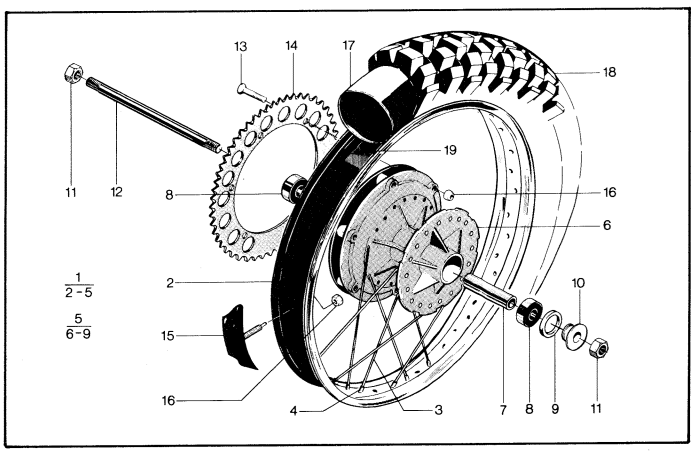

Bakhjul. *Rearwheel.* **20**

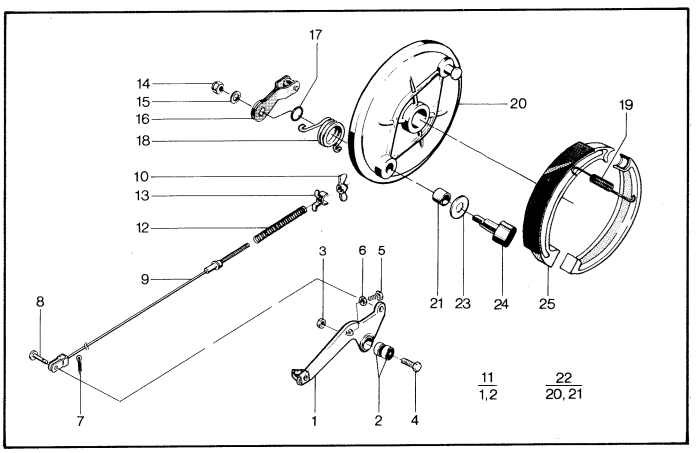

Bakbroms. *Rearbrake.* **22**

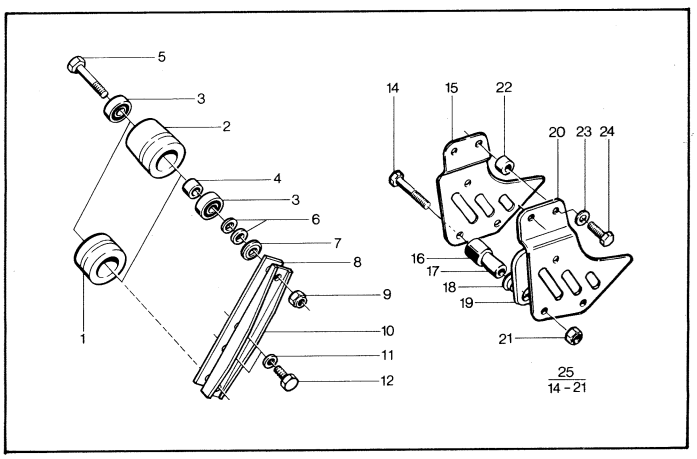

Kedjestyrare CR. *Chainguide.* **24**

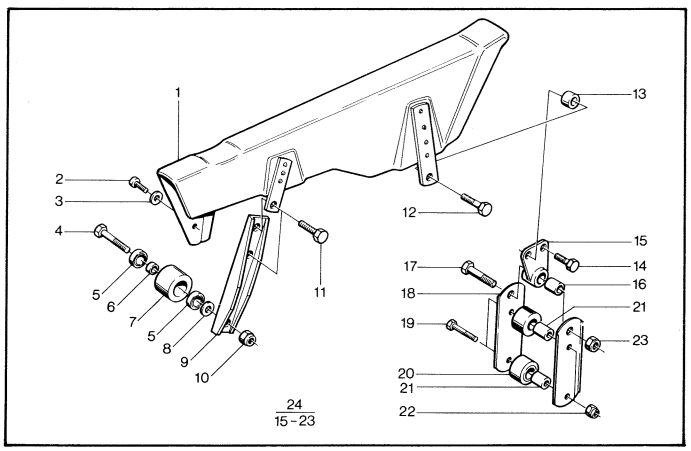

Kedjestyrare WR. *Chainguide.* **25**

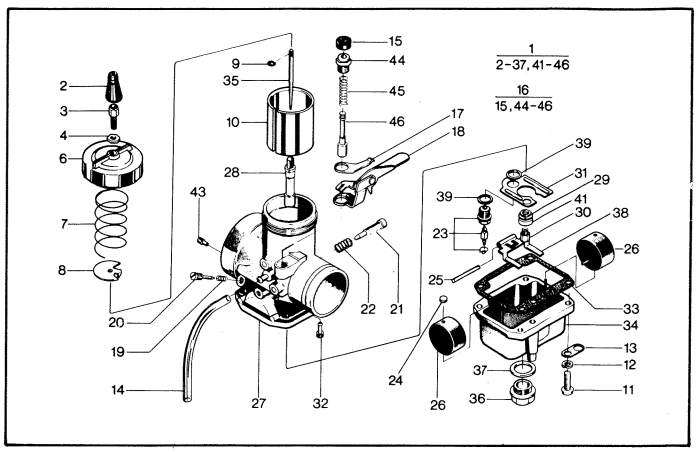

Förgasare. *Carburettor.* **29**

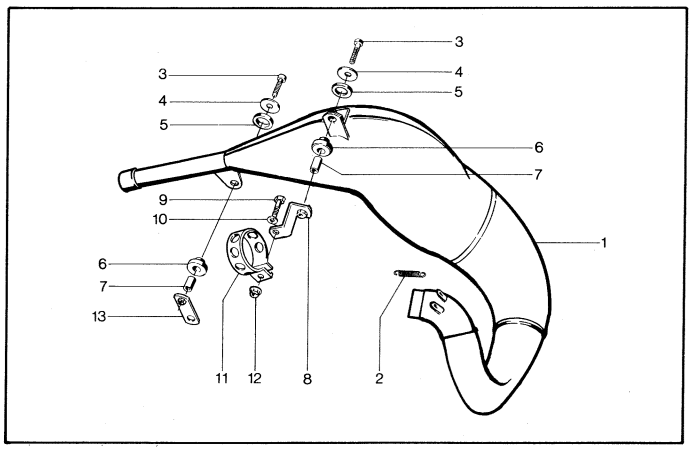

Avgasrör. *Exhaustpipe.* **26**

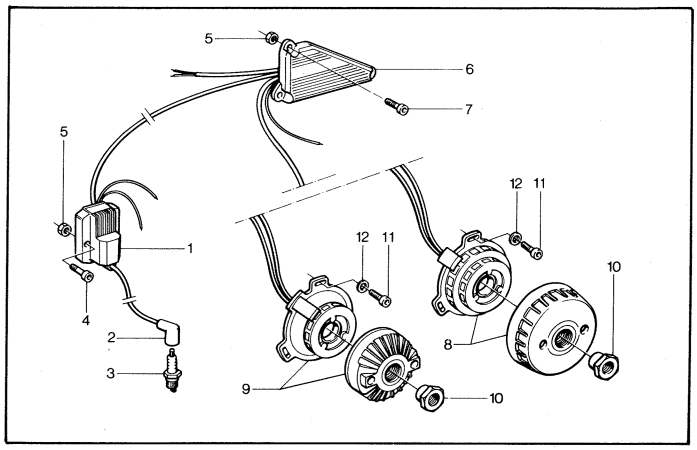

Tändsystem. *Ignition.* **40**

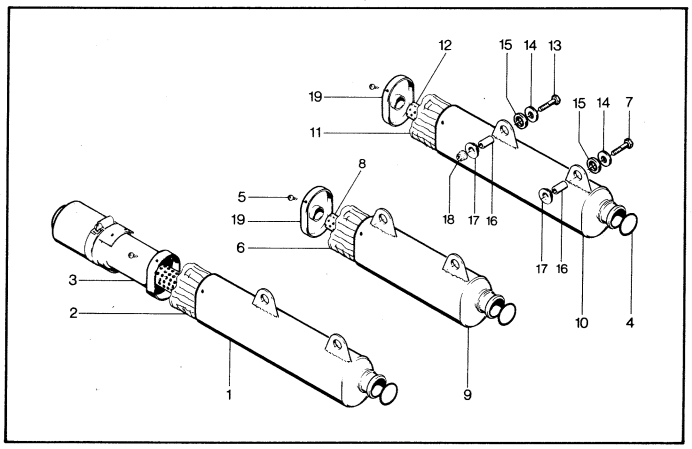

Ljuddämpare. *Silencer.* **27**

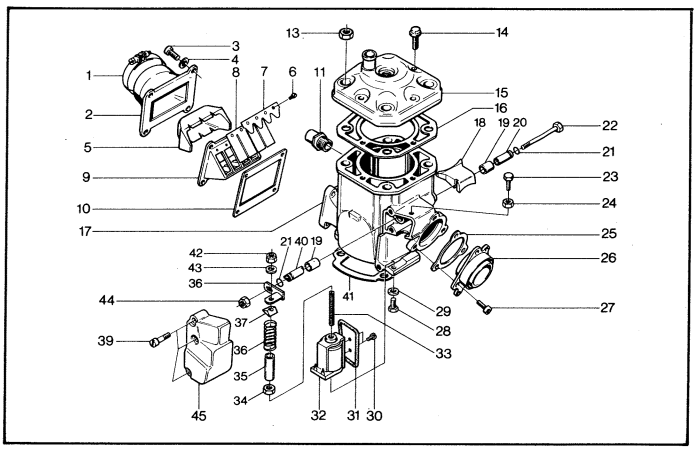

Cylinder. *Cylinder.* **42**

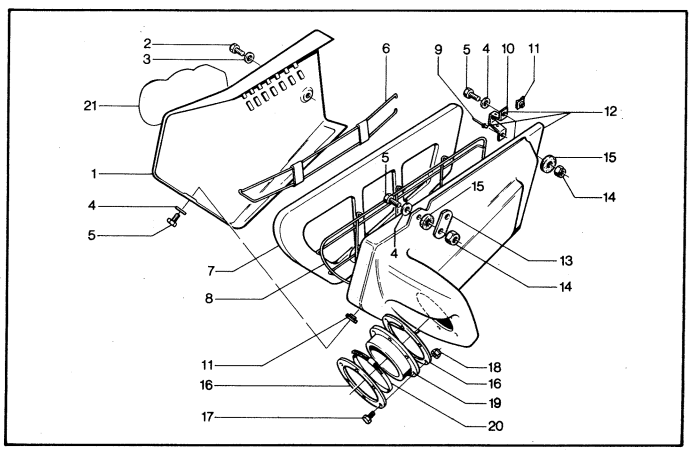

Luftburk. *Airfilterbox.* **28**

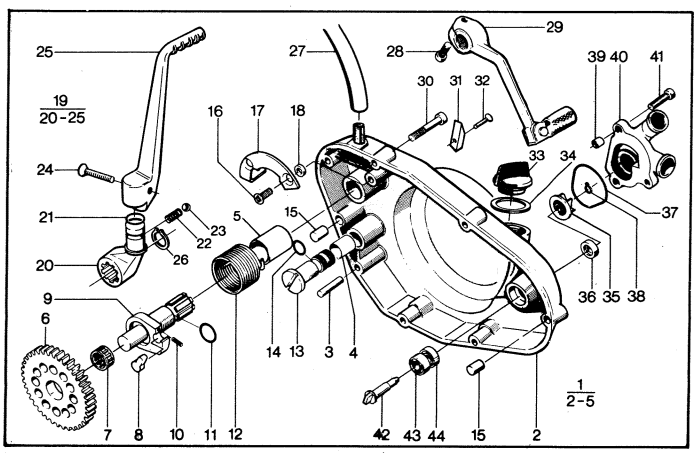

Transmissionskåpa. *Transmissioncover.* **46**

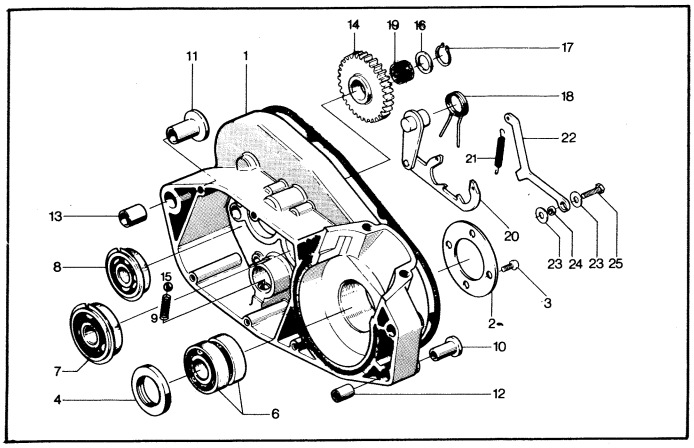

Vevhus, vänster. *Crankcase, left.* **50**

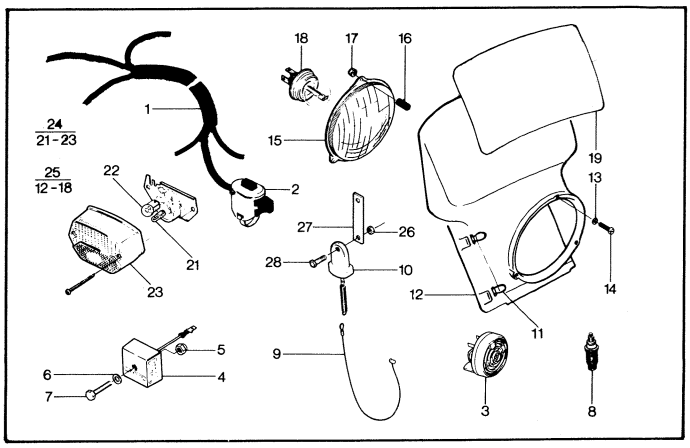

Elsystem. *Electrical equipment.* **67**

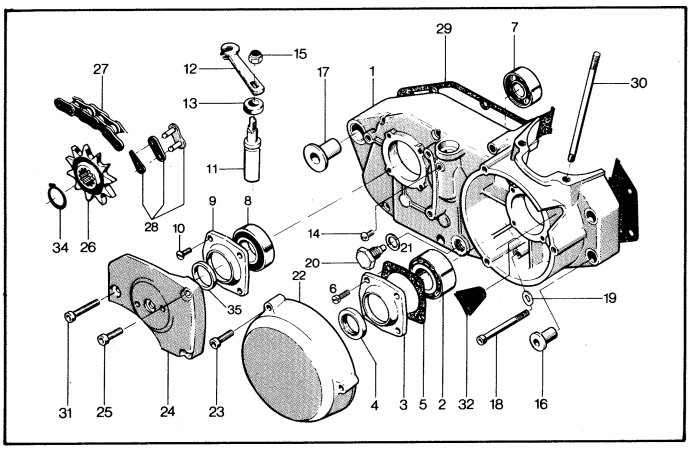

Vevhus, höger. *Crankcase, right.* **52**

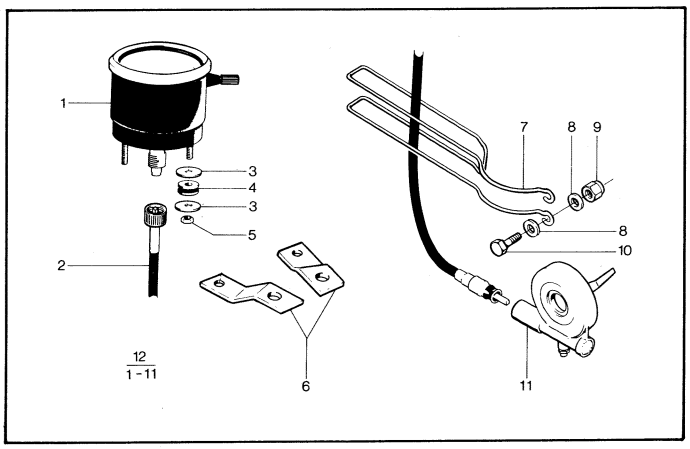

Hastighetsmätare. *Speedometer.* **68**

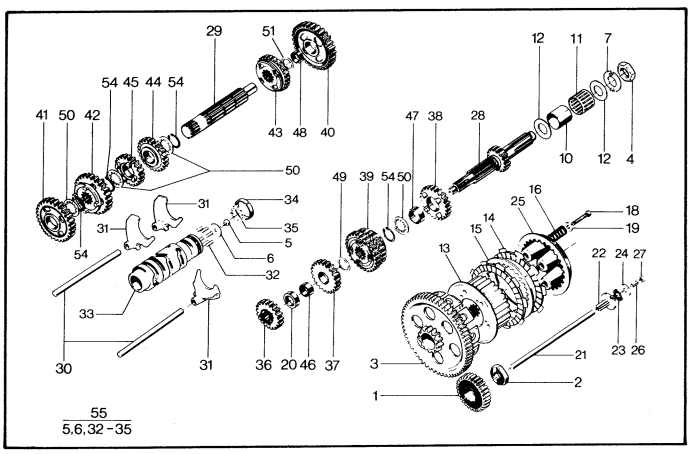

Växellåda. *Gearbox.* **56**

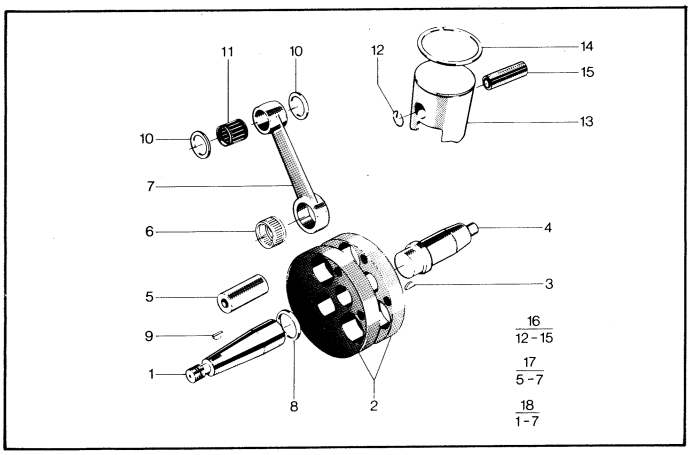

Vevaxel och kolv. *Crankshaft and piston.* **65**

Husqvarna

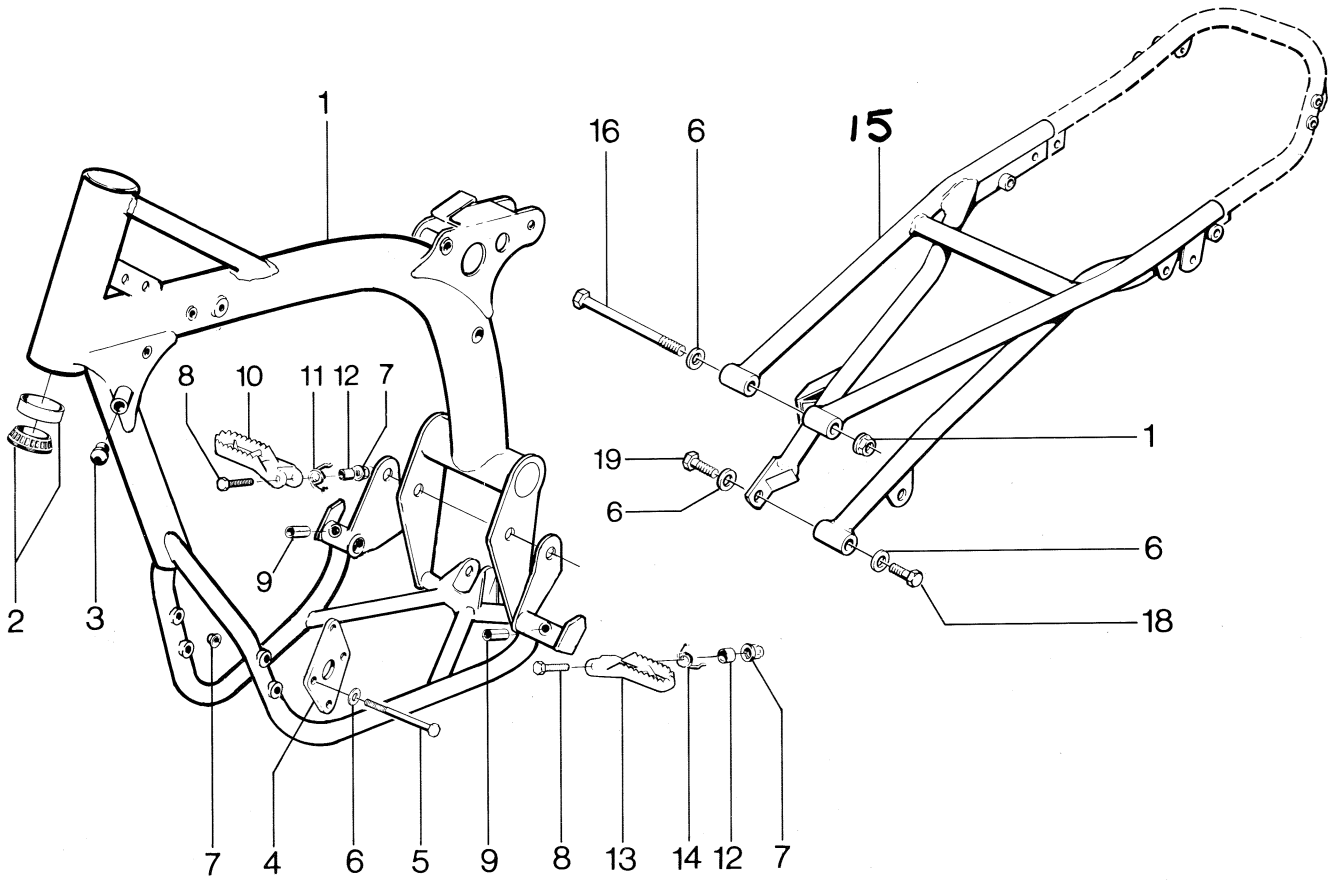

N	Fig.	Reservdel nr Spare part no.	ANTAL – QUANTITY 125 WR	240 CR	240 WR	250 CR	250 EU WR	250 US WR	250 XC	400 WR	430 CR	430 WR	430 XC	430 Aut. EU	430 Aut. US	500 CR	500 XC	Benämning, Description	Not.
N	1	15 11 529-01			1		1			1				1				Ram. Frame.	
N		15 11 529-02						1				1	1		1		1	Ram. Frame.	
N		15 11 529-03									1					1		Ram. Frame.	
N		15 11 529-05	1															Ram. Frame.	
N		15 11 529-06		1		1												Ram. Frame.	
N		15 11 529-07							1									Ram. Frame.	
	2	15 13 070-01	2		2		2	2	2	2		2	2	2	2		2	Styrlager. Bearing.	
	3	15 19 537-01	4	4	4	4	4	4	4	4	4	4	4	4	4	4	4	Propp. Plug.	
	4	15 11 276-01	2															Motorfästplåt. Engine mounting plate.	
		15 11 253-01		2	2	2	2	2	2	2	2	2	2	2	2	2	2	Motorfästplåt. Engine mounting plate.	
	5	725 24 72-81	2	2	2	2	2	2	2	2	2	2	2	2	2	2	2	Bult. Bolt.	
		725 24 61-81	4	4	4	4	4	4	4	4	4	4	4	4	4	4	4	Bult. Bolt.	
	6	734 11 64-01	9	9	9	9	9	9	9	9	9	9	9	9	9	9	9	Bricka. Washer.	
	7	15 13 707-01	6	6	6	6	6	6	6	6	6	6	6	6	6	6	6	Mutter M8. Nut.	
	8	725 24 62-51	2	2	2	2	2	2	2	2	2	2	2	2	2	2	2	Bult. Bolt.	
	9	15 13 160-01	2	2	2	2	2	2	2	2	2	2	2	2	2	2	2	Rörpinne. Bushing.	
	10	15 13 152-01	1	1	1	1	1	1	1	1	1	1	1	1	1	1	1	Fotpinne, höger. Foot peg. Right.	
	11	15 13 158-01	1	1	1	1	1	1	1	1	1	1	1	1	1	1	1	Fjäder, höger. Spring, left.	
	12	15 13 617-01	2	2	2	2	2	2	2	2	2	2	2	2	2	2	2	Distans. Spacer.	
	13	15 13 156-01	1	1	1	1	1	1	1	1	1	1	1	1	1	1	1	Fotpinne, vänster. Foot peg. Left.	
	14	15 13 159-01	1	1	1	1	1	1	1	1	1	1	1	1	1	1	1	Fjäder, vänster. Spring, left.	
N	15	15 11 528-01	1		1		1			1		1		1	1			Sadelbrygga. Rearframe.	
N		15 11 528-02		1		1			1		1		1			1	1	Sadelbrygga. Rearframe.	
	16	725 24 77-81	1	1	1	1	1	1	1	1	1	1	1	1	1	1	1	Bult. Bolt.	
	17	732 21 18-01	1	1	1	1	1	1	1	1	1	1	1	1	1	1	1	Mutter M8. Nut.	
	18	725 24 61-81	1	1	1	1	1	1	1	1	1	1	1	1	1	1	1	Bult. Bolt.	
	19	725 24 51-51	1	1	1	1	1	1	1	1	1	1	1	1	1	1	1	Bult. Bolt.	

Husqvarna

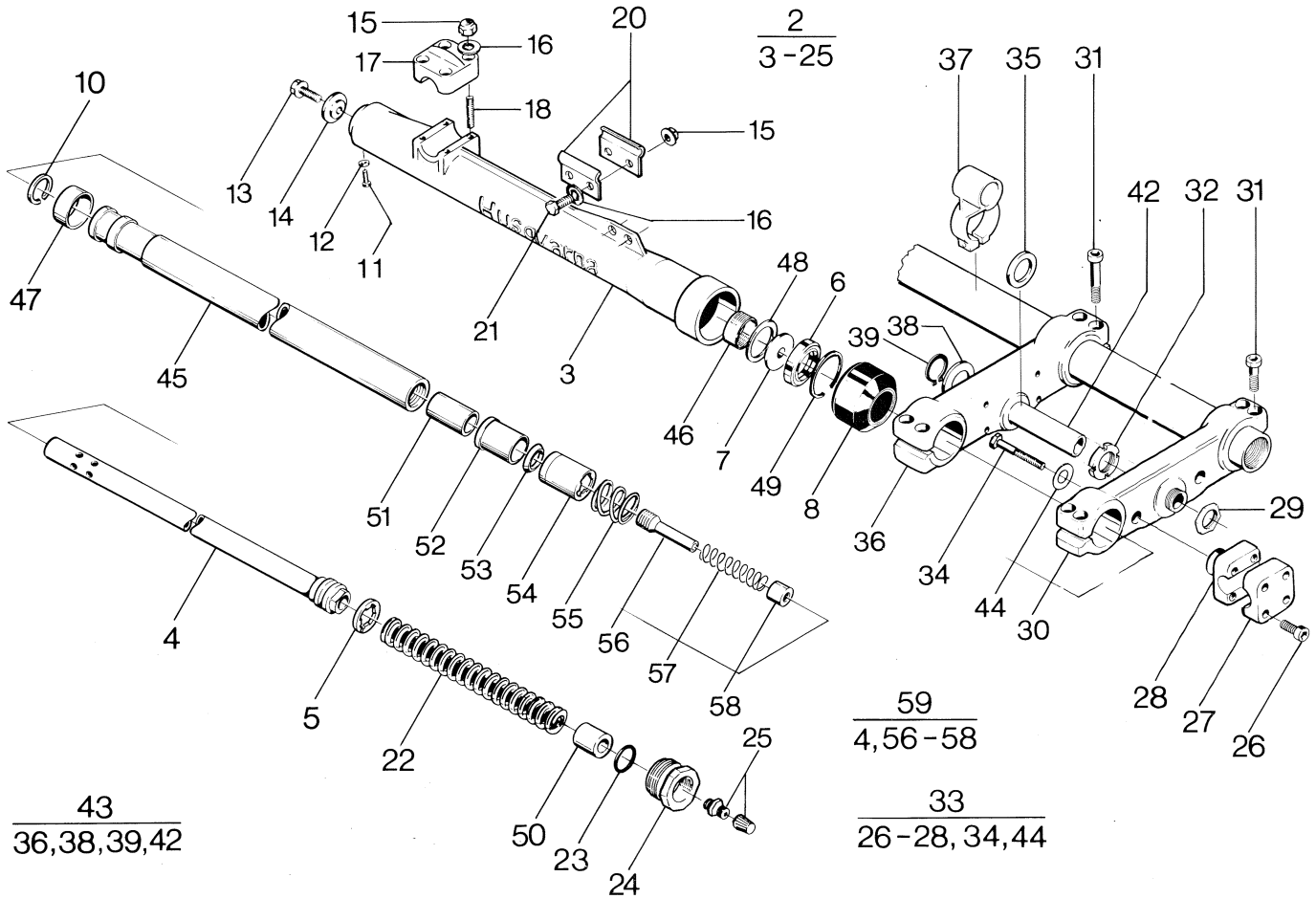

N	Fig.	Reservdel nr Spare part no.	ANTAL – QUANTITY 125 WR	240 CR	240 WR	250 CR	250 EU WR	250 US WR	250 XC	400 WR	430 CR	430 WR	430 XC	430 Aut. EU	430 Aut. US	500 CR	500 XC	Benämning, Description	Not.
N	1	15 12 424-01							1				1				1	Framgaffel kpl. Frontfork compl.	
N		15 12 424-02	1		1		1	1		1		1		1	1			Framgaffel kpl. Frontfork compl.	
N	2	15 12 448-01							2				2				2	Gaffelben kpl. Forkleg compl.	
N		15 12 448-02	2		2		2	2		2		2		2	2			Gaffelben kpl. Forkleg compl.	
	3	15 12 413-01							2				2				2	Gaffelben undre. Forkleg lower.	
		15 12 413-02	2		2		2	2		2		2		2	2			Gaffelben undre. Forkleg lower.	
N	4	15 12 443-01	2		2		2	2	2	2		2	2	2	2		2	Dämpspindel. Dampingspindle.	
	5	15 12 373-01	2		2		2	2	2	2		2	2	2	2		2	Tätningsbricka. Sealwasher.	
	6	15 12 402-01	2		2		2	2	2	2		2	2	2	2		2	Tätningsring. Seal.	
	7	15 12 376-01	2		2		2	2	2	2		2	2	2	2		2	Stödbricka. Supportwasher.	
	8	15 12 372-01	2		2		2	2	2	2		2	2	2	2		2	Avstrykare. Scraper.	
	9	15 12 398-01	2		2		2	2	2	2		2	2	2	2		2	Bottenventil. Valvering.	
N	10	735 31 33-70	2		2		2	2	2	2		2	2	2	2		2	Spårring. Circlip.	
	11	723 13 62-01	2		2		2	2	2	2		2	2	2	2		2	Skruv M6x8. Screw.	
	12	16 10 823-01	2		2		2	2	2	2		2	2	2	2		2	Bricka. Washer.	
	13	725 24 57-51	2		2		2	2	2	2		2	2	2	2		2	Skruv M8x35. Screw.	
	14	15 12 161-01	2		2		2	2	2	2		2	2	2	2		2	Bricka. Washer.	
	15	732 21 16-51	8		8		8	8	8	8		8	8	8	8		8	Mutter M6. Nut.	
	16	734 11 53-01	8		8		8	8	8	8		8	8	8	8		8	Bricka. Washer.	
	17	15 12 379-01	2		2		2	2	2	2		2	2	2	2		2	Överfall. Clamp.	
	18	15 12 371-01	8		8		8	8	8	8		8	8	8	8		8	Pinnskruv. Stud.	
	20	15 16 348-01	2		2		2	2	2	2		2	2	2	2		2	Slanghållare. Hoseholder.	
	21	725 23 68-53	2		2		2	2	2	2		2	2	2	2		2	Skruv M6x16. Screw.	
N	22	15 12 453-01	2		2		2	2		2		2		2	2			Fjäder. Spring.	
N		15 12 453-02							2				2				2	Fjäder. Spring.	
	23	15 13 719-01	2		2		2	2	2	2		2	2	2	2		2	O-ring. O-ring.	
	24	15 12 410-01	2		2		2	2	2	2		2	2	2	2		2	Toppskruv. Topscrew.	
	25	15 12 356-01	2		2		2	2	2	2		2	2	2	2		2	Ventil. Valve.	
	26	725 53 74-01	8		8		8	8	8	8		8	8	8	8		8	Skruv M6x30. Screw.	
	27	15 13 059-01	2		2		2	2	2	2		2	2	2	2		2	Överfall. Clamp.	
	29	15 12 329-01	1		1		1	1	1	1		1	1	1	1		1	Mutter. Nut.	
	30	15 12 404-01	1		1		1	1	1	1		1	1	1	1		1	Gaffelkrona, övre. Tripleclamp, upper.	
	31	725 54 57-01	8		8		8	8	8	8		8	8	8	8		8	Skruv M8x35. Screw.	

Husqvarna

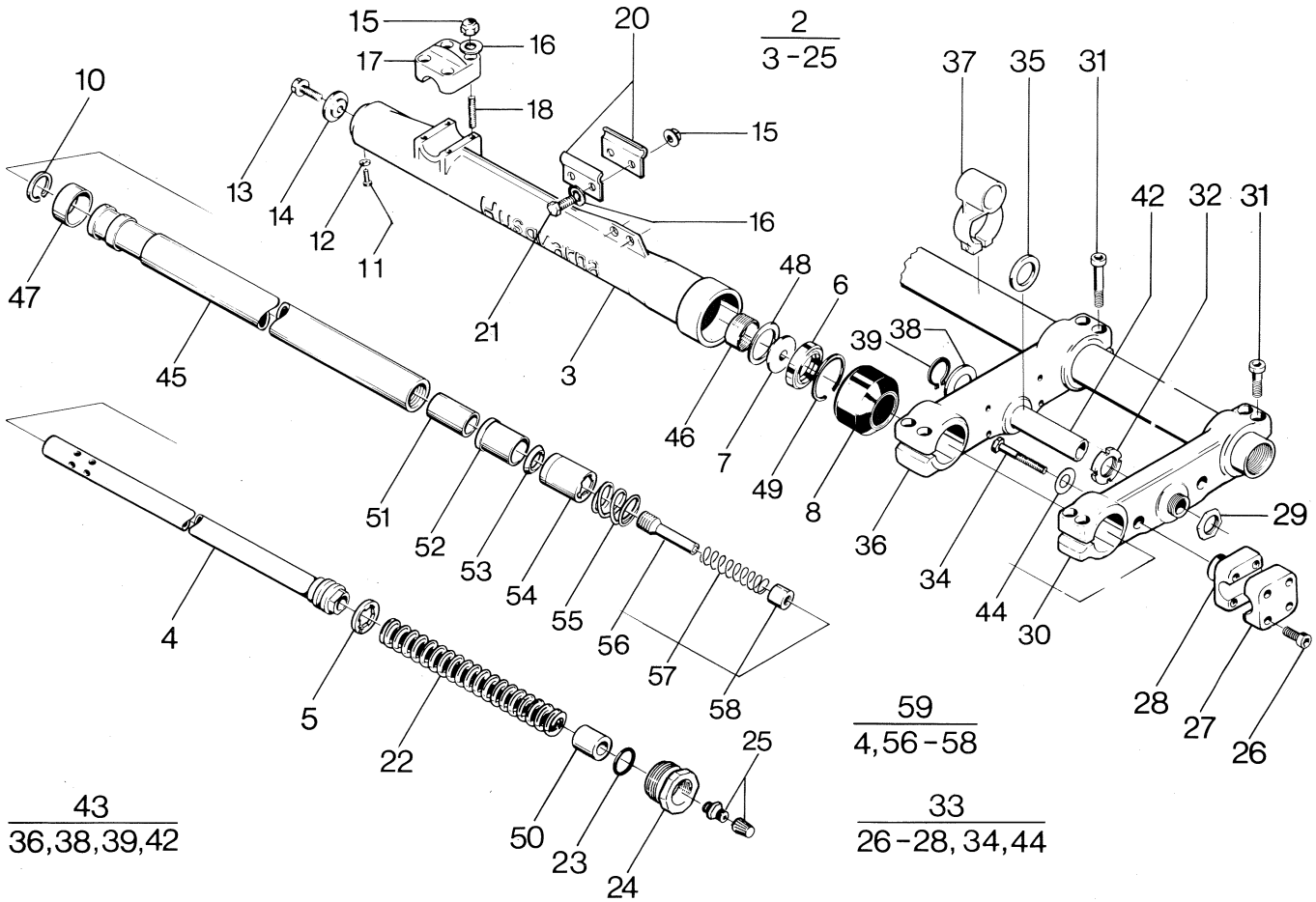

N	Fig.	Reservdel nr Spare part no.	ANTAL – QUANTITY 125 WR	240 CR	240 WR	250 CR	250 EU WR	250 US WR	250 XC	400 WR	430 CR	430 WR	430 XC	430 Aut. EU	430 Aut. US	500 CR	500 XC	Benämning, Description	Not.
	32	15 12 327-01	1		1		1	1	1	1		1	1	1	1		1	Mutter. Nut.	
	33	15 13 141-01	2		2		2	2	2	2		2	2	2	2		2	Styrhållare kpl. Handlebar retainer compl.	
	34	725 24 97-81	2		2		2	2	2	2		2	2	2	2		2	Skruv M10x35. Screw.	
	35	15 12 328-01	1		1		1	1	1	1		1	1	1	1		1	Distans. Spacer.	
	37	15 12 391-01	2		2		2	2	1	2		2	1	2	2		1	Wirestyrare. Cable guide.	
	38	15 12 325-01	1		1		1	1	1	1		1	1	1	1		1	Bricka. Washer.	
	39	735 31 26-00	1		1		1	1	1	1		1	1	1	1		1	Spårring. Circlip.	
	43	15 12 409-01	1		1		1	1	1	1		1	1	1	1		1	Gaffelkrona kpl. Lower Tripleclamp.	
	44	734 11 73-01	2		2		2	2	2	2		2	2	2	2		2	Bricka. Washer.	
	45	15 12 417-01							2				2				2	Gaffelben, övre. Forkleg. upper.	
		15 12 417-02	2		2		2	2		2		2		2	2			Gaffelben, övre. Forkleg, upper.	
	46	15 12 414-01	2		2		2	2	2	2		2	2	2	2		2	Bussning. Bushing.	
	47	15 12 418-01	2		2		2	2	2	2		2	2	2	2		2	Bussning. Bushing.	
	48	15 12 415-01	2		2		2	2	2	2		2	2	2	2		2	Bricka. Washer.	
	49	15 12 416-01	2		2		2	2	2	2		2	2	2	2		2	Spårring. Circlip.	
	50	15 12 458-01							1				1				1	Distans. Spacer.	
N	51	15 12 447-01	2		2		2	2	2	2		2	2	2	2		2	Dämpkona. Dampingcone.	
N	52	15 12 451-01	2		2		2	2	2	2		2	2	2	2		2	Ventilstöd. Valvesupport.	
N	53	15 12 452-01	2		2		2	2	2	2		2	2	2	2		2	Ventil. Valve.	
N	54	15 12 450-01	2		2		2	2	2	2		2	2	2	2		2	Ventilhus. Valvehousing.	
N	55	15 12 446-01							2				2				2	Returfjäder. Return spring.	
N		15 12 446-02	2		2		2	2		2		2		2	2			Returfjäder. Return spring.	
N	56	15 12 444-01	2		2		2	2	2	2		2	2	2	2		2	Bottenplugg. Endplug.	
N	57	15 12 445-01	2		2		2	2	2	2		2	2	2	2		2	Fjäder. Spring.	
N	58	15 12 449-01	2		2		2	2	2	2		2	2	2	2		2	Backventil. Valve.	
N	59	15 12 442-01	2		2		2	2	2	2		2	2	2	2		2	Dämpsindel kpl . Spindle compl.	

Husqvarna

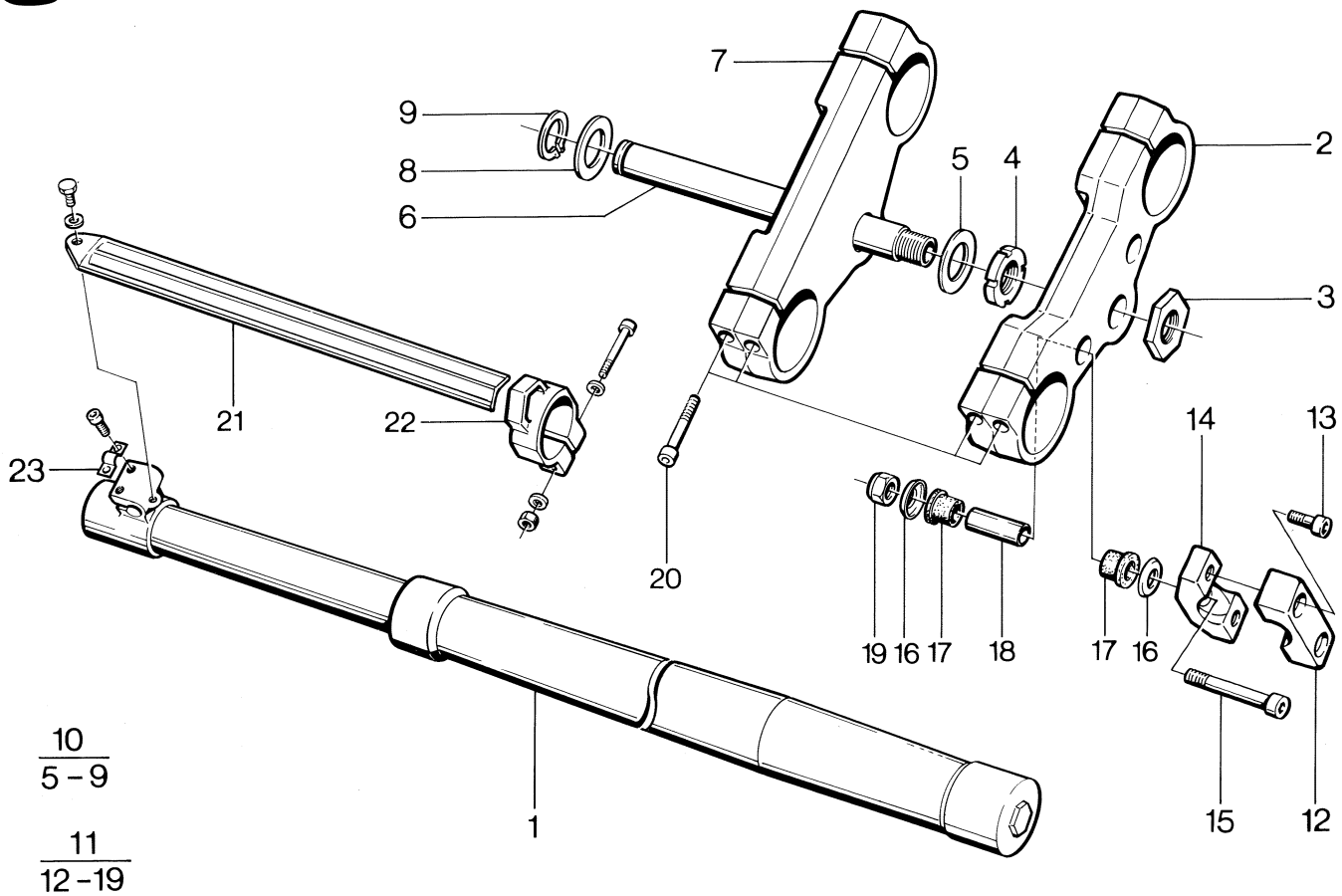

N	Fig.	Reservdel nr Spare part no.	ANTAL – QUANTITY 125 WR	240 CR	240 WR	250 CR	250 EU WR	250 US WR	250 XC	400 WR	430 CR	430 WR	430 XC	430 Aut. EU	430 Aut. US	500 CR	500 XC	Benämning, Description	Not.
N	1	15 12 470-01		1		1					1					1		Gaffelben höger, kpl. Forkleg right, compl.	
N		15 12 471-01		1		1					1					1		Gaffelben vänster, kpl. Forkleg left, compl.	
N	2	15 12 472-01		1		1					1					1		Gaffelkrona övre. Fork crown, upper.	
	3	15 12 329-01		1		1					1					1		Slutmutter. Nut.	
	4	15 12 327-01		1		1					1					1		Styrlagermutter. Bearing nut.	
	5	15 12 328-02		1		1					1					1		Distansring. Spacer ring.	
	8	15 12 325-01		1		1					1					1		Bricka. Washer.	
	9	735 31 26-00		1		1					1					1		Spårring. Circlip.	
N	10	15 12 474-01		1		1					1					1		Gaffekrona undre, kpl. Fork crown, lower.	
N	11	15 12 476-01		2		2					2					2		Styrhållare kpl. Steering holder compl.	
N	15	15 12 479-01		1		1					1					1		Skruv M10x60. Screw.	
N	16	15 12 481-01		2		2					2					2		Bricka. Washer.	
N	17	15 12 482-01		2		2					2					2		Gummibussning. Rubber bushing.	
N	18	15 12 480-01		1		1					1					1		Hylsa. Sleeve.	
	19	732 21 20-01		1		1					1					1		Mutter M10, Nut.	
	20	725 54 57-01		8		8					8					8		Skruv M8x40. Screw.	
N	21	15 12 483-01		2		2					2					2		Stenskottskydd. Guard.	
N	22	15 12 484-01		1		1					1					1		Styrning, vänster. Guide, left.	
N		15 12 485-01		1		1					1					1		Styrning, höger. Guide, right.	
N	23	15 12 486-01		1		1					1					1		Slanghållare. Hose holder.	

Husqvarna

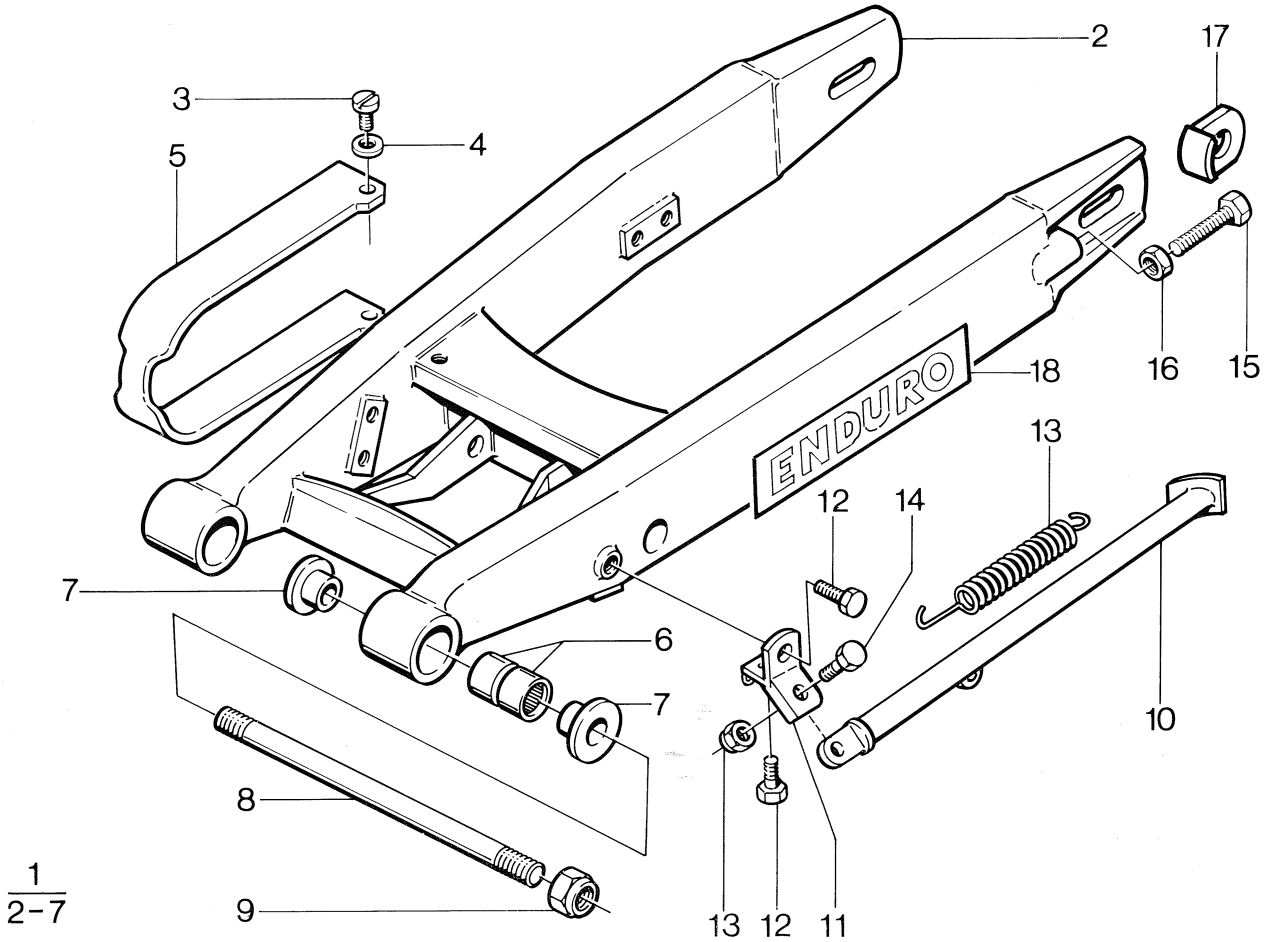

1
2-7

N	Fig.	Reservdel nr Spare part no.	125 WR	240 CR	240 WR	250 CR	250 EU WR	250 US WR	250 XC	400 WR	430 CR	430 WR	430 XC	430 Aut. EU	430 Aut. US	500 CR	500 XC	Benämning, Description	Not.
			ANTAL – QUANTITY																
N	1	15 11 496-01		1		1					1					1		Bakgaffel kpl. Rear fork.	
N	1	15 11 496-02	1		1		1	1	1	1		1	1	1	1		1	Bakgaffel kpl. Rear fork.	
	3	723 13 66-00	2	2	2	2	2	2	2	2	2	2	2	2	2	2	2	Skruv M6x12. Screw.	
	4	734 49 26-01	2	2	2	2	2	2	2	2	2	2	2	2	2	2	2	Bricka 6,7x16. Washer.	
N	5	15 11 554-01	1	1	1	1	1	1	1	1	1	1	1	1	1	1	1	Slitskydd. Protection.	
	6	15 11 277-01	4	4	4	4	4	4	4	4	4	4	4	4	4	4	4	Nållager. Needle bearing.	
	7	15 11 278-01	4	4	4	4	4	4	4	4	4	4	4	4	4	4	4	Distans. Distance.	
	8	15 11 248-01	1	1	1	1	1	1	1	1	1	1	1	1	1	1	1	Fästbult. Bolt.	
	9	15 11 249-01	2		2		2	2	2	2		2	2	2	2		2	Låsmutter. Locking nut.	
	10	15 10 604-04	1		1		1	1	1	1		1	1	1	1		1	Ben kpl parkeringsstöd. Side stand.	
N	11	15 15 553-02	1		1		1	1	1	1		1	1	1	1		1	Fäste kpl parkeringsstöd. Attachment.	
	12	725 24 51-51	1		1		1	1	1	1		1	1	1	1		1	Skruv M 8x20. Screw.	
	13	15 13 707-01	1		1		1	1	1	1		1	1	1	1		1	Låsmutter M8. Locking nut.	
	14	725 24 55-51	1		1		1	1	1	1		1	1	1	1		1	Skruv M 8x30. Screw.	
	15	725 24 60-71	2		2		2	2	2	2		2	2	2	2		2	Skruv M 8x45. Screw.	
	16	731 23 18-01	2		2		2	2	2	2		2	2	2	2		2	Mutter M 8. Nut.	
	17	15 16 867-01	2	2	2	2	2	2	2	2	2	2	2	2	2	2	2	Spännbricka. Adjustment washer.	
	18	15 17 850-01	2		2		2	2		2		2		2	2			Dekal "Enduro". Decal.	
		15 17 850-02							2				2				2	Dekal "Cross Country". Decal.	
		15 17 850-03		2		2					2					2		Dekal "Motocross". Decal.	

Husqvarna

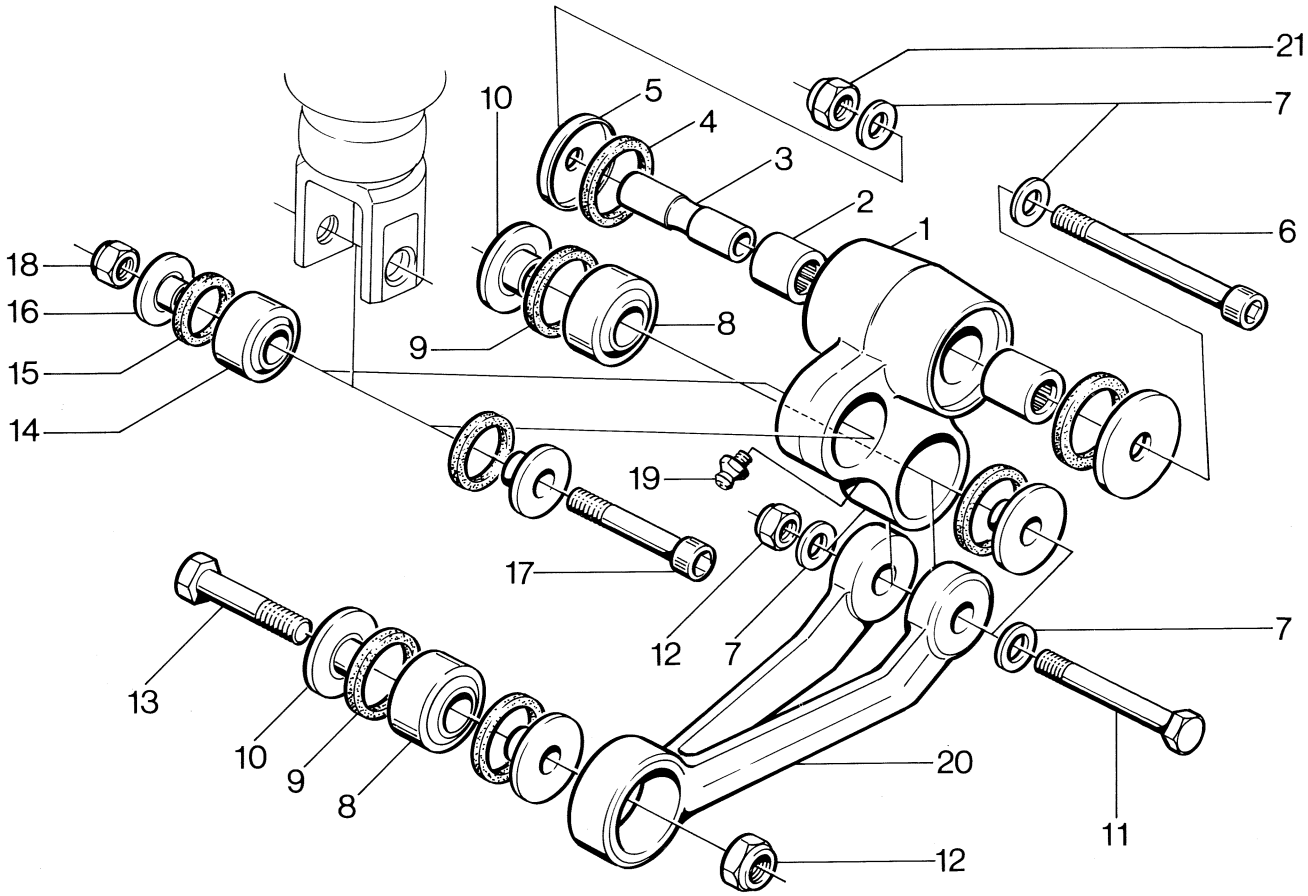

N	Fig.	Reservdel nr Spare part no.	ANTAL – QUANTITY 125 WR	240 CR	240 WR	250 CR	250 EU WR	250 US WR	250 XC	400 WR	430 CR	430 WR	430 XC	430 Aut. EU	430 Aut. US	500 CR	500 XC	Benämning, Description	Not.
N	1	15 11 506-01	1	1	1	1	1	1	1	1	1	1	1	1	1	1	1	Vertikallänk. Vertical link.	
	2	15 11 428-01	2	2	2	2	2	2	2	2	2	2	2	2	2	2	2	Nållager. Needle bearing.	
N	3	15 11 398-01	1	1	1	1	1	1	1	1	1	1	1	1	1	1	1	Lagerdistans. Spacer.	
	4	15 11 555-01	2	2	2	2	2	2	2	2	2	2	2	2	2	2	2	Tätning. Gasket.	
	5	15 11 241-01	2	2	2	2	2	2	2	2	2	2	2	2	2	2	2	Skyddsbricka. Protection washer.	
N	6	15 11 545-01	1	1	1	1	1	1	1	1	1	1	1	1	1	1	1	Bult M12x98. Bolt.	
	7	734 11 78-01	4	4	4	4	4	4	4	4	4	4	4	4	4	4	4	Bricka. Washer.	
	8	15 11 256-01	2	2	2	2	2	2	2	2	2	2	2	2	2	2	2	Ledlager. Bearing.	
	9	15 11 257-01	4	4	4	4	4	4	4	4	4	4	4	4	4	4	4	Tätning. Gasket.	
	10	15 11 258-01	4	4	4	4	4	4	4	4	4	4	4	4	4	4	4	Distans. Spacer.	
	11	15 11 553-01	1	1	1	1	1	1	1	1	1	1	1	1	1	1	1	Bult M12x70. Bolt.	
	12	15 13 705-01	2	2	2	2	2	2	2	2	2	2	2	2	2	2	2	Mutter M12x1. Nut.	
	13	15 11 244-01	1	1	1	1	1	1	1	1	1	1	1	1	1	1	1	Bult M12x50. Bolt.	
	14	15 11 332-01	1	1	1	1	1	1	1	1	1	1	1	1	1	1	1	Ledlager. Bearing.	
	15	15 11 334-01	2	2	2	2	2	2	2	2	2	2	2	2	2	2	2	Tätning. Gasket.	
	16	15 11 333-02	2	2	2	2	2	2	2	2	2	2	2	2	2	2	2	Distans. Spacer.	
N	17	15 11 558-01	1	1	1	1	1	1	1	1	1	1	1	1	1	1	1	Skruv M10. Screw.	
	18	732 21 20-01	1	1	1	1	1	1	1	1	1	1	1	1	1	1	1	Mutter M 10. Nut.	
	19	738 88 10-01	1	1	1	1	1	1	1	1	1	1	1	1	1	1	1	Smörjnippel. Greasing nipple.	
N	20	15 11 505-01	1	1	1	1	1	1	1	1	1	1	1	1	1	1	1	Horisontallänk. Horisontal link.	
	21	732 21 22-01	1	1	1	1	1	1	1	1	1	1	1	1	1	1	1	Mutter M12. Nut.	

Husqvarna

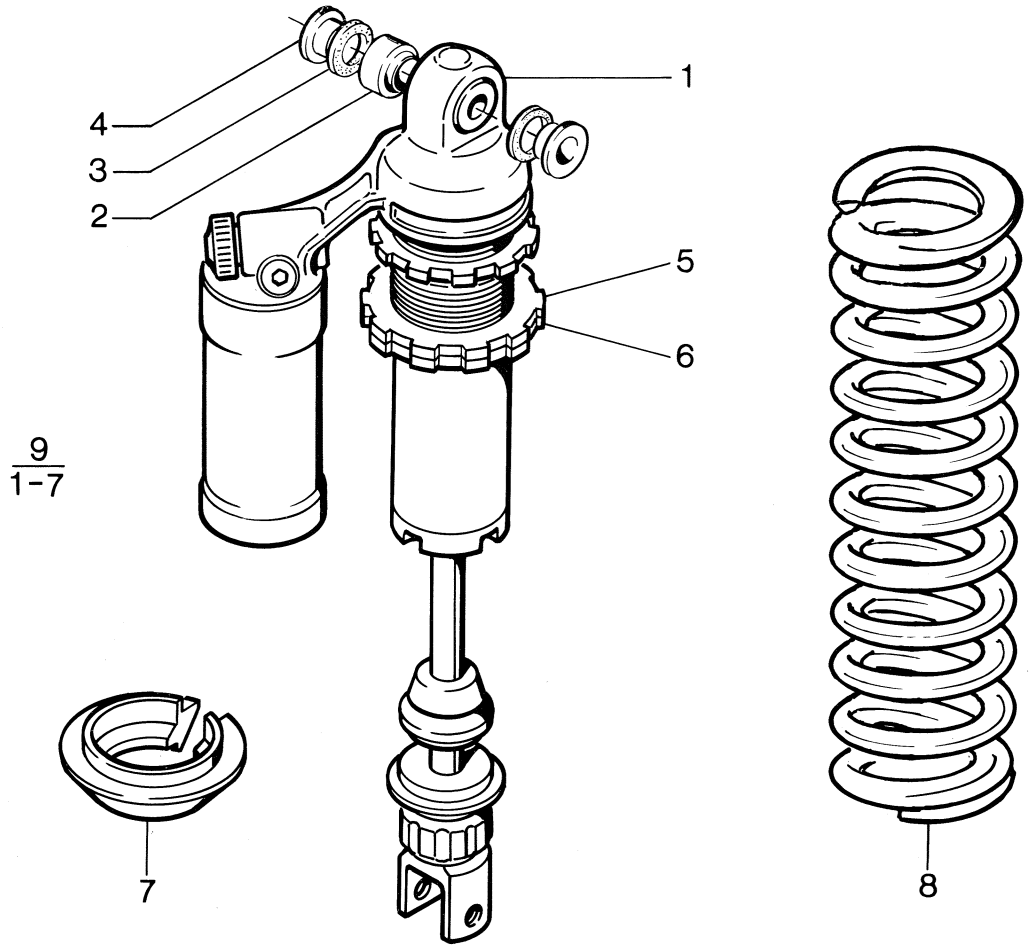

N	Fig.	Reservdel nr Spare part no.	ANTAL – QUANTITY 125 WR	240 CR	240 WR	250 CR	250 EU WR	250 US WR	250 XC	400 WR	430 CR	430 WR	430 XC	430 Aut. EU	430 Aut. US	500 CR	500 XC	Benämning, Description	Not.
	2	15 11 332-01	1	1	1	1	1	1	1	1	1	1	1	1	1	1	1	Kulled, övre. Ball joint.	
	3	15 11 334-01	2	2	2	2	2	2	2	2	2	2	2	2	2	2	2	Tätning. Seal.	
	4	15 11 333-01	2	2	2	2	2	2	2	2	2	2	2	2	2	2	2	Distans. Spacer.	
	5	15 11 328-01	1	1	1	1	1	1	1	1	1	1	1	1	1	1	1	Justermutter. Adjusting nut.	
	6	15 11 329-01	1	1	1	1	1	1	1	1	1	1	1	1	1	1	1	Justermutter. Adjusting nut.	
	7	15 11 574-01	1	1	1	1	1	1	1	1	1	1	1	1	1	1	1	Fjäderclips. Springclip.	
N	8	15 11 573-03	1	1	1	1	1	1	1	1		1		1	1			Fjäder violett-röd-violett 47 N/mm. Spring purple-red-purple.	
N		15 11 573-01																Fjäder violett-svart-violett 43 N/mm. Spring purple-black-purple.	
N		15 11 573-02																Fjäder violett-blå-violett 45 N/mm. Spring purple-blue-purple.	
N		15 11 573-04		1		1			1									Fjäder violett-vit-violett 49 N/mm. Spring purple-white-purple.	
N		15 11 573-05									1		1			1	1	Fjäder svart-violett-svart 51 N/mm. Spring black-purple-black.	
N	9	15 11 509-01		1		1			1									Stötdämpare, kpl. Shock absorber.	
N		15 11 509-02	1		1		1	1		1		1		1	1			Stötdämpare, kpl. Shock absorber.	
N		15 11 509-03									1		1			1	1	Stötdämpare, kpl. Shock absorber.	

Husqvarna

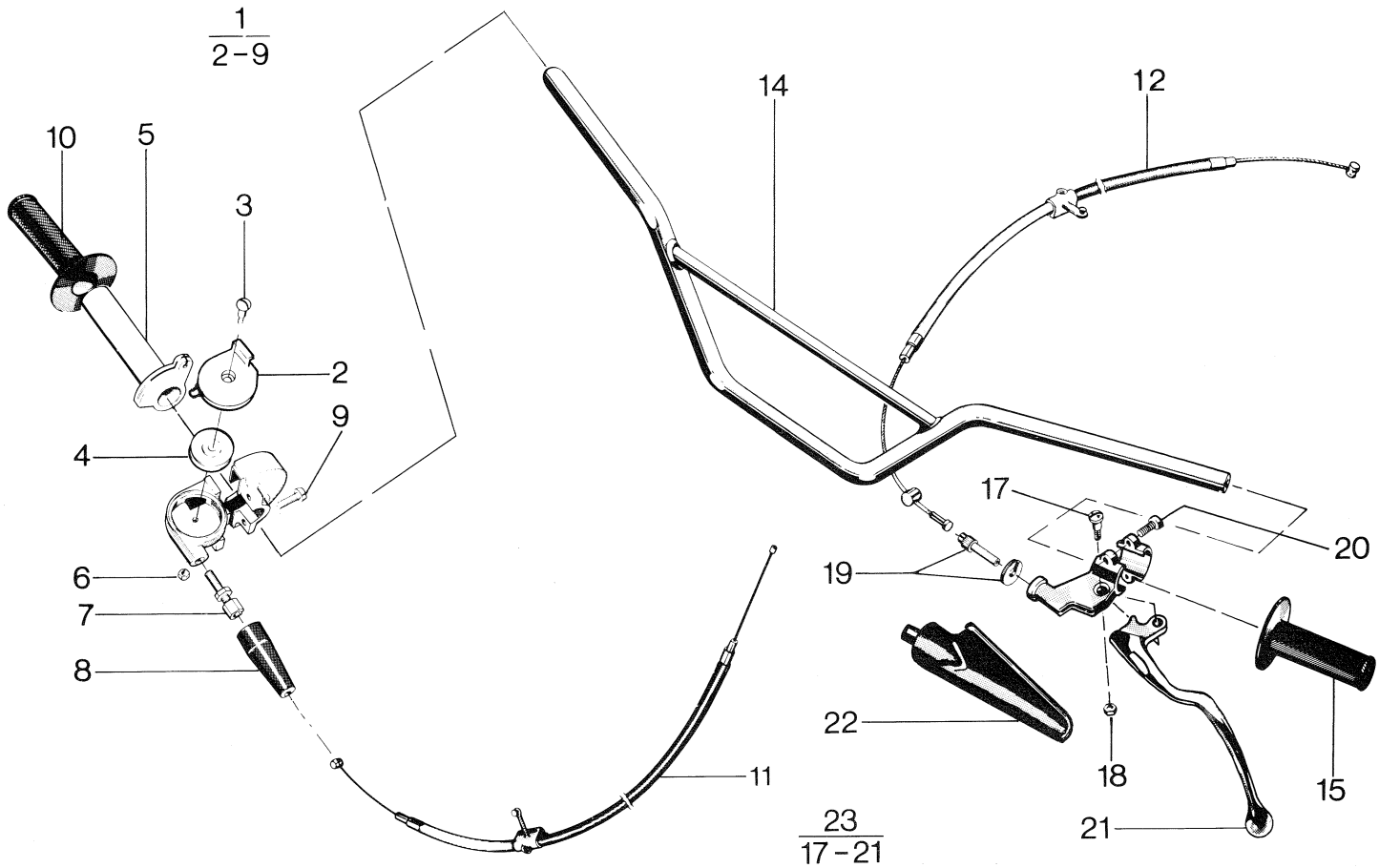

N	Fig.	Reservdel nr Spare part no.	ANTAL – QUANTITY 125 WR	240 CR	240 WR	250 CR	250 EU WR	250 US WR	250 XC	400 WR	430 CR	430 WR	430 XC	430 Aut. EU	430 Aut. US	500 CR	500 XC	Benämning, Description	Not.
	1	15 15 325-01	1	1	1	1	1	1	1	1	1	1	1	1	1		1	Gashandtag, kpl. Throttle handle compl.	
		15 15 325-02														1		Gashandtag, kpl. Throttle handle compl.	
	2	15 15 326-01	1	1	1	1	1	1	1	1	1	1	1	1	1	1	1	Skyddslock. Protect washer.	
	3	15 15 322-01	1	1	1	1	1	1	1	1	1	1	1	1	1	1	1	Skruv. Screw.	
	4	15 15 283-01	1	1	1	1	1	1	1	1	1	1	1	1	1	1	1	Brytrulle. Plastic roller.	
	6	73 22 112-01	1	1	1	1	1	1	1	1	1	1	1	1	1	1	1	Låsmutter M4. Nut.	
	7	15 15 261-01	1	1	1	1	1	1	1	1	1	1	1	1	1	1	1	Justernippel. Nipple.	
	8	15 15 262-01	1	1	1	1	1	1	1	1	1	1	1	1	1	1	1	Skyddshylsa. Protecting sleeve.	
	9	72 31 329-51	2	2	2	2	2	2	2	2	2	2	2	2	2	2	2	Skruv M5 x 16. Screw.	
	10	15 15 266-01	1	1	1	1	1	1	1	1	1	1	1	1	1	1	1	Gummihandtag, höger. Rubber handle right.	
	11	15 15 277-01	1		1		1	1	1	1	1	1	1	1	1		1	Gaswire, kpl. Throttle wire.	
		15 15 277-02														1		Gaswire, kpl. Throttle wire.	
		15 15 277-03		1		1												Gaswire, kpl. Throttle wire.	
	12	15 15 308-03	1															Frikopplingswire, kpl. Declutching wire.	
		15 15 308-02		1	1	1	1	1	1	1	1	1	1			1	1	Frikopplingswire, kpl. Declutching wire.	
	14	15 13 148-01	1	1	1	1	1	1	1	1	1	1	1	1	1	1	1	Styrstång. Handle bar.	
	15	15 15 265-01	1	1	1	1	1	1	1	1	1	1	1	1	1	1	1	Gummihandtag, vänster. Rubber handle left.	
	17	12 13 810-01	1	1	1	1	1	1	1	1	1	1	1			1	1	Ansatsskruv. Screw.	
	18	73 14 316-01	1	1	1	1	1	1	1	1	1	1	1			1	1	Mutter. Nut.	
	19	12 13 821-01	1	1	1	1	1	1	1	1	1	1	1			1	1	Kabelspännskruv. Cable adjusting screw.	
	20	72 31 368-01	2	2	2	2	2	2	2	2	2	2	2			2	2	Skruv. Screw.	
N	21	15 15 315-01	1	1	1	1	1	1	1	1	1	1	1			1	1	Handtag, separat. Lever-blade.	
	22	15 13 074-01	1	1	1	1	1	1	1	1	1	1	1			1	1	Handtagsskydd. Handle protector.	
	23	15 15 314-01	1	1	1	1	1	1	1	1	1	1	1			1	1	Kopplingshandtag, kpl. Clutch-lever assembly.	

Husqvarna

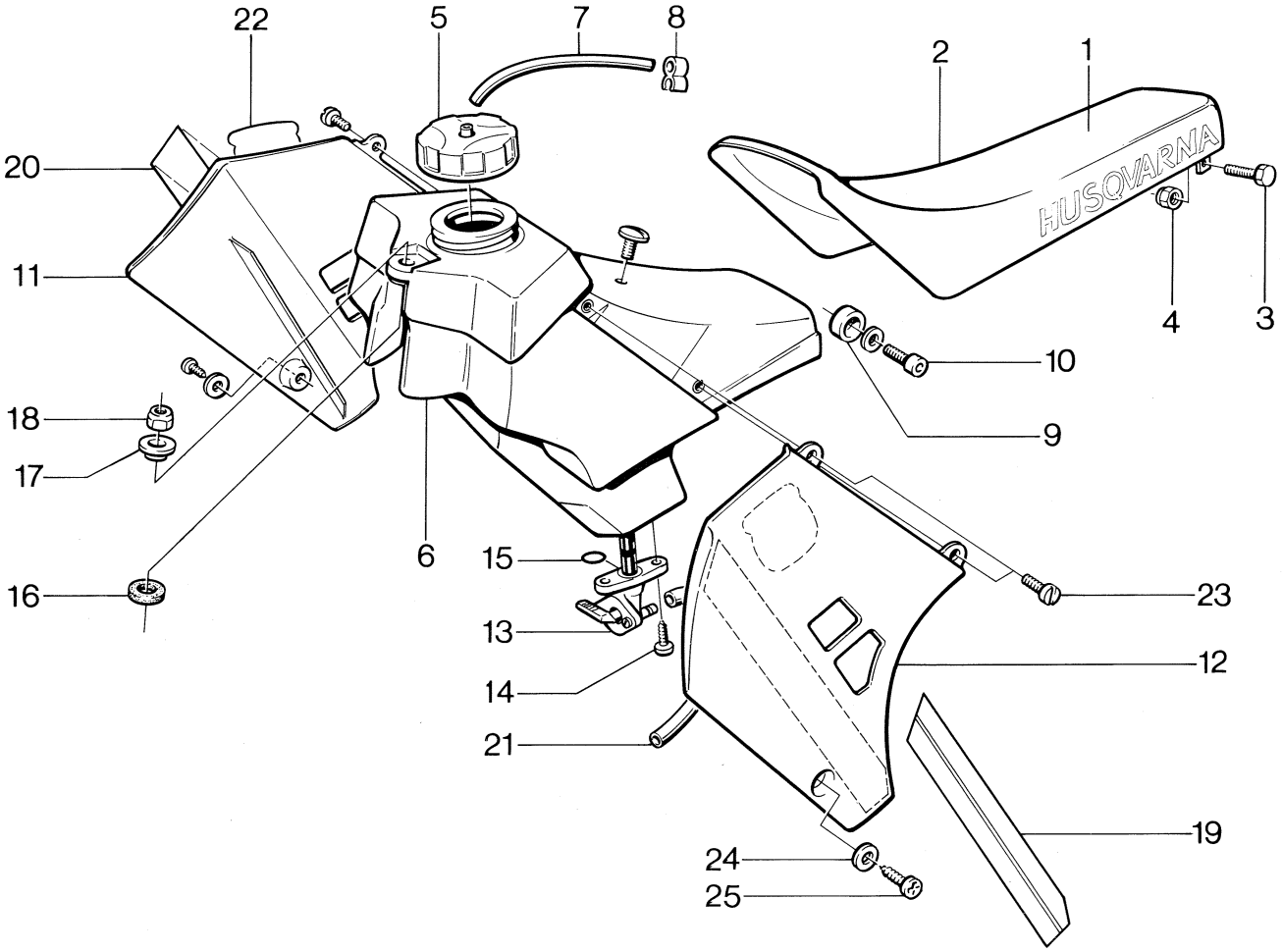

N	Fig.	Reservdel nr Spare part no.	ANTAL – QUANTITY 125 WR	240 CR	240 WR	250 CR	250 EU WR	250 US WR	250 XC	400 WR	430 CR	430 WR	430 XC	430 Aut. EU	430 Aut. US	500 CR	500 XC	Benämning, Description	Not.
N	1	15 13 591-01	1	1	1	1	1	1	1	1	1	1	1	1	1	1	1	Sadel, kpl. Saddle.	
N	2	15 13 592-01	1	1	1	1	1	1	1	1	1	1	1	1	1	1	1	Överdrag. Cover.	
	3	725 23 74-51	2	2	2	2	2	2	2	2	2	2	2	2	2	2	2	Skruv M6x30. Screw.	
	4	15 13 706-01	2	2	2	2	2	2	2	2	2	2	2	2	2	2	2	Mutter M6. Nut.	
	5	15 14 108-01	1	1	1	1	1	1	1	1	1	1	1	1	1	1	1	Tanklock kpl. Cover.	
N	6	15 13 801-01	1	1	1	1	1			1	1			1		1		Bensintank kpl. 10 liter. Petrol tank.	
N		15 13 801-02						1	1			1	1		1		1	Bensintank kpl. 12 liter. Petrol tank.	
	7	15 14 078-06	1	1	1	1	1	1	1	1	1	1	1	1	1	1	1	Ventilationsslang. Vent hose.	
	8	15 15 809-01	1	1	1	1	1	1	1	1	1	1	1	1	1	1	1	Ventilationsnippel. Vent nipple.	
N	9	15 13 806-01	2	2	2	2	2	2	2	2	2	2	2	2	2	2	2	Gummi bakre tankfäste. Rubber.	
	10	725 54 51-01	2	2	2	2	2	2	2	2	2	2	2	2	2	2	2	Skruv M 8x20. Screw.	
N	11	15 13 804-01	1	1	1	1	1			1	1			1		1		Spoiler höger. Spoiler, right.	
N		15 13 855-01						1	1			1	1		1		1		
N	12	15 13 805-01	1	1	1	1	1			1	1			1		1		Spoiler vänster. Spoiler, left.	
N		15 13 854-01						1	1			1	1		1		1		
	13	15 14 109-01	1	1	1	1	1	1	1	1	1	1	1	1	1	1	1	Bensinkran. Petrol cock.	
	14	15 14 110-01	2	2	2	2	2	2	2	2	2	2	2	2	2	2	2	Skruv. Screw.	
	15	740 48 11-02	1	1	1	1	1	1	1	1	1	1	1	1	1	1	1	O-ring.	
	16	15 11 570-01	1	1	1	1	1	1	1	1	1	1	1	1	1	1	1	Gummibricka. Rubber washer.	
	17	15 11 568-01	1	1	1	1	1	1	1	1	1	1	1	1	1	1	1	Bricka, tankfäste. Washer.	
	18	732 21 16-01	1	1	1	1	1	1	1	1	1	1	1	1	1	1	1	Mutter. Nut.	
	19	15 17 955-01	1	1	1	1	1	1	1	1	1	1	1	1	1	1	1	Dekal, spoiler. vänster. Decal spoiler, left.	
	20	15 17 954-01	1	1	1	1	1	1	1	1	1	1	1	1	1	1	1	Dekal, spoiler, höger. Decal spoiler, right.	
	21	15 14 057-02	1	1	1	1	1	1	1	1	1	1	1	1	1	1	1	Bensinslang. Petrol hose.	
	22	15 14 120-01	2	2	2	2	2	2	2	2	2	2	2	2	2	2	2	Dekal. Decal.	
	23	15 13 807-01	4	4	4	4	4	4	4	4	4	4	4	4	4	4	4	Skruv M6. Screw.	
	24	734 49 26-01	2	2	2	2	2	2	2	2	2	2	2	2	2	2	2	Bricka 6,7x16. Washer.	
	25	729 54 14-01	2	2	2	2	2	2	2	2	2	2	2	2	2	2	2	Skruv. Screw.	

Husqvarna

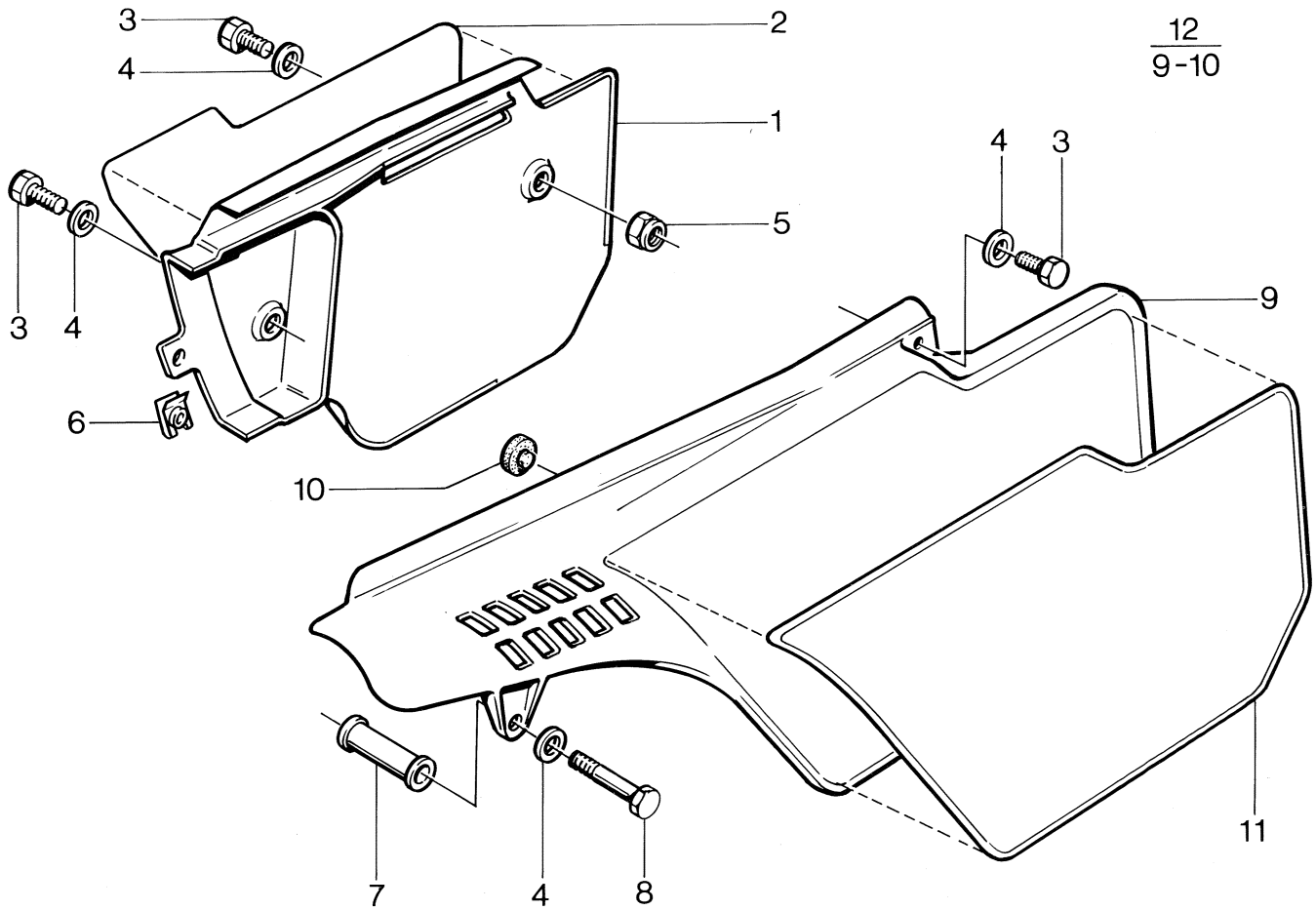

N	Fig.	Reservdel nr Spare part no.	ANTAL – QUANTITY 125 WR	240 CR	240 WR	250 CR	250 EU WR	250 US WR	250 XC	400 WR	430 CR	430 WR	430 XC	430 Aut. EU	430 Aut. US	500 CR	500 XC	Benämning, Description	Not.
N	1	15 15 839-01		1		1			1		1		1			1	1	Sidopanel, höger. Sidepanel, right.	
N	2	15 15 841-01		1		1			1		1		1			1	1	Nummerdekal, gul. Decal, yellow.	
		15 15 841-02																Nummerdekal, vit. Decal, white.	
		15 15 841-03																Nummerdekal, grön. Decal, green.	
	3	725 23 68-51		3		3			3		3		3			3	3	Skruv M6x16. Screw.	
	4	15 13 734-01		4		4			4		4		4			4	4	Bricka 6,4x14. Washer.	
	5	15 13 706-01		1		1			1		1		1			1	1	Låsmutter M6. Locking nut.	
	6	15 13 745-01		1		1			1		1		1			1	1	Snabbmutter. Nut.	
	7	15 19 767-02		1		1			1		1		1			1	1	Distans. Spacer.	
	8	725 23 81-53		1		1			1		1		1			1	1	Skruv M6x55. Screw.	
	10	15 15 810-01		3		3			3		3		3			3	3	Värmeskydd. Heat protector.	
N	11	15 15 840-01		1		1			1		1		1			1	1	Nummerdekal, vänster, gul. Decal, yellow.	
		15 15 840-02																Nummerdekal, vit. Decal, white.	
		15 15 840-03																Nummerdekal, grön. Decal, green.	
N	12	15 15 837-01		1		1			1		1		1			1	1	Sidopanel, vänster. Sidepanel, left.	

Husqvarna

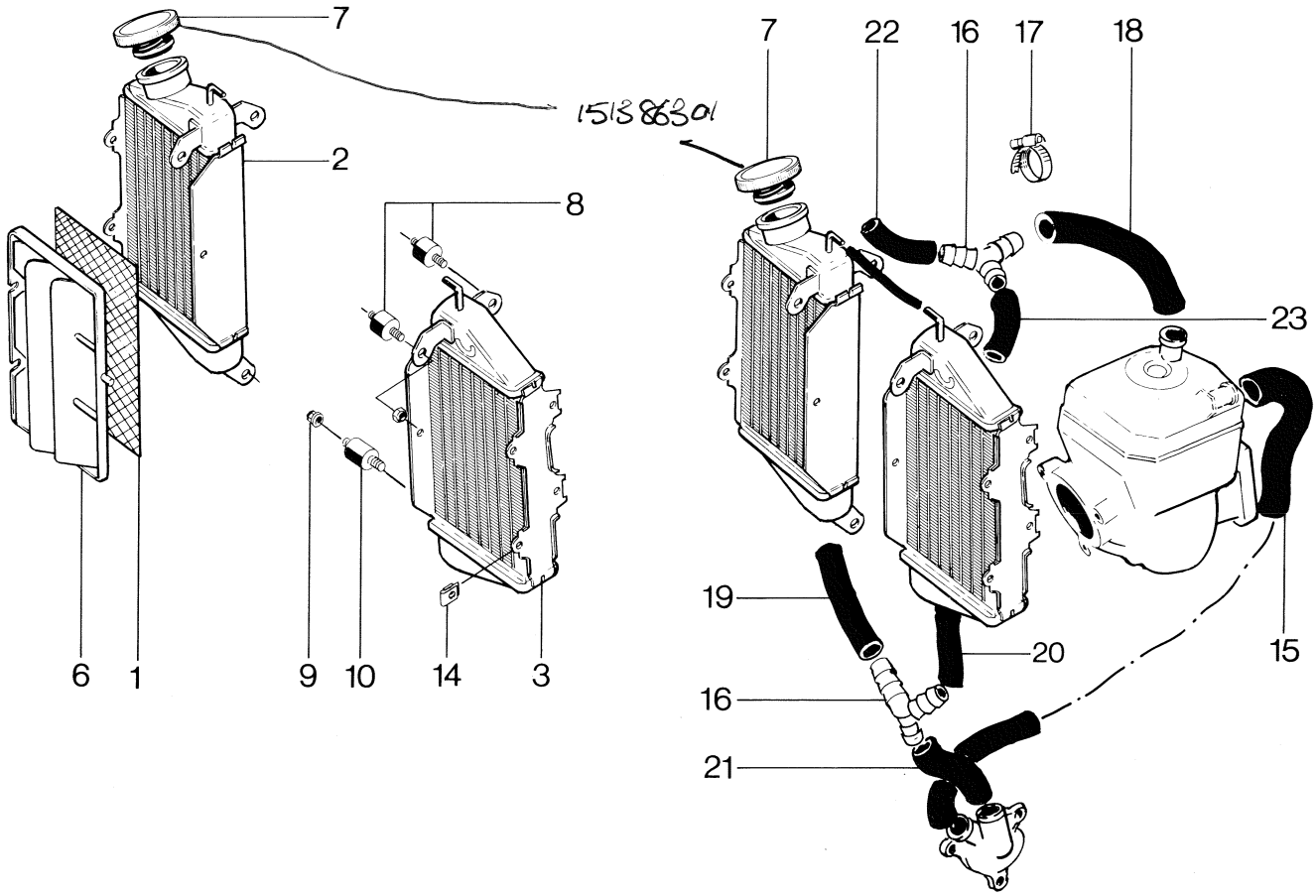

N	Fig.	Reservdel nr / Spare part no.	ANTAL – QUANTITY 125 WR	240 CR	240 WR	250 CR	250 EU WR	250 US WR	250 XC	400 WR	430 CR	430 WR	430 XC	430 Aut. EU	430 Aut. US	500 CR	500 XC	Benämning, Description	Not.
	1	15 13 905-01	2	2	2	2	2	2	2	2	2	2	2	2	2	2	2	Kylargaller. Screen.	
	2	15 13 902-01	1	1	1	1	1	1	1	1	1	1	1	1	1	1	1	Kylare. Radiator.	
	3	15 13 904-01	1	1	1	1	1	1	1	1	1	1	1	1	1	1	1	Kylare. Radiator.	
	6	15 13 906-01	2	2	2	2	2	2	2	2	2	2	2	2	2	2	2	Stänkskydd. Splash shield.	
	7	~~15 14 120-01~~	1	1	1	1	1	1	1	1	1	1	1	1	1	1	1	Kylarlock. Radiator lock.	
	8	15 17 090-01	4	4	4	4	4	4	4	4	4	4	4	4	4	4	4	Vibrationsdämpare L=20 mm. Damper.	
	9	15 13 706-01	8	8	8	8	8	8	8	8	8	8	8	8	8	8	8	Mutter M6. Nut.	
	10	15 17 090-05	2	2	2	2	2	2	2	2	2	2	2	2	2	2	2	Vibrationsdämpare L=10 mm. Damper.	
	14	15 13 907-01	6	6	6	6	6	6	6	6	6	6	6	6	6	6	6	Snabbmutter. Nut.	
	15	16 17 965-01		1	1	1	1	1	1	1	1	1	1	1	1	1	1	Kylarslang. Hose.	
	16	15 14 149-01	2	2	2	2	2	2	2	2	2	2	2	2	2	2	2	Förgrening. Y-branch.	
	17	15 13 740-01	12	12	12	12	12	12	12	12	12	12	12	12	12	12	12	Slangklämma. Hose clamp.	
	18	15 13 916-04								1	1	1	1	1	1	1	1	Kylarslang. Hose.	
		15 13 916-02		1	1	1	1	1	1									Kylarslang. Hose.	
		15 13 916-03	1															Kylarslang. Hose.	
	19	15 13 914-01	1															Kylarslang. Hose.	
		15 13 917-01			1		1	1	1	1	1	1	1	1	1	1	1	Kylarslang. Hose.	
N		15 13 858-01		1		1												Kylarslang. Hose.	
	20	15 13 915-01	1															Kylarslang. Hose.	
		15 13 916-04		1	1	1	1	1	1	1	1	1	1			1	1	Kylarslang. Hose.	
		15 14 148-02												1	1			Kylarslang. Hose.	
	21	15 13 918-01	1															Kylarslang. Hose.	
		15 13 919-01		1	1	1	1	1	1	1	1	1	1	1	1	1	1	Kylarslang. Hose.	
	22	15 13 913-01	1	1	1	1	1	1	1	1	1	1	1	1	1	1	1	Kylarslang. Hose.	
	23	15 13 913-02	1	1	1	1	1	1	1	1	1	1	1	1	1	1	1	Kylarslang. Hose.	

Husqvarna

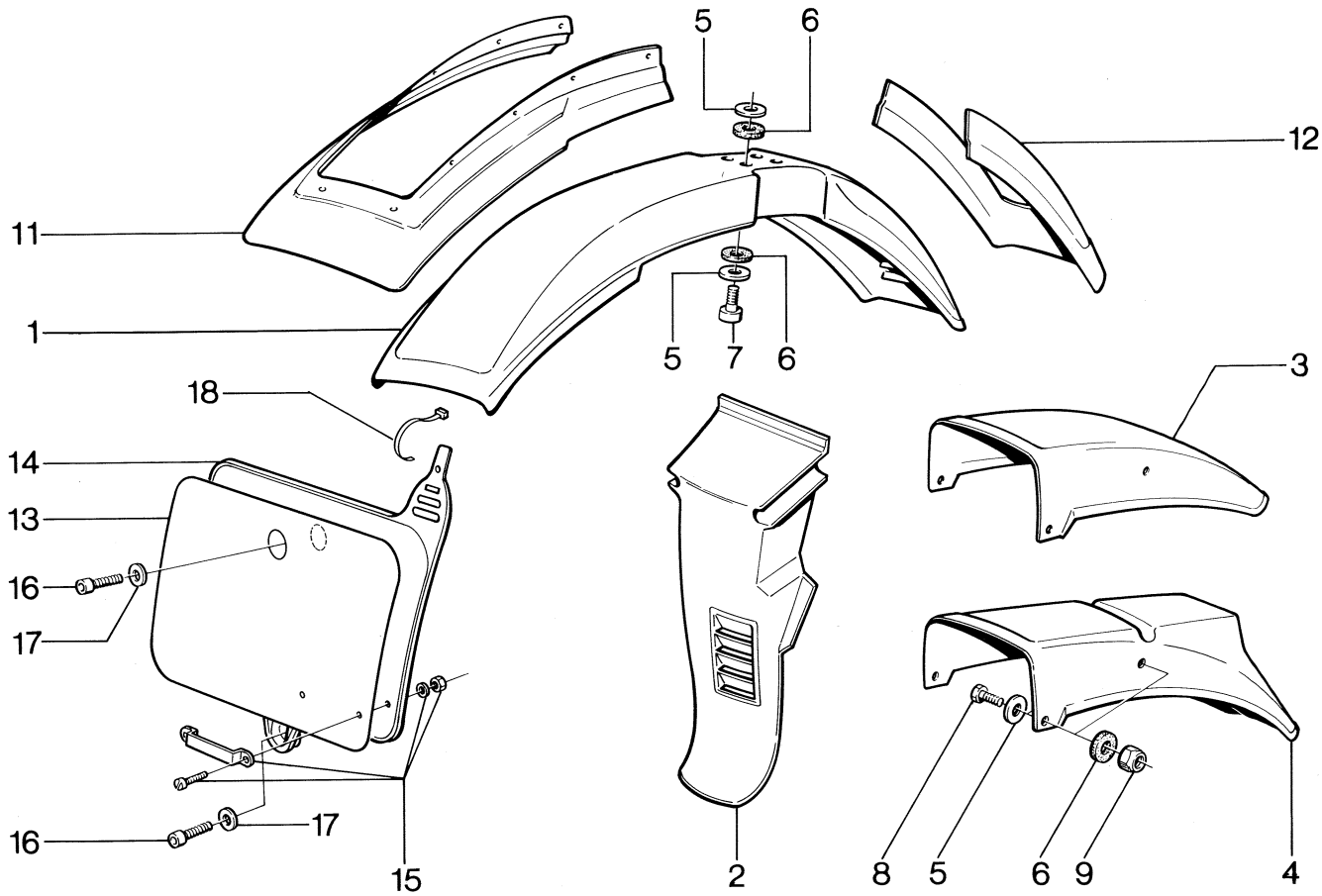

N	Fig.	Reservdel nr Spare part no.	ANTAL – QUANTITY 125 WR	240 CR	240 WR	250 CR	250 EU WR	250 US WR	250 XC	400 WR	430 CR	430 WR	430 XC	430 Aut. EU	430 Aut. US	500 CR	500 XC	Benämning, Description	Not.
	1	15 18 047-02	1	1	1	1	1	1	1	1	1	1	1	1	1	1	1	Framskärm. Front mudguard.	
	2	15 13 746-01	1	1	1	1	1	1	1	1	1	1	1	1	1	1	1	Stänkskydd. Splash shield.	
N	3	15 13 587-01		1		1			1		1		1			1	1	Bakskärm. Rear mudguard.	
N	4	15 18 194-01	1		1		1	1		1		1						Bakskärm. Rear mudguard.	
	5	15 13 709-01	8	8	8	8	8	8	8	8	8	8	8	8	8	8	8	Bricka. Washer.	
	6	15 18 121-01	8	8	8	8	8	8	8	8	8	8	8	8	8	8	8	Gummibricka. Rubber washer.	
	7	725 53 72-01	4	4	4	4	4	4	4	4	4	4	4	4	4	4	4	Skruv M6 x25. Screw.	
	8	725 23 68-51	4	4	4	4	4	4	4	4	4	4	4	4	4	4	4	Skruv M6 x16. Screw.	
	9	732 21 16-01	4		4		4	4		4		4		4	4			Mutter M 6. Nut.	
	11	15 18 050-01																Skärmbreddare. Widener.	
	12	15 18 049-01																Förlängare. Lengthener.	
N	13	15 17 959-01		1		1			1		1		1			1	1	Dekal främre, gul. Decal front, yellow.	
		15 17 959-02																Dekal vit. Decal white.	
		15 17 959-03																Dekal grön. Decal green.	
N	14	15 18 233-01		1		1			1		1		1			1	1		
N	15	15 18 234-01		1		1			1		1		1			1	1	Bromsslangstyrare kpl. Brake hose guide.	
	16	723 13 27-51		1		1			1		1		1			1	1	Skruv M5x12. Screw.	
	17	734 48 80-01		1		1			1		1		1			1	1	Bricka. Washer.	
	18	15 19 532-05		1		1			1		1		1			1	1	Buntband. Ziptie.	

Husqvarna

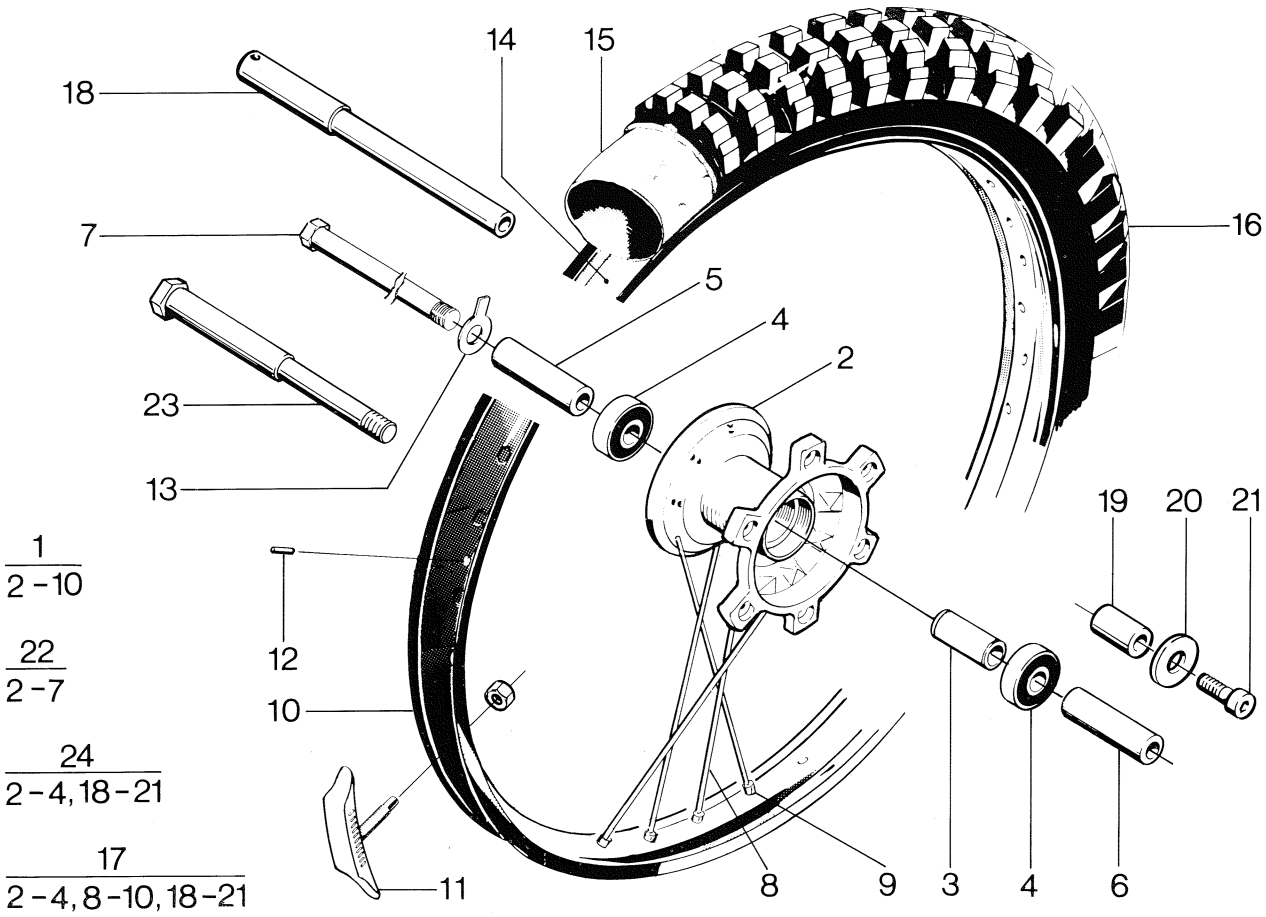

N	Fig.	Reservdel nr Spare part no.	ANTAL – QUANTITY 125 WR	240 CR	240 WR	250 CR	250 EU WR	250 US WR	250 XC	400 WR	430 CR	430 WR	430 XC	430 Aut. EU	430 Aut. US	500 CR	500 XC	Benämning, Description	Not.
N	1	15 17 975-01	1		1		1	1	1	1		1	1	1	1		1	Framhjul kpl. Front wheel compl.	
	2	15 16 324-01	1		1		1	1	1	1		1	1	1	1		1	Navhylsa. Hub sleeve.	
	3	15 16 350-01	1	1	1	1	1	1	1	1	1	1	1	1	1	1	1	Distans. Spacer.	
	4	728 23 02-34	2	2	2	2	2	2	2	2	2	2	2	2	2	2	2	Lager. Bearing.	
	5	15 16 352-01	1		1		1	1		1		1		1	1			Distans. Spacer.	
N	6	15 16 342-01	1		1		1	1	1	1		1	1	1	1		1	Mutter. Nut.	
	7	15 16 351-01	1		1		1	1		1		1		1	1			Axel. Shaft.	
	8	15 16 321-01	36	36	36	36	36	36	36	36	36	36	36	36	36	36	36	Eker. Spoke.	
	9	15 16 219-01	36	36	36	36	36	36	36	36	36	36	36	36	36	36	36	Nippel.	
	10	15 16 320-01	1	1	1	1	1	1	1	1	1	1	1	1	1	1	1	Fälg 1.60x21. Rim.	
	11	15 16 144-01		1		1			1		1				1	1	1	Däcklås. Rimlock.	
	12	720 12 32-00	18		18		18	18		18		18		18	18			Pinne. Pin.	
	13	15 16 355-01	1		1		1	1		1		1		1	1			Låsbricka. Washer.	
	14	15 16 029-01	1	1	1	1	1	1	1	1	1	1	1	1	1	1	1	Fälgband. Rimband.	
	15	15 16 028-01	1	1	1	1	1	1	1	1	1	1	1	1	1	1	1	Innerslang. Tube.	
	16	15 16 907-01		1		1		1	1		1	1	1		1	1	1	Däck 90/90x21 Metzeler MXR. Grip.	
		15 16 257-01	1		1		1			1				1				Däck 3.00x21 Trelleborg Deep. Grip.	
N	17	15 17 977-01		1		1					1					1		Framhjul kpl. WP. Front wheel compl.	
N	18	15 16 375-01		1		1					1					1		Framaxel. Front wheel axle W.P.	
N	19	15 16 376-01		1		1					1					1		Distans. Spacer W.P.	
N	20	734 11 73-01		1		1					1					1		Bricka. Washer. W.P.	
N	21	725 24 91-51		1		1					1					1		Skruv . Screw W.P.	
	22	15 16 323-01	1		1		1	1	1	1		1	1	1	1		1	Framnav kpl. Front hub compl.	
	23	15 16 338-01							1				1				1	Axel. Shaft.	
N	24	15 17 978-01		1		1					1					1		Framnav kpl. Front hub compl. W.P.	
		15 17 780-01																Ekersats. Spoke kit.	
		15 19 902-01																Nippelsats. Nipple kit.	

Husqvarna

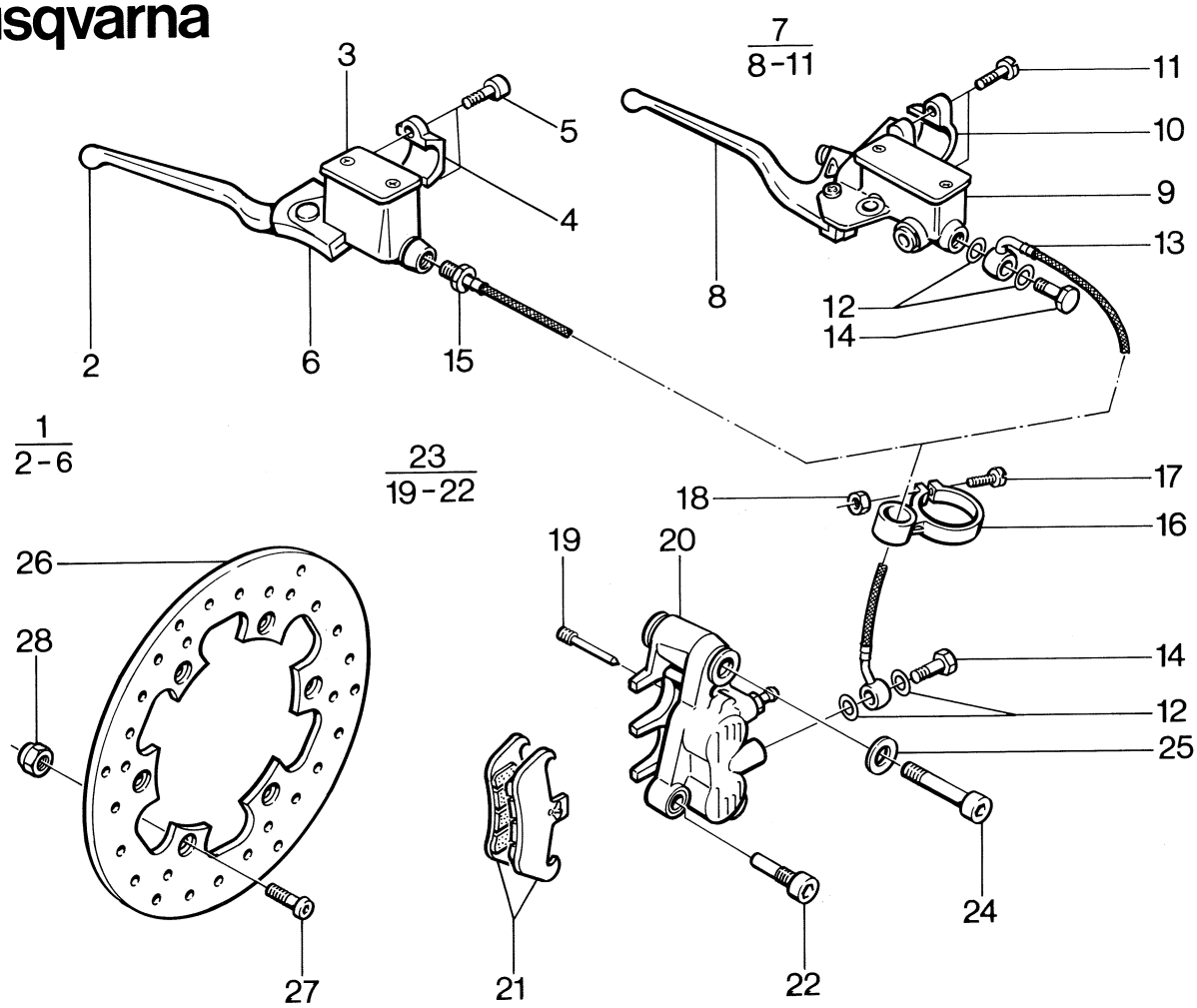

N	Fig.	Reservdel nr Spare part no.	ANTAL – QUANTITY 125 WR	240 CR	240 WR	250 CR	250 EU WR	250 US WR	250 XC	400 WR	430 CR	430 WR	430 XC	430 Aut. EU	430 Aut. US	500 CR	500 XC	Benämning, Description	Not.
	1	15 16 343-01		1		1		1	1		1	1	1		1	1	1	Huvudcylinder kpl Brembo. Main cylinder.	
	2	16 16 346-01		1		1		1	1		1	1	1		1	1	1	Handtag. Handle	
	6	15 16 356-01		1		1		1	1		1	1	1		1	1	1	Handtagsskydd. Handle protection.	
	7	15 16 353-01	1		1		1			1				1				Huvudcylinder kpl Magura. Main cylinder.	
	8	15 16 357-01	1		1		1			1				1				Handtag. Handle.	
N	12	15 16 371-01	4	2	4	2	4	2	2	4	2	2	2	4	2	2	2	Kopparbricka. Copper washer.	
N	13	15 16 372-01	1		1		1			1				1				Bromsslang. Brake hose.	
N	14	15 16 370-01	2	1	2	1	2	1	1	2	1	1	1	2	1	1	1	Hålskruv. Hole screw.	
	15	15 16 367-02						1				1			1			Bromsslang. Brake hose.	
N		15 16 367-01		1		1			1		1		1			1	1	Bromsslang. Brake hose.	
	16	15 12 391-01	2		2		2	2		2		2		2	2			Slangguide. Hose guide.	
	17	723 13 33-01	2		2		2	2		2		2		2	2			Skruv M5x25. Screw.	
	18	731 23 14-01	2		2		2	2		2		2		2	2			Mutter M5. Nut.	
N	19	15 16 364-01	1	1	1	1	1	1	1	1	1	1	1	1	2	1	1	Låspinne. Locking pin.	
N	21	15 16 363-01	1	1	1	1	1	1	1	1	1	1	1	1	2	1	1	Bromsbelägg. Brake pads.	
N	23	15 16 362-01	1	1	1	1	1	1	1	1	1	1	1	1	1	1	1	Bromscylinder kpl Brembo. Brake cylinder.	
N	24	725 54 95-51	1	1	1	1	1	1	1	1	1	1	1	2	1	1	1	Skruv M 10x50. Screw.	
N	25	734 11 71-04	1	1	1	1	1	1	1	1	1	1	1	2	1	1	1	Bricka 10x18. Washer.	
N	26	15 16 926-01	1	1	1	1	1	1	1	1	1	1	1	2	1	1	1	Bromsskiva. Brake disc.	
N	27	15 16 369-01	6	6	6	6	6	6	6	6	6	6	6	6	6	6	6	Skruv M 6x20. Screw.	
	28	15 13 706-01	6	6	6	6	6	6	6	6	6	6	6	6	6	6	6	Mutter. Nut.	

Husqvarna

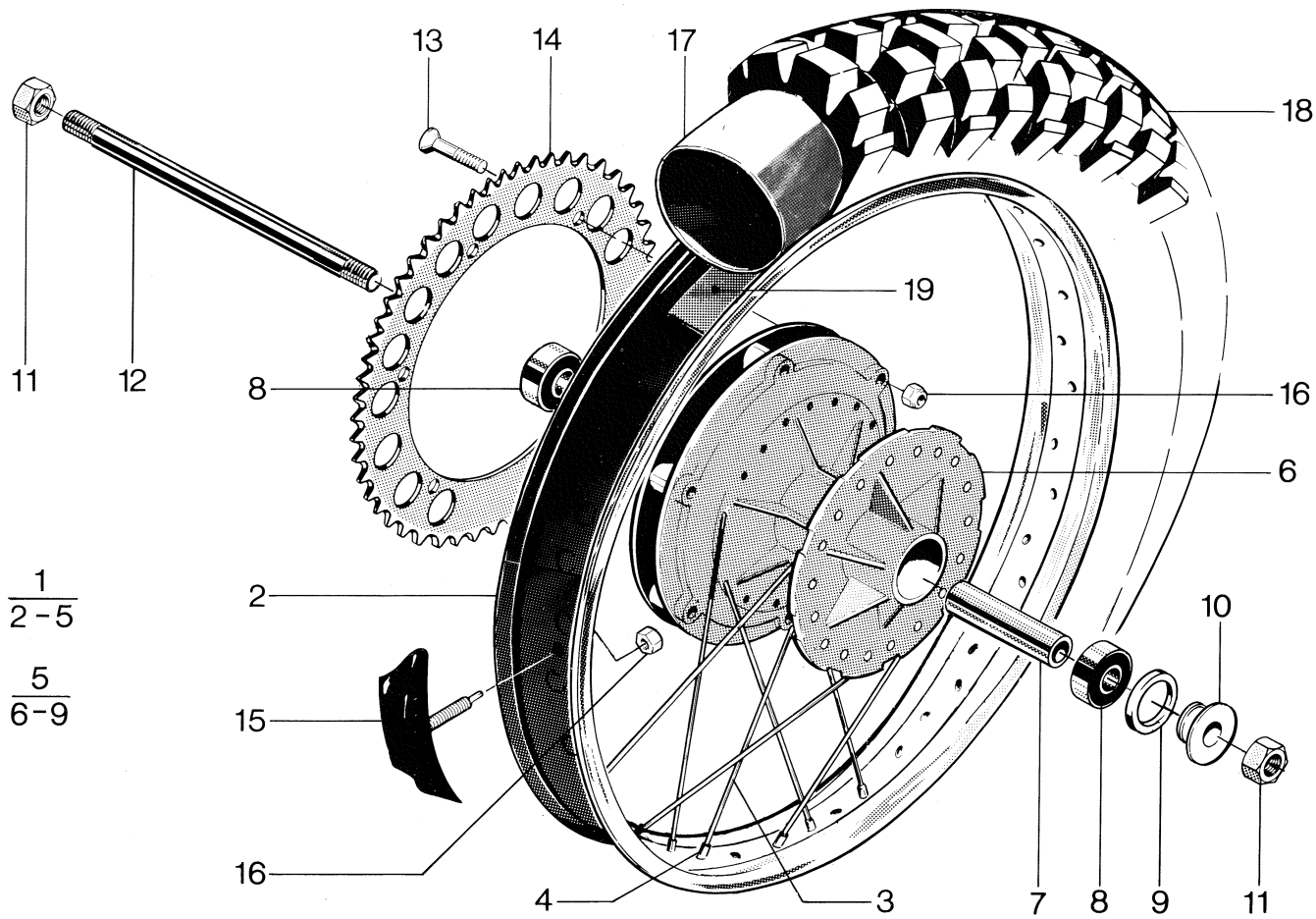

N	Fig.	Reservdel nr Spare part no.	ANTAL – QUANTITY 125 WR	240 CR	240 WR	250 CR	250 EU WR	250 US WR	250 XC	400 WR	430 CR	430 WR	430 XC	430 Aut. EU	430 Aut. US	500 CR	500 XC	Benämning, Description	Not.
	1	15 17 812-01		1		1												Hjul, kpl. exkl. gummi. Wheel excl. rubber.	
		15 17 813-01									1					1		Hjul, kpl. exkl. gummi. Wheel excl. rubber.	
	2	15 16 872-01		1		1												Fälg. Rim.	
		15 16 827-01									1					1		Fälg. Rim.	
	3	15 16 828-02		36		36					36					36		Eker. Spoke.	
	4	15 16 829-01		36		36					36					36		Ekernippel. Spoke nipple.	
	5	15 17 809-01		1		1					1					1		Baknav kpl. utan kedjedrev. Rear hub cpl.	
	6	15 16 817-01		1		1					1					1		Navhylsa kpl. Hub sleeve.	
	7	15 16 752-01		1		1					1					1		Distanshylsa. Distance sleeve.	
	8	738 23 02-34		2		2					2					2		Kullager. Ball bearing.	
	9	15 13 718-01		1		1					1					1		Tätring. Seal.	
N	10	15 16 866-02		1		1					1					1		Distans, vänster. Distance.	
	11	15 16 598-01		2		2					2					2		Mutter. Nut.	
N	12	15 15 524-02		1		1					1					1		Bakaxel. Shaft	
	13	15 16 893-02		6		6					6					6		Skruv M 8. Screw.	
	14	15 16 892-03		1		1					1					1		Kedjekrans 52T. Sprocket.	
	15	15 16 874-01		2		2												Däcklås kpl. Tyre lock.	
		15 16 772-01									2					2		Däcklås kpl. Tyre lock.	
	16	732 21 18-01		7		7					7					7		Låsmutter M8. Nut.	
	17	15 16 508-01		1		1					1					1		Innerslang. Innertyre.	
	18	15 16 883-01		1		1												Däck 4.50 x 18" Metzeler. Motocross. Tyre.	
		15 16 885-01									1					1		Däck 4.50 x 18" Metzeler. Multicross. Tyre.	
	19	15 16 029-01		1		1					1					1		Fälgband. Rimband.	
	14	15 16 892-01																Kedjekrans 48 T. Sprocket.	
		15 16 892-02																Kedjekrans 50 T. Sprocket.	
		15 16 892-04																Kedjekrans 54 T. Sprocket.	
		15 16 892-05																Kedjekrans 56 T. Sprocket.	
N		15 19 952-01																Ekersats. Spoke kit.	
		15 19 938-01																Nippelsats. Nipple kit.	

Husqvarna

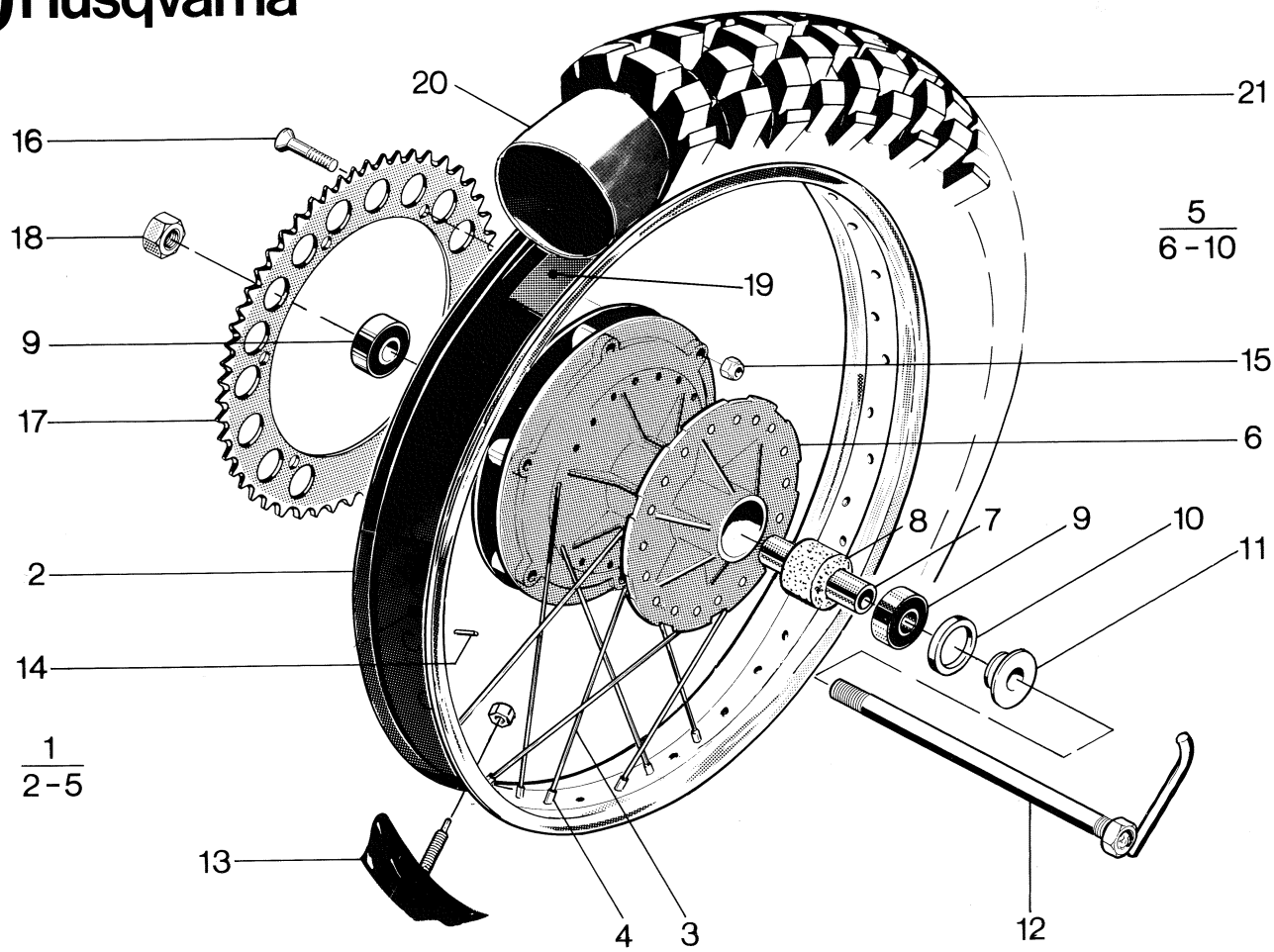

N	Fig.	Reservdel nr Spare part no.	ANTAL – QUANTITY 125 WR	240 CR	240 WR	250 CR	250 EU WR	250 US WR	250 XC	400 WR	430 CR	430 WR	430 XC	430 Aut. EU	430 Aut. US	500 CR	500 XC	Benämning, Description	Not.
	1	15 16 888-01								1		1	1	1	1		1	Hjul, kpl. exkl. gummi. Wheel excl. rubber	
		15 16 888-03	1		1		1	1	1									Hjul, kpl. exkl. gummi. Wheel excl. rubber.	
	2	15 16 827-01	1				1			1	1	1			1			Fälg. Rim.	
	3	15 16 828-02	36		36		36	36	36	36	36	36	36	36	36		36	Eker. Spoke.	
	4	15 16 829-01	36		36		36	36	36	36	36	36	36	36	36		36	Ekernippel. Spoke nipple.	
	5	15 16 889-01	1		1		1	1	1	1	1	1	1	1	1		1	Baknav kpl. utan kedjedrev. Rear hub cpl.	
	6	15 16 854-01	1		1		1	1	1	1	1	1	1	1	1		1	Navhylsa. Hub sleeve.	
	7	15 16 752-01	1		1		1	1	1	1	1	1	1	1	1		1	Distanshylsa. Distance sleeve.	
	8	15 16 300-01	1		1		1	1	1	1	1	1	1	1	1		1	Distanshållare. Space holder.	
	9	738 23 02-34	2		2		2	2	2	2	2	2	1	1	2		2	Kullager. Ball bearing.	
	10	15 13 718-01	1		1		1	1	1	1	1	1	2	2	1		1	Tätring. Seal.	
	11	15 16 866-01	1		1		1	1	1	1	1	1	1	1	1		1	Distans. Spacer.	
	12	15 15 540-02	1		1		1	1	1	1	1	1	1	1	1		1	Bakaxel kpl. Shaft.	
	13	15 16 772-01							2				2	1			2	Däcklås. Tyre lock.	
	14	720 12 32-00	18		18		18	18		18	18	18	18	18	18			Pinne. Pin.	
	15	732 21 18-01	6		6		6	6	6	6	6	6			6		6	Låsmutter. Nut.	
	16	15 16 893-02	6		6		6	6	6	6	6	6			6		6	Skruv. Screw.	
	17	15 16 892-01	1		1			1		1		1		1				Kedjekrans z=48. Sprocket.	
		15 16 892-03					1		1		1		1		1		1	Kedjekrans z=52. Sprocket.	
		15 16 892-04																Kedjekrans z=54. Sprocket.	
		15 16 892-05																Kedjekrans z=56. Sprocket.	
		15 16 892-02																Kedjekrans z=50. Sprocket.	
	18	15 16 598-01	1		1		1	1	1	1	1	1			1		1	Mutter. Nut.	
	19	15 16 029-01	1		1		1	1	1	1	1	1			1		1	Fälgband. Rimband.	
	20	15 16 508-01	1		1		1	1	1	1	1	1			1		1	Innerslang 18". Innertube.	
	21	15 16 839-01	1		1			1										Däck 4.50x18. Trelleborg. Tyre.	
		15 16 883-01					1		1									Däck 4.50x18. Metzeler motocross. Tyre.	
		15 16 848-01								1		1		1				Däck 5.00x18. Trelleborg. Tyre.	
		15 16 885-01									1		1		1		1	Däck 4.50x18. Metzeler Multi Cross. Tyre.	
		15 19 952-01																Ekersats. Spoke unit.	
		15 19 938-01																Nippelsats 36 st. Nipple kit.	

Husqvarna

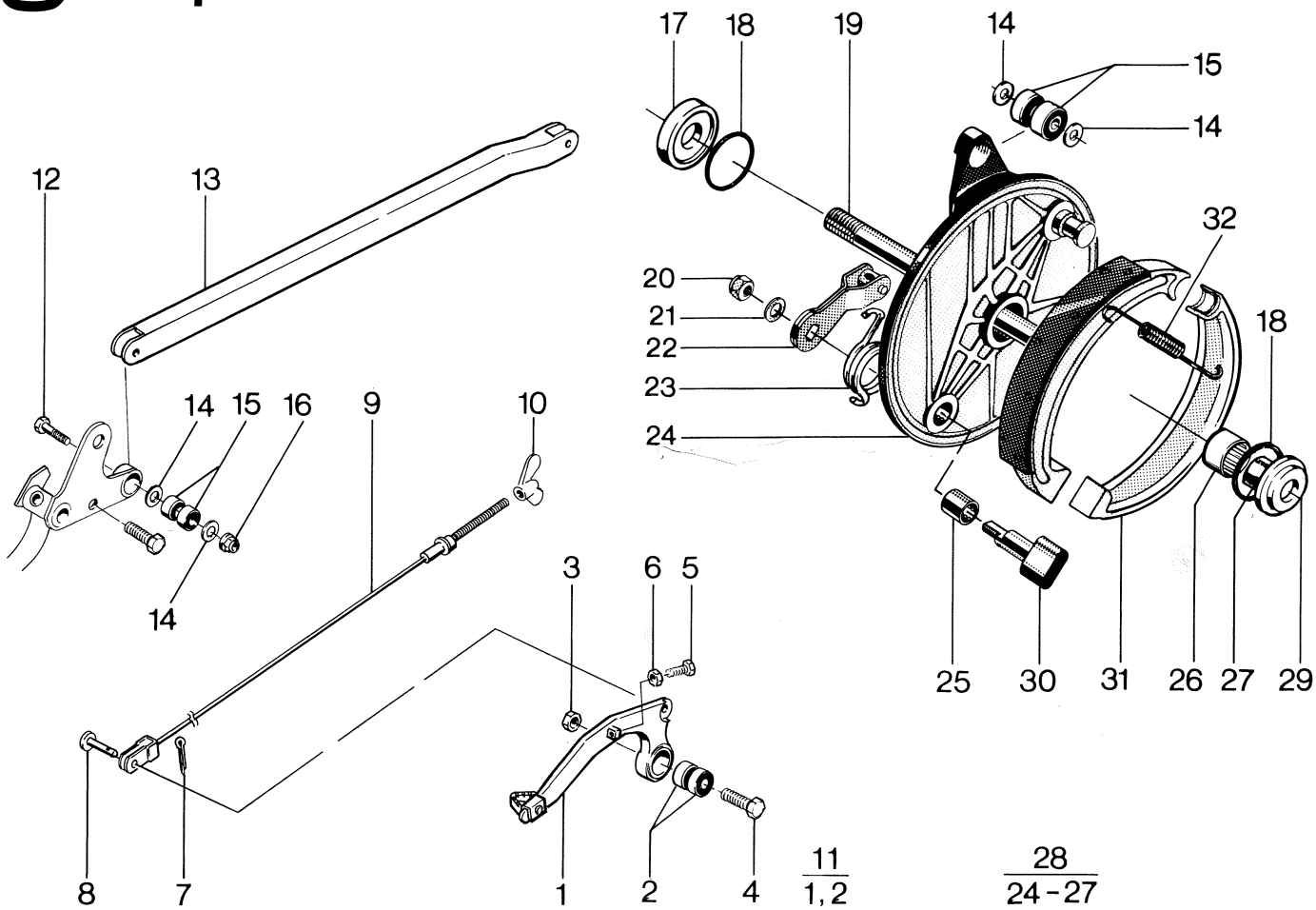

N	Fig.	Reservdel nr Spare part no.	ANTAL – QUANTITY 125 WR	240 CR	240 WR	250 CR	250 EU WR	250 US WR	250 XC	400 WR	430 CR	430 WR	430 XC	430 Aut. EU	430 Aut. US	500 CR	500 XC	Benämning, Description	Not.
	2	738 21 98-04		2		2					2					2		Kullager. Bearing.	
	3	732 21 18-01		1		1					1					1		Mutter M8. Nut.	
	4	725 24 55-51		1		1					1					1		Skruv M8x30. Screw.	
	5	725 23 71-51		1		1					1					1		Skruv M6x22. Screw.	
	6	732 21 16-01		1		1					1					1		Mutter M6. Nut.	
	7	721 61 50-01		1		1					1					1		Saxpinne. Slitpin. Splitpin.	
	8	15 16 289-01		1		1					1					1		Bult. Bolt.	
	9	15 11 303-01		1		1					1					1		Bromswire. Brake cable.	
	10	15 15 554-01		1		1					1					1		Mutter. Nut.	
	11	15 15 510-01		1		1					1					1		Bromspedal kpl. Brake pedal compl.	
	12	725 23 74-51		1		1					1					1		Skruv M6x30. Screw.	
	13	15 15 511-01		1		1					1					1		Bromslänk. Brake stay arm.	
	14	734 11 53-41		2		2					2					2		Bricka. Washer.	
	15	738 23 02-34		2		2					2					2		Kullager. Bearing.	
	16	732 21 16-01		1		1					1					1		Mutter M6. Nut.	
	17	15 15 519-01		1		1					1					1		Tätningshållare. Seal case.	
	18	15 11 242-01		2		2					2					2		X-ring.	
	19	15 15 524-01		1		1					1					1		Bakaxel. Shaft.	
	20	732 21 18-01		1		1					1					1		Låsmutter M8. Nut.	
	21	734 11 64-01		1		1					1					1		Bricka. Washer.	
	22	15 16 723-01		1		1					1					1		Hävarm. Lever.	
	23	15 15 515-01		1		1					1					1		Fjäder. Spring.	
	24																		
	25	15 16 859-01		1		1					1					1		Bussning. Bushing.	
	26	15 11 428-01		1		1					1					1		Nållager. Needle bearing.	
	27	15 15 518-01		1		1					1					1		Innerhylsa. Spacer.	
	28	15 15 522-01		1		1					1					1		Bromssköld kpl. Brake plate compl.	
	29	15 15 523-01		1		1					1					1		Distans. Spacer.	
	30	15 15 514-01		1		1					1					1		Bromsexcenter. Brake cam.	
	31	15 16 788-02		2		2					2					2		Bromsback. Brake shoe.	
	32	15 16 547-01		2		2					2					2		Fjäder. bromsback. Spring.	

Husqvarna

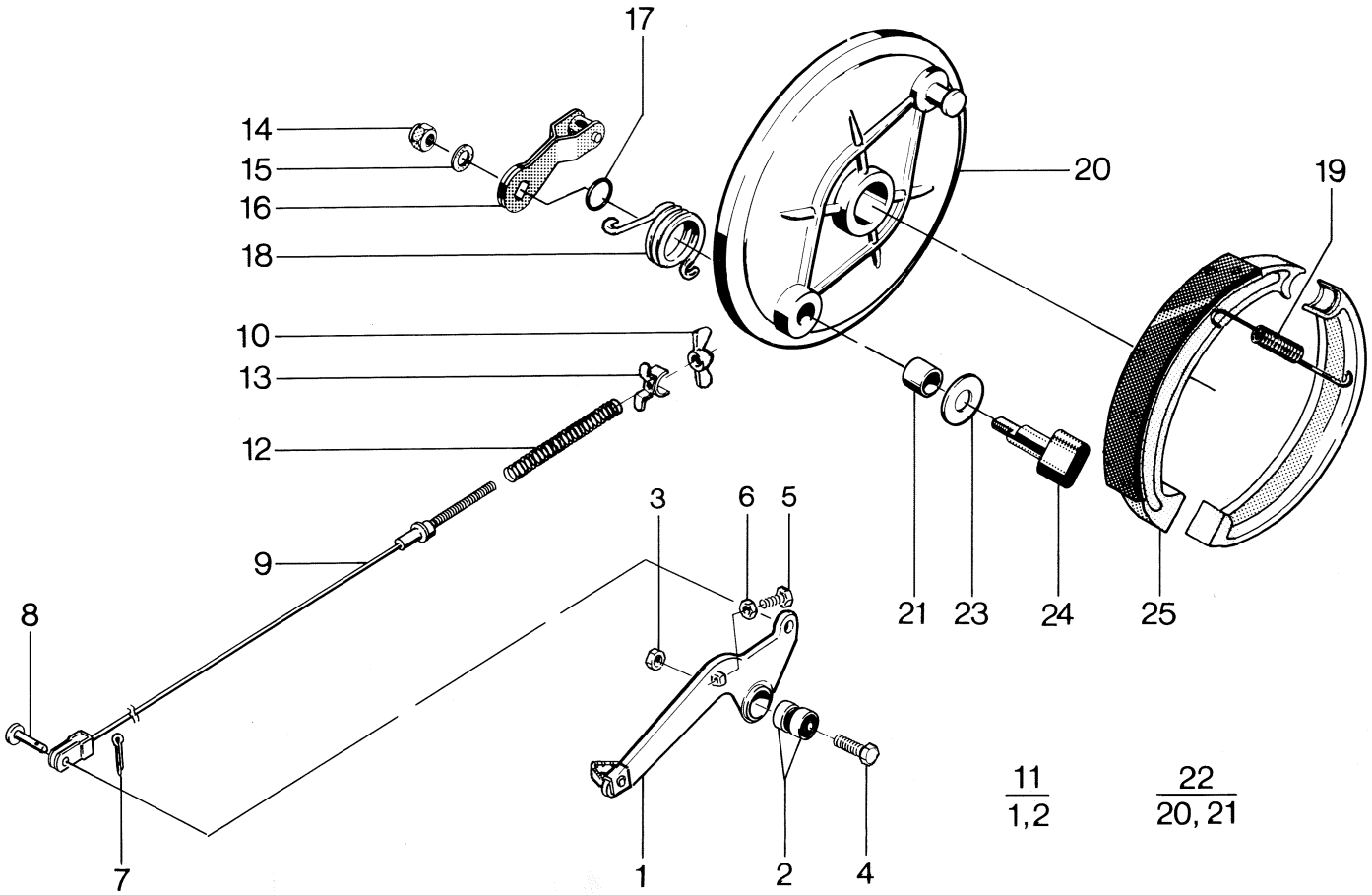

N	Fig.	Reservdel nr Spare part no.	ANTAL – QUANTITY 125 WR	240 CR	240 WR	250 CR	250 EU WR	250 US WR	250 XC	400 WR	430 CR	430 WR	430 XC	430 Aut. EU	430 Aut. US	500 CR	500 XC	Benämning, Description	Not.
	2	738 21 98-04	2		2		2	2	2	2		2	2	2	2		2	Kullager. Bearing.	
	3	732 21 18-01	1		1		1	1	1	1		1	1	1	1		1	Skruv M8x30. Screw.	
	4	725 24 55-51	1		1		1	1	1	1		1	1	1	1		1	Mutter M8. Nut.	
	5	725 23 68-51	1		1		1	1	1	1		1	1	1	1		1	Skruv M6x16. Screw.	
	6	732 21 16-01	1		1		1	1	1	1		1	1	1	1		1	Mutter M6. Nut.	
	7	721 61 50-01	1		1		1	1	1	1		1	1	1	1		1	Saxpinne. Splitpin.	
	8	15 16 289-01	1		1		1	1	1	1		1	1	1	1		1	Bult. Bolt.	
	9	15 11 303-03	1		1		1	1	1	1		1	1	1	1		1	Bromswire. Brakecable.	
	10	15 15 554-01	1		1		1	1	1	1		1	1	1	1		1	Mutter. Nut.	
	11	15 15 550-01	1		1		1			1				1				Bromspedal kpl. Brake pedal compl.	
		15 15 528-01						1	1			1	1		1		1	Bromspedal kpl. Brake pedal compl.	
	12	15 16 898-01	1		1		1	1	1	1		1	1	1	1		1	Fjäder. Spring.	
	13	15 16 897-01	1		1		1	1	1	1		1	1	1	1		1	Låsning. Wirelock.	
	14	732 21 18-01	1		1		1	1	1	1		1	1	1	1		1	Mutter M8. Nut.	
	15	734 11 64-01	1		1		1	1	1	1		1	1	1	1		1	Bricka. Washer.	
	16	15 16 723-02	1		1		1	1	1	1		1	1	1	1		1	Hävarm. Brakelever.	
	17	15 16 299-01	1		1		1	1	1	1		1	1	1	1		1	Tätning. Seal.	
	18	15 15 535-01	1		1		1	1	1	1		1	1	1	1		1	Returfjäder. Spring.	
	19	15 16 547-01	2		2		2	2	2	2		2	2	2	2		2	Fjäder. Spring.	
	21	15 16 859-01	1		1		1	1	1	1		1	1	1	1		1	Bussning. Bushing.	
	22	15 16 891-01	1		1		1	1	1	1		1	1	1	1		1	Bromssköld kpl. Brake plate compl.	
	23	15 16 836-01	1		1		1	1	1	1		1	1	1	1		1	Bricka. Washer.	
	24	15 16 886-01	1		1		1	1	1	1		1	1	1	1		1	Excenter. Brake cam.	
	25	15 16 543-01	2		2		2	2	2	2		2	2	2	2		2	Bromsback. Brake shoe.	

Husqvarna

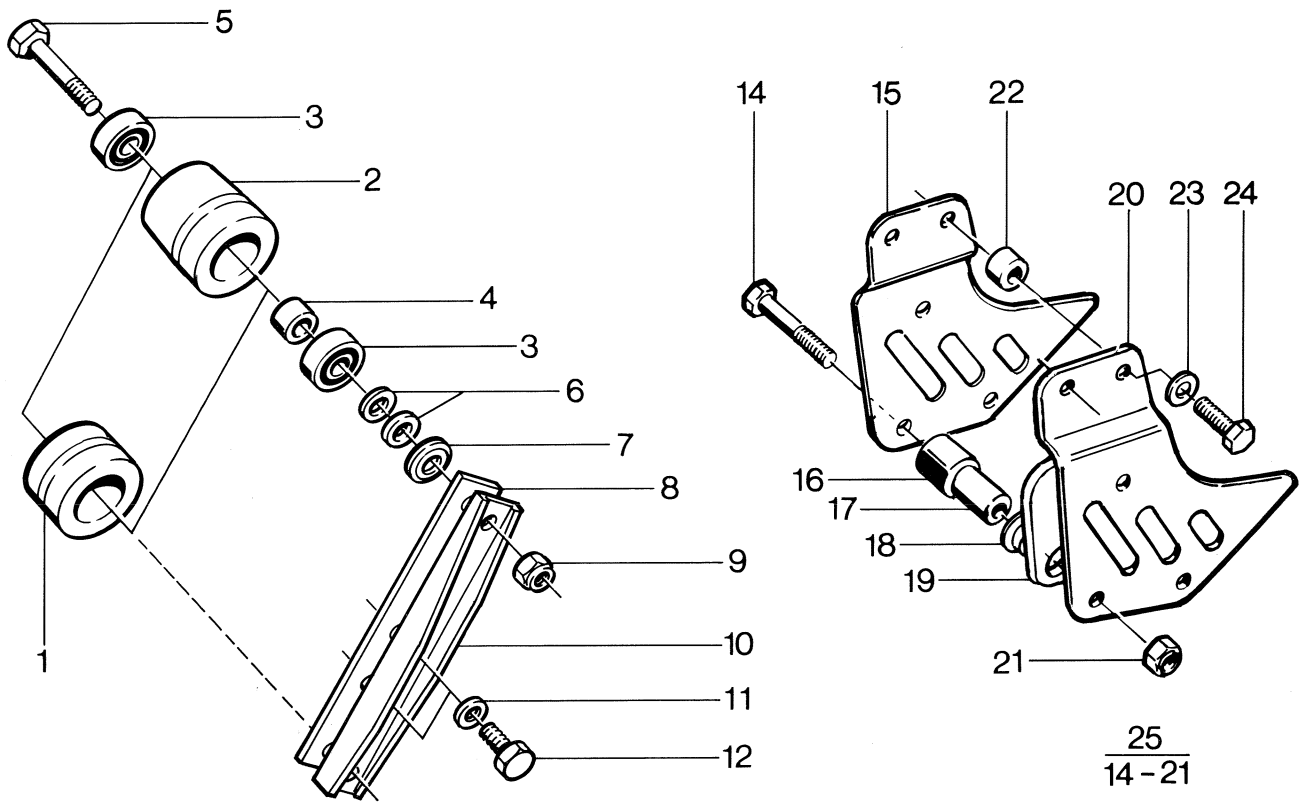

N	Fig.	Reservdel nr Spare part no.	ANTAL – QUANTITY 125 WR	240 CR	240 WR	250 CR	250 EU WR	250 US WR	250 XC	400 WR	430 CR	430 WR	430 XC	430 Aut. EU	430 Aut. US	500 CR	500 XC	Benämning, Description	Not.
	1	15 11 310-01		1		1			1		1		1			1	1	Kedjerulle. Chain roller.	
	2	15 11 310-02		1		1			1		1		1			1	1	Kedjerulle. Chain roller.	
	3	738 21 98-04		4		4			4		4		4			4	4	Kullager. Ball bearing.	
	4	15 11 311-01		2		2			2		2		2			2	2	Distans. Spacer.	
	5	725 24 59-51		2		2			2		2		2			2	2	Skruv M 8x40. Screw.	
	6	734 49 66-03		2		2			2		2		2			2	2	Bricka. Washer.	
	7	15 11 313-02		2		2			2		2		2			2	2	Bricka, kedjestyrare. Washer, chain guide.	
	8	15 11 452-01		1		1			1		1		1			1	1	Slitskydd. Wear plate.	
	9	732 21 18-01		2		2			2		2		2			2	2	Mutter M8. Nut.	
	10	15 11 312-02		1		1			1		1		1			1	1	Fästplåt. Mounting plate.	
	11	734 11 64-01		2		2			2		2		2			2	2	Bricka. Washer.	
	12	725 24 51-51		2		2			2		2		2			2	2	Skruv M 8x20. Screw.	
	14	725 23 79-51		3		3					3					3		Skruv M 6x45. Screw.	
	16	15 11 317-01		3		3					3					3		Kedjestyrarrulle. Chain guide roller.	
	17	15 11 286-01		3		3					3					3		Distans. Spacer.	
	18	15 11 313-01		6		6					6					6		Bricka, kedjestyrare. Washer, chain guide.	
	19	15 11 288-01		2		2					2					2		Slitskydd, kedjestyrare. Wear plate.	
	21	15 13 706-01		3		3					3					3		Mutter M6. Nut.	
	22	15 15 424-01		2		2					2					2		Distans. Spacer.	
	23	734 11 64-01		2		2					2					2		Bricka. Washer.	
	24	725 24 59-01		2		2					2					2		Skruv M 8x30. Screw.	
	25	15 11 447-01		1		1					1					1		Kedjestyrare kpl. Chain guide compl.	

Husqvarna

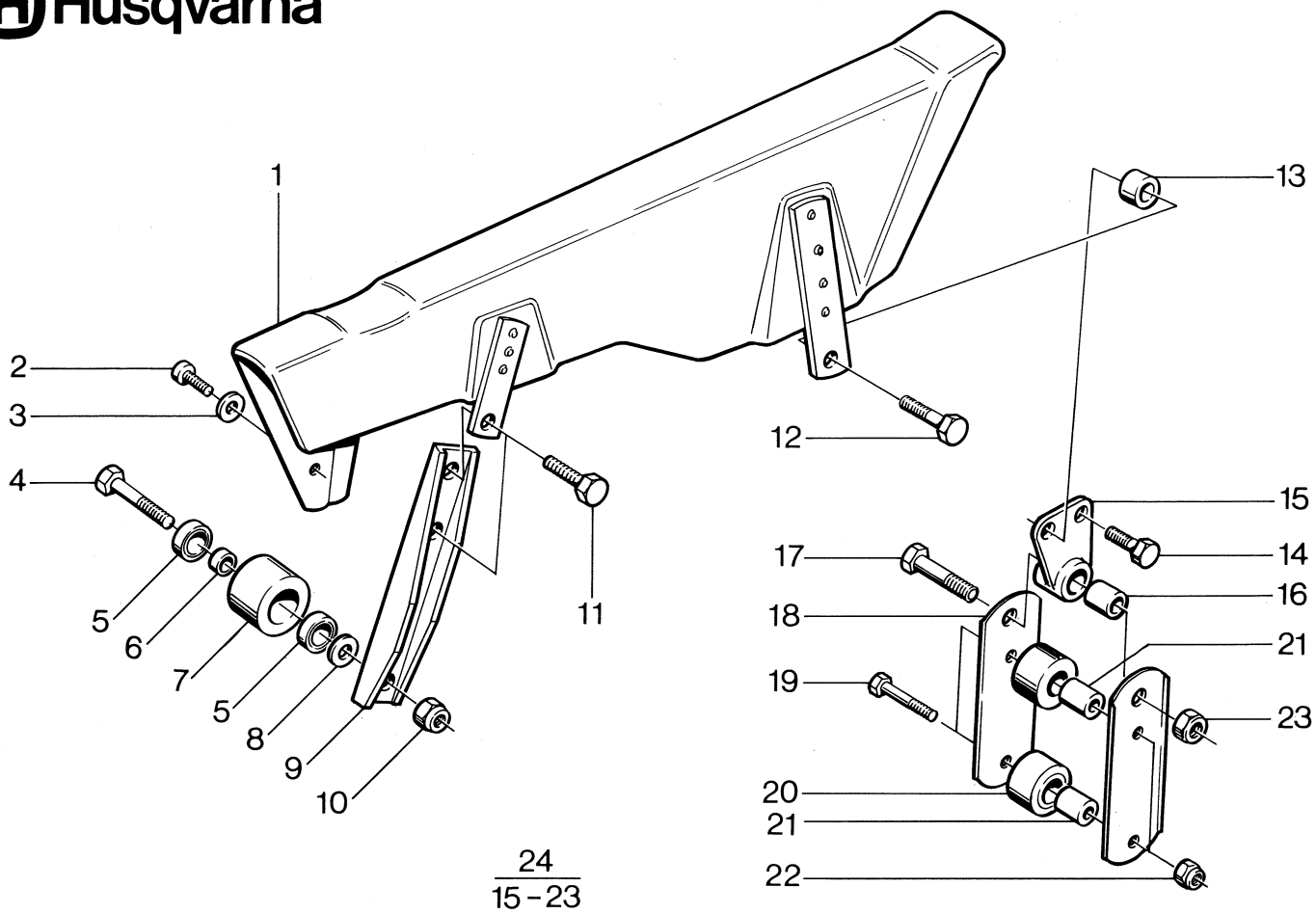

N	Fig.	Reservdel nr Spare part no.	ANTAL – QUANTITY 125 WR	240 CR	240 WR	250 CR	250 EU WR	250 US WR	250 XC	400 WR	430 CR	430 WR	430 XC	430 Aut. EU	430 Aut. US	500 CR	500 XC	Benämning, Description	Not.
	1	15 18 227-02	1		1		1	1		1		1		1	1			Kedjeskydd kpl. Chain guide.	
	2	725 23 64-53	1		1		1	1		1		1		1	1			Skruv M 6x10. Screw.	
	3	15 13 734-01	1		1		1	1		1		1		1	1			Bricka. Washer.	
	4	725 24 59-51	1		1		1	1	2	1		1	2	1	1		2	Skruv M 8x40. Screw.	
	5	738 21 98-04	2		2		2	2	4	2		2	4	2	2		4	Kullager 608-2RS. Ball bearing.	
	6	15 11 311-01	1		1		1	1	2	1		1	2	1	1		2	Distans. Spacer.	
	7	15 11 310-01	1		1		1	1	1	1		1	1	1	1		1	Kedjerulle. Chain roller.	
	8	734 49 66-03	1		1		1	1	2	1		1	2	1	1		2	Bricka. Washer.	
	9	15 11 395-02	1		1		1	1		1		1		1	1			Fästplåt. Mounting plate.	
	10	732 21 18-01	1		1		1	1	2	1		1	2	1	1		2	Mutter M8. Nut.	
	11	725 24 51-51	2		2		2	2	2	2		2	2	2	2		2	Skruv M 8x20. Screw.	
	12	725 24 57-51	1		1		1	1	1	1		1	1	1	1		1	Skruv M 8x35. Screw.	
	13	15 15 457-01	1		1		1	1		1		1		1	1			Distans. Spacer.	
	14	725 24 51-51	1		1		1	1	1	1		1	1	1	1		1	Skruv M 8x20. Screw.	
	15	15 15 500-01	1		1		1	1	1	1		1	1	1	1		1	Fästplåt kedjestyrare. Mounting plate.	
	16	15 15 506-01	1		1		1	1	1	1		1	1	1	1		1	Elastisk bussning. Elastic bushing.	
	17	725 24 57-51	1		1		1	1	1	1		1	1	1	1		1	Skruv M 8x35. Screw.	
	19	725 23 76-51	2		2		2	2	2	2		2	2	2	2		2	Skruv M 6x35. Screw.	
	20	15 11 317-01	1		1		1	1	1	1		1	1	1	1		1	Kedjestyrarrulle. Chain guide roller.	
	21	15 15 413-01	2		2		2	2	2	2		2	2	2	2		2	Distanshylsa. Distance sleeve.	
	22	732 21 16-01	2		2		2	2	2	2		2	2	2	2		2	Mutter M6. Nut.	
	23	732 21 18-01	1		1		1	1	1	1		1	1	1	1		1	Mutter M8. Nut.	
	23	15 15 505-01	1		1		1	1	1	1		1	1	1	1		1	Kedjestyrare. Chain guide cpl.	

Husqvarna

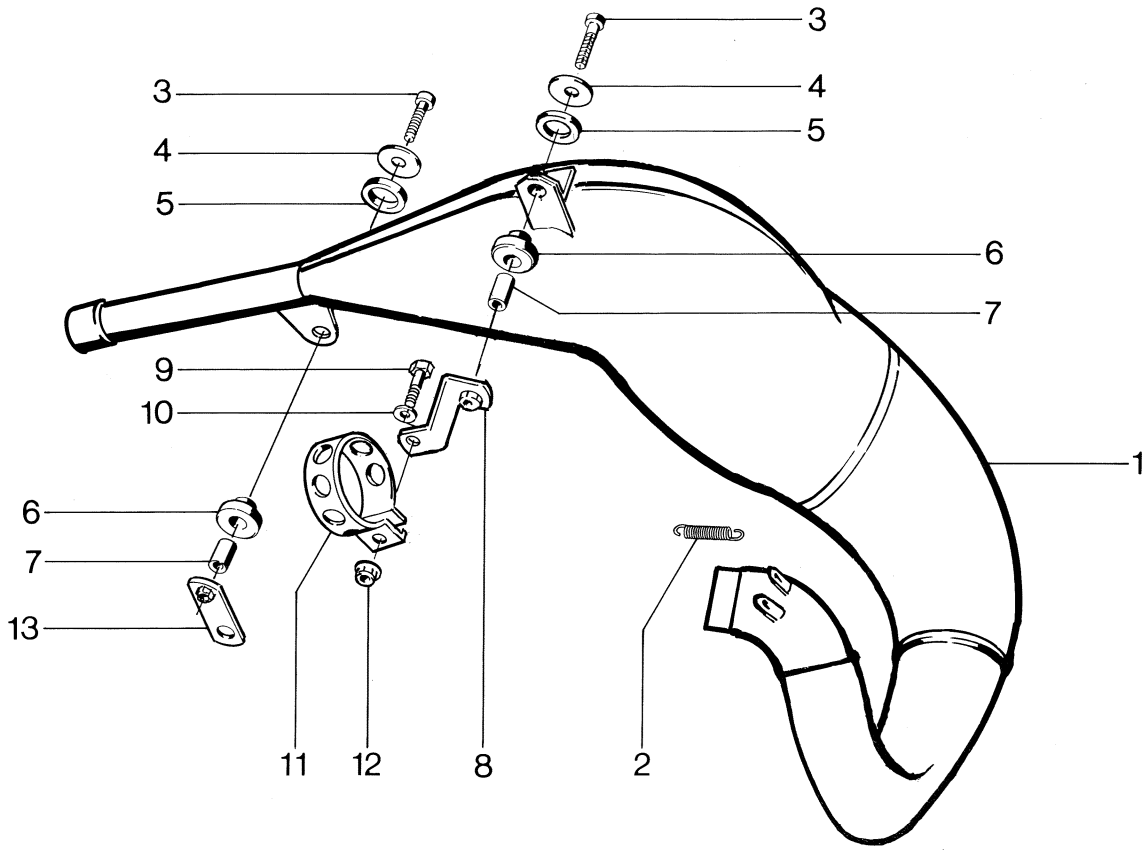

N	Fig.	Reservdel nr Spare part no.	ANTAL – QUANTITY 125 WR	240 CR	240 WR	250 CR	250 EU WR	250 US WR	250 XC	400 WR	430 CR	430 WR	430 XC	430 Aut. EU	430 Aut. US	500 CR	500 XC	Benämning, Description	Not.
N	1	15 13 979-02	1															Avgasrör. Exhaust pipe.	
N		15 15 973-01		1		1												Avgasrör. Exhaust pipe.	
N		15 15 948-01			1		1	1	1									Avgasrör. Exhaust pipe.	
N		15 15 971-01									1							Avgasrör. Exhaust pipe.	
N		15 15 941-01														1	1	Avgasrör. Exhaust pipe.	
N		15 15 943-01								1		1						Avgasrör. Exhaust pipe.	
N		15 15 943-01											1					Avgasrör. Exhaust pipe.	
N		15 15 906-01												1	1			Avgasrör. Exhaust pipe.	
	2	15 13 391-01	2	2	2	2	2	2	2	2	2	2	2	2	2	2	2	Fjäder. Spring.	
	3	725 53 72-01	2	2	2	2	2	2	2	2	2	2	2	2	2	2	2	Skruv M6x25. Screw.	
	4	15 13 743-01	2	2	2	2	2	2	2	2	2	2	2	2	2	2	2	Bricka. Washer.	
	5	15 13 414-01	2	2	2	2	2	2	2	2	2	2	2	2	2	2	2	Gummibricka. Rubber washer.	
	6	15 14 032-02	2	2	2	2	2	2	2	2	2	2	2	2	2	2	2	Gummibussning. Rubber bushing.	
	7	15 15 108-01	2	2	2	2	2	2	2	2	2	2	2	2	2	2	2	Hylsa. Sleeve.	
	8	15 13 976-01								1		1	1					Länk. Bracket.	
		15 15 937-01														1	1	Länk. Bracket.	
		15 13 977-01	1	1	1	1	1	1	1		1			1	1			Länk. Bracket.	
	9	725 53 74-01	1	1	1	1	1	1	1	1	1	1	1	1	1	1	1	Skruv M6x30. Screw.	
	10	15 13 734-01	1	1	1	1	1	1	1	1	1	1	1	1	1	1	1	Bricka. Washer.	
	11	15 13 441-01	1	1	1	1	1	1	1	1	1	1	1	1	1	1	1	Klamma. Clamp.	
	12	15 13 706-01	1	1	1	1	1	1	1	1	1	1	1	1	1	1	1	Mutter. M6. Nut.	
	13	15 13 977-01	1	1	1	1	1	1	1	1	1	1	1	1	1	1	1	Länk. Bracket.	

Husqvarna

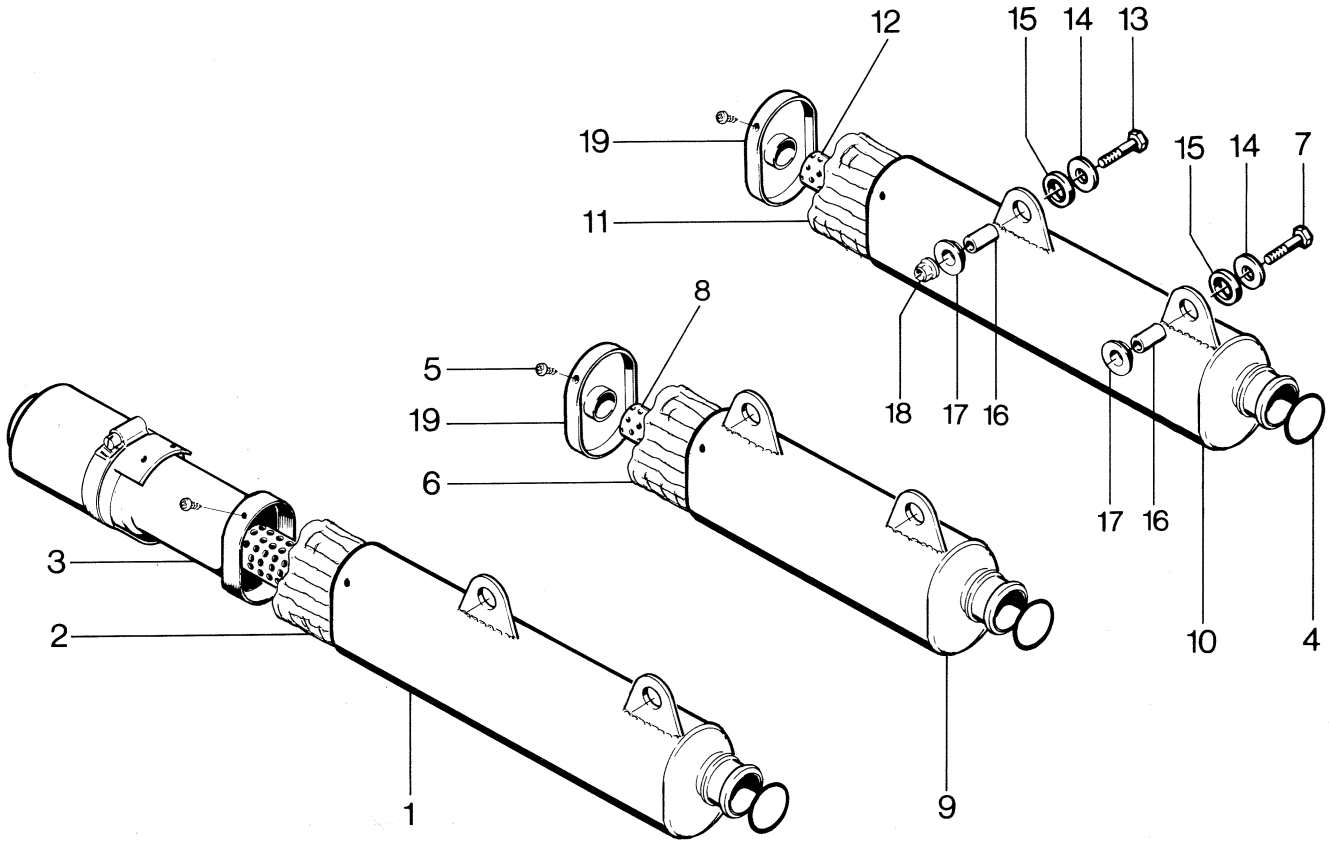

N	Fig.	Reservdel nr Spare part no.	ANTAL – QUANTITY 125 WR	240 CR	240 WR	250 CR	250 EU WR	250 US WR	250 XC	400 WR	430 CR	430 WR	430 XC	430 Aut. EU	430 Aut. US	500 CR	500 XC	Benämning, Description	Not.
N	1	15 15 963-01						1	1			1	1					Ljuddämpare kpl. m. gnistsläckare. Silencer compl. with spark arrestor.	
		15 15 963-02													1		1	Ljuddämpare m. gnistsläckare. Silencer compl. with spark arrestor.	
	2	15 13 336-05						1	1			1	1		1		1	Absorbent. Packing.	
N	3	15 15 928-01						1	1			1	1		1		1	Gnistsläckare kpl. Sparkarrestor compl.	
	4	15 14 559-01	1	1	1	1	1	1	1	1	1	1	1	1	1	1	1	O-ring.	
	5	729 58 42-01	4	4	4	4	4	4	4	4	4	4	4	4	4	4	4	Skruv. Screw.	
	6	15 13 336-09		1		1					1					1		Absorbent. Packning.	
	7	725 53 72-01	1	1	1	1	1	1	1	1	1	1	1	1	1	1	1	Skruv M6x25. Screw.	
	8	15 15 951-01	1															Innerrör. Innertube.	
		15 15 952-01									1					1		Innerrör. Innertube.	
N	9	15 15 956-01	1															Ljuddämpare kpl. Silencer compl.	
N		15 15 961-01									1					1		Ljuddämpare kpl. Silencer compl.	
N		15 15 962-01		1		1												Ljuddämpare kpl. Silencer compl.	
N	10	15 15 960-01			1		1			1								Ljuddämpare kpl. Silencer compl.	
N		15 15 960-02												1				Ljuddämpare kpl. Silencer compl.	
	11	15 13 336-04			1		1			1				1				Absorbent. Packing.	
	12	15 13 995-01			1		1			1				1				Innerrör. Innertube.	
	13	725 53 79-01	1	1	1	1	1	1	1	1	1	1	1	1	1	1	1	Skruv M6x45. Screw.	
	14	15 13 743-01	2	2	2	2	2	2	2	2	2	2	2	2	2	2	2	Bricka. Washer.	
	15	15 13 414-01	2	2	2	2	2	2	2	2	2	2	2	2	2	2	2	Gummibricka. Rubber washer.	
	16	15 15 108-01	2	2	2	2	2	2	2	2	2	2	2	2	2	2	2	Hylsa. Sleeve.	
	17	15 14 032-02	2	2	2	2	2	2	2	2	2	2	2	2	2	2	2	Gummibussning. Rubber bushing.	
	18	15 13 706-01	1	1	1	1	1	1	1	1	1	1	1	1	1	1	1	Mutter. M6. Nut.	
	19	15 15 958-02			1		1			1				1				Gavel. Back gable.	

Husqvarna

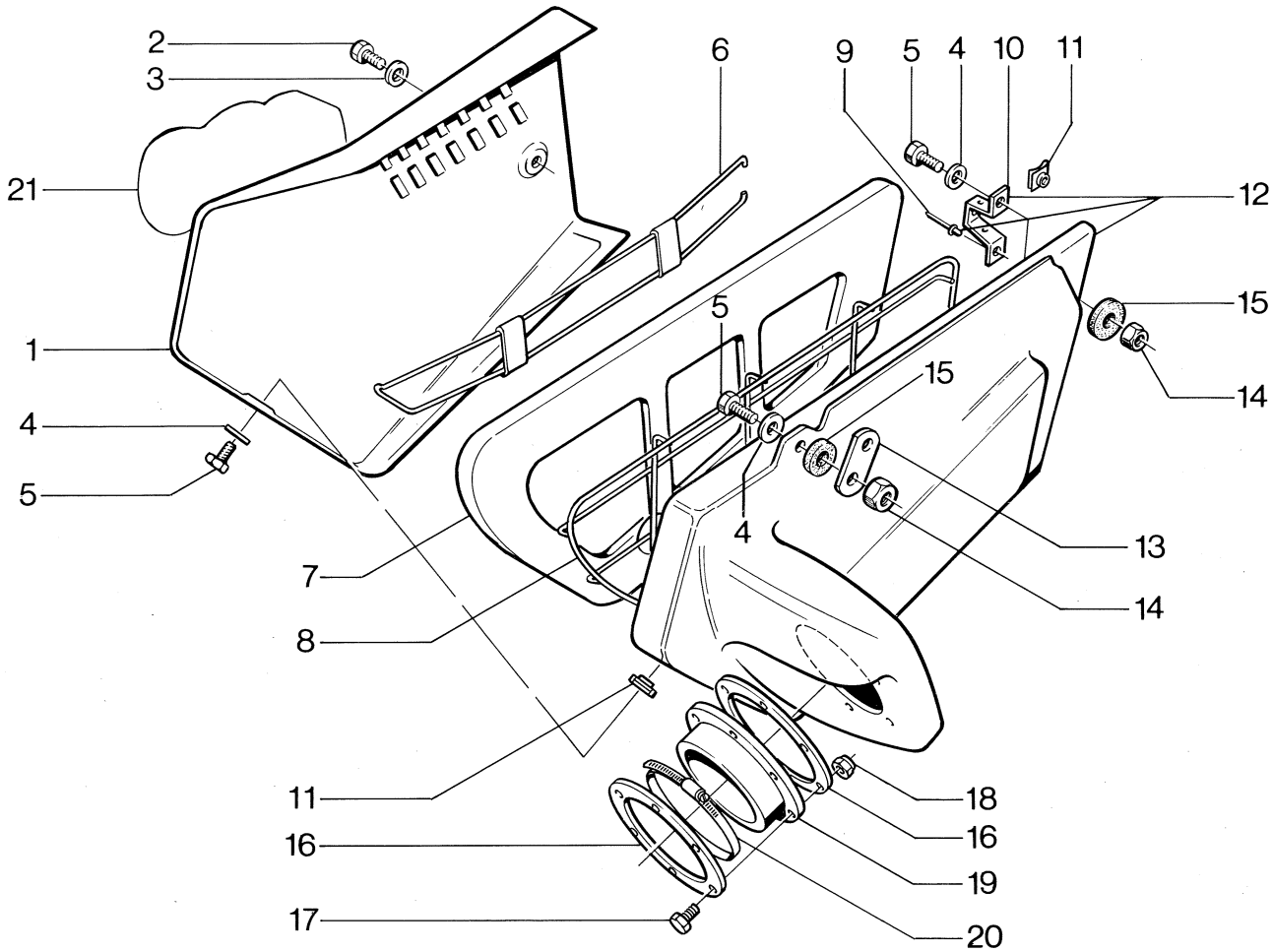

N	Fig.	Reservdel nr Spare part no.	125 WR	240 CR	240 WR	250 CR	250 EU WR	250 US WR	250 XC	400 WR	430 CR	430 WR	430 XC	430 Aut. EU	430 Aut. US	500 CR	500 XC	Benämning, Description	Not.
			ANTAL – QUANTITY																
N	1	15 15 044-01	1	1	1	1	1	1	1	1	1	1	1	1	1	1	1	Lock. Cover.	
	2	725 23 68-51	1	1	1	1	1	1	1	1	1	1	1	1	1	1	1	Skruv 6x16. Screw.	
	3	15 13 709-01	1	1	1	1	1	1	1	1	1	1	1	1	1	1	1	Bricka 6.5x22x1.5. Washer.	
	4	15 13 734-01	2	2	2	2	2	2	2	2	2	2	2	2	2	2	2	Bricka 6.4x14. Washer.	
	5	725 23 71-51	1	1	1	1	1	1	1	1	1	1	1	1	1	1	1	Skruv M6x22. Screw.	
	6	15 15 038-01	1	1	1	1	1	1	1	1	1	1	1	1	1	1	1	Bygel kpl. Clamp	
	7	15 14 171-01	1	1	1	1	1	1	1	1	1	1	1	1	1	1	1	Luftfilter. Air filter.	
	8	15 14 172-01	1	1	1	1	1	1	1	1	1	1	1	1	1	1	1	Filterkorg. Air filter basket.	
	9	722 78 49-02	1	1	1	1	1	1	1	1	1	1	1	1	1	1	1	Popnit. Poprivet.	
	10	15 15 037-01	1	1	1	1	1	1	1	1	1	1	1	1	1	1	1	Bygelhållare. Clamp holder.	
	11	15 14 129-01	1	1	1	1	1	1	1	1	1	1	1	1	1	1	1	Snabbmutter. Nut.	
N	12	15 15 036-02	1	1	1	1	1	1	1	1	1	1	1	1	1	1	1	Filterhus kpl. Filter housing.	
	13	15 15 803-01	1	1	1	1	1	1	1	1	1	1	1	1	1	1	1	Fäste. Support.	
	14	732 21 16-01	2	2	2	2	2	2	2	2	2	2	2	2	2	2	2	Mutter M6. Nut.	
	15	15 18 121-01	2	2	2	2	2	2	2	2	2	2	2	2	2	2	2	Gummibricka. Rubber washer.	
	16	15 15 039-01	2	2	2	2	2	2	2	2	2	2	2	2	2	2	2	Stödring. Spacer.	
	17	724 12 95-01	6	6	6	6	6	6	6	6	6	6	6	6	6	6	6	Skruv 4x20. Screw.	
	18	732 21 12-01	6	6	6	6	6	6	6	6	6	6	6	6	6	6	6	Mutter. Nut.	
	19	15 14 984-02		1	1	1	1	1	1	1	1	1	1	1	1		1	Anslutning. Connection	
		15 15 034-01	1															Anslutning. Connection	
		15 14 462-02														1		Anslutning. Connection.	
	20	16 13 539-01	1	1	1	1	1	1	1	1	1	1	1	1	1		1	Klamma 50-70. Clamp.	
		15 14 476-01														1		Klamma. Clamp. 60-80.	
N	21	15 17 953-01	1															Dekal. Decal.	
		15 17 953-02		1	1													Dekal. Decal.	
		15 17 953-03				1	1	1										Dekal. Decal.	
		15 17 953-04							1									Dekal. Decal.	
		15 17 953-05								1	1	1	1	1	1			Dekal. Decal.	
		15 17 953-06														1	1	Dekal. Decal.	

Husqvarna

Ø 36 mm

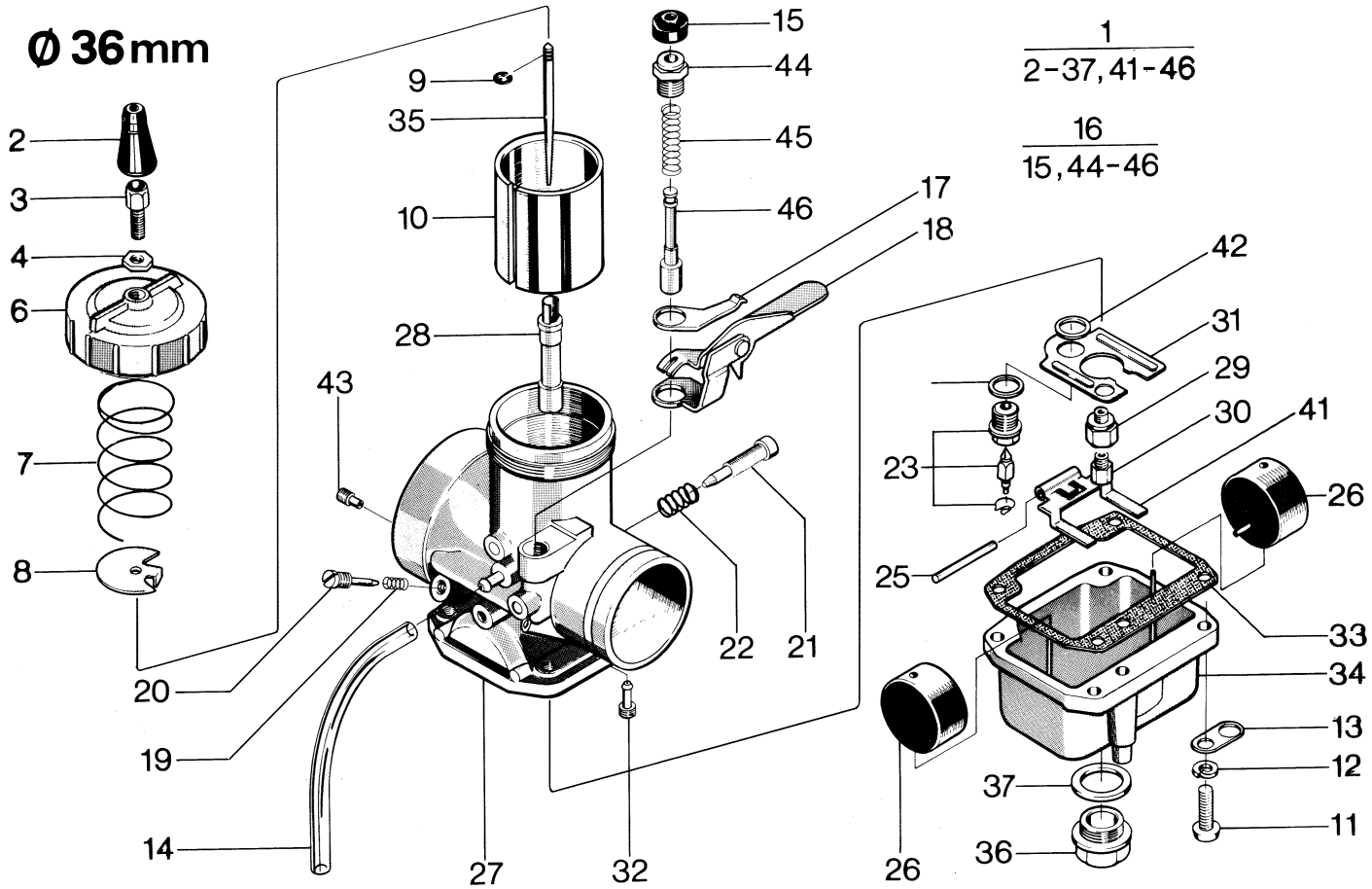

N	Fig.	Reservdel nr Spare part no.	ANTAL – QUANTITY 125 WR	240 CR	240 WR	250 CR	250 EU WR	250 US WR	250 XC	400 WR	430 CR	430 WR	430 XC	430 Aut. EU	430 Aut. US	500 CR	500 XC	Benämning, Description	Not.
	1	16 13 834-01	1															Förgasare Mikuni Ø 36 mm strypt. Carburettor.	
	2	16 13 777-01	1															Skyddshylsa. Protection sleeve.	
	3	16 13 757-01	1															Ställskruv. Adjuster.	
	4	16 13 758-01	1															Mutter. Nut.	
	6	16 13 570-01	1															Förgasarlock. Cover.	
	7	16 13 571-01	1															Fjäder. Spring.	
	8	16 13 584-01	1															Wire lås. Wire lock.	
	9	16 13 583-01	1															Nålclips. Needle clip.	
	10	16 13 785-01	1															Trottel ca 2.0 (Ø 36 mm). Throttle.	
	11	724 13 29-01	4															Skruv M5 x 16. Screw.	
	12	735 11 46-01	4															Bricka. Washer.	
	13	16 13 569-01	2															Hållare. Holder.	
	14	16 13 448-01	2															Slang. Hose.	
	15	16 13 590-01	1															Gummiskydd. Rubber cap.	
	16	16 13 589-01	1															Startventil kpl. Start valve compl.	
	17	16 13 594-01	1															Fjäder. Spring.	
	18	16 13 595-01	1															Chokereglage. Choke lever.	
	19	16 13 572-01	1															Fjäder. Spring.	
	20	16 13 573-01	1															Luftskruv. Airscrew.	
	21	16 13 782-01	1															Ställskruv. Adjusting screw.	
	22	16 13 587-01	1															Fjäder. Spring.	
	23	16 13 565-01	1															Nålventil kpl. Needle valve compl.	
	24	16 13 585-01	2															Flottörstopp. Cap.	
	25	16 13 566-01	1															Stift. Peg.	
	26	16 13 578-01	2															Flottör. Float.	
	28	16 13 790-01	1															Nålmunstycke R 0. Needle jet.	
	29	16 13 580-01	1															Mellanskruv. Distance screw.	
	30	16 13 682-01	1															Huvudmunstycke 340. Main jet.	
	31	16 13 586-01	1															Svalpplåt. Baffle plate.	
	32	16 13 546-01	1															Tomgångsmunstycke P.J 45. Pilot jet.	
	33	16 13 543-01	1															Packning. Gasket.	
	34	16 13 778-01	1															Flottörhus. Float chamber.	
	35	16 13 804-01	1															Nål 6L1. Needle.	
	36	16 13 780-01	1															Bottenskruv. Drain screw.	

Husqvarna

Ø 36 mm

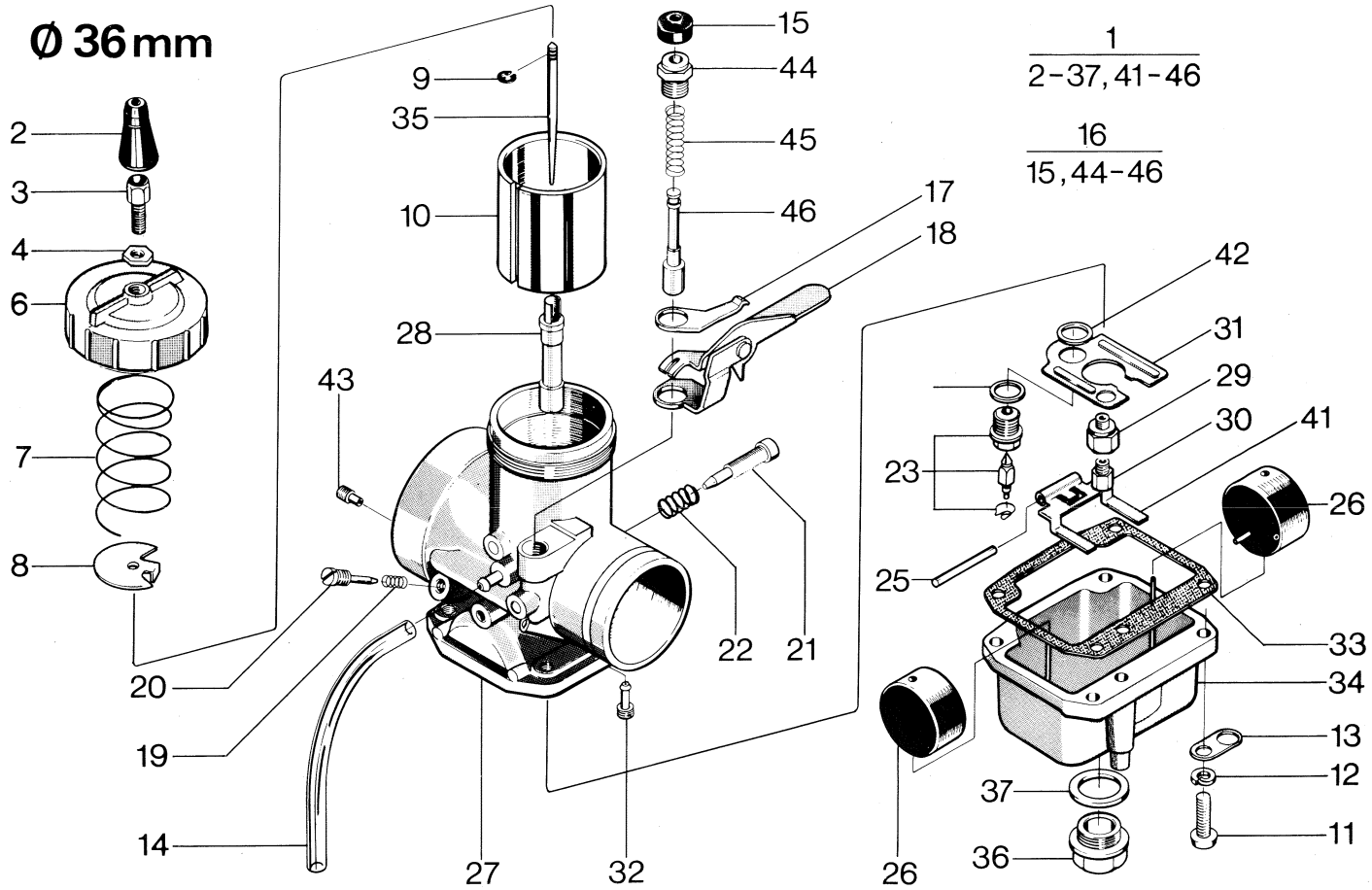

N	Fig.	Reservdel nr Spare part no.	ANTAL – QUANTITY 125 WR	240 CR	240 WR	250 CR	250 EU WR	250 US WR	250 XC	400 WR	430 CR	430 WR	430 XC	430 Aut. EU	430 Aut. US	500 CR	500 XC	Benämning, Description	Not.
	37	16 13 781-01	1															Packning. Gasket.	
	41	16 13 564-01	1															Flottörarm. Float lever.	
	42	16 13 565-01	2															Bricka. Washer.	
	43	16 13 568-01	1															Luftmunstycke 2.0. Air jet.	
	10																	Trottlar . Throttles.	
		16 13 784-01																C.A. 1.5 (Ø 36 mm).	
		16 13 785-01																C.A. 2.0 (Ø 36 mm).	
		16 13 786-01																C.A. 2.5 (Ø 36 mm).	
	28																	Nålmunstycke. Needle jets.	
		16 13 788-01																N.J.Q-6 (Ø 36 mm).	
		16 13 789-01																N.J.Q-8 (Ø 36 mm).	
		16 13 790-01																N.J.R-0 (Ø 36 mm).	
		16 13 791-01																N.J.R-2 (Ø 36 mm).	
		16 13 792-01																N.J.R-4 (Ø 36 mm).	
	30																	Huvudmunstycke. Main jets.	
		16 13 556-01																M.J. 390	
		16 13 557-01																M.J. 400	
		16 13 558-01																M.J. 410	
		16 13 559-01																M.J. 420	
		16 13 561-01																M.J. 440	
		16 13 562-01																M.J. 450	
		16 13 563-01																M.J. 460	
		16 13 641-01																M.J. 470	
		16 13 694-01																M.J. 480	
		16 13 695-01																M.J. 490	
		16 13 696-01																M.J. 500	
		16 13 697-01																M.J. 530	
		16 13 698-01																M.J. 560	
		16 13 683-01																M.J. 350	
		16 13 684-01																M.J. 360	
		16 13 685-01																M.J. 370	
		16 13 686-01																M.J. 380	

Husqvarna

Ø 36 mm

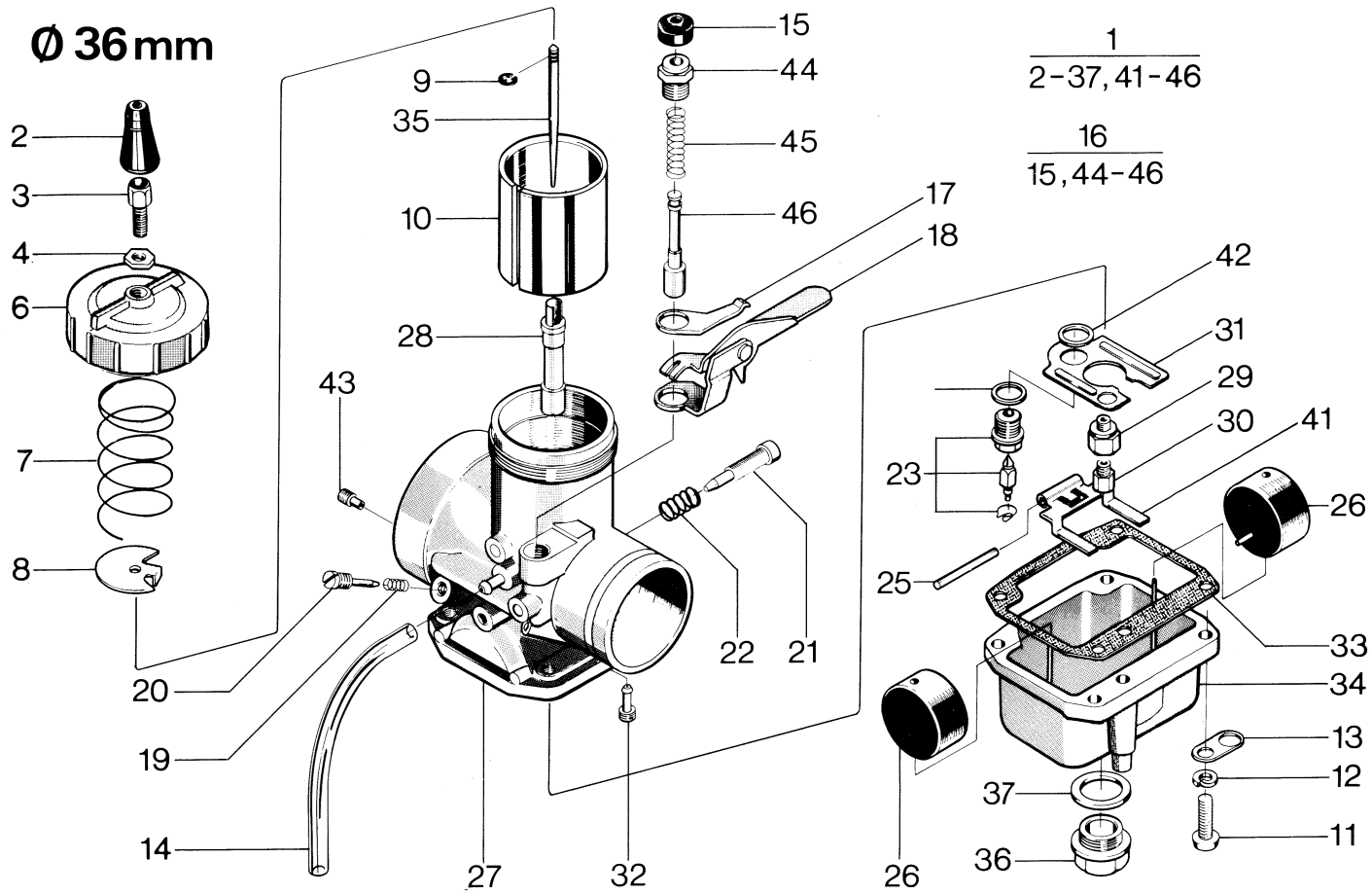

N	Fig.	Reservdel nr Spare part no.	ANTAL – QUANTITY 125 WR	240 CR	240 WR	250 CR	250 EU WR	250 US WR	250 XC	400 WR	430 CR	430 WR	430 XC	430 Aut. EU	430 Aut. US	500 CR	500 XC	Benämning, Description	Not.
	32																	Tomgångsmunstycke. Idling jets.	
		16 13 544-01																P.J 35	
		16 13 545-01																P.J 40	
		16 13 546-01																P.J 45	
		16 13 547-01																P.J 50	
		16 13 548-01																P.J 55	

Husqvarna

Ø 38mm

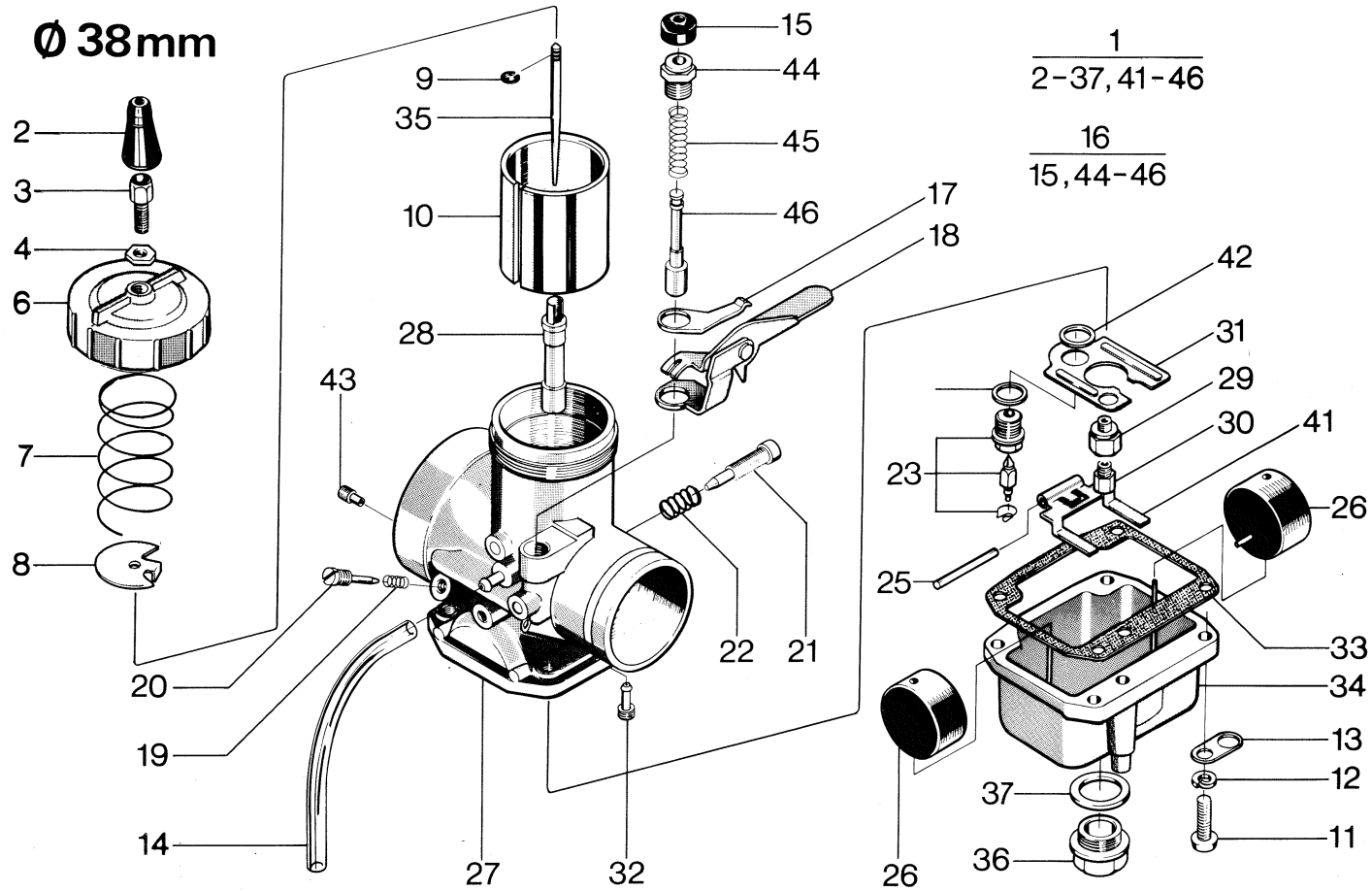

N	Fig.	Reservdel nr Spare part no.	ANTAL – QUANTITY 125 WR	240 CR	240 WR	250 CR	250 EU WR	250 US WR	250 XC	400 WR	430 CR	430 WR	430 XC	430 Aut. EU	430 Aut. US	500 CR	500 XC	Benämning, Description	Not.
N	1	16 13 859-01															1	Förgasare Mikuni Ø38. Carburettor.	
N		16 13 854-01			1		1											Förgasare, strypt. Carburettor, restricted.	
N		16 13 853-01						1	1									Förgasare. Carburettor.	
N		16 13 849-01								1								Förgasare, strypt. Carburettor, restricted.	
N		16 13 848-01										1	1					Förgasare. Carburettor.	
N		16 13 823-01									1			1	1			Förgasare. Carburettor.	
	2	16 13 128-01			1		1	1	1	1		1	1				1	Skyddshylsa. Protection sleeve.	
	3	16 13 916-01			1		1	1	1	1	1	1	1	1	1		1	Ställskruv. Adjuster.	
	4	16 13 908-01			1		1	1	1	1	1	1	1	1	1		1	Mutter. Nut.	
	6	16 13 570-01			1		1	1	1	1	1	1	1	1	1		1	Förgasarlock. Cover.	
	7	16 13 571-01			1		1	1	1	1	1	1	1	1	1		1	Fjäder. Spring.	
	8	16 13 584-01			1		1	1	1	1	1	1	1	1	1		1	Wire lås. Wire lock.	
	9	16 13 583-01			1		1	1	1	1	1	1	1	1	1		1	Nålclips. Needle clip.	
	10	16 13 576-01			1		1	1	1	1	1	1	1	1	1			Trottel ca 2.5. Throttle.	
		16 13 577-01															1	Trottel ca 3.0. Throttle.	
	11	724 13 29-01			4		4	4	4	4	4	4	4	4	4		4	Skruv M5x16. Screw.	
	12	735 11 46-01			4		4	4	4	4	4	4	4	4	4		4	Bricka. Washer.	
	13	16 13 569-01			2		2	2	2	2	2	2	2	2	2		2	Hållare. Holder.	
	14	16 13 448-01			2		2	2	2	2	2	2	2	2	2		2	Slang. Hose.	
	15	16 13 590-01			1		1	1	1	1	1	1	1	1	1		1	Gummiskydd. Rubber cap.	
	16	16 13 589-01			1		1	1	1	1	1	1	1	1	1		1	Startventil kpl. Start valve compl.	
	17	16 13 594-01			1		1	1	1	1	1	1	1	1	1		1	Fjäder. Spring.	
	18	16 13 595-01			1		1	1	1	1	1	1	1	1	1		1	Chokereglage. Choke lever.	
	19	16 13 572-01			1		1	1	1	1	1	1	1	1	1		1	Fjäder. Spring.	
	20	16 13 573-01			1		1	1	1	1	1	1	1	1	1		1	Luftskruv. Airscrew.	
	21	16 13 588-01			1		1	1	1	1	1	1	1	1	1		1	Ställskruv. Adjusting screw.	
	22	16 13 587-01			1		1	1	1	1	1	1	1	1	1		1	Fjäder. Spring.	
	23	16 13 565-01			1		1	1	1	1	1	1	1	1	1		1	Nålventil kpl. Needle valve compl.	
	24	16 13 585-01			2		2	2	2	2	2	2	2	2	2		2	Flottörstopp. Cap.	
	25	16 13 566-01			1		1	1	1	1	1	1	1	1	1		1	Stift. Peg.	
	26	16 13 578-01			2		2	2	2	2	2	2	2	2	2		2	Flottör. Float.	
	28	16 13 642-01			1		1	1	1									Nålmunstycke R6. Needle jet.	
		16 13 554-01									1			1	1			Nålmunstycke R2. Needle jet.	

Husqvarna

Ø 38mm

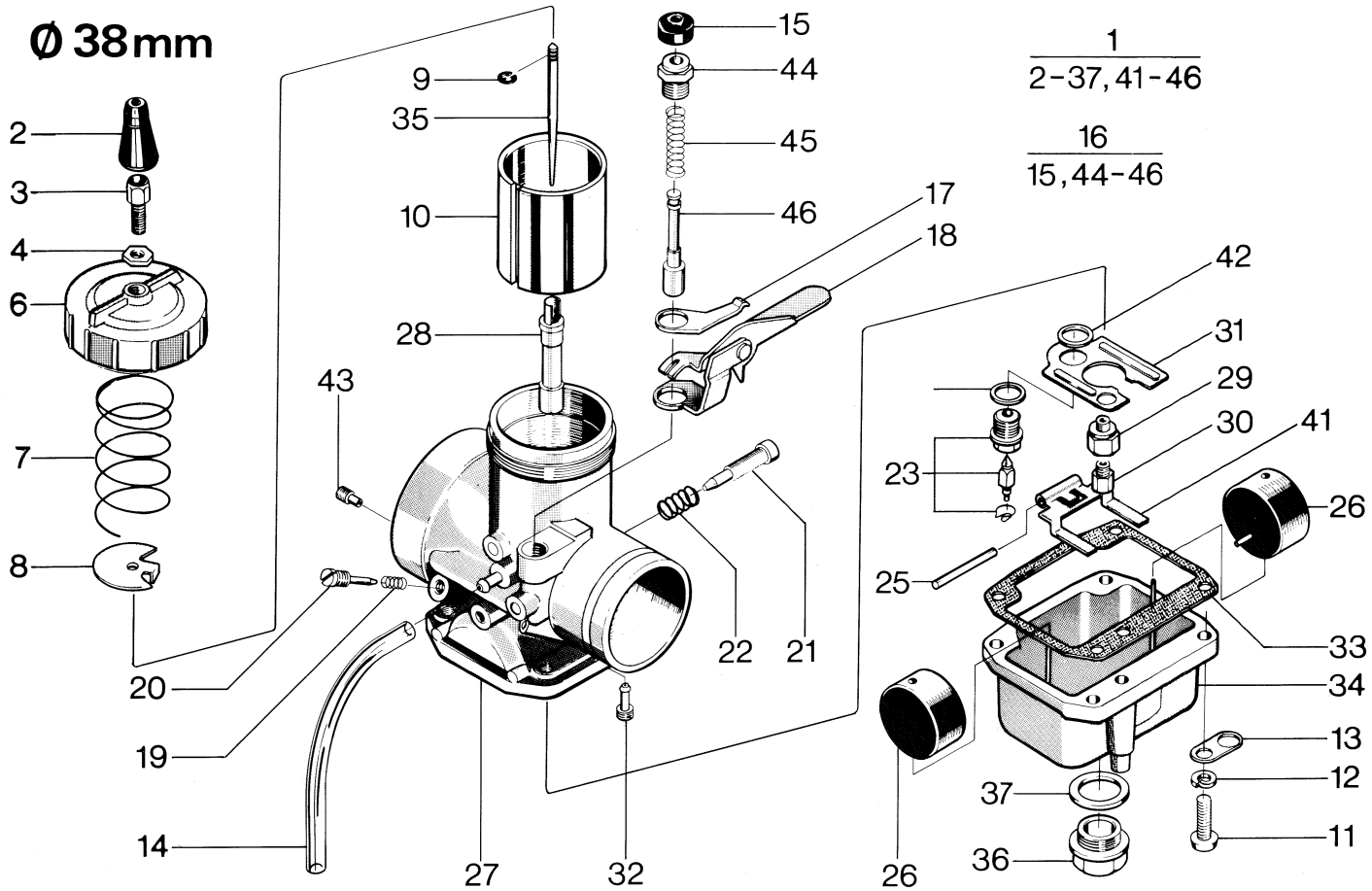

N	Fig.	Reservdel nr Spare part no.	ANTAL – QUANTITY 125 WR	240 CR	240 WR	250 CR	250 EU WR	250 US WR	250 XC	400 WR	430 CR	430 WR	430 XC	430 Aut. EU	430 Aut. US	500 CR	500 XC	Benämning, Description	Not.
		16 13 551-01								1								Nålmunstycke Q6. Needle jet.	
		16 13 553-01										1	1				1	Nålmunstycke R0. Needle jet.	
	29	16 13 580-01			1		1	1	1	1	1	1	1	1	1		1	Mellanskruv. Distance screw.	
	30	16 13 844-01			1													Huvudmunstycke 70. Main jet.	
		16 13 563-01					1	1	1									Huvudmunstycke 460. Main jet.	
		16 13 704-01								1								Huvudmunstycke 100. Main jet.	
		16 13 557-01										1	1				1	Huvudmunstycke 400. Main jet.	
		16 13 560-01									1			1	1			Huvudmunstycke 430. Main jet.	
	31	16 13 586-01			1		1	1	1		1	1	1	1	1		1	Skvalpplåt. Baffle plate.	
	32	16 13 546-01										1	1					Tomgångsmunstycke P.J45. Pilot jet.	
		16 13 545-01									1			1	1			Tomgångsmuntycke P.J40. Pilot jet.	
		16 13 544-01			1		1	1	1	1							1	Tomgångsmunstycke P.J35. Pilot jet.	
	33	16 13 543-01			1		1	1	1	1	1	1	1	1	1		1	Packning. Gasket.	
	34	16 13 574-01			1		1	1	1	1	1	1	1	1	1		1	Flottörhus. Float chamber.	
N	35	16 13 647-01			1		1	1	1	1	1	1	1	1	1			Nål 6DH20. Needle.	
		16 13 860-01															1	Nål 6F8. Needle.	
	36	16 13 581-01			1		1	1	1	1	1	1	1	1	1		1	Bottenskruv. Drain screw.	
	37	16 13 582-01			1		1	1	1	1	1	1	1	1	1		1	Packning. Gasket.	
	41	16 13 564-01			1		1	1	1	1	1	1	1	1	1		1	Flottörarm. Float lever.	
	42	16 13 565-01			2		2	2	2	2	2	2	2	2	2		1	Bricka. Washer.	
	43	16 13 568-01			1		1	1	1	1	1	1	1	1	1		1	Luftmunstycke 2.0. Air jet.	
	10																	Trottlar. Throttles.	
		16 13 575-01																C.A. 2.0.	
		16 13 576-01																C.A. 2.5.	
		16 13 577-01																C.A. 3.0.	
	28																	Nålmunstycke. Needle jets.	
		16 13 549-01																N.J Q-4.	
		16 13 550-01																N.J Q-5	
		16 13 551-01																N.J Q-6	
		16 13 552-01																N.J Q-8	
		16 13 553-01																N.J R-0	
		16 13 554-01																N.J R-2	
		16 13 555-01																N.J R-4	

Husqvarna

Ø 38mm

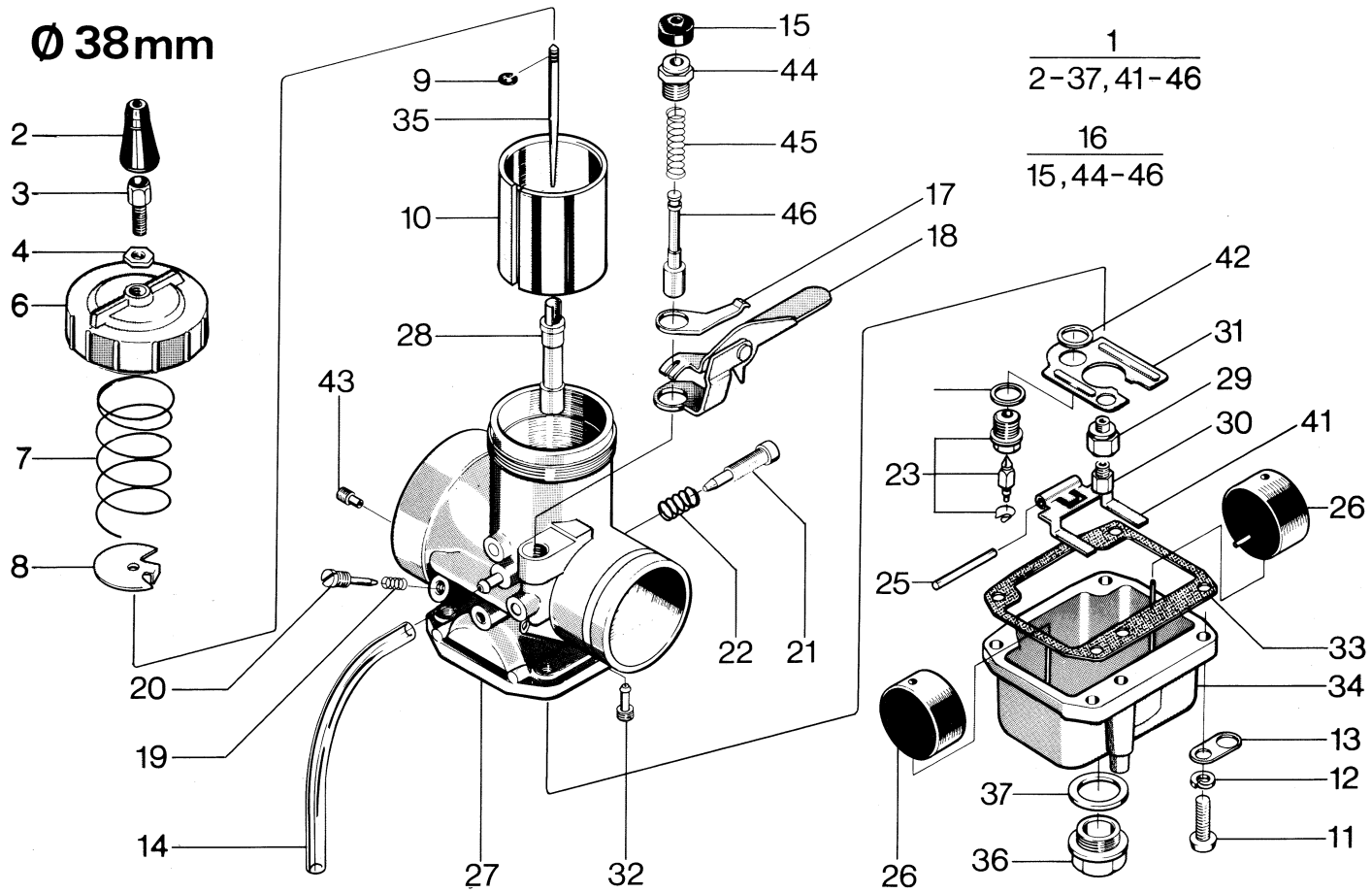

N	Fig.	Reservdel nr Spare part no.	ANTAL – QUANTITY 125 WR	240 CR	240 WR	250 CR	250 EU WR	250 US WR	250 XC	400 WR	430 CR	430 WR	430 XC	430 Aut. EU	430 Aut. US	500 CR	500 XC	Benämning, Description	Not.
		16 13 642-01																N.J R-6	
		16 13 699-01																N.J R-8	
	30																	Huvudmunstycke. Main jets.	
		16 13 556-01																M.J 390.	
		16 13 557-01																M.J 400.	
		16 13 558-01																M.J 410.	
		16 13 559-01																M.J 420.	
		16 13 561-01																M.J 440.	
		16 13 562-01																M.J 450.	
		16 13 563-01																M.J 460.	
		16 13 641-01																M.J 470.	
		16 13 694-01																M.J 480.	
		16 13 695-01																M.J 490.	
		16 13 696-01																M.J 500.	
		16 13 697-01																M.J 530.	
		16 13 698-01																M.J 560.	
		16 13 683-01																M.J 350.	
		16 13 684-01																M.J 360.	
		16 13 685-01																M.J 370.	
		16 13 686-01																M.J 380.	
	32																	Tomgångsmunstycke. Idling jets.	
		16 13 544-01																P.J 35.	
		16 13 545-01																P.J 40.	
		16 13 546-01																P.J 45.	
		16 13 547-01																P.J 50.	
		16 13 548-01																P.J 55.	

Husqvarna

Ø40mm

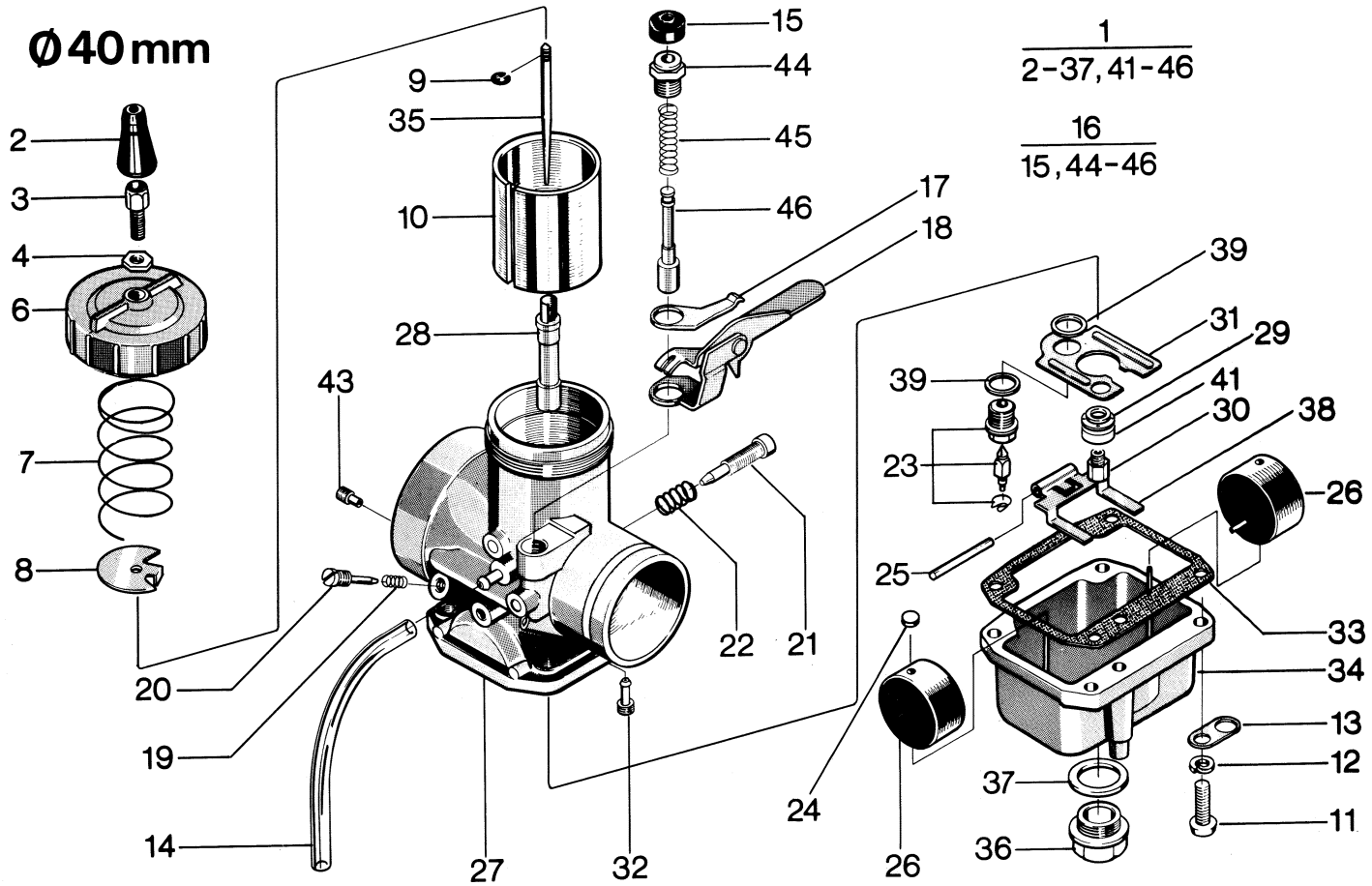

N	Fig.	Reservdel nr Spare part no.	ANTAL – QUANTITY 125 WR	240 CR	240 WR	250 CR	250 EU WR	250 US WR	250 XC	400 WR	430 CR	430 WR	430 XC	430 Aut. EU	430 Aut. US	500 CR	500 XC	Benämning, Description	Not.
N	1	16 13 846-01														1		Förgasare Mikuni Ø40. Carburettor.	
	2	16 13 128-01														1		Skyddshylsa. Protection sleeve.	
	3	16 13 916-01														1		Ställskruv. Adjuster.	
	4	16 13 908-01														1		Mutter. Nut.	
	6	16 13 653-01														1		Lock. Cover.	
	7	16 13 654-01														1		Fjäder. Spring.	
	8	16 13 662-01														1		Wire lås. Wire lock.	
	9	16 13 661-01														1		Nålclips. Needle clip.	
	10	16 13 679-01														1		Trottel 2.5. Throttle.	
	11	724 13 29-01														4		Skruv. Screw.	
	12	735 11 46-01														4		Bricka. Washer.	
	13	16 13 569-01														2		Hållare. Holder.	
	14	16 13 448-01														2		Slang. Hose.	
	15	16 13 665-01														1		Gummiskydd. Rubber cap.	
	16	16 13 664-01														1		Startventil. Start valve compl.	
	17	16 13 594-01														1		Fjäder. Spring.	
	18	16 13 595-01														1		Chokereglage. Choke lever.	
	19	16 13 655-01														1		Fjäder. Spring.	
	20	16 13 573-01														1		Luftskruv. Air screw.	
	21	16 13 588-01														1		Ställskruv. Idle adjuster.	
	22	16 13 587-01														1		Fjäder. Spring.	
	23	16 13 565-01														1		Nålventil, kpl. Needle valve, compl.	
	24	16 13 585-01														2		Flottörstopp. Cap.	
	25	16 13 566-01														1		Stift. Peg.	
	26	15 13 578-01														2		Flottör. Float.	
	28	16 13 672-01														1		Nålmunstycke, BB-0. Needle jet.	
	29	16 13 658-01														1		Bricka. Washer.	
	30	16 13 682-01														1		Huvudmunstycke 340. Main jet.	
	31	16 13 663-01														1		Svalpplåt. Baffle plate.	
	32	15 13 548-01														1		Tomgångsmunstycke 55. Pilot jet.	
	33	16 13 543-01														1		Packning. Gasket.	
N	34	16 13 855-01														1		Flottörhus. Float chamber.	
	35	16 13 681-01														1		Nål 7DH3. Needle.	
N	36	16 13 857-01														1		Bottenplugg. Drain plug.	

Husqvarna

Ø40mm

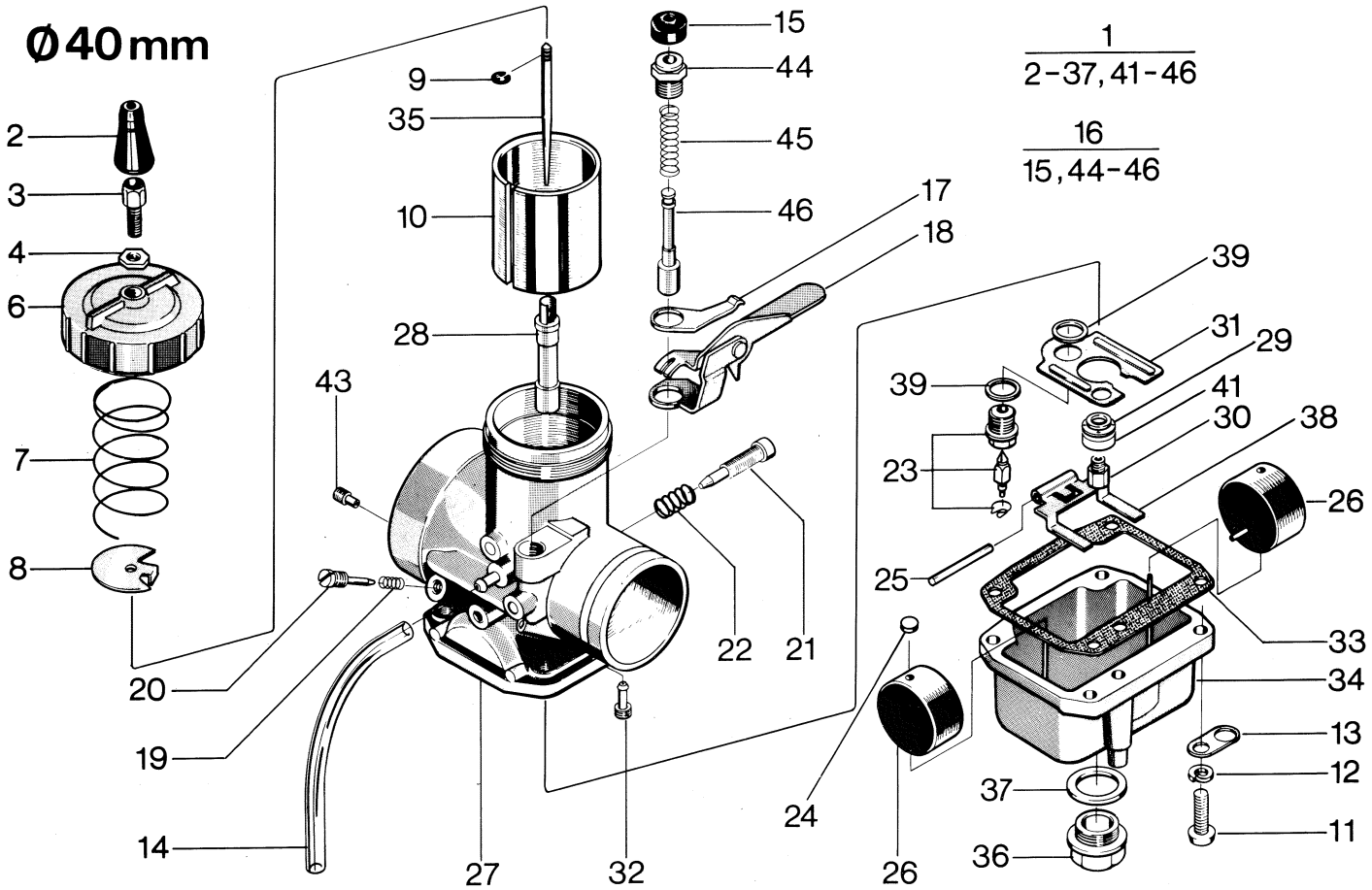

N	Fig.	Reservdel nr Spare part no.	ANTAL – QUANTITY 125 WR	240 CR	240 WR	250 CR	250 EU WR	250 US WR	250 XC	400 WR	430 CR	430 WR	430 XC	430 Aut. EU	430 Aut. US	500 CR	500 XC	Benämning, Description	Not.
	37	16 13 660-01														1		Packning. Gasket.	
	38	16 13 564-01														1		Flottörarm. Float lever.	
	39	16 13 567-01														2		Bricka. Washer.	
	40	16 13 676-01														1		Luftmunstycke, AJ 0.7. Air jet.	
N	41	16 13 856-01														1		Bricka. Washer.	
	10																	Trottel. Throttle.	
		16 13 677-01																C.A. 1.5.	
		16 13 678-01																C.A. 2.0.	
		16 13 679-01																C.A. 2.5.	
		16 13 680-01																C.A. 3.0.	
	28																	Nålmunstycke. Needle jet.	
		16 13 668-01																NJ Z-0.	
		16 13 669-01																Z-5.	
		16 13 670-01																AA-0.	
		16 13 671-01																AA-5.	
		16 13 672-01																BB-0.	
		16 13 673-01																BB-5.	
		16 13 674-01																CC-0.	
		16 13 675-01																CC-5.	
	30																	Huvudmunstycke. Main jet.	
		16 13 682-01																MJ 340.	
		16 13 683-01																MJ 350.	
		16 13 684-01																MJ 360.	
		16 13 685-01																MJ 370.	
		16 13 686-01																MJ 380.	
		16 13 556-01																MJ 390.	
		16 13 557-01																MJ 400.	
		16 13 558-01																MJ 410.	
		16 13 559-01																MJ 420.	
		16 13 560-01																MJ 430.	
		16 13 561-01																MJ 440.	
		16 13 562-01																MJ 450.	
		16 13 563-01																MJ 460.	

Husqvarna

Ø40 mm

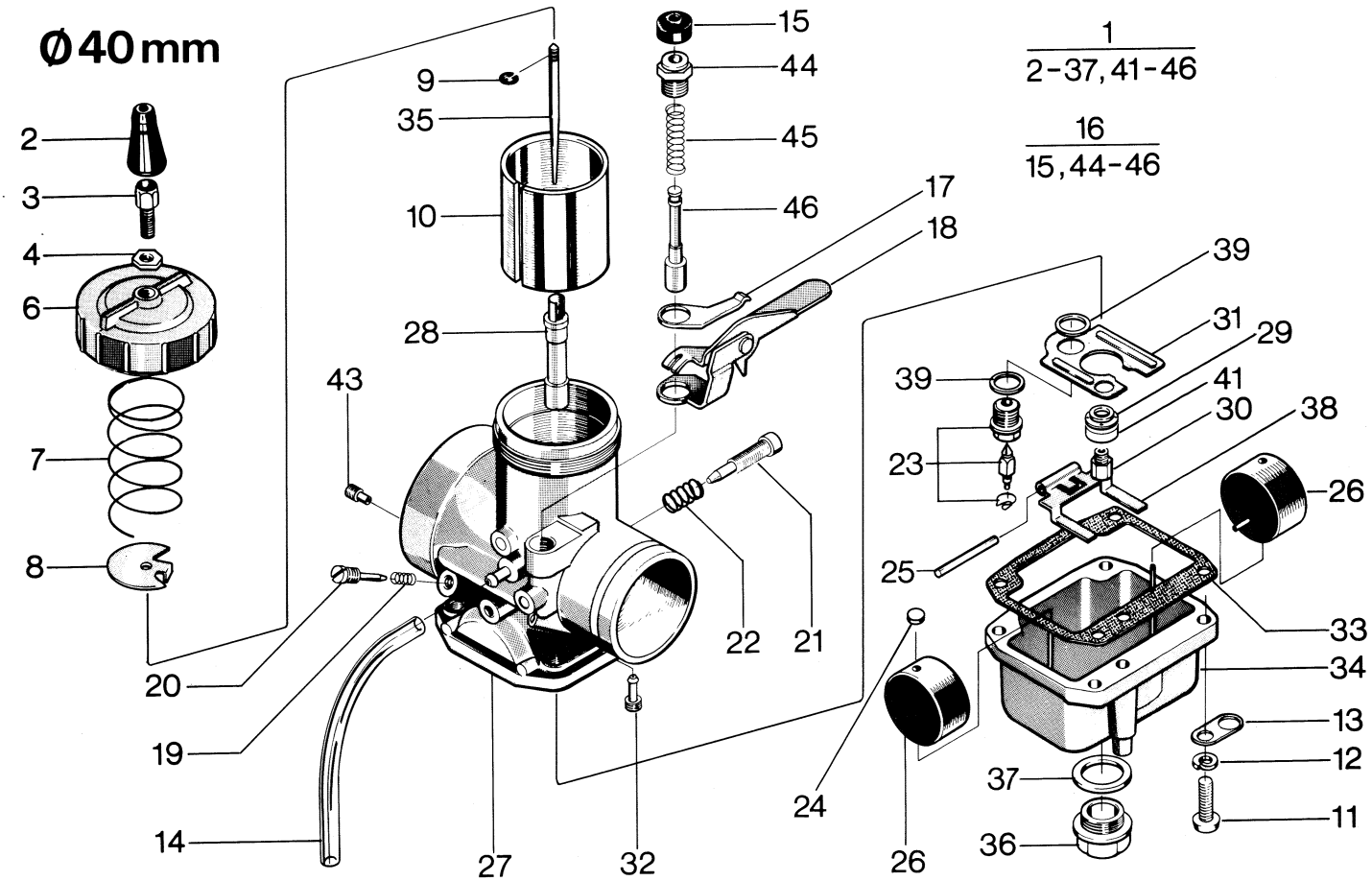

N	Fig.	Reservdel nr Spare part no.	ANTAL – QUANTITY 125 WR	240 CR	240 WR	250 CR	250 EU WR	250 US WR	250 XC	400 WR	430 CR	430 WR	430 XC	430 Aut. EU	430 Aut. US	500 CR	500 XC	Benämning, Description	Not.
		16 13 641-01																MJ 470.	
	32																	Tomgångsmunstycke. Idling jet.	
		16 13 544-01																P.J 35.	
		16 13 545-01																P.J 40.	
		16 13 546-01																P.J 45.	
		16 13 547-01																P.J 50.	
		16 13 548-01																P.J 55.	

Husqvarna

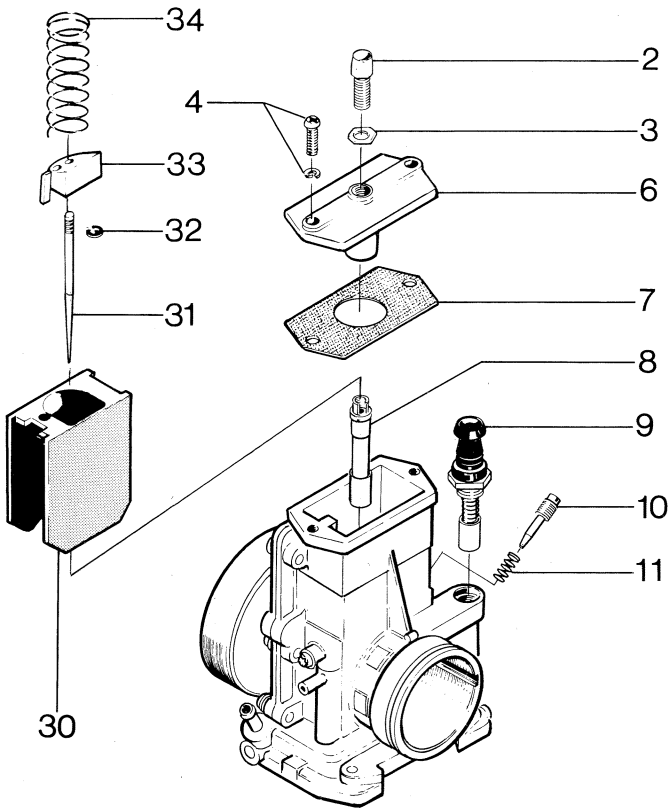

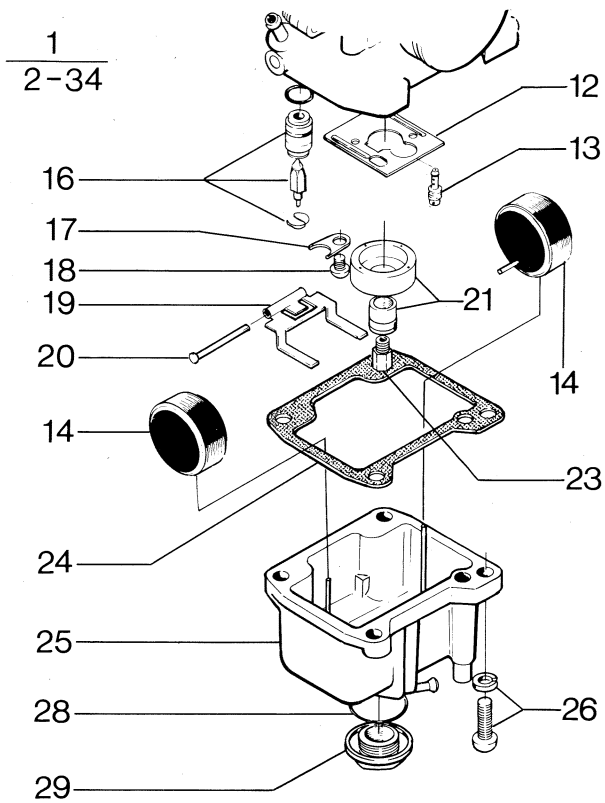

N	Fig.	Reservdel nr Spare part no.	ANTAL – QUANTITY 125 WR	240 CR	240 WR	250 CR	250 EU WR	250 US WR	250 XC	400 WR	430 CR	430 WR	430 XC	430 Aut. EU	430 Aut. US	500 CR	500 XC	Benämning, Description	Not.
N	1	16 13 851-01		1		1												Förgasare, kpl. Ø38. Carburettor compl.	
	2	16 13 757-01		1		1												Justerskruv. Adjuster.	
	3	16 13 758-01		1		1												Mutter. Nut.	
	4	16 13 741-01		2		2												Skruv. Screw.	
	6	16 13 767-01		1		1												Lock. Cover.	
	7	16 13 763-01		1		1												Packning. Gasket.	
	8	16 13 731-01		1		1												Nålmunstycke Q6. Needle jet.	
	9	16 19 857-01		1		1												Startventil. Choke valve compl.	
	10	16 13 752-01		1		1												Luftskruv. Airscrew.	
	11	16 13 753-01		1		1												Fjäder. Spring.	
	12	16 13 759-01		1		1												Skvalpskydd. Plate.	
	13	16 13 545-01		1		1												Tomgångsmunstycke 40. Pilot jet.	
	14	16 13 578-01		2		2												Flottör. Float.	
	16	16 13 742-01		1		1												Nålventil. Valve.	
	17	16 13 754-01		1		1												Hållare. Holder.	
	18	16 13 755-01		1		1												Skruv. Screw.	
	19	16 13 564-01		1		1												Flottörarm. Float lever.	
	20	16 13 566-01		1		1												Stift. Peg.	
	21	16 13 748-01		1		1												Labyrint.	
	23	16 13 558-01		1		1												Huvudmunstycke 410. Main jet.	
	24	16 13 739-01		1		1												Packning. Gasket.	
	25	16 13 740-01		1		1												Flottörhus. Float chamber.	
	26	16 13 746-01		4		4												Skruv. Screw.	
	28	16 13 750-01		1		1												O-ring.	
	29	16 13 749-01		1		1												Bottenskruv. Drain screw.	
	30	16 13 736-01		1		1												Trottel 4.0. Throttle.	
	31	16 13 747-01		1		1												Nål 6 FJ 40. Needle.	
	32	16 13 583-01		1		1												Nålclips. Needle clip.	
	33	16 13 762-01		1		1												Wirelås. Wire lock.	
	34	16 13 764-01		1		1												Fjäder. Spring.	

Husqvarna

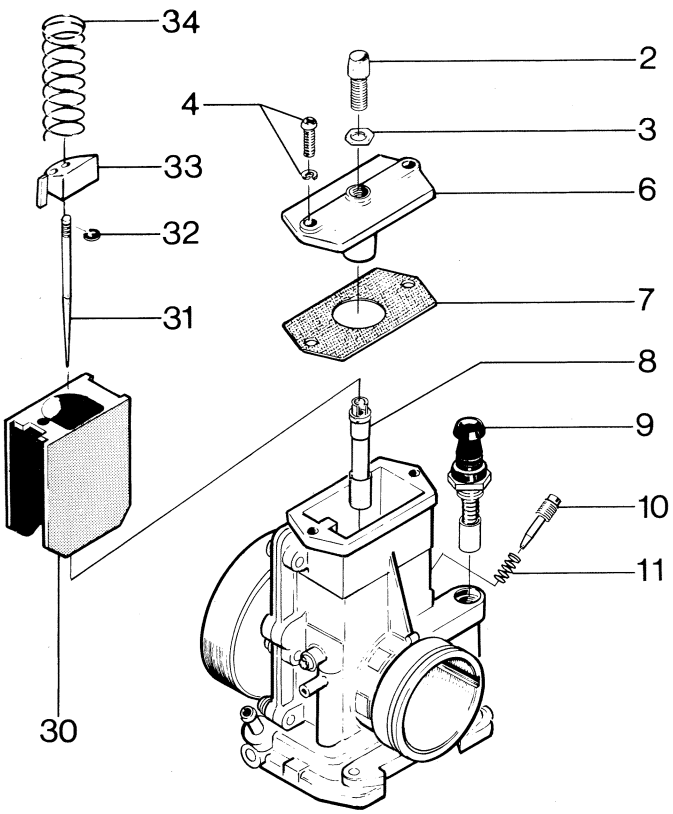

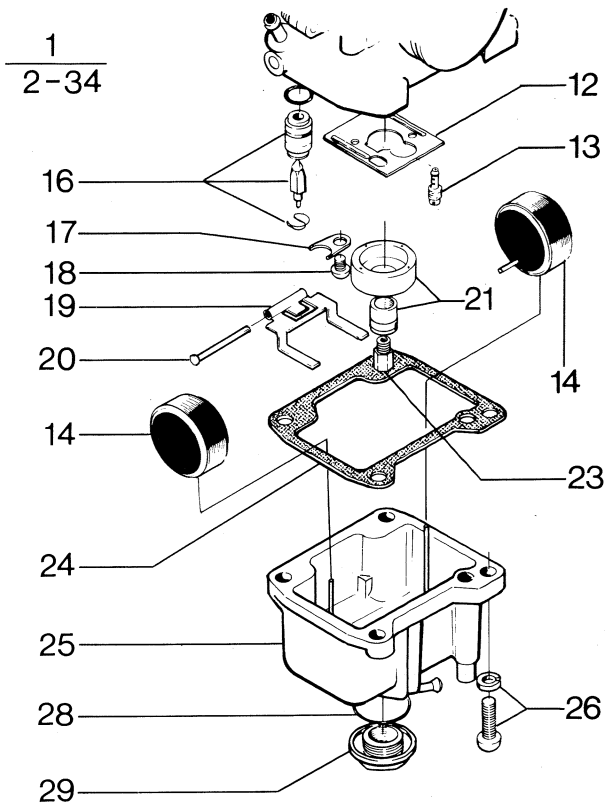

N	Fig.	Reservdel nr Spare part no.	ANTAL – QUANTITY 125 WR	240 CR	240 WR	250 CR	250 EU WR	250 US WR	250 XC	400 WR	430 CR	430 WR	430 XC	430 Aut. EU	430 Aut. US	500 CR	500 XC	Benämning, Description	Not.
	8	16 13 728-01																Nålmunstycke Q2. Needle jet.	
		16 13 729-01																Nålmunstycke Q3. Needle jet.	
		16 13 730-01																Nålmunstycke Q4. Needle jet.	
		16 13 731-01																Nålmunstycke Q6. Needle jet.	
		16 13 732-01																Nålmunstycke Q8. Needle jet.	
		16 13 733-01																Nålmunstycke RO. Needle jet.	
	13	16 13 630-01																Tomgångsmunstycke 25. Pilot jet.	
		16 13 510-01																Tomgångsmunstycke 30. Pilot jet.	
		16 13 544-01																Tomgångsmunstycke 35. Pilot jet.	
		16 13 545-01																Tomgångsmunstycke 40. Pilot jet.	
		16 13 546-01																Tomgångsmunstycke 45. Pilot jet.	
		16 13 547-01																Tomgångsmunstycke 50. Pilot jet.	
	23	16 13 684-01																Huvudmunstycke MJ 360. Main jet.	
		16 13 685-01																Huvudmunstycke MJ 370. Main jet.	
		16 13 686-01																Huvudmunstycke MJ 380. Main jet.	
		16 13 556-01																Huvudmunstycke MJ 390. Main jet.	
		16 13 557-01																Huvudmunstycke MJ 400. Main jet.	
		16 13 558-01																Huvudmunstycke MJ 410. Main jet.	
		16 13 559-01																Huvudmunstycke MJ 420. Main jet.	
		16 13 560-01																Huvudmunstycke MJ 430. Main jet.	
	30	16 13 734-01																Trottel 6.0. Throttle.	
		16 13 735-01																Trottel 5.0. Throttle.	
		16 13 736-01																Trottel 4.0. Throttle.	
		16 13 737-01																Trottel 3.0. Throttle.	

Husqvarna

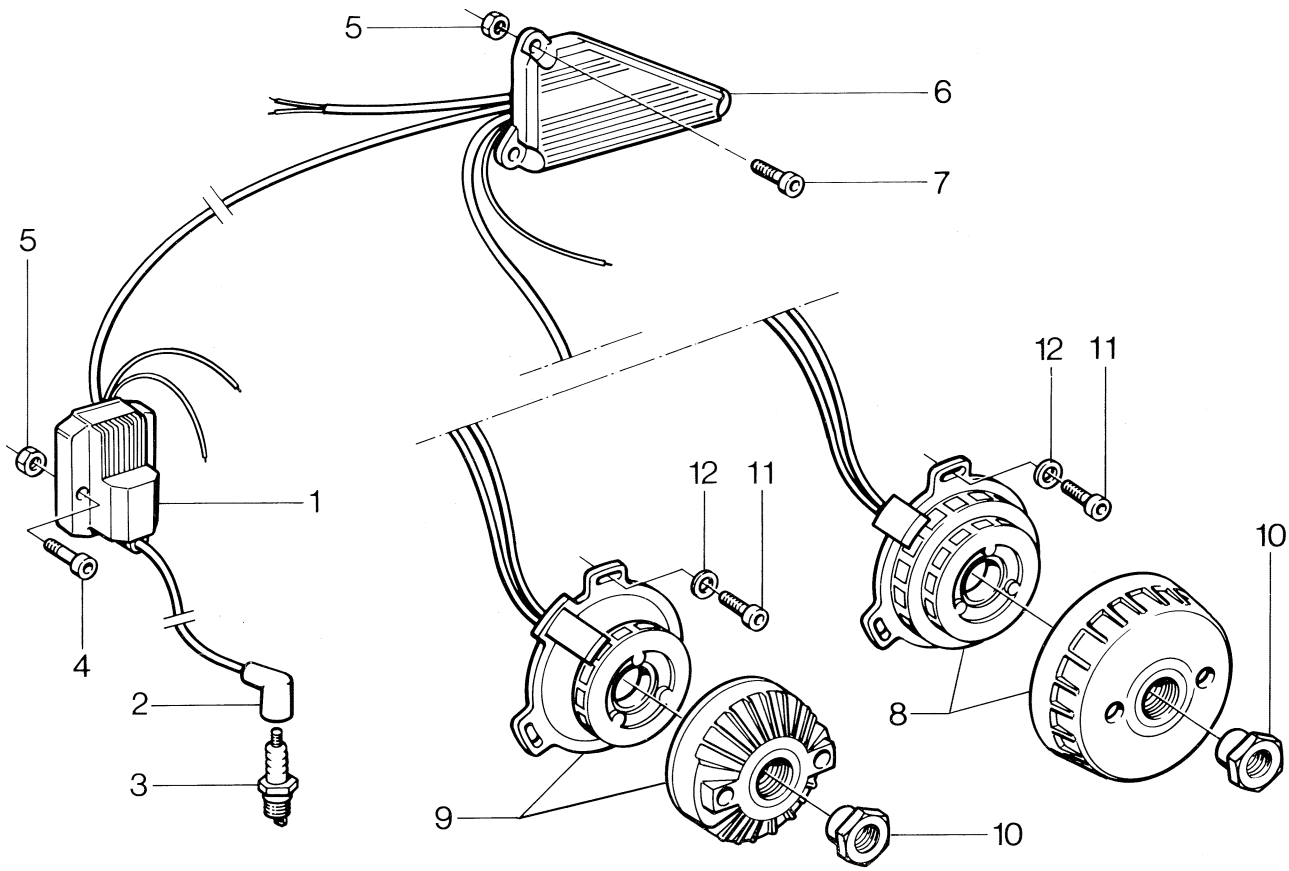

N	Fig.	Reservdel nr Spare part no.	ANTAL – QUANTITY 125 WR	240 CR	240 WR	250 CR	250 EU WR	250 US WR	250 XC	400 WR	430 CR	430 WR	430 XC	430 Aut. EU	430 Aut. US	500 CR	500 XC	Benämning, Description	Not.
N	1	16 14 821-01		1		1			1									Tändmodul. Lighting module.	
	2	16 14 635-01		1		1			1									Tändstiftsanslutning m. fjäder. Spark plug conn	
N	3	16 14 818-02		1		1			1									Tändstift Autolite 4054. Spark plug.	
	4	725 23 33-51		2		2			2									Skruv M5x25. Screw.	
	5	732 21 14-01		2		2			2									Mutter M5. Nut.	
		732 21 16-01		2		2			2									Mutter M6. Nut.	
N	6	16 14 824-01		1		1			1									Styrenhet. Processor unit.	
	7	725 53 68-01		2		2			2									Skruv M6x16. Screw.	
N	8	16 14 823-01							1									Svänghjulsmagnet kpl. Magneto compl.	
N	9	16 14 820-01		1		1												Svänghjulsmagnet kpl. Magneto compl.	
	10	16 11 191-01		1		1			1									Mutter svänghjul. Nut magneto.	
	11	725 53 32-55		3		3			3									Skruv M5x22. Screw.	
	12	15 13 730-01		3		3			3									Bricka. Washer.	

Husqvarna

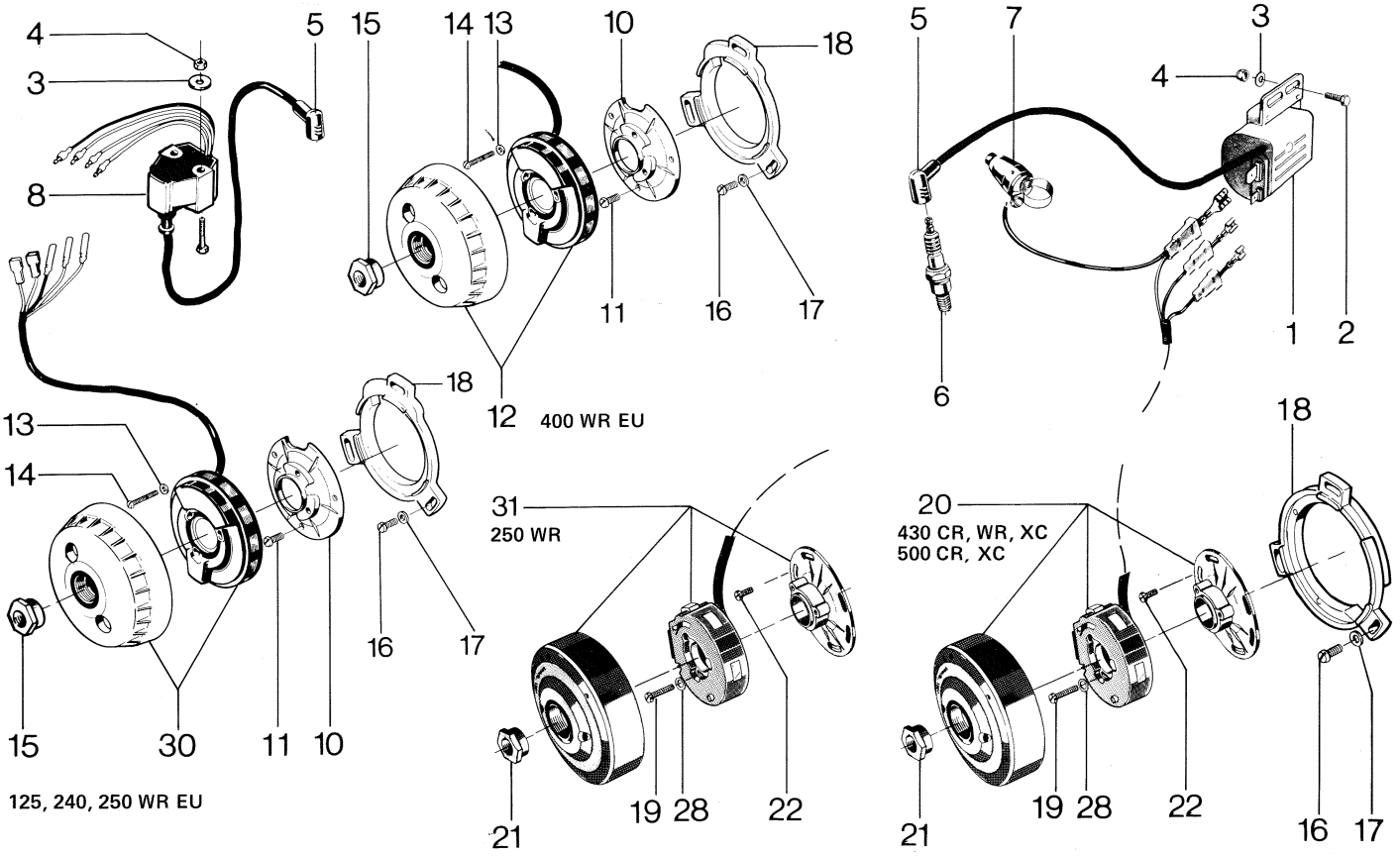

N	Fig.	Reservdel nr Spare part no.	ANTAL – QUANTITY 125 WR	240 CR	240 WR	250 CR	250 EU WR	250 US WR	250 XC	400 WR	430 CR	430 WR	430 XC	430 Aut. EU	430 Aut. US	500 CR	500 XC	Benämning, Description	Not.
	1	16 14 714-01									1	1	1		1	1	1	Tändspole. Ignition coil.	
	2	725 23 68-51									2	2	2		2	2	2	Skruv M6x16. Screw.	
	3	734 11 53-01	2		2		2	2		2	2	2	2	2	2	2	2	Bricka. Washer.	
	4	732 21 16-01	2		2		2	2		2	2	2	2	2	2	2	2	Mutter M6. Nut.	
	5	16 14 635-01	1		1		1	1		1	1	1	1	1	1	1	1	Tändstiftshatt. Spark plug cap.	
	6	16 14 769-01			1		1			1				1				Tändstift Bosch W4C. Spark plug.	
N		16 14 818-02						1										Tändstift Autolite 4054. Spark plug.	
		16 14 769-03	1															Tändstift Bosch W2C. Spark plug	
N		16 14 818-03									1	1	1		1	1	1	Tändstift Autolite 4055. Spark plug.	
	7	15 17 281-01	1		1		1	1		1	1	1	1	1	1	1	1	Kortslutningsknapp. Kill button.	
	8	16 14 816-02								1				1				Tändspole SEM. Ignition coil.	
N		16 14 815-01	1		1		1											Tändspole SEM Retard. Ignition coil.	
	9	725 23 80-51	2		2		2			2				2				Skruv M6x50. Screw.	
	10	16 14 778-01	1		1		1			1				1				Fästplatta. Mounting plate.	
	11	725 53 32-55	3		3		3			3				3				Skruv M5x55. Screw.	
	12	16 14 798-01								1				1				Magnet kpl. SEM. Magneto compl.	
	13	734 48 80-01	3		3		3			3				3				Bricka. Washer.	
	14	723 13 35-55	3		3		3			3				3				Skruv M5x30. Screw.	
	15	16 11 191-01	1		1		1			1				1				Mutter. Nut.	
	16	725 53 32-55			3		3	3		3	3	3	3	3	3	3	3	Skruv M5x22. Screw.	
	17	15 13 730-01			3		3	3		3	3	3	3	3	3	3	3	Bricka. Washer.	
	18	16 14 165-01			1		1	1		1	1	1	1	1	1	1	1	Fästplatta. Mounting plate.	
	19	725 52 95-55						3				3	3		3	3	3	Skruv M4x20. Screw.	
	20	16 14 794-01									1	1	1		1	1	1	Magnet kpl. Motoplat. Magneto compl.	
	21	16 11 191-02						1			1	1	1		1	1	1	Mutter. Nut.	
	22	725 53 28-01						3			3	3	3		3	3	3	Skruv M5x14. Screw.	
	28	734 48 51-01						3			3	3	3		3	3	3	Bricka. Washer.	
N	30	16 14 811-01	1		1		1											Magnet kpl. SEM Retard. Magneto compl.	
	31	16 14 801-01						1										Magnet kpl. Motoplat Retard. Magneto compl.	

Husqvarna

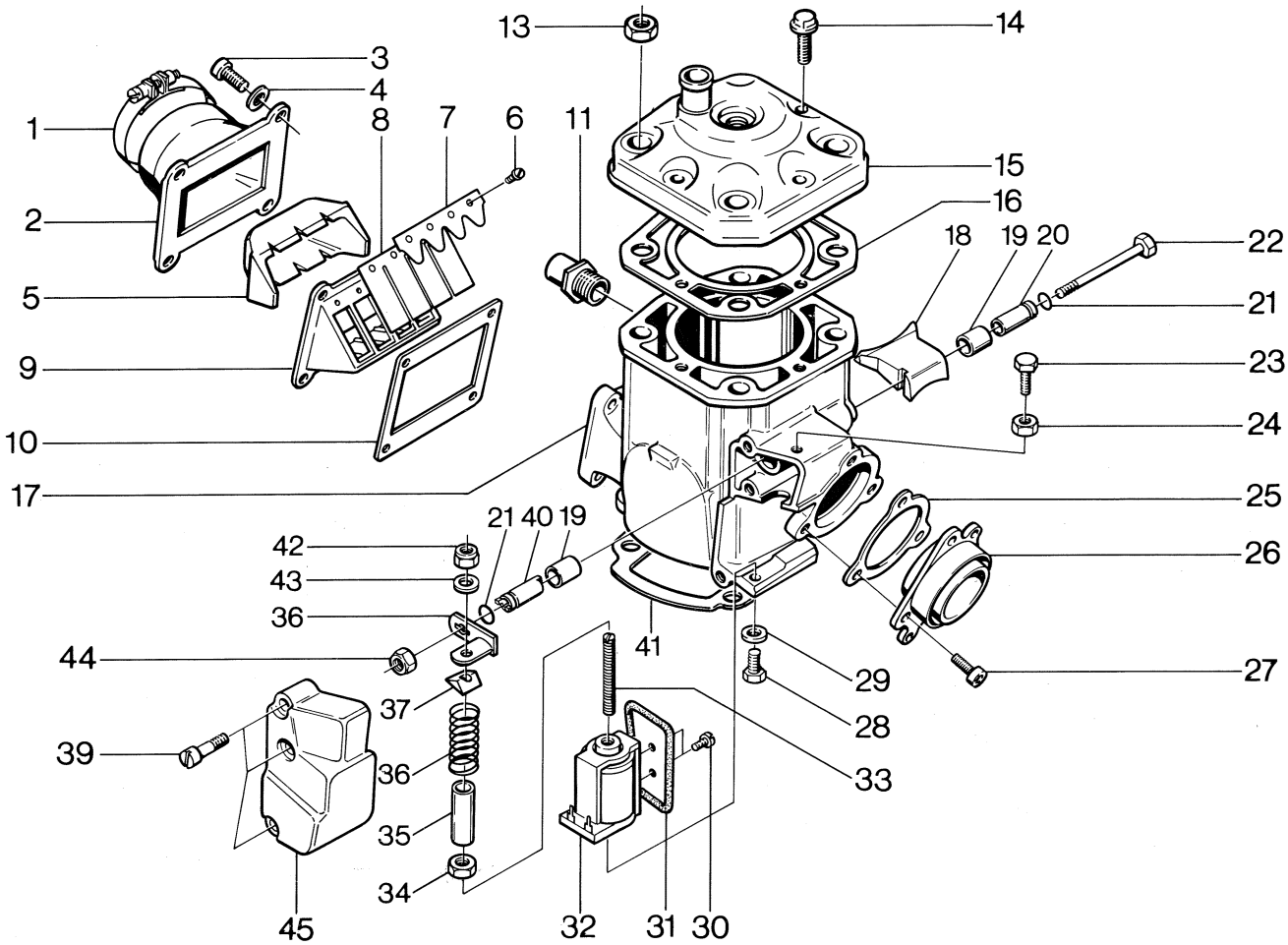

N	Fig.	Reservdel nr Spare part no.	125 WR	240 CR	240 WR	250 CR	250 EU WR	250 US WR	250 XC	400 WR	430 CR	430 WR	430 XC	430 Aut. EU	430 Aut. US	500 CR	500 XC	Benämning, Description	Not.
			ANTAL – QUANTITY																
	1	16 15 389-01		1		1												Slangklämma Norma S54/9Sy. Hose clamp.	
	2	16 15 272-01		1		1												Förgasaranslutning. Intake manifold.	
	3	725 53 70-01		4		4												Skruv M 6x20. Screw.	
	4	735 11 53-50		4		4												Bricka. Washer.	
	5	16 14 445-01		1		1												Ventilhållarinsats. Reed cage insert.	
	6	723 22 85-31		8		8												Skruv M 4x6. Screw.	
	7	16 11 866-01		2		2												Ventilstöd. Reed support.	
	8	16 11 864-01		2		2												Ventil. Reed.	
	9	16 11 856-01		1		1												Ventilhållare. Reed cage.	
	10	16 11 861-01		1		1												Packning ventilhus. Gasket.	
	13	15 13 704-01		4		4												Mutter. Nut.	
	14	15 13 700-01		4		4												Skruv. Screw.	
N	15	16 16 369-01		1		1												Topplock. Cylinder head.	
N	16	16 16 388-01		1		1												Topplockspackning. Cylinder head gasket.	
N	17	16 16 391-01		1														Cylinder kpl. Cylinder cpl.	
N	17	16 16 391-02				1												Cylinder kpl. Cylinder cpl.	
N	18	16 16 396-01		1		1												Klaff. Flap.	
N	19	16 16 401-01		2		2												Bussning. Bushing.	
N	20	16 16 397-01		1		1												Hylsa. Sleeve.	
N	21	740 42 05-10		2		2												O-ring.	
N	22	725 23 46-51		1		1												Skruv M 5x75. Screw.	
	23	725 23 68-51		1		1												Skruv M 6x16. Screw.	
	24	731 23 16-01		1		1												Mutter M 6. Nut.	
	25	16 14 537-01		1		1												Packning. Gasket.	
	26	16 14 534-01		1		1												Avgasstos. Exhaust manifold.	
	27	725 53 68-01		3		3												Skruv M6x16. Screw.	
	28	725 23 23-51		1		1												Skruv M 5x8. Screw.	
	29	735 11 46-50		1		1												Vågbricka. Wave washer.	
N	30	723 12 20-01		2		2												Skruv M3x6. Screw.	
N	31	16 16 407-01																Skyddsplåt. Protection plate.	
N	32	16 16 402-01		1		1												Elmagnet. Solenoid.	
N	33	727 32 80-40		1		1												Pinnskruv 4x40 RFR. Pin bolt.	
	34	731 23 12-01		1		1												Mutter M6M 4. Nut.	
	35	15 14 078-07		1		1												Slang. Hose.	

Husqvarna

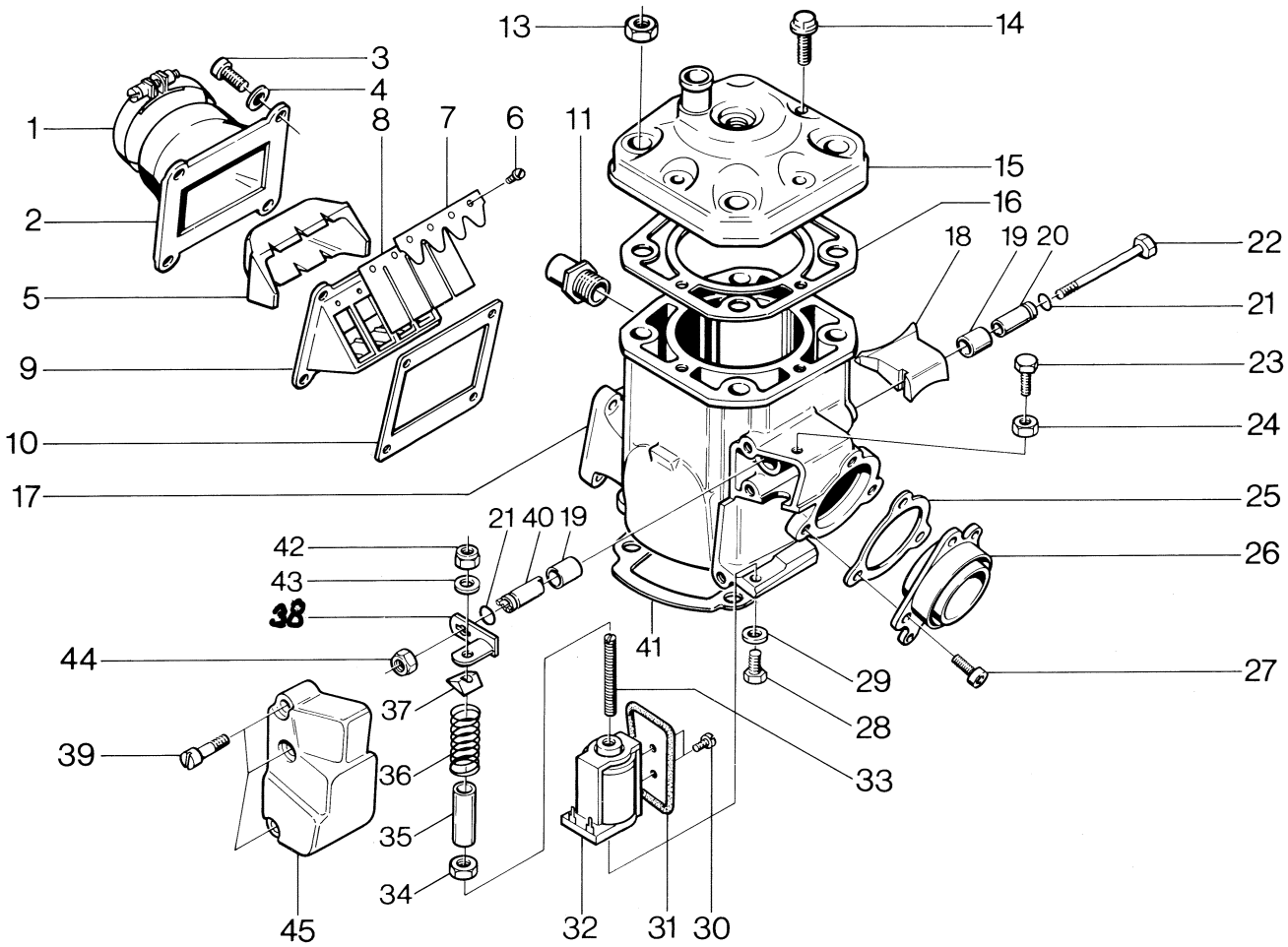

N	Fig.	Reservdel nr Spare part no.	ANTAL – QUANTITY 125 WR	240 CR	240 WR	250 CR	250 EU WR	250 US WR	250 XC	400 WR	430 CR	430 WR	430 XC	430 Aut. EU	430 Aut. US	500 CR	500 XC	Benämning, Description	Not.
N	36	16 16 400-01		1		1												Fjäder. Spring.	
N	37	16 16 411-01		1		1												Fjäderstöd. Spring support.	
N	38	16 16 405-01		1		1												Hävarm kpl. Lever cpl.	
	39	723 13 33-01		3		3												Skruv M5x25. Screw.	
	41	16 11 882-01		1		1												Cylinderfotspackning. Basegasket.	
	42	732 21 12-01		1		1												Mutter M4 nylock. Nut.	
	43	734 11 36-01		1		1												Bricka BRB 4,3x9 FZ. Washer.	
	44	732 21 14-01		1		1												Mutter M5. Nut.	
N	45	16 16 403-01		1		1												Kåpa. Cover.	

Husqvarna

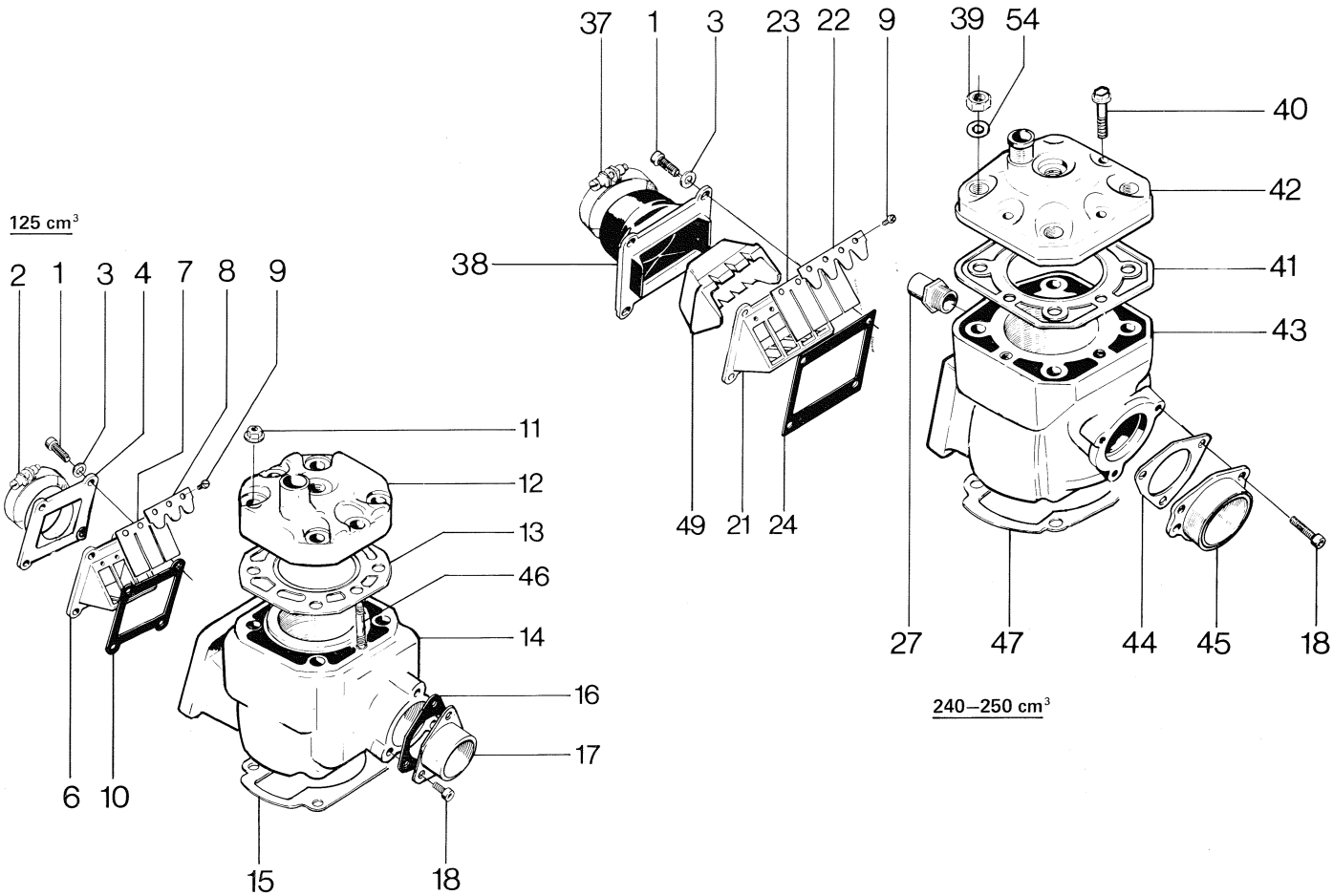

N	Fig.	Reservdel nr Spare part no.	ANTAL – QUANTITY 125 WR	240 CR	240 WR	250 CR	250 EU WR	250 US WR	250 XC	400 WR	430 CR	430 WR	430 XC	430 Aut. EU	430 Aut. US	500 CR	500 XC	Benämning, Description	Not.
	1	725 53 72-01	4		4		4	4	4									Skruv M6x25. Screw.	
	2	16 13 227-01	1															Klämma. Clamp.	
	3	735 11 53-50	4		4		4	4	4									Bricka. Washer.	
	4	16 11 857-01	1															Insugningsrör. Intake manifold.	
	6	16 11 855-01	1															Ventilhållare. Reed cage.	
	7	16 11 863-01	2															Ventil. Reed.	
	8	16 11 865-01	2															Ventilstöd. Reed support.	
	9	723 22 85-31	6		8		8	8	8									Skruv. Screw.	
	10	16 11 859-01	1															Packning. Gasket.	
	11	15 13 731-01	6															Mutter. Nut.	
	12	16 14 516-01	1															Cylinderlock. Cylinderhead.	
	13	16 14 522-01	1															Packning. Gasket.	
	14	16 14 437-02	1															Cylinder.	
	15	16 11 880-01	1															Packning. Gasket.	
	16	16 14 558-01	1															Packning. Gasket.	
	17	16 14 555-01	1															Avgasstos. Exhaust manifold.	
	18	725 53 68-01	3															Skruv M6x16. Screw.	
	21	16 11 856-01			1		1	1	1									Ventilhållare. Reed cage.	
	22	16 11 866-01			2		2	2	2									Ventilstöd. Reed support.	
	23	16 11 864-01			2		2	2	2									Ventil. Reed.	
	24	16 11 861-01			1		1	1	1									Packning. Gasket.	
	27	16 14 506-01	1		1		1	1	1									Anslutning. Hose connection	
	37	16 15 389-01			1		1	1	1									Klämma. Clamp.	
	38	16 15 302-01			1		1	1	1									Förgasaranslutning. Intake manifold.	
	39	16 14 473-01			4		4	4	4									Mutter M10. Nut.	
	40	15 13 700-01			4		4	4	4									Skruv M8x40. Screw.	
N	41	16 16 388-01			1		1	1	1									Packning. Gasket.	
N	42	16 16 369-01			1		1	1	1									Cylinderlock. Cylinder head.	
N	43	16 16 378-01			1													Cylinder.	
N		16 16 378-02					1	1	1									Cylinder.	
	44	16 14 537-01			1		1	1	1									Packning. Gasket.	
	45	16 14 534-01			1		1	1	1									Avgasstos. Exhaust manifold.	
	46	16 14 541-01	4		4		4	4	4									Pinnskruv. Stud.	
	47	16 11 882-01			1		1	1	1									Packning. Gasket.	
	49	16 14 445-01			1		1	1	1									Insats, flapshållare. Insert, reed valve holder.	

Husqvarna

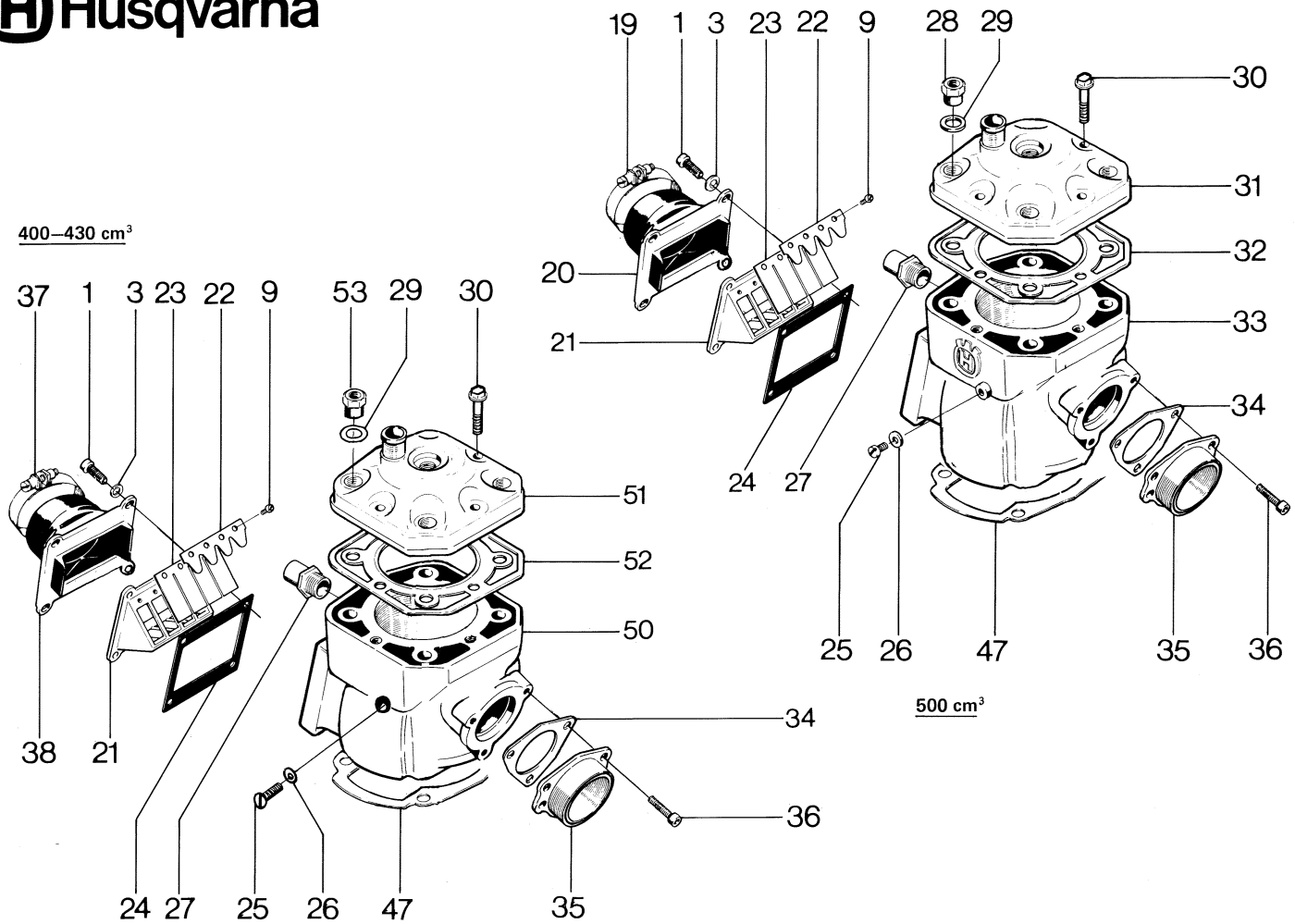

N	Fig.	Reservdel nr Spare part no.	ANTAL – QUANTITY 125 WR	240 CR	240 WR	250 CR	250 EU WR	250 US WR	250 XC	400 WR	430 CR	430 WR	430 XC	430 Aut. EU	430 Aut. US	500 CR	500 XC	Benämning, Description	Not.
	1	725 53 72-01								4	4	4	4	4	4	4	4	Skruv M6x25. Screw.	
	3	735 11 53-50								4	4	4	4	4	4	4	4	Bricka. Washer.	
	9	723 22 85-31								8	8	8	8	8	8	8	8	Skruv. Screw.	
	19	16 13 598-01														1	1	Klämma. Clamp.	
	20	16 15 271-01														1		Insugningsrör. Intake manifold.	
		16 15 302-01															1	Insugningsrör. Intake manifold.	
	21	16 11 856-01								1	1	1	1	1	1	1	1	Ventilhållare. Reed cage.	
	22	16 11 866-01								2	2	2	2	2	2	2	2	Ventilstöd. Reed support.	
	23	16 11 864-01								2	2	2	2	2	2	2	2	Ventil. Reed.	
	24	16 11 861-01								1	1	1	1	1	1	1	1	Packning. Gasket.	
	25	725 23 64-53								1	1	1	1	1	1	1	1	Skruv M6x10. Screw.	
	26	16 10 823-01								1	1	1	1	1	1	1	1	Bricka. Washer.	
	27	16 14 506-01								1	1	1	1	1	1	1	1	Anslutning. Hose connection.	
	28	16 11 190-01														4	4	Mutter. Nut.	
	29	16 14 583-01								4	4	4	4	4	4	4	4	Bricka. Washer.	
	30	15 13 700-01								4	4	4	4	4	4	4	4	Skruv M8x40. Screw.	
	31	16 14 593-02														1	1	Cylinderlock. Cylinder head.	
	32	16 14 587-01														1	1	Packning. Gasket.	
N	33	16 16 390-01														1	1	Cylinder.	
	34	16 14 570-01														1	1	Packning. Gasket.	
	35	16 14 567-01								1	1	1	1	1	1	1	1	Avgasstos. Exhaust manifold.	
	36	725 53 69-01								3	3	3	3	3	3	3	3	Skruv M6x18. Screw.	
	37	16 15 389-01								1	1	1	1	1	1		1	Klämma. Clamp.	
	38	16 15 302-01								1	1	1	1	1	1			Förgasaranslutning. Intake manifold.	
	47	16 11 882-01								1	1	1	1	1	1	1	1	Packning. Gasket.	
	50	16 14 457-01								1								Cylinder 400.	
		16 14 480-01									1	1	1	1	1			Cylinder 430.	
	51	16 14 576-01								1								Cylinderlock 400. Cylinder head.	
		16 14 483-01									1	1	1	1	1			Cylinderlock 430. Cylinder head.	
	52	16 14 577-01								1								Packning 400. Gasket.	
		16 14 482-01									1	1	1	1	1			Packning 430. Gasket.	
	53	16 11 077-01								4	4	4	4	4	4			Halsmutter. Nut.	

Husqvarna

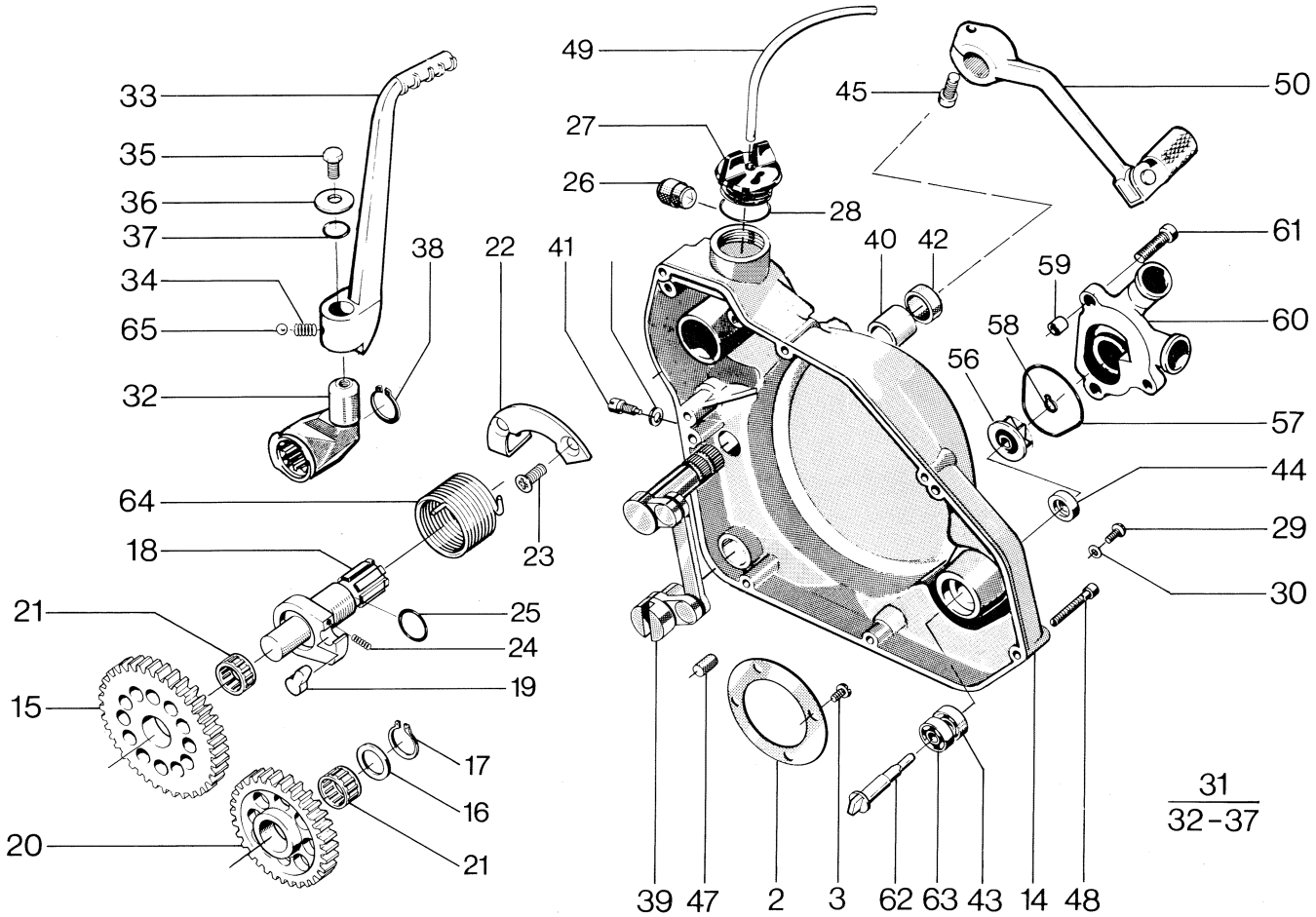

N	Fig.	Reservdel nr Spare part no.	ANTAL – QUANTITY 125 WR	240 CR	240 WR	250 CR	250 EU WR	250 US WR	250 XC	400 WR	430 CR	430 WR	430 XC	430 Aut. EU	430 Aut. US	500 CR	500 XC	Benämning, Description	Not.
	3	725 23 31-86	4															Skruv M5x20. Screw.	
	14	16 19 849-02	1															Vevhuskåpa, vänster. Transmission cover.	
	15	16 14 470-01	1															Kickhjul. Gearwheel kickstart.	
	16	15 13 714-01	1															Bricka. Washer.	
	17	735 31 18-00	1															Spårring. Circlip.	
	18	16 11 678-01	1															Kickaxel. Kickshaft.	
	19	16 11 680-01	1															Medbringare. Pawl.	
	20	16 11 281-01	1															Mellanhjul. Idle gear.	
	21	16 11 675-01	1															Nållager. Needle bearing.	
	22	16 11 284-01	1															Fjäderhållare. Spring holder.	
	23	725 63 31-05	2															Skruv. Screw.	
	24	16 11 681-01	1															Fjäder. Spring.	
	25	740 43 13-10	2															O-ring.	
	26	16 17 017-01	1															Buffert. Buffert.	
	27	16 10 786-01	1															Lock. Cap.	
	28	50 12 782-01	1															Packning. Gasket.	
	29	723 13 64-01	1															Skruv M6x10. Screw.	
	30	16 10 823-01	1															Packning. Gasket.	
	31	16 11 086-01	1															Kickstartpedal. Kick starter pedal.	
	32	16 11 672-02	1															Underdel, kick. Lower part.	
	33	16 11 083-01	1															Kickstartpedal. Kick starter pedal.	
	34	16 11 084-01	1															Fjäder. Spring.	
	35	725 53 66-01	1															Skruv M6x12. Screw.	
	36	16 11 298-01	1															Bricka. Washer.	
	37	740 43 13-10	1															O-ring.	
	38	735 31 22-00	1															Spårring. Circlip.	
	39	16 11 535-01	1															Växelmekanism, kpl. Gear links compl.	
	40	16 11 474-01	1															Bussning. Bushing.	
	41	12 25 077-01	1															Stoppskruv. Screw.	
	42	503 26 02-05	1															Tätring. Seal.	
	43	738 21 98-04	1															Kullager. Bearing.	
	44	16 17 958-01	1															Tätring. Seal.	

Husqvarna

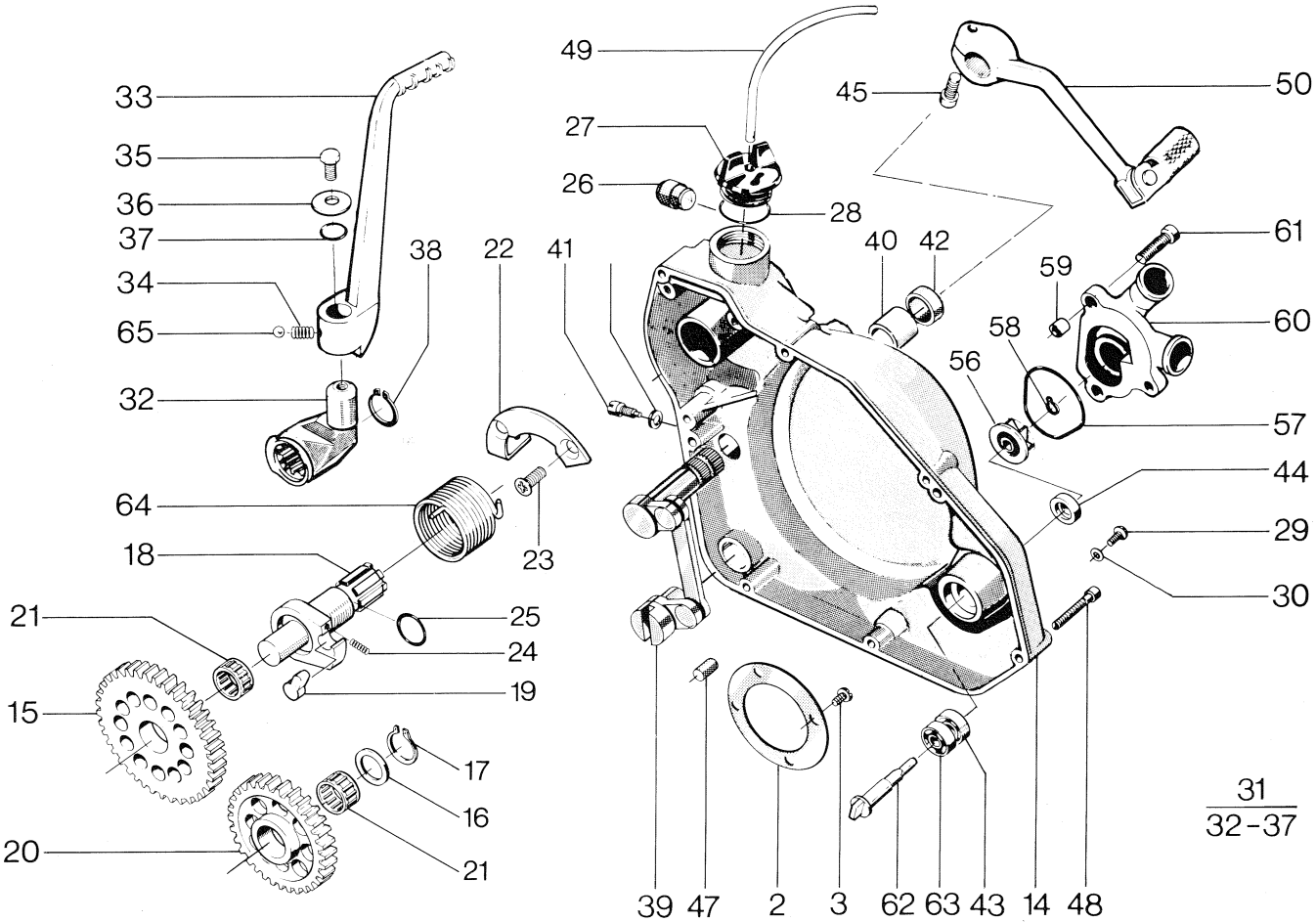

N	Fig.	Reservdel nr Spare part no.	ANTAL – QUANTITY 125 WR	240 CR	240 WR	250 CR	250 EU WR	250 US WR	250 XC	400 WR	430 CR	430 WR	430 XC	430 Aut. EU	430 Aut. US	500 CR	500 XC	Benämning, Description	Not.
	45	725 53 70-01	1															Skruv M6x20. Screw.	
	48	725 53 76-01	7															Skruv M6x35. Screw.	
	49	12 25 621-10	1															Slang/m 4.8x8. Hose/m.	
	50	16 16 359-01	1															Fotväxelpedal. Shift lever.	
	56	16 17 951-01	1															Pumphjul. Pumpwheel.	
	57	740 48 34-03	1															O-ring.	
	58	735 31 08-01	1															Låsring. Circlip.	
	59	16 17 955-01	2															Styrstift. Peg.	
	60	16 17 967-01	1															Pumphus. Pumphousing.	
	61	725 53 71-01	3															Skruv M6x22. Screw.	
	62	16 17 966-01	1															Pumpaxel. Pump shaft.	
	63	738 21 98-00	1															Kullager. Bearing.	
	64	16 11 682-01	1															Kickfjäder. Spring.	
	65	738 61 20-03	1															Kula. Ball.	

Husqvarna

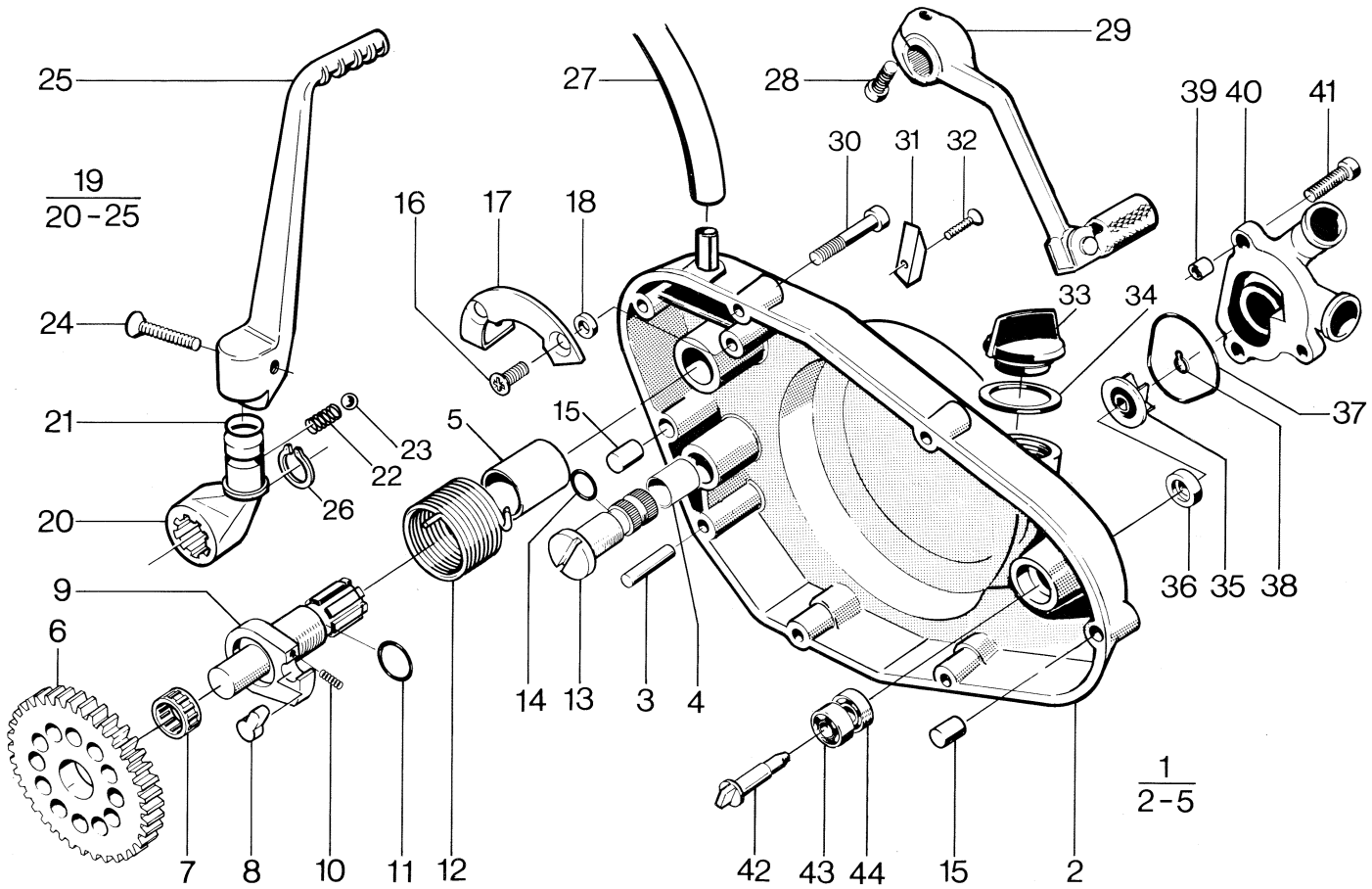

N	Fig.	Reservdel nr Spare part no.	ANTAL – QUANTITY 125 WR	240 CR	240 WR	250 CR	250 EU WR	250 US WR	250 XC	400 WR	430 CR	430 WR	430 XC	430 Aut. EU	430 Aut. US	500 CR	500 XC	Benämning, Description	Not.
N	1	16 19 900-01		1	1	1	1	1	1	1	1	1	1			1	1	Vevhuskåpa vänster, kpl. Transmission cover.	
	3	720 13 61-50		1	1	1	1	1	1	1	1	1	1			1	1	Räffelpinne. Pin.	
	4	16 14 472-01		1	1	1	1	1	1	1	1	1	1			1	1	Bussning. Bushing.	
	5	16 14 469-01		1	1	1	1	1	1	1	1	1	1			1	1	Bussning. Bushing.	
	6	16 11 270-01		1	1	1	1	1	1	1	1	1	1			1	1	Kugghjul. Gear wheel.	
	8	16 11 680-01		1	1	1	1	1	1	1	1	1	1			1	1	Medbringare. Driving.	
	9	16 11 677-01		1	1	1	1	1	1	1	1	1	1			1	1	Kickaxel. Shaft.	
	10	16 11 681-01		1	1	1	1	1	1	1	1	1	1			1	1	Fjäder. Spring.	
	11	740 43 13-10		1	1	1	1	1	1	1	1	1	1			1	1	O-ring.	
	12	16 11 682-01		1	1	1	1	1	1	1	1	1	1			1	1	Kickfjäder. Spring.	
	13	16 11 746-01		1	1	1	1	1	1	1	1	1	1			1	1	Växlingsaxel. Shaft.	
	14	740 43 10-10		2	2	2	2	2	2	2	2	2	2			2	2	O-ring	
	15	16 11 708-01		2	2	2	2	2	2	2	2	2	2			2	2	Styrhylsa. Steering sleeve.	
	16	724 33 70-50		2	2	2	2	2	2	2	2	2	2			2	2	Skruv M 6x20. Screw.	
	17	16 11 704-01		1	1	1	1	1	1	1	1	1	1			1	1	Fjäderhållare. Spring holder.	
	18	16 11 706-01		2	2	2	2	2	2	2	2	2	2			2	2	Distans. Distance.	
	19	16 14 385-01		1	1	1	1	1	1	1	1	1	1			1	1	Kickstartvev. Kick starter.	
N	20	16 14 423-01		1	1	1	1	1	1	1	1	1	1			1	1	Underdel, kick. Lower part, kickstarter.	
	21	740 43 15-02		1	1	1	1	1	1	1	1	1	1			1	1	O-ring.	
	22	16 11 084-01		1	1	1	1	1	1	1	1	1	1			1	1	Fjäder. Spring.	
	23	738 61 20-03		1	1	1	1	1	1	1	1	1	1			1	1	Kula. Ball.	
N	24	725 63 74-03		1	1	1	1	1	1	1	1	1	1			1	1	Skruv M 6x30. Screw.	
N	25	16 14 424-01		1	1	1	1	1	1	1	1	1	1			1	1	Kickstartpedal. Kick starter pedal.	
	26	735 31 22-00		1	1	1	1	1	1	1	1	1	1			1	1	Spårring. Circlip.	
	27	16 14 540-01		1	1	1	1	1	1	1	1	1	1			1	1	Ventilationsslang. Ventilation hose.	
	28	725 53 70-01		1	1	1	1	1	1	1	1	1	1			1	1	Skruv M 6x22. Screw.	
	29	16 16 359-01		1	1	1	1	1	1	1	1	1	1			1	1	Fotväxelpedal kpl. Shift lever cpl.	
	30	725 53 79-01		7	7	7	7	7	7	7	7	7	7			7	7	Skruv M 6x45. Screw.	
N	31	16 14 375-01		1	1	1	1	1	1	1	1	1	1			1	1	Gummistop, kickstart. Buffer.	
	32	725 62 94-03		1	1	1	1	1	1	1	1	1	1			1	1	Skruv M 4x18. Screw.	
	33	16 10 786-02		1	1	1	1	1	1	1	1	1	1			1	1	Lock. Cap.	
	34	16 12 788-01		1	1	1	1	1	1	1	1	1	1			1	1	Packning. Gasket.	

Husqvarna

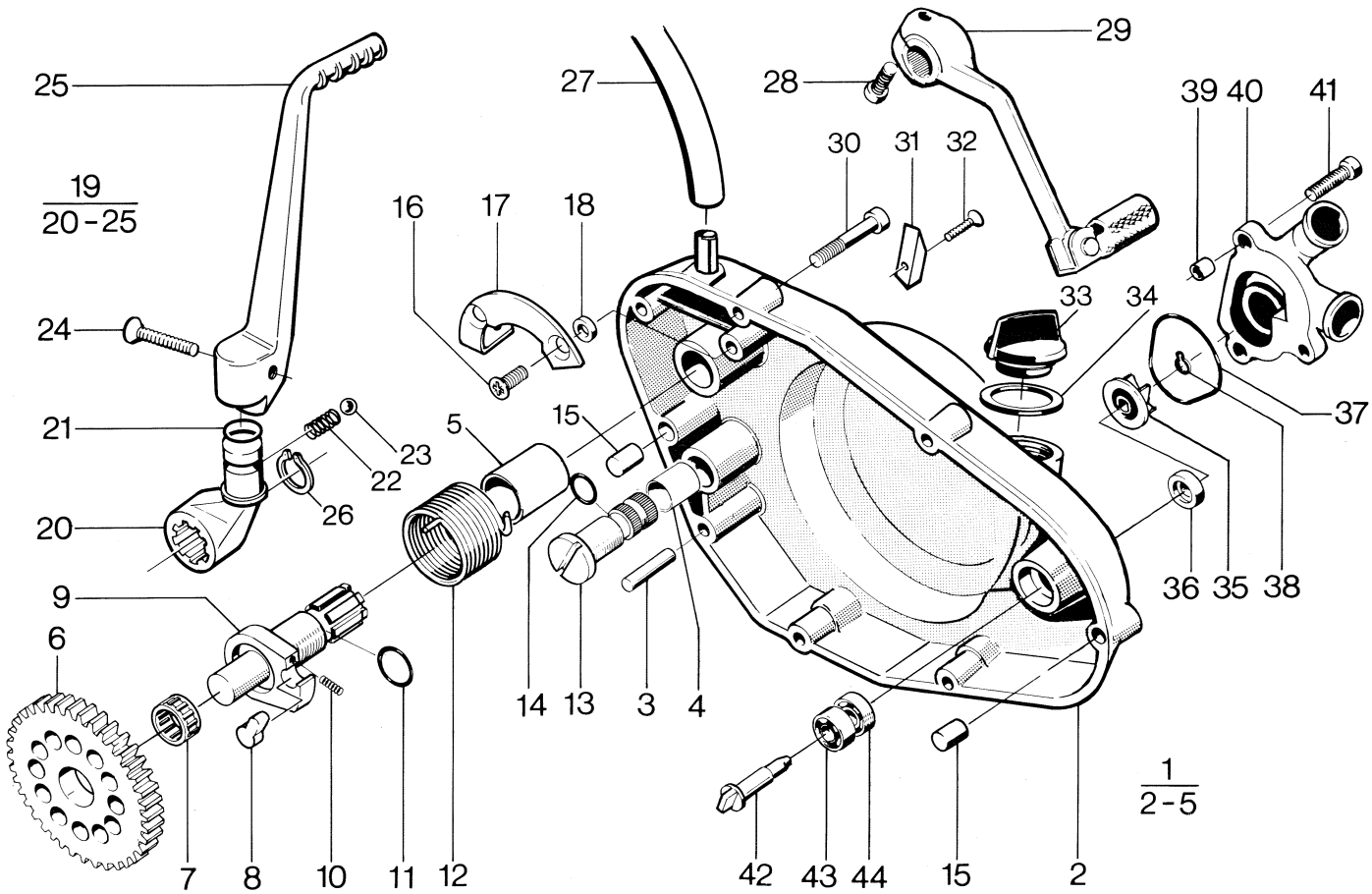

N	Fig.	Reservdel nr Spare part no.	ANTAL – QUANTITY 125 WR	240 CR	240 WR	250 CR	250 EU WR	250 US WR	250 XC	400 WR	430 CR	430 WR	430 XC	430 Aut. EU	430 Aut. US	500 CR	500 XC	Benämning, Description	Not.
	35	16 17 951-01		1	1	1	1	1	1	1	1	1	1			1	1	Pumphjul. Pump wheel.	
	36	16 17 958-01		1	1	1	1	1	1	1	1	1	1			1	1	Tätring. Seal.	
	37	740 48 34-03		1	1	1	1	1	1	1	1	1	1			1	1	O-ring.	
	38	735 31 08-00		1	1	1	1	1	1	1	1	1	1			1	1	Låsring. Circlip.	
	39	16 17 955-01		2	2	2	2	2	2	2	2	2	2			2	2	Styrstift. Peg.	
	40	16 17 967-01		1	1	1	1	1	1	1	1	1	1			1	1	Pumphus. Pump housing.	
	41	725 53 71-01		3	3	3	3	3	3	3	3	3	3			3	3	Skruv M 6x22. Screw.	
	42	16 17 966-01		1	1	1	1	1	1	1	1	1	1			1	1	Pumpaxel. Pump shaft.	
	43	738 21 98-00		1	1	1	1	1	1	1	1	1	1			1	1	Kullager. Ball bearing.	
	44	738 21 98-04		1	1	1	1	1	1	1	1	1	1			1	1	Lager. Bearing.	

Husqvarna

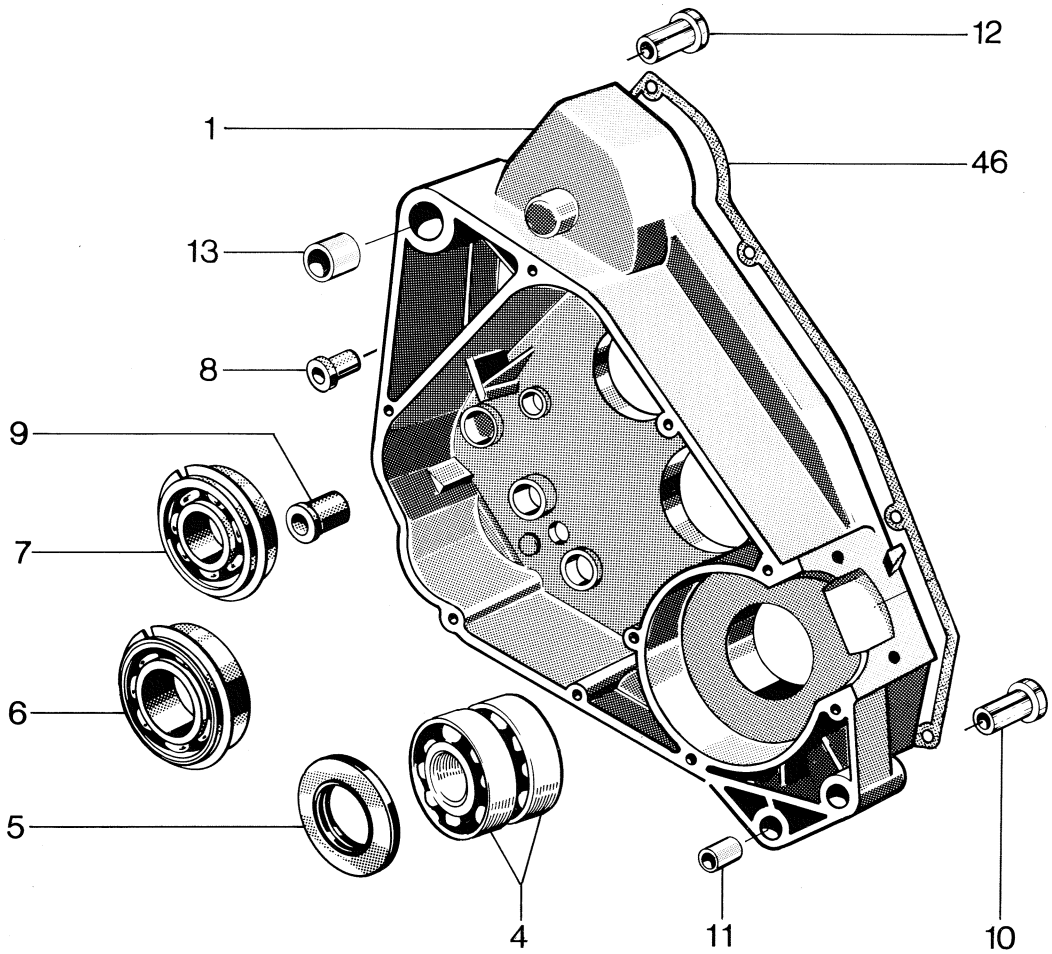

1
10,12

N	Fig.	Reservdel nr Spare part no.	ANTAL – QUANTITY 125 WR	240 CR	240 WR	250 CR	250 EU WR	250 US WR	250 XC	400 WR	430 CR	430 WR	430 XC	430 Aut. EU	430 Aut. US	500 CR	500 XC	Benämning, Description	Not.
	1	16 19 691-01	1															Vevhushalva, vänster. Crankcase half left.	
		16 19 692-01	1															Vevhushalvor par. Crankcase halves pair.	
	2	16 11 566-01	1															Stödbricka. Support washer.	
	4	738 22 04-25	2															Kullager SKF 3204/C3. Ball bearing.	
	5	15 13 724-01	1															Tätring. Seal.	
	6	15 13 721-01	1															Kullager SKF 6205 NR/C3. Ball bearing.	
	7	15 13 720-01	1															Kullager SKF 6303 NR/C3. Ball bearing.	
	8	16 11 465-01	2															Bussning. Bushing.	
	9	12 25 356-01	1															Bussning. Bushing.	
	10	16 10 777-01	2															Flänsbussning. Flange sleeve.	
	11	16 10 776-01	1															Styrhylsa. Steering sleeve.	
	12	16 14 589-01	1															Flänsbussning. Flange sleeve.	
	13	16 14 590-01	1															Styrhylsa. Steering sleeve.	
	46	16 10 792-01	1															Packning. Gasket.	

Husqvarna

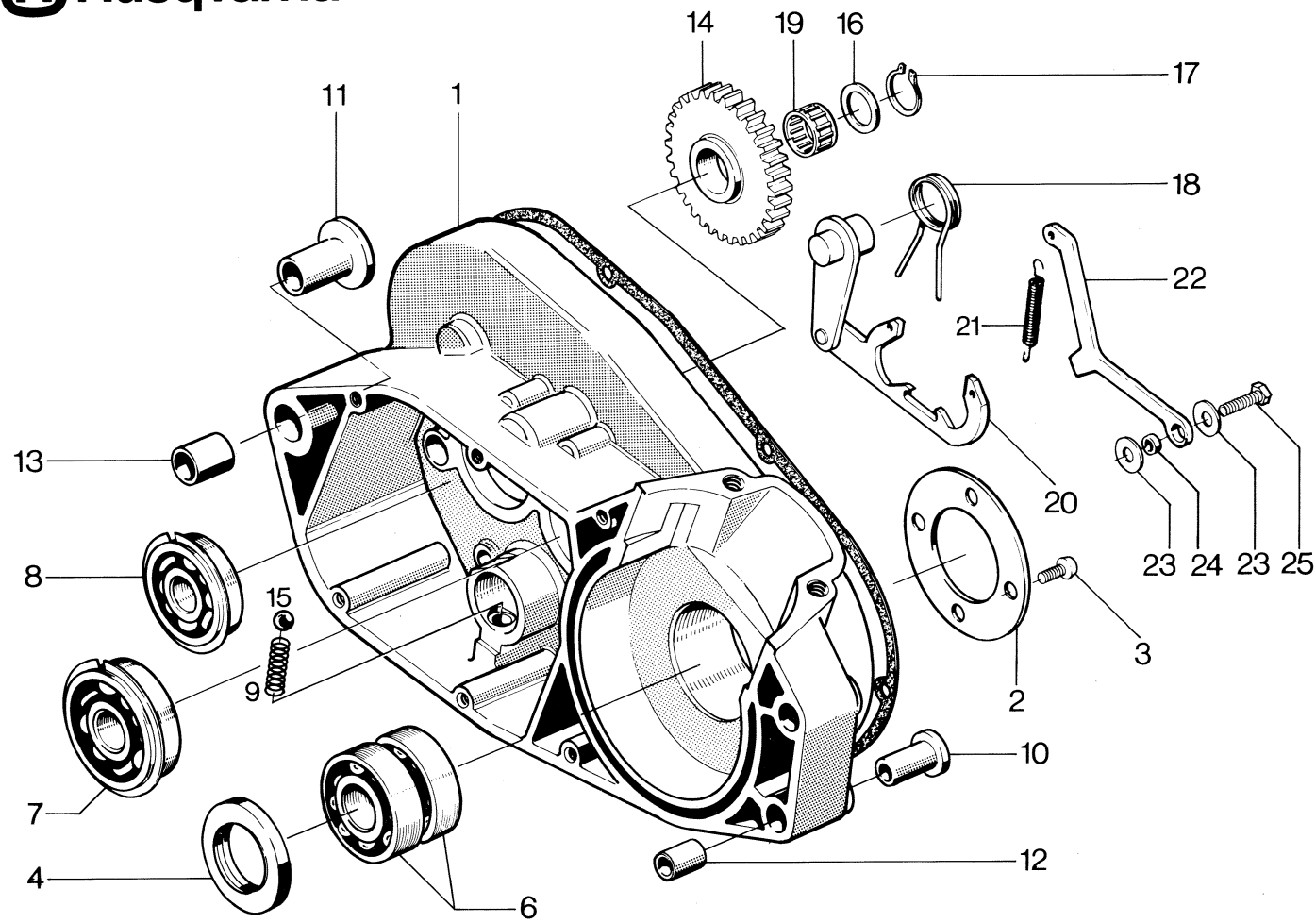

N	Fig.	Reservdel nr Spare part no.	ANTAL – QUANTITY 125 WR	240 CR	240 WR	250 CR	250 EU WR	250 US WR	250 XC	400 WR	430 CR	430 WR	430 XC	430 Aut. EU	430 Aut. US	500 CR	500 XC	Benämning, Description	Not.
N	1	16 19 894-01		1	1	1	1	1	1									Vevhushalva, vänster kpl. Crankcase half left.	
N		16 19 688-02								1	1	1	1			1	1	Vevhushalva, vänster kpl. Crankcase half left.	
	2	16 10 779-01		1	1	1	1	1	1	1	1	1	1			1	1	Stödbricka. Support washer.	
	3	725 23 31-86		4	4	4	4	4	4	4	4	4	4			4	4	Skruv M6x20. Screw.	
	4	15 13 726-01		1	1	1	1	1	1	1	1	1	1			1	1	Tätring. Seal.	
	5	16 11 650-02		1	1	1	1	1	1	1	1	1	1			1	1	Packning. Gasket.	
	6	738 22 05-25		2	2	2	2	2	2	2	2	2	2			2	2	Kullager. Ball bearing.	
	7	15 13 721-01		1	1	1	1	1	1	1	1	1	1			1	1	Kullager. Ball bearing.	
	8	15 13 720-01		1	1	1	1	1	1	1	1	1	1			1	1	Kullager. Ball bearing.	
	9	16 12 745-01		1	1	1	1	1	1	1	1	1	1			1	1	Fjäder. Spring.	
	10	16 10 777-01		2	2	2	2	2	2	2	2	2	2			2	2	Flänsbussning. Flange sleeve.	
	11	16 14 589-01		2	2	2	2	2	2	2	2	2	2			2	2	Flänsbussning. Flange sleeve.	
	12	16 10 776-01		1	1	1	1	1	1	1	1	1	1			1	1	Styrhylsa, fram. Steering sleeve.	
	13	16 14 590-01		1	1	1	1	1	1	1	1	1	1			1	1	Styrhylsa, bak. Steering sleeve.	
	14	16 11 271-01		1	1	1	1	1	1	1	1	1	1			1	1	Mellanhjul. Cog wheel.	
	15	738 61 30-03		1	1	1	1	1	1	1	1	1	1			1	1	Kula. Ball.	
	16	15 13 714-01		1	1	1	1	1	1	1	1	1	1			1	1	Bricka. Washer.	
	17	735 31 18-00		1	1	1	1	1	1	1	1	1	1			1	1	Spårring. Circlip.	
	18	16 11 692-01		1	1	1	1	1	1	1	1	1	1			1	1	Återgångsfjäder. Return spring.	
	19	16 11 675-01		1	1	1	1	1	1	1	1	1	1			1	1	Nålhylsa. Sleeve.	
	20	16 11 686-01		1	1	1	1	1	1	1	1	1	1			1	1	Växelmatare. Kicker.	
	21	16 11 684-01		1	1	1	1	1	1	1	1	1	1			1	1	Fjäder. Spring.	
	22	16 11 683-01		1	1	1	1	1	1	1	1	1	1			1	1	Lägeshake. Hook link.	
	23	15 13 734-01		2	2	2	2	2	2	2	2	2	2			2	2	Bricka. Washer.	
	24	16 11 216-01		1	1	1	1	1	1	1	1	1	1			1	1	Bussning. Bushing.	
	25	725 23 68-53		1	1	1	1	1	1	1	1	1	1			1	1	Skruv M 6x16. Screw.	

Husqvarna

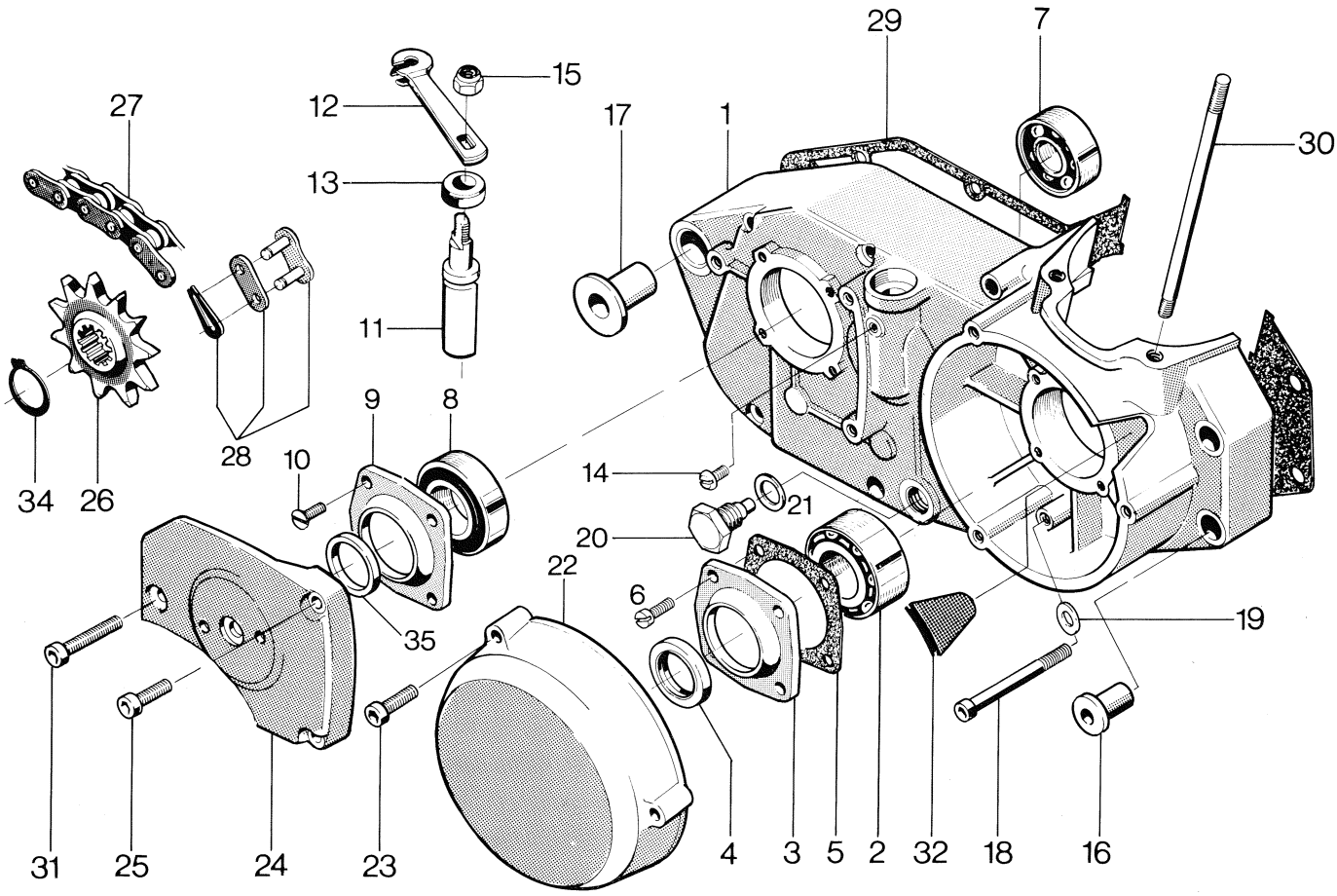

N	Fig.	Reservdel nr Spare part no.	ANTAL – QUANTITY 125 WR	240 CR	240 WR	250 CR	250 EU WR	250 US WR	250 XC	400 WR	430 CR	430 WR	430 XC	430 Aut. EU	430 Aut. US	500 CR	500 XC	Benämning, Description	Not.
N		16 19 895-01		1	1	1	1	1	1									Vevhus, kpl. Crankcase, compl.	
N		16 19 689-02								1	1	1	1			1	1	Vevhus, kpl. Crankcase, compl.	
N	1	16 19 893-01		1	1	1	1	1	1									Vevhushalva höger, kpl. Crankcase half, compl.	
		16 19 687-01								1	1	1	1			1	1	Vevhushalva höger, kpl. Crankcase half, compl.	
	2	738 32 05-40		1	1	1	1	1	1	1	1	1	1			1	1	Vinkelkontaktkullager. Ball bearing.	
	3	16 10 810-01		1	1	1	1	1	1	1	1	1	1			1	1	Fläns. Flange.	
	4	15 13 725-01		1	1	1	1	1	1	1	1	1	1			1	1	Tätring. Seal.	
	5	12 25 358-01		1	1	1	1	1	1	1	1	1	1			1	1	Packning. Gasket.	
	6	723 13 28-51		4	4	4	4	4	4	4	4	4	4			4	4	Skruv M5x14. Screw.	
	7	738 23 02-40		1	1	1	1	1	1	1	1	1	1			1	1	Kullager. Ball bearing.	
	8	738 22 05-28		1	1	1	1	1	1	1	1	1	1			1	1	Kullager. Ball bearing.	
	9	16 11 778-01							1	1	1	1	1			1	1	Fläns. Flange.	
	10	723 53 28-55							4	4	4	4	4			4	4	Skruv M5x14. Screw.	
	11	16 15 310-01		1	1	1	1	1	1	1	1	1	1			1	1	Frikopplingsaxel. Declutching shaft.	
	12	16 14 584-01		1	1	1	1	1	1	1	1	1	1			1	1	Hävarm. Lever.	
	13	15 13 722-01		1	1	1	1	1	1	1	1	1	1			1	1	Tätring. Seal.	
	14	723 13 23-01		1	1	1	1	1	1	1	1	1	1			1	1	Skruv M5x8. Screw.	
	15	732 21 18-01		1	1	1	1	1	1	1	1	1	1			1	1	Låsmutter. Nut.	
	16	16 10 777-01		2	2	2	2	2	2	2	2	2	2			2	2	Flänsbussning. Flange sleeve.	
	17	16 14 589-01		1	1	1	1	1	1	1	1	1	1			1	1	Flänsbussning. Flange sleeve.	
	18	725 53 85-01		6	6	6	6	6	6	6	6	6	6			6	6	Skruv M6x75. Screw.	
	19	734 11 53-01		6	6	6	6	6	6	6	6	6	6			6	6	Bricka 6.4x12.5. Washer.	
	20	16 12 537-01		1	1	1	1	1	1	1	1	1	1			1	1	Magnetbult. Magneto plug.	
	21	12 25 025-01		1	1	1	1	1	1	1	1	1	1			1	1	Packning. Gasket.	
	22	16 11 640-01		1	1	1	1	1	1	1	1	1	1			1	1	Magnetkåpa. Magneto cover.	
	23	725 53 78-01		3	3	3	3	3	3	3	3	3	3			3	3	Skruv M6x40. Screw.	
	24	16 11 816-02		1	1	1	1	1	1	1	1	1	1			1	1	Kåpa. Cover.	
	25	725 53 74-01		2	2	2	2	2	2	2	2	2	2			2	2	Skruv M6x30. Screw.	
	26	16 12 693-04		1		1		1	1		1					1		Kedjedrev z = 13. Sprocket.	
		16 12 693-08			1		1			1								Kedjedrev z = 17. Sprocket.	
		16 12 693-05										1	1				1	Kedjedrev Z = 14. Sprocket.	

Husqvarna

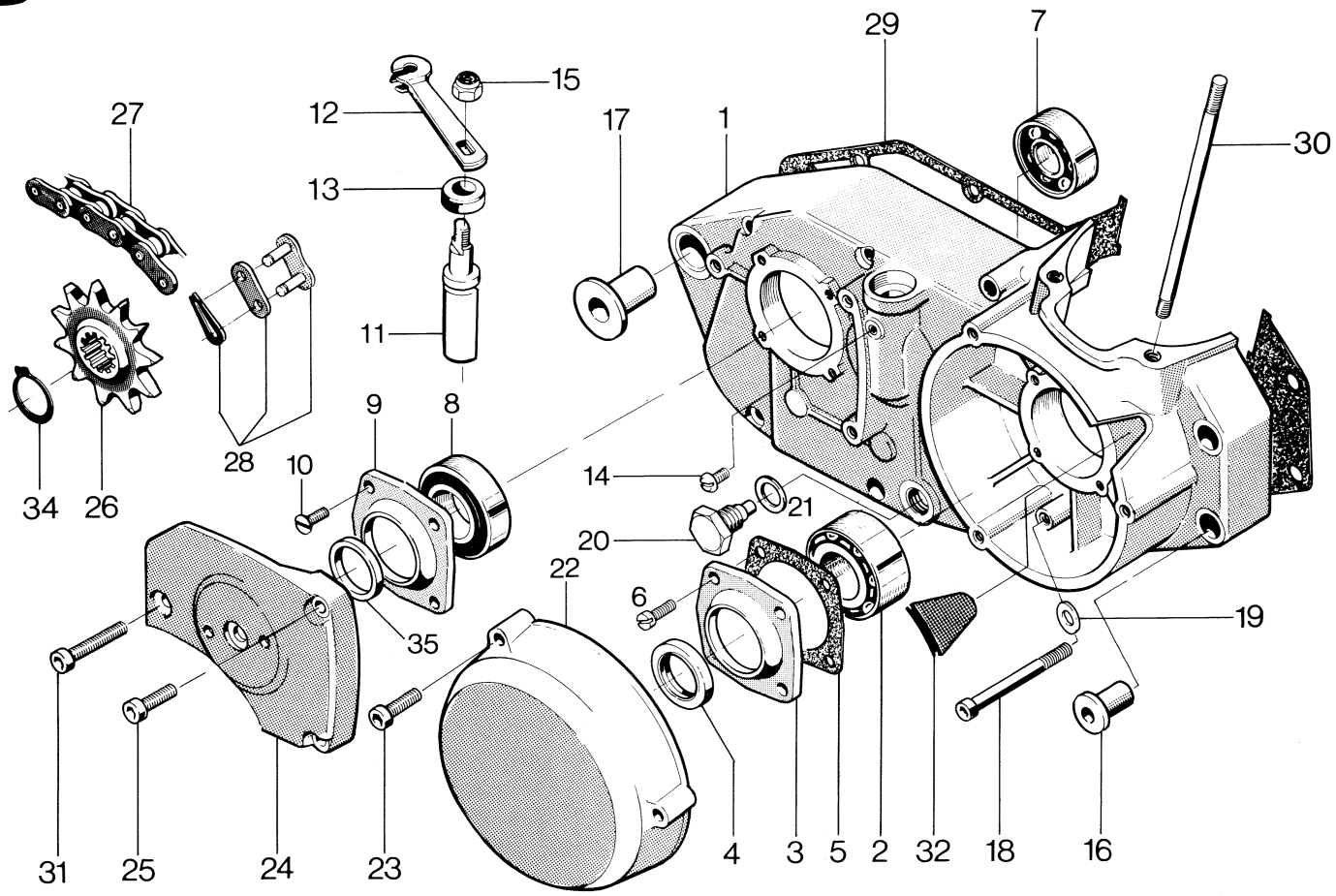

N	Fig.	Reservdel nr Spare part no.	ANTAL – QUANTITY 125 WR	240 CR	240 WR	250 CR	250 EU WR	250 US WR	250 XC	400 WR	430 CR	430 WR	430 XC	430 Aut. EU	430 Aut. US	500 CR	500 XC	Benämning, Description	Not.
	27	15 19 760-11		1		1			1		1		1					Drivkedja 5/8x1/4" 116 länk. Chain.	
		15 19 760-12														1	1	Drivkedja 5/8x1/4" 118 länk. Chain.	
		15 17 760-06			1		1	1				1						Drivkedja O-ring 5/8x1/4" 116 länk. Chain O-ring.	
		15 17 760-07								1		1						Drivkedja O-ring 5/8x1/4" 118 länk. Chain O-ring.	
	28	15 19 769-04		1		1			1				1			1	1	Kedjelås. Chain lock.	
N	29	16 11 667-03		1	1	1	1		1									Packning. Gasket.	
		16 11 667-02								1	1	1	1			1	1	Packning. Gasket.	
	30	16 11 883-04											4			4		Dragbult. Cylinder stud.	
		16 11 710-01		4	4	4	4	4	4	4	4	4					4	Dragbult. Cylinder stud.	
	31	725 53 76-01		1	1	1	1	1	1	1	1	1	1			1	1	Skruv M6x36. Screw.	
	32	16 14 728-01		1	1	1	1	1	1	1	1	1	1			1	1	Kabelgenomföring. Grommet.	
N	33	16 19 905-01		1	1	1	1	1	1									Packningssats. Gasket set.	
		16 19 864-01														1	1	Packningssats. Gasket set.	
N		16 19 703-01								1								Packningssats. Gasket set.	
N		16 19 891-01									1	1	1					Packningssats. Gasket set.	
	34	735 31 26-00		1	1	1	1	1	1	1	1	1	1			1	1	Låsring. Circlip.	
	35	16 12 353-01		1	1	1	1	1	1	1	1	1	1			1	1	Distans Spacer.	

Husqvarna

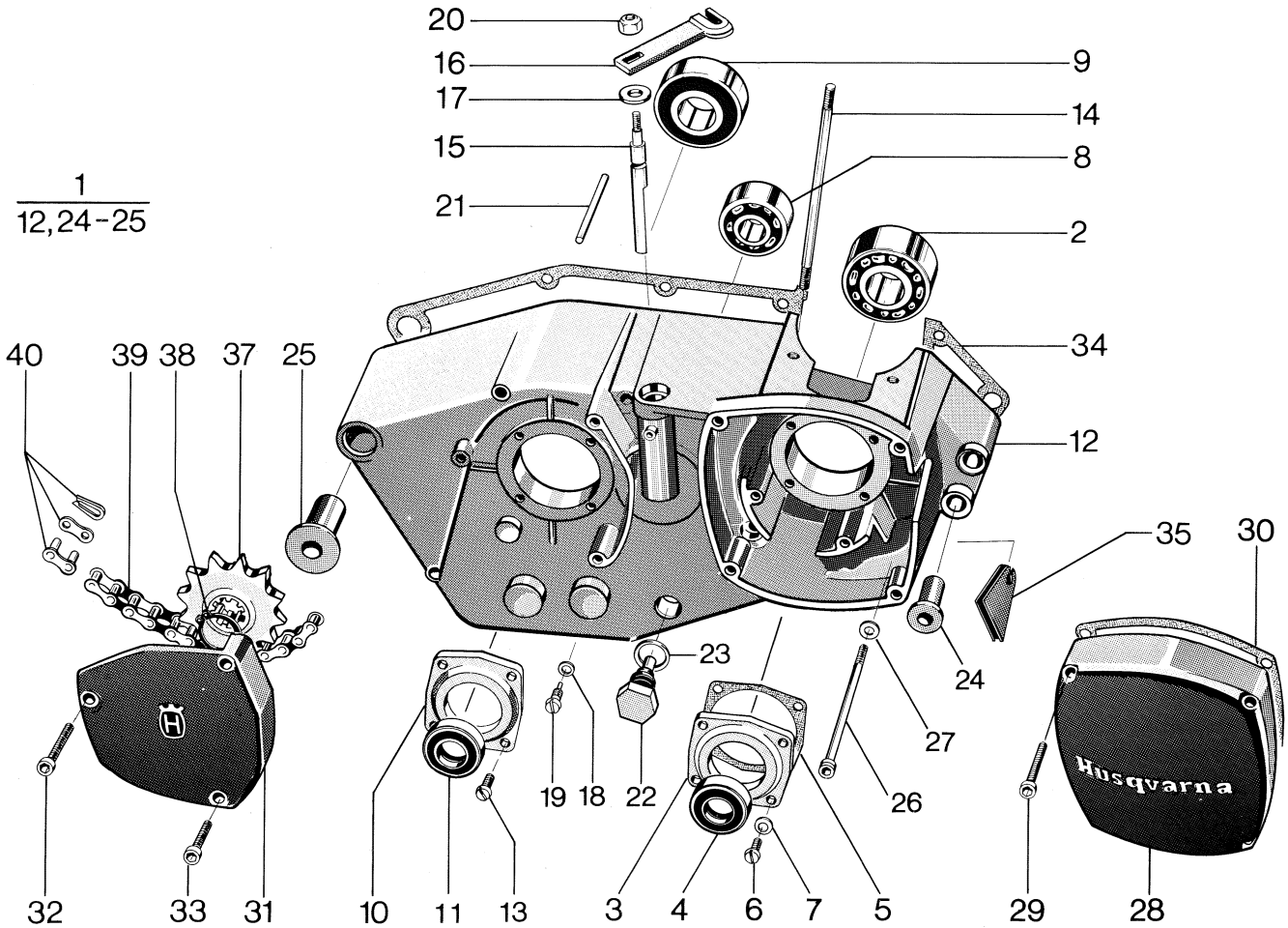

N	Fig.	Reservdel nr Spare part no.	ANTAL – QUANTITY 125 WR	240 CR	240 WR	250 CR	250 EU WR	250 US WR	250 XC	400 WR	430 CR	430 WR	430 XC	430 Aut. EU	430 Aut. US	500 CR	500 XC	Benämning, Description	Not.
	1	16 19 690-01	1															Vevhushalva, höger. Crankcase half right.	
		16 19 692-01	1															Vevhushalvor par. Crankcase halves pair.	
	2	738 32 04-40	1															Kullager. Ball bearing.	
	3	16 10 679-01	1															Fläns. Flange.	
	4	16 10 681-01	1															Tätring. Seal.	
	5	12 25 360-01	1															Packning. Gasket.	
	6	723 13 28-51	4															Skruv M5x14. Screw.	
	7	735 11 46-50	4															Fjäderbricka. Washer.	
	8	738 23 02-40	1															Kullager. Ball bearing.	
	9	16 16 351-01	1															Kullager. Ball bearing.	
	10	16 11 778-01	1															Fläns. Flange.	
	11	16 12 353-01	1															Distans. Spacer.	
	13	723 53 28-55	4															Skruv M5x14. Screw.	
	14	16 11 546-02	4															Dragbult, cylinder. Cylinder stud.	
	15	16 10 774-01	1															Frikopplingsaxel. Declutching shaft.	
	16	16 11 171-01	1															Hävarm. Lever.	
	17	15 13 722-01	1															Tätring. Seal.	
	18	734 48 78-00	1															Bricka. Washer.	
	19	12 25 077-01	1															Stoppskruv. Screw.	
	20	732 21 18-01	1															Låsmutter M8. Nut.	
	21	721 13 50-40	1															Pinne. Pin.	
	22	16 12 537-01	1															Magnetplugg. Magneto plug.	
	23	12 25 025-01	1															Packning. Gasket.	
	24	16 10 777-01	2															Flänsbussning. Flange sleeve.	
	25	16 14 589-01	1															Flänsbussning. Flange sleeve.	
	26	725 53 85-01	9															Skruv M6x75. Screw.	
	27	734 11 53-01	9															Bricka 6.4x12.5. Washer.	
	28	16 10 647-01	1															Magnetkåpa. Magneto cover.	
	29	725 53 78-01	4															Skruv M6x40. Screw.	
	30	16 11 623-01	1															Packning. Gasket.	
	31	16 11 560-02	1															Kåpa. Cover.	
	32	725 53 80-01	1															Skruv M6x50. Screw.	
	33	725 53 76-01	2															Skruv M6x35. Screw.	

Husqvarna

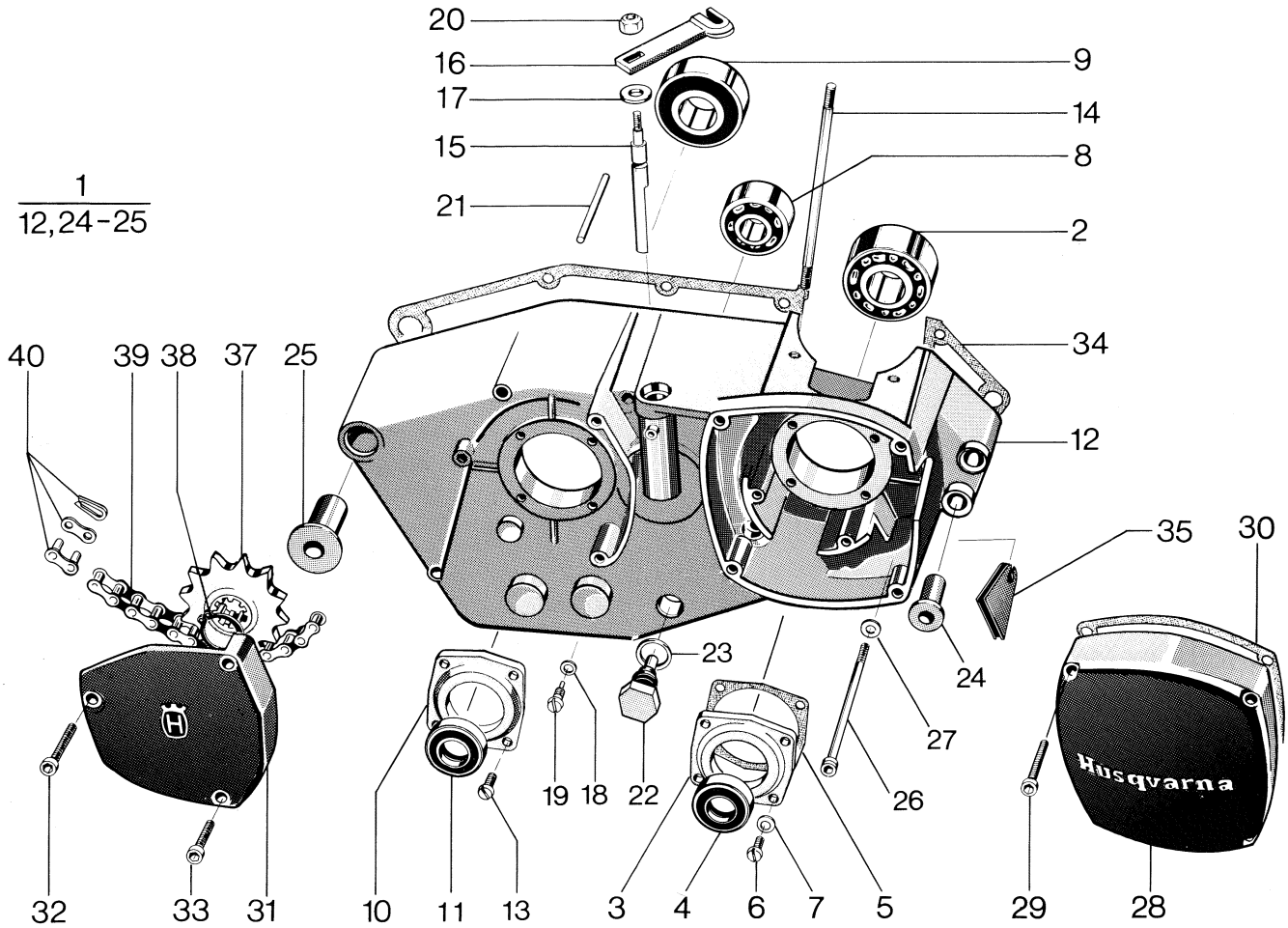

N	Fig.	Reservdel nr Spare part no.	ANTAL – QUANTITY 125 WR	240 CR	240 WR	250 CR	250 EU WR	250 US WR	250 XC	400 WR	430 CR	430 WR	430 XC	430 Aut. EU	430 Aut. US	500 CR	500 XC	Benämning, Description	Not.
	34	16 11 641-01	1															Vevhuspackning. Gasket.	
	35	16 14 728-01	1															Genomföring. Grommet.	
	37	16 12 693-04	1															Kedjedrev z = 13. Sprocket.	
	38	735 31 26-00	1															Spårring. Circlip.	
	39	15 17 760-07	1															Kedja O-ring 5/8x1/4 118. Chain O-ring.	
	40	15 19 759-04																Kedjelås. Master link.	
																		Kedjedrev. Front sprocket.	
		16 12 693-01																z = 10	
		16 12 693-02																z = 11	
		16 12 693-03																z = 12	
		16 12 693-05																z = 14	
		16 12 693-06																z = 15	
		16 12 693-07																z = 16	
		16 12 693-08																z = 17	
		16 19 852-01																Packningssats. Gasket set.	

Husqvarna

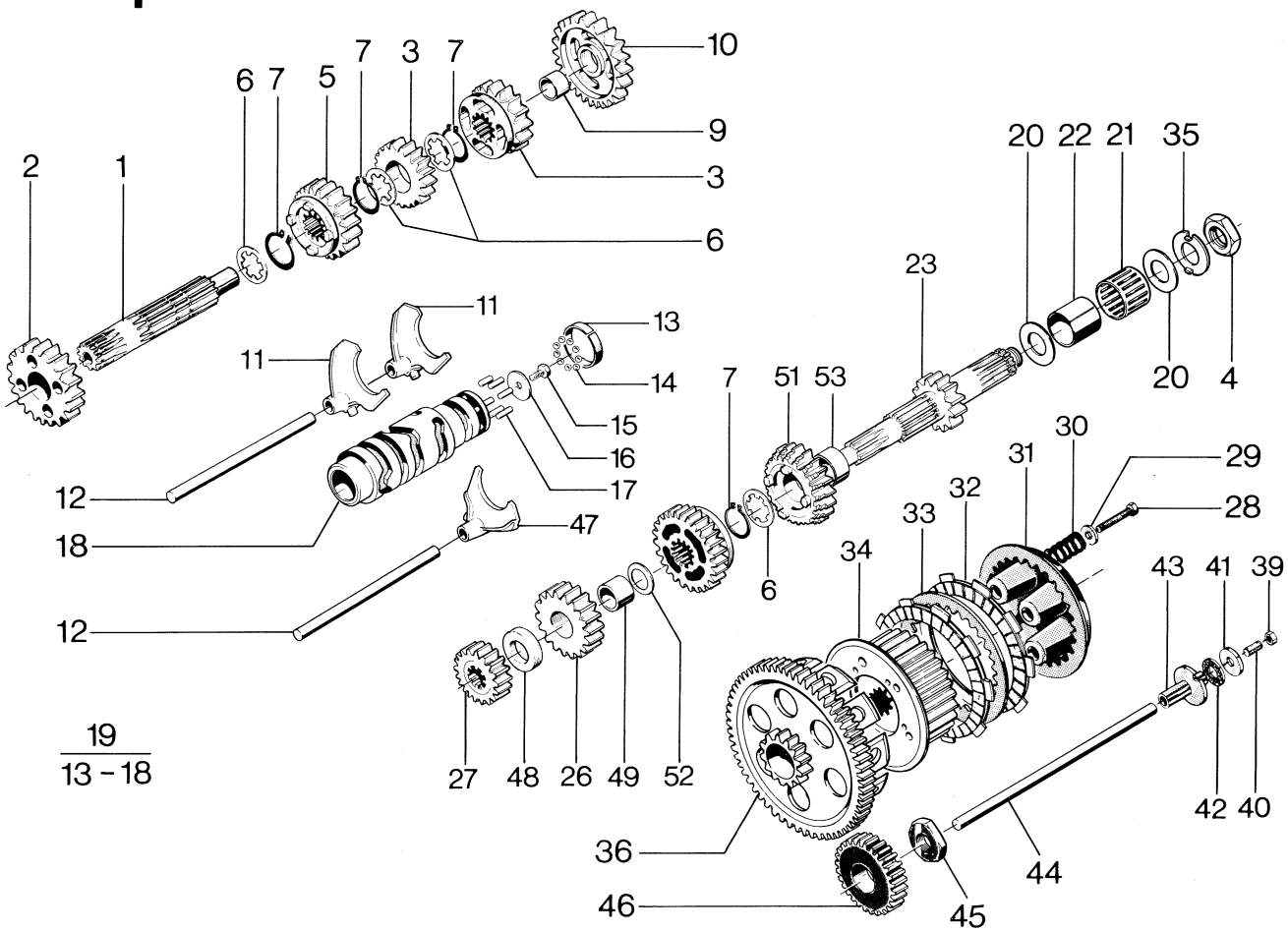

N	Fig.	Reservdel nr Spare part no.	ANTAL – QUANTITY 125 WR	240 CR	240 WR	250 CR	250 EU WR	250 US WR	250 XC	400 WR	430 CR	430 WR	430 XC	430 Aut. EU	430 Aut. US	500 CR	500 XC	Benämning, Description	Not.
	1	16 16 026-01									1					1		Hjälpaxel. Auxilary shaft.	
	2	16 16 022-01									1					1		Kugghjul 2:an. Gearwheel z=26.	
	3	16 16 024-01									1					1		Kugghjul 5:an. Gearwheel z=22.	
N	4	16 14 413-01									5					5		Mutter. Nut.	
	5	16 16 023-01									1					1		Kugghjul 4:an. Gearwheel z=24.	
	6	16 11 717-01									4					4		Stödbricka. Support washer.	
	7	735 31 26-00									5					5		Spårring. Circlip.	
	8	16 16 025-01									1					1		Kugghjul 3:an. Gearwheel z=20.	
	9	16 12 415-01									1					1		Lagerhylsa. Bearing sleeve.	
	10	16 16 021-01									1					1		Kugghjul 1:an. Gearwheel z=29.	
	11	16 12 384-01									2					2		Växelförare. Shiftfork.	
	12	16 11 699-01									2					2		Axel. Shaft.	
	13	16 12 699-01									1					1		Kulbana. Outer race.	
	14	738 61 20-03									11					11		Kula. Ball.	
	15	725 23 64-86									1					1		Skruv M6x10. Screw.	
	16	15 13 709-01									1					1		Bricka. Washer.	
	17	720 12 68-50									6					6		Pinne. Pin.	
	19	16 16 354-01									1					1		Kulissrulle kpl. Linkroller compl.	
N	20	16 14 405-01									2					2		Bricka. Washer.	
	21	16 11 671-01									1					1		Nållager. Needle bearing.	
N	22	16 14 388-01									1					1		Innerring. Bearing sleeve.	
	23	16 14 420-01									1					1		Huvudaxel. Mainshaft z=16.	
	24	16 12 381-01									1					1		Lagringshylsa. Bearing sleeve.	
	25	16 16 020									1					1		Kugghjul 3:an. Gearwheel z=27.	
N	26	16 16 037-01									1					1		Kugghjul 4:an. Gearwheel z=22.	
	27	16 16 017-01									1					1		Kugghjul 2:an. Gearwheel z=19.	
	28	725 23 72-51									5					5		Skruv M6x25. Screw.	
	29	734 49 26-01									5					5		Bricka. Washer.	
N	30	16 14 406-01									5					5		Kopplingsfjäder. Clutch spring.	
N	31	16 14 416-01									1					1		Tryckskiva. Pressure plate.	
N	32	16 14 408-01									8					8		Lamell m. belägg. Disch with lining.	
N	33	16 14 409-01									7					7		Lamell. Disc.	

Husqvarna

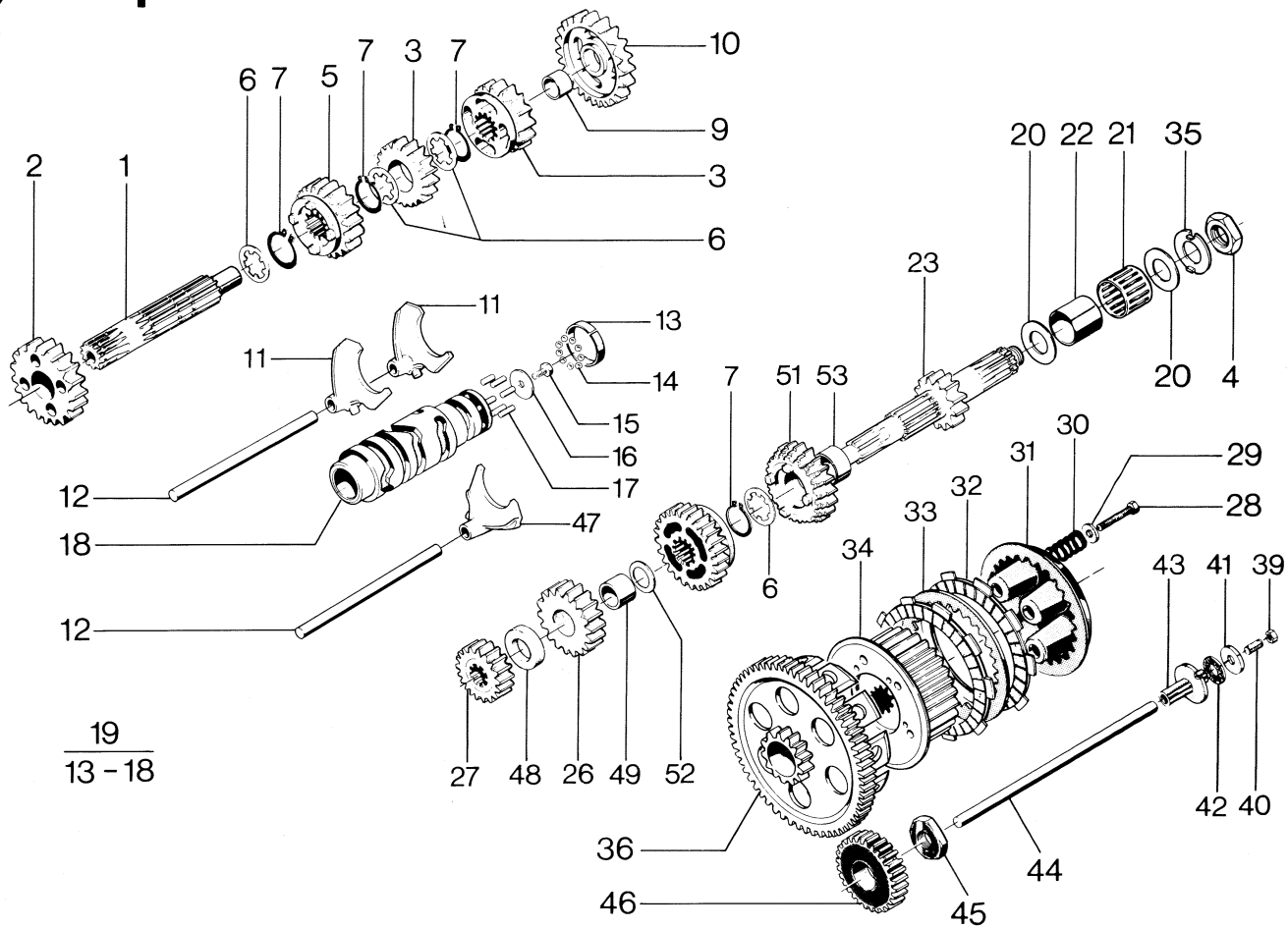

N	Fig.	Reservdel nr Spare part no.	ANTAL – QUANTITY 125 WR	240 CR	240 WR	250 CR	250 EU WR	250 US WR	250 XC	400 WR	430 CR	430 WR	430 XC	430 Aut. EU	430 Aut. US	500 CR	500 XC	Benämning, Description	Not.
N	34	16 14 404-01									1					1		Kopplingscentrum. Clutch hub.	
N	35	16 14 412-01									1					1		Vikbricka. Lockwasher.	
N	36	16 14 403-01									1					1		Kopplingskorg. Clutch ring.	
	39	15 13 703-01									1					1		Mutter M6. Nut.	
	40	728 53 70-00									1					1		Skruv M6. Screw.	
	41	16 11 167-01									1					1		Bricka. Washer.	
	42	16 11 166-01									1					1		Axiallager. Bearing.	
	43	16 11 170-01									1					1		Axeldel. Shaft.	
	44	16 15 315-01									1					1		Tryckstång. Push rod.	
	45	16 11 101-01									1					1		Mutter. Nut.	
	46	16 11 075-01									1					1		Drivhjul. Drive gear.	
	47	16 16 015-01									1					1		Växelförare. Shiftfork.	
	48	16 16 027-01									1					1		Distans. Spacer.	
	49	16 16 360-01									1					1		Lagerhylsa. Bearing sleeve.	
	50	16 16 361-01									1					1		Lagerhylsa. Bearing sleeve.	
	51	16 16 019-01									1					1		Kugghjul 5:an. Gearwheel z=25.	
	52	16 12 842-01									1					1		Bricka. Washer.	
	53	16 16 361-01									1					1		Lagerhylsa. Bearing sleeve.	

Husqvarna

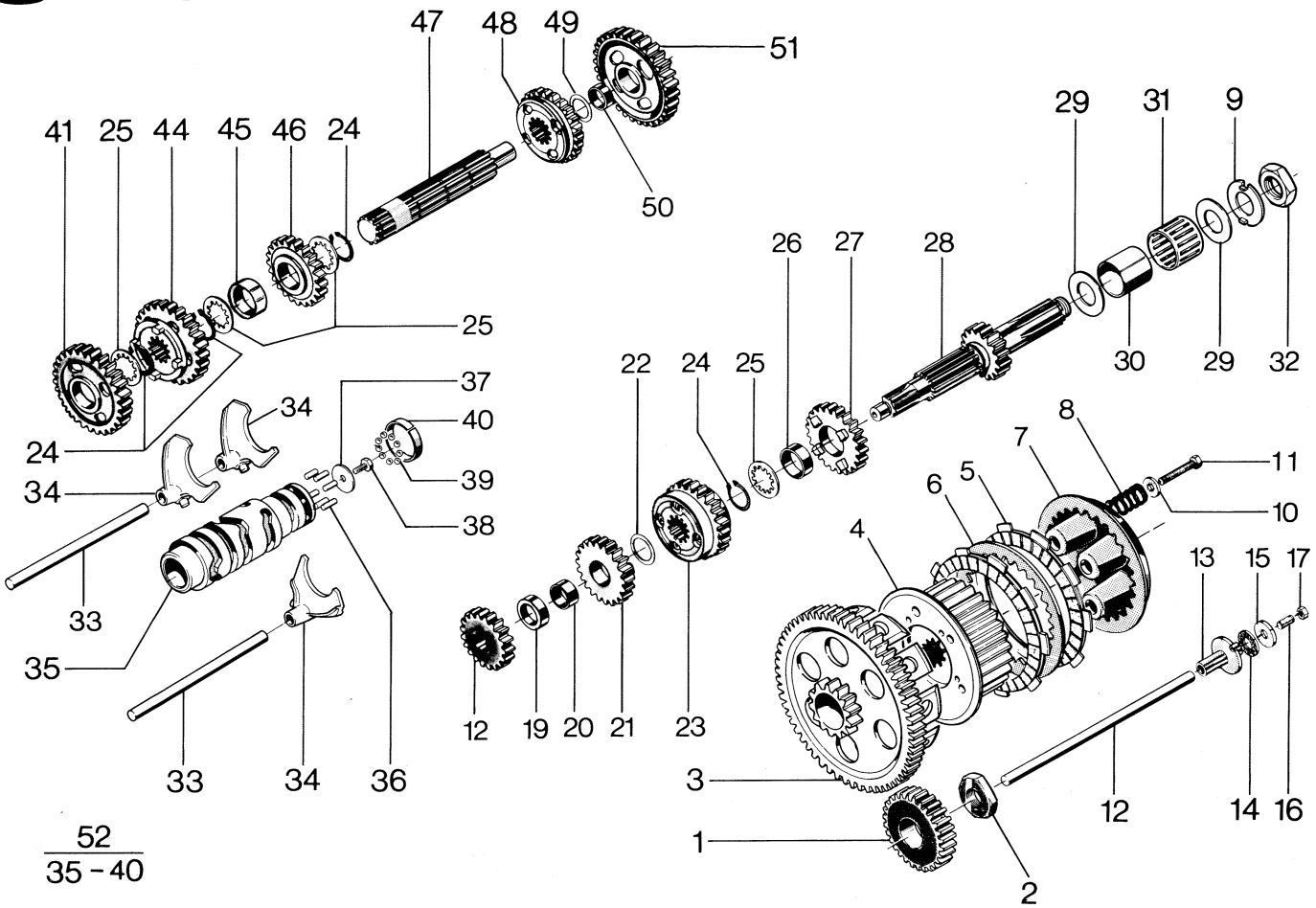

52
35 - 40

N	Fig.	Reservdel nr Spare part no.	ANTAL – QUANTITY 125 WR	240 CR	240 WR	250 CR	250 EU WR	250 US WR	250 XC	400 WR	430 CR	430 WR	430 XC	430 Aut. EU	430 Aut. US	500 CR	500 XC	Benämning, Description	Not.
	1	16 11 178-01		1		1												Drivhjul. Driving gear.	
	2	16 11 101-01		1		1												Mutter. Nut.	
	3	16 14 402-01		1		1												Kopplingskrans. Gear wheel clutch.	
	4	16 14 404-02		1		1												Kopplingscentrum. Clutch hub.	
	5	16 14 408-01		8		8												Lamell m. belägg. Disc with lining.	
	6	16 14 409-01		7		7												Lamell. Disc.	
N	7	16 14 416-01		1		1												Tryckplatta. Pressure plate.	
N	8	16 14 407-01		5		5												Fjäder. Spring.	
N	9	16 14 412-01		1		1												Vikbricka. Lock washer.	
	10	734 49 26-01		5		5												Bricka. Washer.	
	11	725 23 72-51		5		5												Skruv M6x25. Screw.	
	12	16 15 315-01		1		1												Tryckstång. Push rod.	
	13	16 11 170-01		1		1												Axeldel. Shaft.	
	14	16 11 166-01		1		1												Axiallager. Bearing.	
	15	16 11 167-01		1		1												Axialbricka. Washer.	
	16	728 53 70-00		1		1												Skruv M6x20. Screw.	
	17	15 13 703-01		1		1												Mutter. Nut.	
	18	16 12 352-01		1		1												Kugghjul 2:an. Gear wheel.	
	19	16 12 481-01		1		1												Distans. Spacer.	
	20	16 12 480-01		1		1												Lagerhylsa. Sleeve.	
	21	16 11 703-01		1		1												Kugghjul 3:an. Gear wheel.	
	22	16 12 842-01		1		1												Bricka. Washer.	
	23	16 14 595-01		1		1												Kugghjul 5:an. Gear wheel.	
	24	735 31 26-00		5		5												Spårring. Circlip.	
	25	16 11 717-01		4		4												Stödbricka. Washer.	
	26	16 12 418-01		1		1												Lagerhylsa. Sleeve.	
	27	16 11 837-01		1		1												Kugghjul 4:an. Gear wheel.	
N	28	16 14 418-01		1		1												Huvudaxel. Mainshaft.	
N	29	16 14 405-01		2		2												Bricka. Washer.	
N	30	16 14 388-01		1		1												Innerring. Sleeve.	
	31	16 11 671-01		1		1												Nållager. Needle bearing.	
N	32	16 14 413-01		1		1												Mutter. Nut.	
	33	16 11 699-01		2		2												Axel. Shaft.	
	34	16 12 384-01		3		3												Växelförare. Shiaft fork.	

Husqvarna

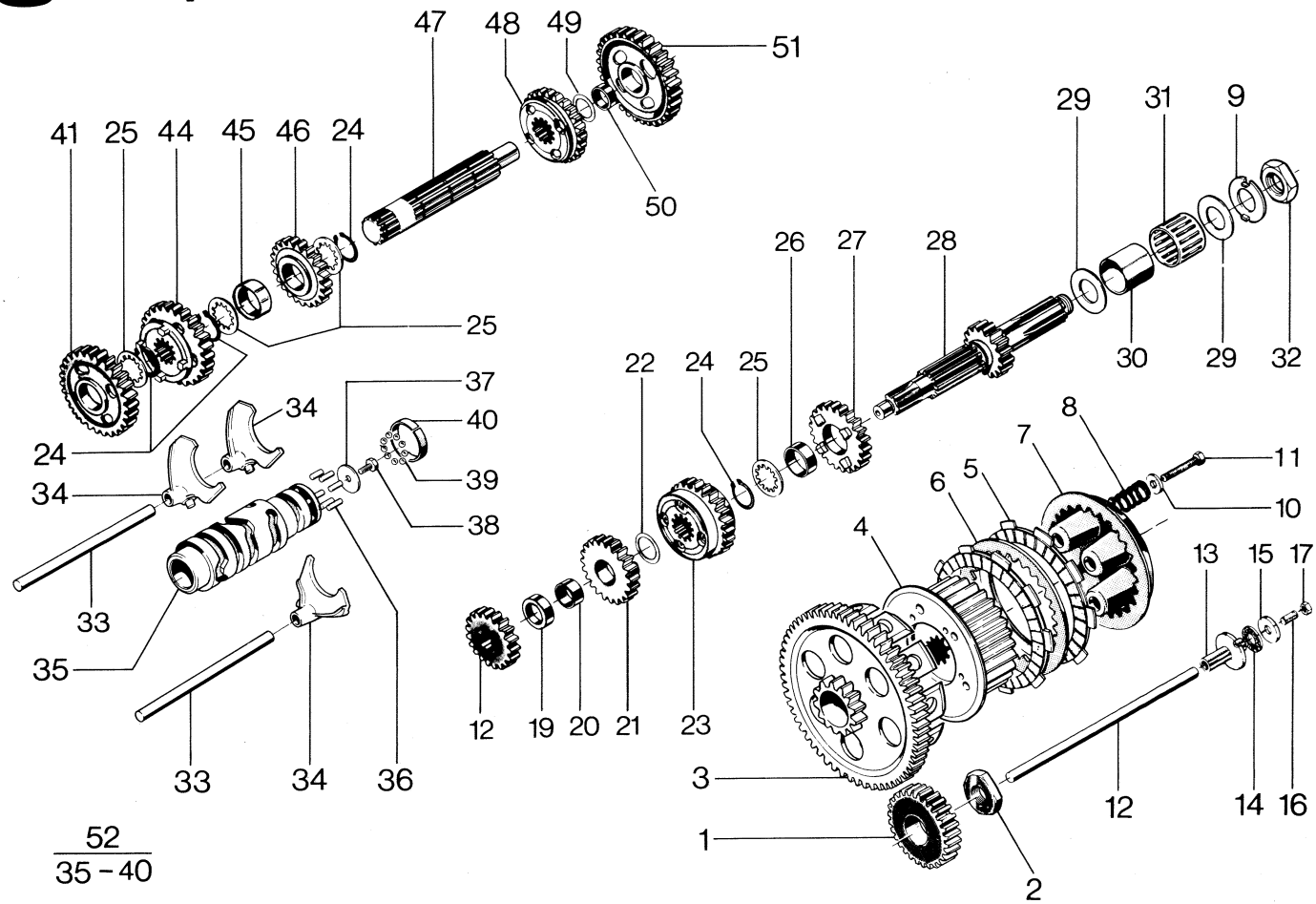

N	Fig.	Reservdel nr Spare part no.	ANTAL – QUANTITY 125 WR	240 CR	240 WR	250 CR	250 EU WR	250 US WR	250 XC	400 WR	430 CR	430 WR	430 XC	430 Aut. EU	430 Aut. US	500 CR	500 XC	Benämning, Description	Not.
	36	720 12 68-50		6		6												Pinne. Pin.	
	37	15 13 709-01		1		1												Bricka. Washer.	
	38	725 23 64-86		1		1												Skruv M6x10. Screw.	
	39	738 61 20-03		11		11												Kula. Ball.	
	40	16 12 699-01		1		1												Kulbana. Race.	
	41	16 12 354-01		1		1												Kugghjul 2:an. Gear wheel.	
	44	16 12 385-01		1		1												Kugghjul 3:an. Gear wheel.	
	45	16 14 594-01		1		1												Distans. Spacer.	
	46	16 11 715-01		1		1												Kugghjul 5:an. Gear wheel.	
	47	16 12 350-01		1		1												Hjälpaxel. Auxilary shaft.	
	48	16 12 388-01		1		1												Kugghjul 4:an. Gear wheel.	
	49	15 13 714-01		1		1												Bricka. Washer.	
	50	16 12 415-01		1		1												Lagerhylsa. Sleeve.	
	51	16 16 003-01		1		1												Kugghjul 1:an. Gear wheel.	
	52	16 14 596-01		1		1												Kulissrulle kpl. Shift drum.	

Husqvarna

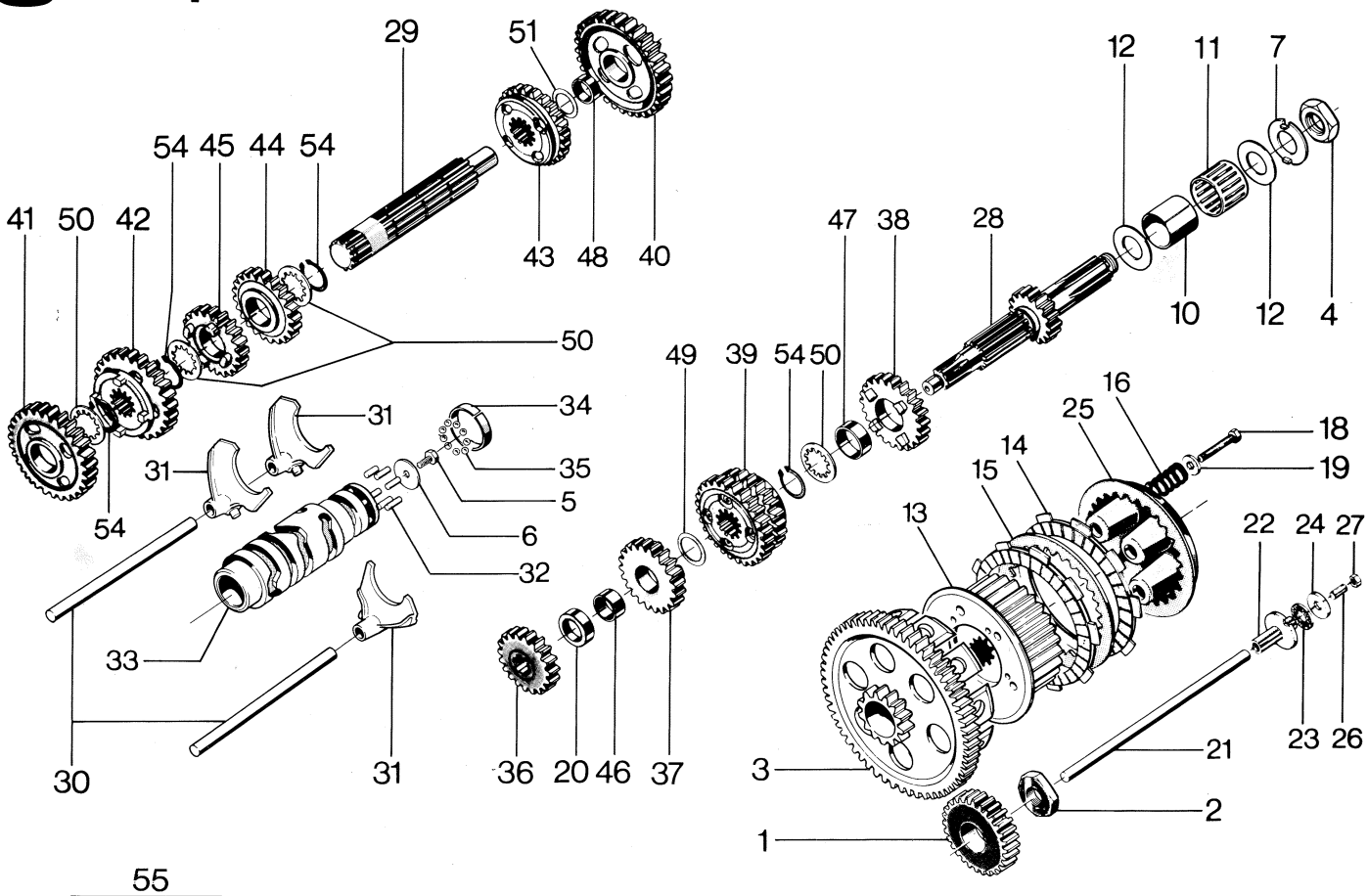

55
5,6,32-35

N	Fig.	Reservdel nr Spare part no.	ANTAL – QUANTITY 125 WR	240 CR	240 WR	250 CR	250 EU WR	250 US WR	250 XC	400 WR	430 CR	430 WR	430 XC	430 Aut. EU	430 Aut. US	500 CR	500 XC	Benämning, Description	Not.
	1	16 11 178-01			1		1	1	1									Drivhjul. Driving gear.	
		16 11 075-01								1		1	1					Drivhjul. Driving gear.	
		16 16 029-01															1	Drivhjul. Driving gear.	
	2	16 11 101-01			1		1	1	1	1		1	1				1	Mutter. Nut.	
N	3	16 14 402-01			1		1	1	1									Kopplingskrans. Gearwheel.	
N		16 14 403-01								1		1	1					Kopplingskrans. Gearwheel.	
N		16 16 028-01															1	Kopplingskrans. Gearwheel.	
N	4	16 14 413-01			1		1	1	1	1		1	1				1	Mutter. Nut.	
	5	725 23 64-86			1		1	1	1	1		1	1				1	Skruv M6x10. Screw.	
	6	15 13 709-01			1		1	1	1	1		1	1				1	Bricka. Washer.	
N	7	16 14 412-01			1		1	1	1	1		1	1				1	Vikbricka. Lockwasher.	
N	10	16 14 388-01			1		1	1	1	1		1	1				1	Innerring. Internal ring.	
	11	16 11 671-01			1		1	1	1	1		1	1				1	Nålhållare. Needle ring.	
N	12	16 14 405-01			2		2	2	2	2		2	2				2	Bricka. Washer.	
N	13	16 14 404-01								1		1	1				1	Kopplingscentrum. Clutch hub.	
		16 14 404-02			1		1	1	1									Kopplingscentrum. Clutch hub.	
N	14	16 14 408-01			8		8	8	8	8		8	8				8	Lamell m. belägg. Disc.	
N	15	16 14 409-01			7		7	7	7	7		7	7				7	Lamell. Disc.	
N	16	16 14 407-01			5		5	5	5									Kopplingsfjäder. Clutch spring.	
		16 14 406-01								5		5	5				5	Kopplingsfjäder. Clutch spring.	
	17	16 11 169-01			5		5	5	5	5		5	5				5	Distanshylsa. Distance sleeve.	
	18	725 23 72-51			5		5	5	5	5		5	5				5	Skruv M6x25. Screw.	
	19	734 49 26-01			5		5	5	5	5		5	5				5	Bricka. Washer.	
	20	16 12 481-01			1		1	1	1	1		1	1				1	Distans. Spacer.	
	21	16 15 315-01			1		1	1	1	1		1	1				1	Tryckstång. Push rod.	
	22	16 11 170-01			1		1	1	1	1		1	1				1	Axeldel. Shaft.	
	23	16 11 166-01			1		1	1	1	1		1	1				1	Axiallager. Axial bearing.	
	24	16 11 167-01			1		1	1	1	1		1	1				1	Axialbricka. Axial washer.	
	25	16 11 168-02			1		1	1	1	1		1	1				1	Tryckskiva. Pressure plate.	
	26	728 53 70-00			1		1	1	1	1		1	1				1	Skruv. Screw.	

Husqvarna

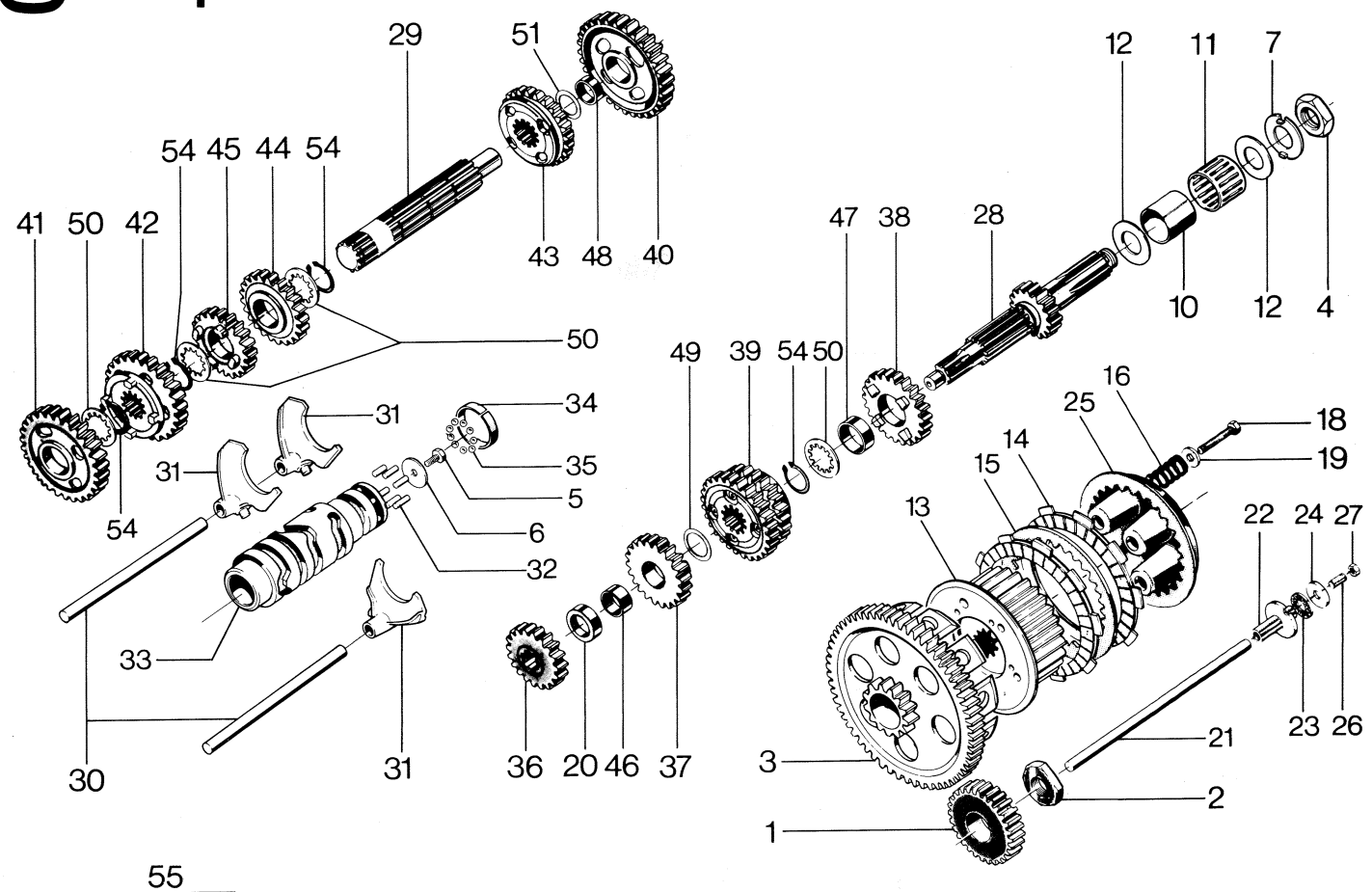

55
5,6,32-35

N	Fig.	Reservdel nr Spare part no.	ANTAL – QUANTITY 125 WR	240 CR	240 WR	250 CR	250 EU WR	250 US WR	250 XC	400 WR	430 CR	430 WR	430 XC	430 Aut. EU	430 Aut. US	500 CR	500 XC	Benämning, Description	Not.
	27	731 23 16-55			1		1	1	1	1		1	1				1	Mutter. Nut.	
N	28	16 14 419-01			1		1	1	1									Huvudaxel. Clutch shaft.	
N		16 14 421-01								1		1	1				1	Huvudaxel. Clutch shaft.	
	29	16 12 350-01			1		1	1	1	1		1	1				1	Hjälpaxel. Sprocket shaft.	
	30	16 11 699-01			2		2	2	2	2		2	2				2	Axel. Shaft.	
	31	16 12 384-01			3		3	3	3	3		3	3				3	Växelförare. Gear striker.	
	32	720 12 68-50			6		6	6	6	6		6	6				6	Pinne. Pin.	
	34	16 12 699-01			1		1	1	1	1		1	1				1	Kulbana. Outer race.	
	35	738 61 20-03			11		11	11	11	11		11	11				11	Kula. Ball.	
	36	16 12 362-01								1		1	1				1	Kugghjul 2:an. Huvudaxel. Gearwheel.	
		16 12 351-01			1		1	1	1									Kugghjul 2:an. Huvudaxel. Gearwheel.	
	37	16 12 363-01								1		1	1				1	Kugghjul 3:an. Huvudaxel. Gearwheel.	
		16 12 349-01			1		1	1	1									Kugghjul 3:an. Huvudaxel. Gearwheel.	
	38	16 11 837-01			1		1	1	1	1		1	1				1	Kugghjul 4:an. Huvudaxel. Gearwheel.	
	39	16 12 390-01			1		1	1	1	1		1	1				1	Kugghjul 5:an-6:an. Huvudaxel. Gearwheel.	
	40	16 12 361-01								1		1	1				1	Kugghjul 1:an. Hjälpaxel. Gearwheel.	
		16 12 346-01			1		1	1	1									Kugghjul 1:an. Hjälpaxel. Gearwheel.	
	41	16 12 365-01								1		1	1				1	Kugghjul 2:an. Hjälpaxel. Gearwheel.	
		16 12 347-01			1		1	1	1									Kugghjul 2:an. Hjälpaxel. Gearwheel.	
	42	16 12 386-01								1		1	1				1	Kugghjul 3:an. Hjälpaxel. Gearwheel.	
		16 12 387-01			1		1	1	1									Kugghjul 3:an. Hjälpaxel. Gearwheel.	
	43	16 12 388-01			1		1	1	1	1		1	1				1	Kugghjul 4:an. Hjälpaxel. Gearwheel.	
	44	16 11 715-01			1		1	1	1	1		1	1				1	Kugghjul 5:an. Hjälpaxel. Gearwheel.	
	45	16 12 357-01			1		1	1	1	1		1	1				1	Kugghjul 6:an. Hjälpaxel. Gearwheel.	
	46	16 12 480-01			1		1	1	1	1		1	1				1	Lagerhylsa 3:an Huvudaxel. Sleeve.	
	47	16 12 418-01			1		1	1	1	1		1	1				1	Lagerhylsa 4:an Huvudaxel. Sleeve.	
	48	16 12 415-01			1		1	1	1	1		1	1				1	Lagerhylsa 1:an Hjälpaxel. Sleeve.	
	49	16 12 842-01			1		1	1	1	1		1	1				1	Stödbricka. Washer.	
	50	16 11 717-01			4		4	4	4	4		4	4				4	Stödbricka. Washer.	
	51	15 13 714-01			1		1	1	1	1		1	1				1	Stödbricka. Washer.	
	53	16 12 481-01			1		1	1	1	1		1	1				1	Distansring. Huvudaxel. Spacer. Clutch shaft.	
	54	735 31 26-00			5		5	5	5	5		5	5				5	Spårring. Circlip.	
	55	16 11 701-01			1		1	1	1	1		1	1				1	Kulissrulle kpl. Link roller.	

Husqvarna

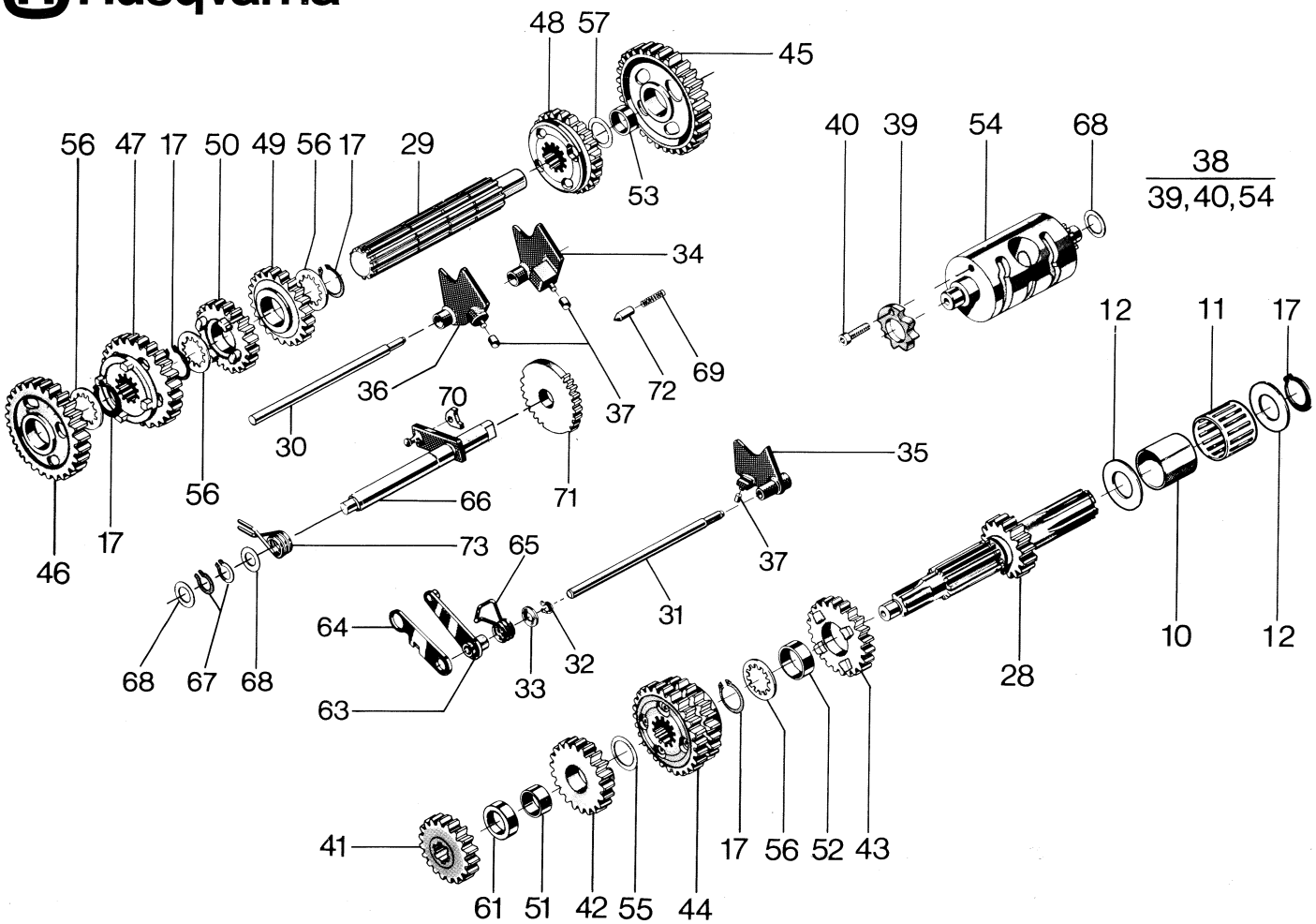

N	Fig.	Reservdel nr Spare part no.	ANTAL – QUANTITY 125 WR	240 CR	240 WR	250 CR	250 EU WR	250 US WR	250 XC	400 WR	430 CR	430 WR	430 XC	430 Aut. EU	430 Aut. US	500 CR	500 XC	Benämning, Description	Not.
	10	16 11 670-01	1															Innerring. Internal ring.	
	11	16 11 671-01	1															Nållager. Needle bearing.	
	12	16 11 155-01	2															Bricka. Washer.	
	17	735 31 26-00	4															Spårring. Circlip.	
	28	16 12 345-01	1															Huvudaxel z = 14. Clutch shaft.	
	29	16 11 280-01	1															Hjälpaxel. Sprocket shaft.	
	30	16 12 843-01	1															Axel. Shaft.	
	31	16 12 484-01	1															Axel. Shaft.	
	32	735 31 12-00	1															Spårring. Circlip.	
	33	16 12 485-01	1															Bricka. Washer.	
	34	16 11 082-01	1															Växelförare kpl. 1-5. Gear striker.	
	35	16 11 081-01	1															Växelförare kpl. 3-4. Gear striker.	
	36	16 11 080-01	1															Växelförare kpl. 6-2. Gear striker.	
	37	16 12 424-01	1															Ledrulle. Guide roller.	
	38	16 12 486-01	1															Kulissrulle kpl. Linkroller compl.	
	39	16 12 488-01	1															Spärrhjul. Ratchet wheel.	
	40	725 53 66-06	1															Skruv M6x12. Screw.	
	41	16 12 351-01	1															Kugghjul 2:an z = 17. Gear wheel.	
	42	16 12 349-01	1															Kugghjul 3:an z = 20. Gear wheel.	
	43	16 11 837-01	1															Kugghjul 4:an z = 23. Gear wheel.	
	44	16 12 390-01	1															Kugghjul 5-6:an z = 25,27. Gear wheel.	
	45	16 12 346-01	1															Kugghjul 1:an z = 33. Gear wheel.	
	46	16 12 347-01	1															Kugghjul 2:an z = 29. Gear wheel.	
	47	16 12 387-01	1															Kugghjul 3:an z = 26. Gear wheel.	
	48	16 12 388-01	1															Kugghjul 4:an z = 24. Gear wheel.	
	49	16 11 715-01	1															Kugghjul 5:an z = 22. Gear wheel.	
	50	16 12 357-01	1															Kugghjul 6:an z = 20. Gear wheel.	
	51	16 12 480-01	1															Lagerhylsa. Sleeve.	
	52	16 12 418-01	1															Lagerhylsa. Sleeve.	
	53	16 12 415-01	1															Lagerhylsa. Sleeve.	
	56	16 11 717-01	4															Stödbricka. Washer.	
	57	16 13 714-01	1															Stödbricka. Washer.	

Husqvarna

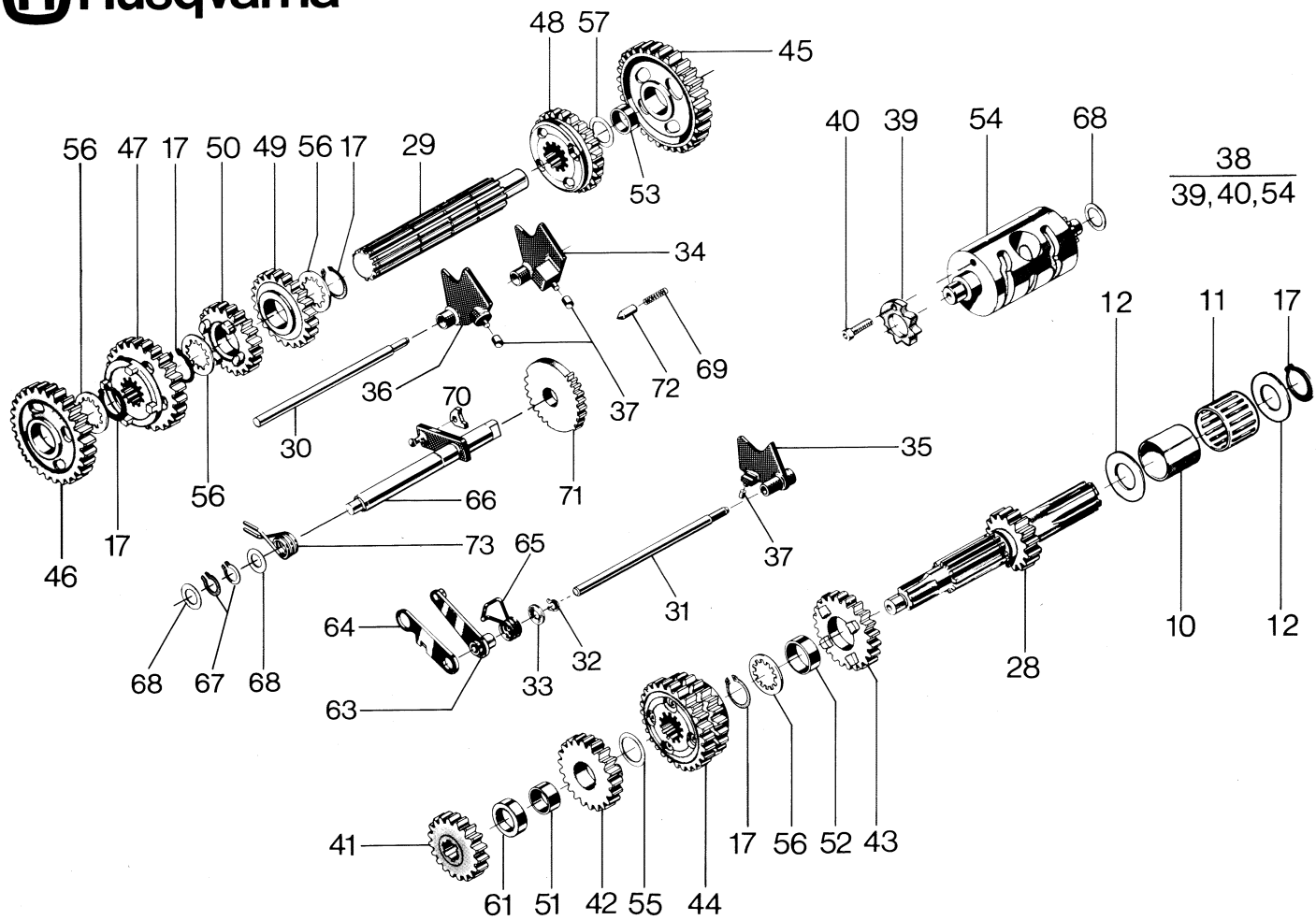

N	Fig.	Reservdel nr Spare part no.	ANTAL – QUANTITY 125 WR	240 CR	240 WR	250 CR	250 EU WR	250 US WR	250 XC	400 WR	430 CR	430 WR	430 XC	430 Aut. EU	430 Aut. US	500 CR	500 XC	Benämning, Description	Not.
	61	16 12 481-01	1															Distansring. Spacer.	
	63	16 12 489-01	1															Spärrarm. Ratchet arm.	
	64	16 12 493-01	1															Distansarm. Distance arm.	
	65	16 12 494-01	1															Fjäder. Spring.	
	66	16 11 279-01	1															Växlingsaxel. Gear shaft.	
	67	735 31 17-00	2															Spårring. Circlip.	
	68	50 32 300-14	3															Bricka. Washer.	
	69	16 12 593-01	1															Fjäder. Spring.	
	70	16 12 895-01	1															Medbringare. Pawl.	
	71	16 12 870-01	1															Stegmatare. Stepfeder.	
	72	16 12 455-01	1															Spärrhylsa. Ratchet sleeve.	
	73	16 12 594-01	1															Fjäder. Spring.	

Husqvarna

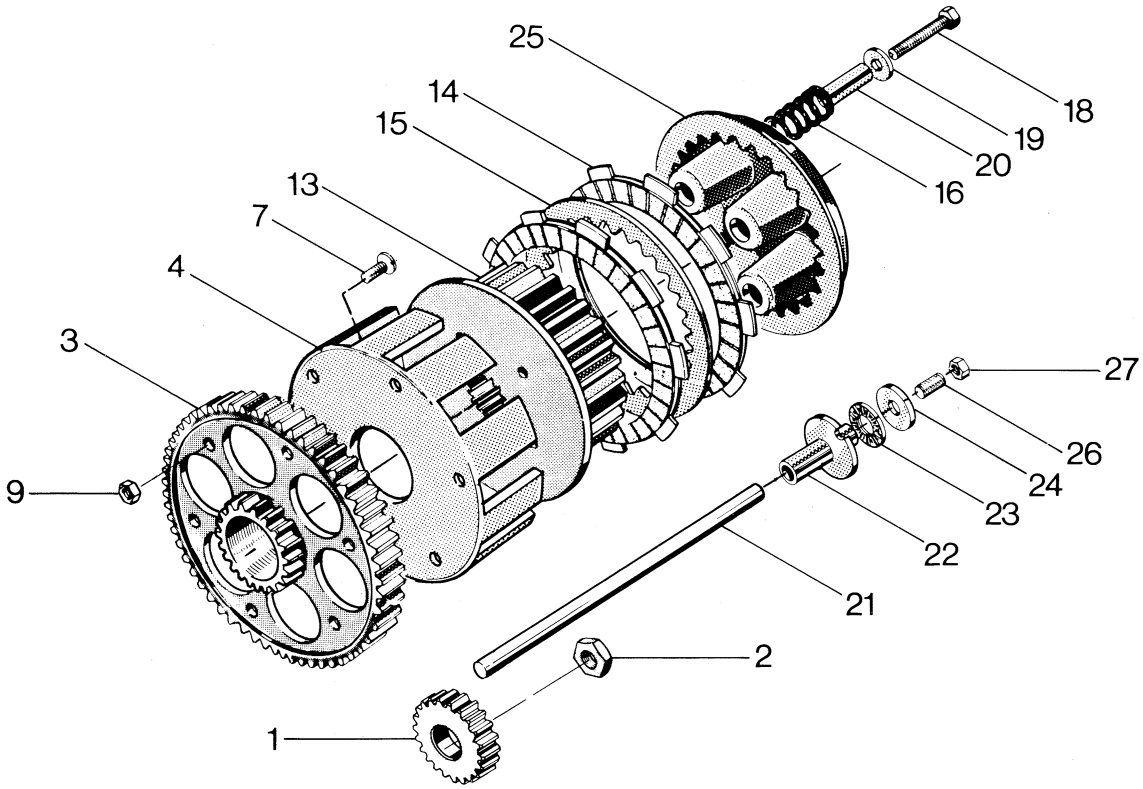

N	Fig.	Reservdel nr Spare part no.	ANTAL – QUANTITY 125 WR	240 CR	240 WR	250 CR	250 EU WR	250 US WR	250 XC	400 WR	430 CR	430 WR	430 XC	430 Aut. EU	430 Aut. US	500 CR	500 XC	Benämning, Description	Not.
	1	16 11 174-01	1															Drivhjul z = 29. Driving gear.	
	2	16 11 175-01	1															Mutter. Nut.	
	3	16 11 283-01	1															Kopplingskrans. Clutch gear.	
	4	16 11 203-01	1															Kopplingskorg. Clutch ring.	
	7	725 63 67-55	6															Skruv M6x16. Screw.	
	9	731 23 16-55	6															Mutter. Nut.	
	13	16 11 156-01	1															Kopplingscentrum. Clutch hub.	
	14	16 15 106-01	7															Lamell m. belägg. Disc w. lining.	
	15	16 15 107-01	6															Lamell. Disc.	
	16	16 15 265-01	5															Kopplingsfjäder. Clutch spring.	
	18	725 23 78-71	5															Skruv M6x40. Screw.	
	19	734 49 26-01	5															Bricka. Washer.	
	20	16 11 169-01	5															Distanshylsa. Distance sleeve.	
	21	16 17 003-02	1															Tryckstång. Push rod.	
	22	16 11 170-01	1															Axelhylsa. Shaft sleeve.	
	23	16 11 166-01	1															Axiallager. Axial bearing.	
	24	16 11 167-01	1															Axialbricka. Axial washer.	
	25	16 11 168-01	1															Tryckskiva. Pressure plate.	
	26	788 53 70-00	1															Skruv TSS6x20. Screw.	
	27	15 13 703-01	1															Mutter M6. Nut.	

Husqvarna

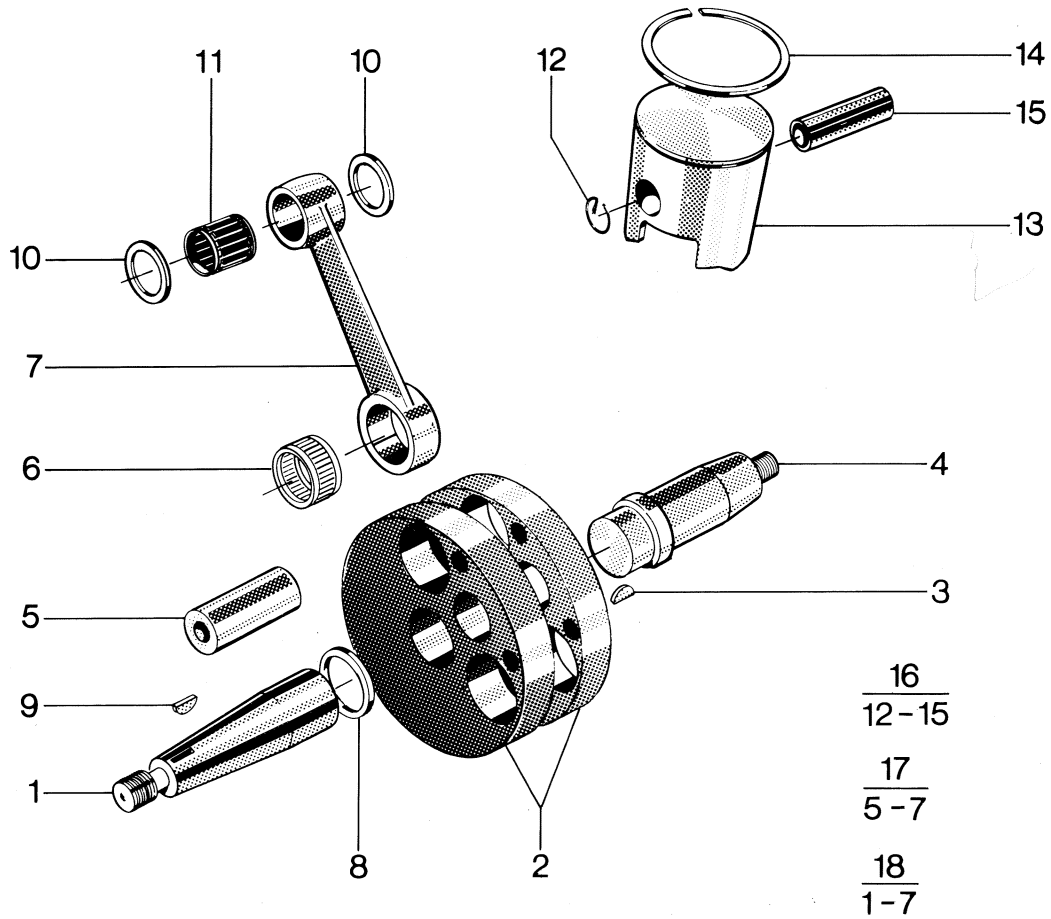

N	Fig.	Reservdel nr Spare part no.	ANTAL – QUANTITY 125 WR	240 CR	240 WR	250 CR	250 EU WR	250 US WR	250 XC	400 WR	430 CR	430 WR	430 XC	430 Aut. EU	430 Aut. US	500 CR	500 XC	Benämning, Description	Not.
	1	16 10 653-01	1															Vevaxel, höger. Crankshaft, right.	
		16 11 659-01		1	1	1	1	1	1	1	1	1	1	1	1	1	1	Vevaxel, höger. Crankshaft, right.	
	3	735 80 16-00	2	2	2	2	2	2	2	2	2	2	2	2	2	2	2	Kil 3x16. Key.	
	4	16 11 285-01	1															Vevaxel, vänster. Crankshaft, left.	
		16 14 359-01		1	1	1	1	1	1	1	1	1	1			1	1	Vevaxel, vänster. Crankshaft, left.	
		16 11 091-01												1	1			Vevaxel, vänster. Crankshaft, left.	
	8	16 10 676-01	1															Distans. Spacer.	
		16 10 921-01		1	1	1	1	1	1	1	1	1	1	1	1	1	1	Distans. Spacer.	
	9	15 13 713-01	1	1	1	1	1	1	1	1	1	1	1	1	1	1	1	Kil. Key.	
	10	16 10 674-01	2															Distans. Spacer.	
		16 10 971-01		2	2	2	2	2	2									Distans. Spacer.	
	11	16 11 534-01	1															Nållager. Needle bearing.	
		16 10 933-01		1	1	1	1	1	1									Nållager. Needle bearing.	
		16 11 205-01														1	1	Nållager. Needle bearing.	
		16 11 838-01								1	1	1	1	1	1			Nållager. Needle bearing.	
	12	731 42 15-01	2															Låsring. Circlip.	
		16 11 738-01		2	2	2	2	2	2	2	2	2	2	2	2			Låsring. Circlip.	
		16 11 195-01														2	2	Låsring. Circlip.	
	14	16 14 521-01	1															Kolvring (Cyl Ø55.0). Piston ring.	
		16 14 521-02																Kolvring (Cyl Ø55.25). Piston ring.	
		16 14 521-03																Kolvring (Cyl Ø55.50). Piston ring.	
N		16 14 827-01				1	1	1	1									Kolvring (Cyl Ø66.50). Piston ring.	
N		16 14 827-02																Kolvring (Cyl Ø66.75). Piston ring.	
N		16 14 827-03																Kolvring (Cyl Ø67.00). Piston ring.	
N		16 14 827-05		1	1													Kolvring (Cyl Ø65.50). Piston ring.	
		16 11 189-01									1	1	1	1	1	1	1	Kolvring (Cyl Ø86.00). Piston ring.	
		16 11 189-02																Kolvring (Cyl Ø86.50). Piston ring.	
		16 11 189-03																Kolvring (Cyl Ø87.00). Piston ring.	
		16 14 454-01								1								Kolvring (Cyl Ø82.50). Piston ring.	
		16 14 454-02																Kolvring (Cyl Ø83.00). Piston ring.	
		16 14 454-03																Kolvring (Cyl Ø83.50). Piston ring.	

Husqvarna

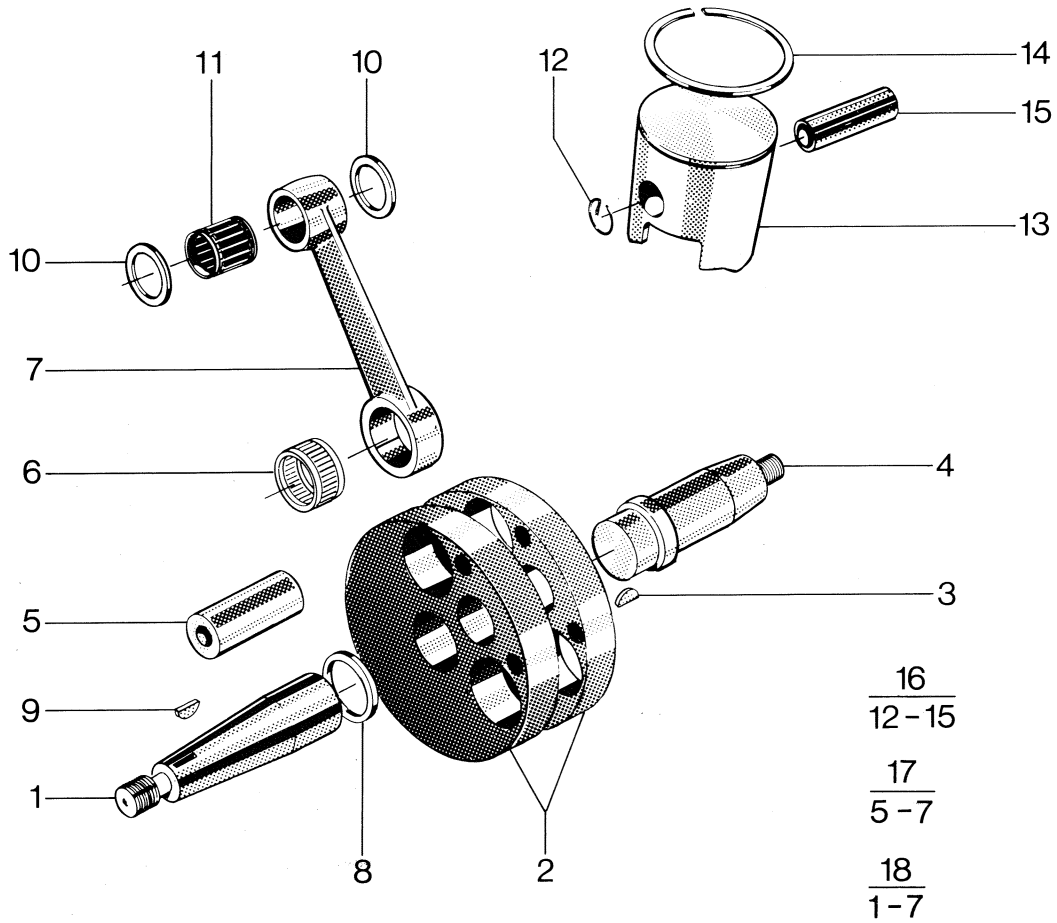

N	Fig.	Reservdel nr Spare part no.	ANTAL – QUANTITY 125 WR	240 CR	240 WR	250 CR	250 EU WR	250 US WR	250 XC	400 WR	430 CR	430 WR	430 XC	430 Aut. EU	430 Aut. US	500 CR	500 XC	Benämning, Description	Not.
	16	16 14 471-01									1	1	1	1	1			Kolv kpl. (Cyl Ø86.00). Piston compl.	
		16 14 471-02																Kolv kpl. (Cyl Ø86.50). Piston compl.	
		16 14 471-03																Kolv kpl. (Cyl Ø87.00). Piston compl.	
		16 14 520-01	1															Kolv kpl. (Cyl Ø55.0). Piston compl.	
		16 14 520-02																Kolv kpl. (Cyl Ø55.25). Piston compl.	
		16 14 520-03																Kolv kpl. (Cyl Ø55.50). Piston compl.	
N		16 16 387-01					1	1	1									Kolv kpl. (Cyl Ø66.50). Piston compl.	
		16 16 412-01				1												Kolv kpl. (Cyl Ø66.50). Piston compl.	
N		16 16 387-02																Kolv kpl. (Cyl Ø66.75). Piston compl.	
N		16 16 412-02																Kolv kpl. (Cyl Ø66.75). Piston compl.	
N		16 16 387-03																Kolv kpl. (Cyl Ø67.00). Piston compl.	
N		16 16 412-03																Kolv kpl. (Cyl Ø67.00). Piston compl.	
N		16 16 355-01		1	1													Kolv kpl. (Cyl Ø65.50). Piston compl.	
		16 14 487-01														1	1	Kolv kpl. (Cyl Ø86.00). Piston compl.	
		16 14 487-02																Kolv kpl. (Cyl Ø86.50). Piston compl.	
		16 14 487-03																Kolv kpl. (Cyl Ø87.00). Piston compl.	
		16 14 455-01								1								Kolv kpl. (Cyl Ø82.50). Piston compl.	
		16 14 455-02																Kolv kpl. (Cyl Ø83.00). Piston compl.	
		16 14 455-03																Kolv kpl. (Cyl Ø83.50). Piston compl.	
	17	16 10 383-01	1															Renov.sats vevstake. Overhaulkit. conn.rod.	
N		16 19 902-01		1	1	1	1	1	1	1	1	1	1					Renov.sats vevstake. Overhaulkit. conn.rod.	
N		16 19 702-01														1	1	Renov.sats vevstake. Overhaulkit. conn.rod.	
N		16 19 701-01												1	1			Renov.sats vevstake. Overhaulkit. conn.rod.	
	18	16 14 542-01	1															Vevparti kpl. Crank shaft compl.	
N		16 16 381-01		1	1	1	1	1	1									Vevparti kpl. Crank shaft compl.	
N		16 16 385-01														1	1	Vevparti kpl. Crank shaft compl.	
N		16 16 384-01								1	1	1	1					Vevparti kpl. Crank shaft compl.	
N		16 16 876-01												1	1			Vevparti kpl. Crank shaft compl.	

Husqvarna

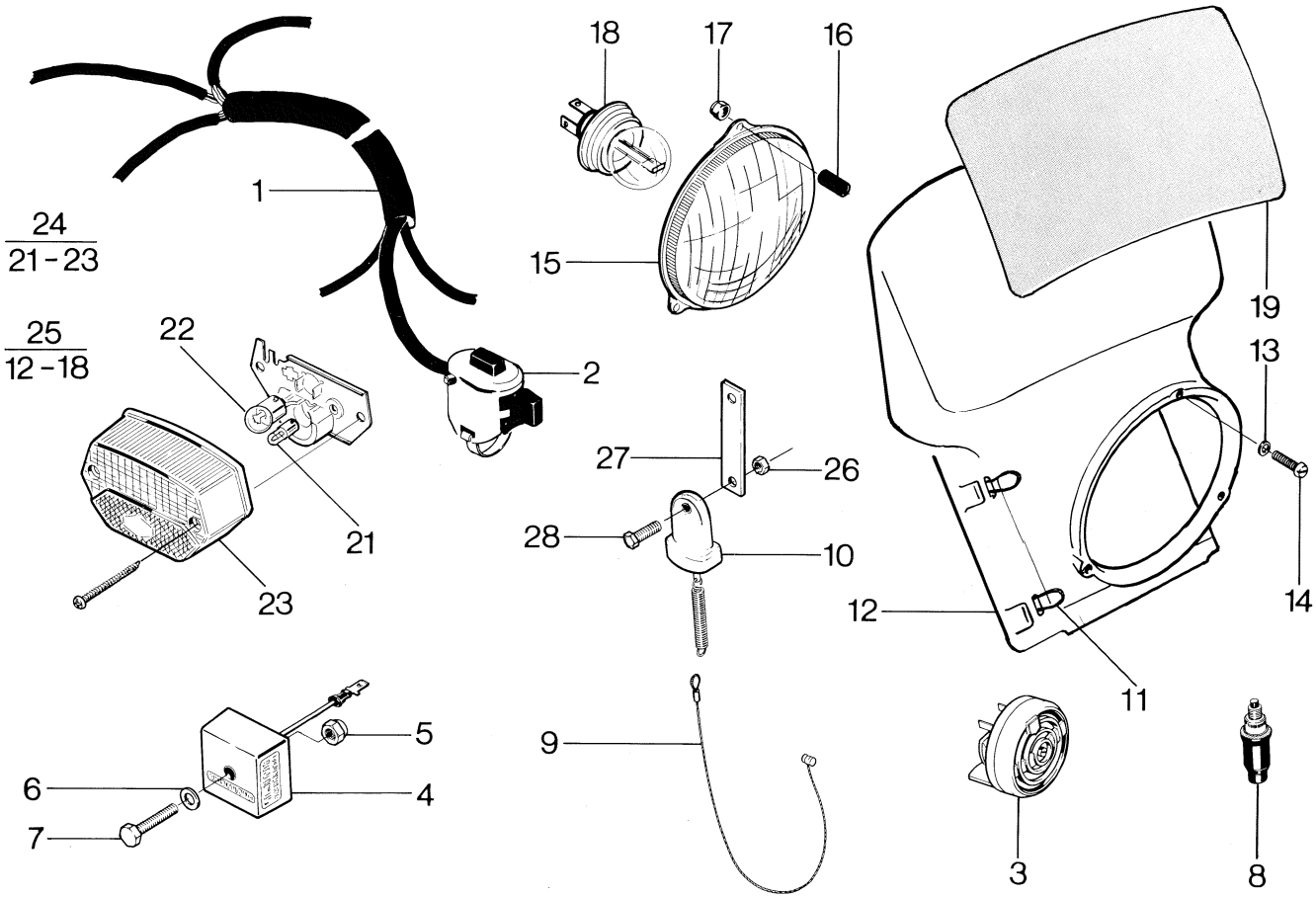

N	Fig.	Reservdel nr Spare part no.	ANTAL – QUANTITY 125 WR	240 CR	240 WR	250 CR	250 EU WR	250 US WR	250 XC	400 WR	430 CR	430 WR	430 XC	430 Aut. EU	430 Aut. US	500 CR	500 XC	Benämning, Description	Not.
N	1	15 17 536-01	1		1					1				1				Kabelmatta. Harness.	
N		15 17 416-01					1	1				1			1			Kabelmatta. Harness.	
	2	15 17 292-01	1		1					1				1				Omkopplare. Switch.	
	3	15 17 420-01	1		1					1				1				Signal. Horn.	
	4	16 14 757-01	1		1		1	1		1		1		1	1			Spänningsregulator. Voltage regulator.	
	5	732 21 16-01	2		2		2	2		2		2		2	2			Mutter M6. Nut.	
	6	734 11 53-01	2		2		2	2		2		2		2	2			Bricka. 6.4x14. Washer.	
	7	725 23 76-51	1		1		1	1		1		1		1	1			Skruv M6x35. Screw.	
	8	15 17 328-01	1		1					1				1				Bromsljuskontakt. Brake light switch.	
	9	15 17 518-01	1		1					1				1				Wire.	
	10	15 17 517-01	1		1					1				1				Bromsljuskontakt. Brake light switch.	
	11	15 17 516-01	3		3		3	3		3		3		3	3			O-ring.	
	12	15 17 511-01	1		1		1	1		1		1		1	1			Kåpa. Head light.	
	13	734 11 46-01	3		3		3	3		3		3		3	3			Bricka 5.3x10. Washer.	
	14	723 13 39-01	3		3		3	3		3		3		3	3			Skruv M5x25. Screw.	
	15	15 17 488-01	1		1		1	1		1		1		1	1			Reflektor. Reflector.	
	16	15 14 078-05	3		3		3	3		3		3		3	3			Slang. Hose.	
	17	722 21 14-01	3		3		3	3		3		3		3	3			Mutter M5. Nut.	
	18	15 19 615-01	1		1		1	1		1		1		1	1			Glödlampa 12V-H4. Bulb.	
	19	15 19 787-01	1		1		1	1		1		1		1	1			Nummer oval, gul. Number oval, yellow.	
N	21	15 17 533-01	1		1		1	1		1		1		1	1			Glödlampa 12V-4W. Bulb.	
	22	15 19 616-01	1		1					1				1				Glödlampa 12V-10W. Bulb.	
	23	15 17 888-01	1		1		1	1		1		1		1	1			Lyktglas. Lens.	
N	24	15 17 535-01	1		1		1	1		1		1		1	1			Baklykta. Tail light.	
	25	15 17 515-01	1		1		1	1		1		1		1	1			Strålkastare kpl. Head light compl.	
	26	732 21 12-01	1		1					1				1				Mutter M4. Nut.	
N	27	15 18 230-01	1		1					1				1				Stag. Attachment.	
	28	725 22 97-51	1		1					1				1				Skruv M4x25. Screw.	

Husqvarna

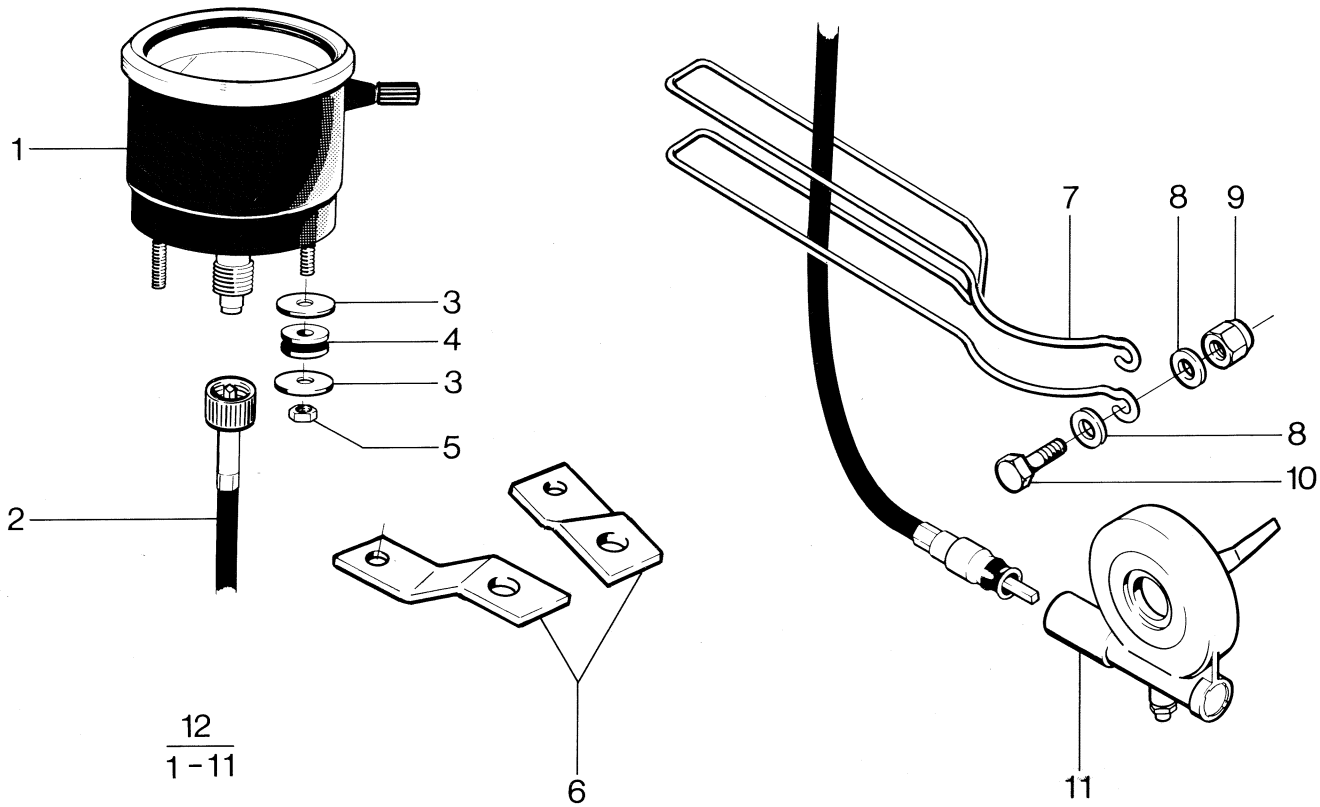

12
1 - 11

N	Fig.	Reservdel nr Spare part no.	ANTAL – QUANTITY 125 WR	240 CR	240 WR	250 CR	250 EU WR	250 US WR	250 XC	400 WR	430 CR	430 WR	430 XC	430 Aut. EU	430 Aut. US	500 CR	500 XC	Benämning, Description	Not.
	1	15 17 493-02	1		1		1			1				1				Hastighetsmätare km/h. Speedometer.	
N		15 17 540-01						1				1			1			Hastighetsmätare mph. Speedometer.	
	2	15 17 495-01	1		1		1	1		1		1		1	1			Hastighetsmätare, wire. Speedometer wire.	
	3	15 13 709-01	4		4		4	4		4		4		4	4			Bricka. Washer.	
	4	15 19 705-01	2		2		2	2		2				2	2			Bussning. Bushing.	
	5	732 21 14-01	2		2		2	2		2				2	2			Mutter M5. Nut.	
	6	15 17 506-01	2		2		2			2				2				Fäste. Attachment.	
N		15 17 541-01						1				1			1			Fäste. Attachment.	
	7	15 17 306-01	1		1		1	1		1		1		1	1			Bygel. Wire protector.	
	8	15 13 734-01	2		2		2	2		2		2		2	2			Bricka. Washer.	
	9	732 21 16-51	2		2		2	2		2		2		2	2			Mutter M6. Nut.	
	10	725 23 71-51	2		2		2	2		2		2		2	2			Skruv M6x22. Screw.	
	11	15 17 523-01	1		1		1	1		1		1		1	1			Vinkelväxel. Drive.	
	12	15 17 526-02	1		1		1			1				1				Hastighetsmätareanlägg. km/h. Speedometer kit.	
N		15 17 543-01						1				1			1			Hastighetsmätareanlägg. mph. Speedometer kit.	

Husqvarna

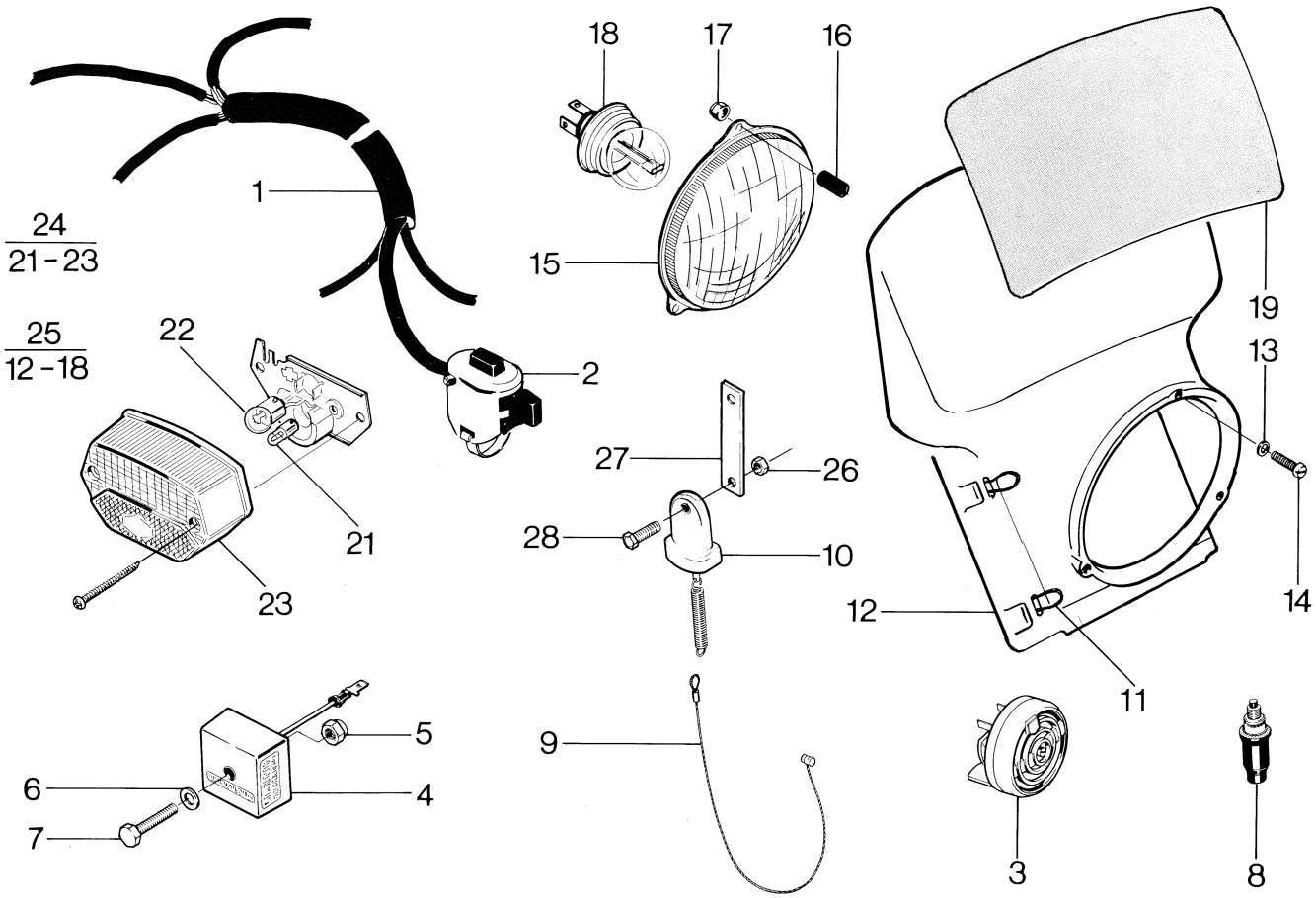

N	Fig.	Reservdel nr Spare part no.	ANTAL – QUANTITY 125 WR	240 CR	240 WR	250 CR	250 EU WR	250 US WR	250 XC	400 WR	430 CR	430 WR	430 XC	430 Aut. EU	430 Aut. US	500 CR	500 XC	Benämning, Description	Not.
N	1	15 17 536-01	1		1					1				1				Kabelmatta. Harness.	
N		15 17 416-01					1	1				1			1			Kabelmatta. Harness.	
	2	15 17 292-01	1		1					1				1				Omkopplare. Switch.	
	3	15 17 420-01	1		1					1				1				Signal. Horn.	
	4	16 14 757-01	1		1		1	1		1		1		1	1			Spänningsregulator. Voltage regulator.	
	5	732 21 16-01	2		2		2	2		2		2		2	2			Mutter M6. Nut.	
	6	734 11 53-01	2		2		2	2		2		2		2	2			Bricka. 6.4x14. Washer.	
	7	725 23 76-51	1		1		1	1		1		1		1	1			Skruv M6x35. Screw.	
	8	15 17 328-01	1		1					1				1				Bromsljuskontakt. Brake light switch.	
	9	15 17 518-01	1		1					1				1				Wire.	
	10	15 17 517-01	1		1					1				1				Bromsljuskontakt. Brake light switch.	
	11	15 17 516-01	3		3		3	3		3		3		3	3			O-ring.	
	12	15 17 511-01	1		1		1	1		1		1		1	1			Kåpa. Head light.	
	13	734 11 46-01	3		3		3	3		3		3		3	3			Bricka 5.3x10. Washer.	
	14	723 13 39-01	3		3		3	3		3		3		3	3			Skruv M5x25. Screw.	
	15	15 17 488-01	1		1		1	1		1		1		1	1			Reflektor. Reflector.	
	16	15 14 078-05	3		3		3	3		3		3		3	3			Slang. Hose.	
	17	722 21 14-01	3		3		3	3		3		3		3	3			Mutter M5. Nut.	
	18	15 19 615-01	1		1		1	1		1		1		1	1			Glödlampa 12V-H4. Bulb.	
	19	15 19 787-01	1		1		1	1		1		1		1	1			Nummer oval, gul. Number oval, yellow.	
N	21	15 17 533-01	1		1		1	1		1		1		1	1			Glödlampa 12V-4W. Bulb.	
	22	15 19 616-01	1		1					1				1				Glödlampa 12V-10W. Bulb.	
	23	15 17 888-01	1		1		1	1		1		1		1	1			Lyktglas. Lens.	
N	24	15 17 535-01	1		1		1	1		1		1		1	1			Baklykta. Tail light.	
	25	15 17 515-01	1		1		1	1		1		1		1	1			Strålkastare kpl. Head light compl.	
	26	732 21 12-01	1		1					1				1				Mutter M4. Nut.	
N	27	15 18 230-01	1		1					1				1				Stag. Attachment.	
	28	725 22 97-51	1		1					1				1				Skruv M4x25. Screw.	

Husqvarna

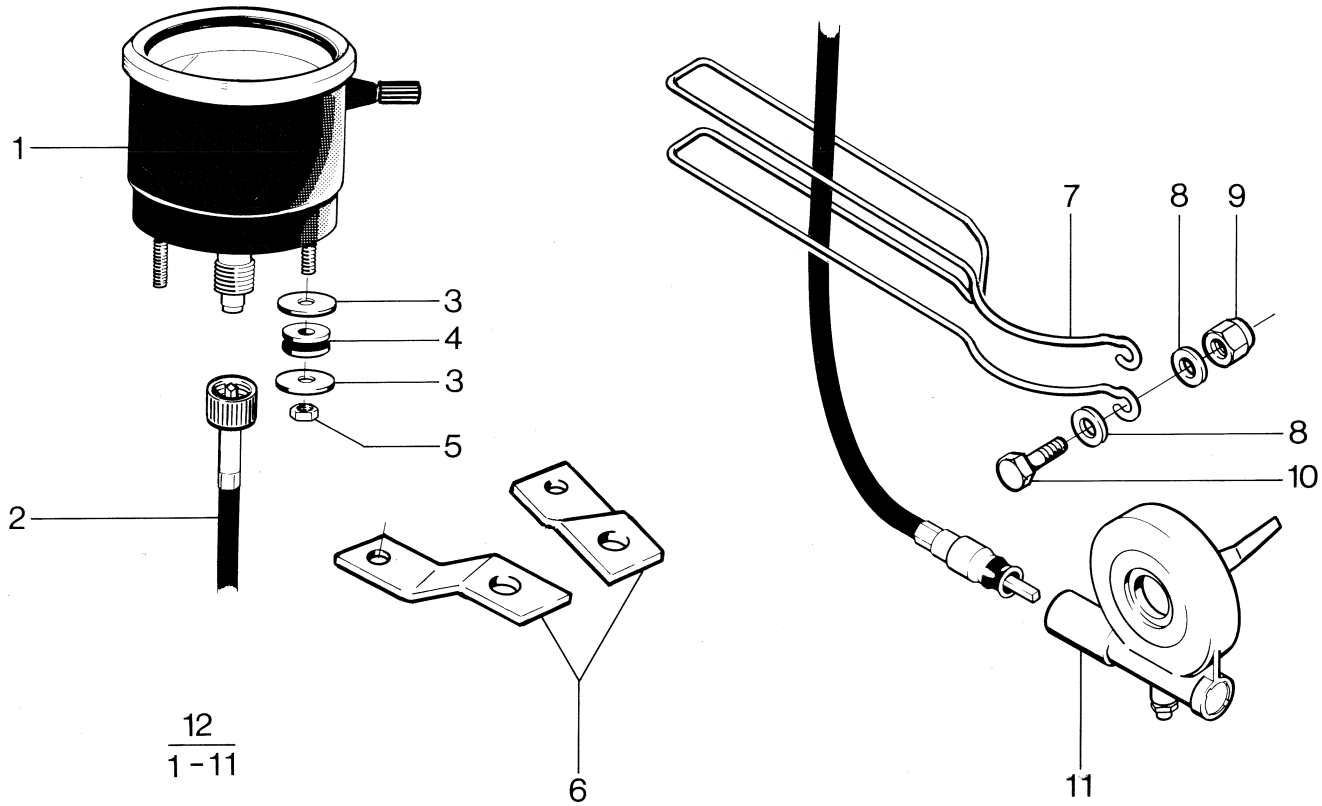

N	Fig.	Reservdel nr Spare part no.	ANTAL – QUANTITY 125 WR	240 CR	240 WR	250 CR	250 EU WR	250 US WR	250 XC	400 WR	430 CR	430 WR	430 XC	430 Aut. EU	430 Aut. US	500 CR	500 XC	Benämning, Description	Not.
	1	15 17 493-02	1		1		1			1				1				Hastighetsmätare km/h. Speedometer.	
N		15 17 540-01						1				1			1			Hastighetsmätare mph. Speedometer.	
	2	15 17 495-01	1		1		1	1		1		1		1	1			Hastighetsmätare, wire. Speedometer wire.	
	3	15 13 709-01	4		4		4	4		4		4		4	4			Bricka. Washer.	
	4	15 19 705-01	2		2		2	2		2				2	2			Bussning. Bushing.	
	5	732 21 14-01	2		2		2	2		2				2	2			Mutter M5. Nut.	
	6	15 17 506-01	2		2		2			2				2				Fäste. Attachment.	
N		15 17 541-01						1				1			1			Fäste. Attachment.	
	7	15 17 306-01	1		1		1	1		1		1		1	1			Bygel. Wire protector.	
	8	15 13 734-01	2		2		2	2		2		2		2	2			Bricka. Washer.	
	9	732 21 16-51	2		2		2	2		2		2		2	2			Mutter M6. Nut.	
	10	725 23 71-51	2		2		2	2		2		2		2	2			Skruv M6x22. Screw.	
	11	15 17 523-01	1		1		1	1		1		1		1	1			Vinkelväxel. Drive.	
	12	15 17 526-02	1		1		1			1				1				Hastighetsmätareanlägg. km/h. Speedometer kit.	
N		15 17 543-01						1				1			1			Hastighetsmätareanlägg. mph. Speedometer kit.	