YAMAHA

SRX250T/TC

Service Manual

LIT-11616-06-04

SRX250T/SRX250TC
SERVICE MANUAL
©1987 by Yamaha Motor Corporation, U.S.A.
1st Edition, February 1987
All rights reserved. Any reprinting or
unauthorized use without the written
permission of Yamaha Motor Corporation
U.S.A. is expressly prohibited.
Printed in U.S.A.
P/N LIT-11616-06-04

NOTICE

This manual was written by the Yamaha Motor Company primarily for use by Yamaha dealers and their qualified mechanics. It is not possible to put an entire mechanic's education into one manual, so it is assumed that persons using this book to perform maintenance and repairs on Yamaha motorcycles have a basic understanding of the mechanical concepts and procedures inherent in motorcycle repair technology. Without such knowledge, attempted repairs or service to this model may render it unfit to use and/or unsafe.

This model has been designed and manufactured to perform within certain specifications in regard to performance and emissions. Proper service with the correct tools is necessary to ensure that the motorcycle will operate as designed. If there is any question about a service procedure, it is imperative that you contact a Yamaha dealer for any service information changes that apply to this model. This policy is intended to provide the customer with the most satisfaction from his motorcycle and to conform with federal environmental quality objectives.

Yamaha Motor Company, Ltd. is continually striving to improve all models manufactured by Yamaha. Modifications and significant changes in specifications or procedures will be forwarded to all Authorized Yamaha dealers and will, where applicable, appear in future editions of this manual.

NOTE:

This Service Manual contains information regarding periodic maintenance to the emission control system for the SRX250T/TC. Please read this material carefully.

TECHNICAL PUBLICATIONS
SERVICE DIVISION
MOTORCYCLES OPERATIONS
YAMAHA MOTOR CO., LTD.

HOW TO USE THIS MANUAL

PARTICULARLY IMPORTANT INFORMATION

This material is distinguished by the following notation.

NOTE: **A NOTE** provides key information to make procedures easier or clearer.

CAUTION: **A CAUTION** indicates special procedures that must be followed to avoid damage to the motorcycle.

WARNING: **A WARNING** indicates special procedures that must be followed to avoid injury to a motorcycle operator or person inspecting or repairing the motorcycle.

MANUAL FORMAT

All of the procedures in this manual are organized in a sequential, step-by-step format. The information has been compiled to provide the mechanic with an easy to read, handy reference that contains comprehensive explanations of all disassembly, repair, assembly, and inspection operations.

In this revised format, the condition of a faulty component will precede an arrow symbol and the course of action required will follow the symbol, e.g.,

- Bearings

  Pitting/Damage→Replace.

EXPLODED DIAGRAM

Each chapter provides exploded diagrams before each disassembly section for ease in identifying correct disassembly and assembly procedures.

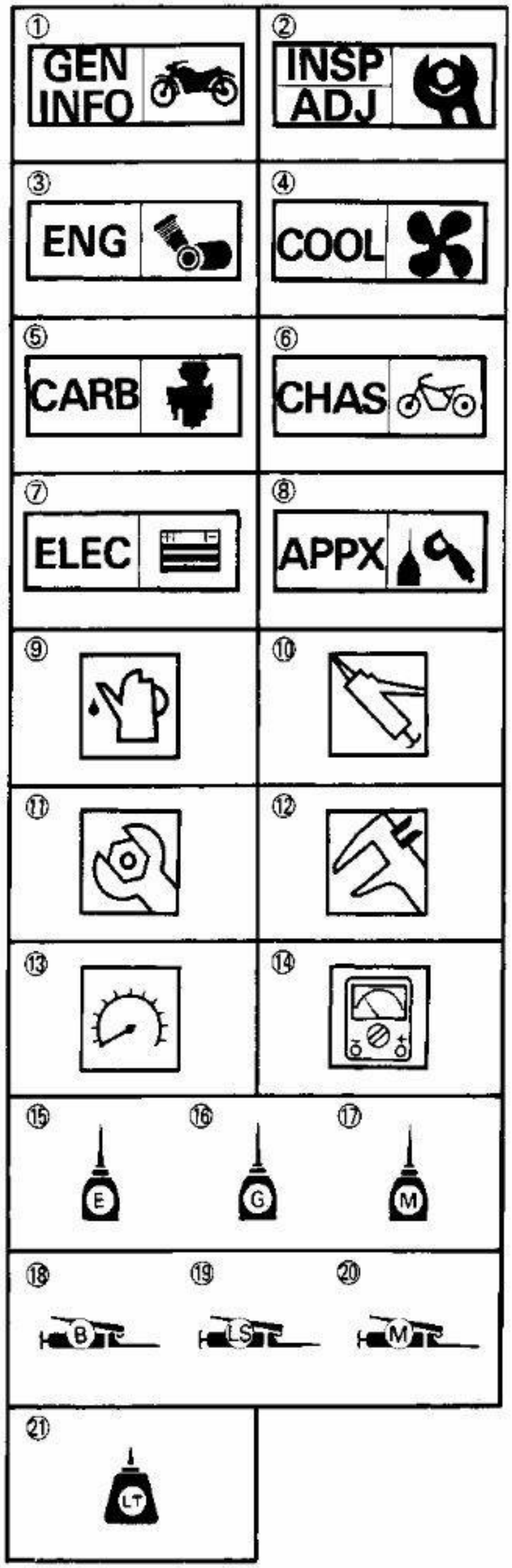

ILLUSTRATED SYMBOLS
(Refer to the illustration)

Illustrated symbols ① to ⑧ are designed as thumb tabs to indicate the chapter's number and content.

① General information
② Periodic inspection and adjustment
③ Engine
④ Cooling system
⑤ Carburetion
⑥ Chassis
⑦ Electrical
⑧ Appendices

Illustrated symbols ⑨ to ⑭ are used to identify the specifications appearing in the text.

⑨ Filling fluid
⑩ Lubricant
⑪ Tightening
⑫ Wear limit, clearance
⑬ Engine speed
⑭ Ω, V, A

Illustrated symbols ⑮ to ㉑ in the exploded diagram indicate grade of lubricant and location of lubrication point.

⑮ Apply engine oil
⑯ Apply gear oil
⑰ Apply molybdenum disulfide oil
⑱ Apply wheel bearing grease
⑲ Apply lightweight lithium-soap base grease
⑳ Apply molybdenum disulfide grease
㉑ Apply locking agent (LOCTITE®)

INDEX

GENERAL INFORMATION	GEN INFO 1
PERIODIC INSPECTIONS AND ADJUSTMENTS	INSP ADJ 2
ENGINE OVERHAUL	ENG 3
CARBURETION	CARB 4
CHASSIS	CHAS 5
ELECTRICAL	ELEC 6
APPENDICES	APPX 7

CHAPTER 1.
GENERAL INFORMATION

MOTORCYCLE IDENTIFICATION 1-1
VEHICLE IDENTIFICATION NUMBER 1-1
ENGINE SERIAL NUMBER 1-1

IMPORTANT INFORMATION 1-2
ALL REPLACEMENT PARTS 1-2
GASKETS, OIL SEALS, AND O-RINGS 1-2
LOCK WASHERS/PLATES AND COTTER PINS. 1-2
BEARINGS AND OIL SEALS 1-2
CIRCLIPS 1-3

SPECIAL TOOLS 1-3
FOR TUNE UP 1-3
FOR ENGINE SERVICE 1-4
FOR CHASSIS SERVICE 1-7
FOR ELECTRICAL COMPONENTS 1-8

GENERAL INFORMATION

MOTORCYCLE IDENTIFICATION

VEHICLE IDENTIFICATION NUMBER

The vehicle identification number (1) is stamped into the steering head pipe.

NOTE:

The vehicle identification number is used to identify your motorcycle and may be used to register your motorcycle with the licensing authority in your state.

Starting Serial Number:
SRX250T JYA2NV00*HA000101
SRX250TC...JYA2NW00*HA000101

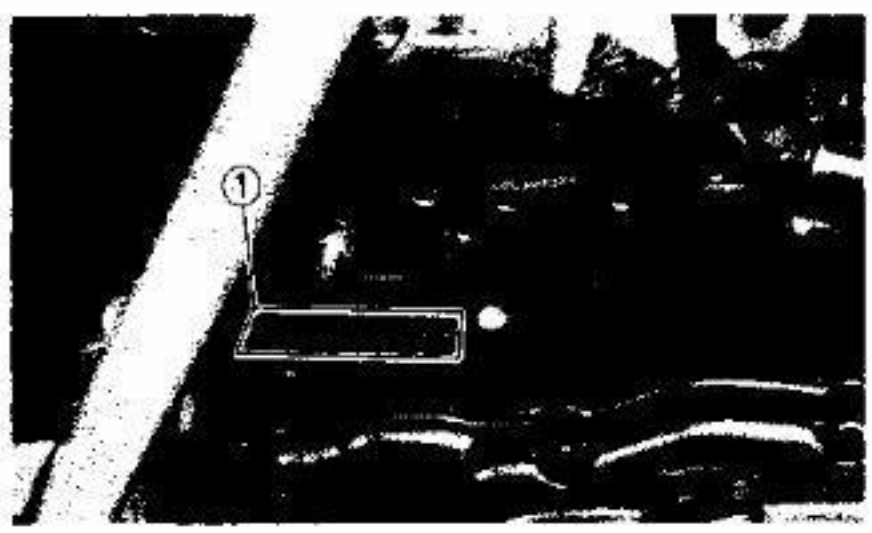

ENGINE SERIAL NUMBER

The engine serial number (1) is stamped into the right side of the engine.

NOTE:

The first three digits of these numbers are for model identifications; the remaining digits are the unit production number.

Starting Serial Number:
SRX250T 2NV-000101
SRX250TC...2NW-000101

NOTE:

Designs and specifications are subject to change without notice.

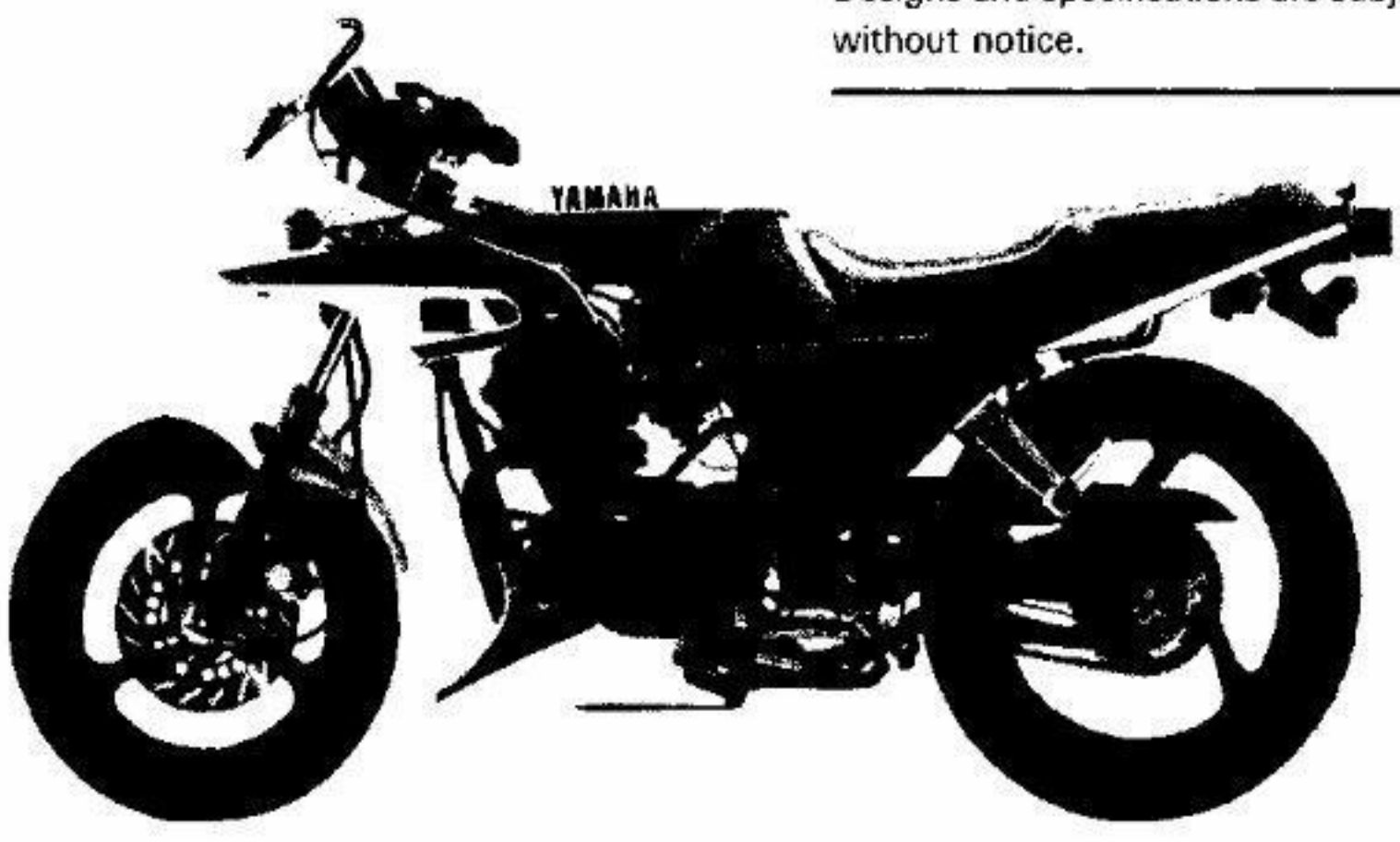

IMPORTANT INFORMATION

ALL REPLACEMENT PARTS

1. We recommend to use Yamaha genuine parts for all replacements. Use oil and/or grease recommended by Yamaha for assenmbly and adjustment.

GASKETS, OIL SEALS, AND O-RINGS

1. All gaskets, seals, and O-rings should be replaced when an engine is overhauled. All gasket surfaces, oil seal lips, and O-rings must be cleaned.
2. Properly oil all mating parts and bearings during reassembly. Apply grease to the oil seal lips.

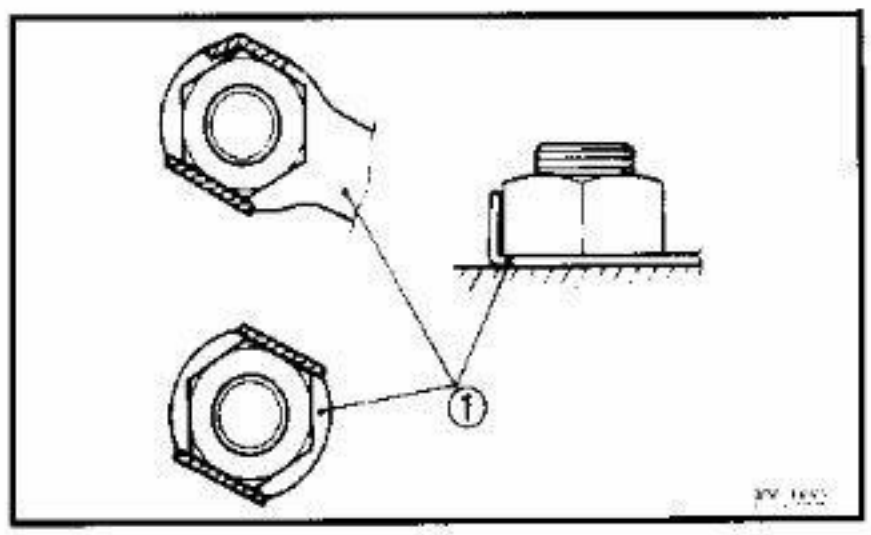

LOCK WASHERS/PLATES AND COTTER PINS

1. All lock washers/plates ① and cotter pins must be replaced when they are removed. Lock tab (s) should be bent along the bolt or nut flat(s) after the bolt or nut has been properly tightened.

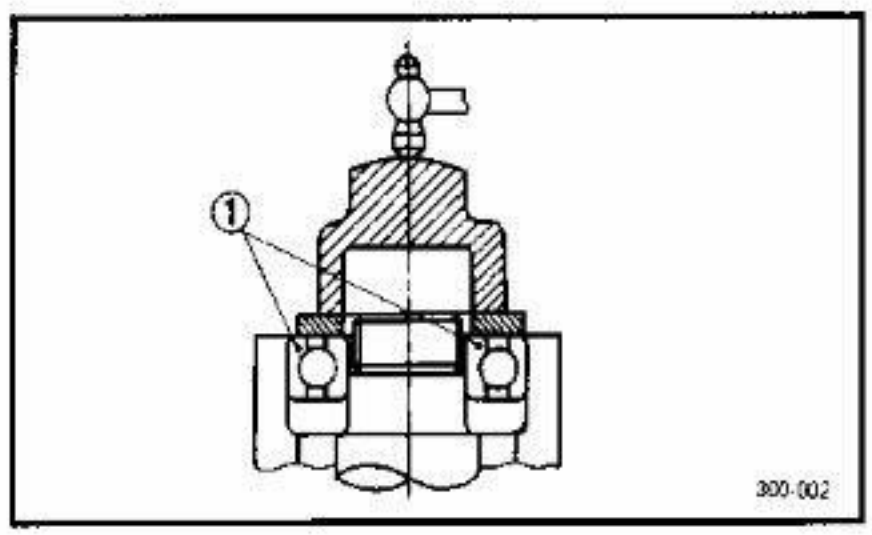

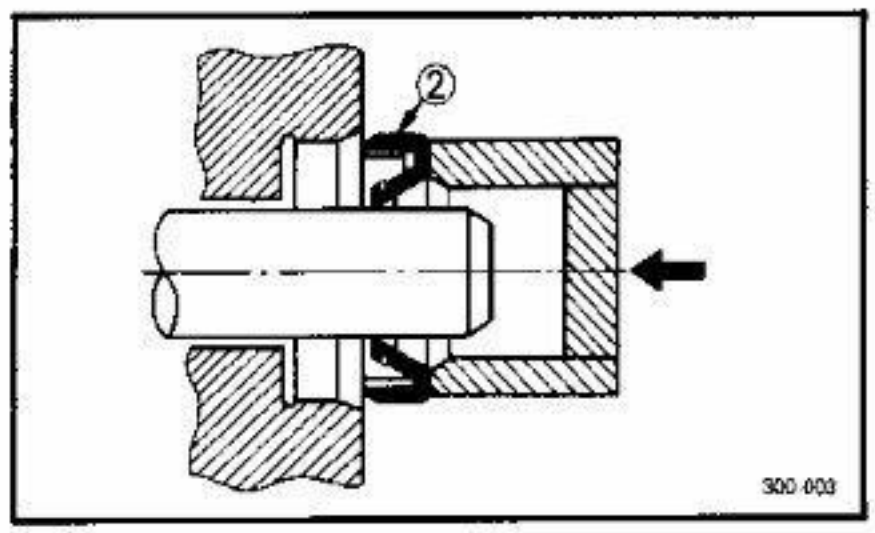

BEARINGS AND OIL SEALS

1. Install the bearing(s) ① and oil seal(s) ② with their manufacture's marks or numbers facing outward. (In other words, the stamped letters must be on the side exposed to view.) When installing oil seal(s), apply a light coating of light-weight lithium base grease to the seal lip(s). Oil the bearings liberally when installing.

CAUTION:

Do not use compressed air to spin the bearings dry. This causes damage to the bearing surfaces.

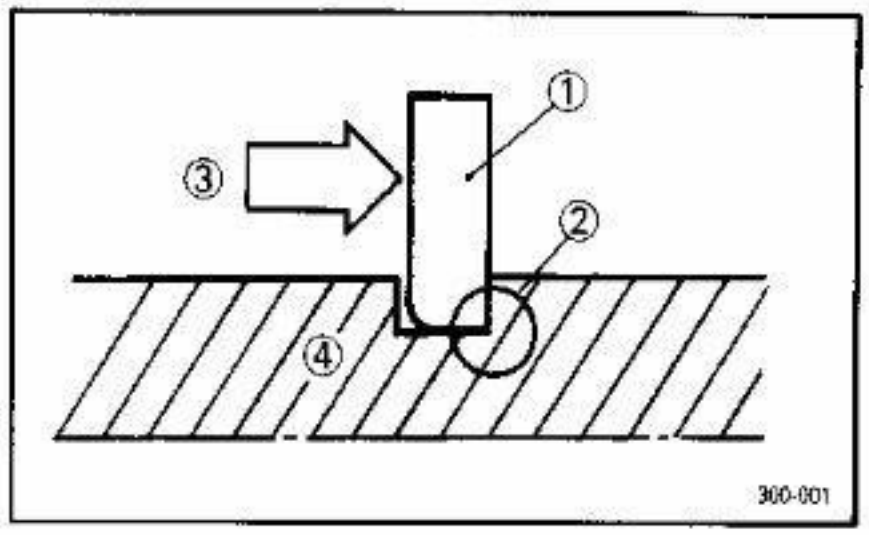

CIRCLIPS

1. All circlips should be inspected carefully before reassembly. Always replace piston pin clips after one use. Replace distorted circlips. When installing a circlip ①, make sure that the sharp-edged corner ② is positioned opposite to the thrust ③ it receives. See the sectional view.

④ Shaft

SPECIAL TOOLS

The proper special tools are necessary for complete and accurate tune-up and assembly. Using the correct special tool will help prevent damage caused by the use of improper tools or improvised techniques.

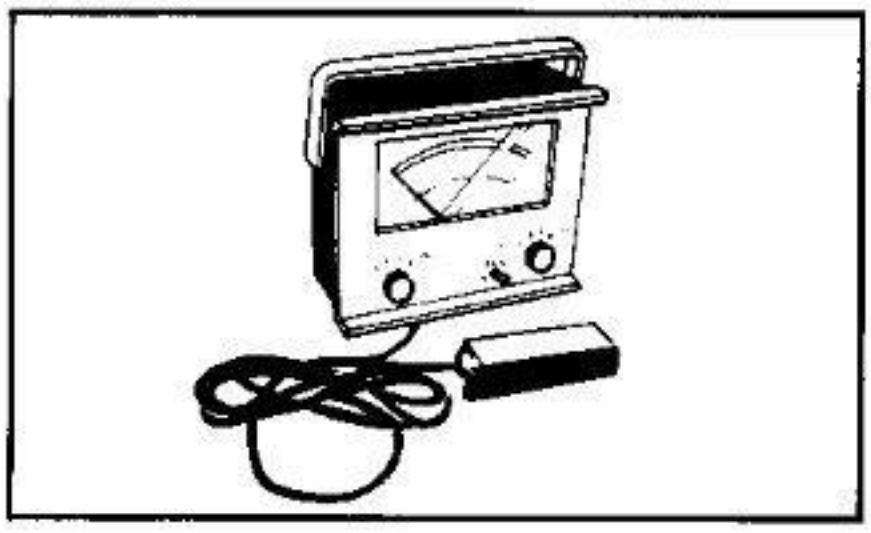

FOR TUNE UP

1. Inductive Tachometer
   P/N. YU-08036

This tool is needed for detecting engine rpm.

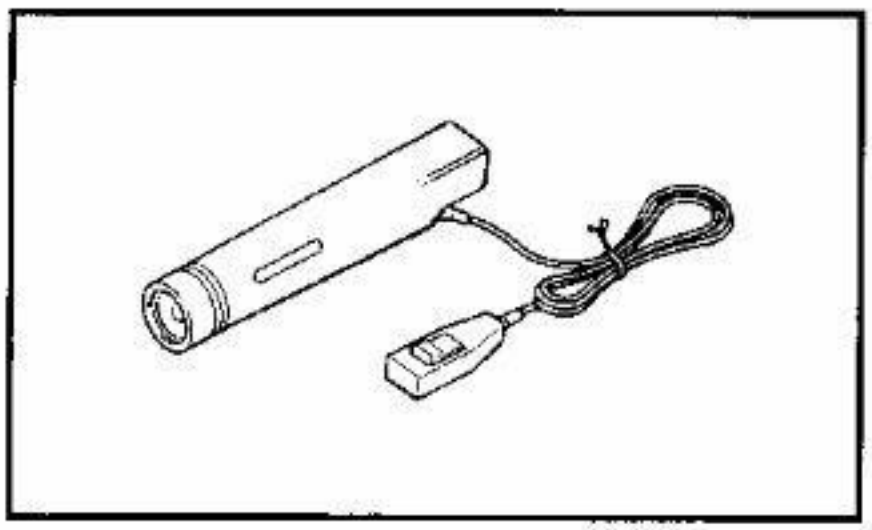

2. Inductive Timing Light
   P/N. YM-33277

This tool is necessary for checking ignition timing.

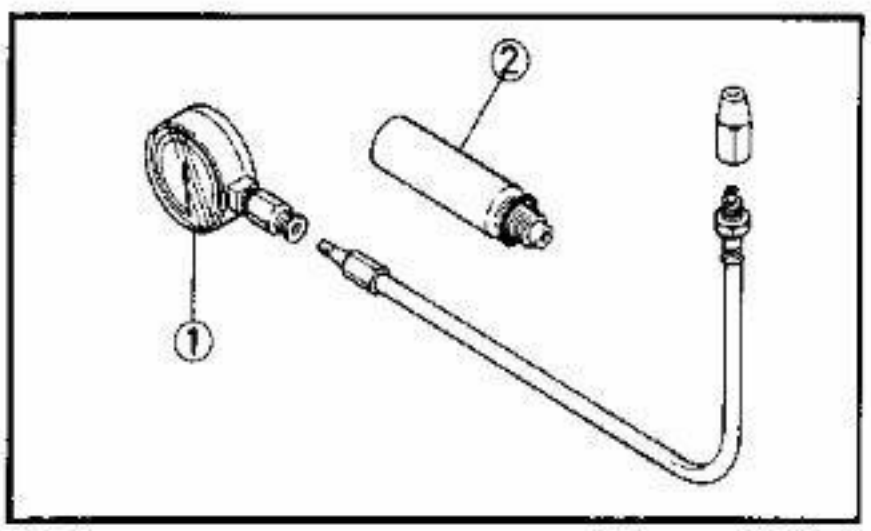

3. Compression Gauge ..... ①
   P/N. YU-33223
   Adapter (12 mm) ..... ②
   P/N. YU-33223-3

This gauge is used to measure the engine compression.

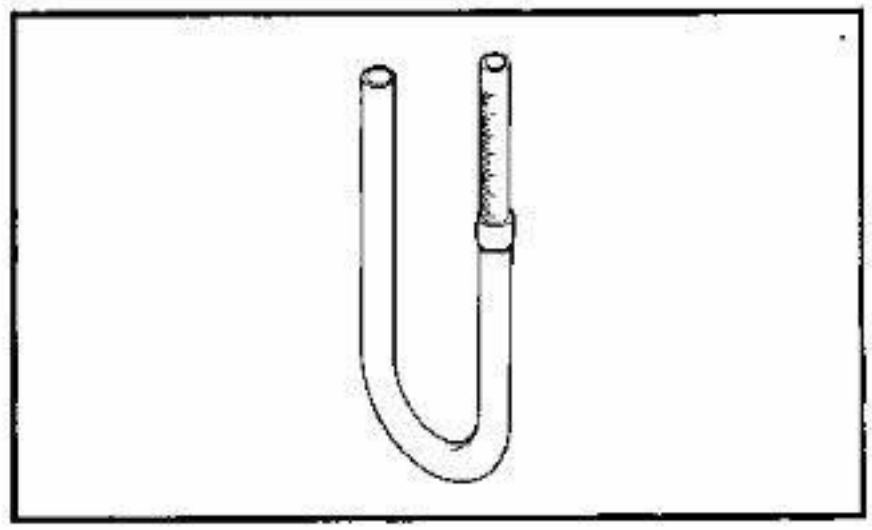

4. Fuel Level Gauge
   P/N. YM-01312-A

This gauge is used to measure the fuel level in the float chamber.

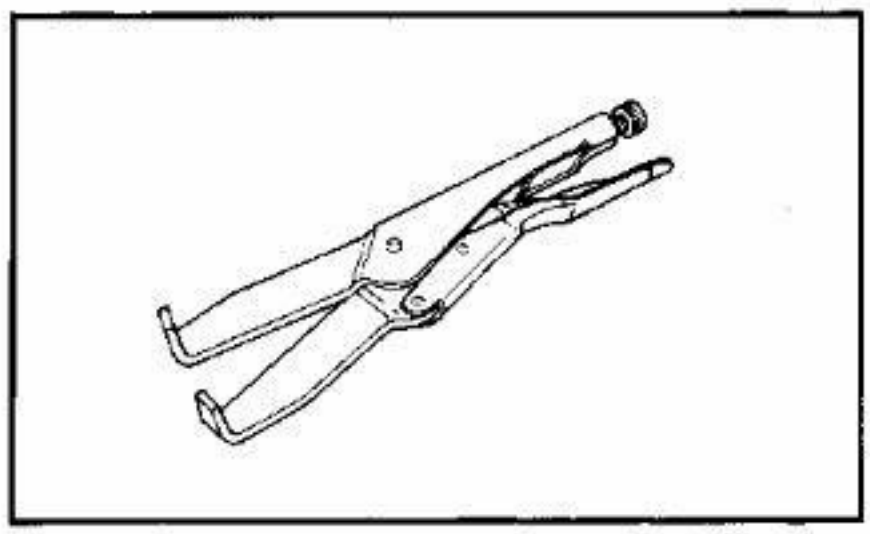

FOR ENGINE SERVICE

1. Universal Clutch Holder
   P/N. YM-91042

This tool is used to hold the clutch when removing or installing the clutch boss locknut.

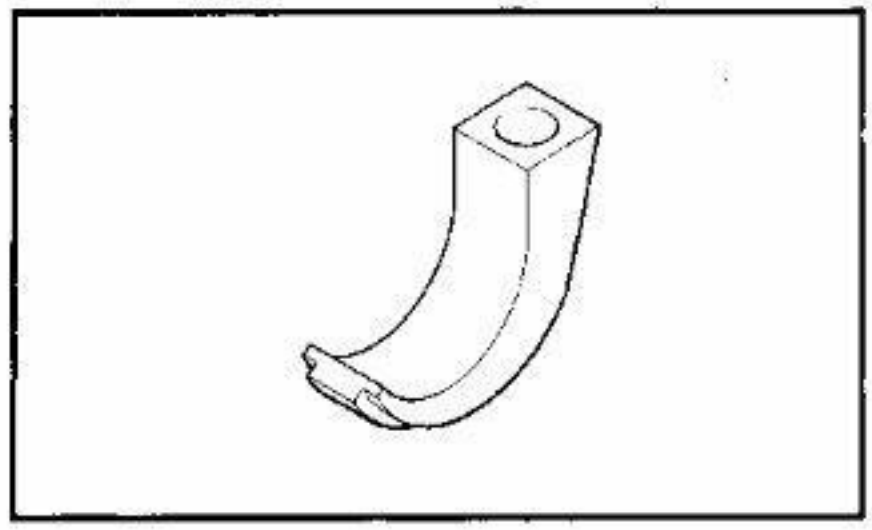

2. Tappet Adjusting Tool
   P/N. YM-4106

This tool is necessary to replace valve adjusting pads.

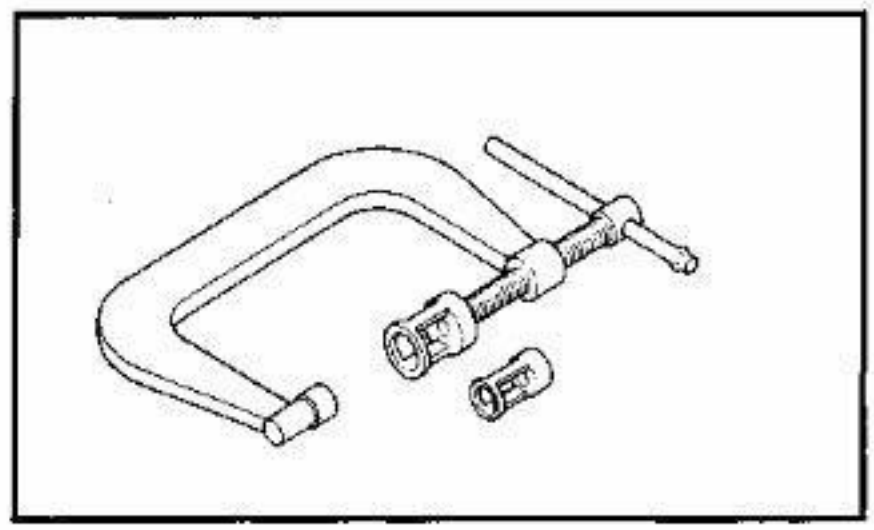

3. Valve Spring Compressor
   P/N. YM-01253

This tool is needed to remove and install the valve assemblies.

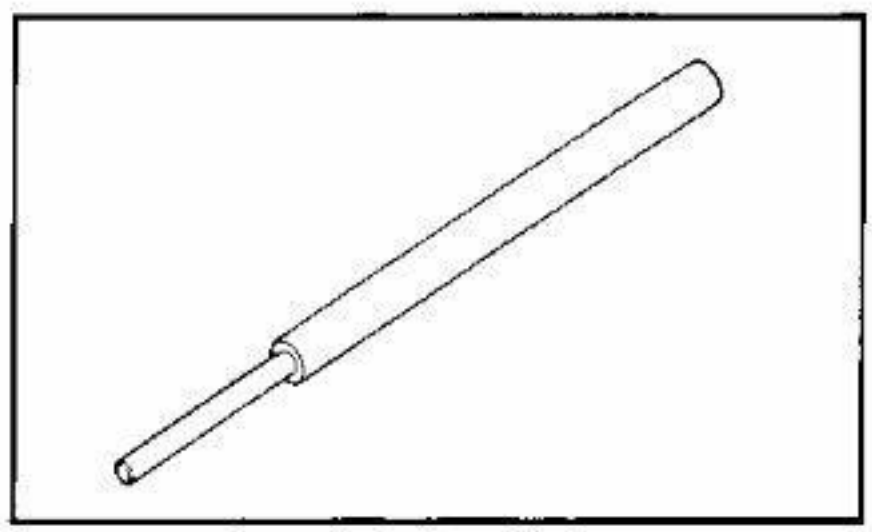

4. Valve Guide Remover (5.5 mm)
   P/N. YM-01122

This tool is used to remove the valve guides.

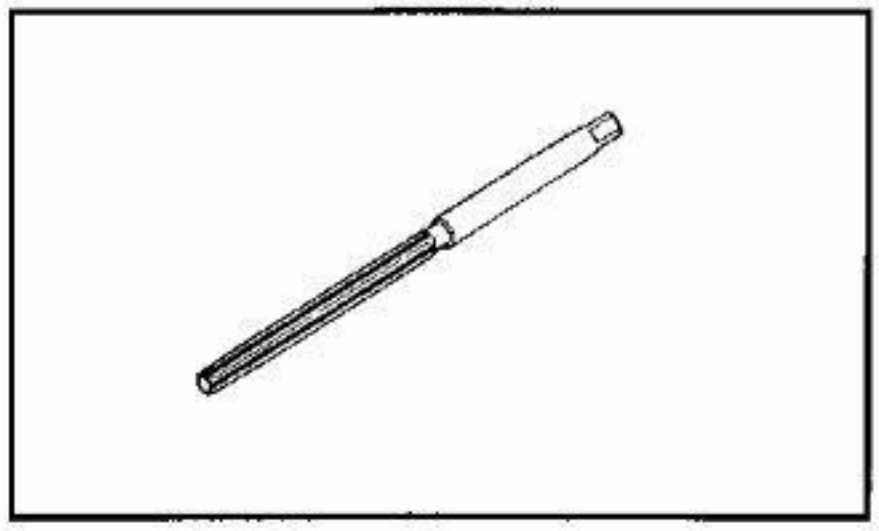

5. Valve Guide Reamer (5.5 mm)
   P/N. YM-01196

This tool is used to rebore the new valve guide.

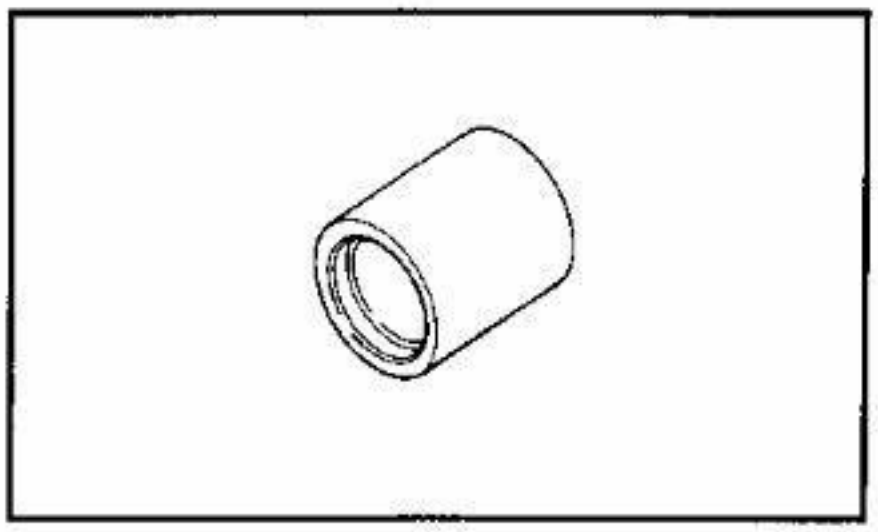

6. Valve Guide Installer
   P/N. YM-4015

This tool is needed to install the valve guides properly.

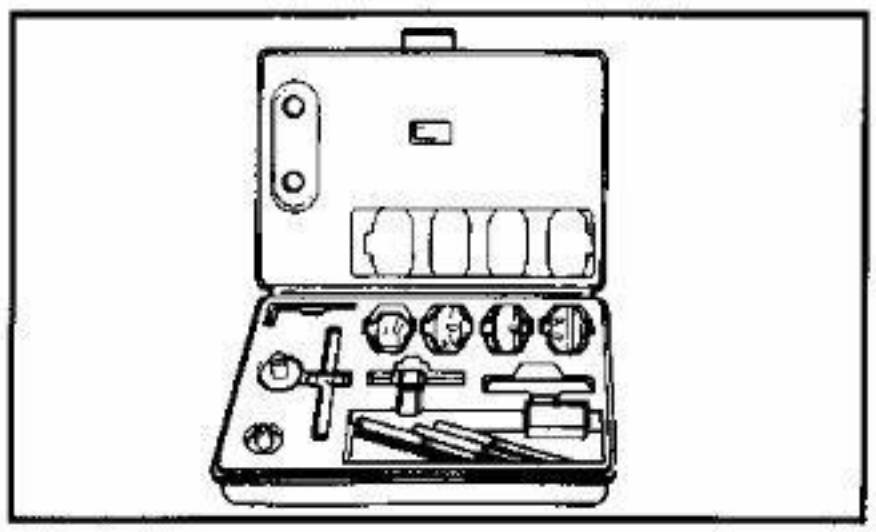

7. Valve Seat Cutter Set
   P/N. YM-91043-A

This tool is needed to resurface the valve seat.

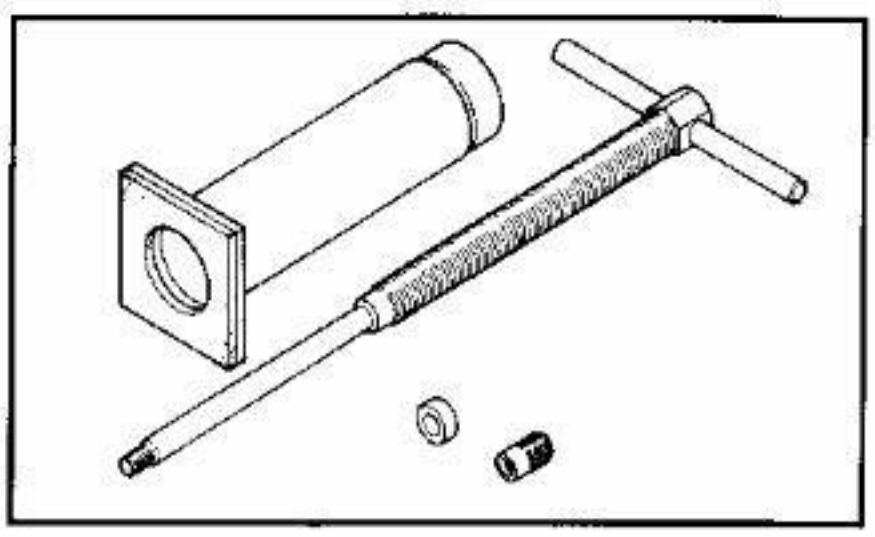

8. Piston Pin Puller
   P/N. YU-01304

This tool is used to remove the piston pin.

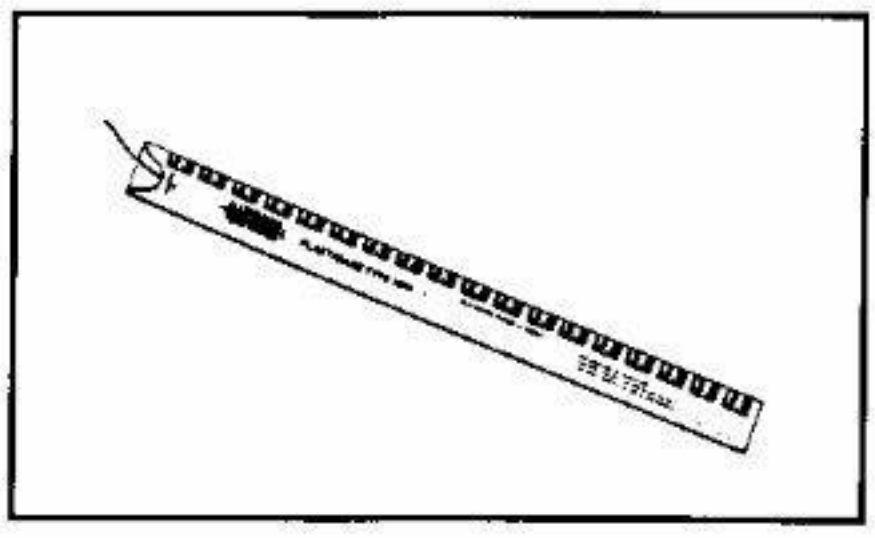

9. Plastigage® Set "Green"
   P/N. YU-33210

This gauge is needed to measure the clearance for the connecting rod bearing.

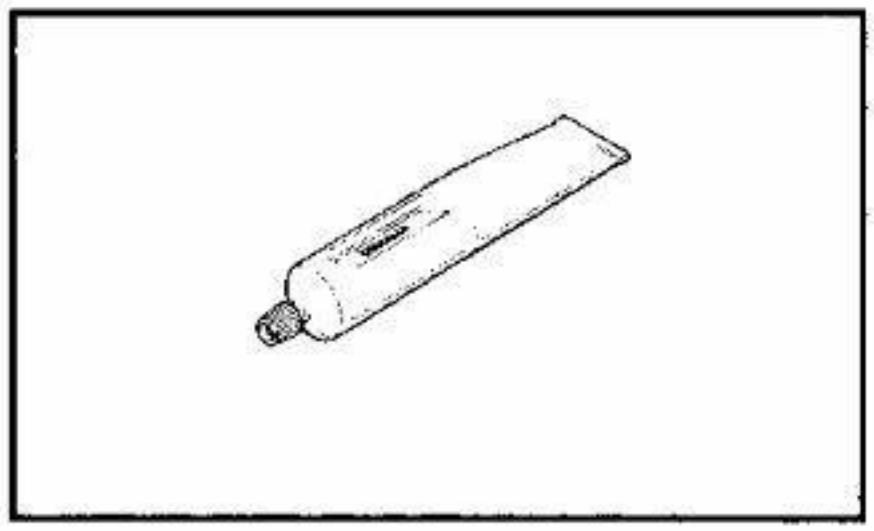

10. Sealant (Quick Gasket®)
    P/N. ACC-11001-05-01

This sealant is used for crankcase mating surfaces, etc.

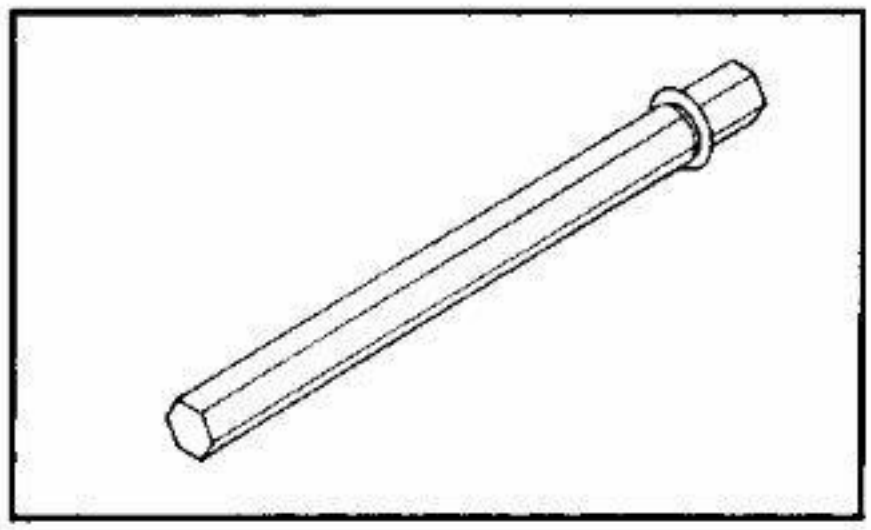

11. Wrench Adapter 8 mm (0.3 in)
    P/N. YM-28897

This tool is used to retighten the cylinder head securing bolts.

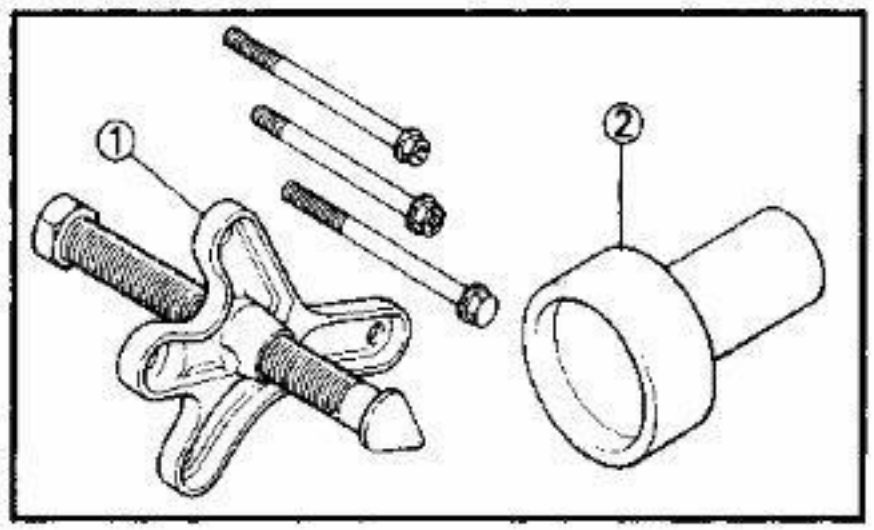

12. Universal Puller
    P/N. YU-33270 ..... ①
    Attachment
    P/N. YM-1382 ..... ②

These tools are used for removing the flywheel.

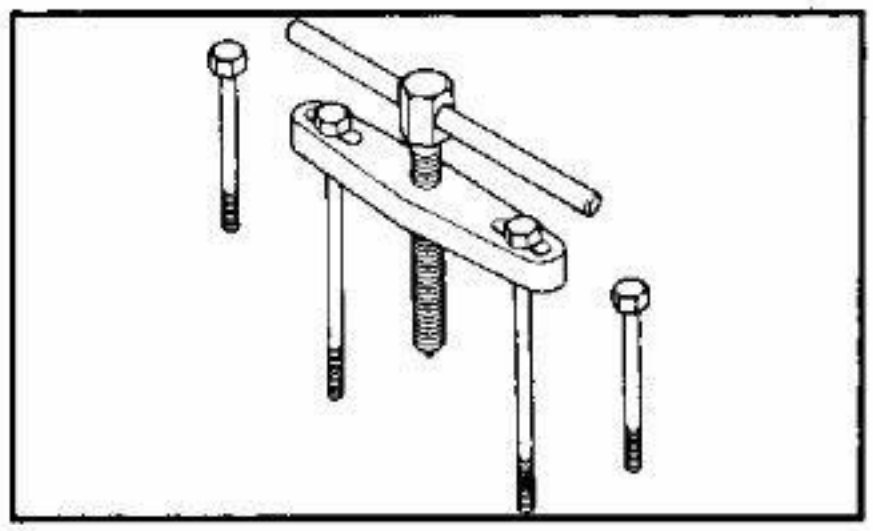

13. Crankcase-Separator
    P/N. YU-01135

This tool is used for removing the crankshaft from the crankcase.

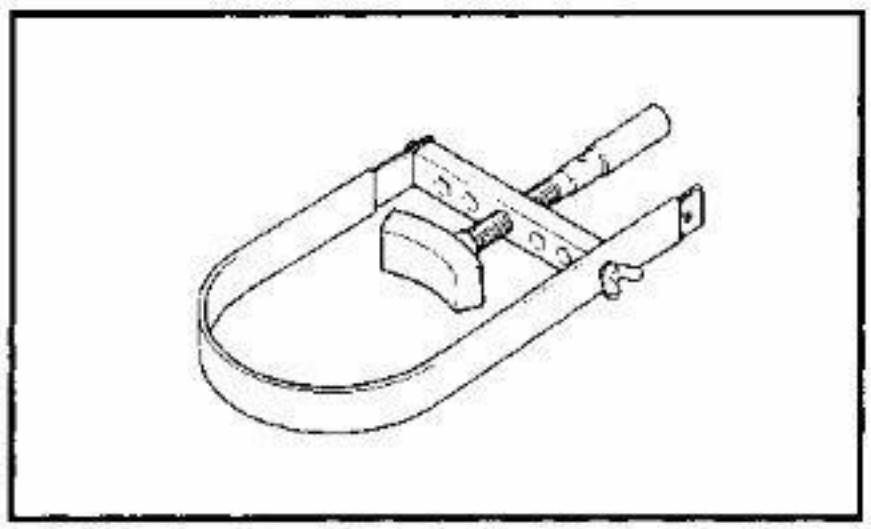

14. Sheave Holder
    P/N. YS-01880

This tool is used when loosening or tightening the flywheel magneto securing bolt.

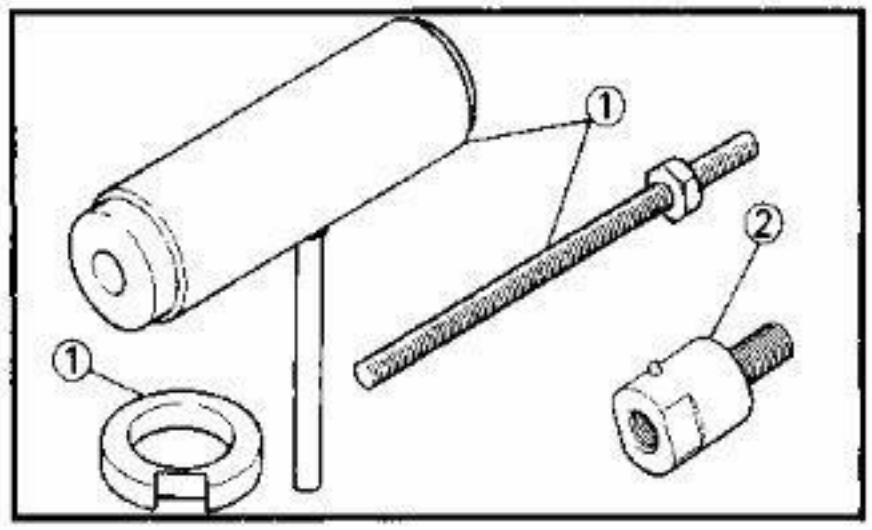

15. Crankshaft Installing Set
    P/N. YU-90050 ..... ①
    Adapter
    P/N. YM-1383 ..... ②

These tools are used when installing the crankshaft.

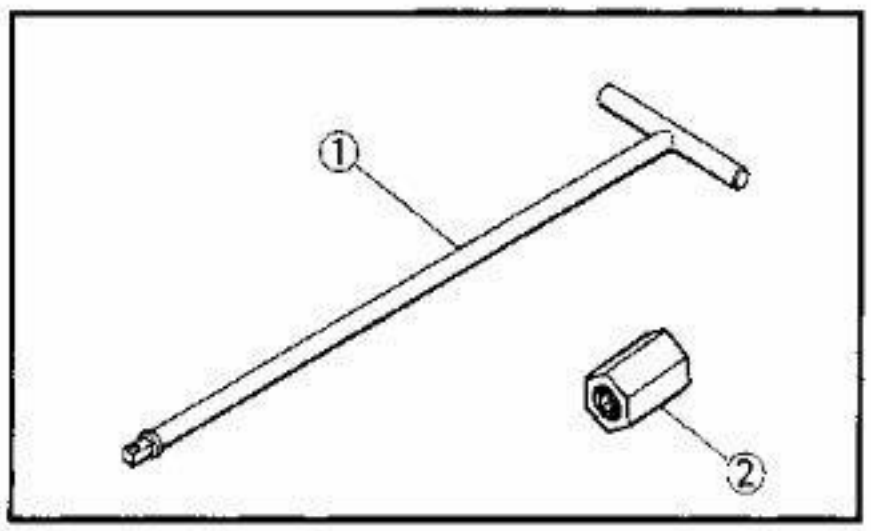

FOR CHASSIS SERVICE

1. T-Handle
   P/N. YM-01326 – ①
   Front Fork Cylinder Holder 19 mm
   P/N. YM-33256 – ②

This tool is used to loosen and tighten the front fork cylinder holding bolt.

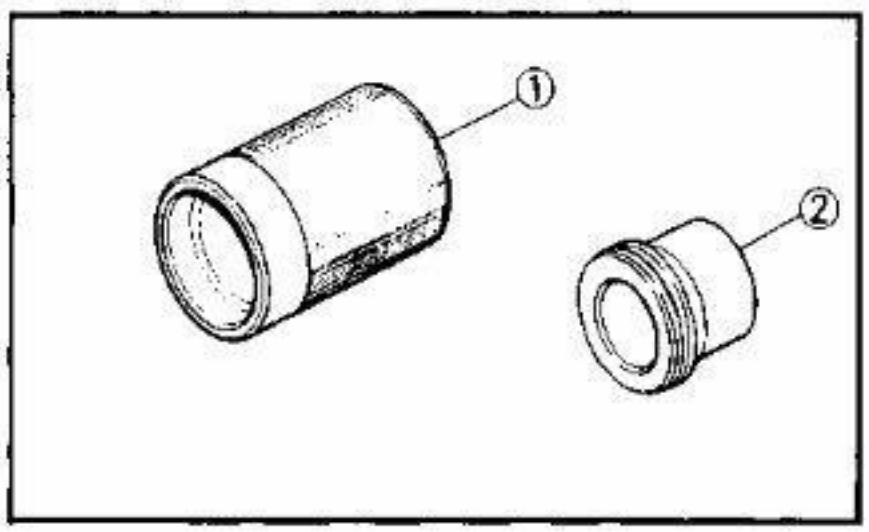

2. Front Fork Seal Driver (weight)
   P/N. YM-33963 – ①
   Adapter (33 mm)
   P/N. YM-1368 – ②

These tools are used when installing the fork seat.

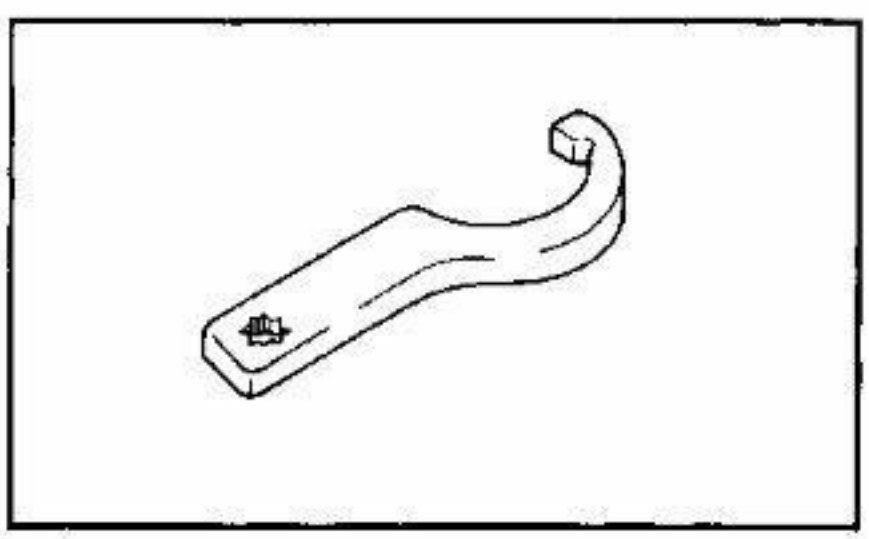

3. Ring Nut Wrench
   P/N. YU-33975

This tool is used to loosen and tighten the steering ring nut.

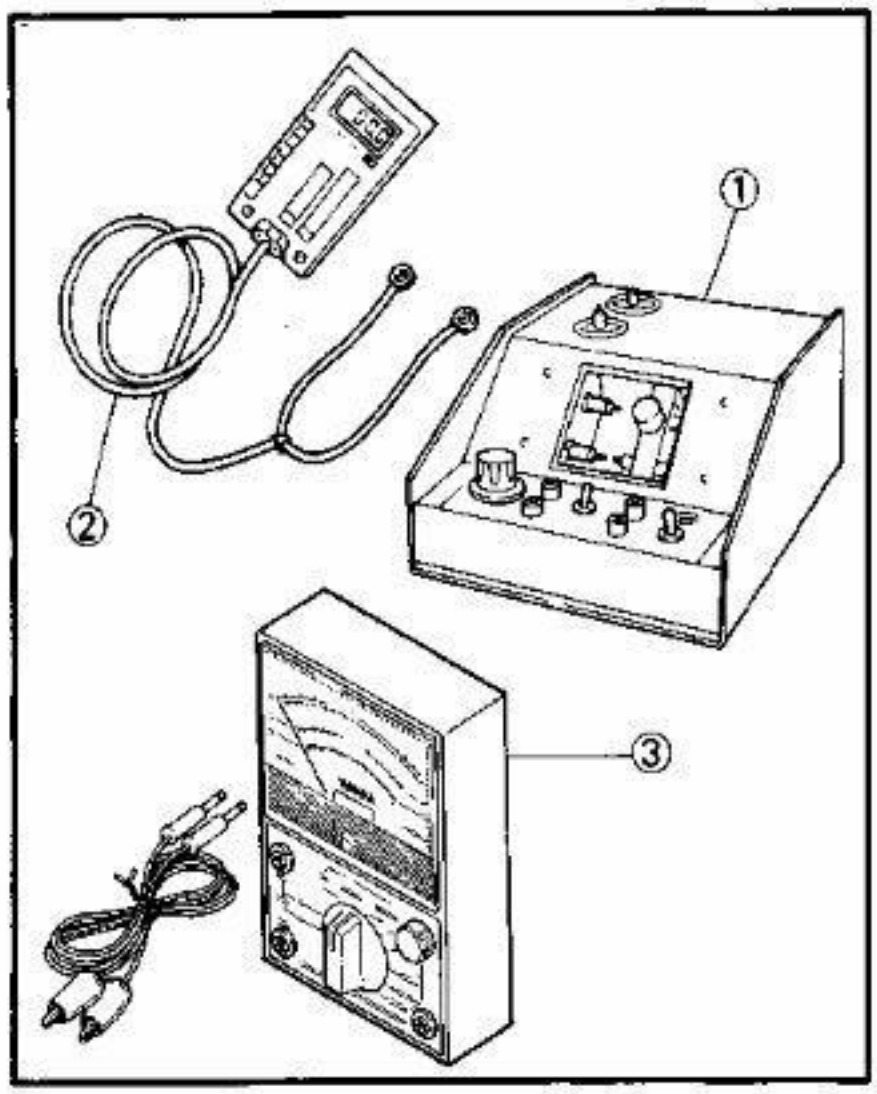

FOR ELECTRICAL COMPONENTS

1. Electro Tester
   P/N YU-33260 – ①

This instrument is necessary for checking the ignition system components.

2. Pocket Tester
   P/N YU-33263 – ② or YU-03112 – ③

This instrument is invaluable for checking the electrical system.

CHAPTER 2
PERIODIC INSPECTIONS AND ADJUSTMENTS

INTRODUCTION 2-1

MAINTENANCE INTERVALS CHARTS 2-1
- PERIODIC MAINTENANCE EMISSION CONTROL SYSTEM 2-1
- GENERAL MAINTENANCE/LUBRICATION 2-2

COWLING 2-4
- UPPER COWLING 2-4
- LOWER COWLING 2-5

ENGINE 2-6
- VALVE CLEARANCE ADJUSTMENT 2-6
- CRANKCASE VENTILATION SYSTEM INSPECTION 2-10
- FUEL LINE INSPECTION 2-10
- INTAKE MANIFOLD INSPECTION 2-11
- EXHAUST SYSTEM INSPECTION 2-11
- IDLING SPEED ADJUSTMENT 2-11
- THROTTLE CABLE ADJUSTMENT 2-11
- ENGINE OIL LEVEL INSPECTION 2-13
- ENGINE OIL REPLACEMENT 2-13
- OIL PRESSURE INSPECTION 2-17
- COMPRESSION PRESSURE MEASUREMENT 2-17
- CLUTCH ADJUSTMENT 2-19
- CANISTER/HOSES INSPECTION (SRX250TC ONLY) 2-20

CHASSIS 2-21
- FUEL COCK CLEANING 2-21
- AIR FILTER CLEANING 2-22
- BRAKE FLUID LEVEL INSPECTION 2-23
- BRAKE PAD INSPECTION 2-24
- BRAKE SHOE INSPECTION 2-24
- FRONT BRAKE ADJUSTMENT 2-24
- REAR BRAKE ADJUSTMENT 2-25
- BRAKE LIGHT SWITCH ADJUSTMENT 2-25
- DRIVE CHAIN SLACK ADJUSTMENT 2-26
- DRIVE CHAIN LUBRICATION 2-27
- STEERING HEAD ADJUSTMENT 2-27
- FRONT FORK OIL REPLACEMENT 2-30
- REAR SHOCK ABSORBER ADJUSTMENT 2-31
- WHEEL INSPECTION 2-32
- TIRE INSPECTION 2-33
- BRAKE AND CHANGE PEDALS/BRAKE AND CLUTCH LEVERS LUBRICATION 2-35
- SIDESTAND LUBRICATION 2-35
- SWINGARM LUBRICATION 2-35
- CABLE INSPECTION AND LUBRICATION 2-36

ELECTRICAL 2-36
BATTERY INSPECTION 2-36
SPARK PLUG INSPECTION 2-38
CIRCUIT BREAKER INSPECTION 2-39
HEADLIGHT BEAM ADJUSTMENT 2-40
HEADLIGHT BULB REPLACEMENT 2-40
IGNITION TIMING CHECK 2-41

PERIODIC INSPECTIONS AND ADJUSTMENTS

INTRODUCTION

This chapter includes all information necessary to perform recommended inspections and adjustments. These preventive maintenance procedures, if followed, will ensure more reliable vehicle operation and a longer service life. The need for costly overhaul work will be greatly reduced. This information applies to vehicles already in service as well as new vehicles that are being prepared for sale. All service technicians should be familiar with this entire chapter.

MAINTENANCE INTERVALS CHARTS

Proper periodic maintenance is important. Especially important are the maintenance services related to emissions control. These controls not only function to ensure cleaner air but are also vital to proper engine operation and maximum performance. In the following maintenance tables, the services related to emissions control are grouped separately.

PERIODIC MAINTENANCE EMISSION CONTROL SYSTEM

No.	ITEM	REMARKS	INITIAL	ODOMETER READING			
			1,000 km or 1 month (600 mi)	**1 6,000 km or 7 months (3,800 mi)	**2 11,000 km or 13 months (6,900 mi)	16,000 km or 19 months (10,000 mi)	**3 21,000 km or 25 months (13,100 mi)
1.*	Valve clearance	Check and adjust valve clearance when engine is cold.	○	○	○	○	○
2.	Spark plug plug	Check condition. Adjust gap and clean. Replace at 11,000 km (or 13 months) and thereafter every 10,000 km (or 12 months).		○	Replace	○	Replace
3.*	Crankcase ventilation system	Check ventilation hose for cracks or damage. Replace if necessary.		○		○	
4.*	Fuel line	Check fuel hose and vacuum pipe for crack or damage. Replace if necessary.		○	○	○	○
5.*	Exhaust system	Check for leakage. Retighten if necessary. Replace gasket(s) if necessary.		○	○	○	○
6.*	Idle speed	Check and adjust engine idle speed. Adjust cable free play.		○	○	○	○

* It is recommended that these items be serviced by a Yamaha dealer or other qualified mechanic.

NOTE:

For farther odometer reading, repeat the above maintenance at the period established; **1: Every 5,000 km (3,000 mi) **2: Every 10,000 km (6,000 mi), **3: Every 20,000 km (12,000 mi) intervals.

GENERAL MAINTENANCE/LUBRICATION

No.	ITEM	REMARKS	TYPE	INITIAL	ODOMETER READING			
				1,000 km or 1 month (600 mi)	**1 6,000 km or 7 months (3,800 mi)	**2 11,000 km or 13 months (6,900 mi)	16,000 km or 19 months (10,000 mi)	**3 21,000 km or 25 months (13,100 mi)
1.	Engine oil	Warm-up engine before draining	See NOTE	○	○	○	○	○
2.	Oil filter/ strainer	Clean and/or replace if necessary.	—	○		○		○
3.*	Air filter	Wet type filter must be washed and damped with oil.	Yamalube 2-cycle oil or equivalent.		○	○	○	○
4.*	Brake system	Adjust free play. Replace pads if necessary. (Front) Replace shoes if necessary. (Rear)	—	○	○	○	○	○
5.*	Clutch	Adjust free play.	—	○	○	○	○	○
6.	Drive chain	Check chain condition. Adjust and lubricate chain thoroughly.	SAE 30 ~ 50W motor oil	Every 500 km (300 mi)				
7.*	Control and meter cable	Apply chain lube thoroughly.	Yamaha chain and cable lube or SAE 10W30 motor oil	○	○	○	○	○
8.*	Rear arm pivot shaft and suspen-sion link pivots	Apply until new grease shows.	Lithium soap base grease.		○	○	○	○
9.	Brake/ Clutch lever pivot shaft	Apply chain lube lightly.	Yamaha chain and cable lube or SAE 10W30 motor oil.		○	○	○	○
10.	Brake pedal and change pedal shaft	Lubricate. Apply chain lube lightly.	Yamaha chain and cable lube or SAE 10W30 motor oil		○	○	○	○
11.	Sidestand pivot	Check operation and lubricate. Apply chain lube lightly.	Yamaha chain and cable lube or SAE 10W30 motor oil.		○	○	○	○
12.*	Front fork oil	Check operation and leakage.	—		○	○	○	○
13.*	Steering bearings	Check bearings assembly for looseness. Moderately repack every 15,000 km (9,000 mi)	Medium weight wheel bearing grease.		○	○	Repack	○

No.	ITEM	REMARKS	TYPE	INITIAL	ODOMETER READING			
				1,000 km or 1 month (600 mi)	**1 6,000 km or 7 months (3,800 mi)	**2 11,000 km or 13 months (6,900 mi)	16,000 km or 19 months (10,000 mi)	**3 21,000 km or 25 months (13,100 mi)
14.*	Wheel bearings	Check bearings for smooth rotation.	—		○	○	○	○
15.	Battery	Check specific gravity and breather pipe for proper operation.	—		○	○	○	○
16.*	Sidestand switch	Check and clean or replace if necessary.	—	○	○	○	○	○

* It is recommended that these items be serviced by a Yamaha dealer or other qualified mechanic.

NOTE:

- For farther odometer reading, repeat the above maintenance at the period established; **1: Every 5,000 km (3,000 mi), **2: Every 10,000 km (6,000 mi), and **3: Every 20,000 km (12,000 mi) intervals.
- Brake system:
  1) When disassembling the master cylinder or caliper cylinder, replace the brake fluid. Normally check the brake fluid level and add the fluid as required.
  2) We recommended that, on the inner parts of the master cylinder and caliper cylinder, replace the oil seals every two years.
  3) We recommended that, replace the brake hoses every four years, or it cracked or damaged.
- Engine oil:

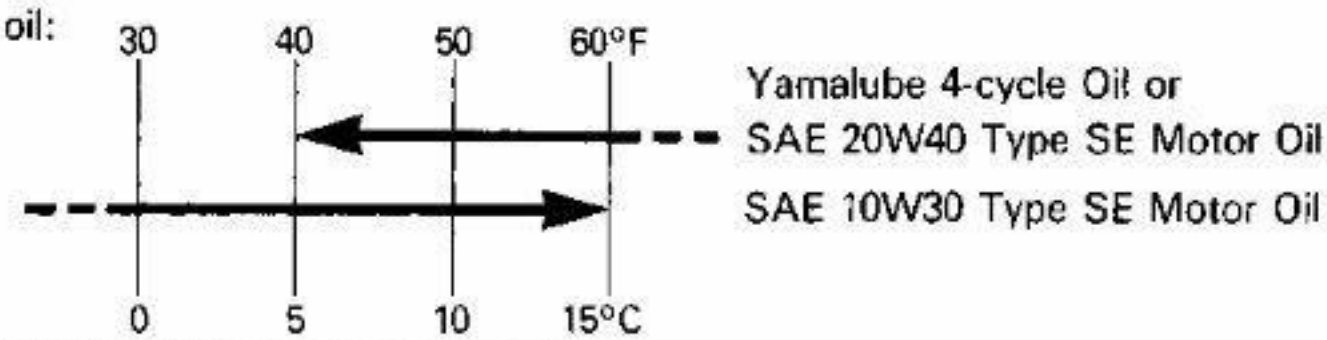

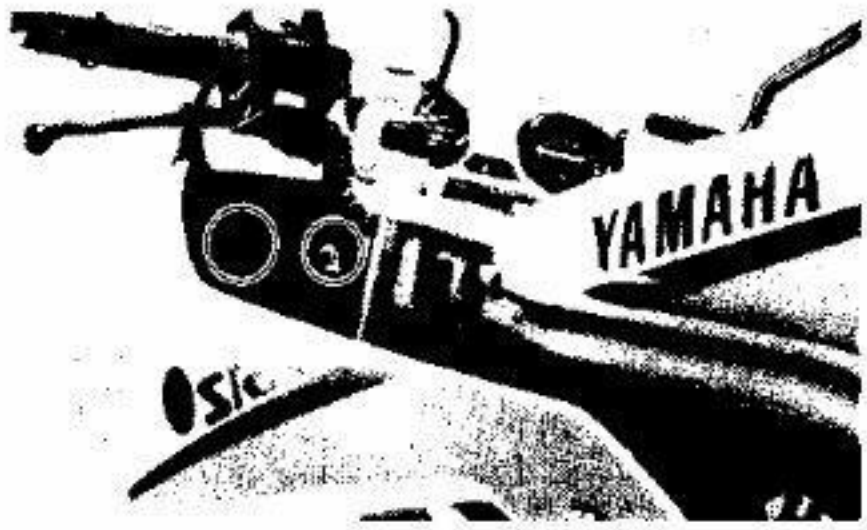

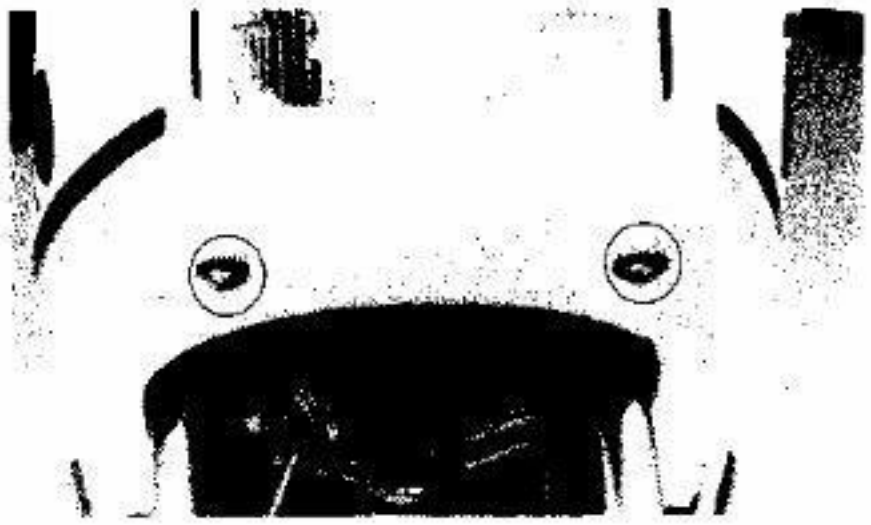

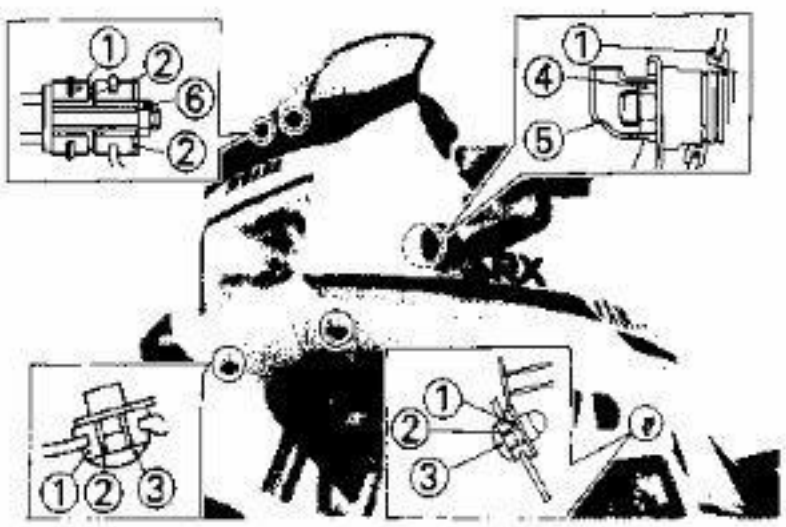

COWLING

UPPER COWLING

Removal

1. Disconnect:
   - Flasher light leads
2. Remove:
   - Nuts (Flasher light) ①
   - Flasher lights
3. Remove:
   - Bolts (Upper cowling)
   - Upper cowling

Installation

1. Install:
   - Upper Cowling
   - Bolts (Upper cowling)
2. Tighten:
   - Bolts (Upper cowling)
3. Install:
   - Flasher lights
4. Connect:
   - Flasher light leads

① Grommet
② Collar
③ Hexagon bolt
④ Hexagon nut
⑤ Cap
⑥ Nut

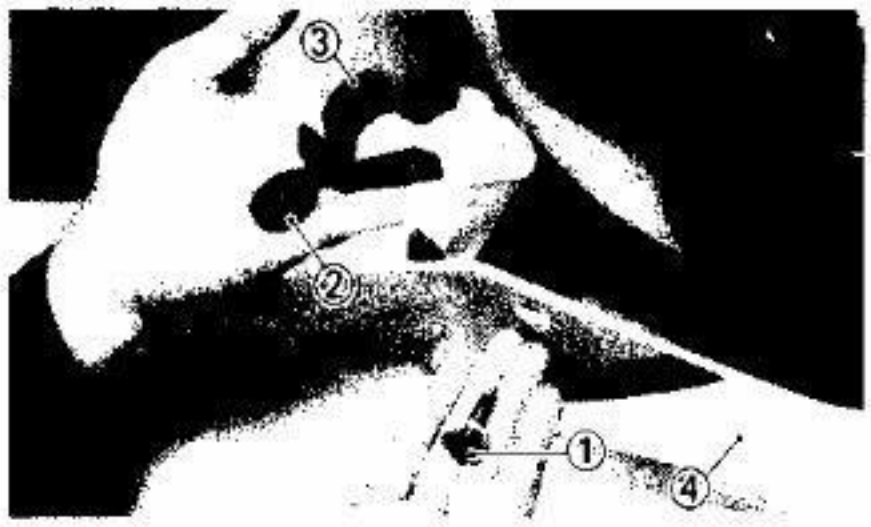

LOWER COWLING

Removal

1. Remove:
   - Bolts (Lower cowling) ①
   - Grommets ②
   - Stays (Lower cowling) ③
   - Lower Cowling ④

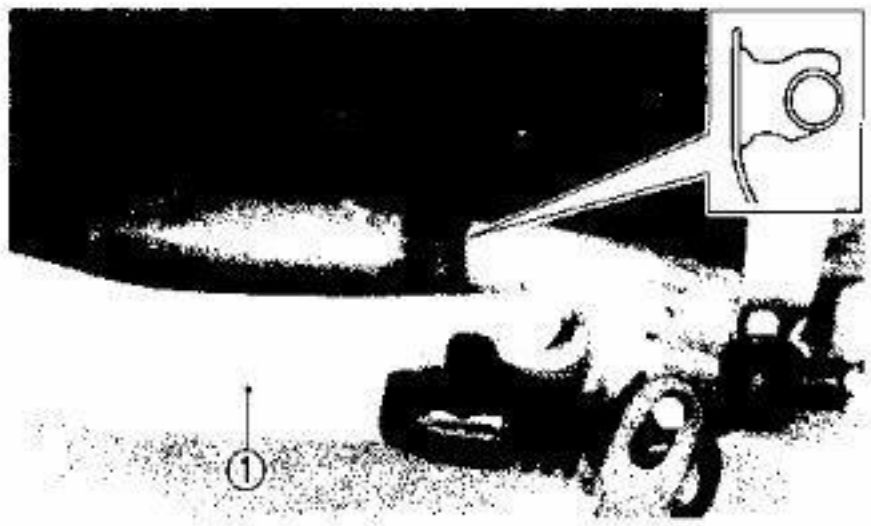

Installation

1. Install:
   - Lower cowling ①
   - Stays (Lower cowling) ②
   - Grommets ③

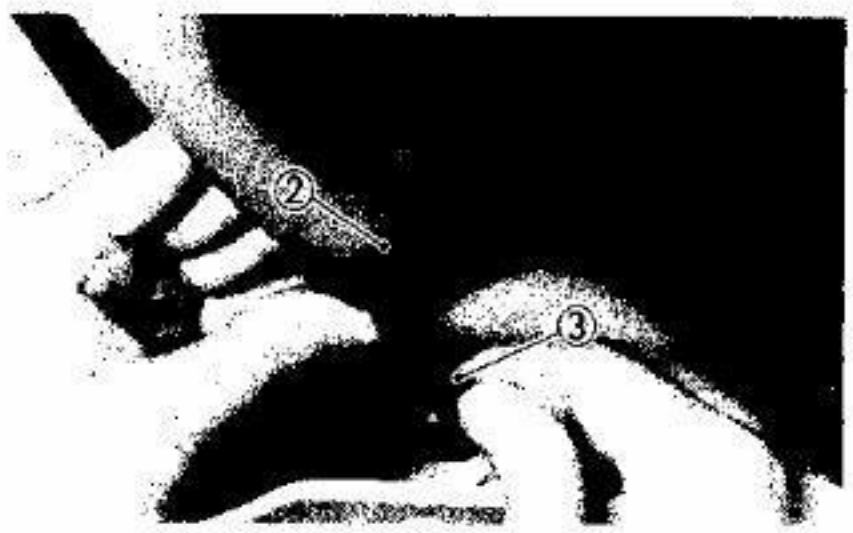

2. Tighten:
   - Bolts (Lower cowling) ①

ENGINE

VALVE CLEARANCE ADJUSTMENT

Removal

1. Remove:
   - Upper cowling
     Refer to "COWLING" section.

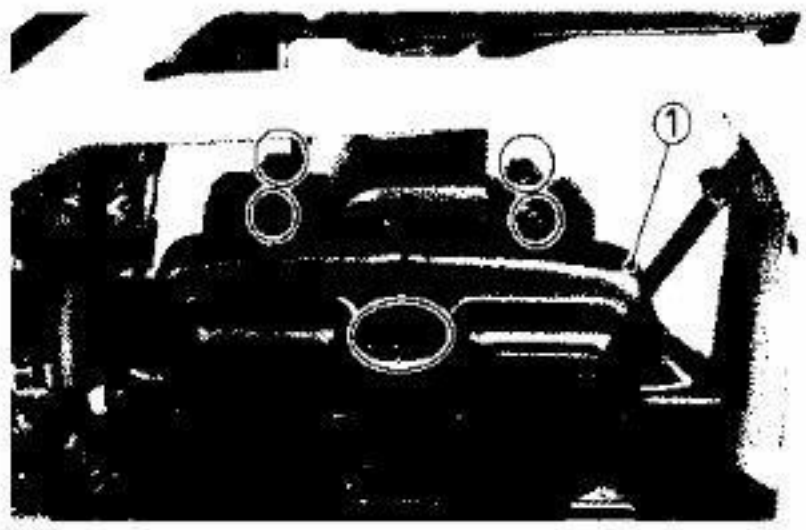

2. Disconnect:
   - Spark plug cap
3. Remove:
   - Spark plug
   - Cylinder head cover ①

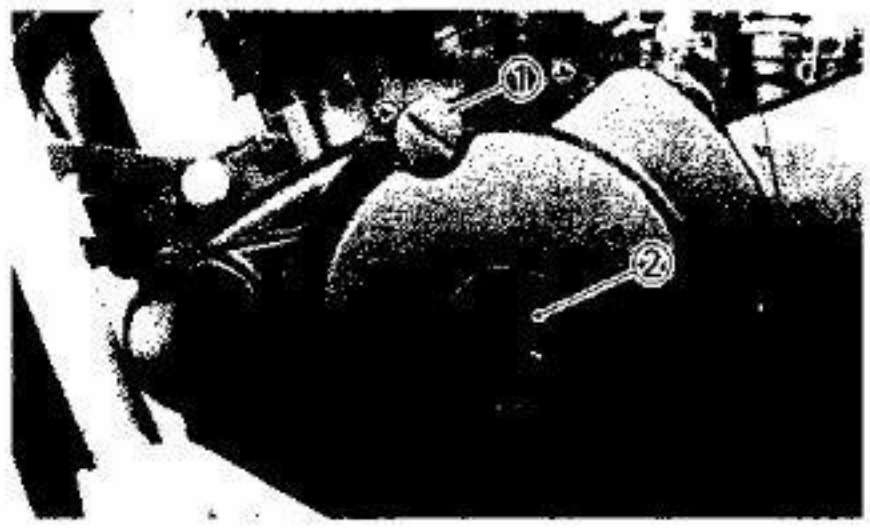

4. Remove:
   - Timing plug ①
   - Crankcase cover plate ②

Measurement and Adjustment

1. Measure:
   - Valve clearance

Valve clearance measurement steps:

- Turn the crankshaft counterclockwise with wrench.

NOTE:

Valve clearance must be measured when the engine is cool to the touch.

- Align the "I" mark ① on the rotor with the stationary pointer ② on the crankcase. When the "I" mark is aligned with the stationary pointer, the piston is at Top Dead Center (TDC).

NOTE:

Be sure piston is at Top Dead Center (TDC) on compression stroke when measuring clearance.

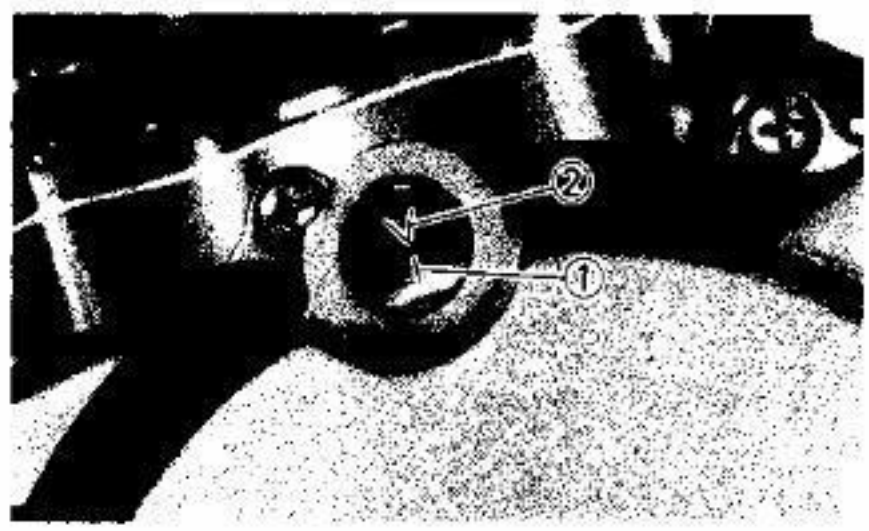

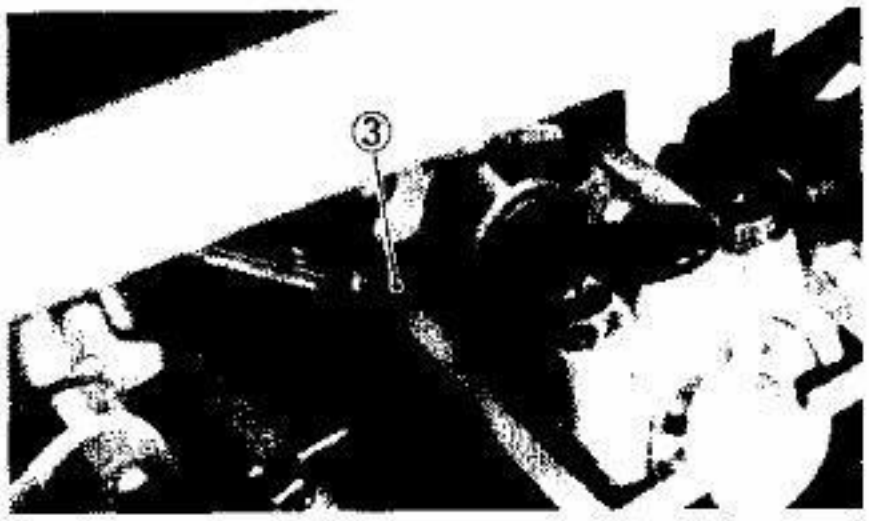

•Measure the valve clearance using a Feeler Gauge ③.
Out of specification→Adjust clearance.

Intake Valve (Cold):
0.08~0.12 mm (0.003~0.005 in)
Exhaust Valve (Cold):
0.10~0.14 mm (0.004~0.006 in)

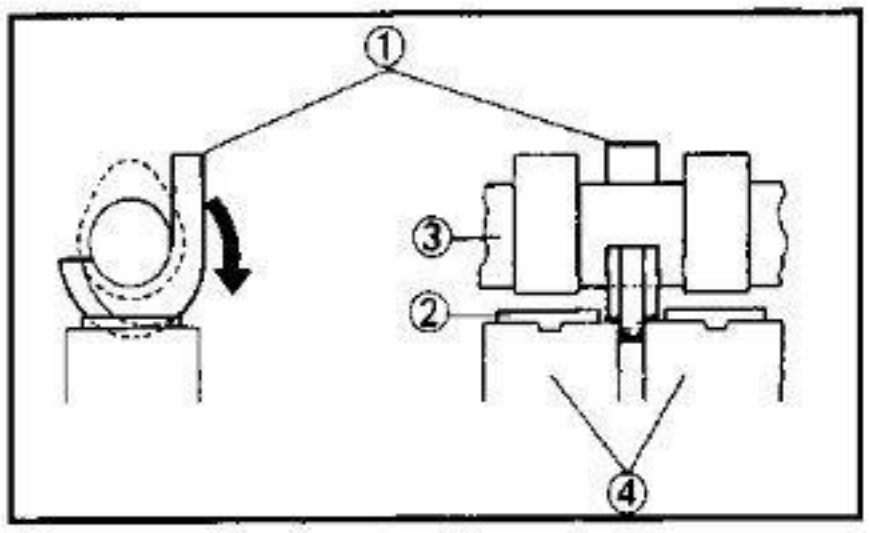

2. Adjust:
•Valve clearance

Valve clearance adjustment steps:
•Position the valve lifter slots (intake and exhaust side) facing each other.
•Install the Tappet Adjusting Tool (YM-4106) onto the cylinder head.
•Using a small screwdriver, turn the Tappet Adjusting Tool ① until the lobe of the Tappet Adjusting Tool depresses the valve lifter.
•Remove the pads ② from the lifter. Use a small screwdriver and a magnetic rod etc. for removal.
Note pad numbers.
③ Camshaft
④ Valve lifter
•Select the proper valve adjusting pad from the chart below:

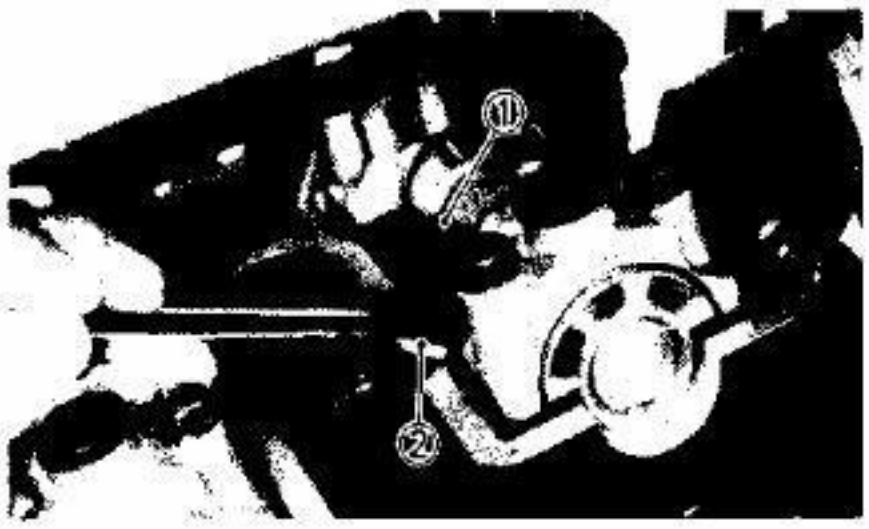

Pad range		Pad Availability: 25 increments
No. 200 – No. 320	2.00 mm (0.079 in) 3.20 mm (0.130 in)	Pads stepped in 0.05 mm (0.002 in) increments

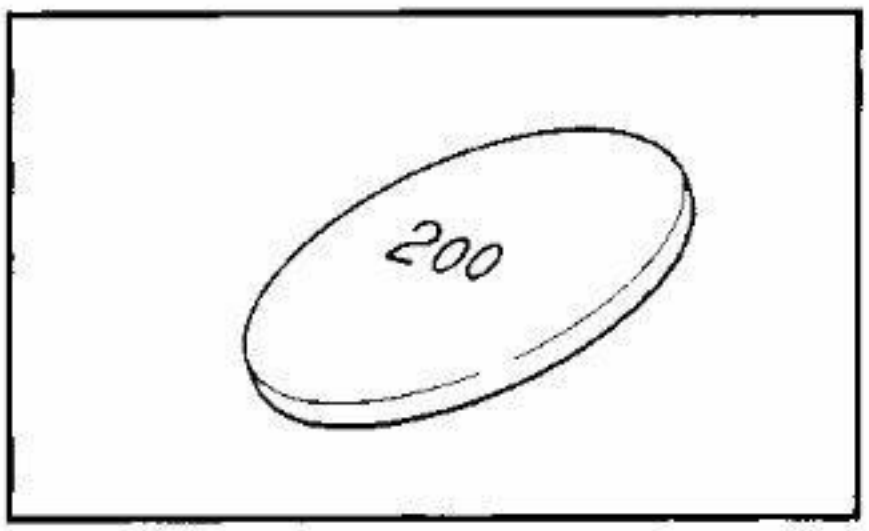

NOTE:

The thickness of each pads is marked on the pad face that contacts the valve lifter (not the cam)

- Round off the hundredths digit of the original pad number to the nearest 0.05 mm (0.002 in) increment.

Hundredths digit	Rounded value
0 or 2	0
5	(NOT ROUNDED OFF)
8	10

EXAMPLE:
Original pad number = 258 (2.58 mm)
Rounded off digit = 260

NOTE:

Pads can only be selected in 0.05 mm (0.002 in) increments.

- Locate the "Installed Pad Number" on the chart, and then find the measured valve clearance. The point where these coordinates intersect is the new pad number.

NOTE:

Use the new pad number as a guide only as the number must be verified.

Pad number verification steps:

- Install the new pad with the number down.
- Remove the adjusting tool.
- Recheck the valve clearance.
- If the clearance is incorrect, repeat all of the clearance adjustment steps until the proper clearance is obtained.

INTAKE

B MEASURED CLEARANCE	A INSTALLED PAD NUMBER																								
	200	205	210	215	220	225	230	235	240	245	250	255	260	265	270	275	280	285	290	295	300	305	310	315	320
0.00 ~ 0.02			200	205	210	215	220	225	230	235	240	245	250	255	260	265	270	275	280	285	290	295	300	305	310
0.03 ~ 0.07		200	205	210	215	220	225	230	235	240	245	250	255	260	265	270	275	280	285	290	295	300	305	310	315
0.08 ~ 0.12																									
0.13 ~ 0.17	205	210	215	220	225	230	235	240	245	250	255	260	265	270	275	280	285	290	295	300	305	310	315	320	
0.18 ~ 0.22	210	215	220	225	230	235	240	245	250	255	260	265	270	275	280	285	290	295	300	305	310	315	320		
0.23 ~ 0.27	215	220	225	230	235	240	245	250	255	260	265	270	275	280	285	290	295	300	305	310	315	320			
0.28 ~ 0.32	220	225	230	235	240	245	250	255	260	265	270	275	280	285	290	295	300	305	310	315	320				
0.33 ~ 0.37	225	230	235	240	245	250	255	260	265	270	275	280	285	290	295	300	305	310	315	320					
0.38 ~ 0.42	230	235	240	245	250	255	260	265	270	275	280	285	290	295	300	305	310	315	320						
0.43 ~ 0.47	235	240	245	250	255	260	265	270	275	280	285	290	295	300	305	310	315	320							
0.48 ~ 0.52	240	245	250	255	260	265	270	275	280	285	290	295	300	305	310	315	320								
0.53 ~ 0.57	245	250	255	260	265	270	275	280	285	290	295	300	305	310	315	320									
0.58 ~ 0.62	250	255	260	265	270	275	280	285	290	295	300	305	310	315	320										
0.63 ~ 0.67	255	260	265	270	275	280	285	290	295	300	305	310	315	320											
0.68 ~ 0.72	260	265	270	275	280	285	290	295	300	305	310	315	320												
0.73 ~ 0.77	265	270	275	280	285	290	295	300	305	310	315	320													
0.78 ~ 0.82	270	275	280	285	290	295	300	305	310	315	320														
0.83 ~ 0.87	275	280	285	290	295	300	305	310	315	320															
0.88 ~ 0.92	280	285	290	295	300	305	310	315	320																
0.93 ~ 0.97	285	290	295	300	305	310	315	320																	
0.98 ~ 1.02	290	295	300	305	310	315	320																		
1.03 ~ 1.07	295	300	305	310	315	320																			
1.08 ~ 1.12	300	305	310	315	320																				
1.13 ~ 1.17	305	310	315	320																					
1.18 ~ 1.22	310	315	320																						
1.23 ~ 1.27	315	320																							
1.28 ~ 1.32	320																								

VALVE CLEARANCE (engine cold) 0.08 ~ 0.12 mm (0.003 ~ 0.005 in)
Example Installed is 250
Measured clearance is 0.32 mm (0.013 in)
Replace 250 pad with 270
*Pad number: (example) Pad No. 250 = 2.50 mm (0.098 in)
Pad No. 225 = 2.55 mm (0.100 in)
Always install pad with number down

EXHAUST

B MEASURED CLEARANCE	A INSTALLED PAD NUMBER																								
	200	205	210	215	220	225	230	235	240	245	250	255	260	265	270	275	280	285	290	295	300	305	310	315	320
0.00 ~ 0.02				200	205	210	215	220	225	230	235	240	245	250	255	260	265	270	275	280	285	290	295	300	305
0.03 ~ 0.07			200	205	210	215	220	225	230	235	240	245	250	255	260	265	270	275	280	285	290	295	300	305	310
0.08 ~ 0.12		200	205	210	215	220	225	230	235	240	245	250	255	260	265	270	275	280	285	290	295	300	305	310	315
0.13 ~ 0.17																									
0.18 ~ 0.22	205	210	215	220	225	230	235	240	245	250	255	260	265	270	275	280	285	290	295	300	305	310	315	320	
0.23 ~ 0.27	210	215	220	225	230	235	240	245	250	255	260	265	270	275	280	285	290	295	300	305	310	315	320		
0.28 ~ 0.32	215	220	225	230	235	240	245	250	255	260	265	270	275	280	285	290	295	300	305	310	315	320			
0.33 ~ 0.37	220	225	230	235	240	245	250	255	260	265	270	275	280	285	290	295	300	305	310	315	320				
0.38 ~ 0.42	225	230	235	240	245	250	255	260	265	270	275	280	285	290	295	300	305	310	315	320					
0.43 ~ 0.47	230	235	240	245	250	255	260	265	270	275	280	285	290	295	300	305	310	315	320						
0.48 ~ 0.52	235	240	245	250	255	260	265	270	275	280	285	290	295	300	305	310	315	320							
0.53 ~ 0.57	240	245	250	255	260	265	270	275	280	285	290	295	300	305	310	315	320								
0.58 ~ 0.62	245	250	255	260	265	270	275	280	285	290	295	300	305	310	315	320									
0.63 ~ 0.67	250	255	260	265	270	275	280	285	290	295	300	305	310	315	320										
0.68 ~ 0.72	255	260	265	270	275	280	285	290	295	300	305	310	315	320											
0.73 ~ 0.77	260	265	270	275	280	285	290	295	300	305	310	315	320												
0.78 ~ 0.82	265	270	275	280	285	290	295	300	305	310	315	320													
0.83 ~ 0.87	270	275	280	285	290	295	300	305	310	315	320														
0.88 ~ 0.92	275	280	285	290	295	300	305	310	315	320															
0.93 ~ 0.97	280	285	290	295	300	305	310	315	320																
0.98 ~ 1.02	285	290	295	300	305	310	315	320																	
1.03 ~ 1.07	290	295	300	305	310	315	320																		
1.08 ~ 1.12	295	300	305	310	315	320																			
1.13 ~ 1.17	300	305	310	315	320																				
1.18 ~ 1.22	305	310	315	320																					
1.23 ~ 1.27	310	315	320																						
1.28 ~ 1.32	315	320																							
1.33 ~ 1.37	320																								

VALVE CLEARANCE (engine cold) 0.10 ~ 0.14 mm (0.004 ~ 0.006 in)
Example Installed is 250
Measured clearance is 0.32 mm (0.013 in)
Replace 250 pad with 265
*Pad number: (example) Pad No. 250 = 2.50 mm (0.098 in)
Pad No. 225 = 2.55 mm (0.100 in)
Always install pad with number down

Assembly

1. Install:
   - Crankcase cover plate
   - Timing plug
   - Cylinder head cover
   - Spark plug
   - Spark plug cap

Bolts (Cylinder Head Cover):
10 Nm (1.0 m•kg, 7.2 ft•lb)
Spark Plug:
17.5 Nm (1.75 m•kg, 12.5 ft•lb)

1. Install:
   - Upper cowling
     Refer to "COWLING-INSTALLATION" section.

CRANKCASE VENTILATION SYSTEM INSPECTION

1. Inspect:
   - Crankcase ventilation hose ①
     Cracks/Damage → Replace.

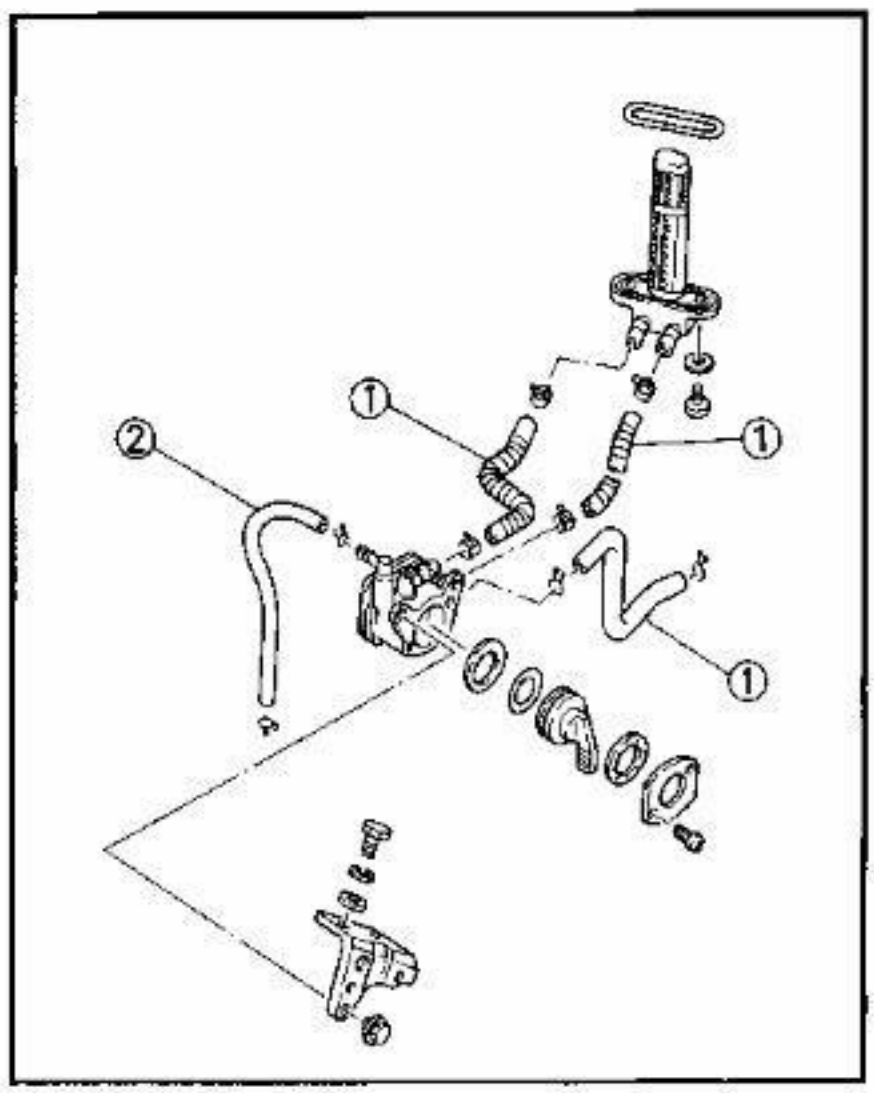

FUEL LINE INSPECTION

1. Inspect:
   - Fuel hoses ①
   - Vacuum hose ②
     Cracks/Damage → Replace.
     Clogs → Clean.

INTAKE MANIFOLD INSPECTION

1. Tighten:
   - Clamps (Carburetor)
   - Bolts (Carburetor joint)
2. Inspect:
   - Carburetor joints
   - O-rings (Carburetor joints)
     Cracks/Damage→Replace.

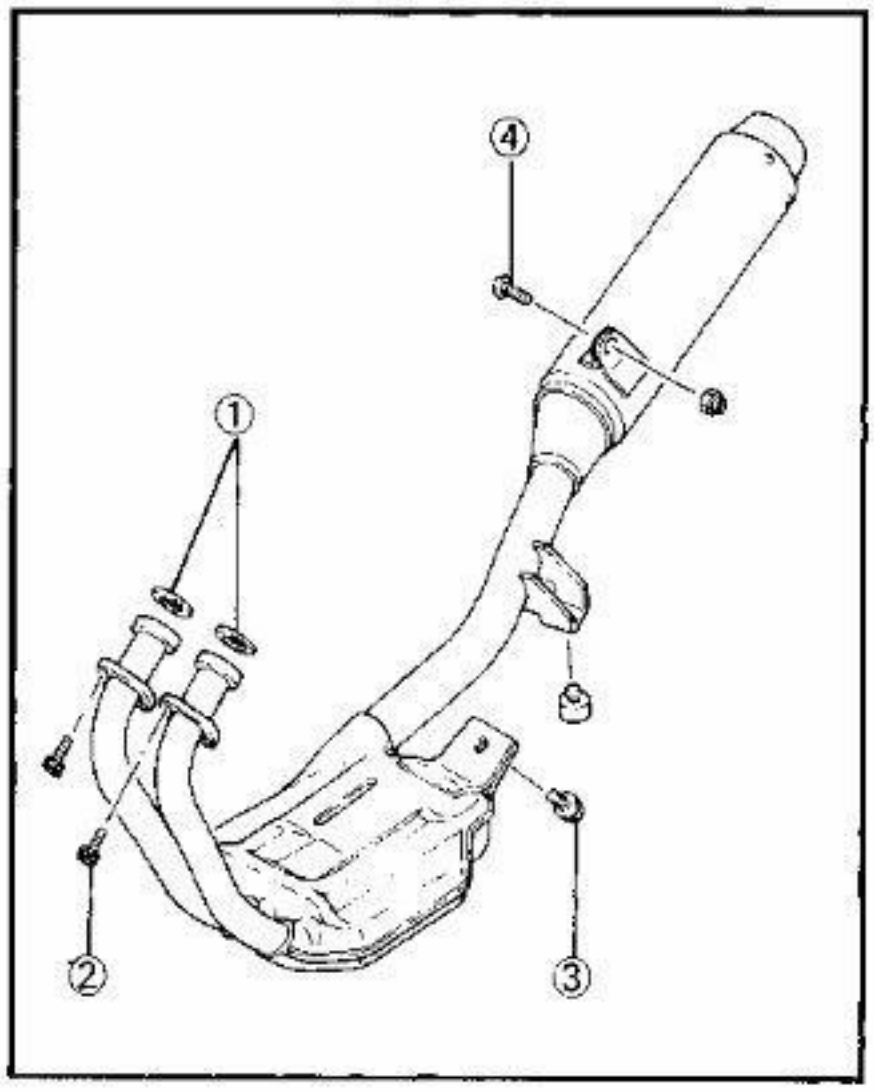

EXHAUST SYSTEM INSPECTION

1. Inspect:
   - Gaskets (Exhaust pipes) ①
     Damage→Replace.
     Exhaust gas leakage→Repair.
2. Tighten:
   - Bolts (Exhaust pipes)
   - Bolts (Muffler)

Exhaust Pipe Flange ②:
12 Nm (1.2 m•kg, 8.7 ft•lb)
Muffler Chamber ③:
27 Nm (2.7 m•kg, 19 ft•lb)
Muffler Bracket ④:
27 Nm (2.7 m•kg, 19 ft•lb)

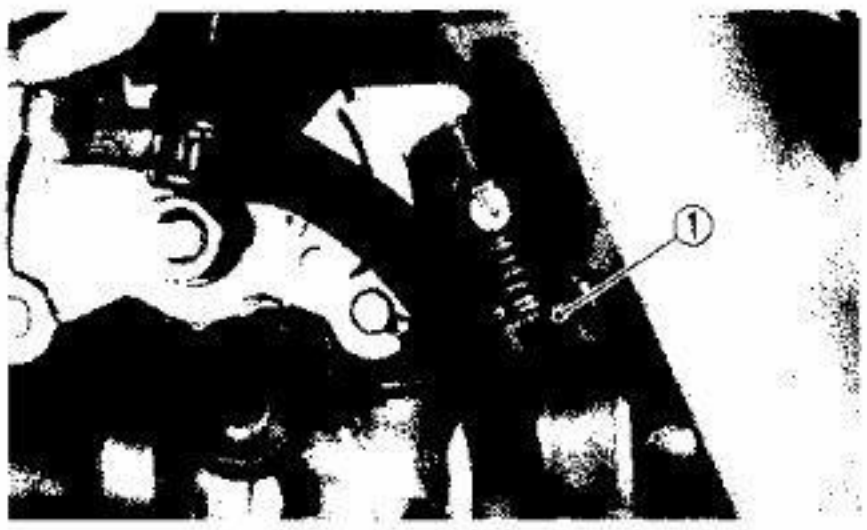

IDLING SPEED ADJUSTMENT

1. Adjust:
   - Idle speed
     Warm up the engine and turn the throttle stop screw ① to adjust.

Idle Speed:
1,350~1,450 r/min

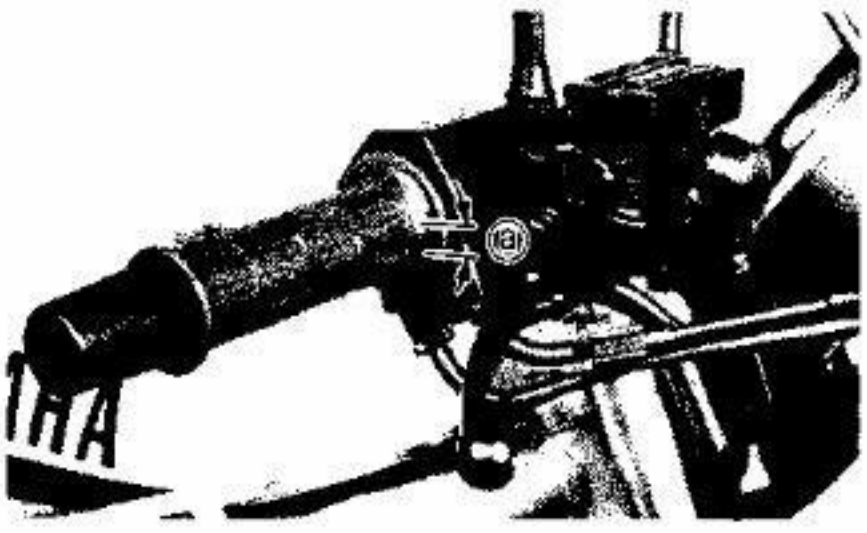

THROTTLE CABLE ADJUSTMENT

NOTE:

Before adjusting the throttle cable free play, the engine idling speed should be adjusted.

1. Check:
   - Throttle cable free play ⓐ
     Out of specification→Adjust.

Throttle Cable Free Play ⓐ:
2~5 mm (0.08~0.20 in)

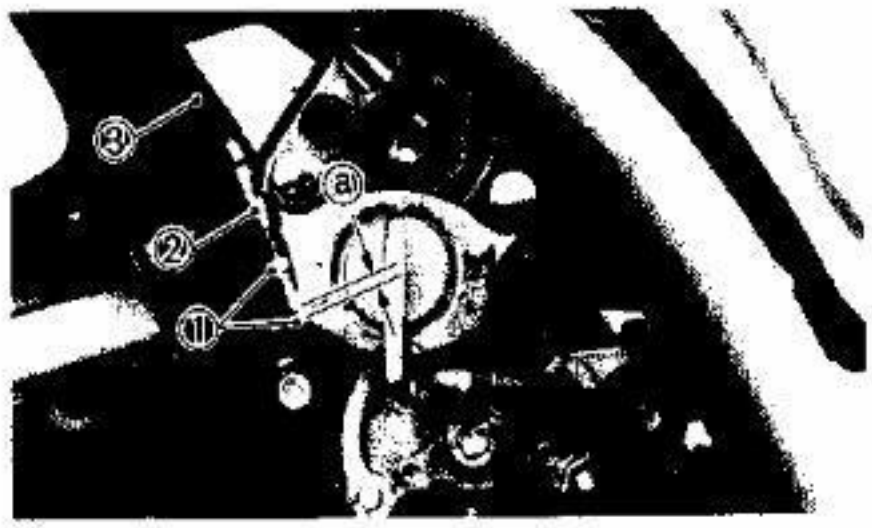

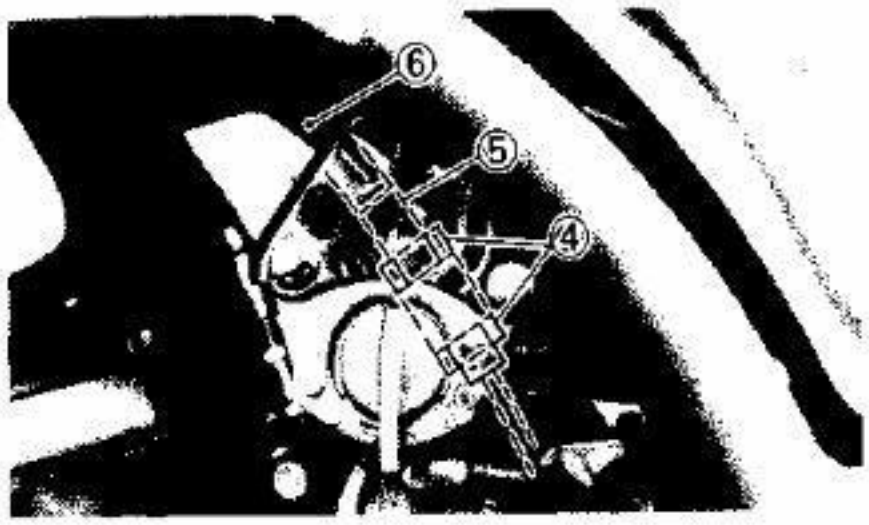

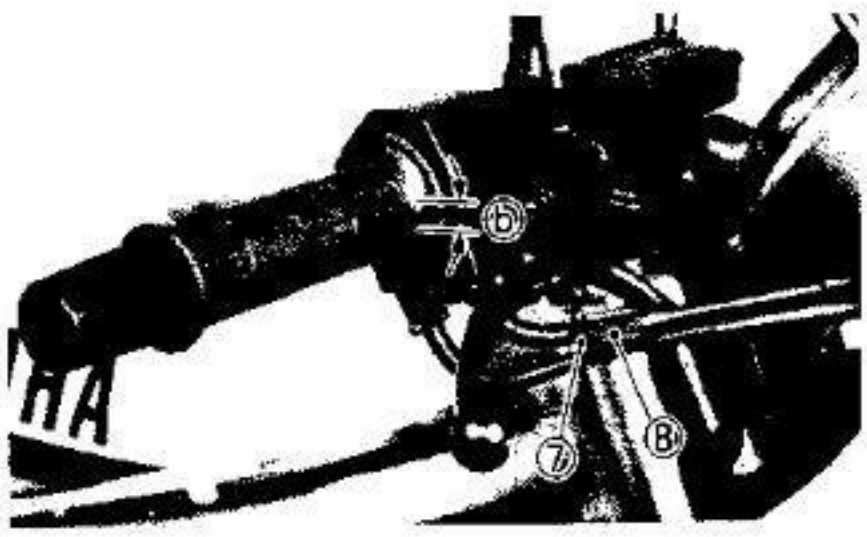

2. Adjust:
   - Throttle cable free play

Throttle cable adjustment steps:

First step:
- Loosen the locknuts (Throttle cable 2) ①.
- Turn the adjuster (Throttle cable 2) ② clockwise or counterclockwise until the specified free play ⓐ.

Throttle Cable 2 Free Play ⓐ:
Zero mm (Zero in)

③ Throttle cable 2

- Tighten the locknuts ①.

Second step:
- Loosen the locknuts (Throttle cable 1) ④.
- Turn the adjuster (Throttle cable 1) ⑤ clockwise or counterclockwise until proper free play (Throttle grip) is attained.

Throttle Cable Free Play (Throttle Grip):
2 ~ 5 mm (0.08 ~ 0.20 in)

⑥ Throttle cable 1

- Tighten the locknuts ④.

Final step:
- If the free play is incorrect, adjust the throttle cable free play with the adjuster (Throttle grip side).
- Loosen the locknut (Throttle cable 1 — Throttle grip side) ⑦.
- Turn the adjuster (Throttle cable 1 — Throttle grip side) ⑧ clockwise or counterclockwise until proper free play (Throttle grip) ⓑ is attained.

Throttle Cable Free Play (Throttle Grip) ⓑ:
2 ~ 5 mm (0.08 ~ 0.20 in)

- Tighten the locknut ⑦.

ENGINE OIL LEVEL INSPECTION

1. Inspect:
   - Engine oil level
     Oil level low→Add sufficient oil.

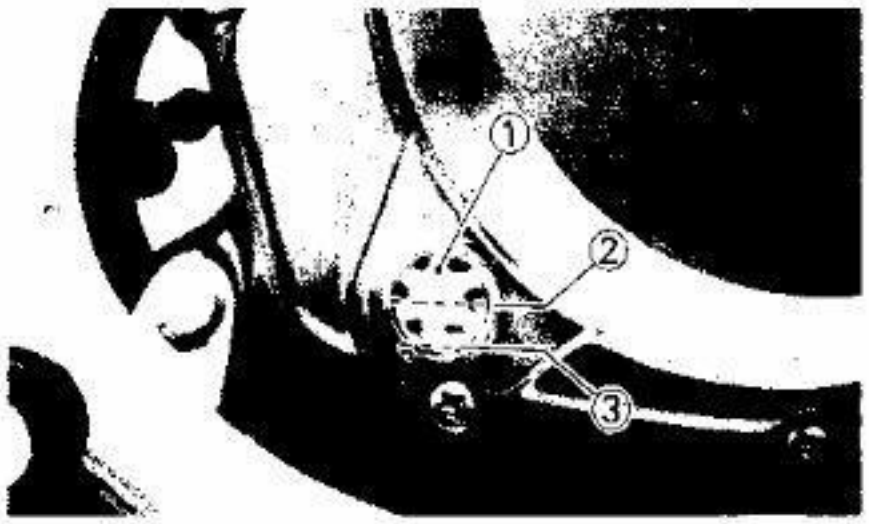

Engine oil level inspection steps:
- Place the motorcycle on a level place and support the motorcycle with a suitable stand.
- Warm up the engine for a few minutes.
- Stop the engine.
- Observe the oil level through the level window (1) located at the lower part of left side crankcase cover.
  Oil level low→Add oil to proper level.

NOTE:
- Position motorcycle straight up when checking oil level; a slight tilt to the side can produce false readings.
- Wait a few minutes until level settles before checking.
- Oil level should be between maximum and minimum marks.

(1) Level window
(2) Maximum
(3) Minimum

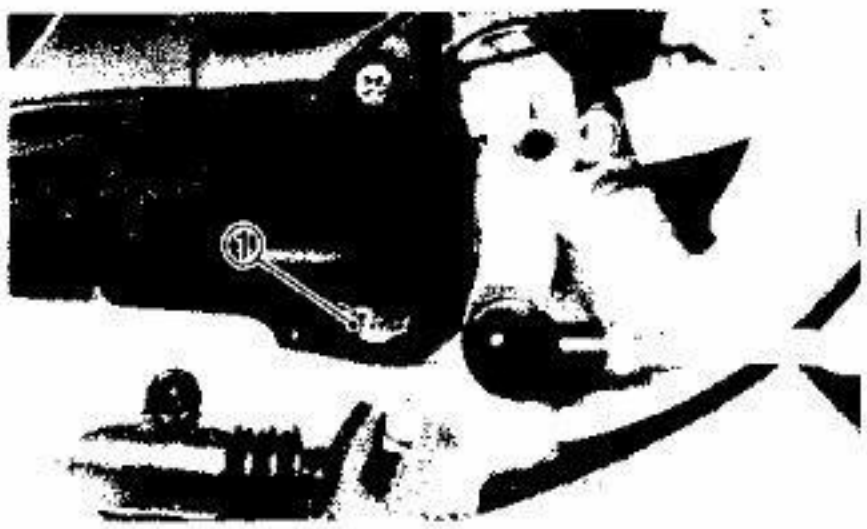

ENGINE OIL REPLACEMENT

Engine Oil Replacement (Without Oil Filter)

1. Warm up engine for several minutes.
2. Place an oil pan under the engine.
3. Remove:
   - Oil filler cap
4. Remove:
   - Drain plug (1)
     Drain the engine oil
5. Inspect:
   - O-ring (Filler cap)
   - Gasket (Drain plug)
     Damage→Replace.
6. Tighten:
   - Drain plug

Drain Plug:
43 Nm (4.3 m•kg, 31 ft•lb)

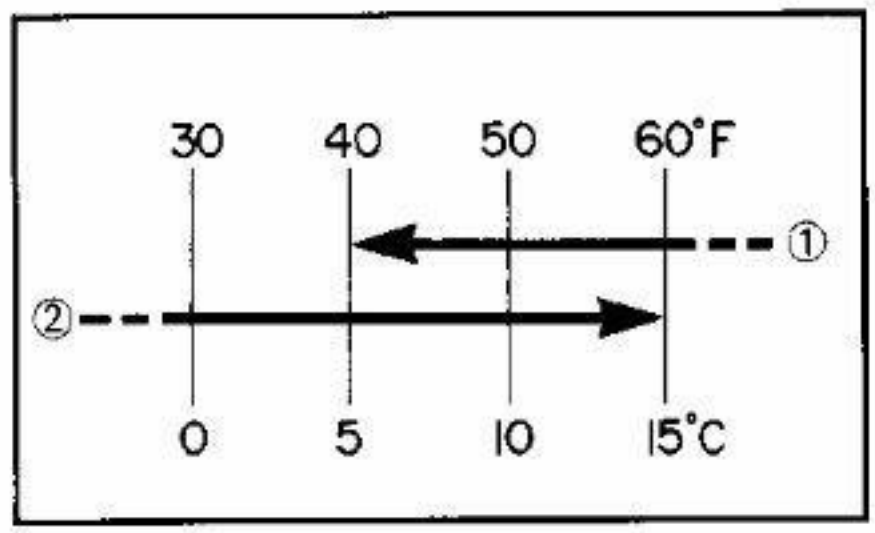

7. Fill:
   - Crankcase

Recommended Oil:
At 5°C (40°F) or Higher ①:
Yamalube 4-cycle Oil or SAE 20W40 Type SE Motor Oil
At 15°C (60°F) or Lower ②:
SAE 10W30 Type SE Motor Oil
Periodic Oil Change
1.5 L (1.32 Imp qt, 1.6 US qt)

CAUTION:
Do not allow foreign material to enter the crankcase.

8. Install:
   - Filler cap
9. Inspect:
   - Oil leaks
   - Oil level
   - Oil pressure
   Refer to "OIL PRESSURE INSPECTION" section.

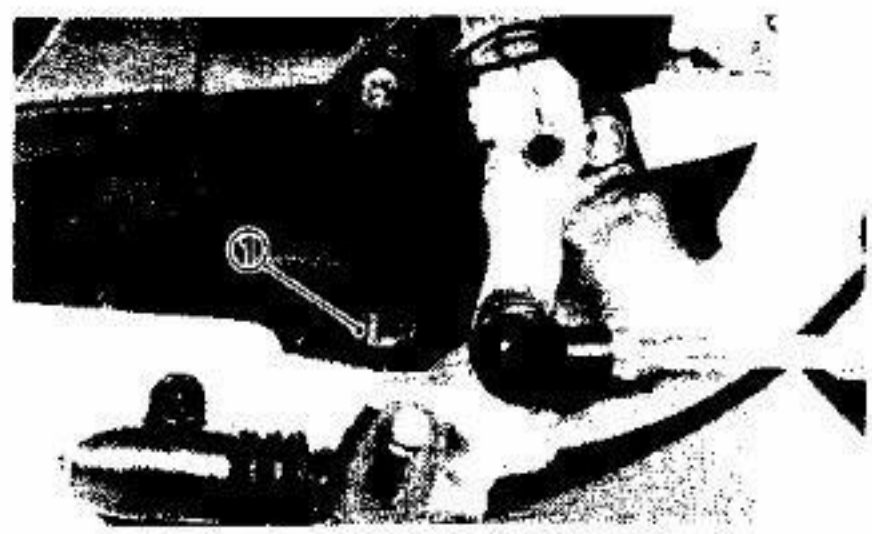

Engine Oil Replacement (With Oil Filter)

1. Warm up the engine for several minutes, then place an oil pan under the engine.
2. Remove:
   - Filler cap
   - Drain plug ①
   Drain the engine oil.

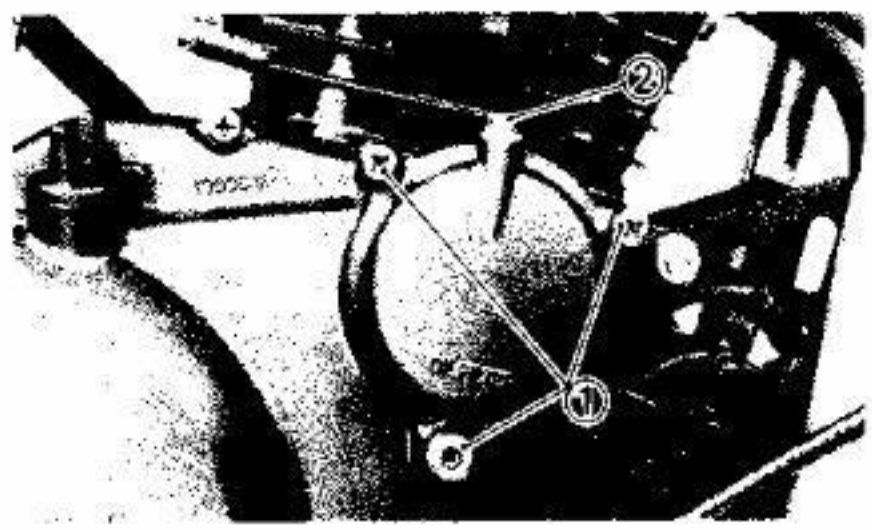

3. Remove:
   - Bolts ①
   - Air bleed screw ②
   - Oil filter cover
   - Oil filter

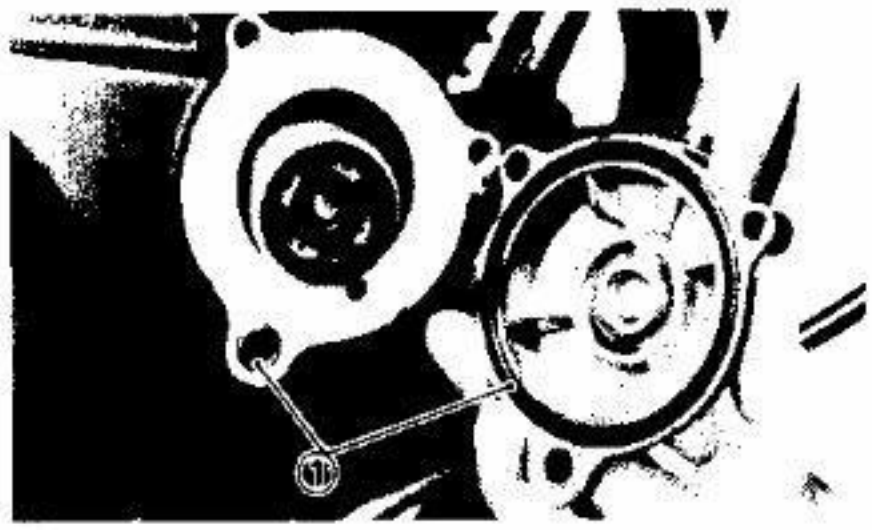

4. Inspect:
   - Gasket (Drain plug)
   - O-rings (Filler cap)
   - O-rings ①

   Damage→Replace.
5. Install:
   - Oil filter (New)
   - Oil filter cover
   - Air bleed screw
   - Drain plug

Drain Plug:
43 Nm (4.3 m•kg, 31 ft•lb)
Bolts (Oil Filter Cover):
10 Nm (1.0 m•kg, 7.2 ft•lb)
Air bleed screw
5 Nm (0.5 m•kg, 3.6 ft•lb)

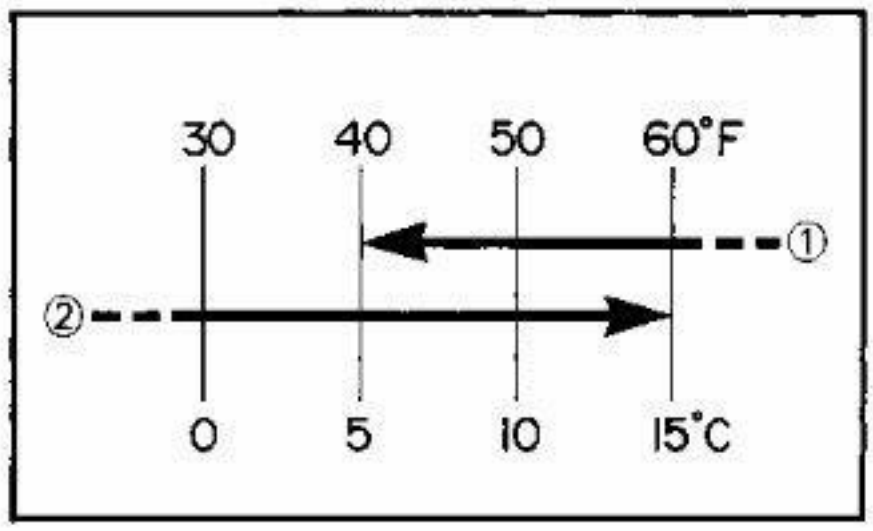

6. Fill:
   - Engine

Recommended Oil:
At 5°C (40°F) or Higher ①:
Yamalube 4-cycle Oil or SAE 20W40 Type SE Motor Oil
At 15°C (60°F) or Lower ②:
SAE 10W30 Type SE Motor Oil
With Oil Filter Replacement:
1.5 L (1.32 Imp qt, 1.6 US qt)

CAUTION:

Do not allow foreign material to enter the crankcase.

7. Install:
   - Filler cap
8. Inspect:
   - Oil leaks
   - Oil level
   - Oil pressure

   Refer to "OIL PRESSURE INSPECTION" section.

Oil Strainer Cleaning

Follow the "ENGINE OIL REPLACEMENT (Without Oil Filter)" Steps 1~4.

Then proceed as follows:

1. Remove:
   - Oil strainer plug
   - O-ring
   - Compression spring
   - Oil strainer

2. Inspect:
   - Oil strainer
     Contamination→Clean or replace.
   - O-ring
     Cracks/Damage→Replace.
   - Gasket (Drain plug)
     Damage→Replace.

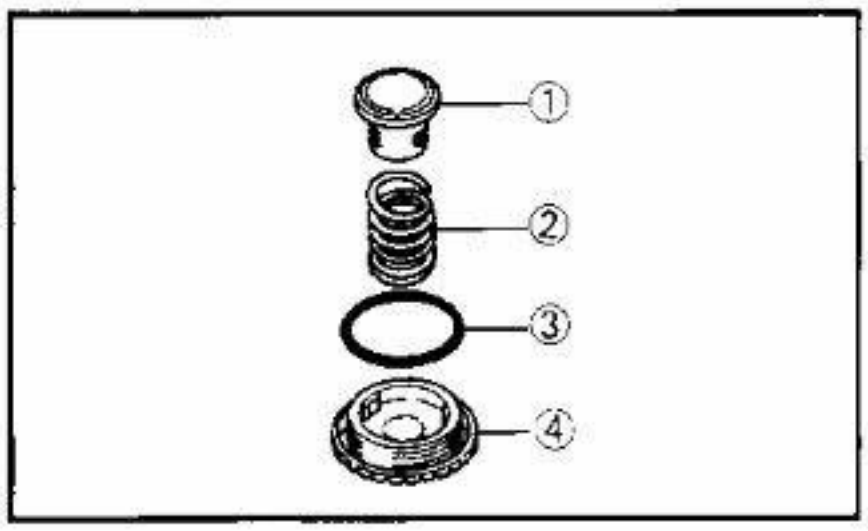

3. Install:
   - Oil strainer ①
   - Compression spring ②
   - O-ring ③
   - Oil strainer plug ④

Oil Strainer Plug:
32 Nm (3.2 m•kg, 23 ft•lb)

4. Tighten:
   - Drain plug

Drain Plug:
43 Nm (4.3 m•kg, 31 ft•lb)

5. Fill:
   - Engine
     Refer to "ENGINE OIL REPLACEMENT (Without Oil Filter)" section.
6. Install:
   - Filler cap
7. Inspect:
   - Oil leaks
   - Oil level
   - Oil pressure
     Refer to "OIL PRESSURE INSPECTION" section.

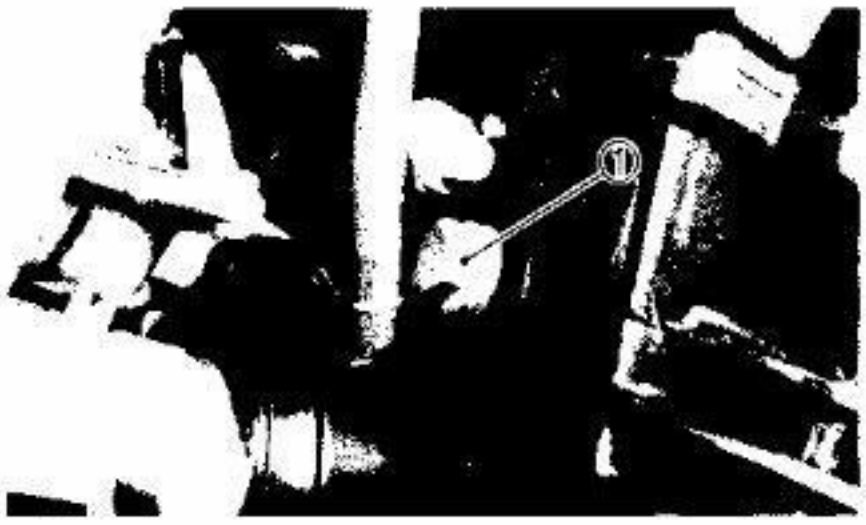

OIL PRESSURE INSPECTION

1. Inspect:
   - Oil pressure

Oil pressure inspection steps:

- Slightly loosen an oil gallery bolt ① in the cylinder head.
- Start the engine. Keep it idling until oil begins to seep from the loosened oil gallery bolt.
- Turn the engine off, and tighten the oil gallery bolt to specification.

Oil Gallery Bolt:
10 Nm (1.0 m•kg, 7.2 ft•lb)

CAUTION:

If no oil comes out after a lapse of one minute, turn off the engine immediately so it will not seize.

COMPRESSION PRESSURE MEASUREMENT

NOTE:

Insufficient compression pressure will result in performance loss.

1. Measure:
   - Valve clearance
     Out of specification→Adjust.
2. Warm up the engine.
3. Remove:
   - Spark plug
4. Measure:
   - Compression pressure

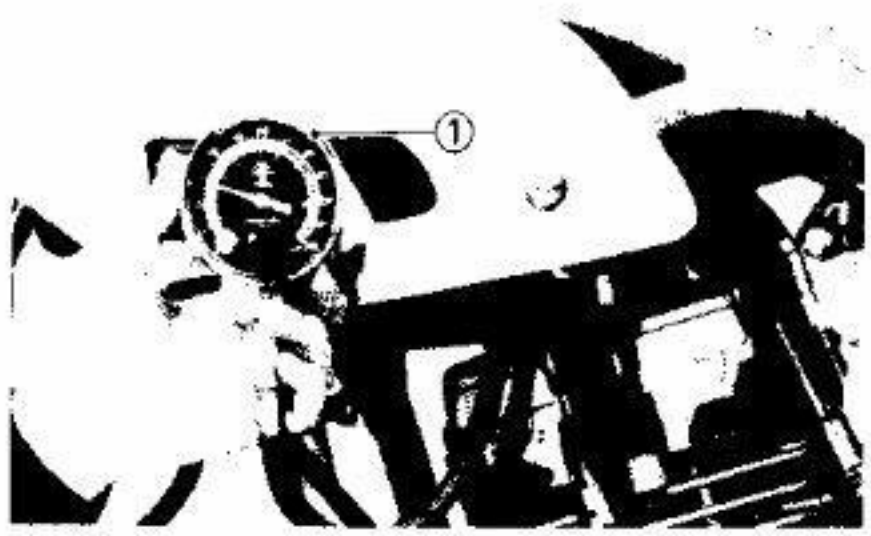

Compression pressure measurement steps:

- Install the Compression Gauge (YU-33223) ① using an adapter (YU-33223-3).
- Crank over the engine with the starter motor with the throttle wide-open until the compression reading on the gauge stabilizes.
- Check readings with specified levels (See chart).

Compression Pressure (at sea level):
Standard:
1,100 kPa (11 kg/cm^2, 156 psi)
Minimum:
900 kPa (9 kg/cm^2, 128 psi)
Maximum:
1,200 kPa (12 kg/cm^2, 171 psi)

WARNING:

When cranking the engine, ground all of the spark plug lead to prevent sparking.

- If pressure falls below the minimum level:
  1. Squirt a few drops of oil into the affected cylinder.
  2. Measure the compression again.

Compression Pressure (with oil introduced into cylinder)

Reading	Diagnosis
Higher than without oil	Worn or damage pistons
Same as without oil	Defective ring(s), valves, cylinder head gasket or piston is possible.
Above maximum level	Inspect cylinder head, valve surfaces, or piston crown for carbon deposits.

5. Install:
   - Spark plug

Spark Plug:
17.5 Nm (1.75 m•kg, 12.5 ft•lb)

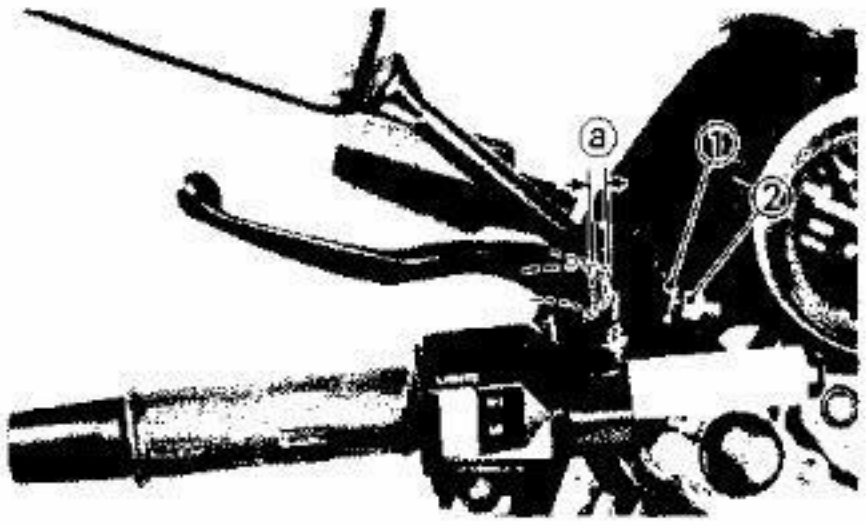

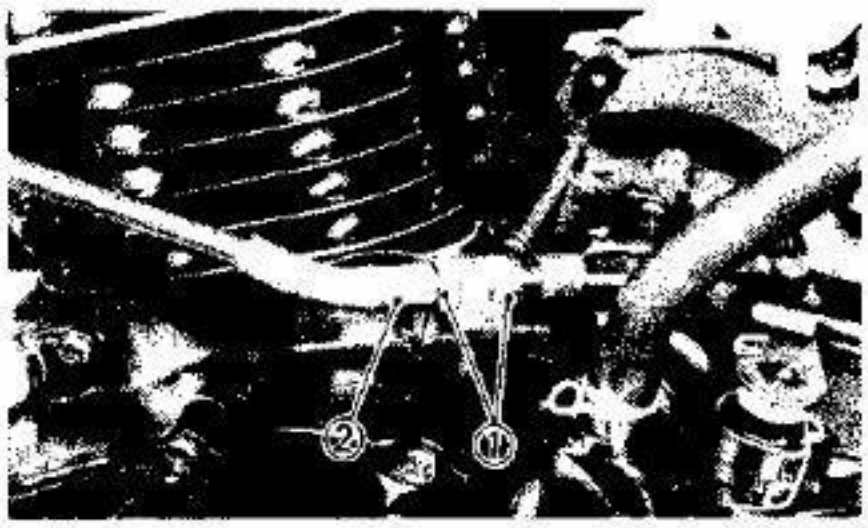

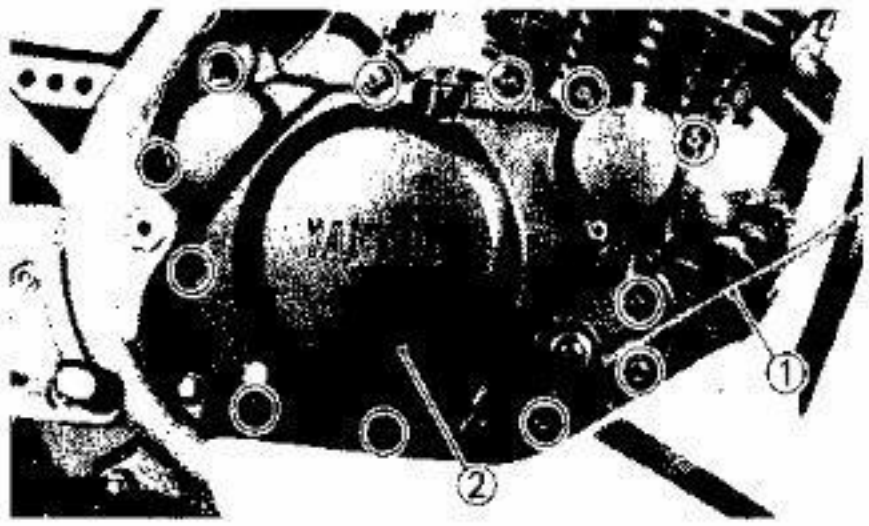

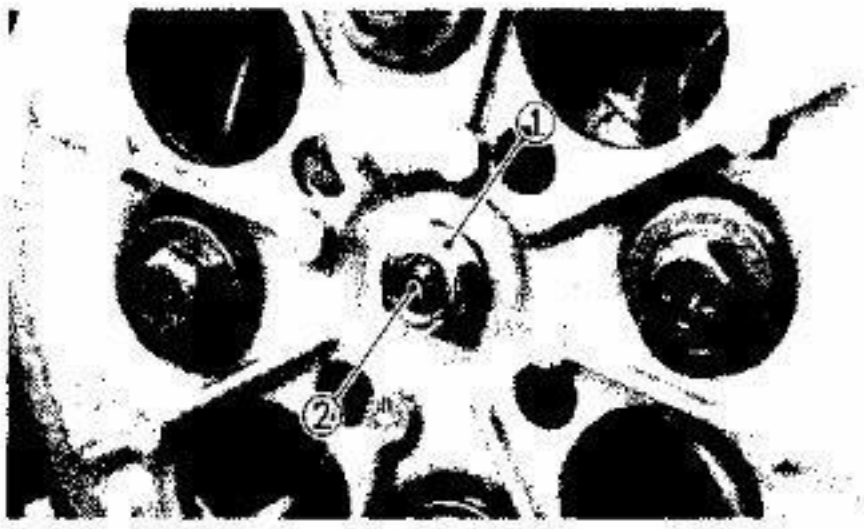

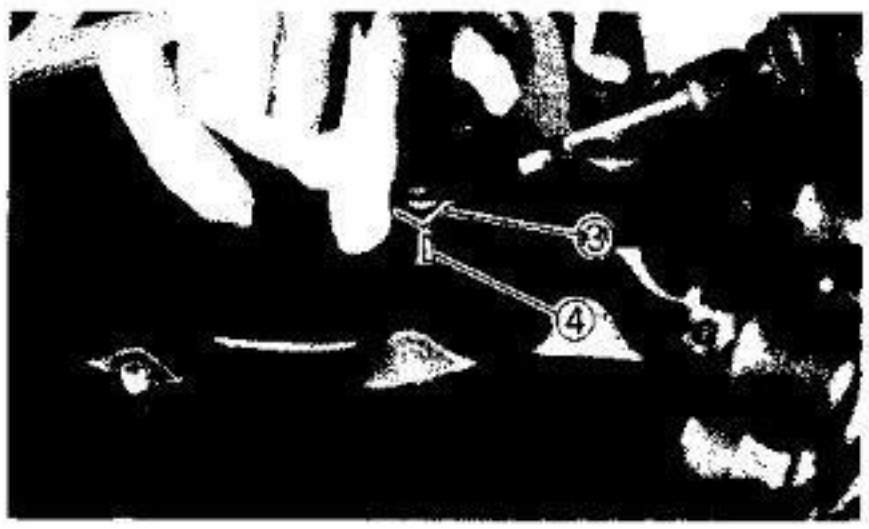

CLUTCH ADJUSTMENT

Free Play Adjustment

1. Loosen:
   - Locknuts ①
2. Adjust:
   - Free play ⓐ

   Turn the adjusters ② until the free play is within the specified limits.

Free Play ⓐ:
2 ~ 3 mm (0.08 ~ 0.12 in)

3. Tighten:
   - Locknuts

NOTE:

The above precedure provides for maximum cable free play to allow for proper clutch actuating mechanism adjustment.

Mechanism Adjustment

1. Loosen:
   - Cable length adjuster locknuts (Fully)
2. Tighten:
   - Cable length adjusters (Until tight)
3. Remove:
   - Speedometer cable ①
   - Crankcase cover (Right) ②

     Darin the engine oil.
   - Gasket
   - Dowel pins
4. Adjust:
   - Free play

Clutch mechanism free play adjustment steps:

- Loosen the locknut ①.
- Push the push lever toward the front of the engine with your finger until it stops.
- With the push lever in this position, turn the adjuster ② either in or out until the push lever mark ③ and crankcase match mark ④ are aligned.
- Tighten the locknut.

Locknut:
8 Nm (0.8 m•kg, 5.8 ft•lb)

5. Install:
   - Dowel pins
   - Gasket (New)
   - Crankcase cover (Right)

	Crankcase Cover (Right): 10 Nm (1.0 m•kg, 7.2 ft•lb)

6. Adjust:
   - Clutch cable free play
     Refer to "Free Play Adjustment" section.
7. Fill:
   - Engine oil
     Refer to "ENGINE OIL REPLACEMENT" section.

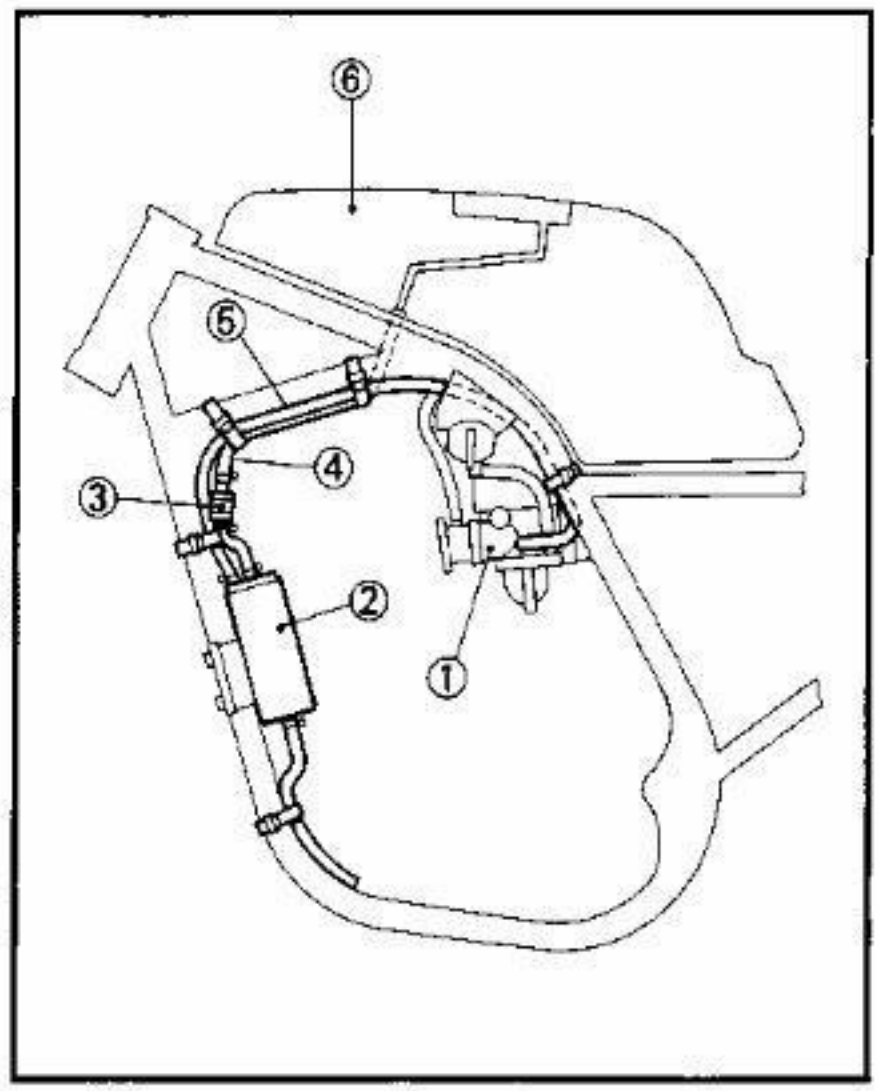

CANISTER/HOSES INSPECTION (SRX250TC ONLY)

Canister Inspection

1. Inspect:
   - Hose connection
     Poor condition → Correct.
   - Hoses
   - Canister
     Cracks/Damage → Replace.
     Clogs → Clean.

① Carburetor
② Canister
③ Roll over valve
④ Hose (To fuel tank)
⑤ Hose (To carburetor)
⑥ Fuel tank

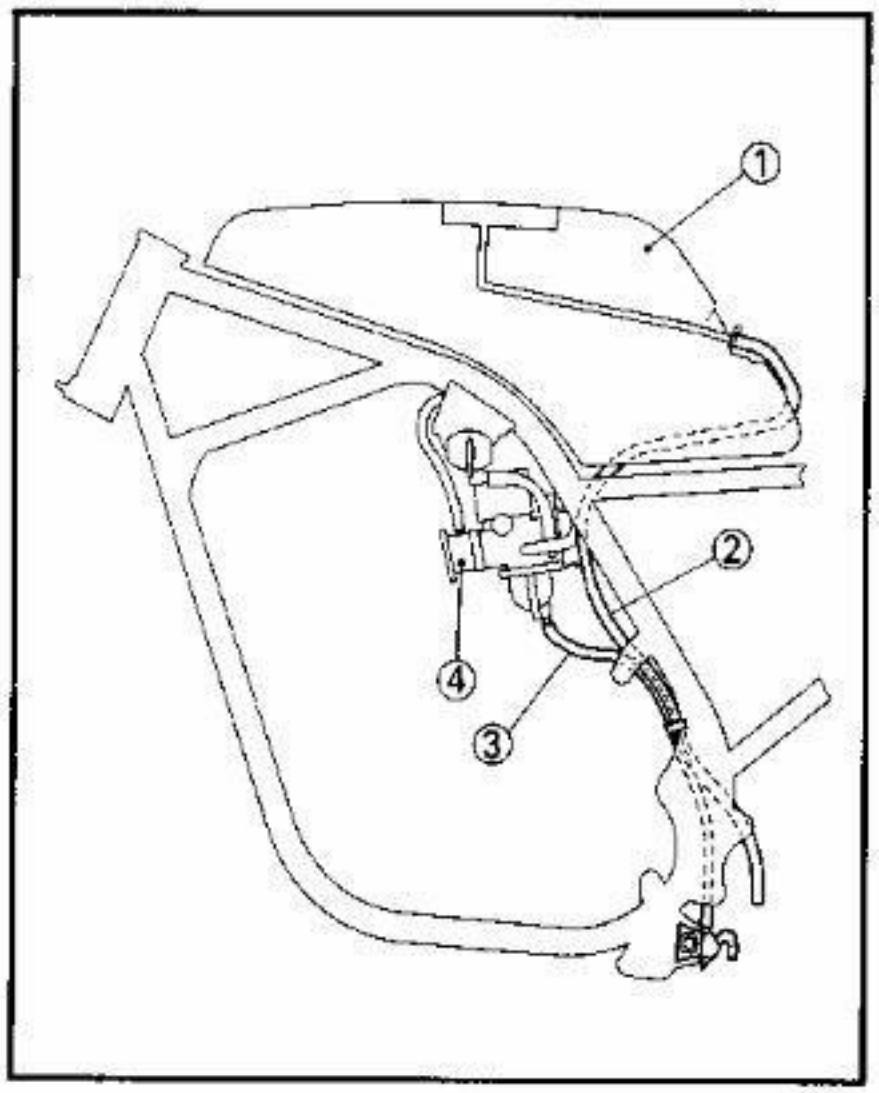

Hoses Inspection

7. Inspect:
   - Hose connection
     Poor condition→Correct.
   - Breather hose
   - Overflow pipe
     Cracks/Damage→Replace.
     Clogs→Clean.

① Fuel tank
② Breather hose
③ Overflow pipe
④ Carburetor

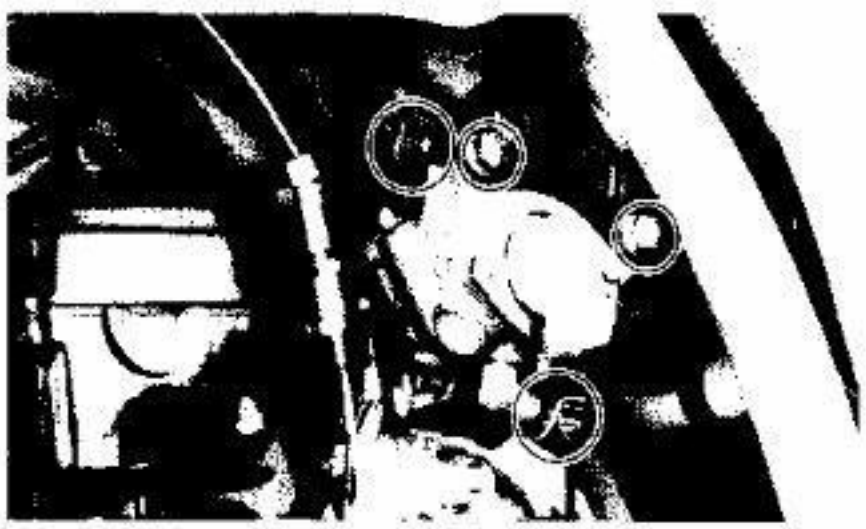

CHASSIS

FUEL COCK CLEANING

1. Turn the fuel cock lever to the "ON" position.
2. Disconnect:
   - Fuel hose
   - Vacuum hose
3. Remove:
   - Bolts (Fuel cock)

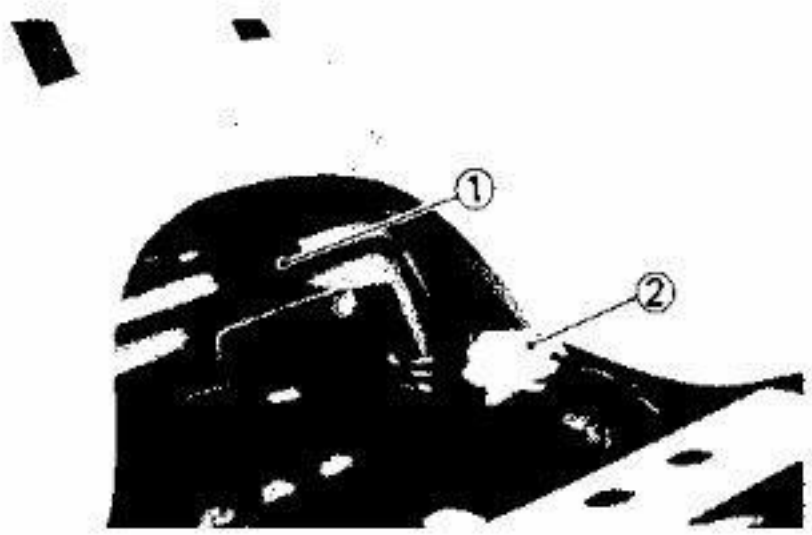

4. Remove:
   - Seat
   - Stopper (Fuel tank) ①
   - Plate
   - Coupler (Fuel sender) ②

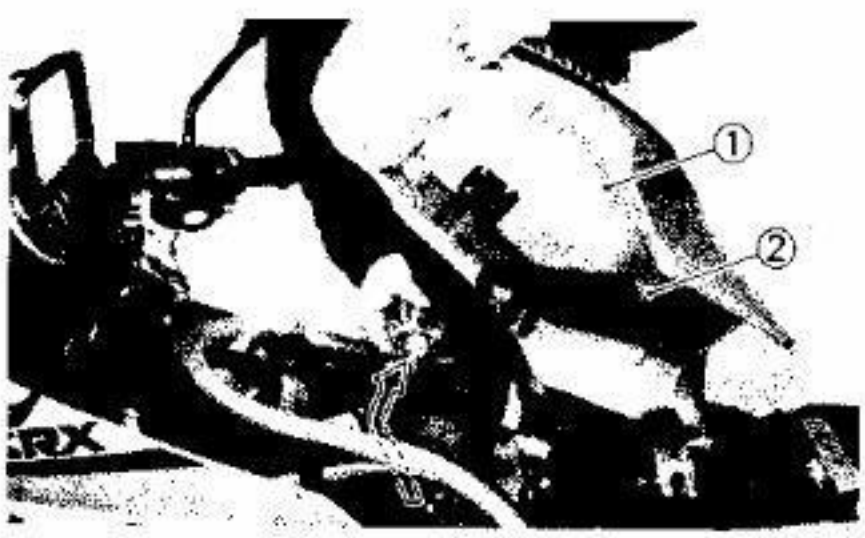

5. Remove:
   - Fuel tank ①
   - Fuel filter ②

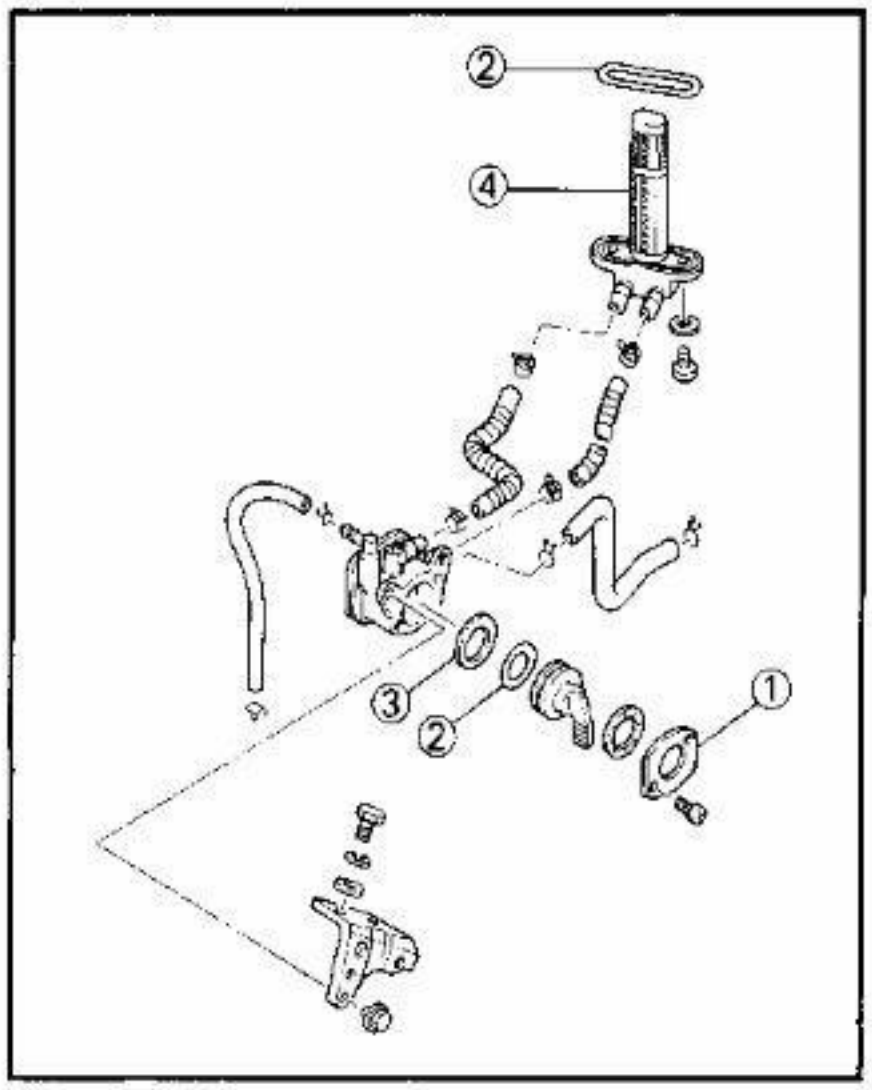

6. Remove:
   - Screws
   - Cock plate ①
   - O-ring ②
   - Valve ③
7. Clean:
   - Filter screen ④
     Clean it with solvent.
8. Inspect:
   - O-ring ②
   - Valve ③
     Damage→Replace.
   - Filter screen ④
     Contamination/Damage→Replace.

NOTE:

Drain and flush fuel tank if abrasive damage to any components is evident.

9. Install:
   - Components in above list (Steps "6 to 2")

NOTE:

Be careful not to clamp the fuel cock too tightly as this may unseat the O-ring and lead to a fuel leak.

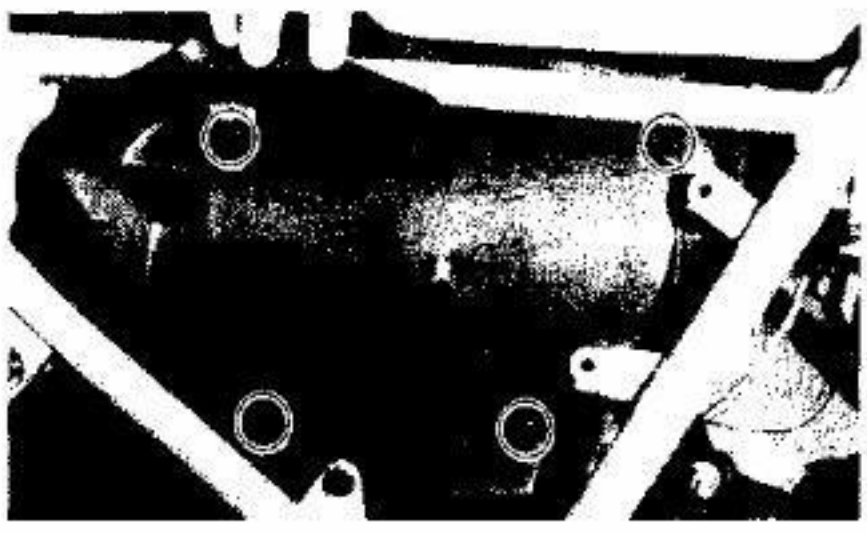

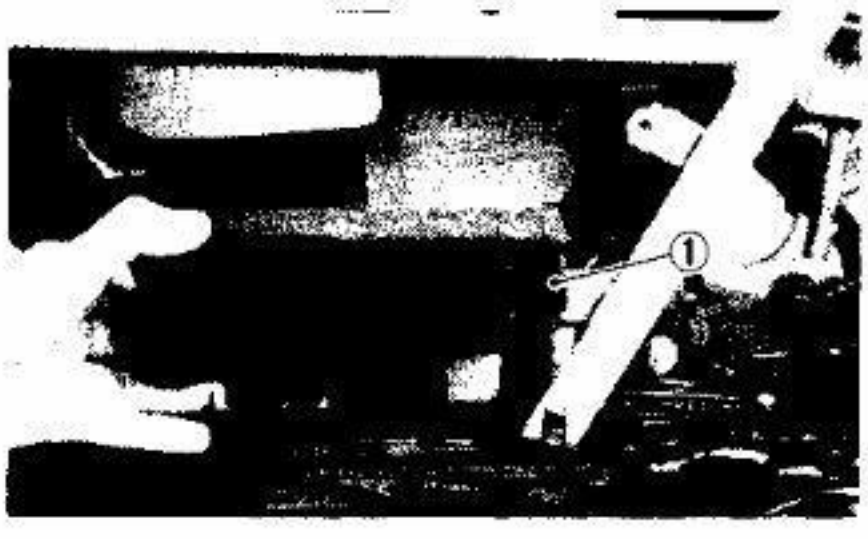

AIR FILTER CLEANING

1. Remove:
   - Side cover (Right)
   - Cover (Air filter)

2. Remove
   - Air filter guide
   - Element ①

CAUTION:

The engine should never be run without the air filter element installed; excessive piston and/or cylinder wear may result.

3. Clean:
   - Element
     Clean it with solvent.
4. Inspect:
   - Element
     Damage→Replace.
5. Apply:
   - SAE 10W30 motor oil
     To the element.

NOTE:

Sqeeze out the excess oil. Element should be wet but not dripping.

6. Install:
   - Components in above list (Steps "2 and 1")

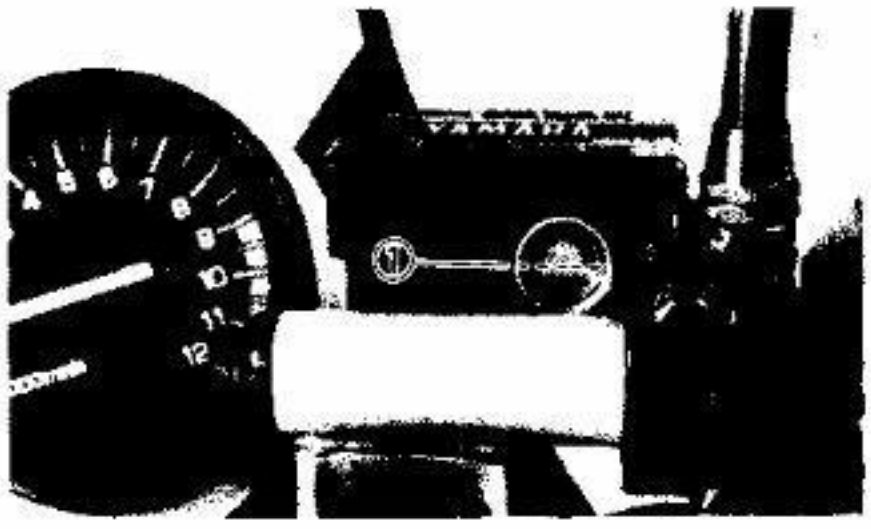

BRAKE FLUID LEVEL INSPECTION

1. Inspect:
   - Brake fluid level (Master cylinder)
     Level low→Replenish fluid.

Brake Fluid:
DOT #3

① Lower level

NOTE:

Spilled fluid is cleaned up immediately to prevent painted surfaces or plastic parts from eroding.

WARNING:

- **Use only designated quality brake fluid to avoid poor brake performance.**
- **Refill with same type and brand of brake fluid; mixing fluids could result in poor brake performance.**
- **Be sure that water or other contaminants do not enter master cylinder when refilling.**
- **Clean up spilled fluid immediately to avoid erosion of painted surfaces or plastic parts.**

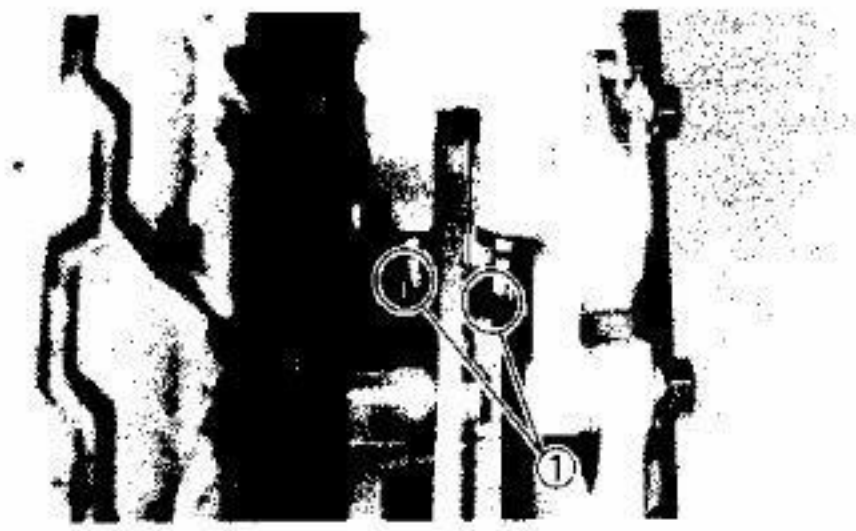

BRAKE PAD INSPECTION

1. Activate the brake lever.
2. Inspect:
   - Wear indicator ①
     Indicator almost contact disc→Replace pads.
     Refer to "CHAPTER 5. CHASSIS" section.

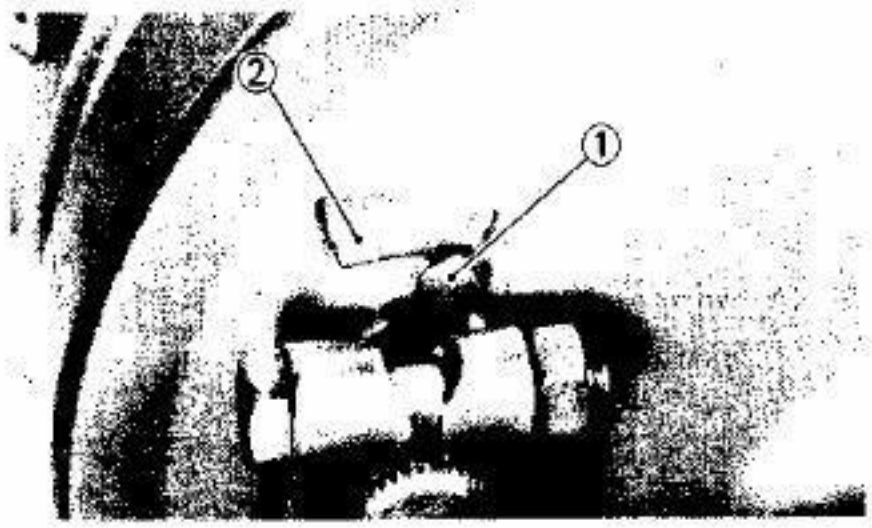

BRAKE SHOE INSPECTION

1. Activate the brake pedal.
2. Inspect:
   - Wear indicator ①
     Indicator reaches the wear limit line ②
     →Replace shoes.
     Refer to "CHAPTER 5. CHASSIS" section.

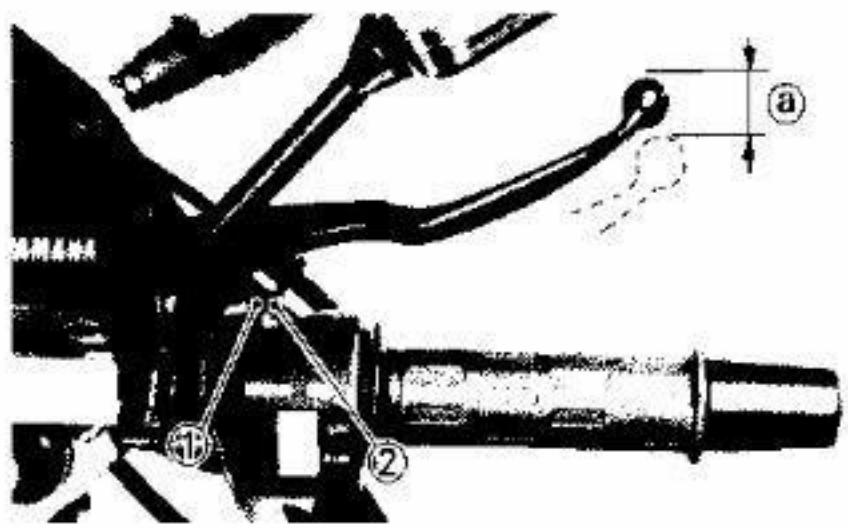

FRONT BRAKE ADJUSTMENT

1. Loosen:
   - Locknut ①
2. Adjust:
   - Free play ⓐ
     Turn the adjuster ② until the free play ⓐ is within the specified limits.

Free Play ⓐ:
5~8 mm (0.2~0.3 in)

CAUTION:

Proper lever free play is essential to avoid excessive brake drag.

WARNING:

A soft or spongy feeling in the brake lever can indicate the pressence of air in the brake system. This air must be removed by bleeding the brake system before the motorcycle is operated. Air in the system will cause greatly diminished braking capability and can result in loss of control and an accident. Inspect and bleed the system if necessary.

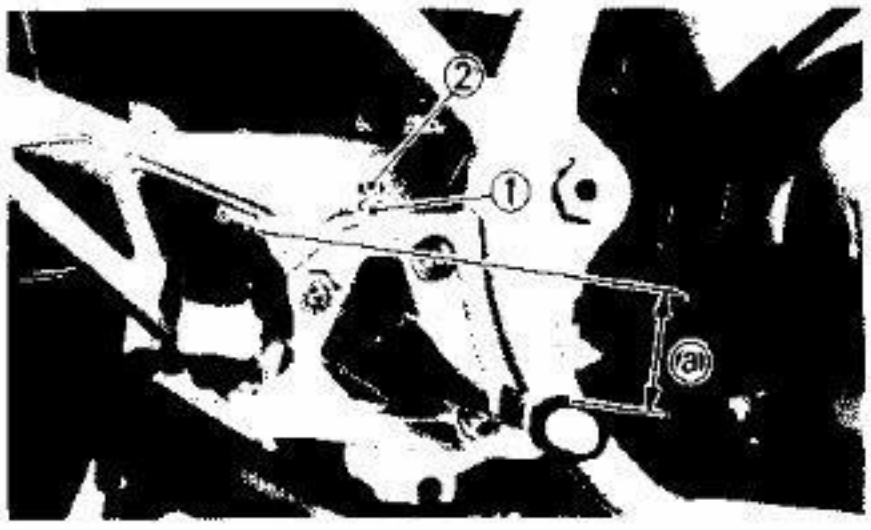

REAR BRAKE ADJUSTMENT

Rear Brake Pedal Height Adjustment

1. Loosen:
   - Locknut ①
2. Adjust:
   - Brake pedal height
     Turn the adjuster ② clockwise or counter-clockwise until proper brake pedal height ⓐ is attained.

Brake Pedal Height ⓐ:
30 mm (1.2 in)
Below the top of the footrest.

3. Tighten:
   - Locknut

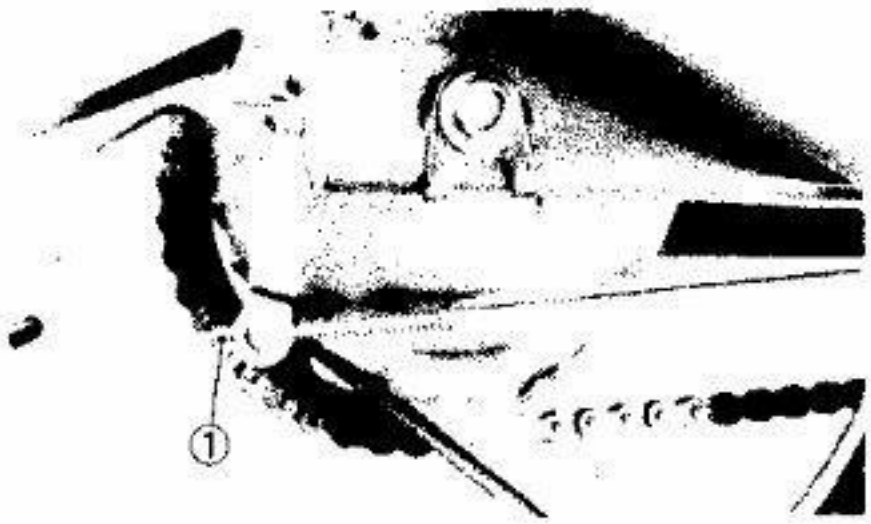

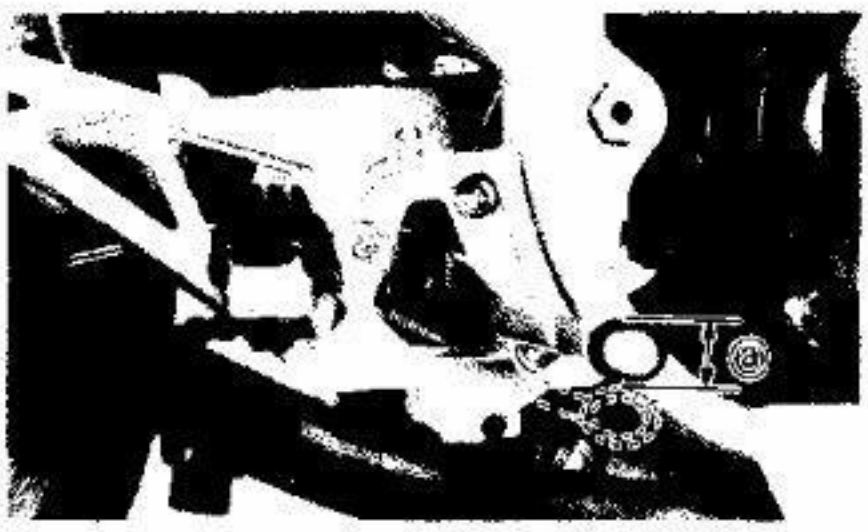

Rear Brake Pedal Free Play Adjustment

NOTE:

Adjust pedal height, then adjust brake pedal free play.

1. Adjust:
   - Brake pedal free play
     Turn the adjuster ① clockwise or counter-clockwise until proper brake pedal free play ⓐ is attained.

Brake Pedal Free Play ⓐ:
20 ~ 30 mm (0.8 ~ 1.2 in)

WARNING:

Check to verify correct brake light operation after adjustment.

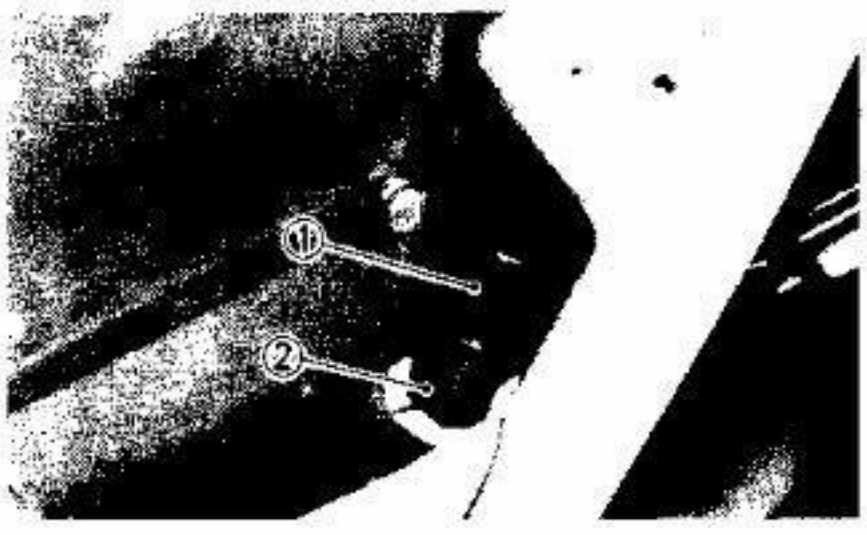

BRAKE LIGHT SWITCH ADJUSTMENT

1. Remove:
   - Side cover (Right)
2. Adjust:
   - Brake light operating timing
     Hold the main body ① of the switch with your hand so that it does not rotate, and turn the adjuster ② until the operating timing is correct.

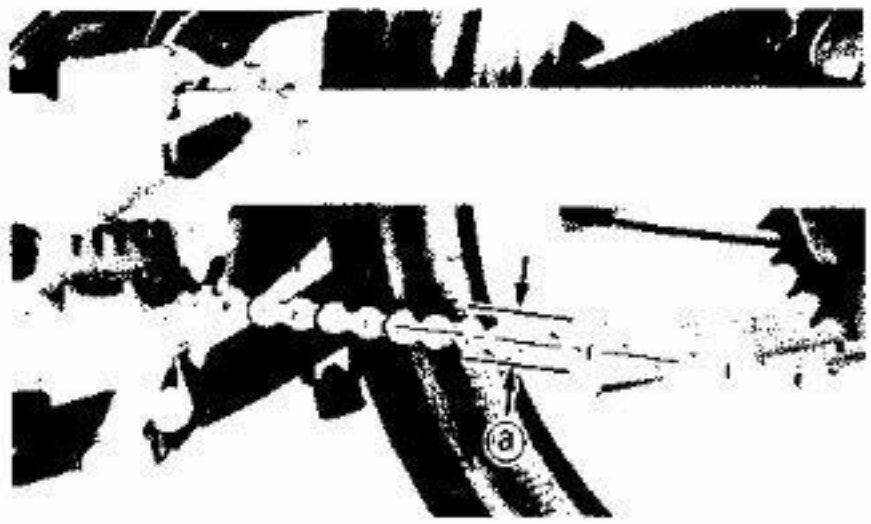

DRIVE CHAIN SLACK ADJUSTMENT

Drive Chain Slack Check

1. Measure:
   - Drive chain slack ⓐ
     Out of specification→Adjust.

Drive chain slack measurement steps:
- Place the motorcycle on a level place, and hold it in an upright position.

NOTE:

The both wheels on the ground without ride on it.

- Turn the rear wheel several times.
- Check the chain slack several times to find the point where the chain is the tightest.
- Check the chain slack when the wheel is in this "tight chain" position.

Drive Chain Slack ⓐ:
15 ~ 20 mm (0.6 ~ 0.8 in)

- If the chain slack exceeds 20 mm (0.8 in), adjust the chain slack.

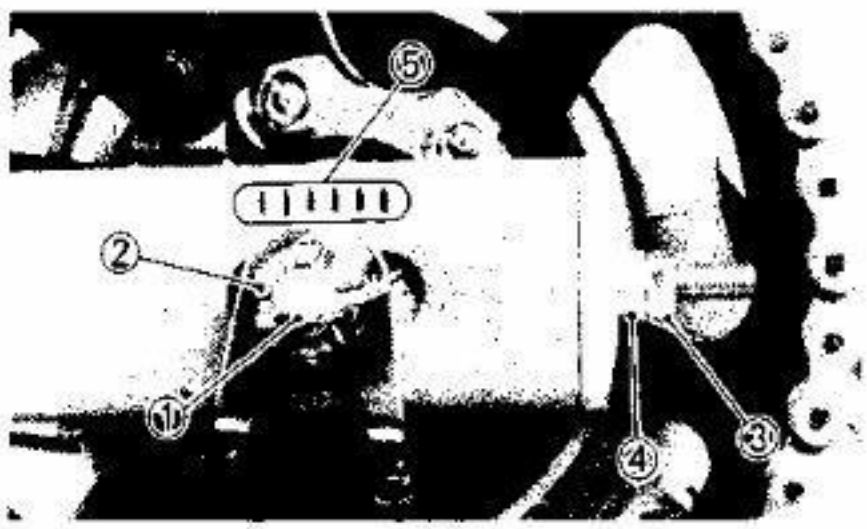

Drive Chain Slack Adjustment

1. Adjust:
   - Drive chain slack
     Out of specification→Replace.

Drive chain slack adjustment steps:
- Remove the cotter pin ①.
- Loosen the axle nut ②.
- Loosen the locknuts ③.
- Adjust chain slack by turning the adjusters ④.

To Tighten→Turn adjuster ④ clockwise.
To Loosen→Turn adjuster ④ counter-clockwise and push wheel forward.

Drive Chain Slack:
15 ~ 20 mm (0.6 ~ 0.8 in)

- Turn each adjuster exactly the same amount to maintain correct axle alignment. (There are marks on each side of the swing arm ⑤ and on each chain puller alignment.)

CAUTION:

Excessive chain tension will overload the engine and other vital parts; keep the tension within the specified limits.

- If the chain slack can not be adjusted, replace the sprockets and drive chain as a set.
- Tighten the axle locknut, axle nut and locknuts.

Locknuts (Chain Puller):
6 Nm (0.6 m•kg, 4.3 ft•lb)
Axle Nut:
110 Nm (11.0 m•kg, 80 ft•lb)

DRIVE CHAIN LUBRICATION

The chain consists of many parts which work against each other. If the chain is not maintained properly, it will wear out rapidly, therefore, form the habit of periodically servicing the chain. This service is especially necessary when riding in dusty conditions.

This motorcycle has a drive chain with small rubber O-rings between the chain plates. Steam cleaning, high-pressure washes, and certain solvents can damage these O-rings. Use only kerosene to clean the drive chain. Wipe it dry, and thoroughly lubricate it with SAE 30 – 50W motor oil. Do not use any other lubricants on the drive chain. They may contain solvents that could damage the O-rings.

STEERING HEAD ADJUSTMENT

Steering Head Inspection

WARNING:

Securely support the motorcycle so there is no danger of it falling over.

1. Elevate the front wheel by placing a suitable stand under the engine.

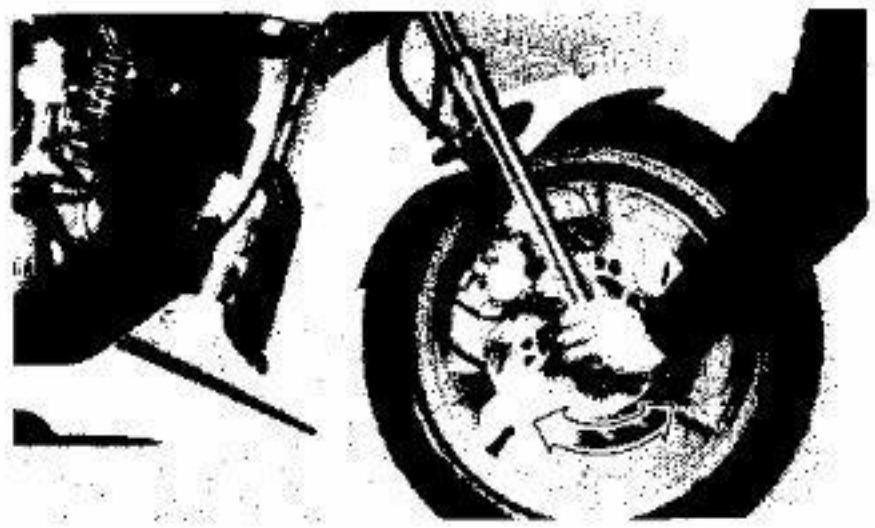

2. Check:
   - Steering assembly bearings
     Grasp the bottom of the forks and gently rock the fork assembly back and forth.
     Looseness→Adjust steering head.

Steering Head Adjustment

1. Adjust:
   - Steering head

Steering head adjustment steps:
- Remove the front wheel.

NOTE:
Do not depress the brake lever when the disc is off the caliper as the brake pads will be forced shut.

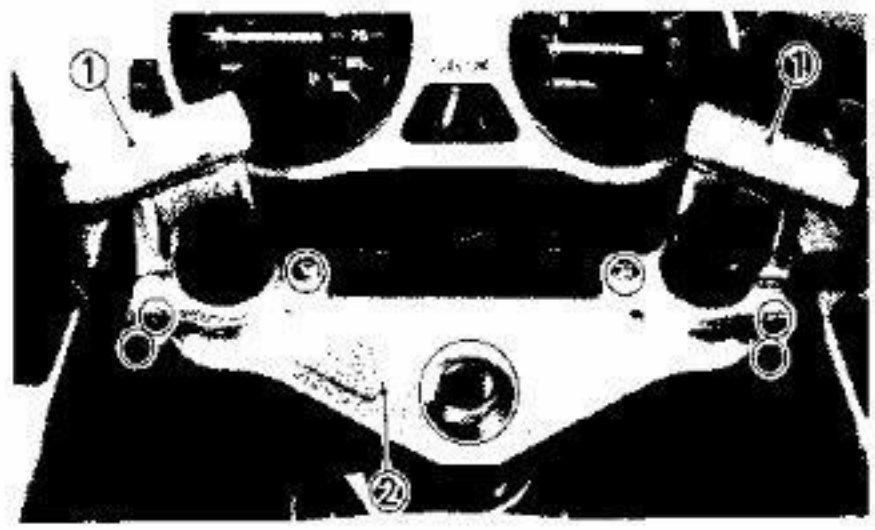

- Remove the handlebars ① and handle crown ②.

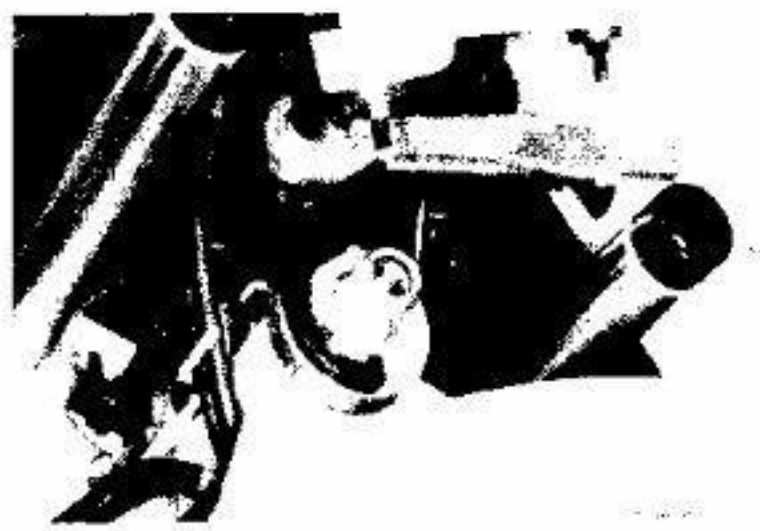

- Tighten the ring nut using the Ring Nut Wrench (YU-33975).

NOTE:
Set the torque wrench to the ring nut wrench so that they form a right angle.

Ring Nut (Initial Tightening):
40 Nm (4.0 m•kg, 29 ft•lb)

- Loosen the ring nut one turn.
- Retighten the ring nut using the Ring Nut Wrench.

WARNING:
Avoid over-tightening.

Ring Nut (Final Tightening):
20 Nm (2.0 m•kg, 14 ft•lb)

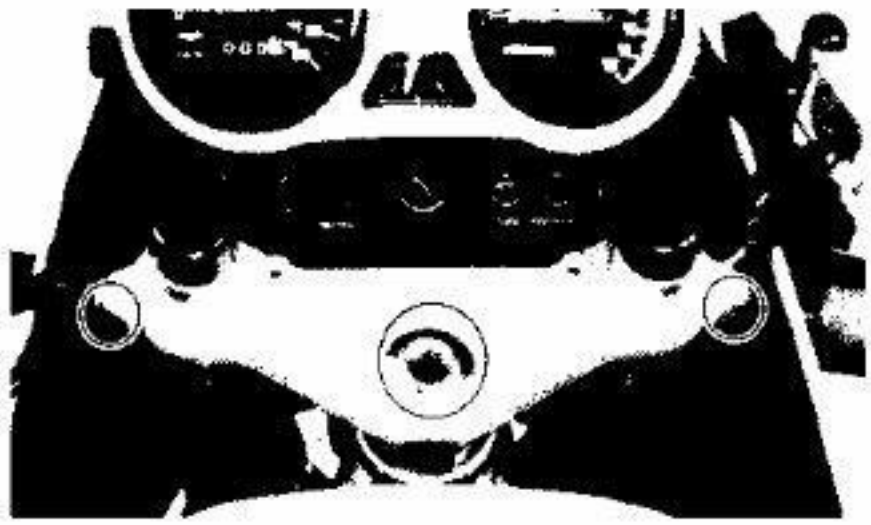

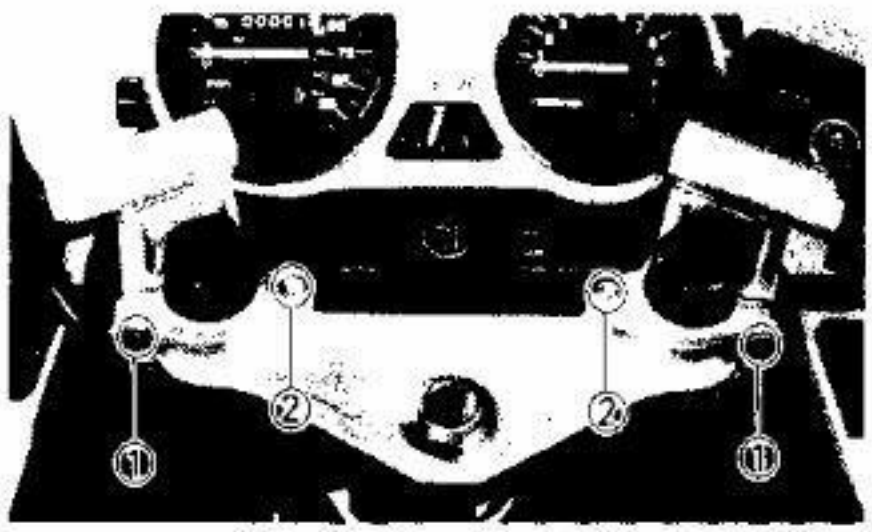

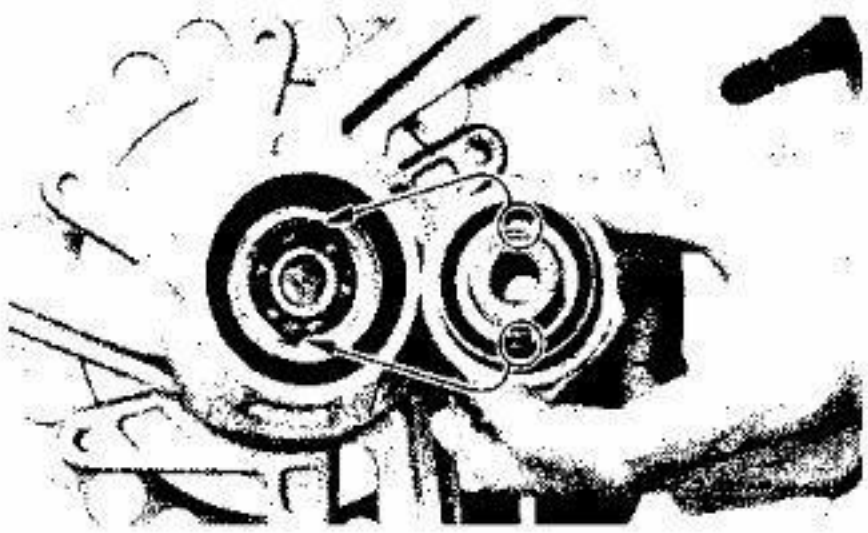

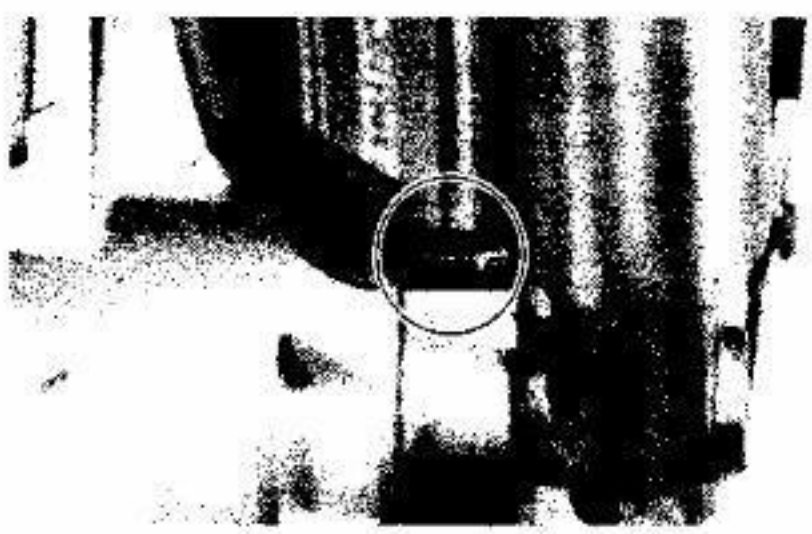

- Install the handle crown.

Bolt (Steering Stem):
54 Nm (5.4 m•kg, 39 ft•lb)
Pinch Bolts (Handle Crown):
20 Nm (2.0 m•kg, 14 ft•lb)

- Install the handlebars.

Pinch Bolts (Handlebar) ①:
20 Nm (2.0 m•kg, 14 ft•lb)
Bolts (Handlebar) ②:
9 Nm (0.9 m•kg, 6.5 ft•lb)

- Install the front wheel.

NOTE:

- Be sure that the two projections inside the wheel hub mesh with the two slots in the speedometer gear unit.

- Be sure that the projecting portion (torque stopper) of the speedometer gear unit is positioned correctly.

Front Axle:
75 Nm (7.5 m•kg, 54 ft•lb)
Pinch Bolt (Front Axle):
23 Nm (2.3 m•kg, 17 ft•lb)

FRONT FORK OIL REPLACEMENT

WARNING:

- **Fork oil leakage can cause loss of stability and safe handling. Have any problem corrected before operating the motorcycle.**
- **Securely support the motorcycle so there is no danger of it falling over.**

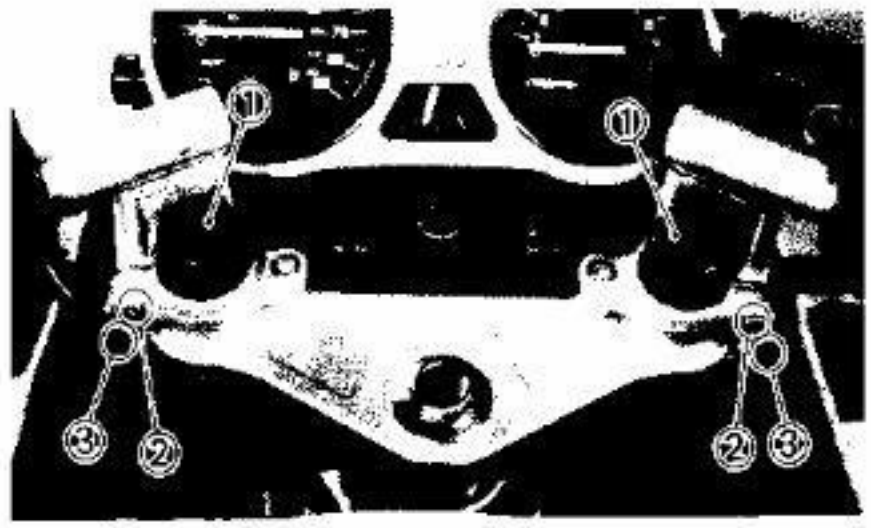

1. Place a suitable stand under the engine to raise the front wheel off the ground.
2. Remove:
   - Fork caps ①
3. Loosen:
   - Pinch bolts (Handlebar) ②
   - Pinch bolts (Handle crown) ③

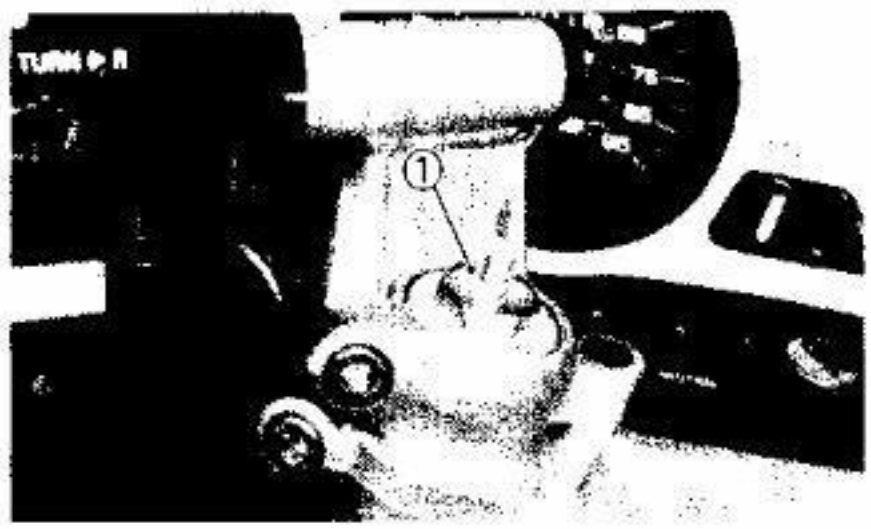

4. Remove:
   - Cap bolt ①
5. Place the oil pans under the drain screws.

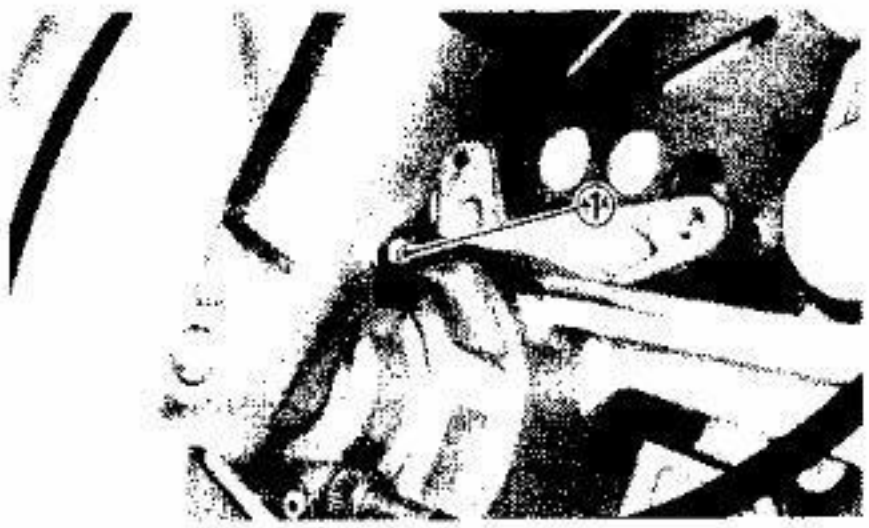

6. Remove:
   - Drain screws ①

   Drain the fork oil.

WARNING:

Do not allow any oil to contact the disc brake components. If oil is discovered, be sure to remove it, otherwise diminished braking capacity and damage to the rubber components of the brake assembly will occur.

7. Inspect:
   - O-rings (Cap bolt) ①
   - Gaskets (Drain screw)

   Wear/Damage→Replace.
8. Install:
   - Drain screws

9. Fill:
   - Front forks

Each Fork:
243 cm^3 (8.55 Imp oz, 8.22 US oz)
Yamaha fork oil 10wt or equivalent
After filling pump the forks slowly up and down to distribute the oil.

10. Tighten:
    - Cap bolts
    - Pinch bolts (Handle crown)
    - Pinch bolts (Handlebar)

Cap Bolt:
23 Nm (2.3 m•kg, 17 ft•lb)
Pinch Bolt (Handle Crown):
20 Nm (2.0 m•kg, 14 ft•lb)
Pinch Bolt (Handlebar):
20 Nm (2.0 m•kg, 14 ft•lb)

11. Install:
    - Fork caps

REAR SHOCK ABSORBER ADJUSTMENT

1. Adjust:
   - Spring preload

NOTE:

The spring preload of the rear shock absorbers can be adjusted to suit rider's preference, weight, and the course condition.

WARNING:

This shock absorber contains hightly pressurized nitrogen gas. Read and understand the following information before handling the shock absorber. The manufacture cannot be held responsible for property damage or personal injury that may result from improper handling.

1. **Do not tamper with or attempt to open the cylinder assembly.**
2. **Do not subject shock absorber to an open flame or other high heat source. This may cause the unit to explode due to excessive gas pressure.**
3. **Do not deform or damage the cylinder in any way. Cylinder damage will result in poor damping performance.**

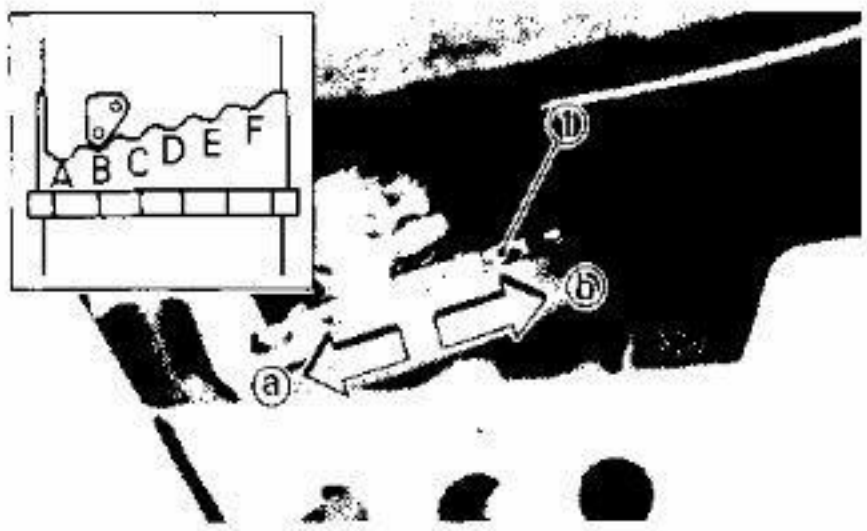

Spring preload adjustment steps:
- Remove the left side cover.
- Using the Shock Absorber Adjusting tool (included in the owner's tool kit), adjust the spring preload.

Stiffer ⓐ → Increase the spring preload. (Turn the spring seat ① clockwise.)
Softer ⓑ → Decrease the spring preload. (Turn the spring seat ① counterclockwise.)

Standard Position: B
Softest Position (Minimum Position): A
Stiffest Position (Maximum Position): F

CAUTION:

Never attempt to turn the spring seat beyond the maximum or minimum setting.

- Install the left side cover.

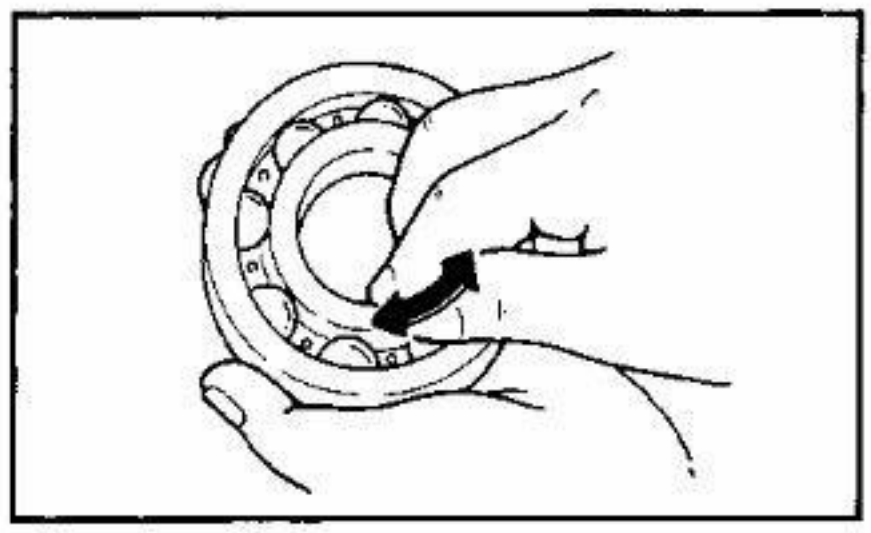

WHEEL INSPECTION

Wheel Bearings Check

1. Check:
   - Front wheel bearings
     Raise the front end of the motorcycle, and spin the wheel by hand. Touch the axle or front fork while spinning the wheel.
     Excessive vibration → Replace bearings.
2. Remove:
   - Rear wheel
3. Check:
   - Bearing (Rear wheel) movement
     Rotate with the fingers.
     Roughness/Wear → Replace bearings.

Wheels Check

1. Inspect:
   - Aluminum wheels
     Damage/Bends→Replace.

NOTE:

Always balance the wheel when a tire or wheel has been changed or replaced.

WARNING:

Never attempt even small repairs to the wheel.

2. Tighten:
   - Valve stem locknut

	Valve Stem Locknut: 1.5 Nm (0.15 m•kg, 1.1 ft•lb)

WARNING:

Ride conservatively after installing a tire to allow it to seat itself properly on the rim.

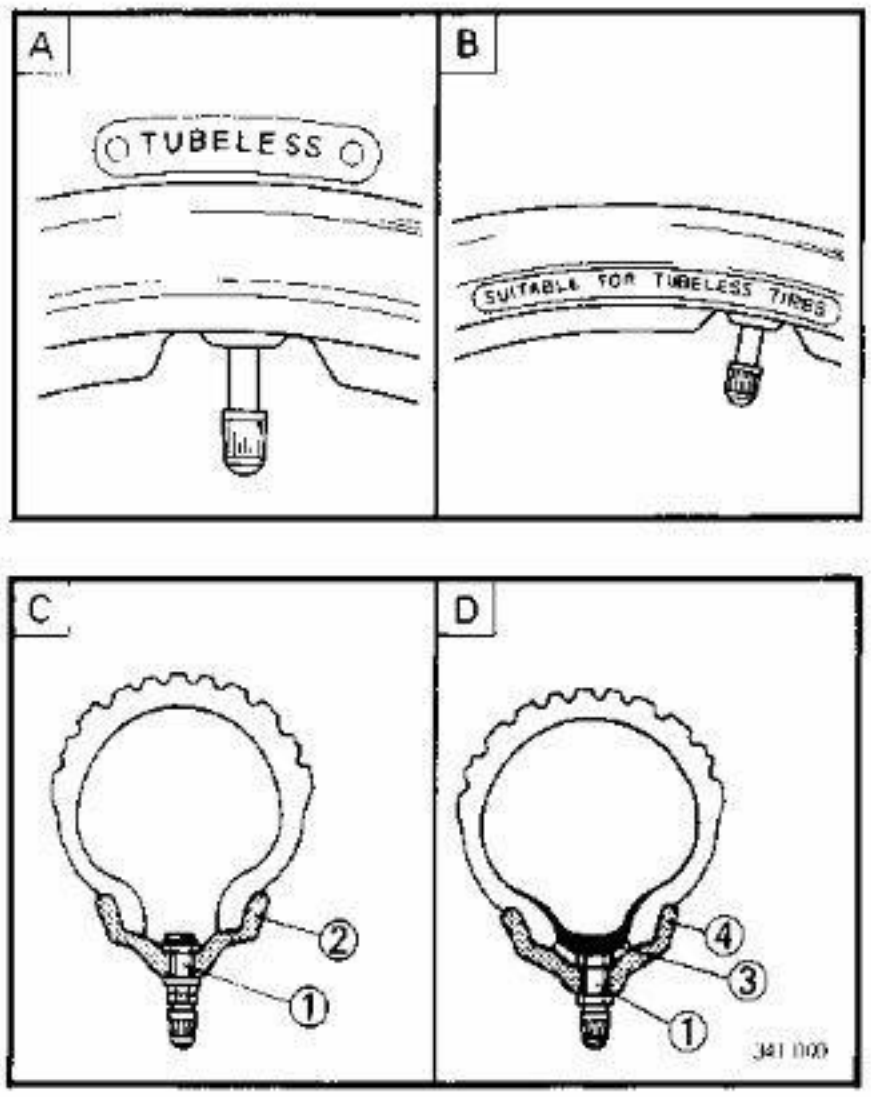

TIRE INSPECTION

WARNING:

Do not attempt to use tubeless tires on a wheel designed for tube type tires only. Tire failure and personal injury may result from sudden deflation.

Wheel	Tire
Tube type	Tube type only
Tubeless	Tube type or tubeless

Be sure to install the correct tube when using tube type tires.

A Tire
B Wheel
C Tubeless tire
D Tube type tire
① Air valve
② Aluminum wheel (Tubeless type)
③ Tube
④ Aluminum wheel (Tube type)

1. Measure:
   - Tire pressure
     Out of specification → Adjust.

Basic weight: With oil and full fuel tank	137 kg (302 lb)	
Maximum load*	134 kg (295 lb)	
Cold tire pressure	Front	Rear
Up to 90 kg (198 lb) load*	180 kPa (1.8 kg/cm², 26 psi)	200 kPa (2.0 kg/cm², 28 psi)
90 kg (198 lb) ~ Maximum load*	200 kPa (2.0 kg/cm², 28 psi)	230 kPa (2.3 kg/cm², 32 psi)
High speed riding	200 kPa (2.0 kg/cm², 28 psi)	230 kPa (2.3 kg/cm², 32 psi)

*Load is the total weight of cargo, rider, passenger, and accessories.

WARNING:

- **Tire inflation pressure should be checked and adjusted when the temperature of the tire equals the ambient air temperature. Tire inflation pressure must be adjusted according to total weight of cargo, rider, passenger, and accessories (fairing, saddlebags, etc. if approved for this model), and vehicle speed.**
- **Proper loading of your motorcycle is important for the handling, braking and other performance and safety characteristics of your motorcycle. Do not carry loosely packed items that can shift. Securely pack your heaviest items close to the center of the motorcycle, and destribute the weight evenly from side to side. Properly adjust the suspension for your load, and check the condition and pressure of your tires. NEVER OVERLOAD YOUR MOTORCYCLE. Make sure the total weight of the cargo, rider, passenger, and accessories (fairing, saddlebags, etc. if approved for this model) does not exceed the maximum load of the motorcycle. Operation of an overloaded motorcycle could cause tire damage, an accident, or even injury.**

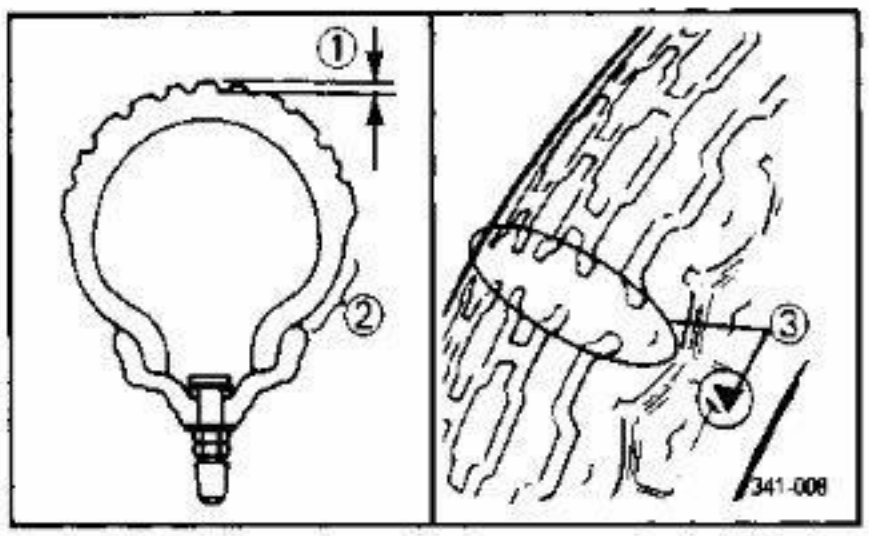

2. Inspect:
   - Tire surfaces
     Wear/Damage → Replace.

Minimum Tire Tread Depth:
(Front and Rear)
1.0 mm (0.04 in)

① Tread depth
② Side wall
③ Wear indicator

WARNING:

- **It is dangerous to ride with a wornout tire. When a tire tread begins to show lines, replace the tire immediately.**
- **Patching a punctured tube is not recommended. If it is absolutely necessary to do so, use great care and replace the tube as soon as possible with a good quality replacement.**

BRAKE AND CHANGE PEDALS/BRAKE AND CLUTCH LEVERS LUBRICATION

Lubricate pivoting parts of each lever and pedal.

Yamaha Chain and Cable Lube or SAE 10W30 Motor Oil

SIDESTAND LUBRICATION

Lubricate sidestand at their pivot points.

Yamaha Chain and Cable Lube or SAE 10W30 Motor Oil

SWINGARM LUBRICATION

Lubricate the swingarm at pivot point.

Lithium Base Waterproof Wheel Bearing Grease

CABLE INSPECTION AND LUBRICATION

Cable inspection and lubrication steps:
- Hold cable end high and apply several drops of lubricant to cable.
- Coat metal surface of disassembled throttle twist grip with suitable all-purpose grease to minimize friction.
- Check for damage to cable insulation. Replace any corroded or obstructed cables.
- Lubricate any cables that do not operate smoothly.

Yamaha Chain and Cable Lube or SAE 10W30 Motor Oil

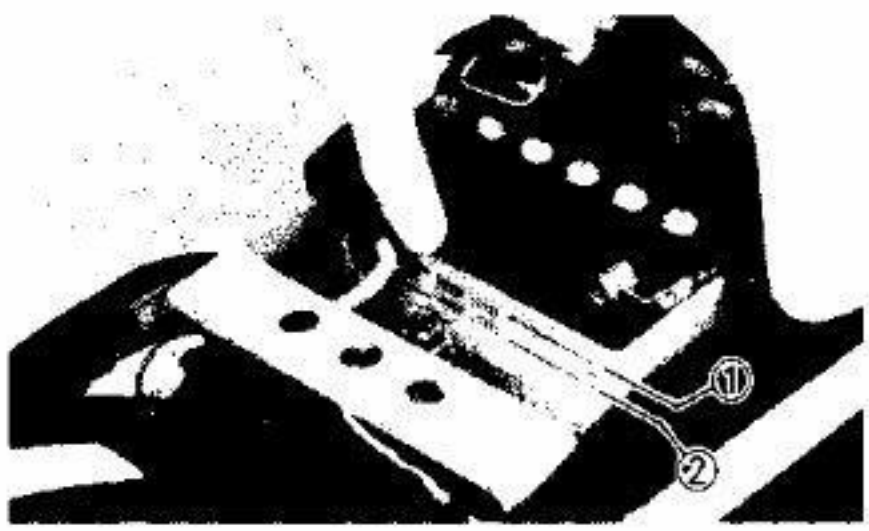

ELECTRICAL

BATTERY INSPECTION

1. Check:
   - Battery fluid level
     Incorrect→Refill.
     Fluid level should be between upper and lower level marks.

① Upper level
② Lower level

CAUTION:

Refill with distilled water only; tap water contains minerals harmful to a battery.

WARNING:

Battery electrolyte is dangerous; it contains sulfuric acid and therefore is poisonous and highly caustic.
Always follow these preventive measures:
- **Avoid bodily contact with electrolyte as it can cause severe burns or permanent eye injury.**
- **Wear protective eye gear when handling or working near batteries.**

Antidote (EXTERNAL):
- **SKIN — Flush with water.**
- **EYES — Flush with water for 15 minutes and get immediate medical attention.**

Antidote (INTERNAL):

- Drink large quantities of water or milk follow with milk of magnesia beaten egg, or vegetable oil. Get immediate medial attention.

Batteries also generate explosive hydrogen gas, therefore you should always follow these preventive measures:

- Charge batteries in a well-ventilated area.
- Keep batteries away from fire, sparks, or open flames (e.g., welding equipment, lighted cigarettes, etc.)
- DO NOT SMOKE when charging or handling batteries.

KEEP BATTERIES AND ELECTROLYTE OUT OF REACH OF CHILDREN.

2. Remove:
   - Battery
3. Inspect:
   - Battery fluid specific gravity
     Out of specification→Charge.

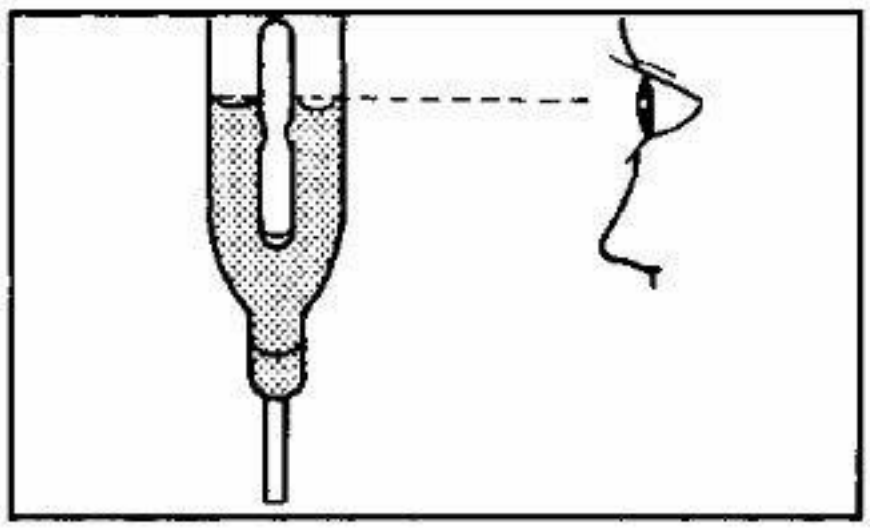

CAUTION:

Always charge a new battery before using it to ensure maximum performance.

Charging Current: **1.2 amps/10 hrs** **Specific Gravity:** **1.280 at 20°C (68°F)**

4. Install:
   - Battery
5. Connect:
   - Breather hose ①
     Be sure the hose is properly attached and routed.

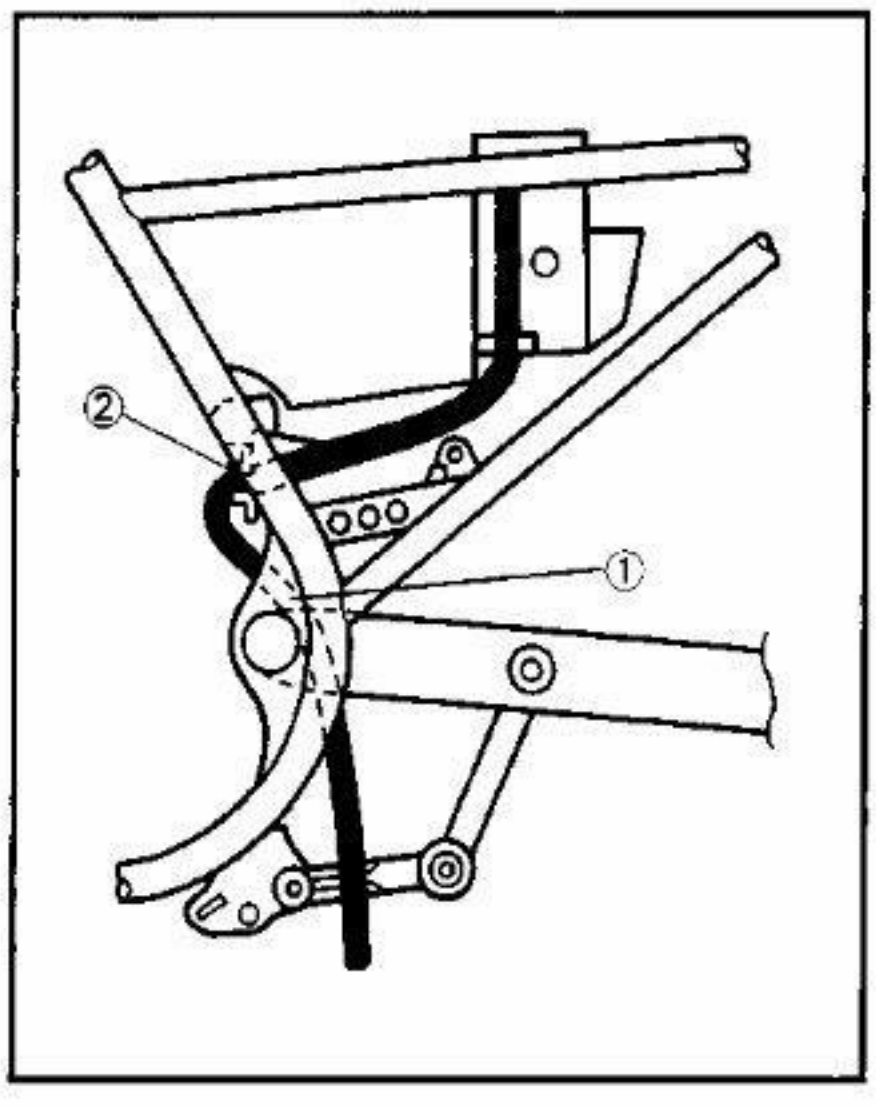

CAUTION:

When inspecting the battery, be sure the breather hose is routed correctly. If the breather hose touches the frame or exits in such a way as to cause battery electrolyte or gas to exit onto the frame, structural and cosmetic damage to the motorcycle can occur.

② Pass through guide

6. Inspect:
   - Breather hose
     Obstruction → Remove.
     Damage → Replace.

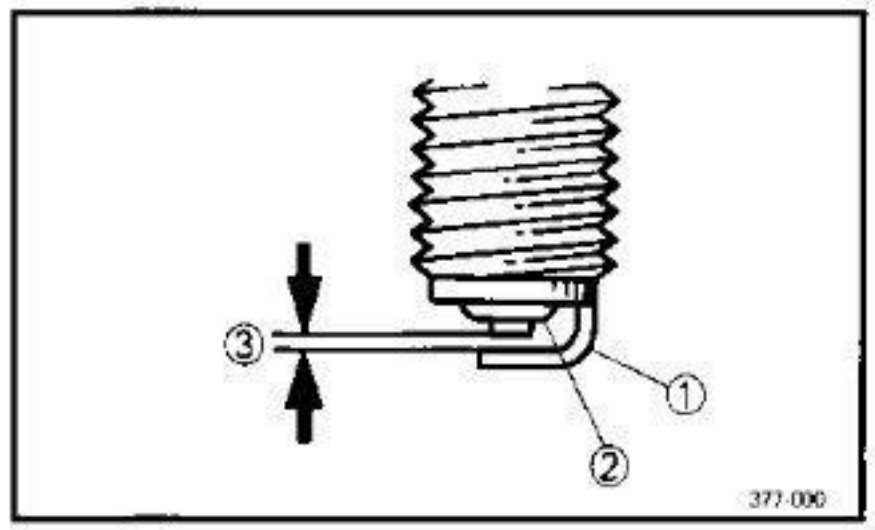

SPARK PLUG INSPECTION

1. Inspect:
   - Electrode ①
     Wear/Damage → Replace.
   - Insulator color ②
     Normal condition is a medium to light tan color.
     Distinctly different color → Check the engine condition.

③ Spark plug gap

2. Clean:
   - Spark plug
     Clean the spark plug with a spark plug cleaner or wire brush.
3. Inspect:
   - Spark plug type
     Incorrect → Replace

Standard Spark Plug:
D8EA (NGK)
X24ES-U (NIPPONDENSO)

4. Measure:
   - Spark plug gap
     Out of specification → Regap.
     Use a wire gauge.

Spark Plug Gap:
0.6 ~ 0.7 mm (0.024 ~ 0.028 in)

5. Tighten:
   - Spark Plug

NOTE:

Before installing a spark plug, clean the gasket surface and plug surface.

Spark Plug:
17.5 Nm (1.75 m•kg, 12.5 ft•lb)

NOTE:

If a torque wrench is not available when you are installing a spark plug, a good estimate of the correct torque is 1/4 to 1/2 turns part finger tight. Have the spark plug torqued to the correct value as soon as possible with a torque wrench.

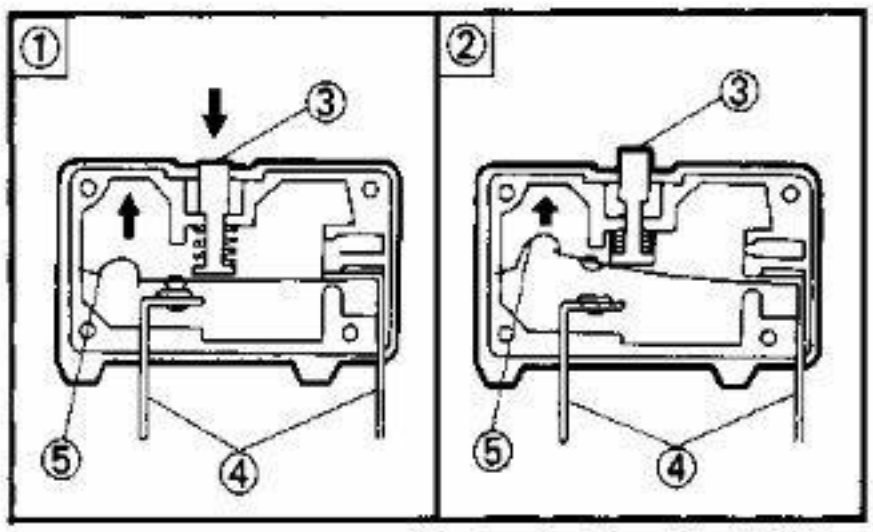

CIRCUIT BREAKER INSPECTION

The circuit breaker is located under the seat.

1. Inspect:
   - Circuit breaker
     Defective→Replace.

① Switch "OFF"
② Switch "ON"
③ Breaker knob
④ Terminal
⑤ Spring

Description	Amperage	Quantity
Main	20A	1

Switch on procedure steps

CAUTION:

Wait 30 seconds before resetting the circuit breaker.

- Turn off the ignition switch and switch in the circuit in question.
- Push in the breaker knob ③.
- Turn on ignition switches to verify operation of electrical device.
- If circuit breaker switches off immediately again, check circuit in question.

NOTE:

Install new circuit breaker of proper amperage.

WARNING:

Do not use circuit breaker of higher amperage rating than recommended. Extensive electrical system damage and fire could result from substitution of a circuit breaker of improper amperage.

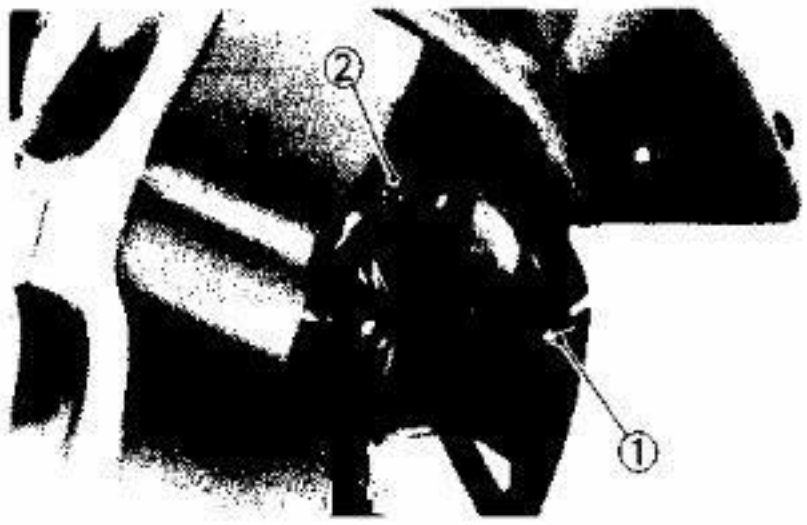

HEADLIGHT BEAM ADJUSTMENT

1. Adjust:
   - Headlight beam (Horizontally)

	Horizontal Adjustment
Right	Turn adjusting screw ① clockwise
Left	Turn adjusting screw ① counterclockwise

2. Adjust:
   - Headlight beam (Vertically)

	Vertical Adjustment
Raise	Turn adjusting screw ② clockwise
Lower	Turn adjusting screw ② counterclockwise

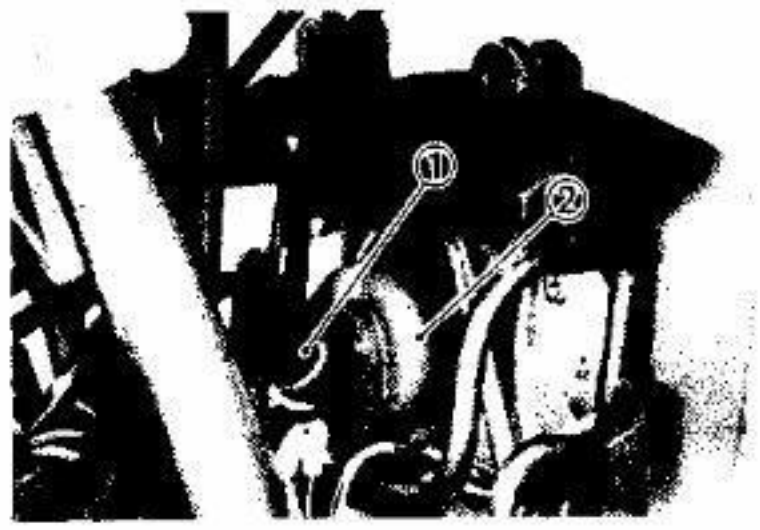

HEADLIGHT BULB REPLACEMENT

1. Remove:
   - Upper cowling
     Refer to "COWLING" section.
2. Disconnect:
   - Headlight bulb leads ①
3. Remove:
   - Cover (Headlight bulb) ②
4. Remove:
   - Bulb
     Turn the bulb holder counterclockwise to release bulb.

WARNING:

Do not touch headlight bulb when it is on as the bulb generates enormous heat; keep flammable objects away.

5. Install:
   - Bulb (New)
     Secure the new bulb with the bulb holder.

CAUTION:

Avoid touching glass part of bulb. Also keep it free from oil otherwise, transparency of glass, bulb life and illuminous flux will be adversely affected. If oil gets on bulb, clean it with a cloth moistened thoroughly with alcohol or lacquer thinner.

6. Install:
   - Cover (Headlight bulb)
7. Connect:
   - Headlight bulb leads
8. Install:
   - Upper cowling
   Refer to "COWLING" section.
9. Adjust:
   - Headlight beam
   Refer to "HEADLIGHT BEAM ADJUSTMENT" section.

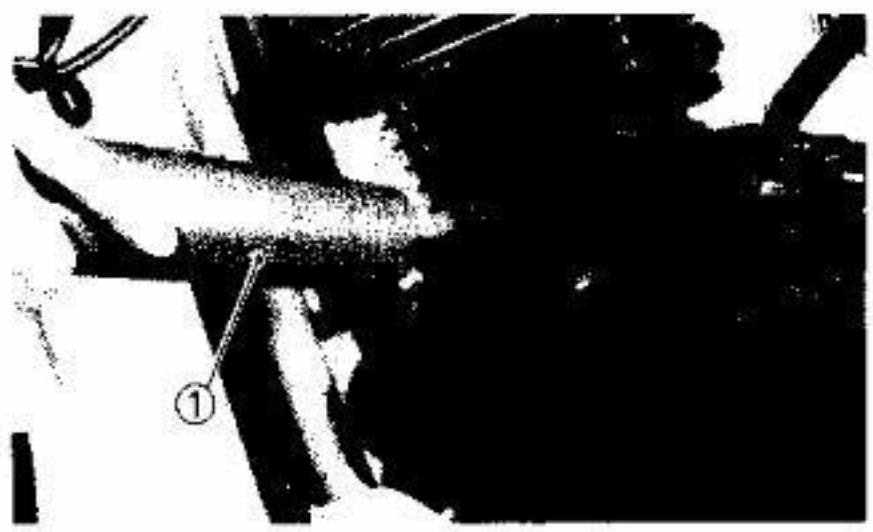

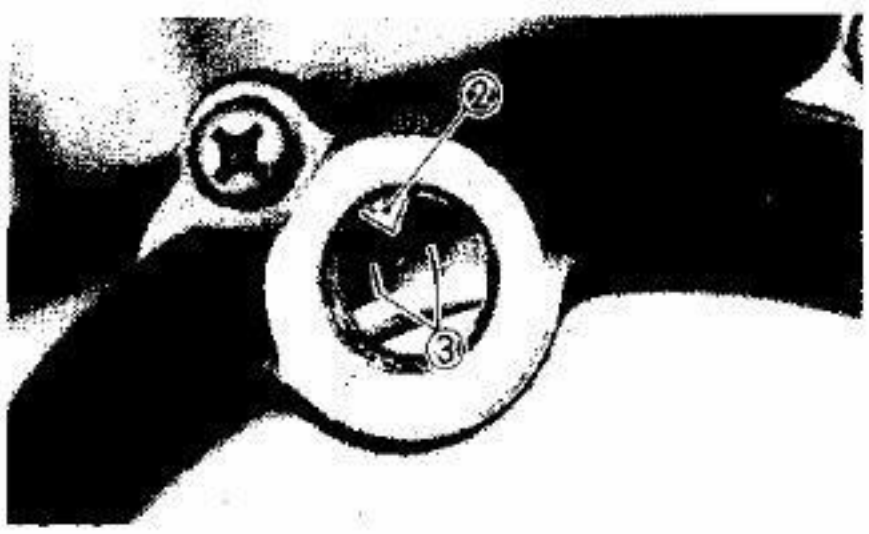

IGNITION TIMING CHECK

1. Check:
   - Ignition timing

Ignition timing check steps:
- Remove the timing plug.
- Connect the Timing Light (YM-33277) ① to spark plug lead.
- Warm up the engine and let it idle at the specified idle speed of 1,350 ~ 1,450 r/min.
- Visually check the stationary pointer ② in the timing window to verify it is within the required firing range ③ indicated on the flywheel.
  Incorrect firing range → Check flywheel and/or pickup assembly (tightness damage). Refer to CHAPTER 6, "ELECTRICAL" for further information.

CHAPTER 3.
ENGINE OVERHAUL

ENGINE REMOVAL 3-1
- PREPARATION FOR REMOVAL 3-1
- COWLING 3-2
- SEAT AND FUEL TANK 3-2
- CARBURETOR 3-3
- EXHAUST PIPE AND MUFFLER 3-3
- VENTILATION HOSE AND CLUTCH CABLE 3-4
- WIRING 3-4
- DRIVE CHAIN 3-5
- ENGINE REMOVAL 3-5

ENGINE DISASSEMBLY 3-6
- CAMSHAFT AND CYLINDER HEAD 3-6
- CYLINDER 3-7
- PISTON 3-8
- OIL FILTER 3-8
- CRANKCASE COVER (RIGHT) 3-8
- CLUTCH 3-9
- PRIMARY DRIVE GEAR AND BALANCER DRIVEN GEAR 3-10
- CHAIN GUIDE (INTAKE) AND CAM CHAIN 3-10
- SPACER AND OIL PUMP 3-11
- CHANGE LEVER 3-11
- AC GENERATOR AND STARTER MOTOR 3-11
- CRANKCASE 3-12
- TRANSMISSION 3-13
- CRANKSHAFT 3-14
- BEARING AND OIL SEALS 3-14

INSPECTION AND REPAIR 3-15
- CYLINDER HEAD 3-15
- VALVE, VALVE GUIDE, VALVE SEATS, AND VALVE SPRING 3-16
- CAMSHAFT 3-22
- CAM CHAIN 3-24
- CAM SPROCKET AND DRIVE SPROCKET 3-24
- CHAIN GUIDE 3-24
- CYLINDER AND PISTON 3-24
- CRANKSHAFT 3-28
- OIL PUMP 3-29
- PRIMARY GEARS 3-29
- CLUTCH 3-30
- TRANSMISSION 3-31
- STARTER DRIVE 3-32
- BALANCER DRIVE GEAR 3-33
- CRANKCASE 3-33
- BEARINGS AND OIL SEAL 3-33
- CIRCLIPS AND WASHERS 3-33

ENGINE ASSEMBLY AND ADJUSTMENT 3-34
CRANKSHAFT AND BALANCER SHAFT 3-34
TRANSMISSION AND SHIFTER 3-36
CRANKCASE 3-39
STARTER MOTOR, AC GENERATOR AND
LEFT CRANKCASE COVER 3-40
CHANGE LEVER 3-41
OIL PUMP AND SPACER 3-41
CAM CHAIN AND INTAKE SIDE CHAIN GUIDE 3-42
BALANCER DRIVEN GEAR AND PRIMARY DRIVE GEAR 3-42
CLUTCH 3-43
CRANKCASE COVER (RIGHT) 3-46
OIL FILTER 3-46
PISTON 3-47
CYLINDER, CYLINDER HEAD AND CAMSHAFT 3-48
REMOUNTING ENGINE 3-54

ENGINE OVERHAUL

ENGINE REMOVAL

NOTE:

It is not necessary to remove the engine in order to remove the following components:

- Piston
- Clutch
- Carburetor
- AC magneto

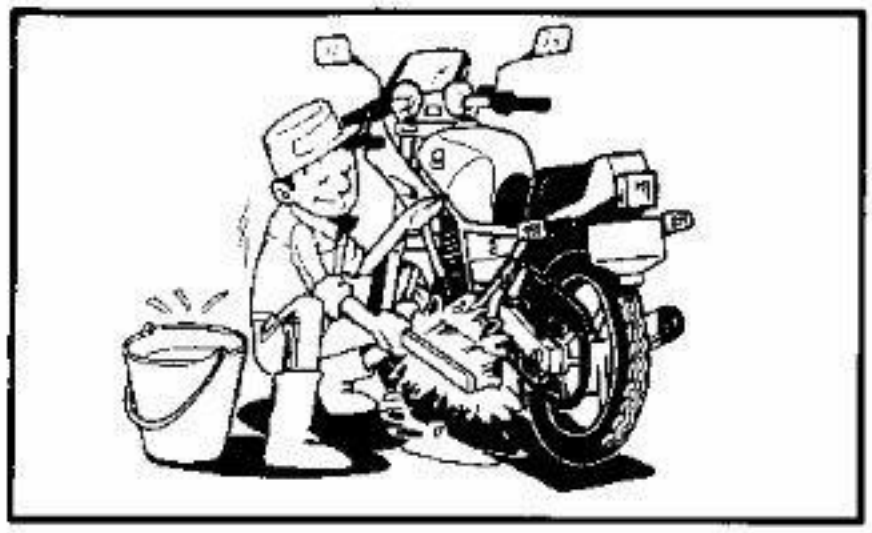

PREPARATION FOR REMOVAL

1. Remove all dirt, mud, dust, and foreign material before removal and disassembly.

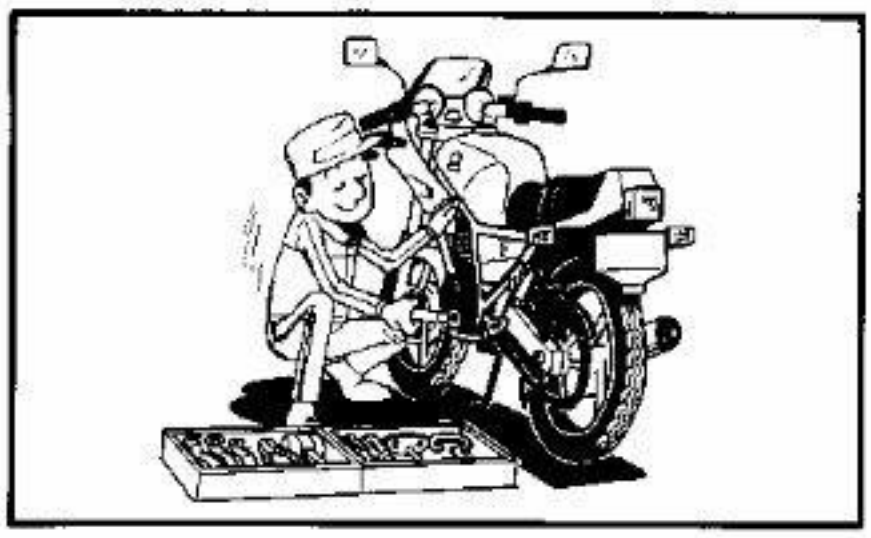

2. Use proper tools and cleaning equipment. Refer to CHAPTER 1, "SPECIAL TOOL."

NOTE:

When disassembling the engine, keep mated parts together. This includes gears, cylinders, pistons, and other parts that have been "mated" through normal wear. Mated parts must be reused as an assembly or replaced.

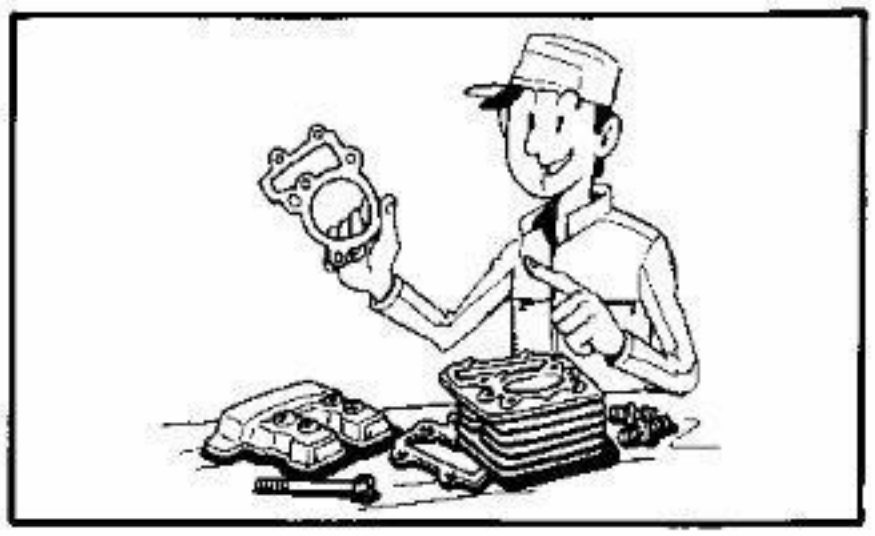

3. During the engine disassembly, clean all parts and place them in trays in the order of disassembly. This will speed up assembly time and help assure that all parts are correctly reinstalled in the engine.
4. Drain engine oil completely.

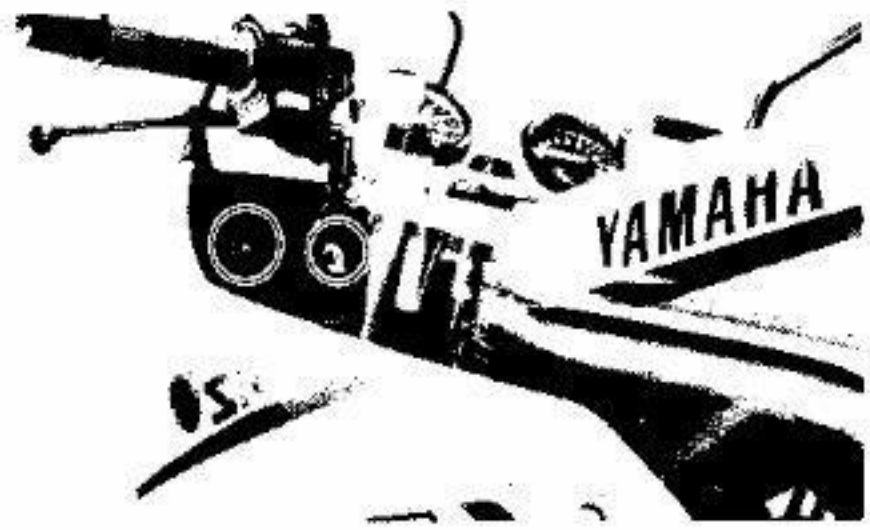

COWLING

Upper Cowling Removal

1. Remove:
   - Upper cowling
     Refer to "CHAPTER 2. — COWLING" section.
   - Cowling stays

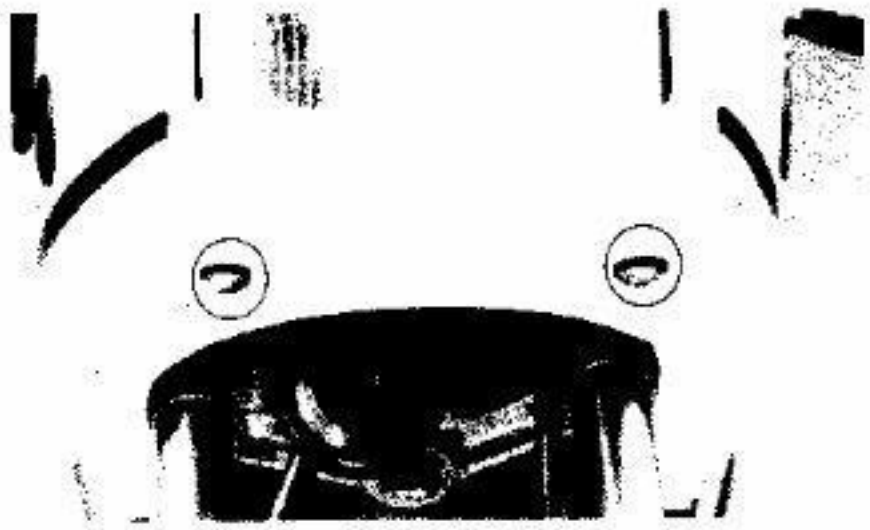

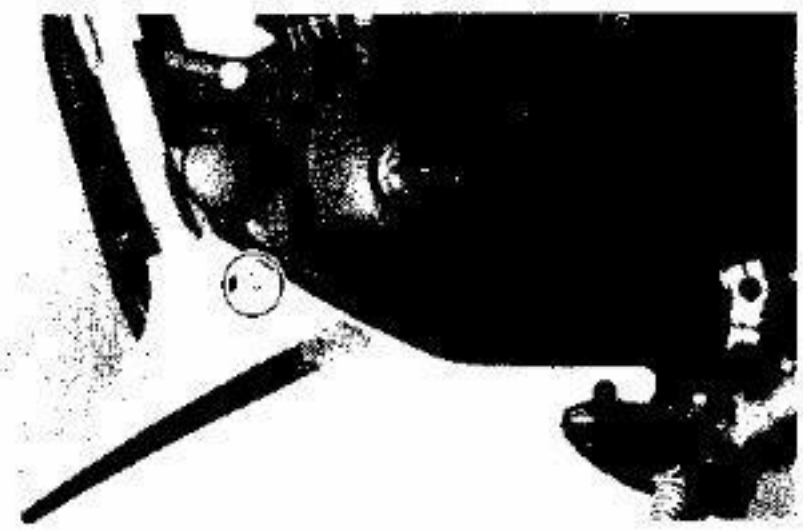

2. Remove:
   - Lower cowling
     Refer to "CHAPTER 2. — COWLING" section.

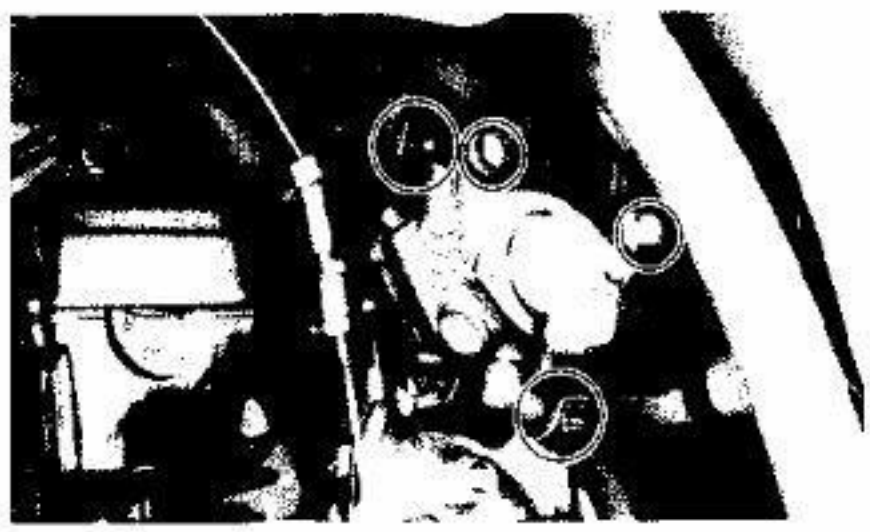

SEAT AND FUEL TANK

1. Turn the fuel cock lever to the "ON" position.
2. Disconnect:
   - Fuel hose
   - Vacuum hose
3. Remove:
   - Bolts (Fuel cock)

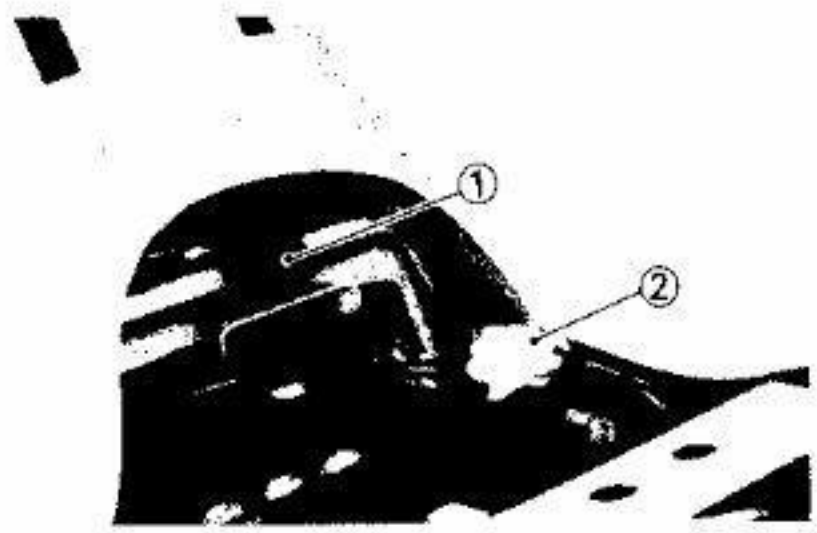

4. Remove:
   - Seat
   - Stopper (Fuel tank) ①
   - Plate
   - Coupler (Fuel sender) ②

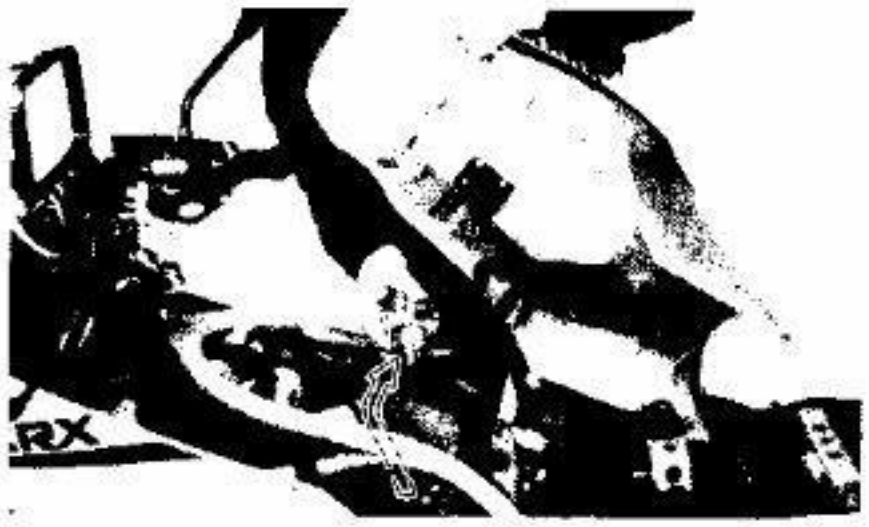

5. Remove:
   - Fuel tank
6. Disconnect:
   - Battery negative lead
   - Battery positive lead

NOTE:

Disconnect the negative lead first.

CARBURETOR

1. Loosen:
   - Screws (Carburetor joint) ①
   - Screws (Air cleaner joint) ②
   - Locknut (Throttle cable) ③
2. Disconnect:
   - Throttle cables ④
3. Remove:
   - Carburetor assembly

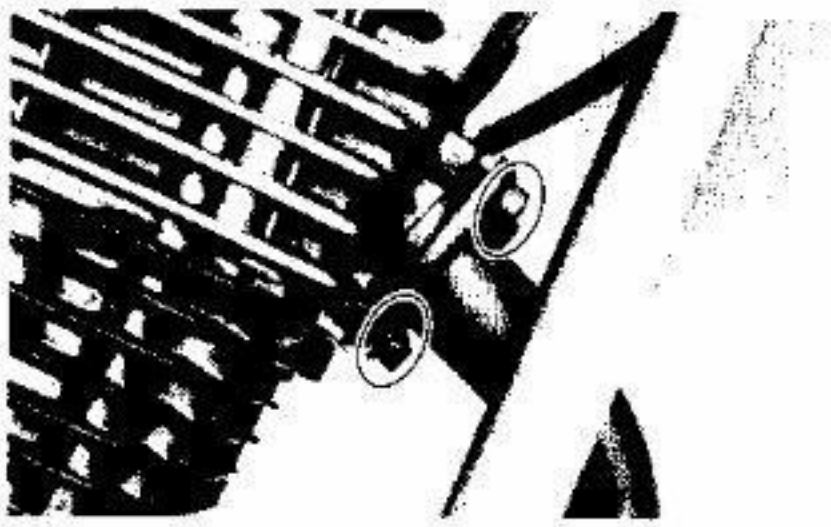

EXHAUST PIPE AND MUFFLER

1. Remove:
   - Bolts (Exhaust pipe)

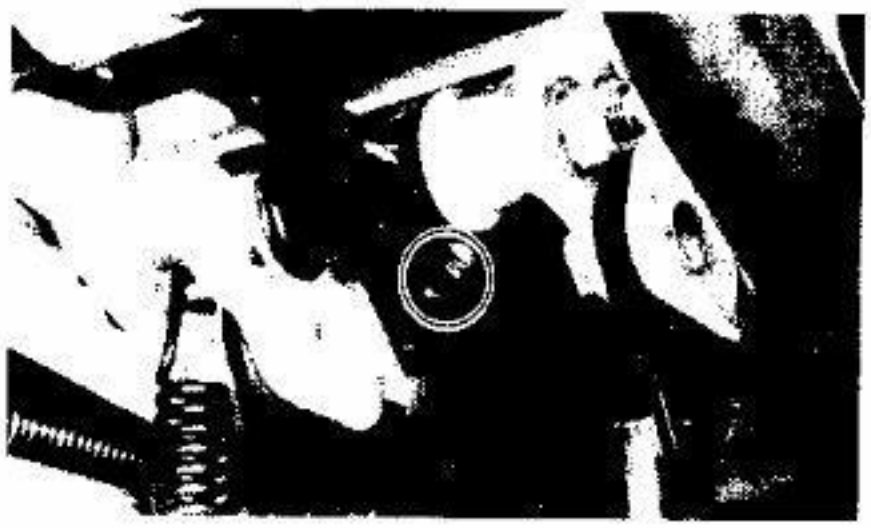

2. Remove:
   - Bolt (Muffler chamber)

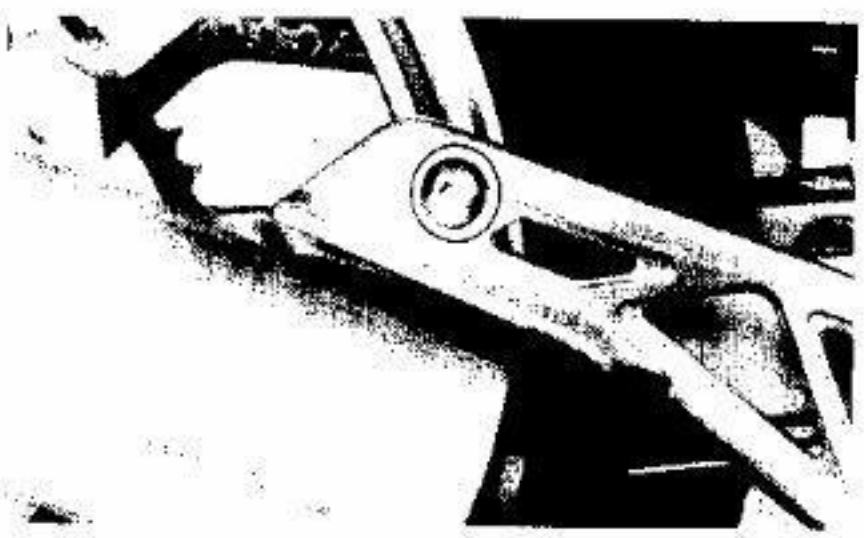

3. Remove:
   - Bolt (Muffler)
   - Muffler assembly

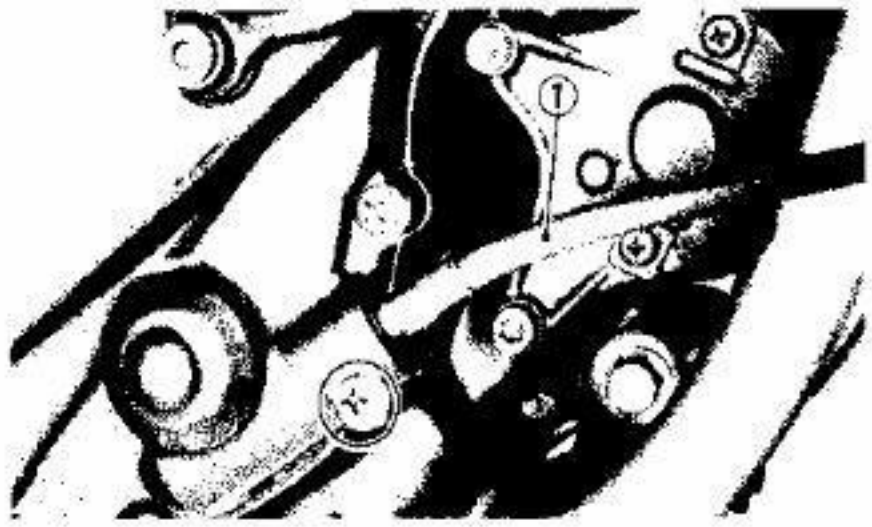

VENTILATION HOSE AND CLUTCH CABLE

1. Remove:
   - Tachometer cable ①

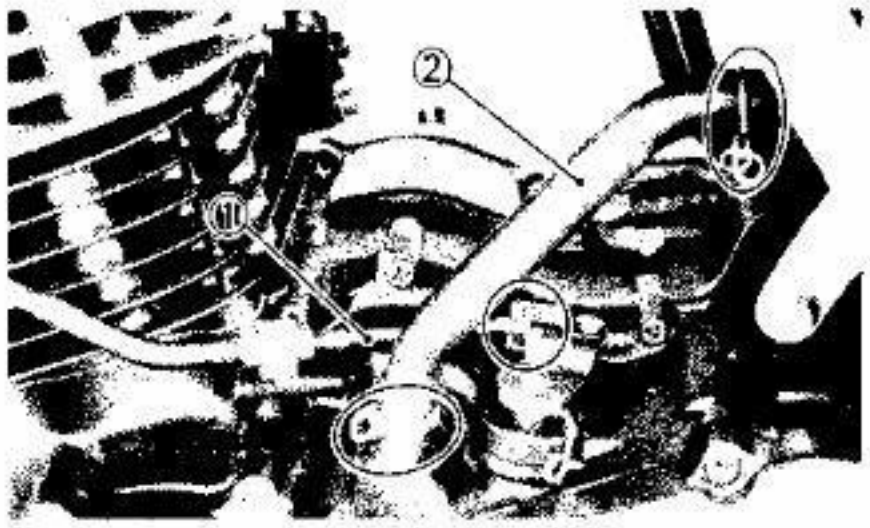

2. Disconnect:
   - Clutch cable ①
     First disconnect the handlebar lever side, and then crankcase side.
   - Ventilation hose ②

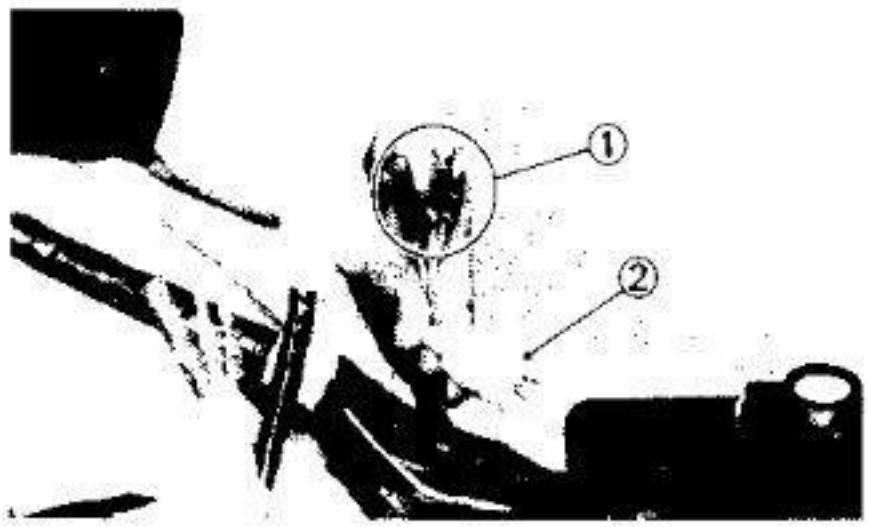

WIRING

1. Disconnect:
   - Leads (Pickup coil) ①
   - Coupler (AC Generator) ②
   - Spark plug lead

2. Remove:
   - Side cover (Left)

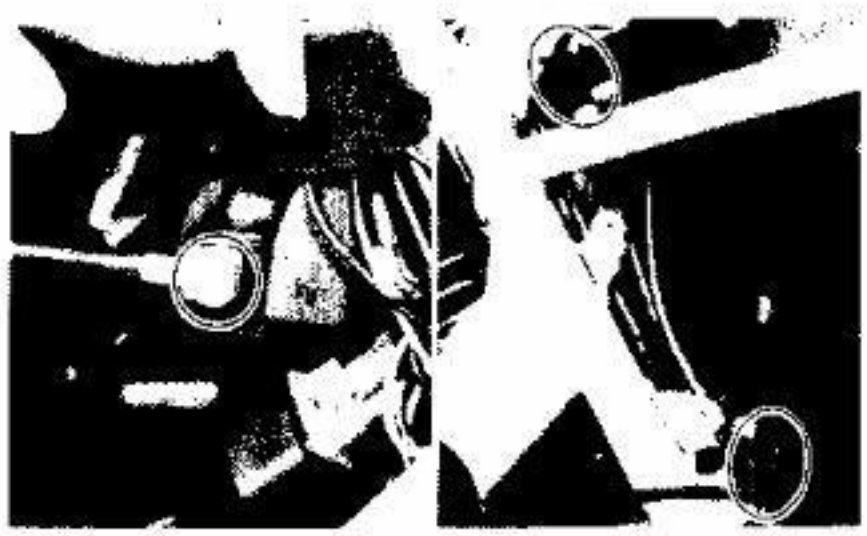

3. Disconnect:
   - Starter motor lead
4. Remove:
   - Bands

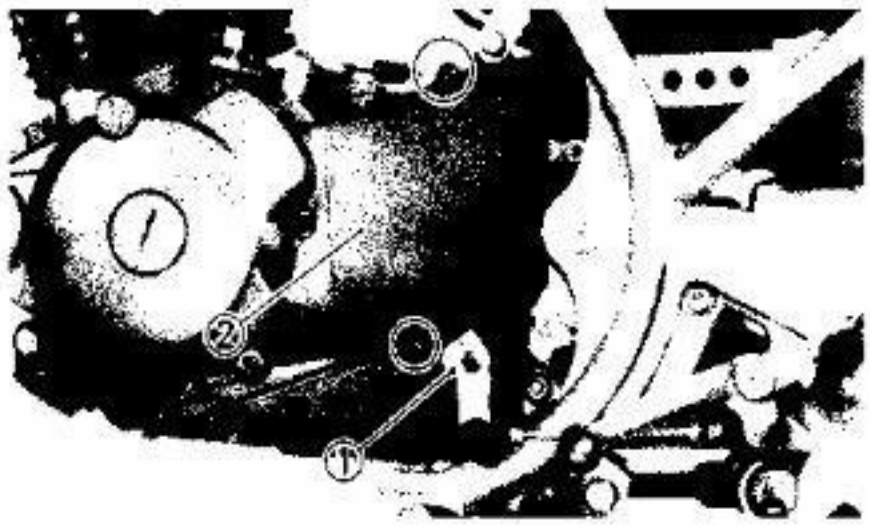

DRIVE CHAIN

1. Remove:
   - Bolt (Change pedal link) ①
   - Screws (Drive sprocket cover)
   - Drive sprocket cover ②

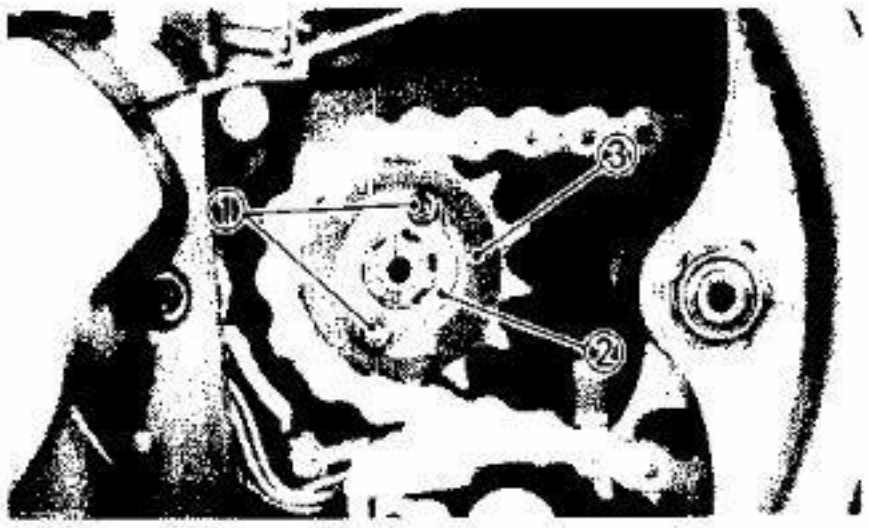

2. Remove:
   - Bolts (Drive sprocket) ①
     Apply the rear brake.
   - Holding plate ②
   - Drive sprocket ③
   - Drive chain

NOTE:

Before removing the drive sprocket and drive chain, increase the drive chain slack.

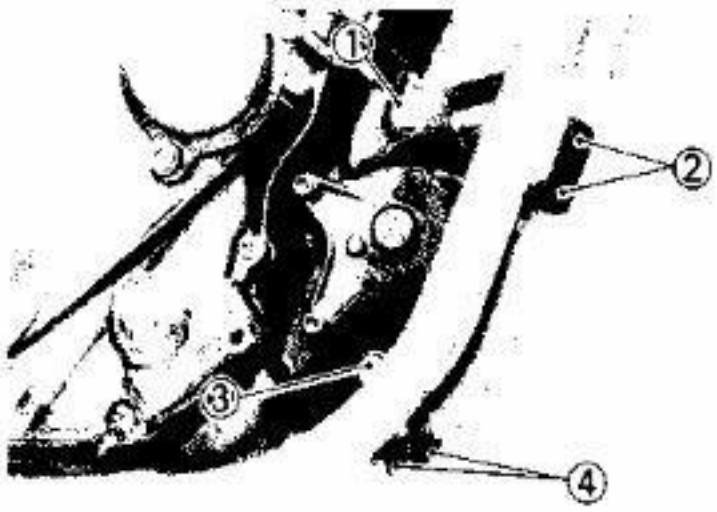

ENGINE REMOVAL

1. Place a suitable stand under the engine.
2. Remove:
   - Bolt (Mounting - Front upper) ①
   - Bolts (Front bracket - upper) ②
   - Bolt (Mounting - Front lower) ③
   - Bolts (Front bracket - lower) ④

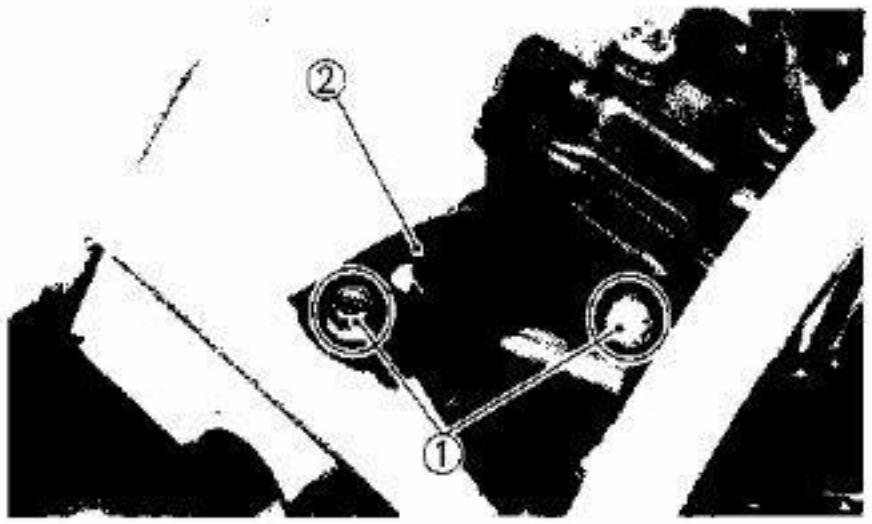

3. Remove:
   - Bolts (Bracket) ①
   - Bracket (Engine mounting) ②

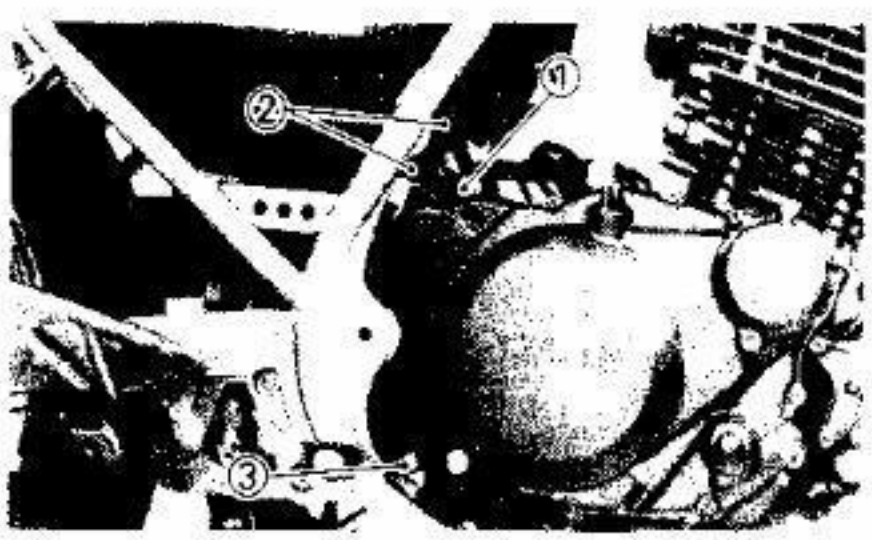

4. Remove:
   - Bolt (Mounting - Rear upper) ①
   - Bolts (Bracket - Rear) ②
   - Bolt (Mounting - Rear lower) ③
   - Engine
     To the right.

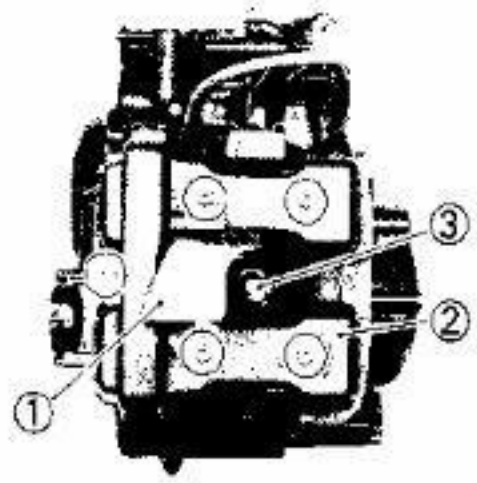

ENGINE DISASSEMBLY

CAMSHAFT AND CYLINDER HEAD

1. Remove:
   - Air baffle plate ①
   - Cylinder head cover ②
   - Spark plug ③
   - Timing plug
   - Crankcase cover plate

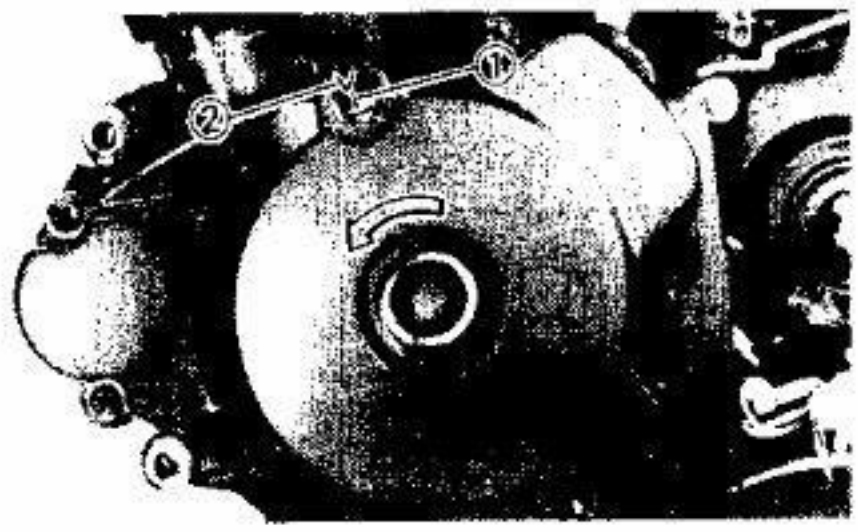

2. Turn the crankshaft counterclockwise with a wrench.
3. Align:
   - Flywheel "I" mark ①
     With the stationary pointer ②.

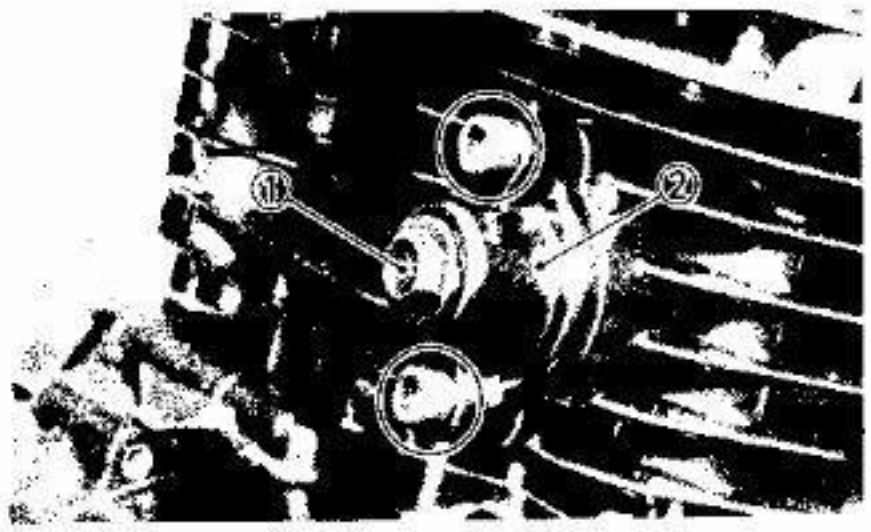

4. Loosen:
   - Bolt (Cam chain tensioner) ①
5. Remove:
   - Tensioner assembly ②

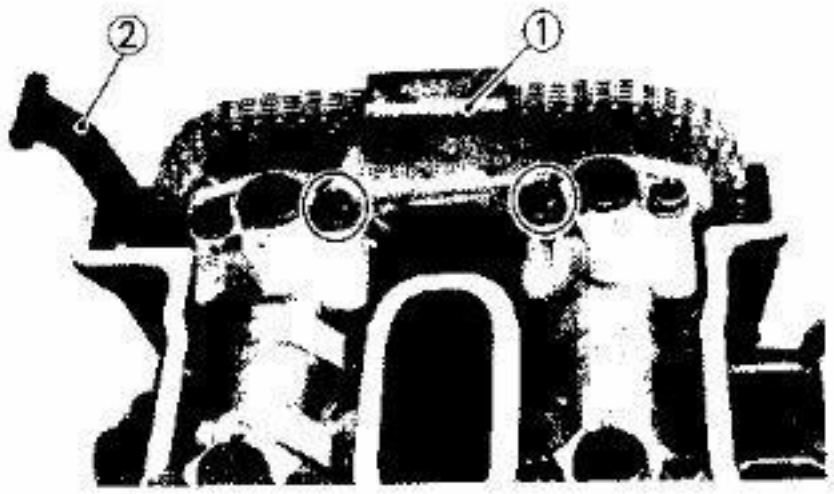

6. Remove:
   - Chain guide (Upper) ①
   - Chain guide (Exhaust) ②

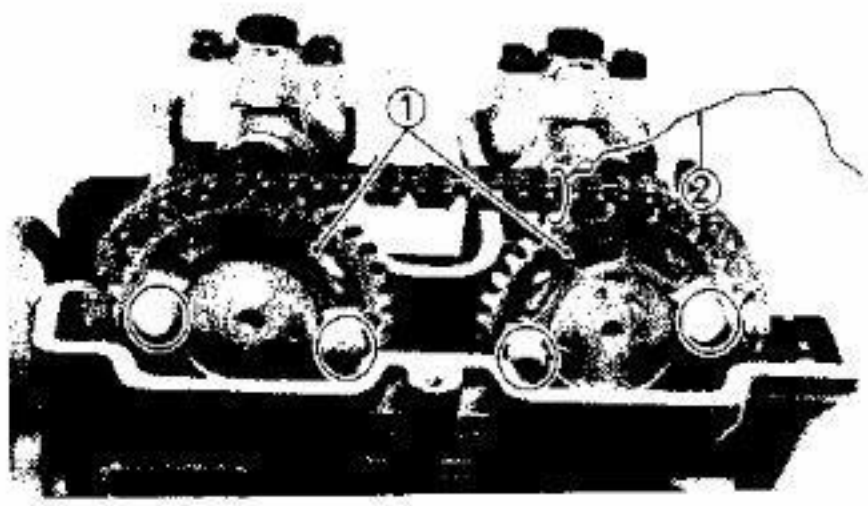

7. Remove:
   - Bolts (Sprocket)
   - Sprockets ①

NOTE:

Fasten safety wire ② to the cam chain to prevent it from falling into the crankcase.

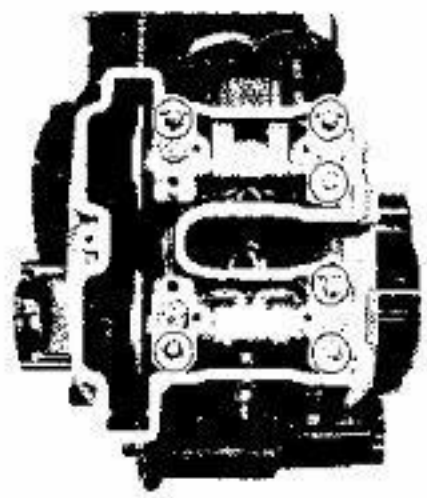

8. Remove:
   - Cam caps
   - Camshafts

CAUTION:

Do not rotate the camshaft or valve damage may occur.

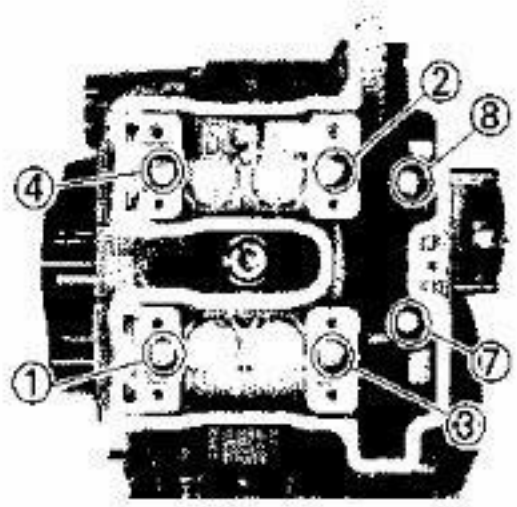

9. Remove:
   - Cylinder head

NOTE:

Loosen the bolts in this stage, using a crisscross pattern.

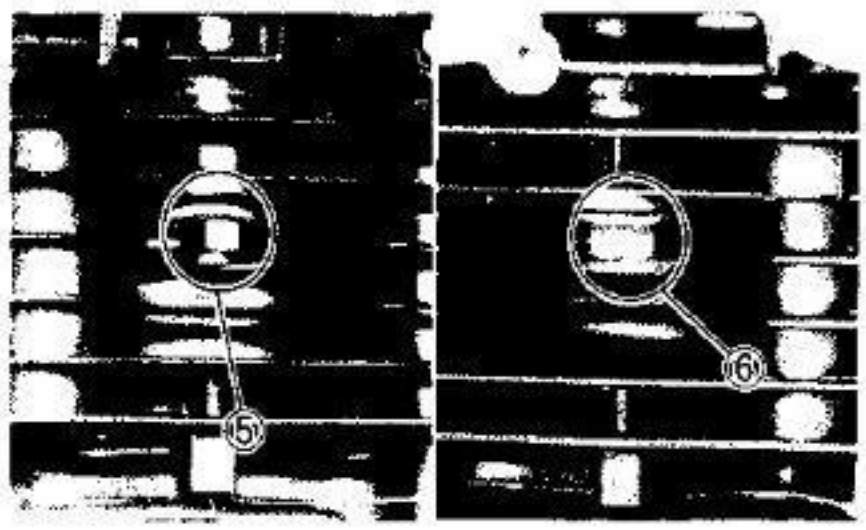

CYLINDER

1. Remove:
   - Gasket (Cylinder head) ①
   - Dowel pins ②
   - Cylinder ③

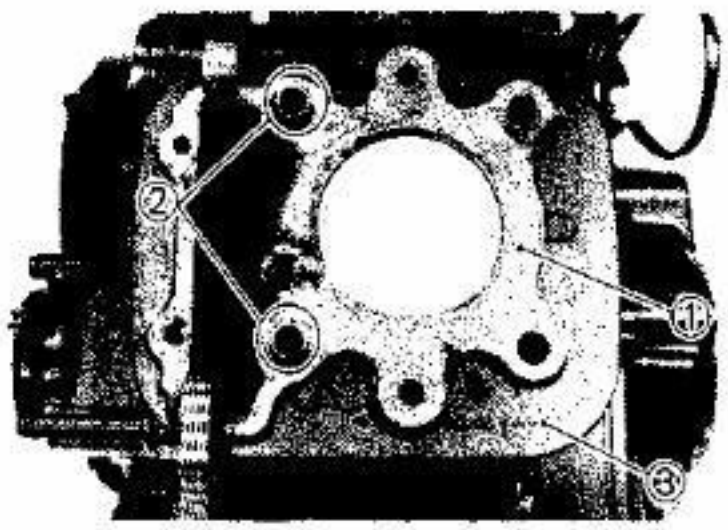

2. Remove:
   - Gasket (Cylinder) ①
   - Dowel pins ②

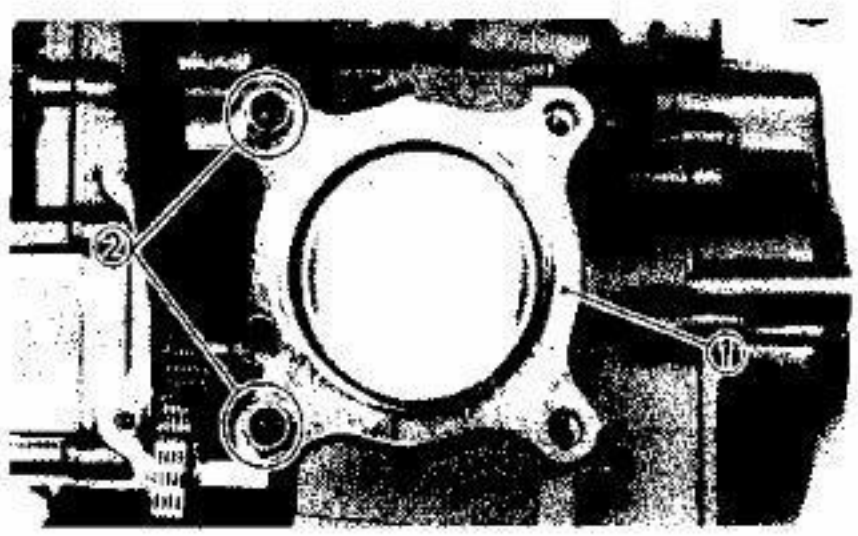

PISTON

1. Remove:
   - Piston pin clips

NOTE:

Before removing piston pin clip, cover crankcase with a clean rag to prevent circlip from falling into crankcase cavity.

2. Remove:
   - Piston pin
   - Piston

NOTE:

Before removing the piston pin, deburr the clip groove and pin hole area. If the piston pin groove is deburred and piston pin is still difficult to remove, use Piston Pin Puller (YU-01304).

CAUTION:

Do not use a hammer to drive the piston pin out.

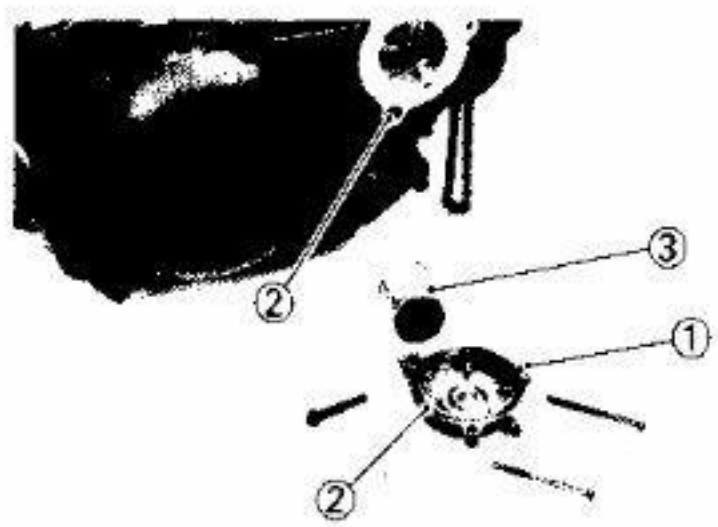

OIL FILTER

1. Remove:
   - Oil filter cover ①
   - O-ring ②
   - Oil filter ③

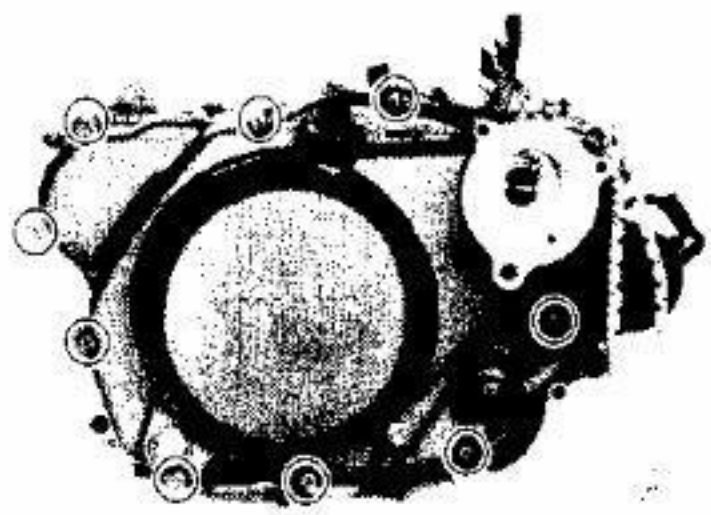

CRANKCASE COVER (RIGHT)

1. Remove:
   - Crankcase cover (Right)
   - Gasket
   - Dowel pins

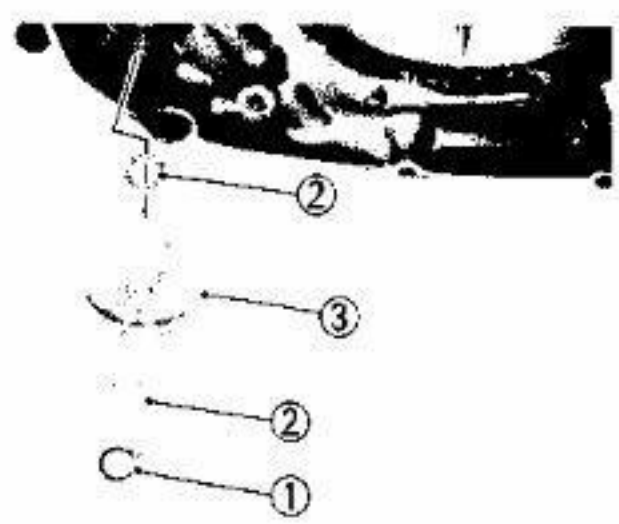

2. Remove:
   - Circlip ①
   - Washer ②
   - Tachometer driven gear ③

   From the crankcase cover (Right).

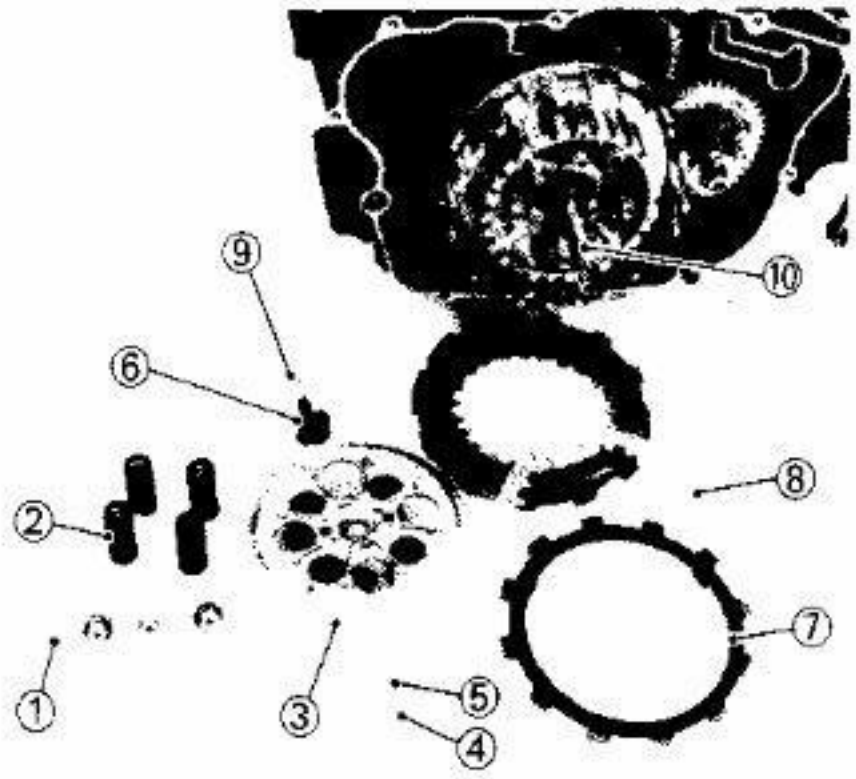

CLUTCH

1. Remove:
   - Screws (Clutch spring) ①
   - Clutch springs ②
   - Pressure plate ③
   - Nut ④
   - Washer ⑤
   - Push rod #1 ⑥
   - Friction plates ⑦
   - Clutch plates ⑧
   - Push rod ball ⑨
   - Push rod #2 ⑩

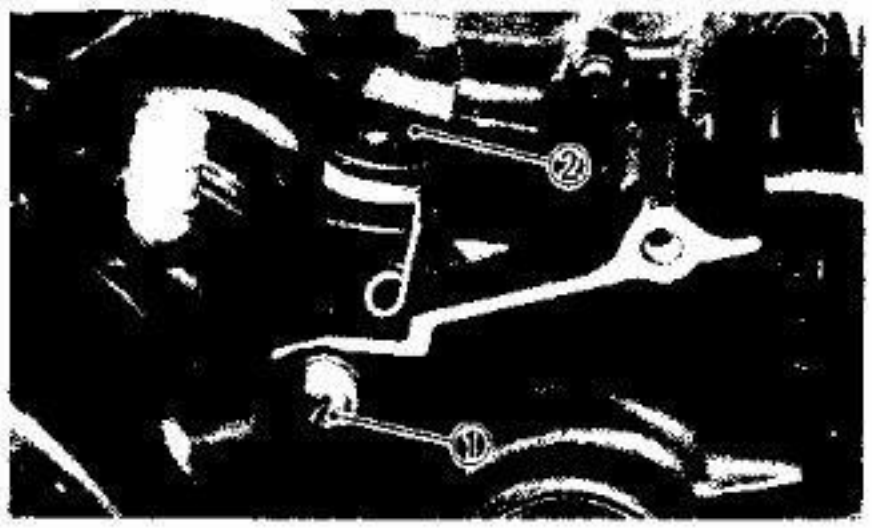

2. Remove:
   - Screw ①
   - Clutch push lever axle assembly ②

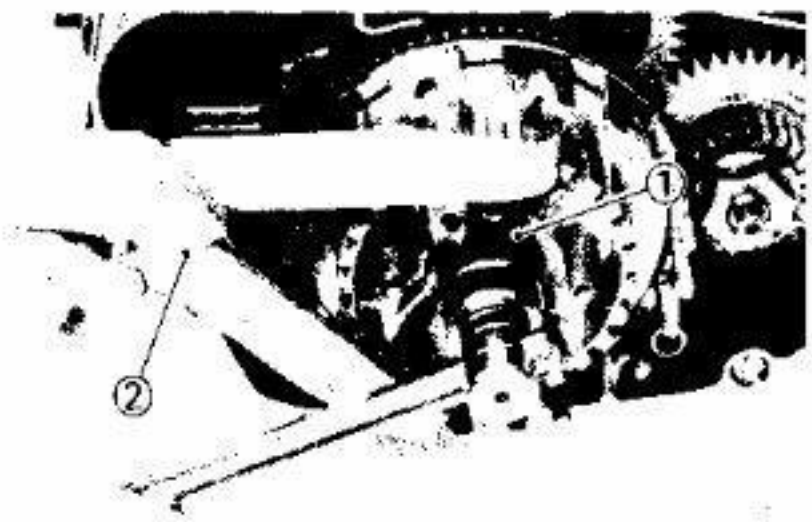

3. Straighten the lock washer tabs of the clutch boss nut.
4. Loosen:
   - Nut (Clutch boss) ①
     Use Universal Clutch Holder ② (YM-91042)

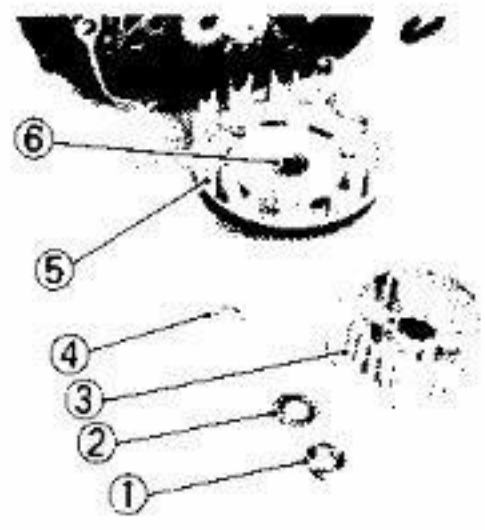

5. Remove:
   - Nut (Clutch boss) ①
   - Lock washer ②
   - Clutch boss ③
   - Washer ④
   - Primary driven gear ⑤
   - Bearing ⑥

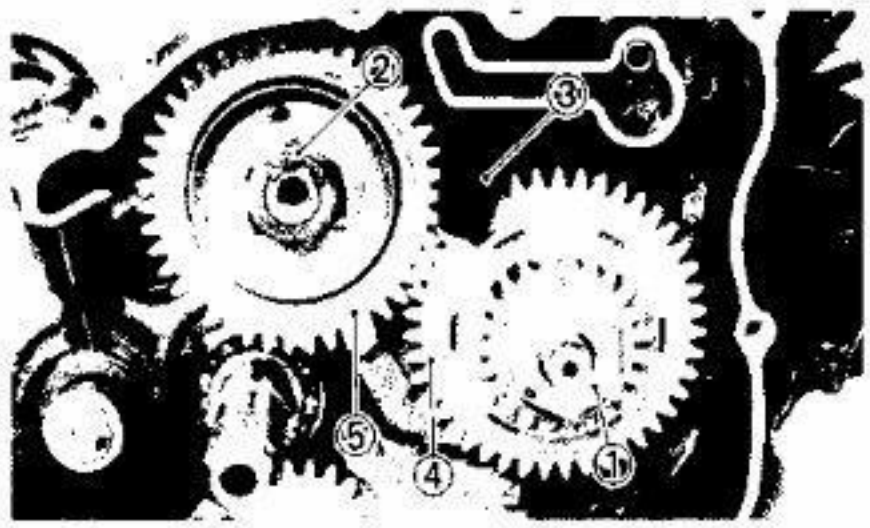

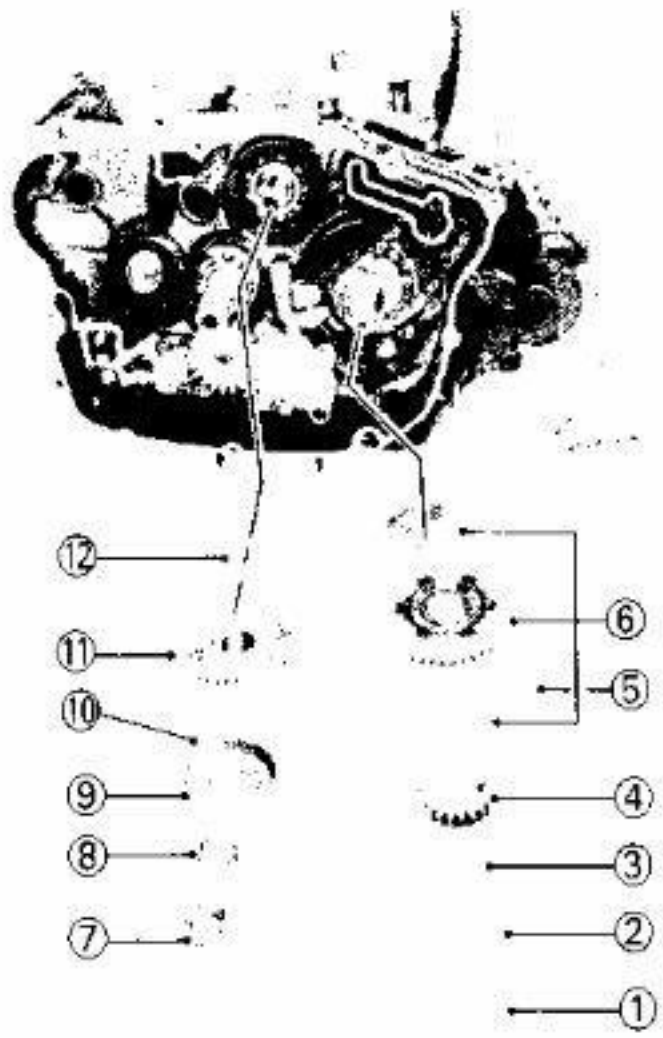

PRIMARY DRIVE GEAR AND BALANCER DRIVEN GEAR

1. Straighten:
   - Lock washer tabs (Balancer driven gear and primary drive gear)
2. Loosen:
   - Nut (Primary drive gear) ①
   - Nut (Balancer driven gear) ②

   Place a folded rag ③ between the teeth of the drive gear ④ and balancer driven gear ⑤ to lock them.

3. Remove:
   - Nut ①
   - Lock washer ②
   - Washer ③
   - Primary drive gear ④
   - Key ⑤
   - Balancer drive gear assembly ⑥
   - Nut ⑦
   - Lock washer ⑧
   - Breather plate ⑨
   - Key ⑩
   - Balancer driven gear ⑪
   - Washer ⑫

NOTE:

The balancer drive gear has six springs and three pins. Use care so that they do not fall out when removing the drive gear.

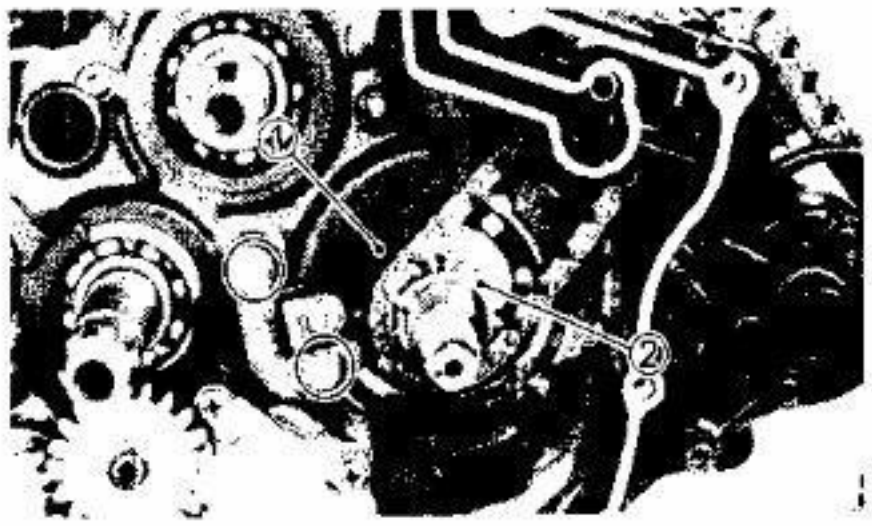

CHAIN GUIDE (INTAKE) AND CAM CHAIN

1. Remove:
   - Chain guide (Intake) ①
   - Chain drive gear ②

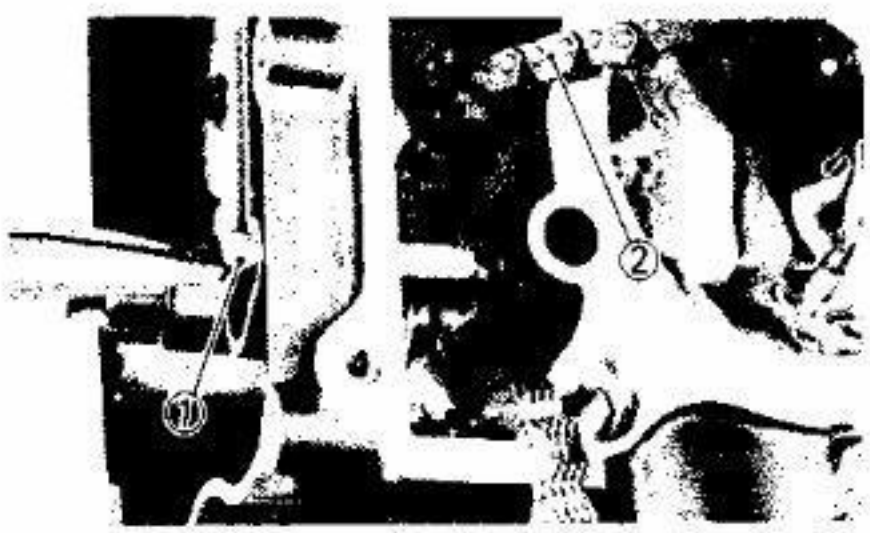

2. Remove:
   - Oil pipe ①
   - Cam chain ②

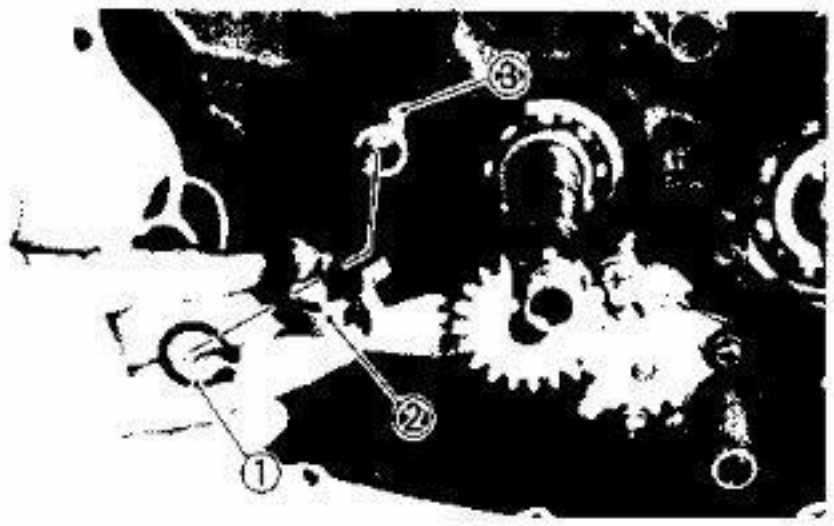

SPACER AND OIL PUMP

1. Remove:
   - Circlip ①
   - Spacer ②
   - Circlip ③

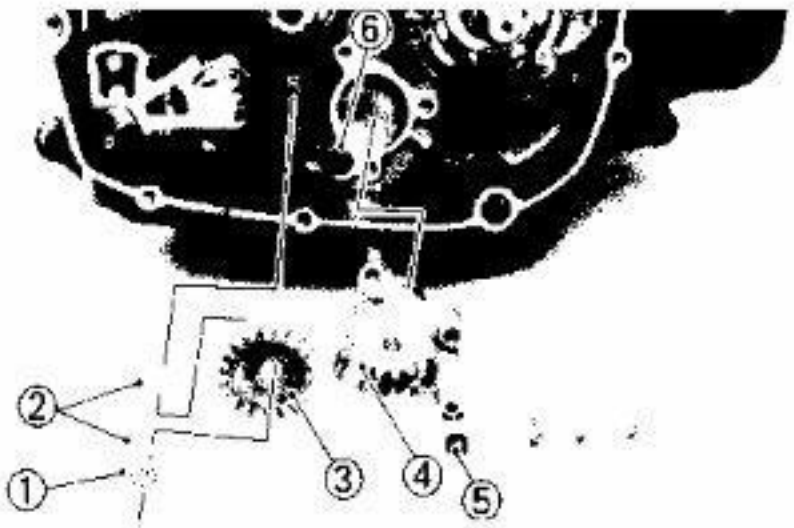

2. Remove:
   - Circlip ①
   - Washer ②
   - Oil pump idle gear ③
   - Oil pump assembly ④
   - Oil seal ⑤
   - O-ring ⑥

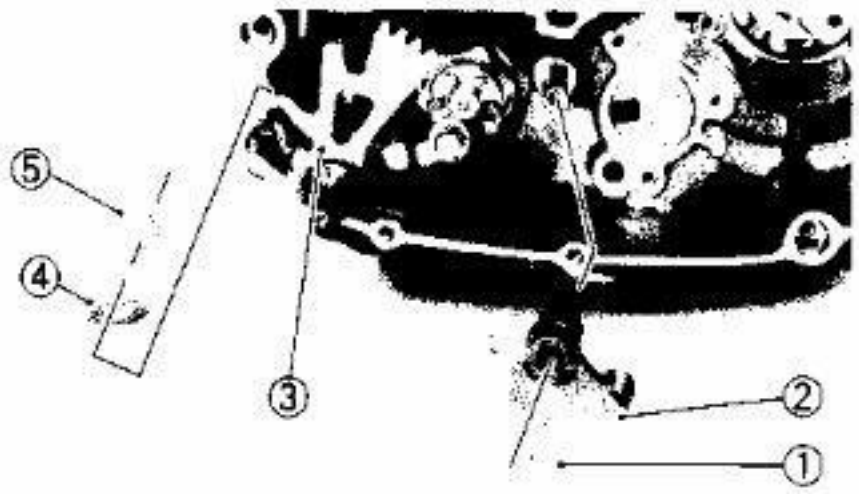

CHANGE LEVER

1. Remove:
   - Circlip ①
   - Change lever 2 ②
   - Change lever assembly ③
   - Washer ④
   - Spacer ⑤

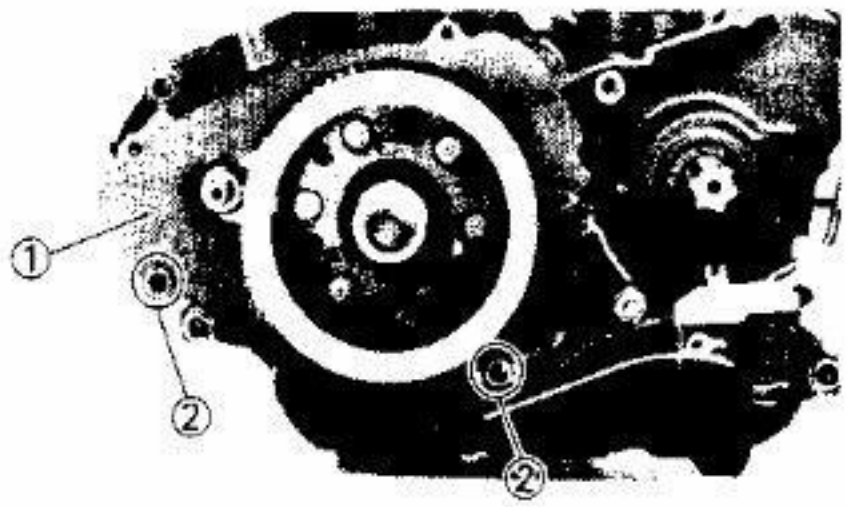

AC GENERATOR AND STARTER MOTOR

1. Remove:
   - Crankcase cover (Left)
   - Gasket ①
   - Dowel pins ②

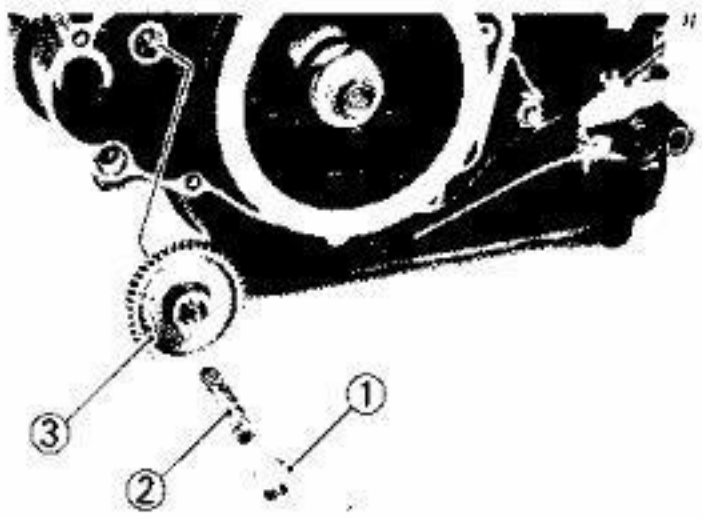

2. Remove:
   - Collar ①
   - Shaft ②
   - Starter idle gear ③

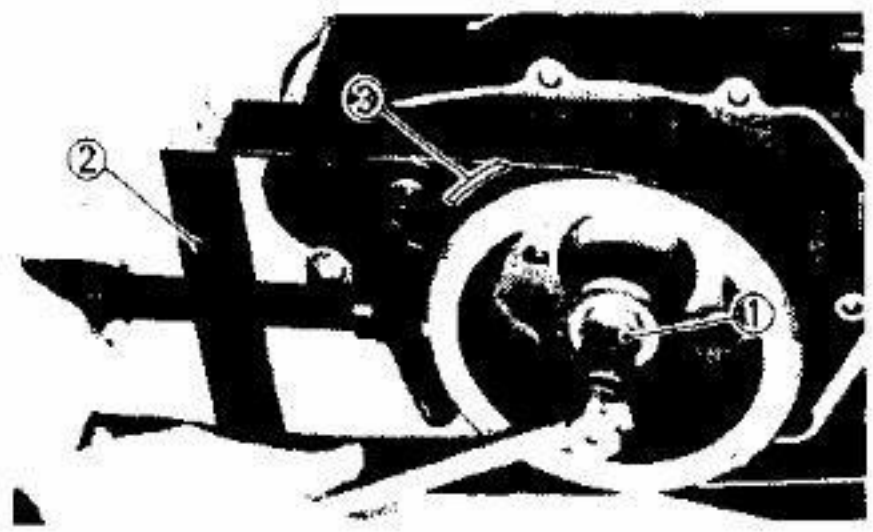

3. Loosen:
   - Bolt ①

   Use the Sheave Holder (YS-01880) ② to lock the rotor.

NOTE:

Do not allow the special tool to touch the projection ③ on the rotor.

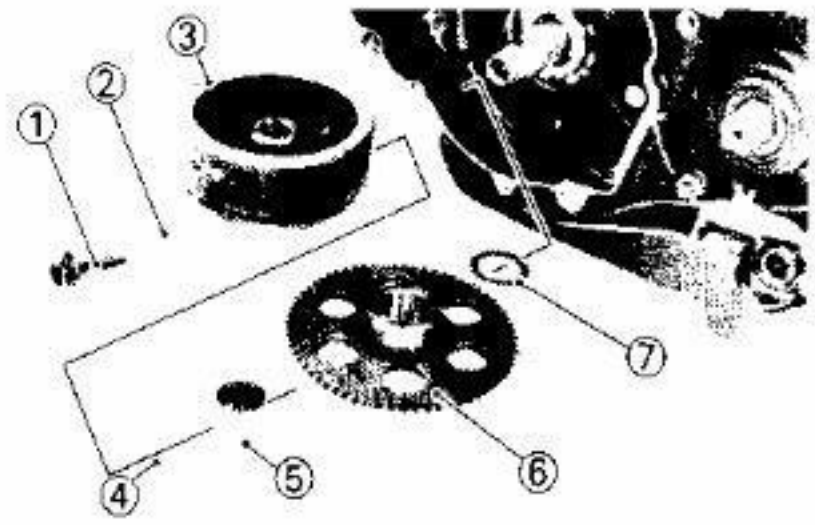

4. Remove:
   - Bolt ①
   - Washer ②
   - AC Generator rotor ③
   - Key ④
   - Bearing ⑤
   - Starter driven gear ⑥
   - Washer ⑦

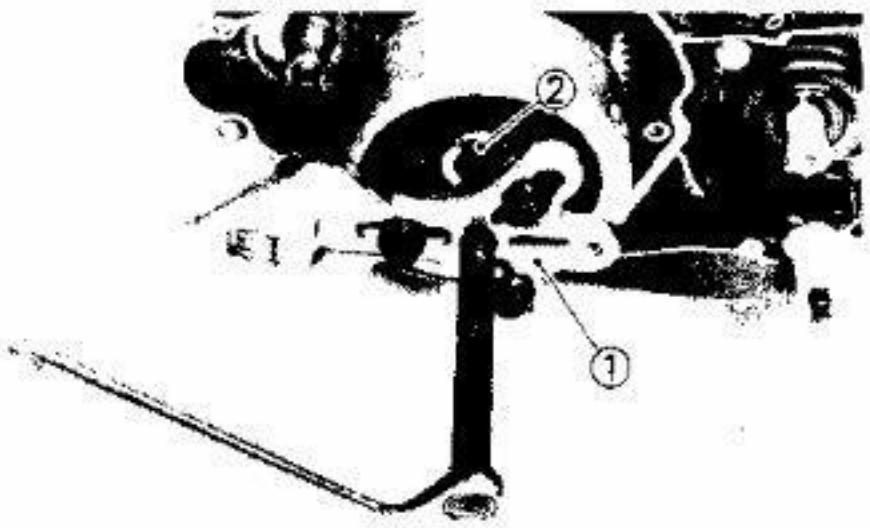

NOTE:

Use 3-Way Universal Puller ① (YU-33270) and Attachment ② (YM-1387) to remove the rotor.

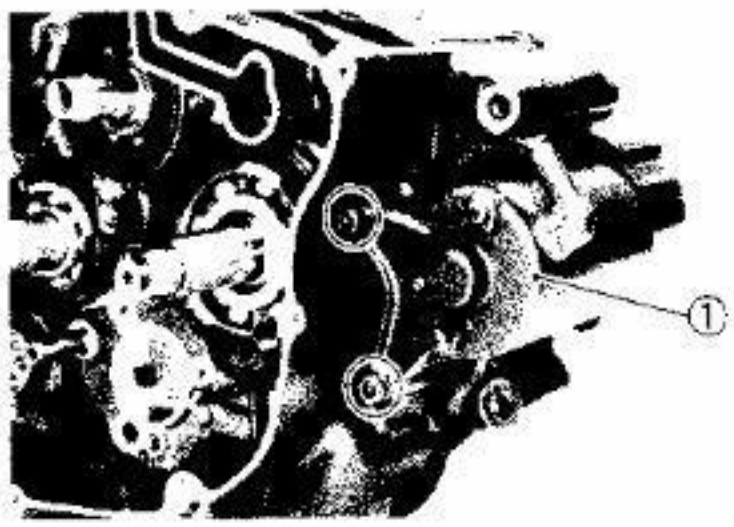

5. Remove:
   - Starter motor ①

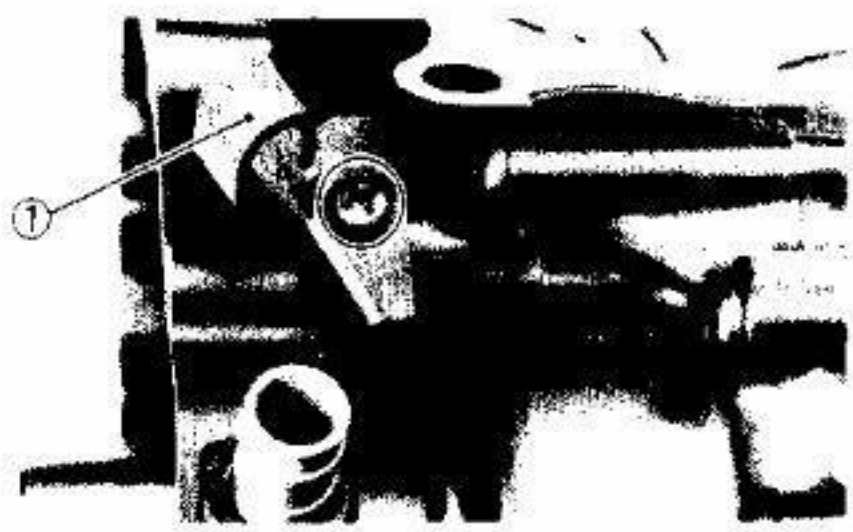

CRANKCASE

1. Remove:
   - Clutch cable bracket ①

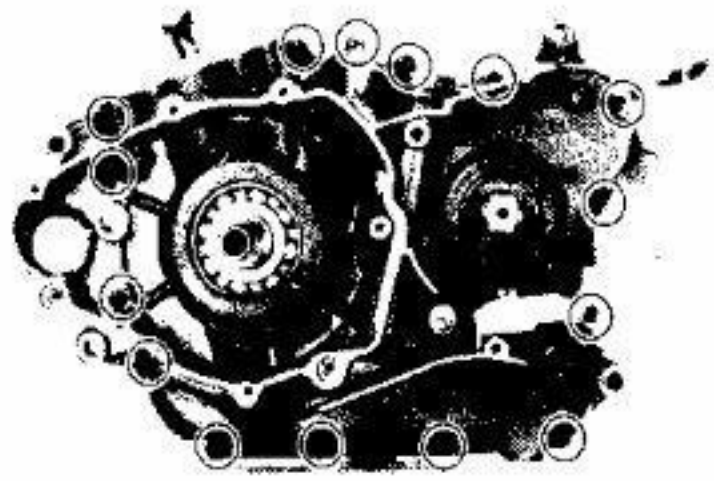

2. Remove:
   - Screws (Crankcase)

NOTE:

Loosen each screw 1/4 turn, and remove them after all are loosened.

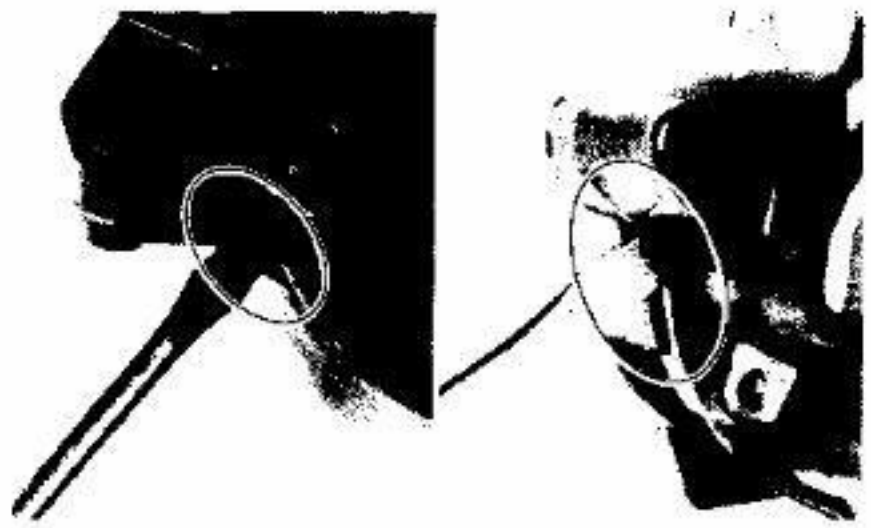

3. Remove:
   - Right crankcase

NOTE:

- For this removal, slits in the crankcase can be use as shown.
- Be sure not to give damages to the mating surface.

CAUTION:

Use soft hammer to tap on the case half. Tap only on reinforced portions of case. Do not tap on gasket mating surface. Work slowly and carefully. Make sure the case halves separate evenly. If one end "hangs up," take pressure off the push screw, realign, and start over. If the cases do not separate, check for a remaining case screw or fitting. Do not force.

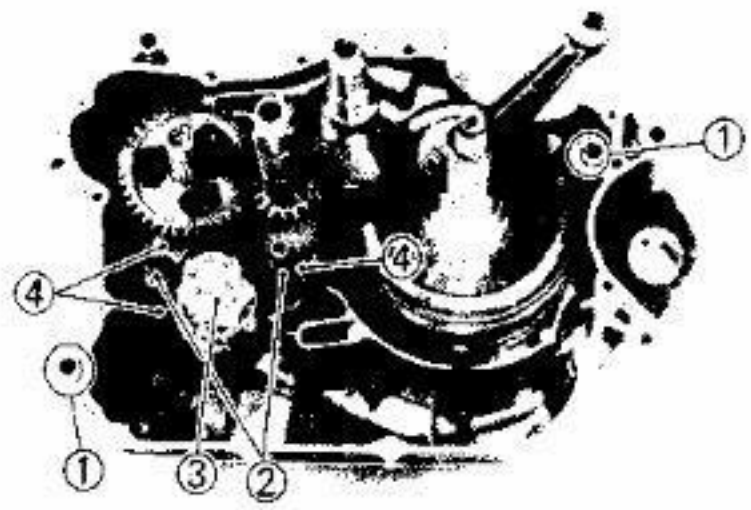

TRANSMISSION

1. Remove:
   - Dowel pins ①
   - Shift shafts ②
   - Shift cam ③
   - Shift forks ④

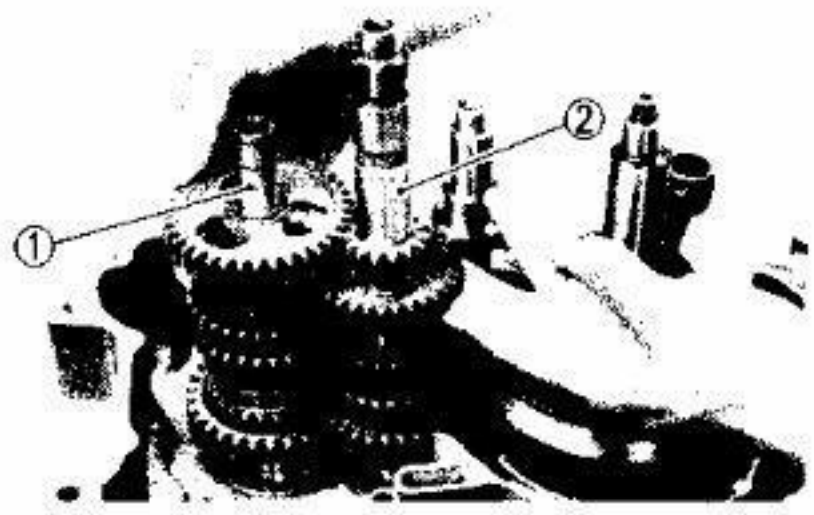

2. Remove:
   - Drive axle ① and main axle ② assembly

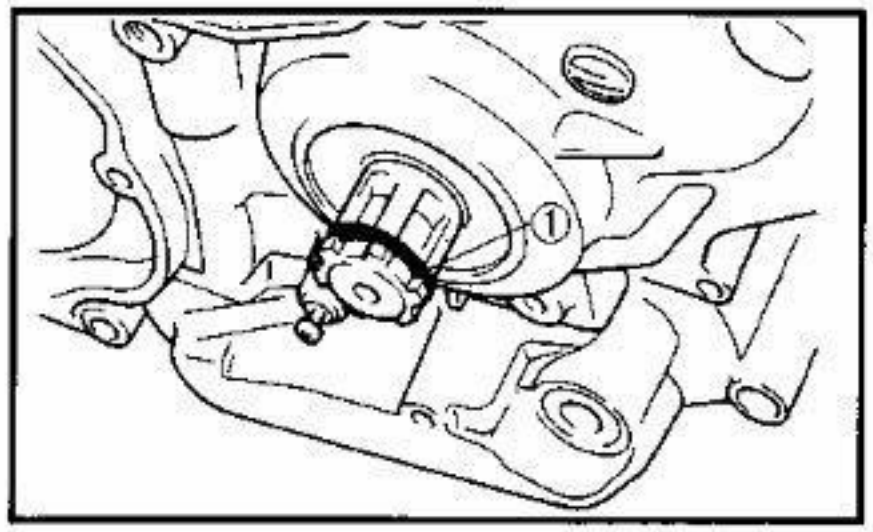

NOTE:

When removing the drive axle from the crankcase, pay attention to the crankcase oil seal lip. A recom mended practice is to fit the "O-ring" ① in the drive axle groove and apply grease over the fitted area before removing drive axle.

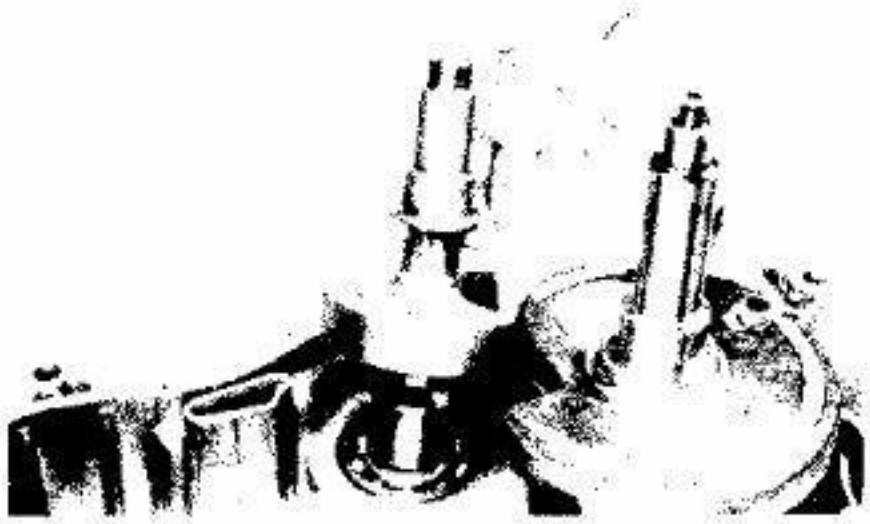

3. Remove:
   - Balancer shaft

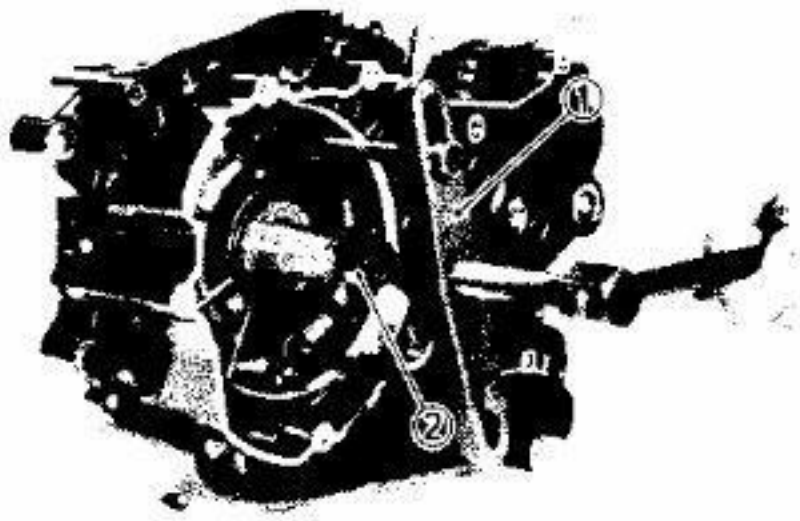

CRANKSHAFT

1. Remove:
   - Crankshaft

   Use Crankcase Separator ① (YU-01135) and Flywheel Puller Attachment (YM-1382) ②.

BEARINGS AND OIL SEALS

NOTE:

- It is not necessary to remove bearings and oil seals unless damaged. See Bearings and oil seals (INSPECTION AND REPAIR.)
- To facilitate bearing removal and installation, first heat the cases to approximately 95° ~ 125°C (205° ~ 257°F) using an oven. Bring the case up to proper temperature slowly.

1. Remove
   - Oil seals

CAUTION:

- **Use a screwdriver to pry out the seal.**
- **Place a piece of wood under the screwdriver to prevent damage to the case.**

2. Remove:
   - Bearings

INSPECTION AND REPAIR

CYLINDER HEAD

1. Remove:
   - Valve pads
   - Lifters

NOTE:

Identify each lifter and pad position very carefully so that it can be reinstalled in its original place.

2. Attach:
   - Valve Spring Compressor (YM-01253) ①

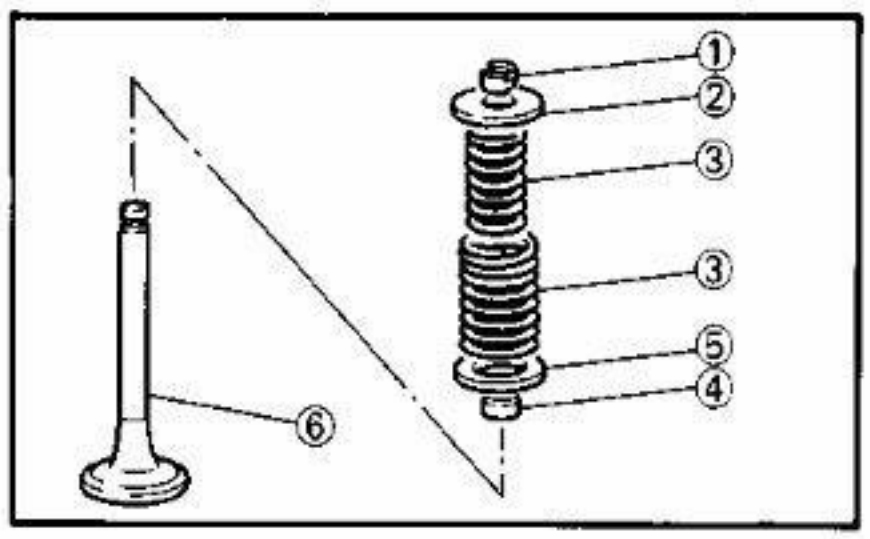

3. Remove:
   - Valve retainers ①
   - Valve spring seat ②
   - Valve springs ③
   - Oil seal ④
   - Valve spring seat ⑤
   - Valve ⑥

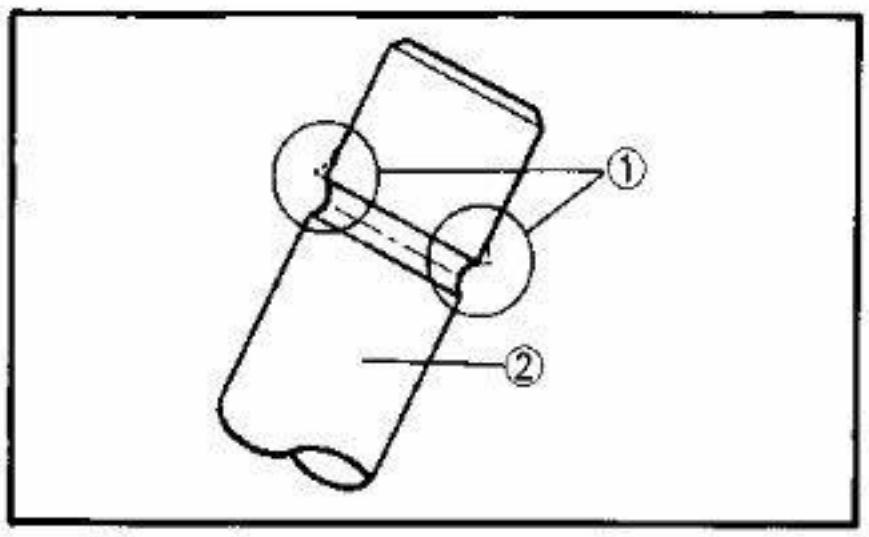

NOTE:

Deburr any deformed valve stem end. Use an oil stone to smooth the stem end.

① Deburr
② Valve stem

4. Eliminate:
   - Carbon deposit

   Use rounded scraper.

NOTE:

Do not use a sharp instrument and avoid damaging or scratching:
- Spark plug threads
- Valve seat
- Aluminum

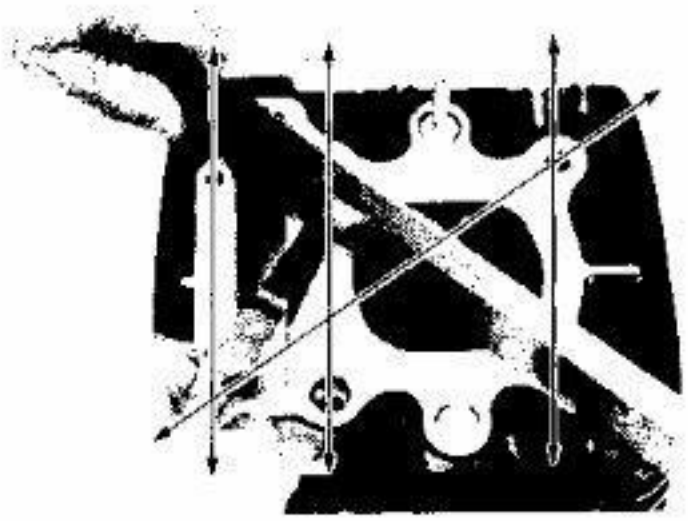

5. Measure:
   - Warpage
     Exceeds allowable limit→Resurface.

	Cylinder Head Warpage: **Less than 0.03 mm (0.0012 in)**

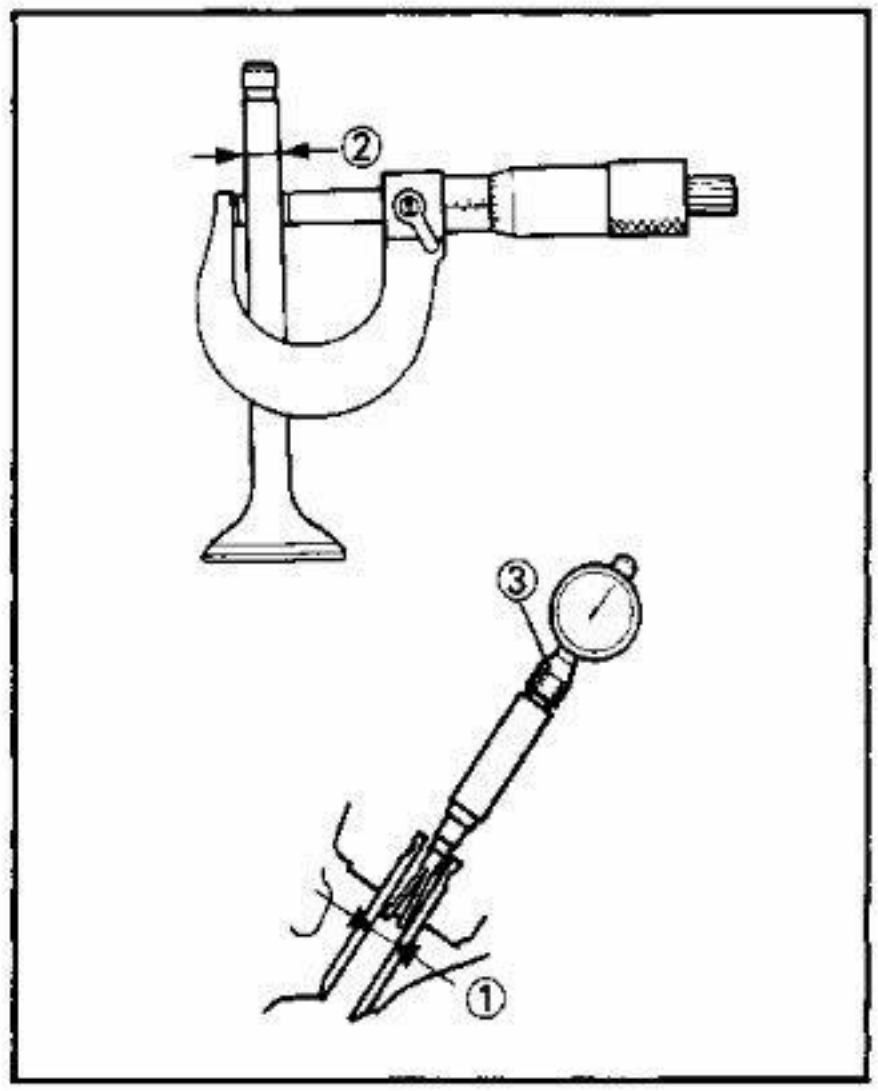

VALVE, VALVE GUIDE, VALVE SEATS, AND VALVE SPRING

Intake and Exhaust Valve

1. Measure:
   - Valve stem clearance

Valve stem clearance =
Valve guide inside diameter ① − Valve stem diameter ②

Out of specification→Replace valve or guide.

	Valve Stem Clearance
Intake	0.010 ~ 0.037 mm (0.0004 ~ 0.0015 in)
Exhaust	0.025 ~ 0.052 mm (0.0001 ~ 0.0020 in)

③ Bore gauge

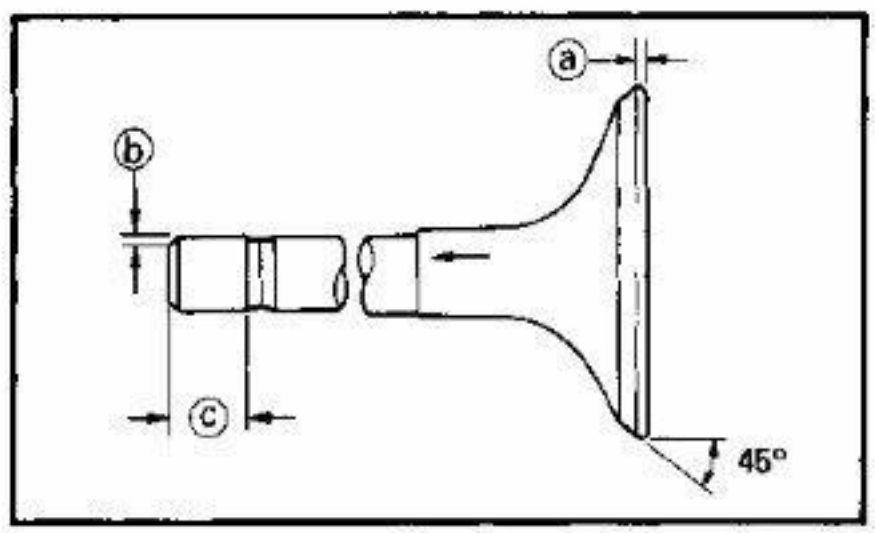

2. Measure:
   - Valve face
     Pitting/Wear→Regrind.
     Out of specification→Raplace.

	Minimum Thickness (Service Limit) ⓐ: **0.7 mm (0.028 in)** **Beveled ⓑ:** **0.5 mm (0.020 in)** **Minimum Length (Service Limit) ⓒ:** **4.0 mm (0.157 in)**

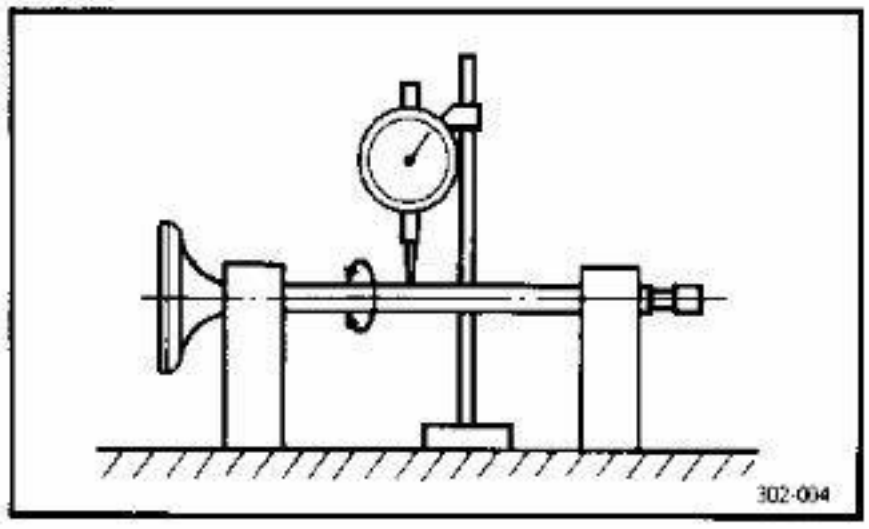

3. Measure:
   - Valve stem runout
     Out of specification → Replace.

Maximum Valve Stem Runout: 0.01 mm (0.0004 in)

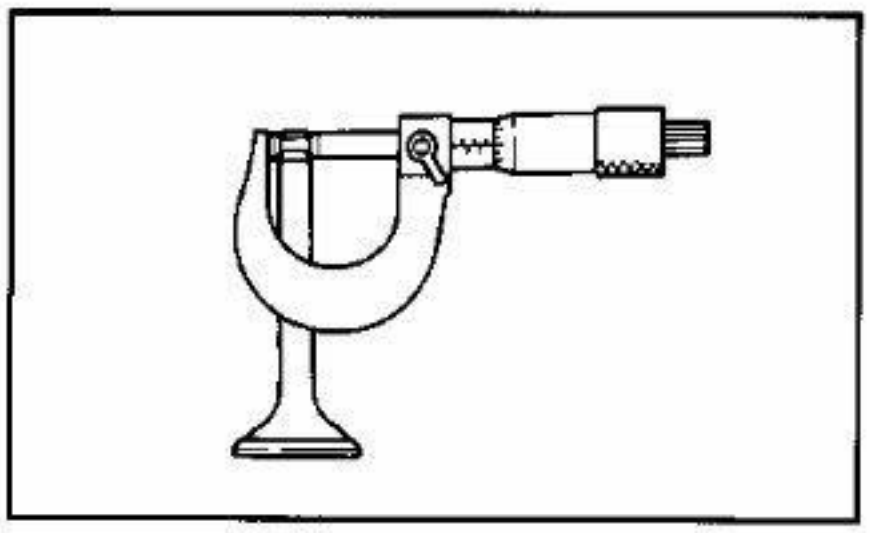

4. Inspect:
   - Valve stem end
     Mushroom shape/Larger diameter than rest of stem → Replace valve, valve guide, and oil seal.

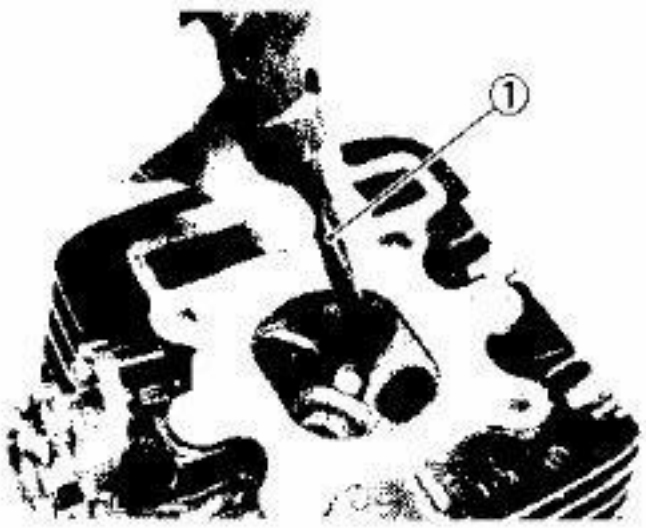

Valve Guide

NOTE:
- Always replace valve guide if valve is replaced.
- Always replace oil seal if valve is removed.

1. Remove:
   - Valve guide
     Use Valve Guide remover (YM-01122) ①.

NOTE:
Heat the cylinder head in an oven to 100°C (212°F) to ease valve guide removal and reinstallation and to maintain correct interference fit.

2. Inspect:
   - Valve guide
     Wear/Oil leakage → Replace.

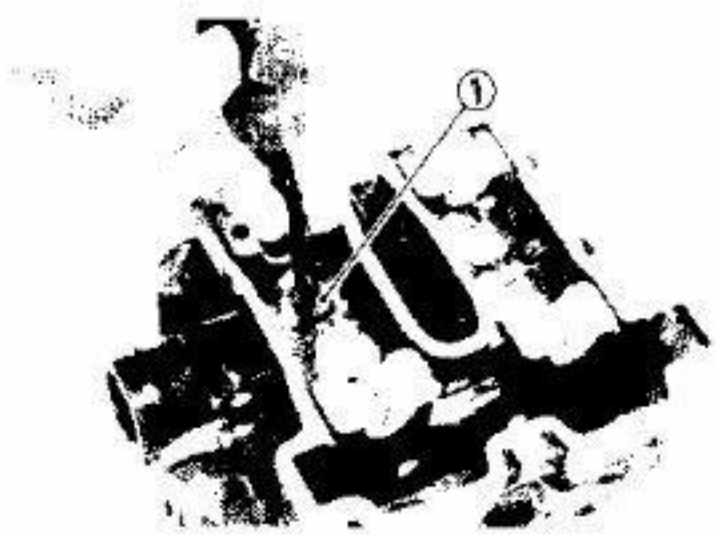

3. Install:
   - Valve guide (new)
     Use Valve Guide Installer (YM-4015) ①.

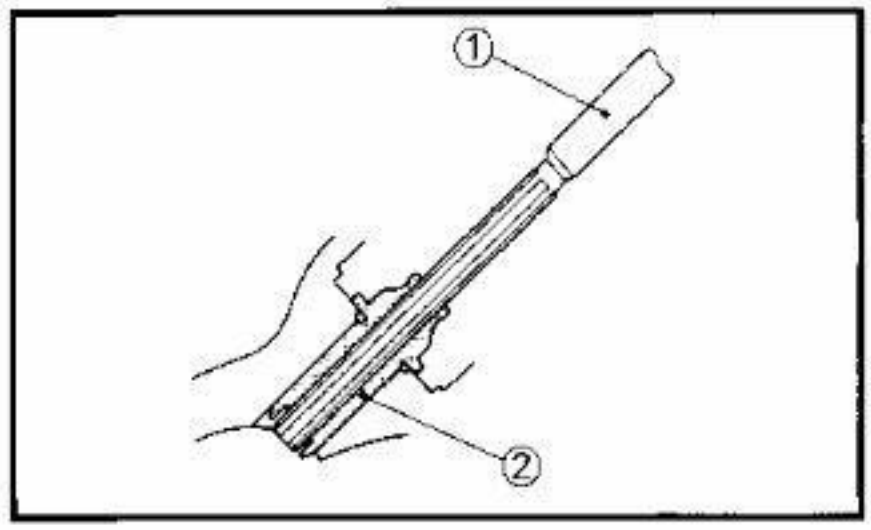

NOTE:

After installing valve guide ②:

- Use the 7 mm (0.28 in) Valve Guide Reamer ① (YM-01196) to obtain proper valve guide/ valve stem clearance.
- Recut the valve seat.

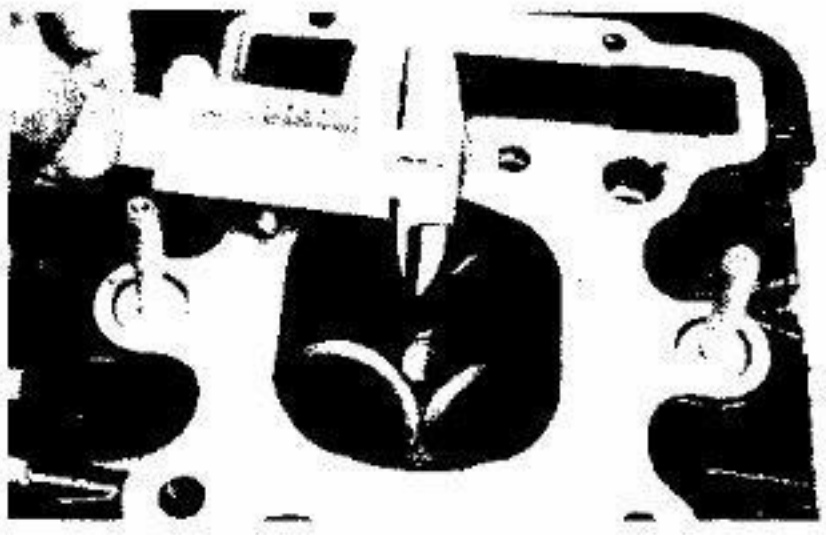

Valve Seat

1. Inspect:
   - Valve seat
     Pitting/Wear→Cut.
2. Measure:
   - Valve seat width
     Out of specification→Follow next steps.

	Standard Width	Wear Limit
Valve Seat Width	1.0±0.1 mm (0.039±0.0039 in)	2.0 mm (0.080 in)

3. Apply:
   - Mechanic's bluing dye (Dykem)
     To valve and seat.
4. Position:
   - Valve
     Into cylinder head.
     Press the valve through the valve guide and onto the valve seat to make a clear pattern.
5. Inspect:
   - Valve seat surface
     Wherever valve seat and valve face made contact, bluing will have been removed.
6. Measure:
   - Valve seat width
     Valve seat width must be uniform in contact area.
     Out of specification→Cut.
7. Cut valve seat.

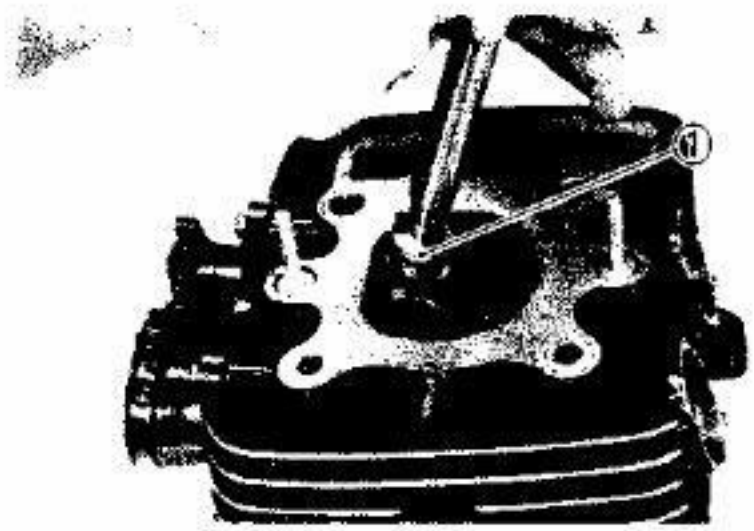

NOTE:

Cut valve seat using valve seat cutter ① if valve seat width exceeds limit or if valve seat is pitted or worn.

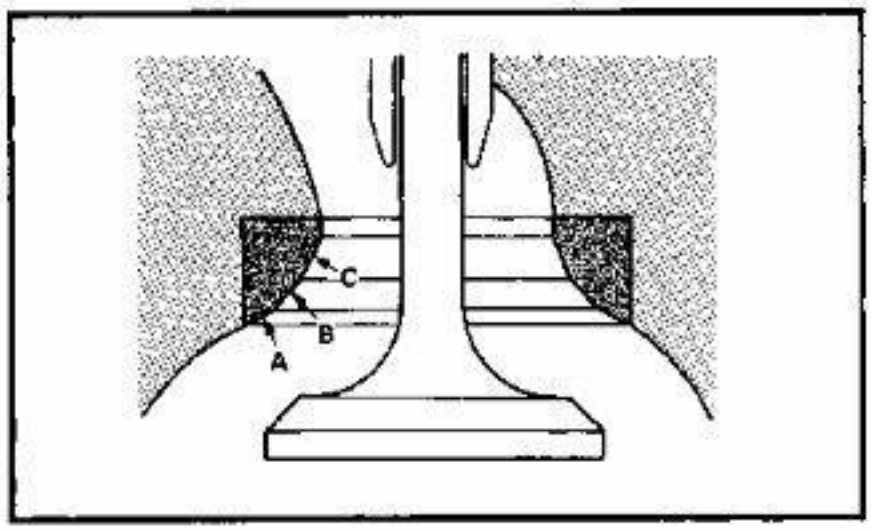

CAUTION:

When twisting cutter, keep an even downward pressure to prevent chatter marks.

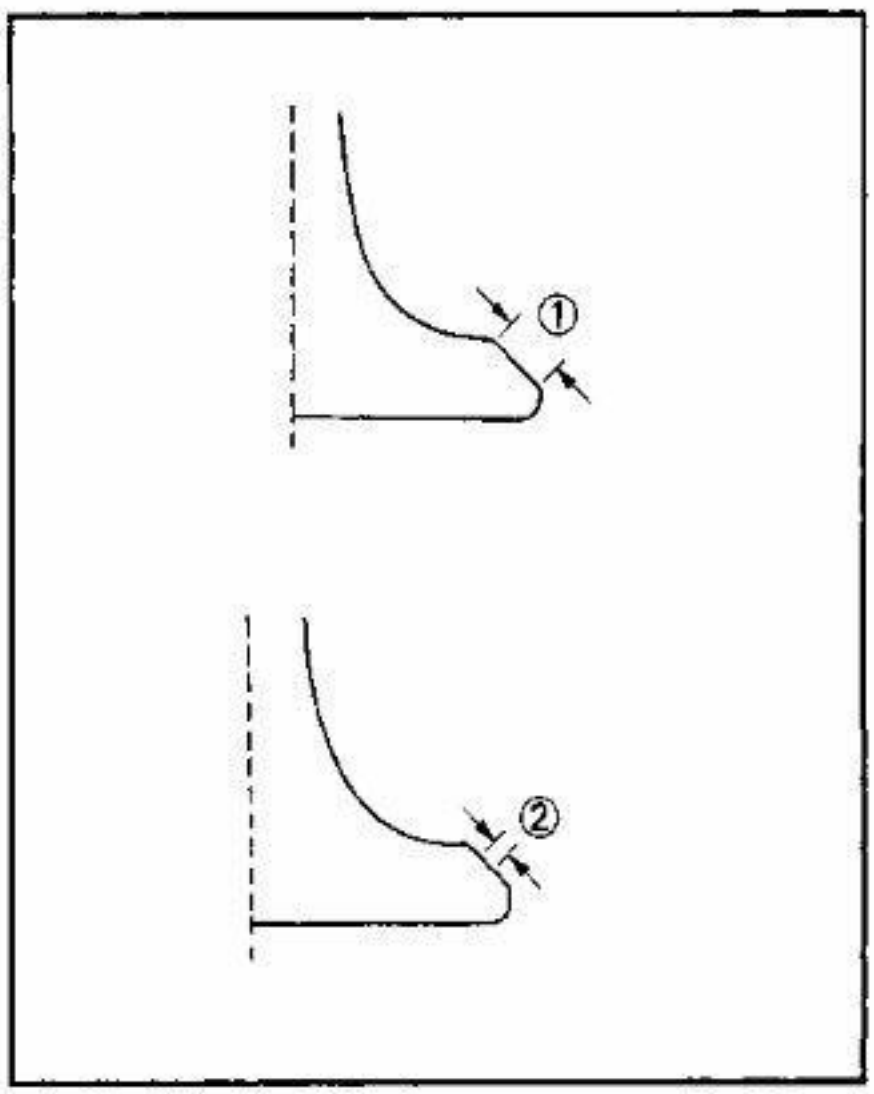

Valve seat recutting steps are necessary if:

- Valve seat is uniform around perimeter of valve face but too wide or too narrow or not centered on valve face.

Cut Valve Seat As Follows:	
Section A	30° Cutter
Section B	45° Cutter
Section C	60° Cutter

- Valve face indicates that valve seat is centered on valve face but is wide ①.

Valve Seat Cutter Set		Desired Result
Use	30° Cutter	to reduce valve seat width.
	60° Cutter	

- Valve seat is in the middle of the valve face but too narrow ②.

Valve Seat Cutter Set		Desired Result
Use	45° Cutter	to achieve a uniform valve seat width (Standard specifications).

- Valve seat is too narrow and right up near valve margin ③.

Valve Seat Cutter Set		Desired Result
Use	30° Cutter, first	to obtain correct seat width.
	45° Cutter	

- Valve seat is too narrow and is located down near the bottom edge of the valve face ④.

Valve Seat Cutter Set		Desired Result
Use	60° Cutter, first	to obtain correct seat width.
	45° Cutter	

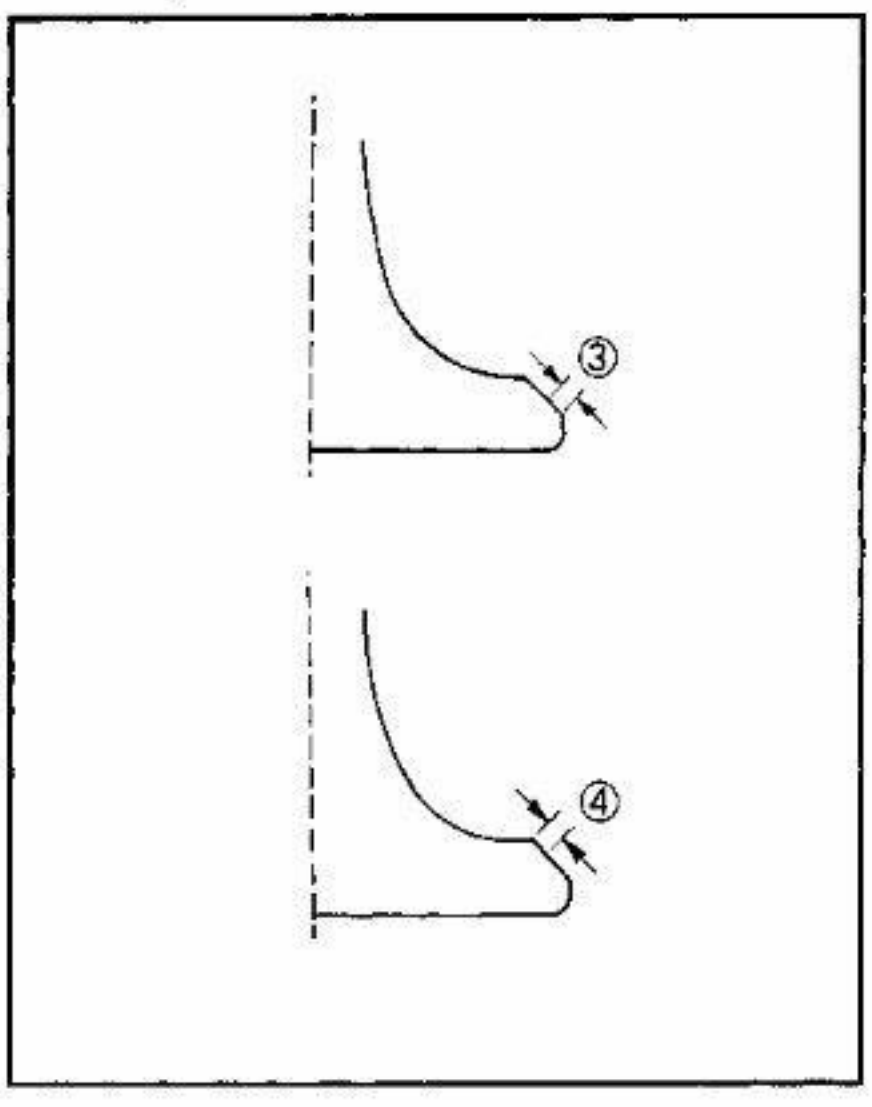

Valve/Valve Seat Assembly Lapping

NOTE:

Lap valve/valve seat assembly if:
- Valve face/valve seat are used or severely worn.
- Valve and valve guide has been replaced.
- Valve seat has been cut.

1. Apply:
   - Coarse lapping compound (Small amount)
     To valve face.
2. Position
   - Valve
     In cylinder head.
3. Rotate:
   - Valve
     Turn until valve and valve seat are evenly polished, then clean off compound.
4. Apply:
   - Fine lapping compound (Small amount)
     To valve face.
5. Repeat steps 2 and 3.

NOTE:

Be sure to clean off all compound from valve face after every lapping operation.

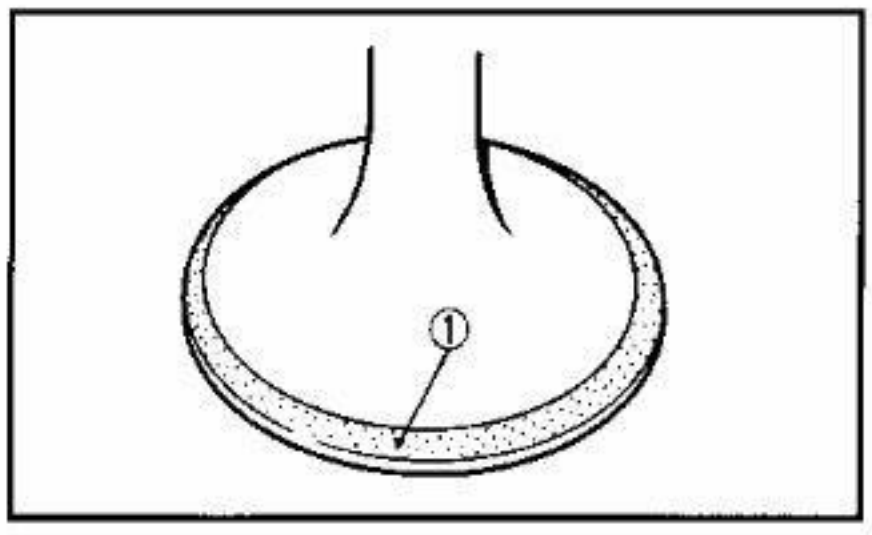

6. Inspect:
   - Valve face
     Not yet uniformly smooth→Repeat procedure from step 1.
7. Apply:
   - Mechanics bluing dye (Dykem) ①
     To valve face and seat.
8. Rotate:
   - Valve
9. Inspect:
   - Valve face
     Valve must make full seat contact indicated by grey surface all around. The valve face where bluing was removed.
     Faulty contact→Replace.
     (See procedure below)

10. Apply:
    - Solvent
      Into each intake and exhaust port.

NOTE:

Pour solvent into intake and exhaust ports only after completion of all valve work and assembly of all head parts.

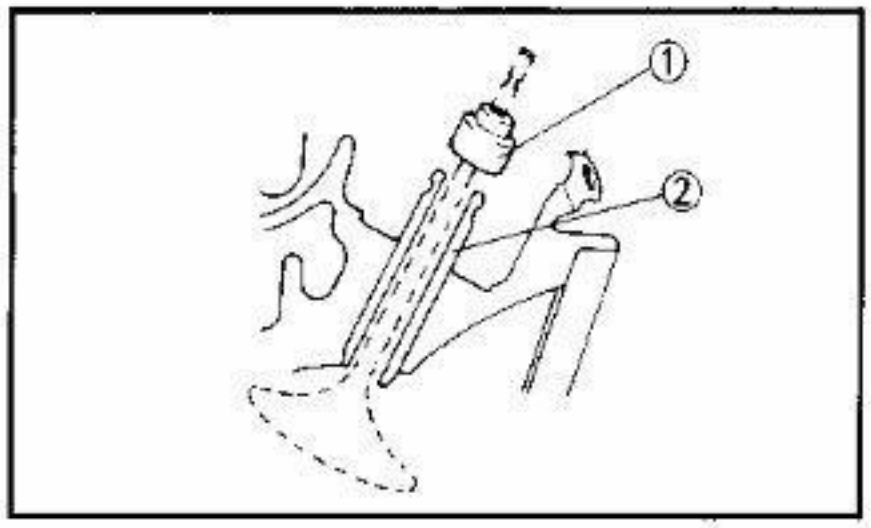

11. Check:
    - Valve seals ①
      Leakage past valve seat → Replace valve.

② Valve guide

Relapping steps:
- Disassemble head parts.
- Repeat lapping steps using fine lapping compound.
- Clean all parts thoroughly.
- Reassemble and check for leakage again using solvent.
- Repeat steps as often as necessary to effect a satisfactory seal.

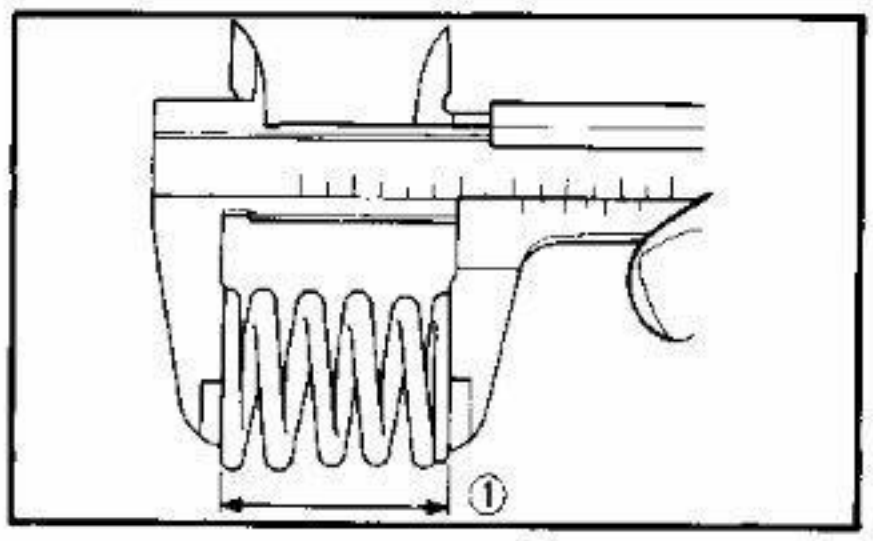

Valve Spring

1. Measure:
    - Valve spring free length ①
      Out of specification → Replace.

Valve Spring Free Length			
Inner Spring		Outer Spring	
Standard	Wear limit	Standard	Wear limit
37.4 mm (1.47 in)	35.4 mm (1.39 in)	39.85 mm (1.57 in)	37.85 limit (1.49 in)

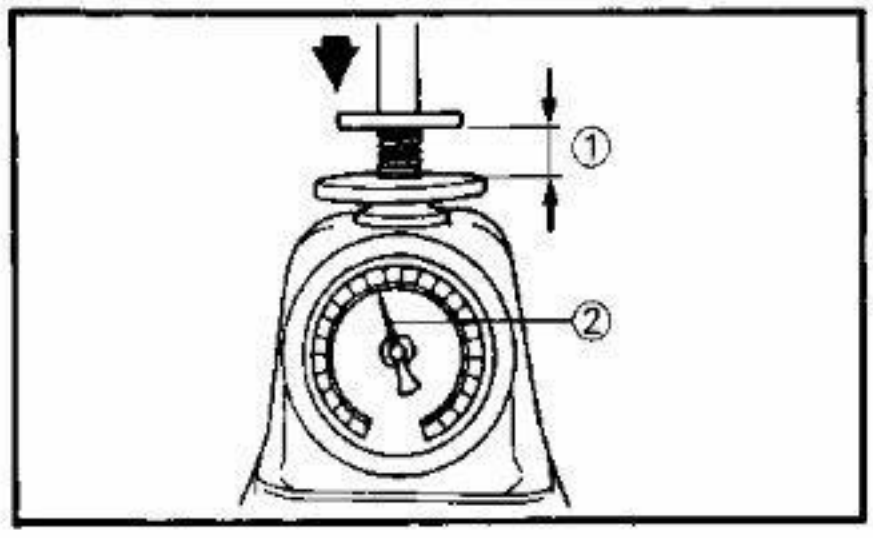

2. Measure:
   - Valve spring installed force ②
     Out of specification→Replace.

① Installed length

Valve Spring Installed Force			
Inner Spring		Outer Spring	
①	②	①	②
31.8 mm (1.25 in)	6.40 kg (14.1 lb)	33.8 mm (1.33 in)	13.1 kg (28.88 lb)

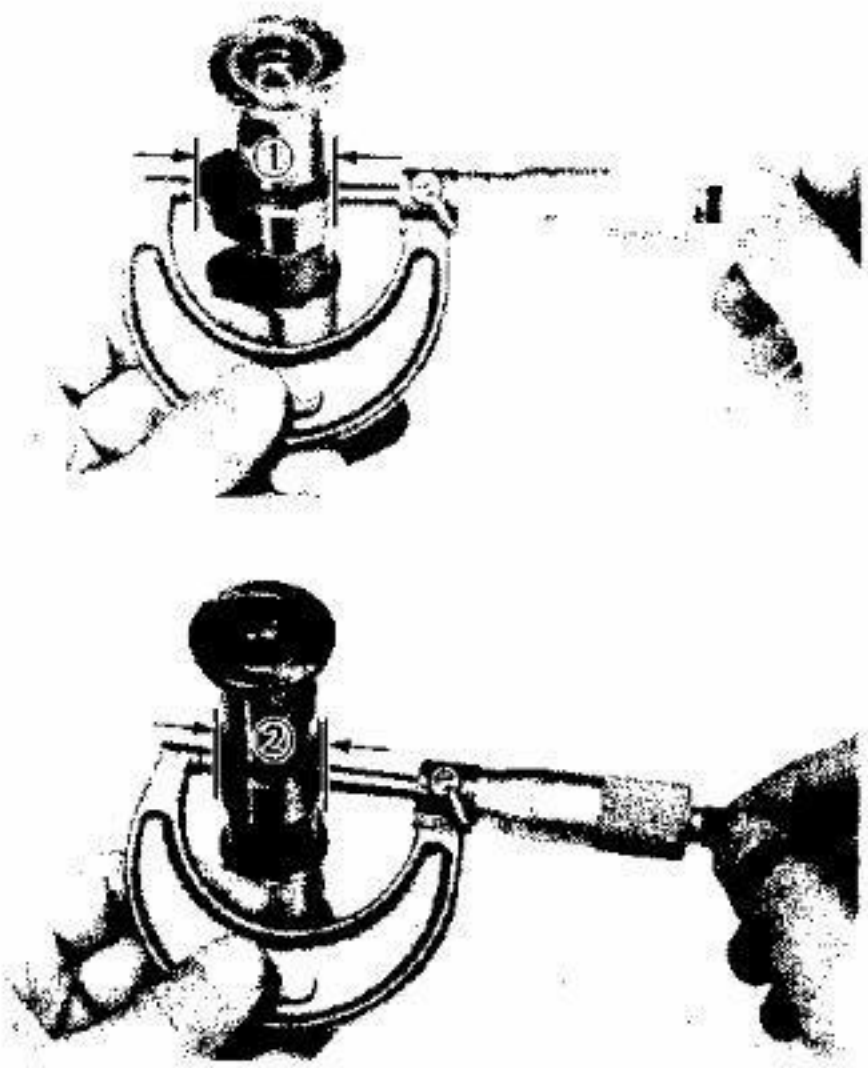

CAMSHAFT

Camshaft

1. Measure:
   - Large cam lobe length ①
   - Small cam lobe length ②
     Use a micrometer.
     Out of specification→Replace.

	Intake	Exhaust
①	34.25 – 34.35 mm (1.348 – 1.352 in)	34.25 – 34.35 mm (1.348 – 1.352 in)
②	27.95 – 28.05 mm (1.100 – 1.104 in)	27.95 – 28.05 mm (1.100 – 1.104 in)

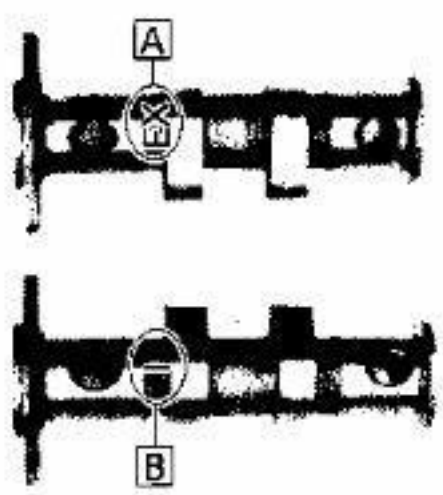

Camshaft/Cap Clearance Measurement

1. Install:
   - Camshaft
2. Position:
   - Strip of Plastigage® (YU-33210)
     Onto camshaft.

A For Exhaust
B For Intake

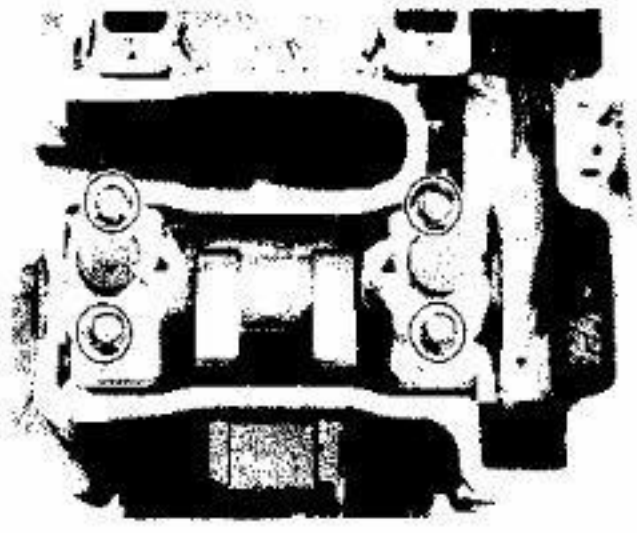

3. Install:
   - Camshaft caps
4. Tighten:
   - Bolts (Camshaft cap)

Bolts (Camshaft Cap):
10 Nm (1.0 m•kg, 7.2 ft•lb)

NOTE:

Do not turn the camshaft when measuring clearance with Plastigage.

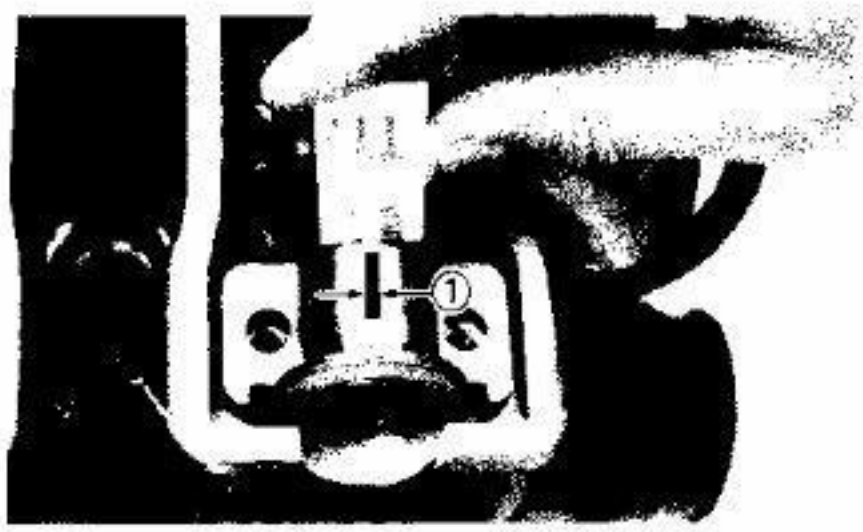

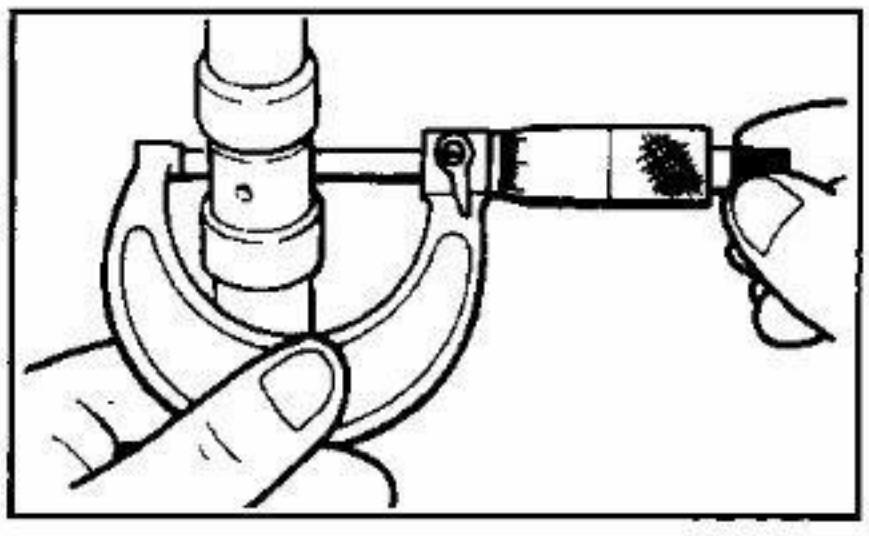

5. Remove:
   - Camshaft caps
6. Measure:
   - Width of Plastigage® ①
     Out of specification→Follow step 7.

Camshaft-to-cap Clearance:
Standard: 0.020 ~ 0.054 mm (0.0008 ~ 0.0021 in)
Maximum: 0.150 mm (0.006 in)

7. Measure:
   - Camshaft bearing surface diameter
     Use a micrometer.
     Out of specification→Replace camshaft.
     Within specification→Replace cylinder head.

Camshaft Bearing Surface Diameter:
Standard: 24.967 ~ 24.980 mm (0.9830 ~ 0.9835 in)
Cam Cap Inside Diameter:
Standard: 25.000 ~ 25.021 mm (0.9843 ~ 0.9851 in)

CAM CHAIN

1. Inspect:
   - Cam chain
     Chain stretch/Cracks→Replace.

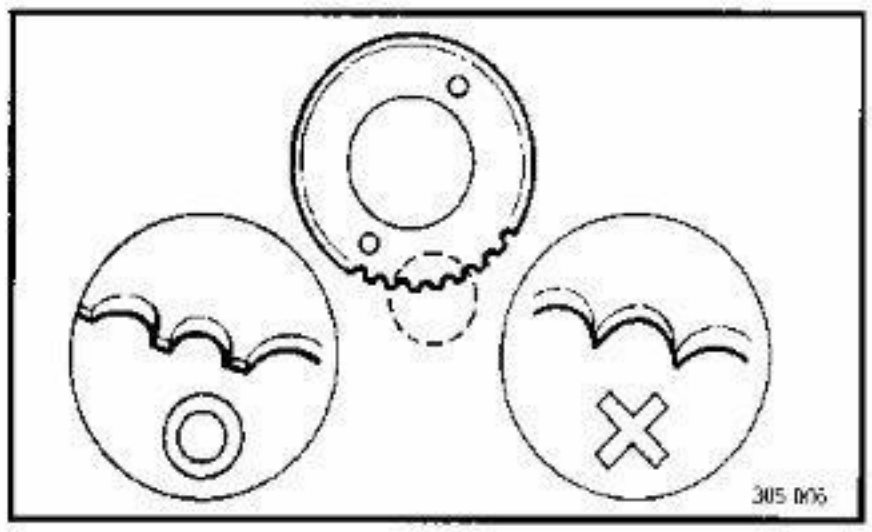

CAM SPROCKET AND DRIVE SPROCKET

1. Inspect:
   - Cam sprockets
   - Cam drive sprocket
     Wear/Damage→Replace.

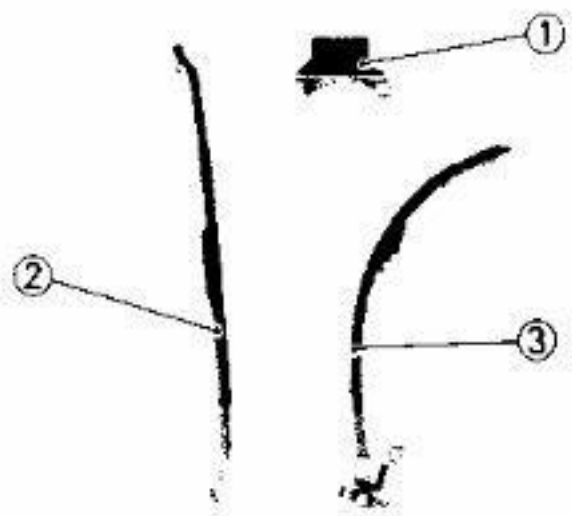

CHAIN GUIDE

1. Inspect:
   - Chain guide (Upper) ①
   - Chain guide (Exhaust) ②
   - Chain guide (Intake) ③
     Wear→Replace.

CYLINDER AND PISTON

1. Inspect:
   - Cylinder and Piston walls
     Vertical scratches→Rebore or Replace cylinder and piston.

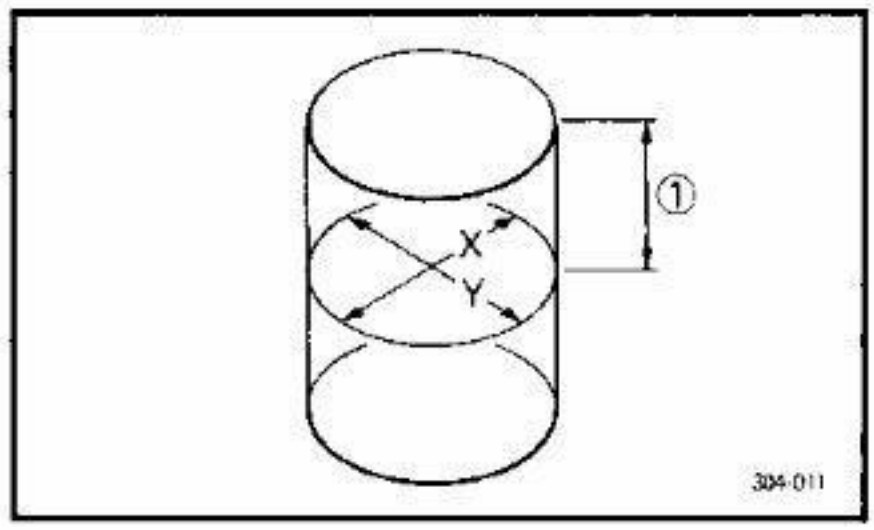

2. Measure:
   - Piston-to-cylinder clearance

Piston-to-cylinder clearance measurement steps:

First step:

- Measure the cylinder bore "C" with a Cylinder Bore Gauge.
  ① 40 mm (1.57 in) from the cylinder top

NOTE:

Measure the cylinder bore "C" in parallel to and at right angles to the crankshaft. Then, calculate the average of the measurements.

	Standard	Wear Limit
Cylinder Bore "C":	72.97 ~ 73.02 mm (2.873 ~ 2.875 in)	73.1 mm (2.878 in)

$$C = \frac{X + Y}{2}$$

- If out of specification, rebore or replace cylinder, and replace piston and piston rings as a set.

2nd step:

- Measure the piston skirt diameter "P" with a Micrometer.
  ② 1 mm (0.04 in) from the piston bottom edge

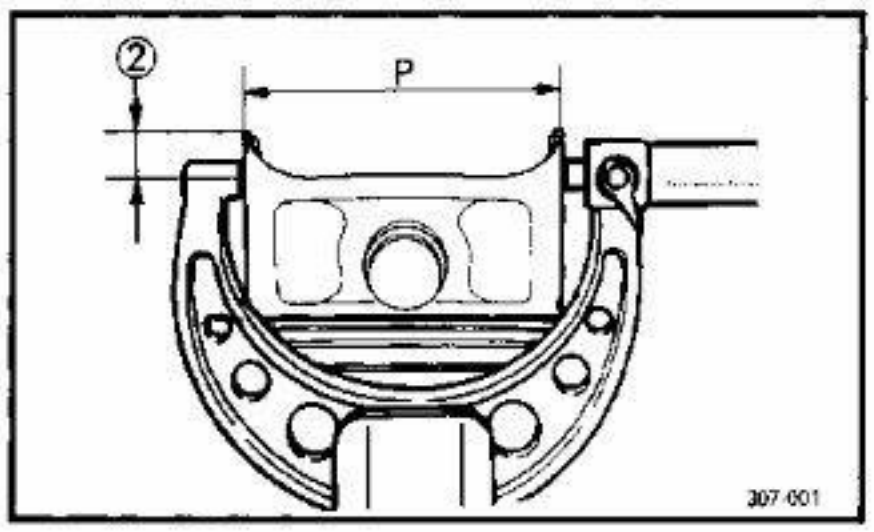

	Piston size P
Standard	72.92 ~ 72.97 mm (2.871 ~ 2.873 in)
Oversize 2	73.5 mm (2.894 in)
Oversize 4	74.0 mm (2.913 in)

- If out of specification, replace piston and piston rings as a set.

3rd step:

- Calculate the piston-to-cylinder clearance with following formula:

Piston-to-cylinder Clearance =
Cylinder bore "C" –
Piston skirt diameter "P"

•If out of specification, rebore or replace cylinder, and replace piston and piston rings as a set.

Piston-to-cylinder Clearance:
0.04 ~ 0.06 mm (0.0016 ~ 0.0024 in)
Limit: 0.1 mm (0.004 in)

Piston Ring

1. Measure:
   •Ring side clearance
   Use a feeler gauge.
   Out of specification → Replace piston and/or piston rings.

NOTE:

•Clean carbon from piston ring grooves and rings before measuring side clearance.

	Side Clearance	
	Standard	Limit
Top Ring	0.04 ~ 0.08 mm (0.0016 ~ 0.0031 in)	0.10 mm (0.0039 in)
2nd Ring	0.03 ~ 0.07 mm (0.0012 ~ 0.0028 in)	0.11 mm (0.0043 in)

2. Position:
   •Piston ring
   Into cylinder.

NOTE:

Insert a ring into cylinder, and push it approximarely 20 mm (0.8 in) into cylinder. Push ring with piston crown so that ring will be at a right angle to cylinder bore.

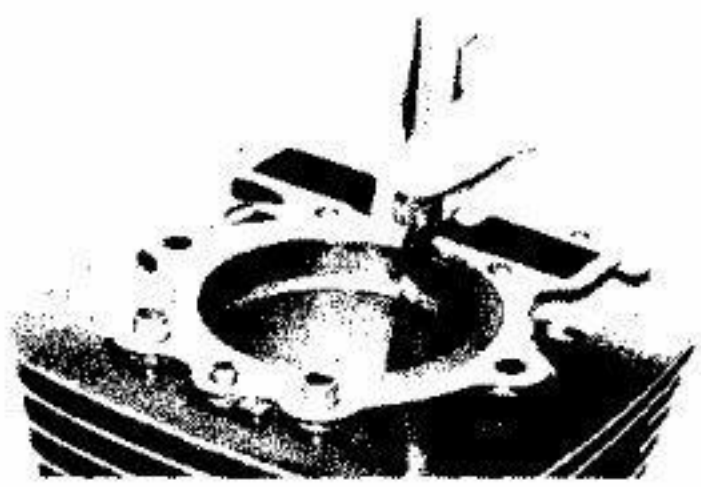

3. Measure:
   •Ring end gap
   Out of specification → Replace.

NOTE:

You cannot measure end gap on expander spacer of oil control ring. If oil control ring rails show excessive gap, replace all three rings.

	End Gap	
	Standard	Limit
Top Ring	0.20 ~ 0.35 mm (0.008 ~ 0.014 in)	0.50 mm (0.020 in)
2nd Ring	0.20 ~ 0.35 mm (0.008 ~ 0.014 in)	0.50 mm (0.020 in)
Oil Ring	0.3 ~ 0.9 mm (0.012 ~ 0.035 in)	–

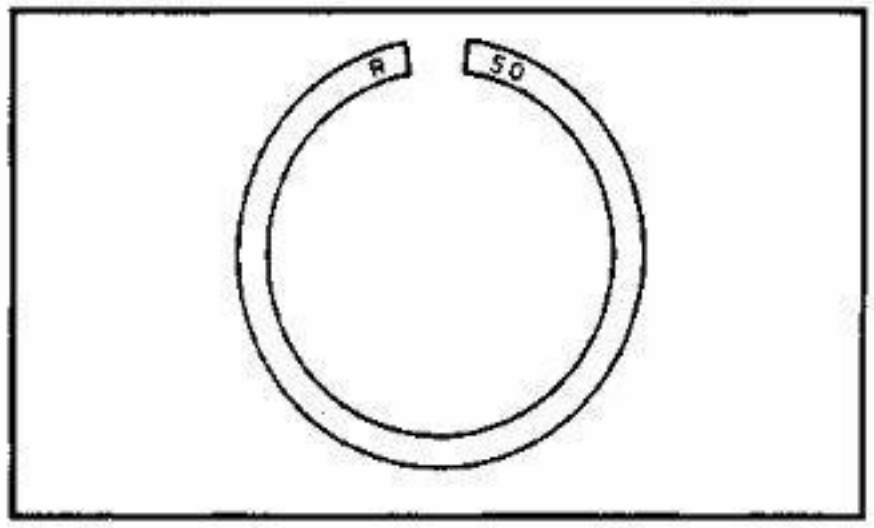

Piston Ring Oversize

•Top and 2nd piston ring

Oversize top and middle ring sizes are stamped on top of ring.

Oversize 2	0.50 mm (0.0197 in)
Oversize 4	1.00 mm (0.0394 in)

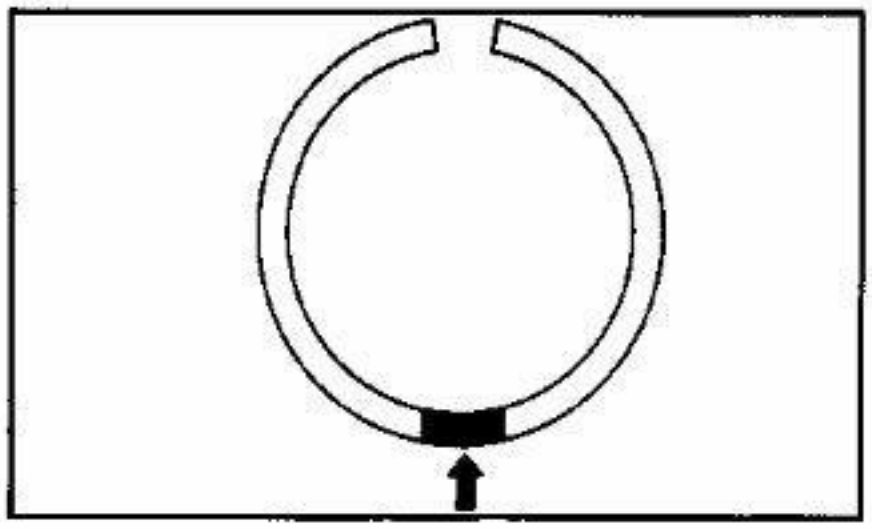

•Oil control ring

Expander spacer of bottom ring (oil control ring) is color-coded to identify sizes.

Size	Color
Oversize 2	Blue
Oversize 4	Yellow

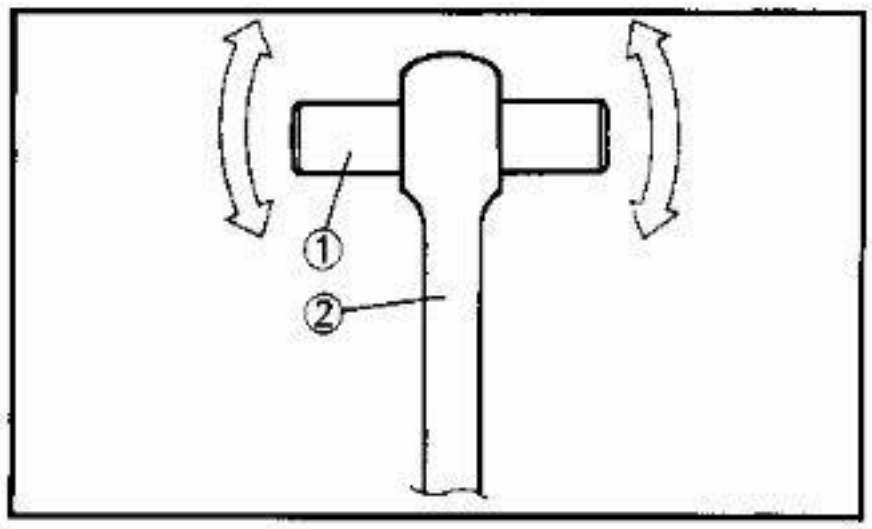

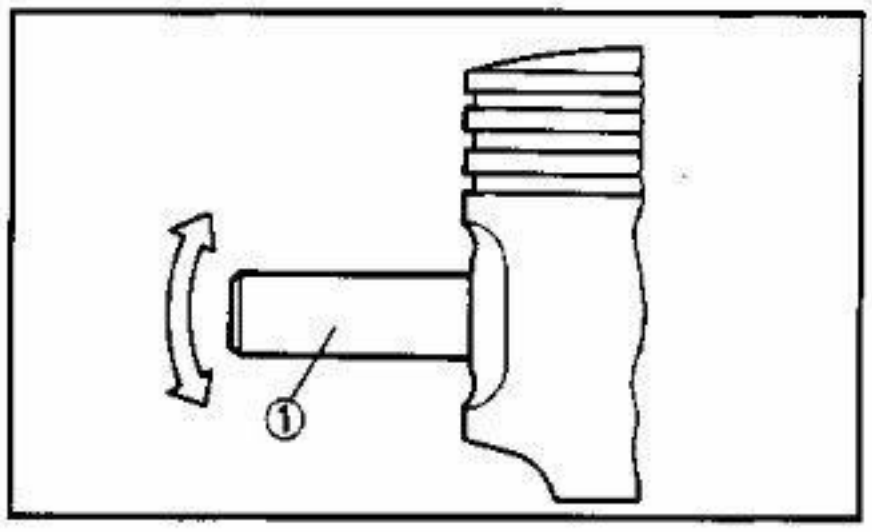

Piston Pin

1. Lubricate:
   •Piston pin (Lightly)
2. Install:
   •Piston pin ①
   Into small end of connecting rod ②.
3. Check:
   •Free play
   Free play→Inspect connecting rod for wear.
   Wear→Replace connecting rod and piston pin.
4. Position:
   •Piston pin ①
   Into piston.
5. Check:
   •Free play
   When pin is in place in piston.
   Free play→Replace piston pin and/or piston.

CRANKSHAFT

Crankshaft

1. Measure:
   - Assembly width "A"
     Use the V-Blocks.
     Out of specification → Replace.

Assembly Width "A":
58.95 ~ 59.00 mm
(2.321 ~ 2.323 in)

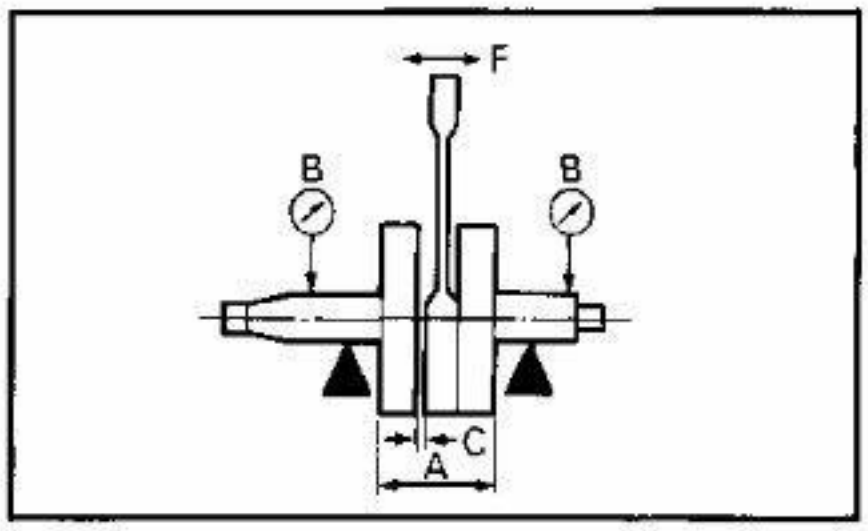

   - Runout "B"
     Use the V-Blocks and Dial Gauge.
     Out of specification → Correct any misalignment.

Runout Limit "B":
0.03 mm (0.001 in)

   - Big end side clearance "C"
     Use a Feeler Gauge.
     Out of specification → Disassemble the crankshaft and replace worn parts, then reassemble the crankshaft.

Big End Side Clearance "C":
0.25 ~ 0.75 mm (0.010 ~ 0.030 in)

   - Small end free play "F"
     Use the V-Blocks and Dial Gauge.
     Out of specification → Disassemble the crankshaft, and replace the defective parts, then reassemble the crankshaft.

Small End Free Play "F":
Standard: 0.8 mm (0.031 in)
Limit: 2 mm (0.08 in)

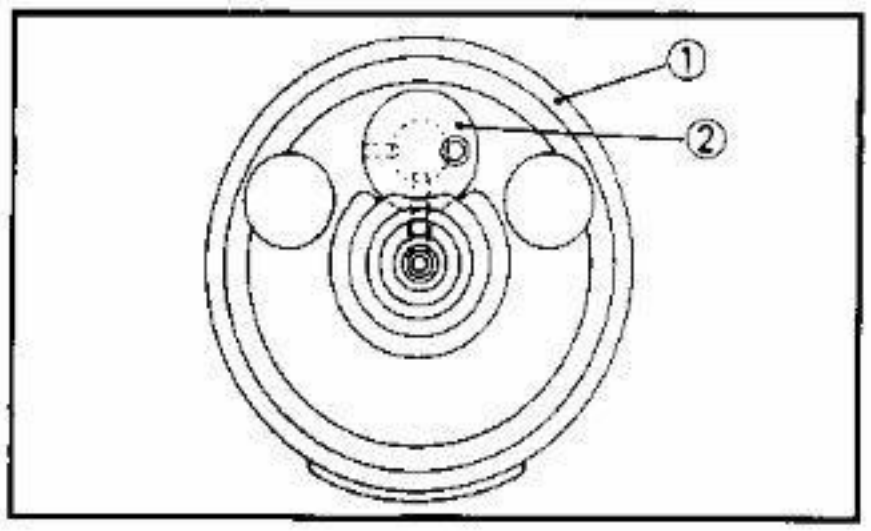

Crankshaft Reassembly

1. Install:
   - Crank web ①
   - Crank pin ②

CAUTION:

The crankshaft oil passage and the crank pin oil passage MUST be properly alined. The deviation of one center line from the other must be LESS THAN 1 mm (0.04 in).

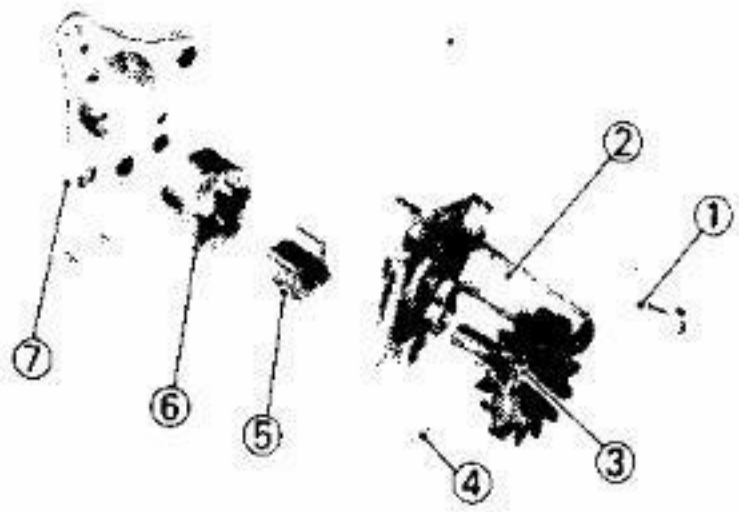

OIL PUMP

1. Remove:
   - Screw ①
   - Pump cover ②
   - Pump shaft ③
   - Pin ④
   - Inner rotor ⑤
   - Outer rotor ⑥
   - Pump housing ⑦

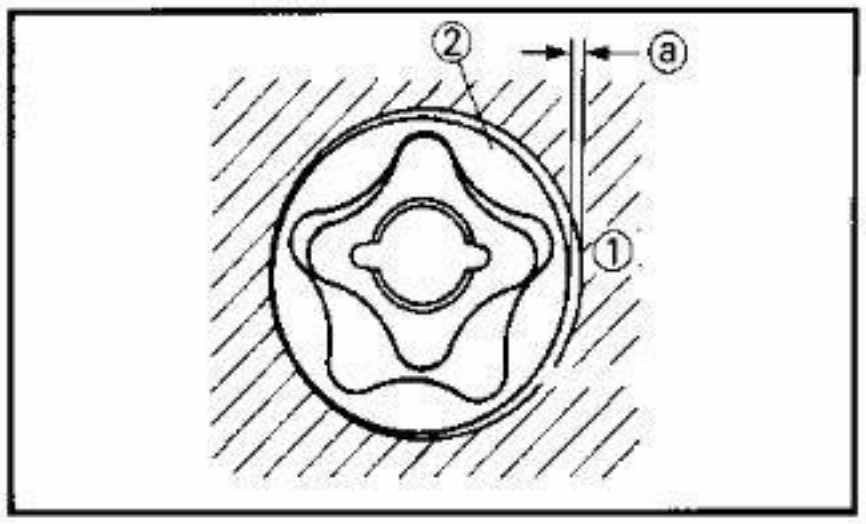

2. Measure:
   - Housing ①/Outer rotor ② clearance ⓐ
     Use a Feeler Gauge.
     Out of specification→Replace oil pump assembly.

Side Clearance Limit:
0.03 ~ 0.09 mm
(0.0012 ~ 0.0035 in)

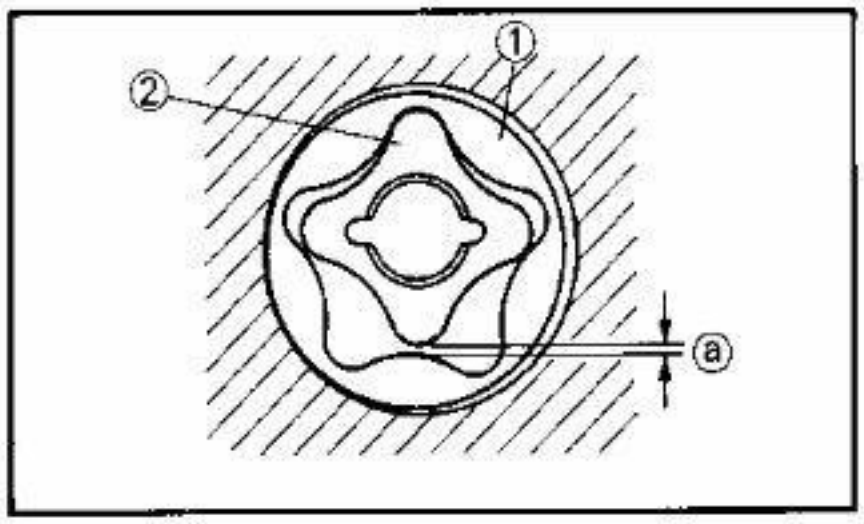

3. Measure:
   - Outer rotor ①/Inner rotor ② clearance ⓐ
     Use a Feeler Gauge.
     Out of specification→Replace oil pump assembly.

Tip Clearance Limit:
0.15 mm (0.0059 in)

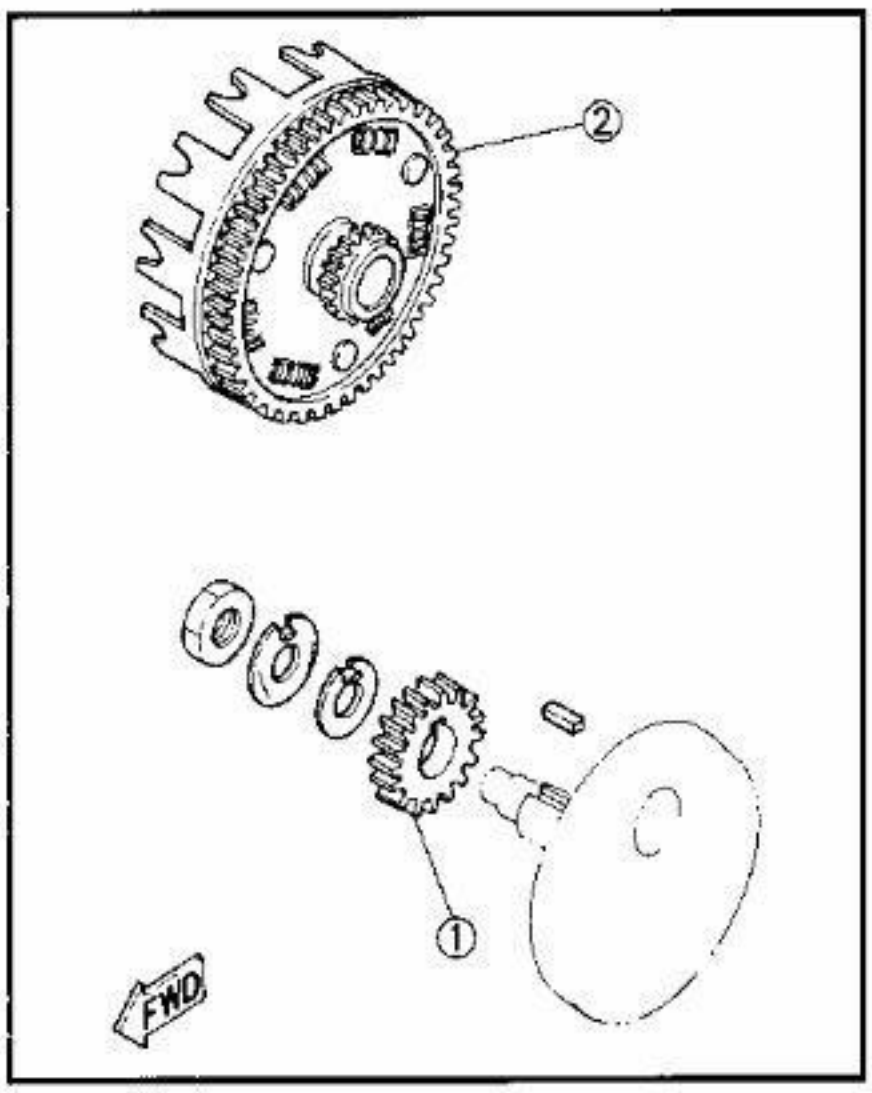

PRIMARY GEARS

1. Inspect:
   - Primary drive gear ①
   - Primary driven gear ②
     Wear/Damage→Replace both gears.
     Excessive noises during operation→Replace both gears.

Primary reduction ratio:		
No. of teeth		Ratio
Drive	Driven	
23	72	3.130

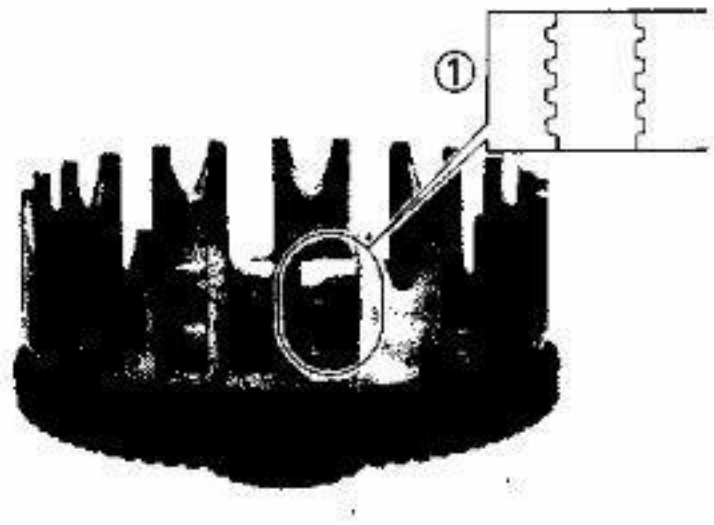

CLUTCH

Clutch Housing

1. Inspect:
   - Clutch housing dogs ①
     Cracks/Pitting (edges):
     Moderate→Deburr.
     Severe→Replace clutch housing.

NOTE:

Pitting on friction plate dogs of clutch housing will cause erratic operation.

2. Inspect:
   - Clutch housing bearing
     Damage→Replace.

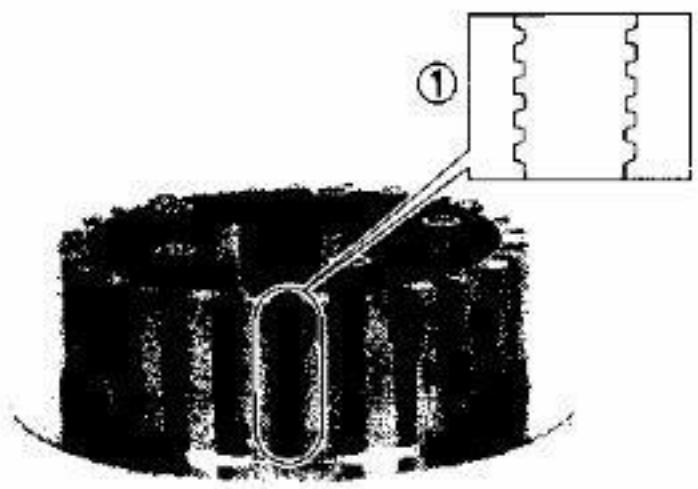

Clutch Boss

1. Inspect:
   - Clutch boss spline ①
     Pitting:
     Moderate→Deburr.
     Severe→Replace.

NOTE:

Pitting on clutch plate splines of clutch boss will cause erratic operation.

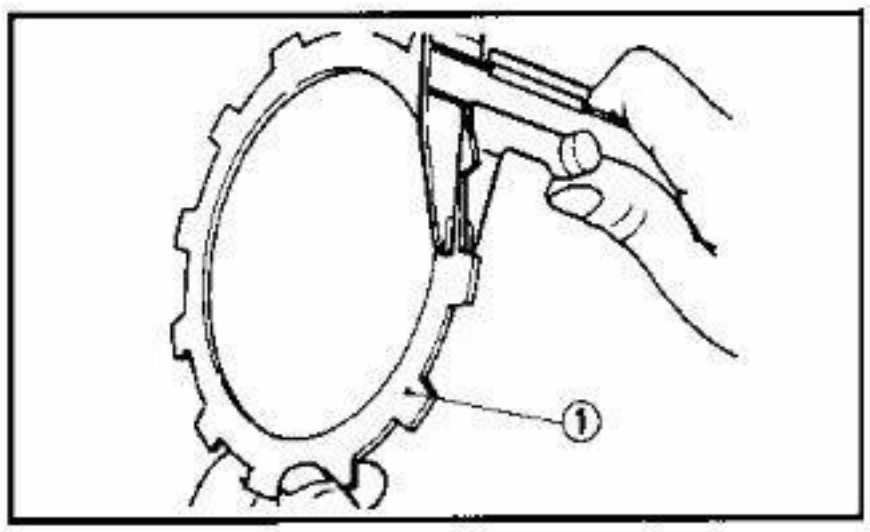

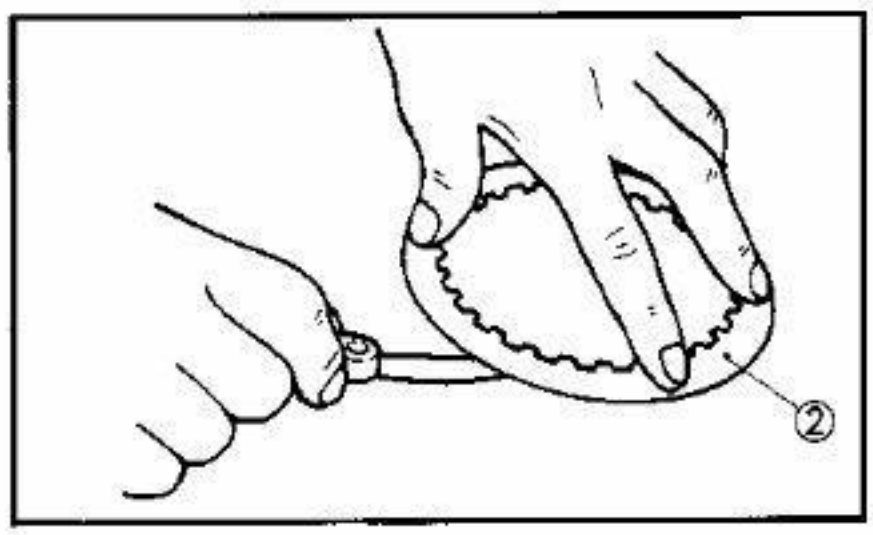

Friction Plates and Clutch Plates

1. Measure:
   - Friction plate thickness ①
   - Clutch plate warpage ②
     Out of specification→Replace.
     Clutch or friction plate as a set.

	Standard	Wear Limit
Friction Plate Thickness	2.9~3.1 mm (0.114~0.122 in)	2.6 mm (0.102 in)
Clutch Plate Warp Limit	–	0.05 mm (0.002 in)

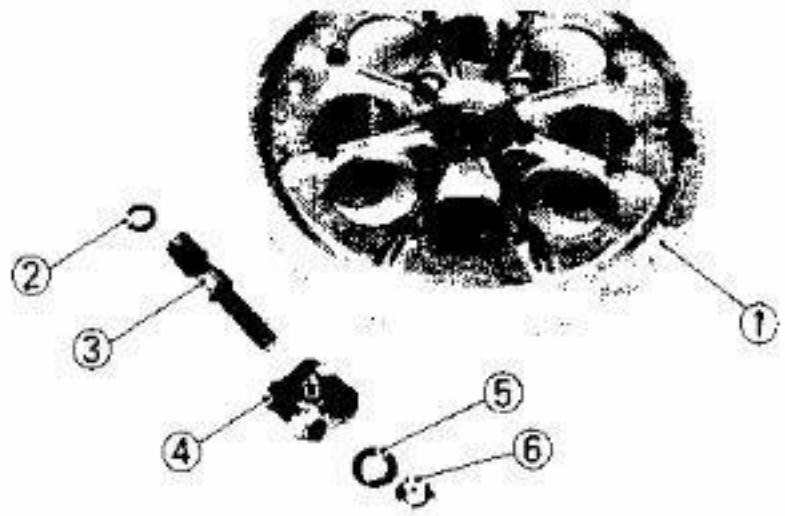

Pressure Plate

1. Inspect:
   - Pressure plate ①
   - O-ring ②
   - Push rod (Short) ③
   - Push plate ④
   - Plain washer ⑤
   - Locknut ⑥

   Damage→Replace.

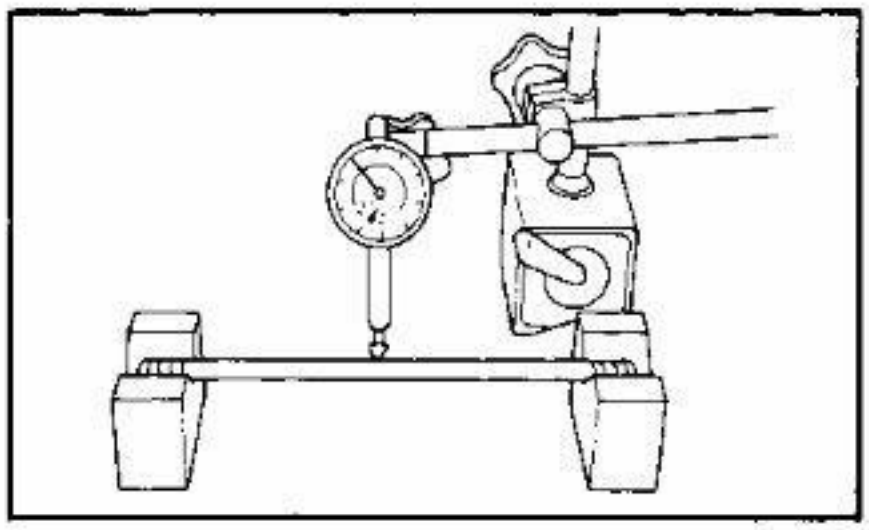

Push Rod

1. Measure:
   - Push rod runout (Long)

   Roll on V-block.
   Exceeds bending limit→Replace.

Bending Limit:
0.5 mm (0.02 in)

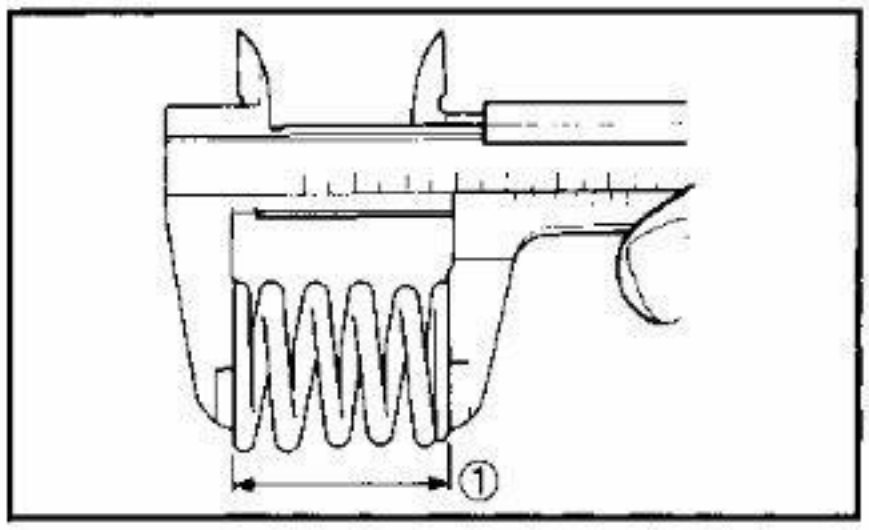

Clutch Springs

1. Measure:
   - Clutch spring free length ①

   Out of specification→Replace spring as a set.

Clutch Spring Minimum Free Length ①:
43 mm (1.69 in)

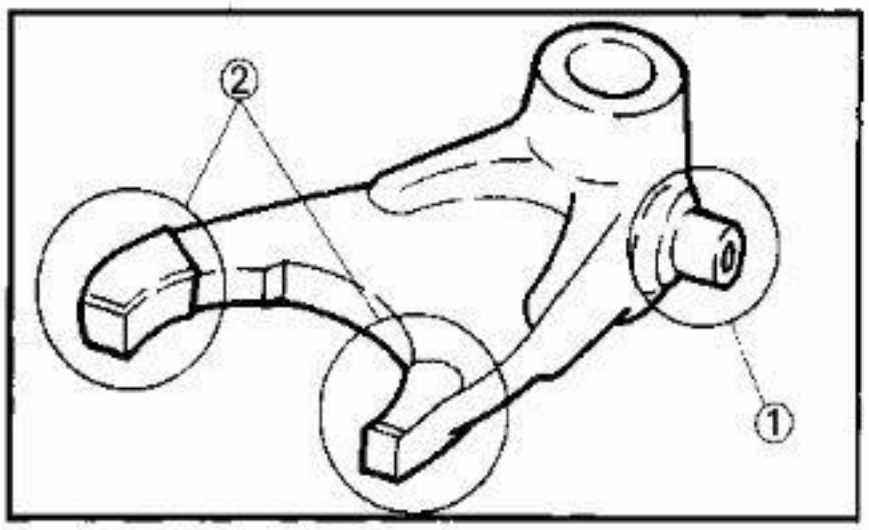

TRANSMISSION

Shift Fork

1. Inspect:
   - Shift fork cam follower ①
   - Shift fork pawl ②

   Scoring/Bends/Wear→Replace.
2. Check:
   - Shift fork movement

   On its guide bar.
   Unsmooth operation→Replace fork and/or guide bar.

Shift Cam

1. Inspect:
   - Shift cam groove
   - Shift cam dowel and side plate
   - Shift cam stopper plate, circlip and stopper.

   Wear/Damage→Replace.

Guide Bars

1. Check:
   - Guide bar
     Roll across a surface plate.
     Bends→Replace.

Main and Drive Axles

1. Measure:
   - Axle runout
     Use centering device and dial gauge.
     Out of specification→Replace bent shaft.

	Runout Limit: **0.08 mm (0.0031 in)**

Gears

1. Inspect:
   - Gear teeth
     Blue discoloration/Pitting/Wear→Replace.
   - Mated dogs
     Rounded edges/Cracks/Missing portions→Replace.
2. Check:
   - Proper gear engagement (Each gear)
     To its counter part.
     Incorrect→Reassemble.
   - Gear movement
     Roughness→Replace.

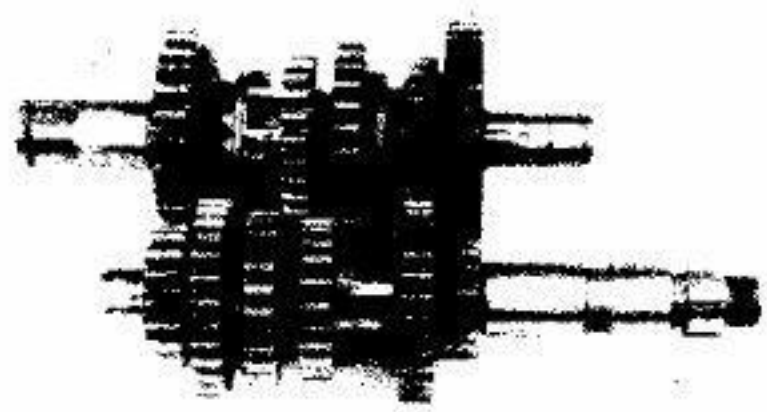

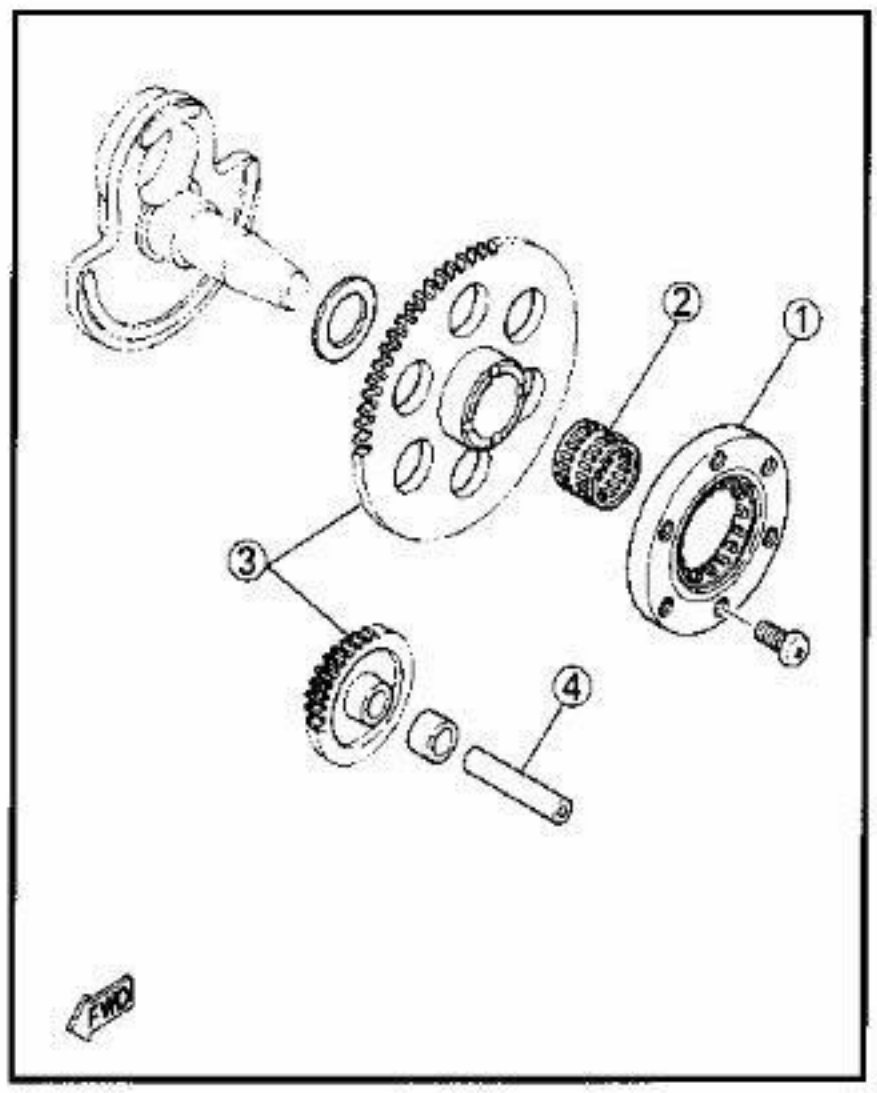

STARTER DRIVE

1. Inspect:
   - One way bearing ①
   - Bearing ②
     Pitting/Damage→Replace.
2. Inspect:
   - Idler gears ③
   - Idler shaft ④
     Damage/Wear→Replace.

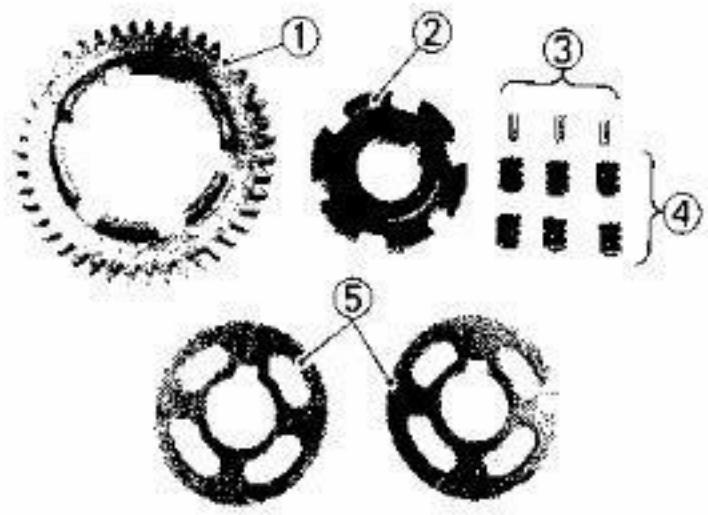

BALANCER DRIVE GEAR

1. Inspect:
   - Balancer drive gear ①
   - Boss ②
   - Pins ③
   - Springs ④
   - Washers ⑤

   Damage/Wear/Fatigue→Replace.

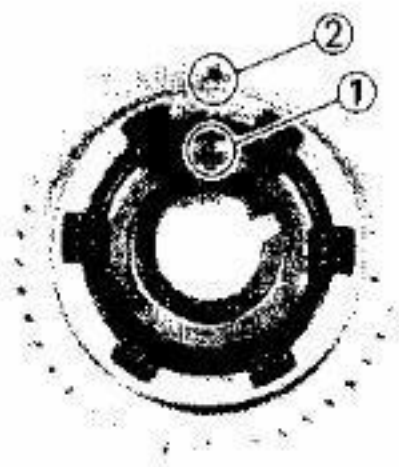

2. Align:
   - Boss match marks ①

   With the drive gear mark ②.

CRANKCASE

1. Inspect:
   - Case halves
   - Bearing seats
   - Fitting

   Damage→Replace.

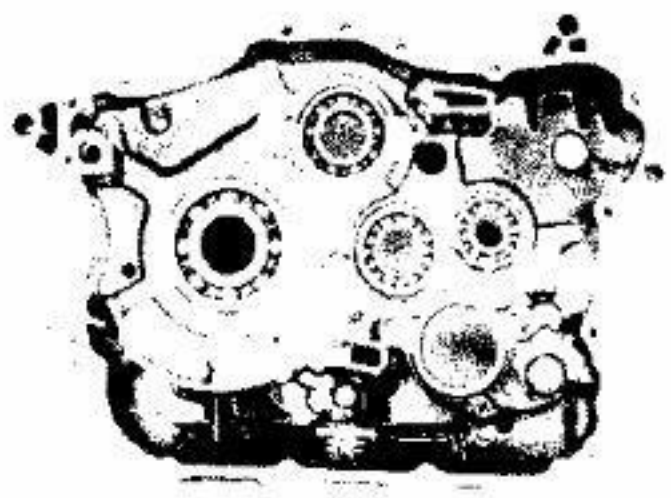

BEARINGS AND OIL SEALS

1. Inspect:
   - Bearings

   Clean and lubricate, then rotate inner race with finger.
   Roughness→Replace.
2. Inspect:
   - Oil seals
   - Damage/Wear→Replace.

CIRCLIPS AND WASHERS

1. Inspect:
   - Circlips
   - Washers

   Damage/Looseness/Bends→Replace.

ENGINE ASSEMBLY AND ADJUSTMENT

CRANKSHAFT AND BALANCER SHAFT

① Piston ring set
② Piston
③ Piston pin clip
④ Piston pin
⑤ Bearing
⑥ Crank (Right)
⑦ Big-end bearing
⑧ Crank pin
⑨ Crank (Left)
⑩ Connecting rod
⑪ Woodruff key
⑫ Cam chain drive gear
⑬ Washer
⑭ Boss
⑮ Balancer drive gear
⑯ Balancer shaft
⑰ Straight key
⑱ Balancer driven gear

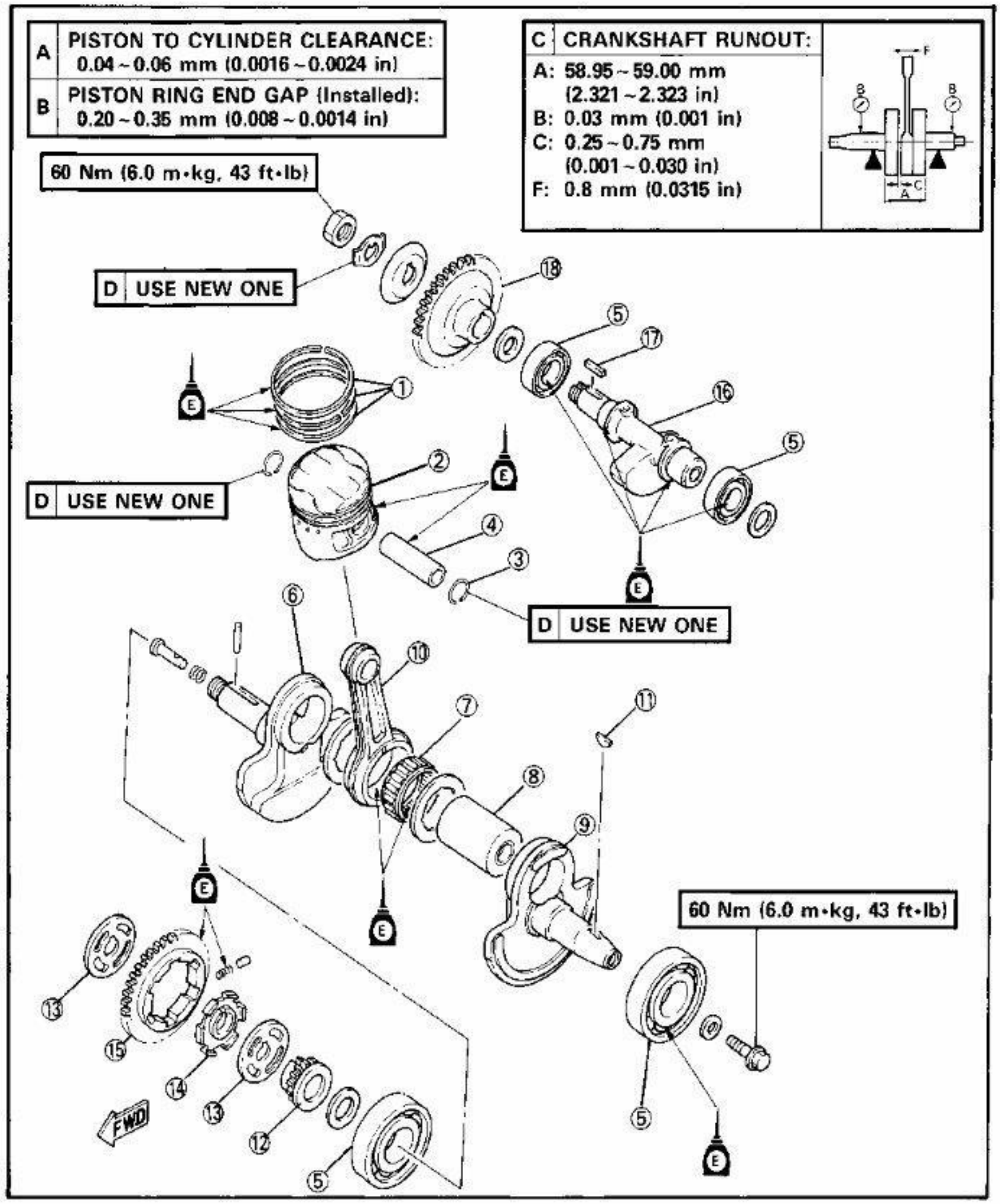

CAUTION:

To protect the crankshaft against scratches or to facilitate the operation of the installation. Apply the grease to the oil seal lips, and apply the engine oil to each bearing.

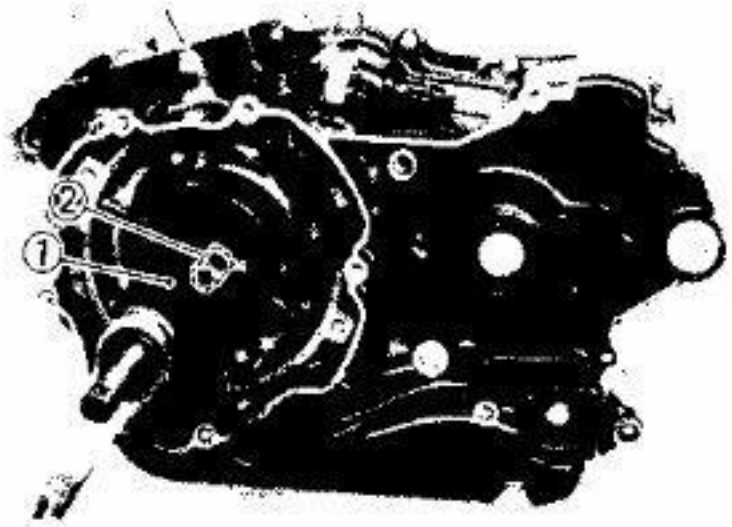

1. Attach:
   - Crankshaft Installing Tool
     (YU-90050 ①, YM-1383 ②)
2. Install:
   - Crankshaft

NOTE:

Hold the connecting rod at top dead center with one hand while turning the nut of the Installing Tool with the other. Operate the Installing Tool until the crankshaft bottoms against the bearing.

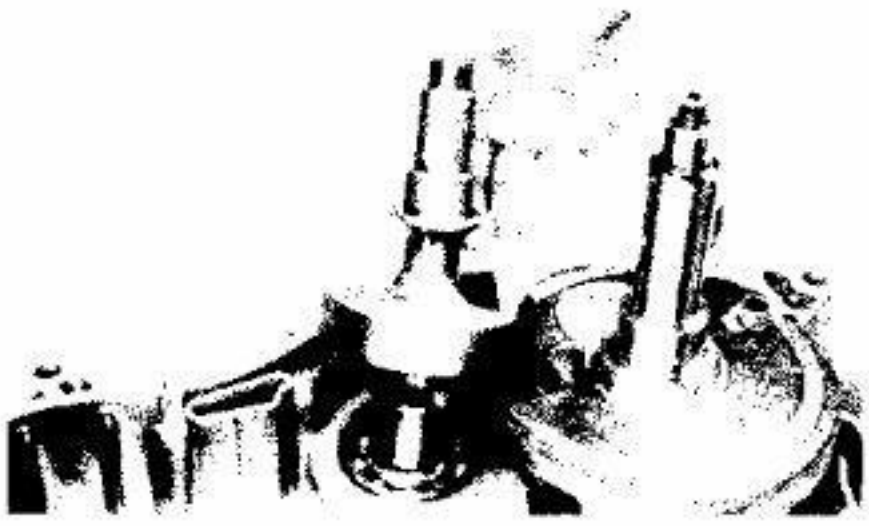

3. Install:
   - Balancer shaft

TRANSMISSION AND SHIFTER

Transmission

① Circlip
② Plain washer
③ 2nd wheel gear (29T)
④ Drive axle
⑤ Bearing
⑥ Oil seal
⑦ Drive sprocket
⑧ Holding plate
⑨ 1st wheel gear (37T)
⑩ 6th wheel gear (25T)
⑪ 3rd wheel gear (30T)
⑫ 4th wheel gear (27T)
⑬ 5th wheel gear (24T)
⑭ Main axle
⑮ 6th pinion gear (32T)
⑯ 3rd/4th pinion gear (22T/25T)
⑰ 5th pinion gear (27T)
⑱ 2nd pinion gear (16T)

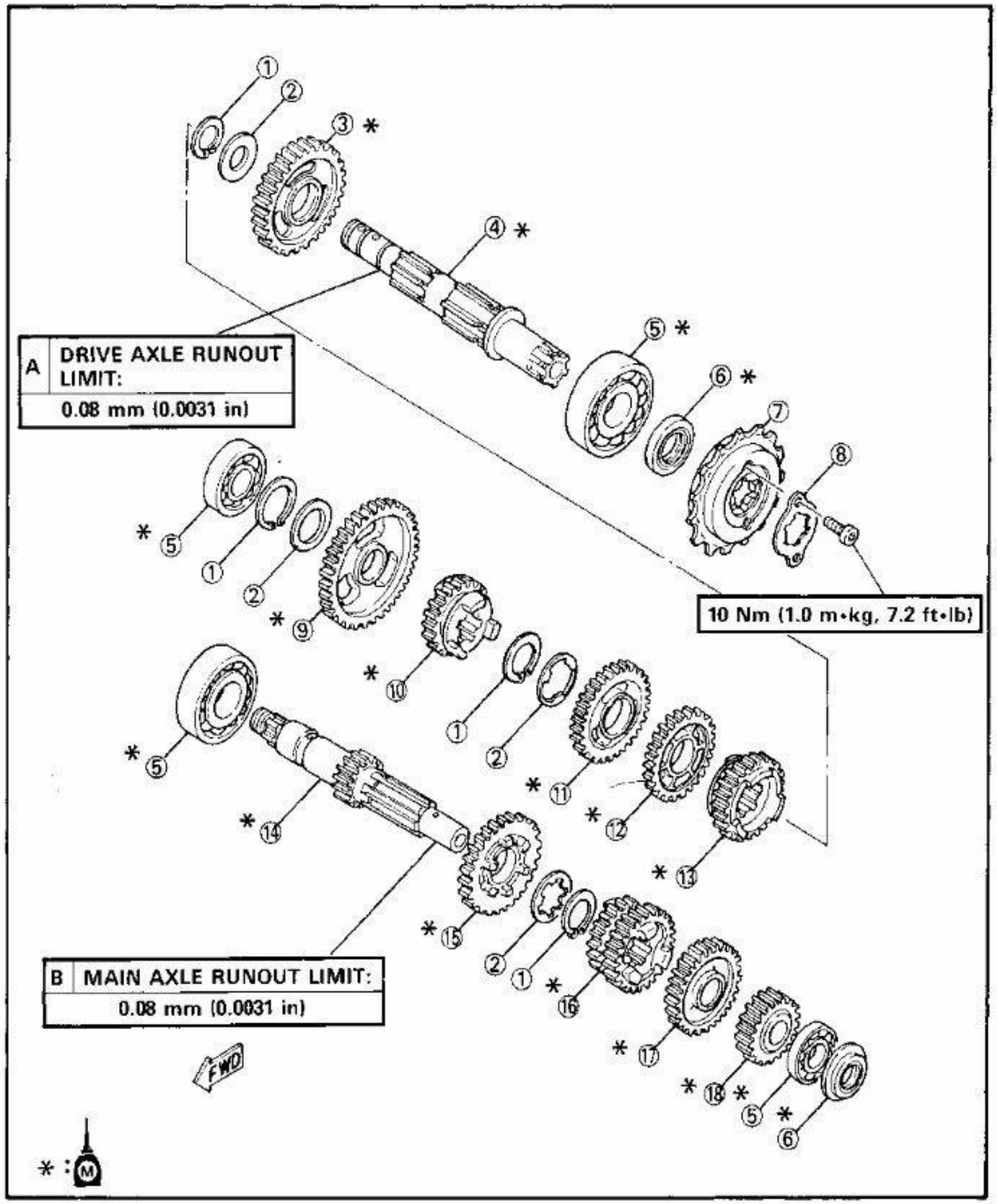

Shifter

① Guide bar 1
② Shift fork (#3)
③ Shift fork (#1)
④ Shift cam assembly
⑤ Change lever 2
⑥ Guide bar 2
⑦ Shift fork (#2)

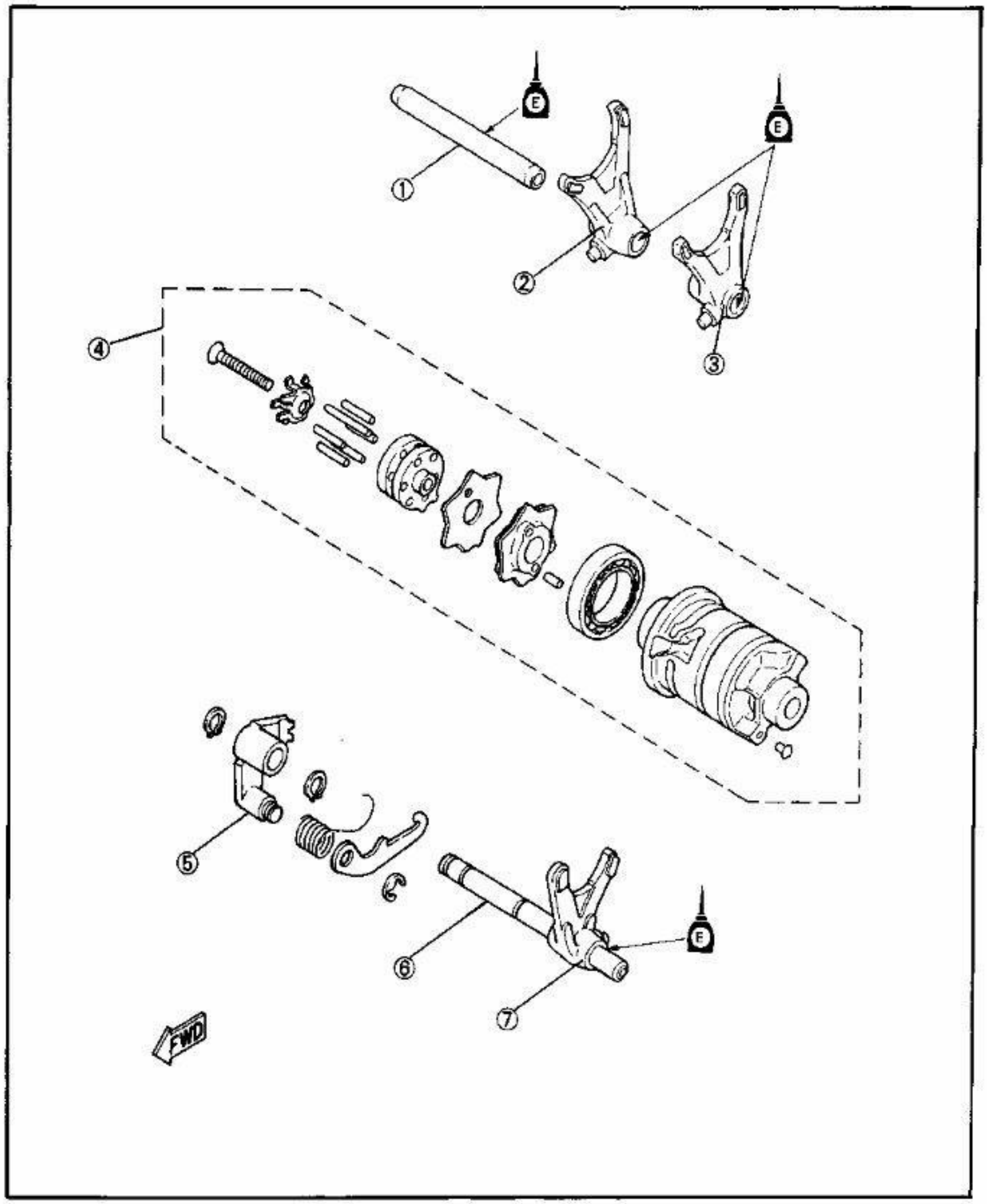

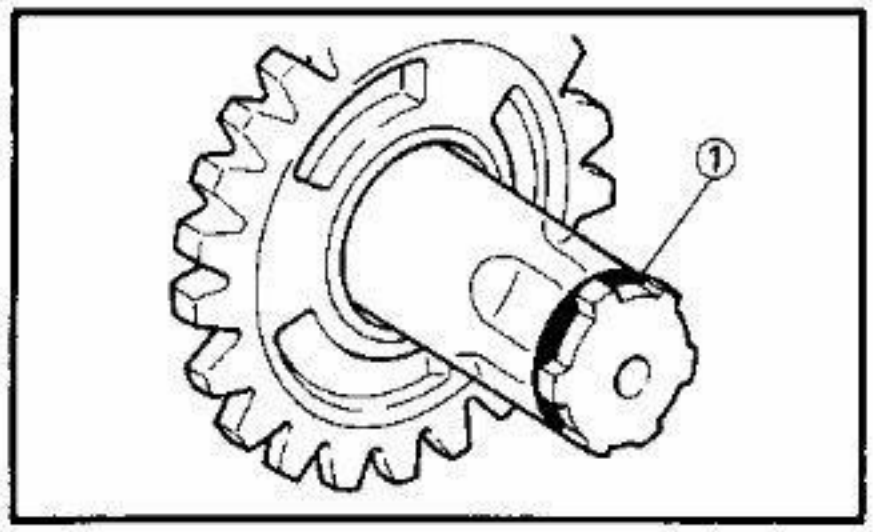

1. Install:
   - O-ring ①

NOTE:

When install the drive axle into the crankcase, pay careful attention to the crankcase oil seal lip. It is recommended to set a suitable O-ring into the drive axle groove.

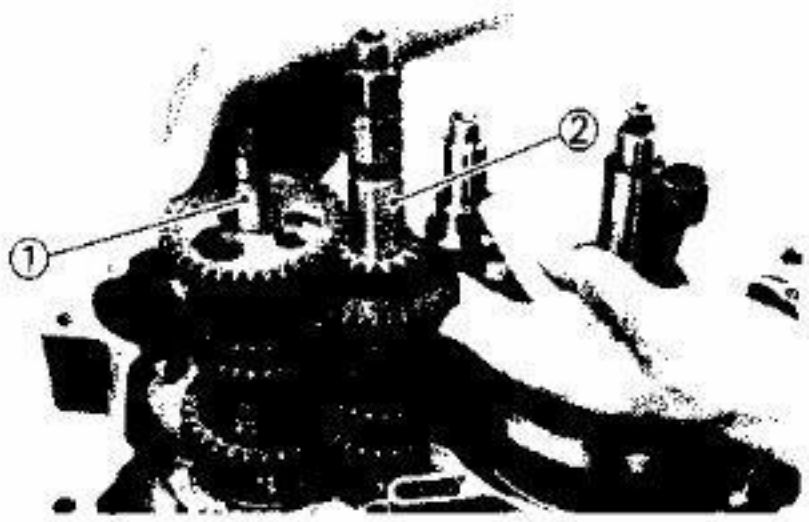

2. Install:
   - Drive axle ① and main axle ② assembly.

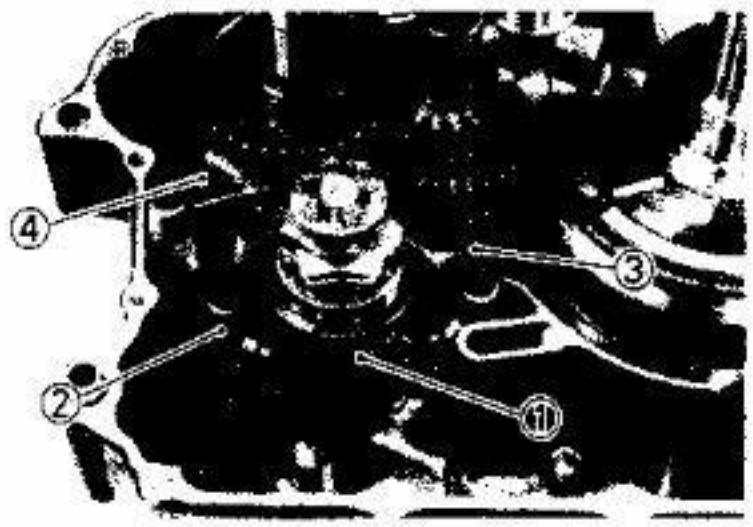

3. Install:
   - Shift cam ①
   - Shift fork #1 ②
   - Shift fork #2 ③
   - Shift fork #3 ④

NOTE:

- Mesh the shift fork #1 with the 6th wheel gear and #3 with the 5th wheel gear on the drive axle.
- Mesh the shift fork #2 with the 3rd/4th pinion gear on the main axle.
- Install the shift forks with the embossed number should face downward.

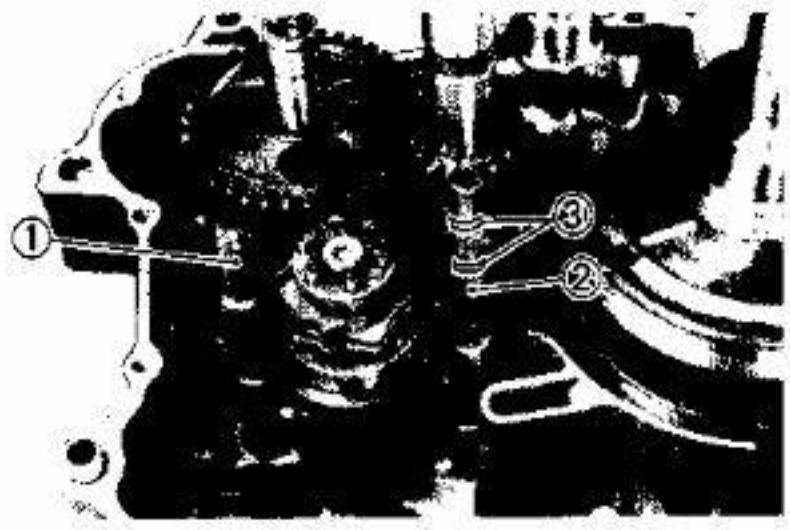

4. Install:
   - Guide bar 1 ①
   - Guide bar 2 ②

NOTE:

Install the guide bar 2 with the circlip grooves ③ should face upward.

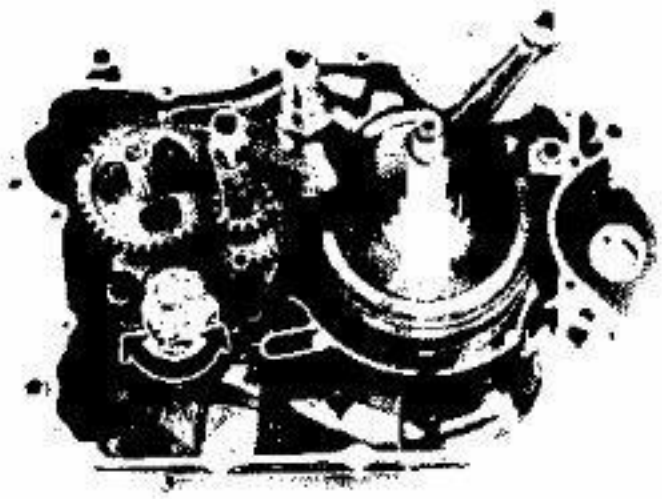

5. Check:
   - Shifter operation
     Unsmooth operation → Repair.

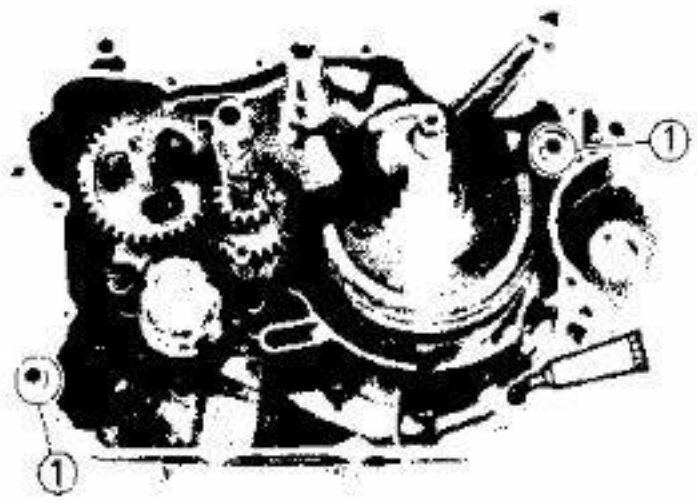

CRANKCASE

1. Install:
   - Dowel pins ①
2. Apply:
   - Sealant (Quick Gasket®)
     To crankcase matching surfaces.
3. Install:
   - Crankcase (Right)
     Onto the left crankcase.

CAUTION:

Before installing and torquing the crankcase holding screws, be sure to check whether the transmission is functioning properly by manually rotating the shift cam either way.

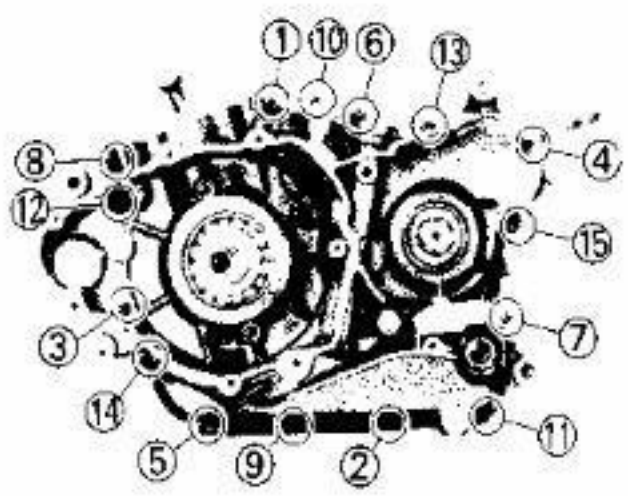

4. Tighten:
   - Screws (Crankcase)

NOTE:

Tighten the screws starting with the lowest numbered one.

	Screws (Crankcase): **7 Nm (0.7 m·kg, 5.1 ft·lb)**

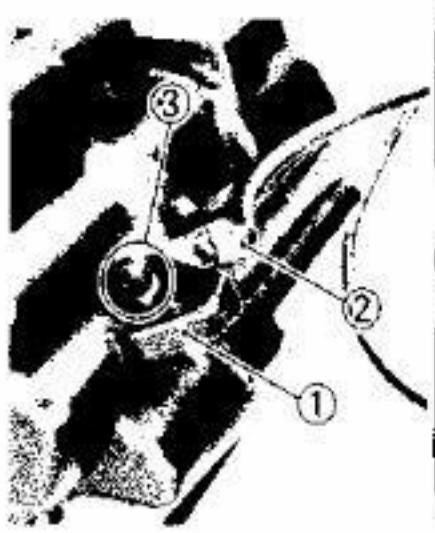

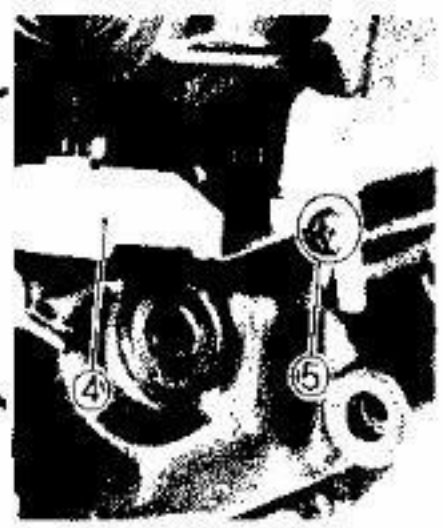

NOTE:

- Install the lead wire clamp ① and ground lead ② on screw No. 4 ③.
- Install the lead wire bracket ④ on screw No. 7 ⑤.

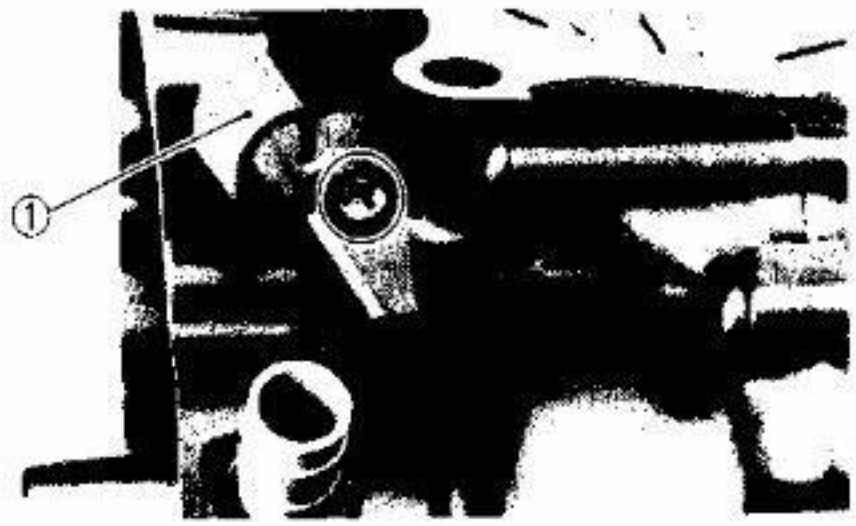

5. Install:
   - Bracket (Clutch cable) ①

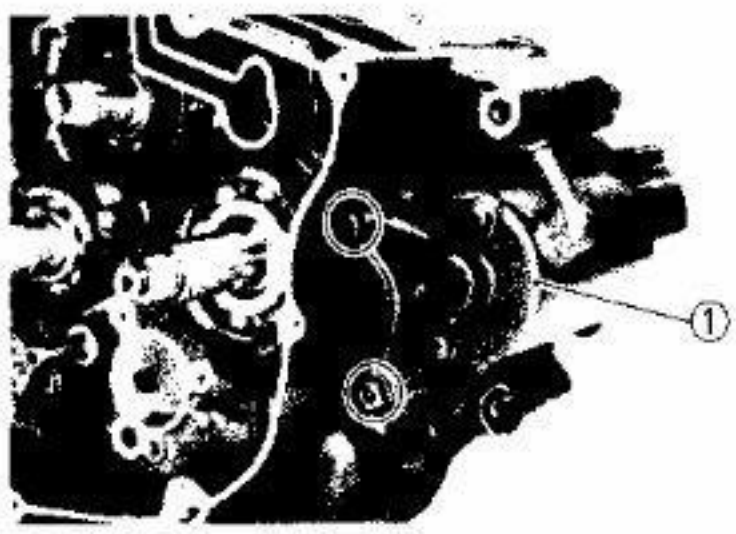

STARTER MOTOR, AC GENERATOR AND LEFT CRANKCASE COVER

1. Install:
   - Starter motor ①

	Screws (Startor Motor): 7 Nm (0.7 m•kg, 5.1 ft•lb)

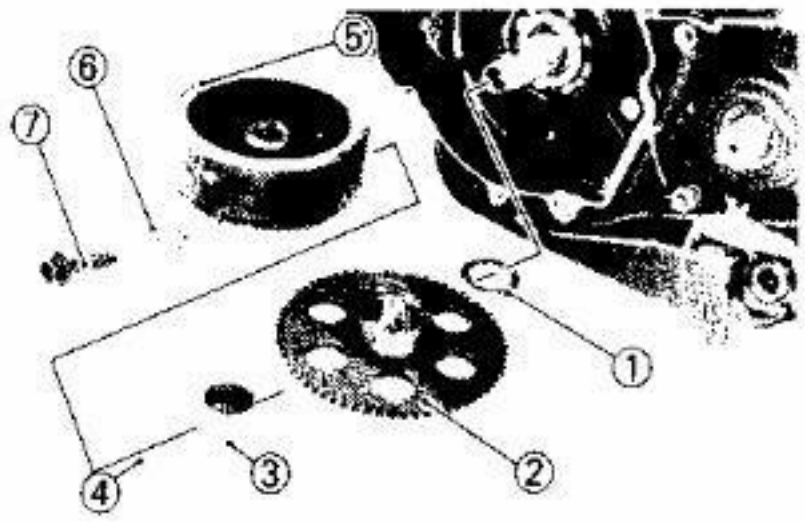

2. Install:
   - Washer ①
   - Starter driven gear ②
   - Bearing ③
   - Key ④
   - AC Generator rotor ⑤
   - Washer ⑥
   - Bolt ⑦

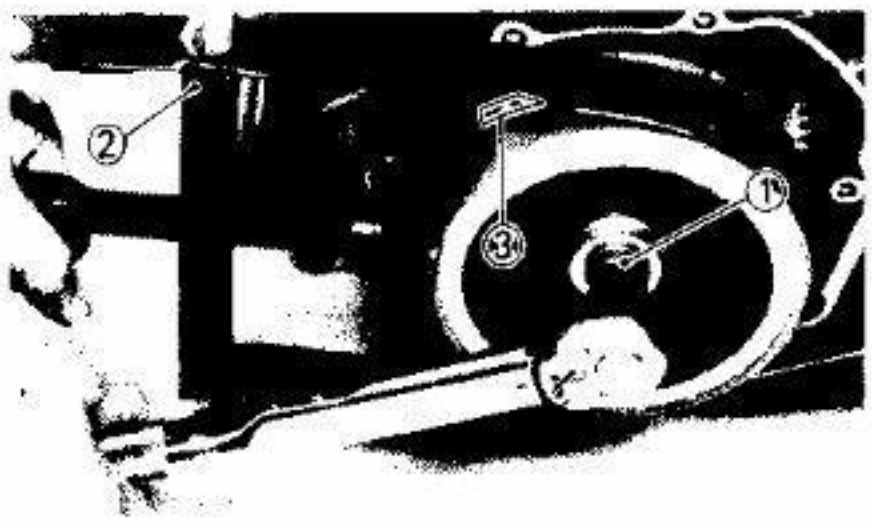

3. Tighten
   - Bolt ①

   Use the Sheave Holder (YS-01880) ② to lock the rotor.

	Bolt (AC Generator Rotor): 60 Nm (6.0 m•kg, 43 ft•lb)

NOTE:

Do not allow the special tool to touch the projection ③ on the rotor.

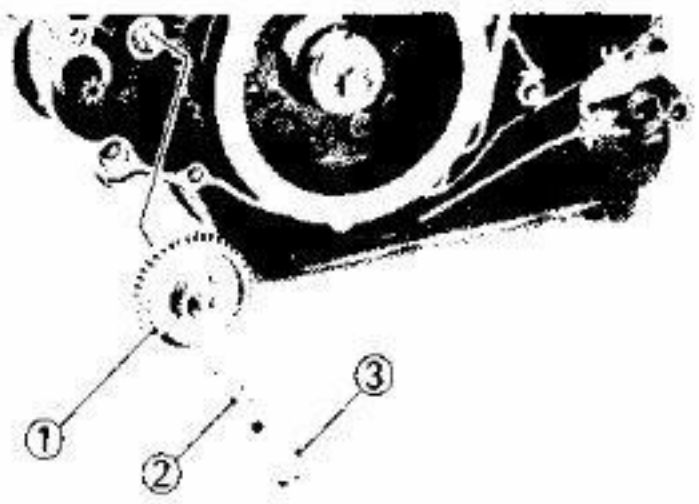

4. Install:
   - Starter idle gear ①
   - Shaft ②
   - Collar ③

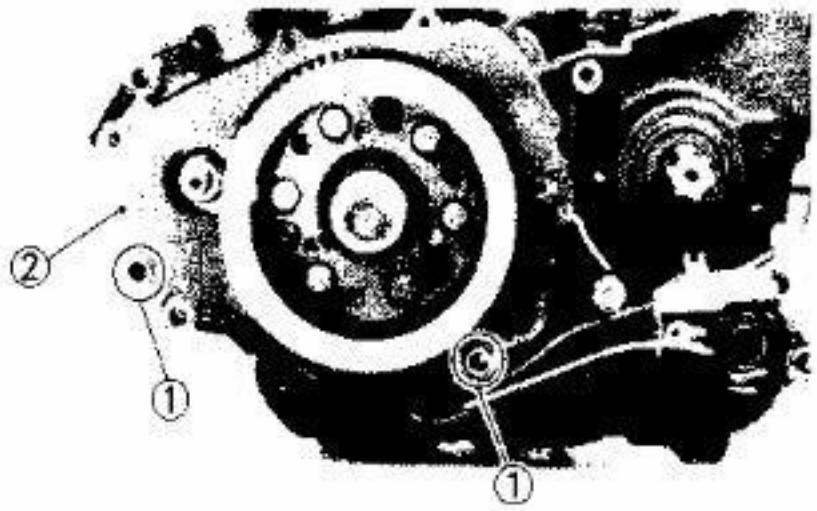

5. Install:
   - Dowel pins ①
   - Gasket (New) ②
   - Crankcase cover (Left)

	Screws (Crankcase Cover-Left): 7 Nm (0.7 m•kg, 5.1 ft•lb)

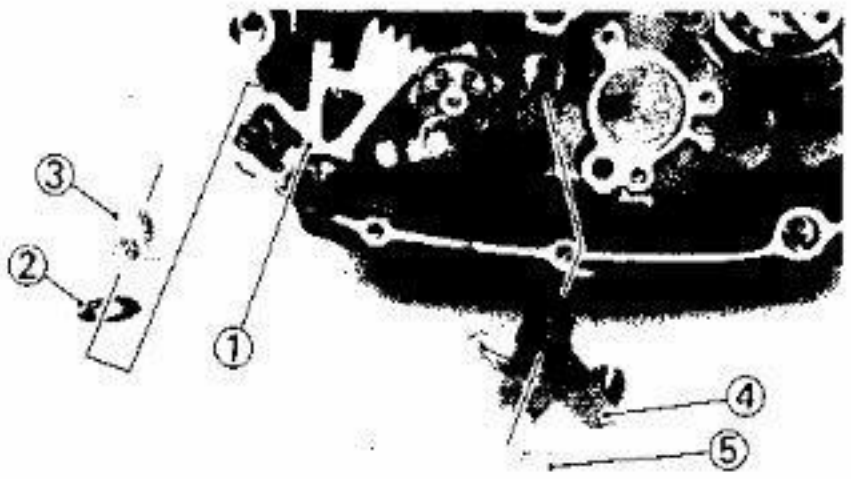

CHANGE LEVER

1. Install:
   - Change lever assembly ①
   - Washer ②
   - Spacer ③
   - Change lever 2 ④
   - Circlip ⑤

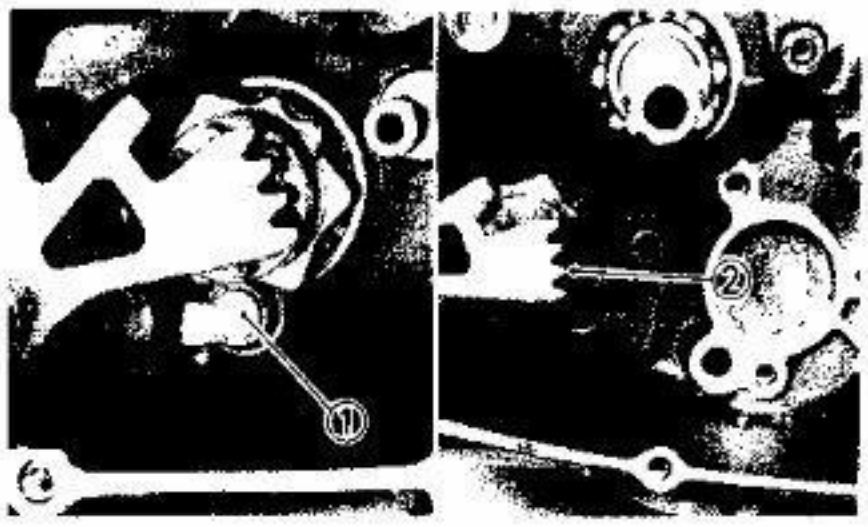

NOTE:

- Mesh the stopper lever ① with the shift cam.
- Mesh the change lever 2 mark ② with change lever pawl center.

2. Check:
   - Change operation
     Unsmooth operation → Repair.

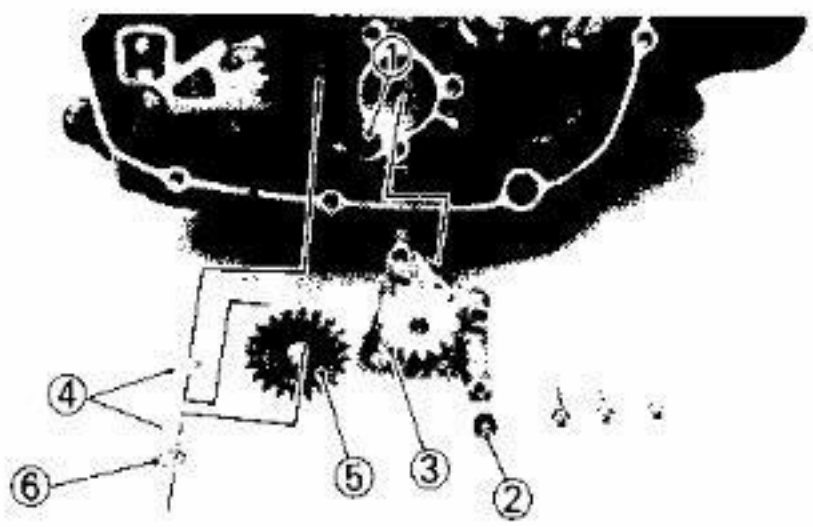

OIL PUMP AND SPACER

NOTE:

Apply a liberal amount of 4-stroke engine oil to the oil pump passages in the crankcase and oil pump.

1. Install:
   - O-ring ①
   - Oil seal ②
   - Oil pump assembly ③

	Screws (Oil pump): 7 Nm (0.7 m•kg, 5.1 ft•lb)

   - Washer ④
   - Oil pump idle gear ⑤
   - Washer ④
   - Circlip ⑥

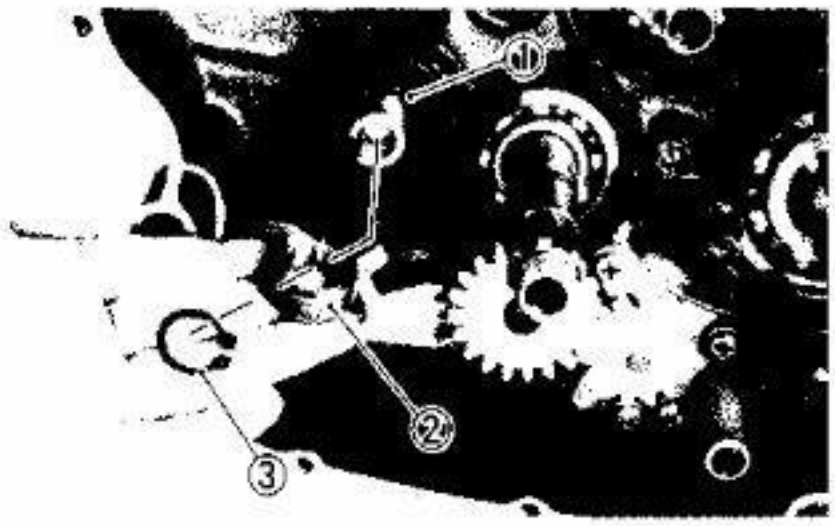

2. Install:
   - Circlip ①
   - Spacer ②
   - Circlip ③

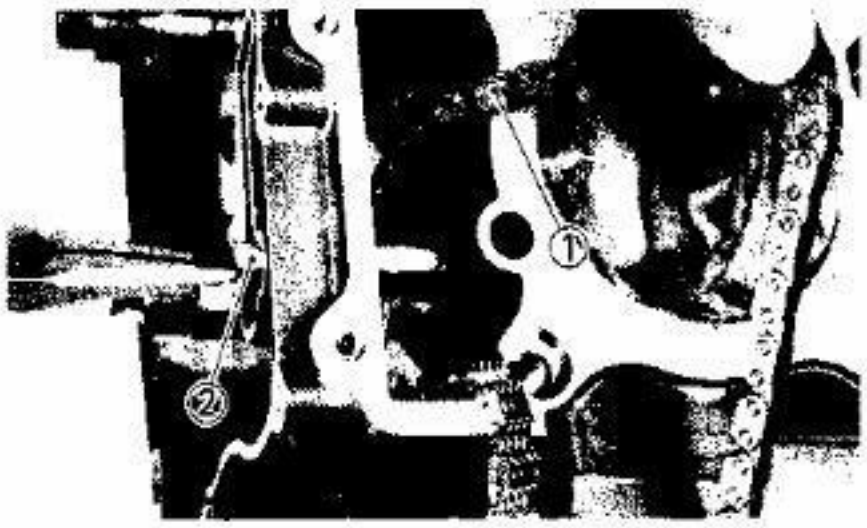

CAM CHAIN AND INTAKE SIDE CHAIN GUIDE

1. Install:
   - Cam chain ①
   - Oil pipe ②
   - Retaining wire
     To the cam chain.

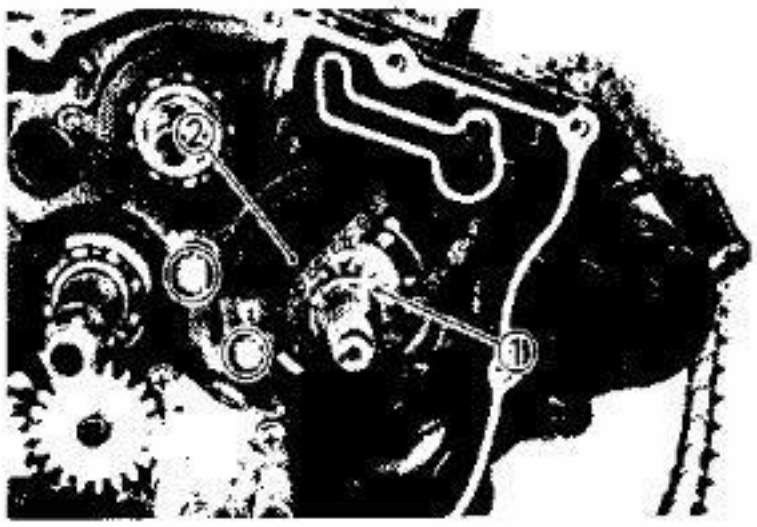

2. Install:
   - Chain drive gear ①
   - Chain guide (Intake) ②

	Bolt (Chain Guide-Intake): 8 Nm (0.8 m•kg, 5.8 ft•lb)

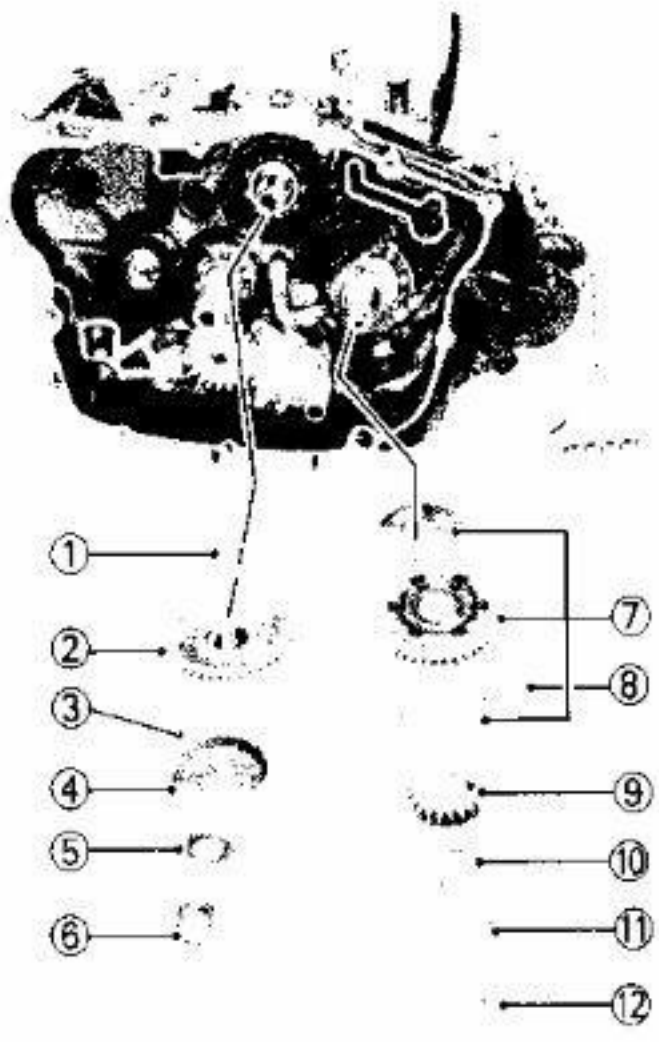

BALANCER DRIVEN GEAR AND PRIMARY DRIVE GEAR

1. Install:
   - Washer ①
   - Balancer driven gear ②
   - Key ③
   - Breather plate ④
   - Lock washer (New) ⑤
   - Nut ⑥
   - Balancer drive gear assembly ⑦
   - Key ⑧
   - Primary drive gear ⑨
   - Washer ⑩
   - Lock washer (New) ⑪
   - Nut ⑫

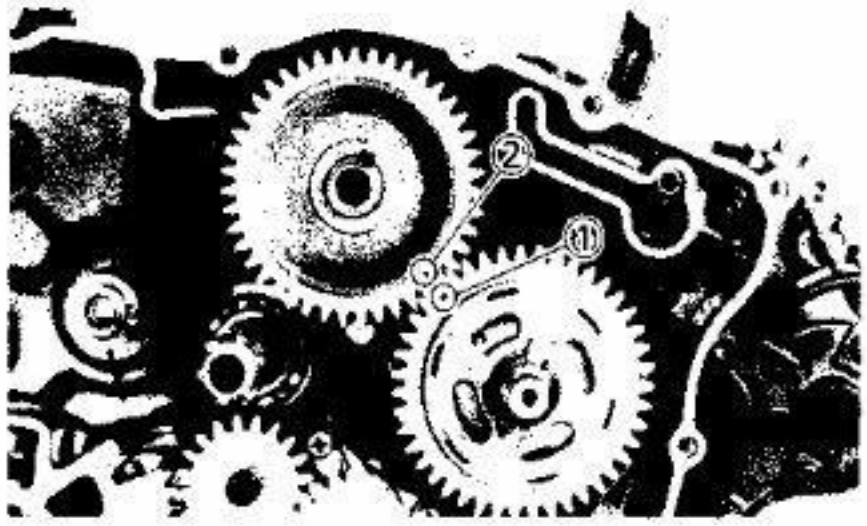

NOTE:
- Align the balancer drive gear mark ① with the balancer driven gear mark ②.

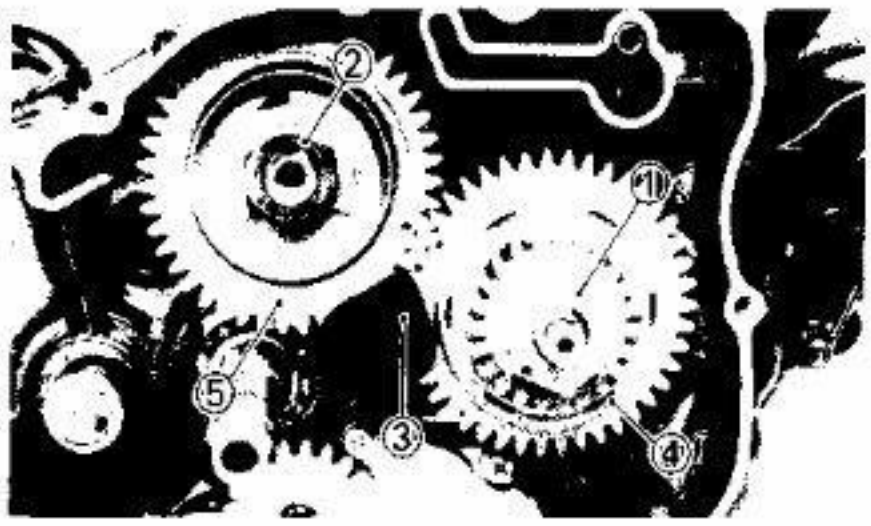

2. Tighten:
   - Nut (Primary drive gear) ①
   - Nut (Balancer driven gear) ②

   Place a folded rag ③ between the teeth of the drive gear ④ and balancer driven gear ⑤ to lock them.

Nut (Primary Drive Gear):
80 Nm (8.0 m•kg, 58 ft•lb)
Nut (Balancer Driven Gear):
60 Nm (6.0 m•kg, 43 ft•lb)

3. Bend the lock washer tabs (Balancer driven gear and primary drive gear) along the nut flats.

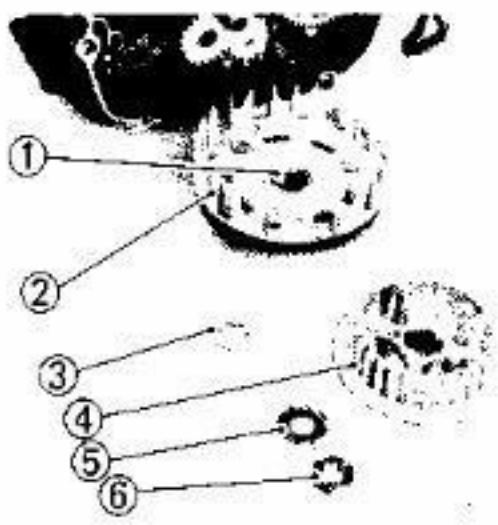

CLUTCH

1. Install:
   - Bearing ①
   - Primary driven gear ②
   - Washer ③
   - Clutch boss ④
   - Lock washer (New) ⑤
   - Nut (Clutch boss) ⑥

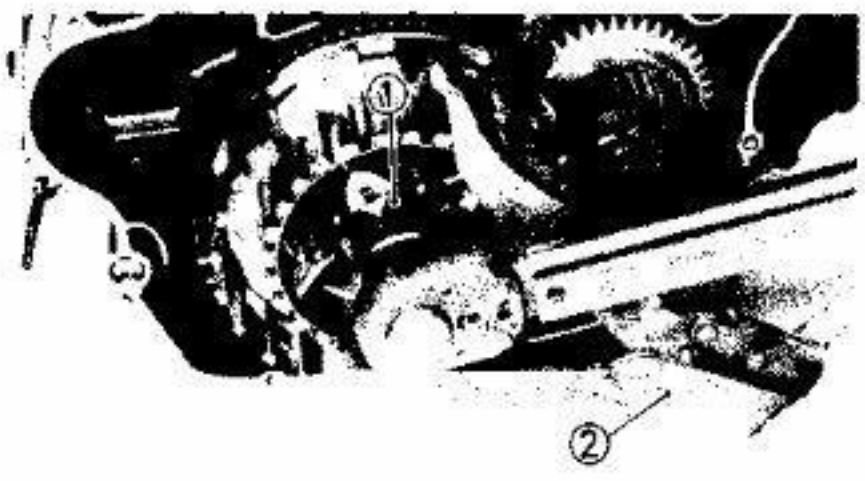

2. Tighten:
   - Nut (Clutch boss) ①

   Use Universal Clutch Holder (YM-91042) ②.

Nut (Clutch Boss):
75 Nm (7.5 m•kg, 54 ft•lb)

3. Bend the lock washer tab along the nut flats.

CLUTCH

① Clutch spring
② Pressure plate
③ Clutch plate
④ Friction plate
⑤ Clutch boss
⑥ Primary driven gear
⑦ Push rod (Short)
⑧ Push rod ball
⑨ Push rod (Long)
⑩ Push lever axle
⑪ Primary drive gear
⑫ Key

A	CLUTCH SPRING FREE LENGTH LIMIT: 43 mm (1.69 in)
B	FRICTION PLATE WEAR LIMIT: 2.6 mm (0.102 in)
C	CLUTCH PLATE WARP LIMIT: 0.05 mm (0.002 in)

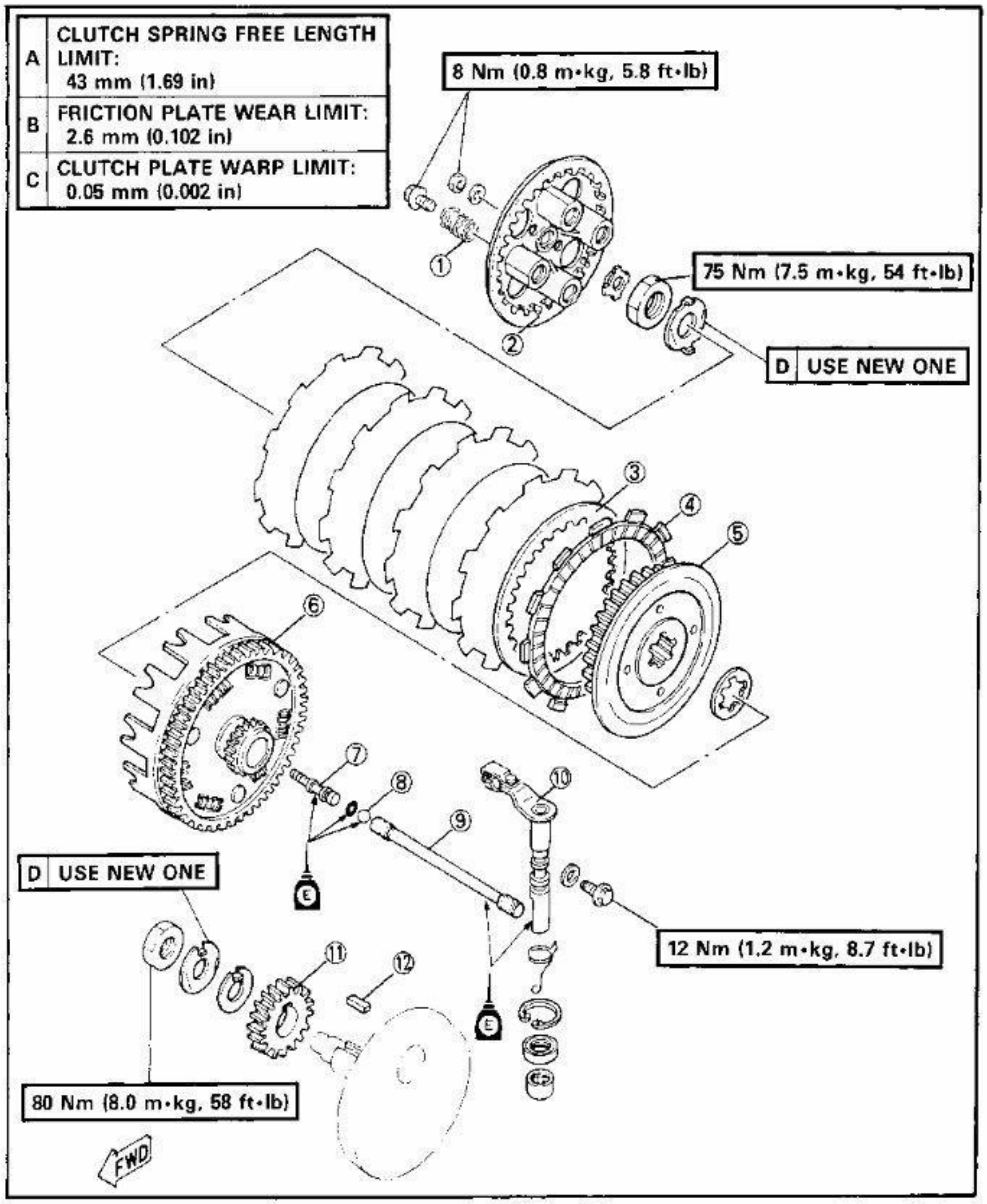

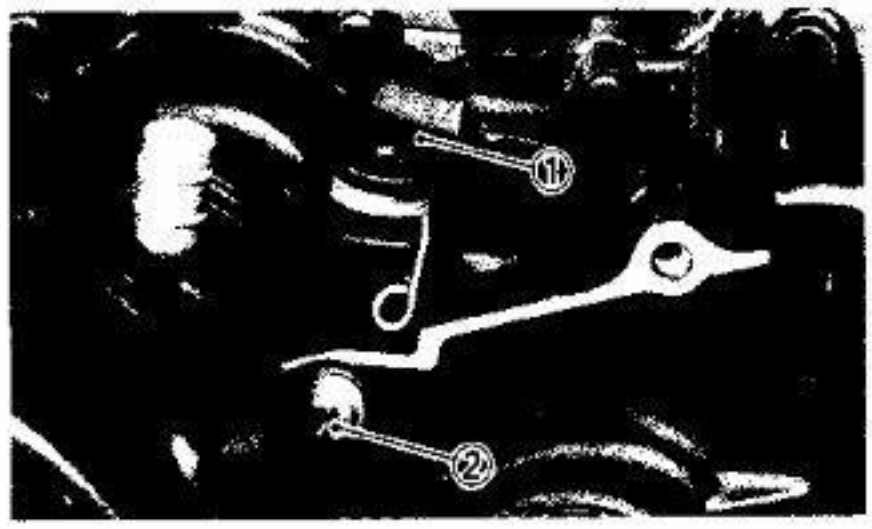

3. Install:
   - Push lever axle assembly ①
   - Screw ②

Screw (Push Lever Axle):
12 Nm (1.2 m•kg, 8.7 ft•lb)

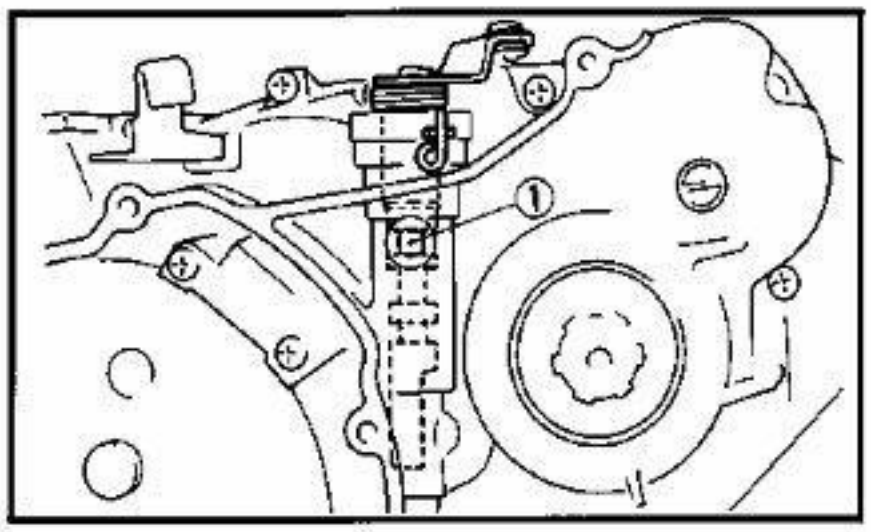

NOTE:

The push lever axle screw should lock the top groove ① of the push lever axle.

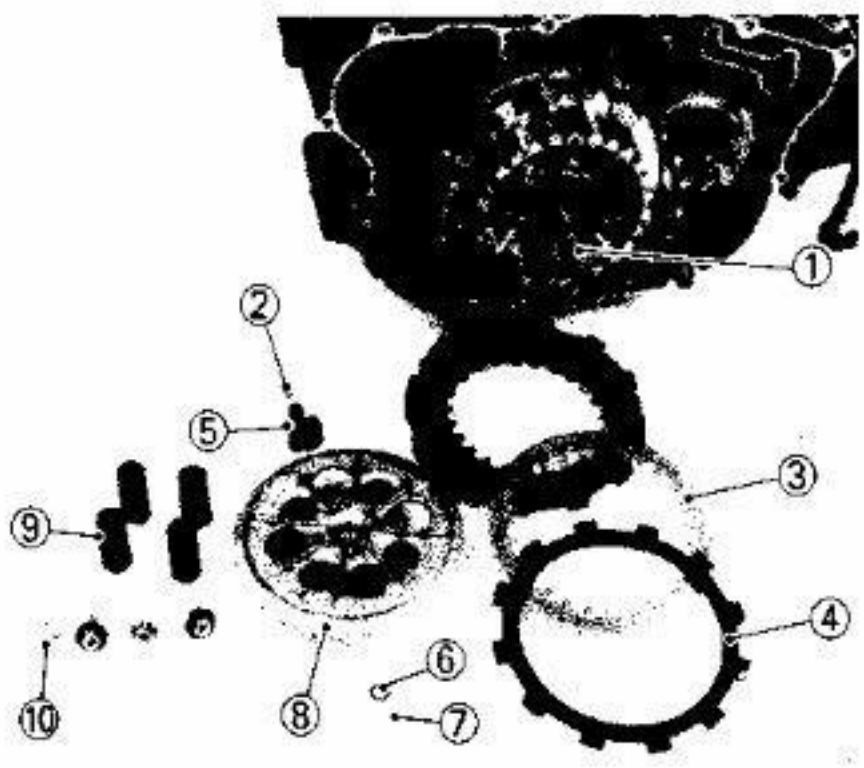

4. Install:
   - Push rod (Long) ①
   - Push rod ball ②
   - Clutch plates ③
   - Friction plates ④
   - Push rod (Short) ⑤
   - Washer ⑥
   - Nut ⑦
   - Pressure plate ⑧
   - Clutch springs ⑨
   - Screws (Clutch spring) ⑩

Screws (Clutch Spring):
8 Nm (0.8 m•kg, 5.8 ft•lb)

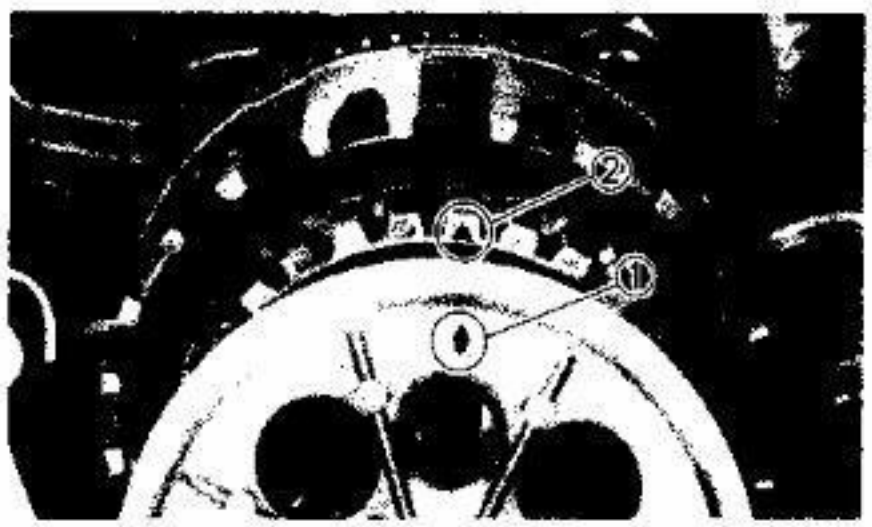

NOTE:

Align the pressure plate arrow mark ① with the clutch boss mark ②.

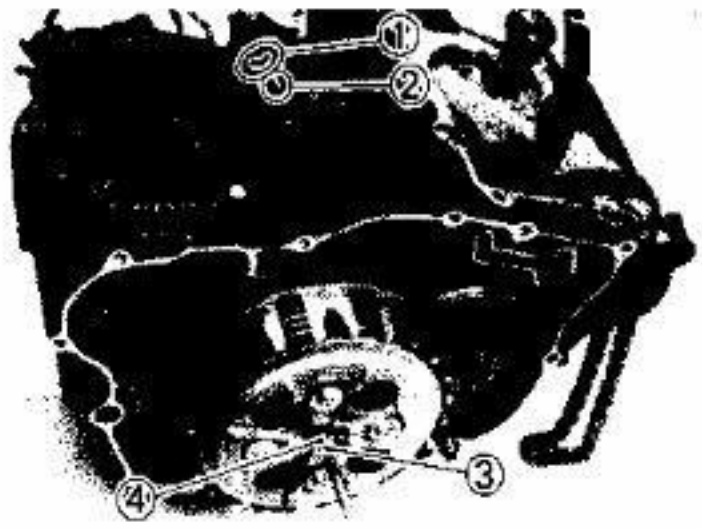

5. Turn:
   - Push lever
     To align the push lever pointer ① with the crankcase embossed mark ②.
6. Turn:
   - Pusn rod (Short)
     (in or out until it lightly seats against a pusn rod ball)

③ Push rod (Short)
④ Locknut

7. Tighten:
   - Locknut

	Locknut (Push Rod): 8 Nm (0.8 m•kg, 5.8 ft•lb)

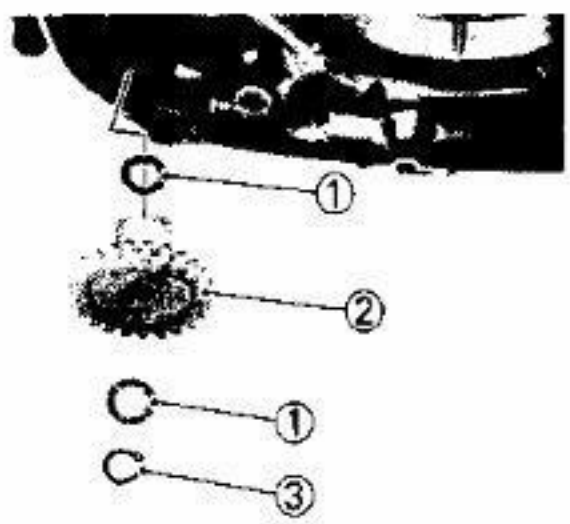

CRANKCASE COVER (RIGHT)

1. Install:
   - Washer ①
   - Tachometer driven gear ②
   - Circlip ③

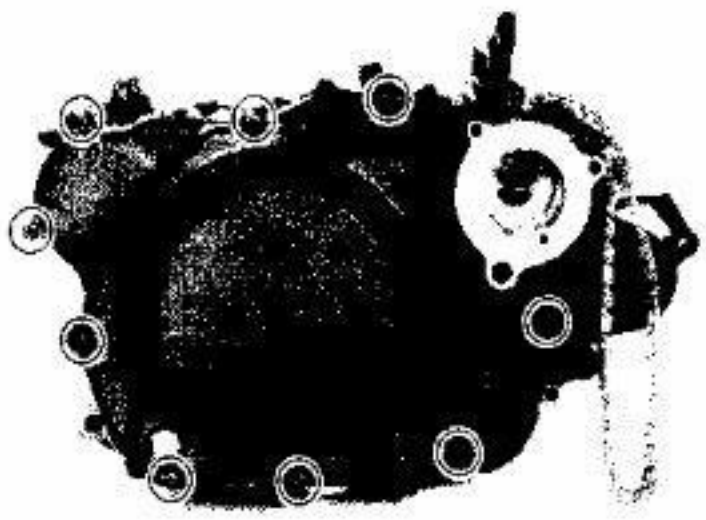

2. Install:
   - Dowel pins
   - Gasket (New)
   - Crankcase cover (Right)

NOTE:

Tighten the bolts in stage, using a crisscross pattern.

	Bolts (Crankcase Cover-Right): 10 Nm (1.0 m•kg, 7.2 ft•lb)

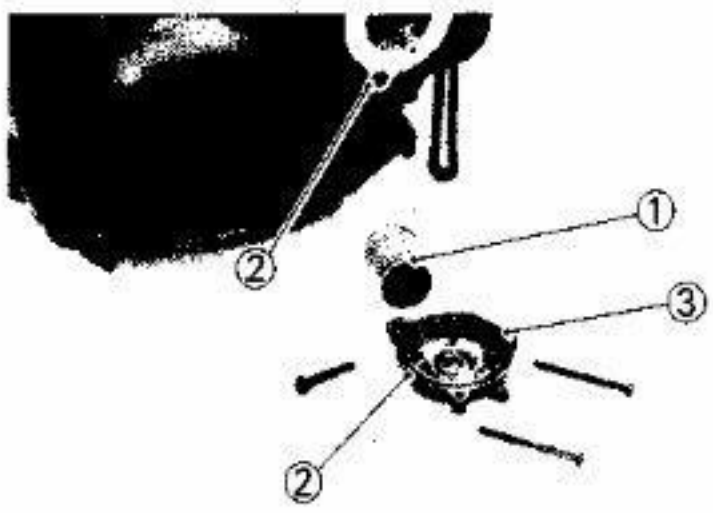

OIL FILTER

1. Install:
   - Oil filter ①
   - O-ring ②
   - Oil filter cover ③

	Bolts (Oil Filter Cover): 10 Nm (1.0 m•kg, 7.2 ft•lb)

PISTON

1. Apply:
   - Engine oil
     To the piston pin, bearing, piston ring grooves and piston skirt areas.

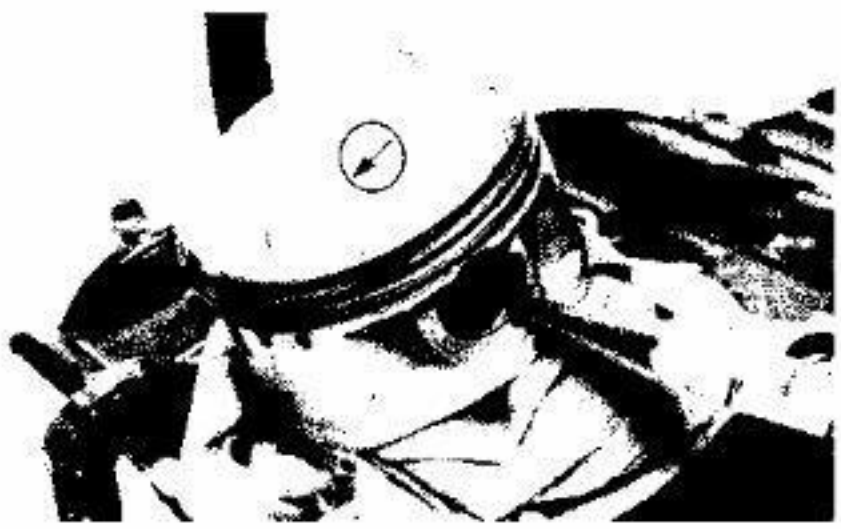

2. Install:
   - Piston
   - Piston pin
   - Piston pin clip (New)

NOTE:

- The arrow on the piston must point to the front of the engine.
- Before installing the piston pin clip, cover the crankcase with a clean towel or rag so you will not accidentally drop the pin clip and material into the crankcase.
- Always use a new piston pin clip.

CYLINDER, CYLINDER HEAD AND CAMSHAFT

① Washer
② Rubber washer
③ Gasket
④ Spark plug
⑤ Valve guide
⑥ Stud bolt
⑦ Oil plug

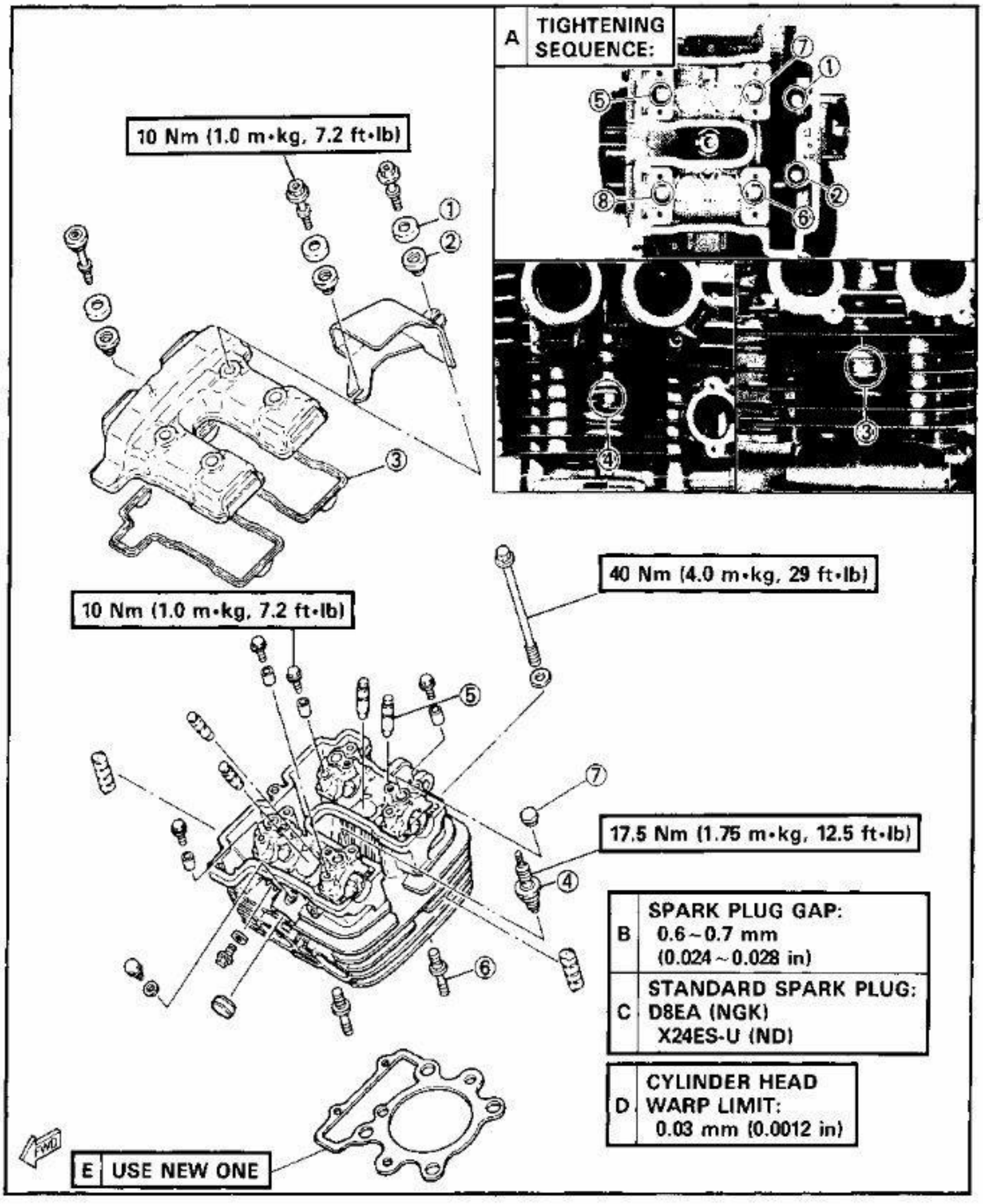

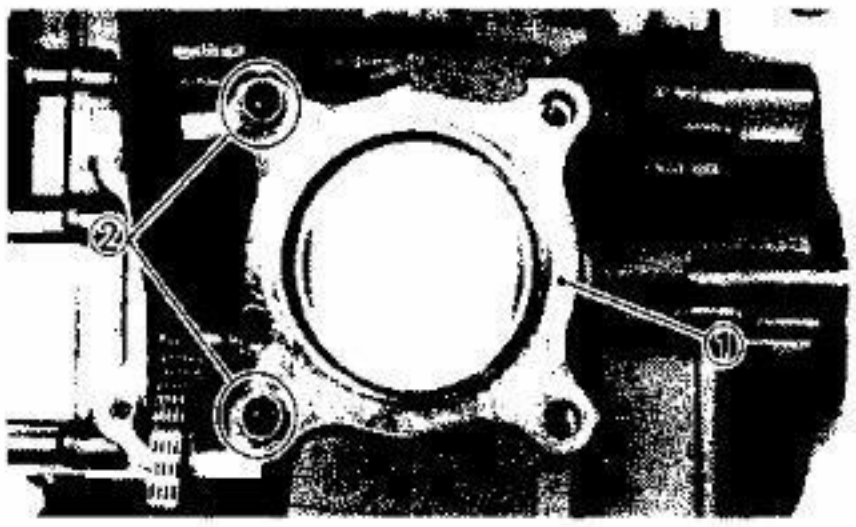

CYLINDER AND CYLINDER HEAD

1. Install:
   - Cylinder gasket (New) ①
   - Dowel pins ②

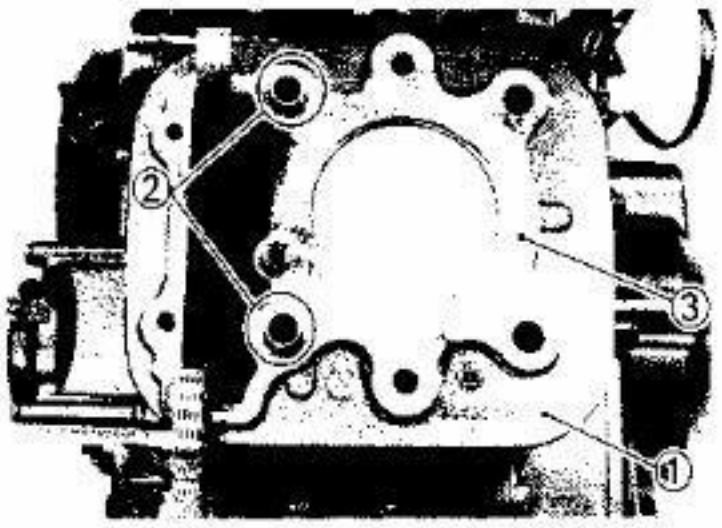

2. Install:
   - Cylinder ①
   - Dowel pins ②
   - Cylinder head gasket (New) ③

NOTE:

- Install the cylinder with one hand while compressing the piston rings with the other hand.
- Tie the cam chain with a piece of mechanics wire, and feed it through the chain opening.
- Set the piston ring ends to the positions as shown.
- Be sure to check the manufacturer's marks or numbers stamped on the rings are on the top side of the rings.
- Before installing the cylinder, apply a liberal coating of 4-stroke engine oil to the piston rings.

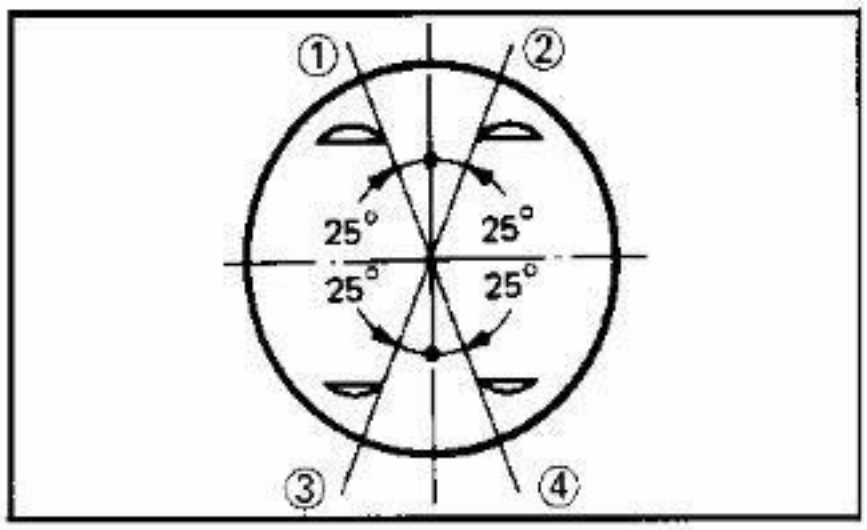

① Top ring end
② Oil ring end (lower rail)
③ Oil ring end (upper rail)
④ 2nd ring end

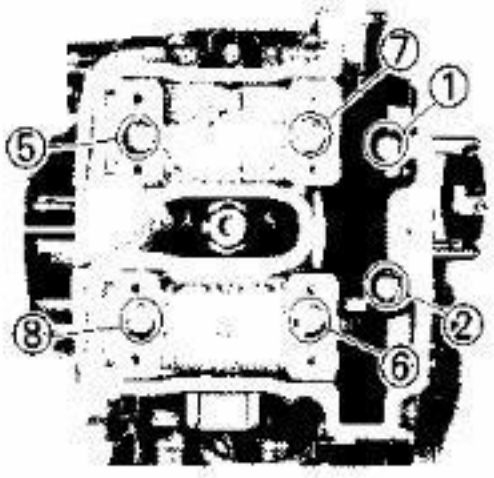

3. Install:
   - Cylinder head

NOTE:

Tighten the bolts and nuts in their proper tightening sequence.

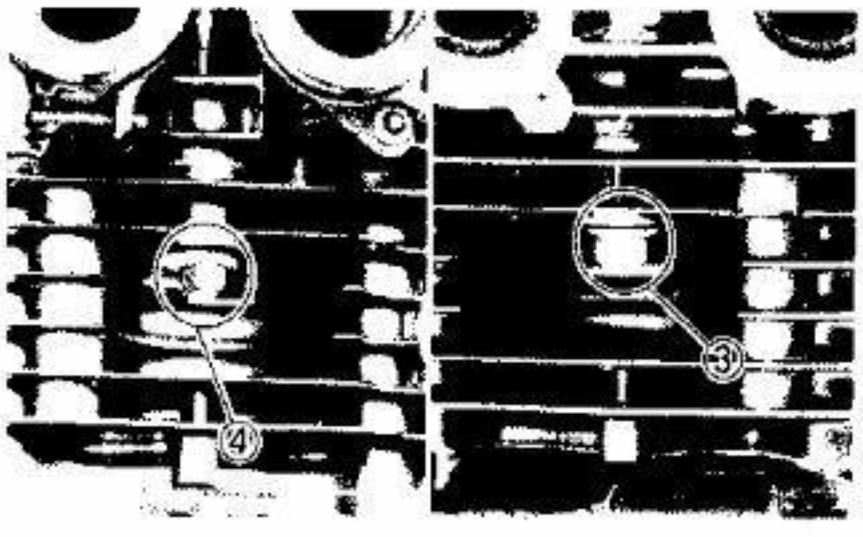

Bolts (Cylinder Head ⑤, ⑥, ⑦, ⑧):
40 Nm (4.0 m•kg, 29 ft•lb)
Bolts (Cylinder Head ①, ②):
10 Nm (1.0 m•kg, 7.2 ft•lb)
Nut (Cylinder Head ③, ④):
20 Nm (2.0 m•kg, 14 ft•lb):

CAMSHAFT

① Intake side chain guide
② Cam sprocket
③ Camshaft (Intake)
④ Camshaft (Exhaust)
⑤ Exhaust side chain guide
⑥ Chain tensioner body
⑦ Cam chain
⑧ Adjusting pad
⑨ Valve lifter
⑩ Valve retainer
⑪ Spring seat
⑫ Oil seal
⑬ Inner spring
⑭ Outer spring
⑮ Spring seat
⑯ Valve
⑰ Upper chain guide
⑱ Match mark

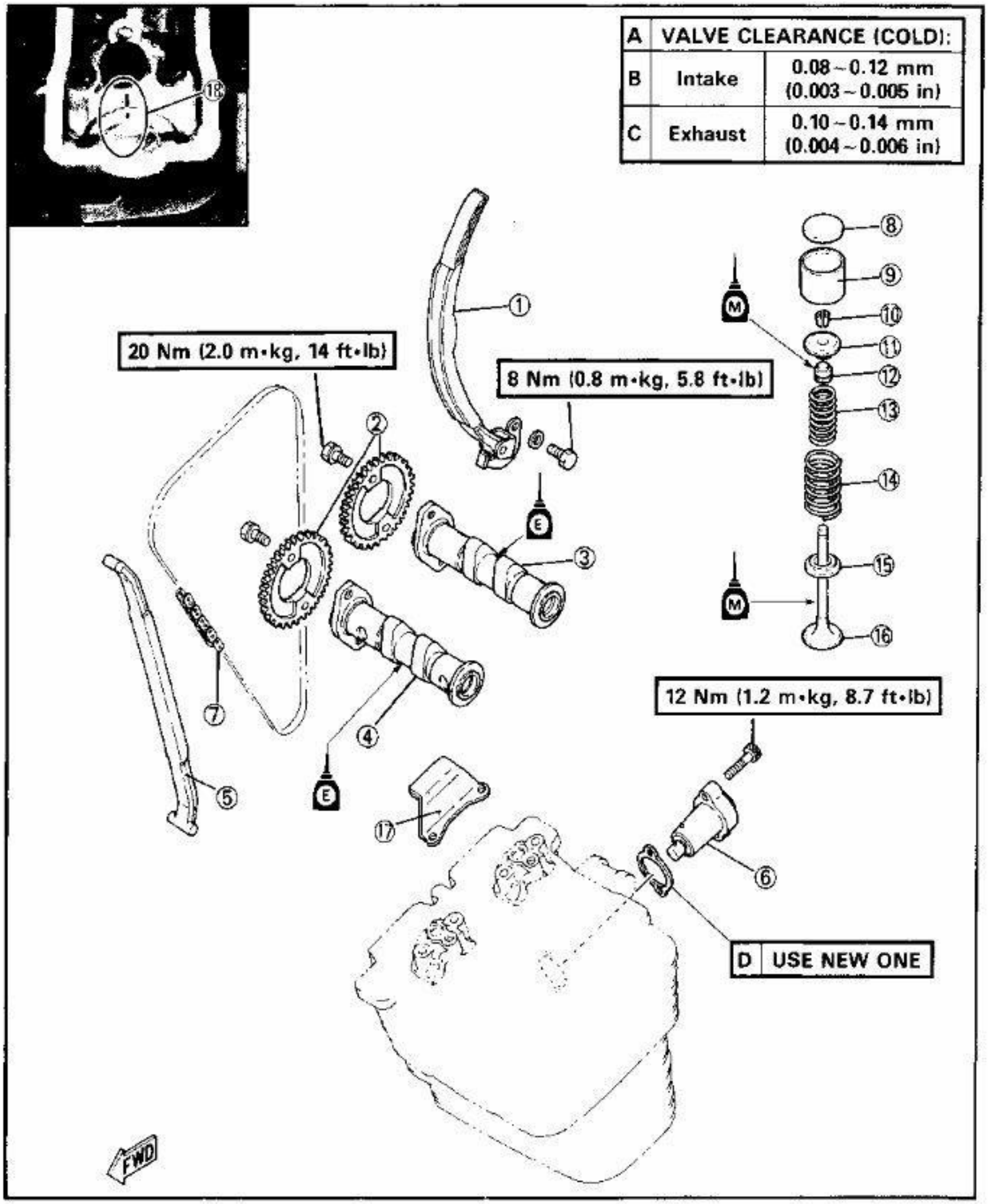

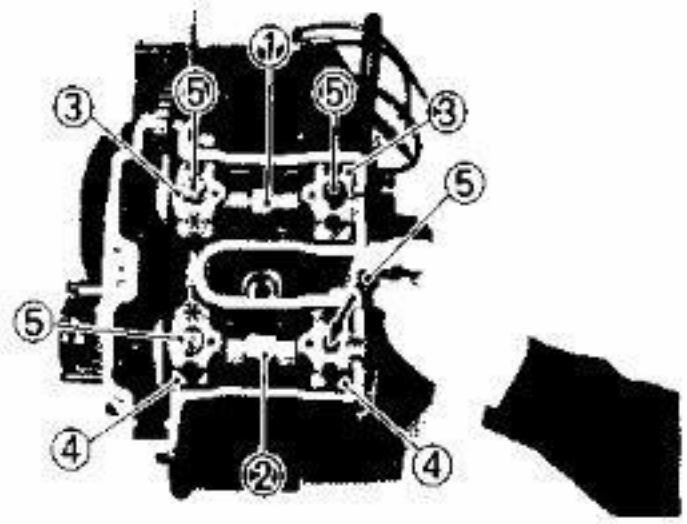

1. Install:
   - Camshaft (Intake) ①
   - Camshaft (Exhaust) ②
   - Cam caps (Intake) ③
   - Cam caps (Exhaust) ④
   - Oil plugs ⑤

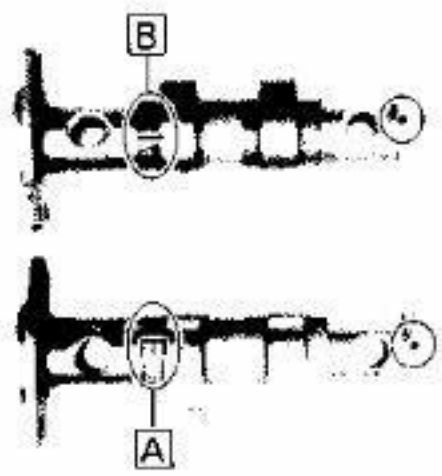

NOTE:

- "I" mark [B] for intake camshaft
- "E" mark [A] for exhaust camshaft
- Make sure the timing mark on the camshaft faces upward.
- Apply engine oil to camshaft bearing surfaces before installing camshafts.
- Do not install the bolts at ✱ marked places in this stoge.

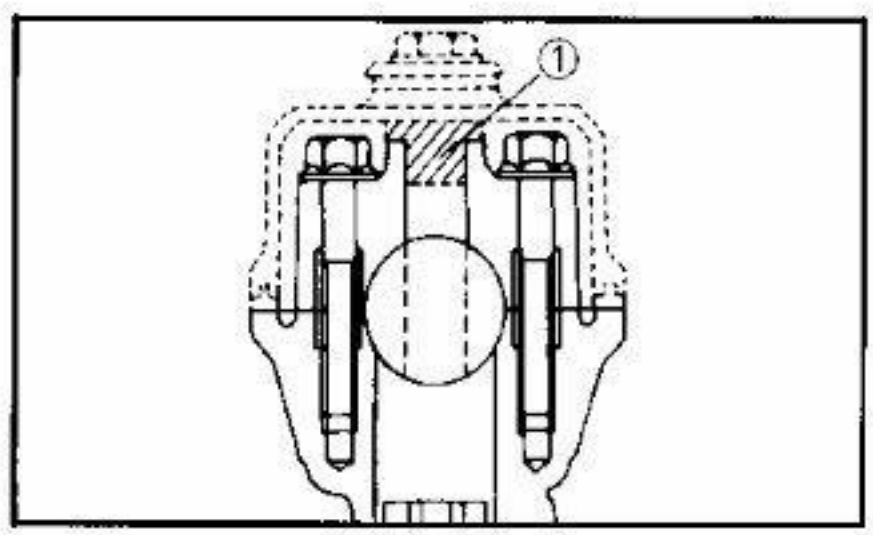

CAUTION:

The oil plugs ① must be installed in each camshaft hole to ensure that an adequate supply of oil will be distributed along the camshafts.

2. Tighten:
   - Bolts (Cam cap):

	Bolts (Cam Cap): **10 Nm (1.0 m•kg, 7.2 ft•lb)**

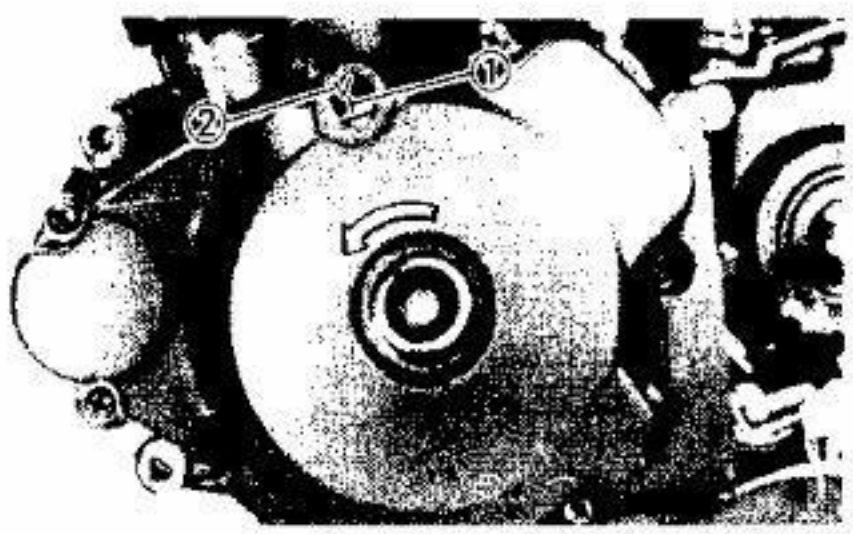

Cam Chain

1. Rotate:
   - Crankshaft
     Counterclockwise.
2. Align:
   - "I" mark ①
     On the AC Generater rotor with the stationary pointer ② when piston is at TDC on compression stroke.

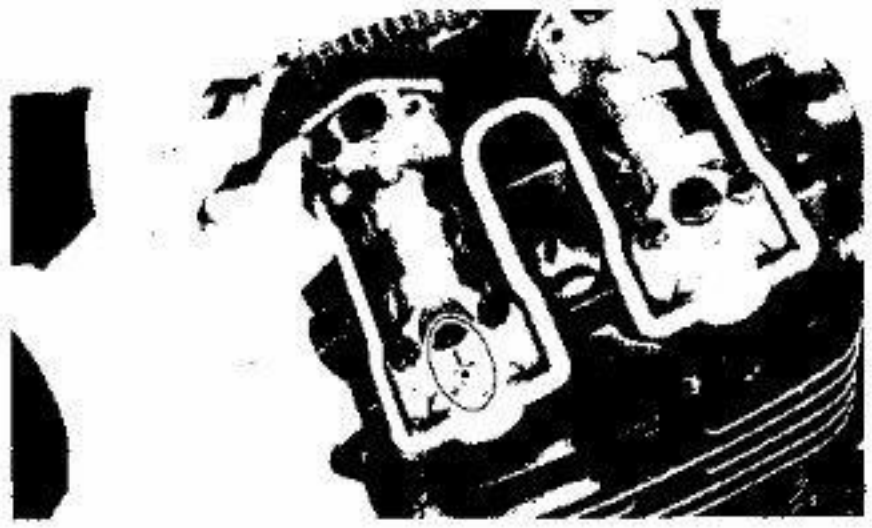

3. Rotate:
   - Camshaft (Exhaust)
4. Align:
   - Exhaust camshaft timing mark
     With the left side exhaust cam cap mark.

CAUTION:

Do not rotate the camshaft over 1/2 turn or damage to the piston and valve will result.

5. Position:
   - Cam chain
     Onto sprockets.
6. Install:
   - Sprockets
     Onto exhaust camshafts.
7. Force the exhaust sprocket clockwise (viewing from left side engine) to remove all cam chain slack.
8. Align:
   - Sprocket, hole
     With the exhaust camshaft thread hole.

NOTE:

If the sprocket hole do not align with the camshaft hole, adjust chain links between crankshaft and exhaust camshaft.

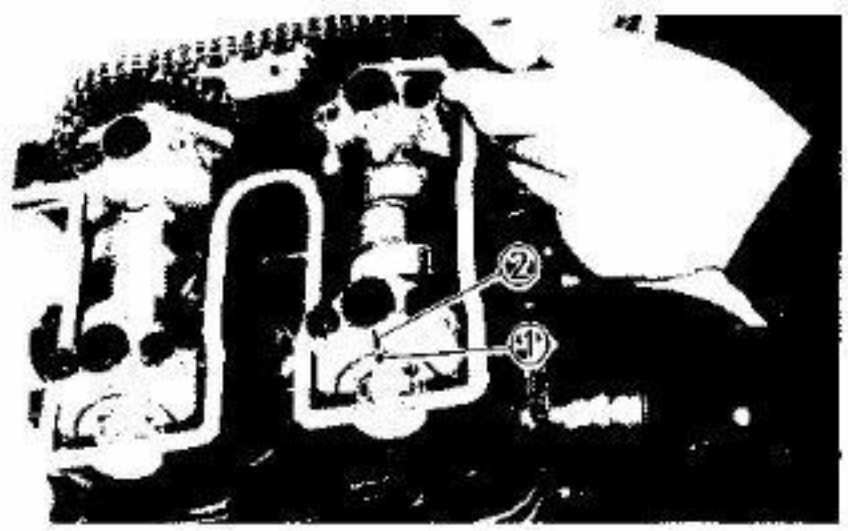

9. Install:
   - Bolt (Sprocket-Exhaust)
     Temporarily tighten.
10. Rotate:
    - Camshaft (Intake)
11. Align:
    - Intake camshaft timing mark ①
      With the left side intake cam cap mark ②.

CAUTION:

Do not rotate the camshaft over 1/2 turn or damage to the piston and valve will result.

12. Force the intake sprocket clockwise (viewing from left side engine) to remove all cam chain slack.

13. Align:
    - Intake sprocket hole
      (with the intake camshaft thread hole)

NOTE:

If the sprocket hole do not align with the camshaft thread hole, adjust chain links between exhaust and intake camshafts.

14. Install:
    - Bolt (Sprocket-Intake)
      (temporarily tighten)

NOTE:

- Be sure the camshaft timing marks align with the cam cap arrow mark.
- Be sure the "I" mark on the rotor align with the stationary pointer.

15. Install:
    - Chain guide (Exhaust) ②
    - Chain guide (Upper) ①

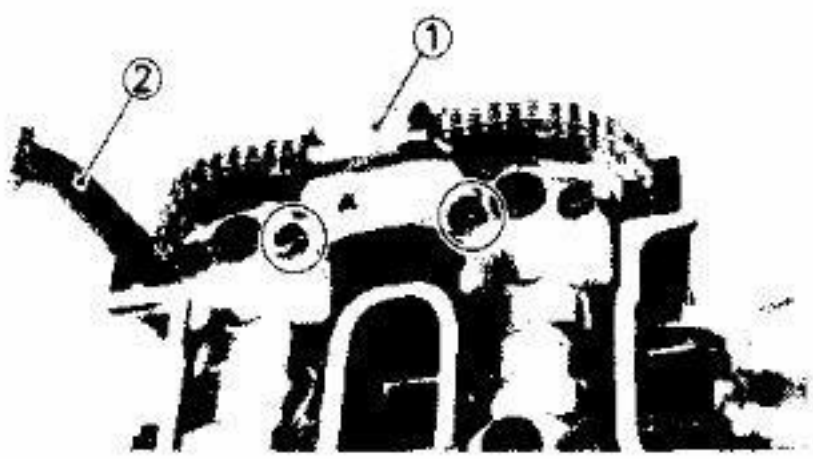

	Bolt (Chain Guide-Upper): **10 Nm (1.0 m•kg, 7.2 ft•lb)**

16. Install:
    - Gasket (New)
    - Tensioner assembly ①

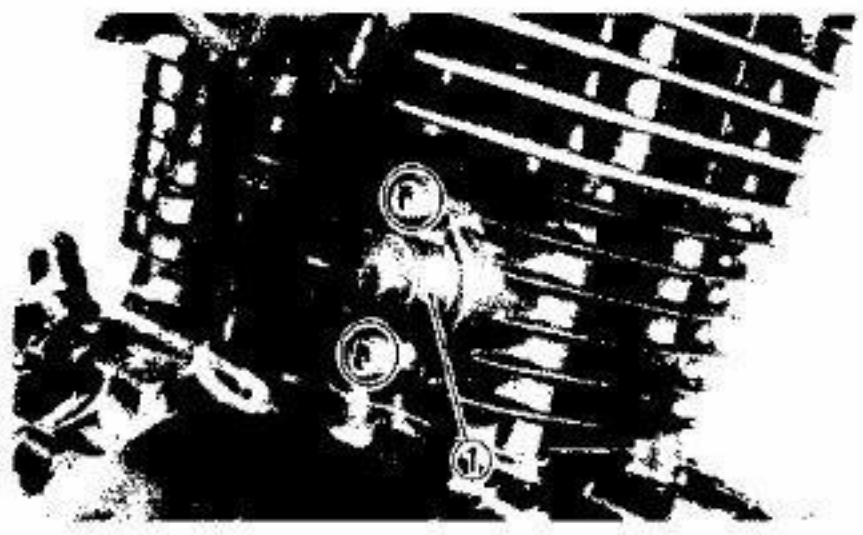

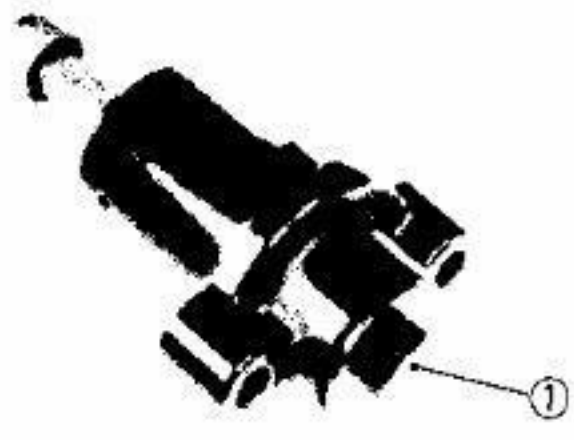

Cam chain tensioner installation steps:
- Remove the blind bolt ① from the tensioner body.
- Insert the small screw driver into the blind bolt hole.
- Turn the screw driver clockwise until it stops completely; then, keep the screw driver at this position.

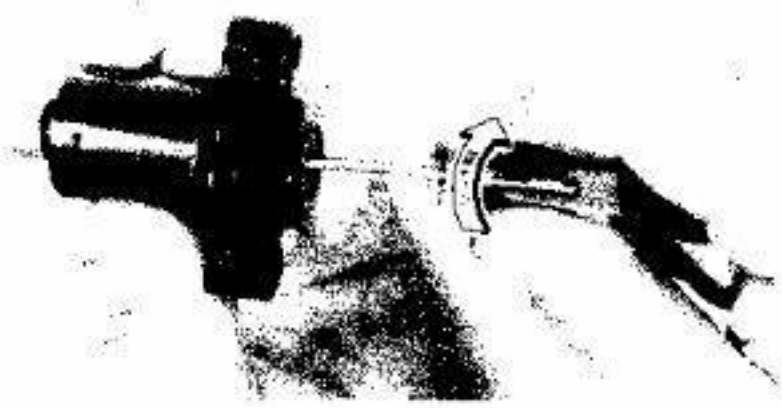

- Install the tensioner with a new gasket onto the cylinder. Torque the bolts to specification.

Bolts (Cam Chain Tensioner):
12 Nm (1.2 m•kg, 8.7 ft•lb)
Blind Bolt:
6 Nm (0.6 m•kg, 4.3 ft•lb)

- Release the tension rod by pulling out the screw driver.

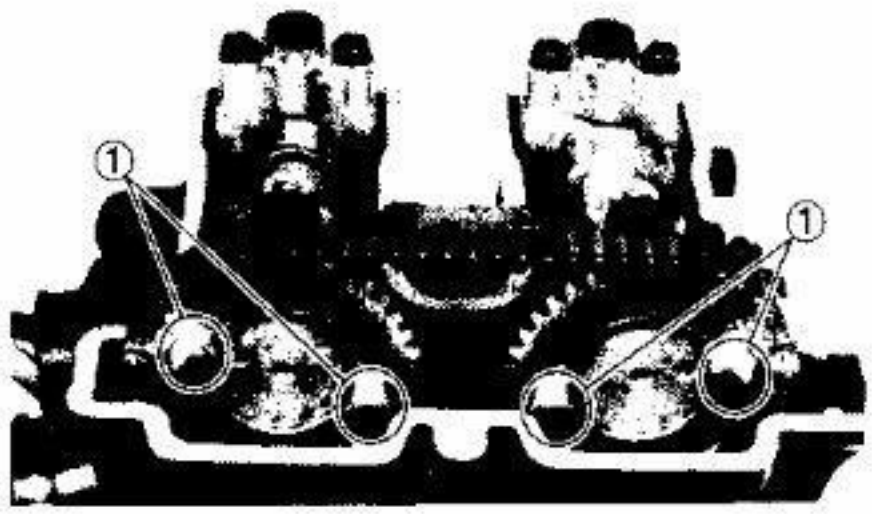

17. Rotate:
    - Crankshaft
    Counterclockwise.
18. Tighten:
    - Bolts (Sprocket) ① (all)

Bolts (Sprocket):
20 Nm (2.0 m•kg, 14 ft•lb)

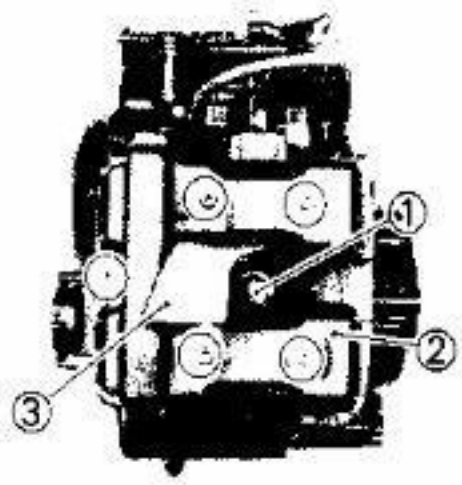

19. Install:
    - Crankcase cover plate
    - Timing plug
    - Spark plug ①

Spark Plug:
17.5 Nm (1.75 m•kg, 12.5 ft•lb)

- Gasket (Cylinder head cover)
- Cylinder head cover ②
- Air baffle plate ③

Cylinder Head Cover Bolt:
10 Nm (1.0 m•kg, 7.2 ft•lb)

REMOUNTING ENGINE

Reverse engine removal steps. Pay close attention to installation of following steps.

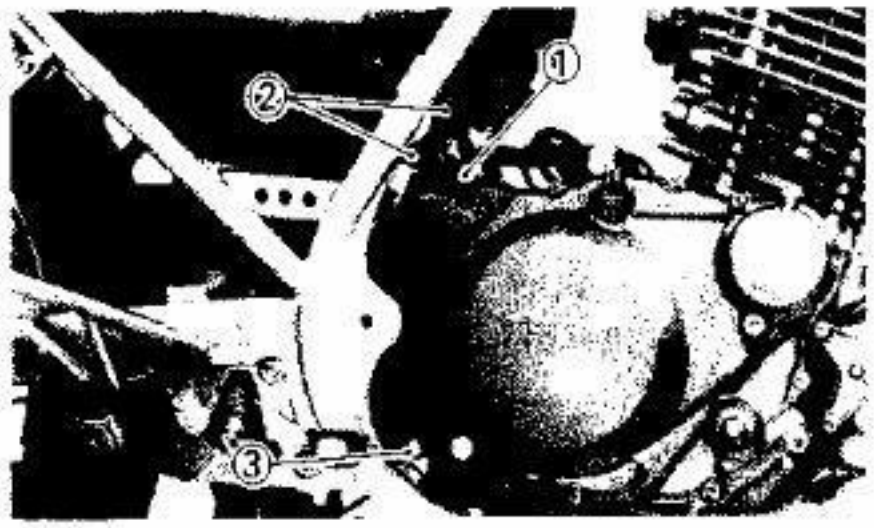

1. Tighten:
   - Engine mounting bolts.

Bolt (Mounting - Rear Upper) ①:
33 Nm (3.3 m•kg, 24 ft•lb)
Bolts (Bracket) ②:
33 Nm (3.3 m•kg, 24 ft•lb)
Bolt (Mounting - Rear Lower) ③:
33 Nm (3.3 m•kg, 24 ft•lb)

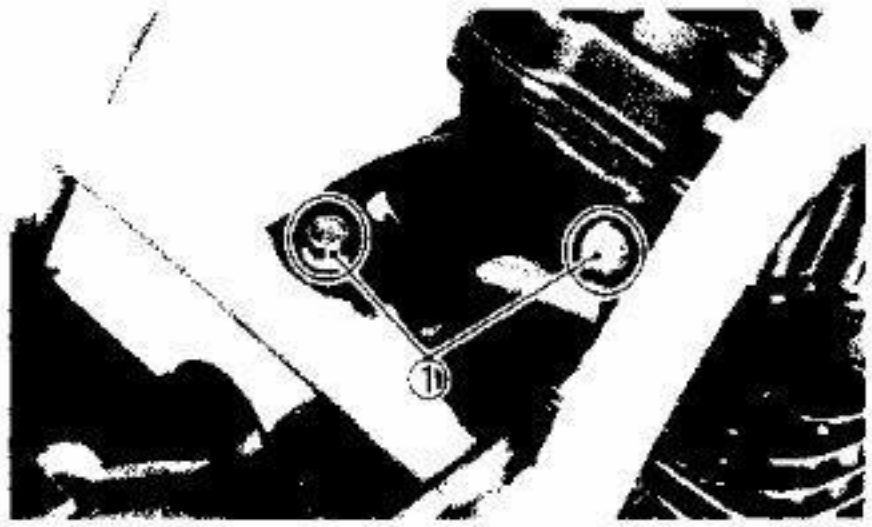

Bolts (Mounting - Upper) ①:
33 Nm (3.3 m•kg, 24 ft•lb)

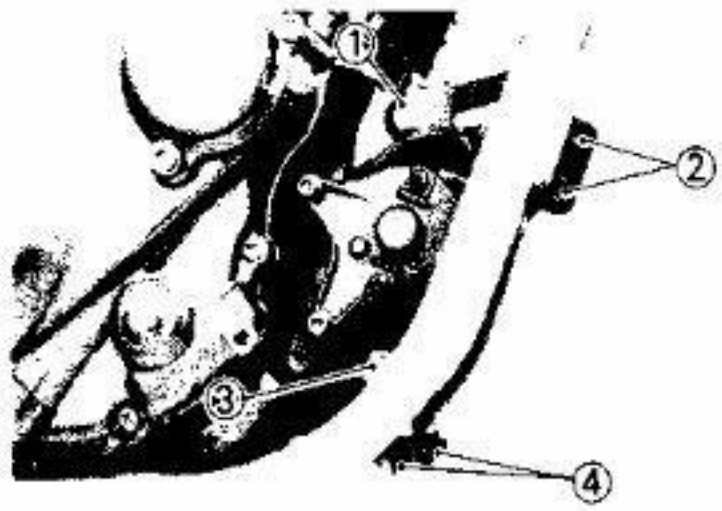

Bolt (Mounting - Front Upper) ①:
33 Nm (3.3 m•kg, 24 ft•lb)
Bolts (Front Bracket - Upper) ②:
33 Nm (3.3 m•kg, 24 ft•lb)
Bolt (Mounting - Front Lower) ③:
33 Nm (3.3 m•kg, 24 ft•lb)
Bolts (Front Bracket - Lower) ④:
20 Nm (2.0 m•kg, 14 ft•lb)

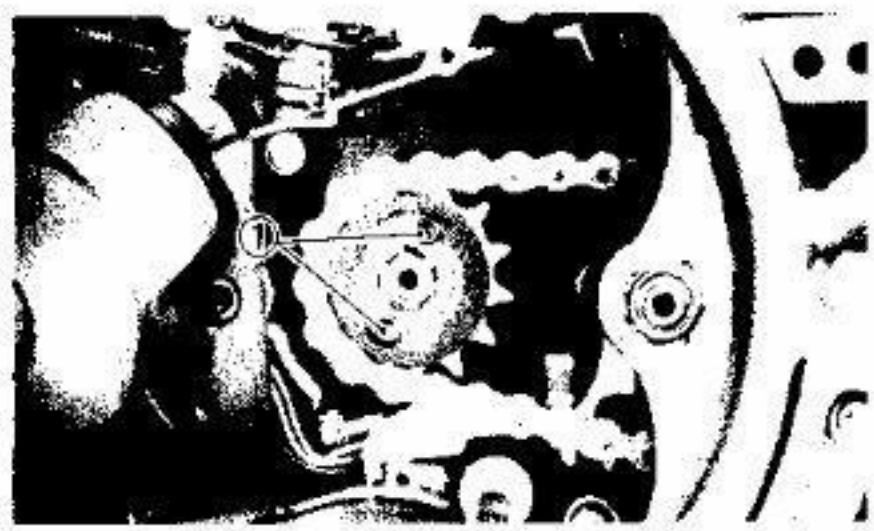

2. Tighten:
   - Bolts (Drive chain sprocket)

Bolts (Drive Chain Sprocket) ①:
10 Nm (1.0 m•kg, 7.2 ft•lb)

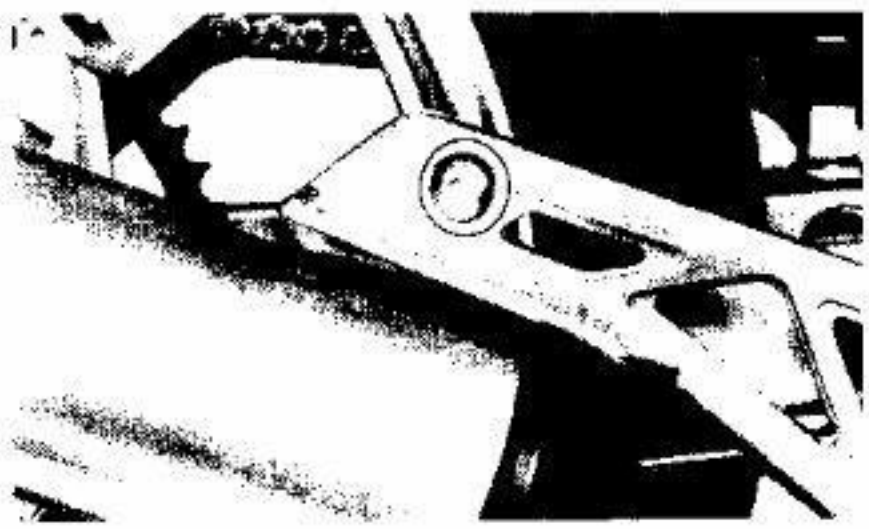

3. Tighten:
   - Exhaust pipe and muffler

Bolt (Muffler):
27 Nm (2.7 m•kg, 19 ft•lb)

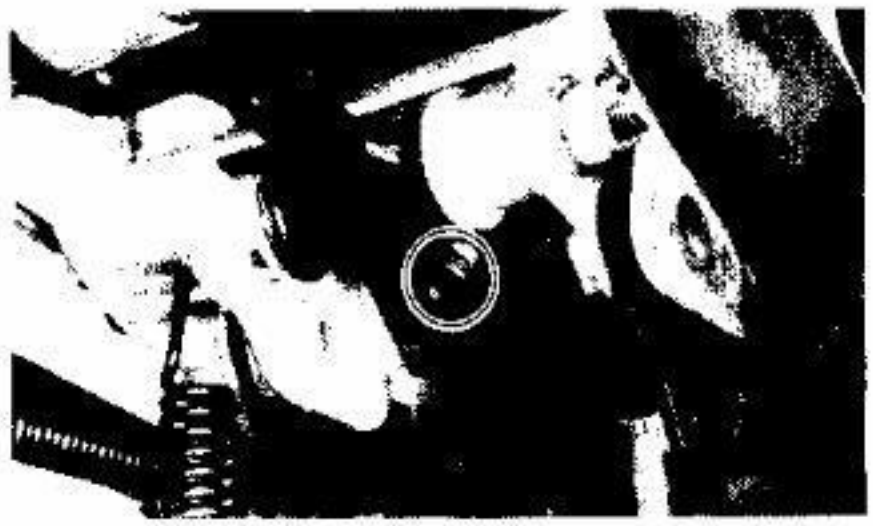

Bolt (Muffler Chamber):
27 Nm (2.7 m•kg, 19 ft•lb)

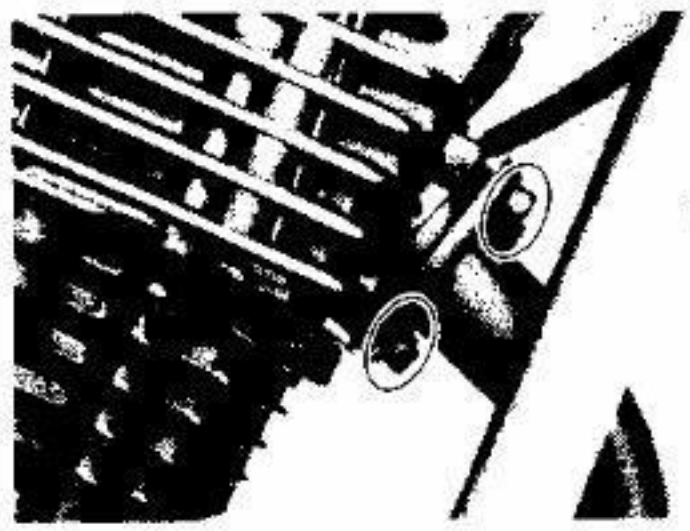

Bolts (Exhaust Pipe):
12 Nm (1.2 m•kg, 8.7 ft•lb)

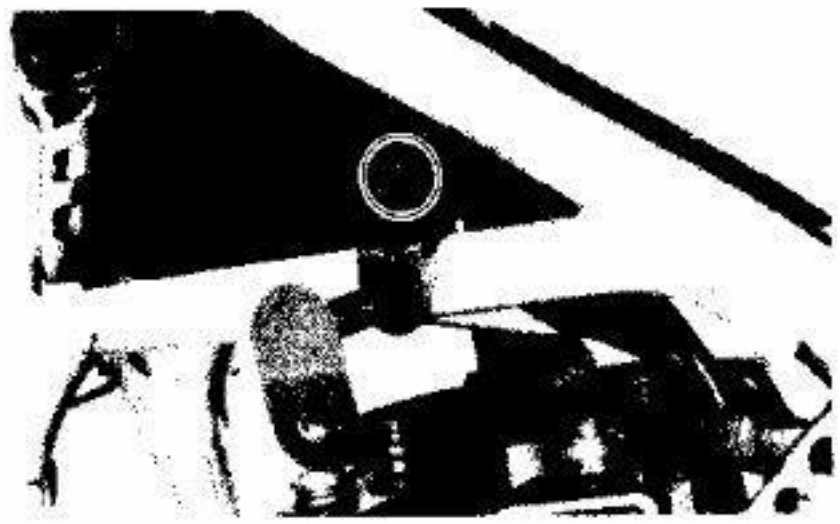

4. Tighten:
   - Cowling stays

Bolts (Cowling Stay):
23 Nm (2.3 m•kg, 17 ft•lb)

5. Adjust:
   - Drive chain slack

   Refer to "CHAPTOR 2. DRIVE CHAIN SLACK ADJUSTMENT" section.

Drive Chain Slack:
15 ~ 20 mm (0.6 ~ 0.8 in)

6. Tighten:
   - Nut (Rear axle)

Nut (Rear Axle):
110 Nm (11.0 m•kg, 80 ft•lb)

7. Fill:
   - Engine

Recommended Oil:
Yamalube 4-cycle oil or SAE 20W40 type SE motor oil
Total Amount:
1.8 L (1.58 Imp qt, 1.9 US qt)

8. Inspect:
   - Oil leakage
   - Oil level
   - Oil pressure

   Refer to "CHAPTER 2. ENGINE OIL LEVEL INSPECTION" and "OIL PRESSURE INSPECTION" section.

9. Install:
   - Cowling

   Refer to "CHAPTER 2. COWLING" section.

CHAPTER 4.
CARBURETION

CARBURETOR 4-1
SECTION VIEW 4-2
REMOVAL 4-3
DISASSEMBLY 4-3
INSPECTION 4-4
ASSEMBLY 4-6
INSTALLATION 4-8
ADJUSTMENT 4-8

CARBURETION

CARBURETOR

① Secondary carburetor
② Primary carburetor
③ Coasting enricher assembly
④ Jet needle (Secondary carburetor)
⑤ Vacuum piston
⑥ Main nozzle
⑦ Main jet (Secondary carburetor)
⑧ Blind plug
⑨ Jet needle (Primary carburetor)
⑩ Piston valve
⑪ Pilot screw
⑫ Pilot jet
⑬ Main nozzle
⑭ Main jet (Primary carburetor)
⑮ Valve seat assembly
⑯ Starter plunger assembly
⑰ Float
⑱ Drain screw

SPECIFICATIONS		
	PRIMARY CARB	SECONDARY CARB
MAIN JET (M.J.)	#122	#80
MAIN AIR JET (M.A.J.)	ϕ1.2	ϕ0.8
JET NEEDLE (J.N.)	5A70	4A12
PILOT JET (P.J.)	#38	—
PILOT AIR JET (P.A.J.)	ϕ1.0	—
PILOT SCREW	Preset	—
FLOAT VALVE SEAT	ϕ2.5	—
FUEL LEVEL	5.5 ~ 6.5 mm (0.22 ~ 0.26 in)	
FLOAT HEIGHT	26 ~ 28 mm (1.02 ~ 1.10 in)	
ENGINE IDLE SPEED	1,350 ~ 1,450 r/min	

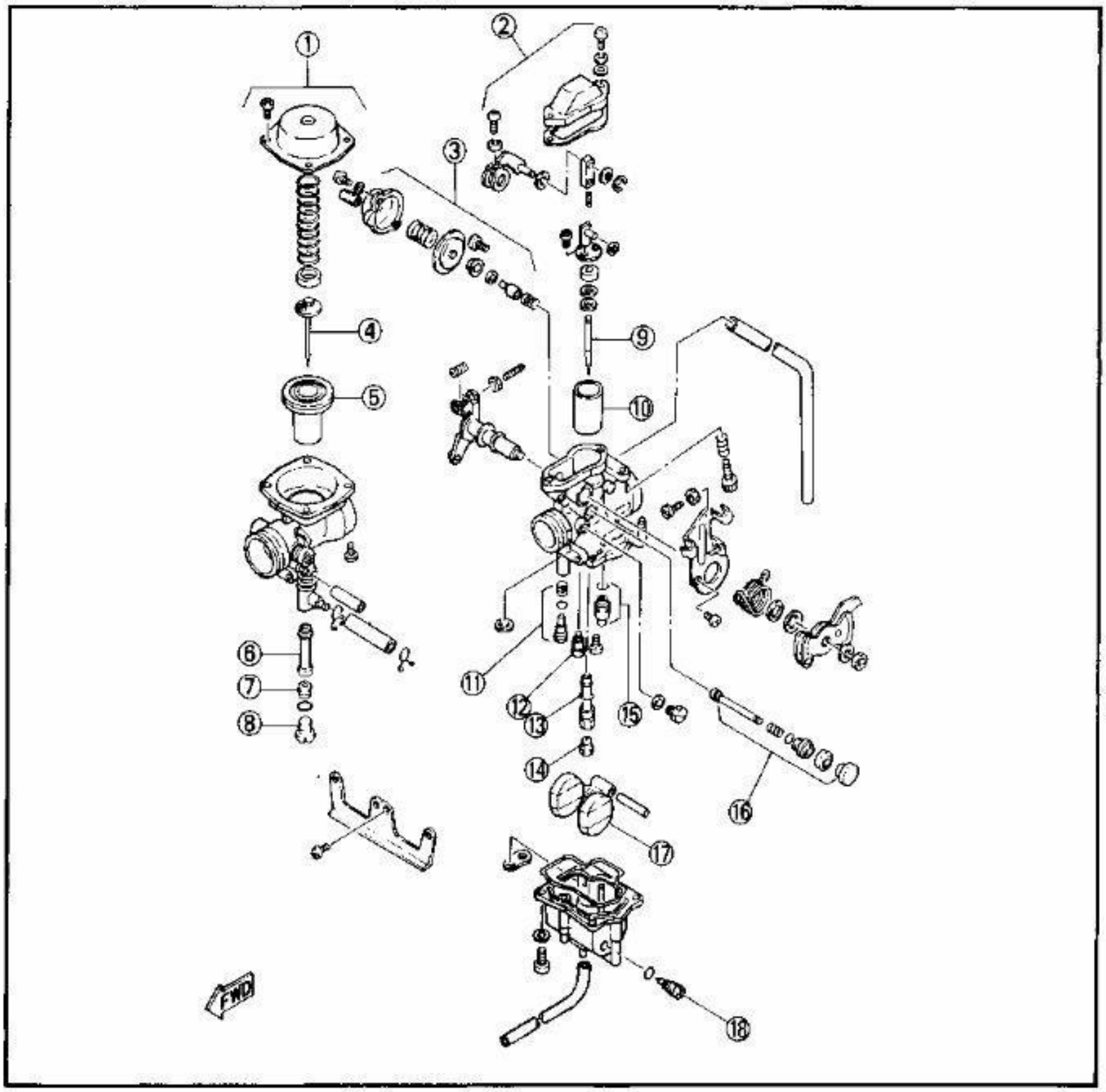

SECTION VIEW

① Air
② Fuel
③ Mixture
④ Air inlet
⑤ Starter valve
⑥ Mixture outlet
⑦ Starter jet #1
⑧ Starter jet #2
⑨ Pilot air circuit
⑩ Pilot outlet
⑪ Pilot screw
⑫ Pilot jet
⑬ Bypass hole
⑭ Throttle valve
⑮ Main air jet
⑯ Main nozzle
⑰ Jet needle
⑱ Primary main air circuit
⑲ Air inlet for startrer
⑳ Enricher air jet
㉑ Pilot air jet
㉒ Main air jet
㉓ Fuel joint
㉔ Float
㉕ Needle valve
㉖ Secondary fuel circuit
㉗ Valve seat
㉘ Main air jet
㉙ Secondary main air circuit
㉚ Air inlet
㉛ Rod
㉜ Valve
㉝ Diaphragm assembly
㉞ Valve seat
㉟ Vacuum circuit
㊱ Diaphragm
㊲ Vacuum piston
㊳ Main nozzle
㊴ Main jet
㊵ Throttle valve
㊶ Vacuum hole
㊷ Jet needle

A COASTING ENRICHER SYSTEM
B PRIMARY SYSTEM
C FUEL SYSTEM
D SECONDARY SYSTEM
E STARTER SYSTEM

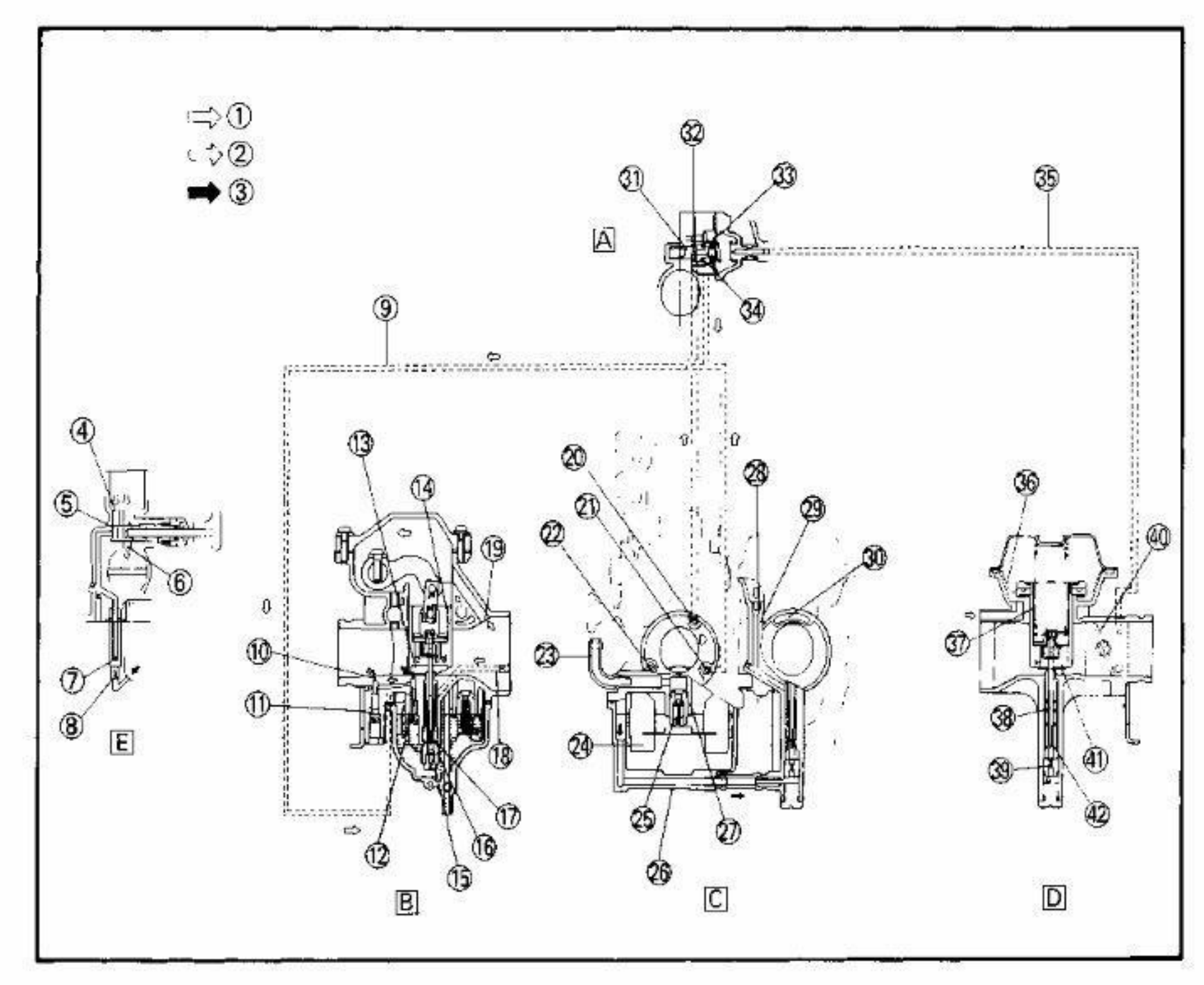

REMOVAL

1. Remove:
   - Carburetor assembly
     Refer to "CHAPTER 3. ENGINE REMOVAL" section.

DISASSEMBLY

NOTE:

The following parts can be cleaned and inspected without carburetor separation.
- Piston valve
- Vacuum piston
- Starter plunger
- Float chamber components
- Coasting enricher

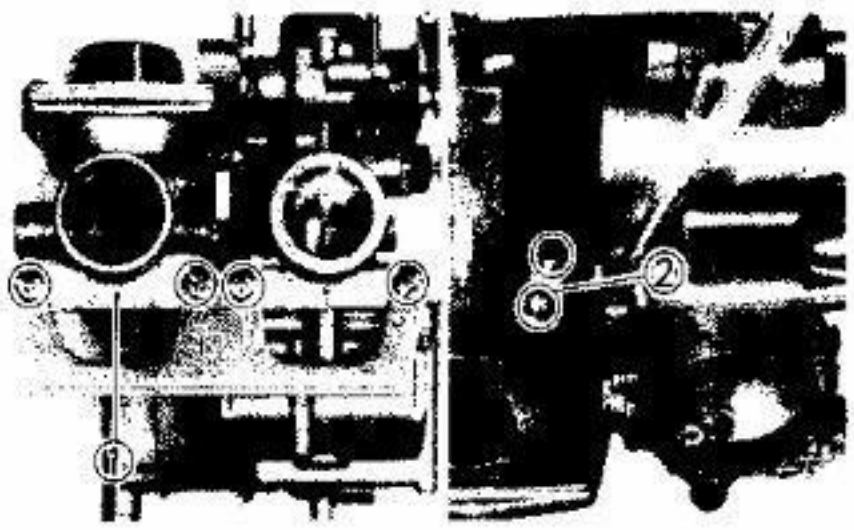

1. Remove:
   - Front bracket ①
   - Rear bracket ②

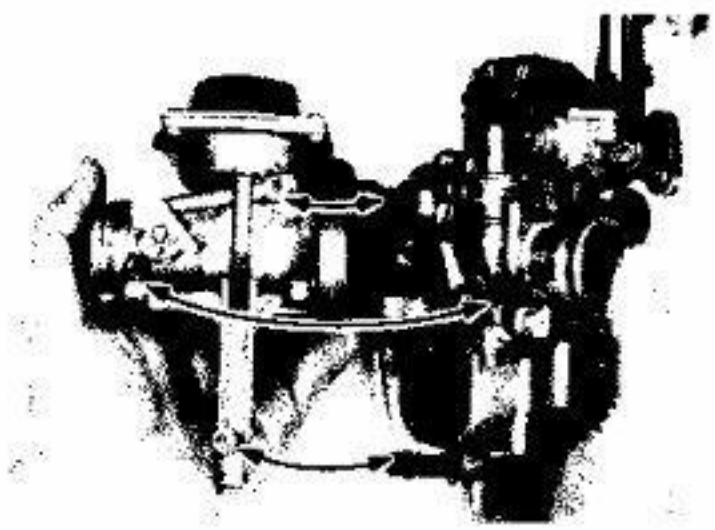

2. Disconnect:
   - Primary carburetor
   - Secondary carburetor

NOTE:

The primary and secondary carburetors are connected by the rubber balance pipe, the fuel line and the vacuum pipe. To separate the carburetors, pull them apart, applying an equal amount of force on each carburetor.

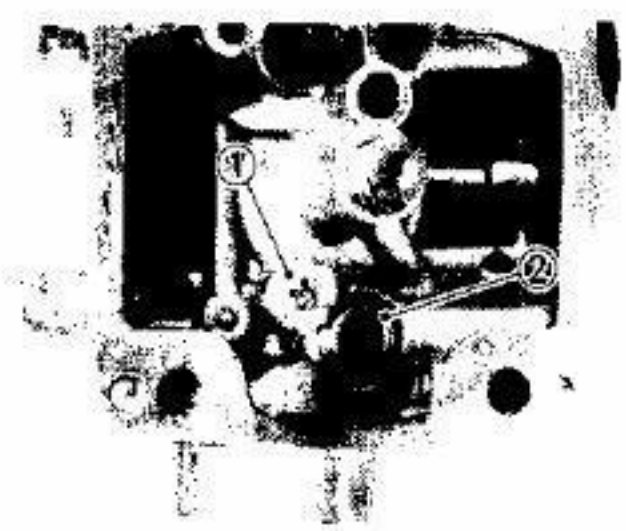

Primary Carburetor

1. Remove:
   - Float chamber
   - Float pin
   - Float
   - Screw ①
   - Valve seat assembly ②

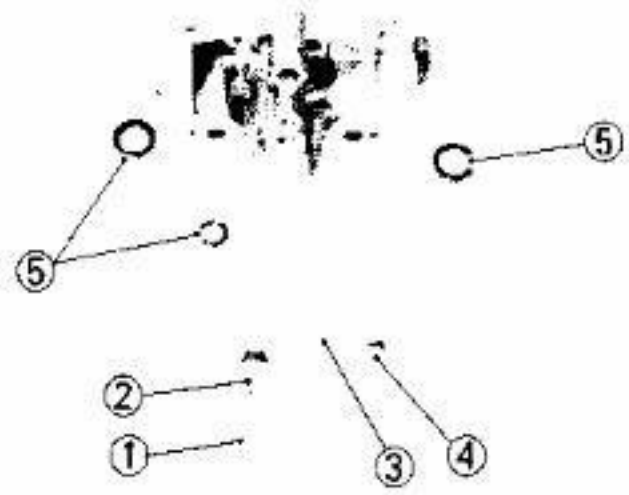

2. Remove:
   - Main jet ①
   - Main nozzle ②
   - Pilot jet ③
   - Pilot screw ④
   - O-rings ⑤

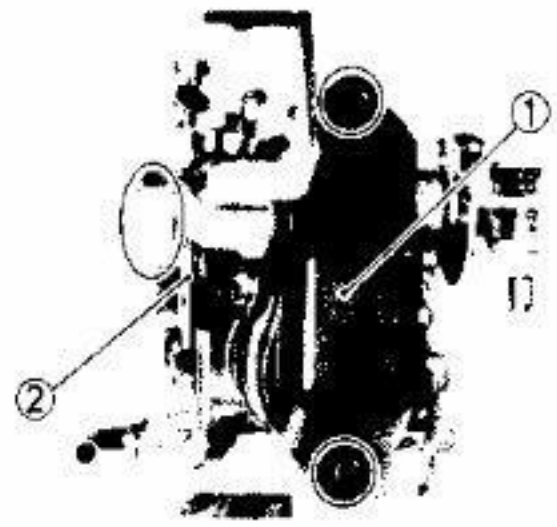

3. Remove:
   - Primary carburetor cap ①
   - Throttle lever assembly ②
   - Piston valve
   - Jet needle

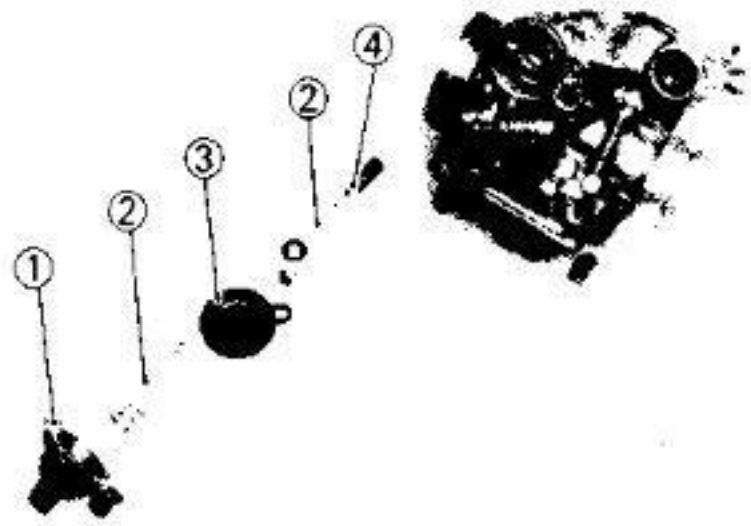

4. Remove:
   - Coasting enricher cover ①
   - Spring ②
   - Diaphragm ③
   - Valve seat ④

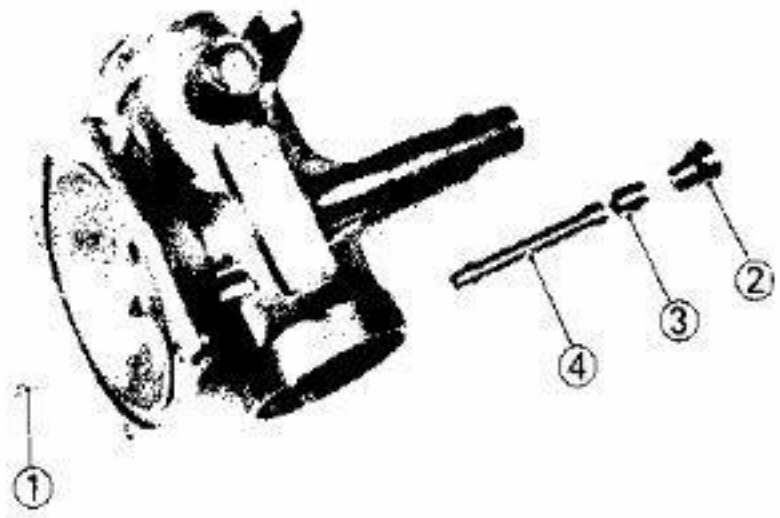

Secondary Carburetor

1. Remove:
   - Vacuum piston cover
   - Vacuum piston
   - Main air jet ①
   - Blind plug ②
   - Main jet ③
   - Main nozzle ④

INSPECTION

1. Inspect:
   - Carburetor body
   - Fuel passage

   Contamination → Clean as indicated.

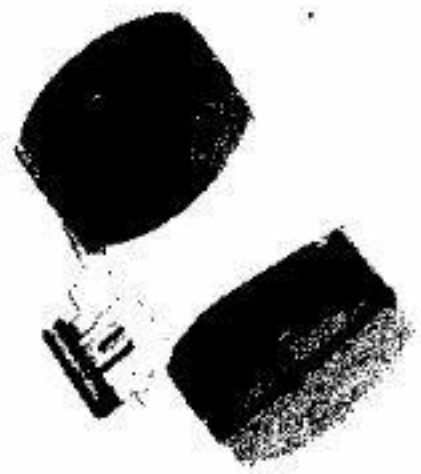

Carburetor cleaning steps:
- Wash carburetor in petroleum based solvent. (Do not use any caustic carburetor cleaning solution).
- Blow out all passages and jets with compressed air.

2. Inspect:
   - Float
     Damage→Replace.

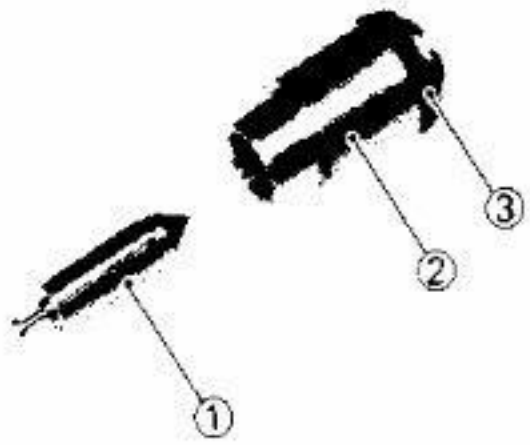

3. Inspect:
   - Float needle valve ①
   - Seat ②
   - O-ring ③
     Damage/Wear/Contamination→Replace as a set
   - Vacuum piston
   - Rubber diaphragm
     Scratches (piston)/Tears (diaphragm)→Replace.

NOTE:
Always replace the needle valve and valve seat as a set.

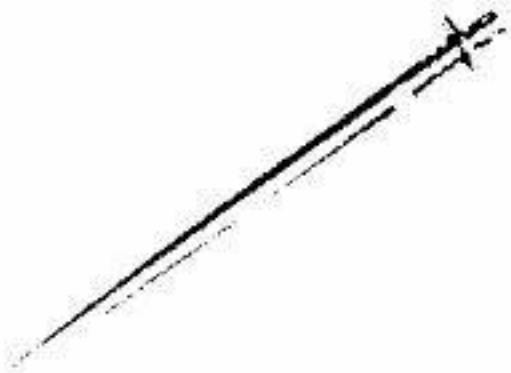

4. Inspect:
   - Jet needles
     Bends/Wear→Replace.

5. Inspect:
   - Starter plunger
     Wear/Damage→Replace.

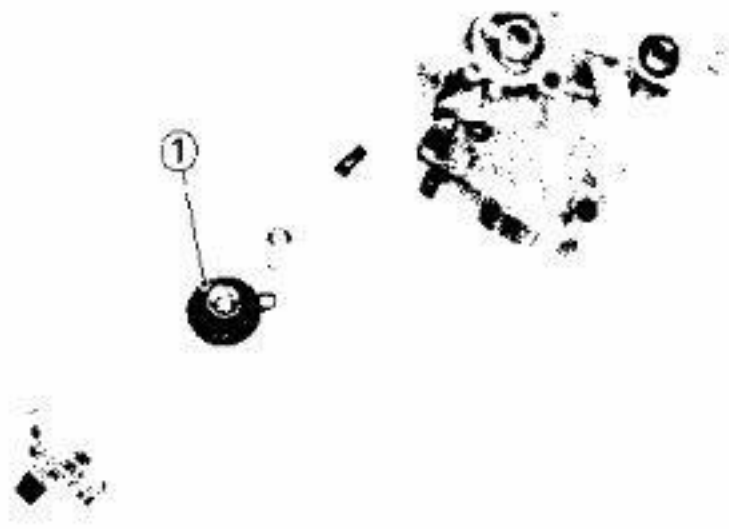

6. Inspect:
   - Coasting enricher rubber diaphragm ①
     Damage→Replace.

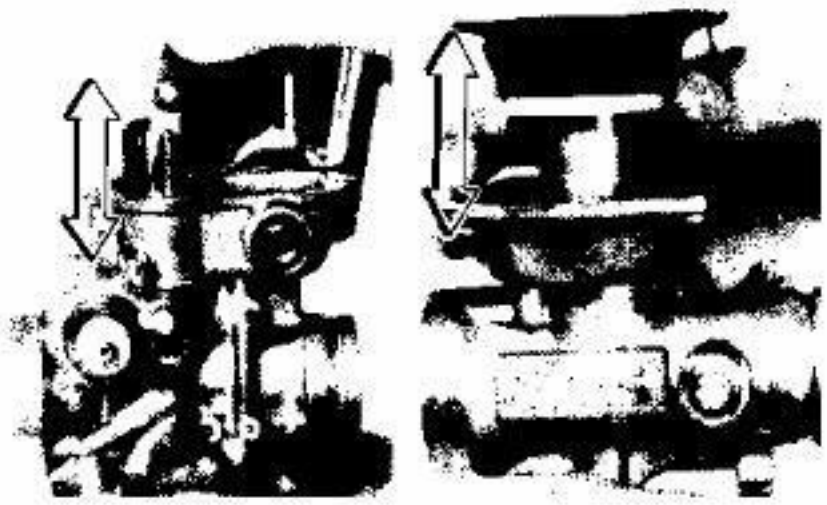

7. Check:
   - Free movement
     Stick → Replace.
     Insert the throttle valve and vacuum piston into the primary and secondary carburetor bodys, and check for free movement.

ASSEMBLY

To assemble the carburetors, reverse the disassembly procedures. Note the following points.

CAUTION:

- **Before reassembling, wash all parts in clean gasoline.**
- **Always use a new gasket.**

Secondary Carburetor

1. Install:
   - Jet needle assembly
     To the vacuum piston.

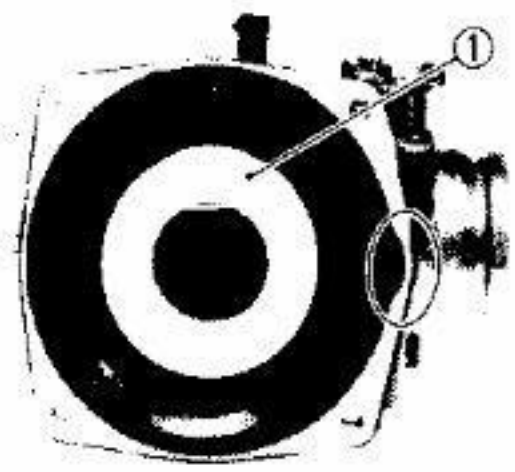

2. Install:
   - Vacuum piston ①

NOTE:

Match the tab on the diaphragm to the matching recess in the vacuum piston.

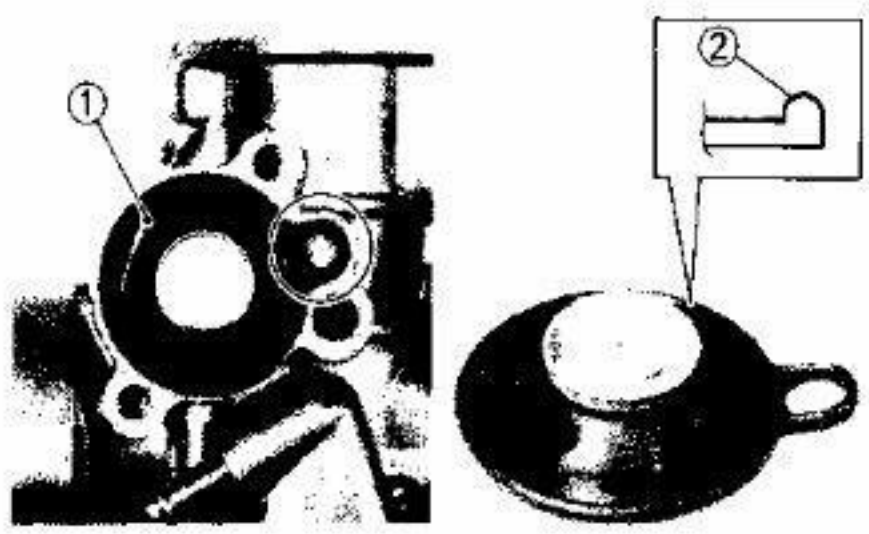

Primary Carburetor

1. Install:
   - Diaphragm ①

NOTE:

- Match the tab on the diaphragm to the matching recess in the coasting enricher.
- The round lip ② side face to carburetor body.

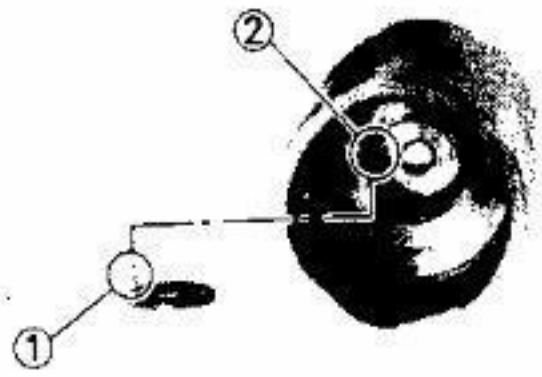

2. Install:
   - Plate
     To the throttle valve.

NOTE:

Insert the projection ① on the plate to the hole ② in the throttle valve.

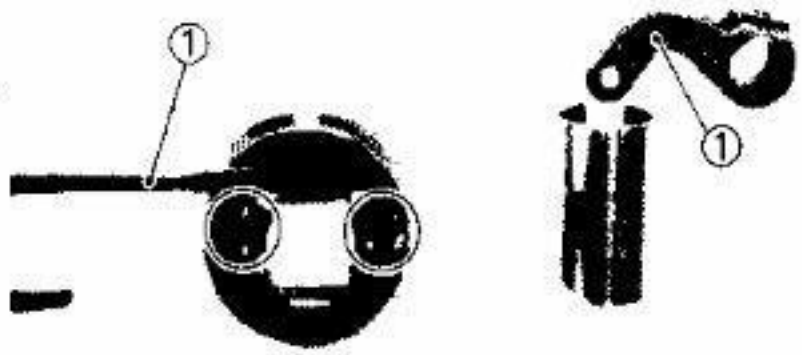

3. Install:
   - Connecting arm assembly ①
     To the throttle valve.

NOTE:

Make sure that the connection arm assembly is at the illustrated position.

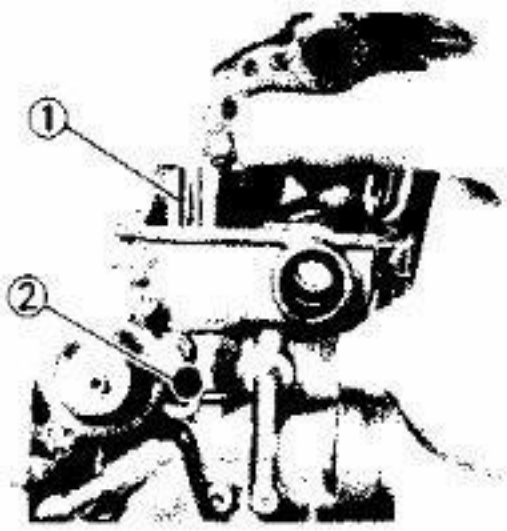

4. Install:
   - Throttle valve assembly

NOTE:

Align the groove ① of the throttle valve with the projection ② of the carburetor body.

5. Measure:
   - Fuel height
     Out of specification → Adjust.

Float height measurement and adjustment steps:

- Remove the float chamber.
- Hold the carburetor in an upside down position.
- Measure the float height ⓐ between the mating surface of the float chamber (gasket removed) and top of the float using a gauge.

NOTE:

The float arm should be resting on the needle valve, but not compressing the needle valve.

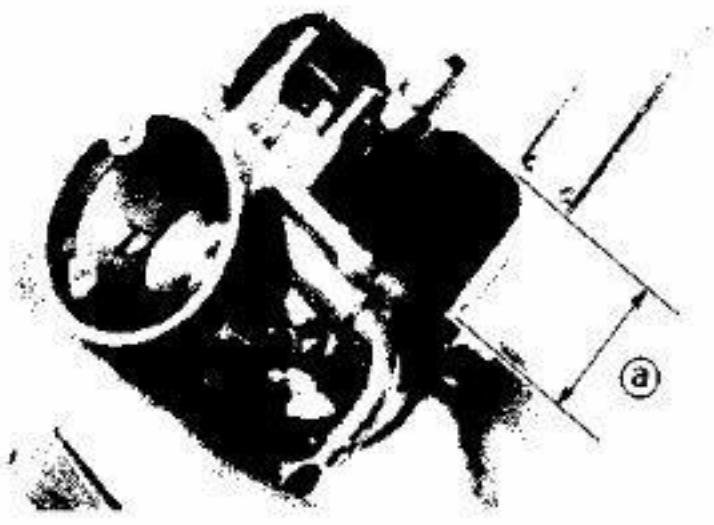

Float Height ⓐ:
26 ~ 28 mm (1.02 ~ 1.10 in)

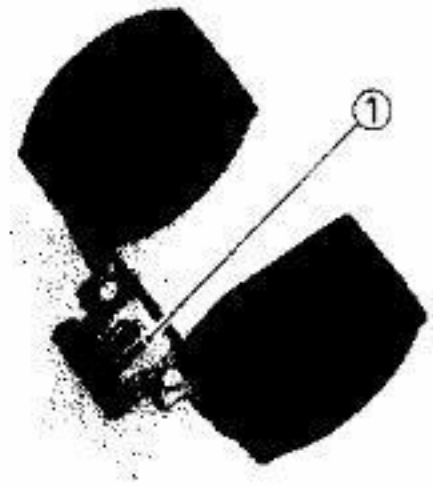

- If the float height is not within specification, inspect the valve seat and needle valve.
- If either is worn, replace them both.
- If both are fine, adjust the float height by bending the float tang (1) on the float.
- Recheck the float height.

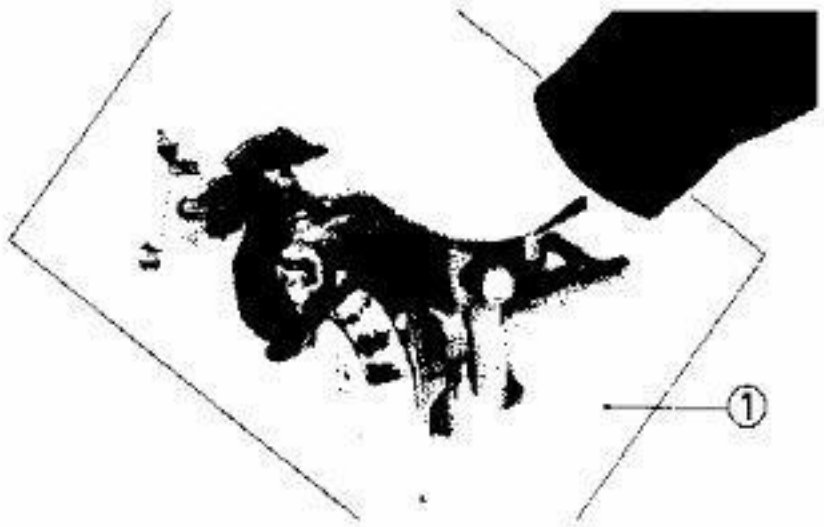

Primary and Secondary Carburetors

1. Install:
   - Stay plate (Upper)
   - Stay plate (Lower)

NOTE:

When reassembling, the surface plate (1) should be used for proper carburetor alignment.

INSTALLATION

1. Install:
   - Carburetor assembly
     Reserve the removal procedures.

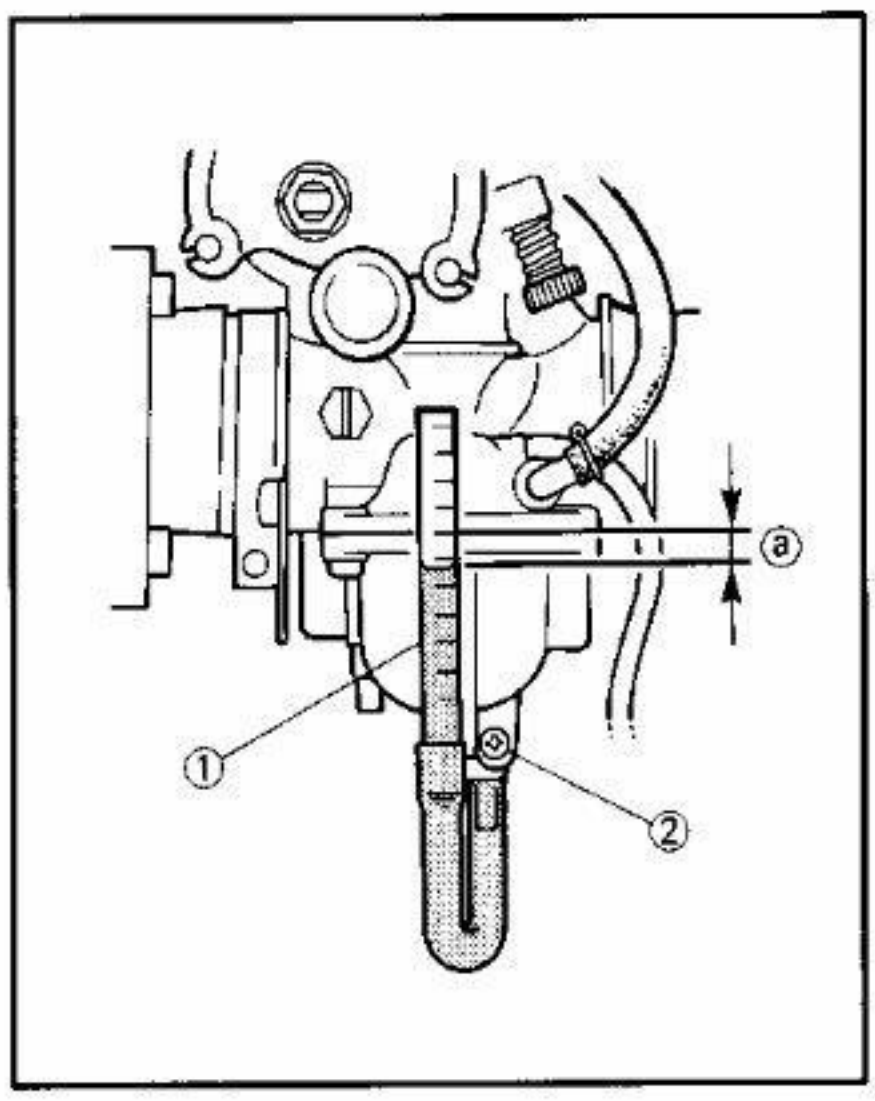

ADJUSTMENT

Fuel Level Adjustment

NOTE:

Before adjusting the fuel level, the float height should be adjusted.

1. Measure:
   - Fuel level (a)
     Out of specification → Adjust.

Fuel level measurement and adjustment steps:

- Place the motorcycle on a level place.
- Use a garage jack under the engine to ensure that the carburetor is positioned vertically.
- Attach the Fuel Level Gauge (1) (YM-01312-A) to the float chamber nozzle.
- Loosen the drain screw (2), and warm up the engine for several minutes.
- Measure the fuel level (a) with the gauge.

Fuel Level ⓐ:
5.5 ~ 6.5 mm (0.22 ~ 0.26 in)
Below the Carburetor Body Edge

- If the fuel level is incorrect, adjust the fuel level.
- Remove the carburetor.
- Inspect the valve seat and needle valve.
- If either is worn, replace them both.
- If both are fine, adjust the float height by bending the float tang on the float.
- Recheck the fuel level.

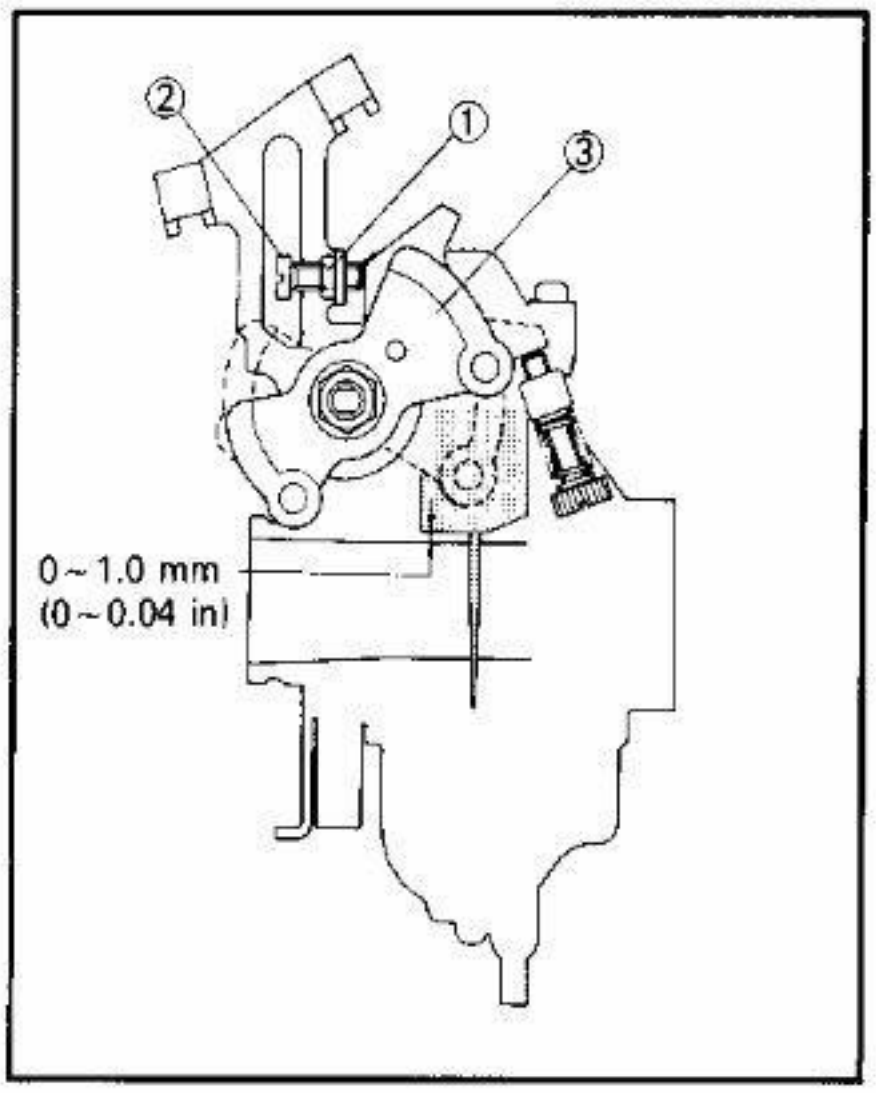

Primary Carburetor Full-open Adjustment

1. Adjust:
   - Throttle valve position

Throttle valve position adjustment steps:
- Loosen the locknut ①.
- Turn the throttle lever ③ to the full-throttle position.
- Turn the adjuster ② in or out so that carburetor valve bottom is positioned within the limits as specified.

Throttle Valve Position ⓐ:
0 ~ 1.0 mm (0 ~ 0.04 in)

- Tighten the locknut.

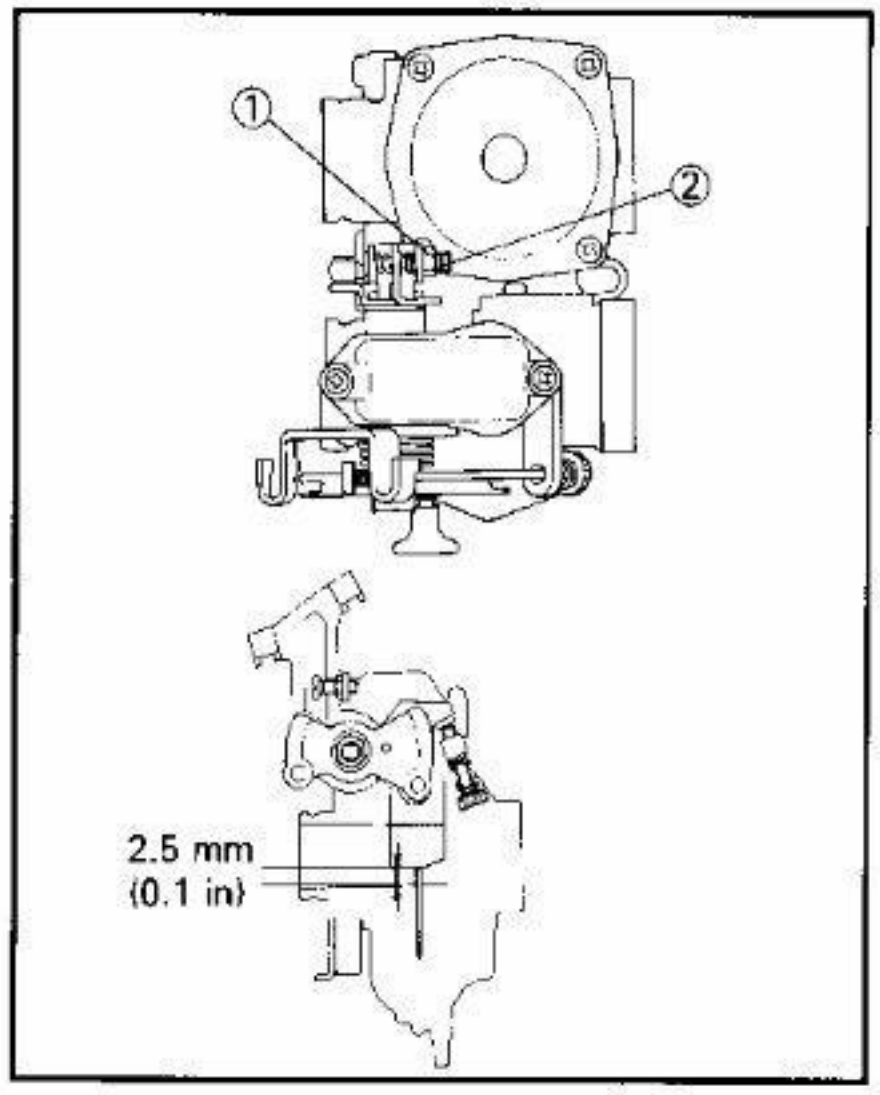

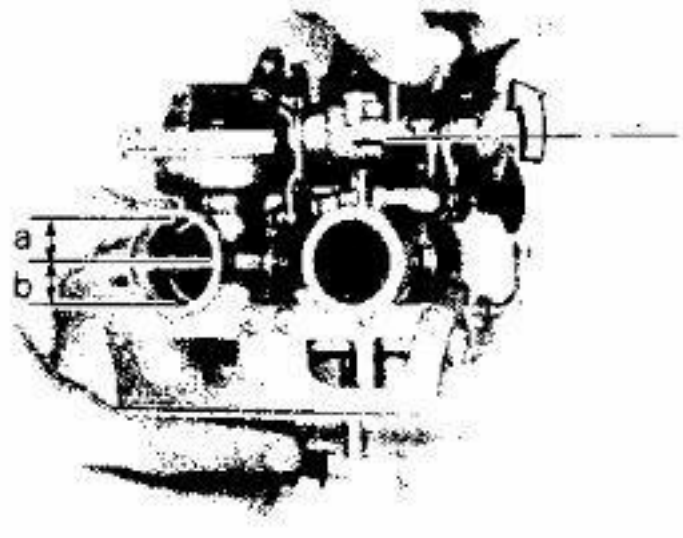

Secondary Carburetor Synchronization

1. Adjust:
   - Secondary carburetor synchronization

Secondary carburetor synchronization adjustment steps:

- Loosen the locknut ①.
- Raise the primary carburetor valve to a height of 2.5 mm (0.1 in) as indicated.
- Adjust the synchronizing screw ② so the secondary throttle shaft just contacts the secondary throttle push lever.
- Tighten the locknut ①.
- Make sure that the secondary valve is opened horizontally (a = b) when the primary carburetor valve is fully opened.

CHAPTER 5.
CHASSIS

FRONT WHEEL 5-1
- REMOVAL 5-2
- INSPECTION 5-2
- INSTALLATION 5-4

REAR WHEEL 5-5
- REMOVAL 5-6
- INSPECTION 5-6
- INSTALLATION 5-8

FRONT BRAKE 5-9
- BRAKE PAD REPLACEMENT 5-11
- CALIPER DISASSEMBLY 5-12
- MASTER CYLINDER DISASSEMBLY 5-13
- INSPECTION AND REPAIR 5-14
- BRAKE REASSEMBLY 5-15
- AIR BLEEDING 5-16
- BRAKE DISC INSTALLATION 5-17

FRONT FORK 5-18
- REMOVAL 5-19
- DISASSEMBLY 5-19
- INSPECTION 5-21
- ASSEMBLY 5-22
- INSTALLATION 5-24

STEERING HEAD 5-25
- REMOVAL 5-26
- INSPECTION 5-28
- INSTALLATION 5-29

REAR SHOCK ABSORBER AND SWINGARM 5-31
- FREE PLAY INSPECTION 5-33
- REMOVAL 5-33
- INSPECTION 5-35
- INSTALLATION 5-36

DRIVE CHAIN AND SPROCKETS 5-39
- REMOVAL 5-39
- INSPECTION 5-39
- ASSEMBLY 5-40

CHASSIS

FRONT WHEEL

① Front axle
② Collar
③ Oil seal
④ Bearing
⑤ Spacer
⑥ Meter clutch
⑦ Clutch retainer
⑧ Oil seal
⑨ Gear unit assembly

TIRE AIR PRESSURE (COLD):		
Basic weight: With oil and full fuel tank	137 kg (302 lb)	
Maximum load*	134 kg (295 lb)	
Cold tire pressure	Front	Rear
Up to 90 kg (198 lb) load*	180 kPa (1.8 kg/cm² 26 psi)	200 kPa (2.0 kg/cm² 28 psi)
90 kg (198 lb) ~ Maximum load*	200 kPa (2.0 kg/cm² 28 psi)	230 kPa (2.3 kg/cm² 32 psi)
High speed riding	200 kPa (2.0 kg/cm² 28 psi)	230 kPa (2.3 kg/cm² 32 psi)

*Load is the total weight of cargo, rider, passenger, and accessories.

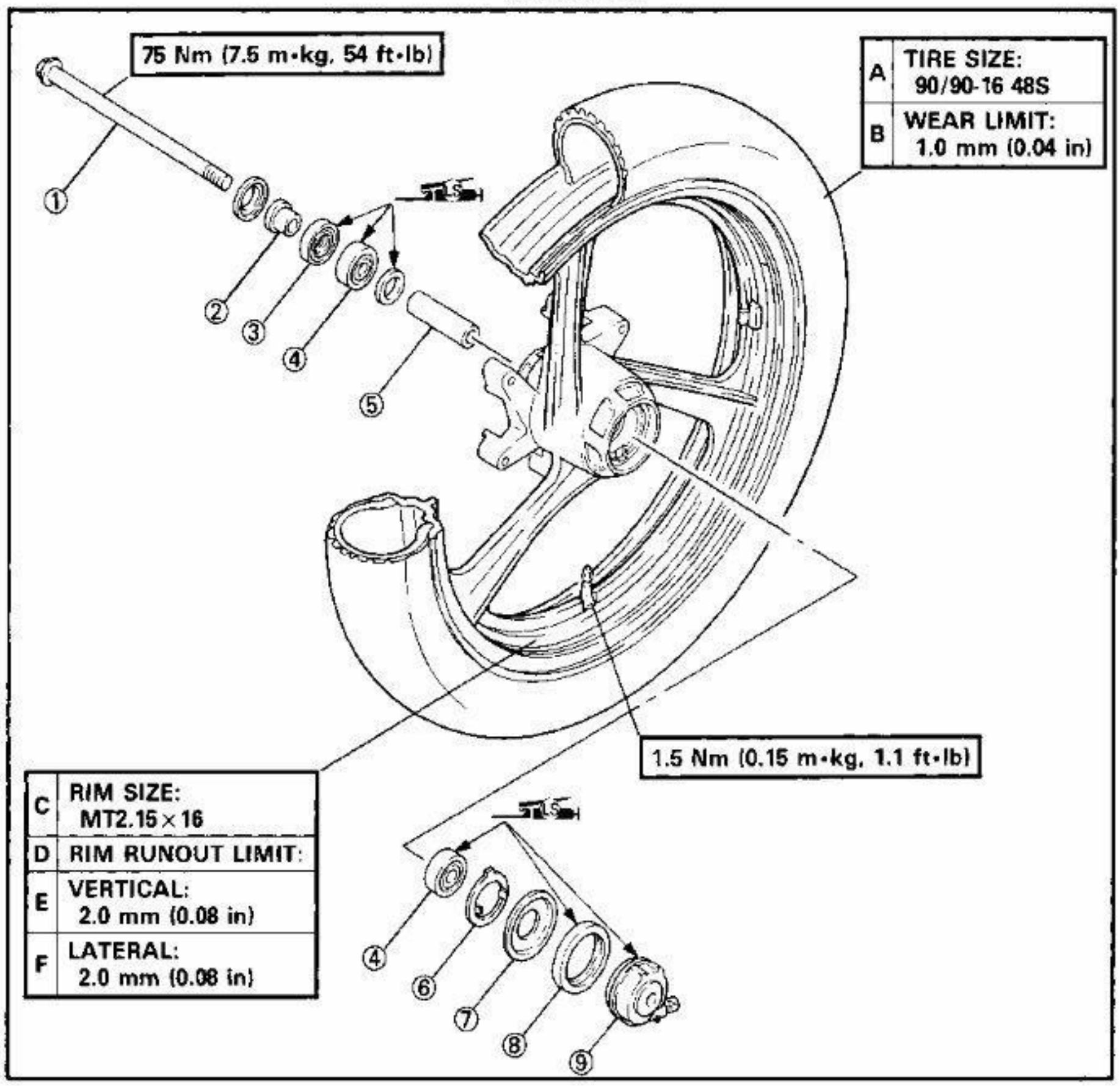

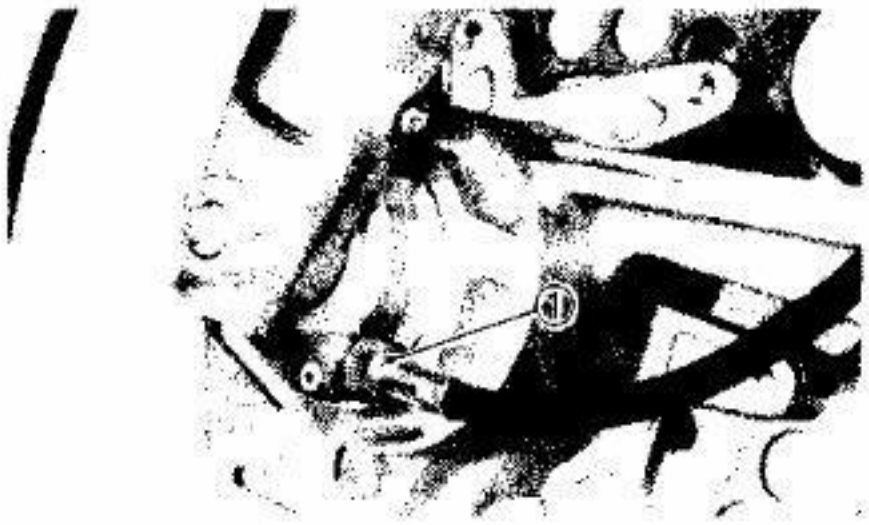

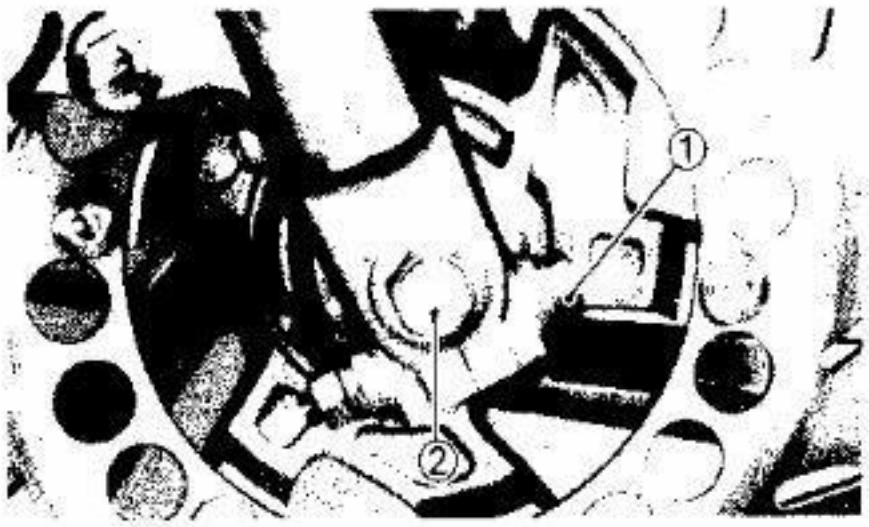

REMOVAL

WARNING:

Securely support the motorcycle so there is no danger of it falling over.

1. Place the motorcycle on a level place.
2. Remove:
   - Speedometer cable ①
3. Loosen:
   - Pinch bolt ①
   - Front axle ②
4. Elevate the front wheel by placing a suitable stand under the engine.
5. Remove:
   - Front axle
   - Front wheel

NOTE:

Do not depress the brake lever when the wheel is off the motorcycle otherwise the brake pads will be forced shut.

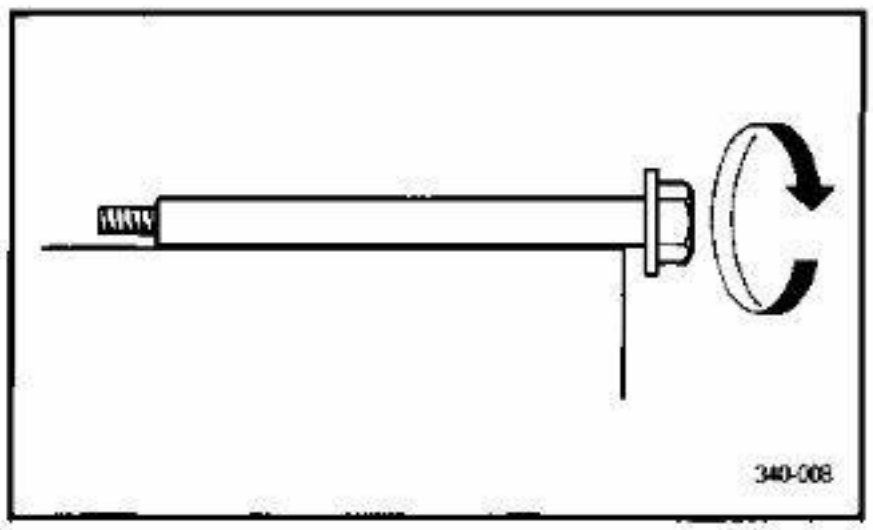

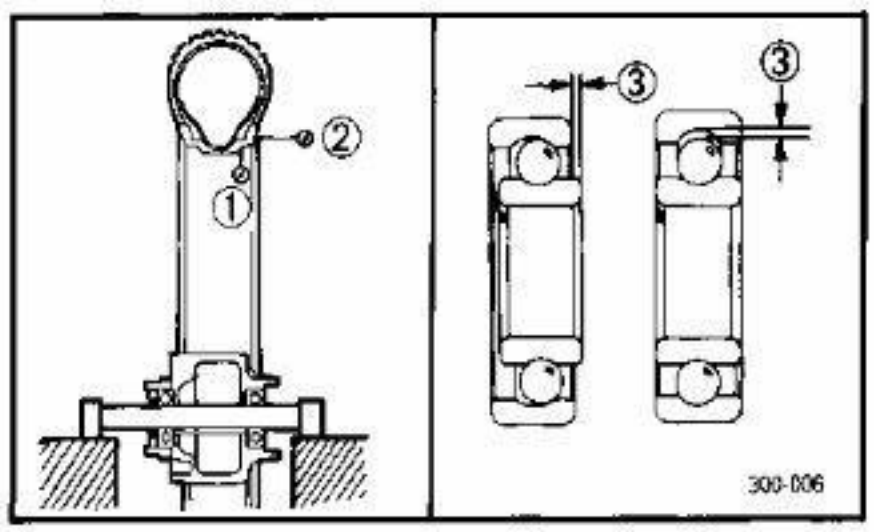

INSPECTION

1. Eliminate any corrosion from parts.
2. Inspect:
   - Front axle
     Roll the axle on a flat surface.
     Bends→Replace.

WARNING:

Do not attempt to straighten a bent axle.

3. Inspect:
   - Wheel
     Cracks/Bends/Warpage→Replace.
4. Measure:
   - Wheel runout
     Over specified limit→Replace, wheel or check bearing play ③

Rim Runout Limits:
Vertical ①: 2.0 mm (0.08 in)
Lateral ②: 2.0 mm (0.08 in)

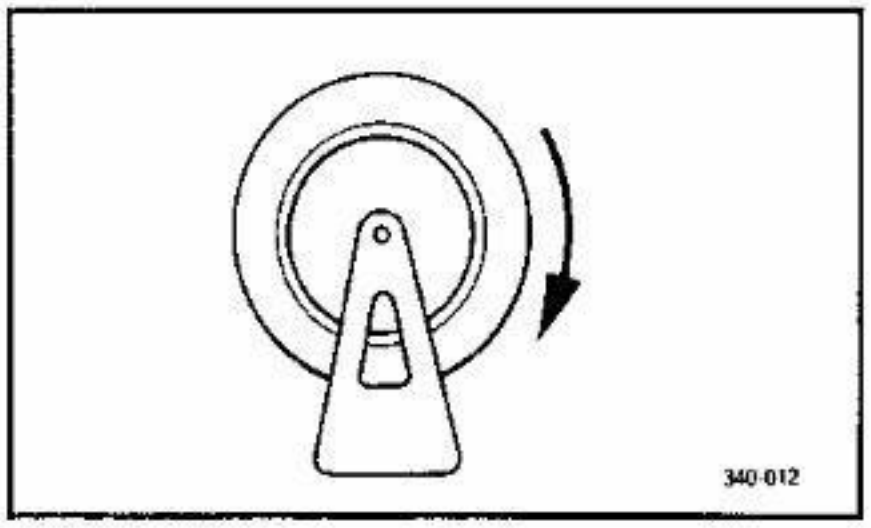

5. Check:
   - Wheel balance
     Wheel is not statically balanced if it comes to rest at the same point after several light rotations.
     Out of balance → Install appropriate balance weight at lightest point (on top).

NOTE:

Balance wheel with brake disc installed.

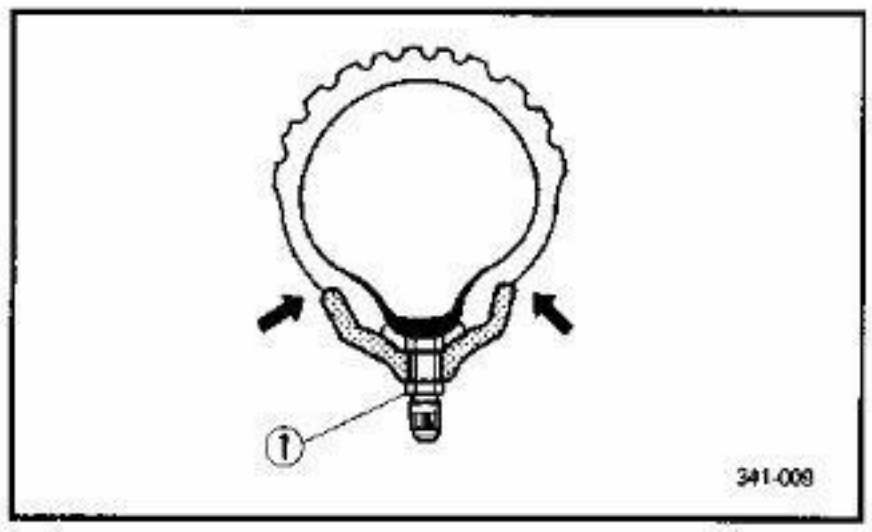

WARNING:

- **After mounting a tire, ride conservatively to allow proper tire to rim seating. Failure to do so may cause an accident resulting in motorcycle damage and possible operator injury.**
- **After a tire repair or replacement, be sure to torque tighten the valve stem locknut ① to specification.**

	Valve-Stem Locknut: **1.5 Nm (0.15 m•kg, 1.1 ft•lb)**

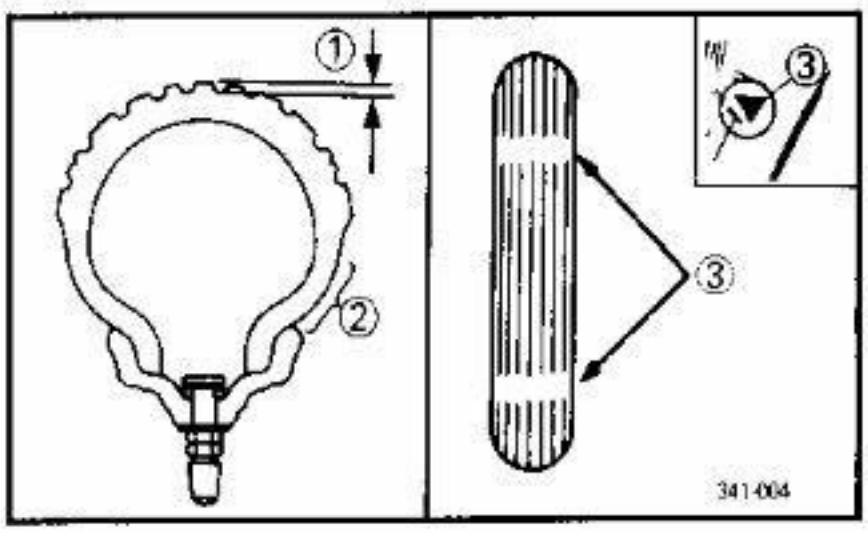

6. Inspect:
   - Tire
     Tire tread shows crosswise lines (Minimum tread depth)/Cracks → Replace.

	Minimum Tire Tread Depth: **1.0 mm (0.04 in)**

① Tread depth ② Sidewall ③ Wear indicator

7. Check:
   - Wheel bearings
     Bearings allow play in the wheel hub or wheel turns roughly → Replace.

Wheel bearing replacement steps:
- Clean the out side of the wheel hub.
- Remove the bearing using a general bearing puller.
- Install the new bearing.

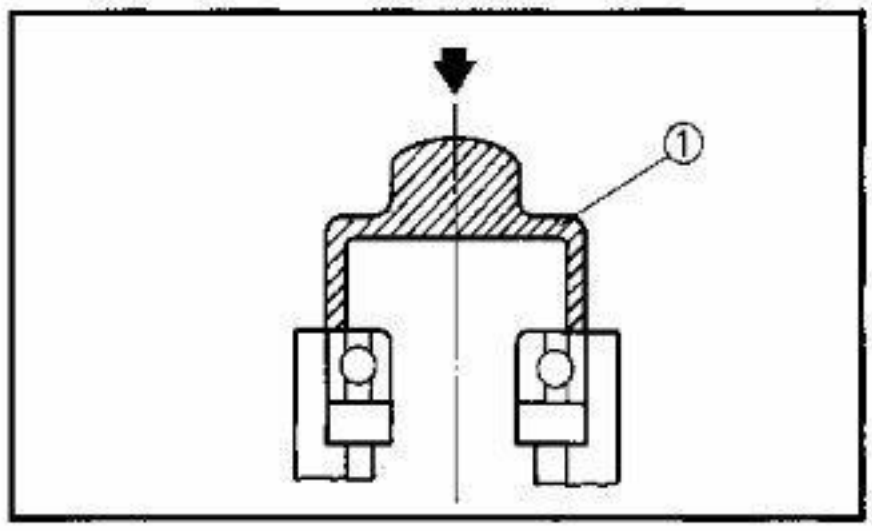

NOTE:

Use a socket ① that matches the outside diameter of the race of the bearing.

CAUTION:

Do not strike the inner race of balls of the bearing. Contact should be made only with the outer race.

INSTALLATION

1. Install:
   - Front wheel
     Reverse removal procedure.

Front wheel installation points:

- Lightly grease lips of front wheel oil seals and gear teeth of speedometer drive and driven gears.
- Be sure the two projections inside the wheel hub are meshed with the two slots in the speedometer housing.
- Be sure that the projecting portion (torque stopper ①) of the speedometer housing is positioned correctly.
- Tighten the axle.

	Axle: **75 Nm (7.5 m•kg, 54 ft•lb)**

- Tighten the axle pinch bolt.

	Axle Pinch Bolt: **23 Nm (2.3 m•kg, 17 ft•lb)**

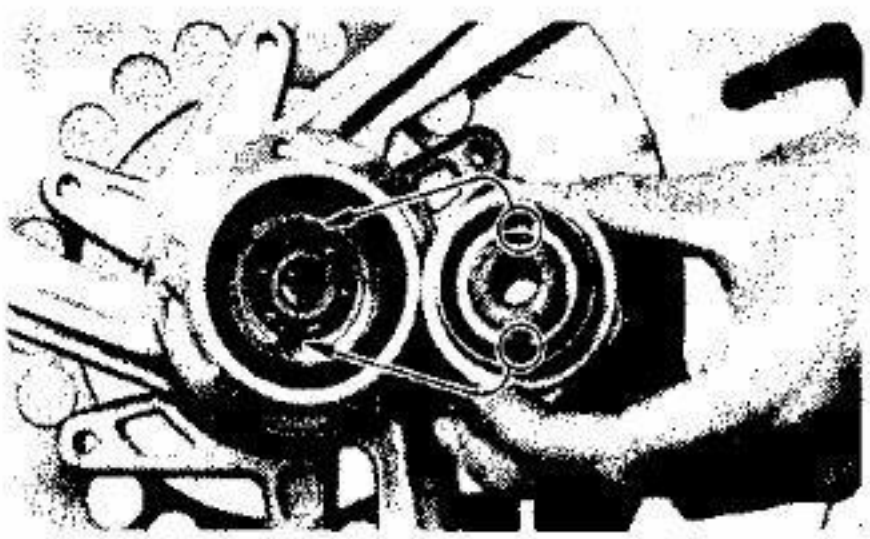

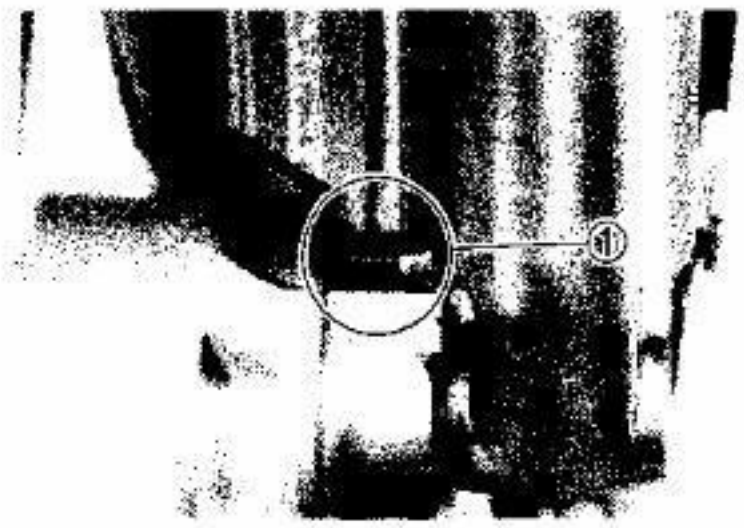

REAR WHEEL

① Rear axle
② Chain puller
③ Collar
④ Spacer
⑤ Bearing
⑥ Clutch hub
⑦ Wheel collar
⑧ Oil seal

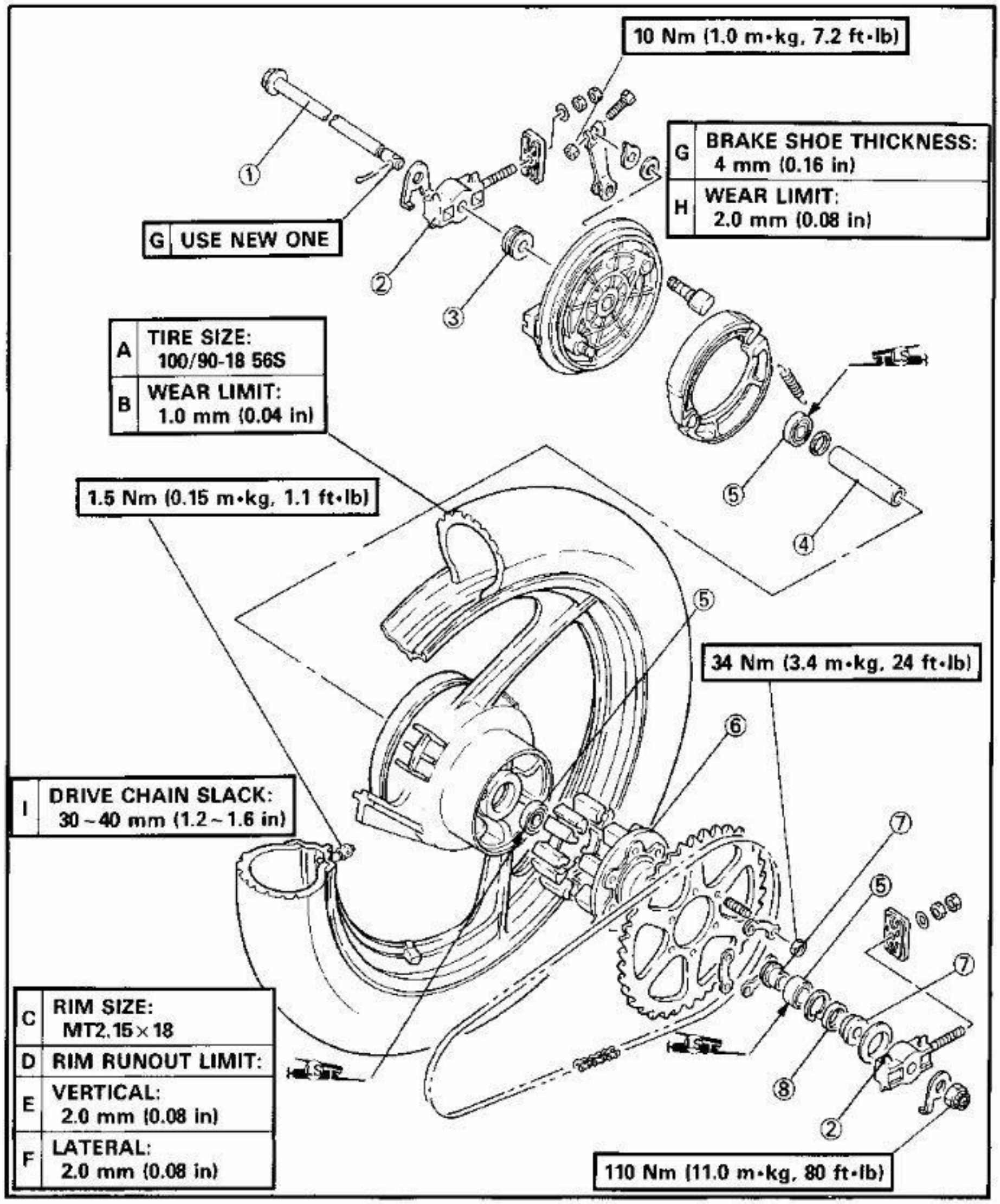

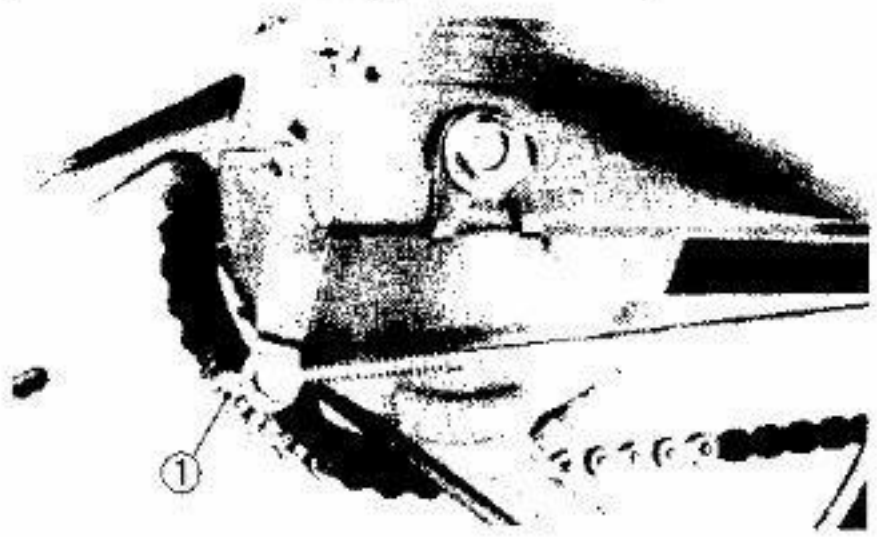

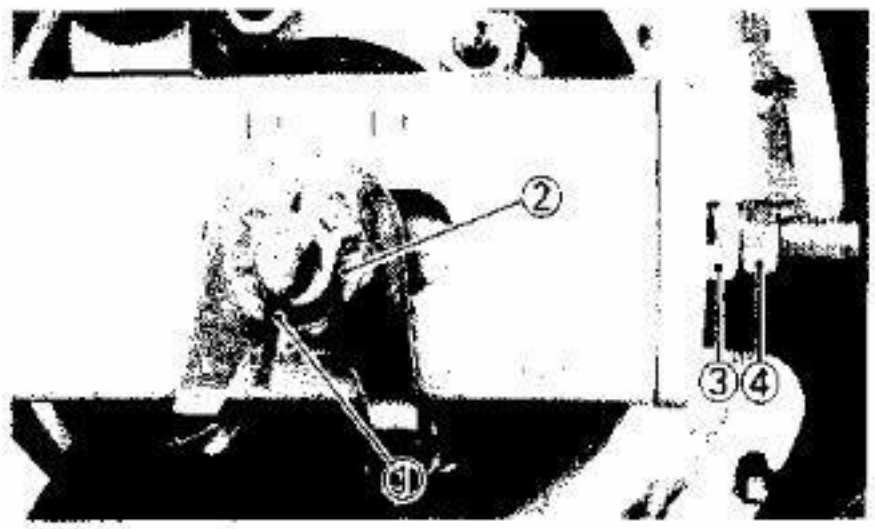

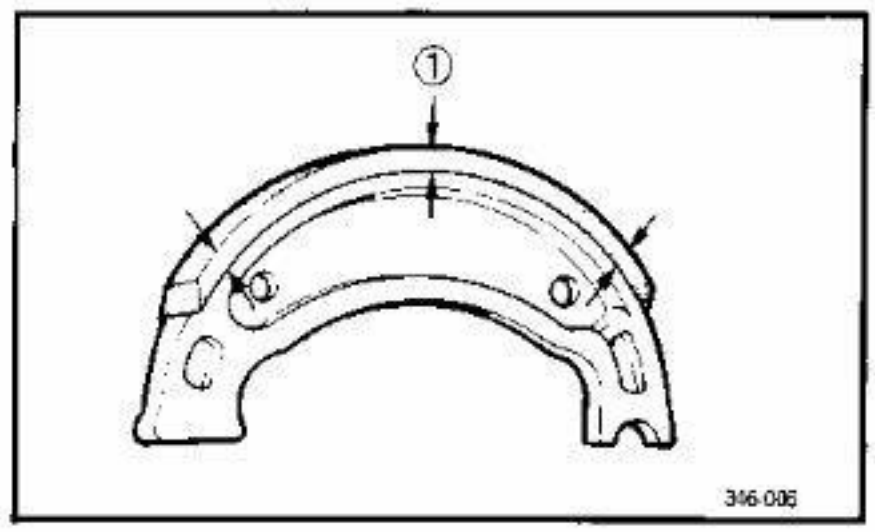

REMOVAL

WARNING:

Securely support the motorcycle so there is no danger of it falling over.

1. Place the motorcycle on a level place.
2. Remove:
   - Adjuster (Rear brake) ①
   - Rod (Rear brake)
3. Remove:
   - Cotter pin ①
   - Axle nut ②
   - Locknuts (Chain puller) ③
   - Adjusters (Chain puller) ④
4. Elevate the rear wheel by placing a suitable stand.
5. Remove:
   - Rear axle
6. Push the wheel forward and remove the drive chain.
7. Remove:
   - Rear wheel

INSPECTION

Brake Shoe

1. Measure:
   - Brake shoes (Thickness)
     Out of specification → Replace.

① Measuring point

Brake Shoe Thickness:
4 mm (0.16 in)
Replacement Limit:
2 mm (0.08 in)

2. Inspect:
   - Brake shoes
     Glazed parts → Sand with coarse sandpaper.

NOTE:

After using the sandpaper, clean of the polished particles with cloth.

Brake Drum

1. Inspect:
   - Brake drum (Inner surface)
     Oil→Wipe off brake drum with rag soaked in lacquer thinner or solvent.
     Scratches→Polish brake drum lightly and evenly with emery cloth.
2. Measure:
   - Brake drum inside diameter
     Use a slide calipers.
     Out of specification→Replace rear wheel.

Brake Drum Inside Diameter Limit:
151 mm (5.94 in)

Brake Shoe Plate

1. Remove:
   - Camshaft
2. Inspect:
   - Cam face
     Wear→Replace camshaft.
     Condition OK→Grease camshaft.

Rear Axle

Refer to "FRONT WHEEL—INSPECTION" section.

Rear Wheel

Refer to "FRONT WHEEL—INSPECTION" section.

Wheel Bearings

Refer to "FRONT WHEEL—INSPECTION" section.

Tire

Refer to "FRONT WHEEL—INSPECTION" section.

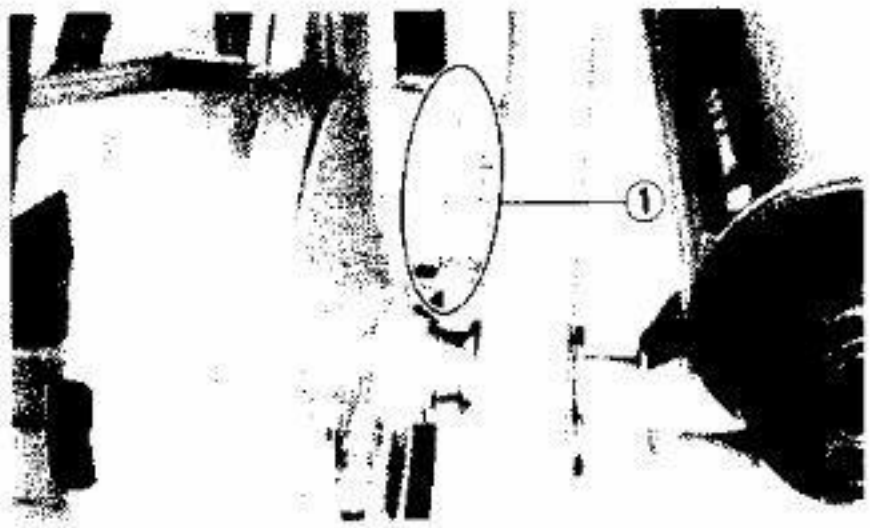

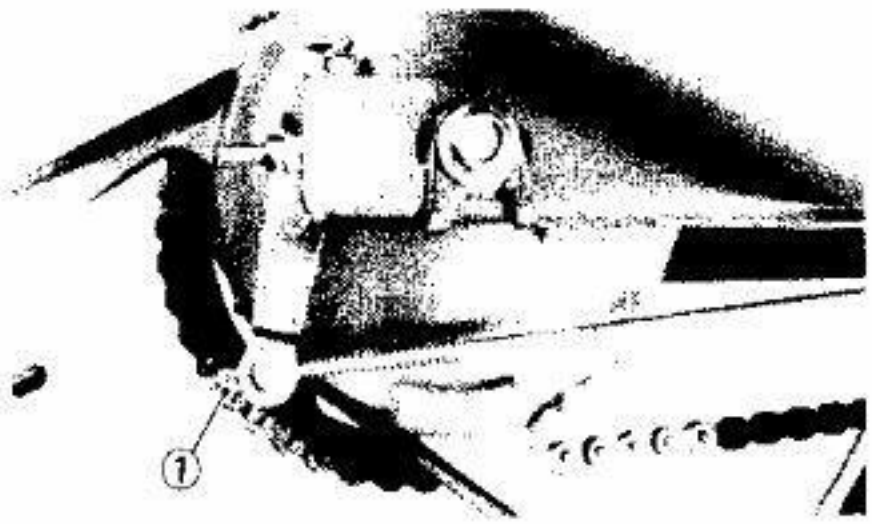

INSTALLATION

1. Install:
   - Rear wheel

     Reverse removal procedure.

Rear wheel installation points:
- Lightly grease lips of rear wheel oil seals and bearings.
- Be sure that the projecting portion (torque stopper (1)) of rear arm is meshed with brake shoe plate.
- Adjust drive chain slack.
- Tighten

Rear Axle:
110 Nm (11.0 m•kg, 80 ft•lb)

WARNING:

Always use a new cotter pin on the axle nut.

2. Adjust:
   - Rear brake free play.

     Turn adjuster (1) as needed.

Adjuster	Rear Brake Free Play
Turn clockwise	to reduce
Turn counterclockwise	to increase

FRONT BRAKE

① Brake disc
② Master cylinder kit
③ Copper washer
④ Union bolt

E When installing the brake hose, lightly touch the brake pipe ⓐ with projections ⓑ on the caliper.

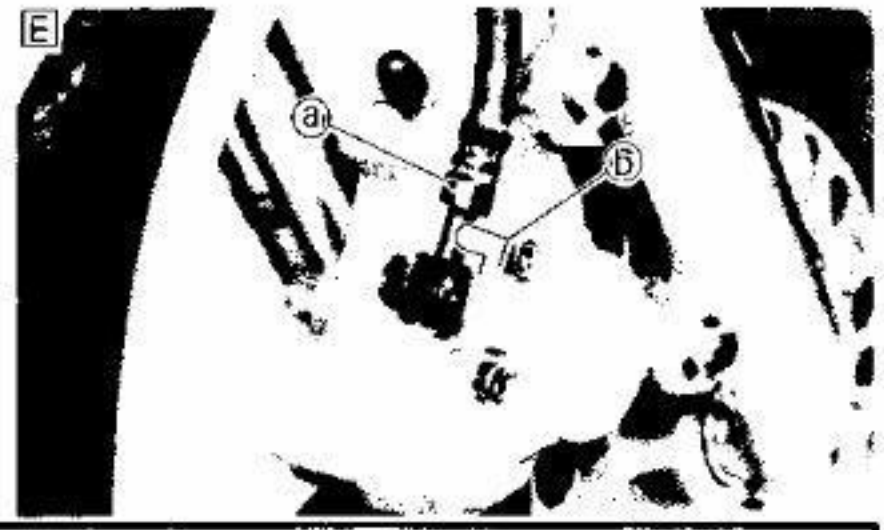

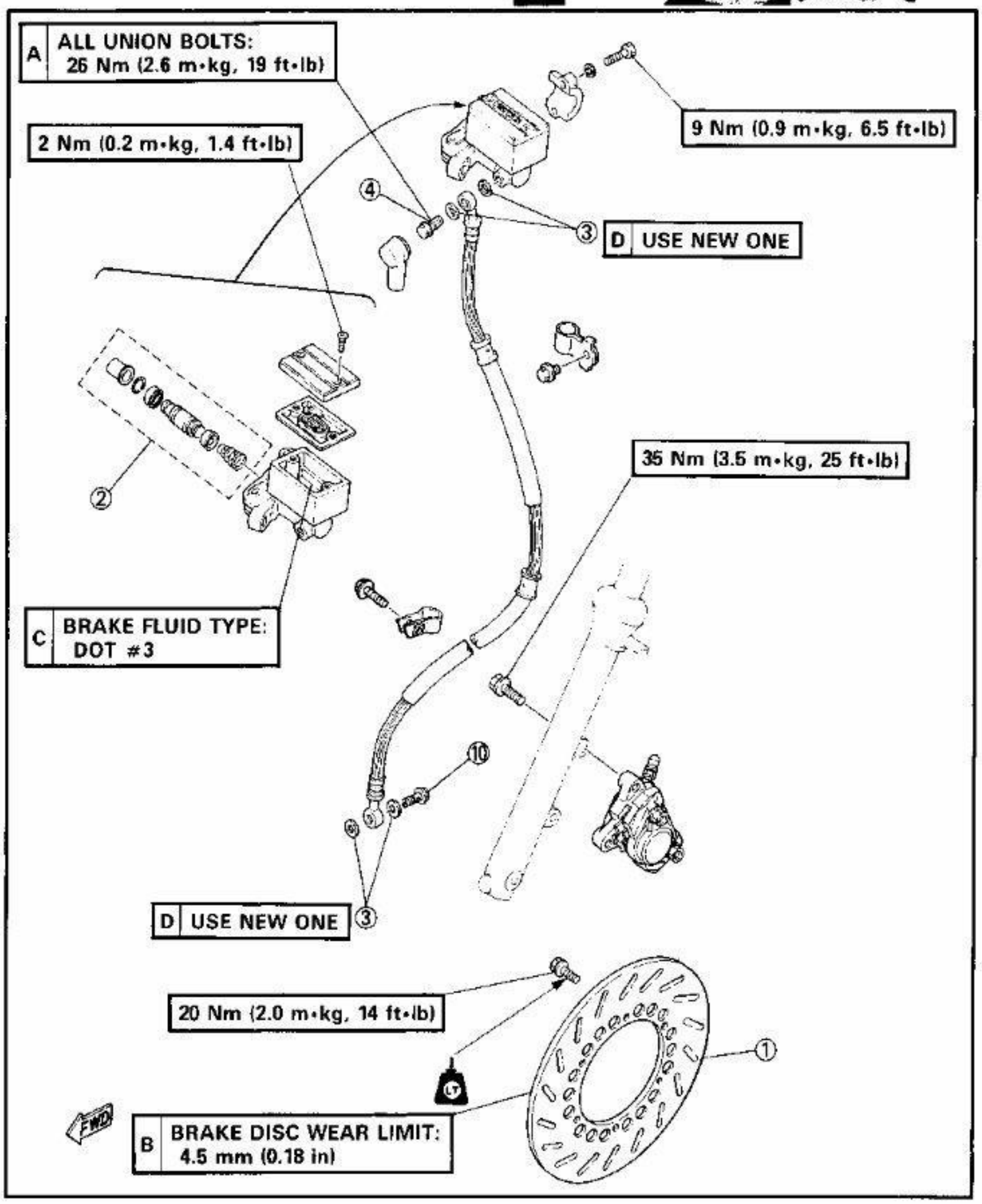

Caliper

① Retaining bolt
② Air bleed screw
③ Caliper piston assembly
④ Pad spring
⑤ Brake pad
⑥ Pad shim

B – ⓐ Install the pad spring with its round side ⓐ facing towards the disc rotating direction.
C – ⓑ Be sure to position the shim ⑥ so that its top hook ⓑ points in the rotating direction ⓒ of the disc plate rotation.

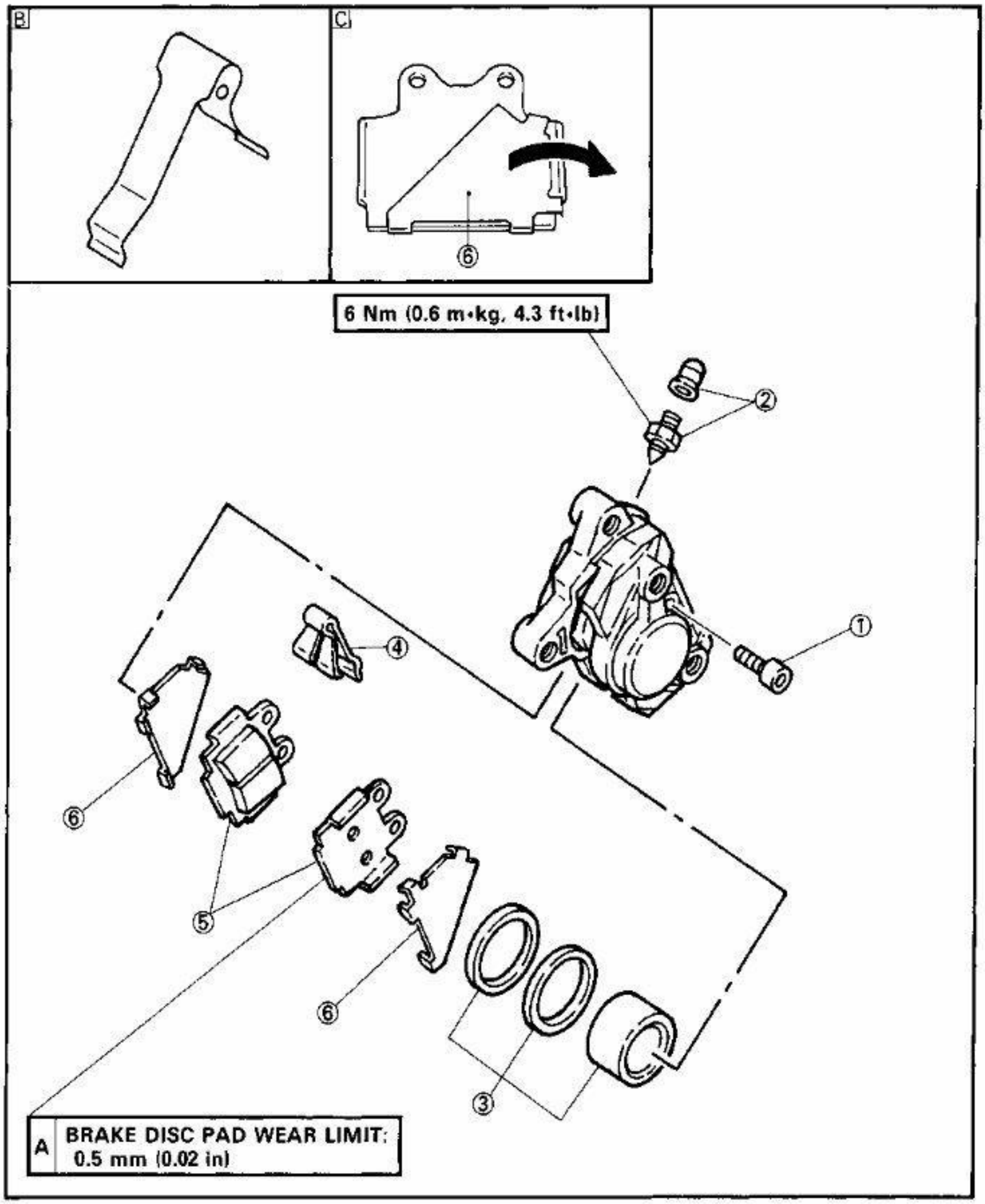

CAUTION:

Disc brake components rarely require disassembly. DO NOT:

- **Disassembly components unless absolutely necessary.**
- **Use solvents on internal brake component.**
- **Use contaminated brake fluid for cleaning. Use only clean brake fluid.**
- **Allow brake fluid to come in contact with the eyes otherwise eye injury may occur.**
- **Allow brake fluid to contact painted surfaces or plastic parts otherwise damage may occur.**
- **Disconnect any hydraulic connection otherwise the entire system must be disassembled, drained, cleaned, and then properly filled and bled after reassembly.**

NOTE:

Drain the brake fluid before removing brake hose.

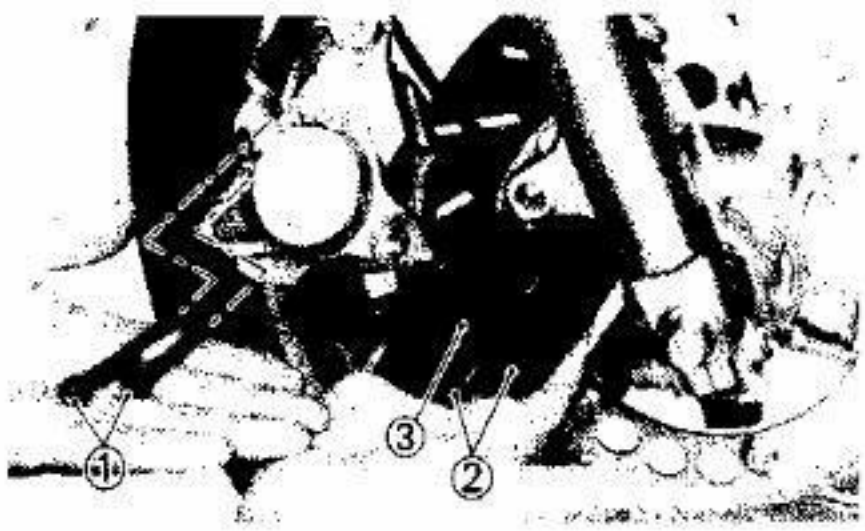

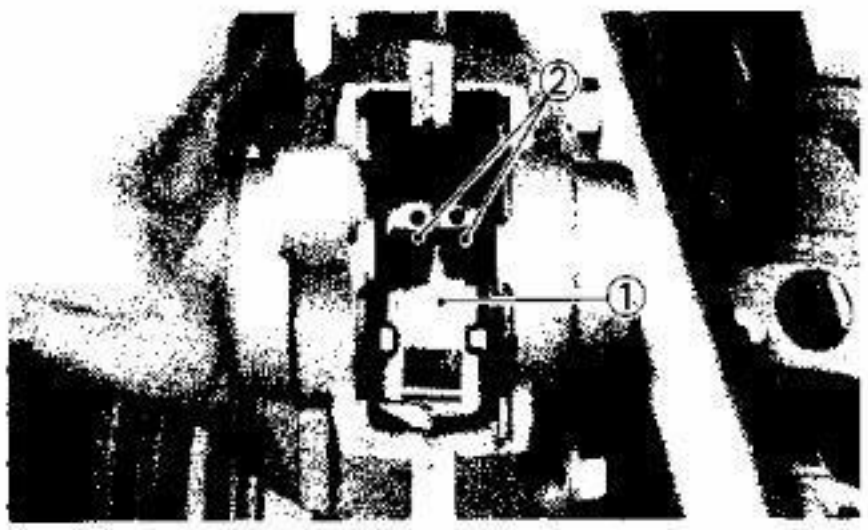

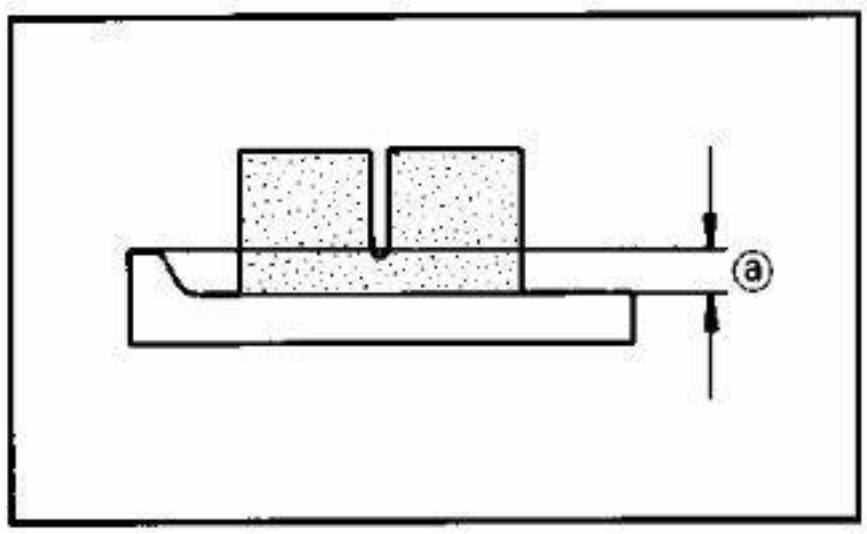

BRAKE PAD REPLACEMENT

1. Remove:
   - Bolts (Brake caliper)
   - Retaining bolts ①
   - Pads ②
   - Pad shims ③

2. Remove
   - Pad spring ①

   ② Spring tang

3. Measure:
   - Pad thickness

   Out of specification→Replace.

NOTE:

- Replace the pad spring if pad replacement is required.
- Replace the pads as a set if either if found to be worn to the wear limit.

Wear Limit ⓐ:
0.5 mm (0.02 in)

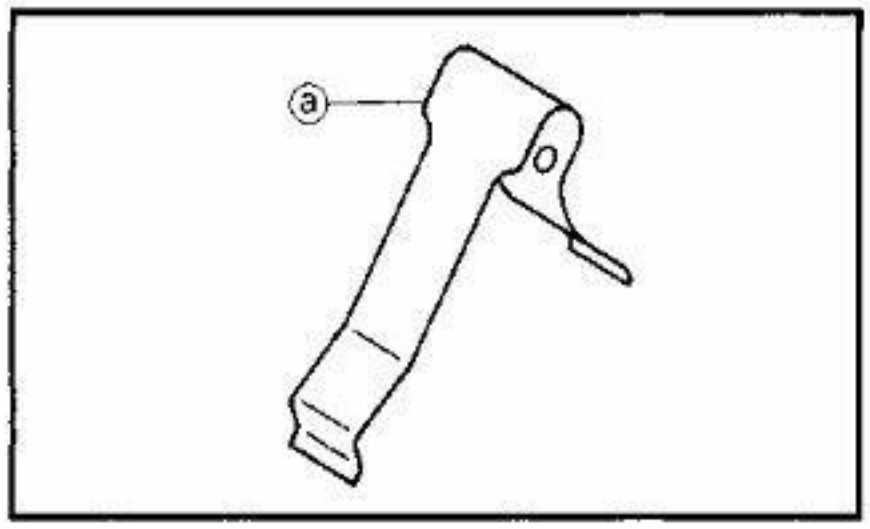

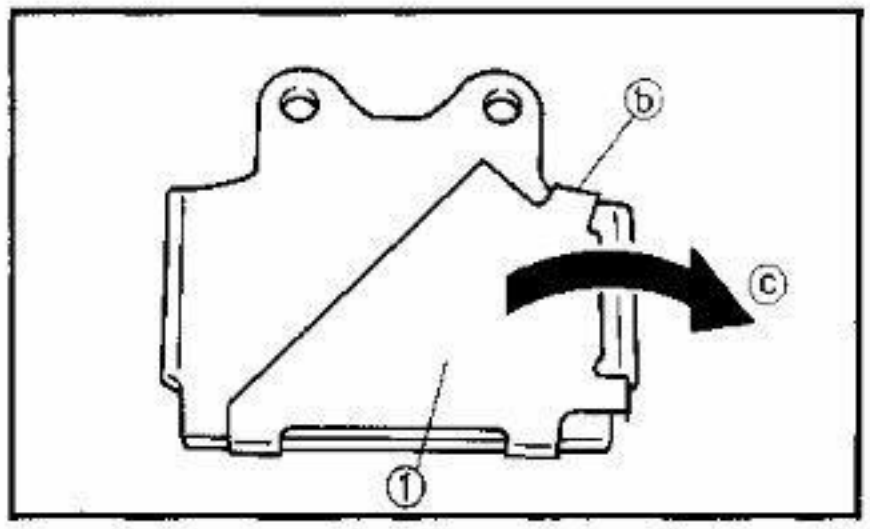

4. Install:
   - Components in above list (Steps "2 – 1")

NOTE:

- Install the pad spring with its round side ⓐ facing towards the disc rotating direction.
- Be sure to position the shim ① so that its top hook ⓑ points in the rotating direction ⓒ of the disc plate rotation.

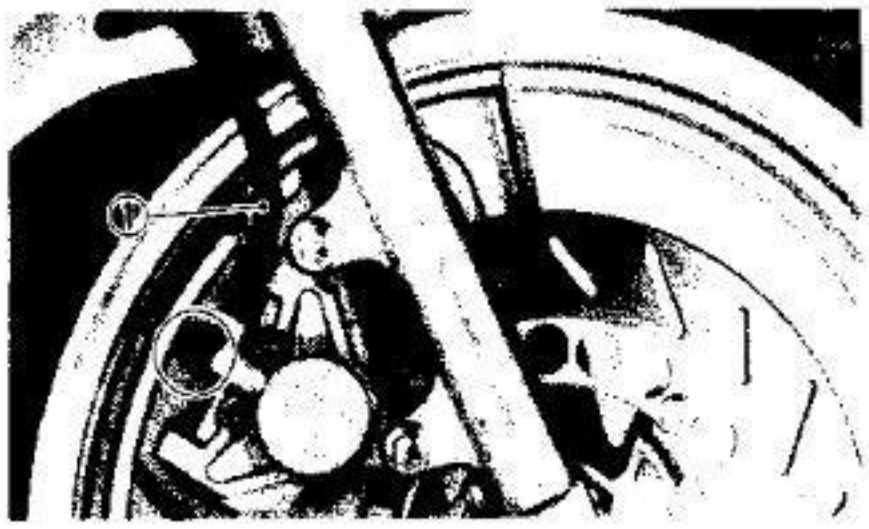

CALIPER DISASSEMBLY

1. Remove:
   - Brake hose ①
     Place the open hose end into a container and pump the old fluid out carefully.
   - Pads
     Refer to "CALIPER PAD REPLACEMENT" section.

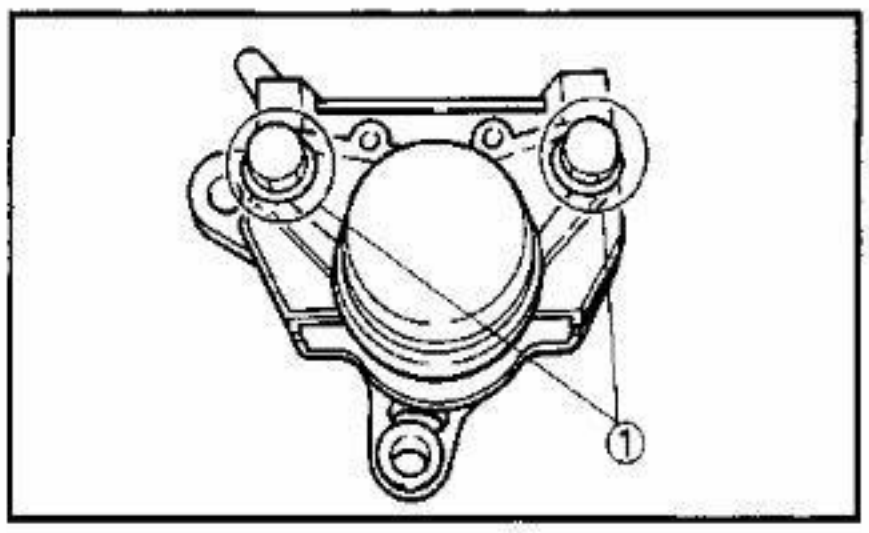

2. Remove:
   - Caliper

CAUTION:

Never loosen the bridge bolts ① on either side of the caliper.

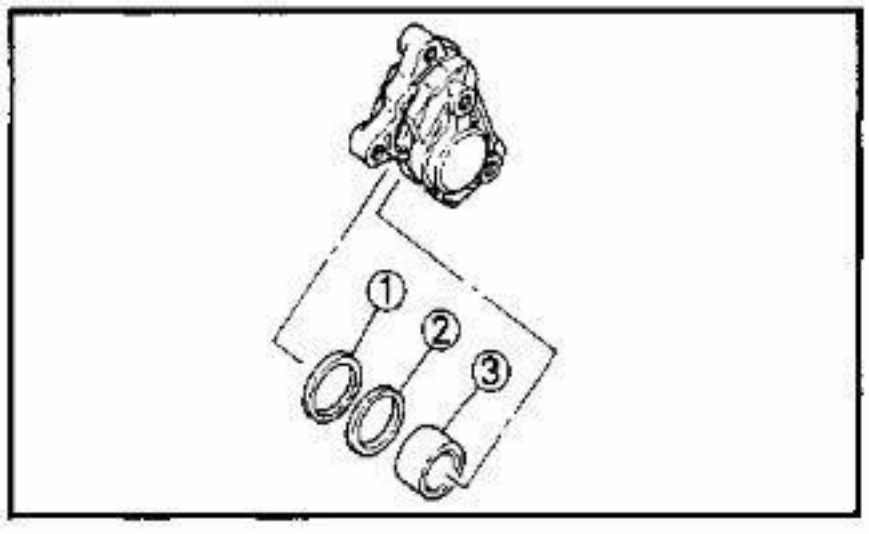

3. Remove:
   - Dust seals ①
   - Piston seals ②
   - Pistons ③

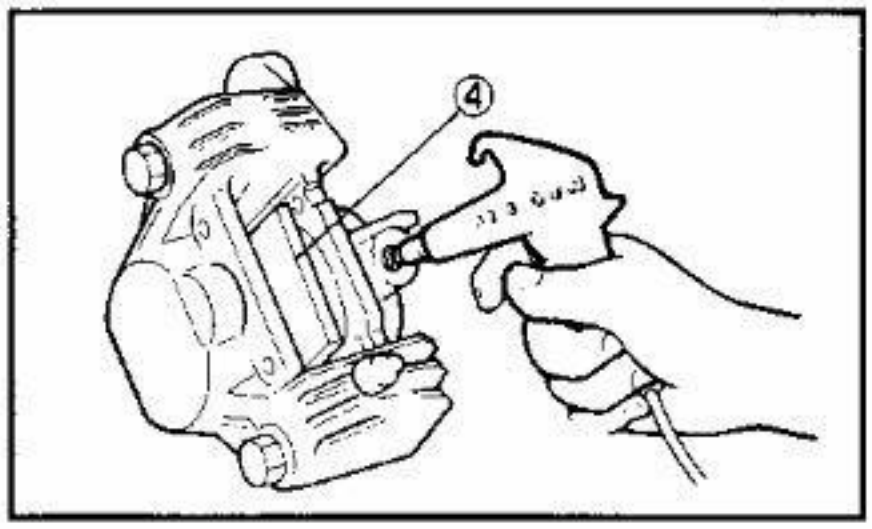

Caliper piston removal steps:

- Insert a piece of wooden board ④ into the caliper to lock the right side piston.
- Blow compressed air into the tube joint opening to force out the left side piston from the caliper body.
- Repeat previous step to force out the right side piston from the caliper body.

WARNING:

- **Cover piston with rag and use extreme caution when expelling piston from cylinder.**
- **Never attempt to pry out piston.**

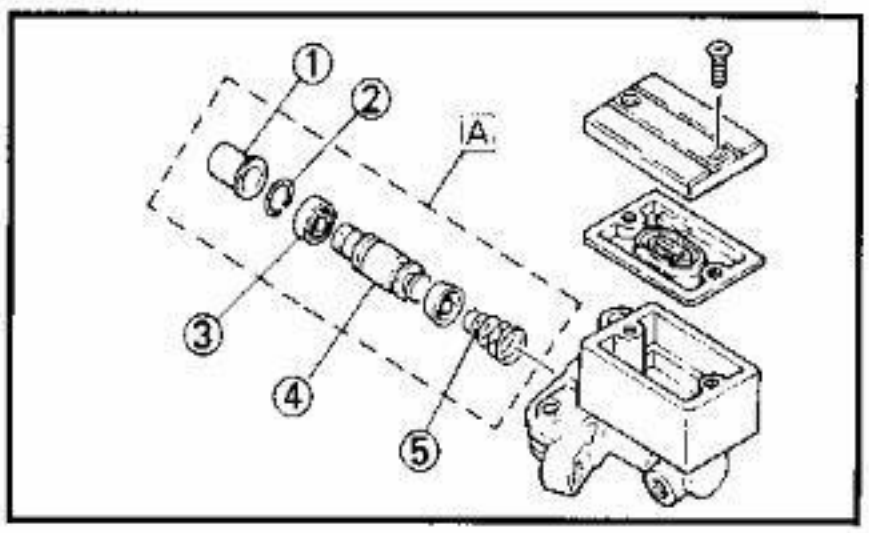

MASTER CYLINDER DISASSEMBLY

NOTE:

Drain the brake fluid before removing master cylinder.

① Dust boot
② Circlip
③ Cup
④ Piston
⑤ Return spring
A MASTER CYLINDER KIT (Replace as a set)

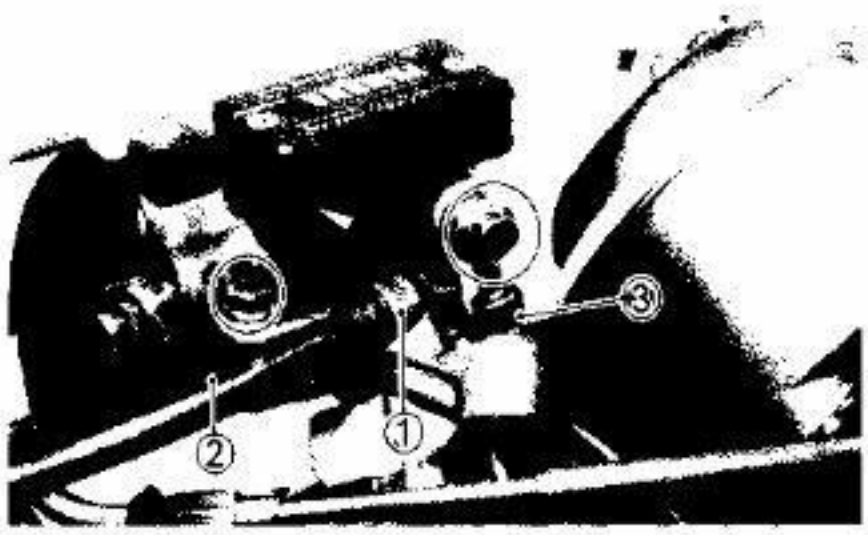

1. Remove:
   - Brake light switch ①
   - Brake lever ②
   - Lever spring
2. Disconnect:
   - Brake hose ③

   Drain the fluid.

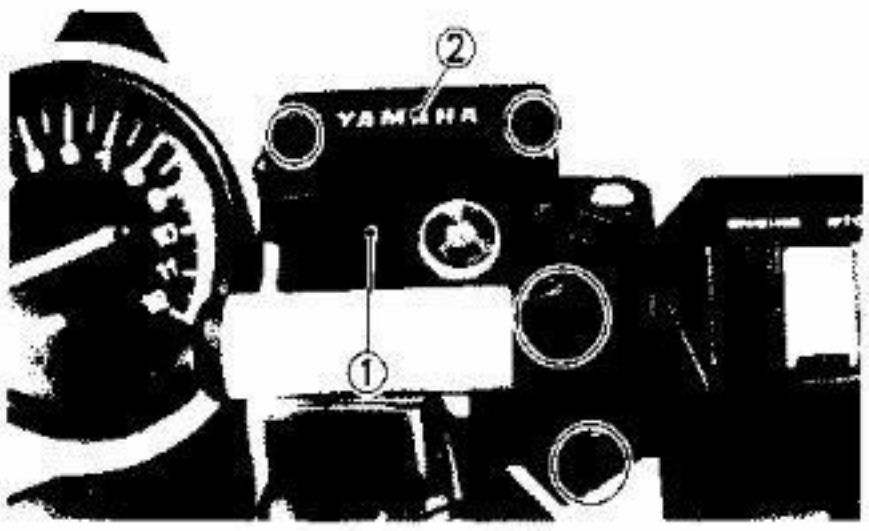

3. Remove:
   - Master cylinder ①
   - Master cylinder cap ②

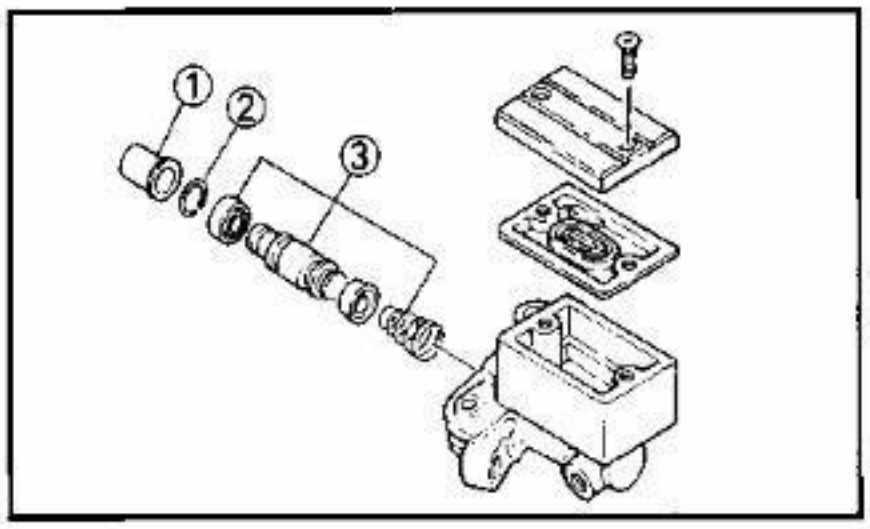

4. Remove:
   - Dust boot ①
   - Circlip ②
   - Master cylinder kit ③

INSPECTION AND REPAIR

Recommended Brake Component Replacement Schedule	
Brake pads	As required
Piston seal, dust seal	Every 2 years
Brake hoses	Every 4 years
Brake fluid	Replace only when brakes disassembled

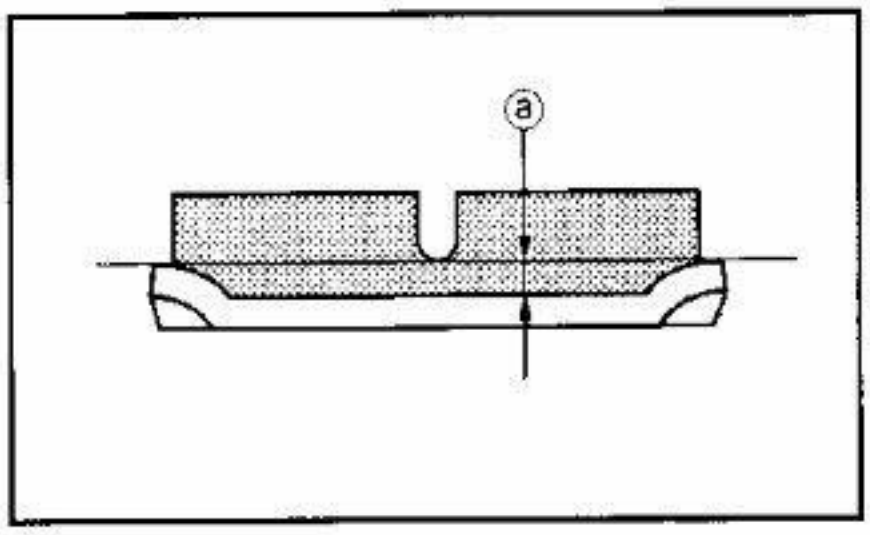

WARNING:

All internal parts should be cleaned in new brake fluid only. Do not use solvents will cause seals to swell and distort.

1. Inspect:
   - Brake pads
     Over specified limit→Replace.

Wear Limit ⓐ:
0.5 mm (0.02 in)

2. Inspect:
   - Caliper piston
     Rust/Wear/Damage→Replace.
   - Dust seal/Piston seal
     Damage→Replace.

WARNING:

Replace the piston and dust seals whenever a caliper is disassembled.

- Master cylinder kit
- Master cylinder body
  Scratches/Wear→Replace.

NOTE:

Clean all passages with new brake fluid.

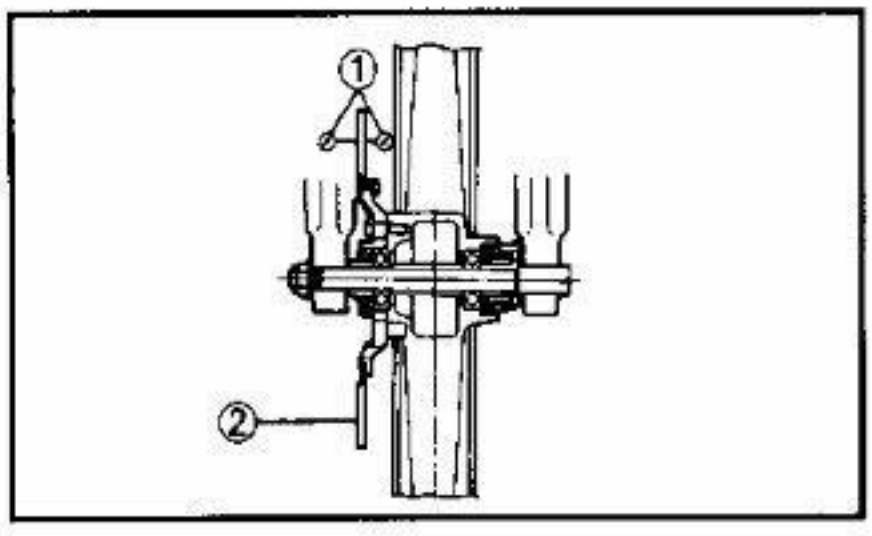

3. Inspect:
   - Brake hose
     Cracks/Wear/Damage→Replace.
4. Inspect:
   - Brake disc ②
     Wear/Deflection out of specification→Replace.

Maximum Deflection:
0.15 mm (0.006 in)
Minimum Disc Thickness:
4.5 mm (0.18 in)

① Dial gauge

BRAKE REASSEMBLY

WARNING:

- **All internal parts should be cleaned in new brake fluid only.**
- **Internal parts should be lubricated with brake fluid when installed.**

Brake Fluid:
DOT #3

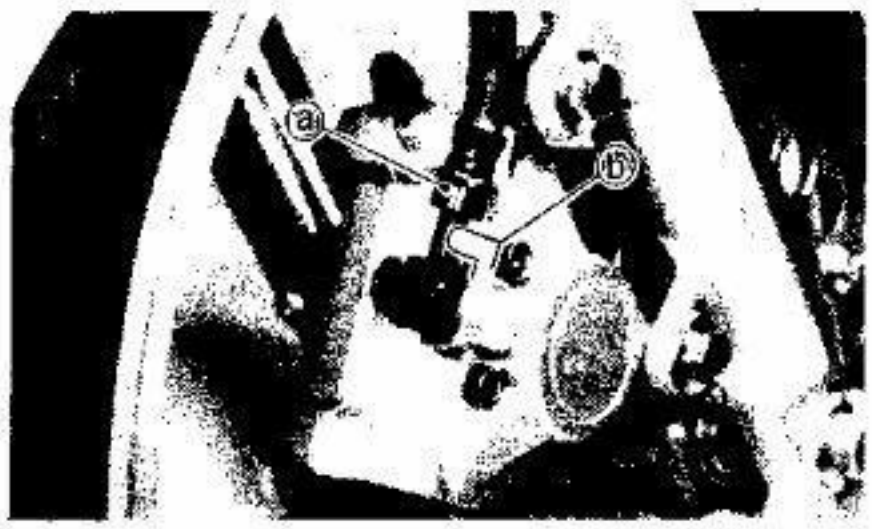

Caliper Reassembly

When assembling the caliper, reverse the disassembly procedure. Note the following points.

1. Install:
   - Brake calipers
   - Brake hoses

CAUTION:

When installing the brake hose, lightly touch the brake pipe ⓐ with projections ⓑ on the caliper.

Brake Caliper:
35 Nm (3.5 m•kg, 25 ft•lb)
Brake Hose:
26 Nm (2.6 m•kg, 19 ft•lb)

2. Bleed the air completely from the brake system.

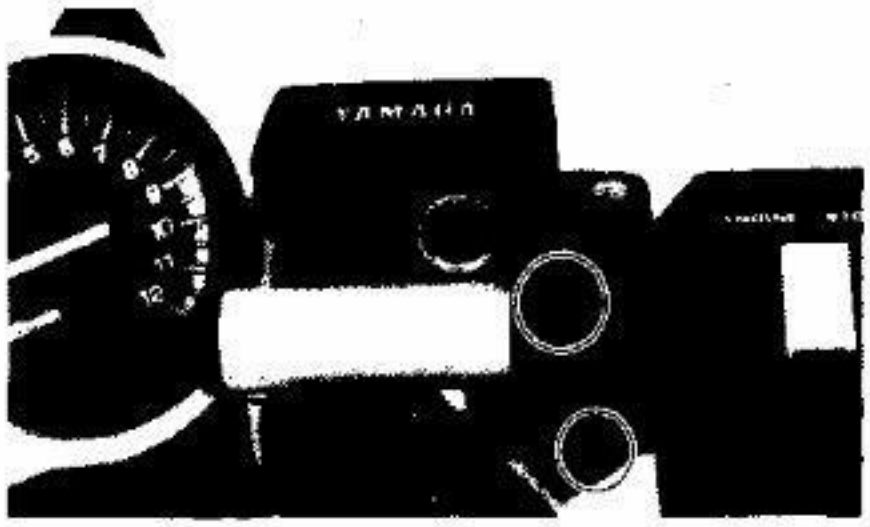

Master Cylinder Reassembly

When assembling the master cylinder, reverse the disassembly procedure. Note the following points.

1. Install:
   - Master cylinder kit

WARNING:

Internal parts should be lubricated with brake fluid when installed.

2. Install:
   - Master cylinder
   - Brake hose

Front Master Cylinder:
9 Nm (0.9 m•kg, 6.5 ft•lb)
Brake Hose:
26 Nm (2.6 m•kg, 19 ft•lb)

3. Fill:
   - Master cylinders

Brake Fluid:
DOT #3

4. Bleed the air completely from the brake system.

AIR BLEEDING

WARNING:

Bleed the brake system it:
- **The system has been disassembled.**
- **A brake hose has been loosened or removed.**
- **The brake fluid is very low.**
- **The brake operation is faulty.**

A dangerous loss of braking performance may occur if the brake system is not properly bled.

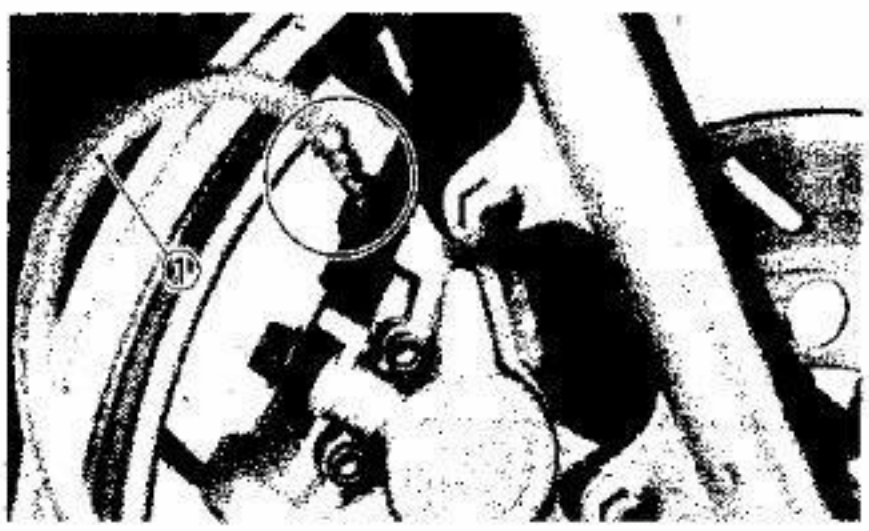

1. Bleed:
   - Brake fluid

Air bleeding steps:
a. Add proper brake fluid to the reservoir.
b. Install the diaphragm. Be careful not to spill any fluid or allow the reservoir to overflow.
c. Connect the clear plastic tube ① tightly to the caliper bleed screw.

d. Place the other end of the tube into a container.
e. Slowly apply the brake lever or pedal several times.
f. Pull the lever in or push down on the pedal. Hold the lever or pedal in position.
g. Loosen the bleed screw and allow the lever or pedal to travel towards its limit.
h. Tighten the bleed screw when the lever or pedal limit has been reached; then release the lever or pedal.

Bleed Screw:
5 Nm (0.5 m•kg, 3.6 ft•lb)

i Repeat steps (e) to (h) until of the air bubbles have been removed from the system.

NOTE:

If bleeding is difficult, it may be necessary to let the brake fluid system stabilize for a few hours. Repeat the bleeding procedure when the tiny bubbles in the system have disappered.

j. Add brake fluid to the level line on the reservoir.

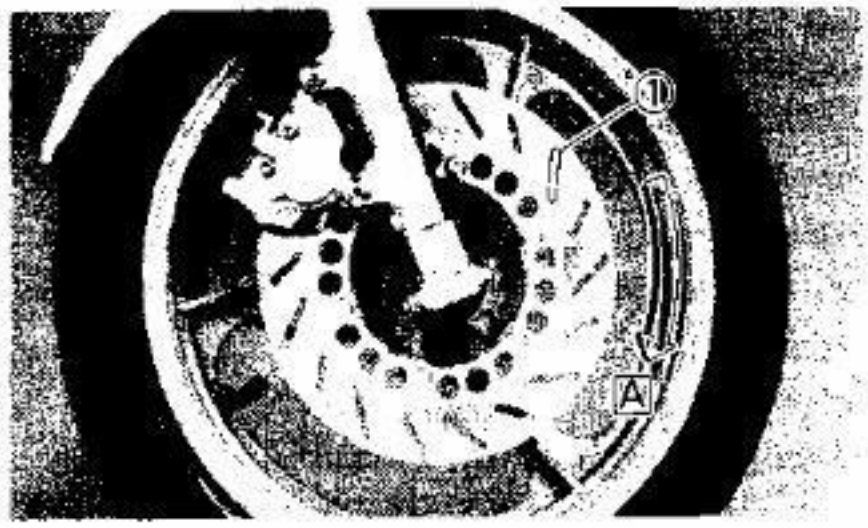

BRAKE DISC INSTALLATION

1. Install:
   - Brake disc

NOTE:

The slots (1) in the disc must point in the rotating direction [A] of the wheel.

2. Tighten:
   - Bolts (Disc)

Bolts:
20 Nm (2.0 m•kg, 14 ft•lb)
LOCTITE®

FRONT FORK

① Rubber cap
② Cap bolt
③ O-ring
④ Fork spring
⑤ Damper rod spring
⑥ Damper rod
⑦ Inner fork tube
⑧ Taper spindle
⑨ Drain bolt
⑩ Outer fork tube
⑪ Damper rod securing bolt
⑫ Dust cover
⑬ Retaining clip
⑭ Oil seal
⑮ Guide bushing

A	FORK OIL (EACH):
B	CAPACITY: 243 cm^3 (8.55 Imp oz, 8.22 US oz)
C	OIL LEVEL: 122 mm (4.8 in) FROM TOP OF FULLY COMPRESSED INNER TUBE WITHOUT FORK SPRING
D	GRADE: YAMAHA FORK OIL 10WT OR EQUIVALENT

E	FORK SPRING: FREE LENGTH 513.5 mm (20.21 in)
F	FORK SPRING: LIMIT LENGTH 508.5 mm (20.02 in)

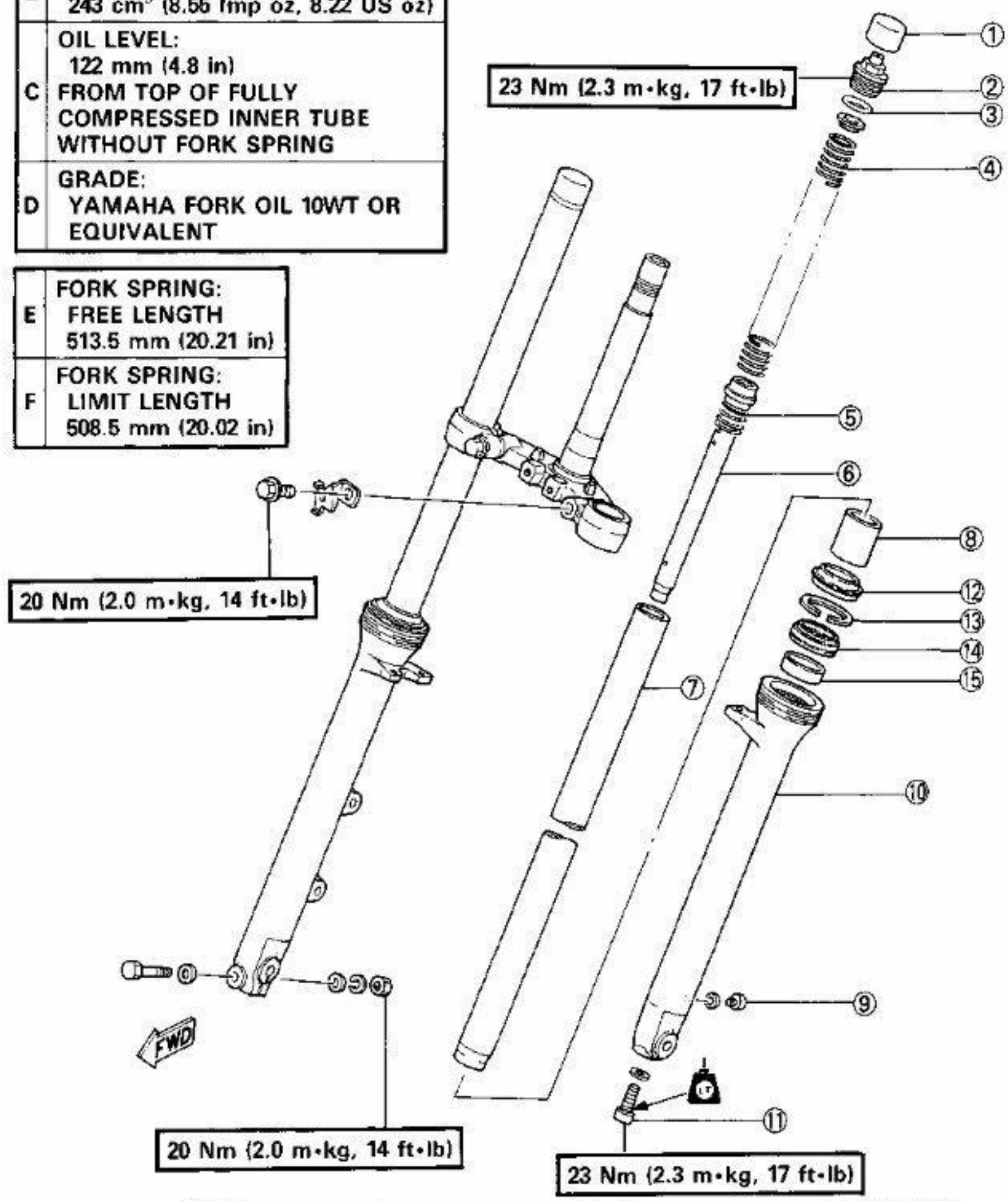

REMOVAL

WARNING:

Support the motorcycle securely so there is no danger of it falling over.

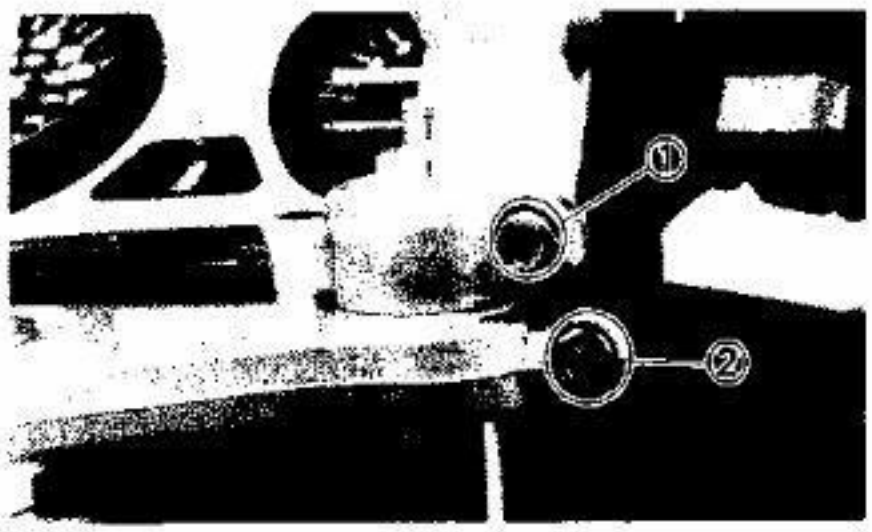

1. Remove:
   - Brake caliper
   - Front wheel
     Refer to "FRONT WHEEL" section.
2. Remove:
   - Front fender
   - Front fork brace
   - Rubber cap
3. Loosen:
   - Pinch bolt (Handlebar) ①
   - Cap bolt
   - Pinch bolt (Handle crown) ②

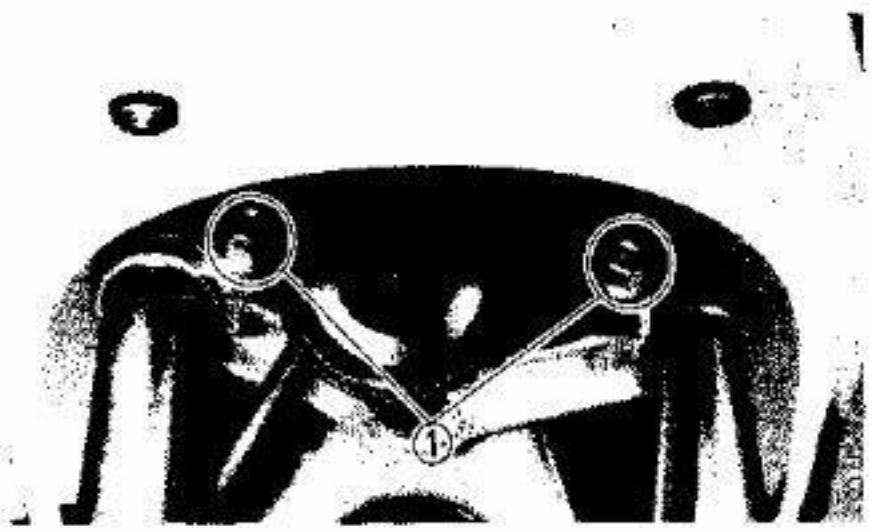

4. Loosen:
   - Pinch bolts (Under bracket) ①

CAUTION:

Support the fork before loosening the pinch bolts.

5. Remove:
   - Front fork(s)
     (from the under bracket)

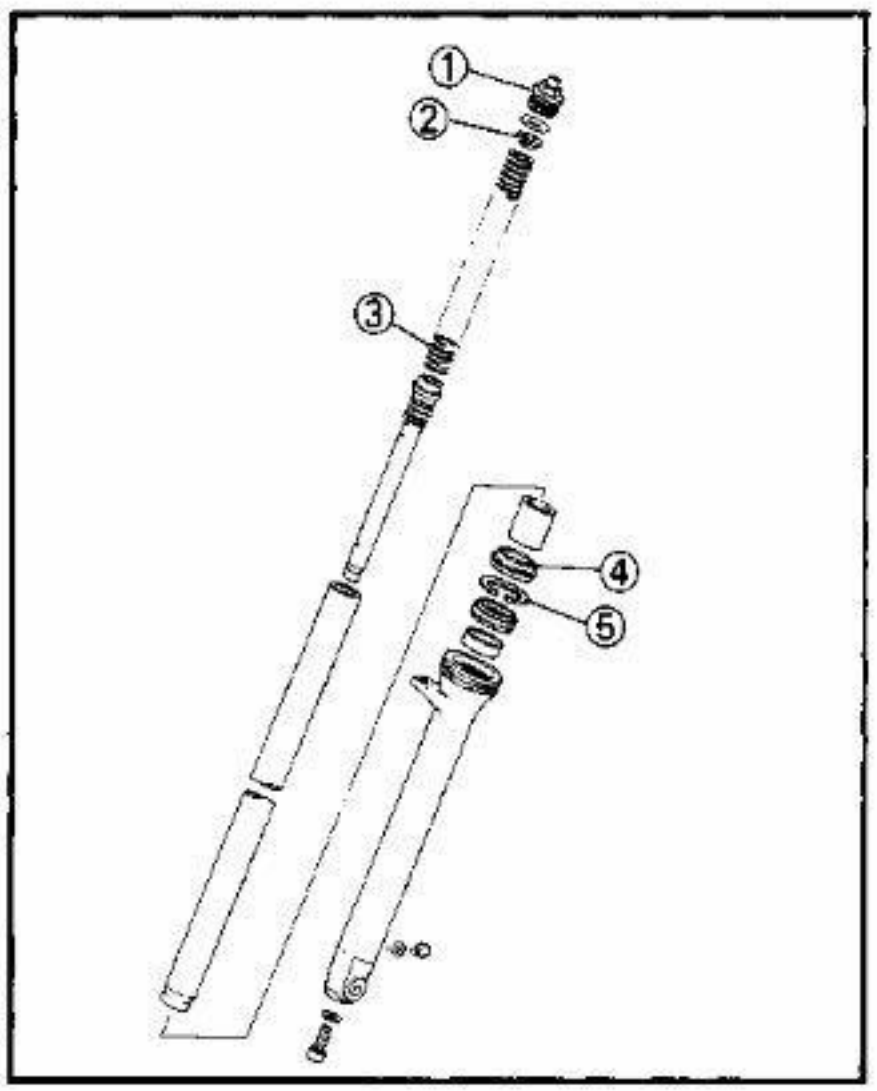

DISASSEMBLY

1. Remove:
   - Cap bolt ①
   - Spring seat ②
   - Fork spring ③
   - Dust cover ④
   - Retaining clip ⑤
2. Fill:
   - Fork inner tube
     With fork oil.
     Stretch the inner tube before filling.
3. Install:
   - Cap bolt

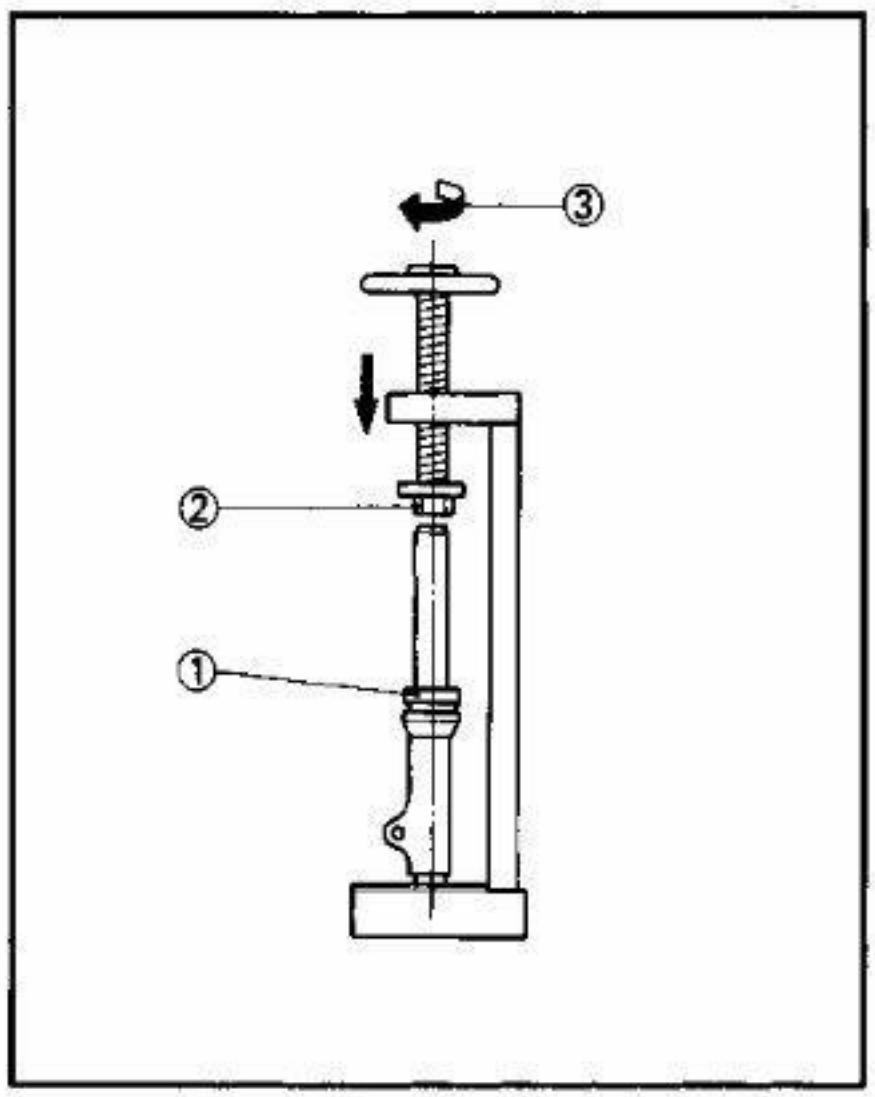

4. Remove:
   - Oil seal
   From outer tube.
   Press the inner tube to facilitate removal.

CAUTION:

- **If air enters the inner tube or it is compressed abruptly, oil may spurt out or the oil seal may be ejected.**
- **Never touch the inner tube during a disassembly operation.**
- **Be sure to wrap the oil seal with a rag for safety.**

① Wrap with rag
② Spacer
③ Turn slowly

5. Remove:
   - Oil seal
   - Cap bolt
6. Drain:
   - Fork oil

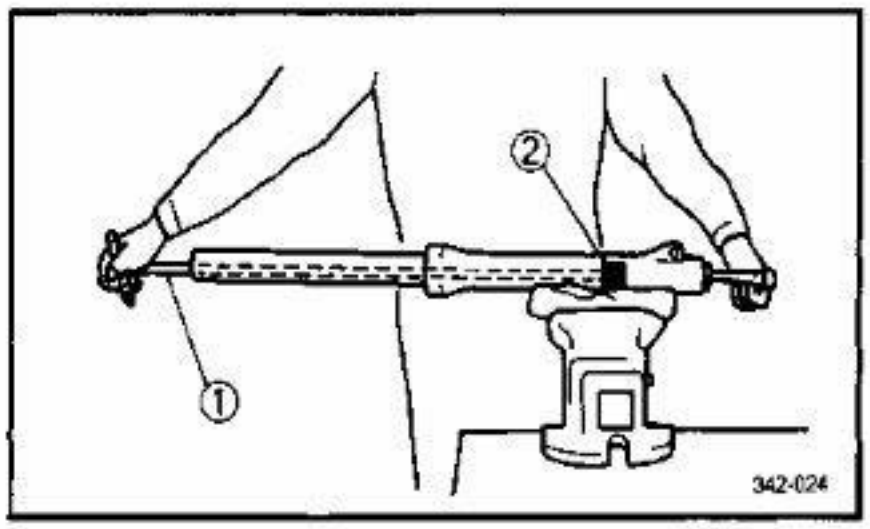

7. Remove:
   - Bolt (Damper rod)
   Use the T-handle ① (YM-01326) and the Front Fork Cylinder Holder (YM-33256) ② to lock the damper rod.
8. Remove:
   - Damper rod
   - Damper rod spring
   - Inner fork tube
   - Guide bushing
   From outer tube.
   - Oil lock piece

INSPECTION

1. Inspect:
   - Inner fork tube
     Severe scratches/Bends→Replace.
     Damaged oil lock valve→Replace.

WARNING:

Do not attempt to straighten a bent fork tube as this may dangerously weaken the tube.

2. Inspect:
   - Outer fork tube
     Bends→Replace.
     Damaged fork seal seat→Replace.

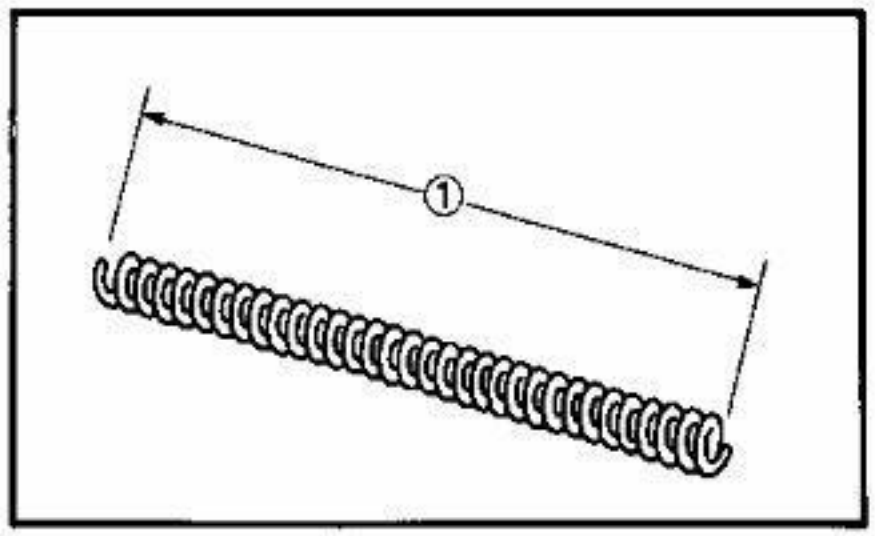

3. Inspect:
   - Fork spring ①
     Over specified limit→Replace.

	Fork Spring Free Length Limit: 508.5 mm (20.02 in)

4. Inspect:
   - Damper rod
     Worn damper rod seal→Replace.
     Contamination→Wash and blow out all passages.
   - Cap bolt O-ring
     Damage→Replace.

ASSEMBLY

Before assembling, clean and inspect all parts and replace when necessary.

NOTE:

In front fork assembly, be sure to use following new parts. Do not reuse them.
- Slide bush
- Guide bush
- Oil seal
- Dust seal

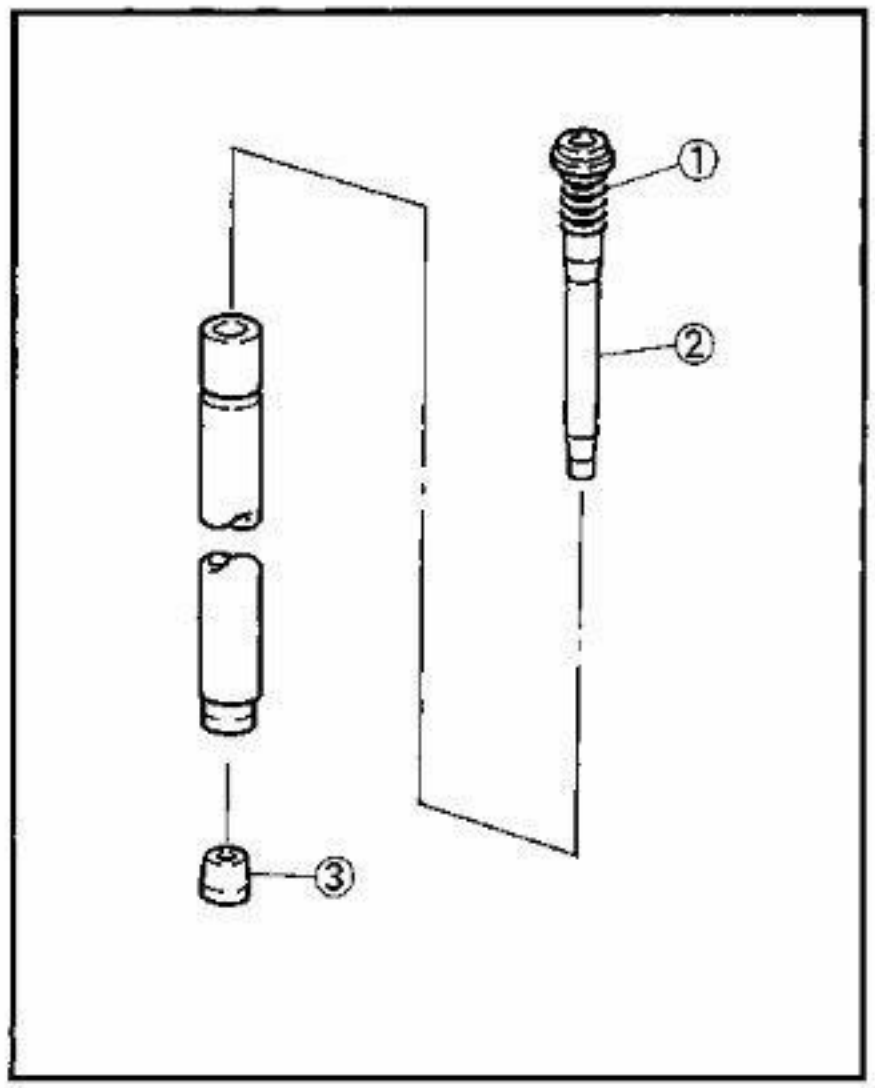

1. Install:
   - Damper rod spring ①
   - Damper rod ②
     Allow rod to slide slowly down the inner fork tube until it protrudes from the bottom.
   - Oil lock piece ③
   - Inner fork tube

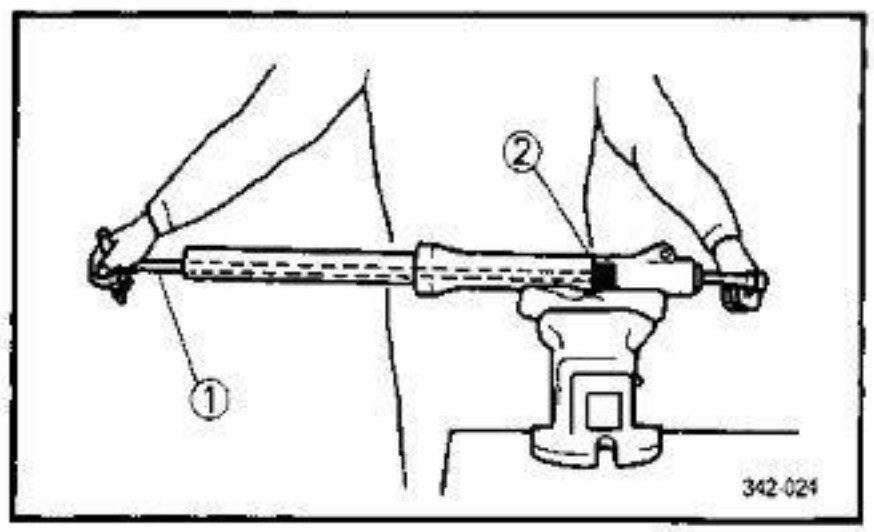

2. Install:
   - Bolt (Damper rod)
     Hold damper rod with Front Fork Cylinder Holder ② (YM-33256) and T-handle ① (YM-01326).

Bolt (Damper Rod):
23 Nm (2.3 m•kg, 17 ft•lb)
LOCTITE®

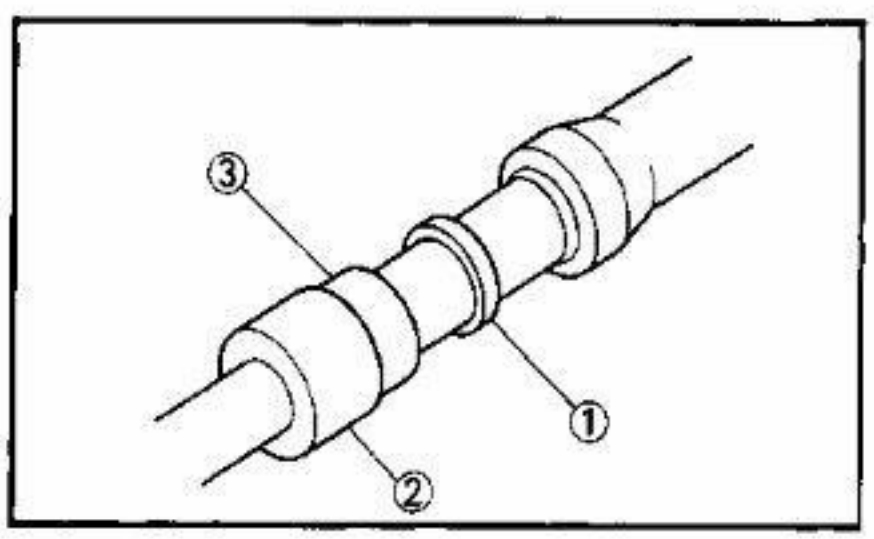

3. Install:
   - Guide bushing ①
     Press guide bushing into the outer fork tube with Fork Seal Driver ② (YM-33963) and Adapter (YM-1368) ③.

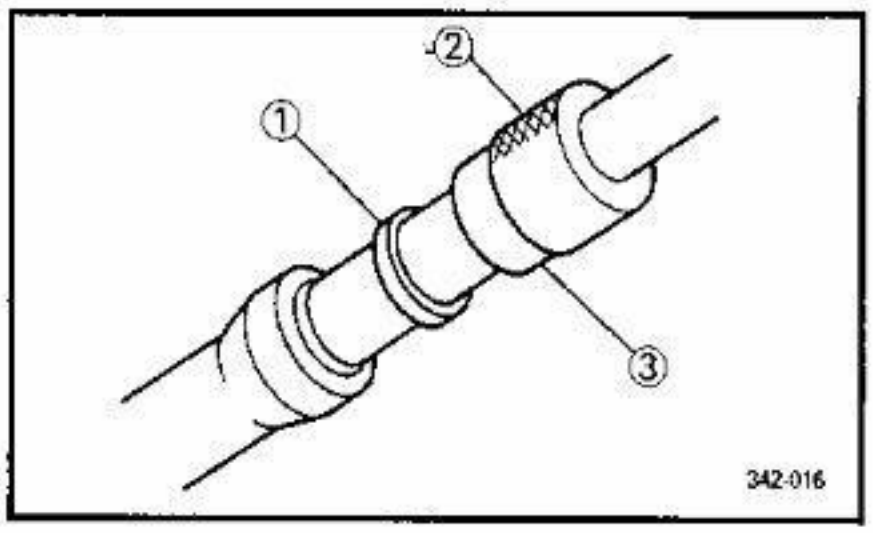

4. Install:
   - Fork oil seal ①
     Press fork oil seal into the outer fork tube with Fork Seal Driver ② (YM-33963) and Adapter (YM-1368) ③.

CAUTION:

Be sure oil seal numbered side face upward.

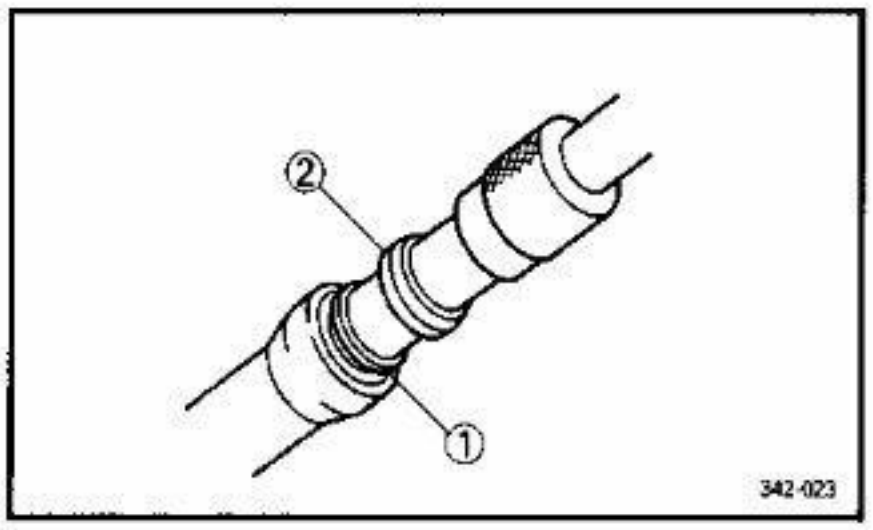

5. Install:
   - Circlip ①
   - Dust seal ②
     Use Fork Seal Driver (YM-33963) and Adapter (YM-1368).

6. Fill:
   - Front fork
     (with fork oil)

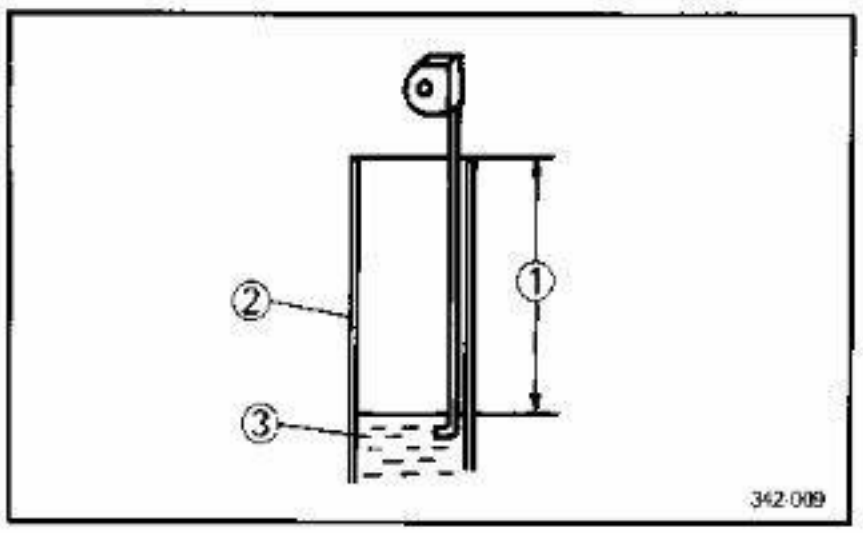

Capacity (Each):
243 cm³ (8.55 Imp oz, 8.22 US oz)
Yamaha fork oil 10wt or equivalent
After filling, slowly pump the fork up and down to distribute oil.
Oil Level ①:
122 mm (4.8 in)
From top of fully compressed inner tube ② without fork spring.

③ Fork oil

7. Install:
   - Fork spring

NOTE:

Be sure the short pitch ③ side face upward.

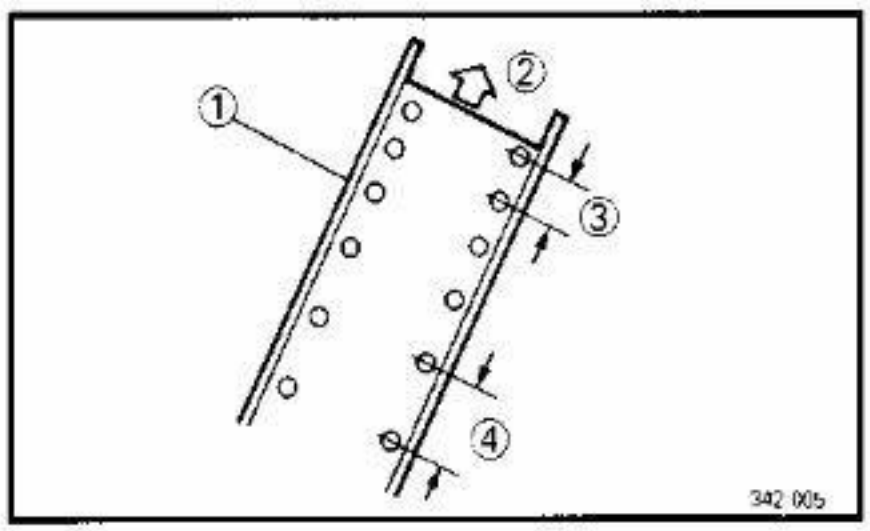

   - Spring seat
   - Cap bolt
     Into the inner fork tube.

① Inner tube
② Upward
④ Long pitch

INSTALLATION

1. Install:
   - Front fork assembly
     Into the underbracket, handle crown, and handlebar.

NOTE:

Be sure the inner fork tube end is flush ⓐ with the top of the handlebar.

2. Tighten:
   - Pinch bolt (Under bracket)

	Pinch Bolt (Under Bracket): **20 Nm (2.0 m•kg, 14 ft•lb)**

3. Tighten:
   - Cap bolt
   - Pinch bolt (Handle crown)
   - Pinch bolt (Handlebar)

	Cap Bolt: **23 Nm (2.3 m•kg, 17 ft•lb)** **Pinch Bolt (Handle Crown):** **20 Nm (2.0 m•kg, 14 ft•lb)** **Pinch Bolt (Handlebar):** **20 Nm (2.0 m•kg, 14 ft•lb)**

4. Continue assembly by reversing of Removal and Disassembly sequence.
   Install and torque tighten each component as specified.

	Disc Brake Caliper: **35 Nm (3.5 m•kg, 25 ft•lb)** **Front Wheel Axle:** **75 Nm (7.5 m•kg, 54 ft•lb)** **Pinch Bolt (Front Axle):** **23 Nm (2.3 m•kg, 17 ft•lb)**

STEERING HEAD

① Steering stem bolt
② Handle crown
③ Ring nut
④ Bearing cover
⑤ Upper bearing races
⑥ Lower bearing races
⑦ Bearing (Upper)
⑧ Bearing (Lower)

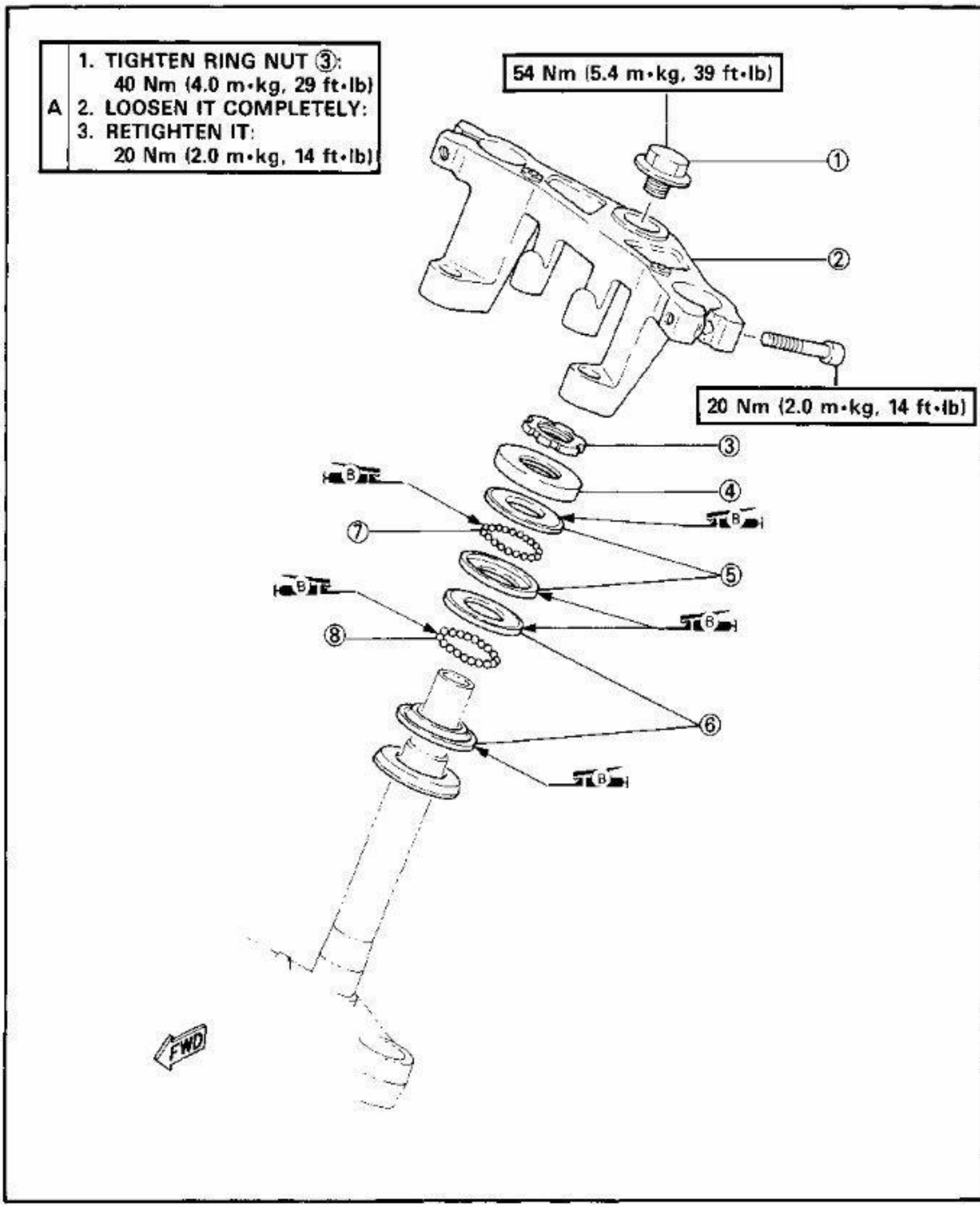

REMOVAL

WARNING:

Securely support the motorcycle so there is no danger of it falling over.

1. Remove:
   - Cowling
     Refer to "CHAPTER 2.—COWLING" section.
2. Disconnect:
   - Headlight lead ①

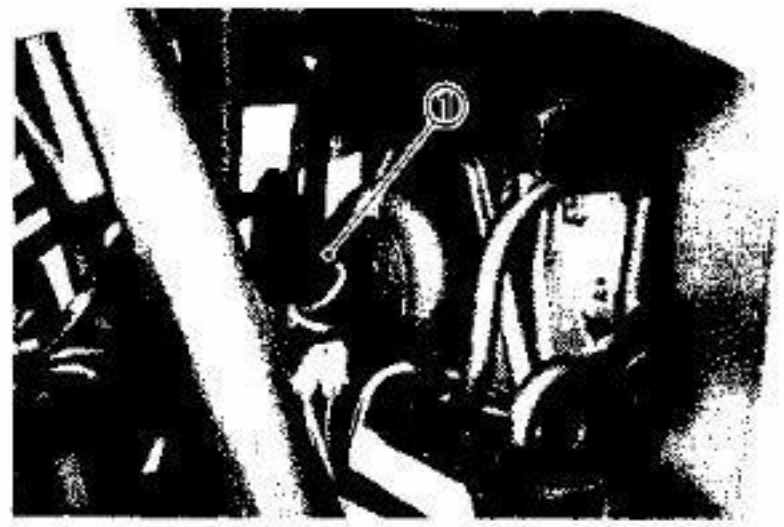

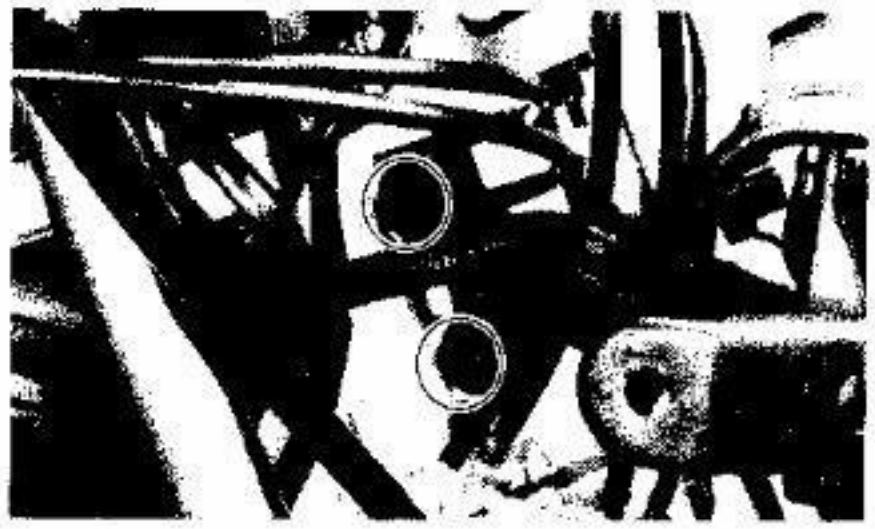

3. Remove:
   - Headlight stay and headlight assembly

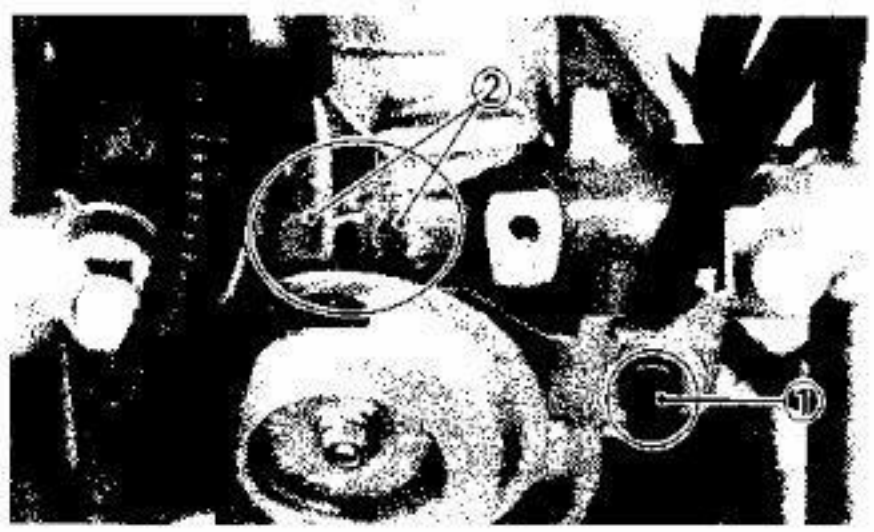

4. Remove:
   - Bolt (Horn) ①
5. Disconnect:
   - Horn leads ②

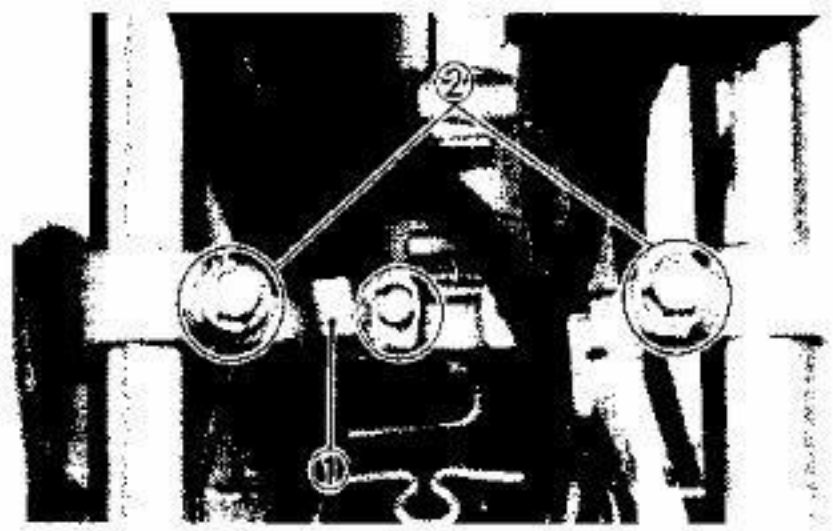

6. Remove:
   - Front wheel
   - Fender
   - Front fork brace
   - Brake hose clamp ①
7. Loosen:
   - Pinch bolt (Under bracket) ②

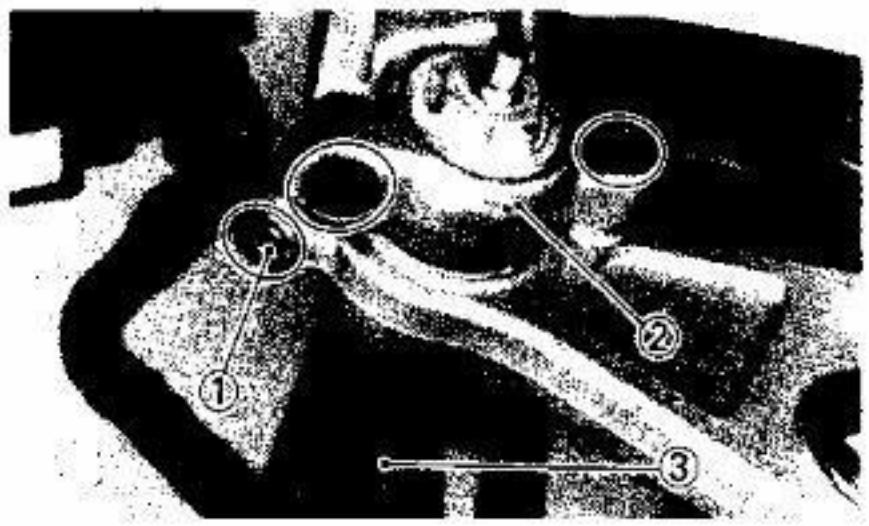

8. Loosen:
   - Pinch bolts (Handle crown) ①
9. Remove:
   - Rubber caps
   - Handlebar assembly ②
   - Front forks ③

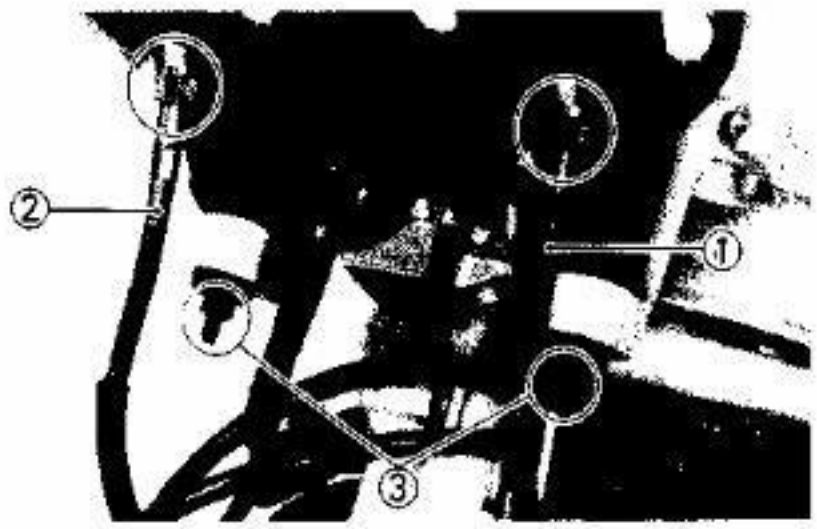

10. Disconnect:
    - Speedometer cable ①
    - Tachometer cable ②
11. Remove:
    - Nut (Meter assembly) ③
    - Meter assembly

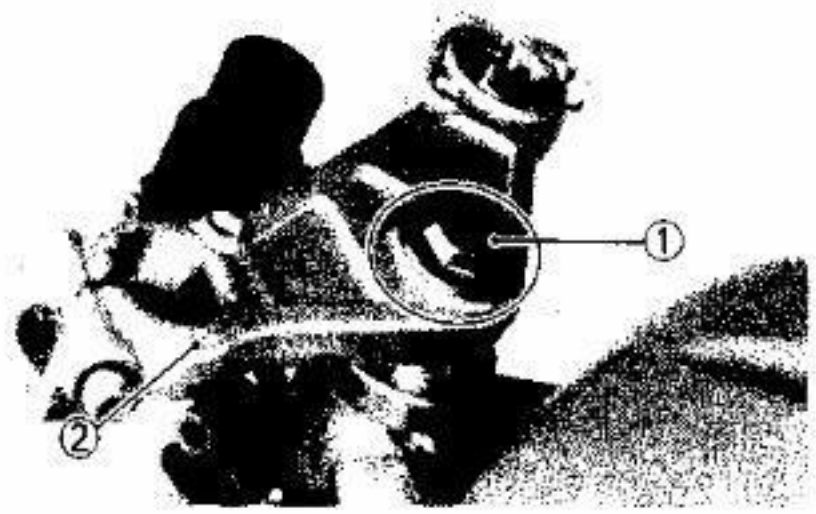

12. Remove:
    - Bolt (Steering stem) ①
    - Handle crown ②

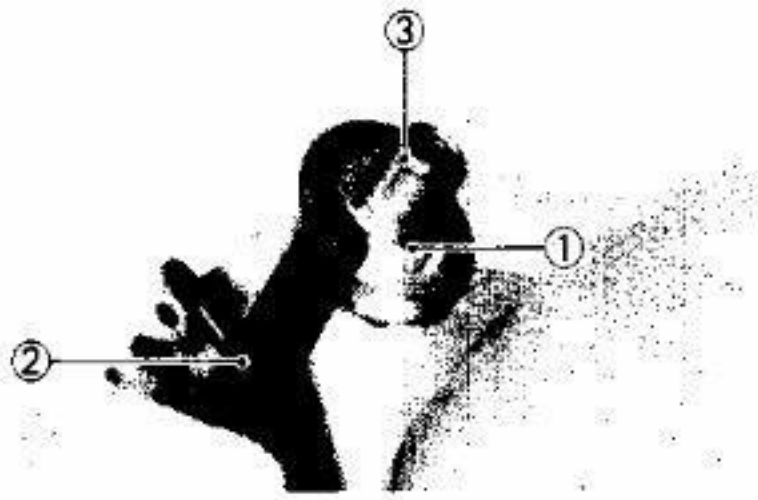

13. Remove:
    - Ring nut ①
      Use Ring Nut Wrench ② (YU-33975)
    - Bearing cover

WARNING:

Support the under bracket ③ so that it may not fall down.

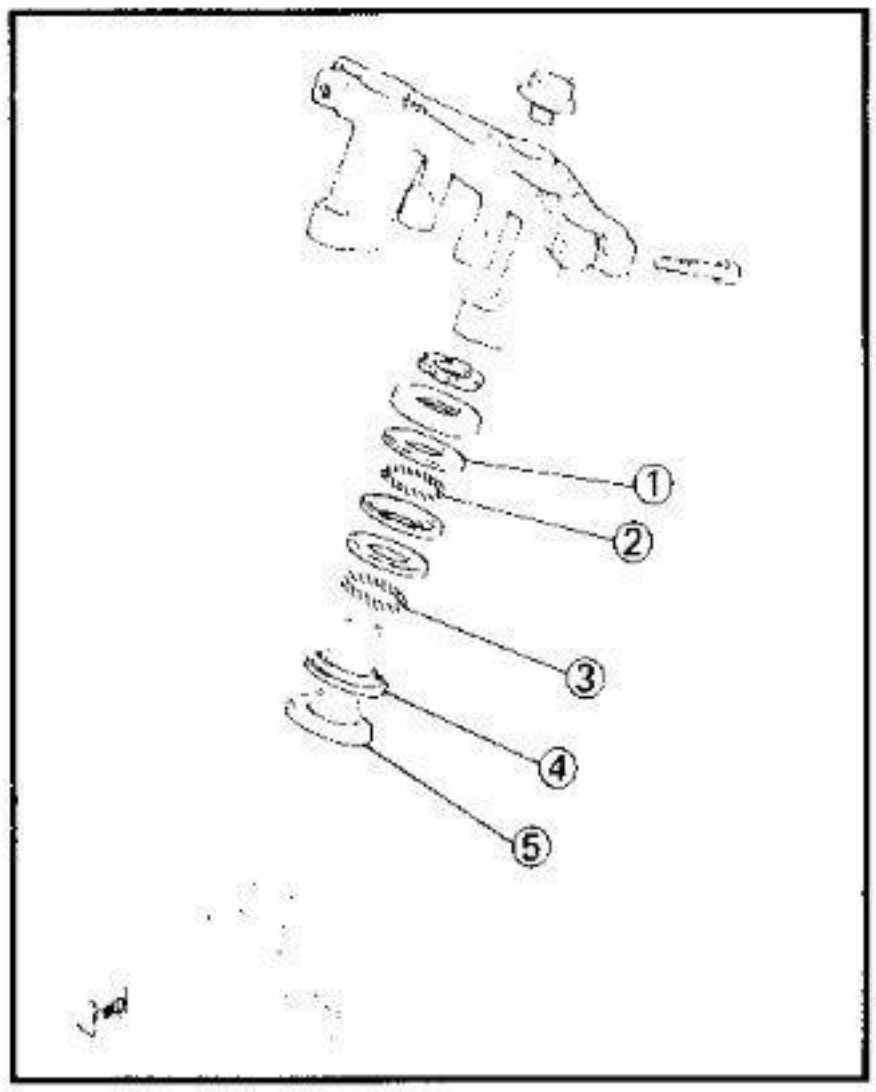

14. Remove:
    - Steering stem
    - Ball race (Upper – Top) (1)
    - Ball (19 pcs.) (2)
    - Ball (19 pcs.) (3)
    - Ball race (Under – Bottom) (4)
    - Steering seal (5)

15. Remove:
    - Ball race (Upper – Bottom)
    - Ball race (Under – Top)

    Use a drift punch and a hammer.

NOTE:

Work the race out gradually by tapping lightly around its complete backside diameter.

INSPECTION

1. Wash the bearing in a solvent.
2. Inspect:
    - Balls
    - Ball races

    Pitting/Damage → Replace.

NOTE:

Always replace ball and race as a set.

3. Inspect:
    - Steering seal
    - Bearing cover

    Damage → Replace.

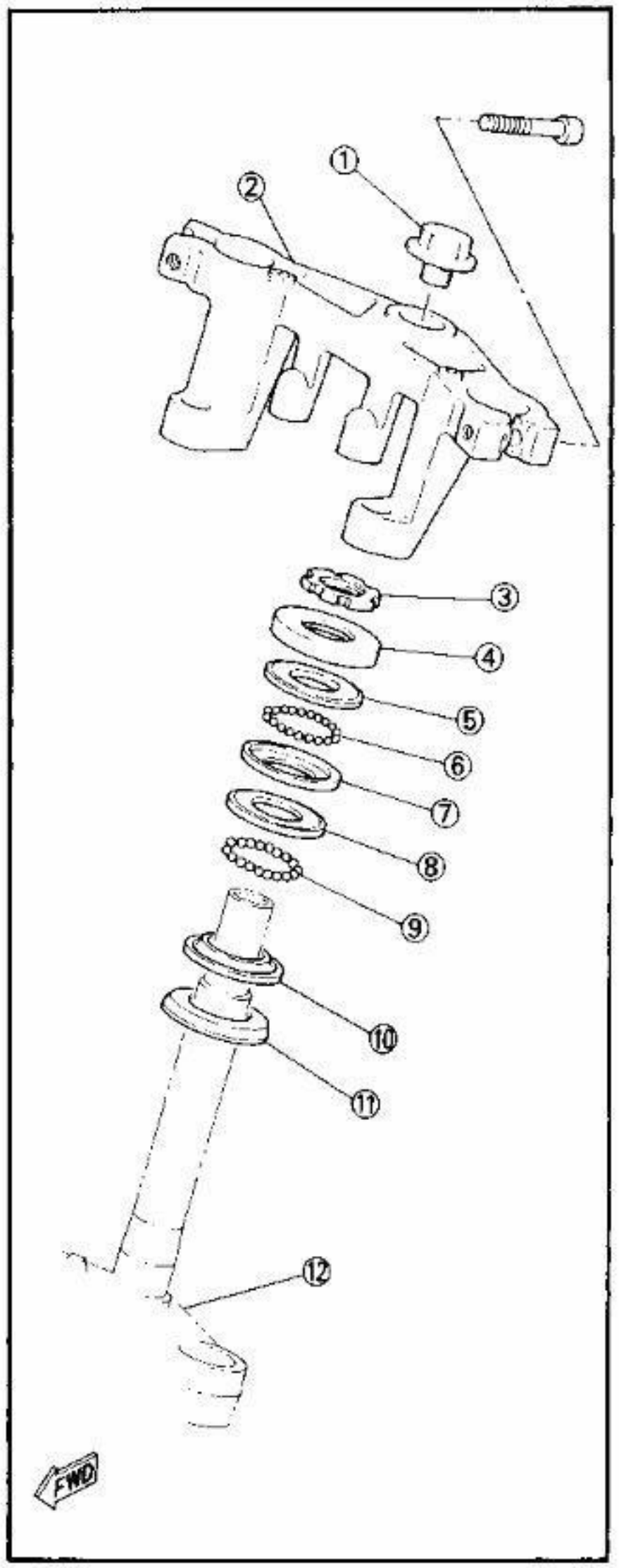

INSTALLATION

1. Install:
   - Ball race (Upper — Bottom) ⑦
   - Ball race (Under — Top) ⑧

   Tap in the new races in the head pipe.
2. Install:
   - Steering seal ⑪
   - Ball race (Under — Bottom) ⑩

   To the steering stem.
3. Lubricate:
   - Ball race (Upper — Bottom)
   - Ball race (Under — Bottom)

Wheel Bearing Grease

4. Install:
   - Balls (Upper and lower) ⑥ ⑨

   Arrange the balls around race, and apply more grease.

Ball Quantity/Size:
19 pcs./1/4 in

5. Install:
   - Ball race (Under — Top) ⑧

   Onto the steering stem.
   - Steering stem ⑫

CAUTION:

Hold the steering stem until it is secured.

- Ball race (Upper — Top) ⑤
- Bearing cover ④
- Ring nut ③

NOTE:

The tapered side of ring nut must face downward.

6. Tighten:
   - Ring nut ③

Ring nut tightening steps:

NOTE:

Set the Torque Wrench to the Ring Nut Wrench so that they form a right angle.

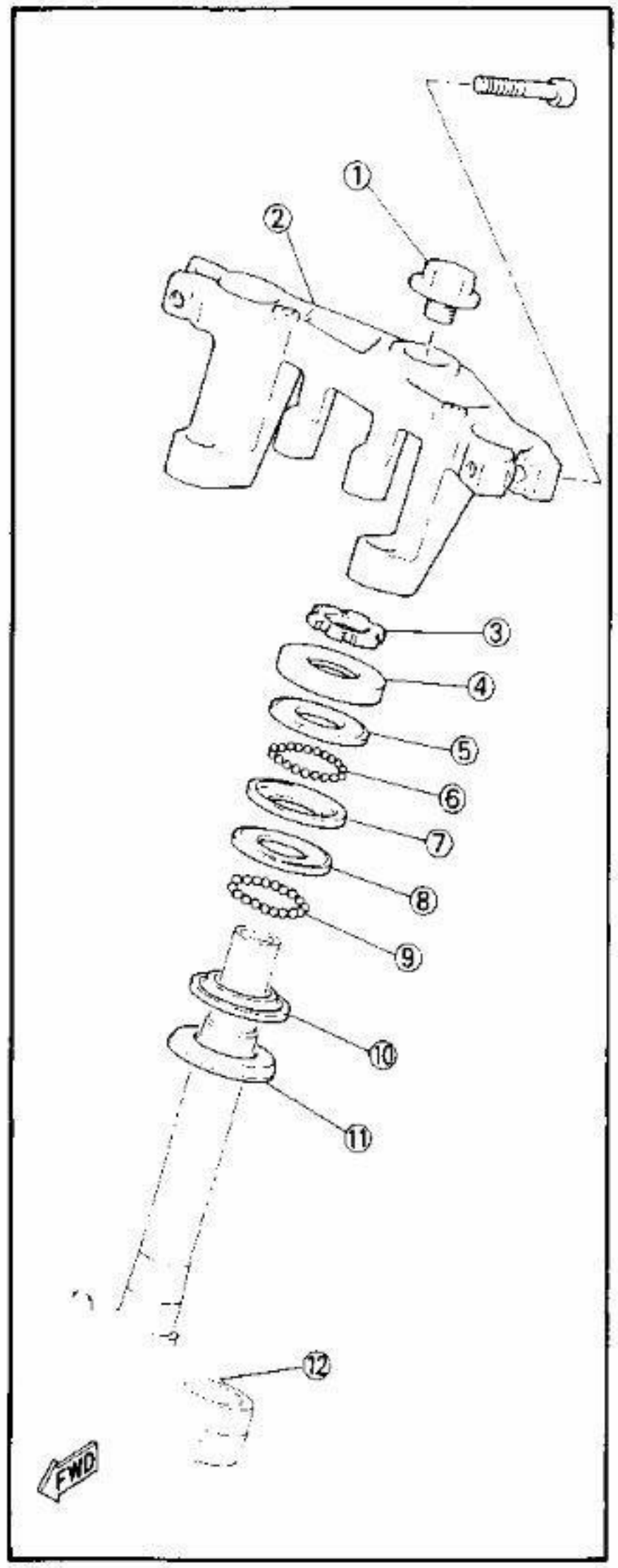

- Tighten the ring nut (3) using the Ring Nut Wrench (YU-33975).

Ring Nut (Initial Tightening):
40 Nm (4.0 m•kg, 29 ft•lb)

- Loosen the ring nut (3) completely and retighten it to specification.

WARNING:

Do not over-tightening.

Ring Nut (Final Tightening):
20 Nm (2.0 m•kg, 14 ft•lb)

- Check the steering stem by turning it lock to lock. If there is any binding, remove the steering stem assembly and inspect the steering bearings (6) (10).
- Position the front fork into the steering stem. This will facilitate alignment of steering stem holes with handle crown holes.
- Install the handle crown (2) and tighten the steering stem bolt (1) to specification.

Bolt (Steering Stem):
54 Nm (5.4 m•kg, 39 ft•lb)

7. Install:
   - Components in aforementioned list (Steps "11 ~ 1")
     Refer to "FRONT FORK" and "FORNT WHEEL" section.

Pinch Bolt (Under Bracket)
20 Nm (2.0 m•kg, 14 ft•lb)
Pinch Bolts (Handle Crown):
20 Nm (2.0 m•kg, 14 ft•lb)
Pinch Bolts (Handlebar):
20 Nm (2.0 m•kg, 14 ft•lb)

REAR SHOCK ABSORBER AND SWINGARM

① Thrust cover
② Collar
③ Bushing
④ Oil seal
⑤ Arm 1
⑥ Arm 2
⑦ Relay arm
⑧ Circlip
⑨ Bearing

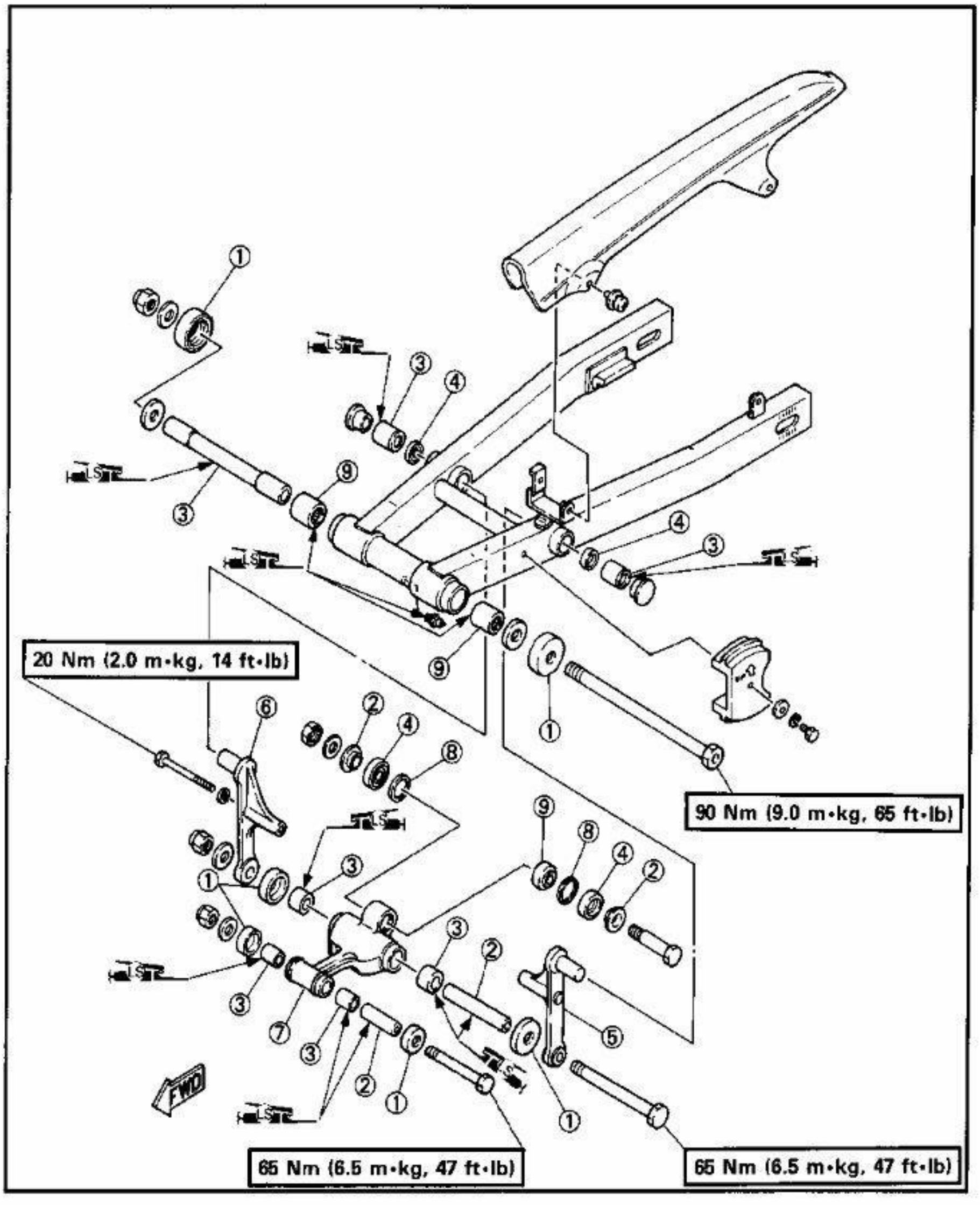

Rear Shock Absorber

① Rear shock absorber
② Collar
③ Oil seal
④ Circlip
⑤ Bearing
⑥ Relay arm
⑦ Adjuster
⑧ Hard
⑨ Soft

SPRING PRELOAD ADJUSTMENT

	Hard				STD	Soft
Adjusting position	6	5	4	3	2	1

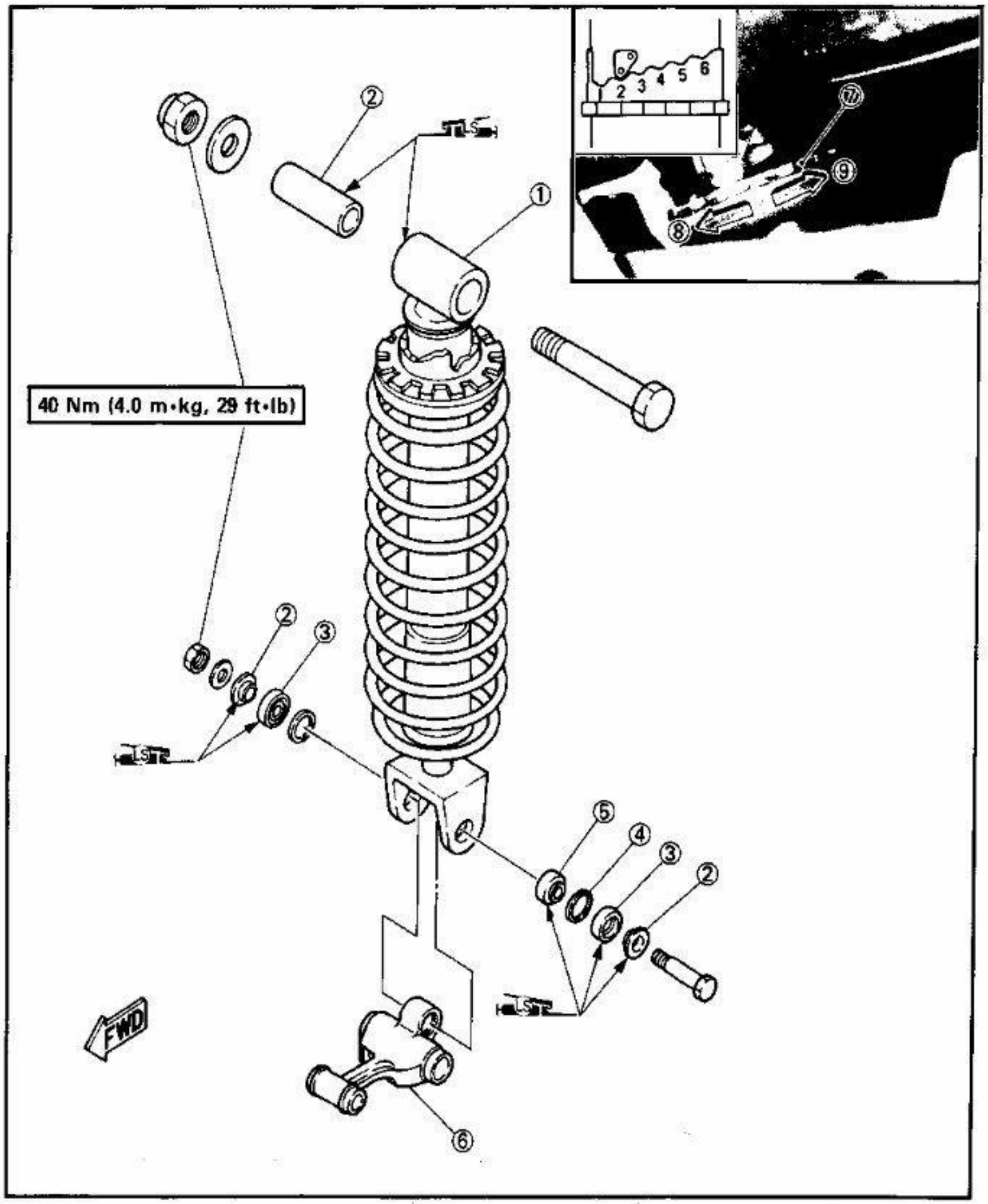

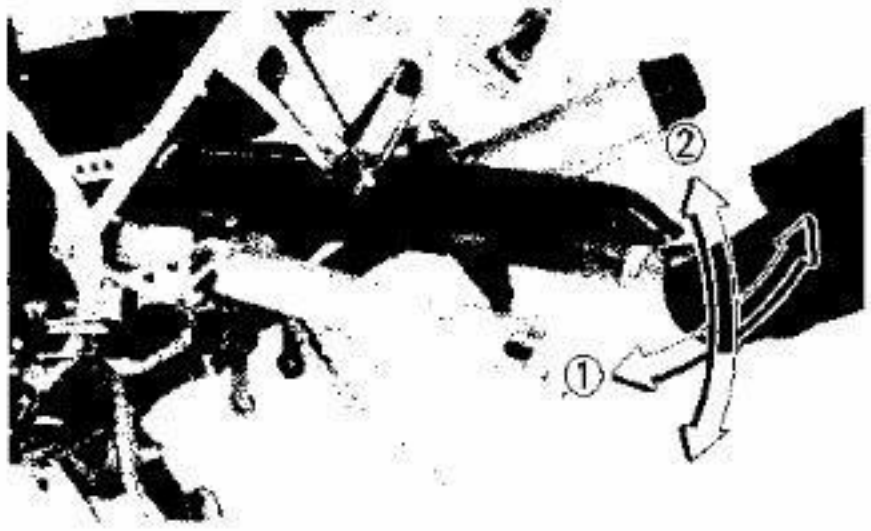

FREE PLAY INSPECTION

1. Check:
   - Swingarm side play ①
     Side play→Replace swingarm or bearing.
   - Swingarm up and down movement ②
     Tightness/Binding/Rough spots→Replace bearings.

Free play inspection step:
- Remove the rear wheel.
- Remove the relay arm securing bolt.
- Inspect swingarm side play by moving it from side to side. (There should be no noticeable side play)
- Inspect swingarm up and down movement by moving it up and down.

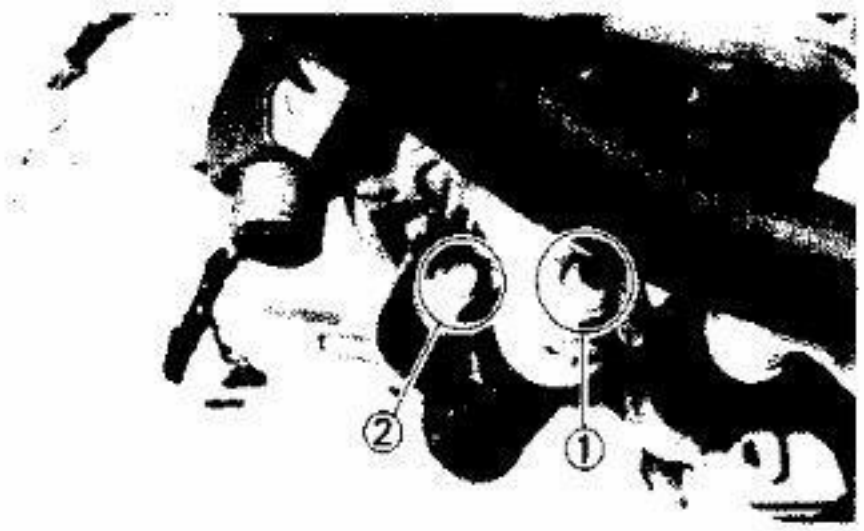

REMOVAL

Rear Shock Absorber

1. Remove:
   - Rear wheel
     Refer to "REAR WHEEL—REMOVAL" section.
   - Bolt (Relay arm — Arm 1, 2) ①
   - Bolt (Shock absorber — Lower) ②

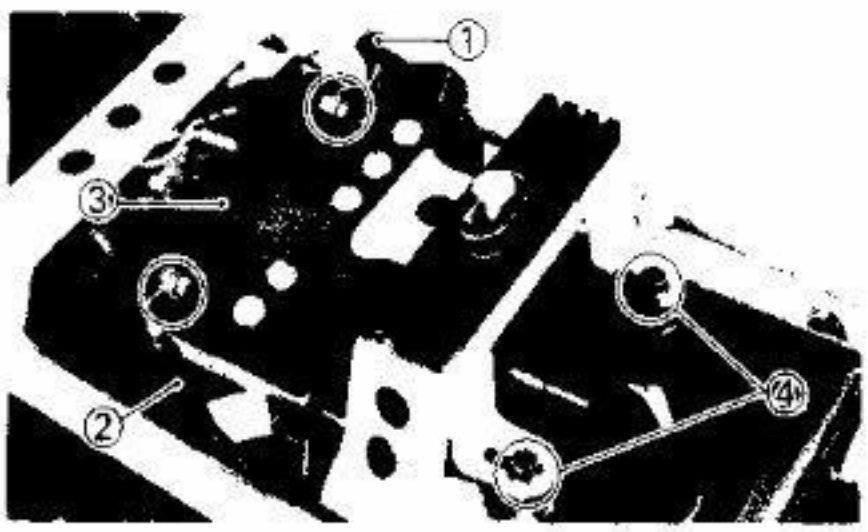

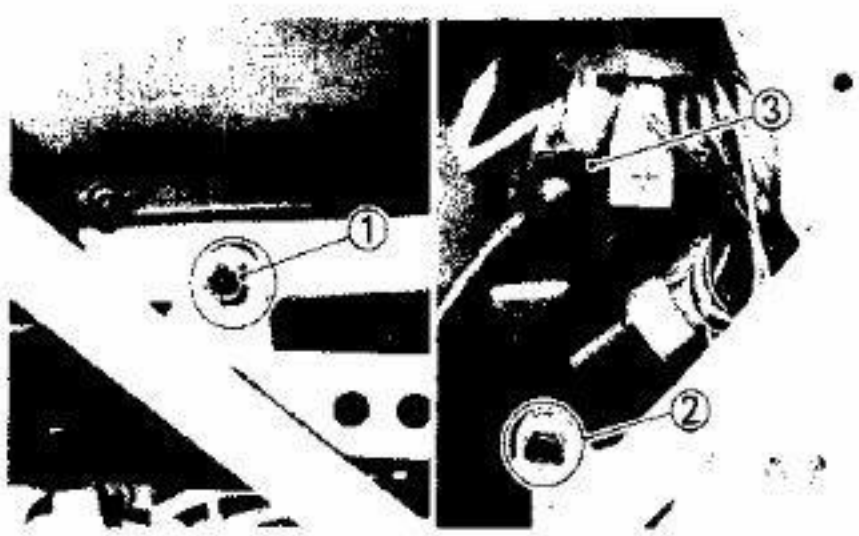

2. Remove:
   - Fuel tank
     Refer to "CHAPTER 2. FUEL COCK CLEANING—REMOVAL" section.
   - Battery positive lead ①
   - Battery negative lead ②
   - Battery band ③
   - Battery
   - Bolts (Air cleaner case) ④
3. Remove:
   - Side cover (Left and right)
   - Bolt (Air cleaner case — Right) ①
   - Bolt (Air cleaner case — Left) ②
   - Starter relay ③
   - Air cleaner case

4. Remove:
   - Bolt (Shock absorber — Upper) ①
   - Shock absorber

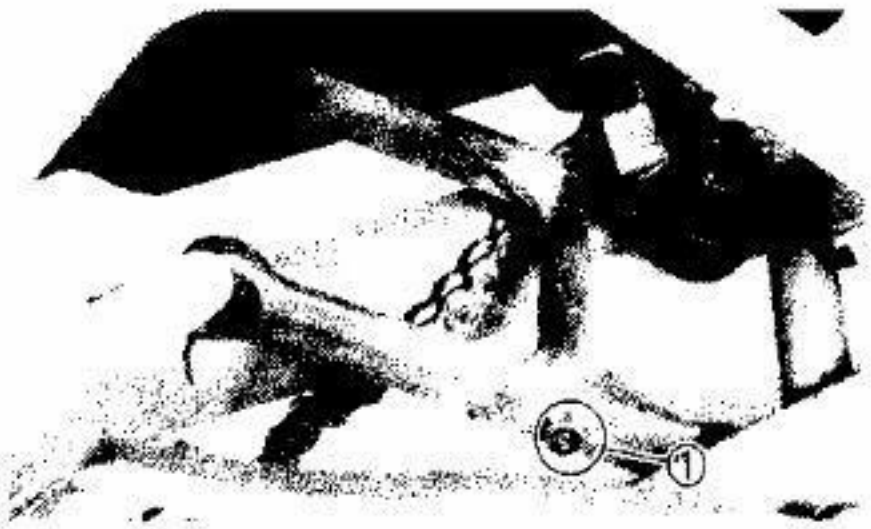

Swingarm

1. Remove:
   - Bolt (Arm 1 and Arm 2) ①

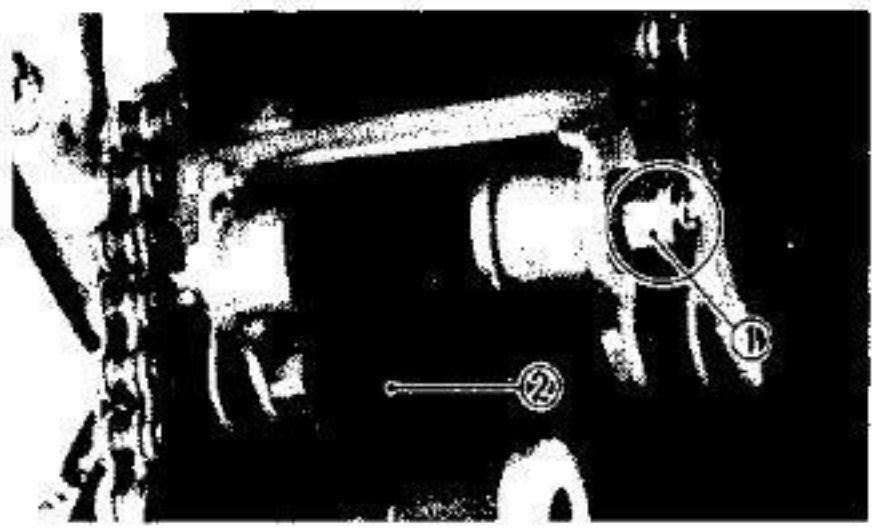

2. Remove:
   - Bolt (Relay arm) ①
   - Relay arm ②
   - Thrust covers
   - Collar

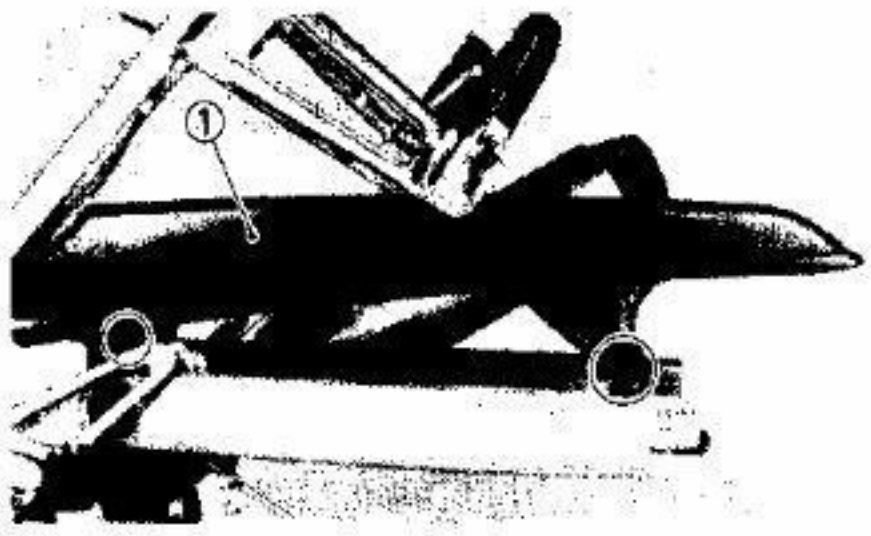

3. Remove:
   - Drive chain cover ①

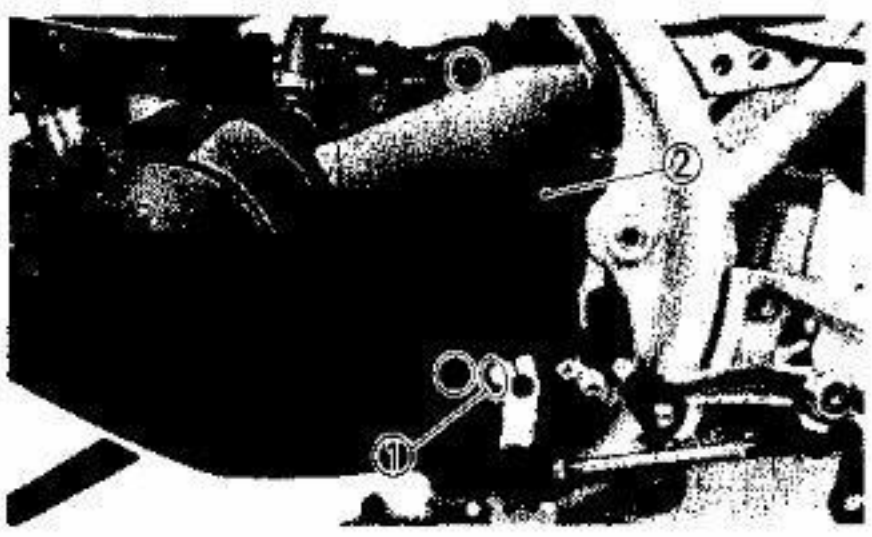

4. Remove:
   - Bolt (Change pedal link) ①
   - Link (Change pedal)
   - Drive sprocket cover ②

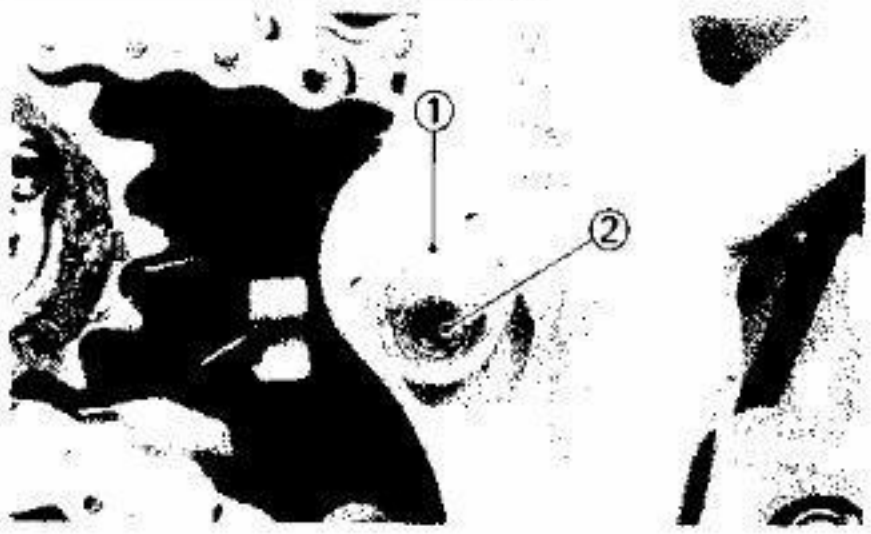

5. Remove:
   - Nut (Pivot shaft) ①
   - Pivot shaft ②
   - Swingarm

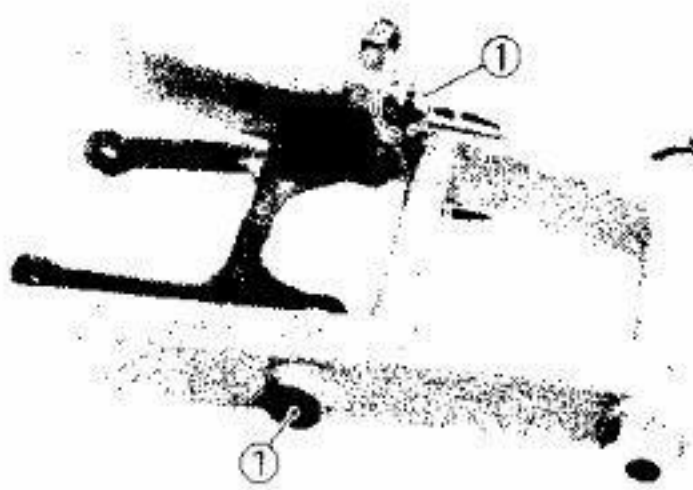

6. Remove:
   - Caps ①
   - Arm 1 and 2

INSPECTION

Rear Shock Absorber

1. Inspect:
   - Shock absorber rod
     Bends/Damage→Replace the shock absorber assembly.
   - Shock absorber
     Oil leakes→Replace the shock absorber assembly.
   - Spring
     Fatigue→Replace the shock absorber assembly.
     Move the spring up and down.

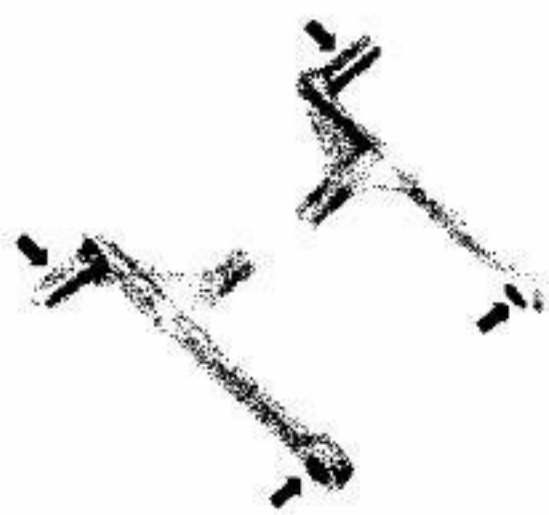

Arm 1, 2 and Relay Arm

1. Inspect:
   - Arm 1, 2
     Damage/Wear→Replace.

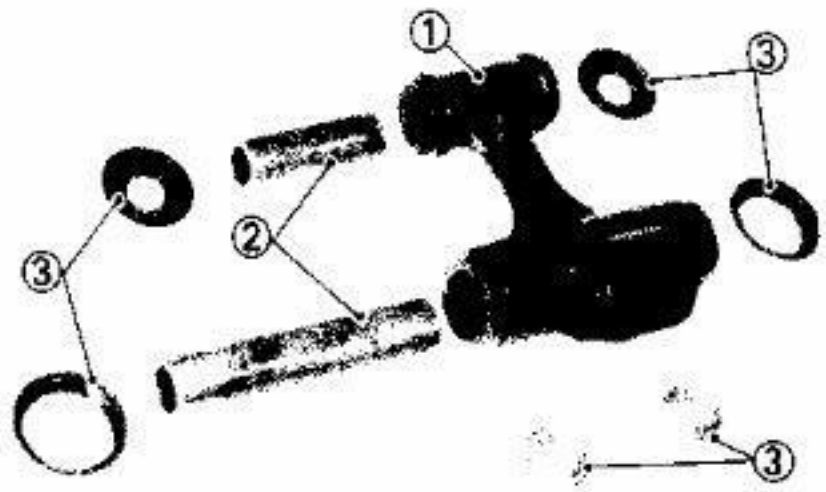

2. Inspect:
   - Relay arm ①
   - Collars ②
   - Thrust covers ③
     Damage/Wear→Replace.

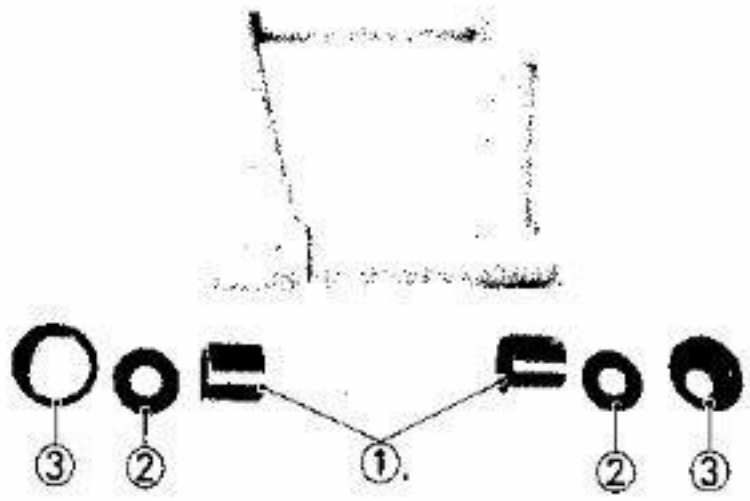

Swingarm

1. Wash the bearings in a solvent.
2. Inspect:
   - Bearings (Race/Rollers) ①
     Pitting/Damage→Replace.
   - Plain washer ②
   - Thrust cover ③
     Damage→Replace.

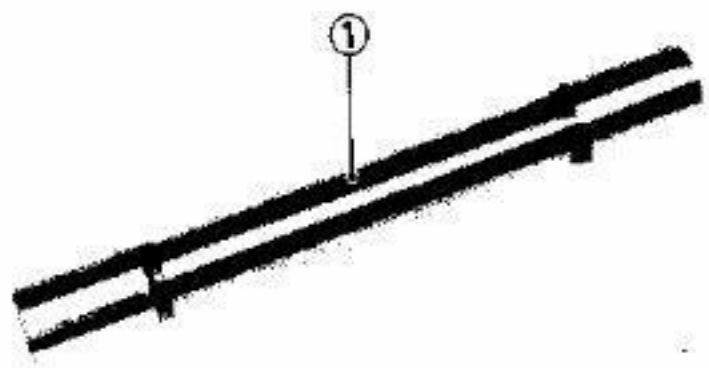

3. Inspect:
   - Bushing ①
     Scratches/Damage→Replace.

INSTALLATION

When installing the swingarm and rear shock absorber, reverse the removal procedures. Note the following points.

Swingarm

1. Lubricate:
   - Bearings

Lithium Base Waterproof Wheel Bearing Grease

2. Install:
   - Arm 1 and 2
     To the swingarm.
   - Caps

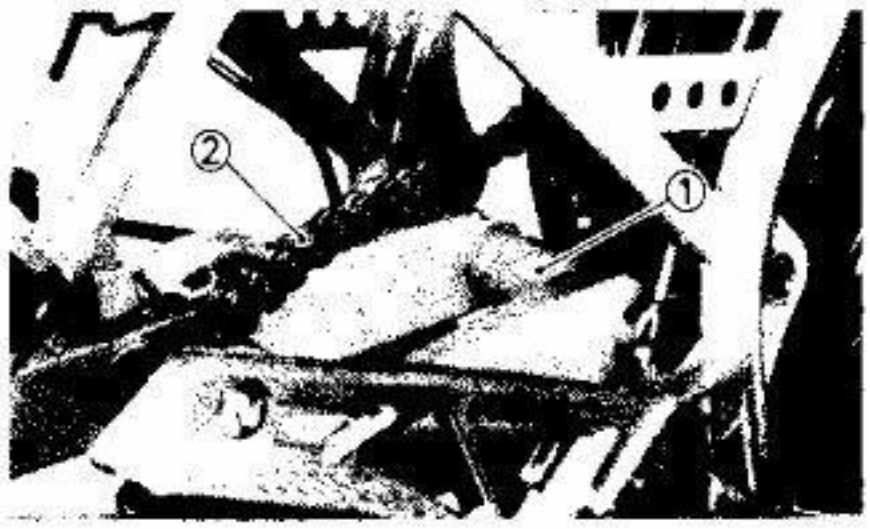

3. Install:
   - Swingarm
   - Pivot shaft

NOTE:

Before installing the swingarm ①, fit the drive chain ② to the swingarm.

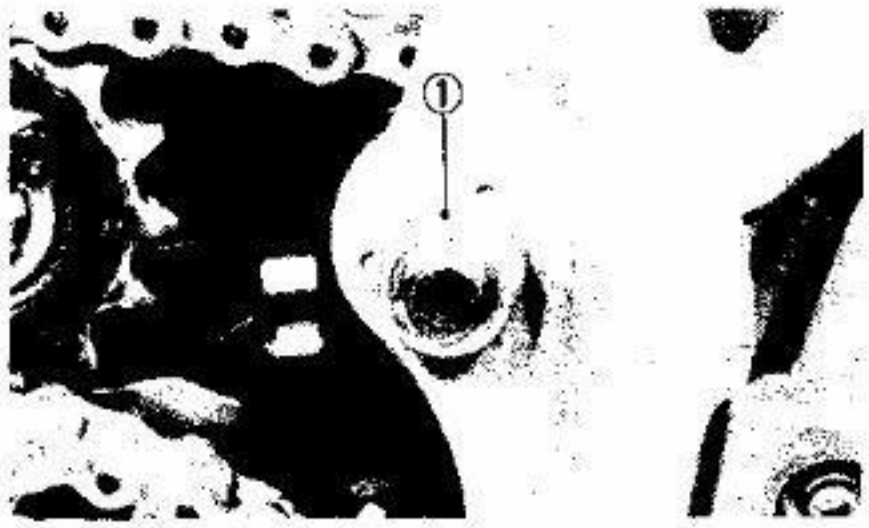

4. Tighten:
   - Nut (Pivot shaft) ①

	Nut (Pivot Shaft): **90 Nm (9.0 m•kg, 65 ft•lb)**

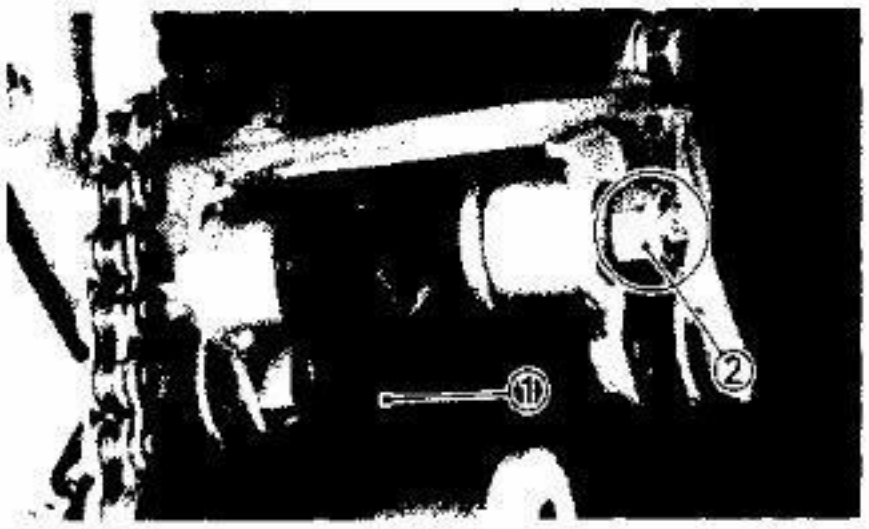

5. Install:
   - Relay arm ①

	Nut (Relay Arm—Frame) ②: **65 Nm (6.5 m•kg, 47 ft•lb)** **Nut (Relay Arm—Arm 1, 2):** **65 Nm (6.5 m•kg, 47 ft•lb)** **Bolt (Arm 1, 2) ③:** **20 Nm (2.0 m•kg, 14 ft•lb)**

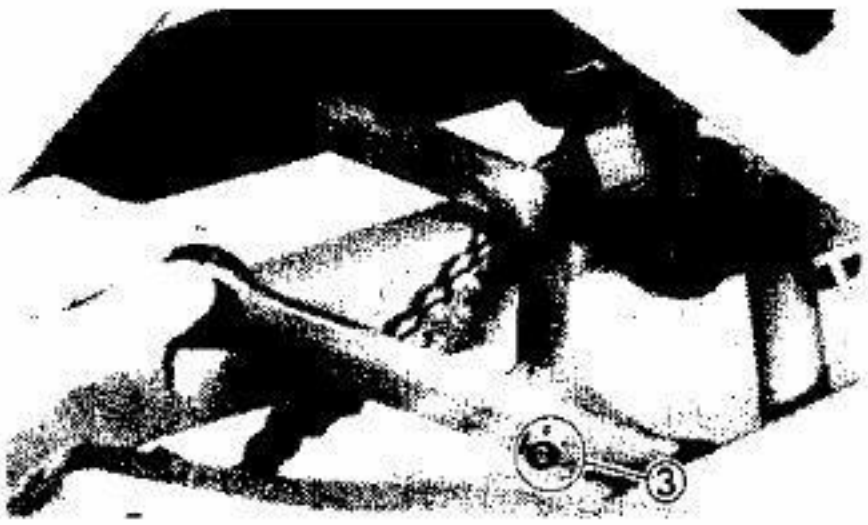

6. Check:
   - Swingarm (Side play)
   - Swingarm (Vertical movement)

   Refer to "FREE PLAY INSPECTION" section.

7. Lubricate:
   - Grease nipple ①

   Using a grease gun.

	Lithium Base Waterproof Wheel Bearing Grease

Rear Shock Absorber

1. Install:
   - Rear shock absorber

Nut (Upper) ①: **40 Nm (4.0 m•kg, 29 ft•lb)** **Nut (Lower) ②:** **40 Nm (4.0 m•kg, 29 ft•lb)**

2. Install:
   - Rear wheel

   Refer to "REAR SHOCK ABSORBER" and "REAR WHEEL" section.

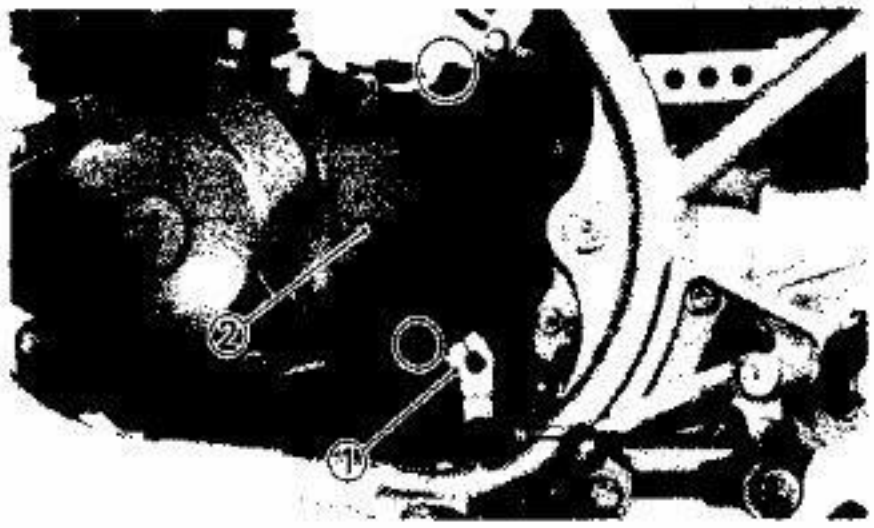

DRIVE CHAIN AND SPROCKETS

REMOVAL

Drive Sprocket and Drive Chain

1. Remove:
   - Bolt (Change pedal) ①
   - Sprocket cover ②

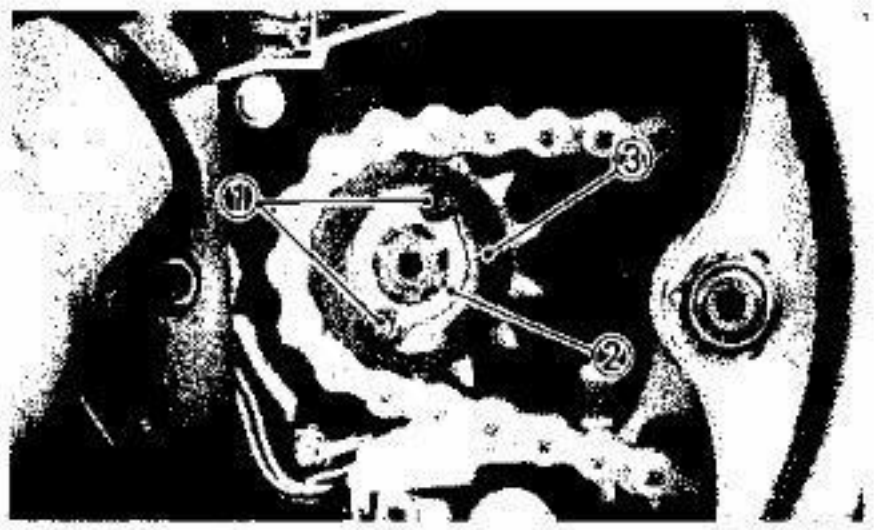

2. Remove:
   - Bolts (Drive sprocket) ①
   - Holding plate ②
   - Drive sprocket ③

NOTE:

Before removing the drive sprocket, increase the drive chain slack.

3. Remove:
   - Rear wheel
   - Swingarm
   - Drive chain

Driven Sprocket

1. Remove:
   - Rear wheel
2. Straighten:
   - Lock washer tabs (Driven sprocket)
3. Remove:
   - Bolts (Drive sprocket)
   - Driven sprocket

INSPECTION

Drive Chain

1. Inspect:
   - O-rings
     Damage/Miss → Replace.
   - Rollers and side plates
     Damage/Wear → Replace.
2. Measure:
   - Length (10 links) ⓐ
     Out of specification → Replace.

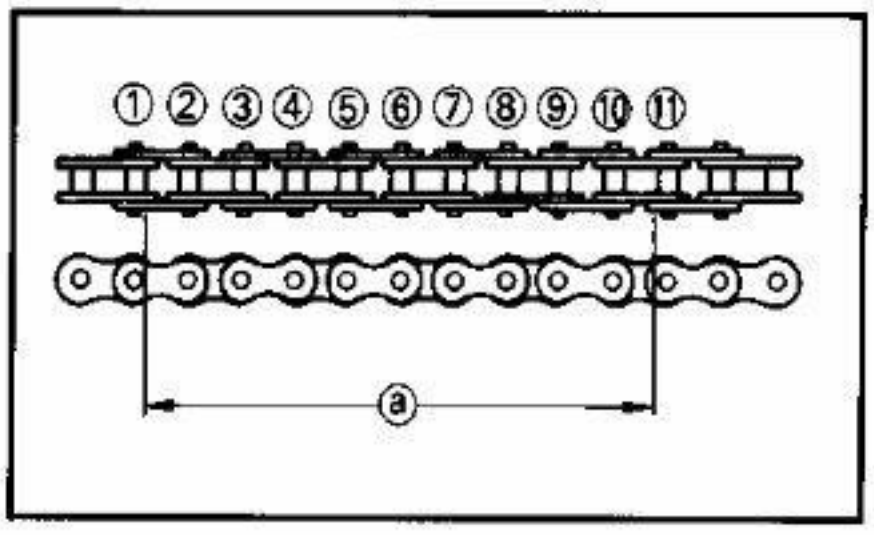

Drive Chain Length (10 links)
Limit:
150.1 mm (5.91 in)

NOTE:

- Replace the sprockets and drive chain as a set.

- For measurement, make the chain tense by finger.
- 10-link length is a measurement between the insides of the ① and ⑪ rollers as shown.
- Two or three different 10-link lengths should be measured.

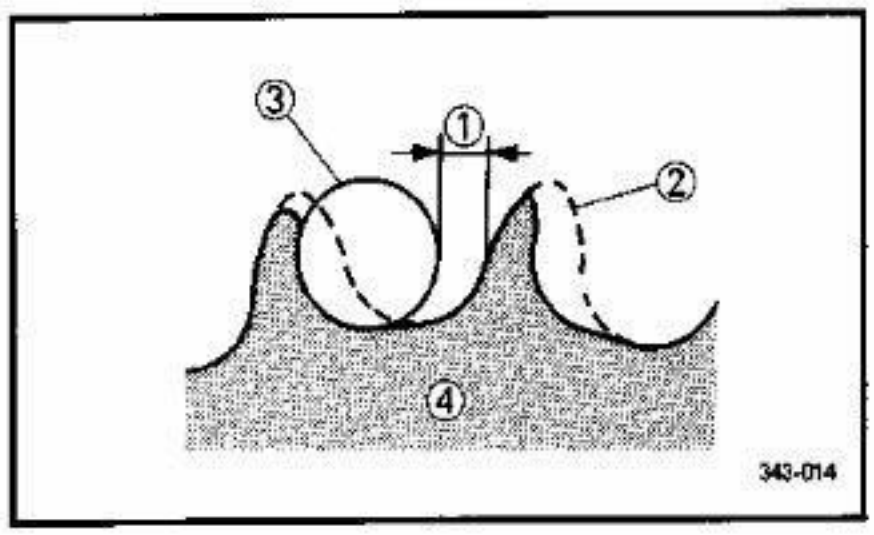

① 1/4 tooth
② Correct
③ Roller
④ Sprocket

Drive and Driven Sprockets

1. Inspect:
   - Drive and driven sprockets
     Wear/Damage→Replace.

ASSEMBLY

When assembling the sprockets, reverse the removal procedure. Note the following points.

1. Tighten:
   - Bolts (Drive sprocket)
   - Bolts (Driven sprocket)

Bolts (Drive Sprocket):
20 Nm (2.0 m•kg, 14 ft•lb)
LOCTITE®
Bolts (Drive Sprocket):
34 Nm (3.4 m•kg, 24 ft•lb)

2. Bend the lock washer tab along the nut flats.

3. Adjust:
   - Drive chain slack
   - Rear brake free play
     Refer to "CHAPTER 2. DRIVE CHAIN SLACK ADJUSTMENT and REAR BRAKE ADJUSTMENT" section.

CHAPTER 6
ELECTRICAL

SRX250T/TC CIRCUIT DIAGRAM 6-1

ELECTRICAL COMPONENTS 6-3

ELECTRIC STARTING SYSTEM 6-5
- CIRCUIT DIAGRAM 6-5
- STARTING CIRCUIT OPERATION 6-7
- TROUBLESHOOTING 6-8
- STARTER MOTOR TEST 6-13

CHARGING SYSTEM 6-17
- CIRCUIT DIAGRAM 6-17
- TROUBLESHOOTING 6-19

IGNITION SYSTEM 6-21
- CIRCUIT DIAGRAM 6-21
- TROUBLESHOOTING 6-23

LIGHTING SYSTEM 6-29
- CIRCUIT DIAGRAM 6-29
- TROUBLESHOOTING 6-31

SIGNAL SYSTEM 6-35
- CIRCUIT DIAGRAM 6-35
- TROUBLESHOOTING 6-37
- SWITCHES TEST 6-47

ELECTRICAL

SRX250T/TC CIRCUIT DIAGRAM

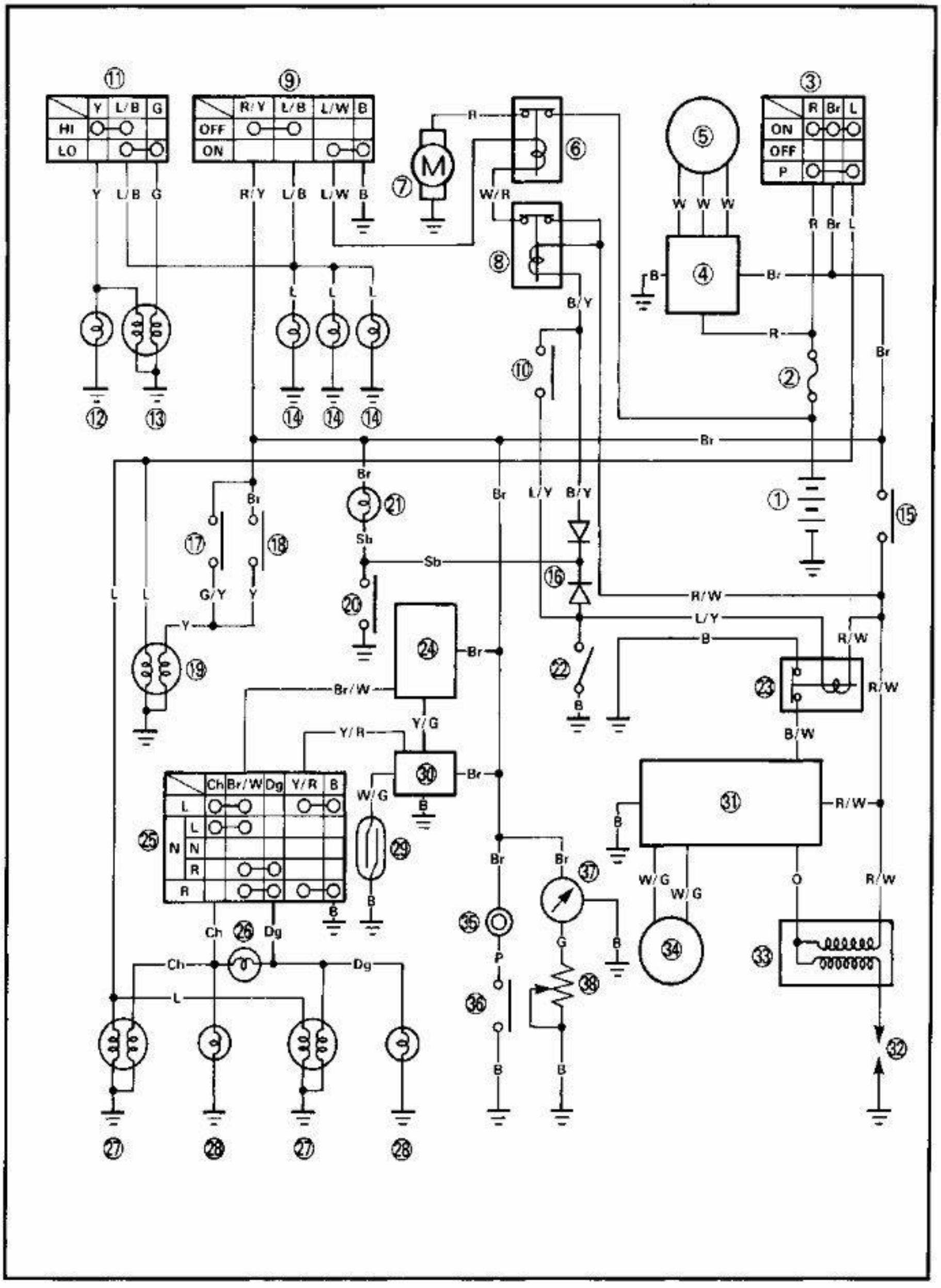

① Battery
② Circuit breaker
③ Main switch
④ Rectifier with regulator
⑤ A.C. Generator
⑥ Starter relay
⑦ Starter motor
⑧ Starting circuit cut-off relay
⑨ "START" switch
⑩ Clutch switch
⑪ "LIGHTS" (Dimmer) switch
⑫ "HIGH BEAM" indicator light
⑬ Headlight
⑭ Meter lights
⑮ "ENGINE STOP" switch
⑯ Diode
⑰ Front brake switch
⑱ Rear brake switch
⑲ Tail/brake light
⑳ Neutral switch
㉑ "NEUTRAL" indicator light
㉒ Sidestand switch
㉓ Sidestand relay
㉔ Flasher relay
㉕ "TURN" switch
㉖ "TURN" indicator light
㉗ Front flasher light/front position light
㉘ Rear flasher light
㉙ Reed switch
㉚ Canceling unit
㉛ Ignitor unit
㉜ Spark plug
㉝ Ignition coil
㉞ Pickup coil
㉟ Horn
㊱ "HORN" switch
㊲ Fuel meter
㊳ Fuel sender

COLOR CODE

B	Black
R	Red
L	Blue
G	Green
Dg	Dark green
Sb	Sky blue
Br	Brown
O	Orange
Y	Yellow
Ch	Chocolate
P	Pink
W	White
B/W	Black/White
R/Y	Red/Yellow
L/B	Blue/Black
L/R	Blue/Red
L/Y	Blue/Yellow
G/Y	Green/Yellow
Br/W	Brown/White
Y/B	Yellow/Black
Y/R	Yellow/Red
W/R	White/Red
W/G	White/Green
W/Y	White/Yellow

ELECTRICAL COMPONENTS (1)

① Wire harness
② Ignitor unit
③ Circuit breaker
④ Starter relay
⑤ Battery
⑥ Sidestand switch
⑦ Rectifier with regulator
⑧ Ignition coil
⑨ Main switch

SPECIFICATIONS	RESISTANCE
IGNITION COIL:	
PRIMARY	2.4 ~ 3.0Ω
SECONDARY	10.6 ~ 15.8KΩ
PICKUP COIL:	85 ~ 115Ω
STATOR COIL:	0.36 ~ 0.51Ω

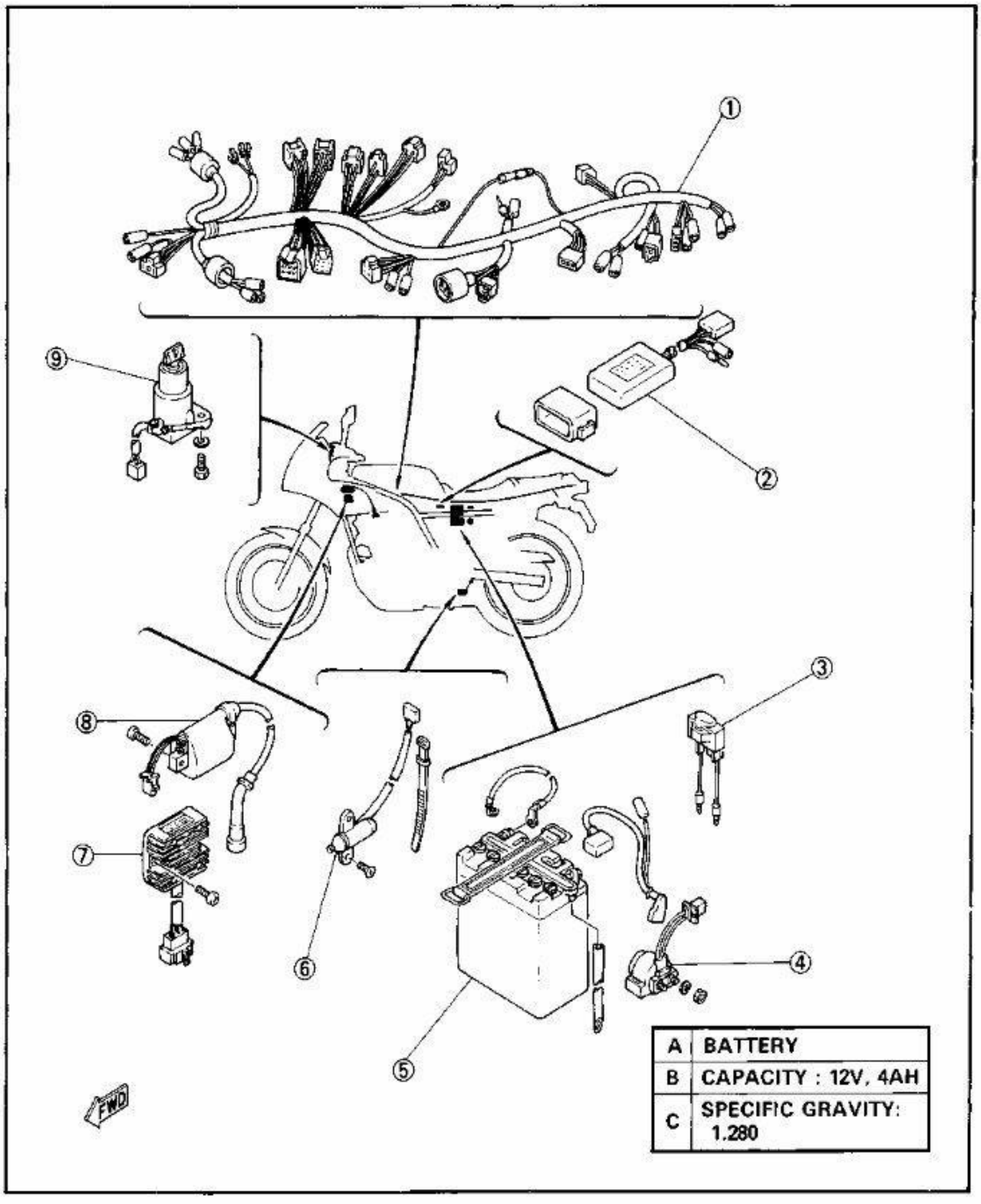

ELECTRICAL COMPONENTS (2)

① Fuel sender
② Side stand relay
③ Rear brake switch
④ Neutral switch
⑤ Horn
⑥ Diode
⑦ Starting circuit cut-off relay
⑧ Flasher relay

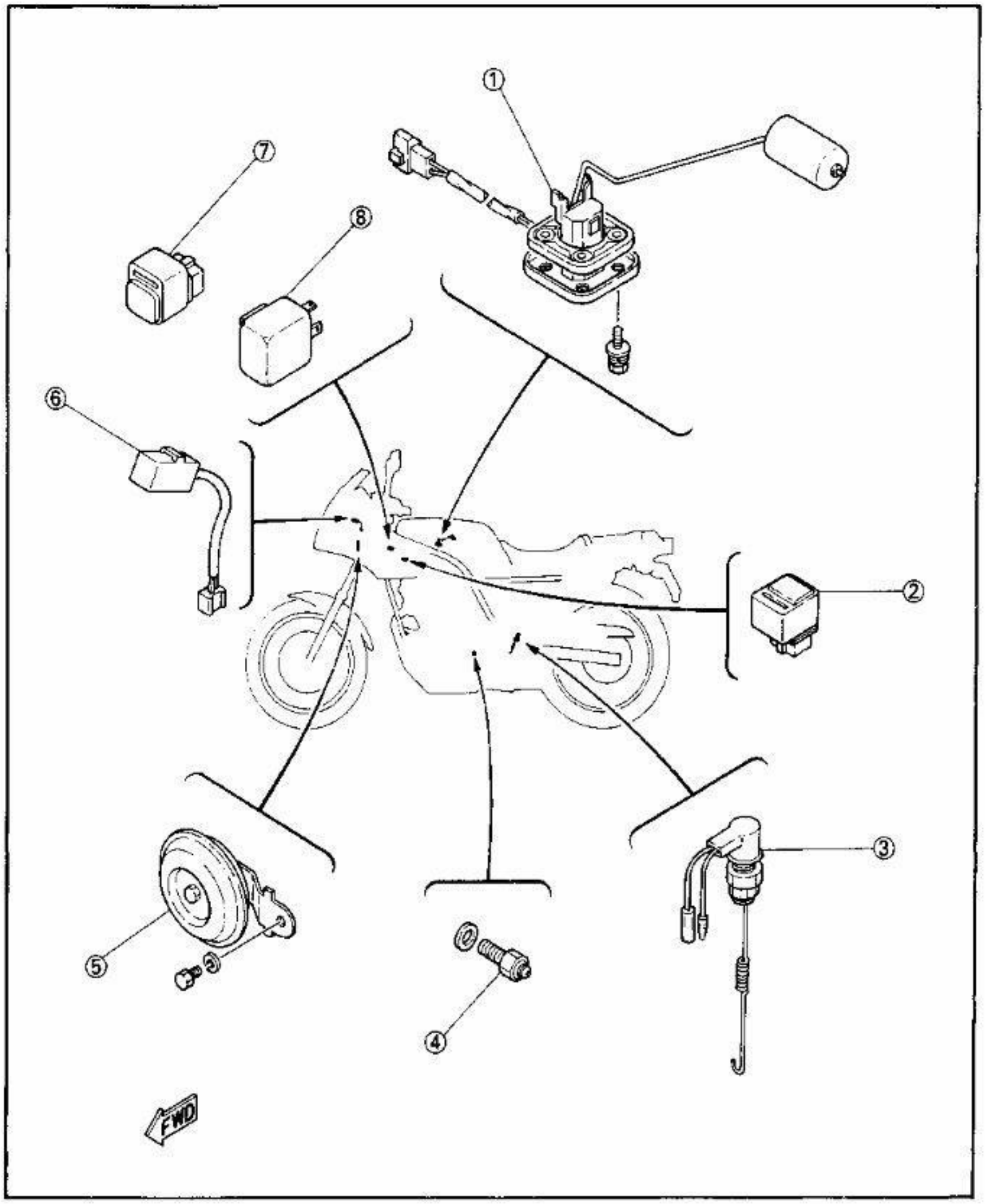

ELECTRICAL STARTING SYSTEM

CIRCUIT DIAGRAM

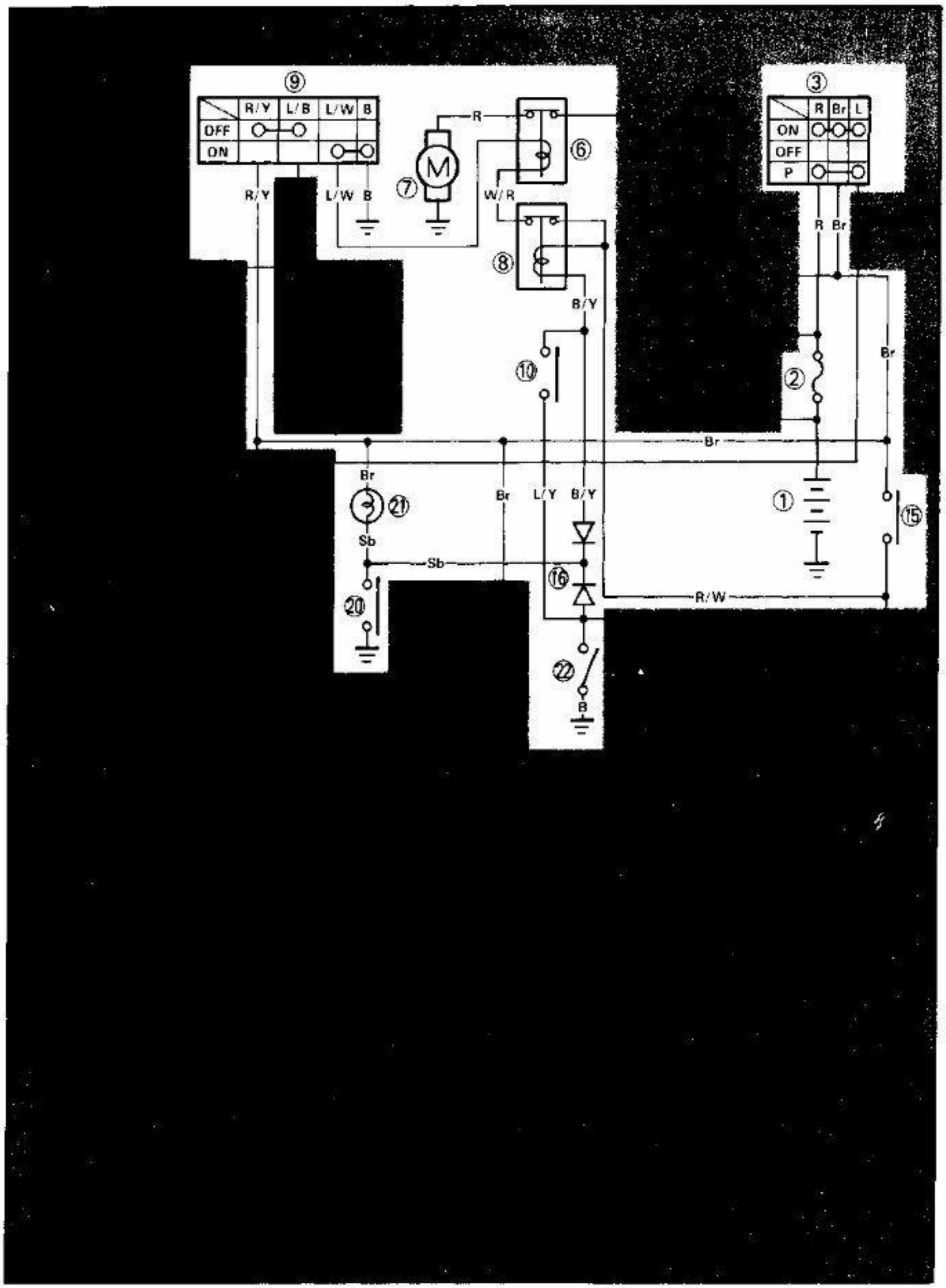

Aforementioned circuit diagram.shows electric starting circuit in wiring diagram.

NOTE:

For the color codes, see page 6-2.

① Battery
② Circuit breaker
③ Main switch
⑥ Starter relay
⑦ Starter motor
⑧ Starting circuit cut-off relay
⑨ "START" switch
⑩ Clutch switch
⑮ "ENGINE STOP" switch
⑯ Diode
⑳ Neutral switch
㉑ "NEUTRAL" indicator light
㉒ Sidestand switch

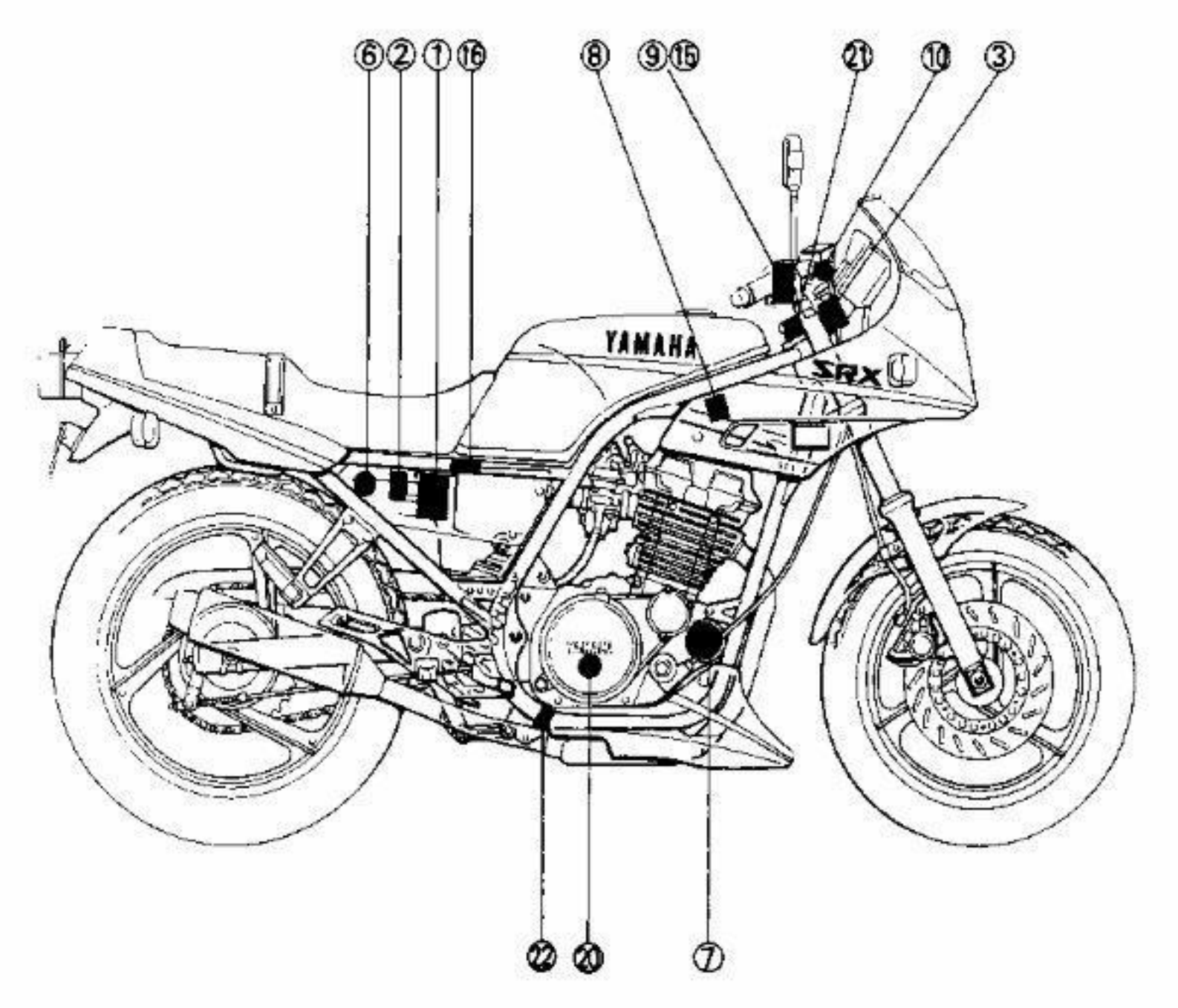

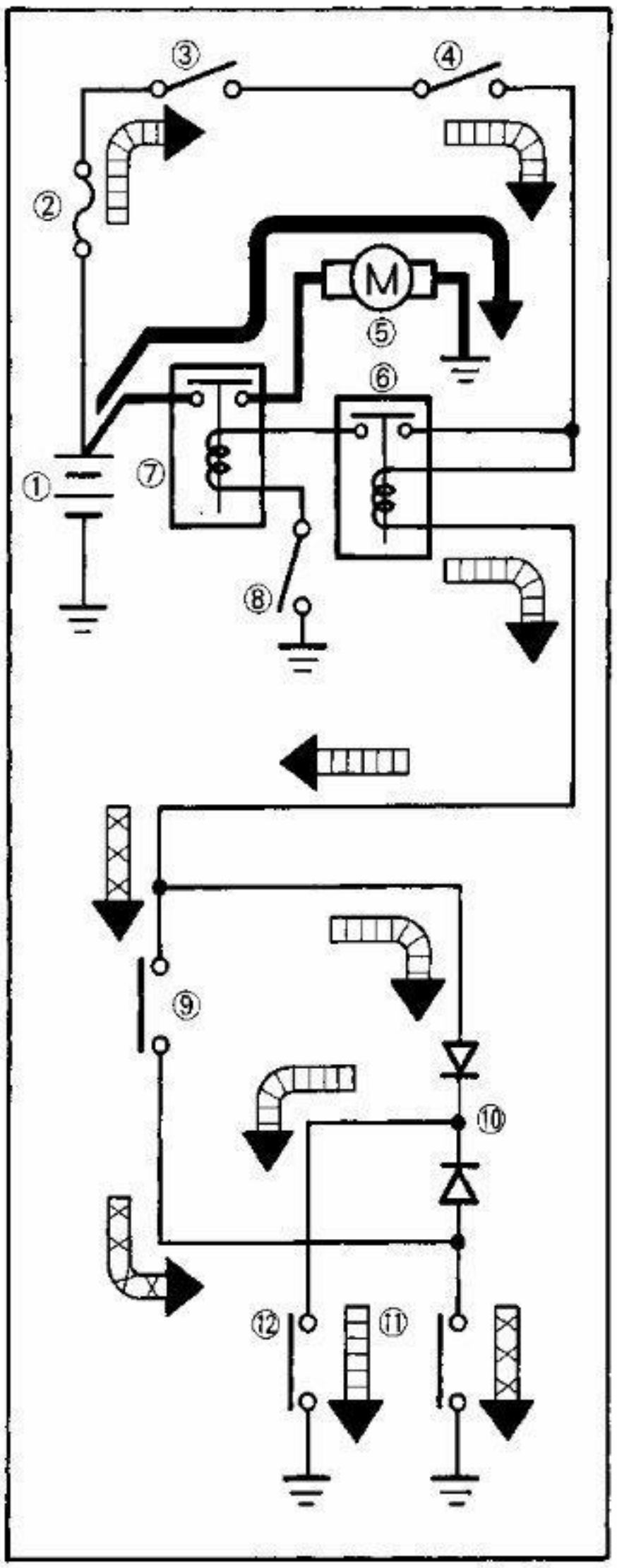

STARTING CIRCUIT OPERATION

The starting circuit on this model consist of the starter motor, starter relay, and the relay unit (starting circuit cut-off relay). If the engine stop switch and the main switch are both closed, the starter motor can operate only if:

> The transmission is in neutral (the neutral switch is closed).
>
> or if
>
> The clutch lever is pulled to the handlebar (the clutch switch is closed) and the sidestand is up (the sidestand switch is closed.)

The starting circuit cut-off relay prevents the starter from operating when neither of these conditions has been met. In this instance, the starting circuit cut-off relay is open so current cannot reach the starter motor.

When one of both of the above conditions have been met, however, the starting circuit cut-off relay is closed, and the engine can be started by pressing the starter switch.

WHEN THE TRANSMISSION IS IN NEUTRAL

WHEN THE SIDESTAND IS UP AND THE CLUTCH LEVER IS PULLED IN

① Battery
② Circuit breaker
③ Main switch
④ "ENGINE STOP" switch
⑤ Starter motor
⑥ Starting circuit cut-off relay
⑦ Starter relay
⑧ "START" switch
⑨ Clutch switch
⑩ Diode
⑪ Sidestand switch
⑫ Neutral switch

TROUBLESHOOTING

NOTE:

Before this troubleshooting, remove the seat, fuel tank and side covers.

STARTER MOTOR DOES NOT OPEATE.

1. Battery inspection
   - Check the battery condition. Refer to "CHAPTER 2. BATTERY INSPECTION" section.

FAULTY → Battery is faulty. Recharge or replace it.

OK ↓

2. Starter relay test
   - Connect the battery positive terminal ① and starter motor cable ② using the jumper lead ③.*
   - Check the starter motor operation.

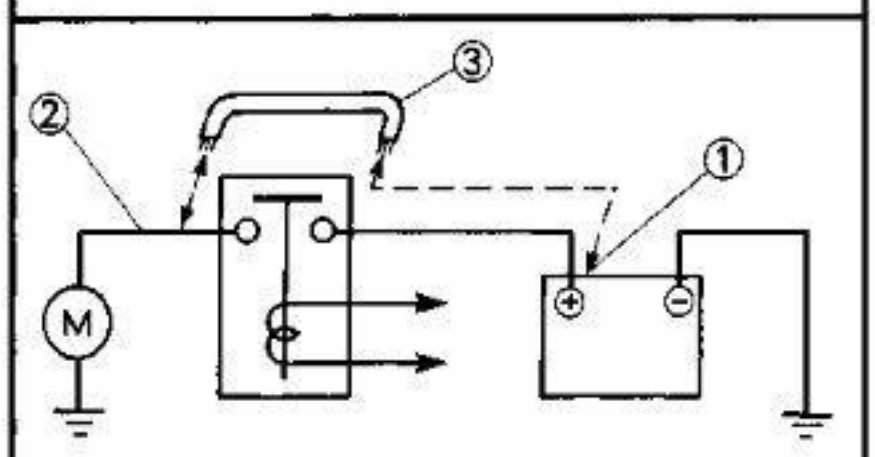

- If the starter motor is operated, go to the next steps. If not, repair and/or replace the starter motor.
- Disconnect the starter relay coupler (Red/White and Blue/White).
- Connect the battery positive terminal ① and starter relay coupler (Red/White) ② using the jumper lead ③.
- Ground the starter relay coupler (Blue/White) ④ to the battery negative terminal using the jumper lead ⑤.
- Check the starter motor operation.

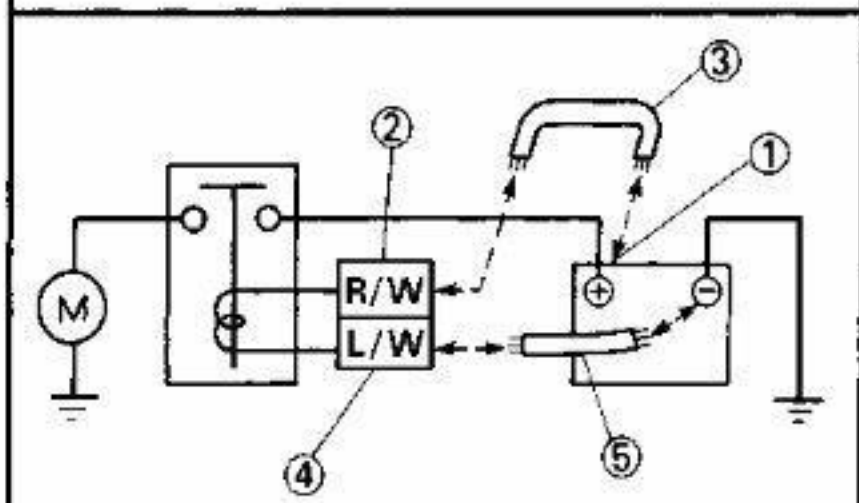

FAULTY → Starter motor is faulty. Repair and/or replace it.

OK ↓ *

*

WARNING:

- **A wire for the jumper lead must have the equivalent capacity as that of the battery lead or more, otherwise it may cause the jumper lead to be burned.**
- **This check is likely to produce sparks, so be sure that no flammable gas or fluid is in the vicinity.**

3. Starting circuit cut-off relay test
   - Disconnect the starting circuit cut-off relay ① coupler (White/Red, Black/Yellow, Red/White and Skyblue) from the wire harness.

   - Connect the relay coupler (Wire harness side) terminal ① (Red/White) and terminal ② (White/Red) using the jumper lead ③. *

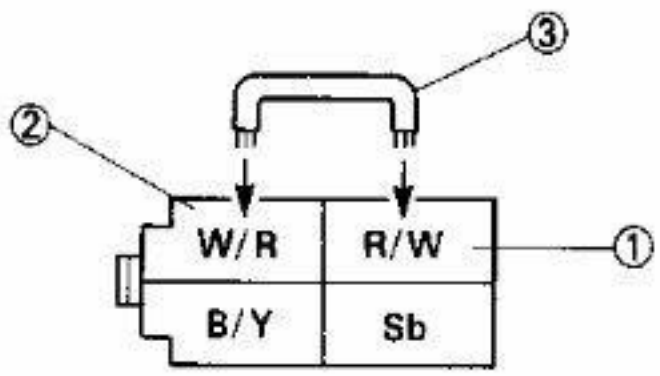

   - Turn the main switch to "ON" position, and check the starter motor operation.

STARTER MOTOR RUNS → Starting circuit cut-off relay is faulty. Replace it.

STARTER MOTOR DOES NOT RUN → *

*

WARNING:

- **A wire for the jumper lead must have the equivalent capacity as that of the battery lead or more, otherwise it may cause the jumper lead to be burned.**
- **This check is likely to produce sparks, so be sure that no flammable gas or fluid is in the vicinity.**

4. Clutch switch conduct check
   - Disconnect the clutch switch leads (Black/Yellow ① and Black ②) from the wire harness.
   - Connect the Pocket Tester (YU-03112) to the clutch switch.
   - Grab or release the clutch lever, and check the clutch switch for continuity.

Clutch lever Position	Good Condition	Bad Condition		
Grab	○	○	×	×
Release	×	○	×	○

○: Continuity ×: No Continuity

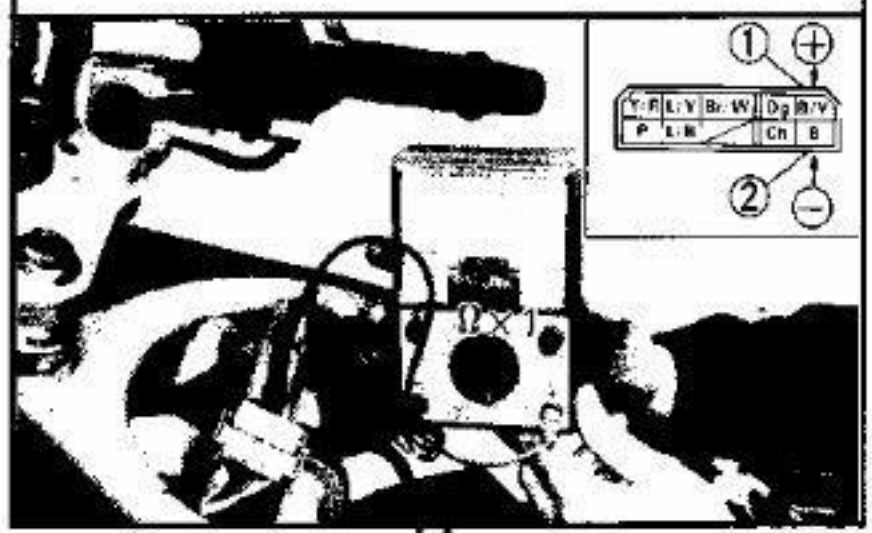

BAD CONDITION → Clutch switch is faulty. Replace it.

GOOD CONDITION

5. Sidestand switch conduct check
   - Disconnect the sidestand switch leads (Black ① and Blue/Yellow ②) from the wire harness.
   - Connect the Pocket Tester (YU-03112) to the sidestand switch leads (sidestand switch side).
   - Move the sidestand up or down, and check the sidestand switch for continuity.

Sidestand Position	Good Condition	Bad Condition		
Up ③	○	○	×	×
Down ④	×	○	×	○

○: Continuity ×: No Continuity

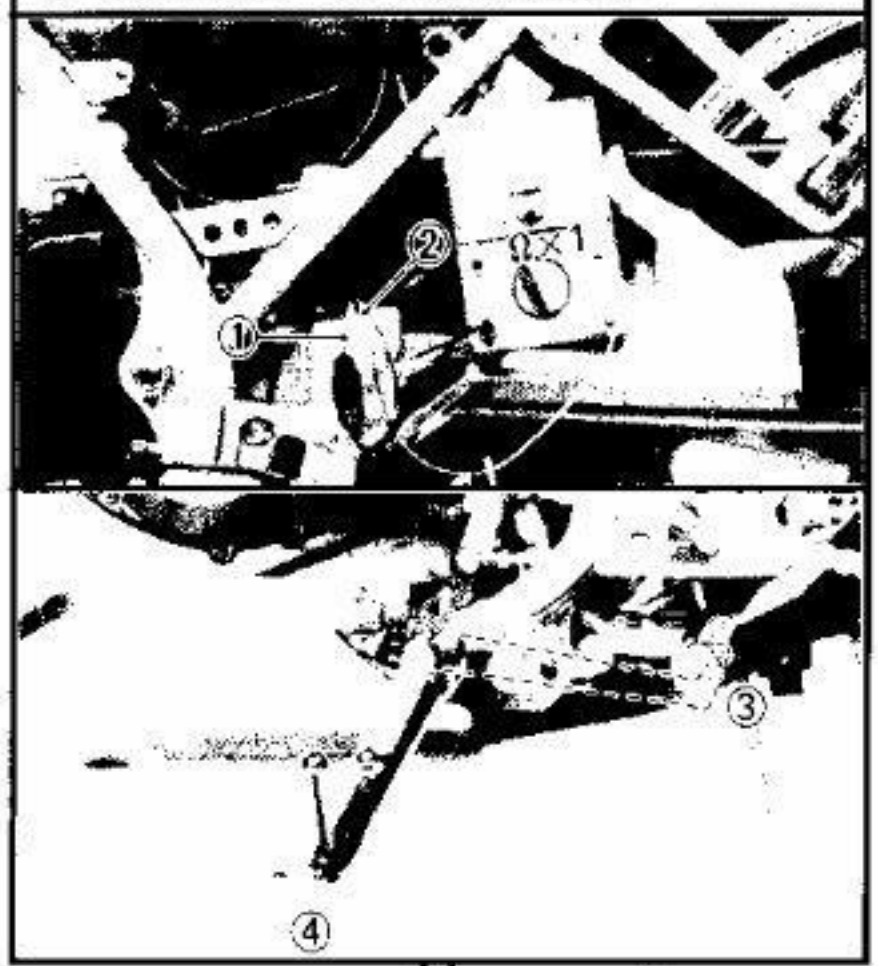

BAD CONDITION → Sidestand switch is faulty. Replace it.

GOOD CONDITION ↓

6. Neutral switch conduct test
   - Disconnect the neutral switch lead (Sky blue) ① from the wire harness.
   - Connect the positive lead ② of the pocket Tester (YU-03112) to the neutral switch lead (neutral switch side).
   - Ground the negative lead ③ of the Tester to the engine.
   - Shift the gear, and check the switch for continuity.

BAD CONDITION → Neutral switch is faulty. Replace it.

Transmission Position	Good Condition	Bad Condition		
In neutral	○	○	×	×
In gear	×	○	×	○

○: Continuity ×: No Continuity

GOOD CONDITION ↓
*

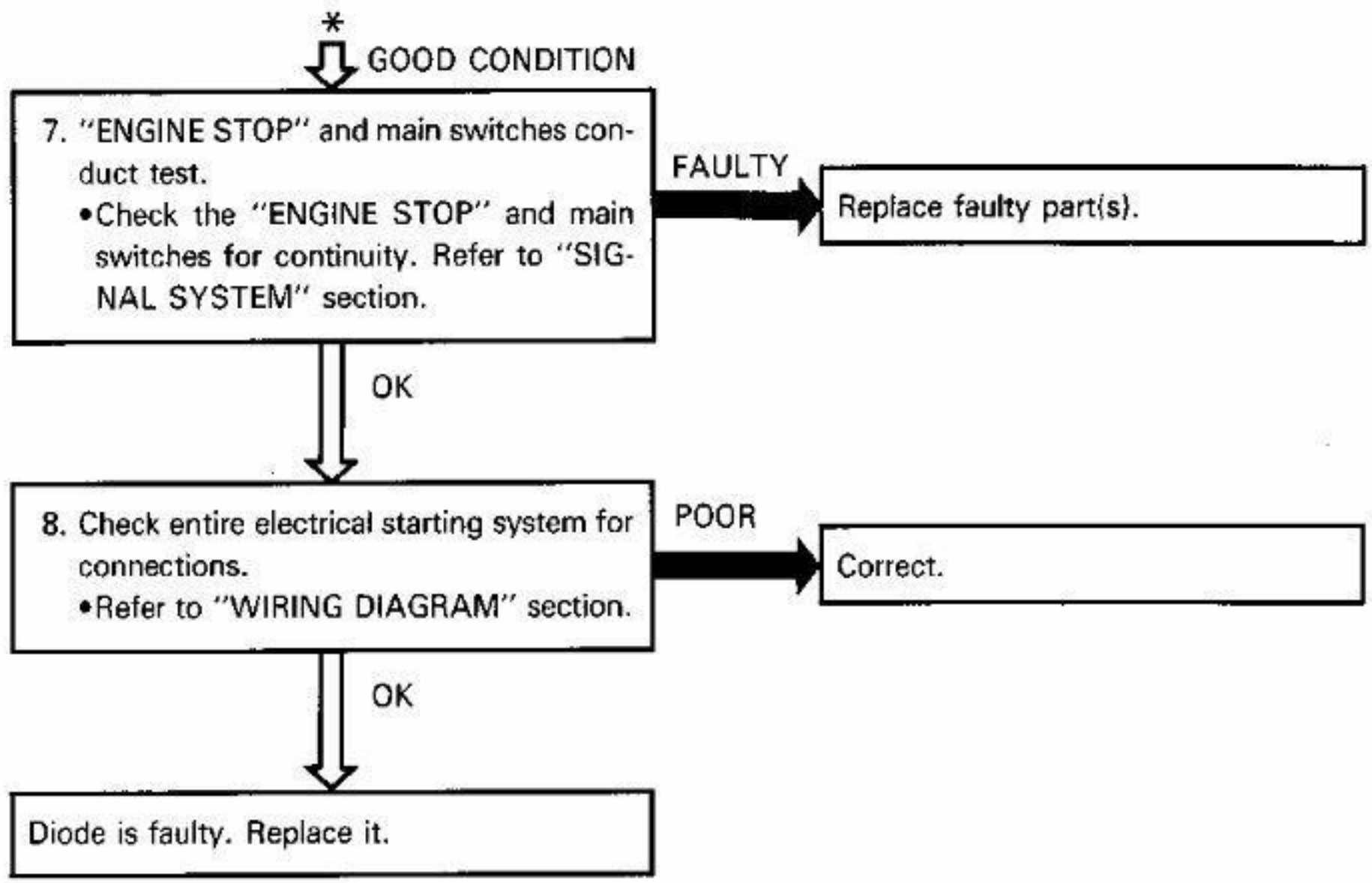
*
GOOD CONDITION
7. "ENGINE STOP" and main switches conduct test.
•Check the "ENGINE STOP" and main switches for continuity. Refer to "SIGNAL SYSTEM" section.
FAULTY
Replace faulty part(s).
OK
8. Check entire electrical starting system for connections.
•Refer to "WIRING DIAGRAM" section.
POOR
Correct.
OK
Diode is faulty. Replace it.

STARTER MOTOR TEST

① Brush set
② O-ring
③ Gasket
④ Armature

A	ARMATURE COIL RESISTANCE: 0.013 ~ 0.015Ω
B	BRUSH WEAR LIMIT: 5.0 mm (0.20 in)
C	COMMUTATOR WEAR LIMIT: 22.0 mm (0.91 in)
D	MICA UNDERCUT: 1.8 mm (0.07 in)

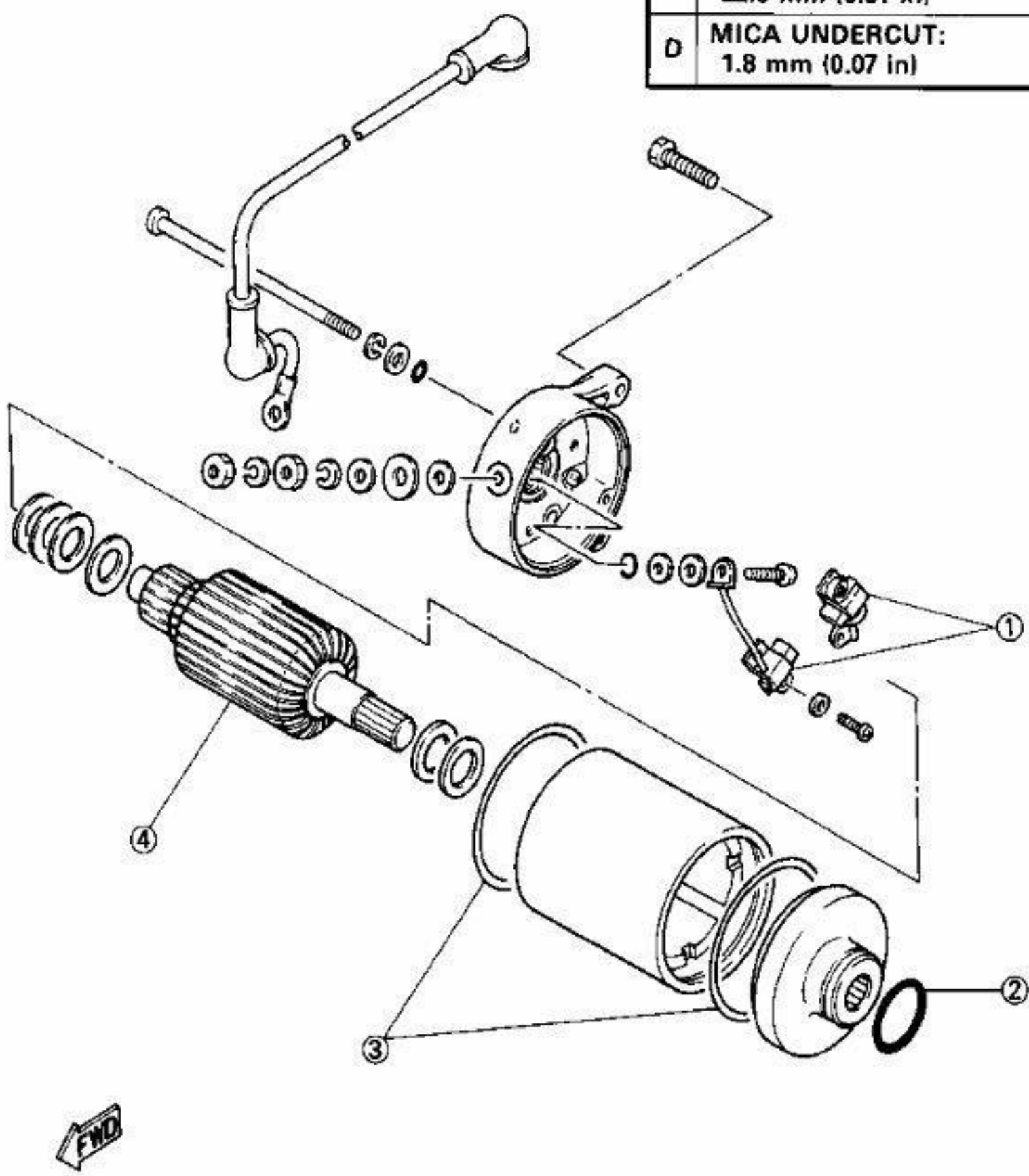

Removal

1. Remove:
   - Starter motor
     Refer to "CHAPTER 3. ENGINE OVERHAUL — ENGINE REMOVAL" section.

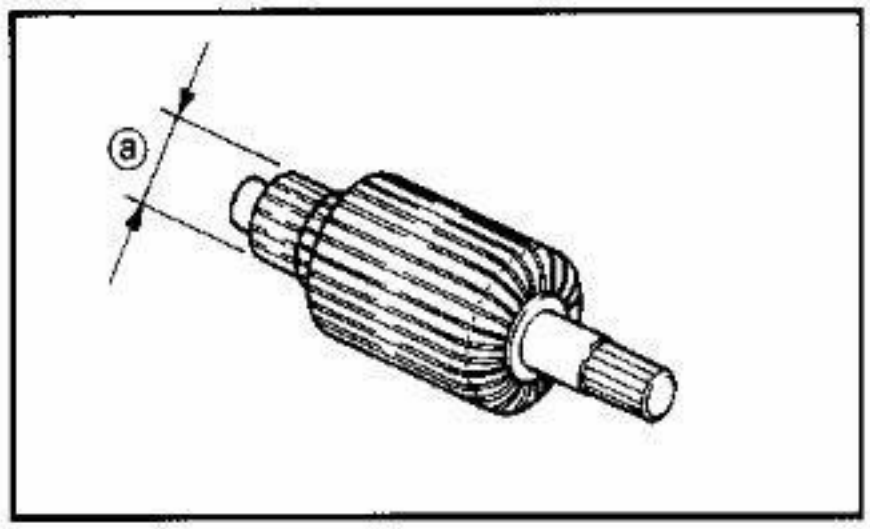

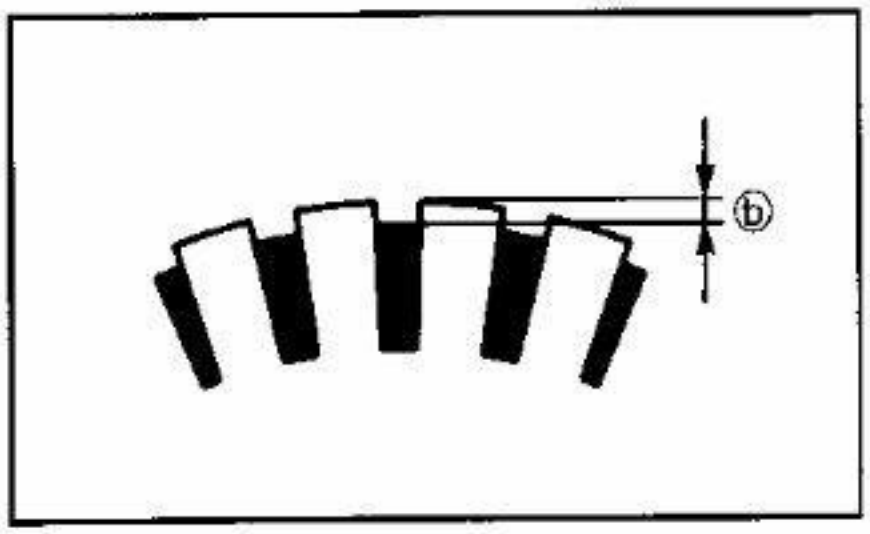

Inspection and Repair

1. Inspect:
   - Commutator
     Dirty→Clean it with #600 grit sandpaper.
2. Measure:
   - Commutator diameter ⓐ
     Out of specification→Replace starter motor.

	Commutator Wear Limit: **22 mm (0.87 in)**

3. Measure:
   - Mica undercut ⓑ
     Out of specification→Scrape the mica to proper value use a hacksaw blade can be ground to fit.

	Mica Undercut ⓑ: **1.8 mm (0.07 in)**

NOTE:

The mica insulation of the commutator must be undercut to ensure proper operation of commutator.

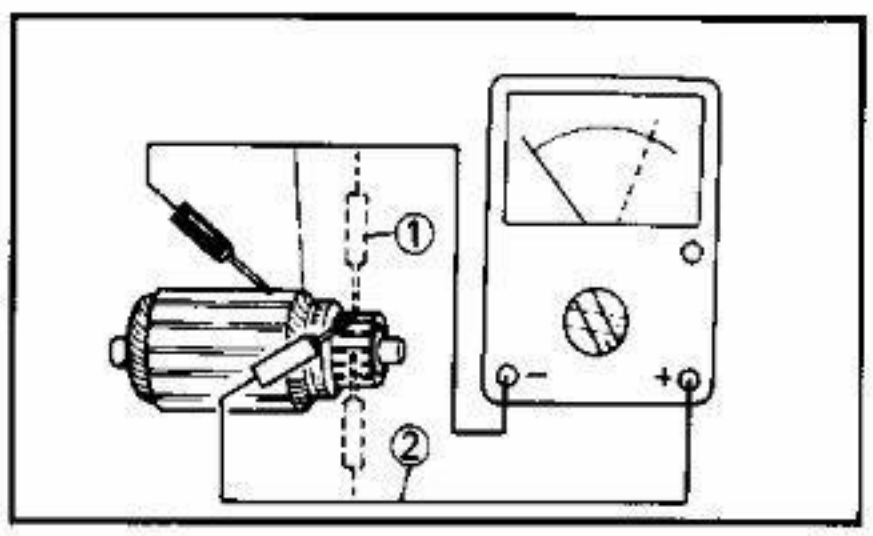

4. Inspect:
   - Armature coil (insulation/continuity)
     Defects(s)→Replace starter motor.

Armature coil inspecting steps:

- Connect the Pocket Tester (YU-03112) for continuity check ① and insulation check ②.
- Measure the armature coil resistances.

Armature Coil Resistance:
Continuity Check ①:
0.013~0.015Ω at 20°C (68°F)
Insulation Check ②:
More than 1MΩ at 20°C (68°F)

- If the resistance is incorrect, replace the starter motor.

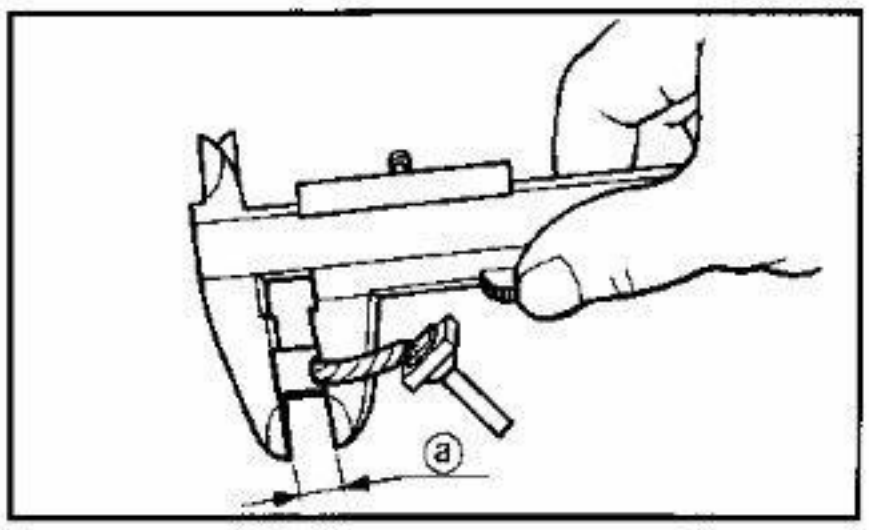

5. Measure:
   - Brush length ⓐ
     Out of specification→Replace.

Brush Length Limit:
5.0 mm (0.20 in)

6. Measure:
   - Brush spring pressure
     Fatigue/Out of specification→Replace as a set.

Brush Spring Pressure:
400~600 g (14.1~21.2 oz)

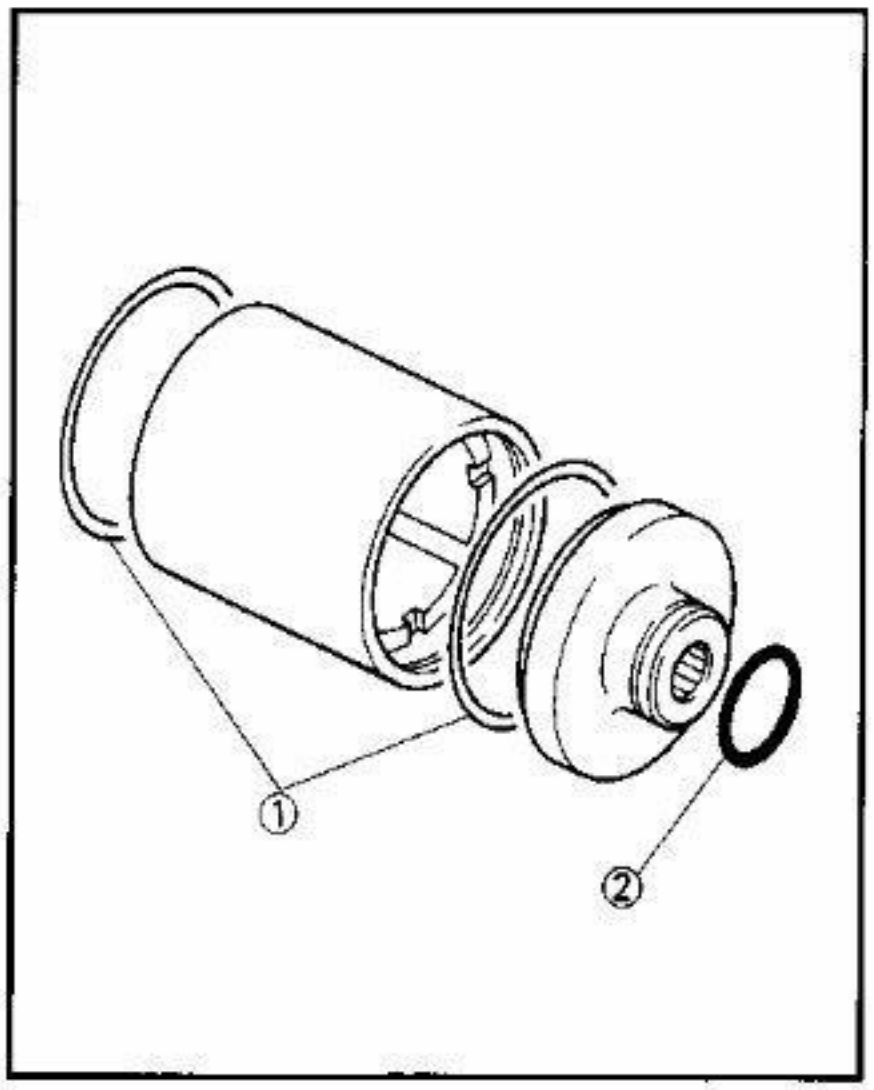

7. Inspect:
   - Bearing
   - Gasket ①
   - O-rings ②
     Wear/Damage→Replace.

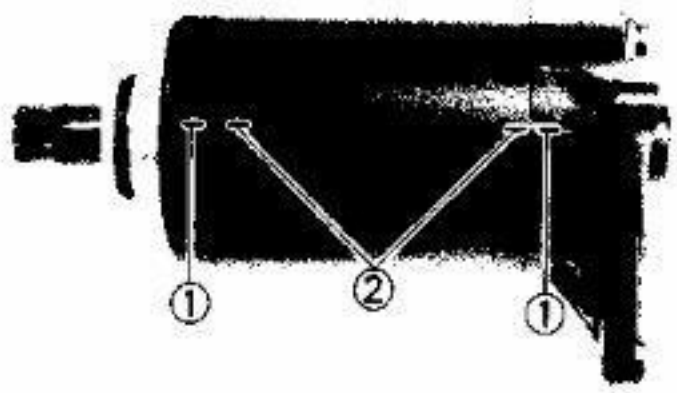

Installation

1. Install:
   - Starter motor

NOTE:

Align the match marks ① on the bracket with the match marks ② on the housing.

CHARGING SYSTEM

CIRCUIT DIAGRAM

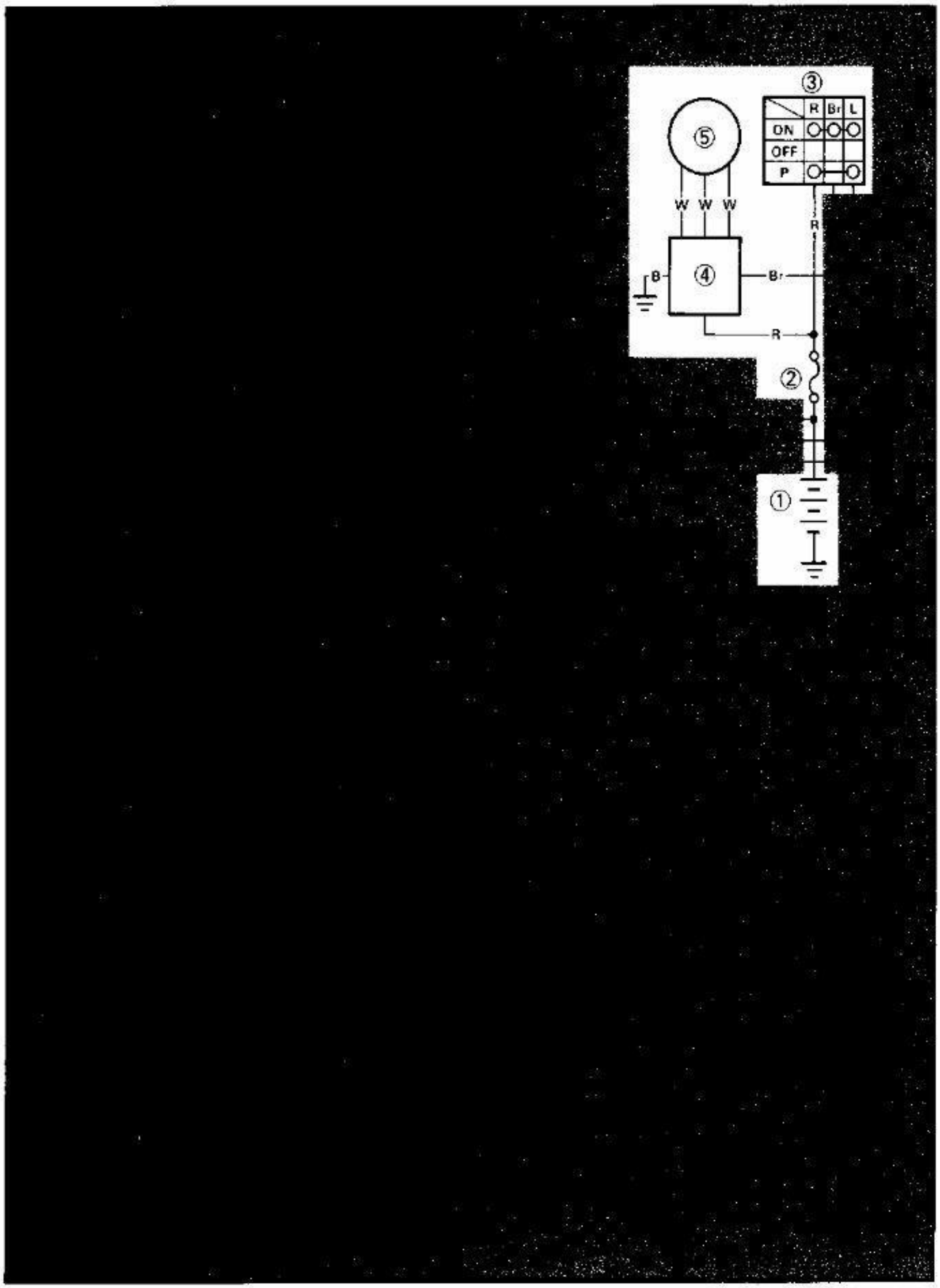

Aforementioned circuit diagram shows charging circuit in wiring diagram.

NOTE:

For the color codes, see page 6-2.

① Battery
② Circuit breaker
③ Main switch
④ Rectifier with regulator
⑤ A.C. Generator

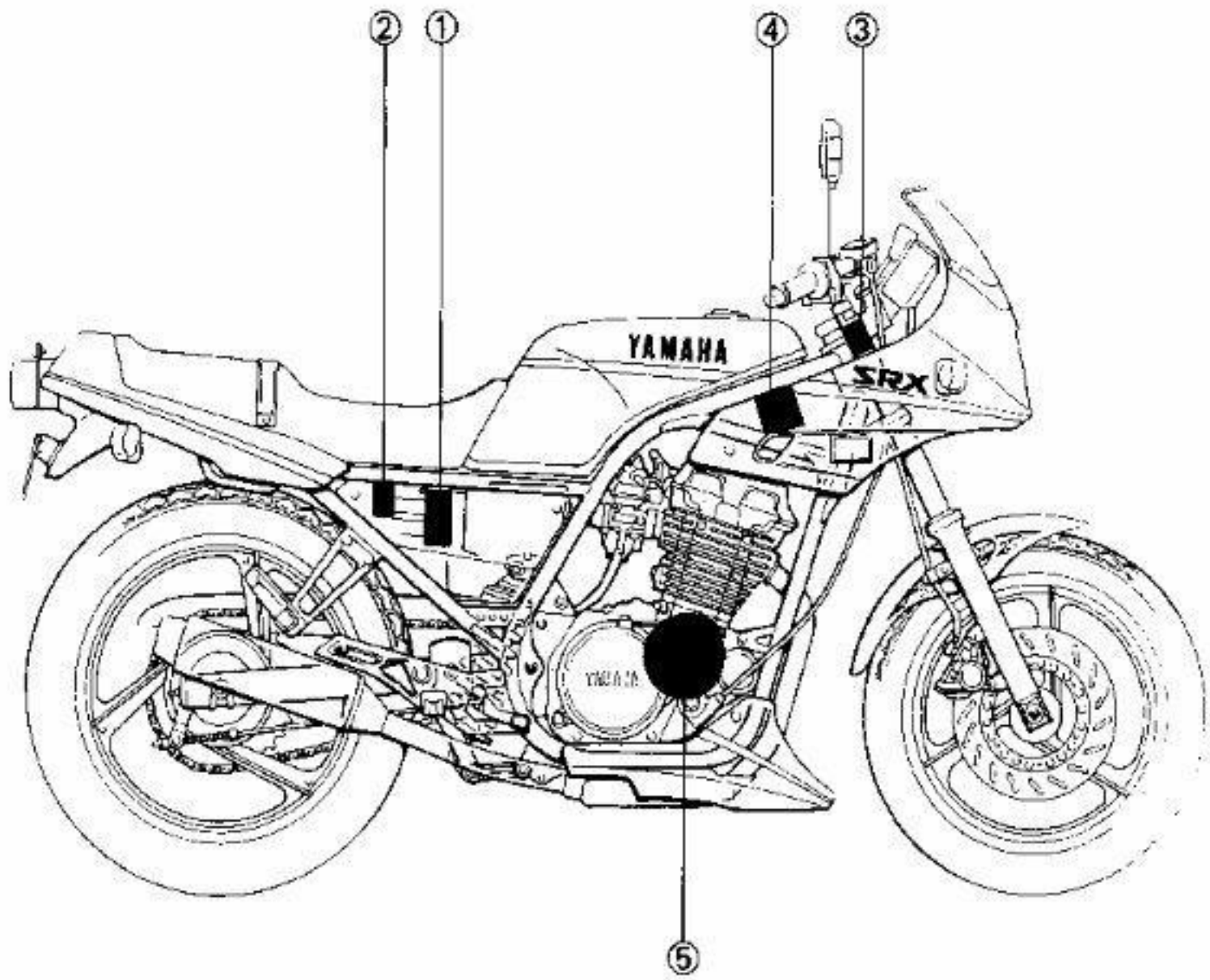

TROUBLESHOOTING

NOTE:

Before this troubleshooting, remove the seat, fuel tank and side covers.

BATTERY IS NOT CHARGED.

1. Circuit breaker inspection
   - Check the circuit breaker condition. Refer to "CHAPTER 2. CIRCUIT BREAKER INSPECTION" section.

FAULTY → Circuit breaker is faulty. Replace it.

OK ↓

2. Battery inspection
   - Check the battery condition. Refer to "CHAPTER 2. BATTERY INSPECTION" section.

FAULTY → Battery is faulty. Recharge or replace it.

OK ↓

3. Charging voltage test
   - Connect the Pocket Tester (YU-03112) to the battery.
   - Start the engine and accelerate to about 5,000 r/min.
   - Measure the charging voltage.

Charging Voltage:
14 ~ 15V at 5,000 r/min

① Positive lead (Pocket Tester)
② Positive terminal (Battery)
③ Negative lead (Pocket Tester)
④ Negative terminal (Battery)

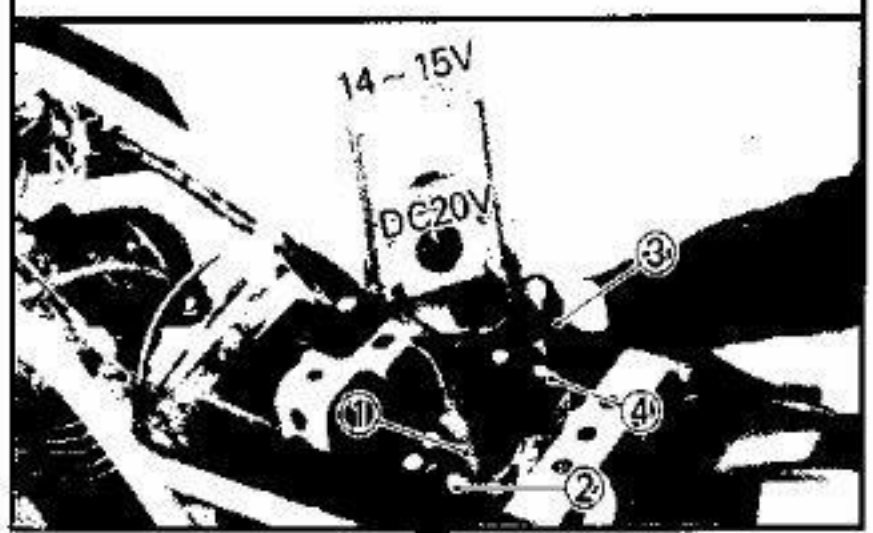

CHARGING VOLTAGE MEETS SPECIFICATION → Battery is faulty. Replace it.

OUT OF SPECIFICATION ↓

*

*

4. Stator coil resistance test.
   - Disconnect the A.C. magneto coupler (White ①, White ② and White ③) from the wire harness.
   - Connect the Pocket Tester (YU-03112) to the A.C. magneto coupler (A.C. magneto side).
   - Measure the stator coil resistance.

Stator Coil Resistance
(White ① – White ②,
White ① – White ③):
0.36 ~ 0.51Ω at 20°C (68°F)

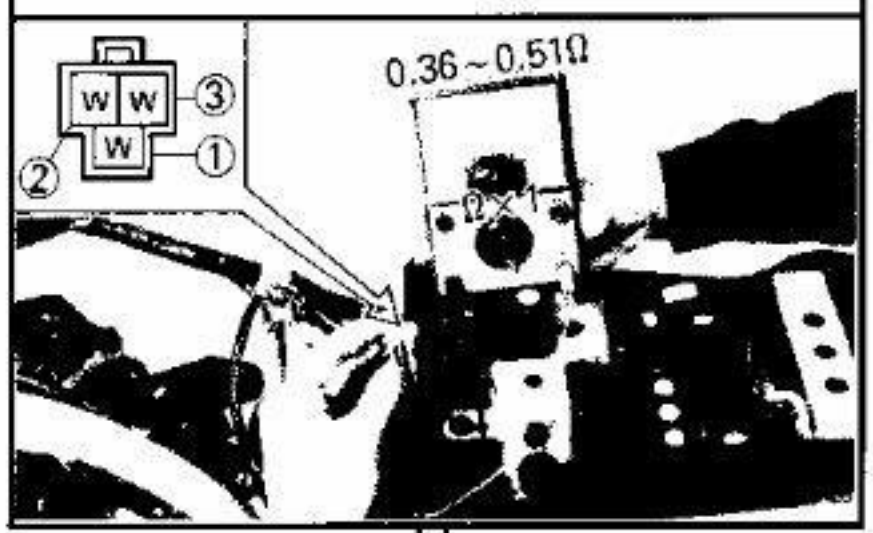

OUT OF SPECIFICATION → Charging coil is faulty. Replace stator assembly.

RESISTANCE MEETS SPECIFICATION ↓

5. Check entire charging system for connections.
   - Refer to "WIRING DIAGRAM" section.

POOR CONNECTION → Correct.

OK ↓

Rectifier/Regulator is faulty. Replace it.

IGNITION SYSTEM

CIRCUIT DIAGRAM

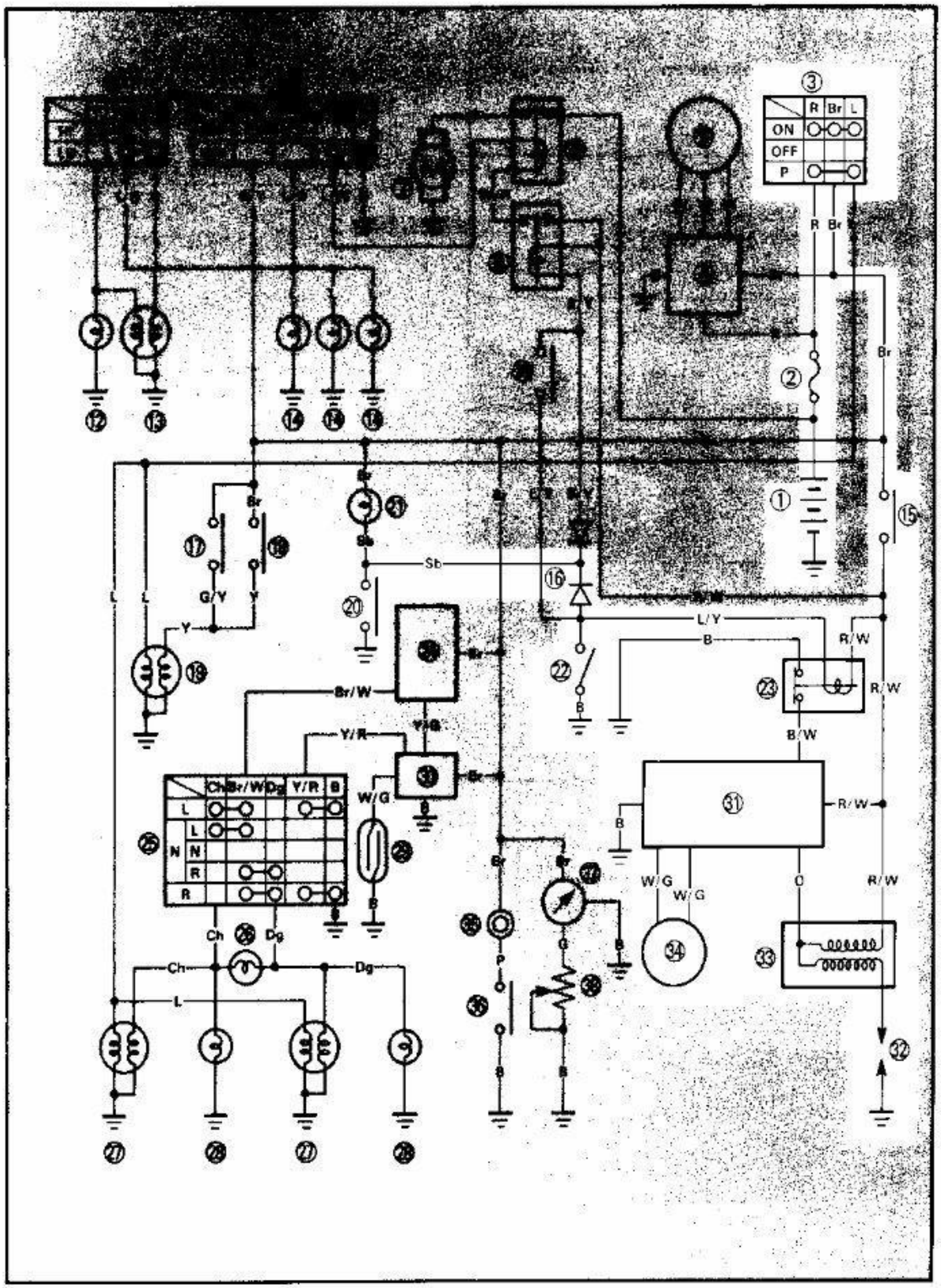

Aforementioned circuit diagram shows ignition circuit in wiring diagram.

NOTE:

For the color codes, see page 6-2.

① Battery
② Circuit breaker
③ Main switch
⑮ "ENGINE STOP" switch
⑯ Diode
⑳ Neutral switch
㉒ Sidestand switch
㉓ Sidestand relay
㉛ Ignitor unit
㉜ Spark plug
㉝ Ignition coil
㉞ Pickup coil

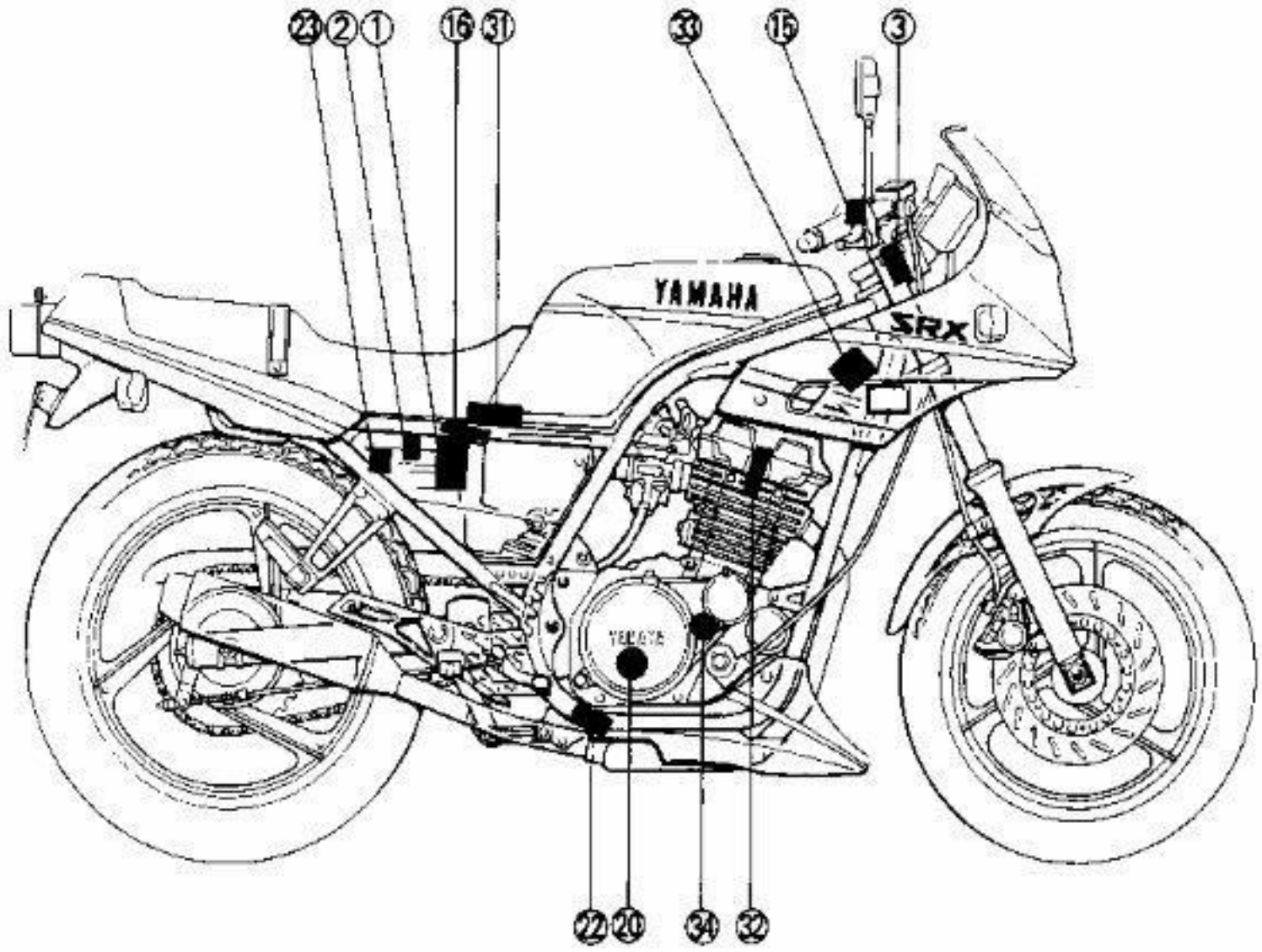

TROUBLESHOOTING

NOTE:

Before this troubleshooting, remove the seat, fuel tank and side covers.

IF IGNITION SYSTEM SHOULD BECOME INOPERATIVE (NO SPARK OR INTERMITTENT SPARK).

1. Spark plug inspection
   - Check the spark plug condition. Refer to "CHAPTER 2. SPARK PLUG INSPECTION" section.

FAULTY → Replace or regap spark plug.

OK ↓

2. Ignition spark test (With spark plug)
   - Install the spark plug to the plug cap.
   - Ground the spark plug to the cylinder head.
   - Turn the main switch to "ON" and "ENGINE STOP" switch to "RUN", then, shift the gear in neutral.
   - Push the "START" switch.
   - Check the ignition spark condition.

SPARK → Ignition circuit is good.

NO SPARK ↓

*

*

3. Ignition spark gap test (Without spark plug and cap)
   - Remove the spark plug and plug cap.
   - Hold the spark plug lead 6 mm (0.24 in) from the cylinder head.
   - Repeat the aforementioned test.
   - Check the ignition spark condition.

SPARK → Spark plug and/or plug cap is faulty. Replace faulty part(s).

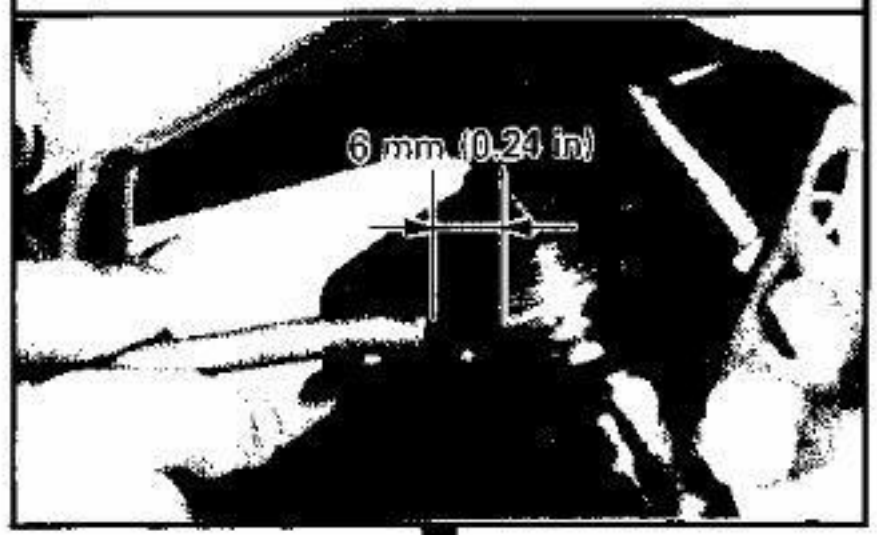

NO SPARK

4. Ignition coil resistance test
   - Disconnect the ignition coil coupler (Orange ① and Red/White ②) and spark plug lead.
   - Connect the pocket tester (YU-03112) as shown.
   - Measure the primary and secondary coil resistance.

Primary Coil Resistance A:
2.4 ~ 3.4Ω at 20°C (68°F)
Secondary Coil Resistance B:
10.6 ~ 15.8KΩ at 20°C (68°F)

OUT OF SPECIFICATION → Ignition coil is faulty. Replace it.

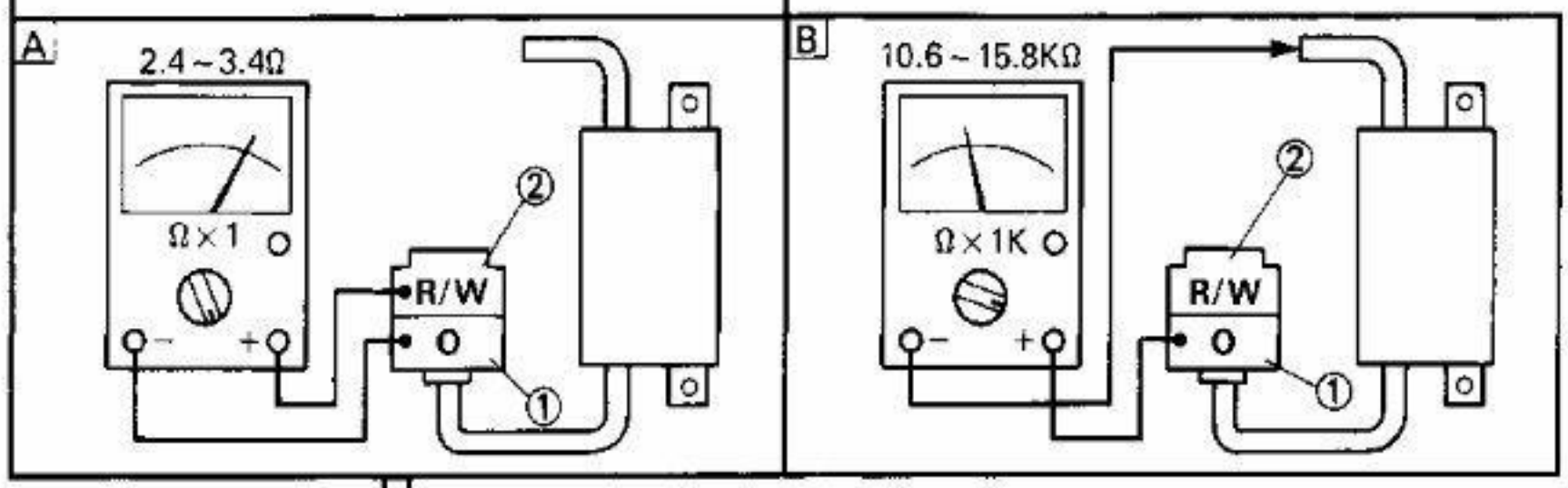

BOTH RESISTANCE MEET SPECIFICATIONS

*

*

5. "START" and main switches conduct check.
   - Check the "START" and main switches for continuity. Refer to "SIGNAL SYSTEM" section.

FAULTY → "START" and/or main switches are faulty. Replace faulty part(s).

OK ↓

6. Neutral switch conduct test
   - Disconnect the neutral switch lead (Sky blue) ① from the wire harness.
   - Connect the positive lead ② of the Pocket Tester (YU-03112) to the neutral switch lead (neutral switch side).
   - Ground the negative lead ③ of the Tester to the engine as shown.
   - Shift the gear, and check the switch for continuity.

Transmission Position	Good Condition	Bad Condition		
In neutral	○	○	×	×
In gear	×	○	×	○

○: Continuity ×: No Continuity

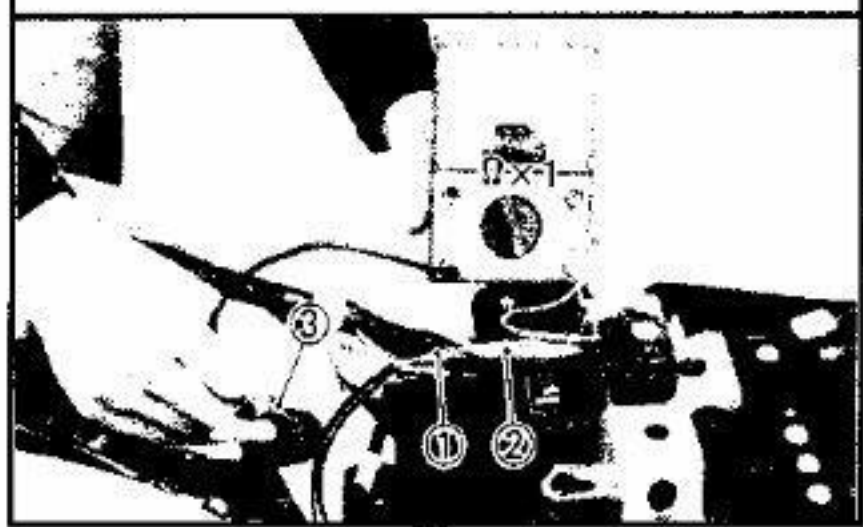

BAD CONDITION → Neutral switch is faulty. Replace it.

GOOD CONDITION ↓

7. Sidestand switch conduct check
   - Disconnect the sidestand switch leads (Black ① and Blue/Yellow ②) from the wire harness.
   - Connect the Pocket Tester (YU-03112) to the sidestand switch leads.
   - Move the sidestand up or down, and check the sidestand switch for continuity.

Sidestand Position	Good Condition	Bad Condition		
Up ③	○	○	×	×
Down ④	×	○	×	○

○: Continuity ×: No Continuity

BAD CONDITION → Sidestand switch is faulty Replace it.

GOOD CONDITION

8. Sidestand relay test
   - Disconnect the sidestand relay ① coupler (Red/White, Blue/Yellow, Black and Black/White) from the wire harness.

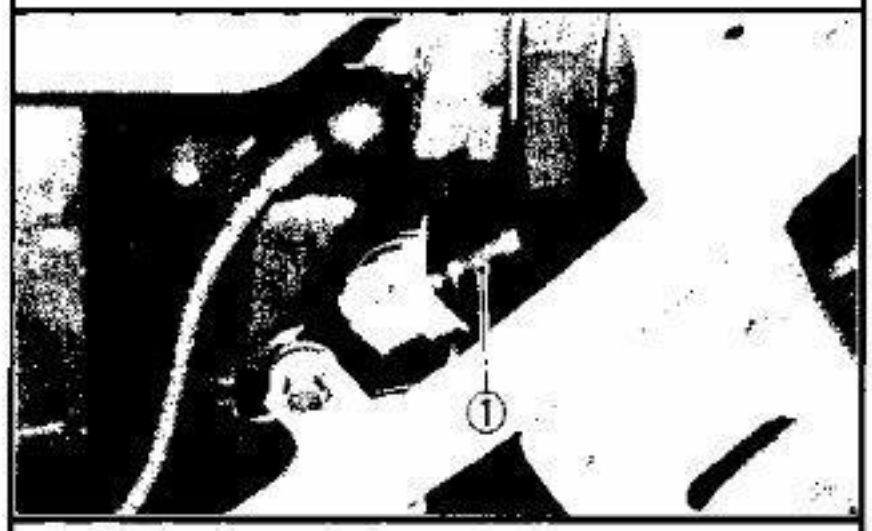

   - Connect the Pocket Tester (YU-03112) and battery (12V) ② to the sidestand relay as shown.
   - Check the relay for continuity.

	Good Condition	Bad Condition		
Battery Connected	×	○	×	○
Battery Disconnected	○	○	×	×

○: Continuity ×: No Continuity

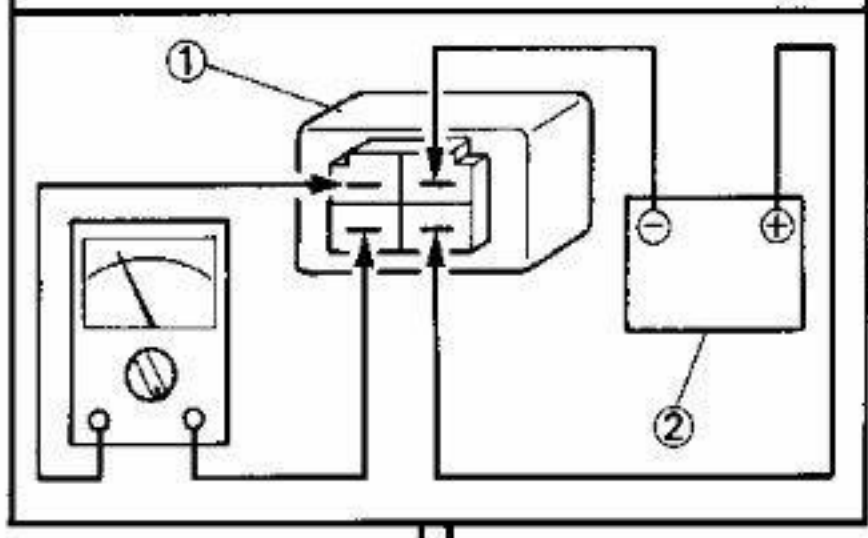

FAULTY → Sidestand relay is faulty. Replace it.

OK ↓

9. Pickup coil resistance test
   - Disconnect the pickup coil leads (White/Red ① and White/Green ②) from the ignitor unit.
   - Connect the Pocket Tester (YU-03112) to the pickup coil leads (pickup coil side).
   - Measure the pickup coil resistance.

Pickup Coil Resistance (White/Red ① – White/Green ②):
85 – 115Ω at 20°C (68°F)

OUT OF SPECIFICATION → Pickup coil is faulty. Replace it.

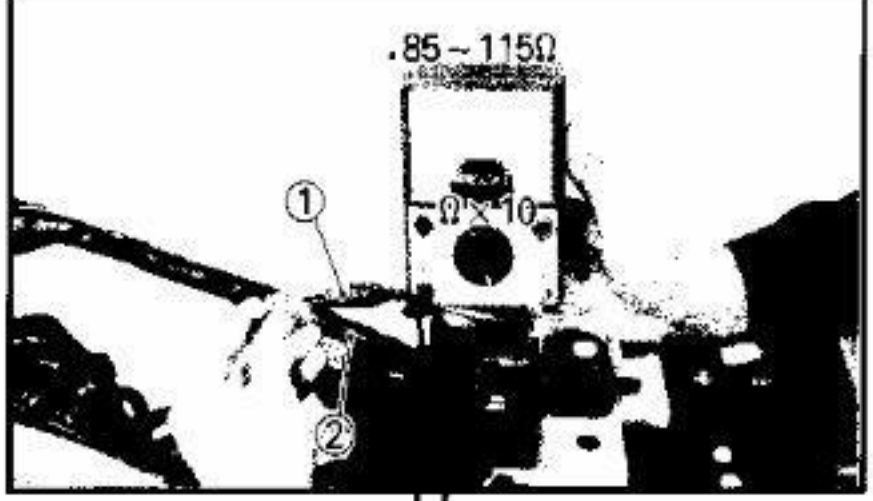

OK ↓

*

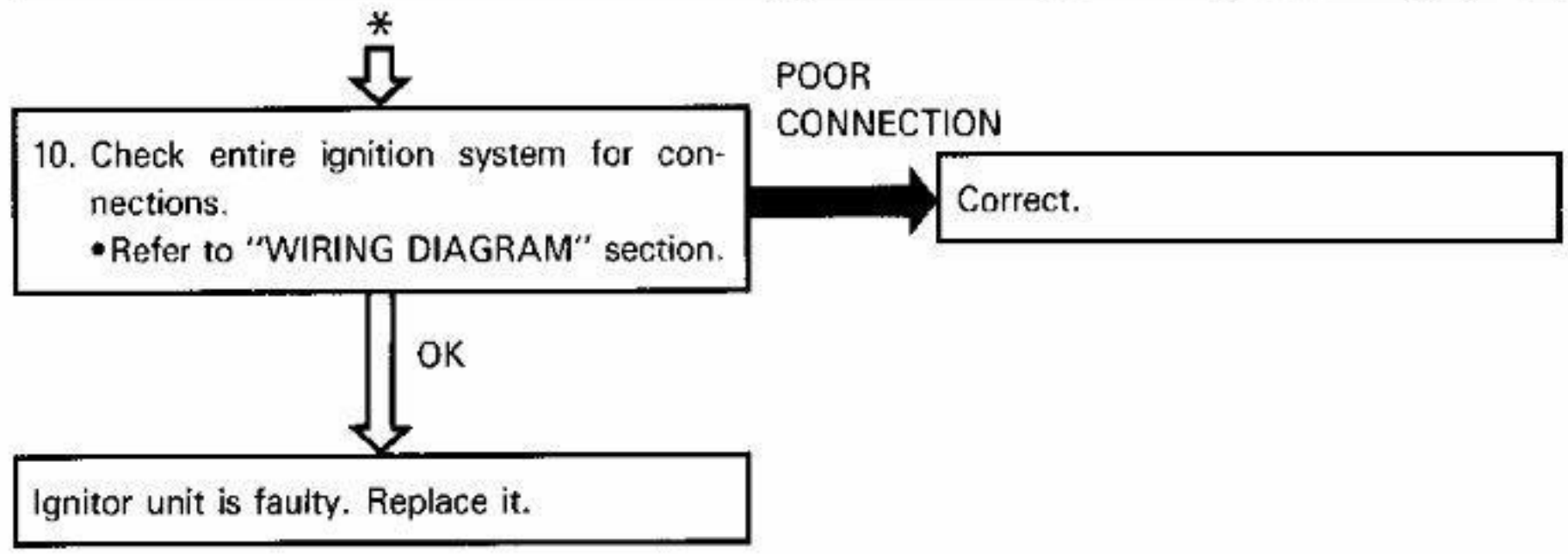
*
10. Check entire ignition system for connections.
•Refer to "WIRING DIAGRAM" section.
POOR CONNECTION
Correct.
OK
Ignitor unit is faulty. Replace it.

LIGHTING SYSTEM

CIRCUIT DIAGRAM

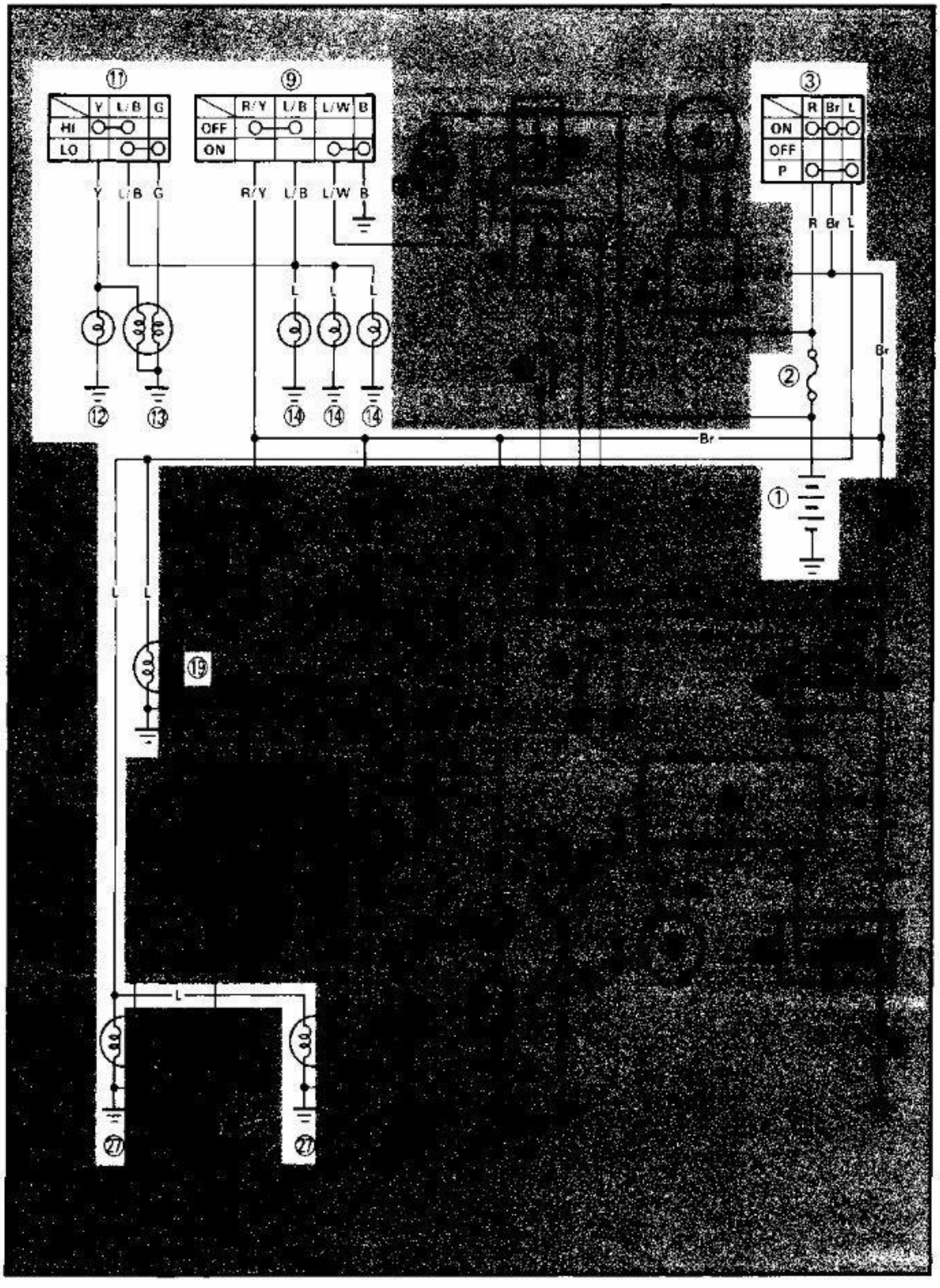

Aforementioned circuit diagram shows lighting circuit in wiring diagram.

NOTE:

For the color codes, see page 6-2.

① Battery
② Circuit breaker
③ Main switch
⑨ "START" switch
⑪ "LIGHTS" (Dimmer) switch
⑫ "HIGH BEAM" indicator light
⑬ Headlight
⑭ Meter lights
⑲ Tail/brake light
㉗ Front flasher light/front position light

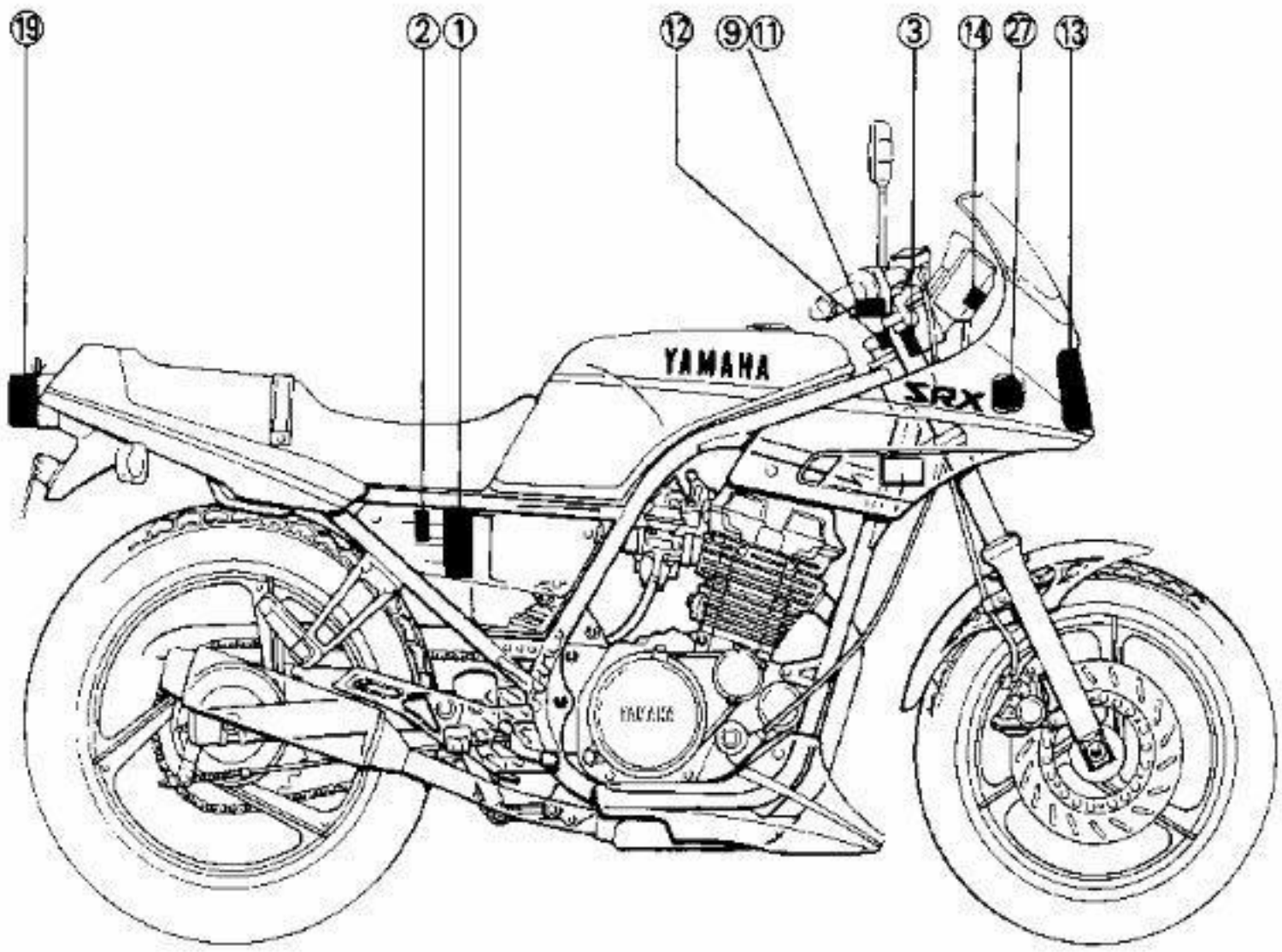

TROUBLESHOOTING

NOTE:

Before this troubleshooting, remove the upper cowling and seat.

HEADLIGHT DOES NOT COME ON.

1. Headlight bulb conduct check
   - Remove the headlight bulb ①. Refer to "CHAPTER 2. HEADLIGHT BULB REPLACEMENT" section.
   - Connect the Pocket Tester (YU-03112) to the bulb terminals as shown, and check the bulb for continuity.

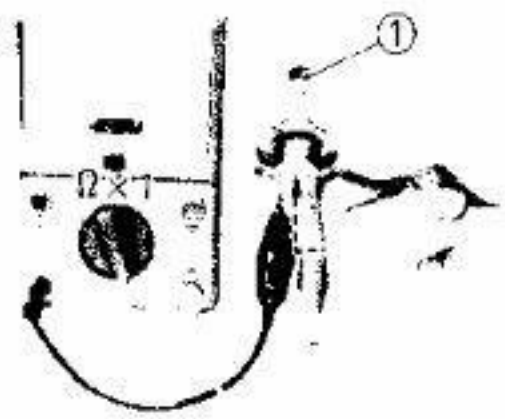

CONTINUITY DOES NOT EXIST ON CIRCUIT → Bulb is faulty. Replace it.

CONTINUITY EXISTS ON BOTH CIRCUIT ↓

2. Circuit breaker inspection
   - Check the circuit breaker condition. Refer to "CHAPTER 2. CIRCUIT BREAKER INSPECTION" section.

FAULTY → Circuit breaker is faulty. Replace it.

OK ↓

3. Battery inspection
   - Check the battery condition. Refer to "CHAPTER 2. BATTERY INSPECTION" section.

FAULTY → Battery is faulty. Recharge or replace it.

OK ↓

4. Lighting voltage test
   - Connect the Pocket Tester (YU-03112) to the headlight coupler (Black ①, Yellow ② and Green ③).
   - Turn the "LIGHTS" (Dimmer) switch to "LO" and "HI" position.
   - Start the engine and accelerate to about 5,000 r/min.
   - Measure the lighting voltage.

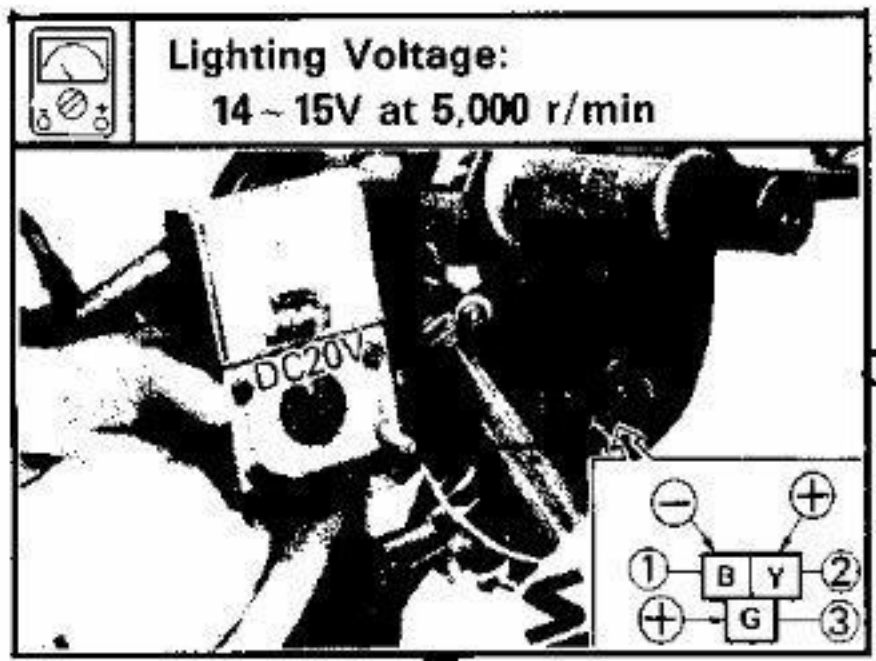

LIGHTING VOLTAGE MEETS SPECIFICATION → Lighting system (Headlight) is good.

OUT OF SPECIFICATION ↓

5. "LIGHTS" (Dimmer) switch conduct check
   - Check the "LIGHTS" (Dimmer) switch for continuity.
     Refer to "SIGNAL SYSTEM" section.

FAULTY → "LIGHTS" (Dimmer) switch is faulty. Replace faulty part(s).

OK ↓

6. Main switch conduct check
   - Check the main switch for continuity.
     Refer to "SIGNAL SYSTEM" section.

FAULTY → Main switch is faulty. Replace it.

OK ↓

7. Check entire lighting system for connections.
   - Refer to "WIRING DIAGRAM" section.

POOR CONNECTION → Correct.

OK ↓

Check the charging system.

TAILLIGHT AND/OR FRONT POSITION LIGHTS DO NOT COME ON.

NOTE:
The following are the taillight troubleshooting steps, which can also be used for the front position lights troubleshooting.

1. Taillight bulb conduct check
   - Remove the taillight lens and bulb ①.
   - Connect the Pocket Tester (YU-03112) to the bulb terminals as shown, and check the bulb for continuity.

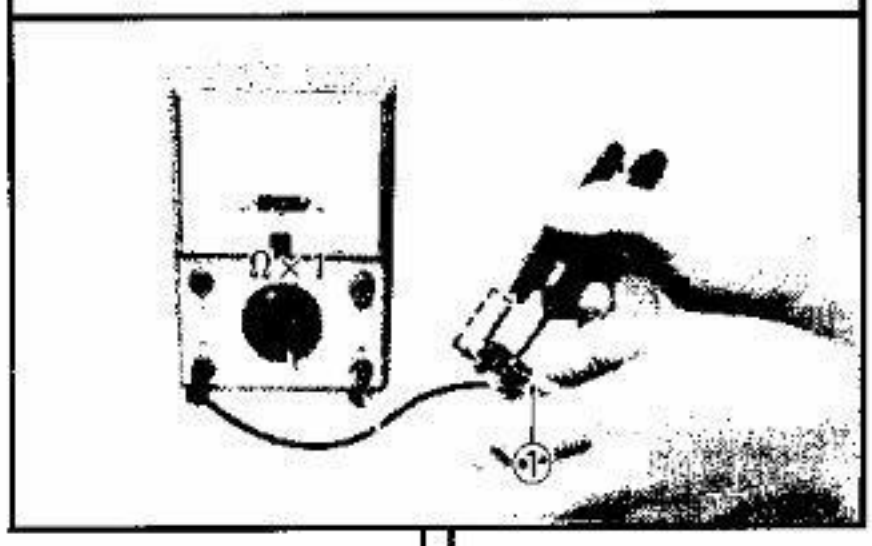

NO CONTINUITY → Bulb is faulty. Replace it.

CONTINUITY ↓

2. Taillight bulb socket conduct check
   - Install the bulb to taillight socket.
   - Disconnect the taillight coupler (Blue ①, Black ② and Yellow ③).
   - Connect the Pocket Tester (YU-03112) to the taillight coupler (taillight bulb side) as shown, and check it for continuity.

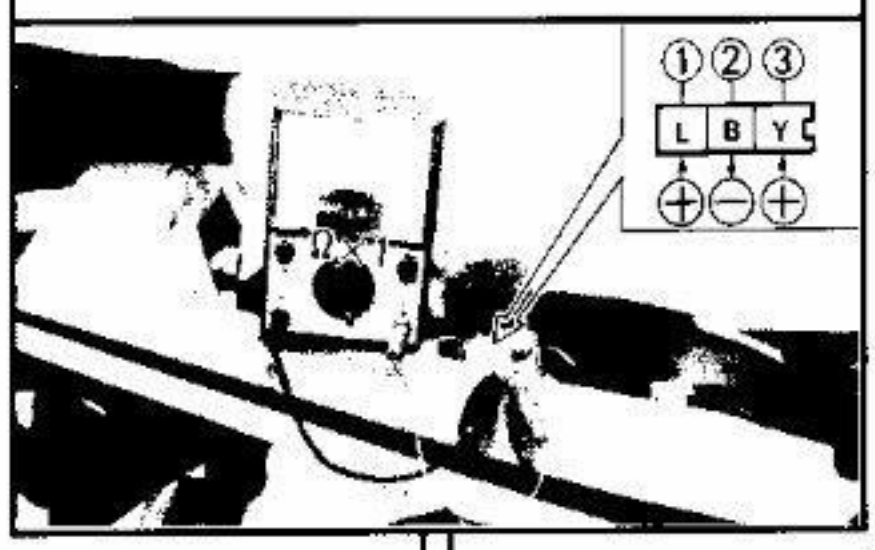

CONTINUITY DOES NOT EXIST ON CIRCUIT → Bulb socket is faulty. Replace it.

CONTINUITY EXISTS ON BOTH CIRCUIT ↓

3. Circuit breaker inspection
   - Check the circuit breaker condition. Refer to "CHAPTER 2. CIRCUIT BREAKER INSPECTION" section.

FAULTY → Circuit breaker is faulty. Replace it.

OK ↓

*

*

4. Battery inspection
   - Check the battery condition. Refer to "CHAPTER 2. BATTERY INSPECTION" section.

FAULTY → Battery is faulty. Recharge or replace battery.

OK ↓

5. Lighting voltage test
   - Connect the Pocket Tester (YU-03112) to the taillight leads (Blue ①, Black ② and Yellow ③ — wire harness side).
   - Start the engine and accelerate to about 5,000 r/min.
   - Measure the lighting voltage.

Lighting Voltage:
14 ~ 15V at 5,000 r/min

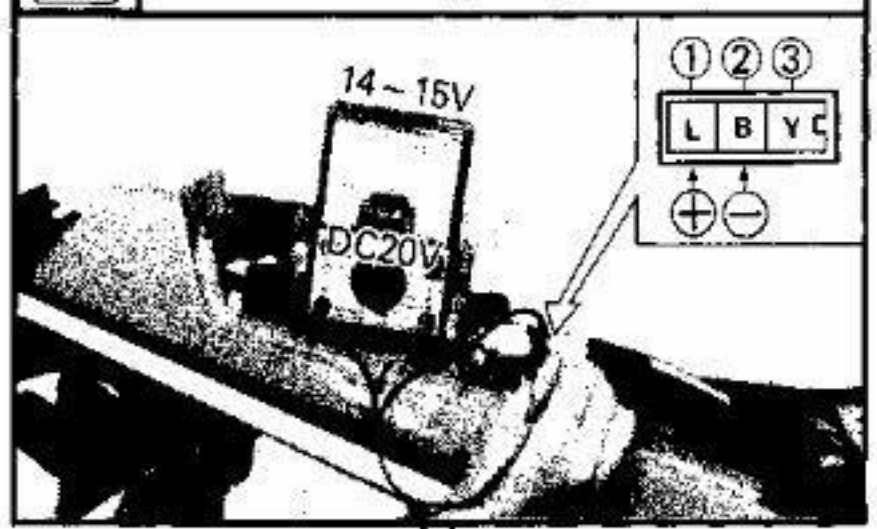

LIGHTING VOLTAGE MEETS SPECIFICATION → Lighting system (Taillight) is good.

OUT OF SPECIFICATION ↓

6. Main switch conduct check
   - Check the main switch for continuity. Refer to "SIGNAL SYSTEM" section.

FAULTY → Main switch is faulty. Replace it.

OK ↓

7. Check entire lighting system for connections.
   - Refer to "WIRING DIAGRAM" section.

POOR CONNECTION → Correct.

OK ↓

Check the charging system.

SIGNAL SYSTEM

CIRCUIT DIAGRAM

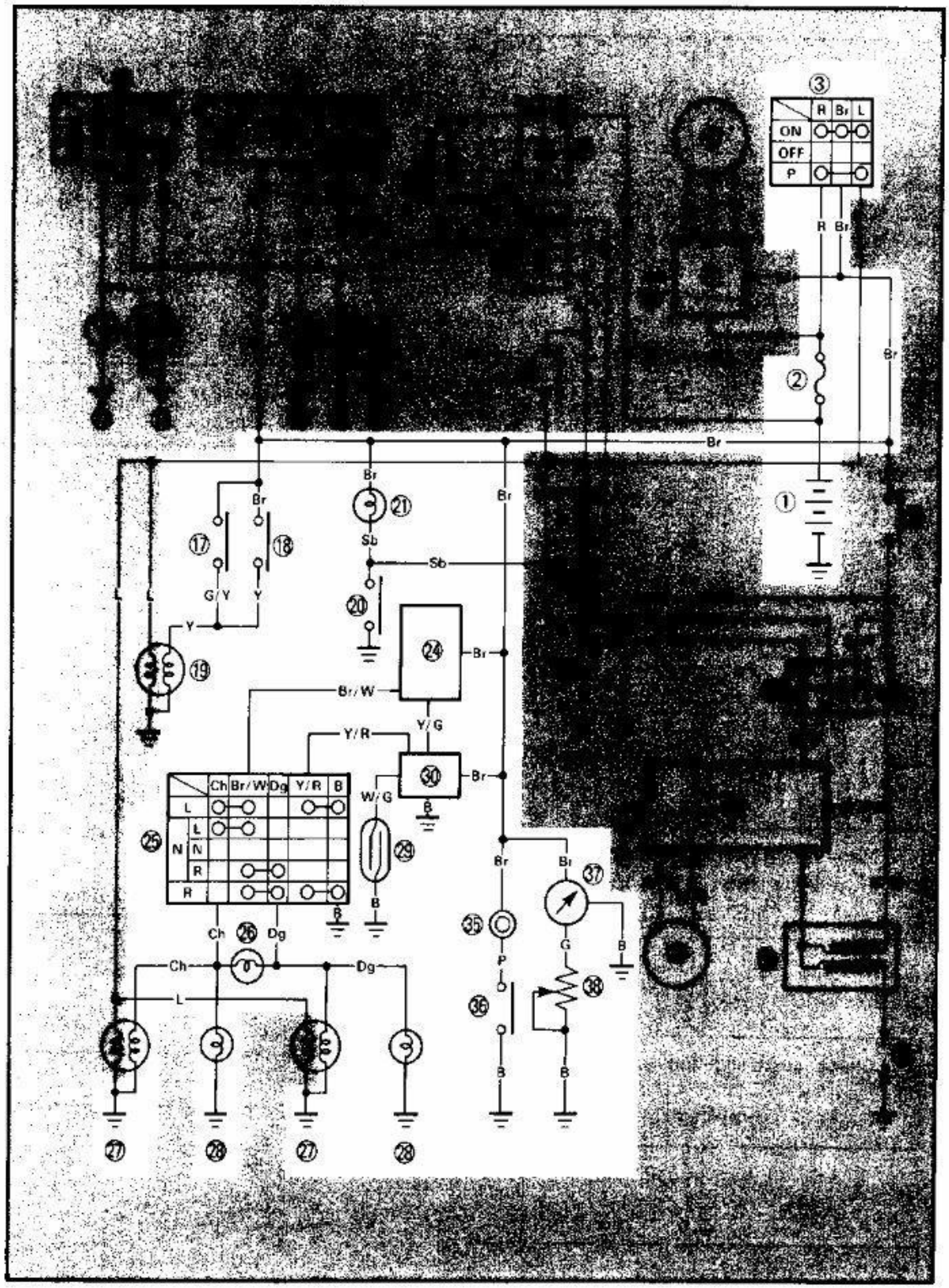

Aforementioned circuit diagram shows signal circuit in wiring diagram.

NOTE:

For the color codes, see page 6-2.

① Battery
② Circuit breaker
③ Main switch
⑰ Front brake switch
⑱ Rear brake switch
⑲ Tail/brake light
⑳ Neutral switch
㉑ "NEUTRAL" indicator light
㉔ Flasher relay
㉕ "TURN" switch
㉖ "TURN" indicator light
㉗ Front flasher light/front position light
㉘ Rear flasher light
㉙ Reed switch
㉚ Canceling unit
㉟ Horn
㊱ "HORN" switch
㊲ Fuel meter
㊳ Fuel sender

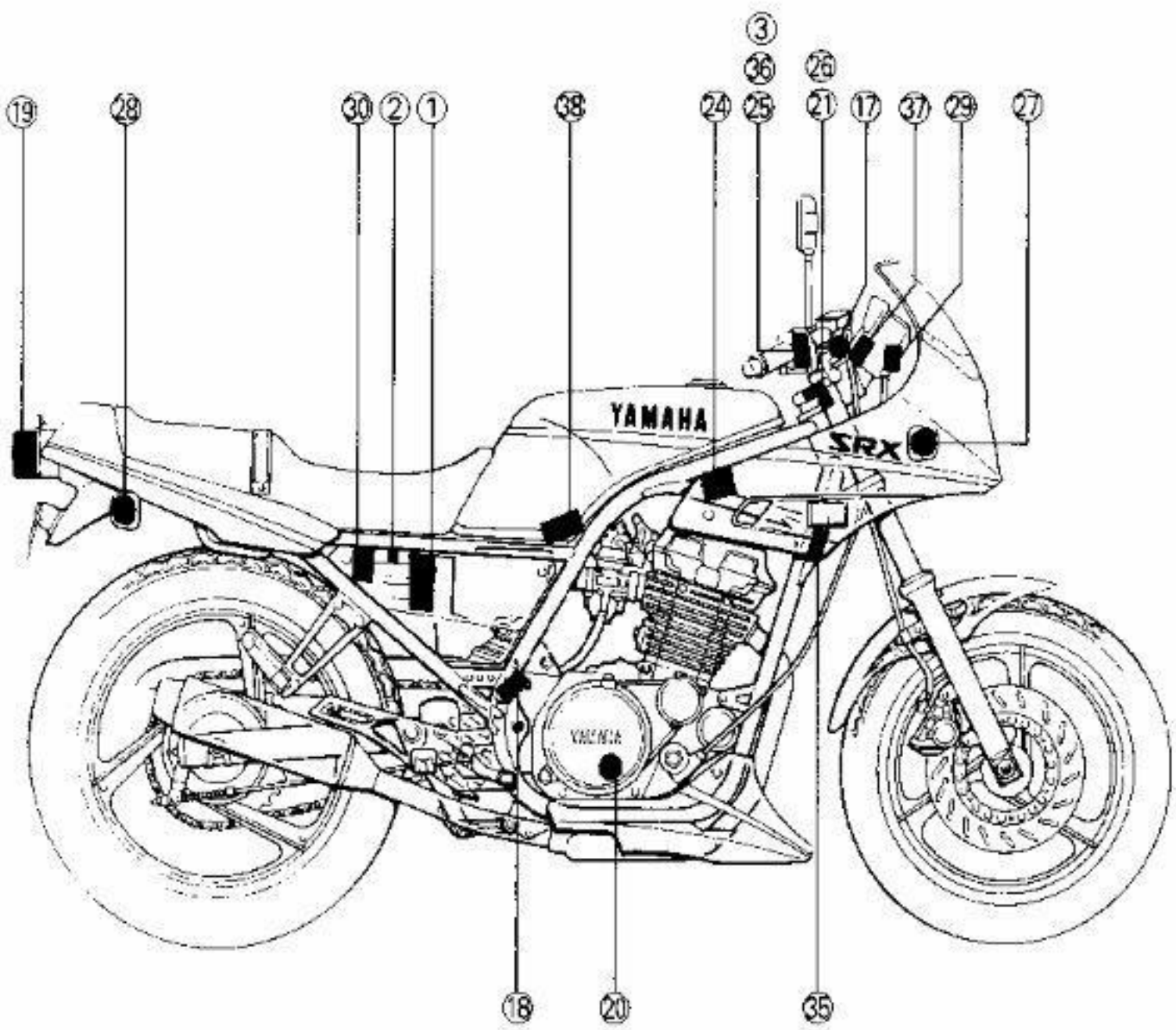

TROUBLESHOOTING

NOTE:

Before this troubleshooting, remove the side covers and seat.

FLASHER LIGHT AND INDICATOR LIGHT DO NOT COME ON.

1. Flasher light and indicator bulbs conduct check
   - Check the flasher light and indicator bulbs condition. Refer to "LIGHTING SYSTEM" section.

FAULTY → Flasher light and/or indicator bulb(s) is faulty. Replace faulty part(s).

OK ↓

2. Flasher light and indicator bulb sockets conduct check
   - Check the flasher light and indicator bulb sockets condition. Refer to "LIGHTING SYSTEM" section.

FAULTY → Flasher light and/or indicator bulb socket(s) is faulty. Replace faulty part(s).

OK ↓

3. Circuit breaker inspection
   - Check the circuit breaker condition. Refer to "CHAPTER 2. CIRCUIT BREAKER INSPECTION" section.

FAULTY → Circuit breaker is faulty. Replace it.

OK ↓

4. Battery inspection
   - Check the battery condition. Refer to "CHAPTER 2. BATTERY INSPECTION" section.

FAULTY → Battery is faulty. Recharge or replace battery.

OK ↓

*

5. Battery voltage test
   - Disconnect the flasher relay coupler (Brown/White ①, Brown ② and Yellow/Green ③).
   - Connect the positive lead ④ of the Pocket Tester (YU-03112) to the flasher relay lead (Brown ② – Wire harness side).
   - Ground the negative lead ⑤ of the Pocket Tester to the engine as shown.
   - Turn the main switch to "ON", and measure the battery voltage.

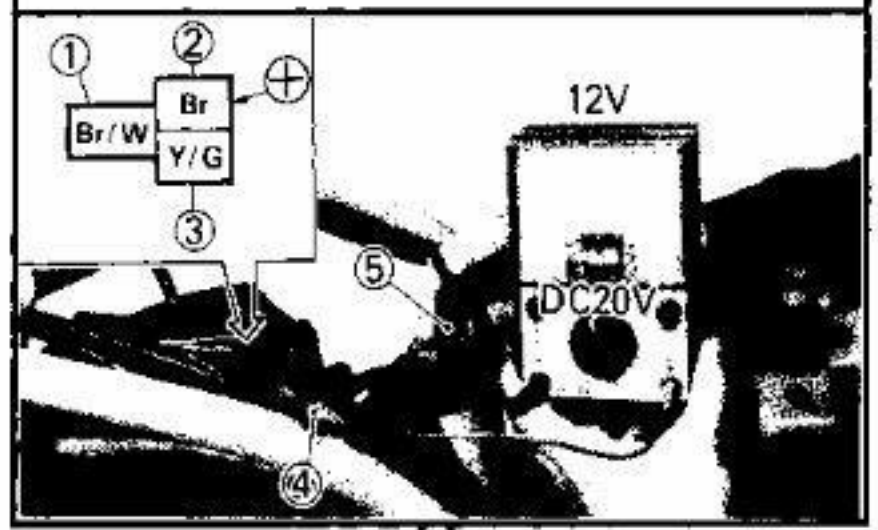

LESS THAN 12V → Check main switch.

MORE THAN 12V ↓

6. Flasher relay test
   - Connect the flasher relay coupler terminals (Brown ① and Brown/White ②) with the jumper lead ③.
   - Turn the main switch to "ON", and turn the "TURN" switch to "L" or "R".
   - Check the flasher light condition.

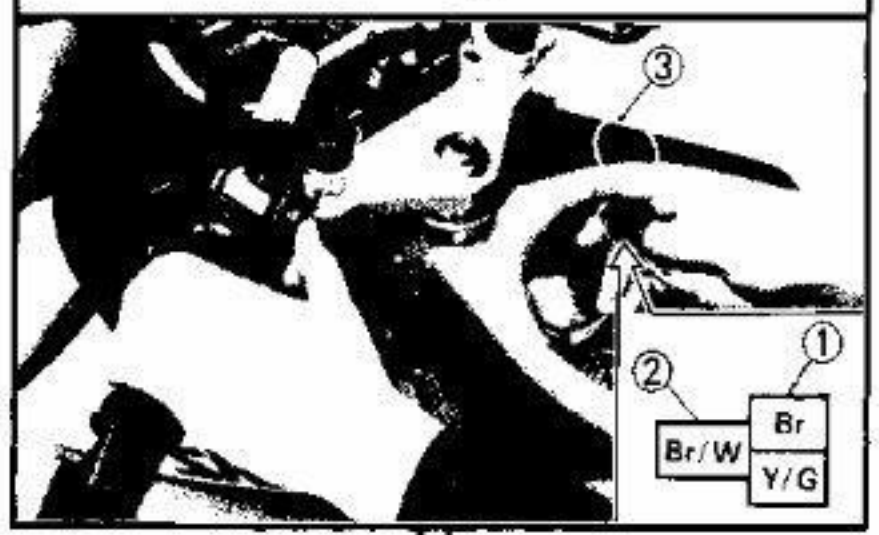

DOES NOT LIGHT → Check "TURN" switch.

OK ↓

7. Check entire signal system for connections.
   - Refer to "WIRING DIAGRAM" section.

FAULTY → Correct.

LIGHTS ↓

Replace flasher relay.

FLASHER LIGHTS DO NOT CANCEL

1. "TURN" switch conduct check
   - Disconnect the handlebar switch (Left) coupler.
   - Connect the positive lead ① of the Pocket Tester (YU-03112) to the handlebar switch coupler terminal (Yellow/Red ② — Handlebar switch side).
   - Ground the negative lead ③ of the Pocket Tester to the frame.
   - Check the following for continuity.
   - Push the "TURN" switch to left or right. Once the switch is released, it will return to the center position.
     To cancel the signal, push the switch in after it has returned to the center position.

BAD CONDITION → "TURN" switch is faulty. Replace it.

"TURN" switch Position	Good Condition	Bad Condition		
"L" and "R"	○	○	×	×
"N" (Cancel)	×	○	×	○

○: Continuity ×: No Continuity

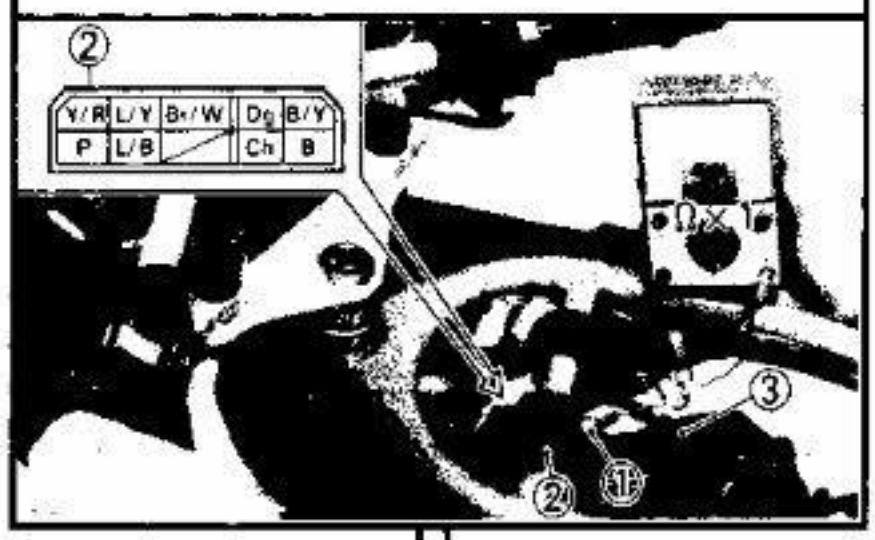

GOOD CONDITION

2. Reed switch test
   - Remove the fuel tank, and disconnect the speedometer coupler.
   - Connect the Pocket Tester (YU-03112) leads to the speedometer coupler terminals (White/Green ① and Black ② — Speedometer side).
   - Lift the front wheel and rotate the wheel by hand, and measure the reed switch resistance.

WARNING:

Securely support the motorcycle so there is no danger of it falling over.

Reed Switch Resistance:
About 7Ω
Then return back 0Ω or ∞ when wheel is stopped.

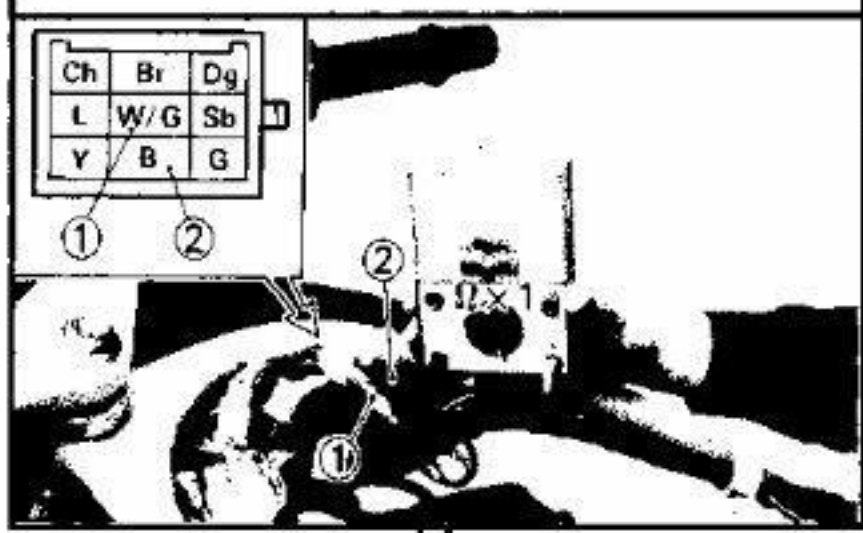

OUT OF SPECIFICATION → Reed switch is faulty. Replace it.

BOTH RESISTANCES MEET SPECIFICATIONS ↓

3. Check entire flasher cancelling system for connections.
   • Refer to "WIRING DIAGRAM" section.

FAULTY → Correct.

OK ↓

Replace flasher cancelling unit.

BRAKE LIGHT DOES NOT COME ON.

1. Brake light bulb conduct check
   - Remove the taillight lens and bulb.
   - Check the brake light bulb condition. Refer to "LIGHTING SYSTEM" section.

FAULTY → Brake light bulb is faulty. Replace it.

OK ↓

2. Brake light bulb socket conduct check
   - Check the brake light bulb socket condition. Refer to "LIGHTING SYSTEM" section.

FAULTY → Brake light bulb socket is faulty. Replace it.

OK ↓

3. Circuit breaker inspection
   - Check the circuit breaker condition. Refer to "CHAPTER 2. CIRCUIT BREAKER INSPECTION" section.

FAULTY → Circuit breaker is faulty. Replace it.

OK ↓

4. Battery inspection
   - Check the battery condition. Refer to "CHAPTER 2. BATTERY INSPECTION" section.

FAULTY → Battery is faulty. Recharge or replace battery.

OK ↓

5. Front and rear brake switches test
   - Disconnect the front and rear brake switch leads.
   - Connect the front brake switch leads (Brown ① and Green/Yellow ②) and rear brake switch leads (Brown ③ and Yellow ④) with the jumper leads ⑤.
   - Turn the main switch to "ON", and check the brake light condition.

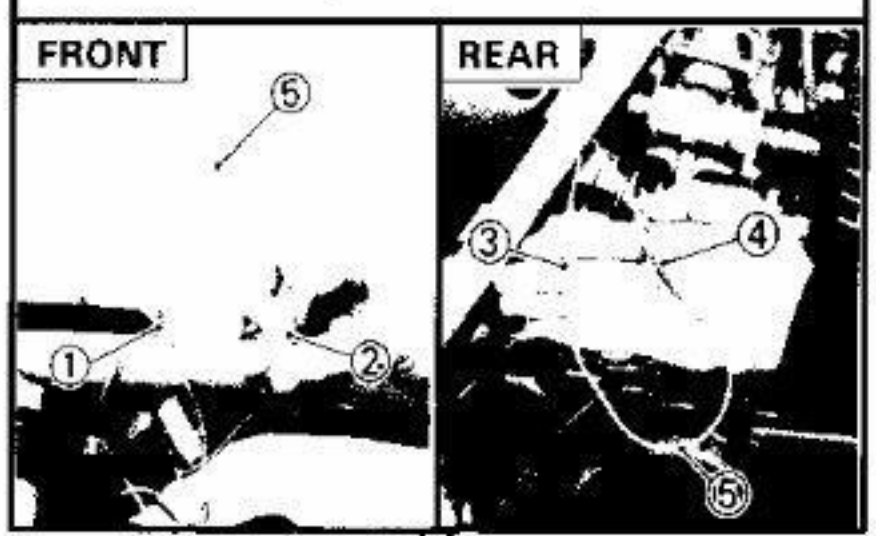

DOES NOT LIGHT → Check the main switch.

LIGHTS ↓

*

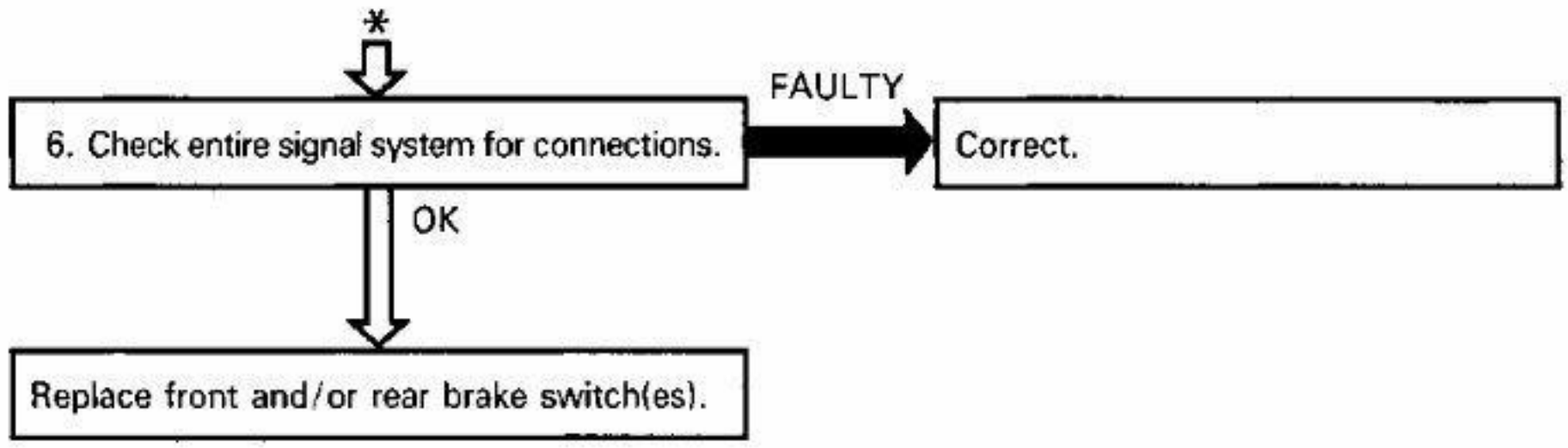
*
6. Check entire signal system for connections.
FAULTY
Correct.
OK
Replace front and/or rear brake switch(es).

"NEUTRAL" INDICATOR LIGHT DOES NOT COME ON.

1. "NEUTRAL" indicator light bulb conduct check
   - Check the "NEUTRAL" indicator light bulb condition. Refer to "LIGHTING SYSTEM" section.

FAULTY → "NEUTRAL" indicator light bulb is faulty. Replace it.

OK ↓

2. "NEUTRAL" indicator light bulb socket conduct check
   - Check the "NEUTRAL" indicator light bulb socket condition. Refer to "LIGHTING SYSTEM" section.

FAULTY → "NEUTRAL" indicator light bulb socket is faulty. Replace it.

OK ↓

3. Circuit breaker inspection
   - Check the circuit breaker condition. Refer to "CHAPTER 2. CIRCUIT BREAKER INSPECTION" section.

FAULTY → Circuit breaker is faulty. Replace it.

OK ↓

4. Battery inspection
   - Check the battery condition. Refer to "CHAPTER 2. BATTERY INSPECTION" section.

FAULTY → Battery is faulty. Recharge or replace battery.

OK ↓

*

*

5. Battery voltage test
   - Disconnect the neutral switch lead (Sky blue ①).
   - Connect the positive lead ② of the Pocket Tester (YU-33260) to the neutral switch lead (Wire harness side).
   - Ground the negative lead ③ of the Pocket Tester to the engine as shown.
   - Turn the main switch to "ON", and measure the battery voltage.

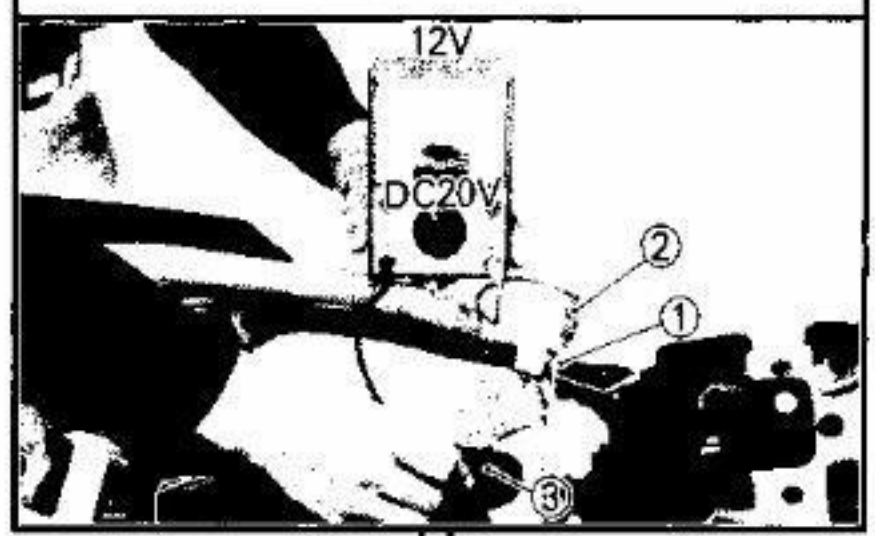

LESS THAN 12V → Check main switch.

MORE THAN 12V ↓

6. Neutral switch test
   - Ground the neutral switch lead (Sky blue ① – Wire harness side) to the engine with the jumper lead ② as shown.
   - Shift the gear in neutral.
   - Turn the main switch to "ON", and check the "NEUTRAL" indicator light condition.

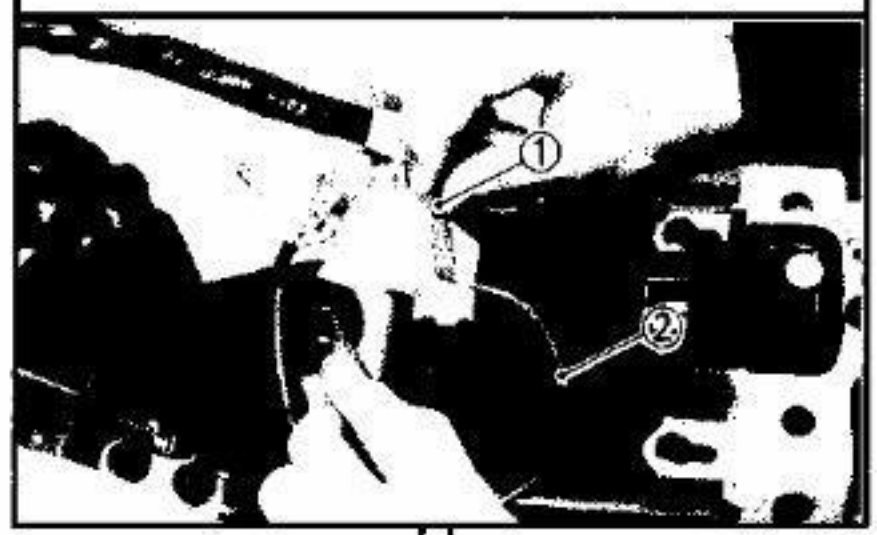

LIGHTS → Neutral switch is faulty. Replace it.

DOES NOT LIGHT ↓

7. Check entire signal system for connection.
   - Refer to "WIRING DIAGRAM" section.

FAULTY → Correct.

FUEL METER IS MALFUNCTIONING

1. Circuit breaker inspection
   - Check the circuit breaker condition. Refer to "CHAPTER 2. CIRCUIT BREAKER INSPECTION" section.

FAULTY → Circuit breaker is faulty. Replace it.

OK ↓

2. Battery inspection
   - Check the battery condition. Refer to "CHAPTER 2. BATTERY INSPECTION" section.

FAULTY → Battery is faulty. Recharge or replace battery.

OK ↓

3. Main switch conduct check
   - Check the main switch for continuity. Refer to "SIGNAL SYSTEM" section.

FAULTY → Main switch is faulty. Replace it.

OK ↓

4. Fuel sender check
   - Remove the fuel tank
   - Remove the fuel sender from the fuel tank.
   - Connect the Pocket Tester (YU-03112) to the fuel sender coupler.
   - Measure the fuel sender resistance.

OUT OF SPECIFICATION → Fuel sender is faulty. Replace it.

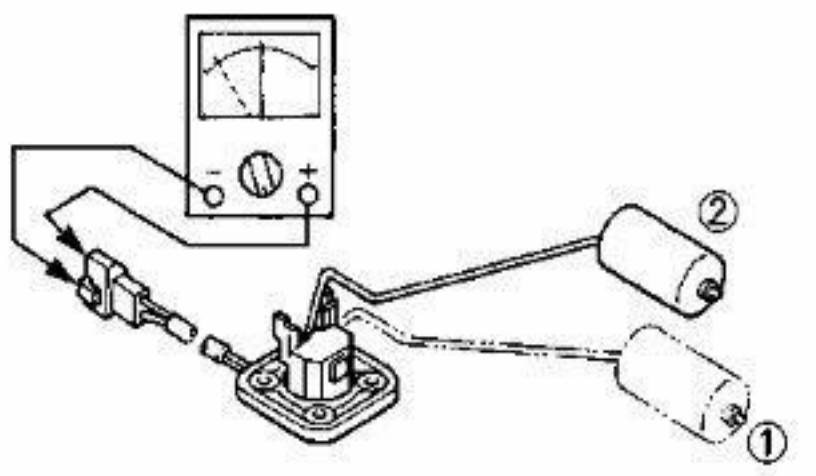

Fuel sender resistance	
Full ②	9 ~ 11Ω
Empty ①	77 ~ 104Ω

OK ↓

*

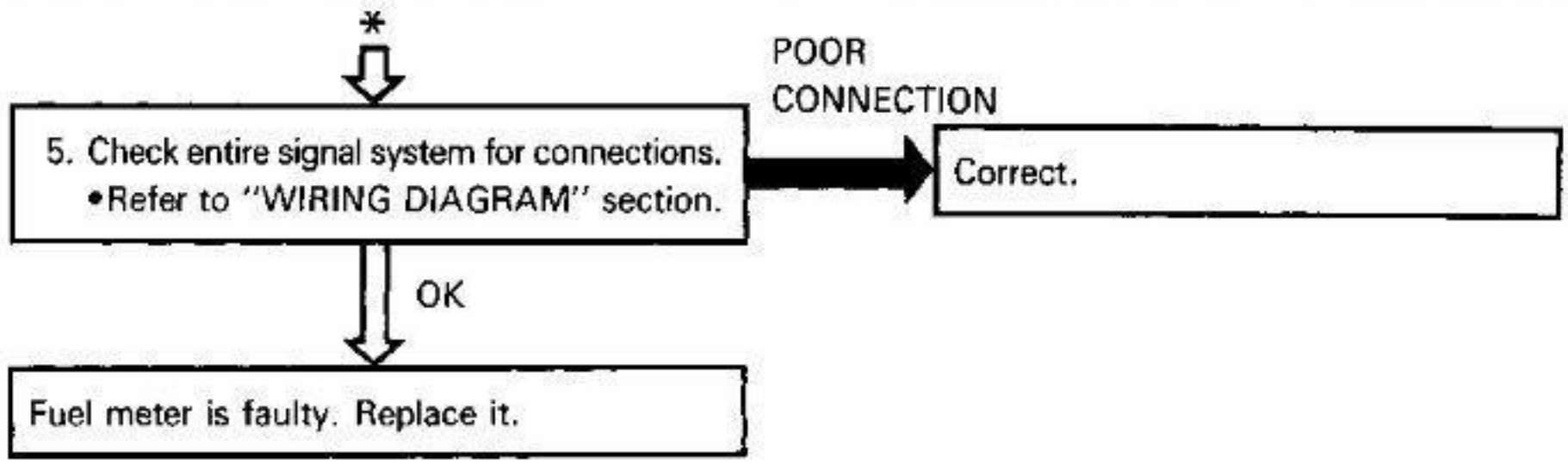
*
5. Check entire signal system for connections.
•Refer to "WIRING DIAGRAM" section.
POOR CONNECTION
Correct.
OK
Fuel meter is faulty. Replace it.

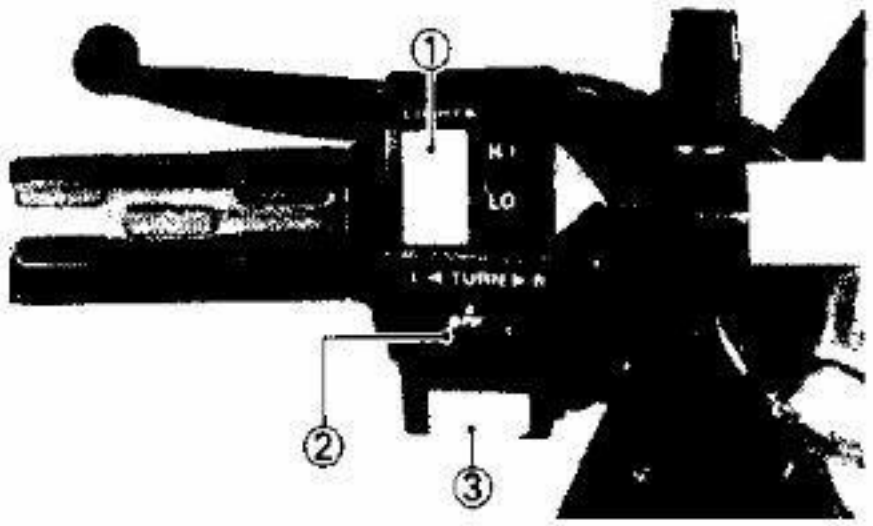

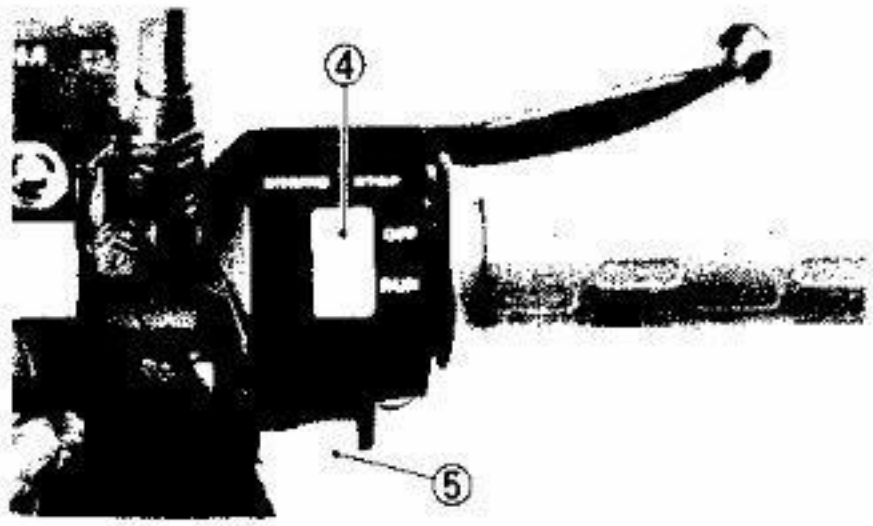

SWITCHES TEST

Switches may be checked for continuity with the Pocket Tester (YU-03112) on the "Ohm × 1" position.

① "LIGHTS" (Dimmer) switch
② "TURN" switch
③ "HORN" switch
④ "ENGINE STOP" switch
⑤ "START" switch

Main Switch

Switch Position	Lead Color		
	R	Br	L
ON	○	○	○
OFF			
P	○		○

"LIGHTS" (Dimmer) Switch

Switch Position	Lead Color		
	L/B	Y	G
HI	○	○	
LO	○		○

"TURN" Switch

Switch Position		Lead Color				
		Ch	Br/W	Dg	Y/R	L/Y
L		○	○		○	○
N	L	○	○			
	N					
	R		○	○		
R			○	○	○	○

"HORN" Switch

Switch Position	Lead Color	
	P	B
OFF		
ON	○	○

"ENGINE STOP" Switch

Switch Position	Lead Color	
	R/W	R/W
OFF	○	○
RUN		

"START" Switch

Switch Position	Lead Color			
	L/W	B	R/Y	L/B
OFF			○	○
ON	○	○		

CHAPTER 7.
APPENDICES

SPECIFICATIONS 7-1
GENERAL SPECIFICATIONS 7-1
MAINTENANCE SPECIFICATIONS 7-4
ENGINE 7-4
CHASSIS 7-10
ELECTRICAL 7-13

GENERAL TORQUE SPECIFICATIONS 7-16

DEFINITION OF UNITS 7-16

CONVERSION TABLES 7-17

LUBRICATION DIAGRAM 7-18

CABLE ROUTING 7-20

SRX250T/TC WIRING DIAGRAM

APPENDICES

SPECIFICATIONS

GENERAL SPECIFICATIONS

Model	SRX250T/TC
Model Code Number	SRX250T : 2NV SRX250TC : 2NW
Engine Starting Number	SRX250T : 2NV-000101 SRX250TC : 2NW-000101
Vehicle Identification Number	SRX250T : JYA2NV00*HA000101 SRX250TC : JYA2NW00*HA000101
Dimensions: Overall Length Overall Width Overall Height Seat Height Wheelbase Minimum Ground Clearance	 1,970 mm (77.6 in) 710 mm (28.0 in) 1,025 mm (40.4 in) 750 mm (29.5 in) 1,340 mm (52.8 in) 145 mm (5.7 in)
Basic Weight: With Oil and Full Fuel Tank	 137 kg (302 lb)
Minimum Turning Radius	2,600 mm (102 in)
Engine: Engine Type Cylinder Arrangement Displacement Bore × Stroke Compression Ratio Compression Pressure Starting System	 Air cooled, 4-stroke, gasoline, DOHC Single cylinder 249 cm^3 73.00 × 59.60 mm (2.87 × 2.35 in) 10.0 : 1 130 kPa (13.0 kg/cm^2, 185 psi) Electric starter
Lubrication System	Wet sump (Pressure lubricated)
Oil Type or Grade: Engine Oil 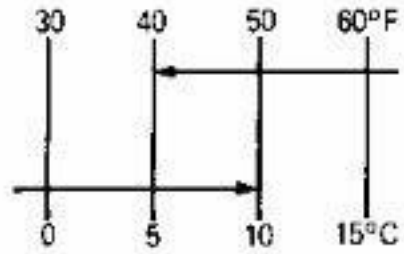 	 SAE 20W40 type SE motor oil (If temperature does not go below 5°C (40°F).) SAE 10W30 type SE motor oil (If temperature does not go above 10°C (50°F).)
Oil Capacity: Engine Oil Periodic Oil Change Total Amount	 1.5 L (1.32 Imp qt, 1.6 US qt) 1.8 L (1.58 Imp qt, 1.9 US qt)
Air Filter	Wet type element
Fuel: Type Tank Capacity	 Regular gasoline 10 L (8.8 Imp qt, 2.64 US gal)

Model	SRX250T/TC	
Carburetor:		
Type/Manufacturer	Y22PV/TEIKEI KIKAKI	
Spark Plug:		
Type/Manufacturer	D8EA (NGK)/X24ES-U (ND)	
Gap	0.6~0.7 mm (0.024~0.028 in)	
Clutch Type	Wet Multiple-disc	
Transmission:		
Primary Reduction System	Spur gear	
Primary Reduction Ratio	72/23 (3.130)	
Secondary Reduction System	Chain drive	
Secondary Reduction Ratio	43/14 (3.071)	
Transmission Type	Constant mesh 6-speed	
Operation	Left foot operation	
Gear Ratio 1st	37/15 (2.466)	
2nd	29/16 (1.812)	
3rd	30/22 (1.363)	
4th	27/25 (1.080)	
5th	24/27 (0.888)	
6th	25/32 (0.781)	
Chassis:		
Frame Type	Double cradle	
Caster Angle	26°30′	
Trail	93 mm (3.66 in)	
Tire:		
Type	Tubeless	
Size (F)	90/90-16 48S	
Size (R)	100/90-18 56S	
Tire Pressure (Cold Tire):		
Basic Weight:		
With Oil and Full Fuel Tank	137 kg (302 lb)	
Maximum load*	134 kg (295 lb)	
	Front	Rear
Up to 90 kg (198 lb) load*	180 kPa (1.8 kg/cm^2, 26 psi	200 kPa (2.0 kg/cm^2, 28 psi)
90 kg (198 lb)~Maximum load*	200 kPa (2.0 kg/cm^2, 28 psi)	230 kPa (2.3 kg/cm^2, 32 psi)
High Speed Riding	200 kPa (2.0 kg/cm^2, 28 psi)	230 kPa (2.3 kg/cm^2, 32 psi)
	*Load is the total weight of cargo, rider, passenger, and accessories	

Model	SRX250T/TC
Brake:	
Front Brake Type	Single disc brake
Operation	Right hand operation
Rear Brake Type	Drum brake
Operation	Right foot operation
Suspension:	
Front Suspension	Telescopic fork
Rear Suspension	Swingarm
Shock Absorber:	
Front Shock Absorber	Coil spring, Oil damper
Rear Shock Absorber	Coil spring, Gas-oil damper
Wheel Travel:	
Front Wheel Travel	140 mm (5.51 in)
Rear Wheel Travel	100 mm (3.93 in)
Electrical:	
Ignition System	T.C.I.
Generator System	A.C. Magneto Generator
Battery Type or Model	12N12A-4A
Battery Capacity	12V 12AH
Headlight Type	Bulb type (Halogen)
Bulb Wattage/Quantity:	
Headlight	12V, 60W/55W × 1
Tail/Brake Light	12V, 27W/8W × 1
Front Flasher Light/Front Position Light	12V, 27W/8W × 2
Rear Flasher Light	12V, 27W × 2
Meter Light	12V, 3.4W × 4
Indicator Light:	
"HIGH BEAM"	12V, 3W × 1
"TURN"	12V, 3W × 1
"NEUTRAL"	12V, 3W × 1

MAINTENANCE SPECIFICATIONS

Engine

Model	SRX250T/TC
Cylinder Head:	
Warp Limit	<0.03 mm (0.0012 in)> *Lines indicate straightedge measurement.
Cylinder:	
Bore Size	72.97~73.02 mm (2.873~2.875 in)
Measuring Point*	*40 mm (1.57 in)
Camshaft:	
Drive Method	Chain (Right)
Cam Cap Inside Diameter	25.000~25.021 mm (0.984~0.985 in)
Camshaft Outside Diameter	24.967~24.980 mm (0.9830~0.9835 in)
Cap Clearance	0.020~0.054 mm (0.0008~0.0021 in)
<Limit>	<0.150 mm (0.006 in)>
Cam Dimensions	
Intake "A"	34.25~34.35 mm (1.348~1.352 in)
<Limit>	<34.15 mm (1.344 in)>
"B"	27.95~28.05 mm (1.100~1.104 in)
<Limit>	<27.85 mm (1.096 in)>
"C"	6.3 mm (0.248 in)
Exhaust "A"	34.25~34.35 mm (1.348~1.352 in)
<Limit>	<34.15 mm (1.344 in)>
"B"	27.95~28.05 mm (1.100~1.104 in)
<Limit>	<27.85 mm (1.096 in)>
"C"	6.3 mm (0.248 in)
Camshaft Runout Limit	<0.03 mm (0.001 in)>
Cam Chain Type/Number of Links	79-010/136 Links
Cam Chain Adjustment Method	Automatic
Valve, Valve Seat, Valve Guide:	
Valve Clearance (Cold)	
IN.	0.08~0.12 mm (0.003~0.005 in)
EX.	0.10~0.14 mm (0.004~0.006 in)

Model		SRX250T/TC
Valve Dimensions		
"A" Head Dia.	IN.	27.90 ~ 28.10 mm (1.098 ~ 1.106 in)
	EX.	24.90 ~ 25.10 mm (0.980 ~ 0.988 in)
"B" Face Width	IN.	2.26 mm (0.09 in)
	EX.	2.26 mm (0.09 in)
"C" Seat Width	IN.	0.9 ~ 1.1 mm (0.0354 ~ 0.0433 in)
	EX.	0.9 ~ 1.1 mm (0.0354 ~ 0.0433 in)
"D" Margin Thickness Limit		
	IN.	0.6 ~ 1.0 mm (0.0236 ~ 0.0394 in)
	EX.	0.8 ~ 1.2 mm (0.0315 ~ 0.0472 in)
Stem Outside Diameter		
	IN.	5.475 ~ 5.490 mm (0.2156 ~ 0.2161 in)
	EX.	5.460 ~ 5.475 mm (0.2150 ~ 0.2156 in)
Guide Inside Diameter		
	IN.	5.500 ~ 5.512 mm (0.2165 ~ 0.2170 in)
	EX.	5.500 ~ 5.512 mm (0.2165 ~ 0.2170 in)
<Limit>		<5.6 mm (0.22 in)>
Stem-to-guide Clerance		
	IN.	0.010 ~ 0.037 mm (0.0004 ~ 0.0015 in)
	EX.	0.025 mm ~ 0.052 mm (0.0001 ~ 0.0020 in)
Stem Runout Limit		<0.01 mm (0.0004 in)>
Valve Seat Width Standard		0.9 ~ 1.1 mm (0.0354 ~ 0.0433 in)
Valve Spring:		
Free Length:		
Inner Spring	IN.	37.4 mm (1.47 in)
	EX.	37.4 mm (1.47 in)
Outer Spring	IN.	39.85 mm (1.57 in)
	EX.	39.85 mm (1.57 in)
Compressed Pressure/Set Length:		
Inner Spring	IN.	6.35 ~ 7.45 kg (14.1 ~ 16.4 lb)
	EX.	6.35 ~ 7.45 kg (14.1 ~ 16.4 lb)
Outer Spring	IN.	12.1 ~ 14.1 kg (26.7 ~ 31.1 lb)
	EX.	12.1 ~ 14.1 kg (26.7 ~ 31.1 lb)

Model		SRX250T/TC
Tilt Limit*		
Inner Spring	IN. & EX.	2.5° or 1.6 mm (0.063 in)
Outer Spring	IN. & EX.	2.5° or 1.7 mm (0.067 in)
Direction of Winding (Top view)		Inner Spring: Left Outer Spring: Right
Piston:		
Piston Size/ Measuring Point*		72.92 ~ 72.97 mm (2.871 ~ 2.873 in)/ *1.0 mm (0.04 in) (From bottom line of piston skirt)
Piston Clearance		0.04 ~ 0.06 mm (0.0016 ~ 0.0024 in)
Oversize	2nd	73.50 mm (2.894 in)
	4th	74.00 mm (2.193 in)
Piston Ring:		
Sectional Sketch		
Top Ring		Barrel B = 1.2 mm (0.047 in) T = 3.1 mm (0.122 in)
2nd Ring		Taper B = 1.2 mm (0.047 in) T = 3.1 mm (0.122 in)
Oil Ring		B = 2.5 mm (0.098 in) T = 3.1 mm (0.122 in)
End Gap (Installed)		
Top Ring		0.20 ~ 0.35 mm (0.008 ~ 0.014 in)
2nd Ring		0.20 ~ 0.35 mm (0.008 ~ 0.014 in)
Oil Ring		0.30 ~ 0.90 mm (0.012 ~ 0.035 in)
Side Clearance		
Top Ring		0.04 ~ 0.08 mm (0.002 ~ 0.003 in)
2nd Ring		0.03 ~ 0.07 mm (0.001 ~ 0.003 in)

Model		SRX250T/TC	
Crankshaft:			
Crank Width "A"		58.95 ~ 59.00 mm (2.321 ~ 2.323 in)	
Runout Limit "B"		<0.03 mm (0.001 in>	
Big End Side Clearance "C"		0.25 ~ 0.75 mm (0.010 ~ 0.030 in)	
Small End Free Play Limit "F"		0.8 mm (0.31 in)	
Balancer Drive Method:		Gear	
Clutch:			
Friction Plate Thickness/Quantity		2.9 ~ 3.1 mm (0.114 ~ 0.122 in)/5	
Wear Limit		<2.6 mm (0.102 in)>	
Clutch Plate Thickness/Quantity		1.9 ~ 2.1 mm (0.0748 ~ 0.0827 in)/4	
Warp Limit		<0.05 mm (0.002 in)>	
Clutch Spring Free Length/Quantity		44 mm (1.73 in)/4	
Clutch Spring Minimum Length		43 mm (1.69 in)	
Clutch Release Method		Inner push (Cam push)	
Push Rod Bending Limit		<0.5 mm (0.02 in)>	
Air Filter Oil Grade (Oiled Filter)		SAE 10W30 SE motor oil	
Carburetor:			
Type/Manufacturer/Quantity		Y22PV/TEIKEI KIKAKI/1	
I.D. Mark		51Y00	
		Primary carb.	Secondary carb.
Main Jet	(M.J.)	#122	#80
Main Air Jet	(M.A.J.)	φ1.2	φ0.8
Jet Needle-clip Position	(J.N.)	5A70	4A12
Main Nozzle	(M.N.)	φ2.610	φ2.610
Pilot Jet	(P.J.)	#38	—
Pilot Air Jet	(P.A.J.)	φ1.0	—
Pilot Screw	(P.S.)	Preset	—
Valve Seat	(V.S.)	φ2.5	—
Starter Jet	($G.S._1$)	#72	—
Fuel Level	(F.L.)	5.5 ~ 6.5 mm (0.22 ~ 0.26 in)	—
Float Height		26 ~ 28 mm (1.02 ~ 1.10 in)	
Engine Idling Speed		1,350 ~ 1,450 r/min	
Vacuum Pressure at Idling Speed		Above 23.9 kPa (180 mmHg, 7.1 inHg)	

Model	SRX250T/TC
Lubrication System:	
Oil Filter Type	Wire mesh
Oil Pump Type	Trochoid pump
Tip Clearance	0.15 mm (0.0059 in)
Side Clearance	0.03 ~ 0.09 mm (0.0012 ~ 0.0035 in)
Bypass Valve Setting Pressure	78.5 ~ 117.7 kPa (0.8 ~ 1.2 kg/cm^2, 11.4 ~ 17.1 psi)
Relief Valve Operating Pressure	78.5 ~ 117.7 kPa (0.8 ~ 1.2 kg/cm^2, 11.4 ~ 17.1 psi)

Lubrication Chart

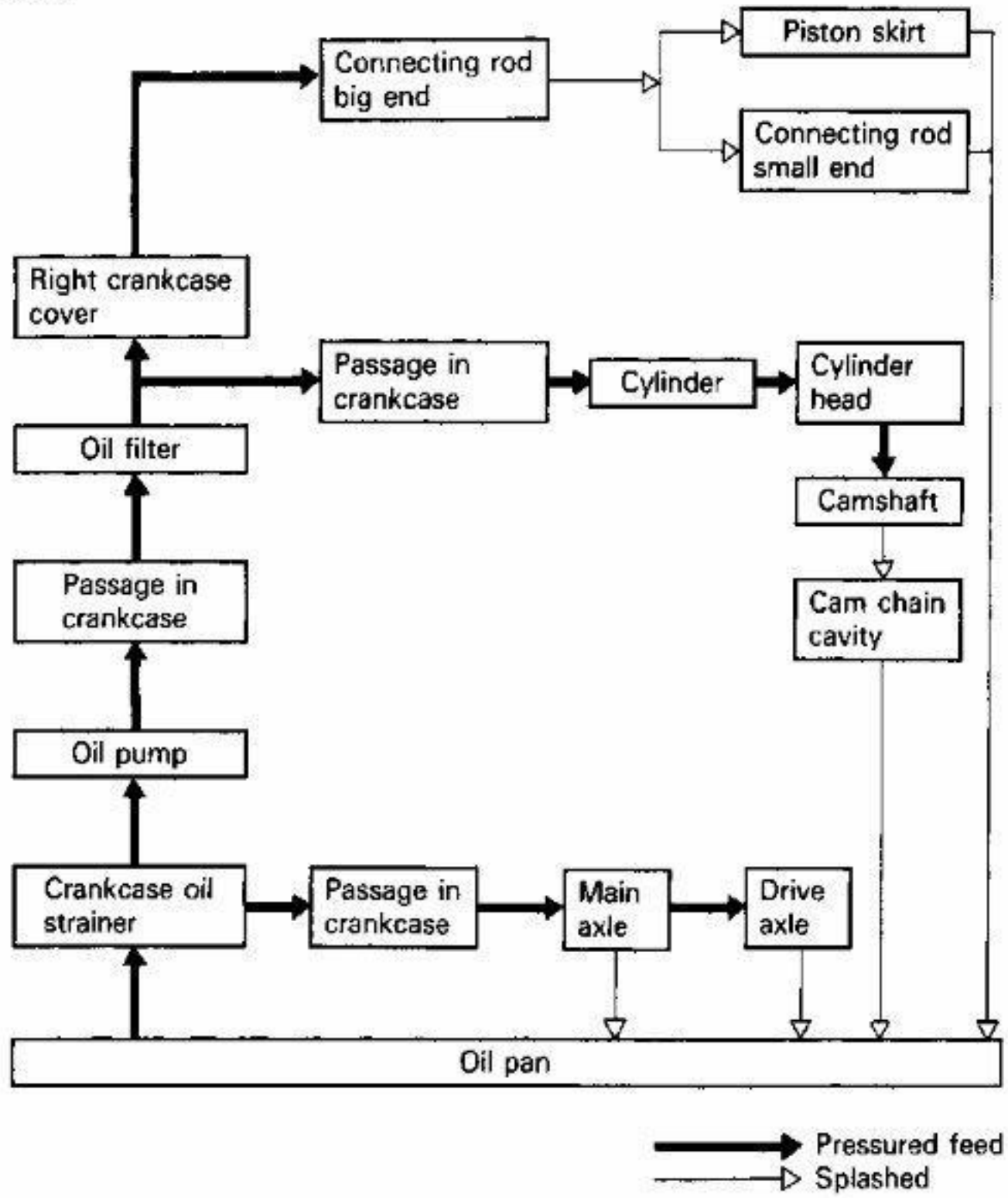

TIGHTENING TORQUE:

Parts to be tightened	Part name	Thread size	Q'ty	Tightening torque			Remarks
				Nm	m•kg	ft•lb	
Cylinder head	Flange bolt	M10×1.25	4	40	4.0	29	
Cylinder head	Flange bolt	M 6×1.0	2	10	1.0	7.2	
Cylinder head	Nut	M 8×1.25	2	20	2.0	14	
Spark plug	—	M12×1.25	1	17.5	1.75	12.5	
Camshaft cap	Flange bolt	M 6×1.0	8	10	1.0	7.2	
Cylinder head cover	Bolt	M 6×1.0	5	10	1.0	7.2	
Primary drive gear	Nut	M16×1.0	1	80	8.0	58	Use lock washer
Balancer driven gear	Nut	M16×1.0	1	60	6.0	43	Use lock washer
A.C. Generator rotor	Bolt	M10×1.25	1	60	6.0	43	
Cam sprocket	Bolt	M 7×1.0	4	20	2.0	14	
Cam chain tensioner	Bolt	M 6×1.0	2	12	1.2	8.7	
Tensioner cap	Flange bolt	M 6×1.0	1	6	0.6	4.3	
Rear cam chain guide	Bolt	M 6×1.0	2	8	0.8	5.8	
Oil pump assembly	Screw	M 6×1.0	3	7	0.7	5.1	
Oil pump cover	Screw	M 6×1.0	1	7	0.7	5.1	
Oil strainer plug	—	M35×1.5	1	32	3.2	23	
Oil filter cover	Bolt	M 6×1.0	3	10	1.0	7.2	
Oil filter cover air bleed	Screw	M 5×0.8	1	5	0.5	3.6	
Drain plug	Bolt	M14×1.25	1	43	4.3	31	
Carburetor joint	Bolt	M 6×1.0	4	12	1.2	8.7	
Air filter body	Bolt	M 6×1.0	4	8	0.8	5.8	
Exhaust pipe flange	Bolt	M 6×1.0	4	12	1.2	8.7	
Muffler bracket	Flange bolt	M 8×1.25	1	27	2.7	19	
Muffler chamber	Flange bolt	M 8×1.25	1	27	2.7	19	
Crankcase	Screw	M 6×1.0	14	7	0.7	5.1	
Left crankcase cover	Screw	M 6×1.0	6	7	0.7	5.1	
Right crankcase cover	Bolt	M 6×1.0	9	10	1.0	7.2	
Clutch cable bracket	Screw	M 6×1.0	1	7	0.7	5.1	
Balancer bearing retainer	Screw	M 6×1.0	2	7	0.7	5.1	
Clutch spring	Screw with washer	M 6×1.0	4	8	0.8	5.8	
Clutch boss	Nut	M16×1.0	1	75	7.5	54	Use lock washer
Push lever stopper	Screw	M 8×1.25	1	12	1.2	8.7	
Clutch adjuster lock	Nut	M 6×1.0	1	8	0.8	5.8	
Drive chain sprocket (Front)	Bolt	M 6×1.0	2	10	1.0	7.2	
Shift cam segment	Torx	M 6×1.0	1	12	1.2	8.7	
Change pedal	Bolt	M 6×1.0	1	8	0.8	5.8	
CDI magneto base	Screw	M 6×1.0	2	7	0.7	5.1	
Neutral switch	—	M10×1.25	1	20	2.0	14	
Oil gallery bolt	Bolt	M10×1.25	1	20	2.0	14	

Chassis

Model	SRX250T/TC
Steering System:	
Steering Bearing Type	Ball Bearing
No./Size of Steel Balls	
Upper and Lower	19 pcs/1/4 in
Front Suspension:	
Frot Fork Travel	140 mm (5.51 in)
Fork Spring Free Length	513.5 mm (20.21 in)
<Limit>	<508.5 mm (20.02 in)>
Spring Rate K1	3.5 N/mm (0.35 kg/mm, 19.6 lb/in)
K2	5 N/mm (0.5 kg/mm, 28 lb/in)
Stroke K1	0~98 mm (0~3.85 in)
K2	98~140 mm (3.85~5.51 in)
Optional Spring	No.
Oil Capacity	243 cm^3 (8.55 Imp oz, 8.22 US oz)
Oil Level	122 mm (4.8 in) From top of fully compressed inner tube without fork spring
Oil Grade	Yamaha Fork oil 10wt or equivalent
Rear Suspension:	
Shock Absorber Travel	46 mm (1.81 in)
Spring Free Length	202 mm (7.95 in)
Fitting length	184 mm (7.24 in)
Spring Rate	70 N/mm (7 kg/mm, 392 lb/in)
Stroke	0~46 mm (0~1.81 in)
Optional Spring	No.
Enclosed Gas Pressure	2,256 kPa (23 kg/cm^2, 327 psi)
Front Wheel:	
Type	Cast Wheel
Rim Size	MT2.15×16
Rim Material	Aluminum
Rim Runout Limit Vertical	<2 mm (0.08 in)>
Lateral	<2 mm (0.08 in)>
Rear Wheel:	
Type	Cast Wheel
Rim Size	MT2.15×18
Rim Material	Aluminum
Rim Runout Limit Vertical	<2 mm (0.08 in)>
Lateral	<2 mm (0.08 in)>
Drive Chain:	
Type/Manufacturer	520VC5/DID
No. of Links	106 Links
Chain Slack	30~40 mm (1.2~1.6 in)

Model	SRX250T/TC
Front Disc Brake:	
Type	Single
Disc Outside Dia. × Thickness	267 × 5.0 mm (10.5 × 0.196 in)
Pad Thickness Inner	5.0 mm (0.2 in)
<Limit>*	<0.5 mm (0.02 in)>
Pad Thickness Outer	5.0 mm (0.2 in)
<Limit>*	<0.5 mm (0.02 in)>
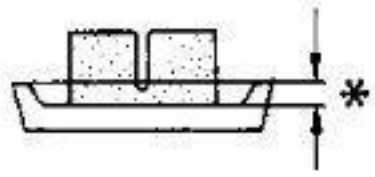	
Master Cylinder Inside Dia.	12.7 mm (0.5 in)
Caliper Cylinder Inside Dia.	38.1 mm (1.5 in)
Brake Fluid Type	DOT #3
Rear Drum Brake:	
Type	Leading trailing
Drum Inside Dia.	150 mm (5.90 in)
<Limit>	<151 mm (5.94 in)>
Lining Thickness	4 mm (0.16 in)
<Limit>	<2 mm (0.08 in)>
Shoe Spring Free Length	68 mm (2.7 in)
Brake Lever and Brake Pedal:	
Brake Lever Free Play	5 ~ 8 mm (0.2 ~ 0.3 in)
Brake Pedal Position	30 mm (1.2 in) (Below the top of the footrest)
Brake Pedal Free Play	20 ~ 30 mm (0.8 ~ 1.2 in)
Clutch Lever:	
Clutch Lever Free Play	2 ~ 3 mm (0.08 ~ 0.12 in)

TIGHTENING TORQUE:

Parts to be tightened	Thread size	Tightening torque			Remarks
		Nm	m•kg	ft•lb	
Front axle	M12×1.25	75	7.5	54	
Front axle pinch bolt	M 8×1.25	23	2.3	17	
Handle crown and Inner tube	M 8×1.25	20	2.0	14	
Steering stem bolt	M14×1.25	54	5.4	39	
Handlebar and Handle crown	M 6×1.0	9	0.9	6.5	
Handlebar and Inner tube	M 8×1.25	20	2.0	14	
Steering stem ring nut	M25×1.0	40	4.0	29	See NOTE
Under bracket and Inner tube	M 8×1.25	20	2.0	14	
Engine mounting bolt					
Upper:	M 8×1.25	33	3.3	24	
Front (Upper):	M 8×1.25	33	3.3	24	
Front (Lower):	M 8×1.25	33	3.3	24	
Rear (Upper):	M 8×1.25	33	3.3	24	
Rear (Lower):	M 8×1.25	33	3.3	24	
Engine mounting bracket and Frame					
Front (Lower):	M 8×1.25	20	2.0	14	
Rear:	M 8×1.25	33	3.3	24	
Upper:	M 8×1.25	33	3.3	24	
Pivot shaft	M14×1.5	90	9.0	65	
Rear shock absorber and Frame	M10×1.25	40	4.0	29	
Arm 1 and Arm 2	M 8×1.25	20	2.0	14	
Frame and Relay arm	M12×1.25	65	6.5	47	
Relay arm and Arm 1, 2	M14×1.25	65	6.5	47	
Rear axle	M14×1.5	110	11.0	80	Use cotter pin
Brake lever and Camshaft	M 6×1.0	10	1.0	7.2	
Rear driven sprocket	M 8×1.25	34	3.4	24	Use lock washer
Footrest	M 8×1.25	20	2.0	14	
Front fork cap bolt		23	2.3	17	Use O-ring
Front fork damper rod and Outer tube	M10×1.0	23	2.3	17	LT
Fuel sender unit	M 5×0.8	4	0.4	2.9	LT
Front wheel and Brake disc	M 8×1.25	20	2.0	14	
Change pedal and Footrest	M 8×1.25	20	2.0	14	
Brake pedal axle and Muffler bracket	M10×1.25	35	3.5	25	
Cowling stay and Frame	M 8×1.25	23	2.3	17	
Front brake master cylinder and Bracket	M 6×1.0	9	0.9	6.5	
Front brake master cylinder and Cap	M 5×0.8	2	0.2	1.4	
Brake hose and Union bolt	M10×1.25	26	2.6	19	
Brake bleed screw	M 8×1.25	6	0.6	4.3	
Brake caliper and Front fork	M10×1.25	35	3.5	25	

NOTE:

1. First, tighten the ring nut approximately 40 Nm (4.0 m•kg, 29 ft•lb) by using the torque wrench, then loosen the ring nut one turn.
2. Retighten the ring nut 20 Nm (2.0 m•kg, 14 ft•lb).

Electrical

Model	SRX250T/TC
Voltage	12V
Ignition System: Ignition Timing (B.T.D.C.) Advanced Timing (B.T.D.C.) Advancer Type	 9° at 1,200 r/min 34° at 5,500 r/min Electrical

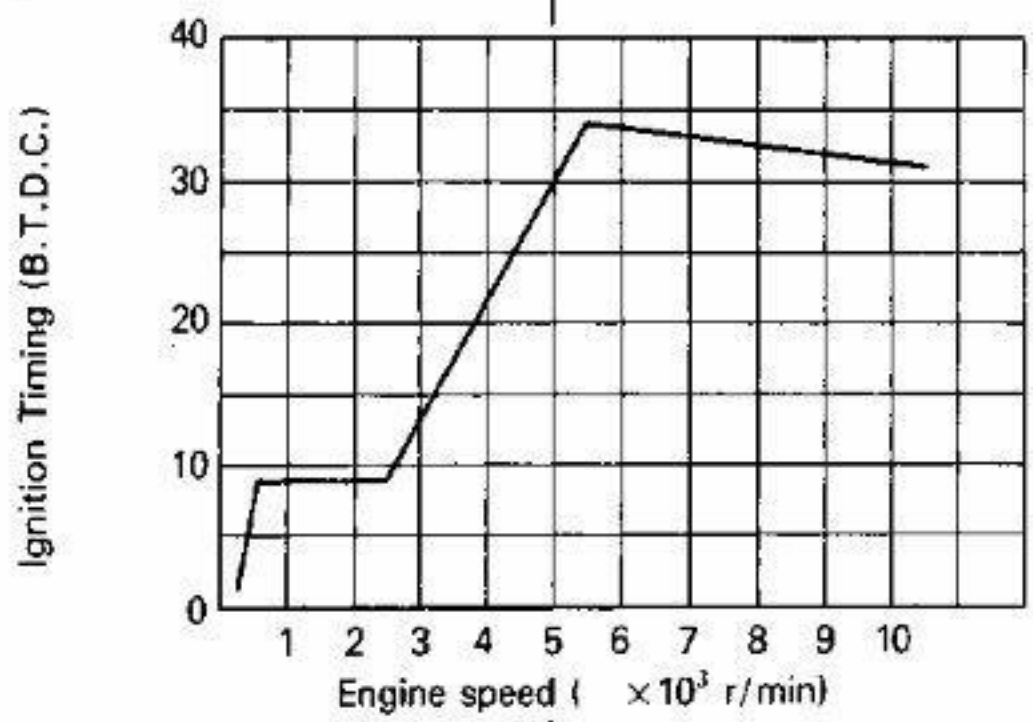

T.C.I.: Pickup Coil Resistance (Color) T.C.I. Unit-Model/Manufacture	 85~115Ω at 20°C (68°F) (White/Green—White/Red) TID11-08/HITACHI
Ignition Coil: Model/Manufacturer Primary Winding Resistance Secondary Winding Resistance Minimum Spark Gap	 CM11-61/HITACHI 2.4~3.0Ω at 20°C (68°F) 10.6~15.8KΩ at 20°C (68°F) 6 mm (0.24 in)
Charging System/Type	A.C. Magneto
A.C. Generator: Model/Manufacturer Normal Output	 FL118-07/HITACHI 14V, 15A at 5,000 r/min

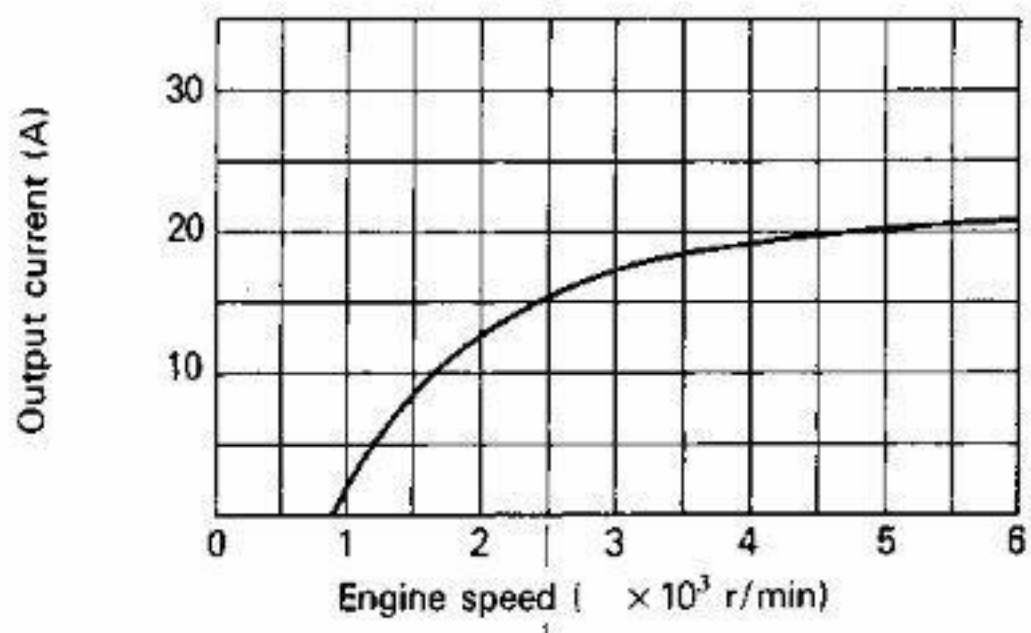

Model	SRX250T/TC
Stator Coil Resistance (Color)	0.36 ~ 0.51Ω at 20°C (68°F) (White – White)
Voltage Regulator:	
Type	Semi Conductor-Short Circuit Type
Model/Manufacture	SH235-12B/SHINDENGEN
No Load Regulated Voltage	14.0 ~ 15.0V
Rectifier:	
Model/Manufacturer	SH235-12B/SHINDENGEN
Capacity	20A
Withstand Voltage	200V
Battery:	
Capacity	12V 12AH
Specific Gravity	1.280
Electric Starter System:	
Type	Constant mesh type
Starter Motor-Model/Manufacturer	SM7258/MITSUBA
Out put	0.4 kw
Armature Coil Resistance	0.013 ~ 0.015Ω at 20°C (68°F)
Brush-Overall Length	11.0 mm (0.41 in)
<Limit>	<5.0 mm (0.20 in)>
Spring Pressure	400 ~ 600 g (14.1 ~ 21.2 oz)
Commutator Dia.	23.0 mm (0.91 in)
<Wear Limit>	<22.0 mm (0.87 in)>
Mica Undercut (Width × Depth)	0.8 × 1.8 mm (0.03 × 0.07 in)
Starter Relay:	
Model/Manufacturer	A104-132/HITACHI
Amperage Rating	100A
Coil Winding Resistance	3.1 ~ 3.7Ω at 20°C (68°F)
Horn:	
Type/Quantity	Plain type
Model/Manufacturer	MF-12/NIKKO
Maximum Amperage	1.5A
Flasher Relay:	
Type	Condenser type
Model/Manufacturer	FZ257SD/NIPPONDENSO
Self Cencelling Device	No
Flasher Frequency	75 ~ 95 cycle/min
Wattage	27W × 2 + 3.4W
Fuel Gauge:	
Model/Manufacturer	51Y/NIPPON SEIKI
Sender Unit Resistance:	
Full	9 ~ 11Ω at 20°C (68°F)
Empty	76.5 ~ 103.5Ω at 20°C (68°F)

Model	SRX250T/TC
Starting Circuit Cut off Relay:	
Model/Manufacturer	12R/TATEISHI (OMRON)
Coil Winding Resistance	67.5~82.5Ω at 20°C (68°F)
Diode	Yes
Main Fuse:	
Type	Circuit Breaker
Amperage for Individual Circuit/Quantity	
Main	20A × 1

GENERAL TORQUE SPECIFICATIONS

This chart specifies torque for standard fasteners with standard I.S.O. pitch threads. Torque specifications for special components or assemblies are included in the applicable sections of this book. To avoid warpage, tighten multi-fastener assemblies in a crisscross fashion, in progressive stages, until full torque is reached. Unless otherwise specified, torque specifications call for clean, dry threads. Components should be at room temperature.

A (Nut)	B (Bolt)	General torque specifications		
		Nm	m•kg	ft•lb
10 mm	6 mm	6	0.6	4.3
12 mm	8 mm	15	1.5	11
14 mm	10 mm	30	3.0	22
17 mm	12 mm	55	5.5	40
19 mm	14 mm	85	8.5	61
22 mm	16 mm	130	13.0	94

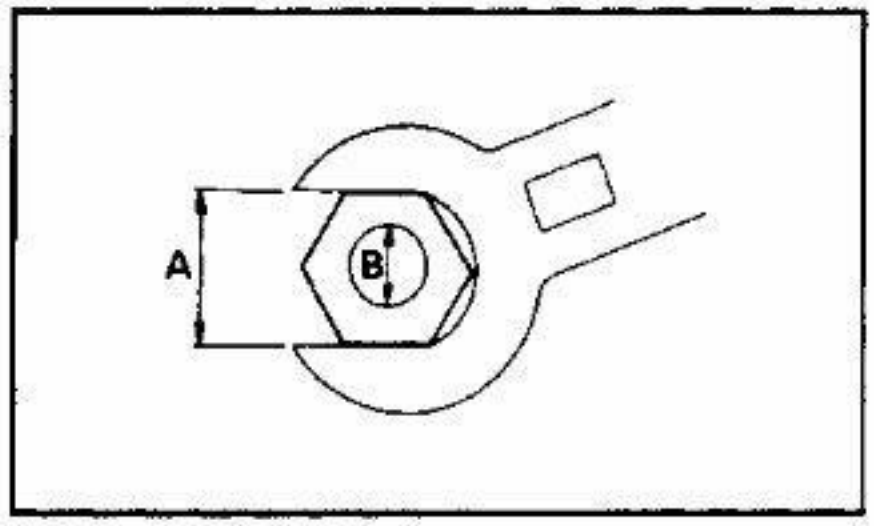

A: Distance cross flats
B: Outside thread diameter

DEFINITION OF UNITS

Unit	Read	Definition	Measure
mm cm	millimeter centimeter	10^{-3} meter 10^{-2} meter	Length Length
kg	kilogram	10^{3} gram	Weight
N	Newton	1 kg × m/sec^2	Force
Nm m•kg	Newton meter Meter kilogram	N × m m × kg	Torque Torque
Pa N/mm	Pascal Newton per millimeter	N/m^2 N/mm	Pressure Spring rate
L cm^3	Liter Cubic centimeter	—	Volume or Capacity
r/min	Rotation per minute	—	Engine speed

CONVERSION TABLES

Metric to inch system		
Known	Multiplier	Result
m•kg	7.233	ft•lb
m•kg	86.80	in•lb
cm•kg	0.0723	ft•lb
cm•kg	0.8680	in•lb
kg	2.205	lb
g	0.03527	oz
km/lit	2.352	mpg
km/hr	0.6214	mph
km	0.6214	mi
m	3.281	ft
m	1.094	yd
cm	0.3937	in
mm	0.03937	in
cc (cm^3)	0.03382	oz (US liq)
cc (cm^3)	0.06102	cu in
lit (liter)	2.1134	pt (US liq)
lit (liter)	1.057	qt (US liq)
lit (liter)	0.2642	gal (US liq)
kg/mm	56.007	lb/in
kg/cm	14.2234	psi (lb/in)
Centigrade (°C)	9/5 (°C) + 32	Fahrenheit (°F)

Inch to metric system		
Known	Multiplier	Result
ft•lb	0.13862	m•kg
in•lb	0.01152	m•kg
ft•lb	13.831	cm•kg
in•lb	1.1521	cm•kg
lb	0.4535	kg
oz	28.352	g
mpg	0.4252	km/lit
mph	1.609	km/hr
mi	1.609	km
ft	0.3048	m
yd	0.9141	m
in	2.54	cm
in	25.4	mm
oz (US liq)	29.57	cc (cm^3)
cu in	16.387	cc (cm^3)
pt (US liq)	0.4732	lit (liter)
qt (US liq)	0.9461	lit (liter)
gal (US liq)	3.785	lit (liter)
lb/in	0.017855	kg/mm
psi (lb/in)	0.07031	kg/cm
Fahrenheit (°F)	5/9 (F°-32)	Centigrade (°C)

LUBRICATION DIAGRAMS

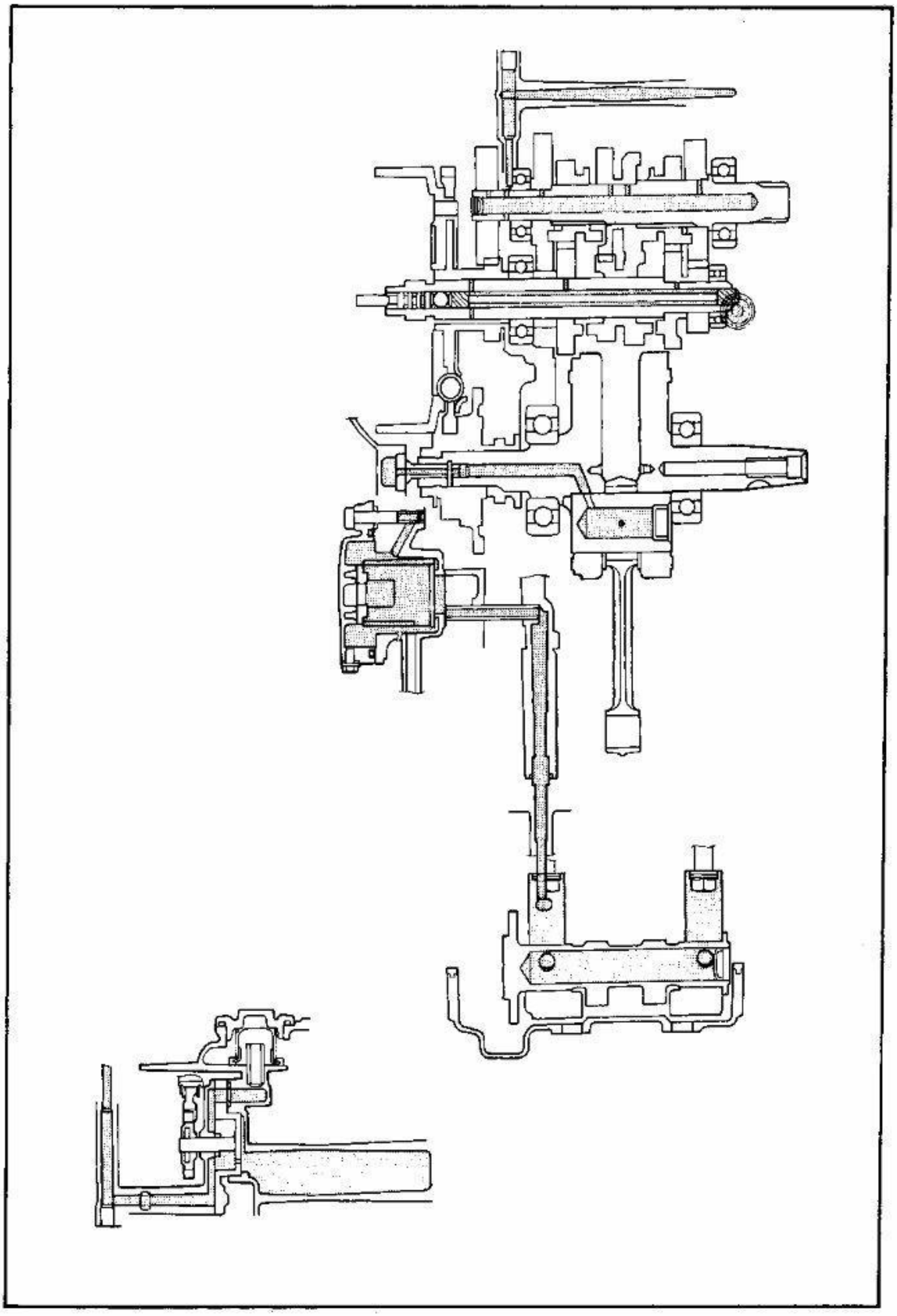

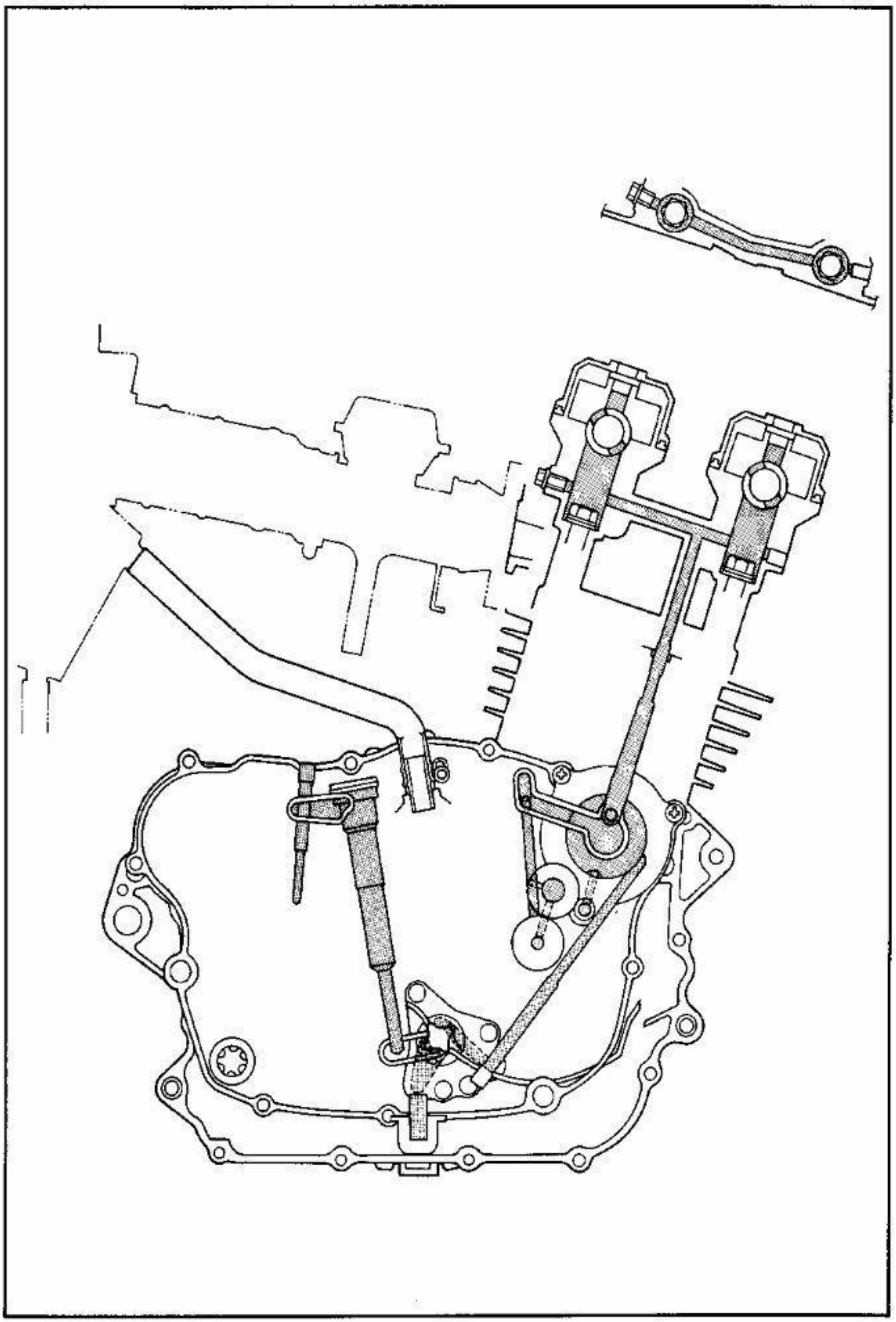

CABLE ROUTING

① Handlebar switch lead (Left)
② Clutch cable
③ Front flasher light lead
④ Speedometer cable
⑤ Tachometer cable
⑥ Throttle cable
⑦ Handlebar switch lead (Right)
⑧ Front brake switch lead
⑨ Brake hose
⑩ Meter leads
⑪ Main switch lead

[A] Route it in front of the front forks to the right side of the cylinder head and the rear of the under-bracket.
[B] Pass it from the left side of the meter and through the cable guide on the steering head pipe, and connect it on the inner side of the side cover 3.
[C] Route it behind the horn stay.
[D] Route it in front of the front forks and behind the throttle cable and tachometer cable. Next, clamp it to the right front of the under-bracket and route it in front of the front forks.
[E] Route in front of the brake hose and behind the underbracket, then route it through the cable guide on the down-tube (Right).
[F] Route it in front of the front forks, brake hose, and tachometer cable, and route it on the left side of head pipe, then insert into side cover 3.
[G] Route it on the right side of the meter and the right side of the steering head pipe, and connect it inside the side cover 4.
[H] Route it on the right side of the meter and the right side of the steering head pipe, and connect it inside the side cover 4.
[I] Route them on the right side of the steering head pipe and connect inside the side cover.
[J] Route it on the right side of the steering head pipe and connect it inside the side cover 4.

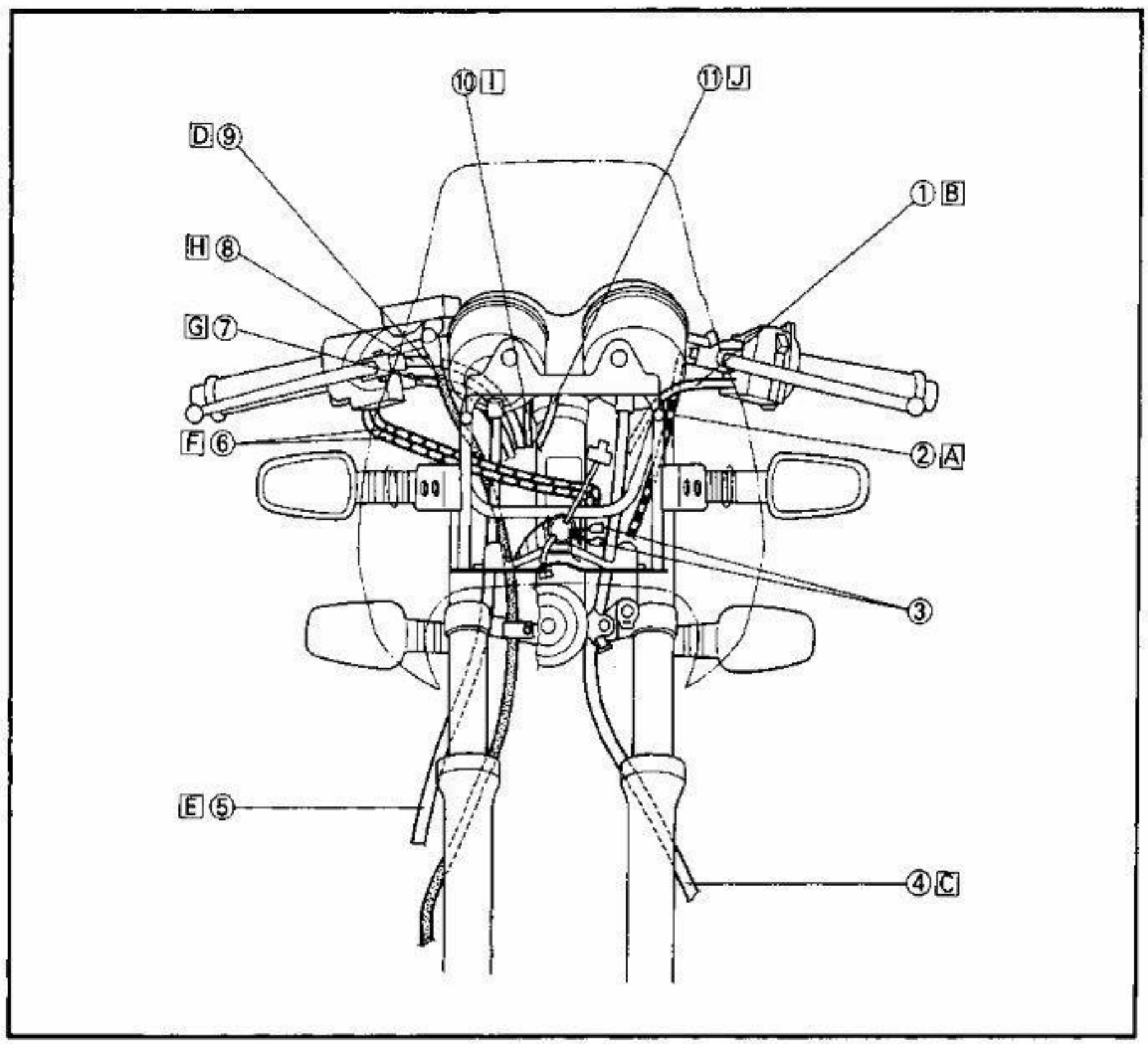

① Front flasher light leads
② Throttle cables
③ Handlebar switch lead (Right)
④ Handlebar switch lead (Left)
⑤ Clutch cable
⑥ Wire harness
⑦ Flasher relay
⑧ Ground
⑨ Clutch cable
⑩ Handlebar switch lead (Left)
⑪ Throttle cable

A As shown, install the flasher lead in the gap between the cowling stay 1 and headlight assembly.
B Pass the throttle cable through the clamp.
C Turn the rectifier-regulator lead upward.
D Pass the clutch cable through the cable guide.

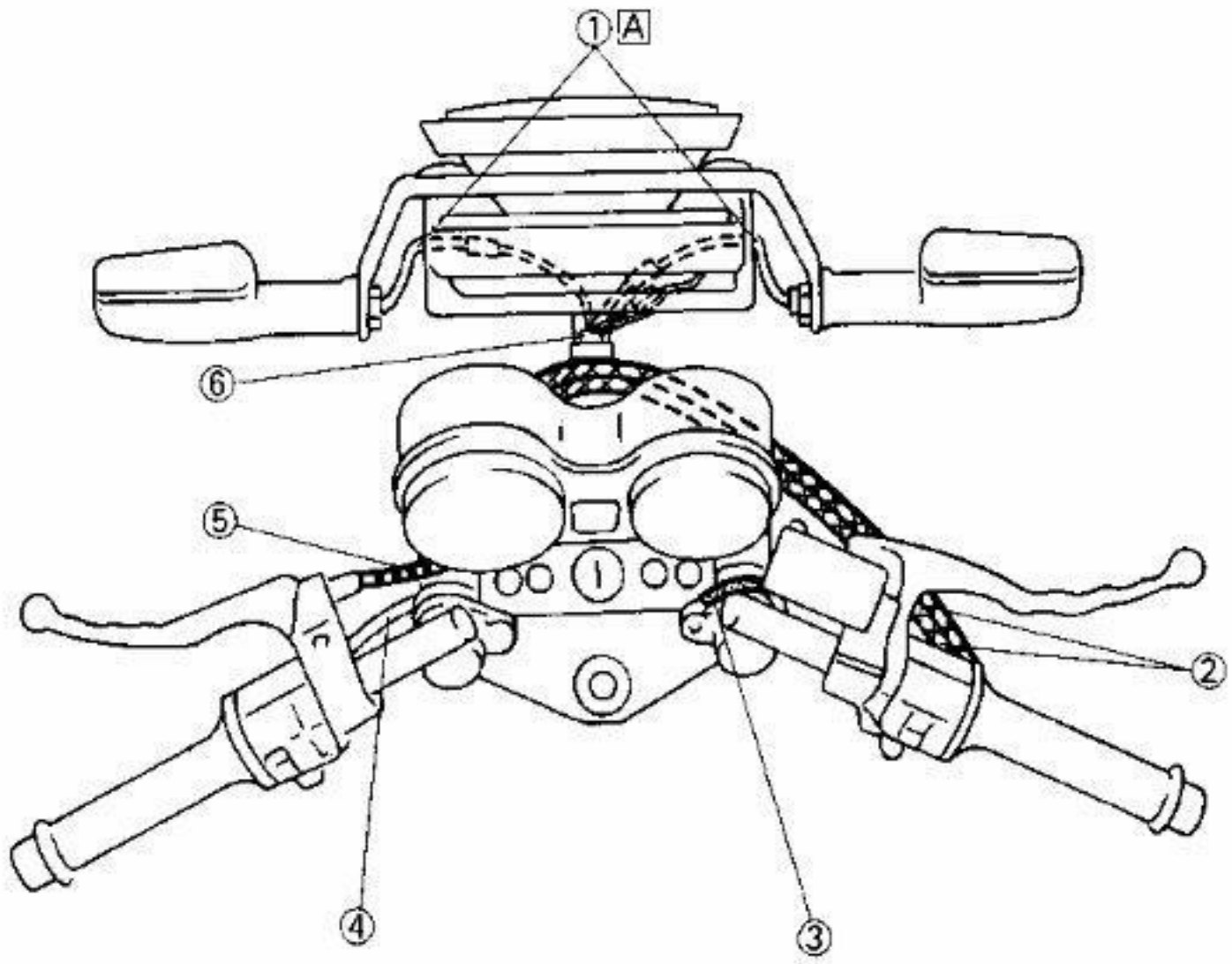

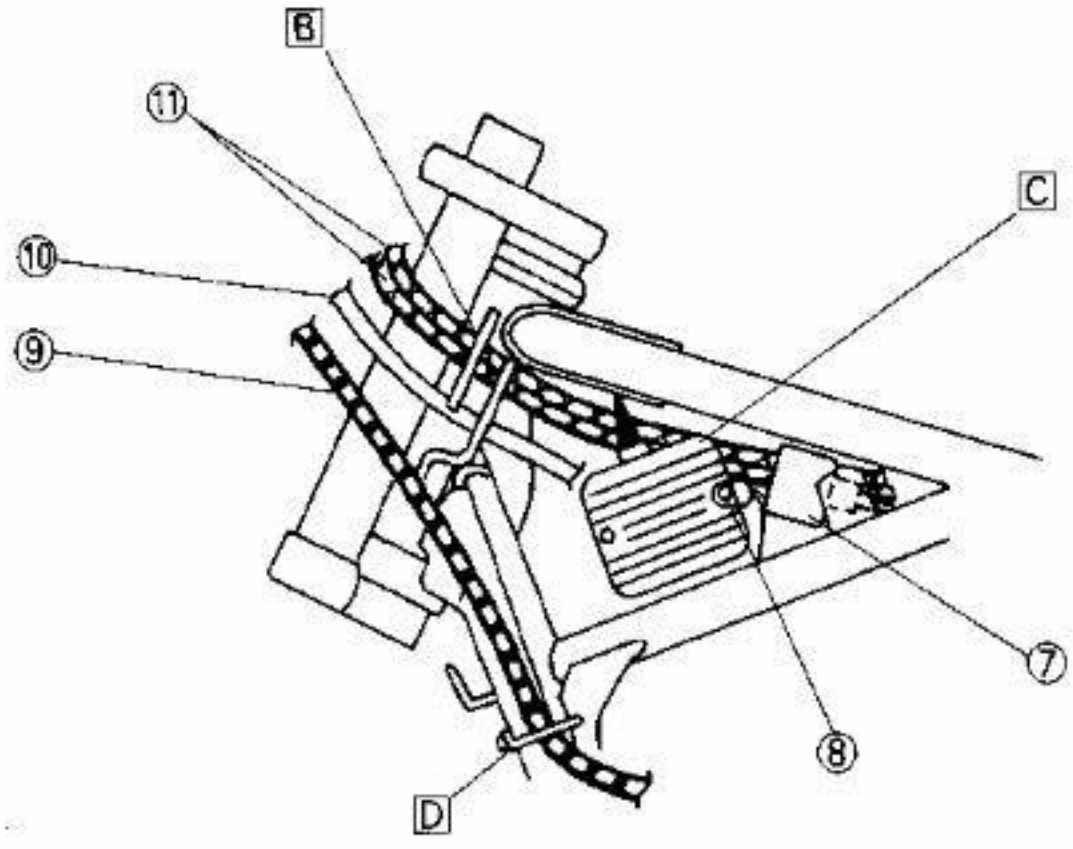

① Ignitor unit
② Battery
③ Battery positive lead
④ To the circuit breaker
⑤ Starter relay
⑥ Starter motor lead
⑦ Rear arm
⑧ Cable guide
⑨ Battery breather pipe
⑩ Gray marking
⑪ Throttle cables 1, 2
⑫ Flasher cancelling unit
⑬ Sidestand relay
⑭ Sidestand switch lead
⑮ Sidestand switch

[A] Set the clutch cable end so that the clutch cable can pass straight through the clamp.
[B] Pass it through the clamp and route it between the rear cushion and rear arm and leave it hanging.
[C] Route this portion behind the engine stay.
[D] Secure the three leads and starter motor lead to the cross pipe with the band.
[E] Clamp the throttle cables at the centers of the threaded portions.

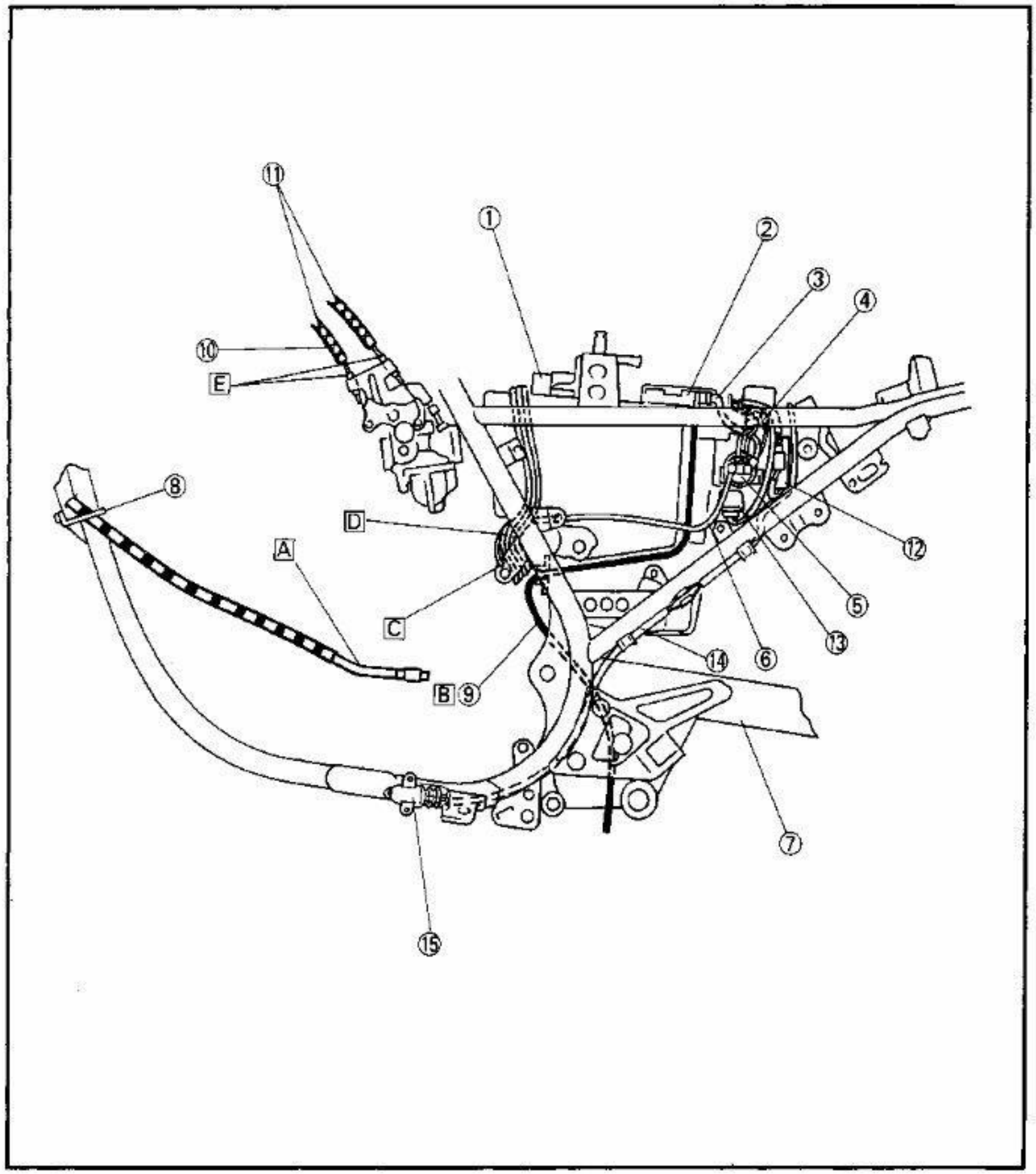

① Flasher relay
② Rectifier/Regulator
③ Handlebar switch lead
④ Ignition coil lead
⑤ Main switch lead
⑥ Ignition coil
⑦ Starting circuit cut-off relay
⑧ Front brake switch lead
⑨ Clamp
⑩ 6pin-coupler
⑪ Battery ground lead
⑫ To the fuel tank
⑬ Circuit breaker
⑭ Wire harness
⑮ Rear flasher light lead (Right)
⑯ Taillight lead
⑰ Rear flasher light lead (Left)
⑱ Battery positive lead
⑲ 7pin-coupler
⑳ Starter relay
㉑ Battery
㉒ Ignitor unit
㉓ Band

[A] Secure the ground lead, together with the regulator.
[B] Route the throttle cables 1 and 2 behind the rectifier-regulator and over the wire harness. (Excluding the rectifier lead)
[C] Route over the throttle cables 1 and 2 and connect the lead.
[D] Align the white tape on the wire harness with the cross pipe.
[E] Make sure this portion is not pinched by the rear fender cover.
[F] Route the negative lead under the ignitor unit.

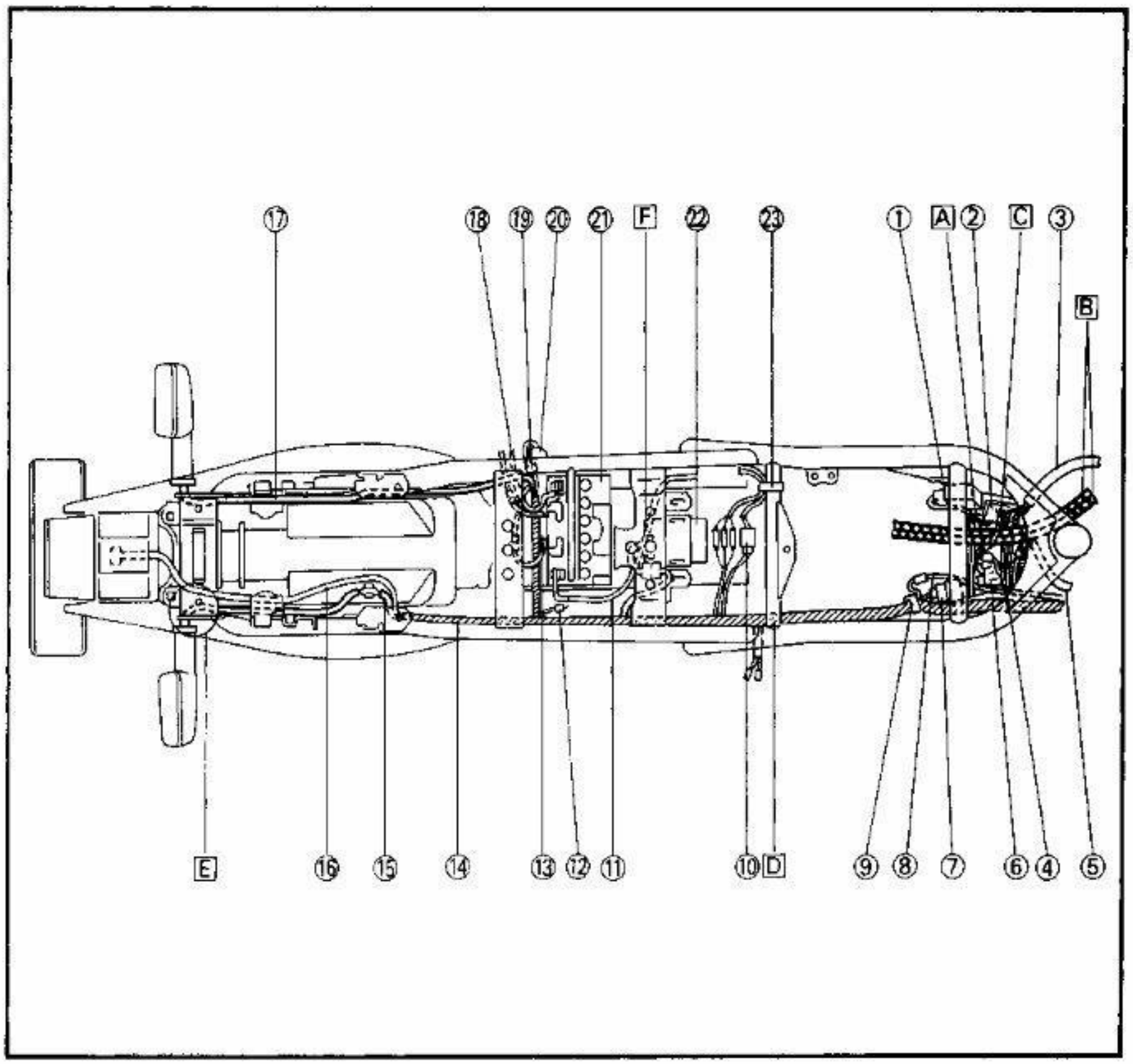

① Starting circuit cut-off relay
② Main switch lead
③ Handlebar switch lead (Right)
④ Meter lead
⑤ Front brake switch lead
⑥ Throttle cable 1, 2
⑦ Band
⑧ Brake hose
⑨ Speedometer cable
⑩ Ignition coil
⑪ Tachometer cable
⑫ Starter motor lead
⑬ Rear brake switch
⑭ Rear brake switch lead
⑮ Wire harness
⑯ Battery
⑰ Battery negative lead
⑱ To the fuel tank sender
⑲ Ignitor unit

[A] Insert the cables into the opening of side cover 4.
[B] Clamp to the outer tube.
[C] Route the cable between the under-bracket and horn and pass through the cable guide.
[D] Pass the tachometer cable through the cable guide.
[E] Route the lead under the engine hanger.

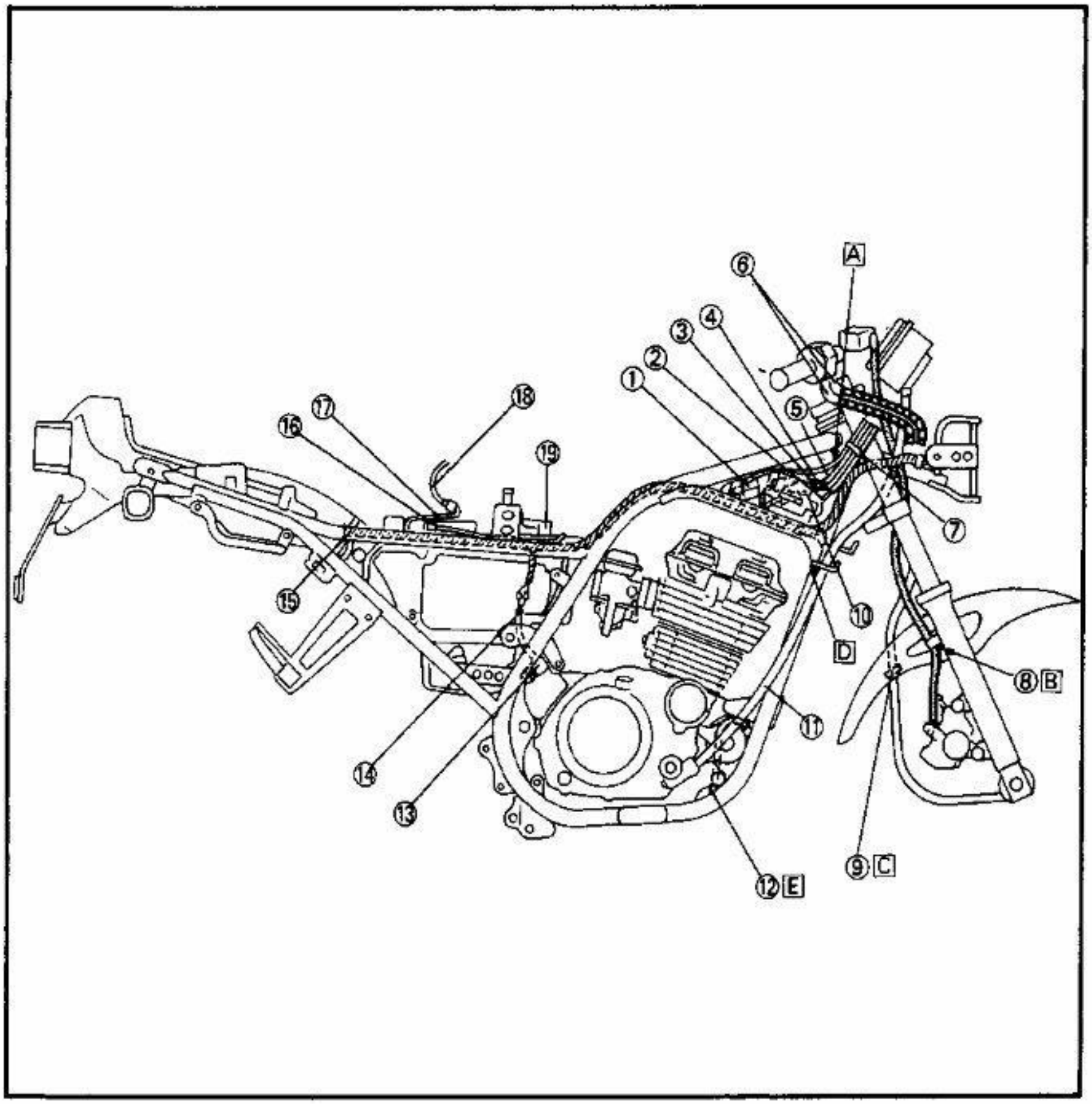

SRX250TC ONLY

① Carburetor
② Canister
③ Roll over valve
④ Hose (To fuel tank)
⑤ Hose (To carburetor)
⑥ Fuel tank
⑦ Breather hose
⑧ Over flow pipe

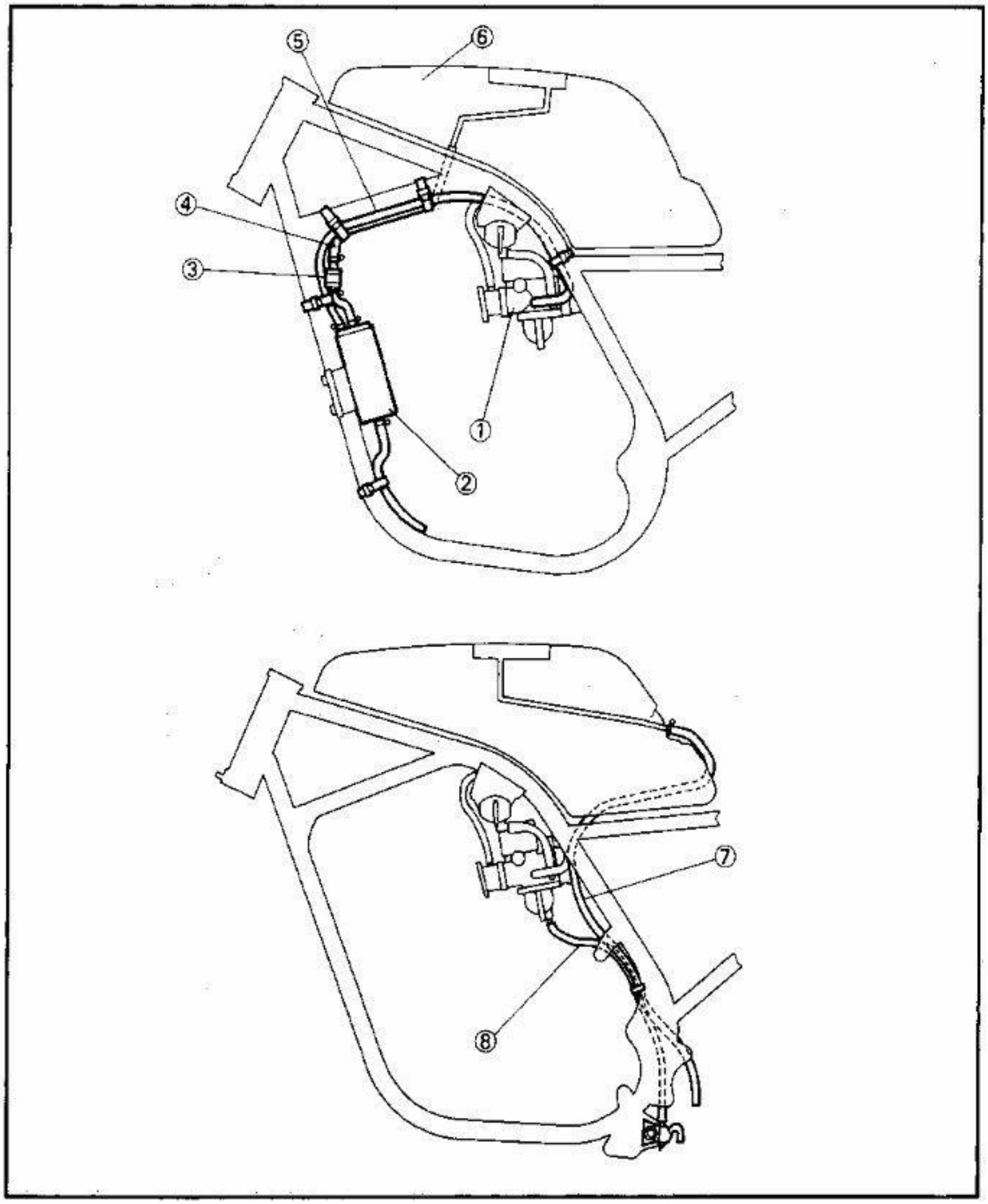

SRX250T/TC WIRING DIAGRAM

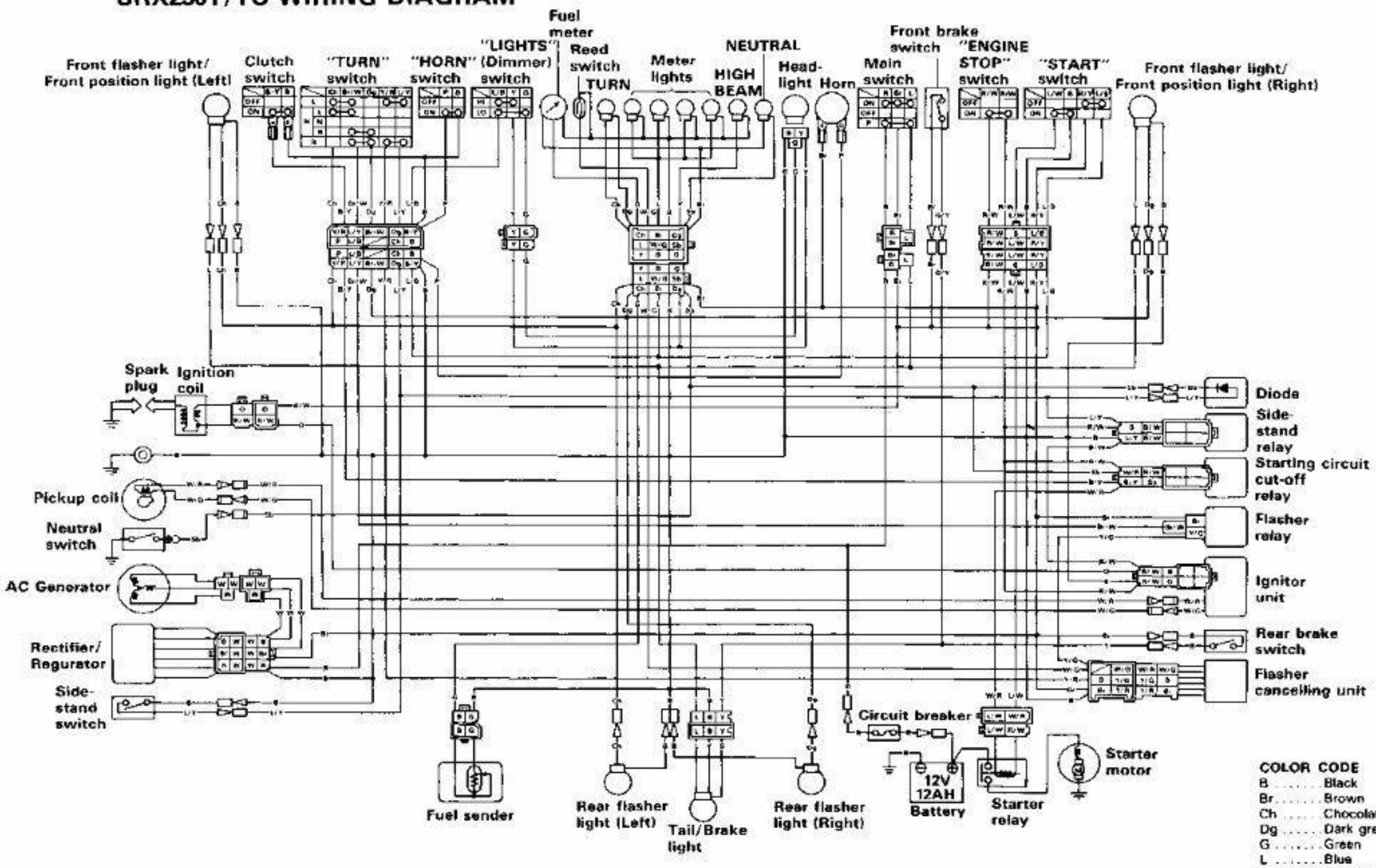

COLOR CODE

B	Black	B/Y	Black/Yellow
Br	Brown	Br/W	Brown/White
Ch	Chocolate	G/Y	Green/Yellow
Dg	Dark green	L/B	Blue/Black
G	Green	L/W	Blue/White
L	Blue	L/Y	Blue/Yellow
O	Orange	R/W	Red/White
P	Pink	R/Y	Red/Yellow
R	Red	W/B	White/Black
Sb	Sky blue	W/G	White/Green
W	White	W/R	White/Red
Y	Yellow	Y/G	Yellow/Green
B/W	Black/White	Y/R	Yellow/Red

YAMAHA MOTOR CO.,LTD.

IWATA, JAPAN

PRINTED IN U.S.A.