2010 Harley-Davidson Sportster Models Service Manual

ABOUT THIS MANUAL

GENERAL

This Service Manual has been prepared with two purposes in mind. First, it will acquaint the user with the construction of the Harley-Davidson product and assist in the performance of basic maintenance and repair. Secondly, it will introduce to the professional Harley-Davidson Technician the latest field-tested and factory-approved major repair methods. We sincerely believe that this Service Manual will make your association with Harley-Davidson products more pleasant and profitable.

HOW TO USE YOUR SERVICE MANUAL

Refer to the table below for the content layout of this manual.

NO.	CHAPTER
1	Maintenance
2	Chassis
3	Engine
4	Fuel System
5	Drive/Transmission
6	Electrical
A	Appendix A Connector Repair
B	Appendix B Wiring
C	Appendix C Conversions
D	Appendix D Compensating Sprocket
E	Appendix E Glossary

Use the TABLE OF CONTENTS (which follows this FOREWORD) and the INDEX (at the back of this manual) to quickly locate subjects. Sections and topics in this manual are sequentially numbered for easy navigation.

For example, a cross-reference shown as **2.1 SPECIFICATIONS** refers to chapter 2 CHASSIS, heading 2.1 SPECIFICATIONS.

For quick and easy reference, all pages contain a section number followed by a page number. For example, **page 3-5** refers to page 5 in section 3.

A number of acronyms and abbreviations are used in this document. See the E.1 GLOSSARY for a list of acronyms, abbreviations and definitions.

PREPARATION FOR SERVICE

⚠WARNING

Stop the engine when refueling or servicing the fuel system. Do not smoke or allow open flame or sparks near gasoline. Gasoline is extremely flammable and highly explosive, which could result in death or serious injury. (00002a)

Good preparation is very important for efficient service work. A clean work area at the start of each job will allow you to perform the repair as easily and quickly as possible, and will reduce the incidence of misplaced tools and parts. A motorcycle that is excessively dirty should be cleaned before work starts. Cleaning will occasionally uncover sources of trouble. Tools, instruments and any parts needed for the job should be gathered before work is started. Interrupting a job to locate tools or parts is a distraction and causes needless delay.

NOTES

- *To avoid unnecessary disassembly, carefully read all relative service information before repair work is started.*
- *In figure legends, the number which follows the name of a part indicates the quantity necessary for one complete assembly.*
- *When servicing a vehicle equipped with the Harley-Davidson Smart Security System (H-DSSS), you must first disarm the security system. Either keep the fob in close proximity to the vehicle, or use Digital Technician II to disable the security system while the vehicle is being serviced and re-enable the system after service is completed.*

SERVICE BULLETINS

In addition to the information presented in this Service Manual, Harley-Davidson Motor Company will periodically issue Service Bulletins to Harley-Davidson dealers. Service Bulletins cover interim engineering changes and supplementary information. Consult the Service Bulletins to keep your product knowledge current and complete.

USE GENUINE REPLACEMENT PARTS

⚠WARNING

Do not use aftermarket parts and custom made front forks which can adversely affect performance and handling. Removing or altering factory installed parts can adversely affect performance and could result in death or serious injury. (00001a)

To ensure satisfactory and lasting repairs, carefully follow the Service Manual instructions and use only genuine Harley-Davidson replacement parts. Behind the emblem bearing the words GENUINE HARLEY-DAVIDSON stand more than 100 years of design, research, manufacturing, testing and inspecting experience. This is your assurance that the parts you are using will fit right, operate properly and last longer.

WARNINGS AND CAUTIONS

Statements in this service manual preceded by the following words are of special significance.

⚠WARNING

WARNING indicates a potentially hazardous situation which, if not avoided, could result in death or serious injury. (00119a)

⚠CAUTION

CAUTION indicates a potentially hazardous situation which, if not avoided, may result in minor or moderate injury. (00139a)

CAUTION

CAUTION used without the safety alert symbol indicates a potentially hazardous situation which, if not avoided, may result in property damage. (00140a)

NOTE

Refers to important information, and is placed in italic type. It is recommended that you take special notice of these items.

Proper service and repair is important for the safe, reliable operation of all mechanical products. The service procedures recommended and described in this service manual are effective methods for performing service operations.

⚠WARNING

Always wear proper eye protection when using hammers, arbor or hydraulic presses, gear pullers, spring compressors, slide hammers and similar tools. Flying parts could result in death or serious injury. (00496b)

Some of these service operations require the use of tools specially designed for the purpose. These special tools should be used when and as recommended. It is important to note that some warnings against the use of specific service methods, which could damage the motorcycle or render it unsafe, are stated in this service manual. However, please remember that these warnings are not all-inclusive. Inadequate safety precautions could result in death or serious injury.

Since Harley-Davidson could not possibly know, evaluate or advise the service trade of all possible ways in which service might be performed, or of the possible hazardous consequences of each method, we have not undertaken any such broad evaluation. Accordingly, anyone who uses a service procedure or tool which is not recommended by Harley-Davidson must first thoroughly satisfy himself that neither his nor the operator's safety will be jeopardized as a result. Failure to do so could result in death or serious injury.

PRODUCT REFERENCES

⚠WARNING

Read and follow warnings and directions on all products. Failure to follow warnings and directions can result in death or serious injury. (00470b)

When reference is made in this manual to a specific brand name product, tool or instrument, an equivalent product, tool or instrument may be substituted.

Kent-Moore Products

All tools mentioned in this manual with an "HD", "J" or "B" preface must be ordered through SPX Kent-Moore. For ordering information or product returns, warranty or otherwise, visit www.spx.com.

Loctite Sealing and Threadlocking Products

Some procedures in this manual call for the use of Loctite products. If you have any questions regarding Loctite product usage or retailer/wholesaler locations, please contact Loctite Corp. at www.loctite.com.

PRODUCT REGISTERED MARKS

Alcantara S.p.A., Allen, Amp Multilock, Bluetooth, Brembo, Delphi, Deutsch, Dunlop, Dynojet, Fluke, G.E. Versilube, Gunk, Hydroseal, Hylomar, Kevlar, Lexan, Loctite, Lubriplate, Keps, K&N, Magnaflux, Marson Thread-Setter Tool Kit, MAXI fuse, Molex, Michelin, MPZ, Mulitilock, NGK, Novus, Packard, Pirelli, Permatex, Philips, PJ1, Pozidriv, Robinair, S100, Sems, Snap-on, Teflon, Threadlocker, Torca, Torco, TORX, Tufoil, Tyco, Ultratorch, Velcro, X-Acto, and XM Satellite Radio are among the trademarks of their respective owners.

H-D MICHIGAN, INC. TRADEMARK INFORMATION

Harley, Harley-Davidson, H-D, Bar & Shield, Cross Bones, Digital Tech, Digital Technician, Digital Technician II, Dyna, Electra Glide, Evolution, Fat Bob, Fat Boy, Glaze, Gloss, H-D, H-Dnet.com, HD, Harley, Harley-Davidson, Heritage Softail, Low Rider, Night Rod, Nightster, Night Train, Profile, Revolution, Road Glide, Road King, Road Tech, Rocker, Softail, Sportster, Street Glide, Street Rod, Sun Ray, Sunwash, Tech Link, Twin Cam 88, Twin Cam 88B, Twin Cam 96, Twin Cam 96B, Twin Cam 103, Twin Cam 103B, Twin Cam 110, Twin Cam 110B, Tour-Pak, Screamin' Eagle, Softail, Super Glide, SYN3, Ultra Classic, V-Rod, VRSC and Harley-Davidson Genuine Motor Parts and Genuine Motor Accessories are among the trademarks of H-D Michigan, Inc.

CONTENTS

All photographs, illustrations and procedures may not necessarily depict the most current model or component, but are based on the latest production information available at the time of publication.

Since product improvement is our continual goal, Harley-Davidson reserves the right to change specifications, equipment or designs at any time without notice and without incurring obligation.

MAINTENANCE

1.1 FASTENER TORQUE VALUES

Fastener Torque Values in this Chapter....1-1

1.2 GENERAL

Servicing a New Motorcycle....1-3
Safe Operating Maintenance....1-3
Shop Practices....1-3
- Repair Notes....1-3
- Safety....1-3
- Removing Parts....1-3
- Cleaning....1-3
- Disassembly and Assembly....1-4
- Checking Torques on Fasteners....1-4
- Magnetic Parts Trays....1-4

Repair and Replacement Procedures....1-4
- Hardware and Threaded Parts....1-4
- Threadlocking Agents....1-4
- Wiring, Hoses and Lines....1-4
- Instruments and Gauges....1-4
- Bearings....1-4
- Bushings....1-4
- Gaskets....1-4
- Lip-Type Seals....1-4
- O-Rings (Pre-Formed Packings)....1-4
- Gears....1-5
- Shafts....1-5
- Part Replacement....1-5
- Exhaust System Leakage....1-5

Cleaning....1-5
- Part Protection....1-5
- Cleaning Process....1-5
- Rust or Corrosion Removal....1-5
- Bearings....1-5

Tool Safety....1-5
- Air Tools....1-5
- Wrenches....1-5
- Pliers/Cutters/Pry Bars....1-5
- Hammers....1-5
- Punches/Chisels....1-6
- Screwdrivers....1-6
- Ratchets and Handles....1-6
- Sockets....1-6
- Storage Units....1-6

1.3 FUEL AND OIL

Fuel....1-7
Gasoline Blends....1-7
Engine Lubrication....1-7
Winter Lubrication....1-8

1.4 BULB REQUIREMENTS

Bulb Chart....1-9

1.5 MAINTENANCE SCHEDULE

General....1-10

1.6 ENGINE OIL AND FILTER

Checking and Adding Oil....1-14
- Removing and Replacing Oil Filler Cap....1-14
- Oil Level Cold Check....1-14
- Oil Level Hot Check....1-15

Changing Oil and Filter....1-15
- Draining Oil Tank....1-15
- Removing Oil Filter....1-15
- Installing Oil Filter....1-16
- Refilling Oil Tank....1-16

1.7 BRAKES

General....1-18
Inspection....1-18
Troubleshooting....1-19

1.8 BLEEDING HYDRAULIC BRAKE SYSTEM

General....1-20
Bleeding Front Brake: All Models....1-20
Bleeding Rear Brake: All Models....1-22

1.9 BRAKE PADS AND DISCS: XL MODELS

Inspection....1-24
- Brake Pads....1-24
- Brake Disc Thickness, Lateral Runout and Warpage....1-24

Brake Pad Replacement: Front....1-24
Brake Pad Replacement: Rear....1-27

1.10 BRAKE PADS AND DISCS: XR MODELS

Inspection....1-31
- Brake Pads....1-31
- Brake Disc Thickness, Lateral Runout and Warpage....1-31

Brake Pad Replacement: Front....1-31
- Removal....1-31
- Installation....1-32

Brake Pad Replacement: Rear....1-33
- Removal....1-33
- Installation....1-34

1.11 TIRES AND WHEELS

Tires....1-36
Tire Replacement....1-36
- Inspection....1-36
- When To Replace Tires....1-36

Wheel Bearings....1-37
Wheel Spokes....1-37
- Identify Wheel Spoke Groups....1-37
- Wheel Spoke Adjustment....1-37

1.12 PRIMARY CHAIN

Inspection....1-39
Adjustment....1-39

1.13 CLUTCH

Adjustment....1-41

1.14 TRANSMISSION LUBRICANT

Transmission Lubrication....1-43
- Check Lubricant Level....1-43
- Changing Lubricant....1-44

1.15 DRIVE BELT AND SPROCKETS

General....1-45
Cleaning....1-45
Inspection....1-45
- Sprockets....1-45
- Idler Pulley: XR Models....1-45
- Drive Belt....1-45

Checking Drive Belt Deflection....1-47
- General....1-47

Gauging Deflection....1-47
Belt Deflection Adjustment....1-48

1.16 WHEEL ALIGNMENT

Wheel Alignment....1-50
Checking Wheel Alignment....1-50
Adjusting Wheel Alignment....1-51

1.17 BATTERY MAINTENANCE

General....1-52
Battery Disconnection and Removal....1-53
Cleaning and Inspection....1-54
Voltmeter Test....1-54
Voltmeter Test....1-54
Charging Battery....1-54
Safety Precautions....1-54
Using a Battery Charger....1-54
Battery Installation and Connection....1-55
Storage....1-56

1.18 SPARK PLUGS

General....1-58
Inspection....1-58
Spark Plug Cable Inspection....1-58

1.19 STEERING HEAD BEARINGS

Adjustment....1-60
Lubrication....1-60

1.20 SHOCK ABSORBER ADJUSTMENT

Shock Absorber Preload Adjustment: Sportster Models Except XR 1200X....1-62
Shock Absorber Suspension Adjustment: XR 1200X....1-62
Shock Absorber Preload Adjustment....1-62
Shock Absorber Rebound Damping Adjustment....1-62
Shock Absorber Compression Damping Adjustment....1-63

1.21 CABLE AND CHASSIS LUBRICATION

General....1-64
Cables and Hand Levers....1-64
Foot Shift Lever and Rear Brake Pedal....1-64
Jiffy Stand....1-64
Steering Head Bearings....1-64

1.22 AIR CLEANER: XL MODELS

General....1-65
Removal....1-65
Cleaning, Inspection and Repair....1-65
Installation....1-66

1.23 AIR CLEANER: XR MODELS

General....1-67
Removal....1-67
Cleaning, Inspection and Repair....1-68
Installation....1-68

1.24 EXHAUST SYSTEM

Exhaust System Leak Check....1-70

1.25 THROTTLE CONTROL

Cable Inspection and Lubrication....1-71
Cable Adjustment....1-71

1.26 FUEL SUPPLY FILTER

General....1-72
Removal....1-72
Installation....1-72

1.27 ENGINE MOUNTS AND STABILIZER LINKS

Inspection....1-73

1.28 HEADLAMP ALIGNMENT

Headlamp Alignment....1-74
Headlamp Adjustment: Sportster Models....1-74
Adjustment (XL 883C and XL 1200C Models)....1-74
Adjustment (All Models Except XL 883C and XL 1200C)....1-75

1.29 CRITICAL FASTENERS

Inspection....1-76
Checking Torques on Fasteners....1-76

1.30 STORAGE

General....1-78
Placing in Storage....1-78
Removal From Storage....1-78

1.31 TROUBLESHOOTING

General....1-80
Engine....1-80
Starter Motor Does Not Operate or Does Not Turn Engine Over....1-80
Engine Turns Over But Does Not Start....1-80
Starts Hard....1-80
Starts But Runs Irregularly or Misses....1-80
Spark Plug Fouls Repeatedly....1-80
Pre-Ignition or Detonation (Knocks or Pings)....1-81
Check Engine Light Illuminates During Operation....1-81
Overheating....1-81
Valve Train Noise....1-81
Excessive Vibration....1-81
Lubrication System....1-81
Oil Does Not Return To Oil Tank....1-81
Engine Uses Too Much Oil Or Smokes Excessively...1-81
Engine Leaks Oil From Cases, Push Rods, Hoses, Etc....1-81
Low Oil Pressure....1-81
High Oil Pressure....1-82
Electrical System....1-82
Alternator Does Not Charge....1-82
Alternator Charge Rate Is Below Normal....1-82
Speedometer Operates Erratically....1-82
Transmission....1-82
Shifts Hard....1-82
Jumps Out Of Gear....1-82
Clutch Slips....1-82
Clutch Drags Or Does Not Release....1-82
Clutch Chatters....1-82

Handling....1-82
Brakes....1-82
Brake Does Not Hold Normally....1-82

CHASSIS

2.1 FASTENER TORQUE VALUES

Fastener Torque Values in this Chapter....2-1

2.2 SPECIFICATIONS

Sportster Specifications....2-9
Chassis Specifications....2-9
Tire Specifications....2-11

2.3 VEHICLE IDENTIFICATION NUMBER (V.I.N.)

Vehicle Identification Number (V.I.N.)....2-12
General....2-12
Location....2-12
Abbreviated V.I.N....2-12

2.4 WHEELS

General....2-14
Troubleshooting....2-14
Front Wheel....2-15
Removal....2-15
Disassembly: Cast Front Wheel....2-16
Disassembly: Laced Front Wheel....2-16
Cleaning and Inspection....2-16
Assembly: Cast Front Wheel....2-16
Assembly: Laced Front Wheel....2-17
Installation....2-21
Rear Wheel....2-21
Removal....2-21
Disassembly....2-22
Cleaning and Inspection....2-22
Assembly....2-22
Installation....2-25
Sealed Wheel Bearings....2-25
Inspection....2-25
Removal....2-26
Installation....2-28

2.5 WHEEL LACING: 16 INCH RIM

Wheel Lacing: Angle Flange Hub....2-29

2.6 WHEEL LACING: 19 INCH RIM

Wheel Lacing: Straight Flange Hub, Single Hole Circle....2-31

2.7 WHEEL LACING: 21 INCH RIM

Wheel Lacing: Straight Flange Hub, Dual Hole Circle....2-33

2.8 CHECKING AND TRUING WHEELS

General....2-35
Checking Wheel Runout....2-35
Lateral Runout....2-35
Radial Runout....2-35
Setting Rim Offset....2-36
Truing Wheels....2-37
Radial Truing....2-37
Lateral Truing....2-38

2.9 FRONT BRAKE MASTER CYLINDER

General....2-40
Inspection....2-40
Removal....2-40
Disassembly....2-42
Cleaning, Inspection and Repair....2-44
Assembly....2-44
Installation....2-45

2.10 FRONT BRAKE CALIPER: XL MODELS

Removal....2-49
Disassembly....2-50
Cleaning, Inspection and Repair....2-52
Assembly....2-53
Lubricating Front Caliper Bolt Pins and Boots....2-53
Installing Brake Pads in Caliper....2-54
Installation....2-55

2.11 FRONT BRAKE CALIPER: XR MODELS

Removal....2-57
Disassembly....2-58
Cleaning, Inspection and Repair....2-59
Assembly....2-60
Installation....2-61

2.12 REAR BRAKE MASTER CYLINDER: XL MODELS

General....2-62
Inspection....2-62
Removal....2-62
Disassembly....2-65
Cleaning, Inspection and Repair....2-66
Assembly....2-67
Installation....2-69

2.13 REAR BRAKE MASTER CYLINDER: XR MODELS

General....2-70
Inspection....2-70
Removal....2-70
Disassembly....2-71
Cleaning, Inspection and Repair....2-72
Assembly....2-72
Installation....2-73

2.14 REAR BRAKE MASTER CYLINDER RESERVOIR

General....2-75
Removal: XL Models....2-75
Installation: XL Models....2-76
Removal: XR Models....2-76
Installation: XR Models....2-77

2.15 REAR BRAKE CALIPER: XL MODELS

Removal....2-78
Disassembly....2-80
Cleaning, Inspection and Repair....2-81
Lubricating Rear Caliper Bolt Pins and Boots....2-81

Assembly....2-82
Installation....2-83

2.16 REAR BRAKE CALIPER: XR MODELS

Removal....2-85
Disassembly....2-86
Cleaning, Inspection and Repair....2-88
Assembly....2-88
Installation....2-89

2.17 BRAKE LINES

Front Brake Line: All Models....2-91
Removal....2-91
Installation....2-92
Rear Brake Line: XL Models....2-93
Removal....2-94
Installation....2-94
Rear Brake Line: XR Models....2-95
Removal....2-95
Installation....2-96

2.18 TIRES

General....2-97
Removal....2-97
Cleaning, Inspection and Repair....2-97
Installation....2-98
Tube Type Tires....2-98
Tubeless Tires....2-98
Checking Tire Runout....2-99
Lateral Runout....2-99
Radial Runout....2-99
Wheel Balancing....2-100
Weights....2-100

2.19 LEFT SIDE COVER

General....2-101
Opening Left Side Cover....2-101
Closing Left Side Cover....2-102
Removing Left Side Cover....2-102
Installing Left Side Cover....2-102

2.20 FRONT FORK: XL MODELS

General....2-104
Changing Fork Oil: XL Models....2-104
Drain Forks....2-104
Fill Forks....2-104
Removal....2-104
Disassembly....2-104
Drain Fork Oil....2-104
Fork Disassembly....2-105
Cleaning, Inspection and Repair....2-107
Assembly....2-107
Initial Assembly....2-107
Fill with Fork Oil....2-108
Installation....2-109

2.21 FRONT FORK: XR MODELS

General....2-110
Removal....2-110
Disassembly: XR 1200....2-110
Left Fork: Initial Disassembly....2-110
Drain Oil....2-111
Left Fork: Final Disassembly....2-112
Right Fork: Initial Disassembly....2-112
Drain Fork Oil....2-113
Right Fork: Complete Disassembly....2-113
Disassembly: XR 1200X....2-114
Initial Disassembly....2-114
Drain the Fork Oil....2-115
Complete Disassembly....2-115
Cleaning and Inspection....2-116
Assembly: XR 1200....2-117
Left Fork: Initial Assembly....2-117
Left Fork: Fill with Fork Oil....2-118
Left Fork: Complete Assembly....2-118
Right Fork: Initial Assembly....2-119
Right Fork: Fill with Fork Oil....2-120
Right Fork: Complete Assembly....2-120
Assembly: XR 1200X....2-121
Piston Rod Service....2-121
Initial Assembly....2-122
Fill with Fork Oil....2-123
Complete Assembly....2-124
Installation....2-124
General Suspension Adjustment: XR 1200X....2-124
Changes in Load....2-125
Front Fork Suspension Adjustment: XR 1200X....2-125
Front Fork Preload Adjustment....2-125
Front Fork Rebound Damping Adjustment....2-125
Front Fork Compression Damping Adjustment....2-125

2.22 FORK STEM AND BRACKET ASSEMBLY

Removal and Disassembly....2-127
Cleaning, Inspection and Repair....2-127
Assembly and Installation....2-128

2.23 BELT GUARD AND DEBRIS DEFLECTOR

Belt Guard: XL Models....2-129
Removal....2-129
Installation....2-129
Debris Deflector: XL Models....2-129
Removal....2-129
Installation....2-129
Belt Guard: XR Models....2-129
Removal....2-129
Installation....2-129
Debris Deflector: XR Models....2-129
Removal....2-129
Installation....2-130

2.24 REAR FORK

General....2-131
Removal....2-131
Disassembly....2-131
Cleaning and Inspection....2-132
Assembly....2-132
Installation....2-132

2.25 SHOCK ABSORBERS

General....2-134

Removal....2-134
Cleaning and Inspection....2-134
Installation....2-134
Shock Disposal: Schrader Valve Models....2-135

2.26 STABILIZER LINKS

General....2-136
Upper Front Stabilizer Link....2-136
Removal....2-136
Installation....2-136
Lower Front Stabilizer Link....2-136
Removal....2-136
Installation....2-136
Rear Stabilizer Link....2-137
Removal....2-137
Installation....2-137

2.27 FRONT ENGINE MOUNT/ISOLATOR

Removal....2-138
Installation....2-139

2.28 REAR ENGINE MOUNT/ISOLATOR

Removal....2-140
Installation....2-142

2.29 THROTTLE CABLES: ALL MODELS

Removal and Disassembly....2-143
Cleaning, Inspection and Repair....2-144
Assembly and Installation....2-145

2.30 CLUTCH CONTROL

Removal and Disassembly....2-147
Clutch Cable: Lower....2-147
Clutch Lever and Clutch Cable: Upper....2-148
Clutch Hand Control....2-148
Assembly and Installation....2-149
Clutch Hand Control....2-149
Clutch Lever and Clutch Cable: Upper....2-150
Clutch Cable: Lower....2-150

2.31 HANDLEBARS

Removal....2-151
All Models....2-151
XL 883C and XL 1200C....2-151
All XL Models Except XL 883C, XL 1200C....2-152
XR 1200....2-153
Installation....2-154
XL 883C and XL 1200C....2-154
All XL Models Except XL 883C, XL 1200C....2-155
XR 1200....2-155
All Models....2-156

2.32 FRONT FENDER

XL Models....2-157
Removal....2-157
Installation....2-157
XR Models....2-157
Removal....2-157
Installation....2-157

2.33 REAR FENDER: ALL XL MODELS EXCEPT XL 883N/XL 1200N

General....2-158
Removal....2-158
Installation....2-160

2.34 REAR FENDER AND LICENSE PLATE BRACKET: XL 883N/XL 1200N

General....2-162
Removal and Disassembly....2-162
Assembly and Installation....2-164

2.35 REAR FENDER: XR MODELS

Removal....2-167
Installation....2-167

2.36 JIFFY STAND

General....2-168
Jiffy Stand Interlock: International Models....2-168
Removal....2-168
Cleaning and Lubrication....2-168
Installation....2-169

2.37 SEAT: XL MODELS

General....2-170
Seat Removal: XL Models....2-170
Seat Installation: XL Models....2-170

2.38 SEAT: XR MODELS

Seat Removal: XR Models....2-172
Seat Installation: XR Models....2-172
Passenger Pillion: XR Models....2-172
Removal....2-172
Installation....2-172

2.39 RIDER FOOT CONTROLS: XL MID-MOUNT CONTROLS

Right Footrest and Rear Brake Pedal Assembly....2-174
Removal....2-174
Installation....2-174
Left Footrest and Shift Lever Assembly....2-174
Removal....2-174
Installation....2-174

2.40 RIDER FOOT CONTROLS: XL FORWARD CONTROLS

Right Footrest and Rear Brake Pedal Assembly....2-176
Removal....2-176
Installation....2-176
Left Footrest and Shift Lever Assembly....2-177
Removal....2-177
Installation....2-178
Adjusting Shift Pedal....2-179

2.41 RIDER FOOT CONTROLS: XR MODELS

Right Footrest and Rear Brake Pedal Assembly....2-180
Removal....2-180
Installation....2-180
Left Footrest and Shift Lever Assembly....2-180

Removal....2-180
Installation....2-181
Adjusting Shift Pedal....2-181

2.42 PASSENGER FOOTRESTS

General....2-182
XL Models....2-182
Removal....2-182
Installation....2-182
XR Models....2-182
Removal....2-182
Installation....2-182

2.43 FORK LOCK

Removal....2-184
Installation....2-184

ENGINE

3.1 FASTENER TORQUE VALUES

Fastener Torque Values in this Chapter....3-1

3.2 SPECIFICATIONS

Specifications: Sportster Models....3-5

3.3 ENGINE

General....3-11

3.4 OIL PRESSURE

General....3-12
Oil Pressure Indicator Lamp....3-12
Checking Oil Pressure....3-13
Connecting Gauge: XL Models....3-13
Connecting Gauge: XR Models....3-13
Testing Pressure....3-13
Removing Gauge: XL Models....3-13
Removing Gauge: XR Models....3-13
Finalize Test....3-13

3.5 CRANKCASE BREATHING SYSTEM: XL MODELS

General....3-15

3.6 CRANKCASE BREATHING SYSTEM: XR MODELS

General....3-16

3.7 TROUBLESHOOTING

Diagnosing Valve Train Noise....3-18
Compression Test....3-18
Cylinder Leakage Test....3-18
Diagnosing Smoking Engine or High Oil Consumption....3-19
Check Prior to Cylinder Head Removal....3-19
Check After Cylinder Head Removal....3-19
Adjustment and Testing....3-19
General....3-19

3.8 ENGINE LUBRICATION SYSTEM

Oil Pump Operation....3-20
Oil Flow: XL Models....3-23
Oil Flow: XR Models....3-23

3.9 HOW TO USE THIS SECTION

Typical Symptoms....3-29
Top End Repair....3-29
Bottom End Repair....3-29

3.10 TOP END SERVICE

Engine in Chassis....3-30
Engine Removed from Chassis....3-31

3.11 BOTTOM END SERVICE

Engine in Chassis....3-32
Engine Removed From Chassis....3-33

3.12 REMOVING ENGINE FROM CHASSIS

General....3-34
Procedure: XL Models....3-34
Procedure: XR Models....3-38

3.13 INSTALLING ENGINE IN CHASSIS

General....3-43
Procedure: XL Models....3-43
Procedure: XR Models....3-45

3.14 PRECISION COOLING SYSTEM: XR MODELS

General....3-48
Return Oil Manifold....3-48
Removal....3-48
Installation....3-49
Cylinder Head Oil Return Lines....3-49
Removal....3-49
Installation....3-50
Cylinder Head Oil Feed Assembly....3-50
Removal....3-50
Installation....3-50
Oil Pump Lines....3-51
Removal....3-51
Installation....3-52
Oil Cooler....3-52
Removal....3-52
Installation....3-52

3.15 TOP END OVERHAUL: DISASSEMBLY

General....3-54
Stripping Motorcycle for Top End Repair....3-54
Cylinder Heads....3-55
Disassembling Rocker Covers....3-55
Removing Cylinder Head....3-57
Disassembling Push Rods and Covers....3-60
Cylinder and Piston....3-61

3.16 TOP END OVERHAUL: ASSEMBLY

General....3-63
Piston and Cylinder....3-63
Push Rods, Covers, and Retainers....3-64
Cylinder Head....3-66
Rocker Covers....3-69
Assembling Motorcycle After Top End Repair....3-72

3.17 BOTTOM END OVERHAUL: DISASSEMBLY

General....3-74
Tappets....3-74
Oil Pump: XL Models....3-74
Gearcase Cover and Cam Gears: XL Models....3-74
Oil Pump Housing/Gearcase Cover and Cam Gears: XR Models....3-75
Crankcase....3-76
Removing Piston Oil Jets....3-78
Removing Cylinder Base Studs....3-78

3.18 BOTTOM END OVERHAUL: ASSEMBLY

Crankcase....3-79
Installing Piston Oil Jets....3-79
Installing Pinion Shaft Bearings....3-79
Installing Left Main Bearing....3-81
Assembling Crankcase Halves....3-81
Installing Cylinder Base Studs....3-84
Cam Gears and Gearcase Cover: XL Models....3-84
Cam Gears and Gearcase Cover: XR Models....3-87
Tappets....3-90
Assembling Top End of Engine....3-91

3.19 VALVE TAPPETS

General....3-92
Removal....3-92
Cleaning and Inspection....3-92
Installation....3-92

3.20 GEARCASE COVER AND CAM GEARS

General....3-93
Removal and Disassembly....3-93
Cleaning, Inspection and Repair....3-93
Cam and Pinion Gear Identification, Inspection and Selection....3-93
Bushing Inspection and Removal: XL Only....3-94
Bushing Installation: XL Only....3-95
Cam Gear Bushings in Right Crankcase....3-95
Cam Gear Bushings (Except Rear Intake Bushing) in Gearcase Cover....3-95
Rear Intake Cam Gear Bushing in Gearcase Cover..3-95
Pinion Shaft Bushing in Gearcase Cover....3-95
Bushing Reaming: XL Only....3-96
Cam Gear Bushings in Right Crankcase....3-96
Cam Gear Bushings (Except Rear Intake Bushing) in Gearcase Cover....3-97
Rear Intake Cam Gear Bushing in Gearcase Cover..3-97
Pinion Shaft Bushing in Gearcase Cover....3-97
Assembly and Installation....3-98

3.21 CYLINDER HEAD

Removal....3-99
Disassembly....3-99
Cleaning and Inspection....3-101
Cylinder Heads....3-101
Rocker Arm Assemblies....3-101
Valves....3-102
Valve Seats....3-102
Valve Guides....3-103
Valve Springs....3-103
Spark Plug Threads....3-103
Push Rods....3-103
Replacing Rocker Arm Bushings....3-103
Replacing Valve Guides....3-104
Removal....3-104
Installation....3-106
Refacing Valve Seats....3-108
Replacing Valve Seats....3-110
Assembly....3-110
Installation....3-112

3.22 CYLINDER AND PISTON

Removal and Disassembly....3-113
Cleaning, Inspection and Repair....3-113
Checking Gasket Surface....3-113
Measuring Cylinder Bore....3-113
Measuring Piston to Cylinder Fit....3-114
Boring and Honing Cylinder....3-115
Fitting Piston Rings....3-115
Connecting Rod Bushings....3-117
Removing Upper Connecting Rod Bushings....3-117
Installing Upper Connecting Rod Bushings....3-118
Reaming Upper Connecting Rod Bushings....3-119
Honing Upper Connecting Rod Bushings....3-119
Repair....3-120
Assembly and Installation....3-120

3.23 CRANKCASE

General....3-121
Removal....3-121
Disassembly....3-121
Fitting Pinion Bearings....3-123
Bearing Selection....3-124
Inner Bearing Finish Example....3-126
Lapping Engine Main Bearing Races....3-127
Assembling Crankcase Halves....3-128

3.24 OIL PUMP: XL MODELS

General....3-129
Removal....3-130
Disassembly....3-130
Cleaning and Inspection....3-130
Assembly....3-130
Installation....3-130

3.25 OIL PUMP: XR MODELS

General....3-132
Disassembly....3-133
Cleaning and Inspection....3-134
Assembly....3-135

3.26 OIL FILTER MOUNT

General....3-136
Disassembly....3-136
Cleaning and Inspection....3-136
Assembly....3-136

3.27 OIL TANK

Pressure Relief Valve....3-137
Oil Line Routing: XR Models....3-137
Removal....3-139

Installation....3-140

FUEL SYSTEM

4.1 FASTENER TORQUE VALUES

Fastener Torque Values in this Chapter....4-1

4.2 SPECIFICATIONS: FUEL SYSTEM

Specifications....4-4

4.3 AIR CLEANER: XL MODELS

Removal....4-5
Cleaning, Inspection and Repair....4-5
Installation....4-6

4.4 AIR BOX: XR MODELS

Removal....4-7
Installation....4-7

4.5 FUEL TANK: XL MODELS

General....4-8
Purging and Disconnecting Fuel Supply Hose....4-9
Removing Fuel Tank....4-9
Cleaning and Inspection....4-10
Installing Fuel Tank....4-10
Reconnecting Fuel Hose and Filling Fuel Tank....4-11
Vapor Valve....4-11
Console Replacement....4-12
Removal....4-12
Installation....4-13

4.6 FUEL TANK: XR MODELS

General....4-15
Purging and Disconnecting Fuel Supply Hose....4-15
Removing Fuel Tank....4-15
Disassemble Fuel Tank....4-17
Cleaning and Inspection....4-17
Assemble Fuel Tank....4-18
Installing Fuel Tank....4-18
Reconnecting Fuel Hose and Filling Fuel Tank....4-19

4.7 THROTTLE POSITION (TP) SENSOR

General....4-20
Removal: XL Models....4-20
Installation: XL Models....4-21
Removal: XR Models....4-21
Installation: XR Models....4-22

4.8 ENGINE TEMPERATURE (ET) SENSOR

General....4-24
Removal....4-24
Installation....4-25

4.9 INDUCTION MODULE: XL MODELS

General....4-26
Removal....4-26
Disassembly....4-29
Assembly....4-30
Installation....4-30

4.10 INDUCTION MODULE: XR MODELS

General....4-33
Removal....4-33
Disassembly....4-34
Assembly....4-35
Installation....4-35

4.11 IDLE AIR CONTROL (IAC)

General....4-37
Removal: XL Models....4-38
Installation: XL Models....4-38
Removal: XR Models....4-39
Installation: XR Models....4-40

4.12 TEMPERATURE MANIFOLD ABSOLUTE PRESSURE (TMAP) SENSOR

General....4-41
Removal: XL Models....4-41
Installation: XL Models....4-42
Removal: XR Models....4-43
Installation: XR Models....4-43

4.13 OXYGEN SENSOR

General....4-45
Removal....4-45
Installation....4-46

4.14 EXHAUST SYSTEM: XL MODELS

General....4-47
Removal....4-48
Mufflers and Exhaust Pipes....4-48
Muffler Interconnect Bracket....4-48
Installation....4-49
Muffler Interconnect Bracket....4-49
Exhaust Pipes and Mufflers....4-49

4.15 EXHAUST SYSTEM: XR MODELS

General....4-51
Removal....4-51
Mufflers....4-51
Header Pipes....4-52
Installation....4-52

4.16 FUEL INJECTORS

General....4-53
Removal....4-53
Installation....4-54

4.17 FUEL PUMP

General....4-56
Removal....4-56
Disassembly....4-57
Pressure Regulator and Filter Housing....4-57
Fuel Pump Assembly and Pump Bracket....4-58
Low Fuel Level Sensor Assembly....4-58
Fuel Pump/Sender Harness....4-58
Assembly....4-58
Fuel Pump/Sender Harness....4-58
Low Fuel Level Sensor Assembly....4-58
Fuel Pump Assembly and Pump Bracket....4-58

Pressure Regulator and Filter Housing....4-58
Installation....4-59

4.18 FUEL PRESSURE TEST

General....4-61
Testing....4-61

4.19 INTAKE LEAK TEST

General....4-63
Leak Tester....4-63
Parts List....4-63
Tester Assembly....4-63
Tester Adjustment....4-63
Procedure....4-63

4.20 EVAPORATIVE EMISSIONS CONTROL (CA MODELS)

General....4-65
Charcoal Canister....4-66
Removal....4-66
Installation....4-67
Vapor Valve: XL Models....4-67
Removal....4-67
Installation....4-67
Hose Routing....4-68
Induction Module....4-68
Canister Hose Routings: XL Models....4-68
Canister Hose Routings: XR Models....4-69

DRIVE/TRANSMISSION

5.1 FASTENER TORQUE VALUES

Fastener Torque Values in this Chapter....5-1

5.2 SPECIFICATIONS: DRIVE

Sportster Specifications....5-3

5.3 PRIMARY CHAIN ADJUSTER

General....5-4
Removal....5-4
Primary Cover....5-4
Primary Chain Adjuster....5-6
Installation....5-6
Primary Chain Adjuster....5-6
Primary Cover....5-7

5.4 CLUTCH RELEASE MECHANISM

Removal and Disassembly....5-9
Cleaning, Inspection and Repair....5-10
Assembly and Installation....5-10

5.5 PRIMARY DRIVE AND CLUTCH: XL MODELS

General....5-12
Removal....5-14
Disassembly....5-14
Inspection and Repair....5-15
Adjusting Screw Disassembly/Assembly....5-16
Assembly....5-17
Installation....5-18

5.6 PRIMARY DRIVE AND CLUTCH: XR MODELS

General....5-20
Removal....5-22
Disassembly....5-22
Clutch Pack Cleaning and Inspection....5-23
Adjusting Screw Disassembly/Assembly....5-24
Clutch Shell/Hub Inspection....5-24
Clutch Shell Bearing Replacement....5-25
Assembly....5-26
Installation....5-28

5.7 DRIVE BELT

Removal....5-30
XL Models....5-30
XR Models....5-31
Installation....5-31
XL Models....5-31
XR Models....5-31
Idler Pulley: XR Models Only....5-32
Removal....5-32
Installation....5-33

5.8 TRANSMISSION

General....5-34

5.9 CASE DISASSEMBLY FOR TRANSMISSION REMOVAL

General....5-35
Engine Removal and Disassembly....5-35

5.10 TRANSMISSION REMOVAL AND DISASSEMBLY

Transmission Removal From Left Crankcase....5-39
Mainshaft/Countershaft....5-42
Mainshaft Disassembly....5-43
Cleaning and Inspection....5-44
Countershaft Disassembly....5-44
Cleaning and Inspection....5-44

5.11 TRANSMISSION ASSEMBLY

Mainshaft Assembly....5-46
Countershaft Assembly....5-46

5.12 MAIN DRIVE GEAR AND BEARING

General....5-48
Removal....5-49
Main Drive Gear....5-49
Main Drive Gear Ball Bearing....5-50
Disassembly....5-50
Assembly....5-51
Installation....5-52
Main Drive Gear Bearing: XL Models....5-52
Main Drive Gear Bearing: XR Models....5-53
Main Drive Gear....5-53
Main Drive Gear Seal....5-55

5.13 TRANSMISSION RIGHT CASE BEARINGS

Removal....5-57
Countershaft Needle Bearing....5-57
Shifter Drum Bushing....5-57
Installation....5-57
Countershaft Needle Bearing....5-57
Shifter Drum Bushing....5-57

5.14 TRANSMISSION LEFT CASE BEARINGS

Removal....5-58
Mainshaft and Countershaft Bearings....5-58
Shifter Drum Bushing....5-58
Installation....5-58
Mainshaft and Countershaft Bearings....5-58
Shift Drum Bushing....5-58

5.15 TRANSMISSION INSTALLATION

General....5-59
Installation....5-59
Shifter Forks and Drum Assembly....5-60
Assembling Crankcases....5-61
Shifter Shaft Installation....5-62

5.16 TRANSMISSION SPROCKET

Removal....5-64
Preparation....5-64
XL Models....5-64
XR Models....5-64
All Models....5-65
Installation....5-65
Preparation....5-65
XL Models....5-66
XR Models....5-66
All Models....5-66

ELECTRICAL

6.1 FASTENER TORQUE VALUES

Fastener Torque Values in this Chapter....6-1

6.2 SPECIFICATIONS: ELECTRICAL

Specifications: 2009 Sportster Models....6-4

6.3 VOLTAGE REGULATOR

General....6-5
Removal: XL Models....6-5
Installation: XL Models....6-6
Removal: XR Models....6-6
Installation: XR Models....6-7

6.4 FUSES AND RELAYS

General....6-9
Replacing Fuses....6-9
Replacing Relays....6-9

6.5 MAIN FUSE HOLDER

General....6-10
Replacement....6-10

6.6 SPEEDOMETER: XL SINGLE GAUGE MODELS EXCEPT XL 883C/XL 1200C

Removal....6-11
Installation....6-11

6.7 SPEEDOMETER: XL 883C/XL 1200C

Removal....6-13
Installation....6-14

6.8 SPEEDOMETER AND TACHOMETER: XR MODELS

Speedometer Removal....6-15
Speedometer Installation....6-15
Trip Odometer Reset Switch Replacement....6-17
Tachometer Removal....6-17
Tachometer Installation....6-17

6.9 ELECTRONIC CONTROL MODULE (ECM)

General....6-18
Removal....6-18
XL Models....6-18
XR Models....6-19
Installation....6-19
XL Models....6-19
XR Models....6-19

6.10 TURN SIGNAL AND SECURITY MODULE (TSM/TSSM/HFSM)

General....6-20
Testing....6-20
Removal....6-20
Installation....6-21

6.11 BATTERY CABLES

Removal....6-22
Installation....6-22

6.12 BATTERY TRAY

General....6-24
Removal....6-24
Installation....6-25

6.13 STARTER

General....6-26
Wiring Diagrams....6-26
Paint Touch-Up....6-26
Removal....6-26
Field Coil Assembly....6-26
Disassembly....6-26
Inspection....6-26
Assembly....6-27
Drive Assembly....6-28
Disassembly....6-28
Inspection....6-28
Assembly....6-28
Installation....6-29

6.14 STARTER SOLENOID

Solenoid Assembly....6-30
Disassembly....6-30
Assembly....6-30
Solenoid Plunger....6-30
Disassembly....6-30
Assembly....6-30
Solenoid Contacts....6-30
Disassembly....6-30
Assembly....6-31

6.15 IGNITION AND LIGHT SWITCH

General....6-33
Removal....6-33
Installation....6-33

6.16 SPARK PLUG CABLES

General....6-35
Removal....6-35
Installation....6-36

6.17 IGNITION COIL

General....6-38
Troubleshooting....6-38
Removal....6-38
Installation....6-39

6.18 HEADLAMP

Replacement: XL 883C/XL 1200C....6-41
Replacement: All Models Except XL 883C/XL 1200C....6-42

6.19 INDICATOR LAMP MODULE

General....6-44
Preliminary Disassembly: All Models....6-44
Replacement: XL 1200L/XL 883N and XL 1200N....6-44
Replacement: XL 883C and XL 1200C....6-45
Replacement: All Other Models....6-45
Reassembling Vehicle: All Models....6-46

6.20 TAIL LAMP: ALL MODELS EXCEPT XL 883N/XL 1200N

General....6-47
Bulb Replacement....6-47
Base Replacement....6-47

6.21 TURN SIGNALS

General....6-50
Bulb Replacement....6-50
Front Housing Replacement....6-50
Rear Housing Replacement....6-51
Preliminary Vehicle Disassembly: All Models....6-51
Disconnect Wiring: All Models Except XL 883N/XL 1200N....6-51
Disconnect Wiring: XL 883N/XL 1200N....6-52
Remove and Disassemble Turn Signal Assembly: All But XR 1200....6-53
Reassemble and Install Turn Signal Assembly: All But XR 1200....6-54
Remove and Disassemble Turn Signal Assembly: XR 1200....6-55
Reassemble and Install Turn Signal Assembly: XR 1200....6-56
Connect Wiring: All Models Except XL 883N/XL 1200N....6-56
Connect Wiring: XL 883N/XL 1200N....6-56
Final Assembly: All Models....6-56

6.22 LICENSE PLATE LAMP MODULE: XL 883N/XL 1200N

General....6-57
Removal (Domestic Only)....6-57
Installation (Domestic Only)....6-58
Removal (HDI Only)....6-58
Installation (HDI Only)....6-60

6.23 REAR LIGHTING CONVERTER MODULE: XL 883N/XL 1200N (DOMESTIC ONLY)

General....6-62
Removal....6-62
Installation....6-63

6.24 REAR STOP LAMP SWITCH

General....6-64
Replacement....6-64

6.25 CRANK POSITION SENSOR (CKP)

General....6-65
Removal....6-65
Installation....6-65

6.26 ALTERNATOR

Removal and Disassembly....6-66
Rotor....6-66
Stator....6-66
Cleaning and Inspection....6-67
Assembly and Installation....6-67
Stator....6-67
Rotor....6-68
Final Assembly....6-68

6.27 VEHICLE SPEED SENSOR (VSS)

General....6-69
Removal....6-69
Installation....6-69

6.28 NEUTRAL INDICATOR SWITCH

General....6-70
Replacement....6-70

6.29 MAIN WIRING HARNESS

General....6-72
Removal....6-72
Installation....6-73

6.30 ELECTRICAL CADDIES

General....6-77
Wire Harness Caddy: XL Models....6-77
Removal....6-78
Installation....6-79

Wire Harness Caddy: XR Models....6-80
Removal....6-80
Installation....6-81

6.31 JIFFY STAND SWITCH: INTERNATIONAL MODELS

General....6-83
Removal....6-83
Installation....6-84

6.32 OPTIONAL SECURITY SIREN

General....6-85
Removal....6-85
Disassembly....6-85
Battery Replacement....6-86
Schedule....6-86
Battery Replacement: Early Style Siren....6-86
Battery Replacement: Late Style Siren....6-86
Assembly....6-87
Installation....6-87

6.33 OIL PRESSURE SWITCH

General....6-88
Removal....6-88
Installation....6-88

6.34 HORN

Troubleshooting....6-90
Voltage Test....6-90
Replacement: Models with Front Mounted Horn....6-90
Replacement: Models with Side Mounted Horn....6-90

6.35 MAIN FUSE

General....6-92
Removal....6-92
Installation....6-92

6.36 HANDLEBAR SWITCH ASSEMBLIES

Repair Procedures....6-93
Connectors....6-93

6.37 RIGHT HANDLEBAR SWITCHES

Removal....6-95
Disassembly....6-95
Switch Repair/Replacement....6-96
Switch and Lead Replacement....6-96
Switch Only Replacement: Upper Housing....6-96
Switch Only Replacement: Lower Housing....6-96
Turn-Right Signal Switch Only....6-97
Front Stoplight Switch Only....6-97
Assembly....6-97
Installation....6-98

6.38 LEFT HANDLEBAR SWITCHES

Removal....6-101
Disassembly....6-101
Switch Repair/Replacement....6-101
Switch and Lead Replacement....6-101
Switch Only Replacement: Upper Housing....6-101
Switch Only Replacement: Lower Housing....6-102
Turn-Left Signal Switch Only....6-102
Clutch Interlock Switch Only....6-102
Assembly....6-102
Installation....6-103

6.39 TSSM/HFSM MAINTENANCE

General....6-105
FOB Battery....6-105
Schedule....6-105
Battery Replacement....6-105
Smart Siren (If Installed)....6-105
Schedule....6-105
Battery Replacement: Early Style Siren....6-105
Battery Replacement: Late Style Siren....6-106

6.40 PERSONAL IDENTIFICATION NUMBER (PIN)

General....6-107
Initial Pin Entry....6-107
Changing the Pin....6-107
Modifying an Existing Pin....6-107

6.41 H-DSSS ACTUATION

General....6-109
Sidecar Configuration....6-109
Actuation....6-109
Fob Assignment....6-109
Power Disruption and Configuring....6-109

6.42 TSM/HFSM: PASSWORD LEARN

General....6-110
Password Learning....6-110

APPENDIX A CONNECTOR REPAIR

A.1 AMP MULTILOCK CONNECTORS

AMP Multilock Connector Repair....A-1
General....A-1
Separating Pin and Socket Housings....A-1
Mating Pin and Socket Housings....A-1
Removing Terminals from Housing....A-1
Inserting Terminals into Housing....A-2
Preparing Wire Leads for Crimping....A-2
Crimping Terminals to Leads....A-3
Inspecting Crimped Terminals....A-4

A.2 AUTOFUSE ELECTRICAL CONNECTORS

Autofuse Connector Repair....A-5
General....A-5
Disassembly....A-5
Assembly....A-5

A.3 DELPHI CONNECTORS

Delphi Connector Repair....A-6
General....A-6
Separating Pin and Socket Housings....A-6
Mating Pin and Socket Housings....A-6
Removing Socket Terminals....A-6
Installing Socket Terminals....A-6

A.4 DELPHI MAIN FUSE HOUSING

Delphi Main Fuse Housing Repair....A-8
General....A-8
Removing Main Fuse....A-8
Installing Main Fuse....A-8
Removing Socket Terminals....A-8
Installing Socket Terminals....A-8

A.5 DEUTSCH ELECTRICAL CONNECTORS

Deutsch Connector Repair....A-10
General....A-10
Separating Pin and Socket Housings....A-10
Mating Pin and Socket Housings....A-10
Removing Socket Terminals....A-10
Installing Socket Terminals....A-10
Removing Pin Terminals....A-12
Installing Pin Terminals....A-12
Crimping Terminals....A-13

A.6 DEUTSCH STANDARD TERMINAL REPAIR

Deutsch Standard Terminal Crimps....A-14
Preparing Wire Leads for Crimping....A-14
Crimping Terminal to Lead....A-14
Inspecting Crimps....A-14

A.7 DEUTSCH SOLID BARREL MINI TERMINAL REPAIR

Deutsch Solid Barrel Terminal Crimps....A-15
Preparing Wire Leads For Crimping....A-15
Adjusting Crimper Tool....A-15
Crimping a Barrel Contact To Wire Lead....A-15
Inspecting Crimps....A-15

A.8 DEUTSCH MINI TERMINAL REPAIR

Deutsch Mini Terminal Crimps....A-17
Preparing Wire Leads for Crimping....A-17
Crimping a Mini Terminal to Wire Lead....A-17
Inspecting Crimps....A-17

A.9 MOLEX CONNECTORS

Molex Connector Repair....A-18
Separating Pin and Socket Housings....A-18
Mating Pin and Socket Housings....A-18
Removing Terminals....A-18
Installing Terminals....A-18
Crimp Terminal to Lead....A-19
Prepare Lead....A-19
Prepare Tool....A-19
Position Terminal in the Punch/Die....A-20
Insert Stripped Lead....A-20
Crimp Terminal to Lead....A-20
Inspect Crimp....A-21

A.10 PACKARD 150 METRI-PACK CONNECTORS

150 Metri-Pack Connector Repair....A-22
General....A-22
Separating Pin and Socket Housings....A-22
Mating Pin and Socket Housings....A-22
Removing Socket Terminal....A-22
Inserting Socket Terminal....A-22

A.11 PACKARD 480 METRI-PACK CONNECTORS

480 Metri-Pack Connector Repair....A-24
General....A-24
Separating Pin and Socket Housings....A-24
Mating Pin and Socket Housings....A-24
Removing Socket Terminals....A-24
Installing Socket Terminals....A-24

A.12 PACKARD 630 METRI-PACK CONNECTORS

630 Metri-Pack Connector Repair....A-25
General....A-25
Separating Pin and Socket Housings....A-25
Mating Pin and Socket Housings....A-25
Removing Socket Terminal....A-25
Installing Socket Terminal....A-25

A.13 PACKARD METRI-PACK TERMINALS

Metri-Pack Terminal Crimps....A-26
Matching Terminal To Crimper....A-26
Preparing Wire Lead....A-26
Crimping Wire Core....A-26
Crimping Insulation/Seal....A-26
Inspecting Crimps....A-27

A.14 PACKARD ECM CONNECTOR

Packard 100W Connector Repair....A-28
General....A-28
Separating Socket Housing From ECM....A-28
Mating Socket Housing To ECM....A-28
Removing Socket Terminal....A-28
Installing Socket Terminal....A-28
Crimping Terminals....A-28

A.15 PACKARD MICRO-64 CONNECTORS

Packard Micro-64 Connector Repair....A-30
General....A-30
Separating Pin and Socket Housings....A-30
Mating Pin and Socket Housings....A-30
Removing Terminal....A-30
Installing Terminal....A-30
Preparing Wire Leads for Crimping....A-31
Crimping Terminals....A-31
Inspecting Crimps....A-31

A.16 SEALED SPLICE CONNECTORS

Sealed Splice Connector Repair....A-33
General....A-33
Preparing Wire Leads....A-33
Splicing Wire Leads....A-33
Inspecting Seals....A-33

APPENDIX B WIRING

B.1 CONNECTORS

Connector Locations....B-1

Function/Location....B-1
Place and Color....B-1
Connector Number....B-1
Repair Instructions....B-1

B.2 WIRING DIAGRAMS

Wiring Diagram Information....B-3
Wire Color Codes....B-3
Wiring Diagram Symbols....B-3
2010 Sportster Wiring Diagrams....B-5

APPENDIX C CONVERSIONS

C.1 METRIC CONVERSION

Conversion Table....C-1

C.2 FLUID CONVERSIONS

United States System....C-2
Metric System....C-2
British Imperial System....C-2

C.3 TORQUE CONVERSIONS

United States System....C-3
Metric System....C-3

APPENDIX D COMPENSATING SPROCKET

D.1 COMPENSATING SPROCKET

General....D-1
Removal and Disassembly....D-1
Cleaning, Inspection and Repair....D-1
Sprocket Bearing Replacement....D-1
Removal....D-1
Installation....D-2
Assembly and Installation....D-2

APPENDIX E GLOSSARY

E.1 GLOSSARY

Acronyms and Abbreviations....E-1

REFERENCE MATERIAL

TOOLS....I

TORQUE VALUES....IX

INDEX....XXXI

SUBJECT	PAGE NO.
1.1 FASTENER TORQUE VALUES	1-1
1.2 GENERAL	1-3
1.3 FUEL AND OIL	1-7
1.4 BULB REQUIREMENTS	1-9
1.5 MAINTENANCE SCHEDULE	1-10
1.6 ENGINE OIL AND FILTER	1-14
1.7 BRAKES	1-18
1.8 BLEEDING HYDRAULIC BRAKE SYSTEM	1-20
1.9 BRAKE PADS AND DISCS: XL MODELS	1-24
1.10 BRAKE PADS AND DISCS: XR MODELS	1-31
1.11 TIRES AND WHEELS	1-36
1.12 PRIMARY CHAIN	1-39
1.13 CLUTCH	1-41
1.14 TRANSMISSION LUBRICANT	1-43
1.15 DRIVE BELT AND SPROCKETS	1-45
1.16 WHEEL ALIGNMENT	1-50
1.17 BATTERY MAINTENANCE	1-52
1.18 SPARK PLUGS	1-58
1.19 STEERING HEAD BEARINGS	1-60
1.20 SHOCK ABSORBER ADJUSTMENT	1-62
1.21 CABLE AND CHASSIS LUBRICATION	1-64
1.22 AIR CLEANER: XL MODELS	1-65
1.23 AIR CLEANER: XR MODELS	1-67
1.24 EXHAUST SYSTEM	1-70
1.25 THROTTLE CONTROL	1-71
1.26 FUEL SUPPLY FILTER	1-72
1.27 ENGINE MOUNTS AND STABILIZER LINKS	1-73
1.28 HEADLAMP ALIGNMENT	1-74
1.29 CRITICAL FASTENERS	1-76
1.30 STORAGE	1-78
1.31 TROUBLESHOOTING	1-80

FASTENER TORQUE VALUES IN THIS CHAPTER

The table below lists torque values for all fasteners presented in this chapter.

FASTENER	TORQUE VALUE		NOTES
Air cleaner cover screw	36-60 **in-lbs**	4.1-6.8 Nm	1.5 MAINTENANCE SCHEDULE, General
Air cleaner cover screw	36-60 **in-lbs**	4.1-6.8 Nm	1.22 AIR CLEANER: XL MODELS, Installation
Air filter element screw	40-60 **in-lbs**	4.5-6.8 Nm	1.5 MAINTENANCE SCHEDULE, General
Air filter element screw	40-60 **in-lbs**	4.5-6.8 Nm	1.22 AIR CLEANER: XL MODELS, Installation
Axle nut, rear	95-105 ft-lbs	129-142 Nm	1.15 DRIVE BELT AND SPROCKETS, Belt Deflection Adjustment
Axle nut, rear	95-105 ft-lbs	129-142 Nm	1.16 WHEEL ALIGNMENT, Wheel Alignment
Battery cable connector nut	55-75 **in-lbs**	6.2-8.5 Nm	1.17 BATTERY MAINTENANCE, Battery Installation and Connection
Battery negative terminal screw	60-70 **in-lbs**	6.8-7.9 Nm	1.5 MAINTENANCE SCHEDULE, General
Battery negative terminal screw	60-70 **in-lbs**	6.8-7.9 Nm	1.17 BATTERY MAINTENANCE, Battery Installation and Connection
Battery positive terminal screw	60-70 **in-lbs**	6.8-7.9 Nm	1.17 BATTERY MAINTENANCE, Battery Installation and Connection
Battery strap screw	36-60 **in-lbs**	4.1-6.8 Nm	1.17 BATTERY MAINTENANCE, Battery Installation and Connection
Bleeder valve	35-61 **in-lbs**	4.0-6.9 Nm	1.8 BLEEDING HYDRAULIC BRAKE SYSTEM, Bleeding Front Brake: All Models
Bleeder valve	35-61 **in-lbs**	4.0-6.9 Nm	1.8 BLEEDING HYDRAULIC BRAKE SYSTEM, Bleeding Rear Brake: All Models
Brake hose clamp-to-rear fork screw	30-40 **in-lbs**	3.4-4.5 Nm	1.15 DRIVE BELT AND SPROCKETS, Belt Deflection Adjustment
Brake pad pin	131-173 **in-lbs**	14.8-19.6 Nm	1.9 BRAKE PADS AND DISCS: XL MODELS, Brake Pad Replacement: Rear
Brake pad pin	131-173 **in-lbs**	14.8-19.6 Nm	1.10 BRAKE PADS AND DISCS: XR MODELS, Brake Pad Replacement: Rear
Brake pad pin plug	18-25 **in-lbs**	2.0-2.9 Nm	1.9 BRAKE PADS AND DISCS: XL MODELS, Brake Pad Replacement: Front
Brake pad pin plug	18-25 **in-lbs**	2.0-2.9 Nm	1.9 BRAKE PADS AND DISCS: XL MODELS, Brake Pad Replacement: Rear
Brake pad pin plug	18-25 **in-lbs**	2.0-2.9 Nm	1.10 BRAKE PADS AND DISCS: XR MODELS, Brake Pad Replacement: Rear
Brake pad pins, front caliper	131-173 **in-lbs**	14.8-19.6 Nm	1.10 BRAKE PADS AND DISCS: XR MODELS, Brake Pad Replacement: Front
Caliper pad pin	131-173 **in-lbs**	14.8-19.6 Nm	1.9 BRAKE PADS AND DISCS: XL MODELS, Brake Pad Replacement: Front
Captive screw	9-17 **in-lbs**	1.0-2.0 Nm	1.8 BLEEDING HYDRAULIC BRAKE SYSTEM, Bleeding Front Brake: All Models
Captive screw	9-17 **in-lbs**	1.0-2.0 Nm	1.9 BRAKE PADS AND DISCS: XL MODELS, Brake Pad Replacement: Front
Chain tensioner nut	20-25 ft-lbs	27.1-33.9 Nm	1.5 MAINTENANCE SCHEDULE, General
Clutch cable jam nut	10 ft-lbs	13.6 Nm	1.13 CLUTCH, Adjustment
Clutch inspection cover screw	84-108 **in-lbs**	9.5-12.2 Nm	1.5 MAINTENANCE SCHEDULE, General
Clutch inspection cover screw	84-108 **in-lbs**	9.5-12.2 Nm	1.13 CLUTCH, Adjustment

FASTENER	TORQUE VALUE		NOTES
Clutch inspection cover screw	84-108 **in-lbs**	9.5-12.2 Nm	1.14 TRANSMISSION LUBRICANT, Transmission Lubrication
Footrest mount fastener: XR models	45-50 ft-lbs	61.0-67.8 Nm	1.13 CLUTCH, Adjustment
Fork stem pinch screw	30-35 ft-lbs	40.7-47.5 Nm	1.19 STEERING HEAD BEARINGS, Adjustment
Front fork lower bracket pinch screw	30-35 ft-lbs	40.7-47.5 Nm	1.19 STEERING HEAD BEARINGS, Adjustment
Front master cylinder cover screw	9-17 **in-lbs**	1.0-2.0 Nm	1.10 BRAKE PADS AND DISCS: XR MODELS, Brake Pad Replacement: Front
Front master cylinder reservoir cover screw	9-17 **in-lbs**	1.0-2.0 Nm	1.5 MAINTENANCE SCHEDULE, General
Fuel pump module mounting screw	40-45 **in-lbs**	4.5-5.1 Nm	1.5 MAINTENANCE SCHEDULE, General
Fuel pump module mounting screw	40-45 **in-lbs**	4.5-5.1 Nm	1.26 FUEL SUPPLY FILTER, Installation
Handlebar clamp screw	12-18 ft-lbs	16.3-24.4 Nm	1.5 MAINTENANCE SCHEDULE, General
Handlebar switch housing screw	35-45 **in-lbs**	4.0-5.1 Nm	1.5 MAINTENANCE SCHEDULE, General
Handlebar switch housing screw	35-45 **in-lbs**	4.0-5.1 Nm	1.25 THROTTLE CONTROL, Cable Inspection and Lubrication
Headlamp Allen head capscrew	30-35 ft-lbs	40.7-47.5 Nm	1.28 HEADLAMP ALIGNMENT, Headlamp Adjustment: Sportster Models
Headlamp clamp nut	120-240 **in-lbs**	14-27 Nm	1.28 HEADLAMP ALIGNMENT, Headlamp Adjustment: Sportster Models
Primary chaincase drain plug	14-30 ft-lbs	19.0-40.7 Nm	1.5 MAINTENANCE SCHEDULE, General
Primary chaincase drain plug	14-30 ft-lbs	19.0-40.7 Nm	1.14 TRANSMISSION LUBRICANT, Transmission Lubrication/Apply LOCTITE 565 PST THREAD SEALER (Part No. 99818-97)
Primary chain inspection cover	84-120 **in-lbs**	9.5-13.6 Nm	1.12 PRIMARY CHAIN, Adjustment
Primary chain inspection cover screw	84-120 **in-lbs**	9.5-13.6 Nm	1.5 MAINTENANCE SCHEDULE, General
Primary chain lock nut	20-25 ft-lbs	27.1-33.9 Nm	1.12 PRIMARY CHAIN, Adjustment
Rider footrest support bracket mounting screw	45-50 ft-lbs	61-68 Nm	1.13 CLUTCH, Adjustment
Shift linkage pivot bolt	10-15 ft-lbs	13.6-20.3 Nm	1.13 CLUTCH, Adjustment
Spark plug	12-18 ft-lbs	16.3-24.4 Nm	1.18 SPARK PLUGS, Inspection
Spark plug (XL)	12-18 ft-lbs	16.3-24.4 Nm	1.5 MAINTENANCE SCHEDULE, General
Spark plug (XL)	12-18 ft-lbs	16.3-24.4 Nm	1.5 MAINTENANCE SCHEDULE, General
Spoke nipple	55 **in-lbs**	6.2 Nm	1.5 MAINTENANCE SCHEDULE, General
Spoke nipple	55 **in-lbs**	6.2 Nm	1.11 TIRES AND WHEELS, Wheel Spokes
Vertical headlamp adjustment bolt	30-35 ft-lbs	40.7-47.5 Nm	1.28 HEADLAMP ALIGNMENT, Headlamp Adjustment: Sportster Models

SERVICING A NEW MOTORCYCLE

⚠WARNING

Perform the service and maintenance operations as indicated in the regular service interval table. Lack of regular maintenance at the recommended intervals can affect the safe operation of your motorcycle, which could result in death or serious injury. (00010a)

Service operations to be performed before customer delivery are specified in the applicable model year predelivery and set-up instructions.

The performance of new motorcycle initial service is required to keep warranty in force and to verify proper emissions systems operation. See 1.5 MAINTENANCE SCHEDULE.

SAFE OPERATING MAINTENANCE

NOTES

- *Do not attempt to tighten engine head bolts or engine damage may result.*
- *During the initial break-in period, use only Harley-Davidson 20W50 engine oil. Failure to use the recommended oil will result in improper break-in of the engine cylinders and piston rings.*

A careful check of certain equipment is necessary after periods of storage, and frequently between regular service intervals, to determine if additional maintenance is required.

Check:

1. Tires for abrasions, cuts and correct pressure.
2. Drive belt tension and condition.
3. Brakes, steering and throttle for responsiveness.
4. Brake fluid level and condition. Hydraulic lines and fittings for leaks. Also, check brake pads and discs for wear.
5. Cables for fraying, crimping and free operation.
6. Engine oil and transmission fluid levels.
7. Headlamp, auxiliary lamp, tail lamp, brake lamp, horn and turn signal operation.

SHOP PRACTICES

Repair Notes

General maintenance practices are given in this section.

NOTES

- *Repair = Disassembly/Assembly.*
- *Replacement = Substitute a **new** part for existing component.*

All special tools and torque values are noted at the point of use.

All required parts or materials can be found in the appropriate PARTS CATALOG.

Safety

Safety is always the most important consideration when performing any job. Be sure you have a complete understanding of the task to be performed. Use common sense. Use the proper tools. Protect yourself and bystanders with approved eye protection. Don't just do the job - do the job safely.

Removing Parts

Always consider the weight of a part when lifting. Use a hoist whenever necessary. Do not lift heavy parts by hand. A hoist and adjustable lifting beam or sling are needed to remove some parts. The lengths of multiple chains or cables from the hoist to the part should be equal and parallel and should be positioned directly over the center of the part. Be sure that no obstructions will interfere with the lifting operation. Never leave a part suspended in mid-air.

⚠WARNING

Be sure to check capacity rating and condition of hoists, slings, chains and cables before use. Exceeding capacity ratings or using lifting devices that are in poor condition can lead to an accident, which could result in death or serious injury. (00466c)

Always use blocking or proper stands to support the part that has been hoisted. If a part cannot be removed, verify that all bolts and attaching hardware have been removed. Check to see if any parts are in the way of the part being removed.

When removing hoses, wiring or tubes, always tag each part to verify proper installation.

Cleaning

If parts are to be reused, follow good shop practice and thoroughly clean the parts before assembly. Keep all dirt out of parts to promote better component operation and longer life. Seals, filters and covers are used in this vehicle to keep out extraneous dirt and dust. These items must be kept in good condition to guarantee satisfactory operation.

When instructed to clean fastener threads or threaded holes, proceed as follows: Clean all threadlocking material from fastener threads and threaded holes. Use a wire brush to clean fastener threads. Use a thread chaser or other suitable tool to clean threaded holes. Use PJ1 cleaner or equivalent to remove all traces of oil and contaminants from threads. Clean all threaded holes with low pressure compressed air.

Clean and inspect all parts as they are removed. Be sure all holes and passages are clean and open. After cleaning, cover all parts with clean lint-free cloth, paper or other material. Be sure the part is clean when it is installed.

Always clean around lines or covers before they are removed. Plug, tape or cap holes and openings to keep out dirt, dust and debris.

Always verify cleanliness of blind holes before assembly. Tightening a screw with dirt, water or oil in the hole can cause castings to crack or break.

Disassembly and Assembly

Always assemble or disassemble one part at a time. Do not work on two assemblies simultaneously. Be sure to make all necessary adjustments. Check your work when finished to be sure that everything is done.

Operate the vehicle to perform any final check or adjustments. If all is correct, the vehicle is ready to go back to the customer.

Checking Torques on Fasteners

Attempt to turn the fastener using a torque wrench set to the minimum torque specification for that fastener. If the fastener does not rotate, the fastener torque has been maintained. If the fastener rotates, remove it to determine if it has a threadlocking agent.

If it has a threadlocking agent, clean all threadlocking material from the threaded hole. Replace the fastener with a **new** one or clean the original fastener threads and apply the appropriate threadlocking product (see the specific procedure). Install and tighten the fastener to specification.

If the fastener does not use a threadlocking agent, install and tighten it to specification.

Magnetic Parts Trays

Magnetic parts trays are common in the service facility because they are convenient and can keep parts from becoming lost during a repair procedure.

However, hardened steel parts can become magnetized when held in magnetic parts trays. Metal fragments that would ordinarily be washed away in the oil and trapped in the oil filter or magnetic drain plug during vehicle operation could be captured by magnetized parts in the engine, potentially causing accelerated engine wear and damage.

Parts that will be returned to service inside the vehicle's powertrain such as gears, thrust washers and especially bearings should never be kept in magnetic parts trays.

REPAIR AND REPLACEMENT PROCEDURES

Hardware and Threaded Parts

Install thread repair inserts when threaded holes in castings are stripped, damaged or not capable of withstanding specified torque.

Replace bolts, nuts, studs, washers, spacers and small common hardware if missing or damaged. Clean up or repair minor thread damage with a suitable tap or die.

Replace all damaged or missing lubrication fittings.

Use Teflon pipe sealant or LOCTITE 565 THREAD SEALANT on pipe fitting threads.

Threadlocking Agents

Always follow specific service manual procedures when working with fasteners containing preapplied threadlocking agents when fastener replacement is recommended. When re-using fasteners containing threadlocking agents, be sure to completely remove all existing threadlocking agent from fastener threads with a wire brush or wire wheel. Also, be sure to remove residual threadlocking agent from fastener hole using an appropriate thread chasing device and compressed air. Always use the recommended threadlocking agent for the specific procedure.

Wiring, Hoses and Lines

Hoses, clamps, electrical wiring, electrical switches or fuel lines if they do not meet specifications.

Instruments and Gauges

Replace damaged or defective instruments and gauges.

Bearings

Anti-friction bearings must be handled in a special way. To keep out dirt and abrasives, cover the bearings as soon as they are removed from the package.

When bearings are installed against shoulders, be sure that the chamfered side of the bearing always faces the shoulder. Lubricate bearings and all metal contact surfaces before pressing into place. Only apply pressure on the part of the bearing that makes direct contact with the mating part. Install bearings with numbered side facing out.

Always use the proper tools and fixtures for removing and installing bearings.

Only remove bearings if necessary. Removal usually damages bearings requiring them to be replaced with new parts.

Bushings

Do not remove a bushing unless damaged, excessively worn or loose in its bore. Press out bushings that must be replaced.

When pressing or driving bushings, be sure to apply pressure in line with the bushing bore. Use a bearing/bushing driver or a bar with a smooth, flat end. Never use a hammer to drive bushings.

Inspect the bushing and the mating parts for oil holes before installation, and be sure all oil holes are properly aligned during installation.

Gaskets

Always discard gaskets after removal. Replace with **new** gaskets. Never use the same gasket twice. Be sure that gasket holes match up with holes in the mating part. But be aware that sections of a gasket may be used to seal passages.

Lip-Type Seals

Lip seals are used to seal oil or grease and are usually installed with the sealing lip facing the contained lubricant. Seal orientation, however, may vary under different applications.

Seals should not be removed unless necessary. Only remove seals if required to gain access to other parts or if seal damage or wear dictates replacement.

Leaking oil or grease usually means that a seal is damaged. Replace leaking seals to prevent overheated bearings.

Always discard seals after removal. Do not use the same seal twice.

O-Rings (Pre-Formed Packings)

Always discard O-rings after removal. Replace with **new** O-ring. To prevent leaks, lubricate the O-rings before installation. Apply the same type of lubricant as that being sealed. Be sure that all gasket, O-ring and seal mating surfaces are thoroughly clean before installation.

Gears

Always check gears for damaged or worn teeth.

Remove burrs and rough spots with a honing stone or crocus cloth before installation.

Lubricate mating surfaces before pressing gears on shafts.

Shafts

If a shaft does not come out easily, check that all nuts, bolts or retaining rings have been removed. Check to see if other parts are in the way before using force to remove.

Shafts fitted to tapered splines should be very tight. If shafts are not tight, disassemble and inspect tapered splines. Discard parts that are worn. Be sure tapered splines are clean, dry and free of burrs before putting them in place. Press mating parts together tightly.

Clean all rust from the machined surfaces of new parts.

Part Replacement

Always replace worn or damaged parts with **new** parts.

Exhaust System Leakage

In the event of an exhaust system leak at a muffler or header pipe connection location, disassemble and clean all mating surfaces. Replace any damaged components. If the leak still exists, disassemble and repair the leak by applying a bead of Permatex Ultra Copper or LOCTITE 5920 Flange Sealant (or an equivalent oxygen sensor/catalyst-safe alternative). Assemble components, wipe off any excess sealant and allow adequate curing time following sealant product instructions before operating vehicle.

CLEANING

Part Protection

Before cleaning, protect rubber parts (such as hoses, boots and electrical insulation) from cleaning solutions. Use a grease-proof barrier material. Remove the rubber part if it cannot be properly protected.

Cleaning Process

Any cleaning method may be used as long as it does not result in parts damage. Thorough cleaning is necessary for proper parts inspection. Strip rusted paint areas to bare metal before priming and repainting.

Rust or Corrosion Removal

Remove rust and corrosion with a wire brush, abrasive cloth, sand blasting, vapor blasting or rust remover. Use buffing crocus cloth on highly polished parts that are rusted.

Bearings

Wash bearings in a non-flammable petroleum cleaning solution. Never use a solution that contains chlorine. Knock out packed lubricant by tapping the bearing against a wooden block. Wash bearings again.

⚠WARNING

Using compressed air to "spin dry" bearings can cause bearing to fly apart, which could result in death or serious injury. (00505b)

Cover bearings with a clean shop towel and allow to air dry. Do not spin bearings while they are drying. Never use compressed air to dry bearings.

When dry, coat bearings with clean oil. Wrap bearings in clean paper.

TOOL SAFETY

Air Tools

- Always use approved eye protection equipment when performing any task using air-operated tools.
- On all power tools, use only recommended accessories with proper capacity ratings.
- Do not exceed air pressure ratings of any power tools.
- Bits should be placed against work surface before air hammers are operated.
- Disconnect the air supply line to an air hammer before attaching a bit.
- Never point an air tool at yourself or another person.
- Protect bystanders with approved eye protection.

Wrenches

- Never use an extension on a wrench handle.
- If possible, always pull on a wrench handle and adjust your stance to prevent a fall if something suddenly releases.
- Always keep the wrench squarely installed on the fastener.
- Never use a hammer on any wrench other than a STRIKING FACE wrench.
- Discard any wrench with broken or battered points.
- Never use a pipe wrench to bend, raise or lift a pipe.

Pliers/Cutters/Pry Bars

- Plastic- or vinyl-covered pliers handles are not intended to act as insulation. Do not use them on live electrical circuits.
- Do not use pliers or cutters for cutting hardened wire unless they were designed for that purpose.
- Always cut at right angles.
- Do not use any pry bar as a chisel, punch or hammer.

Hammers

- Never strike a hammer against a hardened object, such as another hammer.
- Always grasp a hammer handle firmly, close to the end.
- Strike the object with the full face of the hammer.
- Never work with a hammer which has a loose head or cracked handle.
- Discard hammer if face is chipped or mushroomed.
- Wear approved eye protection when using striking tools.
- Protect bystanders with approved eye protection.

Punches/Chisels

- Never use a punch or chisel with a chipped or mushroomed end. Dress mushroomed chisels and punches with a grinder.
- Hold a chisel or a punch with a tool holder if possible.
- When using a chisel on a small piece, clamp the piece firmly in a vise and chip toward the stationary jaw.
- Always wear approved eye protection when using these tools.
- Protect bystanders with approved eye protection.

Screwdrivers

- Do not use a screwdriver for prying, punching, chiseling, scoring or scraping.
- Use the right type of screwdriver for the job; match the tip to the fastener.
- Do not interchange POZIDRIV, PHILLIPS or REED AND PRINCE screwdrivers.
- Screwdriver handles are not intended to act as insulation. Do not use them on live electrical circuits.
- Do not use a screwdriver with rounded edges because it will slip. Redress with a grinder.

Ratchets and Handles

- Periodically clean and lubricate ratchet mechanisms with a light grade oil. Do not replace parts individually; ratchets should be rebuilt with the entire contents of service kit.
- Never hammer on a ratchet or put a pipe extension on a ratchet handle for added leverage.
- Always support the ratchet head when using socket extensions, but do not put your hand on the head or you may interfere with the action of its reversing mechanism.
- When breaking a fastener loose, apply a small amount of pressure as a test to be sure the ratchet's gear wheel is engaged with the pawl.

Sockets

- Never use hand sockets on power or impact wrenches. Select only impact sockets for use with air or electric impact wrenches.
- Select the right size socket for the job.
- Always keep the wrench or socket squarely on the fastener.
- Replace sockets showing cracks or wear.
- Keep sockets clean.
- Always use approved eye protection when using power or impact sockets.

Storage Units

- Do not open more than one loaded drawer at a time. Close each drawer before opening another to prevent the cabinet from unexpectedly tipping over.
- Close lids and lock drawers and doors before moving storage units.
- Do not pull on a tool cabinet; push it in front of you.
- Set the brakes on the locking casters after the cabinet has been rolled into position.

FUEL

Refer to Table 1-1. Always use a good quality unleaded gasoline. Octane ratings are usually found on the pump.

⚠WARNING

Avoid spills. Slowly remove filler cap. Do not fill above bottom of filler neck insert, leaving air space for fuel expansion. Secure filler cap after refueling. Gasoline is extremely flammable and highly explosive, which could result in death or serious injury. (00028a)

⚠WARNING

Use care when refueling. Pressurized air in fuel tank can force gasoline to escape through filler tube. Gasoline is extremely flammable and highly explosive, which could result in death or serious injury. (00029a)

Modern service station pumps dispense a high flow of gasoline into a motorcycle fuel tank making air entrapment and pressurization a possibility.

Table 1-1. Octane Ratings

SPECIFICATION	RATING
Pump Octane (R+M)/2	91 (95 RON)

GASOLINE BLENDS

Your motorcycle was designed to get the best performance and efficiency using unleaded gasoline. Most gasoline is blended with alcohol and/or ether to create oxygenated blends. The type and amount of alcohol or ether added to the fuel is important.

CAUTION

Do not use gasoline that contains methanol. Doing so can result in fuel system component failure, engine damage and/or equipment malfunction. (00148a)

- Gasoline containing METHYL TERTIARY BUTYL ETHER (MTBE): Gasoline/MTBE blends are a mixture of gasoline and as much as 15% MTBE. Gasoline/MTBE blends can be used in your motorcycle.
- ETHANOL is a mixture of 10% ethanol (Grain alcohol) and 90% unleaded gasoline. Gasoline/ethanol blends can be used in your motorcycle if the ethanol content does **not** exceed 10%.
- REFORMULATED OR OXYGENATED GASOLINES (RFG): Reformulated gasoline is a term used to describe gasoline blends that are specifically designed to burn cleaner than other types of gasoline, leaving fewer tailpipe emissions. They are also formulated to evaporate less when you are filling your tank. Reformulated gasolines use additives to oxygenate the gas. Your motorcycle will run normally using this type of gas and Harley-Davidson recommends you use it when possible, as an aid to cleaner air in our environment.
- Do not use race gas or octane boosters. Use of these fuels will damage the fuel system.

Some gasoline blends might adversely affect the starting, driveability or fuel efficiency of the motorcycle. If any of these problems are experienced, try a different brand of gasoline or gasoline with a higher octane blend.

ENGINE LUBRICATION

CAUTION

Do not switch lubricant brands indiscriminately because some lubricants interact chemically when mixed. Use of inferior lubricants can damage the engine. (00184a)

Engine oil is a major factor in the performance and service life of the engine. Always use the proper grade of oil for the lowest temperature expected before the next scheduled oil change. Refer to Table 1-2. Your authorized dealer has the proper oil to suit your requirements.

If it is necessary to add oil and Harley-Davidson oil is not available, use an oil certified for diesel engines. Acceptable diesel engine oil designations include: CF-4, CG-4, CH-4 and CI-4.

The preferred viscosities for the diesel engine oils in descending order are: 20W50, 15W40 and 10W40.

At the first opportunity, see an authorized dealer to change back to 100 percent Harley-Davidson oil.

Table 1-2. Recommended Engine Oils

H-D TYPE	VISCOSITY	H-D RATING	LOWEST AMBIENT TEMPERATURE	COLD WEATHER STARTS BELOW 50 °F (10 °C)
H-D Multi-grade	SAE 10W40	HD 360	Below 40 °F (4 °C)	Excellent
Screamin' Eagle SYN3 Synthetic Motorcycle Lubricant	SAE 20W50	HD 360	Above 40 °F (4 °C)	Excellent
H-D Multi-grade	SAE 20W50	HD 360	Above 40 °F (4 °C)	Good
H-D Regular Heavy	SAE 50	HD 360	Above 60 °F (16 °C)	Poor
H-D Extra Heavy	SAE 60	HD 360	Above 80 °F (27 °C)	Poor

WINTER LUBRICATION

In colder climates, the engine oil should be changed often. If motorcycle is used frequently for short trips, less than 15 mi (24 km), in ambient temperatures below 60 °F (16 °C), oil change intervals should be reduced to 1500 mi (2400 km). Motorcycles used only for short runs must have a thorough tank flush-out before **new** oil is put in. The tank flush-out should be performed by an authorized dealer or qualified technician.

NOTE

The further below freezing the temperature drops, the shorter the oil change interval should be.

Water vapor is a normal by-product of combustion in any engine. During cold weather operation, some of the water vapor condenses to liquid form on the cool metal surfaces inside the engine. In freezing weather this water will become slush or ice and, if allowed to accumulate too long, may block the oil lines and cause damage to the engine.

If the engine is run frequently and allowed to thoroughly warm up, most of this water will become vapor again and will be blown out through the crankcase breather.

If the engine is not run frequently and allowed to thoroughly warm up, this water will accumulate, mix with the engine oil and form a sludge that is harmful to the engine.

BULB CHART

Table 1-3. Bulb Chart

LAMP	DESCRIPTION (ALL LAMPS 12 VOLT)	BULBS REQUIRED	CURRENT DRAW (AMPERAGE)	HARLEY-DAVIDSON PART NUMBER
Headlamp	high beam/low beam	1	5.0/4.58	68329-03
	position lamp international	1	0.32	53436-97
Tail and stop lamps	tail lamp	1	0.59	68167-04
	stop lamp	1	2.10	68167-04
	tail lamp international	1	0.59	68167-04
	stop lamp international	1	2.10	68167-04
Turn signal lamp	front/running	2	2.25/0.59	68168-89A
	front international	2	1.75	68163-84
	rear (XL models except 883N/1200N)	2	2.25	68572-64B
	rear (XL 883N/1200N)*	2	2.25	68168-89A
	rear (all XR models, international XL models)**	2	1.75	68163-84
Instrument panel	Illuminated with LEDs. Replace entire assembly upon failure.			

*Functions as turn signals, tail lamps and brake lamps. This feature may not be found in all destinations.
**On some international XL 883N/1200N models, this is an LED assembly (replace entire assembly upon failure).

GENERAL

The table below lists the periodic maintenance requirements for Sportster model motorcycles. If you are familiar with the procedures, just refer to the table for the recommended service interval. If necessary, see the quick reference table (Table 1-5.) for the required specifications.

If more detailed information is needed, turn to the sections which follow for step-by-step instructions.

Also, throughout this manual, you will be instructed to use various lubricants, greases and sealants. Refer to Table 1-6. for the correct part numbers of these items.

Table 1-4. Regular Service Intervals: 2010 Sportster Models

ITEM SERVICED	PROCEDURE	1000 MI 1600 KM	5000 MI 8000 KM	10,000 MI 16,000 KM	15,000 MI 24,000 KM	20,000 MI 32,000 KM	25,000 MI 40,000 KM	30,000 MI 48,000 KM	NOTES
Engine oil and filter	Replace	X	X	X	X	X	X	X	3
Oil lines and brake system	Inspect for leaks, contact or abrasion	X	X	X	X	X	X	X	1, 3
Air cleaner	Inspect, service as required	X	X	X	X	X	X	X	
Tires	Check pressure, inspect tread	X	X	X	X	X	X	X	
Wheel spokes (if equipped)	Check tightness	X	X			X			1, 5
Transmission lubricant	Replace	X		X		X		X	
Clutch	Check adjustment	X	X	X	X	X	X	X	1
Primary chain	Check adjustment	X	X	X	X	X	X	X	
Drive belt and sprockets	Inspect, adjust belt	X	X	X	X	X	X	X	1
Throttle, brake and clutch controls	Check, adjust and lubricate	X	X	X	X	X	X	X	1
Jiffy stand	Inspect and lubricate	X	X	X	X	X	X	X	1
Fuel lines and fittings	Inspect for leaks, contact or abrasion	X	X	X	X	X	X	X	1, 3
Fuel tank filter screen	Replace						X		1
Brake fluid	Check levels and condition	X	X	X	X	X	X	X	4
Brake pads and discs	Inspect for wear	X	X	X	X	X	X	X	
Front brake lever pin	Inspect		X	X	X	X		X	1, 7
	Lubricate						X		1, 7
Brake caliper pins	Inspect		X	X	X	X		X	1, 7
	Lubricate						X		1, 7
Brake caliper boots and bushings	Inspect		X	X	X	X		X	1, 7
	Replace						X		1, 7
Rear master cylinder outer boot	Inspect		X	X	X	X	X	X	1, 7
Brake components	Replace brake rubber components in master cylinders and calipers						X		1, 7
	Lubricate master cylinder pistons						X		1, 7
Spark plugs	Inspect	X	X		X		X		
	Replace					X			
Electrical equipment and switches	Check operation	X	X	X	X	X	X	X	
Engine idle speed	Check adjustment	X	X	X	X	X	X	X	1
Front fork oil		Replace every 50,000 miles (80,000 km)							1, 6
Steering head bearings	Adjust	X				X			1, 2
Rear fork bearings		Inspect every 30,000 miles (48,000 km)							1
Shock absorbers	Inspect	X	X	X	X	X	X	X	1
Critical fasteners	Check tightness	X		X		X		X	1
Engine mounts and stabilizer links	Inspect			X		X		X	1
Battery	Check battery and clean connections								3
Exhaust system	Inspect for leaks, cracks, and loose or missing fasteners or heat shields	X	X	X	X	X	X	X	3

Table 1-4. Regular Service Intervals: 2010 Sportster Models

ITEM SERVICED	PROCEDURE	1000 MI 1600 KM	5000 MI 8000 KM	10,000 MI 16,000 KM	15,000 MI 24,000 KM	20,000 MI 32,000 KM	25,000 MI 40,000 KM	30,000 MI 48,000 KM	NOTES
Road test	Verify component and system functions	X	X	X	X	X	X	X	
NOTES:	1. Should be performed by an authorized Harley-Davidson dealer, unless you have the proper tools, service data and are mechanically qualified. 2. Disassemble, lubricate and inspect every 30,000 miles (48,000 kilometers). 3. Perform annually or at specified intervals, whichever comes first. 4. Replace D.O.T. 4 hydraulic brake fluid and flush system every two (2) years. 5. Perform spoke tension check at the 1000, 5000, 20,000 mile services and every 15,000 mile interval thereafter. Not all vehicles are equipped with spoke wheels. Consult appropriate topic in service manual. 6. Replace fork oil and inspect every 50,000 miles (80,000 kilometers). 7. Replace every four (4) years or at specified intervals, whichever comes first.								

Table 1-5. Quick Reference Maintenance Chart

ITEM SERVICED	SPECIFICATION	DATA
Engine oil and filter	Oil capacity	2.8 qt (2.65 L)
	Filter	Hand tighten 1/2-3/4 turn after gasket contact
	Chrome filter (XL 1200C)	Part no. 63796-77A
	Black filter (all except XL 1200C)	Part no. 63805-80A
Primary chain tension	Deflection with hot engine	1/4-3/8 in. (6.3-9.5 mm)
	Deflection with cold engine	3/8-1/2 in. (9.5-12.7 mm)
	Chain tensioner nut torque	20-25 ft-lbs (27.1-33.9 Nm)
	Primary chain inspection cover screw torque	84-120 **in-lbs** (9.5-13.6 Nm)
Primary chain/transmission lubricant	Lubricant capacity	32 oz. (946 mL)
	Primary chaincase drain plug torque	14-30 ft-lbs (19.0-40.7 Nm)
	Lubricant	Genuine Harley-Davidson Formula+ Transmission and Primary Chaincase Lubricant
Clutch adjustment	Free play at adjuster screw	1/4 turn
	Free play at hand lever	1/16-1/8 in. (1.6-3.2 mm)
	Clutch inspection cover screw torque	84-108 **in-lbs** (9.5-12.2 Nm)
Tire condition and pressure	XL Models	Front: 30 psi (206 kPa), Rear: 40 psi (275 kPa)
	XR Models	Front: 36 psi (248 kPa), Rear: 42 psi (290 kPa)
	Wear	Replace tire if 1/32 in. (0.8 mm) or less of tread pattern remains
Wheel spokes	Spoke nipple torque	55 **in-lbs** (6.2 Nm)
Steering head bearings	Lubricant	SPECIAL PURPOSE GREASE
Brake fluid reservoir level	Brake fluid type	D.O.T. 4 brake fluid
	Proper fluid level (front brake)	1/4 in. (6.35 mm) from the top of the reservoir
	Proper fluid level (rear brake)	Upper fluid level in reservoir
	Front master cylinder reservoir cover screw torque	9-17 **in-lbs** (1.0-2.0 Nm)
Brake pad linings and discs	Minimum brake pad thickness	0.04 in. (1.02 mm)
	Minimum brake disc thickness	See stamp on side of disc

Table 1-5. Quick Reference Maintenance Chart

ITEM SERVICED	SPECIFICATION	DATA
Drive belt	Upward measurement force applied at midpoint of bottom belt strand	10 lb. (4.5 kg)
	Belt deflection with motorcycle on jiffy stand, belt and sprockets at ambient temperature (cold engine), without rider or luggage	XL 883C/XL 883L/XL 883N/XL 1200C/XL 1200L/XL 1200N: 1/4-5/16 in. (6.35-7.94 mm)
		XL 883R: 9/16-5/8 in. (14.3-15.9 mm)
	Belt deflection measurement taken midway between rear sprocket and idler	XR Models: 1/4-3/8 in. (6.4-9.5 mm)
Air cleaner	See 1.23 AIR CLEANER: XR MODELS	
	Air filter element screw torque: XL Models	40-60 **in-lbs** (4.5-6.8 Nm)
	Air cleaner cover screw torque: XL Models	36-60 **in-lbs** (4.1-6.8 Nm)
Engine idle speed	Idle speed	950-1050 RPM
Fuel filter	Fuel pump module mounting screw torque	40-45 **in-lbs** (4.5-5.1 Nm)
Clutch and throttle cables	Lubricant	Harley Lube (94968-09)
	Handlebar clamp screw torque	12-18 ft-lbs (16.3-24.4 Nm)
	Handlebar switch housing screw torque	35-45 **in-lbs** (4.0-5.1 Nm)
Spark plugs: XL models	Type	6R12
	Gap	0.038-0.043 in. (0.96-1.09 mm)
	Torque	12-18 ft-lbs (16.3-24.4 Nm)
Spark plugs: XR models	Type	10R12X
	Gap	0.032-0.038 in. (0.81-0.97 mm)
	Torque	12-18 ft-lbs (16.3-24.4 Nm)
Front fork oil: XL Models	Type	HYDRAULIC FORK OIL (TYPE E) (Part No. HD-99884-80)
	Amount	See 2.20 FRONT FORK: XL MODELS, Assembly.
Front fork oil: XR 1200	Type	HYDRAULIC FORK OIL (TYPE E) (Part No. HD-99884-80)
	Amount	See 2.21 FRONT FORK: XR MODELS, Assembly: XR 1200. Different amounts for left and right forks.
Front fork oil: XR 1200X models equipped with BPF forks	Type	Harley-Davidson BPF PERFORMANCE FORK OIL (Part No. 99885-10)
	Amount	See 2.21 FRONT FORK: XR MODELS, Assembly: XR 1200X.
Battery	Lubricant	ELECTRICAL CONTACT LUBRICANT
	Terminal screw torque	60-70 **in-lbs** (6.8-7.9 Nm)
Critical fasteners	See 1.29 CRITICAL FASTENERS	
Engine mounts/isolators and Stabilizers	See 2.27 FRONT ENGINE MOUNT/ISOLATOR, 2.28 REAR ENGINE MOUNT/ISOLATOR, 2.26 STABILIZER LINKS	

Table 1-6. Lubricants, Greases, Sealants

ITEM	PART NUMBER	PACKAGE
SILVER GRADE ANTI-SEIZE	98960-97	1 oz squeeze tube
CCI #20 Brake Grease	42830-05 (included in master cylinder rebuild kit)	squeeze packet
D.O.T. 4 Brake Fluid	99953-99A	12 oz. bottle
Electrical Contact Lubricant	99861-02	1 oz squeeze tube
Genuine Harley-Davidson Formula+ Transmission and Primary Chaincase Lubricant	99851-05	1 qt bottle
G40M Brake Grease	42820-04	squeeze packet
Gray High Performance Sealant	99650-02	1.9 oz squeeze tube
HYLOMAR Gasket and Thread Sealant	99653-85	3.5 oz tube
Loctite Pipe Sealant With Teflon 565	99818-97	6 ml squeeze tube
Loctite Prism Primer (770)		
Loctite Prism Superbonder (411)		
Loctite Superbonder 420 Adhesive		
Loctite Threadlocker 243 (blue)	99642-97	6 ml squeeze tube
Loctite Threadlocker 262 (red)	94759-99	6 ml squeeze tube
Loctite Threadlocker 272	98618-03	10 ml bottle
Special Purpose Grease	99857-97	14 oz. cartridge
Harley Lube	94968-09	1/4 fl. oz
Hydraulic Fork Oil (Type E)	99884-80	16 oz bottle
BPF Performance Fork Oil	99885-10	16 oz bottle

CHECKING AND ADDING OIL

CAUTION

Oil level cannot be accurately measured on a cold engine. For pre-ride inspection, with motorcycle leaning on jiffy stand on level ground, oil should register on dipstick between arrows when engine is cold. Do not add oil to bring the level to the FULL mark on a COLD engine. (00185a)

CAUTION

Do not allow hot oil level to fall below Add/Fill mark on dipstick. Doing so can result in equipment damage and/or equipment malfunction. (00189a)

CAUTION

Do not overfill oil tank. Doing so can result in oil carryover to the air cleaner leading to equipment damage and/or equipment malfunction. (00190a)

- Check engine oil level at each complete fuel refill.
- Refer to Table 1-4. Oil should be changed at specified intervals in normal service at warm or moderate temperatures.
- Oil change intervals should be more frequent in cold weather or severe operating conditions. See 1.3 FUEL AND OIL, Winter Lubrication.

Removing and Replacing Oil Filler Cap

1. Position motorcycle so that it is leaning on jiffy stand on level ground.
2. See Figure 1-1. Remove filler cap from oil tank on right side of vehicle.
   a. Press straight down on filler cap and release. Cap will pop up.
   b. Pull up on filler cap while turning counterclockwise one-quarter turn as if removing filler cap.
3. Wipe attached dipstick clean.

NOTE

See Figure 1-2. Note that dipstick has a wide slot (1) and a narrow slot (2) and can only be inserted in oil tank one way.

4. Insert dipstick into tank. Turn filler cap clockwise one-quarter turn as if screwing filler cap into tank. When filler cap stops turning, it is fully seated. Press down on filler cap until it snaps in place, flush with top of oil tank cover.

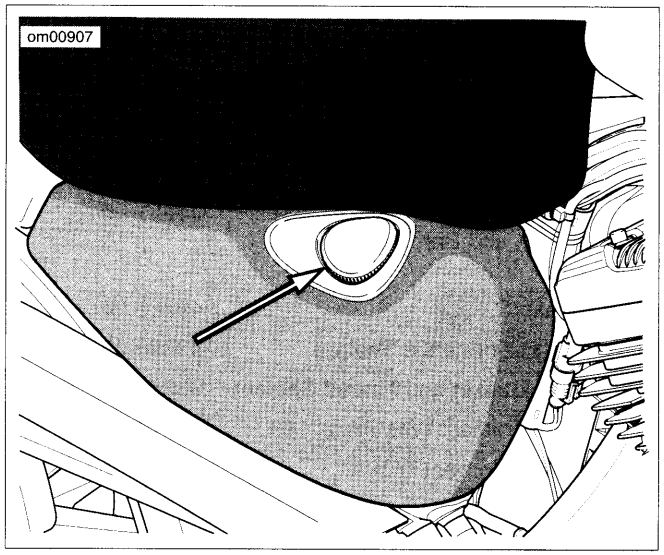

Figure 1-1. Filler Cap/Dipstick Location (XL Model Shown)

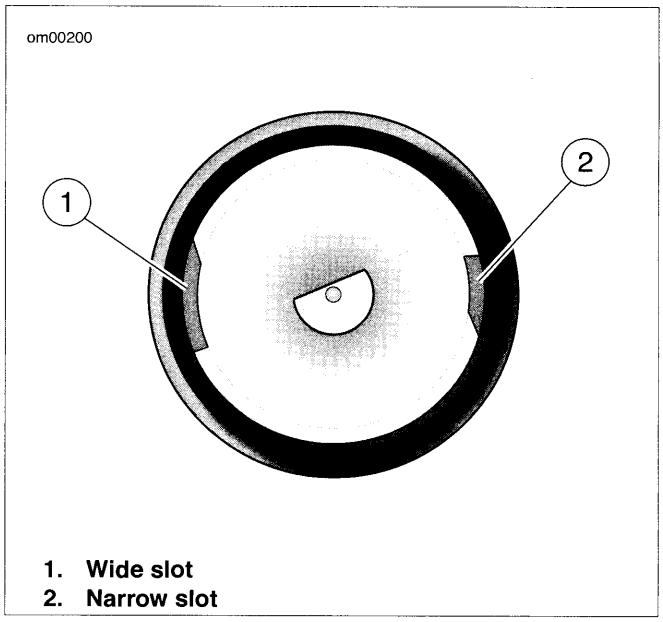

Figure 1-2. Filler Cap/Dipstick Slots

Oil Level Cold Check

1. Position motorcycle so that it is leaning on jiffy stand on level ground.
2. Remove filler cap. Wipe attached dipstick clean. Reinstall oil filler cap in tank.
3. Remove oil filler cap again and check oil level on dipstick. See Figure 1-3. Dipstick has two marks. If oil level is at or below lower mark (2), add only enough oil to bring the level to a point between the two arrows on the dipstick. Reinstall filler cap.

NOTE

Refer to Table 1-2. Use only recommended oil specified in 1.3 FUEL AND OIL, Engine Lubrication.

Oil Level Hot Check

1. Run engine until engine oil is at normal operating temperature.
2. Idle motorcycle on jiffy stand for 1-2 minutes. Turn engine off.
3. Position motorcycle so that it is leaning on jiffy stand on level ground.
4. Remove filler cap. Wipe attached dipstick clean. Reinstall oil filler cap in tank.
5. See Figure 1-3. Remove filler cap again and check warm oil level on dipstick. Dipstick has two marks. If oil level in tank is at or below lower mark, add 1.0 U.S. quart (0.946 liter) of Harley-Davidson oil to tank.

NOTE

Refer to Table 1-2. Use only recommended oil specified in 1.3 FUEL AND OIL, Engine Lubrication.

6. Install filler cap/dipstick into oil tank.
7. If oil was added, remove filler cap and verify correct engine oil level in oil tank. Do not fill oil tank to a level above upper mark on dipstick. Reinstall filler cap.

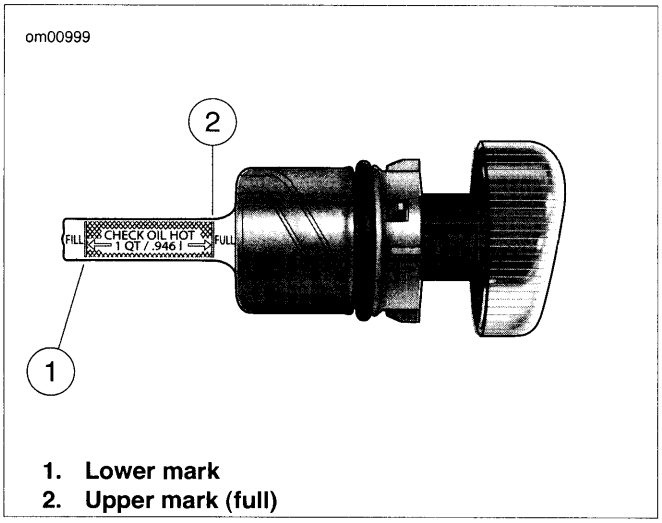

1. **Lower mark**
2. **Upper mark (full)**

Figure 1-3. Filler Cap/Dipstick (typical)

CHANGING OIL AND FILTER

PART NUMBER	TOOL NAME
HD-42311 OR HD-44067-A	HARLEY-DAVIDSON OIL FILTER WRENCH

CAUTION

Do not switch lubricant brands indiscriminately because some lubricants interact chemically when mixed. Use of inferior lubricants can damage the engine. (00184a)

Refer to Table 1-4. Completely drain oil tank of used oil at scheduled service intervals. Refill with fresh oil.

NOTES

- *If vehicle is driven extremely hard, used in competition, or driven on dusty roads, change engine oil at shorter intervals.*
- *Always change oil filter when changing engine oil.*

⚠WARNING

Be sure that no lubricants or fluids get on tires, wheels or brakes when changing fluid. Traction can be adversely affected, which could result in loss of control of the motorcycle and death or serious injury. (00047d)

Draining Oil Tank

1. Run engine until engine oil has reached normal operating temperature.
2. Remove oil filler cap/dipstick from oil tank. Oil will drain faster when filler cap/dipstick is removed.
3. See Figure 1-4. Place a suitable container directly under the drain hose (1) at the bottom rear of the engine crankcase. The container must be able to hold approximately 3.0 quarts (2.8 liters).
4. Loosen worm drive clamp (2) and pull drain plug (3) from end of drain hose. Completely drain engine oil from oil tank. It is not necessary to drain engine crankcase.
5. Install drain plug into end of drain hose and tighten worm drive clamp securely.

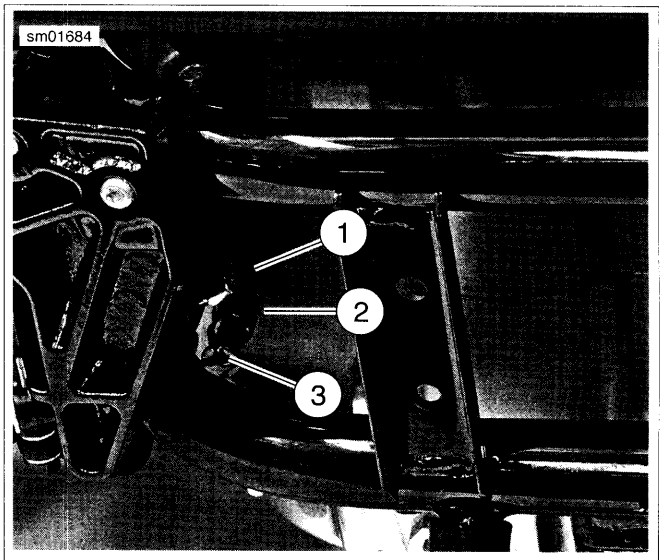

1. **Oil tank drain hose**
2. **Worm drive clamp**
3. **Drain plug**

Figure 1-4. Oil Tank Drain Hose (typical; XL model shown)

Removing Oil Filter

1. Place a drain pan beneath front of engine crankcase.

CAUTION

Use Harley-Davidson oil filter wrench for filter removal. This tool can prevent damage to crankshaft position sensor and/or sensor cable. (00192b)

2. See Figure 1-5 and Figure 1-6. Remove oil filter using HARLEY-DAVIDSON OIL FILTER WRENCH (Part No. HD-42311 or HD-44067-A). Turn oil filter counterclockwise to remove from filter mount.
3. Drain oil filter into drain pan. Discard oil filter.
4. Clean any oil spills off crankcase and frame.

NOTE

Dispose of oil and oil filter in accordance with local regulations.

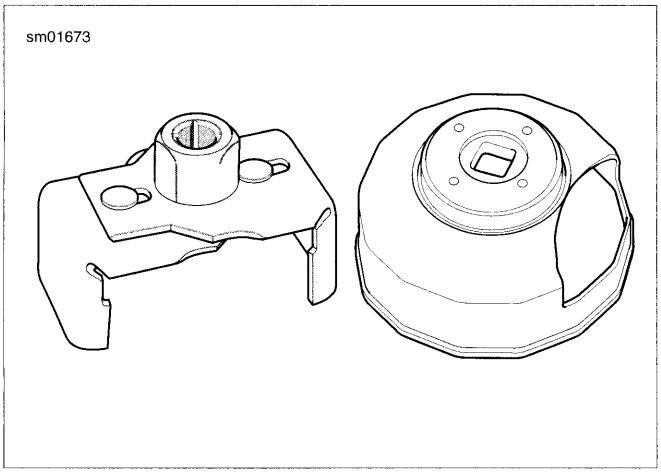

Figure 1-5. Oil Filter Wrenches

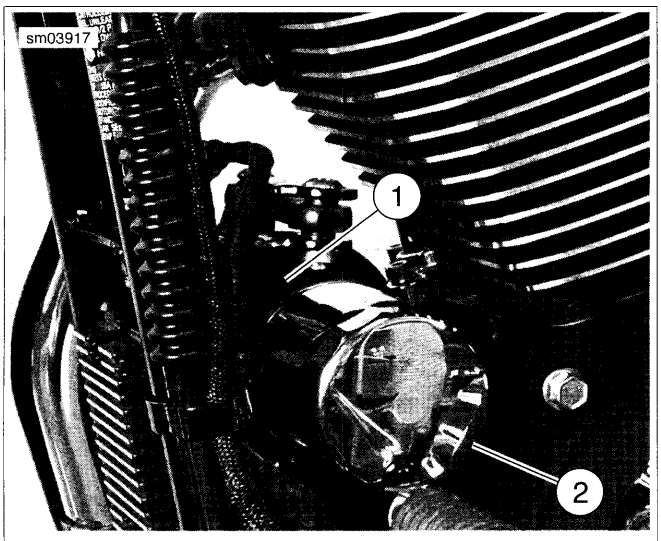

1. **Oil filter mount**
2. **Oil filter**

Figure 1-6. Oil Filter: All Models (XL Model Shown)

Installing Oil Filter

NOTE

Partially fill oil filter before installation to minimize the time required for buildup of oil pressure when engine is first started.

1. Pour about 4 fluid ounces (U.S.) (120 ml) of fresh, clean engine oil into **new** oil filter. Allow time for oil to soak into filter element.
2. See Figure 1-7. Wipe filter gasket contact surface of oil filter mount with a clean cloth. Surface should be smooth and free of any debris or old gasket material.
3. Apply a thin film of oil to gasket contact surface on crankcase (3), gasket and **new** oil filter.

NOTE

Do not use oil filter wrench to install new oil filter.

4. Install **new** oil filter. Screw filter clockwise onto adapter until gasket contacts the filter mount surface. Then hand tighten an additional 1/2 to 3/4-turn to secure the oil filter.

Refilling Oil Tank

CAUTION

Do not overfill oil tank. Doing so can result in oil carryover to the air cleaner leading to equipment damage and/or equipment malfunction. (00190a)

1. Refer to Table 1-2. Always use the proper grade of oil for the lowest expected air temperature before the next regularly scheduled oil change. Pour 2.0 U.S. quarts (1.9 liters) of oil into engine oil tank.

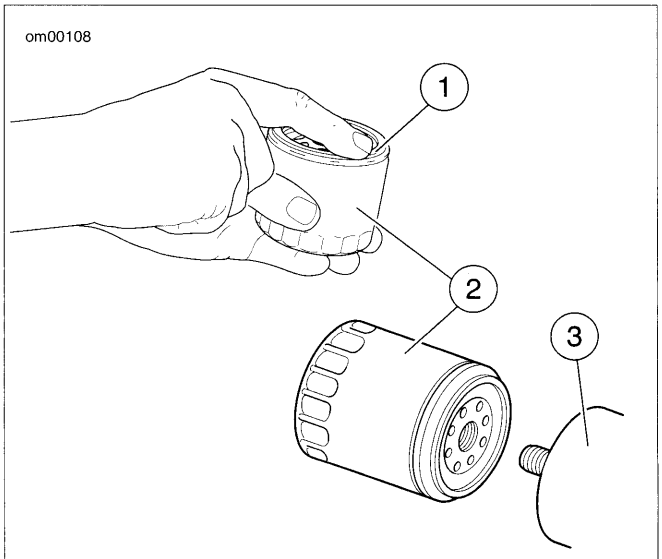

1. **Thin film of oil ONLY**
2. **Oil filter**
3. **Mounting plate**

Figure 1-7. Applying Thin Oil Film

2. Install filler cap/dipstick in oil tank. Make sure cap is fully seated.

3. See Figure 1-8. Start engine. Verify that oil pressure signal lamp turns off when engine speed is 1000 RPM or above. Turn engine off.
4. Check for oil leaks at oil filter and oil tank drain hose. Perform oil level hot check.

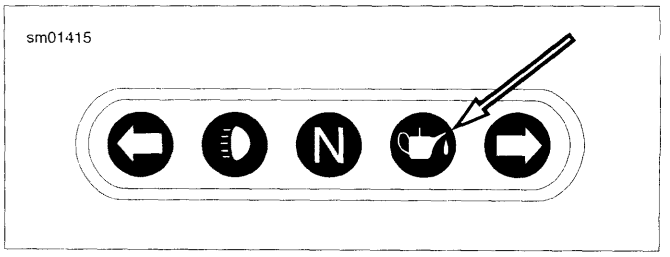

Figure 1-8. Oil Pressure Indicator Lamp

GENERAL

The front and rear brakes are fully hydraulic disc brake systems that require little maintenance. The front brake master cylinder is an integral part of the brake hand lever assembly on the right handlebar. The rear brake master cylinder is located at the rear of the motorcycle's frame, beneath the rear fork pivot point and is actuated by the rear brake pedal via mechanical linkage.

⚠WARNING

Use denatured alcohol to clean brake system components. Do not use mineral-based solvents (such as gasoline or paint thinner), which will deteriorate rubber parts even after assembly. Deterioration of these components can cause brake failure, which could result in death or serious injury. (00291a)

⚠CAUTION

Direct contact of D.O.T. 4 brake fluid with eyes can cause irritation. Avoid eye contact. In case of eye contact flush with large amounts of water and get medical attention. Swallowing large amounts of D.O.T. 4 brake fluid can cause digestive discomfort. If swallowed, obtain medical attention. Use in well ventilated area. KEEP OUT OF REACH OF CHILDREN. (00240a)

CAUTION

D.O.T. 4 brake fluid will damage painted and body panel surfaces it comes in contact with. Always use caution and protect surfaces from spills whenever brake work is performed. Failure to comply can result in cosmetic damage. (00239b)

NOTES

- *If D.O.T. 4 brake fluid contacts painted surfaces, IMMEDIATELY flush area with clear water.*
- *Cover handlebar switches with a shop towel before adding brake fluid to front master cylinder reservoir. Spilling brake fluid on handlebar switches may render them inoperative.*

⚠WARNING

After repairing the brake system, test brakes at low speed. If brakes are not operating properly, testing at high speeds can cause loss of control, which could result in death or serious injury. (00289a)

INSPECTION

Check the master cylinder reservoirs for proper fluid levels. With the reservoir in a level position, add HARLEY-DAVIDSON D.O.T. 4 BRAKE FLUID from a sealed container until the fluid level is within approximately 1/4-inch (6.35 mm) below the top edge of the reservoir (front brake) or reaches the upper fluid level in the reservoir (rear brake).

Do not overfill the reservoir. See 1.8 BLEEDING HYDRAULIC BRAKE SYSTEM for procedures related to filling reservoirs.

Check brake pads and discs for wear. Replace brake pads if friction material is worn to 0.04 in (1.02 mm) or less. Minimum brake disc thickness is stamped on side of disc. Replace any brake disc that is worn beyond this limit. Maximum brake rotor lateral runout and warpage is 0.008 in. (0.2 mm) when measured near the outside diameter.

TROUBLESHOOTING

Use the following troubleshooting guide to help in determining probable causes of poor brake operation. Refer to Table 1-7.

Table 1-7. Troubleshooting Brakes

CONDITION	CHECK FOR	REMEDY
Excessive lever or pedal travel or spongy feel.	• Air in system. • Master cylinder reservoir low on fluid.	• Bleed brake system. • Fill master cylinder reservoir with approved brake fluid. Bleed brake system.
Chattering sound when brake is applied.	• Worn brake pads. • Loose mounting bolts. • Warped brake disc.	• Replace brake pads. • Tighten bolts. • Replace brake disc.
Ineffective brake - lever or pedal travels to limit.	• Low fluid level. • Piston cup not functioning.	• Fill master cylinder reservoir with approved brake fluid, and bleed brake system. • Rebuild master cylinder.
Ineffective brake - lever or pedal travel normal.	• Distorted or glazed brake disc. • Distorted, glazed or contaminated brake pads.	• Replace brake disc. • Replace brake pads.
Brake pads drag on disc - will not retract.	• Cup in master cylinder not uncovering relief port.	• Inspect master cylinder.

GENERAL

Bleed the hydraulic brake system any time a hydraulic brake line, brake master cylinder or brake caliper has been opened, or whenever brake lever/pedal operation feels "spongy." Bleeding evacuates air from the system leaving only incompressible hydraulic fluid.

⚠CAUTION

Direct contact of D.O.T. 4 brake fluid with eyes can cause irritation. Avoid eye contact. In case of eye contact flush with large amounts of water and get medical attention. Swallowing large amounts of D.O.T. 4 brake fluid can cause digestive discomfort. If swallowed, obtain medical attention. Use in well ventilated area. KEEP OUT OF REACH OF CHILDREN. (00240a)

NOTE

Hydraulic brake fluid bladder-type pressure equipment can be used to fill brake master cylinders through the bleeder valve. Remove master cylinder reservoir cover so that system cannot pressurize. Do not use pressure bleeding equipment when the hydraulic system is sealed with master cylinder reservoir cover and diaphragm in place.

BLEEDING FRONT BRAKE: ALL MODELS

CAUTION

D.O.T. 4 brake fluid will damage painted and body panel surfaces it comes in contact with. Always use caution and protect surfaces from spills whenever brake work is performed. Failure to comply can result in cosmetic damage. (00239b)

NOTES

- *If D.O.T. 4 brake fluid contacts painted surfaces, IMMEDIATELY flush area with clear water.*
- *Cover handlebar switches with a shop towel before adding brake fluid to front master cylinder reservoir. Spilling brake fluid on handlebar switches may render them inoperative.*

1. See Figure 1-9. Position motorcycle so that top of front master cylinder reservoir (1) is level.
2. See Figure 1-10. Remove reservoir cover (4) with two captive screws (5), diaphragm plate (3) and diaphragm (2) from master cylinder reservoir (1).

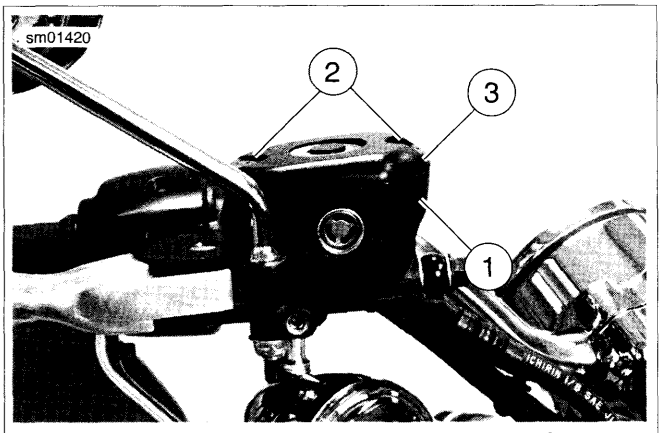

1. **Front brake master cylinder and reservoir**
2. **Cover screw (2)**
3. **Top cover**

Figure 1-9. Front Brake Master Cylinder Reservoir (typical; XL model shown)

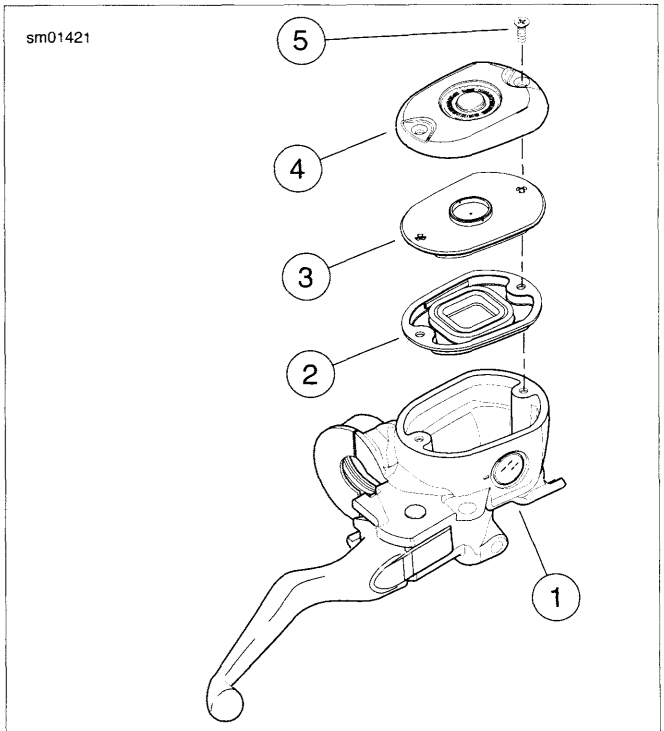

1. **Front brake master cylinder assembly**
2. **Diaphragm**
3. **Diaphragm plate**
4. **Reservoir cover**
5. **Captive screw (2)**

Figure 1-10. Front Brake Master Cylinder Cover Assembly (Typical)

NOTES

- *See Figure 1-11. Do not use sight glass (2) to determine maximum fluid level. Sight glass should only be used as a visual indicator that fluid level is low and needs attention. A ridge (1) is cast into the inside of the reservoir to assist you in determining the correct level.*
- *Use only HARLEY-DAVIDSON D.O.T. 4 BRAKE FLUID from a sealed container.*
- *Do not overfill reservoir. Do not reuse old brake fluid.*

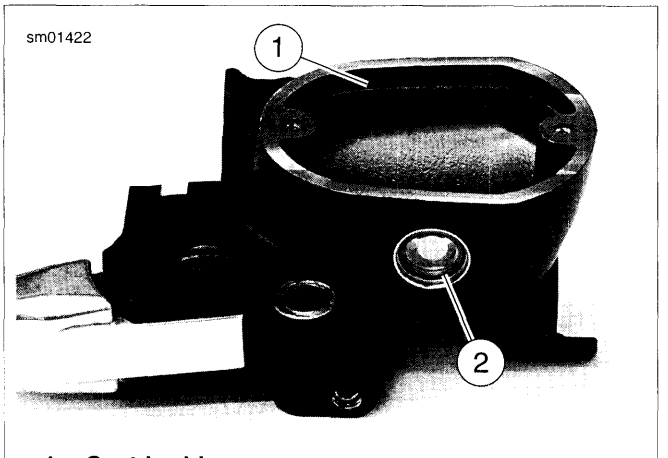

1. **Cast-in ridge**
2. **Sight glass**

Figure 1-11. Filling Front Master Cylinder Reservoir (Typical)

3. See Figure 1-11. Add enough HARLEY-DAVIDSON D.O.T. 4 BRAKE FLUID to reservoir to bring fluid level even with ridge (1) cast into inside of reservoir, about 1/4-in. (6.35 mm) below top edge.
4. See Figure 1-12 or Figure 1-13. Remove bleeder cap (3) from bleeder valve (2) on front caliper (1).
5. See Figure 1-14. Install end of a length of 5/16 in. (7.9 mm) I.D. clear plastic tubing over caliper bleeder valve. Place free end of tube in a clean container.
6. Squeeze and hold brake lever to build up hydraulic pressure. See Figure 1-12. Open bleeder valve (2) about 1/2-turn. Brake fluid will flow from bleeder valve through tubing. Observe fluid flowing through tubing. Check for air bubbles.
7. Close bleeder valve when brake lever has moved 1/2 to 3/4 of its full range of travel. Allow brake lever to return slowly to its released position.
8. Repeat two previous steps until all air bubbles are purged from system.
9. Final tighten bleeder valve to 35-61 **in-lbs** (4.0-6.9 Nm). Remove plastic tubing and install bleeder cap (3).
10. See Figure 1-11. Add enough HARLEY-DAVIDSON D.O.T. 4 BRAKE FLUID to reservoir to bring fluid level even with ridge cast into inside of reservoir, about 1/4-in. (6.35 mm) below top edge.

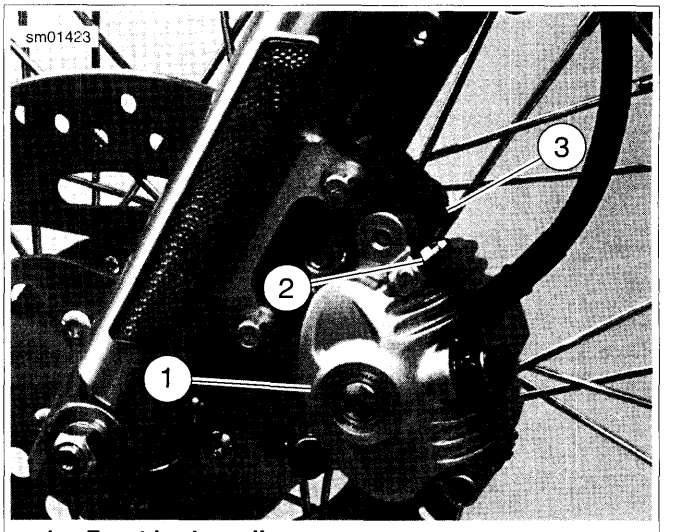

1. **Front brake caliper**
2. **Bleeder valve**
3. **Bleeder cap**

Figure 1-12. Front Brake Caliper: XL Models

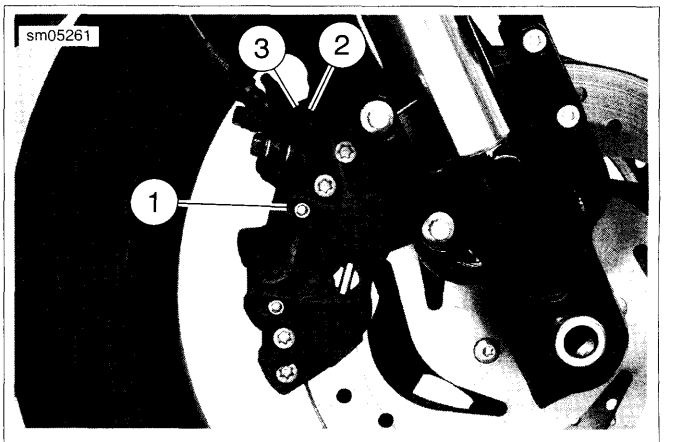

1. **Front brake caliper**
2. **Bleeder valve**
3. **Bleeder cap**

Figure 1-13. Front Caliper Assembly: XR Models

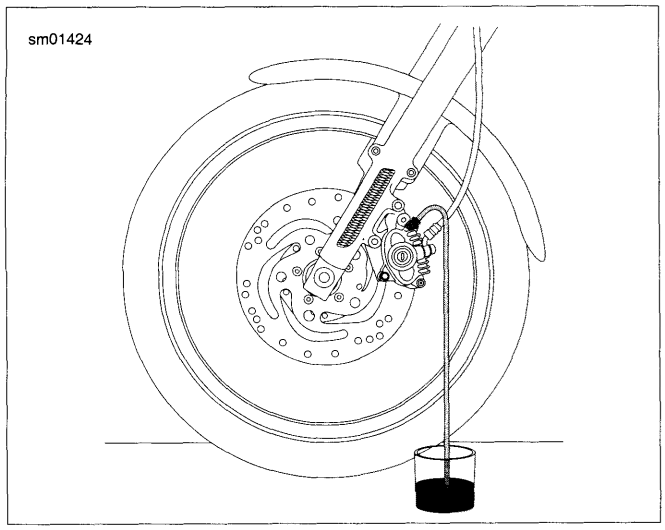

Figure 1-14. Bleeding Hydraulic System (typical; XL model shown)

11. If bleeding vehicle equipped with dual front disc brake system, repeat this procedure for other caliper.
12. See Figure 1-10. Replace diaphragm (2), diaphragm plate (3) and reservoir cover (4) with captive screws (5). Tighten to 9-17 **in-lbs** (1.0-2.0 Nm).

⚠WARNING

After repairing the brake system, test brakes at low speed. If brakes are not operating properly, testing at high speeds can cause loss of control, which could result in death or serious injury. (00289a)

13. Test ride motorcycle at low speed. Repeat the above bleeding procedure if front brake feels spongy.

BLEEDING REAR BRAKE: ALL MODELS

CAUTION

D.O.T. 4 brake fluid will damage painted and body panel surfaces it comes in contact with. Always use caution and protect surfaces from spills whenever brake work is performed. Failure to comply can result in cosmetic damage. (00239b)

NOTES

- *If D.O.T. 4 brake fluid contacts painted surfaces, IMMEDIATELY flush area with clear water.*
- *See Figure 1-15 or Figure 1-16. Vehicle must be upright so that rear brake master cylinder reservoir (1) is in a level position when filling and checking fluid level.*
- *Reservoir cover (5) may be removed from rear brake master cylinder reservoir to more easily verify fluid level in reservoir.*
- *Use only HARLEY-DAVIDSON D.O.T. 4 BRAKE FLUID from a sealed container.*
- *Do not overfill reservoir. Do not reuse old brake fluid.*

1. Position motorcycle upright (not resting on jiffy stand). See Figure 1-15 or Figure 1-16. Remove reservoir cap (2).
2. If desired, remove reservoir cover (5) by grasping cover and gently pull straight out from reservoir (1).
3. Add HARLEY-DAVIDSON D.O.T. 4 BRAKE FLUID to master cylinder reservoir (1) until the fluid reaches the upper fluid level (3).
4. See Figure 1-17 or Figure 1-18. Remove bleeder cap (3). Install end of a length of 5/16 in. (7.9 mm) I.D. clear plastic tubing over caliper bleeder valve (2). Place free end of tube in a clean container.
5. Depress and hold brake pedal to build up hydraulic pressure. Open bleeder valve about 1/2-turn. Brake fluid will flow from bleeder valve through tubing. Observe fluid flowing through tubing. Check for air bubbles.
6. Close bleeder valve when brake pedal has moved 1/2 to 3/4 of its full range of travel. Allow brake pedal to return slowly to its released position.
7. Repeat two previous steps until all air bubbles are purged.
8. Final tighten bleeder valve to 35-61 **in-lbs** (4.0-6.9 Nm). Remove plastic tubing and install bleeder cap.
9. See Figure 1-15 or Figure 1-16. Add HARLEY-DAVIDSON D.O.T. 4 BRAKE FLUID to master cylinder reservoir (1) until the fluid reaches the upper fluid level (3).
10. Replace reservoir cap (2). Replace reservoir cover (5) if removed.

⚠WARNING

After repairing the brake system, test brakes at low speed. If brakes are not operating properly, testing at high speeds can cause loss of control, which could result in death or serious injury. (00289a)

11. Test ride motorcycle at low speed. Repeat the above bleeding procedure if rear brake feels spongy.

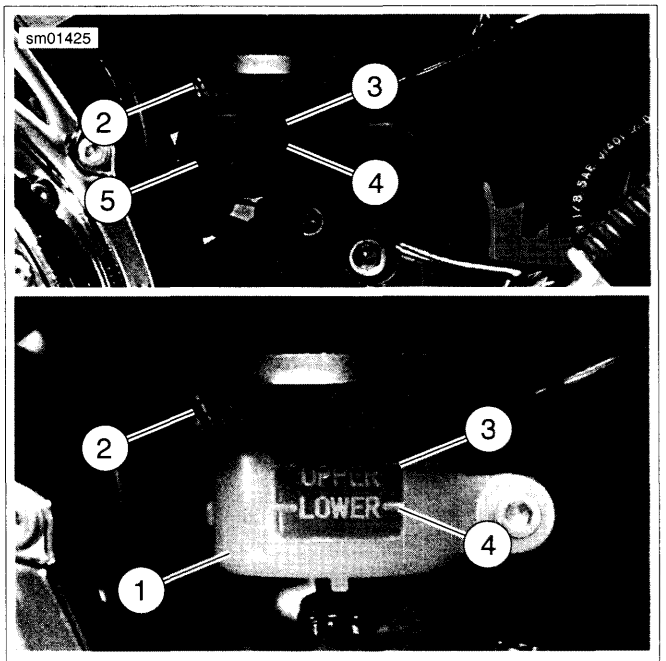

1. Rear brake master cylinder reservoir
2. Reservoir cap
3. Upper fluid level
4. Lower fluid level
5. Reservoir cover

Figure 1-15. Rear Brake Master Cylinder Reservoir: XL Models

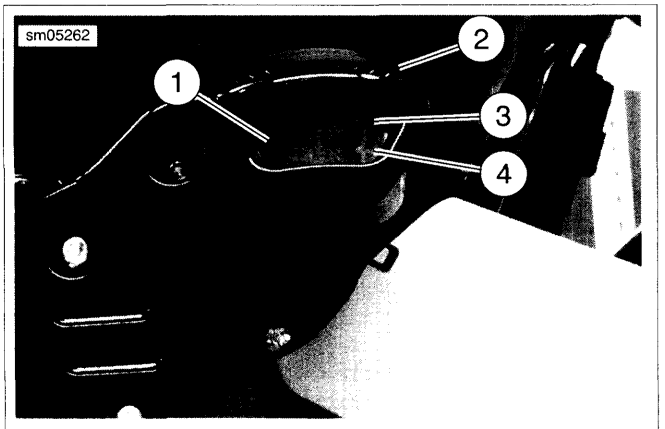

1. Rear brake master cylinder reservoir
2. Reservoir cap
3. Upper fluid level
4. Lower fluid level

Figure 1-16. Rear Brake Master Cylinder Reservoir (XR Models)

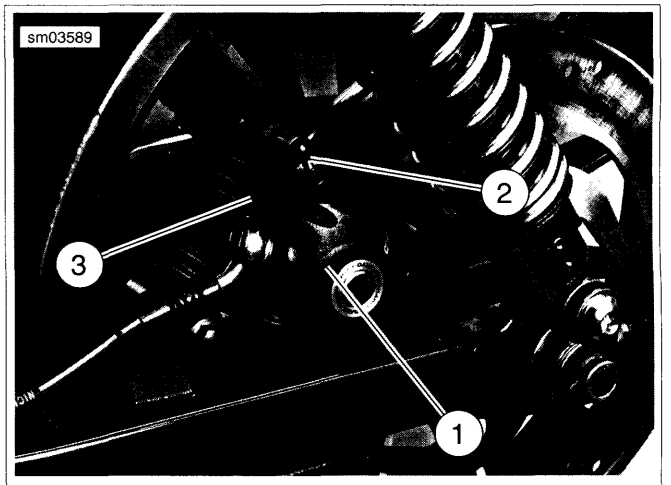

1. Rear brake caliper
2. Bleeder valve
3. Bleeder cap

Figure 1-17. Rear Brake Caliper: XL Models

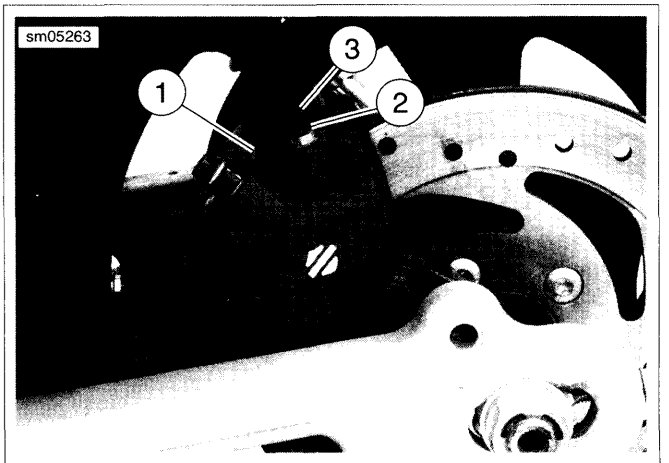

1. Rear brake caliper
2. Bleeder valve
3. Bleeder cap

Figure 1-18. Rear Brake Caliper: XR Models

INSPECTION

Brake Pads

⚠CAUTION

Direct contact of D.O.T. 4 brake fluid with eyes can cause irritation. Avoid eye contact. In case of eye contact flush with large amounts of water and get medical attention. Swallowing large amounts of D.O.T. 4 brake fluid can cause digestive discomfort. If swallowed, obtain medical attention. Use in well ventilated area. KEEP OUT OF REACH OF CHILDREN. (00240a)

CAUTION

D.O.T. 4 brake fluid will damage painted and body panel surfaces it comes in contact with. Always use caution and protect surfaces from spills whenever brake work is performed. Failure to comply can result in cosmetic damage. (00239b)

⚠WARNING

Always replace brake pads in complete sets for correct and safe brake operation. Improper brake operation could result in death or serious injury. (00111a)

See Figure 1-19. Replace brake pads (3) if brake pad friction material on either the front or rear caliper is worn to 0.04 in. (1.02 mm) or less above the backing plate (4). Always replace both pads in a caliper as a set. See 1.9 BRAKE PADS AND DISCS: XL MODELS, Brake Pad Replacement: Front or 1.9 BRAKE PADS AND DISCS: XL MODELS, Brake Pad Replacement: Rear.

When checking the brake pads and discs, inspect the brake hoses for correct routing and any signs of damage or leakage.

Brake Disc Thickness, Lateral Runout and Warpage

The minimum brake disc (2) thickness is stamped on the side of the disc. Replace disc if worn past minimum thickness or badly scored.

Maximum brake disc lateral runout and warpage is 0.008 in. (0.2 mm) when measured near the outside diameter.

- To replace front brake disc(s), see 2.4 WHEELS, Front Wheel.
- To replace rear brake disc, see 2.4 WHEELS, Rear Wheel.

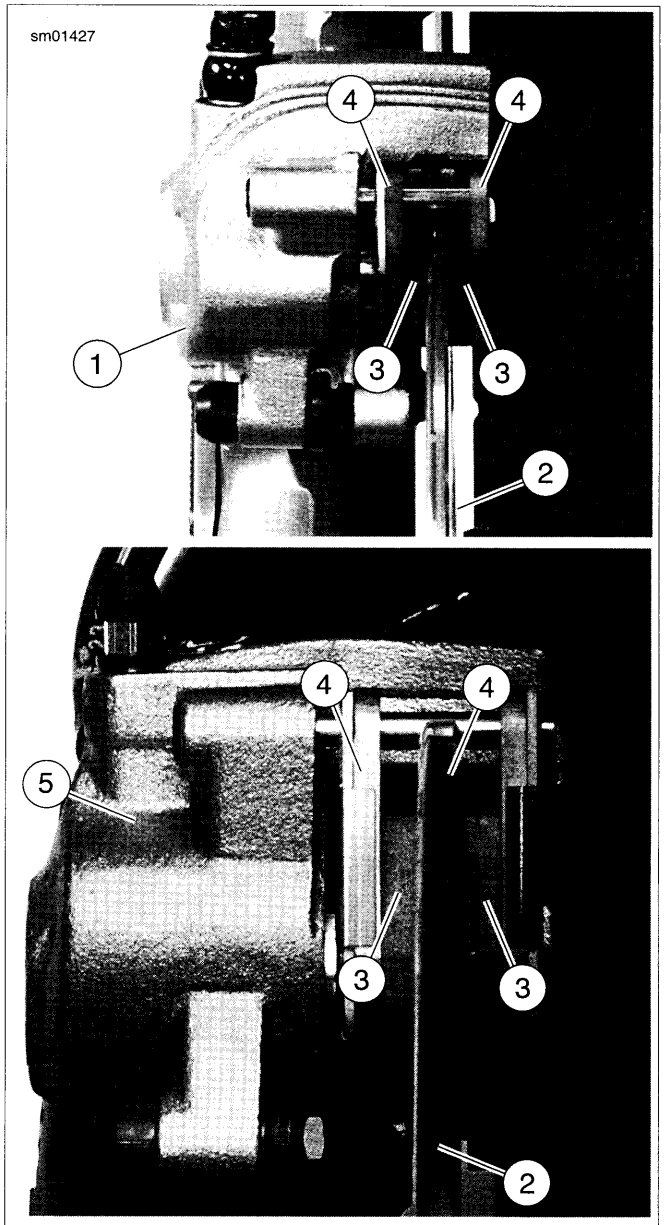

1. **Front brake caliper (viewed from below)**
2. **Brake disc**
3. **Brake pad (2)**
4. **Brake pad backing plate (2)**
5. **Rear brake caliper (viewed from rear)**

Figure 1-19. Brake Pad Inspection (Top: Front Brake, Bottom: Rear Brake)

BRAKE PAD REPLACEMENT: FRONT

CAUTION

D.O.T. 4 brake fluid will damage painted and body panel surfaces it comes in contact with. Always use caution and protect surfaces from spills whenever brake work is performed. Failure to comply can result in cosmetic damage. (00239b)

NOTES

- *Do not remove front caliper(s) from mounting bracket unless caliper mounting pins require service. Removing caliper from mounting bracket unnecessarily increases the risk of contaminants falling into mounting pin holes and damaging caliper during vehicle operation.*
- *If D.O.T. 4 brake fluid contacts painted surfaces, IMMEDIATELY flush area with clear water.*
- *Cover handlebar switches with a shop towel before adding brake fluid to front master cylinder reservoir. Spilling brake fluid on handlebar switches may render them inoperative.*

1. See Figure 1-20. Position motorcycle so that front master cylinder reservoir (1) is level.
2. See Figure 1-21. Remove two screws (5), reservoir cover (4), diaphragm plate (3) and diaphragm (2) from master cylinder reservoir (1).

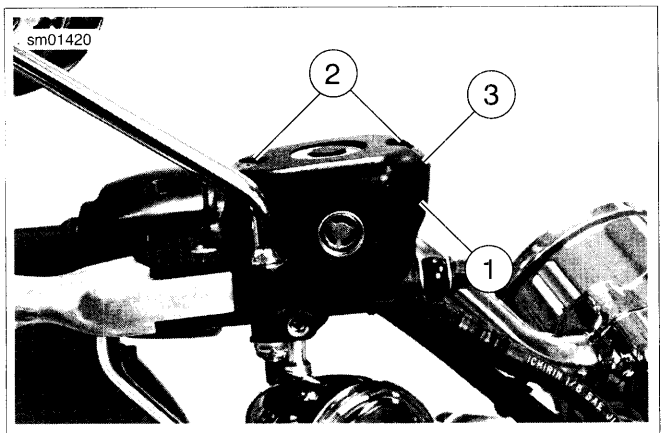

1. **Front brake master cylinder and reservoir**
2. **Cover screw (2)**
3. **Top cover**

Figure 1-20. Front Brake Master Cylinder Reservoir (typical; XL model shown)

NOTE

As the pistons are pushed back into the caliper, fluid level may rise higher than fluid level mark at about 1/4-in. (6.35 mm) below top of reservoir. You may have to remove fluid to allow for this.

3. Press against the side of the brake caliper body to push the outside brake pad (pad closest to caliper pistons) back. This pushes the caliper pistons back into their bores.

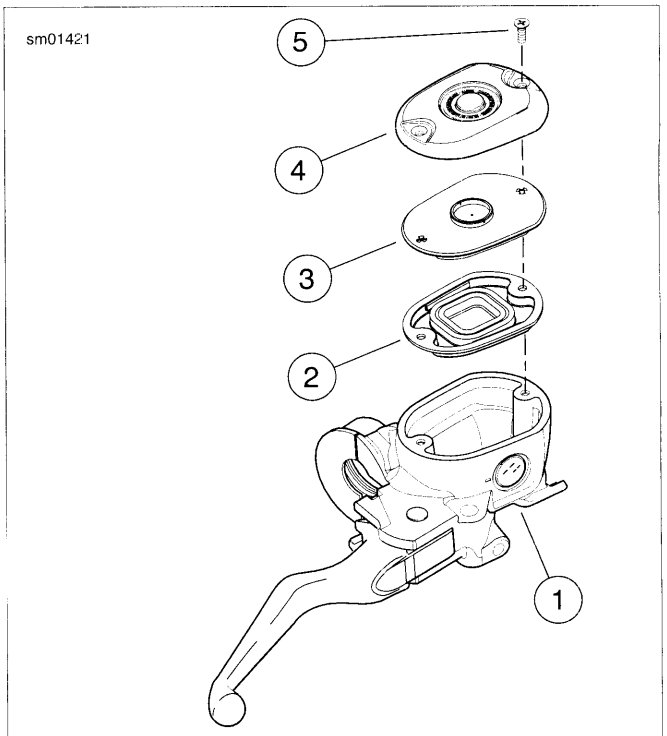

1. **Front brake master cylinder assembly**
2. **Diaphragm**
3. **Diaphragm plate**
4. **Reservoir cover**
5. **Captive screw (2)**

Figure 1-21. Front Brake Master Cylinder Cover Assembly (Typical)

NOTES

- *See Figure 1-22. When replacing front brake pads, make sure pad spring does not become dislodged and fall out. If it does, you will have to reinstall it before installing new pads.*
- *The front left and front right (not present on all models) calipers do NOT use the same brake pad set as the rear brake caliper.*

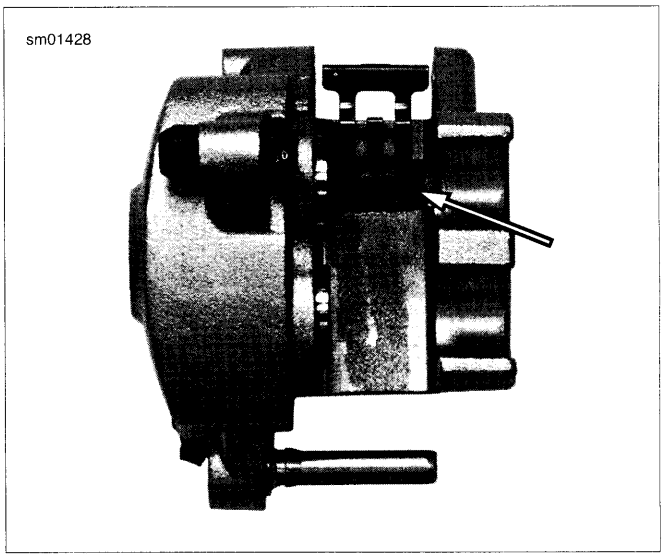

Figure 1-22. Front Caliper Pad Spring

4. See Figure 1-23. Remove pad pin plug (3).
5. See Figure 1-24. Loosen, but do not remove, brake pad pin.

NOTE

Do not completely remove brake pad pin from caliper during the next step. Completely removing pad pin at this time may cause difficulty during assembly.

6. Once the pistons have been fully retracted into their bores, pull pad pin part way until inside pad drops free. Note the pad's original orientation for replacement purposes.

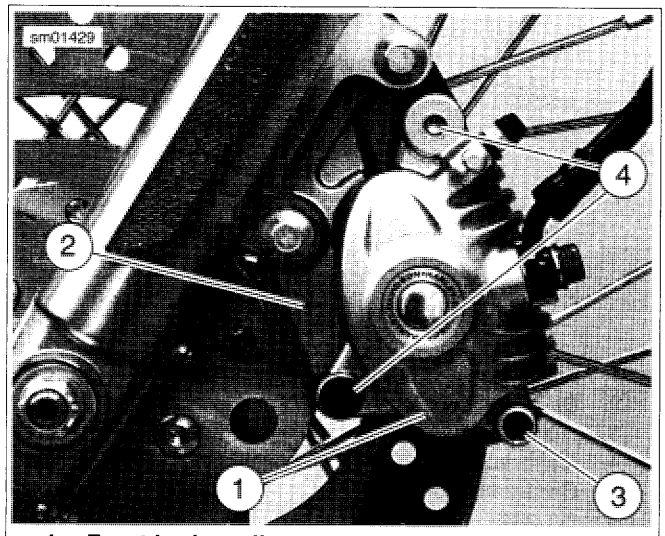

1. **Front brake caliper**
2. **Caliper mounting bracket**
3. **Pad pin plug**
4. **Caliper mounting pins**

Figure 1-23. Front Caliper Assembly

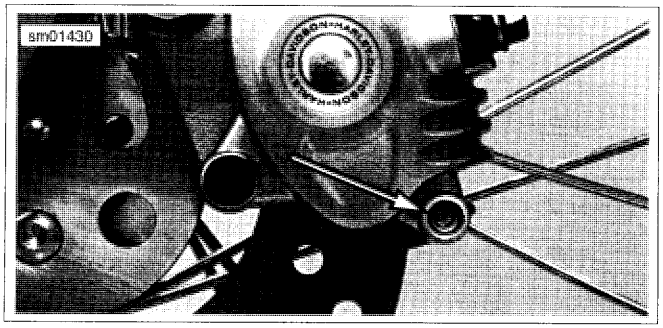

Figure 1-24. Brake Pad Pin (Plug Removed)

7. See Figure 1-25. Install **new** inside brake pad (1) using same orientation as pad previously removed. Make sure front mounting tab (2) is seated in slot (5) in caliper mounting bracket (4) and pad friction material faces brake disc.
8. While holding **new** inside pad in place, pull pad pin out and remove outside brake pad. Note the pad's original orientation for replacement purposes.
9. Install **new** outside brake pad using the same orientation as pad previously removed. Make sure front mounting tab is seated in slot in caliper mounting bracket and pad friction material faces brake disc.
10. Temporarily insert a 1/8-in drill bit in caliper pad pin hole to hold both pads in place.
11. Inspect pad pin for grooving and wear. Measure pad pin diameter in an unworn area, and then in the area of any grooving or wear. If wear is more than 0.011 in. (0.28 mm), replace pin.

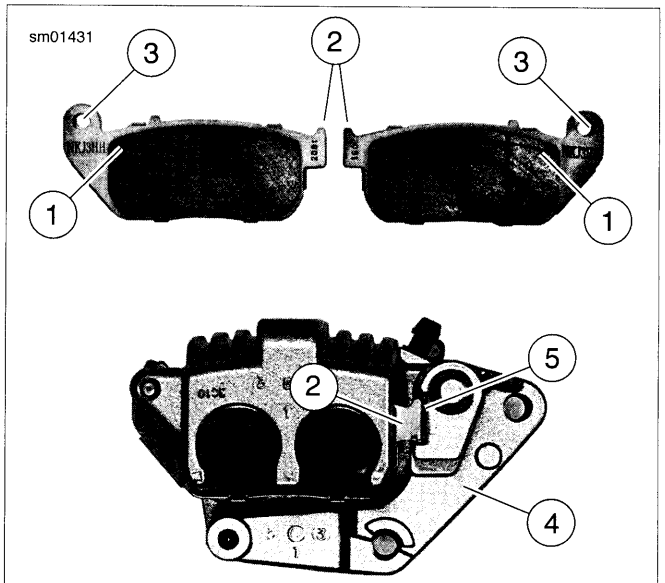

1. **Brake pad**
2. **Front mounting tab**
3. **Pad pin hole**
4. **Front caliper mounting bracket**
5. **Slot**

Figure 1-25. Front Brake Pads

12. Press brake pads firmly up against pad spring, remove drill bit and install pad pin. Tighten to 131-173 **in-lbs** (14.8-19.6 Nm).

NOTE

If pad pin does not fit, check the following:

- *You are using a set of pads, not two identical pads.*
- *Pad spring orientation must match Figure 1-22.*
- *See Figure 1-25. Pad front mounting tabs (2) must be fully seated in mounting bracket slot (5).*
- *Pads must be pushed tight up against pad spring before pad pin is installed.*

13. See Figure 1-23. Install pad pin plug (3). Tighten to 18-25 **in-lbs** (2.0-2.9 Nm).

⚠WARNING

After servicing brakes and before moving motorcycle, pump brakes to build brake system pressure. Insufficient pressure can adversely affect brake performance, which could result in death or serious injury. (00279a)

14. Pump brake lever to move pistons out until they contact outside brake pad. Verify piston location against pad.

⚠CAUTION

Direct contact of D.O.T. 4 brake fluid with eyes can cause irritation. Avoid eye contact. In case of eye contact flush with large amounts of water and get medical attention. Swallowing large amounts of D.O.T. 4 brake fluid can cause digestive discomfort. If swallowed, obtain medical attention. Use in well ventilated area. KEEP OUT OF REACH OF CHILDREN. (00240a)

CAUTION

D.O.T. 4 brake fluid will damage painted and body panel surfaces it comes in contact with. Always use caution and protect surfaces from spills whenever brake work is performed. Failure to comply can result in cosmetic damage. (00239b)

NOTE

If D.O.T. 4 brake fluid contacts painted surfaces, IMMEDIATELY flush area with clear water.

15. See Figure 1-26. Check brake fluid level in master cylinder. Add enough HARLEY-DAVIDSON D.O.T. 4 BRAKE FLUID to reservoir to bring fluid level even with ridge (1) cast into inside of reservoir, about 1/4-inch (6.35 mm) below top edge.

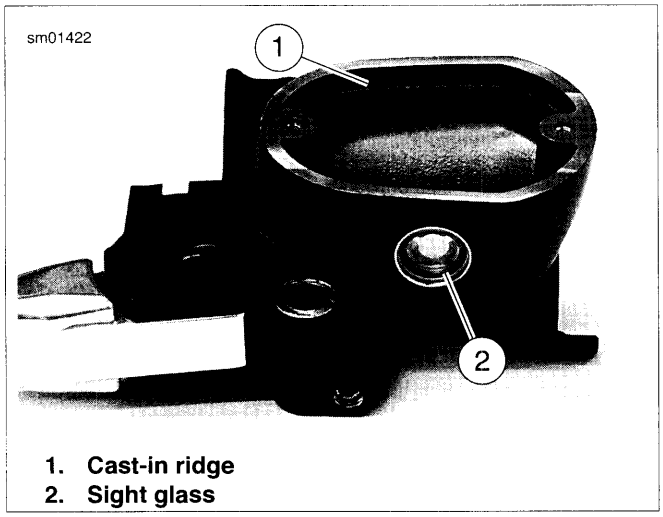

1. **Cast-in ridge**
2. **Sight glass**

Figure 1-26. Filling Front Master Cylinder Reservoir (Typical)

16. See Figure 1-21. Install diaphragm (2), diaphragm plate (3), reservoir cover (4) and screws (5) on front brake master cylinder reservoir. Tighten screws to 9-17 **in-lbs** (1.0-2.0 Nm).

⚠WARNING

After repairing the brake system, test brakes at low speed. If brakes are not operating properly, testing at high speeds can cause loss of control, which could result in death or serious injury. (00289a)

17. Test brake system.
    a. Turn ignition switch ON. Pump brake lever to verify operation of the brake lamp.
    b. Test ride the motorcycle. If the brakes feel spongy, bleed the system. See 1.8 BLEEDING HYDRAULIC BRAKE SYSTEM.

NOTE

*Avoid making hard stops for the first 100 miles (160 km). This allows the **new** pads to become conditioned to the brake discs.*

BRAKE PAD REPLACEMENT: REAR

CAUTION

D.O.T. 4 brake fluid will damage painted and body panel surfaces it comes in contact with. Always use caution and protect surfaces from spills whenever brake work is performed. Failure to comply can result in cosmetic damage. (00239b)

NOTES

- *Do **not** remove rear caliper from mounting bracket unless caliper mounting pins and boots require service. Removing caliper from mounting bracket unnecessarily increases the risk of contaminants falling into caliper boots and bushings which could damage caliper during vehicle operation.*
- *See Figure 1-29. It is further **not** required or recommended to remove or loosen the caliper mounting pins (4).*
- *It is **not** necessary or recommended to remove the rear brake caliper from the caliper mounting bracket to replace pads.*
- *If D.O.T. 4 brake fluid contacts painted surfaces, IMMEDIATELY flush area with clear water.*

1. Place motorcycle in an upright, level position.

NOTE

See Figure 1-27. As the piston is pushed back into the caliper, fluid level may rise higher than the upper fluid level (3) in the reservoir (1). You may have to remove fluid to allow for this.

2. See Figure 1-27. Remove rear master cylinder reservoir cap (2).

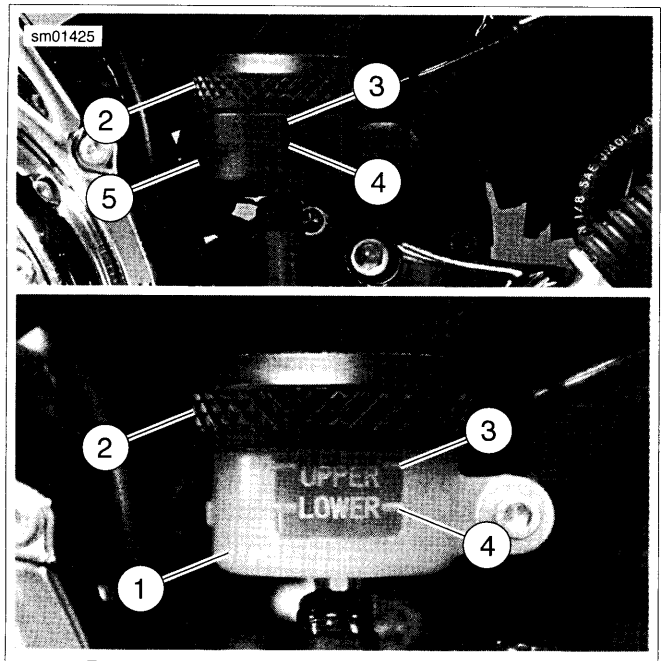

1. **Rear brake master cylinder reservoir**
2. **Reservoir cap**
3. **Upper fluid level**
4. **Lower fluid level**
5. **Reservoir cover**

Figure 1-27. Rear Brake Master Cylinder Reservoir: XL Models

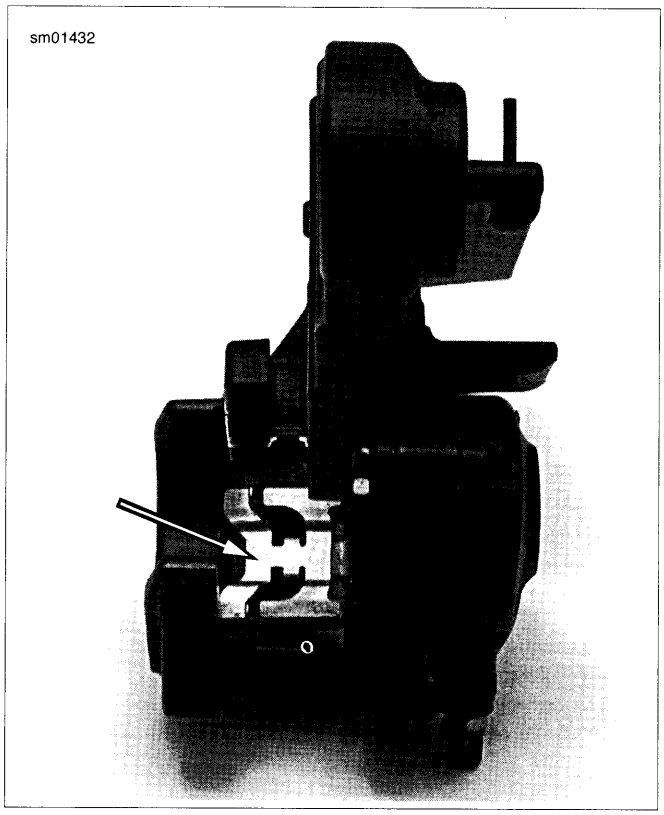

Figure 1-28. Rear Caliper Pad Spring

3. Press against the side of the brake caliper body to push the outside brake pad (pad closest to caliper piston) back. This pushes the caliper piston back into its bore.

NOTES

- *See Figure 1-28. When replacing rear brake pads, make sure pad spring does not become dislodged and fall out. If it does, you will have to reinstall it before installing new pads.*
- *The rear brake caliper does NOT use the same brake pad set as the front left and front right (not present on all models) calipers.*

4. See Figure 1-29. Remove pad pin plug (3).
5. See Figure 1-30. Loosen, but do not remove, brake pad pin.

NOTE

Do not completely remove brake pad pin from caliper during the next step. Completely removing pad pin at this time may cause difficulty during assembly.

6. Once the piston has been fully retracted into its bore, pull pad pin part way until inside pad drops free. Note the pad's original orientation for replacement purposes.

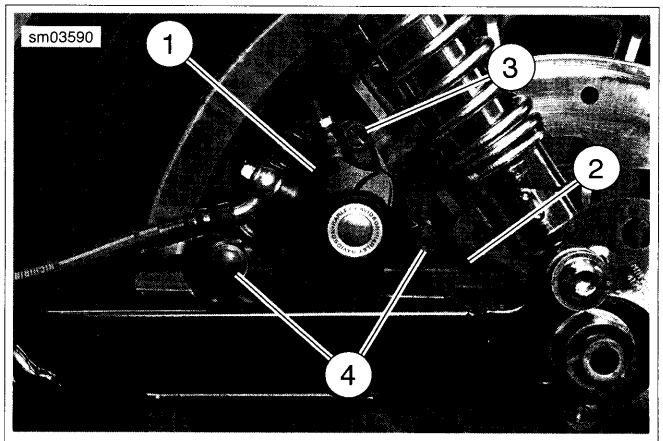

1. **Rear brake caliper**
2. **Caliper mounting bracket**
3. **Pad pin plug**
4. **Caliper mounting pins**

Figure 1-29. Rear Caliper Assembly

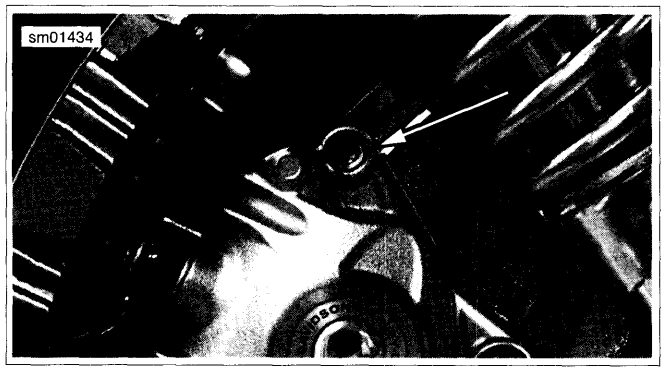

Figure 1-30. Brake Pad Pin (Plug Removed)

7. See Figure 1-31. Install **new** inside brake pad (2) using same orientation as pad previously removed. Make sure front mounting tab (3) is seated in slot (6) in caliper mounting bracket (5) and pad friction material faces brake disc.
8. While holding **new** inside pad in place, pull pad pin out and remove outside brake pad (1). Note the pad's original orientation for replacement purposes.
9. Install **new** outside brake pad using the same orientation as pad previously removed. Make sure front mounting tab is seated in slot in caliper mounting bracket and pad friction material faces brake disc.
10. Temporarily insert a 1/8-in. (3.175 mm) drill bit in caliper pad pin hole to hold pads in place.
11. Inspect pad pin for grooving and wear. Measure pad pin diameter in an unworn area, and then in the area of any grooving or wear. If wear is more than 0.011 in. (0.28 mm), replace pin.
12. Press brake pads firmly up against pad spring, remove drill bit and install pad pin. Tighten to 131-173 **in-lbs** (14.8-19.6 Nm).

NOTE

If pad pin does not fit, check the following:

- *You are using a set of pads, not two identical pads.*
- *Pad spring orientation must match Figure 1-28.*
- *See Figure 1-31. Pad front mounting tabs (3) must be fully seated in mounting bracket slot (6).*
- *Pads must be pushed tight up against pad spring before pad pin is installed.*

13. See Figure 1-29. Install pad pin plug (3). Tighten to 18-25 **in-lbs** (2.0-2.9 Nm).

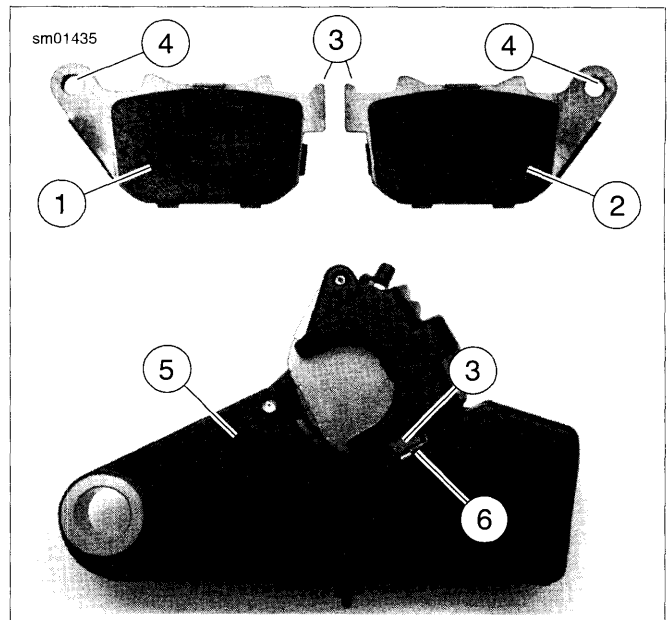

1. **Outside brake pad**
2. **Inside brake pad**
3. **Front mounting tab**
4. **Pad pin hole**
5. **Rear caliper mounting bracket**
6. **Slot**

Figure 1-31. Rear Brake Pads

⚠WARNING

After servicing brakes and before moving motorcycle, pump brakes to build brake system pressure. Insufficient pressure can adversely affect brake performance, which could result in death or serious injury. (00279a)

14. Pump brake pedal to move piston out until it contacts outside brake pad. Verify piston location against pad.

⚠CAUTION

Direct contact of D.O.T. 4 brake fluid with eyes can cause irritation. Avoid eye contact. In case of eye contact flush with large amounts of water and get medical attention. Swallowing large amounts of D.O.T. 4 brake fluid can cause digestive discomfort. If swallowed, obtain medical attention. Use in well ventilated area. KEEP OUT OF REACH OF CHILDREN. (00240a)

CAUTION

D.O.T. 4 brake fluid will damage painted and body panel surfaces it comes in contact with. Always use caution and protect surfaces from spills whenever brake work is performed. Failure to comply can result in cosmetic damage. (00239b)

NOTES

- *If D.O.T. 4 brake fluid contacts painted surfaces, IMMEDIATELY flush area with clear water.*
- *Rear brake master cylinder reservoir must be in a level position when filling and checking fluid level.*
- *See Figure 1-27. Reservoir cover (5) may be removed from rear brake master cylinder reservoir (1) to more easily verify fluid level in reservoir.*

15. See Figure 1-27. If desired, remove rear brake master cylinder reservoir cover (5) by grasping cover and gently pulling it straight away from reservoir (1).
16. Check brake fluid level in master cylinder reservoir. If necessary, add HARLEY-DAVIDSON D.O.T. 4 BRAKE FLUID to reservoir until fluid reaches upper fluid level (3).
17. Replace master cylinder reservoir cap (2). Replace reservoir cover (5), if removed.

⚠WARNING

After repairing the brake system, test brakes at low speed. If brakes are not operating properly, testing at high speeds can cause loss of control, which could result in death or serious injury. (00289a)

18. Test brake system.
    a. Turn ignition switch ON. Pump brake pedal to verify operation of the rear brake lamp.
    b. Test ride motorcycle at low speed. If the brakes feel spongy, bleed the system. See 1.8 BLEEDING HYDRAULIC BRAKE SYSTEM.

NOTE

*Avoid making hard stops for the first 100 miles (160 km). This allows the **new** pads to become conditioned to the brake discs.*

INSPECTION

Brake Pads

⚠WARNING

Always replace brake pads in complete sets for correct and safe brake operation. Improper brake operation could result in death or serious injury. (00111a)

⚠CAUTION

Direct contact of D.O.T. 4 brake fluid with eyes can cause irritation. Avoid eye contact. In case of eye contact flush with large amounts of water and get medical attention. Swallowing large amounts of D.O.T. 4 brake fluid can cause digestive discomfort. If swallowed, obtain medical attention. Use in well ventilated area. KEEP OUT OF REACH OF CHILDREN. (00240a)

CAUTION

D.O.T. 4 brake fluid will damage painted and body panel surfaces it comes in contact with. Always use caution and protect surfaces from spills whenever brake work is performed. Failure to comply can result in cosmetic damage. (00239b)

See Figure 1-32. Replace brake pads if thickness (1) of brake pad friction material (3) is worn to 0.040 in. (1.02 mm) or less. Always replace both pads in a caliper as a set. See 1.10 BRAKE PADS AND DISCS: XR MODELS, Brake Pad Replacement: Front or 1.10 BRAKE PADS AND DISCS: XR MODELS, Brake Pad Replacement: Rear.

When checking the brake pads and discs, inspect the brake hoses for correct routing and any signs of damage or leakage.

Brake Disc Thickness, Lateral Runout and Warpage

The minimum brake disc (4) thickness is stamped on the side of the disc. Replace disc if worn past minimum thickness or badly scored.

Maximum brake disc lateral runout and warpage is 0.008 in. (0.2 mm) when measured near the outside diameter.

- To replace front brake disc(s), see 2.4 WHEELS, Front Wheel.
- To replace rear brake disc, see 2.4 WHEELS, Rear Wheel.

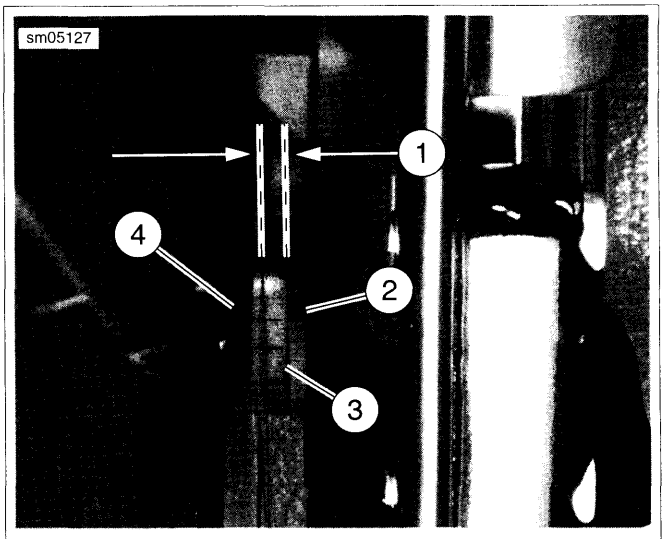

1. Friction material thickness
2. Pad backing plate
3. Friction material
4. Brake disc

Figure 1-32. Brake Pad Inspection (front brake shown)

BRAKE PAD REPLACEMENT: FRONT

Removal

CAUTION

D.O.T. 4 brake fluid will damage painted and body panel surfaces it comes in contact with. Always use caution and protect surfaces from spills whenever brake work is performed. Failure to comply can result in cosmetic damage. (00239b)

NOTES

- *If D.O.T. 4 brake fluid contacts painted surfaces, IMMEDIATELY flush area with clear water.*
- *Cover handlebar switches with a shop towel before adding brake fluid to front master cylinder reservoir. Spilling brake fluid on handlebar switches may render them inoperative.*

1. Position motorcycle so that front master cylinder reservoir is level.
2. See Figure 1-33. Remove two screws (5), reservoir cover (4), diaphragm plate (3) and diaphragm (2) from master cylinder reservoir (1).

NOTE

As the pistons are pushed back into the caliper, fluid level may rise higher than fluid level mark at about 1/4-in. (6.35 mm) below top of reservoir. Remove fluid as necessary to prevent overflow.

3. Wrap a shop towel around the master cylinder reservoir to contain any brake fluid spills.

4. Pry between the brake pads and brake disc to force all caliper pistons back into their bores. Use care not to scratch the rotor or cause warpage.

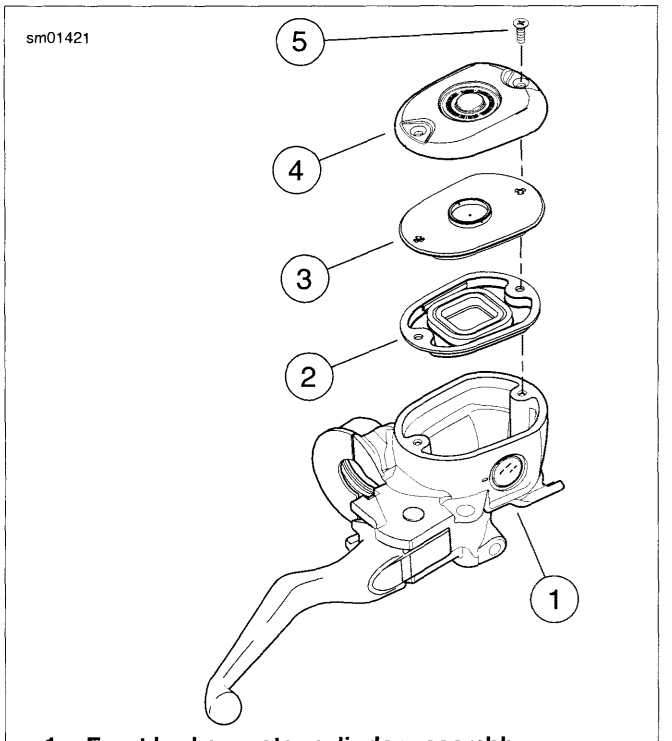

1. **Front brake master cylinder assembly**
2. **Diaphragm**
3. **Diaphragm plate**
4. **Reservoir cover**
5. **Captive screw (2)**

Figure 1-33. Front Brake Master Cylinder Cover Assembly (Typical)

5. See Figure 1-34. Remove pad pins (1).
6. Remove pad spring (2) and brake pads through opening in caliper assembly.

NOTE

The pad pins are manufactured with a relief near the center of their length, where the pad spring touches. Do not use this area as a measurement point to determine pad pin wear.

7. Inspect pad pin for grooving and wear. Measure pad pin diameter in an unworn area, and then in the area of any grooving or wear. If wear is more than 0.011 in. (0.28 mm), replace pin.
8. Inspect pad spring for wear or cracks. If worn or damaged, replace.

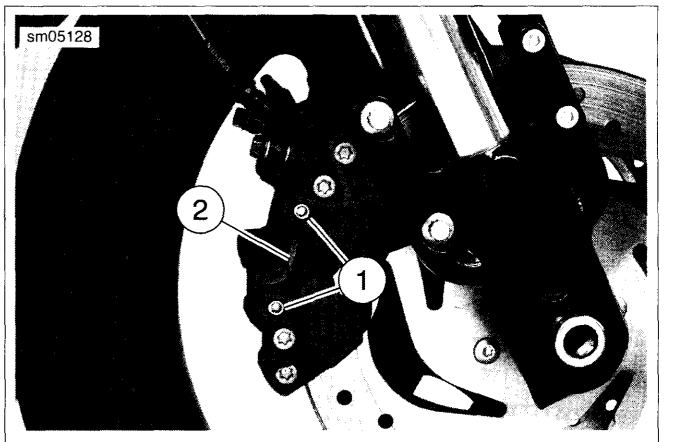

1. **Pad pins**
2. **Pad spring**

Figure 1-34. Front Caliper Assembly: XR Models

Installation

NOTE

See Figure 1-35. When replacing front brake pads, make sure pad spring is installed with the arrow and word "UP" (2) pointing up, and captured by both pad pins (3).

1. See Figure 1-34. Install **new** outer brake pad and pad spring. Make sure friction material faces brake disc.

NOTES

If pad pin does not fit, check the following:

- *You are using the correct set of pads.*
- *Pad spring orientation must match Figure 1-35.*
- *Pads must be pushed tight up against pad spring before pad pins are installed.*

2. While holding **new** outer pad in place, insert pad pins through holes in tabs of pad and into pad spring.
3. Install **new** inner brake pad, making sure friction material faces brake disc.
4. Push pad pins through holes in tabs of inner pad and into holes in caliper housing.
5. Tighten pad pins to 131-173 **in-lbs** (14.8-19.6 Nm).

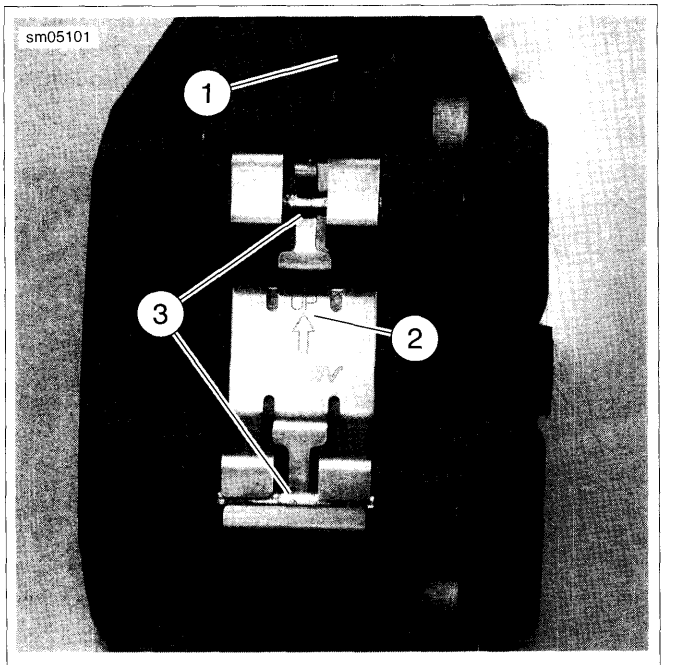

1. Banjo bolt hole
2. Arrow and word "UP"
3. Pad pins (2)

Figure 1-35. Front Caliper Pad Spring Orientation

⚠WARNING

After servicing brakes and before moving motorcycle, pump brakes to build brake system pressure. Insufficient pressure can adversely affect brake performance, which could result in death or serious injury. (00279a)

6. Pump brake lever to move pistons out until they contact outside brake pad. Verify piston location against pad.

⚠CAUTION

Direct contact of D.O.T. 4 brake fluid with eyes can cause irritation. Avoid eye contact. In case of eye contact flush with large amounts of water and get medical attention. Swallowing large amounts of D.O.T. 4 brake fluid can cause digestive discomfort. If swallowed, obtain medical attention. Use in well ventilated area. KEEP OUT OF REACH OF CHILDREN. (00240a)

CAUTION

D.O.T. 4 brake fluid will damage painted and body panel surfaces it comes in contact with. Always use caution and protect surfaces from spills whenever brake work is performed. Failure to comply can result in cosmetic damage. (00239b)

NOTE

If D.O.T. 4 brake fluid contacts painted surfaces, IMMEDIATELY flush area with clear water.

7. See Figure 1-36. Check brake fluid level in master cylinder. Add enough HARLEY-DAVIDSON D.O.T. 4 BRAKE FLUID to reservoir to bring fluid level even with ridge (1) cast into inside of reservoir, about 1/4 in. (6.35 mm) below top edge.

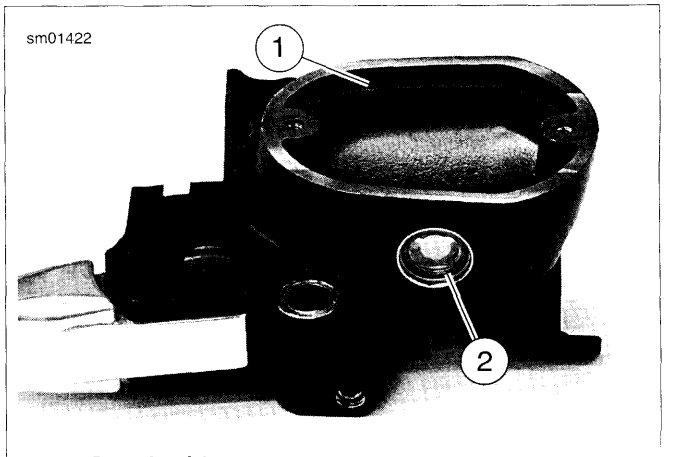

1. Cast-in ridge
2. Sight glass

Figure 1-36. Filling Front Master Cylinder Reservoir (Typical)

8. See Figure 1-33. Install diaphragm (2), diaphragm plate (3), reservoir cover (4) and screws (5) on front brake master cylinder reservoir. Tighten screws to 9-17 **in-lbs** (1.0-2.0 Nm).

⚠WARNING

After repairing the brake system, test brakes at low speed. If brakes are not operating properly, testing at high speeds can cause loss of control, which could result in death or serious injury. (00289a)

9. Test brake system.
   a. Turn ignition switch ON. Pump brake lever to verify operation of the brake lamp.
   b. Test ride the motorcycle. If the brakes feel spongy, bleed the system. See 1.8 BLEEDING HYDRAULIC BRAKE SYSTEM.

NOTE

*Avoid making hard stops for the first 100 miles (160 km). This allows the **new** pads to become conditioned to the brake discs.*

BRAKE PAD REPLACEMENT: REAR

Removal

CAUTION

D.O.T. 4 brake fluid will damage painted and body panel surfaces it comes in contact with. Always use caution and protect surfaces from spills whenever brake work is performed. Failure to comply can result in cosmetic damage. (00239b)

NOTES

- *Do **not** remove rear caliper from mounting bracket unless caliper mounting pins and boots require service. Removing caliper from mounting bracket unnecessarily increases the risk of contaminants falling into caliper boots and*

bushings which could damage caliper during vehicle operation.

- *See Figure 1-38. It is **not** required or recommended to remove or loosen the caliper mounting fasteners (3).*
- *It is **not** necessary or recommended to remove the rear brake caliper from the caliper mounting bracket to replace pads.*
- *If D.O.T. 4 brake fluid contacts painted surfaces, IMMEDIATELY flush area with clear water.*

1. Place motorcycle in an upright, level position.
2. Remove rear master cylinder reservoir cover.
3. Place a suitable container under the rear master cylinder to catch any fluid that may overflow.

NOTE

As the piston is pushed back into the caliper, fluid level may rise higher than the upper fluid level in the reservoir. Remove fluid as necessary to avoid fluid overflow.

4. Press against the outside of the brake caliper body to push the caliper piston back into its bore, forcing fluid back to the reservoir.

NOTE

See Figure 1-37. When replacing rear brake pads, make sure pad spring does not become dislodged and fall out. If it does, reinstall it before installing new pads.

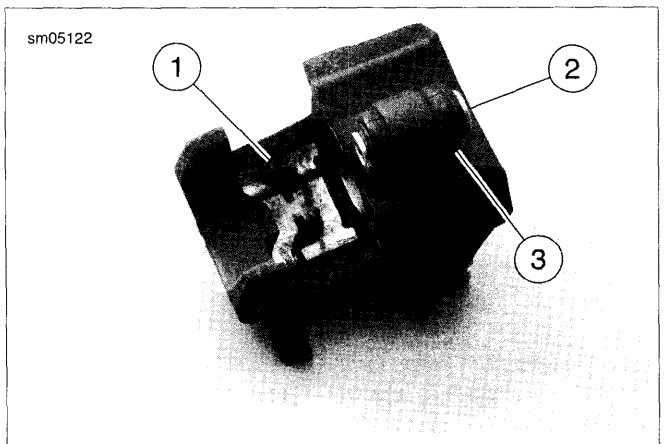

1. **Pad spring**
2. **Caliper housing**

Figure 1-37. Rear Caliper Pad Spring

NOTE

Left shock absorber is disconnected from rear fork for clarity of photograph. Pad replacement does not require the shock be disconnected.

5. See Figure 1-38. Remove pad pin plug (1).
6. Loosen, but do not remove, brake pad pin (2) (metric).
7. Pull pad pin part way out until inner pad drops free. Remove pad and note the pad's original orientation for replacement purposes.
8. Continue to remove pad pin until outer pad drops free.
9. Inspect pad pin for grooving and wear. Measure pad pin diameter in an unworn area, and then in the area of any grooving or wear. If wear is more than 0.011 in. (0.28 mm), replace pin.

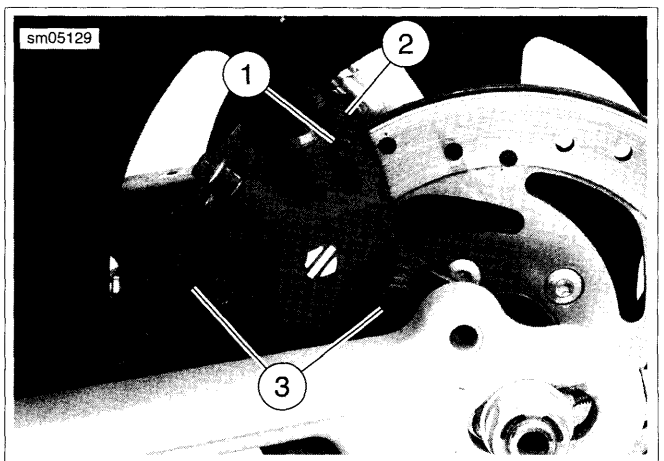

1. **Pad pin plug**
2. **Pad pin**
3. **Mounting fasteners**

Figure 1-38. Rear Caliper Assembly

Installation

NOTE

The caliper and mounting bracket are shown removed for clarity of photograph. Removal is not required to replace brake pads.

1. See Figure 1-39. Install **new** outside brake pad using the same orientation as pad previously removed. Make sure front mounting tab (3) is seated in slot (6) in caliper mounting bracket and pad friction material faces brake disc.
2. Install pad pin into caliper and through outer pad.
3. Position inner pad and continue to install pad pin while pressing brake pads firmly up against pad spring. Tighten pad pin to 131-173 **in-lbs** (14.8-19.6 Nm).

NOTE

If pad pin does not fit, check the following:

- *The correct pads are being installed.*
- *Pad spring orientation is correct as shown in Figure 1-37.*
- *See Figure 1-39. Pad front mounting tabs (3) must be fully seated in mounting bracket slot (6).*
- *Pads must be pushed tight up against pad spring before pad pin is installed.*

4. See Figure 1-38. Install pad pin plug (1). Tighten to 18-25 **in-lbs** (2.0-2.9 Nm).

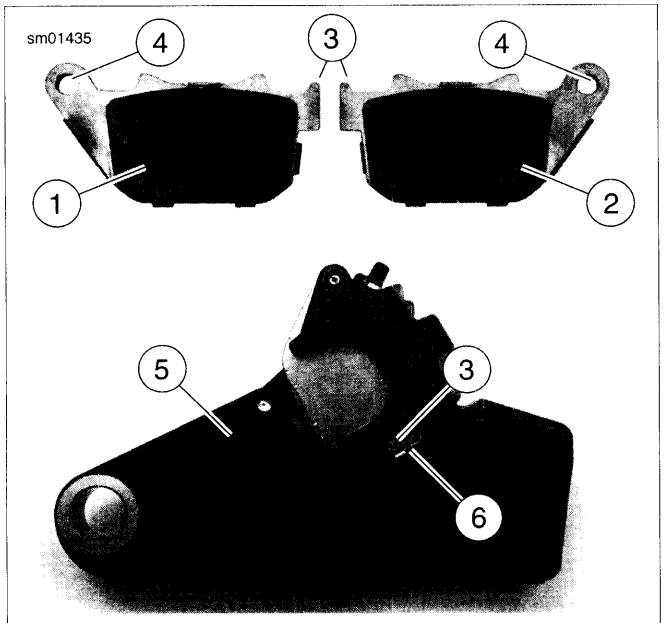

1. **Outside brake pad**
2. **Inside brake pad**
3. **Front mounting tab**
4. **Pad pin hole**
5. **Rear caliper mounting bracket**
6. **Slot**

Figure 1-39. Rear Brake Pads

⚠WARNING

After servicing brakes and before moving motorcycle, pump brakes to build brake system pressure. Insufficient pressure can adversely affect brake performance, which could result in death or serious injury. (00279a)

5. Pump brake pedal to move piston out until it contacts outside brake pad. Verify piston location against pad.

⚠CAUTION

Direct contact of D.O.T. 4 brake fluid with eyes can cause irritation. Avoid eye contact. In case of eye contact flush with large amounts of water and get medical attention. Swallowing large amounts of D.O.T. 4 brake fluid can cause digestive discomfort. If swallowed, obtain medical attention. Use in well ventilated area. KEEP OUT OF REACH OF CHILDREN. (00240a)

NOTE

Rear brake master cylinder reservoir must be in a level position when filling and checking fluid level.

6. Remove rear brake master cylinder reservoir cover and check brake fluid level in master cylinder reservoir. If necessary, add HARLEY-DAVIDSON D.O.T. 4 BRAKE FLUID to reservoir until fluid reaches upper fluid level.
7. Replace reservoir cover.

⚠WARNING

After repairing the brake system, test brakes at low speed. If brakes are not operating properly, testing at high speeds can cause loss of control, which could result in death or serious injury. (00289a)

8. Test brake system.
   a. Turn ignition switch ON. Pump brake pedal to verify operation of the rear brake lamp.
   b. Test ride motorcycle at low speed. If the brakes feel spongy, bleed the system. See 1.8 BLEEDING HYDRAULIC BRAKE SYSTEM.

NOTE

*Avoid making hard stops for the first 100 miles (160 km). This allows the **new** pads to become conditioned to the brake discs.*

TIRES

⚠WARNING

Match tires, tubes, air valves and caps to the correct wheel rim. Contact a Harley-Davidson dealer. Mismatching can result in damage to the tire bead, allow tire slippage on the rim or cause tire failure, which could result in death or serious injury. (00023a)

⚠WARNING

Use only Harley-Davidson approved tires. See a Harley-Davidson dealer. Using non-approved tires can adversely affect stability, which could result in death or serious injury. (00024a)

⚠WARNING

Use inner tubes on laced (wire spoked) wheels. Using tubeless tires on laced wheels can cause air leaks, which could result in death or serious injury. (00025a)

NOTES

- *Inner tubes must not be used in radial tires and radial tires must not be used on laced (wire spoked) wheels.*
- *Tubeless tires are used on all Harley-Davidson cast and disc wheels.*
- *Tire sizes are molded on the tire sidewall. Inner tube sizes are printed on the tube.*
- *New tires should be stored on a horizontal tire rack. Avoid stacking new tires in a vertical stack. The weight of the stack compresses the tires and closes down the beads.*

Check tire pressure and tread:

- As part of the pre-ride inspection.
- At every scheduled service interval.

1. Inspect each tire for punctures, cuts and breaks.
2. Inspect each tire for wear. Replace tires before they reach the tread wear indicator bars.

NOTE

Missing indicator wear bars represent less than 1/32 in. (0.8 mm) tread pattern depth remaining.

3. Check for proper front and rear tire pressures when tires are cold. Refer to Table 1-8.

Table 1-8. Tires

MODEL	MOUNT	DIAMETER (in)	NUMBER	PRESSURE (COLD)	
				psi	kPa
XR models	front	18	Dunlop D209F RP 120/70 ZR 18	36	248
XR models	rear	17	Dunlop D209 HD 180/55 ZR 17	42	290
XL models (except XL 883C, XL 1200C)	front	19	Dunlop D401F 100/90-19	30	206
XL 883C, XL 1200C	front	21	Dunlop D402F MH90-21	30	206
XL models	rear	16	Dunlop D401 150/80B16	40	275

TIRE REPLACEMENT

Inspection

⚠WARNING

Harley-Davidson tires are equipped with wear bars that run horizontally across the tread. When wear bars become visible and only 1/32 in. (0.8 mm) tread depth remains, replace tire immediately. Using a worn tire can adversely affect stability and handling, which could result in death or serious injury. Use only Harley-Davidson approved replacement tires. (00090b)

See Figure 1-40. Arrows on tire sidewalls pinpoint location of wear bar indicators.

Tread wear indicator bars will appear on tire tread surfaces when 1/32 in (0.8 mm) or less of tire tread remains. See Figure 1-41 . Always replace tires before the tread wear indicator bars appear.

When To Replace Tires

New tires are needed if any of the following conditions exist:

1. Tread wear indicator bars become visible on the tread surfaces.
2. Tire cords or fabric become visible through cracked sidewalls, snags or deep cuts.
3. A bump, bulge or split in the tire.
4. Puncture, cut or other damage to the tire that cannot be repaired.

When installing tires on rims, do not rely on tread design to determine direction of rotation. Always be sure the rotational

arrows molded into the sidewalls point in the direction of rotation when the vehicle is moving forward.

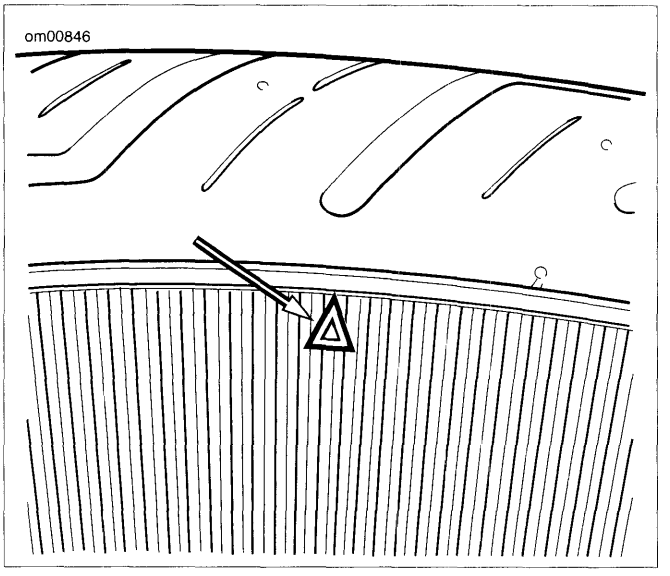

Figure 1-40. Tire Sidewall Wear Bar Locator (Typical)

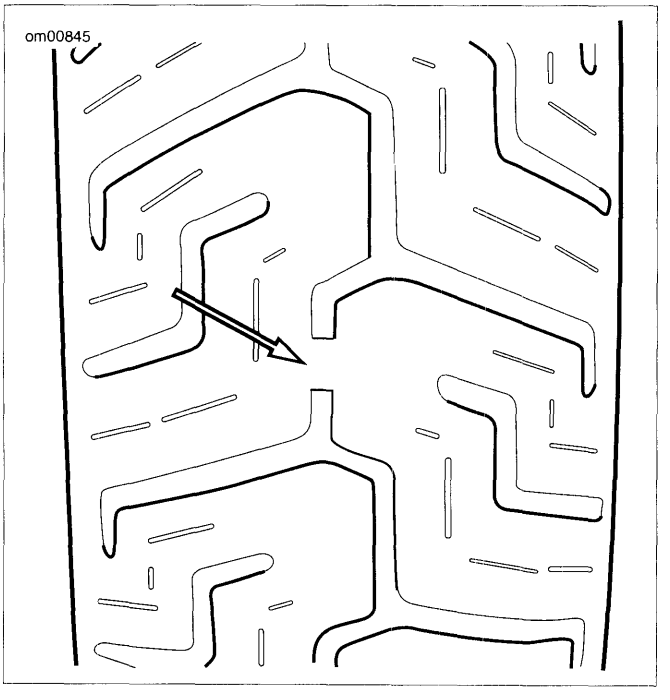

Figure 1-41. Wear Bar Appearance (Typical)

WHEEL BEARINGS

1. Replace when bearings exceed end play service wear limit of 0.002 in. (0.051 mm).
2. Inspect any time the wheels are removed.
   a. Inspect the play of the wheel bearings by finger while they are in the wheel.
   b. Rotate the inner bearing race and check for abnormal noise.
   c. Make sure bearing rotates smoothly.
3. Check wheel bearings and axle spacers for wear and corrosion. Excessive play or roughness indicates worn bearings. Replace bearings in sets only. See 2.4 WHEELS, Sealed Wheel Bearings.

WHEEL SPOKES

PART NUMBER	TOOL NAME
HD-48985	SPOKE TORQUE WRENCH
HD-94681-80	SPOKE NIPPLE WRENCH

⚠WARNING

Spokes that are too tight can draw nipples through the rim or distort hub flanges. Spokes that are too loose can continue to loosen when put in service. Either condition can adversely affect stability and handling, which could result in death or serious injury. (00286a)

CAUTION

If nipples require more than one full turn to tighten spoke, remove tire to check that spoke protrusion has not damaged tube. (00526b)

CAUTION

When lifting a motorcycle using a jack, be sure jack contacts both lower frame tubes where down tubes and lower frame tubes converge. Never lift by jacking on crossmembers, oil pan or other housings. Failure to comply can cause serious damage resulting in the need to perform major repair work. (00586c)

1. Raise wheel with a suitable lifting device.

Identify Wheel Spoke Groups

NOTE

Spokes are grouped in sets of four.

1. See Figure 1-42. Starting at the valve stem, identify the first group of four spokes (1-4).
2. Using a different color for each spoke in the group, draw an alignment mark across the spoke nipple and onto the rim.
3. Continue around the wheel marking the rest of the spokes the same as they were marked in the previous step.

Wheel Spoke Adjustment

NOTES

- *Do not tighten spoke more than 1/4 turn past alignment mark. If more tension is needed, label spoke and check after completing rest of wheel.*
- *Do not use the torque spoke wrench to loosen spokes. Use SPOKE NIPPLE WRENCH (Part No. HD-94681-80) to loosen spokes.*

1. See Figure 1-42. Starting with the first group of spokes, loosen spoke (1) using SPOKE NIPPLE WRENCH (Part No. HD-94681-80) 1/4 turn.

2. Using SPOKE TORQUE WRENCH (Part No. HD-48985) tighten spoke (1) to the value listed in Table 1-9.
   a. While tightening, if the torque wrench clicks before the alignment marks align, continue to turn the spoke nipple until the marks align.
   b. If the alignment marks align and the torque spec has not been reached, continue to tighten the spoke nipple until the correct torque is achieved, but do not turn spoke nipple more then 1/4 turn past alignment mark.
3. Repeat previous two steps for spoke (4) in the same group.
4. Continue around the wheel checking spokes 1 and 4 until all groups are done.
5. Repeat procedure for spokes (2, 3) in each group.

NOTE

When checking any spokes that were labeled, make sure to use the original alignment mark.

6. Check spokes, if any, that were labeled as not reaching the proper torque value after tigtening 1/4 turn past alignment mark.
   a. Loosen spoke 1/4 turn past original alignment mark using SPOKE NIPPLE WRENCH (Part No. HD-94681-80).
   b. While tightening, if the torque wrench clicks before the alignment marks align, continue to turn the spoke nipple until the marks align.
   c. If the alignment marks align and the torque spec has not been reached, continue to tighten the spoke nipple until the correct torque is achieved, but do not turn spoke nipple more then 1/4 turn past alignment mark.
7. True the wheel. See 2.8 CHECKING AND TRUING WHEELS.

Table 1-9. Spoke Nipple Torque Specification

RIM TYPE	MINIMUM TORQUE
All	55 **in-lbs** (6.2 Nm)

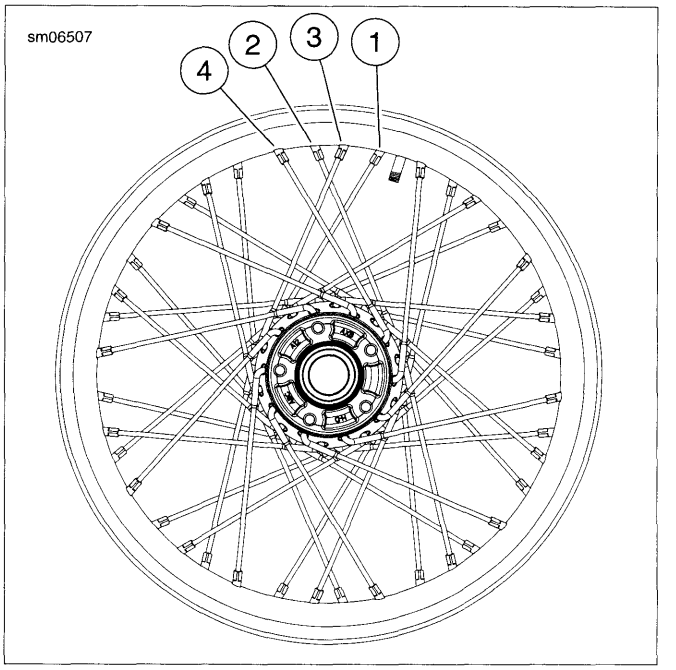

Figure 1-42. Tightening Laced Wheels (Typical)

INSPECTION

See Figure 1-43. Check the primary chain for correct tension by measuring its vertical free play through the primary chain inspection cover (1) opening located near the top of the primary cover (2).

NOTES

- *See Figure 1-44. Refer to Table 1-10. A properly adjusted primary chain should have the specified vertical free play in its upper strand. Be sure the measurement is taken midway between engine and clutch sprockets with sprockets rotated to the tightest chain position.*
- *Always measure the vertical free play with the sprockets rotated to several different positions. The tightest measurement observed must be within specifications shown in Table 1-10.*
- *The initial primary chain vertical free play specification used at the Harley-Davidson assembly plant is 1/4-3/8 in. (6.35-9.53 mm) with a cold engine. The 1/4 in. (6.35 mm) minimum is only allowed at the absolute tightest point in the drive, as measured with precision factory equipment. If a chain has less than 1/4 in. (6.35 mm) vertical free play (with a cold engine), adjust free play to the "field" specification of 3/8-1/2 in. (9.53-12.70 mm). The looser specification will avoid overtightening, which might otherwise occur during adjustment using "non-factory" equipment and methods.*
- *An opening between the primary drive and transmission compartments allows the same lubricant supply to lubricate moving parts in both compartments. For complete lubrication service on the primary chain, see 1.14 TRANSMISSION LUBRICANT.*
- *Since the primary chain runs in lubricant, little service will be required other than checking lubricant level and chain tension. If, through hard usage, the primary chain does become worn, it must be replaced. Remove and install the chain following the procedure under 5.5 PRIMARY DRIVE AND CLUTCH: XL MODELS.*

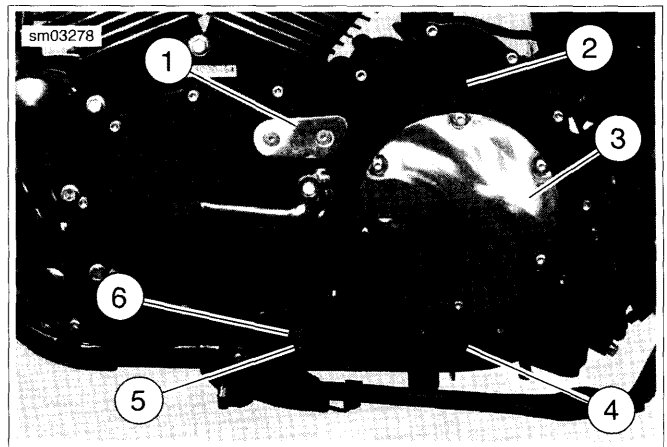

1. **Primary chain inspection cover**
2. **Primary cover**
3. **Clutch inspection cover**
4. **Drain plug**
5. **Primary chain adjuster screw**
6. **Lock nut**

Figure 1-43. Primary Cover: All Models (XL Model Shown)

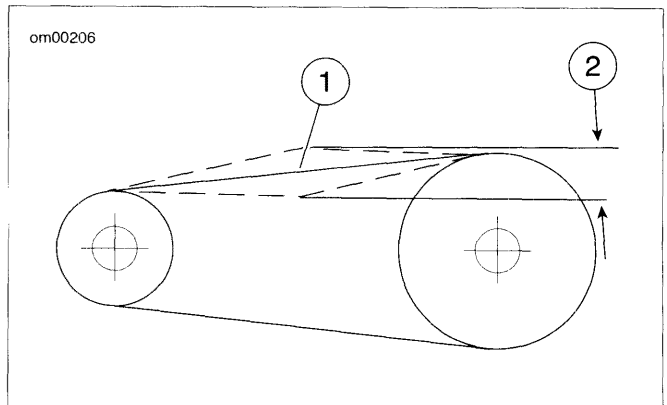

1. **Measurement point between sprockets**
2. **Free play measurement**

Figure 1-44. Primary Chain Vertical Free Play: Sportster Models

Table 1-10. Primary Chain Adjustment: Sportster Models

FREE PLAY	INCHES	MILLIMETERS
COLD engine	3/8-1/2	9.5-12.7
HOT engine	1/4-3/8	6.3-9.5

ADJUSTMENT

⚠WARNING

To prevent accidental vehicle start-up, which could cause death or serious injury, remove main fuse before proceeding. (00251b)

See Figure 1-43. The primary chain can be adjusted without removing the primary cover (2). Proceed as follows:

1. Unplug main fuse. See 6.35 MAIN FUSE.
2. Remove two hex socket screws securing primary chain inspection cover (1).
3. Rotate sprockets to find tightest point on primary chain.

CAUTION

Do not adjust the primary chain tighter than specified. Running chain too tight will result in excessive wear. (00202a)

4. Loosen lock nut (6). Using a 1/4-inch allen wrench, turn chain adjuster screw (5) clockwise (inward) to reduce free play or counterclockwise (outward) to increase free play. Vertical free play must fall within the limits specified in Table 1-10.

NOTE

If vertical free play cannot be set within the limits specified in Table 1-10, then primary chain and/or chain adjuster are worn beyond adjustment limits. Replace parts as necessary. See 5.3 PRIMARY CHAIN ADJUSTER.

5. See Figure 1-43. When tension is set correctly, hold chain adjusting screw with allen wrench and tighten lock nut (6) to 20-25 ft-lbs (27.1-33.9 Nm).
6. Install primary chain inspection cover (1) and **new** gasket. Tighten hex socket screws to 84-120 **in-lbs** (9.5-13.6 Nm).
7. Plug in main fuse. See 6.35 MAIN FUSE.

ADJUSTMENT

All models feature a primary cover and a quick-release clutch cable to simplify both clutch service and adjustment. See Figure 1-45. Clutch cable adjuster is located in middle of cable, adjacent to left frame downtube.

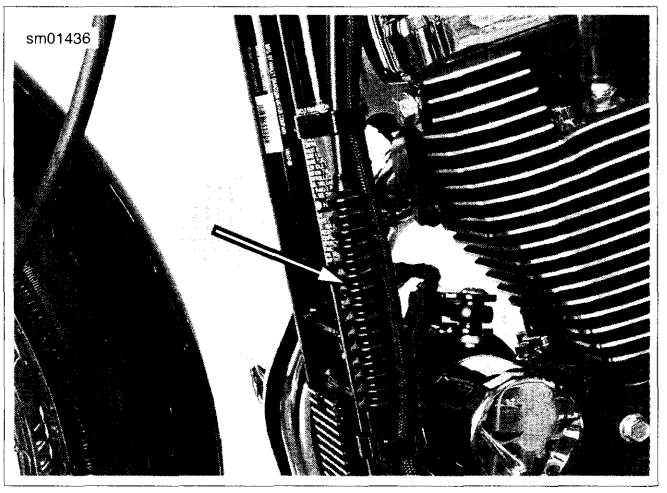

Figure 1-45. Clutch Cable Adjuster Location (typical; XL model shown)

1. See Figure 1-46. Slide rubber boot (1) off cable adjuster (2).
2. Holding cable adjuster with 1/2 inch wrench, loosen jam nut (3) using a 9/16 inch wrench. Back jam nut away from cable adjuster. Screw adjuster toward jam nut to introduce a large amount of free play at hand lever.
3. **XL models equipped with mid-mount foot controls:** remove left side rider footrest and mounting bracket assembly. See 2.39 RIDER FOOT CONTROLS: XL MID-MOUNT CONTROLS for removal.

   XR models: remove left side rider footrest, mounting bracket assembly, and shift linkage. See 2.41 RIDER FOOT CONTROLS: XR MODELS for removal.
4. See Figure 1-47. Remove six screws (1) and remove clutch inspection cover (2). Remove and discard quad ring (7).
5. Remove hex lockplate with attached spring (3) from flats of adjusting screw assembly (8). Turn adjusting screw counterclockwise until resistance is felt. Back off adjusting screw 1/4 turn.
6. Slide hex lockplate with spring onto flats of adjusting screw. If necessary, turn adjusting screw clockwise slightly so that lockplate slides onto flats while also fitting within recess of outer ramp.

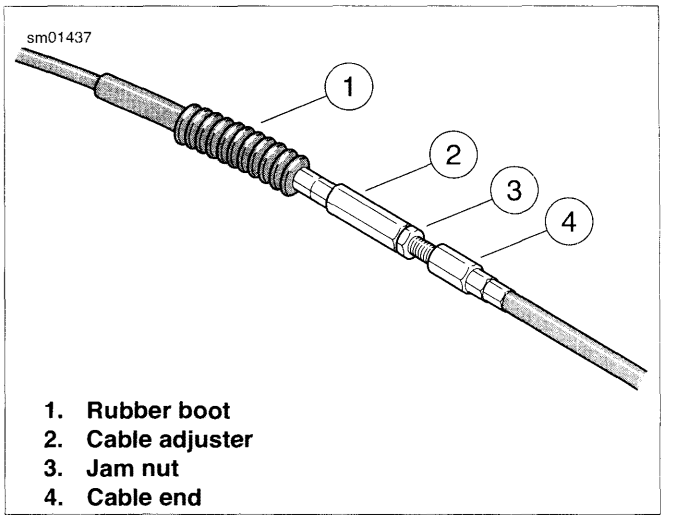

Figure 1-46. Clutch Cable Adjuster Mechanism

7. Install **new** quad ring. Verify that quad ring is fully seated in groove of primary cover. Install clutch inspection cover and secure with six screws. Tighten screws in a crosswise pattern to 84-108 **in-lbs** (9.5-12.2 Nm).
8. See Figure 1-46. Turn cable adjuster (2) clockwise away from jam nut (3) until slack is eliminated.
9. See Figure 1-48. Pull clutch cable ferrule away from clutch lever bracket to check free play. Turn cable adjuster as necessary to obtain 1/16-1/8 in. (1.6-3.2 mm) free play between end of cable ferrule and clutch lever bracket.
10. See Figure 1-46. Hold adjuster (2) with 1/2 inch wrench. Using 9/16 inch wrench, tighten jam nut (3) against cable adjuster to 10 ft-lbs (13.6 Nm).
11. Cover cable adjuster mechanism with rubber boot (1).
12. Secure cable in cable retainers attached to down tube.
13. **XL models equipped with mid-mount foot controls:** install left side rider footrest and mounting bracket assembly. Tighten footrest bracket mounting screws to 45-50 ft-lbs (61-68 Nm). See 2.39 RIDER FOOT CONTROLS: XL MID-MOUNT CONTROLS for installation.

    XR models: install left side rider footrest, shifter and mounting bracket assembly, and shift linkage. Tighten footrest bracket mounting screws to 45-50 ft-lbs (61.0-67.8 Nm). Tighten linkage fastener to 10-15 ft-lbs (13.6-20.3 Nm). See 2.41 RIDER FOOT CONTROLS: XR MODELS for installation.

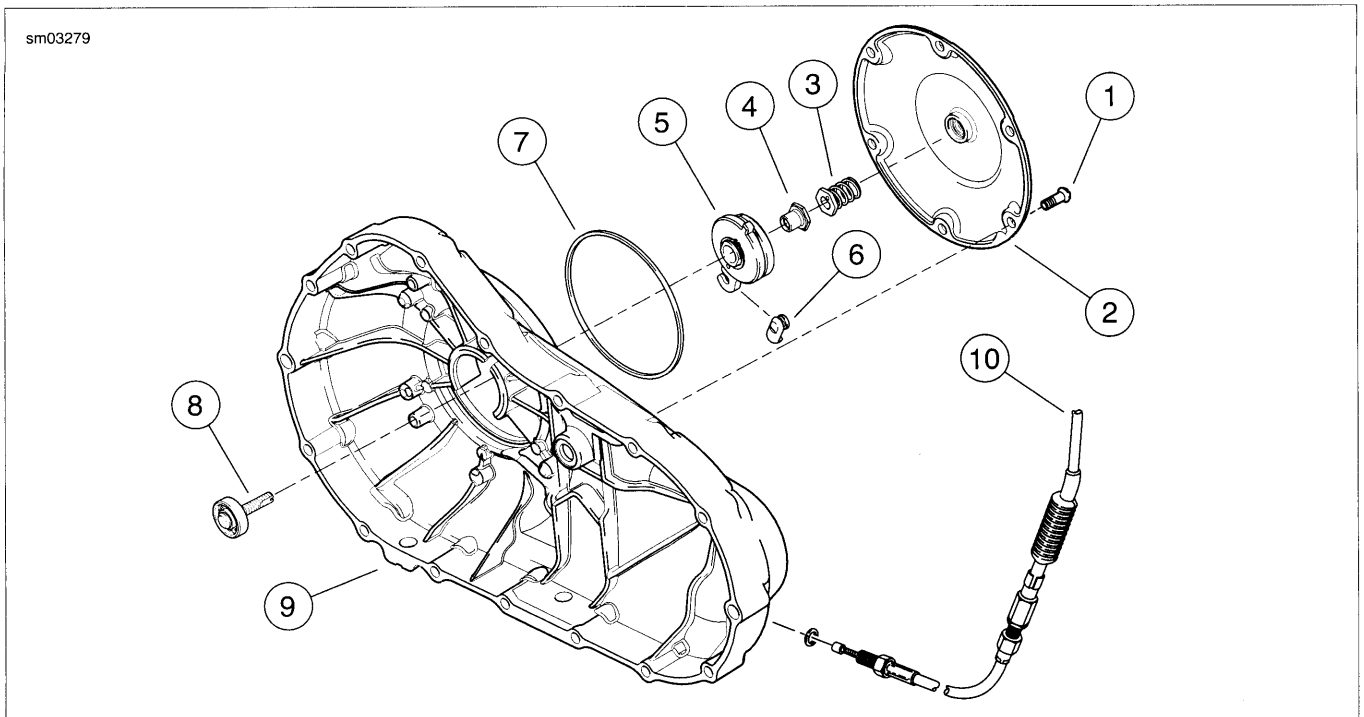

1. Screw (6)
2. Clutch inspection cover
3. Hex lockplate and spring
4. Nut
5. Ramp assembly
6. Coupling
7. Quad ring
8. Clutch adjusting screw assembly
9. Primary cover
10. Clutch cable

Figure 1-47. Clutch Release Mechanism

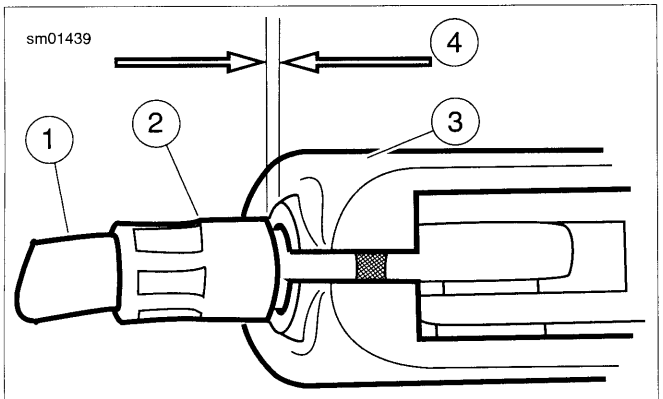

1. Clutch cable
2. Cable ferrule
3. Clutch lever bracket
4. Adjustment range

Figure 1-48. Clutch Freeplay: Adjust for 1/16-1/8 in. (1.6-3.2 mm) Gap Between Ferrule and Bracket

TRANSMISSION LUBRICATION

Refer to Table 1-4. The transmission should be drained and refilled with fresh lubricant at proper intervals. For best results, drain lubricant while hot.

NOTE

When checking the transmission lubricant level, motorcycle should be standing STRAIGHT UP, not leaning on the jiffy stand. Keep motorcycle upright for a short period of time to equalize lubricant level in the transmission compartments.

CAUTION

When draining or adding lubricant, do not allow dirt, debris or other contaminants to enter the engine. (00198a)

⚠WARNING

Be sure that no lubricants or fluids get on tires, wheels or brakes when changing fluid. Traction can be adversely affected, which could result in loss of control of the motorcycle and death or serious injury. (00047d)

CAUTION

Do not overfill the primary chaincase with lubricant. Overfilling can cause rough clutch engagement, incomplete disengagement, clutch drag and/or difficulty in finding neutral at engine idle. (00199b)

Check Lubricant Level

1. Ride motorcycle until engine is warmed up to normal operating temperature.
2. Position motorcycle straight up.

⚠WARNING

To prevent accidental vehicle start-up, which could cause death or serious injury, remove main fuse before proceeding. (00251b)

3. Remove main fuse. See 6.35 MAIN FUSE, Removal.
4. **XL models equipped with mid-mount foot controls:** remove left side rider footrest and mounting bracket assembly. See 2.39 RIDER FOOT CONTROLS: XL MID-MOUNT CONTROLS for removal.

   XR models: remove left side rider footrest, mounting bracket assembly, and shift linkage. See 2.41 RIDER FOOT CONTROLS: XR MODELS for removal.
5. See Figure 1-49. Remove screws with washers from clutch inspection cover (1). Remove clutch inspection cover from primary cover.

NOTE

The filler access is the clutch inspection cover.

6. See Figure 1-50. Verify that lubricant level is even with bottom of clutch diaphragm spring (1).

NOTE

Add only enough of GENUINE Harley-Davidson FORMULA+ TRANSMISSION AND PRIMARY CHAINCASE LUBRICANT (Part No. 98851-05 quart) through clutch inspection cover opening until the lubricant reaches the bottom of clutch diaphragm spring.

7. Install **new** quad ring. Verify that quad ring is fully seated in groove of primary cover. Install clutch inspection cover and secure with six screws. Tighten screws in a crosswise pattern to 84-108 **in-lbs** (9.5-12.2 Nm).
8. **XL models equipped with mid-mount foot controls:** install left side rider footrest and mounting bracket assembly. See 2.39 RIDER FOOT CONTROLS: XL MID-MOUNT CONTROLS for installation.

   XR models: install left side rider footrest, shifter and mounting bracket assembly, and shift linkage. See 2.41 RIDER FOOT CONTROLS: XR MODELS for installation.
9. Install main fuse.
10. Start engine. Check for any lubricant leaks.
11. Turn engine off.

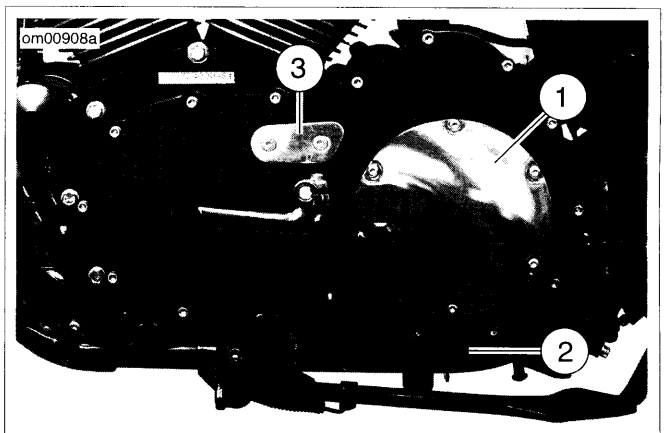

1. **Clutch inspection cover**
2. **Drain plug**
3. **Primary chain inspection cover**

Figure 1-49. Primary Cover (XL Model Shown)

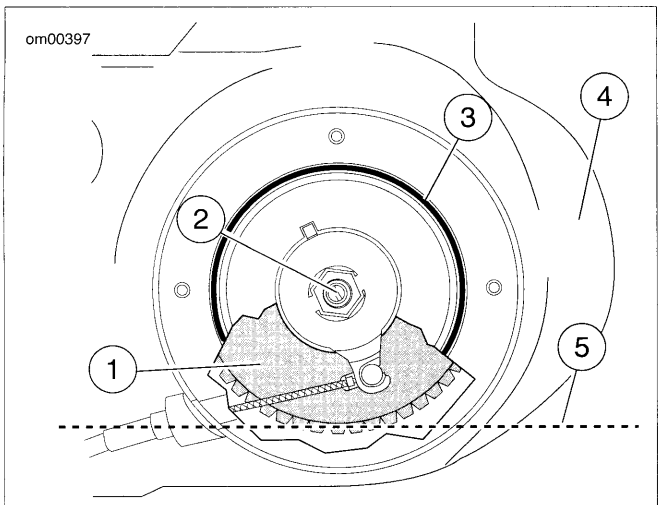

1. **Clutch diaphragm spring**
2. **Clutch adjusting screw**
3. **Quad-ring**
4. **Primary cover**
5. **Chaincase lubricant level**

Figure 1-50. Chaincase Lubricant Level

Changing Lubricant

1. Ride motorcycle until engine is warmed up to normal operating temperature.
2. When the engine reaches normal operating temperature, turn the engine off and position motorcycle on jiffy stand. This will allow the chaincase lubricant to drain out of transmission.

⚠WARNING

To prevent accidental vehicle start-up, which could cause death or serious injury, remove main fuse before proceeding. (00251b)

3. Remove main fuse. See 6.35 MAIN FUSE, Removal.
4. See Figure 1-49. Position a suitable container under transmission drain plug (2).
5. The drain plug is located under the clutch, on the underside of the chaincase. Remove drain plug and drain lubricant.
6. Position the motorcycle STRAIGHT UP and LEVEL. This allows additional fluid to be drained from clutch compartment.

NOTE

Dispose of lubricant in accordance with local regulations.

CAUTION

Do not over-tighten filler or drain plug. Doing so could result in a lubricant leak. (00200b)

7. Remove foreign material from magnetic drain plug. Apply LOCTITE 565 PST THREAD SEALER (Part No. 99818-97) and install drain plug. Tighten to 14-30 ft-lbs (19.0-40.7 Nm).
8. Remove inspection cover from primary cover. See 1.14 TRANSMISSION LUBRICANT, Transmission Lubrication.

NOTE

The filler access is the clutch inspection cover.

9. See Figure 1-50. Add 1.00 U.S. Quart (0.95 liter) of GENUINE Harley-Davidson FORMULA+ TRANSMISSION AND PRIMARY CHAINCASE LUBRICANT (Part No. 98851-05 quart) through clutch inspection cover opening. Verify that lubricant level is even with bottom of clutch diaphragm spring (1).
10. Install clutch inspection cover on primary cover. See 1.14 TRANSMISSION LUBRICANT, Transmission Lubrication.
11. Install main fuse.
12. Start engine. Check for any lubricant leaks.
13. Turn engine off.

GENERAL

When a drive belt is replaced for any reason other than stone damage, it is recommended that both the transmission sprocket and rear sprocket also be replaced to increase the longevity of the new drive belt. In the case of stone damage, inspect sprockets for damage and replace as required.

⚠WARNING

Never bend belt forward into a loop smaller than the drive sprocket diameter. Never bend belt into a reverse loop. Over bending can damage belt resulting in premature failure, which could cause loss of control and death or serious injury. (00339a)

CLEANING

Keep dirt, grease, oil, and debris off the drive belt and sprockets. Clean the belt with a rag slightly dampened with a light cleaning agent.

INSPECTION

Sprockets

NOTE

If chrome chips or gouges to rear sprocket are large enough to be harmful, they will leave a pattern on the belt face.

1. See Figure 1-51. Inspect each tooth (1) of rear sprocket for:
   a. Major tooth damage.
   b. Large chrome chips with sharp edges.
   c. Gouges caused by hard objects.
   d. Excessive loss of chrome plating (see next step).
2. To check if chrome plating has worn off, drag a scribe or sharp knife point across the bottom of a groove (2) (between two teeth) with medium pressure.
   a. If scribe or knife point slides across groove without digging in or leaving a visible mark, chrome plating is still good.
   b. If scribe or knife points digs in and leaves a visible mark, it is cutting the bare aluminum. A knife point will not penetrate the chrome plating.
3. Replace rear sprocket if major tooth damage or loss of chrome exists.

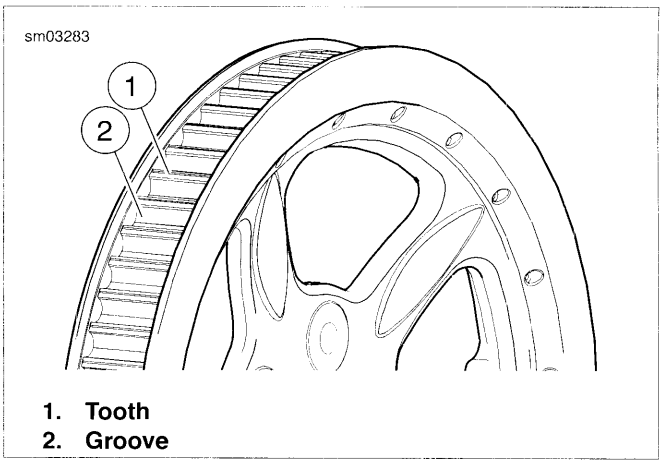

Figure 1-51. Rear Sprocket

Idler Pulley: XR Models

See Figure 1-52. Inspect idler pulley for signs of uneven wear. Excessive lateral side play of 0.035 in. (0.9 mm) or roughness indicates worn bearings. Replace idler pulley as an assembly. See 5.7 DRIVE BELT.

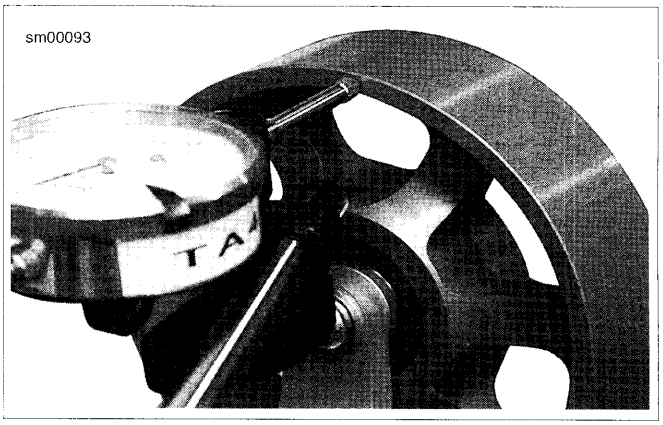

Figure 1-52. Measuring Lateral Side Play on Idler Pulley

Drive Belt

See Figure 1-53. Inspect drive belt for:

- Cuts or unusual wear patterns.
- Outside edge bevelling (8). Some bevelling is common, but it indicates that sprockets are misaligned.
- Outside ribbed surface for signs of stone puncture (7). If cracks/damage exists near edge of belt, replace belt immediately. Damage to center of belt will require belt replacement eventually, but when cracks extend to edge of belt, belt failure is imminent.
- Inside (toothed portion) of belt for exposed tensile cords (normally covered by nylon layer and polyethylene layer). This condition will result in belt failure and indicates worn

transmission sprocket teeth. Replace belt and transmission sprocket.

- Signs of puncture or cracking at the base of the belt teeth. Replace belt if either condition exists.
- Replace belt if conditions 2, 3, 6 or 7 (on edge of belt) exist.

NOTE

Condition 1 may develop into 2 or 3 over time. Condition 1 is not grounds for replacing the belt, but it should be watched closely before condition 2 develops which will require belt replacement.

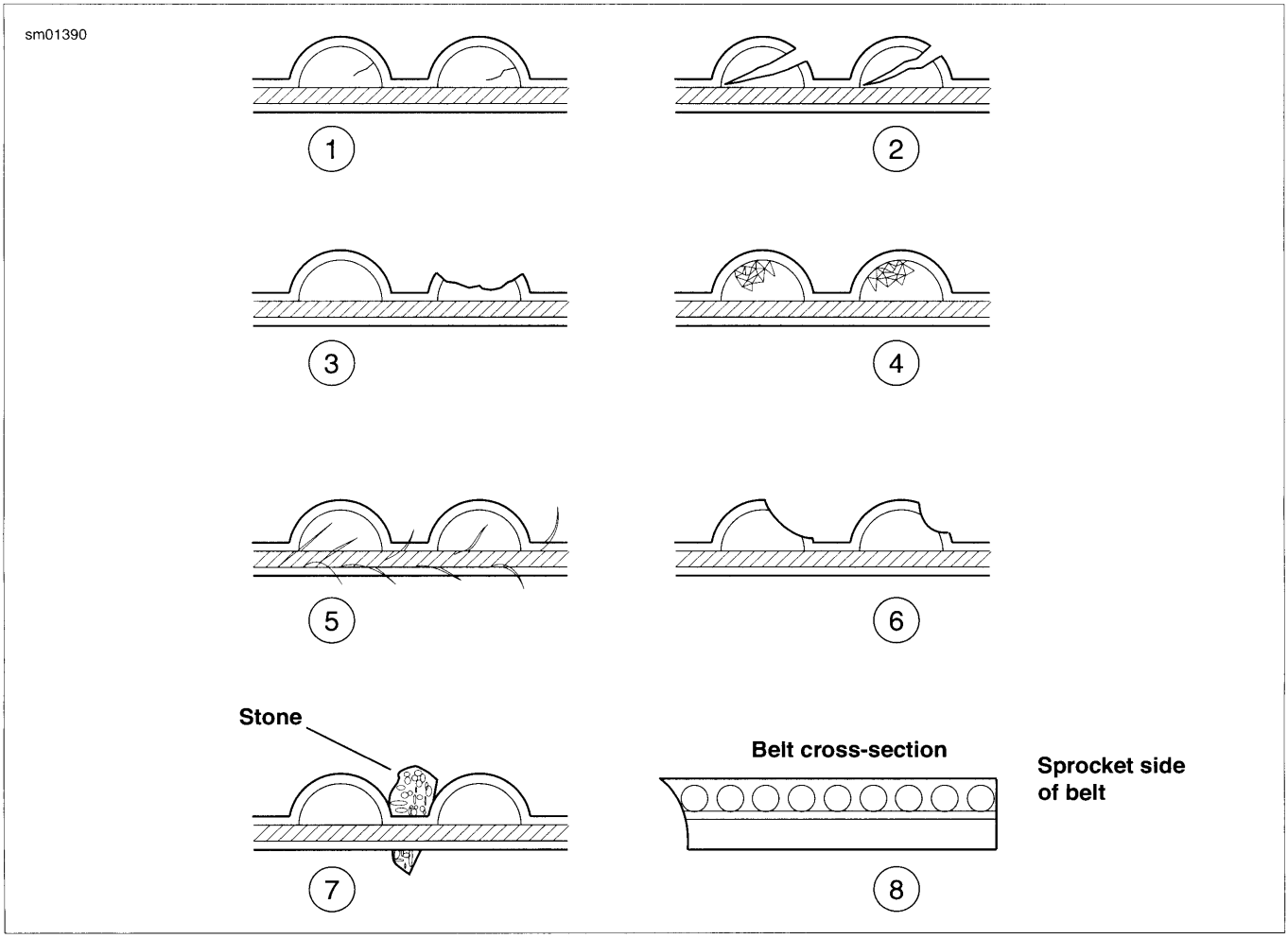

Figure 1-53. Drive Belt Wear Patterns

Table 1-11. Drive Belt Wear Analysis

PATTERN	CONDITION	REQUIRED ACTION
1	Internal tooth cracks (hairline)	OK to run, but monitor condition.
2	External tooth cracks	Replace belt.
3	Missing teeth	Replace belt.
4	Chipping (not serious)	OK to run, but monitor condition.
5	Fuzzy edge cord	OK to run, but monitor condition.
6	Hook wear	Replace belt and sprocket.
7	Stone damage	Replace belt if damage is on the edge.
8	Bevel wear (outboard edge only)	OK to run, but monitor condition.
XR only	Excess edge wear	Check idler bearings and bracket attachment.

CHECKING DRIVE BELT DEFLECTION

PART NUMBER	TOOL NAME
HD-35381A	BELT TENSION GAUGE

General

The inner tooth surface of the secondary belt has a thin coating of polyethylene lubricant. During initial operation, this coating will wear off as it is burnished into the belt fabric. This is a normal condition and not an indication of belt wear.

Belt tension is set at the factory and should be checked after the first 1000 miles (1600 kilometers), at scheduled maintenance intervals, and after a hard ride.

Gauging Deflection

Check belt deflection at the loosest spot in the belt with the transmission in neutral and the motorcycle at ambient temperature.

1. With the motorcycle unladen and resting on its jiffy stand, fit the BELT TENSION GAUGE (Part No. HD-35381A) on the belt.
   a. See Figure 1-57. On XR models, fit BELT TENSION GAUGE half-way between the idler wheel and rear sprocket.
   b. See Figure 1-56. On XL models, position the gauge half-way between the transmission and rear wheel sprockets.
2. With the BELT TENSION GAUGE set to 0 lbs. (0 kg), note the current belt position.
   a. See Figure 1-55. On XR models, note the belt position according to the graduations on the front of the debris deflector.
   b. See Figure 1-54. On XL models, note the belt position according to the graduations on the belt deflection window located on the drive belt guard.
3. Using the BELT TENSION GAUGE, apply 10 lbs. (4.5 kg) of force to the bottom belt. Count the number of graduations between the original belt position and after applying the force. Multiply this number by 1/8 in. (3.2 mm) to determine the deflection.
4. Refer to Table 1-12 for the recommended deflection. If belt tension adjustment is necessary, see a Harley-Davidson dealer or follow the belt deflection adjustment procedure in the Service Manual.

⚠WARNING

Be sure wheel and brake caliper are aligned. Riding with a misaligned wheel or brake caliper can cause the brake disc to bind and lead to loss of control, which could result in death or serious injury. (00050a)

NOTE

When gauging deflection, check the rear brake caliper position on rear brake disc. Disc should run true within brake caliper.

Table 1-12. Belt Deflection

MODELS	INCHES	MILLIMETERS
XL 883R	9/16-5/8	14.3-15.9
Other XL models	1/4-5/16	6.4-7.9
XR models	1/4-3/8	6.4-9.5

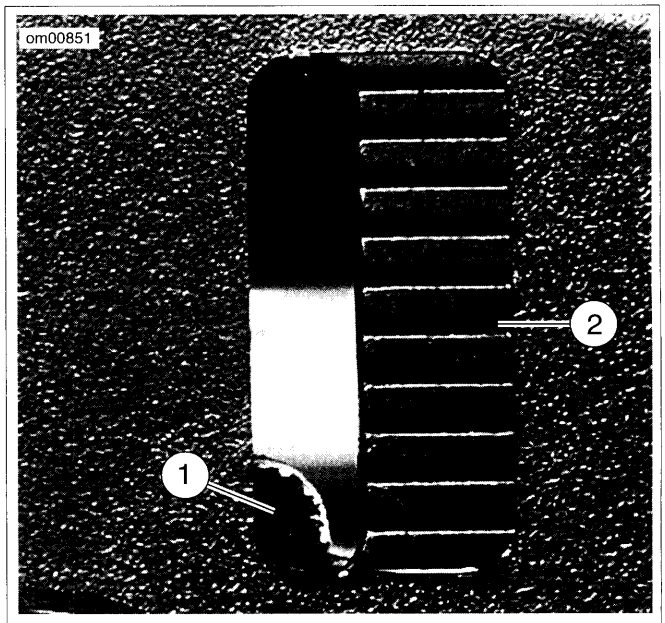

1. **Drive belt**
2. **Deflection graduations 1/8 in. (3.2 mm) apart**

Figure 1-54. Belt Deflection Window: XL Models

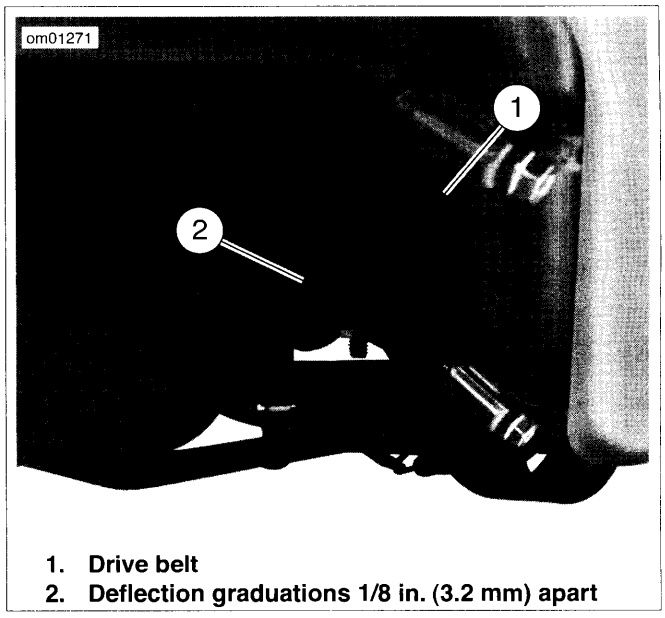

1. **Drive belt**
2. **Deflection graduations 1/8 in. (3.2 mm) apart**

Figure 1-55. Belt Deflection: XR Models

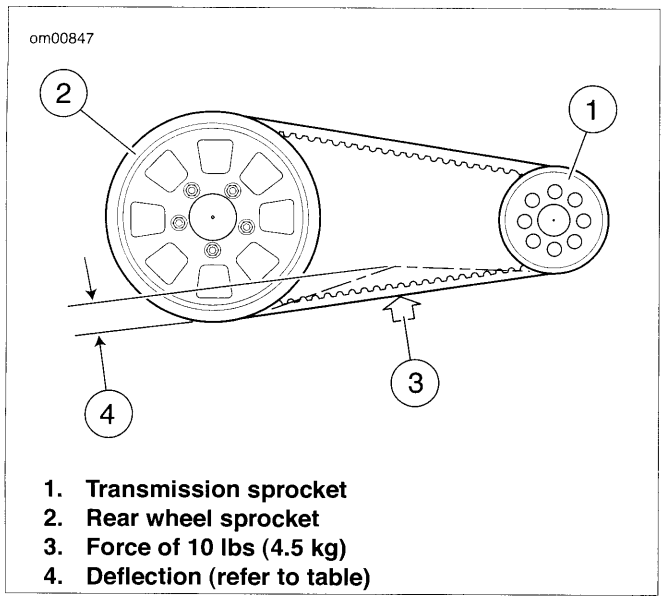

1. **Transmission sprocket**
2. **Rear wheel sprocket**
3. **Force of 10 lbs (4.5 kg)**
4. **Deflection (refer to table)**

Figure 1-56. Gauging Belt Deflection: XL Models

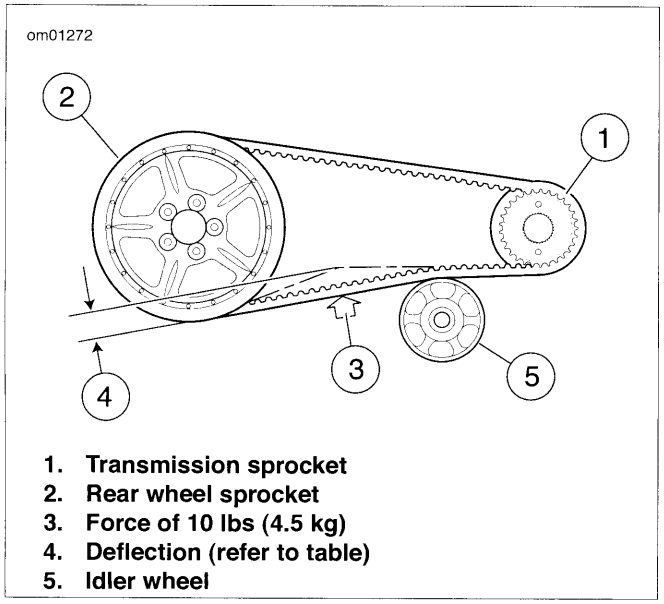

1. **Transmission sprocket**
2. **Rear wheel sprocket**
3. **Force of 10 lbs (4.5 kg)**
4. **Deflection (refer to table)**
5. **Idler wheel**

Figure 1-57. Gauging Belt Deflection: XR Models

BELT DEFLECTION ADJUSTMENT

See Figure 1-56. Determine belt deflection in manner specified in 1.15 DRIVE BELT AND SPROCKETS, Checking Drive Belt Deflection. If belt deflection is not correct, adjust per the following procedure.

NOTE

Rear brake line is clamped tightly to rear fork to avoid chafing of brake line in clamp. A small amount of slack must be maintained in rear brake line between clamp and rear caliper when rear wheel is adjusted.

1. **XL Models:** See Figure 1-58. Remove screw (4) from clamp (3) on rear brake line (2).
2. See Figure 1-59. Remove and discard e-clip (1) and loosen rear axle nut (4). Turn axle adjuster nuts (2) on each side of rear fork clockwise to decrease belt deflection (increase tension), or counterclockwise to increase belt deflection (decrease tension). Turn both adjuster nuts the same number of turns in order to maintain approximate alignment of rear wheel.
3. Check rear wheel alignment. Wheel must be centered in rear fork. See 1.16 WHEEL ALIGNMENT.

⚠WARNING

Do not exceed specified torque when tightening axle nut. Exceeding torque can cause wheel bearings to seize during vehicle operation, which could result in death or serious injury. (00408e)

4. After belt deflection and wheel alignment are properly adjusted,
   a. Tighten axle nut (4) to 95-105 ft-lbs (129-142 Nm). Install **new** e-clip (1).
   b. **XL Models:** See Figure 1-58. Reposition clamp (3) on rear brake line (2) and secure clamp to rear fork (1) with screw (4). Tighten to 30-40 **in-lbs** (3.4-4.5 Nm).

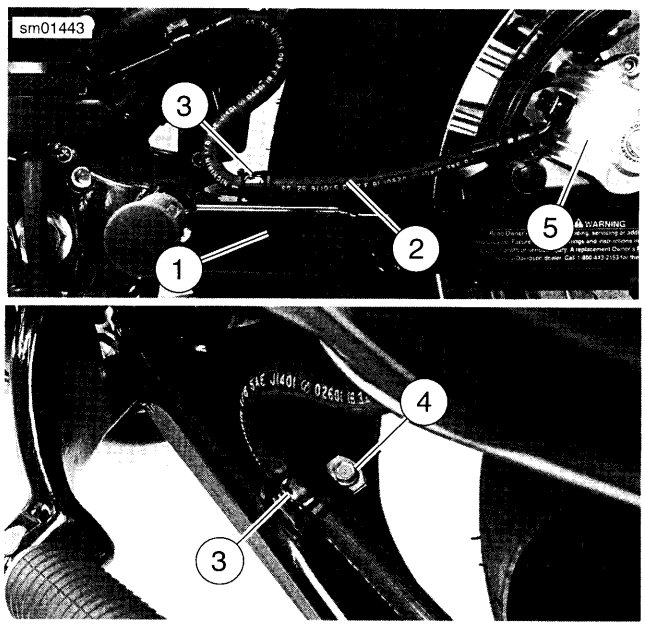

1. **Rear fork**
2. **Rear brake line**
3. **Clamp**
4. **Screw**
5. **Rear brake caliper**

Figure 1-58. Rear Brake Line: XL Models

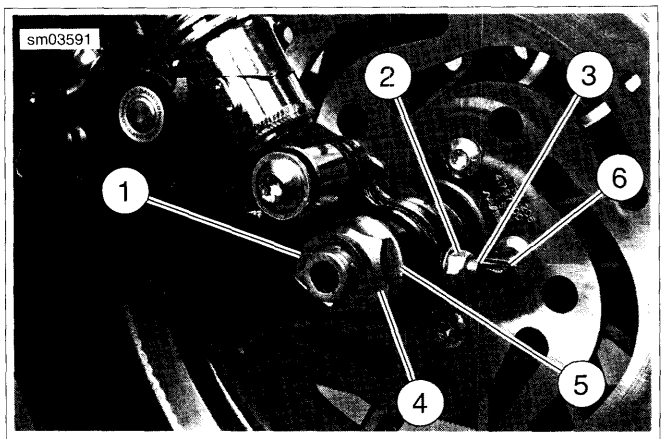

1. E-clip
2. Axle adjuster nut (2)
3. Axle adjuster (2)
4. Axle nut
5. Washer
6. Protective cap (2)

Figure 1-59. Drive Belt Adjustment (typical; XL model shown)

WHEEL ALIGNMENT

PART NUMBER	TOOL NAME
HD-48856	AXLE ALIGNMENT PLUG SET

Checking Wheel Alignment

⚠WARNING

Check vehicle alignment according to following procedures. Incorrect alignment can adversely affect stability and handling, which could result in death or serious injury. (00287a)

1. Obtain AXLE ALIGNMENT PLUG SET (Part No. HD-48856). See Figure 1-60. Insert axle alignment plugs (1, 2) into left and right ends of rear axle.
2. **For XL Models:** See Figure 1-61. Fabricate an alignment tool using a piece of 1/8-in. (3.175 mm) diameter aluminum welding rod 21.5 in. (546 mm) long. Grind one end down to a blunt point. Use pliers to bend rod at a 90 degree angle, 2.25 in. (57 mm) from the blunt point, as shown. Place a snug-fitting rubber grommet (2) on rod to act as a slide measurement indicator.
3. **For XR Models:** See Figure 1-62. Fabricate an alignment tool using a piece of 1/8-in. (3.175 mm) diameter aluminum welding rod 22.375 in. (568 mm) long. Grind one end down to a blunt point. Use pliers to bend rod as shown. Place a snug-fitting rubber grommet (2) on rod to act as a slide measurement indicator.
4. Figure 1-63. Insert blunt point of alignment tool in rear fork pivot bolt dimple (2) on right side of rear fork (3). Slide rubber grommet along tool shaft until it aligns with hole in center of alignment plug (5). Without moving grommet, position alignment tool on left side of rear fork. Verify that distance between rear fork pivot bolt and rear axle alignment plug center is the same as on right side.
5. If left and right side measurements are not equal, adjust rear wheel alignment.

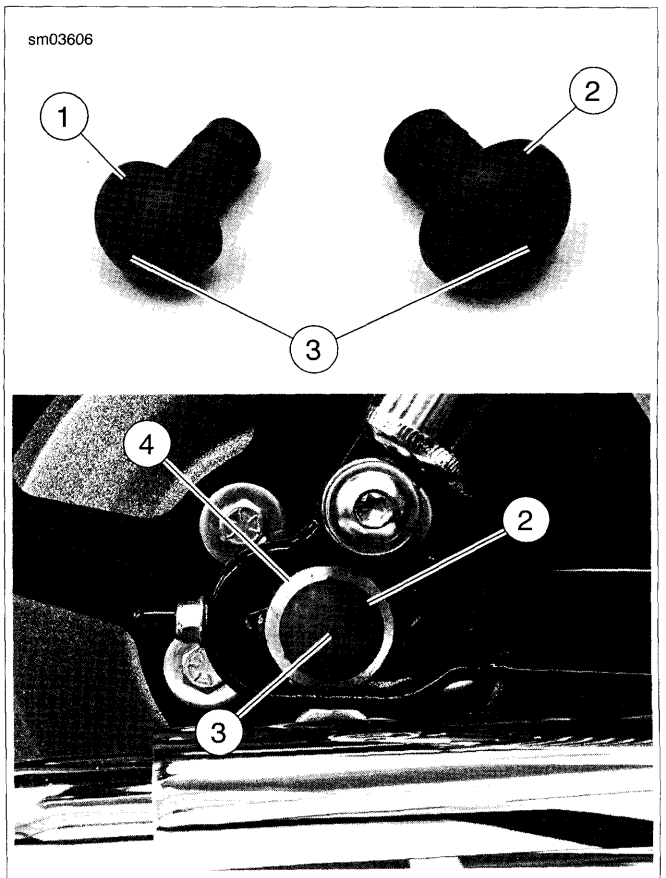

1. **Axle alignment plug (smaller)**
2. **Axle alignment plug (larger)**
3. **Alignment hole**
4. **Rear axle (right side)**

Figure 1-60. Axle Alignment Plugs

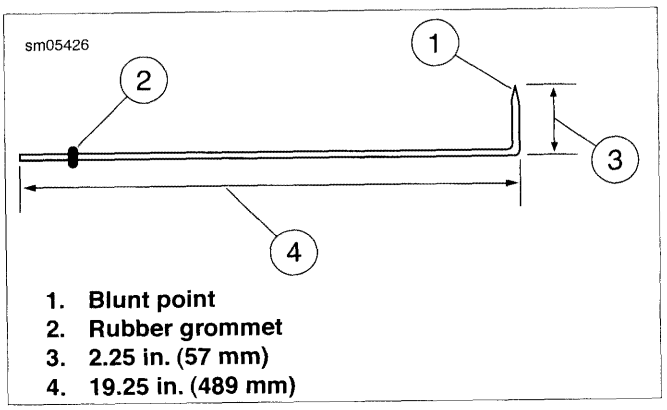

1. **Blunt point**
2. **Rubber grommet**
3. **2.25 in. (57 mm)**
4. **19.25 in. (489 mm)**

Figure 1-61. Wheel Alignment Tool: XL Models

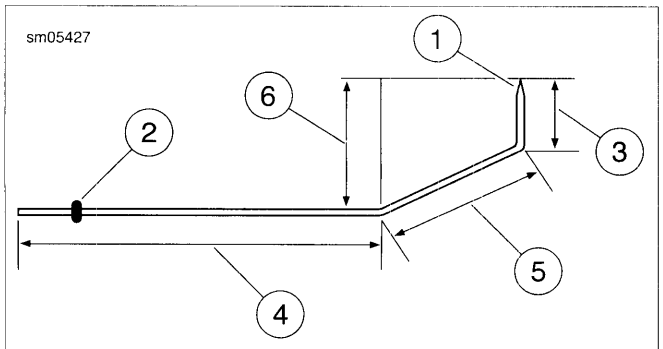

1. **Blunt point**
2. **Rubber grommet**
3. **5/8 in. (16 mm)**
4. **15-1/4 in. (387 mm)**
5. **6-1/2 in. (165 mm)**
6. **3-7/8 in. (98 mm)**

Figure 1-62. Wheel Alignment Tool: XR Models

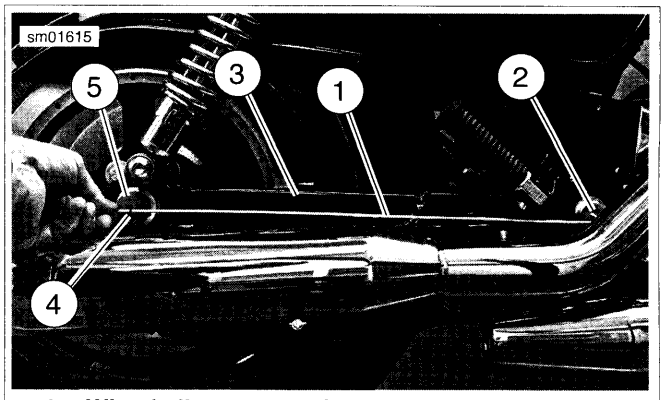

1. **Wheel alignment tool**
2. **Rear fork pivot bolt dimple**
3. **Rear fork**
4. **Rubber grommet**
5. **Axle alignment plug**

Figure 1-63. Checking Wheel Alignment Using Wheel Alignment Tool (XL Models Shown)

Adjusting Wheel Alignment

1. See Figure 1-59. Remove and discard e-clip (1).
2. Loosen rear axle nut (4).
3. On side of rear fork that has longer distance from pivot bolt to axle center, turn nut (2) on axle adjuster (3) counterclockwise to shorten distance. Adjust axle until left and right side alignment measurements are equal.

NOTES

- *Keep axle adjuster mechanisms firmly seated (under tension) on each side of rear fork during wheel alignment procedures above. Do so by applying moderate upward force on lower span of drive belt. This tensions drive belt, which holds rear axle forward against both adjuster mechanisms.*
- *Do not tighten rear axle nut or install* ***new*** *e-clip until after checking drive drive belt tension.*

4. Verify drive belt deflection after aligning rear wheel; adjust if required. See 1.15 DRIVE BELT AND SPROCKETS, Belt Deflection Adjustment.

NOTE

Rear brake line is clamped tightly to rear fork to avoid chafing of brake line in clamp. If rear axle has been moved forward or back, make sure there is a small amount of slack in rear brake line between clamp and rear caliper. If necessary, loosen clamp screw, reposition brake line, then tighten screw. See 1.15 DRIVE BELT AND SPROCKETS, Belt Deflection Adjustment.

⚠WARNING

Do not exceed specified torque when tightening axle nut. Exceeding torque can cause wheel bearings to seize during vehicle operation, which could result in death or serious injury. (00408e)

5. Tighten axle nut to 95-105 ft-lbs (129-142 Nm) and install **new** e-clip.

GENERAL

⚠WARNING

Batteries contain sulfuric acid, which could cause severe burns to eyes and skin. Wear a protective face shield, rubberized gloves and protective clothing when working with batteries. KEEP BATTERIES AWAY FROM CHILDREN. (00063a)

⚠WARNING

Never remove warning label attached to top of battery. Failure to read and understand all precautions contained in warning, could result in death or serious injury. (00064a)

⚠WARNING

Batteries, battery posts, terminals and related accessories contain lead and lead compounds, and other chemicals known to the State of California to cause cancer, and birth defects or other reproductive harm. Wash hands after handling. (00019e)

All AGM batteries are permanently sealed, maintenance-free, valve-regulated, lead/calcium and sulfuric acid batteries. The batteries are shipped pre-charged and ready to be put into service. Do not attempt to open these batteries for any reason.

NOTE

For charging information, see 1.17 BATTERY MAINTENANCE, Charging Battery. For testing information, see the electrical diagnostic manual.

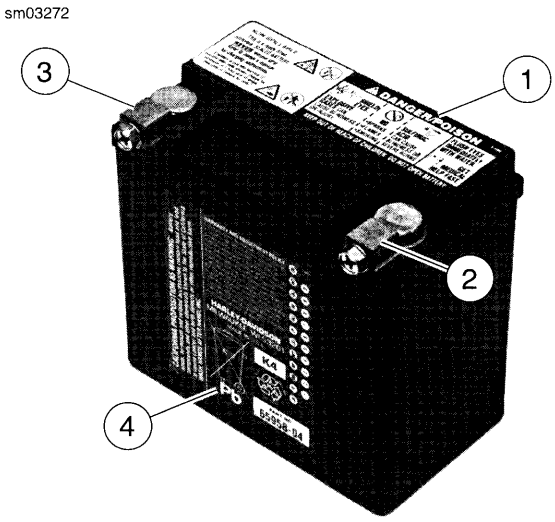

1. **Warning label**
2. **Positive (+) terminal**
3. **Negative (-) terminal**
4. **Warranty/date code label**

Figure 1-64. Battery

1. **Contents are corrosive**
2. **Wear safety glasses**
3. **Contents are explosive**
4. **Keep flames away**
5. **Read instructions**
6. **Keep away from children**

Figure 1-65. Battery Warning Label

Table 1-13. Antidotes for Battery Acid

CONTACT	TREATMENT
External	Flush with water.
Internal	Drink large quantities of milk or water, followed by milk of magnesia, vegetable oil or beaten eggs. Get immediate medical attention.
Eyes	Flush with water. Get immediate medical attention.

BATTERY DISCONNECTION AND REMOVAL

⚠WARNING

Disconnect negative (-) battery cable first. If positive (+) cable should contact ground with negative (-) cable connected, the resulting sparks can cause a battery explosion, which could result in death or serious injury. (00049a)

1. Open left side cover.

NOTE

If vehicle is equipped with optional security siren, verify that fob is present and turn ignition key to IGNITION before removing main fuse or disconnecting battery.

2. See Figure 1-66. Using a swivel socket (2), remove nut that secures the negative (-) battery cable (1) connector to ground stud (4) on crankcase boss behind starter motor assembly (3). Remove cable connector from stud.
3. See Figure 1-67. Pull end of negative (-) cable (2) forward gently to free it from cable holder (1).
4. See Figure 1-68. Press main fuse holder (1) toward the rear of the motorcycle until it pops off its mounting pin on battery strap (4). Remove main fuse holder from battery strap.
5. Press data link connector (6) toward the rear of the motorcycle until it pops off its mounting pin on battery strap. Remove the connector from battery strap.
6. Remove battery strap screw (5). Unhook battery strap from battery tray mount on top of battery and remove strap.
7. Lift up protective rubber boot covering battery positive (+) terminal (3). Remove screw from battery positive (+) terminal and remove positive (+) battery cable.
8. Disconnect positive (+) battery cable from cable holder (2).
9. Slide the battery (with attached negative cable) out from the left side of the vehicle until the negative battery cable is accessible.
10. Disconnect the negative battery cable at the battery (-) terminal. Leave the cable on the vehicle.
11. Remove battery from battery tray. Note routing of negative (-) battery cable around frame downtube.
12. If battery is to be left out of vehicle (i.e. winter storage), close left side cover.

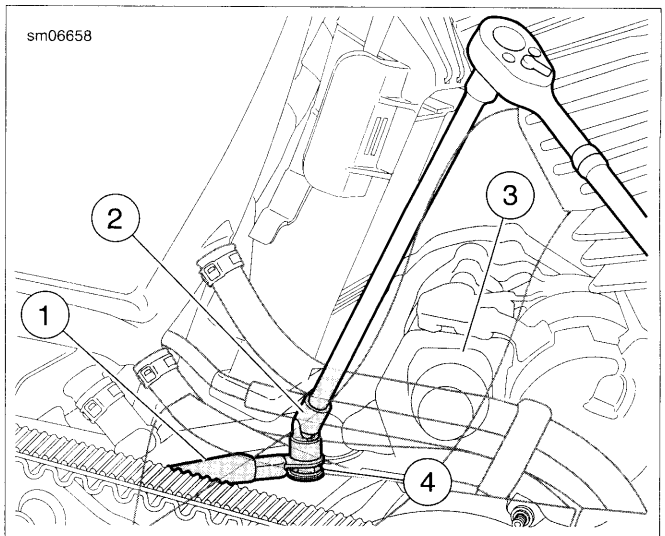

1. **Negative (-) battery cable**
2. **Swivel socket**
3. **Starter motor assembly**
4. **Ground stud**

Figure 1-66. Negative (-) Battery Connection

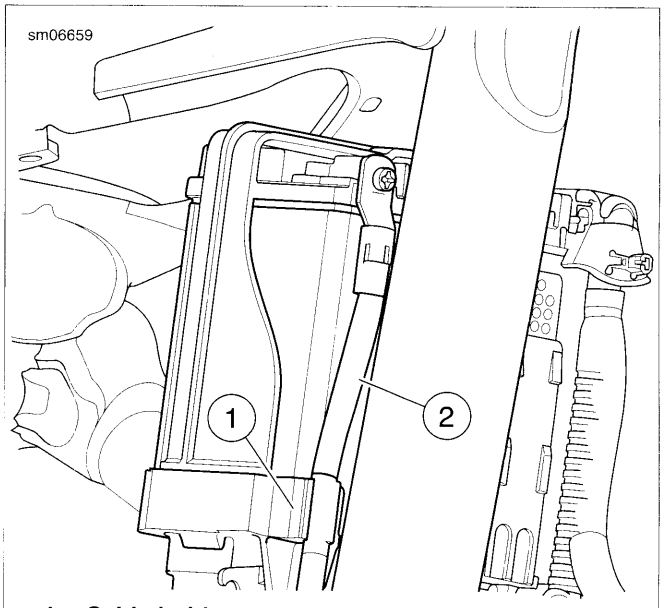

1. **Cable holder**
2. **Negative battery cable**

Figure 1-67. Negative (-) Battery Cable Holder

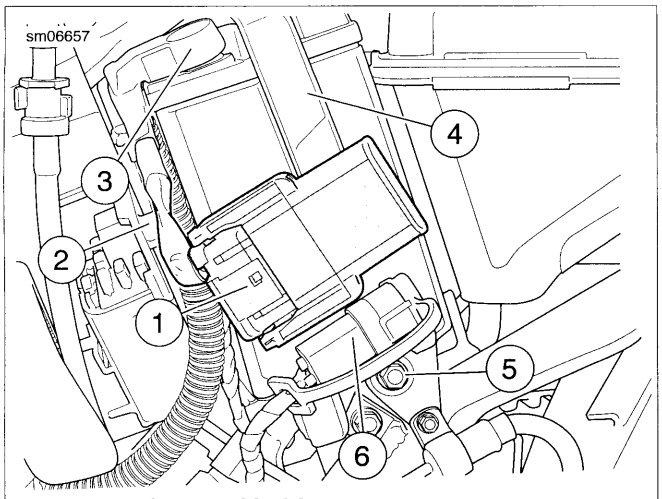

1. **Main fuse and holder**
2. **Positive (+) battery cable holder**
3. **Positive (+) battery terminal (under protective rubber boot)**
4. **Battery strap**
5. **Screw**
6. **Data link connector**

Figure 1-68. Main Fuse and Battery Location: All Models

CLEANING AND INSPECTION

1. Battery top must be clean and dry. Dirt and electrolyte on top of the battery can cause battery to self-discharge. Clean battery top with a solution of baking soda (sodium bicarbonate) and water (5 teaspoons baking soda per quart or liter of water). When the solution stops bubbling, rinse off the battery with clean water.
2. Clean cable connectors and battery terminals using a wire brush or sandpaper. Remove any oxidation.
3. Inspect the battery screws, clamps and cables for breakage, loose connections and corrosion. Clean clamps.
4. Check the battery posts for melting or damage caused by overtightening.
5. Inspect the battery for discoloration, raised top or a warped or distorted case, which might indicate that the battery has been frozen, overheated or overcharged.
6. Inspect the battery case for cracks or leaks.

VOLTMETER TEST

⚠WARNING

Batteries contain sulfuric acid, which could cause severe burns to eyes and skin. Wear a protective face shield, rubberized gloves and protective clothing when working with batteries. KEEP BATTERIES AWAY FROM CHILDREN. (00063a)

⚠WARNING

Never remove warning label attached to top of battery. Failure to read and understand all precautions contained in warning, could result in death or serious injury. (00064a)

Voltmeter Test

Refer to Table 1-14. The voltmeter test provides a general indicator of battery condition. Check the voltage of the battery to verify that it is fully charged. If the open circuit (disconnected) voltage reading is below 12.6V, charge the battery and check the voltage after the battery has set for one to two hours. If the voltage reading is 12.7V or above, perform a load test. See the electrical diagnostic manual for the load test procedure.

Table 1-14. Voltmeter Test For Battery Charge Conditions

VOLTAGE (OCV)	STATE OF CHARGE
12.7 V	100%
12.6 V	75%
12.3 V	50%
12.0 V	25%
11.8 V	0%

CHARGING BATTERY

Safety Precautions

Never charge a battery without first reviewing the instructions for the charger being used. In addition to the manufacturer's instructions, follow these general safety precautions:

- Always wear eye, face and hand protection.
- Always charge batteries in a well-ventilated area.
- Turn the charger off before connecting or disconnecting the leads to the battery to avoid dangerous sparks.
- Never try to charge a visibly damaged or frozen battery.
- Connect the charger leads to the battery; red positive (+) lead to the positive (+) terminal and black negative (-) lead to the negative (-) terminal. If the battery is still in the vehicle, connect the negative lead to the chassis ground. Be sure that the ignition and all electrical accessories are turned off.
- Make sure that the charger leads to the battery are not separated, frayed or loose.
- If the battery temperature exceeds 110 °F (43 °C) during charging, discontinue charger and allow the battery to cool.

Using a Battery Charger

Charge the battery if any of the following conditions exist:

- Vehicle lights appear dim.
- Electric starter sounds weak.
- Battery has not been used for an extended period of time.

⚠WARNING

Explosive hydrogen gas, which escapes during charging, could cause death or serious injury. Charge battery in a well-ventilated area. Keep open flames, electrical sparks and smoking materials away from battery at all times. KEEP BATTERIES AWAY FROM CHILDREN. (00065a)

CAUTION

If battery releases an excessive amount of gas during charging, decrease the charging rate. Overheating can result in plate distortion, internal shorting, drying out or damage. (00413b)

1. Perform a voltmeter test to determine the state of charge. See the electrical diagnostic manual. If battery needs to be charged, proceed to the next step.

NOTE

The figures listed in the table below show typical charging times. Charge times may vary. When using an appropriate automatic charger, allow the charger to determine when charging is complete.

Table 1-15. 12 Amp-Hour Battery Charging Rates/Times (Approximate)

READING (VOLTS)	PERCENT OF CHARGE	5 AMP CHARGER	2 AMP CHARGER	1.5 AMP CHARGER	0.75 AMP CHARGER
12.7	100	-	-	-	-
12.6	75	1 hour 36 minutes	2 hours 30 minutes	3 hours	5 hours
12.3	50	2 hours 12 minutes	4 hours	5 hours	9 hours
12.0	25	2 hours 48 minutes	5 hours 30 minutes	7 hours	13 hours
11.8	0	3 hours 24 minutes	7 hours	9 hours	17 hours

NOTE

Do not use battery chargers that produce excessively high voltage designed for flooded batteries or excessively high current designed for much larger batteries. Charging should be limited to no more than 5 amps at no more than 14.6 volts.

⚠WARNING

Unplug or turn OFF battery charger before connecting charger cables to battery. Connecting cables with charger ON can cause a spark and battery explosion, which could result in death or serious injury. (00066a)

CAUTION

Do not reverse the charger connections described in the following steps or the charging system of the motorcycle could be damaged. (00214a)

2. Connect red battery charger lead to the positive (+) terminal and black battery charger lead to the negative (-) terminal of the battery.

NOTE

If the battery is still in the vehicle, connect the negative lead to the chassis ground. Be sure that the ignition and all electrical accessories are turned off.

3. Step away from the battery and turn on the charger. See the charging instructions in Table 1-15.

⚠WARNING

Unplug or turn OFF battery charger before disconnecting charger cables from battery. Disconnecting clamps with charger ON can cause a spark and battery explosion, which could result in death or serious injury. (00067a)

4. After the battery is fully charged, turn the charger OFF and disconnect the black battery charger lead to the negative (-) terminal of the battery.
5. Disconnect the red battery charger lead to the positive (+) terminal of the battery.
6. Mark the charging date on the battery.
7. Perform either a conductance test or load test to determine the condition of the battery. See the electrical diagnostic manual.
8. If charging a battery because voltmeter test reading was below 12.6 V, perform voltmeter test. See the electrical diagnostic manual.

BATTERY INSTALLATION AND CONNECTION

CAUTION

Connect the cables to the correct battery terminals. Failure to do so could result in damage to the motorcycle electrical system. (00215a)

1. If negative (-) battery cable was removed from battery, insert screw through negative (-) battery cable and into negative (-) battery terminal. Thread screw into terminal. Position negative (-) battery cable so that it hangs straight down from negative (-) battery terminal. Tighten screw to 60-70 **in-lbs** (6.8-7.9 Nm).
2. Apply a light coat of petroleum jelly or corrosion retardant material to the negative (-) battery terminal.
3. Open left side cover.
4. Slide fully charged battery into battery tray, routing negative (-) battery cable around frame downtube.

⚠WARNING

Connect positive (+) battery cable first. If positive (+) cable should contact ground with negative (-) cable connected, the resulting sparks can cause a battery explosion, which could result in death or serious injury. (00068a)

⚠WARNING

Do not allow positive (+) battery cable to contact ground with negative (-) cable connected. Resulting sparks can cause a battery explosion, which could result in death or serious injury. (00069a)

5. See Figure 1-68. With negative (-) battery cable disconnected from grounding point on crankcase, insert screw through positive (+) battery cables: through main fuse cable first, then through main positive (+) battery cable, and into positive (+) battery terminal (3). Thread screw into terminal. Tighten to 60-70 **in-lbs** (6.8-7.9 Nm).
6. Apply a light coat of petroleum jelly or corrosion retardant material to the positive (+) battery terminal. Place protective rubber boot over terminal.
7. Hook top of battery strap (4) to battery tray mount on top of battery. Install strap screw (5). Tighten to 36-60 **in-lbs** (4.1-6.8 Nm).
8. Route main positive (+) battery cable through holders on electrical bracket.
9. Hook main fuse holder (1) to top pin on battery strap and slide forward until it snaps into place.
10. Hook data link connector (6) to bottom pin on battery strap and slide forward until it snaps into place.
11. See Figure 1-67. Press negative (-) battery cable (2) into cable holder (1).
12. See Figure 1-66. Place negative (-) battery cable connector onto ground stud (4) on crankcase boss behind starter motor assembly (3). Thread nut onto stud.
13. See Figure 1-69 or Figure 1-70. Press negative (-) battery cable connector (1) against cable stop (2) on crankcase and tighten nut (3) to 55-75 **in-lbs** (6.2-8.5 Nm).
14. Close left side cover.

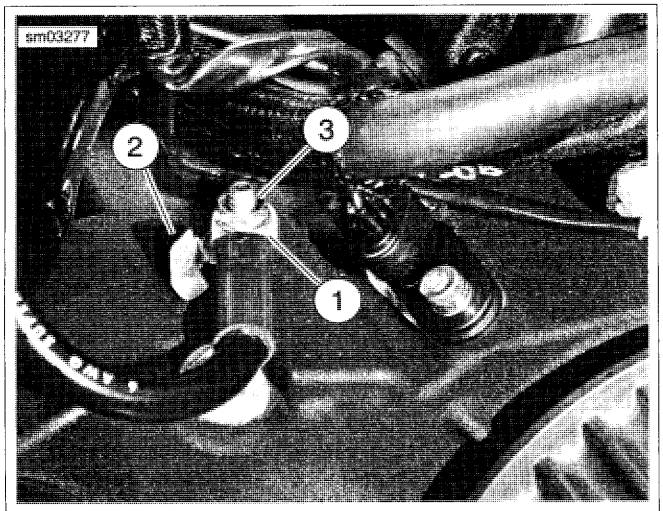

1. **Negative battery cable connector**
2. **Cable stop**
3. **Nut**

Figure 1-69. Attaching Negative (-) Battery Cable to Ground Stud Crankcase: XL Models

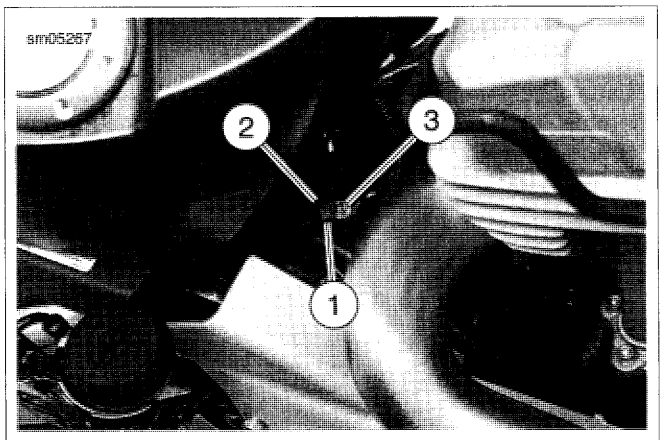

1. **Negative battery cable connector**
2. **Cable stop**
3. **Nut**

Figure 1-70. Attaching Negative (-) Battery Cable to Ground Stud Crankcase: XR Models

STORAGE

PART NUMBER	TOOL NAME
99863-01A	GLOBAL BATTERY CHARGER

⚠WARNING

Batteries contain sulfuric acid, which could cause severe burns to eyes and skin. Wear a protective face shield, rubberized gloves and protective clothing when working with batteries. KEEP BATTERIES AWAY FROM CHILDREN. (00063a)

If the motorcycle is to be stored with the security system armed, connect a GLOBAL BATTERY CHARGER (Part No. 99863-01A) to maintain battery charge.

If the motorcycle is to be stored with the battery installed, without a GLOBAL BATTERY CHARGER, and with the security system **not** armed, remove the main fuse.

If the motorcycle will not be operated for several months, such as during the winter season, remove the battery from the motorcycle and fully charge.

See Figure 1-71. A battery that is removed from the vehicle is affected by self-discharge. A battery that is stored in the vehicle is affected by self-discharge and, more significantly, by parasitic loads. A parasitic load is generated by such things as diode leakage or maintaining computer memory with the vehicle turned off. Batteries self-discharge at a faster rate at higher ambient temperatures. To reduce the self-discharge rate, store battery in a cool, dry place.

Charge the battery once per month if stored in the vehicle. Charge the battery every three months if stored out of the vehicle.

NOTES

- *The GLOBAL BATTERY CHARGER (Part No. 99863-01A) may be used to maintain battery charge for extended periods of time without risk of overcharging or boiling.*
- *When returning a battery to service after storage, see the electrical diagnostic manual.*

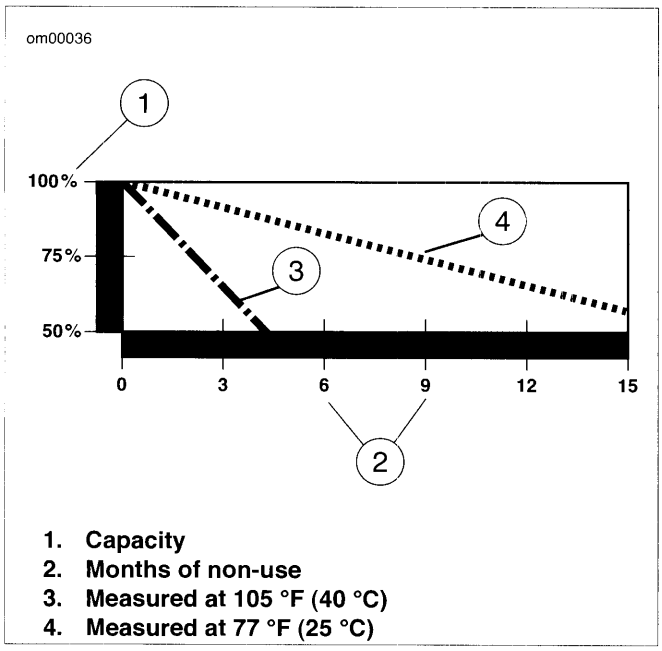

Figure 1-71. Effective Rate of Temperature on Battery Self-discharging Rate

GENERAL

Harley-Davidson 6R12 and 10R12X spark plugs have a resistor element to reduce the radio interference which originates in the motorcycle ignition system. Use only the resistor-type spark plugs specified.

INSPECTION

⚠WARNING

Disconnecting spark plug cable with engine running can result in electric shock and death or serious injury. (00464b)

1. Disconnect cables from both spark plugs.
2. Remove spark plugs. If a plug has eroded electrodes, heavy deposits or a cracked insulator, discard it.
3. See Figure 1-72. Compare your observations of the plug deposits with the descriptions provided below.
   a. A wet, black and shiny deposit on plug base, electrodes and ceramic insulator tip indicates an oil fouled plug. The condition may be caused by one or more of the following: worn pistons, worn piston rings, worn valves, worn valve guides, worn valve seals, a weak battery or a faulty ignition system.
   b. A dry, fluffy or sooty black deposit indicates an air-fuel mixture that is too rich.
   c. A light brown, glassy deposit indicates an overheated plug. This condition may be accompanied by cracks in the insulator or by erosion of the electrodes and is caused by an air-fuel mixture that is too lean, a hot-running engine, valves not seating or improper ignition timing. The glassy deposit on the spark plug is a conductor when hot and may cause high-speed misfiring. A plug with eroded electrodes, heavy deposits or a cracked insulator must be replaced.
   d. A plug with a white, yellow, tan or rusty brown powdery deposit indicates balanced combustion. Clean off spark plug deposits at regular intervals.

⚠WARNING

Compressed air can pierce the skin and flying debris from compressed air could cause serious eye injury. Wear safety glasses when working with compressed air. Never use your hand to check for air leaks or to determine air flow rates. (00061a)

4. If the plugs require cleaning between tune-ups, proceed as follows:
   a. Degrease firing end of spark plug using ELECTRICAL CONTACT CLEANER. Dry plug with compressed air.
   b. Use a thin file to flatten spark plug electrodes. A spark plug with sharp edges on its electrodes requires 25-40% less firing voltage than one with rounded edges.
   c. If the plugs cannot be cleaned, replace with **new** spark plugs.
5. Check electrode gap with a wire-type feeler gauge. Bend the outside of the electrode so only a slight drag on the gauge is felt when passing it between electrodes. Proper gap measurement is listed in Table 1-16.
6. Check condition of threads on cylinder head and plug. If necessary to remove deposits, apply penetrating oil and clean out with a thread chaser.
7. Apply LOCTITE ANTI-SEIZE to the spark plug threads. Install and tighten to 12-18 ft-lbs (16.3-24.4 Nm).
8. Connect spark plug cables. Rear cylinder plug cable attaches to top coil terminal. Verify that cables are securely connected to coil and spark plugs.

Table 1-16. Spark Plug Gap

MODEL	TYPE	GAP (IN.)	GAP (MM)
All XL	6R12	0.038-0.043	0.96-1.09
All XR	10R12X	0.032-0.038	0.81-0.97

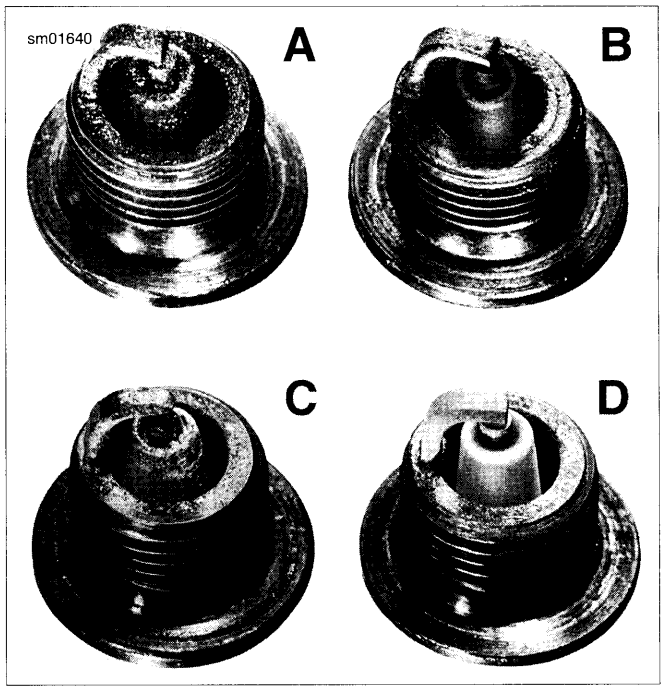

Figure 1-72. Typical Spark Plug Deposits

SPARK PLUG CABLE INSPECTION

1. Inspect spark plug cables. Replace cables that are worn or damaged.
   a. Check for cracks or loose terminals.
   b. Check for loose fit on ignition coil and spark plugs.
2. Check cable boots/caps for cracks or tears. Replace boots/caps that are worn or damaged.
3. See Figure 1-73. Check spark plug cable resistance with an ohmmeter. Compare values from test with Table 1-17. Replace cables not meeting resistance specifications.

Table 1-17. Spark Plug Cable Resistance

CABLE	RESISTANCE (OHMS)
Front	1,750-4,836
Rear	4843-15,420

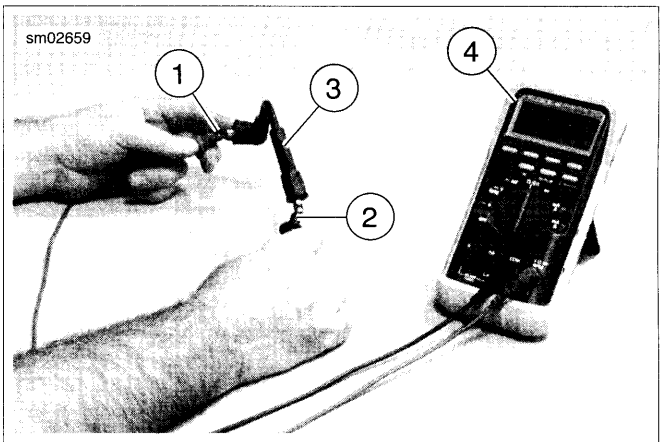

1. Ohmmeter positive lead
2. Ohmmeter negative lead
3. Spark plug cable
4. Ohmmeter

Figure 1-73. Testing Resistance

ADJUSTMENT

1. Place suitable blocking under frame to raise front wheel several inches off floor.
2. Remove all items that could interfere with front end swing momentum. If clutch control cable inhibits front end swing, disconnect it.
3. Place a strip of masking tape over tip of front fender.
4. Install a pointer mounted to a floor stand. The pointer is positioned at the center of the fender with the front wheel pointed straight ahead.
5. Repeatedly nudge the fender a short distance on one side until the front end begins to "fall-away" (i.e., pivot about its steering head center) by itself. Mark the point on the tape where the front end begins to "fall-away." Repeat this procedure in the opposite direction.
6. Measure the distance between the two "fall-away" marks. The distance must be 1.0-2.0 in. (25-50 mm) for XL models and 2.0-4.0 in. (50-100 mm) for XR models for proper bearing adjustment.
7. See Figure 1-74. If the distance is not correct, perform the following procedure:
   a. Loosen the two lower bracket pinch screws (5) and the fork stem pinch screw (3).
   b. Loosen or tighten the fork stem screw (1) until the "fall-away" distance is 1.0-2.0 in. (25-50 mm) for XL models or 2.0-4.0 in. (50-100 mm) for XR models.

   NOTE

   Loosen fork stem screw if "fall-away" point is more than 2.0 in. (50 mm) for XL models or more than 4.0 in. (100 mm) for XR models. If "fall-away" point is less than 1.0 in. (25 mm) for XL models or less than 2.0 in. (50 mm) for XR models, tighten fork stem bolt.

   c. Tighten fork stem pinch screw to 30-35 ft-lbs (40.7-47.5 Nm).
   d. Tighten lower bracket pinch screws to 30-35 ft-lbs (40.7-47.5 Nm).
   e. Recheck "fall-away."

LUBRICATION

See Figure 1-74. Disassemble the steering head assembly and lubricate the tapered roller bearings (8) with HARLEY-DAVIDSON SPECIAL PURPOSE GREASE. See 2.22 FORK STEM AND BRACKET ASSEMBLY for disassembly and reassembly procedures.

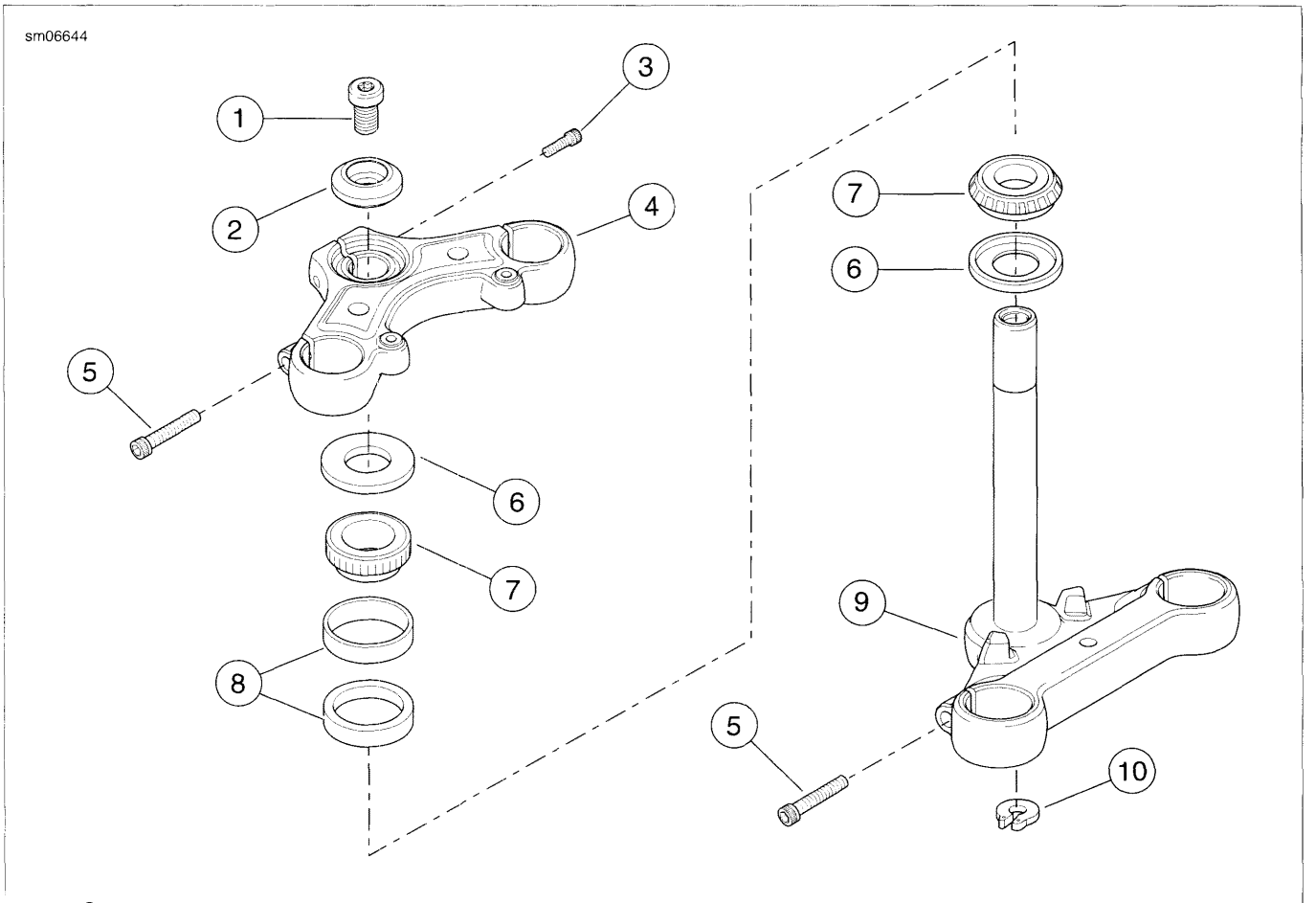

1. Screw
2. Washer
3. Screw
4. Upper bracket
5. Screw (4)
6. Seal (2)
7. Tapered roller bearing (2)
8. Bearing cup (2)
9. Lower bracket
10. Retaining ring

Figure 1-74. Steering Head Assembly (typical; XL model shown)

SHOCK ABSORBER PRELOAD ADJUSTMENT: SPORTSTER MODELS EXCEPT XR 1200X

PART NUMBER	TOOL NAME
HD-48645	SPANNER WRENCH
HD-94820-75A	SPANNER WRENCH

The shock absorber spring preload can be adjusted for the weight the motorcycle is to carry. Increase preload to accommodate additional weight of rider, passenger and/or luggage. Reduce preload if carrying less weight.

WARNING

Adjust both shock absorbers equally. Improper adjustment can adversely affect stability and handling, which could result in death or serious injury. (00036b)

See Figure 1-75. To adjust the shock absorber spring preload, turn spring adjusting cam to the desired position with a SPANNER WRENCH (Part No. HD-94820-75A). When reducing preload, cam should be rotated in opposite direction.

See Figure 1-76. On the XR 1200 model, use SPANNER WRENCH (Part No. HD-48645) with a 3/8-inch ratchet and extension to adjust the preload on the right side of the motorcycle.

CAUTION

The 883L, 883N and 1200N are designed for solo operation. If you choose to add an adult passenger and/or cargo to the vehicle, the ride quality will be compromised. See a Harley-Davidson dealer for high capacity rear suspension options. (00487g)

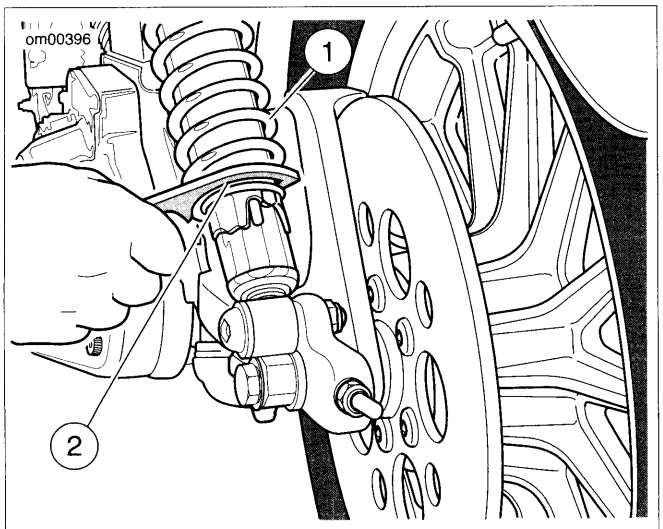

1. **Rear shock absorber**
2. **Adjusting cam preload**

Figure 1-75. Rear Shock Absorber Adjustment: Sportster Models

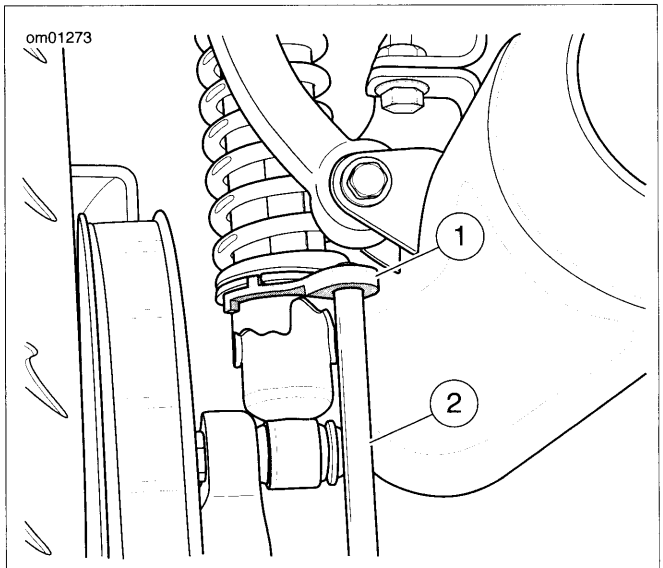

1. **Spanner wrench**
2. **3/8-in. extension**

Figure 1-76. Right Side Preload Adjustment: XR 1200 Model

SHOCK ABSORBER SUSPENSION ADJUSTMENT: XR 1200X

PART NUMBER	TOOL NAME
C2050.1AM	SPANNER WRENCH

WARNING

Adjust both shock absorbers equally. Improper adjustment can adversely affect stability and handling, which could result in death or serious injury. (00036b)

CAUTION

Compression and rebound adjusting valves may be damaged if too much force is used at either end of the adjustment range. (00237a)

NOTE

Do not force adjusters beyond the mechanical stops.

Shock Absorber Preload Adjustment

1. See Figure 1-77 and Figure 1-79. Using SPANNER WRENCH (Part No. C2050.1AM) (provided in the owner's tool kit), turn the spring adjusting cam to the recommended position as specified in Table 1-18.

Shock Absorber Rebound Damping Adjustment

1. See Figure 1-78. Turn the rebound adjuster in the direction of the embossed H (hard) until it stops. This is the maximum rebound damping setting.
2. Refer to Table 1-19. Turn the rebound adjuster toward the embossed S (soft) the recommended number of clicks.

Shock Absorber Compression Damping Adjustment

1. See Figure 1-77. Using fingers, turn the compression adjuster clockwise until it stops. This is the maximum compression damping setting.
2. Refer to Table 1-19. Turn the compression adjuster counterclockwise the recommended number of clicks.

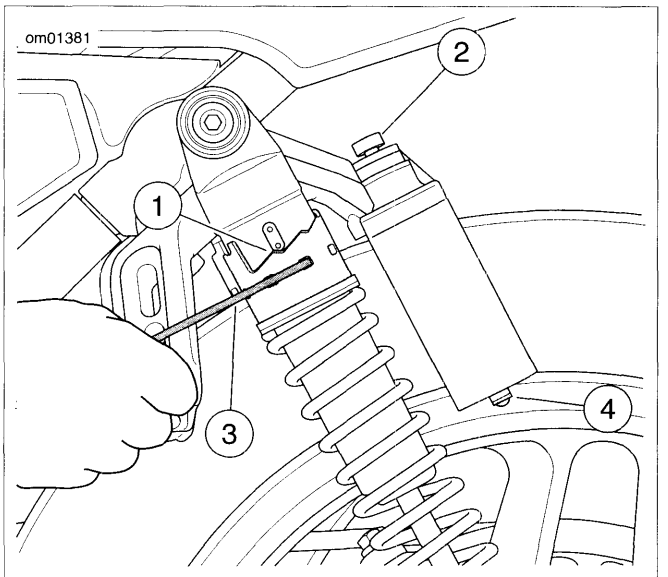

1. **Preload adjusting cam**
2. **Compression damping adjuster**
3. **Spanner wrench**
4. **Pressurized gas valve (do not remove cover)**

Figure 1-77. Shock Absorber Preload and Compression Damping Adjusters: XR 1200X

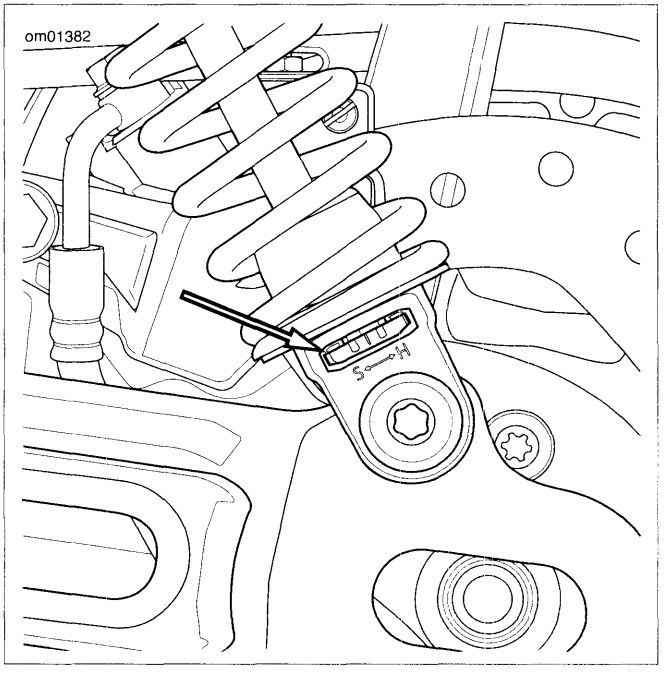

Figure 1-78. Shock Absorber Rebound Damping Adjuster: XR 1200X

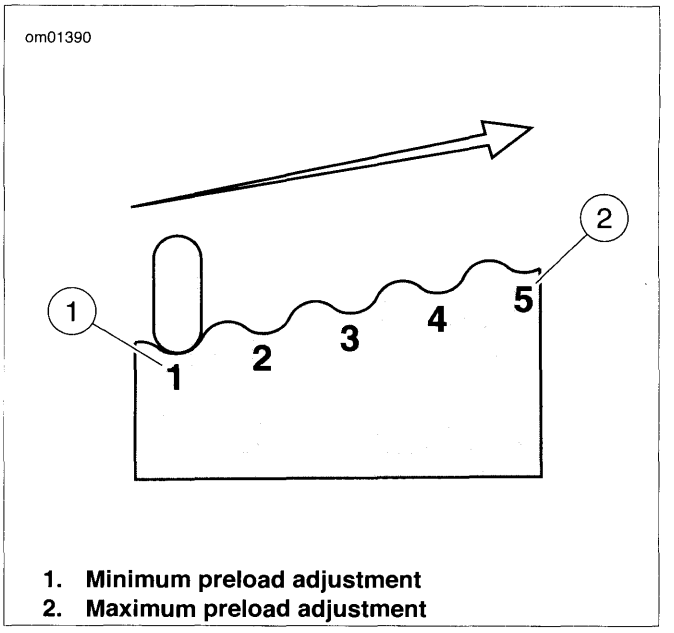

1. **Minimum preload adjustment**
2. **Maximum preload adjustment**

Figure 1-79. Shock Absorber Preload Adjustment: XR 1200X

Table 1-18. Recommended Rear Shock Preload Adjustment: XR 1200X

RIDER WEIGHT	PRELOAD
Less than 165 lb (75 kg)	Position 1
165-195 lb (75-89 kg)	Position 2
195-225 lb (89-102 kg)	Position 3
225-255 lb (102-116 kg)	Position 4
Greater than 255 lb (116 kg)	Position 5

Table 1-19. Recommended Rear Shock Rebound and Compression Damping Adjustment: XR 1200X

DAMPING	NOMINAL (From Maximum)
Compression (COM)	7 clicks
Rebound (REB)	5 clicks

GENERAL

Inspect and lubricate the following at scheduled service intervals as specified in 1.5 MAINTENANCE SCHEDULE.

- Front brake hand lever
- Clutch hand lever
- Throttle control cables
- Throttle control grip sleeve
- Clutch cable
- Foot shift lever pivot (if applicable)
- Rear brake lever pivot
- Steering head bearings
- Jiffy stand

If service is on muddy or dusty roads, clean and lubricate at shorter intervals.

CABLES AND HAND LEVERS

For throttle cables, see 2.29 THROTTLE CABLES: ALL MODELS.

Use Harley Lube (Part No. 94968-09) for clutch lever and cable.

Use G40M BRAKE GREASE on front brake lever pin pivot hole and on the end of piston that contacts brake lever.

FOOT SHIFT LEVER AND REAR BRAKE PEDAL

Clean and lubricate the foot shift lever pivot (on models with forward controls) and rear brake pedal pivot with ANTI-SEIZE LUBRICANT at scheduled service intervals as specified in 1.5 MAINTENANCE SCHEDULE.

If service is on muddy or dusty roads, clean and lubricate components at shorter intervals.

JIFFY STAND

Clean and lubricate the jiffy stand. For more information, see 2.36 JIFFY STAND.

STEERING HEAD BEARINGS

Lubricate the steering head bearings with HARLEY-DAVIDSON SPECIAL PURPOSE GREASE. See 1.19 STEERING HEAD BEARINGS for procedure.

GENERAL

The air cleaner prevents foreign material from entering the induction module and engine, trapping airborne dust and dirt in the filter element.

REMOVAL

1. See Figure 1-80. Remove two screws (1) and trim insert (2) from air cleaner cover (3).
2. Remove air cleaner cover from air cleaner backplate (9). Remove air cleaner seal (4) from cover.
3. Remove three screws (5). Remove air filter element (6) and gasket (7) from air cleaner backplate. Discard gasket.

CAUTION

Install air filter before running engine. Failure to do so can draw debris into the engine and could result in engine damage. (00207a)

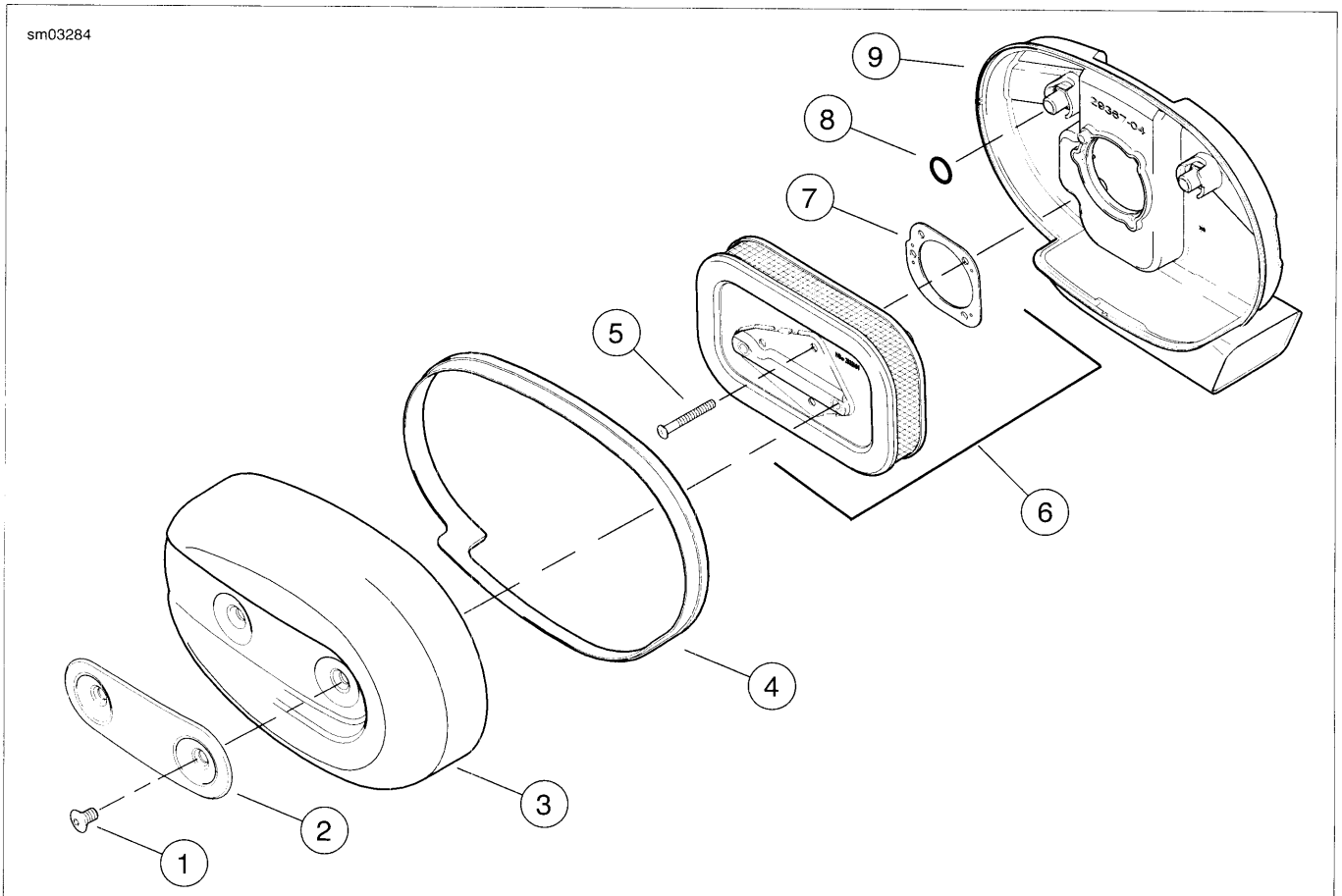

1. **Screw (2)**
2. **Trim insert**
3. **Air cleaner cover**
4. **Air cleaner seal**
5. **Screw (3)**
6. **Air filter element (includes item 7)**
7. **Gasket**
8. **O-ring (2)**
9. **Air cleaner backplate**

Figure 1-80. Air Cleaner Assembly: XL Models

CLEANING, INSPECTION AND REPAIR

1. See Figure 1-80. Thoroughly clean air cleaner backplate (9) and inside of air cleaner cover (3).
2. If air filter element (6) is damaged or if filter media cannot be adequately cleaned, replace element and proceed to steps below to examine O-rings and air cleaner seal.

⚠WARNING

Do not use gasoline or solvents to clean filter element. Flammable cleaning agents can cause an intake system fire, which could result in death or serious injury. (00101a)

3. Wash air filter element thoroughly in warm, soapy water. To remove soot and carbon, soak air filter element for 30 minutes in warm water with mild detergent.

⚠WARNING

Compressed air can pierce the skin and flying debris from compressed air could cause serious eye injury. Wear safety glasses when working with compressed air. Never use your hand to check for air leaks or to determine air flow rates. (00061a)

4. Dry air filter element using low-pressure compressed air. Rotate air filter element while moving air nozzle up and down filter element interior. Do not tap air filter element on hard surface.
5. Hold air filter element up to strong light source. Element can be considered sufficiently clean if light is uniformly visible through filter material.

NOTE

Do not use air cleaner filter oil on Harley-Davidson paper air filter elements.

6. Examine O-rings (8). If damaged, replace with **new** O-ring(s).
7. Examine air cleaner seal (4). If cracked, torn or otherwise damaged, replace with **new** seal.

INSTALLATION

1. See Figure 1-80. Apply a thin coat of engine oil or light grease to O-rings (8). This will help prevent them from being damaged when air filter element is installed.
2. Position **new** gasket (7) on air cleaner backplate (9). Make sure gasket holes are lined up with backplate holes.
3. Install air filter element (6) onto backplate. The words "This Side Out" should be readable on the upper edge of the air filter element when installed. Apply a drop of Loctite 243 to each of three air filter element screws (5). Secure filter element with screws and tighten to 40-60 **in-lbs** (4.5-6.8 Nm).
4. Fit air cleaner seal (4) onto air cleaner cover (3). To maintain proper sealing, make sure air cleaner seal covers entire edge of air cleaner cover.
5. Install air cleaner cover onto backplate. Make sure air cleaner seal fits inside backplate and is not pinched or distorted.
6. Install trim insert (2) and secure cover assembly with two screws (1). Tighten to 36-60 **in-lbs** (4.1-6.8 Nm).

GENERAL

The air cleaner prevents foreign material from entering the induction module and engine, trapping airborne dust and dirt in the filter element.

See Figure 1-81. The XR air filter element (3) is housed in the airbox assembly (1), mounted to the underside of the fuel tank on the right side of the vehicle. In order to remove the air filter element for service, the fuel tank must be removed from the vehicle.

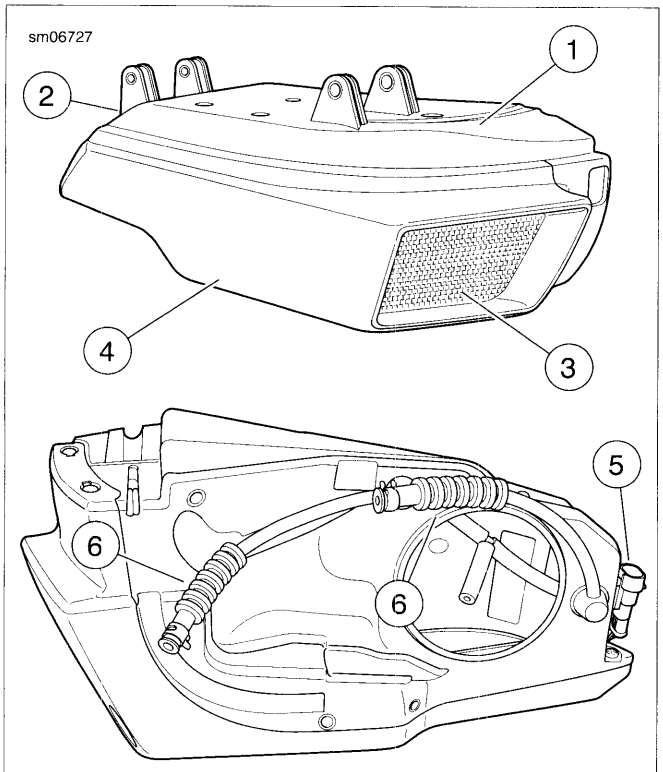

1. **Airbox assembly**
2. **Mounting boss (4)**
3. **Air filter element (behind screen)**
4. **Air filter cover**
5. **Active intake connector [178]**
6. **Breather hose (2)**

Figure 1-81. Airbox: XR Models

REMOVAL

⚠WARNING

Stop the engine when refueling or servicing the fuel system. Do not smoke or allow open flame or sparks near gasoline. Gasoline is extremely flammable and highly explosive, which could result in death or serious injury. (00002a)

1. Purge and disconnect fuel supply hose, and remove fuel tank. See 4.6 FUEL TANK: XR MODELS.
2. Remove airbox assembly. See 4.4 AIR BOX: XR MODELS.
3. See Figure 1-82. Remove two screws (2, 3) securing air filter cover (4) to airbox assembly (1).
4. Using a small flat blade screwdriver, or other suitable tool, gently pry two button head clips (5) securing air filter cover to airbox. Discard button head clips.

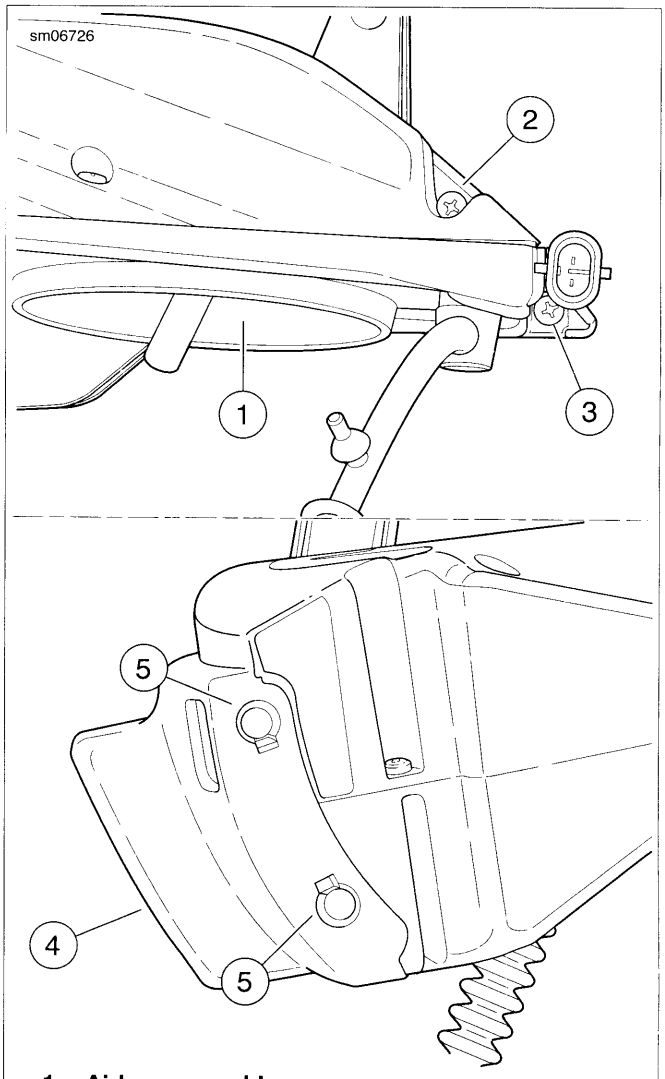

1. **Airbox assembly**
2. **Screw**
3. **Screw**
4. **Air filter cover**
5. **Button head clip (2)**

Figure 1-82. Unbolting Air Filter Cover

5. See Figure 1-83. Gently pull rear end of air filter cover away from airbox assembly. Disengage front of air filter cover from airbox assembly and set cover aside.

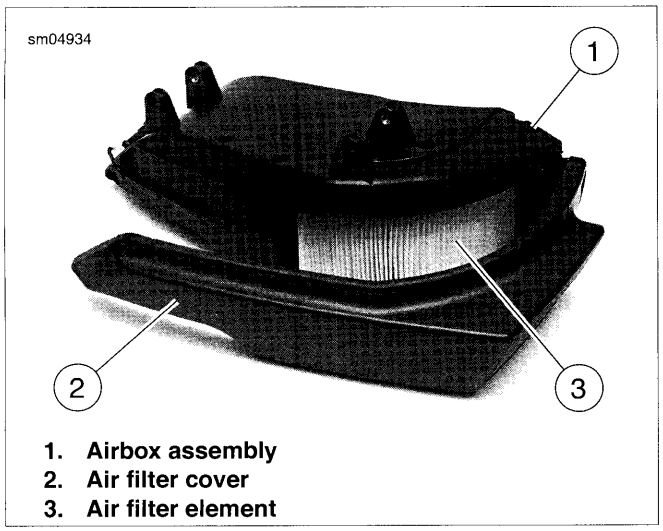

1. **Airbox assembly**
2. **Air filter cover**
3. **Air filter element**

Figure 1-83. Removing Air Filter Cover

6. See Figure 1-84. Using a flat blade screwdriver or other suitable tool, gently pry lower front corner of air filter element out of airbox. Work screwdriver around bottom of filter element gasket (4) until entire bottom end of filter element is free.
7. Carefully pull air filter element out of airbox.

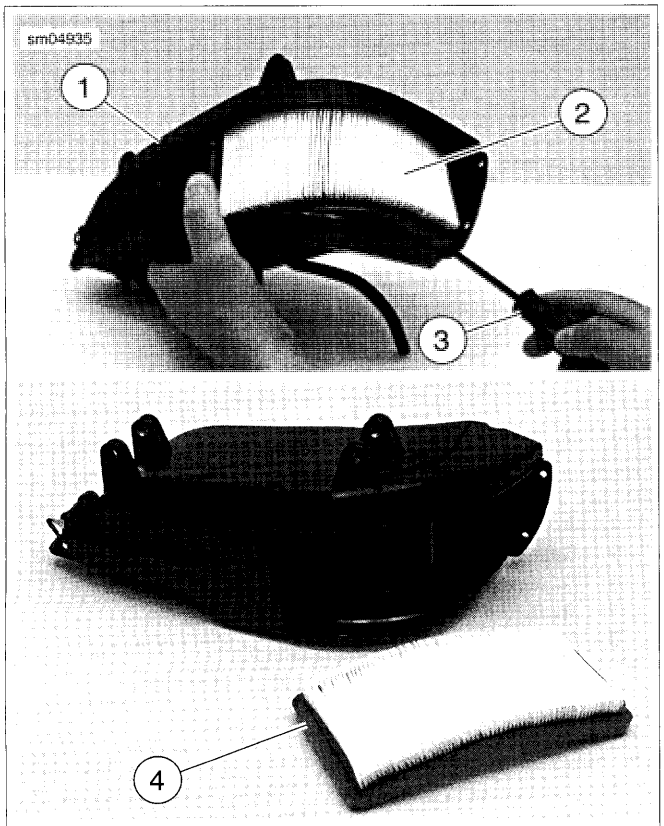

1. **Airbox assembly**
2. **Air filter element**
3. **Screwdriver**
4. **Gasket (built into air filter element)**

Figure 1-84. Removing Air Filter Element

CLEANING, INSPECTION AND REPAIR

1. See Figure 1-83. Thoroughly clean inside of airbox housing (1) and cover (2).
2. If air filter element (3) is damaged or if filter media cannot be adequately cleaned, replace filter element.
3. See Figure 1-84. Examine air filter seal (4). If cracked, torn or otherwise damaged, replace filter element.

⚠WARNING

Do not use gasoline or solvents to clean filter element. Flammable cleaning agents can cause an intake system fire, which could result in death or serious injury. (00101a)

4. Wash air filter element thoroughly in warm, soapy water. To remove soot and carbon, soak air filter element for 30 minutes in warm water with mild detergent.

⚠WARNING

Compressed air can pierce the skin and flying debris from compressed air could cause serious eye injury. Wear safety glasses when working with compressed air. Never use your hand to check for air leaks or to determine air flow rates. (00061a)

5. Dry air filter element using low-pressure compressed air. Rotate air filter element while moving air nozzle up and down filter element interior. Do not tap air filter element on hard surface.
6. Hold air filter element up to strong light source. Element can be considered sufficiently clean if light is uniformly visible through filter material. If any holes are visible, the element must be replaced.

NOTE

Do not use air cleaner filter oil on Harley-Davidson paper air filter elements.

INSTALLATION

1. Form **new** air filter element into a curved shape. Slide top of air filter element up into opening in airbox. See Figure 1-85. Top of air filter element must fully fit into channel in top of airbox.
2. Press bottom and ends of air filter element into airbox, making sure that filter element fits fully into airbox opening.
3. See Figure 1-83. Position front of air filter cover (2) onto airbox. Do not secure with button head clips at this time.
4. See Figure 1-86. If vehicle is equipped with active intake, make sure active intake connector wiring harness (4) is in recess (5) in airbox (1) and cannot be pinched or cut when air filter cover (2) is installed.
5. See Figure 1-82. Install rear of air filter cover in place onto airbox. Secure with two screws (2, 3) and tighten.
6. Install **new** button head clips (5). Press in firmly.
7. Install airbox assembly. See 4.4 AIR BOX: XR MODELS.
8. Install fuel tank. See 4.6 FUEL TANK: XR MODELS.

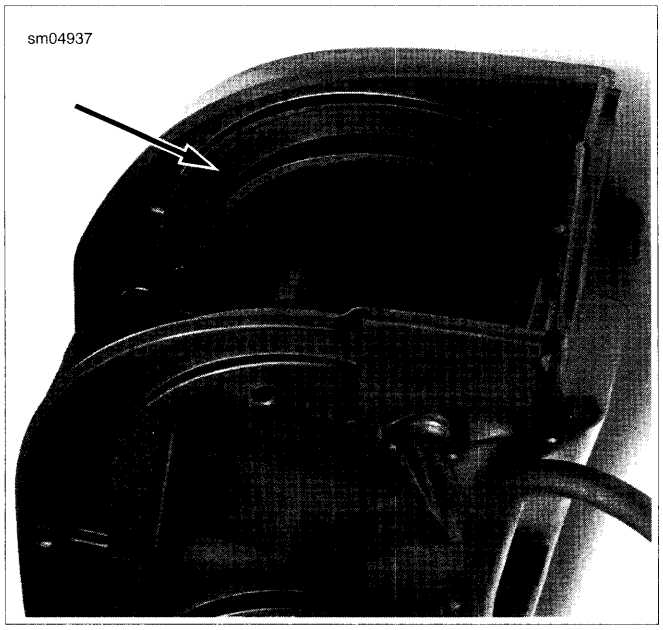

Figure 1-85. Filter Element Channel

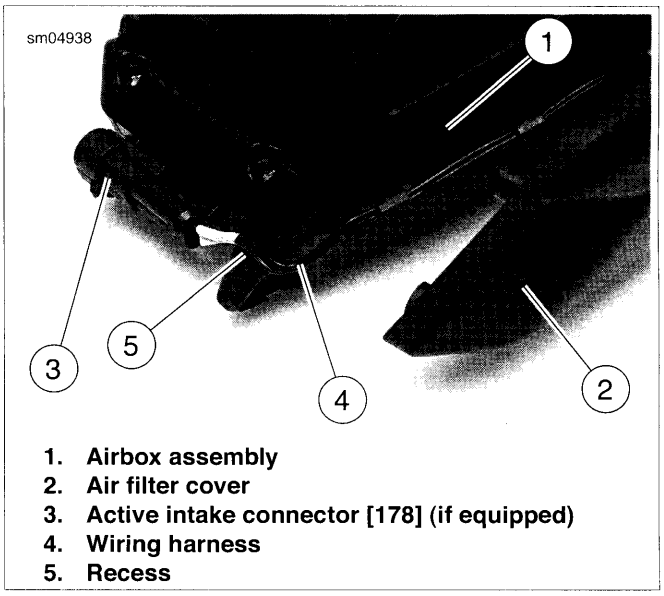

1. Airbox assembly
2. Air filter cover
3. Active intake connector [178] (if equipped)
4. Wiring harness
5. Recess

Figure 1-86. Installing Air Filter Cover

EXHAUST SYSTEM LEAK CHECK

Check the exhaust system for leaks at every scheduled service interval as follows:

1. Check entire exhaust system for loose or missing fasteners, broken pipe clamps or brackets, and obvious signs of leakage (carbon tracks at pipe joints, etc.).
2. Check for loose or broken heat shields. Repair or replace as necessary.
3. Start engine, cover muffler ends with clean, dry shop towels and listen for audible signs of exhaust leakage.
4. Correct any leaks detected. See 4.14 EXHAUST SYSTEM: XL MODELS or 4.15 EXHAUST SYSTEM: XR MODELS for exhaust system removal and installation procedures.

CABLE INSPECTION AND LUBRICATION

Inspect, lubricate and adjust throttle control cables as follows.

1. See Figure 1-87. Remove two screws (1) to separate the upper handlebar housing from the lower housing.
2. Unhook each ferrule and cable from the throttle grip and remove the throttle sleeve.
3. Inspect each cable. Replace cable assembly if cable is frayed or kinked.
4. Inspect entire cable outer sheath from throttle grip to induction module for damage. Replace if necessary.
5. Apply a light coat of graphite to the handlebar and replace throttle grip.
6. Pour one or two drops of HARLEY LUBE (Part No. 94968-09) into the housing of each cable.
7. Assemble handlebar housing. Tighten both screws (1) to 35-45 **in-lbs** (4.0-5.1 Nm).

CABLE ADJUSTMENT

⚠WARNING

Before starting engine, be sure throttle control will snap back to idle position when released. A throttle control that prevents engine from automatically returning to idle can lead to loss of control, which could result in death or serious injury. (00390a)

See Figure 1-87. With throttle friction screw (3) backed off, induction module throttle wheel must return to closed (idle) position. Check control cable adjustment. With engine idling, turn handlebars through full range of travel. If engine speed changes during this maneuver, adjust control cables according to the following procedure.

1. Loosen throttle friction screw (3).
2. Slide rubber boot off each control cable adjuster (6).
3. Loosen jam nut (7) on each cable adjuster.
4. Turn cable adjusters in direction which will shorten cable housings to minimum length.
5. Point front wheel straight ahead. With engine OFF, gently turn throttle control grip (2) to fully open position (fully counterclockwise) and hold in position.
6. Gently turn adjuster (6) on throttle control cable (4) counterclockwise until throttle cam (8) touches throttle cam stop (10). Release throttle control grip and turn adjuster counterclockwise an additional 1/2-1 turn. Tighten jam nut on throttle control cable adjuster.
7. Turn handlebars fully to right. Turn adjuster (6) on idle control cable (5), lengthening sleeve until end of cable housing just touches spring (9) within cable guide (11).
8. Check adjustment. With throttle friction screw loosened, twist and release throttle control grip two or three times. Induction module throttle wheel must return to idle position each time throttle grip is released. If throttle does not return to idle, turn idle adjuster, shortening sleeve until correct adjustment is reached. Tighten jam nut.
9. Slide rubber boot over each cable adjuster.

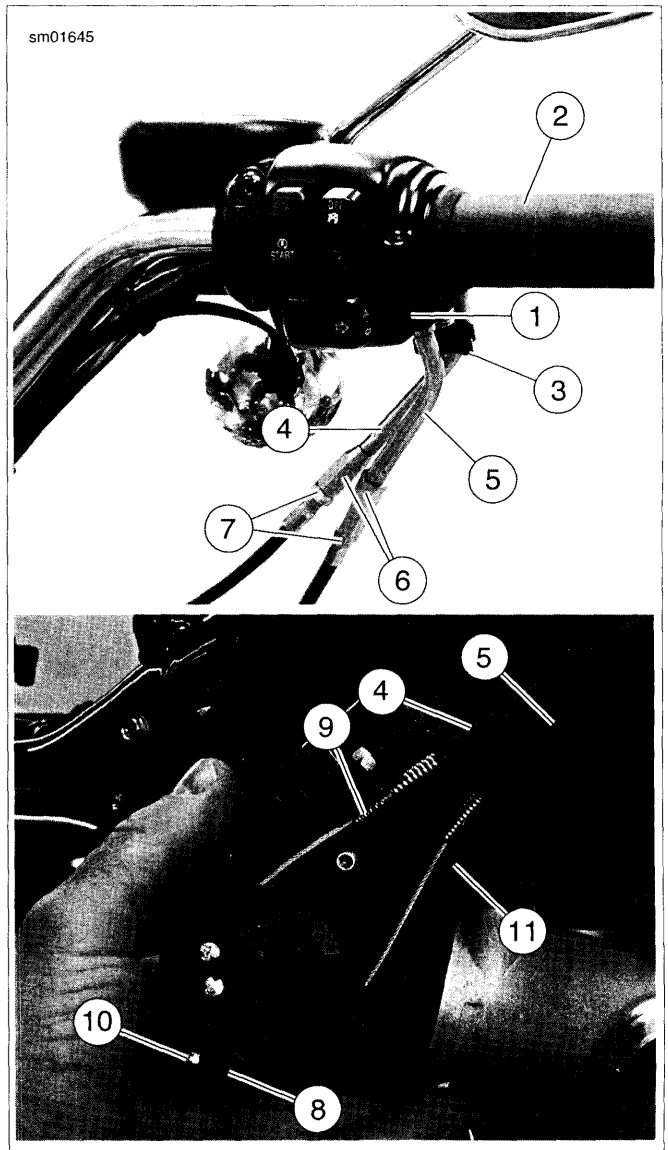

1. **Screw (2)**
2. **Throttle control grip**
3. **Throttle friction screw**
4. **Throttle control (pull open) cable**
5. **Idle control (pull close) cable**
6. **Control cable adjuster (2)**
7. **Jam nut (2)**
8. **Throttle cam**
9. **Spring**
10. **Throttle cam stop**
11. **Cable guide**

Figure 1-87. Throttle Cable Adjustment (typical; XL model shown) (Induction Module Partially Removed from Vehicle for Clarity)

GENERAL

The fuel supply filter is located in the fuel pump assembly inside the fuel tank.

Check fuel system hose and fittings for leaks.

REMOVAL

⚠WARNING

To prevent spray of fuel, purge system of high-pressure fuel before supply line is disconnected. Gasoline is extremely flammable and highly explosive, which could result in death or serious injury. (00275a)

1. Purge the fuel supply hose of high pressure gasoline. Disconnect fuel supply hose from fuel pump module. See 4.5 FUEL TANK: XL MODELS or 4.6 FUEL TANK: XR MODELS.
2. Remove seat.

⚠WARNING

To prevent accidental vehicle start-up, which could cause death or serious injury, remove main fuse before proceeding. (00251b)

3. Unplug main fuse. See 6.35 MAIN FUSE.
4. Drain and remove fuel tank. See 4.5 FUEL TANK: XL MODELS or 4.6 FUEL TANK: XR MODELS.
5. Remove fuel pump assembly from fuel tank. See 4.17 FUEL PUMP.
6. See Figure 1-88. Remove and discard cover plate seal (6).
7. Remove retaining clip (4) and lift filter housing (5) off fuel pump assembly (1).
8. Remove and discard filter element (3).

INSTALLATION

1. See Figure 1-88. Examine O-ring (2). Replace if cracked, torn or otherwise damaged.
2. Install **new** filter element (3) into filter housing (5).
3. Install filter housing onto base of fuel pump assembly (1). Secure with retaining clip (4), making sure that clip is oriented right side up, exactly as shown in the figure.
4. Install **new** cover plate seal (6) into groove in cover plate (7).
5. Install fuel pump assembly into fuel tank. Tighten mounting screws in a cross pattern to 40-45 **in-lbs** (4.5-5.1 Nm). See 4.17 FUEL PUMP.
6. Install fuel tank and reconnect fuel hose. See 4.5 FUEL TANK: XL MODELS or 4.6 FUEL TANK: XR MODELS. Fill fuel tank and carefully check for leaks.
7. Plug in main fuse. See 6.35 MAIN FUSE.
8. Install seat.
9. Turn ignition switch ON and verify operation of fuel pump.

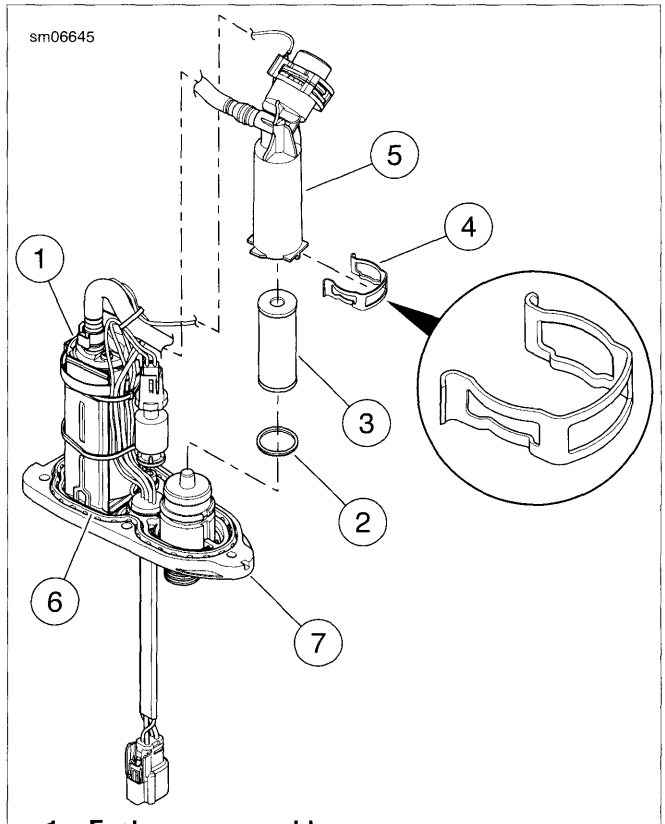

1. **Fuel pump assembly**
2. **O-ring**
3. **Fuel filter element**
4. **Retaining clip**
5. **Filter housing**
6. **Cover plate seal**
7. **Cover plate**

Figure 1-88. Replacing Fuel Filter Element

INSPECTION

Check engine mounts and stabilizer links as follows:

1. See Figure 1-89. Check for cracks or tears in engine mount isolator rubber (17, 18).
2. Check for lateral movement at each end of the three stabilizer links (8). Any lateral movement indicates the need to replace the stabilizer link. Rotational movement does not indicate excess wear.
3. Check that all engine mount bolts and stabilizer link screws are tight. See 2.26 STABILIZER LINKS, 2.27 FRONT ENGINE MOUNT/ISOLATOR, or 2.28 REAR ENGINE MOUNT/ISOLATOR for torque specifications.
4. Check that the mounts are supporting the weight of the motor.

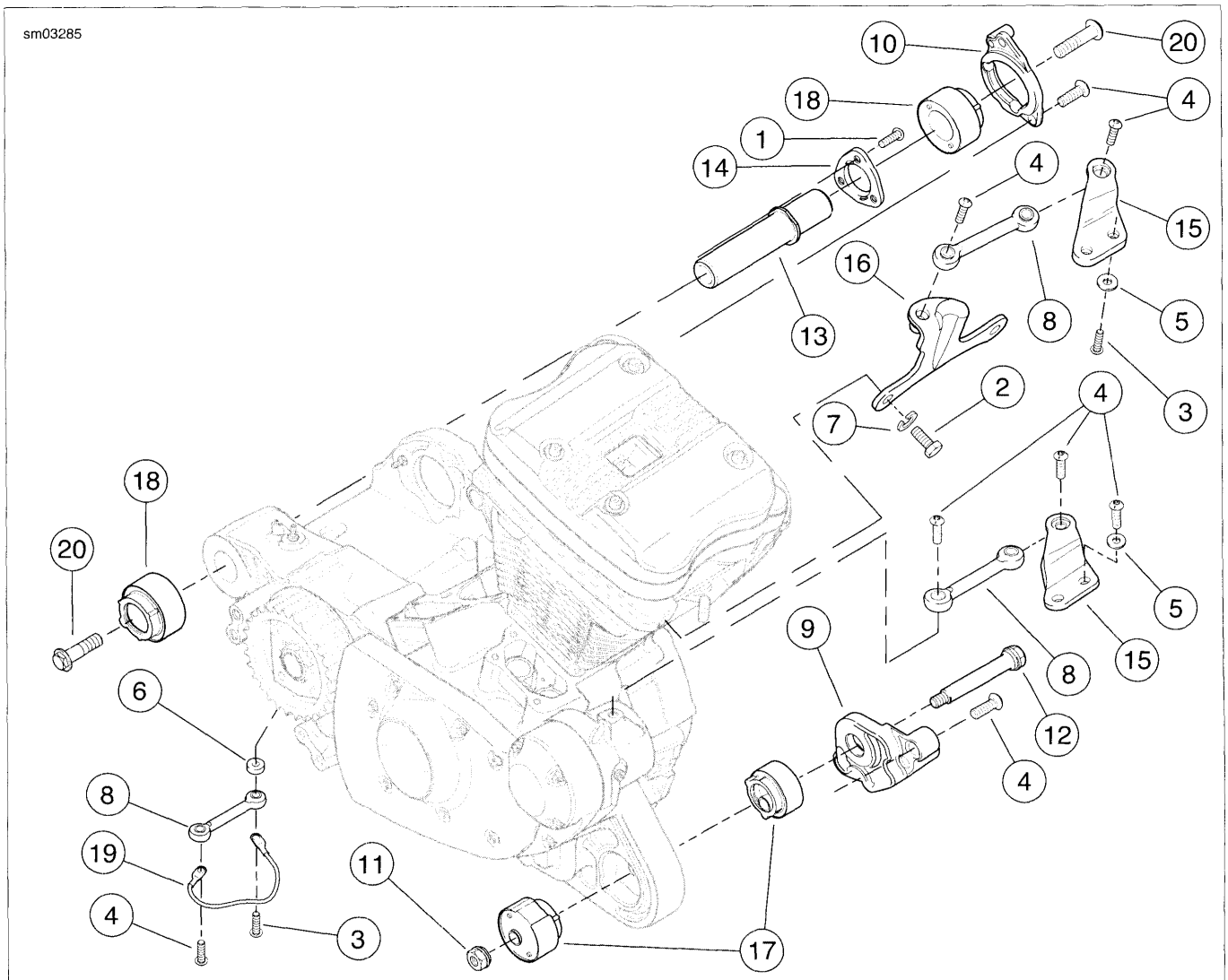

1. Screw (3)
2. Screw (2)
3. Screw (3)
4. Screw (11)
5. Washer (4)
6. Spacer
7. Lock washer (2)
8. Stabilizer link (3)
9. Front isolator mount
10. Rear isolator mount
11. Nut
12. Bolt
13. Rear fork pivot shaft
14. Rear pivot lockplate
15. Stabilizer link bracket (2)
16. Engine bracket
17. Front mount isolator (2)
18. Rear mount isolator (2)
19. Grounding strap
20. Rear fork pivot bolt (2)

Figure 1-89. Engine Mounting Assemblies: All Models (XL Model Shown)

HEADLAMP ALIGNMENT

⚠WARNING

The automatic-on headlamp feature provides increased visibility of the rider to other motorists. Be sure headlamp is on at all times. Poor visibility of rider to other motorists can result in death or serious injury. (00030b)

NOTE

Vehicles with multiple beam headlamps that are individually aimed should be adjusted so both lamps converge into one pattern.

1. Verify that front and rear tire inflation pressures are correct and that suspension is adjusted to the weight of the principal rider. See 1.11 TIRES AND WHEELS.
2. Fill fuel tank or add ballast to equal the weight of the fuel needed.

NOTE

See Figure 1-90. To aid in properly placing the motorcycle, a perpendicular line (1) can be drawn on the floor. For best results, choose an area with minimum light.

3. Draw a vertical line (2) on the wall.
4. Position motorcycle so that front axle is 25 ft (7.6 m) from wall.

NOTE

As the weight of the rider will compress the suspension slightly, have a person whose weight is approximately the same as that of the principal rider sit on the motorcycle.

5. With the vehicle laden and upright, point the front wheel straight forward at wall and measure the distance (4) from the floor to the center of the HIGH BEAM bulb.
6. Draw a horizontal line (5) through the vertical line on the wall that is 2.1 in (53.3 mm) lower than the measured bulb centerline.

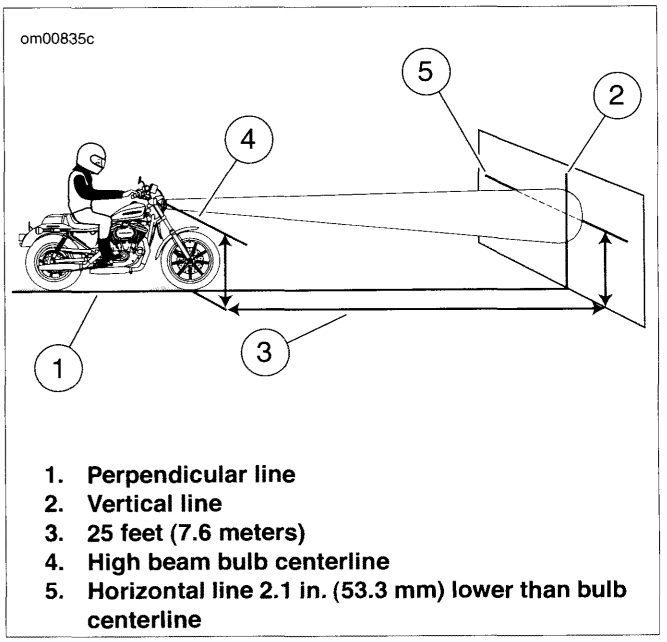

1. **Perpendicular line**
2. **Vertical line**
3. **25 feet (7.6 meters)**
4. **High beam bulb centerline**
5. **Horizontal line 2.1 in. (53.3 mm) lower than bulb centerline**

Figure 1-90. Checking Headlamp Alignment: Sportster Models

7. Verify headlamp alignment. Turn the ignition switch to IGNITION and set the headlamp switch to HIGH beam.
   a. The center of the hot spot (brightest area of light beam) should be centered where the two lines intersect.
   b. Adjust headlamp alignment if necessary.

HEADLAMP ADJUSTMENT: SPORTSTER MODELS

Adjustment (XL 883C and XL 1200C Models)

1. Set horizontal adjustment:
   a. See Figure 1-91. Loosen the Allen head capscrew (3).
   b. Turn the headlamp right or left as necessary to direct the light beam straight ahead.
   c. Tighten the Allen head capscrew to 30-35 ft-lbs (40.7-47.5 Nm).
2. Set vertical adjustment:
   a. See Figure 1-91. Loosen the locknut (1) for the vertical adjustment bolt.
   b. Tilt headlamp up or down to properly aim it at the horizontal line on the wall.
   c. Tighten headlamp locknut to 30-35 ft-lbs (40.7-47.5 Nm).

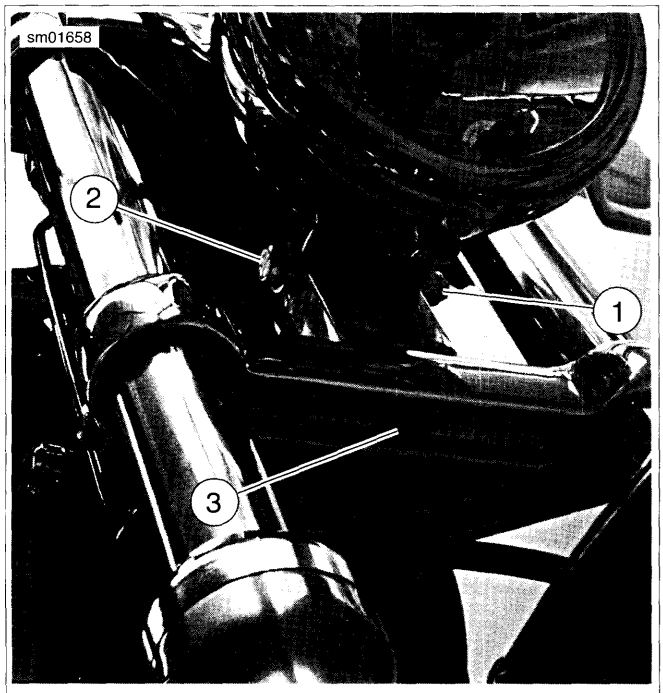

1. **Locknut**
2. **Vertical adjustment bolt**
3. **Horizontal adjustment screw**

Figure 1-91. Headlamp Adjustment (XL 883C/XL 1200C)

Adjustment (All Models Except XL 883C and XL 1200C)

1. See Figure 1-92. Remove snap plug (1) on top of headlamp bracket (2).
2. See Figure 1-93. Loosen headlamp clamp nut.
3. Tilt headlamp up or down to properly aim it in relation to the horizontal line and, at the same time, turn it right or left to direct light beam straight ahead.
4. Tighten headlamp clamp nut to 120-240 **in-lbs** (14-27 Nm) after lamp is properly positioned. Install snap plug in headlamp bracket.

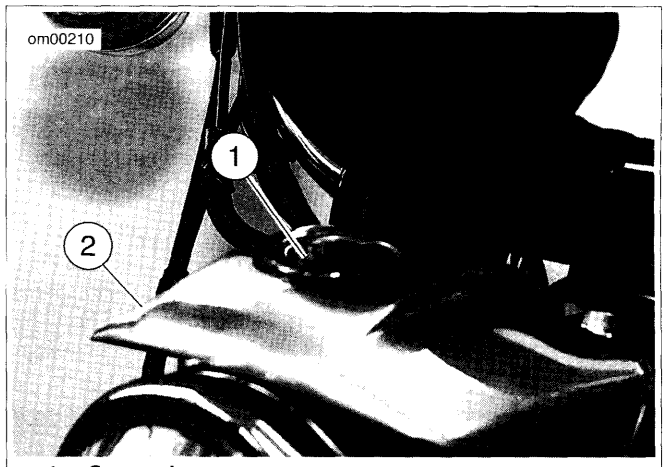

1. **Snap plug**
2. **Headlamp bracket**

Figure 1-92. Headlamp Snap Plug: Sportster Models (XL Model Shown)

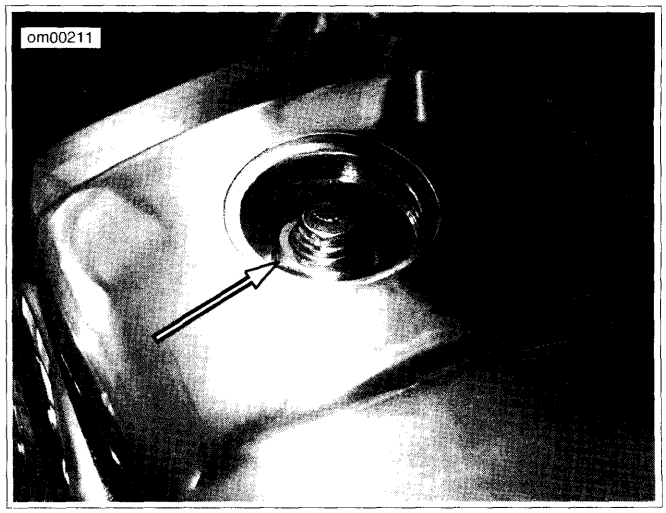

Figure 1-93. Headlamp Clamp Nut: Sportster Models (XL Model Shown)

INSPECTION

Inspect critical fasteners at the scheduled service intervals.

Replace any fasteners that are damaged or missing.

Checking Torques on Fasteners

Refer to Table 1-20. Attempt to turn the fastener using a torque wrench set to the minimum torque specification for that fastener. If the fastener does not rotate, the fastener torque has been maintained. If the fastener rotates, remove it to determine if it has a locking agent.

If it has a locking agent, clean all locking material from the threaded hole. Replace the fastener with a new one or clean the original fastener threads and apply the appropriate locking agent (see appropriate procedure). Install and tighten the fastener to specification.

If the fastener does not have a locking agent, install and tighten to specification.

Table 1-20. Critical Fasteners

SYSTEM	FASTENER	TORQUE	
Hand controls	Upper and lower switch housing screws	35-45 **in-lbs**	4.0-5.1 Nm
	Clutch lever handlebar clamp screws	108-132 **in-lbs**	12.2-14.9 Nm
	Master cylinder handlebar clamp screws	108-132 **in-lbs**	12.2-14.9 Nm
Engine	Stabilizer link screws	25-35 ft-lbs	33.9-47.5 Nm
	Upper front stabilizer link frame bracket mounting screws	25-35 ft-lbs	33.9-47.5 Nm
	Upper front stabilizer link engine bracket mounting screws	55-65 ft-lbs	74.6-88.2 Nm
	Lower front stabilizer link frame bracket mounting screws	25-35 ft-lbs	33.9-47.5 Nm
	Front isolator mounting bolt	95-105 ft-lbs	129-142 Nm
	Rear fork pivot/engine mount bolts	60-70 ft-lbs	81.4-95.0 Nm
	Front isolator mounting bracket screws (left side)	25-35 ft-lbs	33.9-47.5 Nm
	Rear isolator mounting bracket screws (left side)	25-35 ft-lbs	33.9-47.5 Nm
Brakes	Brake line banjo bolts	20-25 ft-lbs	27.1-33.9 Nm
	Front brake disc mounting screws	16-24 ft-lbs	21.7-32.6 Nm
	Rear brake disc mounting screws	30-45 ft-lbs	40.7-61.1 Nm
	Front master cylinder reservoir cover screws	9-17 **in-lbs**	1.0-2.0 Nm
	Rear master cylinder mounting screws: XL	17-22 ft-lbs	23.1-29.9 Nm
	Rear master cylinder mounting screws: XR	72-96 **in-lbs**	8.1-10.9 Nm
	Rear master cylinder bracket-to-frame mounting screws: XL	17-22 ft-lbs	23.1-29.9 Nm
	Rear master cylinder/footpeg bracket-to-frame mounting screws: XR	45-50 ft-lbs	61-67.8 Nm
	Front brake caliper mounting bolts	28-38 ft-lbs	38.0-51.6 Nm
Axle nuts	Front	60-65 ft-lbs	81-88 Nm
	Rear	95-105 ft-lbs	129-142 Nm

Table 1-20. Critical Fasteners

SYSTEM	FASTENER	TORQUE	
Front fork/handlebars	Lower bracket pinch screws	30-35 ft-lbs	40.7-47.5 Nm
	Upper bracket pinch screws	30-35 ft-lbs	40.7-47.5 Nm
	Fork stem bolt	23-27 ft-lbs, loosen, 72-96 **in-lbs**	31.2-36.6 Nm, loosen, 8.1-10.9 Nm
	Fork stem pinch screw	30-35 ft-lbs	40.7-47.5 Nm
	Front axle pinch screw: XL	21-27 ft-lbs	28.5-36.6 Nm
	Front axle pinch screw: XR	41-48 ft-lbs	55.6-65.1 Nm
	Handlebar clamp mounting screw	12-18 ft-lbs	16.3-24.4 Nm
	Riser mounting bolts	30-40 ft-lbs	40.7-54.3 Nm
Final drive	Rear sprocket mounting screws	60 ft-lbs, loosen 180°, 80 ft-lbs	81.3 Nm, loosen 180°, 108 Nm

GENERAL

If the motorcycle will not be operated for several months, such as during the winter season, there are several things which should be done to protect parts against corrosion, to preserve the battery and to prevent the buildup of gum and varnish in the fuel system.

This work should be performed following Service Manual procedures.

PLACING IN STORAGE

PART NUMBER	TOOL NAME
98716-87A	STORAGE COVER

⚠WARNING

Do not store motorcycle with gasoline in tank within the home or garage where open flames, pilot lights, sparks or electric motors are present. Gasoline is extremely flammable and highly explosive, which could result in death or serious injury. (00003a)

1. Run motorcycle until engine is at normal operating temperature. Stop the engine then drain the oil tank, install a **new** oil filter, and fill oil tank with the proper grade oil. Check the transmission lubricant level.

⚠WARNING

Avoid spills. Slowly remove filler cap. Do not fill above bottom of filler neck insert, leaving air space for fuel expansion. Secure filler cap after refueling. Gasoline is extremely flammable and highly explosive, which could result in death or serious injury. (00028a)

⚠WARNING

Use care when refueling. Pressurized air in fuel tank can force gasoline to escape through filler tube. Gasoline is extremely flammable and highly explosive, which could result in death or serious injury. (00029a)

2. Prepare your fuel system by filling fuel tank and adding a gasoline stabilizer. Use one of the commercially available gasoline stabilizers following the manufacturer's instructions.
3. Remove the spark plugs, inject a few squirts of engine oil into each cylinder and crank the engine 5-6 revolutions. Replace the spark plugs.
4. Inspect rear belt deflection. See 1.16 WHEEL ALIGNMENT.
5. Inspect rear belt and sprockets. See 1.15 DRIVE BELT AND SPROCKETS.
6. Inspect air cleaner filter. See 1.22 AIR CLEANER: XL MODELS or 1.23 AIR CLEANER: XR MODELS.
7. Lubricate controls. See 1.21 CABLE AND CHASSIS LUBRICATION.
8. Inspect operation of all electrical equipment and switches.
9. Check tire inflation and inspect tires for wear and/or damage. See 1.11 TIRES AND WHEELS. If the motorcycle will be stored for an extended period of time, securely support the motorcycle under the frame so that all weight is off the tires.

⚠WARNING

Be sure that brake fluid or other lubricants do not contact brake pads or discs. Such contact can adversely affect braking ability, which could cause loss of control, resulting in death or serious injury. (00290a)

10. Wash painted and chrome-plated surfaces. Apply a light film of oil to exposed unpainted surfaces.

⚠WARNING

Unplug or turn OFF battery charger before connecting charger cables to battery. Connecting cables with charger ON can cause a spark and battery explosion, which could result in death or serious injury. (00066a)

⚠WARNING

Explosive hydrogen gas, which escapes during charging, could cause death or serious injury. Charge battery in a well-ventilated area. Keep open flames, electrical sparks and smoking materials away from battery at all times. KEEP BATTERIES AWAY FROM CHILDREN. (00065a)

11. Remove battery from vehicle. Charge battery until the correct voltage is obtained. Charge the battery every other month if it is stored at temperatures below 60 °F (16 °C). Charge battery once a month if it is stored at temperatures above 60 °F (16 °C). See 1.17 BATTERY MAINTENANCE.

⚠WARNING

Unplug or turn OFF battery charger before disconnecting charger cables from battery. Disconnecting clamps with charger ON can cause a spark and battery explosion, which could result in death or serious injury. (00067a)

12. If the motorcycle is to be covered, use a material that will breathe, such as STORAGE COVER (Part No. 98716-87A) or light canvas. Plastic materials that do not breathe promote the formation of condensation, which leads to corrosion.

REMOVAL FROM STORAGE

⚠WARNING

The clutch failing to disengage can cause loss of control, which could result in death or serious injury. Prior to starting after extended periods of storage, place transmission in gear and push vehicle back and forth several times to assure proper clutch disengagement. (00075a)

1. Charge and install battery. If main fuse was removed, plug it in.

2. Remove and inspect the spark plugs. Replace if necessary.
3. Clean the air cleaner element.
4. If fuel tank was drained, fill fuel tank with fresh gasoline.
5. Start the engine and run until it reaches normal operating temperature.
6. Check engine oil level. Check the transmission lubricant level. Fill to proper levels with correct fluids, if required.
7. Perform all of the checks in the PRE-RIDING CHECKLIST in the Owner's Manual.

GENERAL

⚠WARNING

The Troubleshooting section of this manual is a guide to diagnose problems. Read the appropriate sections of this manual before performing any work. Improper repair and/or maintenance could result in death or serious injury. (00528b)

The following check list of possible operating troubles and their probable causes will be helpful in keeping a motorcycle in good operating condition. More than one of these conditions may be causing the trouble and all should be carefully checked.

NOTE

For further troubleshooting information, see the electrical diagnostic manual.

ENGINE

Starter Motor Does Not Operate or Does Not Turn Engine Over

1. Engine run switch in OFF position.
2. Ignition switch not in IGNITION position.
3. Discharged battery, loose or corroded connections (solenoid chatters).
4. Starter control circuit, relay, or solenoid faulty.
5. Electric starter shaft pinion gear not engaging or overrunning clutch slipping.
6. TSM/TSSM/HFSM Bank Angle Sensor tripped and ignition switch not cycled OFF then back to IGNITION position.
7. Security system activated.
8. Motorcycle in gear and clutch not pulled in.
9. Main fuse not in place.
10. Jiffy stand down and transmission in gear (HDI models).

Engine Turns Over But Does Not Start

1. Fuel tank empty.
2. Fuel filter clogged.
3. Plugged fuel injectors.
4. Discharged battery, loose or damaged battery terminal connections.
5. Fouled spark plugs.
6. Spark plug cables in bad condition and shorting, cable connections loose or cables connected to incorrect cylinders.
7. Ignition timing incorrect due to faulty coil, ECM or sensors (TMAP, CKP) and/or TSM/TSSM/HFSM.
8. Bank Angle Sensor tripped and ignition/light key switch not cycled OFF then back to IGNITION.
9. Damaged wire or loose wire connection at ignition coil, battery or ECM connector.
10. Sticking or damaged valve(s) or wrong length push rod(s).
11. Engine lubricant too heavy (winter operation).

NOTE

For cold weather starts, always disengage clutch.

Starts Hard

1. Spark plugs in bad condition, have improper gap or are partially fouled.
2. Spark plug cables in bad condition.
3. Battery nearly discharged.
4. Damaged wire or loose wire connection at battery terminal, ignition coil or ECM connector.
5. Ignition not functioning properly (possible sensor failure).
6. Faulty ignition coil.
7. Fuel tank filler cap vent plugged or fuel line closed off restricting fuel flow.
8. Water or dirt in fuel system.
9. Intake air leak.
10. Partially plugged fuel injectors.
11. Valves sticking.
12. Engine lubricant too heavy (winter operation).

NOTE

For cold weather starts, always disengage clutch.

Starts But Runs Irregularly or Misses

1. Spark plugs in bad condition or partially fouled.
2. Spark plug cables in bad condition and shorting or leaking.
3. Spark plug gap too close or too wide.
4. Faulty ignition coil, ECM, or sensor (TMAP, CKP, ET or O2).
5. Battery nearly discharged.
6. Damaged wire or loose connection at battery terminals, ignition coil or ECM connector.
7. Intermittent short circuit due to damaged wire insulation.
8. Water or dirt in fuel system.
9. Fuel tank vent system plugged.
10. Air leak at intake manifold or air cleaner.
11. Partially plugged fuel injectors.
12. Damaged intake or exhaust valve(s).
13. Weak or damaged valve springs.
14. Incorrect valve timing.

Spark Plug Fouls Repeatedly

1. Incorrect spark plug.
2. Piston rings badly worn or damaged.

3. Fuel mixture too rich.
4. Valve guides or seals badly worn or damaged.

Pre-Ignition or Detonation (Knocks or Pings)

1. Excessive carbon deposit on piston head or in combustion chamber.
2. Incorrect heat range spark plug.
3. Faulty spark plug(s).
4. Ignition timing advanced. ECM or sensors (CKP, ET or TMAP) defective.
5. Fuel octane rating too low.
6. Intake manifold vacuum leak.

Check Engine Light Illuminates During Operation

Fault detected. See the electrical diagnostic manual for this motorcycle.

Overheating

1. Insufficient oil supply or oil not circulating.
2. Insufficient air flow over engine.
3. Leaking valve(s).
4. Heavy carbon deposits.
5. Ignition timing retarded. ECM or sensor (CKP, TMAP) defective.

Valve Train Noise

1. Low oil pressure caused by oil feed pump not functioning properly or oil passages obstructed.
2. Faulty hydraulic lifter(s).
3. Bent push rod(s).
4. Incorrect push rod length.
5. Cam(s), cam gear(s), or cam bushing(s) worn.
6. Rocker arm binding on shaft.
7. Valve sticking in guide.

Excessive Vibration

1. Stabilizer links worn or loose, or stabilizer link brackets loose or damaged.
2. Isolators worn or isolator bolts loose or damaged.
3. Isolator mounting brackets (left side of vehicle) loose or damaged.
4. Rubber mounts loose or worn.
5. Rear fork pivot shaft fasteners loose.
6. Front engine mounting bolts loose.
7. Exhaust system binding or hitting frame.
8. Engine/transmission and rear wheel not aligned properly.
9. Damaged frame.
10. Ignition timing advanced due to faulty sensor inputs (CKP, TMAP)/poorly tuned engine.
11. Primary chain badly worn or links tight as a result of insufficient lubrication or misalignment.
12. Wheels not aligned, rims bent, or tires worn or damaged.
13. Internal engine problem.

LUBRICATION SYSTEM

PART NUMBER	TOOL NAME
HD-35457	BLACK LIGHT LEAK DETECTOR

Oil Does Not Return To Oil Tank

1. Oil tank empty.
2. Oil pump gerotors damaged; oil pump not functioning.
3. Restricted oil hoses or fittings.
4. Restricted oil filter.

Engine Uses Too Much Oil Or Smokes Excessively

1. Piston rings badly worn or broken.
2. Valve guide(s) or seal(s) worn or damaged.
3. Restricted oil filter.
4. Oil tank overfilled.
5. Restricted oil return hose to tank.
6. Restricted breather operation.
7. Plugged crankcase scavenge port.
8. Oil diluted with gasoline.

Engine Leaks Oil From Cases, Push Rods, Hoses, Etc.

1. Loose parts.
2. Imperfect seal at gaskets, push rod cover, washers, etc.

NOTE

To aid locating leaks, use BLACK LIGHT LEAK DETECTOR (Part No. HD-35457).

3. Restricted oil return hose to tank.
4. Restricted breather passage(s) to air cleaner.
5. Restricted oil filter.
6. Oil tank overfilled.
7. Porosity.

Low Oil Pressure

1. Oil tank underfilled.
2. Faulty low oil pressure switch.
3. Worn oil pump gerotor(s).
4. Worn pinion shaft drive gear.
5. Restricted feed hose from oil tank.
6. Restricted high-pressure feed hose to oil filter housing.
7. Oil diluted with gasoline.
8. Oil bypass plunger stuck open.

High Oil Pressure

1. Oil tank overfilled.
2. Restricted oil tank return hose.
3. Oil bypass plunger stuck closed.

ELECTRICAL SYSTEM

NOTE

For diagnostic information see the electrical diagnostic manual.

Alternator Does Not Charge

1. Voltage regulator module not grounded.
2. Engine ground wire loose or damaged.
3. Faulty voltage regulator module.
4. Loose or damaged wires in charging circuit.
5. Faulty stator and/or rotor.

Alternator Charge Rate Is Below Normal

1. Weak or damaged battery.
2. Loose connections.
3. Faulty voltage regulator module.
4. Faulty stator and/or rotor.

Speedometer Operates Erratically

1. Contaminated vehicle speed sensor (remove sensor and clean off metal particles).
2. Loose connections.

TRANSMISSION

Shifts Hard

1. Clutch dragging slightly.
2. Transmission lubricant level too high.
3. Transmission lubricant too heavy (winter operation).
4. Shifter return spring (inside primary chaincase) bent or broken.
5. Bent shifter rod.
6. Shifter forks sprung or damaged.
7. Corners worn off gear dogs and shifter dog rings.

Jumps Out Of Gear

1. Shifter engaging parts (inside transmission) badly worn and rounded.
2. Shifter forks bent.
3. Shifter drum damaged/worn.
4. Damaged gears.

Clutch Slips

1. Clutch controls improperly adjusted.
2. Worn friction plates.
3. Insufficient clutch spring tension.

Clutch Drags Or Does Not Release

1. Lubricant level too high in primary chaincase.
2. Clutch controls improperly adjusted.
3. Clutch plates warped.
4. Insufficient clutch spring tension.
5. Primary chain badly misaligned or too tight.

Clutch Chatters

Friction plates or steel plates worn, warped or dragging.

HANDLING

1. Tires improperly inflated. Do not overinflate.
2. Loose wheel axle nuts. Tighten to torque specification.
3. Improper vehicle alignment: rear wheel out of alignment with frame and front wheel.
4. Rims and tires out-of-true sideways.
5. Rims and tires out-of-round or eccentric with hub.
6. Loose spokes (models with laced wheels).
7. Irregular or peaked front tire tread wear.
8. Damaged tires or improper front-rear tire combination.
9. Tire and wheel unbalanced.
10. Steering head bearings improperly adjusted or pitted or worn bearings and races.
11. Shock absorbers damaged/worn - not functioning normally.
12. Heavy front end loading. Non-standard equipment on the front end (such as heavy radio receivers, extra lighting equipment, or luggage) tends to cause unstable handling.
13. Engine mounts/stabilizer links loose, worn or damaged.
14. Rear fork pivot assembly: improperly tightened or assembled, or loose, pitted or damaged pivot bearings.

BRAKES

Brake Does Not Hold Normally

1. Brake fluid reservoir low, system leaking or pads worn.
2. Brake system contains air bubbles.
3. Master cylinder/caliper piston seals worn or parts damaged.
4. Brake pads contaminated with grease or oil.
5. Brake pads badly worn.
6. Brake disc badly worn or warped.
7. Brake drags - insufficient brake pedal or hand lever free-play, caliper piston worn or damaged, or excessive brake fluid in reservoir.
8. Brake fades due to heat build up - brake pads dragging or excessive braking.
9. Brake fluid leak when under pressure.

SUBJECT	PAGE NO.
2.1 FASTENER TORQUE VALUES	2-1
2.2 SPECIFICATIONS	2-9
2.3 VEHICLE IDENTIFICATION NUMBER (V.I.N.)	2-12
2.4 WHEELS	2-14
2.5 WHEEL LACING: 16 INCH RIM	2-29
2.6 WHEEL LACING: 19 INCH RIM	2-31
2.7 WHEEL LACING: 21 INCH RIM	2-33
2.8 CHECKING AND TRUING WHEELS	2-35
2.9 FRONT BRAKE MASTER CYLINDER	2-40
2.10 FRONT BRAKE CALIPER: XL MODELS	2-49
2.11 FRONT BRAKE CALIPER: XR MODELS	2-57
2.12 REAR BRAKE MASTER CYLINDER: XL MODELS	2-62
2.13 REAR BRAKE MASTER CYLINDER: XR MODELS	2-70
2.14 REAR BRAKE MASTER CYLINDER RESERVOIR	2-75
2.15 REAR BRAKE CALIPER: XL MODELS	2-78
2.16 REAR BRAKE CALIPER: XR MODELS	2-85
2.17 BRAKE LINES	2-91
2.18 TIRES	2-97
2.19 LEFT SIDE COVER	2-101
2.20 FRONT FORK: XL MODELS	2-104
2.21 FRONT FORK: XR MODELS	2-110
2.22 FORK STEM AND BRACKET ASSEMBLY	2-127
2.23 BELT GUARD AND DEBRIS DEFLECTOR	2-129
2.24 REAR FORK	2-131
2.25 SHOCK ABSORBERS	2-134
2.26 STABILIZER LINKS	2-136
2.27 FRONT ENGINE MOUNT/ISOLATOR	2-138
2.28 REAR ENGINE MOUNT/ISOLATOR	2-140
2.29 THROTTLE CABLES: ALL MODELS	2-143
2.30 CLUTCH CONTROL	2-147
2.31 HANDLEBARS	2-151
2.32 FRONT FENDER	2-157
2.33 REAR FENDER: ALL XL MODELS EXCEPT XL 883N/XL 1200N	2-158
2.34 REAR FENDER AND LICENSE PLATE BRACKET: XL 883N/XL 1200N	2-162
2.35 REAR FENDER: XR MODELS	2-167
2.36 JIFFY STAND	2-168
2.37 SEAT: XL MODELS	2-170
2.38 SEAT: XR MODELS	2-172
2.39 RIDER FOOT CONTROLS: XL MID-MOUNT CONTROLS	2-174
2.40 RIDER FOOT CONTROLS: XL FORWARD CONTROLS	2-176
2.41 RIDER FOOT CONTROLS: XR MODELS	2-180
2.42 PASSENGER FOOTRESTS	2-182
2.43 FORK LOCK	2-184

FASTENER TORQUE VALUES IN THIS CHAPTER

The table below lists torque values for all fasteners presented in this chapter.

FASTENER	TORQUE VALUE		NOTES
Axle (front) pinch screw: XL Models	21-27 ft-lbs	28.5-36.6 Nm	2.4 WHEELS, Front Wheel
Axle (front) pinch screw: XL Models	21-27 ft-lbs	28.5-36.6 Nm	2.10 FRONT BRAKE CALIPER: XL MODELS, Installation
Axle (front) pinch screw: XR Models	41-48 ft-lbs	55.6-65.1 Nm	2.4 WHEELS, Front Wheel
Axle (front) pinch screw: XR Models	41-48 ft-lbs	55.6-65.1 Nm	2.11 FRONT BRAKE CALIPER: XR MODELS, Installation
Axle nut, front	60-65 ft-lbs	81-88 Nm	2.4 WHEELS, General
Axle nut, front	60-65 ft-lbs	81-88 Nm	2.4 WHEELS, Front Wheel
Axle nut, front	60-65 ft-lbs	81-88 Nm	2.10 FRONT BRAKE CALIPER: XL MODELS, Installation
Axle nut, front	60-65 ft-lbs	81-88 Nm	2.11 FRONT BRAKE CALIPER: XR MODELS, Installation
Axle nut, rear	95-105 ft-lbs	129-142 Nm	2.4 WHEELS, General
Axle nut, rear	95-105 ft-lbs	129-142 Nm	2.4 WHEELS, Rear Wheel
Belt guard screw, front: XL Models	120-180 **in-lbs**	13.6-20.4 Nm	2.23 BELT GUARD AND DEBRIS DEFLECTOR, Belt Guard: XL Models
Belt guard screw, front: XR Models	72-96 **in-lbs**	8.1-10.8 Nm	2.23 BELT GUARD AND DEBRIS DEFLECTOR, Belt Guard: XR Models
Bolt pin: XL Models	15-18 ft-lbs	19.6-24.5 Nm	2.15 REAR BRAKE CALIPER: XL MODELS, Installation
Brake (rear) disc screw	30-45 ft-lbs	40.7-61.1 Nm	2.4 WHEELS, Rear Wheel
Brake (rear) line/switch tee bracket screw: XL Models	72-120 **in-lbs**	8.14-13.6 Nm	2.17 BRAKE LINES, Rear Brake Line: XL Models
Brake (rear) line/switch tee bracket screw: XL Models	17-22 **in-lbs**	1.9-2.5 Nm	2.17 BRAKE LINES, Rear Brake Line: XR Models
Brake bridge bolt, front caliper	12-18 ft-lbs	16.9-24.5 Nm	2.11 FRONT BRAKE CALIPER: XR MODELS, Assembly
Brake caliper bleeder valve	35-61 **in-lbs**	4.0-6.9 Nm	2.9 FRONT BRAKE MASTER CYLINDER, Installation
Brake caliper bleeder valve	35-61 **in-lbs**	4.0-6.9 Nm	2.10 FRONT BRAKE CALIPER: XL MODELS, Assembly
Brake caliper bleeder valve	35-61 **in-lbs**	4.0-6.9 Nm	2.11 FRONT BRAKE CALIPER: XR MODELS, Assembly
Brake caliper bleeder valve	35-61 **in-lbs**	4.0-6.9 Nm	2.17 BRAKE LINES, Front Brake Line: All Models
Brake caliper bleeder valve	35-61 **in-lbs**	4.0-6.9 Nm	2.17 BRAKE LINES, Rear Brake Line: XL Models
Brake caliper bleeder valve	35-61 **in-lbs**	4.0-6.9 Nm	2.17 BRAKE LINES, Rear Brake Line: XR Models
Brake disc mounting screw, front	16-24 ft-lbs	21.7-32.6 Nm	2.4 WHEELS, Front Wheel/Cast front wheel
Brake disc mounting screw, front	16-24 ft-lbs	21.7-32.6 Nm	2.4 WHEELS, Front Wheel/Cast front wheel
Brake disc mounting screw, front	16-24 ft-lbs	21.7-32.6 Nm	2.4 WHEELS, Front Wheel/Laced front wheel
Brake front caliper mounting bolt	28-38 ft-lbs	38.0-51.6 Nm	2.10 FRONT BRAKE CALIPER: XL MODELS, Installation
Brake front caliper mounting bolt	28-38 ft-lbs	38.0-51.6 Nm	2.11 FRONT BRAKE CALIPER: XR MODELS, Installation

FASTENER	TORQUE VALUE		NOTES
Brake front cover master cylinder reservoir cover screw	9-17 **in-lbs**	1.0-2.0 Nm	2.9 FRONT BRAKE MASTER CYLINDER, Installation
Brake front master cylinder clamp screw	108-132 **in-lbs**	12.2-14.9 Nm	2.9 FRONT BRAKE MASTER CYLINDER, Installation
Brake front master cylinder reservoir cover screw	9-17 **in-lbs**	1.0-2.0 Nm	2.10 FRONT BRAKE CALIPER: XL MODELS, Installation
Brake hose clamp-to-battery tray screw	30-40 **in-lbs**	3.4-4.5 Nm	2.17 BRAKE LINES, Rear Brake Line: XL Models
Brake hose clamp-to-rear fork screw	30-40 **in-lbs**	3.4-4.5 Nm	2.17 BRAKE LINES, Rear Brake Line: XL Models
Brake lamp switch, rear: XL Models	132-168 **in-lbs**	14.9-18.9 Nm	2.17 BRAKE LINES, Rear Brake Line: XL Models
Brake lamp switch, rear: XR Models	132-168 **in-lbs**	14.9-18.9 Nm	2.17 BRAKE LINES, Rear Brake Line: XR Models
Brake line banjo bolt	20-25 ft-lbs	27.1-33.9 Nm	2.9 FRONT BRAKE MASTER CYLINDER, Installation
Brake line banjo bolt	20-25 ft-lbs	27.1-33.9 Nm	2.10 FRONT BRAKE CALIPER: XL MODELS, Installation
Brake line banjo bolt	20-25 ft-lbs	27.1-33.9 Nm	2.11 FRONT BRAKE CALIPER: XR MODELS, Installation
Brake line banjo bolt	20-25 ft-lbs	27.1-33.9 Nm	2.15 REAR BRAKE CALIPER: XL MODELS, Installation
Brake line banjo bolt	20-25 ft-lbs	27.1-33.9 Nm	2.16 REAR BRAKE CALIPER: XR MODELS, Installation
Brake line banjo bolt	20-25 ft-lbs	27.1-33.9 Nm	2.17 BRAKE LINES, Front Brake Line: All Models
Brake line banjo bolt	20-25 ft-lbs	27.1-33.9 Nm	2.17 BRAKE LINES, Front Brake Line: All Models
Brake line banjo bolt	20-25 ft-lbs	27.1-33.9 Nm	2.17 BRAKE LINES, Rear Brake Line: XL Models
Brake line banjo bolt	20-25 ft-lbs	27.1-33.9 Nm	2.17 BRAKE LINES, Rear Brake Line: XR Models
Brake line-to-front fork bracket clamp screw	45-65 **in-lbs**	5.1-7.4 Nm	2.17 BRAKE LINES, Front Brake Line: All Models
Brake line-to-front fork lower bracket clamp screw	120-168 **in-lbs**	13.6-19.0 Nm	2.17 BRAKE LINES, Front Brake Line: All Models
Brake pad pin, front caliper: XL Models	132-168 **in-lbs**	14.7-19.6 Nm	2.11 FRONT BRAKE CALIPER: XR MODELS, Assembly
Brake pad pin: XL Models	131-173 **in-lbs**	14.8-19.6 Nm	2.10 FRONT BRAKE CALIPER: XL MODELS, Installing Brake Pads in Caliper
Brake pad pin: XL Models	131-173 **in-lbs**	14.8-19.6 Nm	2.15 REAR BRAKE CALIPER: XL MODELS, Installation
Brake pad pin plug	18-25 **in-lbs**	2.0-2.9 Nm	2.10 FRONT BRAKE CALIPER: XL MODELS, Installing Brake Pads in Caliper
Brake pad pin plug	18-25 **in-lbs**	2.0-2.9 Nm	2.15 REAR BRAKE CALIPER: XL MODELS, Installation
Brake pedal clevis screw	13-17 ft-lbs	17.6-23.0 Nm	2.39 RIDER FOOT CONTROLS: XL MID-MOUNT CONTROLS, Right Footrest and Rear Brake Pedal Assembly
Brake pedal clevis screw	13-17 ft-lbs	17.6-23.0 Nm	2.40 RIDER FOOT CONTROLS: XL FORWARD CONTROLS, Right Footrest and Rear Brake Pedal Assembly
Brake rear master cylinder banjo bolt; XL models	20-25 ft-lbs	27.1-33.9 Nm	2.12 REAR BRAKE MASTER CYLINDER: XL MODELS, Installation
Brake rear master cylinder banjo bolt; XR models	20-25 ft-lbs	27.1-33.9 Nm	2.13 REAR BRAKE MASTER CYLINDER: XR MODELS, Installation
Brake rear master cylinder mounting bracket screw; XL models	17-22 ft-lbs	23.1-29.9 Nm	2.12 REAR BRAKE MASTER CYLINDER: XL MODELS, Installation
Brake rear master cylinder mounting bracket screw; XL models	17-22 ft-lbs	23.1-29.9 Nm	2.12 REAR BRAKE MASTER CYLINDER: XL MODELS, Installation

FASTENER	TORQUE VALUE		NOTES
Brake rear master cylinder mounting screw; XL models	17-22 ft-lbs	23.1-29.9 Nm	2.12 REAR BRAKE MASTER CYLINDER: XL MODELS, Installation
Brake rear master cylinder mounting screw; XR models	72-96 **in-lbs**	8.1-10.9 Nm	2.13 REAR BRAKE MASTER CYLINDER: XR MODELS, Installation
Brake rear master cylinder pushrod nut; XR models	130-173 **in-lbs**	14.7-19.6 Nm	2.13 REAR BRAKE MASTER CYLINDER: XR MODELS, Assembly
Brake rear master cylinder pushrod shoulder nut	130-173 **in-lbs**	14.7-19.6 Nm	2.12 REAR BRAKE MASTER CYLINDER: XL MODELS, Assembly
Brake rear master cylinder reservoir mounting screw; XR models	36-60 **in-lbs**	4.1-6.8 Nm	2.14 REAR BRAKE MASTER CYLINDER RESERVOIR, Installation: XR Models
Brake rear master cylinder reservoir mounting screw: XL Models	20-25 **in-lbs**	2.3-2.8 Nm	2.14 REAR BRAKE MASTER CYLINDER RESERVOIR, Installation: XL Models
Brake rear master cylinder reservoir mounting screw: XL Models	20-25 **in-lbs**	2.3-2.8 Nm	2.24 REAR FORK, Installation
Brake rod-to-bell crank screw	120-180 **in-lbs**	13.6-20.4 Nm	2.39 RIDER FOOT CONTROLS: XL MID-MOUNT CONTROLS, Right Footrest and Rear Brake Pedal Assembly
Brake rod-to-bell crank screw	120-180 **in-lbs**	13.6-20.4 Nm	2.40 RIDER FOOT CONTROLS: XL FORWARD CONTROLS, Right Footrest and Rear Brake Pedal Assembly
Brake rod-to-brake pedal screw	120-180 **in-lbs**	13.6-20.4 Nm	2.39 RIDER FOOT CONTROLS: XL MID-MOUNT CONTROLS, Right Footrest and Rear Brake Pedal Assembly
Brake rod-to-brake pedal screw	120-180 **in-lbs**	13.6-20.4 Nm	2.40 RIDER FOOT CONTROLS: XL FORWARD CONTROLS, Right Footrest and Rear Brake Pedal Assembly
Caliper to mouting bracket, XL Models	87-130 **in-lbs**	9.8-14.7 Nm	2.15 REAR BRAKE CALIPER: XL MODELS, Installation
Clutch cable end fitting	36-108 **in-lbs**	4.1-12.2 Nm	2.30 CLUTCH CONTROL, Assembly and Installation
Clutch inspection cover screw	84-120 **in-lbs**	9.5-13.6 Nm	2.30 CLUTCH CONTROL, Assembly and Installation
Clutch lever anti-rattle spring screw	8-13 **in-lbs**	0.9-1.5 Nm	2.30 CLUTCH CONTROL, Assembly and Installation
Clutch lever handlebar clamp screw	108-132 **in-lbs**	12.2-14.9 Nm	2.30 CLUTCH CONTROL, Assembly and Installation
Clutch lever handlebar clamp screw	108-132 **in-lbs**	12.2-14.9 Nm	2.31 HANDLEBARS, Installation
Cylinder head exhaust port nut	96-120 **in-lbs**	10.9-13.6 Nm	2.9 FRONT BRAKE MASTER CYLINDER, Installation
Debris deflector screw (XL)	36-60 **in-lbs**	4.1-6.8 Nm	2.23 BELT GUARD AND DEBRIS DEFLECTOR, Debris Deflector: XL Models
Debris deflector screw (XR)	72-96 **in-lbs**	8.1-10.8 Nm	2.23 BELT GUARD AND DEBRIS DEFLECTOR, Debris Deflector: XR Models
Engine mount bolt, front	95-105 ft-lbs	129-142 Nm	2.27 FRONT ENGINE MOUNT/ISOLATOR, Installation
Exhaust pipe clamp bracket screw	30-33 ft-lbs	40.7-44.8 Nm	2.28 REAR ENGINE MOUNT/ISOLATOR, Installation
Fender (front) mounting screw	96-156 **in-lbs**	10.9-17.6 Nm	2.20 FRONT FORK: XL MODELS, Installation
Fender (rear) mounting screw	132-216 **in-lbs**	14.9-24.4 Nm	2.33 REAR FENDER: ALL XL MODELS EXCEPT XL 883N/XL 1200N, Installation
Footrest bracket fastener: XR models	45-50 ft-lbs	61.0-67.8 Nm	2.41 RIDER FOOT CONTROLS: XR MODELS, Left Footrest and Shift Lever Assembly
Footrest bracket fastener: XR Models	45-50 ft-lbs	61-68 Nm	2.42 PASSENGER FOOTRESTS, XR Models

FASTENER	TORQUE VALUE		NOTES
Footrest clevis fastener: XR models	13-17 ft-lbs	17.6-23.0 Nm	2.41 RIDER FOOT CONTROLS: XR MODELS, Right Footrest and Rear Brake Pedal Assembly
Footrest clevis fastener: XR models	13-17 ft-lbs	17.6-23.0 Nm	2.41 RIDER FOOT CONTROLS: XR MODELS, Left Footrest and Shift Lever Assembly
Footrest wear peg	72-108 **in-lbs**	8.1-12.2 Nm	2.41 RIDER FOOT CONTROLS: XR MODELS, Right Footrest and Rear Brake Pedal Assembly
Footrest wear peg	72-108 **in-lbs**	8.1-12.2 Nm	2.41 RIDER FOOT CONTROLS: XR MODELS, Left Footrest and Shift Lever Assembly
Fork cap to outer tube: XR 1200	21-29 ft-lbs	29-39 Nm	2.21 FRONT FORK: XR MODELS, Assembly: XR 1200
Fork cap to outer tube: XR 1200	21-29 ft-lbs	29-39 Nm	2.21 FRONT FORK: XR MODELS, Assembly: XR 1200
Fork cap to outer tube: XR 1200	21-29 ft-lbs	29-39 Nm	2.21 FRONT FORK: XR MODELS, Assembly: XR 1200X
Fork cap to retainer nut: XR 1200	12.5-16.25 **ft-lbs**	17-22 Nm	2.21 FRONT FORK: XR MODELS, Assembly: XR 1200
Fork cap to retainer nut: XR 1200	13-16 ft-lbs	17-22 Nm	2.21 FRONT FORK: XR MODELS, Assembly: XR 1200
Fork cartridge fastener	132-216 **in-lbs**	14.9-24.4 Nm	2.21 FRONT FORK: XR MODELS, Assembly: XR 1200
Fork piston rod hex nut: XR 1200X	18.4-22.1 ft-lbs	25-30 Nm	2.21 FRONT FORK: XR MODELS, Assembly: XR 1200X
Fork slider tube cap	22-58 ft-lbs	29.9-78.7 Nm	2.20 FRONT FORK: XL MODELS, Assembly
Fork slider tube cap, XL models	22-58 ft-lbs	29.9-78.7 Nm	2.20 FRONT FORK: XL MODELS, Changing Fork Oil: XL Models
Fork slider tube fastener	132-216 **in-lbs**	14.9-24.4 Nm	2.20 FRONT FORK: XL MODELS, Assembly
Fork stem bolt, final	72-96 **in-lbs**	8.1-10.9 Nm	2.22 FORK STEM AND BRACKET ASSEMBLY, Assembly and Installation
Fork stem bolt, initial	23-27 ft-lbs	31.2-36.6 Nm	2.22 FORK STEM AND BRACKET ASSEMBLY, Assembly and Installation
Fork stem pinch screw	30-35 ft-lbs	40.7-47.5 Nm	2.22 FORK STEM AND BRACKET ASSEMBLY, Assembly and Installation
Forward and lower sprocket cover screws: XR models	80-120 **in-lbs**	9.0-13.6 Nm	2.28 REAR ENGINE MOUNT/ISOLATOR, Installation
Front fender (XL) mounting screw	96-156 **in-lbs**	10.9-17.6 Nm	2.32 FRONT FENDER, XL Models
Front fender (XR) mounting screw	15-19 ft-lbs	20.4-25.8 Nm	2.32 FRONT FENDER, XR Models
Front fender bracket (XR) screw	36-60 **in-lbs**	4.1-6.8 Nm	2.32 FRONT FENDER, XR Models
Front fork bracket pinch screw	30-35 ft-lbs	40.7-47.5 Nm	2.20 FRONT FORK: XL MODELS, Installation
Front fork bracket pinch screw	30-35 ft-lbs	40.7-47.5 Nm	2.21 FRONT FORK: XR MODELS, Installation
Front fork oil drain screw, XL models	13-17 **in-lbs**	1.5-2.0 Nm	2.20 FRONT FORK: XL MODELS, Changing Fork Oil: XL Models
Front fork slider tube cap	22-58 ft-lbs	29.9-78.7 Nm	2.20 FRONT FORK: XL MODELS, Installation
Front master cylinder cover screw	9-17 **in-lbs**	1.0-2.0 Nm	2.11 FRONT BRAKE CALIPER: XR MODELS, Installation
Gear shift lever pinch screw	16-20 ft-lbs	21.7-27.1 Nm	2.39 RIDER FOOT CONTROLS: XL MID-MOUNT CONTROLS, Left Footrest and Shift Lever Assembly
Gear shift lever pinch screw	16-20 ft-lbs	21.7-27.1 Nm	2.40 RIDER FOOT CONTROLS: XL FORWARD CONTROLS, Left Footrest and Shift Lever Assembly

FASTENER	TORQUE VALUE		NOTES
Handlebar riser cover screw (XL 883C/XL 1200C)	8-12 **in-lbs**	0.9-1.4 Nm	2.31 HANDLEBARS, Installation
Handlebar riser mounting bolt (XL 883C/XL 1200C)	30-40 ft-lbs	40.7-54.3 Nm	2.31 HANDLEBARS, Installation
Handlebar switch housing screw	35-45 **in-lbs**	4.0-5.1 Nm	2.29 THROTTLE CABLES: ALL MODELS, Assembly and Installation
Handlebar switch housing screw	35-45 **in-lbs**	4.0-5.1 Nm	2.30 CLUTCH CONTROL, Assembly and Installation
Handlebar switch housing screw	35-45 **in-lbs**	4.0-5.1 Nm	2.31 HANDLEBARS, Installation
Handlebar switch housing screw	35-45 **in-lbs**	4.0-5.1 Nm	2.31 HANDLEBARS, Installation
Handlebar upper clamp/speedometer housing screw (XL 883C/XL 1200C)	12-18 ft-lbs	16.3-24.4 Nm	2.31 HANDLEBARS, Installation
Handlebar upper clamp/speedometer housing screw (XL 883C/XL 1200C)	12-18 ft-lbs	16.3-24.4 Nm	2.31 HANDLEBARS, Installation
Hub plate mounting screw	16-24 ft-lbs	21.7-32.6 Nm	2.4 WHEELS, Front Wheel/Cast front wheel
Inner fender screw: XR models	72-120 **in-lbs**	8.1-13.6 Nm	2.35 REAR FENDER: XR MODELS, Installation
Inner fork nut, right: XR 1200	69-83 ft-lbs	93-113 Nm	2.21 FRONT FORK: XR MODELS, Assembly: XR 1200/Hand tighten. Then tighten to torque.
Isolator (front) mounting bracket screw	25-35 ft-lbs	33.9-47.5 Nm	2.27 FRONT ENGINE MOUNT/ISOLATOR, Installation
Isolator (front) mounting bracket screw	25-35 ft-lbs	33.9-47.5 Nm	2.28 REAR ENGINE MOUNT/ISOLATOR, Installation
License plate bracket mounting screw	20-25 **in-lbs**	2.3-2.8 Nm	2.33 REAR FENDER: ALL XL MODELS EXCEPT XL 883N/XL 1200N, Installation
Lower fork bracket pinch screw	30-35 ft-lbs	40.7-47.5 Nm	2.22 FORK STEM AND BRACKET ASSEMBLY, Assembly and Installation
Lower handlebar clamp bolts	30-40 ft-lbs	40.7-54.3 Nm	2.31 HANDLEBARS, Installation
Lower shock absorber fastener	45-50 ft-lbs	61.0-67.8 Nm	2.16 REAR BRAKE CALIPER: XR MODELS, Installation
Mirror stem lock nut	96-144 **in-lbs**	10.9-16.3 Nm	2.9 FRONT BRAKE MASTER CYLINDER, Installation
Mirror stem lock nut	96-144 **in-lbs**	10.9-16.3 Nm	2.30 CLUTCH CONTROL, Assembly and Installation
Muffler bracket-to-footrest bracket screw (XR)	15-19 ft-lbs	20.4-25.8 Nm	2.42 PASSENGER FOOTRESTS, XR Models
Passenger footrest support bracket screw	45-50 ft-lbs	61-68 Nm	2.24 REAR FORK, Installation
Passenger footrest support bracket screw	45-50 ft-lbs	61-68 Nm	2.42 PASSENGER FOOTRESTS, XL Models
Passenger pillion retainer post screw: XR models	36-60 **in-lbs**	4.1-6.8 Nm	2.35 REAR FENDER: XR MODELS, Installation
Rear caliper mounting bolt	14-18 ft-lbs	19.6-24.5 Nm	2.16 REAR BRAKE CALIPER: XR MODELS, Installation
Rear caliper pin bolt	14-18 ft-lbs	19.6-24.5 Nm	2.16 REAR BRAKE CALIPER: XR MODELS, Installation
Rear fender brace screw	20-25 **in-lbs**	2.3-2.8 Nm	2.34 REAR FENDER AND LICENSE PLATE BRACKET: XL 883N/XL 1200N, Assembly and Installation
Rear fender support screw	132-216 **in-lbs**	14.9-24.4 Nm	2.34 REAR FENDER AND LICENSE PLATE BRACKET: XL 883N/XL 1200N, Assembly and Installation
Rear fork pivot/engine mount bolt	60-70 ft-lbs	81.4-95.0 Nm	2.24 REAR FORK, Installation

FASTENER	TORQUE VALUE		NOTES
Rear fork pivot/engine mount bolt	60-70 ft-lbs	81.4-95.0 Nm	2.28 REAR ENGINE MOUNT/ISOLATOR, Installation
Rear sprocket cover screw: XR models	30-33 ft-lbs	40.7-44.7 Nm	2.28 REAR ENGINE MOUNT/ISOLATOR, Installation
Rear turn signal stalk nut	132-216 **in-lbs**	14.9-24.4 Nm	2.34 REAR FENDER AND LICENSE PLATE BRACKET: XL 883N/XL 1200N, Assembly and Installation
Rider footrest bracket mounting screw	45-50 ft-lbs	61-68 Nm	2.30 CLUTCH CONTROL, Assembly and Installation
Rider footrest support bracket mounting screw	45-50 ft-lbs	61-68 Nm	2.39 RIDER FOOT CONTROLS: XL MID-MOUNT CONTROLS, Right Footrest and Rear Brake Pedal Assembly
Rider footrest support bracket mounting screw	45-50 ft-lbs	61-68 Nm	2.39 RIDER FOOT CONTROLS: XL MID-MOUNT CONTROLS, Left Footrest and Shift Lever Assembly
Rider footrest support bracket mounting screw	45-50 ft-lbs	61-68 Nm	2.40 RIDER FOOT CONTROLS: XL FORWARD CONTROLS, Right Footrest and Rear Brake Pedal Assembly
Rider footrest support bracket mounting screw	45-50 ft-lbs	61-68 Nm	2.40 RIDER FOOT CONTROLS: XL FORWARD CONTROLS, Left Footrest and Shift Lever Assembly
Rod guide case to inner tube: XR 1200X	66 ft-lbs	90 Nm	2.21 FRONT FORK: XR MODELS, Assembly: XR 1200X
Seat post mounting screw	96-156 **in-lbs**	10.9-17.6 Nm	2.34 REAR FENDER AND LICENSE PLATE BRACKET: XL 883N/XL 1200N, Assembly and Installation
Seat post screw	96-156 **in-lbs**	10.9-17.6 Nm	2.33 REAR FENDER: ALL XL MODELS EXCEPT XL 883N/XL 1200N, Installation
Shifter peg: XR models	96-144 **in-lbs**	10.9-16.3 Nm	2.41 RIDER FOOT CONTROLS: XR MODELS, Left Footrest and Shift Lever Assembly
Shifter peg screw	96-144 **in-lbs**	10.9-16.3 Nm	2.39 RIDER FOOT CONTROLS: XL MID-MOUNT CONTROLS, Left Footrest and Shift Lever Assembly
Shifter peg screw	96-144 **in-lbs**	10.9-16.3 Nm	2.40 RIDER FOOT CONTROLS: XL FORWARD CONTROLS, Left Footrest and Shift Lever Assembly
Shifter rod lock nuts	84-132 **in-lbs**	9.5-14.9 Nm	2.40 RIDER FOOT CONTROLS: XL FORWARD CONTROLS, Adjusting Shift Pedal
Shifter rod-to-shift lever screw	120-180 **in-lbs**	13.6-20.4 Nm	2.40 RIDER FOOT CONTROLS: XL FORWARD CONTROLS, Left Footrest and Shift Lever Assembly
Shifter rod-to-shift lever screw	120-180 **in-lbs**	13.6-20.4 Nm	2.40 RIDER FOOT CONTROLS: XL FORWARD CONTROLS, Left Footrest and Shift Lever Assembly
Shifter rod-to-shift lever screw	120-180 **in-lbs**	13.6-20.4 Nm	2.40 RIDER FOOT CONTROLS: XL FORWARD CONTROLS, Adjusting Shift Pedal
Shift linkage fastener	120-180 **in-lbs**	13.6-20.3 Nm	2.41 RIDER FOOT CONTROLS: XR MODELS, Left Footrest and Shift Lever Assembly
Shift pedal clevis screw	13-17 ft-lbs	17.6-23.0 Nm	2.40 RIDER FOOT CONTROLS: XL FORWARD CONTROLS, Left Footrest and Shift Lever Assembly
Shift rod jamnuts	84-132 **in-lbs**	9.5-14.9 Nm	2.41 RIDER FOOT CONTROLS: XR MODELS, Adjusting Shift Pedal
Shift rod screw (XR)	120-180 **in-lbs**	13.6-20.4 Nm	2.41 RIDER FOOT CONTROLS: XR MODELS, Adjusting Shift Pedal

FASTENER	TORQUE VALUE		NOTES
Shock absorber mounting screw	45-50 ft-lbs	61-68 Nm	2.4 WHEELS, Rear Wheel
Shock absorber mounting screw	45-50 ft-lbs	61-68 Nm	2.23 BELT GUARD AND DEBRIS DEFLECTOR, Belt Guard: XL Models
Shock absorber mounting screw	45-50 ft-lbs	61-68 Nm	2.25 SHOCK ABSORBERS, Installation
Shock absorber mounting screw	45-50 ft-lbs	61-68 Nm	2.25 SHOCK ABSORBERS, Installation
Single caliper cast front wheel hub plate screw	16-24 ft-lbs	21.7-32.6 Nm	2.4 WHEELS, Sealed Wheel Bearings
Spoke nipple	55 **in-lbs**	6.2 Nm	2.8 CHECKING AND TRUING WHEELS, Truing Wheels
Sprocket (rear) mounting screw - FINAL torque	80 ft-lbs	108.0 Nm	2.4 WHEELS, Rear Wheel
Sprocket (rear) mounting screw - INITIAL torque	60 ft-lbs	81.3 Nm	2.4 WHEELS, Rear Wheel
Sprocket cover screw: XL models	80-120 **in-lbs**	9.0-13.6 Nm	2.28 REAR ENGINE MOUNT/ISOLATOR, Installation
Sprocket cover screw: XL models	80-120 **in-lbs**	9.0-13.6 Nm	2.28 REAR ENGINE MOUNT/ISOLATOR, Installation
Stabilizer link (lower front) frame bracket mounting screw	25-35 ft-lbs	33.9-47.5 Nm	2.26 STABILIZER LINKS, Lower Front Stabilizer Link
Stabilizer link (lower front) frame bracket mounting screw	25-35 ft-lbs	33.9-47.5 Nm	2.28 REAR ENGINE MOUNT/ISOLATOR, Installation
Stabilizer link (upper front) engine bracket mounting screw	55-65 ft-lbs	74.6-88.2 Nm	2.26 STABILIZER LINKS, Upper Front Stabilizer Link
Stabilizer link (upper front) frame bracket mounting screw	25-35 ft-lbs	33.9-47.5 Nm	2.26 STABILIZER LINKS, Upper Front Stabilizer Link
Stabilizer link (upper front) frame bracket mounting screw	25-35 ft-lbs	33.9-47.5 Nm	2.27 FRONT ENGINE MOUNT/ISOLATOR, Installation
Stabilizer link (upper front) frame bracket mounting screw	25-35 ft-lbs	33.9-47.5 Nm	2.28 REAR ENGINE MOUNT/ISOLATOR, Installation
Stabilizer link screw	25-35 ft-lbs	33.9-47.5 Nm	2.26 STABILIZER LINKS, Upper Front Stabilizer Link
Stabilizer link screw	25-35 ft-lbs	33.9-47.5 Nm	2.26 STABILIZER LINKS, Lower Front Stabilizer Link
Stabilizer link screw	25-35 ft-lbs	33.9-47.5 Nm	2.26 STABILIZER LINKS, Rear Stabilizer Link
Stabilizer link screw	25-35 ft-lbs	33.9-47.5 Nm	2.27 FRONT ENGINE MOUNT/ISOLATOR, Installation
Stabilizer link screw	25-35 ft-lbs	33.9-47.5 Nm	2.27 FRONT ENGINE MOUNT/ISOLATOR, Installation
Stabilizer link screw	25-35 ft-lbs	33.9-47.5 Nm	2.28 REAR ENGINE MOUNT/ISOLATOR, Installation
Tail lamp base mounting screw	45-48 **in-lbs**	5.1-5.4 Nm	2.33 REAR FENDER: ALL XL MODELS EXCEPT XL 883N/XL 1200N, Installation
Tail section bolts: XR models	72-120 **in-lbs**	8.1-13.6 Nm	2.35 REAR FENDER: XR MODELS, Installation
Turn signal (front) clamp screw	96-120 **in-lbs**	10.9-13.6 Nm	2.30 CLUTCH CONTROL, Assembly and Installation
Turn signal (rear) stalk nut	132-216 **in-lbs**	14.9-24.4 Nm	2.33 REAR FENDER: ALL XL MODELS EXCEPT XL 883N/XL 1200N, Installation
Upper handlebar clamp screw, front	12-18 ft-lbs	16.3-24.4 Nm	2.31 HANDLEBARS, Installation
Upper handlebar clamp screw, front: XR 1200	12-18 ft-lbs	16.3-24.4 Nm	2.31 HANDLEBARS, Installation
Upper handlebar clamp screw, rear	12-18 ft-lbs	16.3-24.4 Nm	2.31 HANDLEBARS, Installation

FASTENER	TORQUE VALUE		NOTES
Upper handlebar clamp screw, rear: XR 1200	12-18 ft-lbs	16.3-24.4 Nm	2.31 HANDLEBARS, Installation
Valve stem nut	12-15 **in-lbs**	1.4-1.7 Nm	2.18 TIRES, Installation

SPORTSTER SPECIFICATIONS

Chassis Specifications

Table 2-1. Dimensions: 883 Models

ITEM	XL 883R		XL 883C		XL 883L		XL 883N	
	IN.	MM	IN.	MM	IN.	MM	IN.	MM
Wheel base	60.00	1524.00	60.40	1534.16	60.00	1524.00	60.00	1524.00
Overall length	90.10	2288.54	90.30	2293.62	89.10	2263.14	85.80	2179.32
Overall width	32.70	830.58	32.70	830.58	35.20	894.08	32.32	821.00
Road clearance	5.60	142.24	4.40	111.76	3.90	99.06	3.90	99.06
Overall height	44.80	1137.90	45.70	1160.78	45.70	1160.78	43.60	1107.44
Saddle height*	27.30	693.42	26.50	673.10	25.30	642.62	25.30	642.62
*With 180 lb. (81.7 kg) rider on seat.								

Table 2-2. Dimensions: 1200 Models

ITEM	XL 1200C		XL 1200L		XL 1200N		XR 1200		XR 1200X	
	IN.	MM	IN.	MM	IN.	MM	IN.	MM	IN.	MM
Wheel base	60.40	1534.16	59.70	1516.38	60.00	1524.00	59.80	1518.92	59.80	1518.92
Overall length	90.30	2293.62	89.10	2263.14	85.80	2179.32	85.40	2169.16	85.40	2169.16
Overall width	32.70	830.58	35.20	894.08	36.40	924.56	36.50	927.10	36.50	927.10
Road clearance	4.40	111.76	4.40	111.76	3.90	99.06	5.80	147.32	5.80	147.32
Overall height	45.70	1160.78	46.80	1188.72	43.60	1107.44	45.10	1145.54	45.10	1145.54
Saddle height*	26.50	673.10	26.30	668.02	25.30	642.62	29.20	741.68	29.20	741.68
*With 180 lb. (81.7 kg) rider on seat.										

Table 2-3. Weights: 883 Models

ITEM	XL 883C		XL 883L		XL 883R		XL 883N	
	LB.	KG	LB.	KG	LB.	KG	LB.	KG
Weight (as shipped from factory)	565.00	256.28	563.00	255.37	568.00	257.64	548.00	248.40
GVWR	1000.00	453.59	1000.00	453.59	1000.00	453.59	1000.00	453.59
GAWR front	335.00	151.95	335.00	151.95	335.00	151.95	335.00	151.95
GAWR rear	665.00	301.64	665.00	301.64	665.00	301.64	665.00	301.64

Table 2-4. Weights: 1200 Models

ITEM	XL 1200C		XL 1200L		XL 1200N		XR 1200		XR 1200X	
	LB.	KG	LB.	KG	LB.	KG	LB.	KG	LB.	KG
Weight (as shipped from factory)	562.00	254.92	557.00	252.65	545.00	247.21	562.00	254.92	557.00	253.00
GVWR	1000.00	453.59	1000.00	453.59	1000.00	453.59	1000.00	453.59	1000.00	453.59
GAWR front	335.00	151.95	335.00	151.95	335.00	151.95	350.00	158.76	350.00	158.76
GAWR rear	665.00	301.64	665.00	301.64	665.00	301.64	650.00	294.84	650.00	294.84

Table 2-5. Capacities: 883 Models

ITEM	XL 883R		XL 883C		XL 883L		XL 883N	
	U.S.	LITERS	U.S.	LITERS	U.S.	LITERS	U.S.	LITERS
Fuel tank (total)	3.30 gal.	12.49	4.50 gal.	17.03	3.30 gal.	12.49	3.30 gal.	12.49
Oil tank with filter	2.80 qt.	2.65	2.80 qt.	2.65	2.80 qt.	2.65	2.80 qt.	2.65
Transmission (approximate)	1.00 qt.	0.95	1.00 qt.	0.95	1.00 qt.	0.95	1.00 qt.	0.95
Low fuel warning light on	0.80 gal.	3.03	1.00 gal.	3.79	0.80 gal.	3.03	0.80 gal.	3.03

Table 2-6. Capacities: 1200 Models

ITEM	XL 1200C		XL 1200L		XL 1200N		XR 1200		XR 1200X	
	U.S.	LITERS	U.S.	LITERS	U.S.	LITERS	U.S.	LITERS	U.S.	LITERS
Fuel tank (total)	4.50 gal.	17.03	4.50 gal.	17.03	3.30 gal.	12.49	3.50 gal.	13.25	3.50 gal.	13.25
Oil tank with filter	2.80 qt.	2.65	2.80 qt.	2.65	2.80 qt.	2.65	2.80 qt.	2.65	2.80 qt.	2.65
Transmission (approximate)	1.00 qt.	0.95	1.00 qt.	0.95	1.00 qt.	0.95	1.00 qt.	0.95	1.00 qt.	0.95
Low fuel warning light on	1.00 gal.	3.79	1.00 gal.	3.79	0.80 gal.	3.03	0.50 gal.	1.89	0.50 gal.	1.89

Table 2-7. Brake Disc Specifications: XL Models and XR 1200

SPECIFICATION	IN	MM
Diameter (front and rear)	11.5	292
Minimum thickness (front)	0.200	5.08
Minimum thickness (rear)	0.230	5.84
Maximum disc runout (front and rear)	0.008	0.20

Table 2-8. Brake Disc Specifications: XR 1200X

SPECIFICATION	IN	MM
Diameter (front and rear)	11.5	292
Minimum thickness (front)	0.187	4.75
Minimum thickness (rear)	0.230	5.84
Maximum disc runout (front and rear)	0.006	0.15

Tire Specifications

⚠WARNING

Use only Harley-Davidson approved tires. See a Harley-Davidson dealer. Using non-approved tires can adversely affect stability, which could result in death or serious injury. (00024a)

Tire sizes are molded on the sidewall. Refer to the tire fitment tables below. Rim size and contour are cast or stamped into the exterior surface of the rim.

Example: T19 x 2.15 MT DOT. "T" indicates that the rim conforms to Tire and Rim Association standards. The "19" is the normal diameter of the rim in inches, measured at the bead seat diameter. The "2.15" is the width of the bead seat measured in inches. "MT" designates the rim contour. "DOT" means that the rim meets Department of Transportation Federal Motor Vehicle Safety Standards.

Table 2-9. Tire Fitment: Tubeless Cast Wheels

WHEEL SIZE AND POSITION	RIM SIZE AND CONTOUR	RIM VALVE HOLE DIA.		TIRE	
		IN	MM	TYPE	SIZE
19 in - Front (XL models)	T19 x 2.15 MT	0.33	8.46	Dunlop D401F	100/90-19 57H
16 in - Rear (XL models)	T16 x 3.00 D			Dunlop D401	150/80B16 71H
18 in - Front (XR models)	E18 x 3.5 MT			Dunlop D209F RP	120/70 ZR18
17 in - Rear (XR models)	E17 x 5.5 M			Dunlop D209 HD	180/55 ZR17

Table 2-10. Tire Fitment: Tube Type Steel Laced Wheels

WHEEL SIZE AND POSITION	RIM SIZE AND CONTOUR	TUBE SIZE	TIRE	
			TYPE	SIZE
21 in - Front	T21 x 2.15 TLA	MH90-21	Dunlop D402F	MH90-21 54H
19 in - Front	T19 x 2.50 TLA	MJ90-19	Dunlop D401F	100/90-19 57H
16 in - Rear	T16 x 3.00 D	MT90-16	Dunlop D401	150/80B16 71H

Table 2-11. Tire Fitment: Tube Type Chrome Aluminum Profile Laced Wheels

WHEEL SIZE AND POSITION	RIM SIZE AND CONTOUR	TUBE SIZE	TIRE	
			TYPE	SIZE
21 in - Front	T21 x 2.15 MT	MH90-21	Dunlop D402F	MH90-21 54H
16 in - Rear	T16 x 3.00 MT	MT90-16	Dunlop D401	150/80B16 71H

VEHICLE IDENTIFICATION NUMBER (V.I.N.)

General

See Figure 2-2. A unique 17-digit serial or Vehicle Identification Number (V.I.N.) is assigned to each motorcycle. For a description of each item in the V.I.N., refer to Table 2-12.

Location

See Figure 2-1. The full 17-digit V.I.N. is stamped on the right side of the frame near the steering head. In some destinations, a printed V.I.N. label is also attached to the right front downtube.

Abbreviated V.I.N.

An abbreviated V.I.N. showing the vehicle model, engine type, model year, and sequential number is stamped on the left side of the crankcase between the engine cylinders.

NOTE

Always give the full 17-digit Vehicle Identification Number when ordering parts or making any inquiry about your motorcycle.

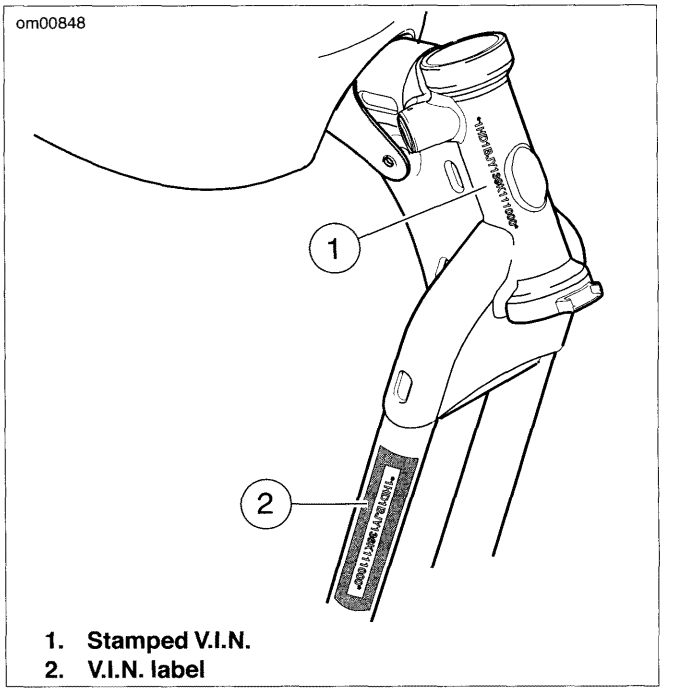

1. **Stamped V.I.N.**
2. **V.I.N. label**

Figure 2-1. V.I.N. Locations: Sportster Models

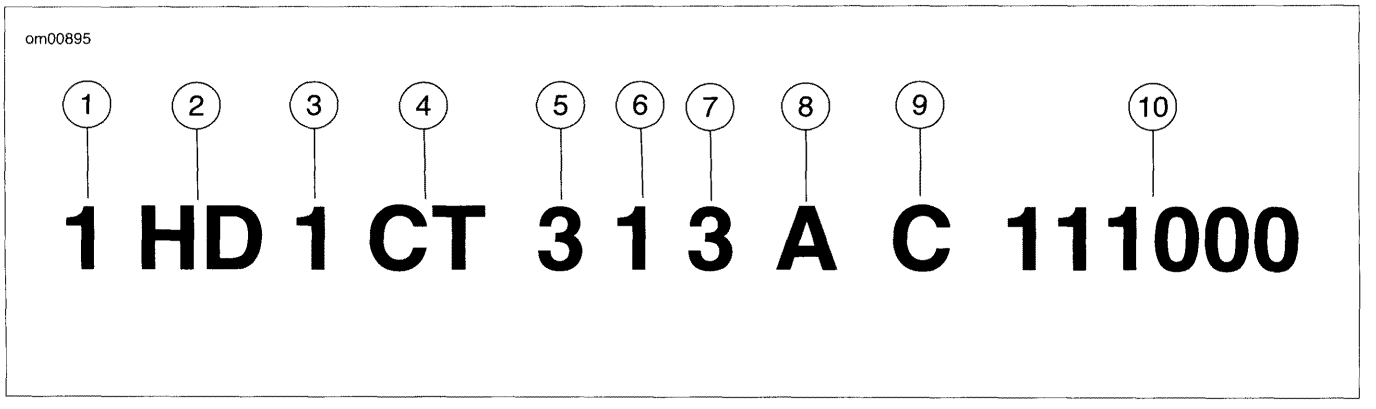

Figure 2-2. Typical Harley-Davidson V.I.N.: 2010 Sportster Models

Table 2-12. Harley-Davidson V.I.N. Breakdown: 2010 Sportster Models

POSITION	DESCRIPTION	POSSIBLE VALUES
1	Market designation	1=Originally manufactured for sale **within** the United States 5=Originally manufactured for sale **outside** of the United States
2	Manufacturer/vehicle type	HD=Harley-Davidson motorcycle
3	Motorcycle type	1=Heavyweight motorcycle (901 cc or larger) 4=Middleweight motorcycle (351 cc to 900 cc)
4	Model	See V.I.N. model table
5	Engine type	2=Evolution® 883 cc air-cooled, fuel-injected 3=Evolution® 1200 cc air-cooled, fuel-injected 6=Evolution® 1200 cc precision-cooled, fuel-injected

Table 2-12. Harley-Davidson V.I.N. Breakdown: 2010 Sportster Models

POSITION	DESCRIPTION	POSSIBLE VALUES	
6	Introduction date/calibration	**Normal Introduction** 1=Domestic 3=California A=Canada C=HDI E=Japan G=Australia J=Brazil	**Mid-year or Special Introduction** 2, 4=Domestic 5, 6=California B=Canada D=HDI F=Japan H=Australia K=Brazil
7	V.I.N. check digit	Can be 0-9 or X	
8	Model year	A=2010	
9	Assembly plant	C=Kansas City, MO U.S.A.	
10	Sequential number	Varies	

Table 2-13. V.I.N. Model Codes: 2010 Sportster Models

CODE	MODEL	CODE	MODEL
CP	XL 883C Sportster® 883 Custom	CX	XL 1200L Sportster® 1200 Low
CR	XL 883L Sportster® 883 Low	CZ	XL 1200N Sportster® 1200 Nightster™
CS	XL 883R Sportster® 883R	LA	Sportster® XR 1200™
LE	XL 883N Iron 883®	LD	Sportster® XR 1200X™
CT	XL 1200C Sportster® 1200 Custom		

GENERAL

Good handling and maximum tire mileage are directly related to the care of wheels and tires. Regularly inspect wheels and tires for damage and wear. If handling problems occur, see 1.31 TROUBLESHOOTING or refer to Table 2-14 for a list of probable causes.

Keep tires inflated to the recommended air pressure. Always balance the wheel after replacing a tube or tire.

⚠WARNING

Do not inflate tire beyond maximum pressure as specified on sidewall. Over inflated tires can blow out, which could result in death or serious injury. (00027a)

Table 2-14. Wheel Service Chart

CHECK FOR	REMEDY
Loose axle nuts.	Tighten front axle nut to 60-65 ft-lbs (81-88 Nm). Tighten rear axle nut to 95-105 ft-lbs (129-142 Nm).
Excessive side-play or radial (up-and-down) play in wheel hubs.	Replace wheel hub bearings. See 2.4 WHEELS, Sealed Wheel Bearings.
Loose spokes.	Tighten or replace spokes. See 2.8 CHECKING AND TRUING WHEELS and 2.5 WHEEL LACING: 16 INCH RIM, 2.6 WHEEL LACING: 19 INCH RIM or 2.7 WHEEL LACING: 21 INCH RIM.
Alignment of rear wheel in frame or with front wheel.	Check rear wheel alignment as described in this section or repair rear fork as described in 2.24 REAR FORK.
Rims and tires out-of-true sideways; should not be more than 1/32 in. (0.76 mm).	True wheels, replace rims or replace spokes. See 2.8 CHECKING AND TRUING WHEELS and 2.5 WHEEL LACING: 16 INCH RIM, 2.6 WHEEL LACING: 19 INCH RIM or 2.7 WHEEL LACING: 21 INCH RIM.
Rims and tires out-of-round or eccentric with hub; should not be more than 1/32 in. (0.76 mm).	
Irregular or peaked front tire wear.	Replace as described in 2.4 WHEELS and 2.18 TIRES.
Correct tire inflation.	Inflate tires to correct pressure. See 2.2 SPECIFICATIONS.
Correct tire and wheel balance.	Static balance may be satisfactory if dynamic balancing facilities are not available. However, dynamic balancing is strongly recommended.
Steering head bearings.	Correct adjustment and replace pitted or worn bearings. See 2.22 FORK STEM AND BRACKET ASSEMBLY.
Damper tubes.	Check for leaks. See 2.20 FRONT FORK: XL MODELS or 2.21 FRONT FORK: XR MODELS.
Shock absorbers.	Check damping action and mounting stud bushings. See 2.25 SHOCK ABSORBERS.
Rear fork bearings.	Check for looseness. See 2.24 REAR FORK.

TROUBLESHOOTING

See Figure 2-3. Check tire inflation pressure at least once each week. At the same time, inspect tire tread for punctures, cuts, breaks and other damage. Repeat the inspection before road trips.

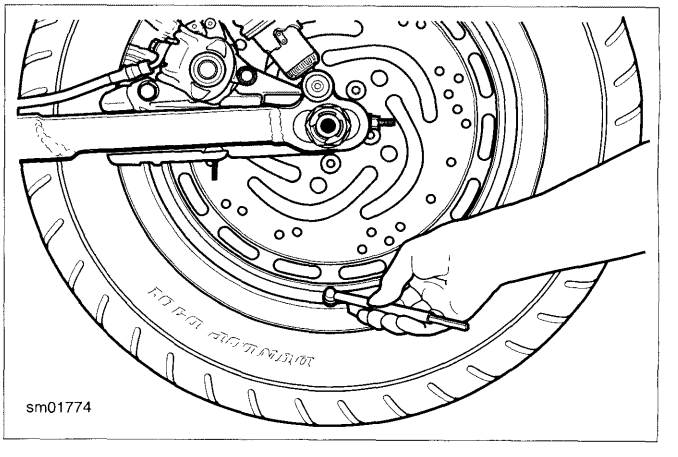

Figure 2-3. Checking Tire Pressure

⚠WARNING

Be sure tires are properly inflated, balanced and have adequate tread. Inspect your tires regularly and see a Harley-Davidson dealer for replacements. Riding with excessively worn, unbalanced or under-inflated tires can adversely affect stability and handling, which could result in death or serious injury. (00014a)

⚠WARNING

Use only Harley-Davidson approved tires. See a Harley-Davidson dealer. Using non-approved tires can adversely affect stability, which could result in death or serious injury. (00024a)

NOTES

Use the following guidelines when installing a new tire or repairing a flat.

- *Always locate and eliminate the cause of the original tire failure.*
- *Do not patch or vulcanize a tire casing. These procedures weaken the casing and increase the risk of a blowout.*
- *Only patch an inner tube as an emergency measure. Replace the damaged tube as soon as possible.*
- *Be sure the inner tube is the correct size for the tire casing. Any stretching or wrinkling within the casing will weaken the tube and result in premature failure.*
- *The use of tires other than those specified can adversely affect handling resulting in death or serious injury.*
- *Tires, tubes and wheels are critical safety items. Since the servicing of these components requires special tools and skills, Harley-Davidson recommends that you see your dealer for these services.*

FRONT WHEEL

Removal

1. Block motorcycle underneath frame so front wheel is raised off the ground.
2. See Figure 2-4. Check wheel bearing end play.
   a. Mount a magnetic base dial indicator on the brake disc. Set the indicator contact point on the end of the axle.
   b. Move the wheel back as far as it will go. Holding the wheel in position, zero the dial indicator gauge.
   c. Move the wheel forward as far as it will go. Note the reading of the dial indicator. The lateral movement or end play must be less than 0.002 in. (0.05 mm). Repeat the procedure to verify the reading.
   d. If the end play is 0.002 in. (0.05 mm) or more, replace the wheel bearings.
3. See Figure 2-5. Remove brake caliper mounting screws (3). Slide caliper (4) off brake disc and secure caliper out of the way.

NOTES

- *Do not operate the front brake lever with the front wheel removed or the caliper pistons may be forced out. Reseating the pistons requires disassembly of the caliper.*
- *On models with dual disc brakes, remove both calipers.*

4. Remove axle nut (1) and flat washer (2) from axle on left side of vehicle.
5. See Figure 2-6. On right side of vehicle, loosen nut (4) on pinch screw (1). Pull axle out of hub while supporting wheel.
6. Remove spacer and front wheel assembly.

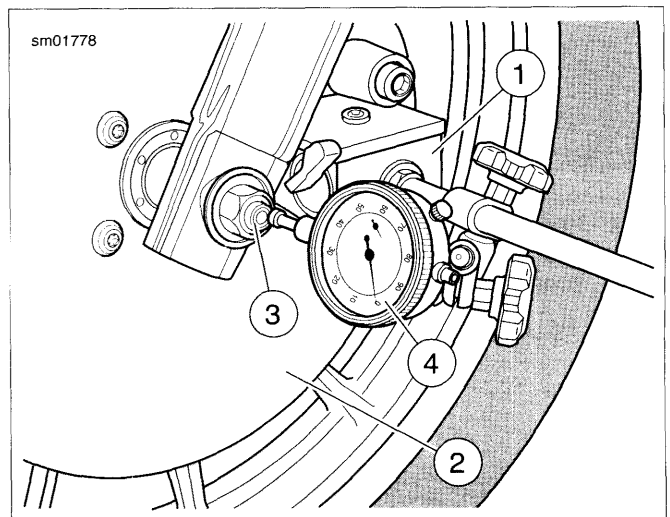

1. **Magnetic base**
2. **Brake disc**
3. **Axle**
4. **Dial indicator**

Figure 2-4. Check Wheel Bearing End Play

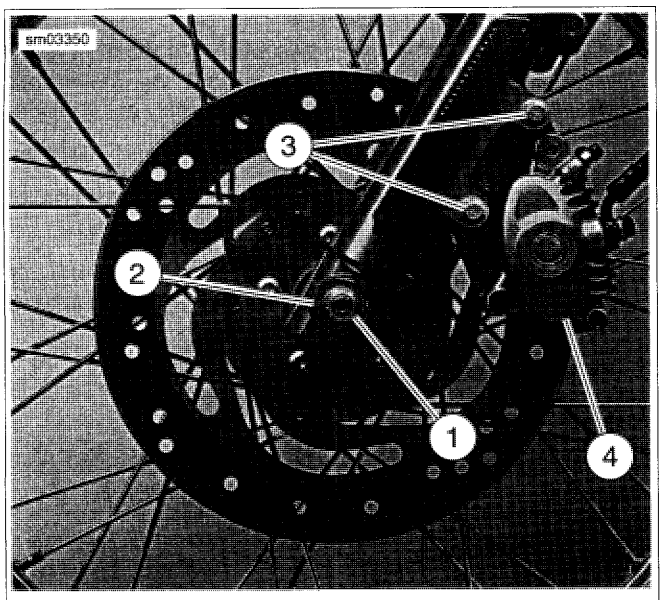

1. **Axle nut**
2. **Flat washer**
3. **Brake caliper mounting screws**
4. **Brake caliper**

Figure 2-5. Left Side Front Wheel Mounting: (Laced Front Wheel Shown)

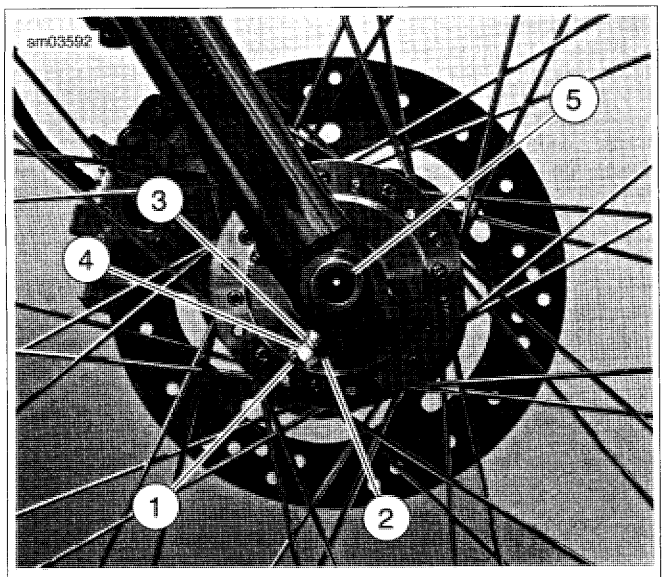

1. **Pinch screw**
2. **Washer**
3. **Lockwasher**
4. **Nut**
5. **Axle**

Figure 2-6. Right Side Front Wheel Mounting: Typical (Laced Front Wheel Shown)

Disassembly: Cast Front Wheel

If necessary, remove tire. See 2.18 TIRES.

NOTE

Label all components as they are removed so they may be returned to their original locations.

1. See Figure 2-10. Remove bearing spacers (9, 11) from right and left sides of wheel.
2. If necessary, remove five screws (1) and left side brake disc (13).
3. If necessary, remove five screws and right side brake disc (14) (dual front disc models) or hub plate (8) (single front disc models).
4. If necessary, remove roller bearings (4) and hub spacer (10). See 2.4 WHEELS, Sealed Wheel Bearings.

Disassembly: Laced Front Wheel

1. See Figure 2-11. Remove spacers (9, 11) from right and left sides of wheel.
2. If necessary, remove five screws (1) and brake disc (14).
3. If necessary, remove wheel bearings (4) and hub spacer (10). See 2.4 WHEELS, Sealed Wheel Bearings.

NOTE

If only rim is to be replaced, tape spokes together to hold position on hub and remove spokes from rim. Install taped hub/spoke assembly to new rim and tighten spokes. Then remove tape and true wheels. See 2.6 WHEEL LACING: 19 INCH RIM or 2.7 WHEEL LACING: 21 INCH RIM. Then, see 2.8 CHECKING AND TRUING WHEELS.

4. If it is necessary to disassemble wheel, loosen spoke nipples and spokes (8) and slide each spoke out of hub (12).

Cleaning and Inspection

1. Inspect all parts for damage or excessive wear.

⚠WARNING

Always replace brake pads in complete sets for correct and safe brake operation. Improper brake operation could result in death or serious injury. (00111a)

2. Inspect brake pads and disc(s). See 1.9 BRAKE PADS AND DISCS: XL MODELS or 1.10 BRAKE PADS AND DISCS: XR MODELS. Replace as necessary.

Assembly: Cast Front Wheel

⚠WARNING

Be sure that brake fluid or other lubricants do not contact brake pads or discs. Such contact can adversely affect braking ability, which could cause loss of control, resulting in death or serious injury. (00290a)

1. See Figure 2-10. Install hub spacer (10) and wheel bearings (4) if removed. See 2.4 WHEELS, Sealed Wheel Bearings.
2. **Single front disc models:** If necessary, install hub plate and brake disc as follows:
   a. Install hub plate (8) on left side of wheel. Secure with **new** screws and tighten in an alternating pattern to 16-24 ft-lbs (21.7-32.6 Nm).
   b. Install brake disc (13). Secure with **new** screws and tighten in an alternating pattern to 16-24 ft-lbs (21.7-32.6 Nm).

3. **Dual front disc models:** Install the brake discs:
   a. Hold brake discs together, inboard sides facing each other (minimum thickness and part number stampings are on outboard side of brake disc).

      XL Models: See Figure 2-8. Orient brake discs so that bulb shaped end of each slot is on the trailing edge of the slot in the direction of rotation, as shown. Note that the words "LEFT" and "RIGHT" will be located on correct sides when oriented this way.

      XR 1200 Model: See Figure 2-9. Orient brake discs so that outer diameter of each slot is on the trailing edge in the direction of rotation, as shown. Note that the words "LEFT" and "RIGHT" will be located on correct sides when oriented this way.

      XR 1200X Model: See Figure 2-7. XR 1200X models are equipped with a floating front brake rotor. They are non-directional and do not need to be matched with opposite rotor.

   b. Rotate one brake disc as necessary, until all vent holes are aligned with those of the other brake disc.

   c. Holding brake discs aligned, use a felt marking pen or paint pen to draw a line across the edge of both brake discs.

   d. See Figure 2-10. Keeping the paint marks on the edge of both discs aligned, install both brake discs onto hub. Secure with **new** screws and tighten in an alternating pattern to 16-24 ft-lbs (21.7-32.6 Nm).

4. Install spacers (9, 11) on right and left sides of wheel.
5. Verify that wheel is true. See 2.8 CHECKING AND TRUING WHEELS.
6. Install tire, if removed. See 2.18 TIRES.

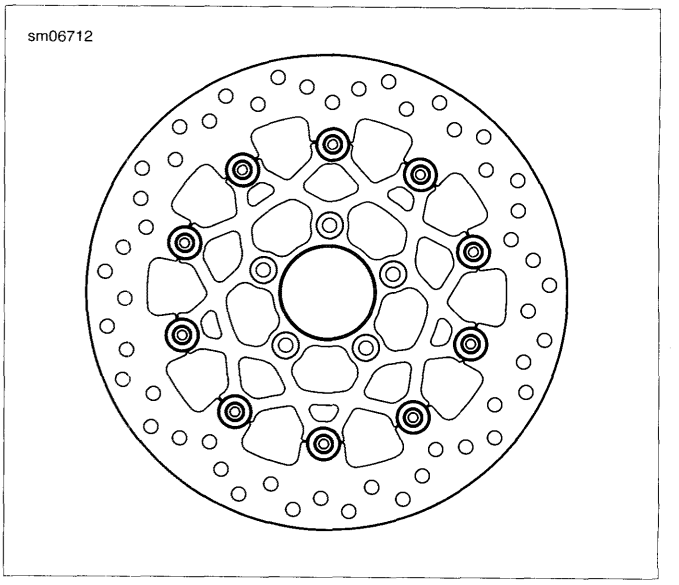

Figure 2-7. XR 1200X Front Brake Disc

Assembly: Laced Front Wheel

1. See Figure 2-11. Install hub spacer (10) and wheel bearings (4) if removed. See 2.4 WHEELS, Sealed Wheel Bearings.
2. If hub (12) and rim (5 or 16) were disassembled, reassemble and true wheel. See 2.6 WHEEL LACING: 19 INCH RIM or 2.7 WHEEL LACING: 21 INCH RIM. Then see 2.8 CHECKING AND TRUING WHEELS.

⚠WARNING

Be sure that brake fluid or other lubricants do not contact brake pads or discs. Such contact can adversely affect braking ability, which could cause loss of control, resulting in death or serious injury. (00290a)

3. Install brake disc (14). Secure with **new** screws and tighten in an alternating pattern to 16-24 ft-lbs (21.7-32.6 Nm).
4. Install spacers (9, 11) on right and left sides of wheel.
5. Verify that wheel is true. See 2.8 CHECKING AND TRUING WHEELS.
6. Install tire, if removed. See 2.18 TIRES.

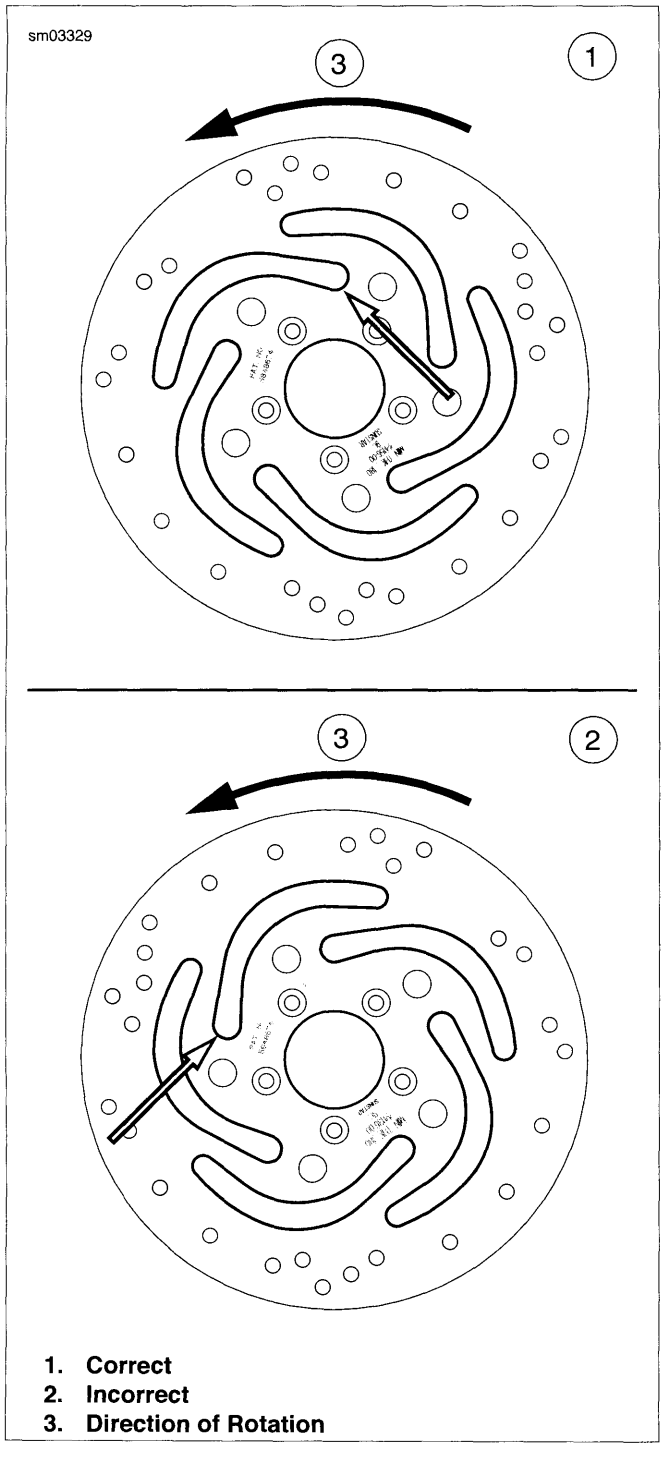

1. Correct
2. Incorrect
3. Direction of Rotation

Figure 2-8. Dual Disc Orientation: XL Models (Left Side Brake Disc Shown)

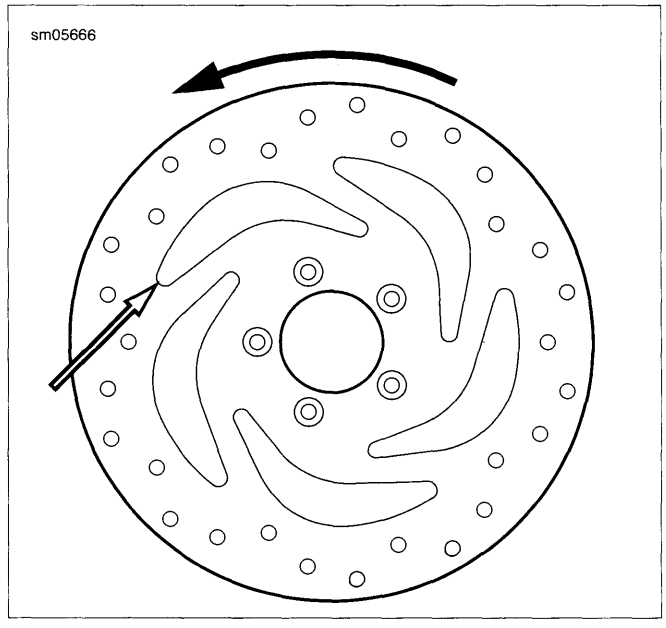

Figure 2-9. Dual Disc Orientation: XR 1200 Model (Left Side Brake Disc Shown)

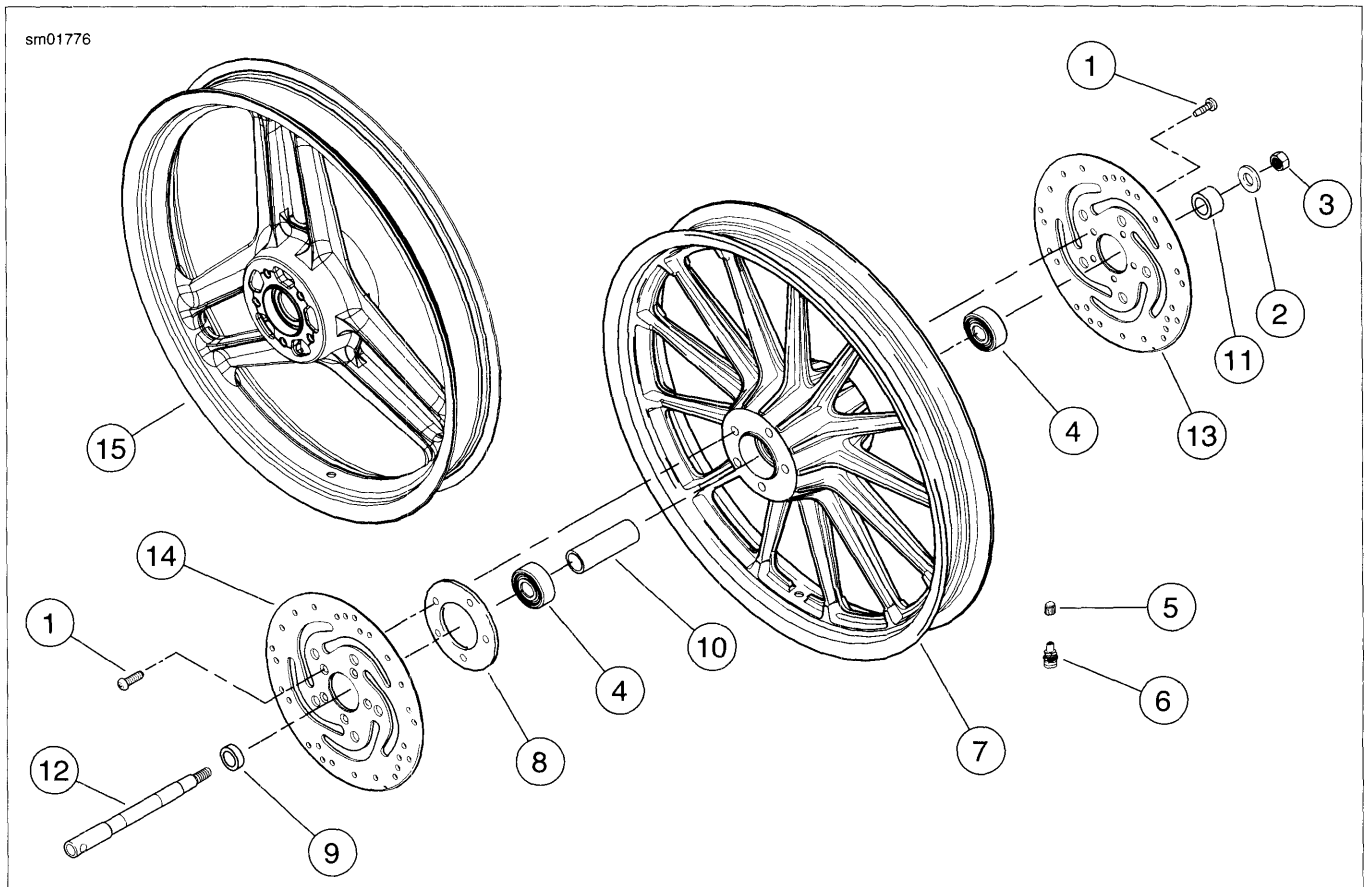

1. Screw (10)
2. Washer
3. Nut
4. Roller bearing (2)
5. Valve cap
6. Valve stem assembly with nut
7. Wheel assembly, 19 in., XL models
8. Hub plate (single front disc models only)
9. Bearing spacer, narrow
10. Hub spacer
11. Bearing spacer, wide
12. Front axle
13. Brake disc L.H.
14. Brake disc R.H. (dual front disc models only)
15. Wheel assembly, XR models

Figure 2-10. Cast Wheel Front (typical)

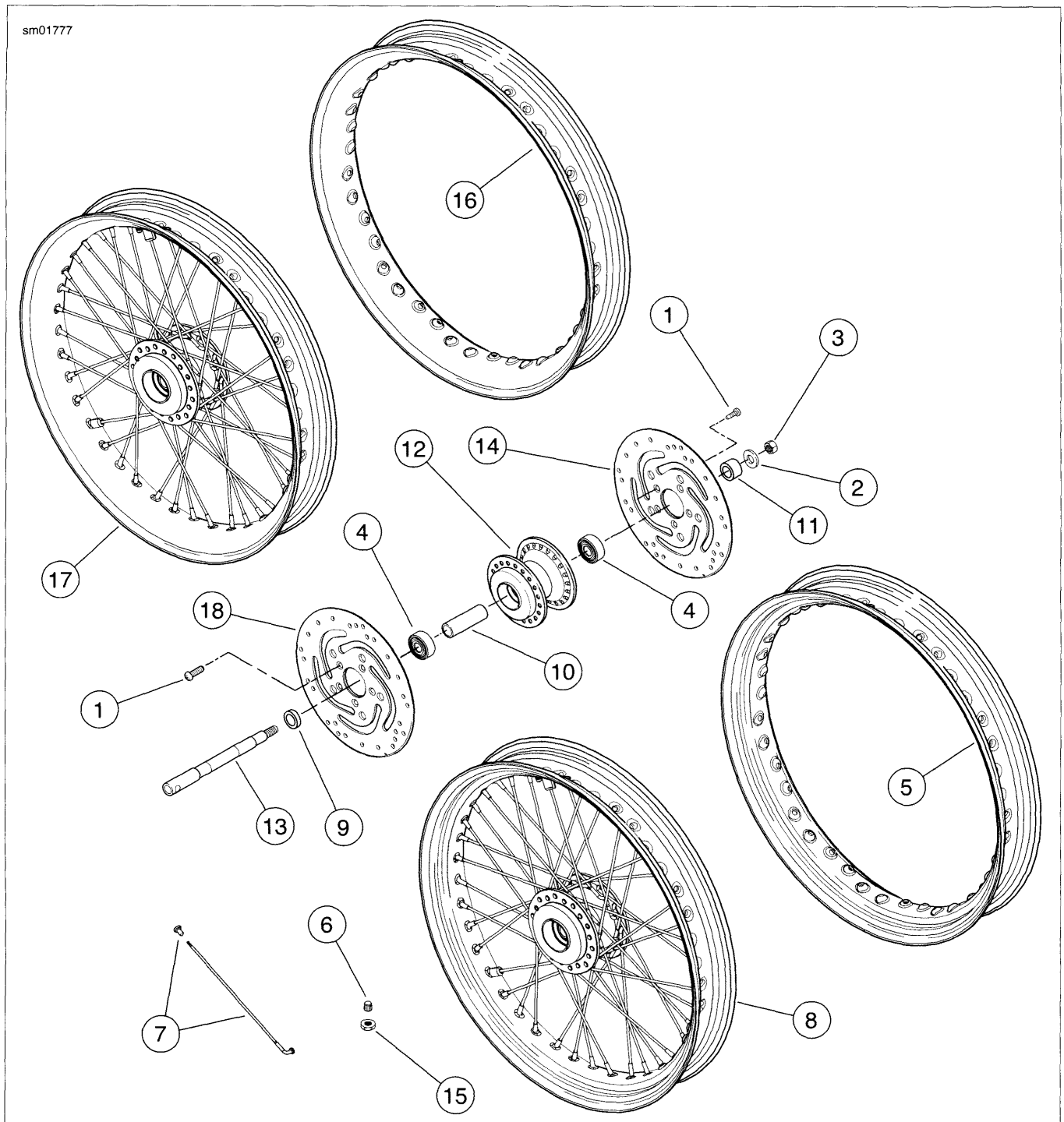

1. Screw (10)
2. Washer
3. Nut
4. Roller bearing (2)
5. Rim, 19 in. or 21 in., standard
6. Valve cap
7. Spoke and nipple
8. Wheel assembly, 19 in. or 21 in, standard
9. Bearing spacer, narrow
10. Hub spacer
11. Bearing spacer, wide
12. Wheel hub
13. Front axle
14. Brake disc L.H.
15. Valve stem nut
16. Rim, 21 in., profile
17. Wheel assembly, 21 in., profile rim
18. Brake disc, R.H. (dual front disc models only)

Figure 2-11. Laced Front Wheel

Installation

1. See Figure 2-10 or Figure 2-11. Apply a light coat of ANTI-SEIZE LUBRICANT to the axle (12 or 13), bearing (4) bores, and hub spacer (10) bore.
2. Position wheel between forks. Verify that bearing spacers (9, 11) on right and left side of wheel bearings are in position.
3. See Figure 2-6. With pinch screw (1) loose, insert threaded end of axle (5) through right side fork. Push axle through fork and wheel hub until it begins to emerge from left side of hub.
4. Push axle through left fork, until axle shoulder contacts external bearing spacer on right fork side.
5. See Figure 2-5. Install flat washer (2) and axle nut (1) over threaded end of axle. Insert screwdriver or steel rod through hole in axle on right side of vehicle. While holding axle stationary, tighten axle nut to 60-65 ft-lbs (81-88 Nm).
6. If servicing a vehicle with dual front brakes, align calipers to brake discs as follows:
   a. Make sure axle pinch screw nut is loose.
   b. See Figure 2-10 or Figure 2-11. Position right fork leg against bearing spacer (9).
   c. **XL Models:** Tighten axle pinch screw to 21-27 ft-lbs (28.5-36.6 Nm).

      XR Models: Tighten axle pinch screw to 41-48 ft-lbs (55.6-65.1 Nm).
7. Install brake caliper(s). See 2.10 FRONT BRAKE CALIPER: XL MODELS or 2.11 FRONT BRAKE CALIPER: XR MODELS.

⚠WARNING

Check wheel bearing end play after tightening axle nut to specified torque. Excessive end play can adversely affect stability and handling and can cause loss of control, which could result in death or serious injury. (00285b)

8. Check wheel bearing end play. See 2.4 WHEELS, Front Wheel.

⚠WARNING

Whenever a wheel is installed and before moving the motorcycle, pump brakes to build brake system pressure. Insufficient pressure can adversely affect brake performance, which could result in death or serious injury. (00284a)

9. Pump brake lever to move pistons out until they contact outside brake pad(s). Verify piston location against pad.

REAR WHEEL

PART NUMBER	TOOL NAME
HD-45968	FAT JACK

Removal

1. Secure motorcycle upright on a suitable lift. Raise rear end of motorcycle high enough to permit wheel removal, using a FAT JACK (Part No. HD-45968) (or similar lifting device) underneath frame.
2. Check wheel bearing end play.
   a. Mount a magnetic base dial indicator on the brake disc. Set the indicator contact point on the end of the axle.
   b. Move the wheel back as far as it will go. Holding the wheel in position, zero the dial indicator gauge.
   c. Move the wheel forward as far as it will go. Note the reading of the dial indicator. The lateral movement or end play must be less than 0.002 in. (0.05 mm). Repeat the procedure to verify the reading.
   d. If end play is 0.002 in. (0.05 mm) or more, remove wheel and replace both wheel bearings.
3. **XL Models:** Remove rear muffler. See 4.14 EXHAUST SYSTEM: XL MODELS.
4. **XL Models:** Remove right lower shock absorber nut and pull screw out slightly. This will help avoid damage to sprocket when rear wheel is removed.
5. See Figure 2-12. Remove e-clip (2), axle nut (1) and washer (3).
6. Loosen adjuster screws several turns to relieve belt tension.
7. Gently tap end of axle (4) with a soft hammer to loosen. Pull axle free of rear fork assembly.
8. Slide wheel forward and slip belt off sprocket.

NOTE

It is not necessary to disassemble rear brake caliper in order to remove rear wheel.

9. **XR Models:** Disengage brake hose from clamps on lower side of rear fork. Carefully slide caliper and bracket assembly forward to disengage from brake disk and boss on rear fork. Support assembly from frame using rope or bungee cord.
10. Remove spacers and roll rear wheel assembly back out of fork.
11. Remove rear wheel assembly.

NOTE

Do not operate rear brake pedal with rear wheel removed or caliper piston may be forced out of piston bore. Reseating piston requires disassembly of caliper.

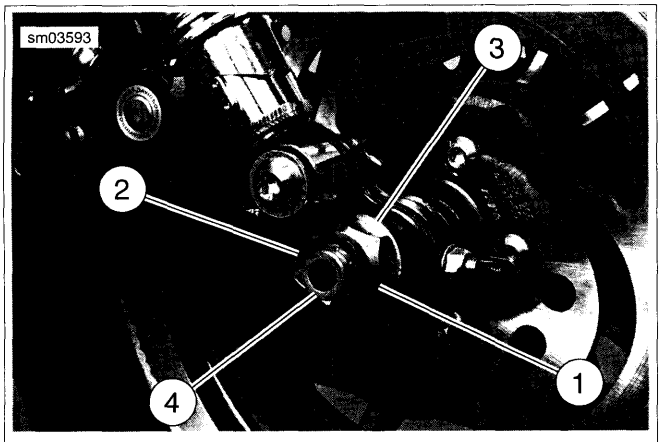

1. **Axle nut**
2. **E-clip**
3. **Washer**
4. **Rear axle**

Figure 2-12. Rear Wheel Mounting (typical)

Disassembly

If necessary, remove tire. See 2.18 TIRES.

NOTES

- *Sportster models sold in the Japanese market are equipped with rear wheel compensating sprockets. See D.1 COMPENSATING SPROCKET for the correct disassembly and repair procedures.*
- *Label all components as they are removed so they may be returned to their original locations.*

Cast or Disc wheel: see Figure 2-13. **Laced wheel:** see Figure 2-14.

1. Remove spacers (8, 9) from left and right sides of wheel.
2. If necessary, remove five screws (15) to detach rear brake disc (10) from left side of wheel.
3. If necessary, remove five screws (2) and washers (4) to detach rear sprocket (7) from right side of wheel.
4. If necessary, remove wheel bearings (6) and hub spacer (14). See 2.4 WHEELS, Sealed Wheel Bearings.

NOTE

Laced Wheel: *if only rim is to be replaced, tape spokes together to hold position on hub and remove spokes from rim. Install taped hub/spoke assembly to new rim and tighten spokes. See 2.5 WHEEL LACING: 16 INCH RIM, 2.6 WHEEL LACING: 19 INCH RIM or 2.7 WHEEL LACING: 21 INCH RIM. Then true wheel. See 2.8 CHECKING AND TRUING WHEELS.*

5. **Laced Wheel:** see Figure 2-14. If it is necessary to disassemble wheel, loosen spoke nipples and spokes (19) and slide each spoke out of hub (18).

Cleaning and Inspection

1. Inspect all parts for damage or excessive wear.

⚠WARNING

Always replace brake pads in complete sets for correct and safe brake operation. Improper brake operation could result in death or serious injury. (00111a)

2. Inspect brake pads and disc. See 1.9 BRAKE PADS AND DISCS: XL MODELS OR 1.10 BRAKE PADS AND DISCS: XR MODELS.
3. Inspect rear belt and sprocket. See 1.15 DRIVE BELT AND SPROCKETS.

Assembly

1. **Laced Wheel:** if wheel was disassembled, reassemble hub, rim, spokes and nipples, and tighten spokes. See 2.5 WHEEL LACING: 16 INCH RIM, 2.6 WHEEL LACING: 19 INCH RIM or 2.7 WHEEL LACING: 21 INCH RIM.
2. **Cast or disc wheel:** see Figure 2-13. **Laced wheel:** see Figure 2-14.
3. Install hub spacer (14) and wheel bearings (6), if removed. See 2.4 WHEELS, Sealed Wheel Bearings.
4. If brake disc (10) was removed, install brake disc on valve stem side of wheel. Secure with **new** screws and tighten to 30-45 ft-lbs (40.7-61.1 Nm).

NOTE

Sportster models sold in the Japanese market are equipped with rear wheel compensating sprockets. See D.1 COMPENSATING SPROCKET for the correct assembly/installation procedure.

5. If rear sprocket (7) was removed, install sprocket on side of wheel opposite valve stem.
   a. Secure with **new** screws and washers (4). Tighten to 60 ft-lbs (81.3 Nm).
   b. Loosen each screw 180 degrees and retighten to 80 ft-lbs (108.0 Nm).
6. Verify that wheel assembly is true. See 2.8 CHECKING AND TRUING WHEELS or 2.8 CHECKING AND TRUING WHEELS.
7. Install tire, if removed. See 2.18 TIRES.

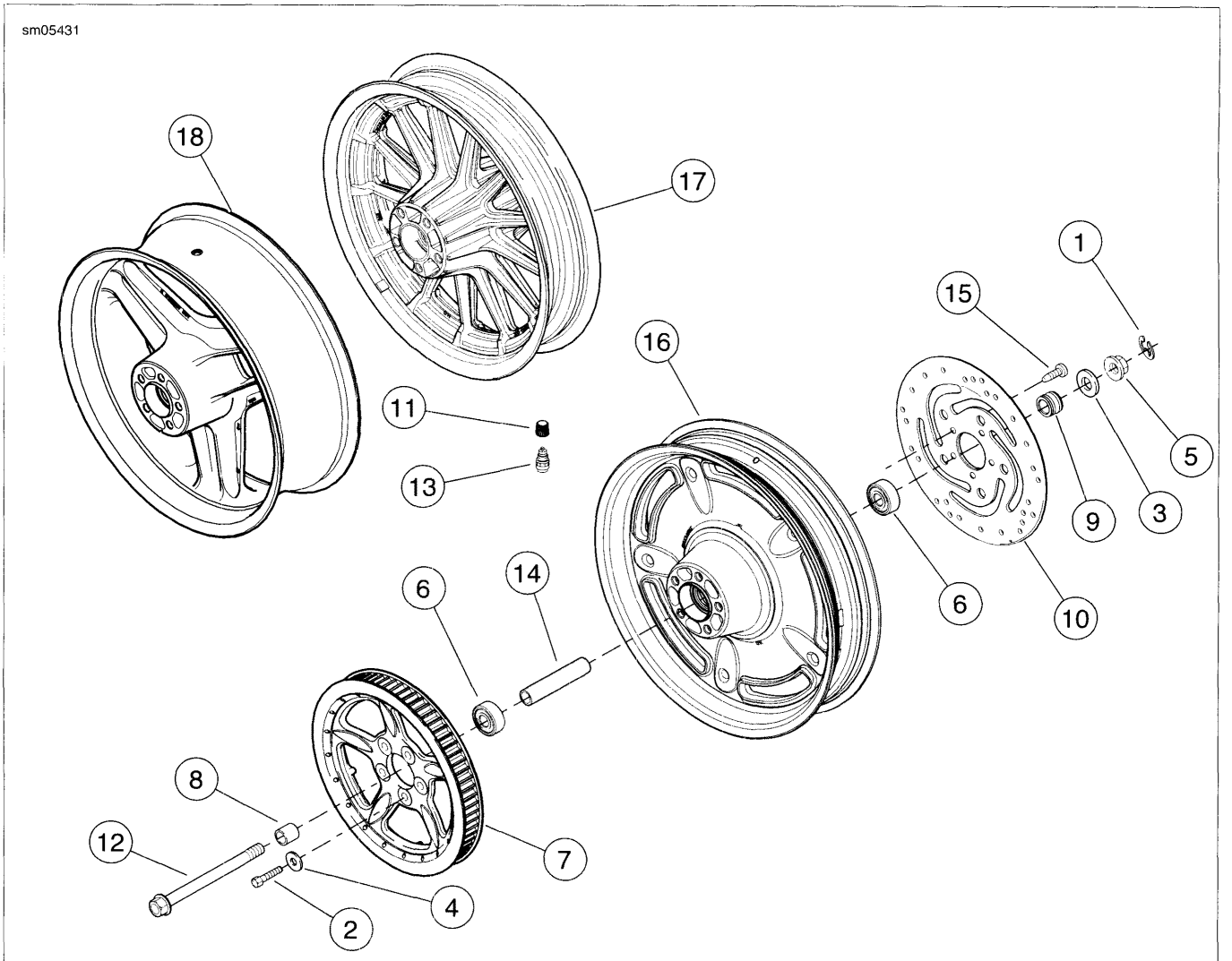

1. E-clip
2. Screw (5)
3. Washer
4. Washer (5)
5. Axle nut
6. Roller bearing (2)
7. Sprocket
8. Spacer, wide
9. Spacer, narrow
10. Brake disc
11. Valve cap
12. Axle
13. Valve stem
14. Hub spacer
15. Screw (5)
16. Wheel assembly, disc: XL models
17. Wheel assembly, cast: XL models
18. Wheel assembly, cast: XR models

Figure 2-13. Cast or Disc Rear Wheel

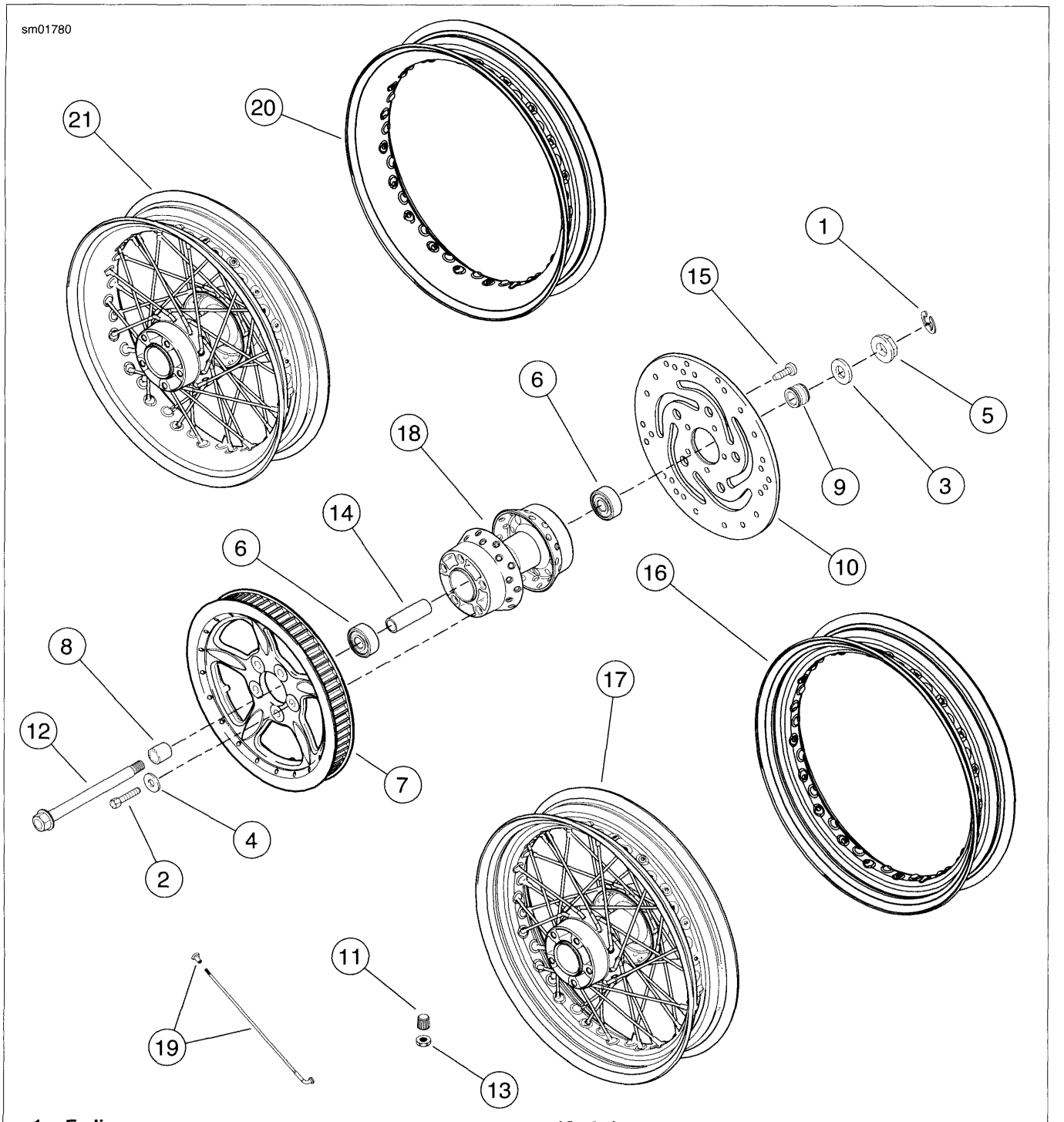

1. E-clip
2. Screw (5)
3. Spacer
4. Washer (5)
5. Axle nut
6. Roller bearing (2)
7. Sprocket
8. Spacer, wide
9. Spacer, narrow
10. Brake disc
11. Valve cap
12. Axle
13. Valve stem nut
14. Hub spacer
15. Brake disc screw (5)
16. Rim, standard (all except XL 883C/XL 1200C)
17. Wheel assembly, 16 in., standard rim
18. Hub
19. Spoke and nipple (40)
20. Rim, profile (XL 883C/XL 1200C only)
21. Wheel assembly, 16 in., profile rim

Figure 2-14. Laced Rear Wheel

Installation

1. See Figure 2-13 or Figure 2-14. Apply a light coat of ANTI-SEIZE LUBRICANT to the axle (12), bearing (6) bores, and hub spacer (14) bore.
2. Place wheel centrally in the rear fork assembly. Engage the brake disc in the caliper on XL models.
3. **XR Models:** With the wheel as far forward as possible, install the caliper/bracket assembly in place, engaging the brake disk and the boss on the rear fork.
4. Slide wheel forward and slip belt over sprocket and then slide the wheel back.
5. Position sprocket side spacer (8) between wheel and rear fork.
6. Insert axle (12) through right side of rear fork and right side axle adjuster, sprocket side spacer (8), wheel assembly, disc side spacer (9), rear caliper bracket, and left side of rear fork and left side axle adjuster.
7. Install washer (3) and axle nut (5) on left end of axle. Do not tighten nut at this time.
8. **XL Models:** Slide right lower shock absorber screw back in place. Install nut and tighten to 45-50 ft-lbs (61-68 Nm).

NOTE

If rear brake caliper was disassembled or removed, see 2.15 REAR BRAKE CALIPER: XL MODELS or 2.16 REAR BRAKE CALIPER: XR MODELS for the proper assembly and installation procedure.

9. Check for proper belt tension and rear wheel alignment. See 1.16 WHEEL ALIGNMENT.

⚠WARNING

Do not exceed specified torque when tightening axle nut. Exceeding torque can cause wheel bearings to seize during vehicle operation, which could result in death or serious injury. (00408e)

10. Tighten axle nut to 95-105 ft-lbs (129-142 Nm). Install e-clip.

⚠WARNING

Check wheel bearing end play after tightening axle nut to specified torque. Excessive end play can adversely affect stability and handling and can cause loss of control, which could result in death or serious injury. (00285b)

11. Check wheel bearing end play. See 2.4 WHEELS, Rear Wheel.
12. **XL Models:** Install rear muffler. See 4.14 EXHAUST SYSTEM: XL MODELS.

⚠WARNING

Whenever a wheel is installed and before moving the motorcycle, pump brakes to build brake system pressure. Insufficient pressure can adversely affect brake performance, which could result in death or serious injury. (00284a)

13. Pump brake pedal to move piston out until it contacts outside brake pad. Verify piston location against pad.

SEALED WHEEL BEARINGS

PART NUMBER	TOOL NAME
HD-44060-C	WHEEL BEARING INSTALLER/REMOVER

Inspection

1. Inspect the play of the wheel bearings by finger while they are in the wheel. Rotate the inner bearing race and check for abnormal noise. Make sure bearing rotates smoothly.
2. Check wheel bearings and axle spacers for wear and corrosion. Excessive play or roughness indicates worn bearings. Replace bearings in sets only.

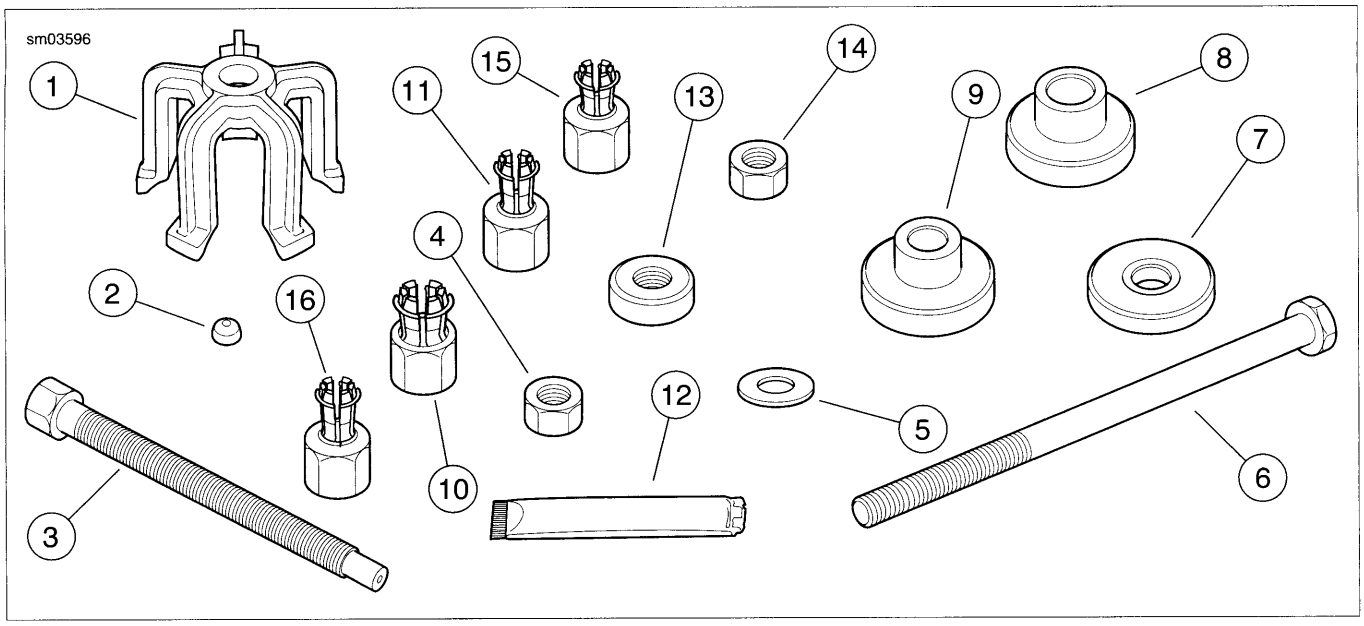

Figure 2-15. Wheel Bearing Remover/Installer (HD-44060-C) (See Table)

Table 2-15. HD-44060-C Wheel Bearing Remover/Installer

NO.	DESCRIPTION	PART NO.
1	Bridge	HD-44060-5
2	Steel ball	12547
3	6" forcing screw	HD-44060-4
4	1/2-20 UNF nut	222413
5	Washer	12004
6	11" forcing screw	280856
7	Back-up plug	HD-44060-1
8	1" and 25 mm bearing installer	HD-44060-8
9	3/4" bearing installer	HD-44060-6
10	1" remover	HD-44060-7B
11	3/4" bearing remover	HD-44060-3B
12	Thread lubricant	J-23444-A
13	Nice bearing	217801
14	1/2-13 UNC nut	215654
15	25 mm bearing remover	HD-44060-10A
16	25 mm bearing remover (ABS)	HD-44060-11A

Removal

1. If not already done, remove wheel from motorcycle. See 2.4 WHEELS. On models with a single front brake caliper, remove hub plate from wheel on side opposite front brake disc.

NOTE

See Figure 2-16. Some wheel hubs may not provide adequate support for the puller bridge. In these cases, center a used brake disc over the hub to support the puller bridge while removing the bearing.

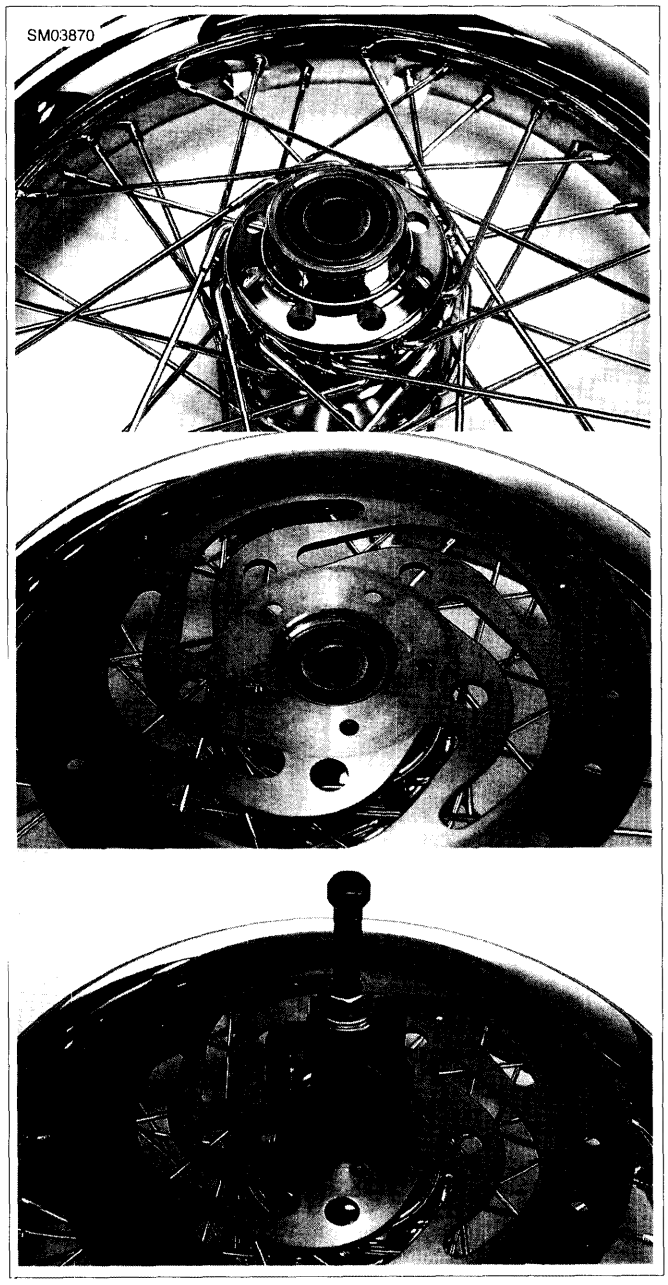

Figure 2-16. Brake Disk as Puller Aid

2. See Figure 2-17. Obtain WHEEL BEARING INSTALLER/REMOVER (Part No. HD-44060-C) and assemble.
   a. Sparingly apply graphite lubricant to threads of forcing screw (1) for prolonged service life and smooth operation.
   b. Install nut (2), washer (3) and Nice bearing (4) on screw. Insert assembly through hole in bridge (5).
   c. Drop ball bearing inside collet (6). Fasten collet and ball bearing to forcing screw.
3. Hold end of forcing screw and turn collet to expand edges of collet.
4. See Figure 2-18. When expanded collet has gripped bearing edges, hold end of forcing screw (1) and turn the nut (2) to remove bearing from wheel.
5. Remove spacer from inside wheel hub.
6. Repeat procedure for opposite side bearing. Discard both bearings upon removal.

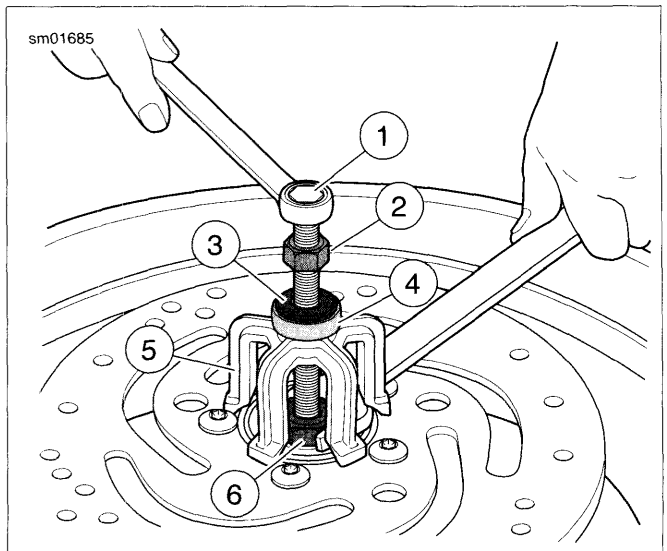

1. **Forcing screw**
2. **Nut**
3. **Washer**
4. **Bearing**
5. **Bridge**
6. **Collet with ball bearing inside**

Figure 2-17. Wheel Bearing Removal Tool

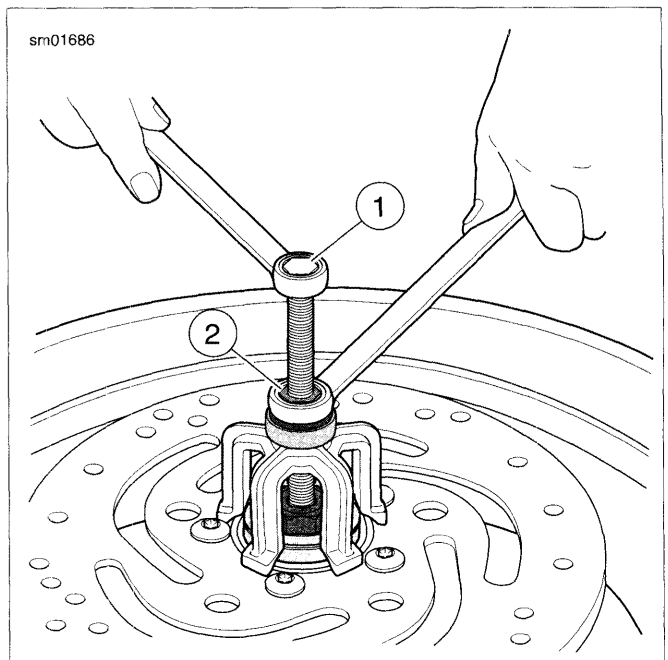

1. **Forcing screw**
2. **Nut**

Figure 2-18. Removing Bearing

Installation

NOTES

- *When installing wheel bearings, use specialty tool WHEEL BEARING INSTALLER/REMOVER (Part No. HD-44060-C).*
- *Always install first bearing on primary brake disc side. If front wheel has two brake discs, install bearing on the left side first.*

1. See Figure 2-15. Obtain WHEEL BEARING INSTALLER/REMOVER (Part No. HD-44060-C) and assemble.
   a. Sparingly apply graphite lubricant to threads of threaded rod (6) for prolonged service life and smooth operation.
   b. See Figure 2-19. Place threaded rod (1) through support plate (2). Insert assembly through wheel.
   c. See Figure 2-20. Place **new** bearing on rod (1) with lettered side facing out.
   d. Install pilot (5), Nice bearing (4), washer (3) and nut (2) over rod.
2. Hold hex end of threaded rod and turn nut to install wheel bearing. Bearing is fully seated when nut can no longer be turned. Remove tool.
3. Install spacer inside wheel hub.
4. Reverse tool and install opposite side wheel bearing.
5. Install hub plate opposite brake disc and secure with **new** screws. Tighten to 16-24 ft-lbs (21.7-32.6 Nm).

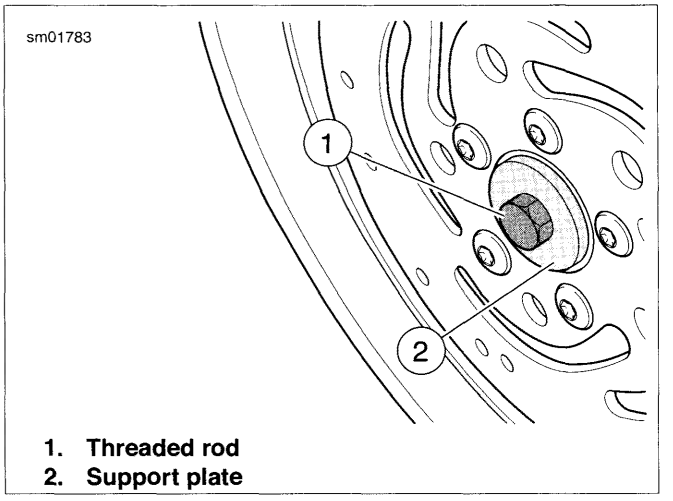

Figure 2-19. Assembling Installation Tool

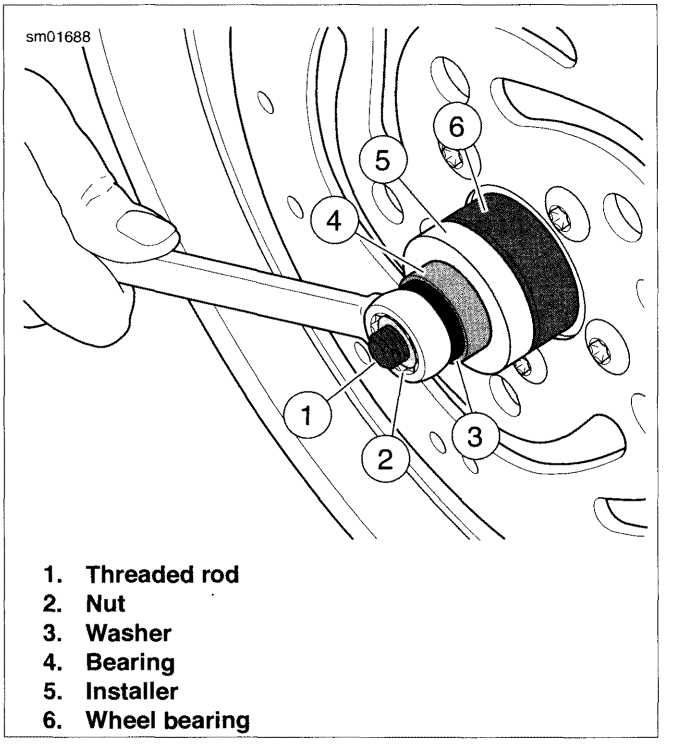

Figure 2-20. Installing Bearing

WHEEL LACING: ANGLE FLANGE HUB

NOTES

- *See Figure 2-21. The following procedure is valid for 40-spoke wheels that use an angle flange hub regardless of rim style or diameter.*
- *The primary brake side of the hub can be identified as having one or two grooves cut into the disc mounting surface.*

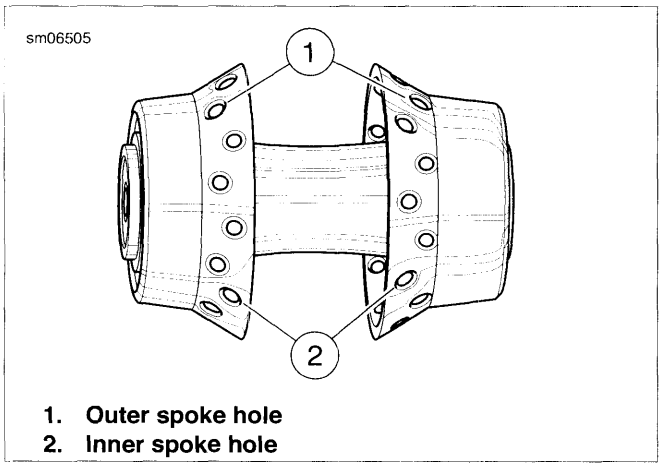

1. **Outer spoke hole**
2. **Inner spoke hole**

Figure 2-21. Angle Flange Hub

1. Place hub on workbench:
   a. Front: primary brake side up.
   b. Rear: brake side down.
2. Install all spokes in the lower flange.
3. See Figure 2-22. Flip hub over. Gather all outer spokes and hold upright with a rubber band. Repeat with the inner spokes using a second rubber band.
4. Install spokes in remaining flange.
5. Rotate the lower flange spokes as far as they will go:
   a. Outer spokes clockwise.
   b. Inner spokes counterclockwise.
6. Center the rim over the hub and spokes assembly and support on wooden blocks approximately 1.5 in (38.1 mm) thick.
   a. If valve is not located in the center of the rim, place valve hole facing up
   b. 19 in. and 21 in. with the valve located in the center of the rim can be placed either side up.

NOTE

Install nipples until approximately 1/8 in (3.2 mm) of spoke thread shows.

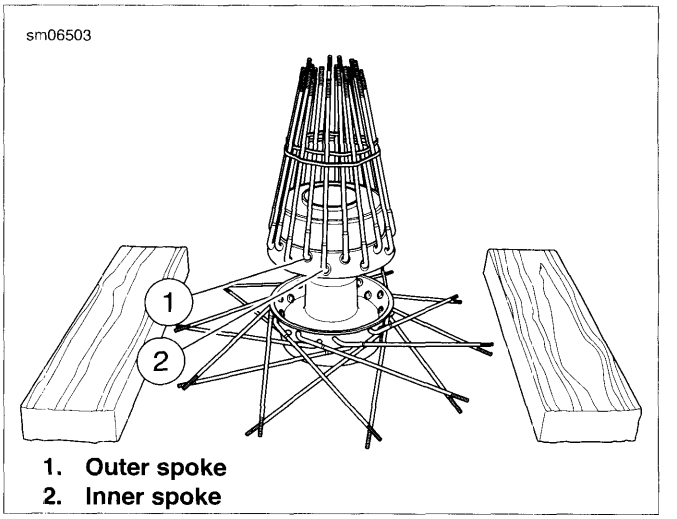

1. **Outer spoke**
2. **Inner spoke**

Figure 2-22. Spokes Gathered

7. Install lower flange outer spokes and loosely install spoke nipples:
   a. See Figure 2-23. Rim with side valve hole: start at the valve stem hole (1).
   b. See Figure 2-24. Rim with center valve hole: start at the first hole counterclockwise (1) from valve stem hole.
   c. Install remaining outer spokes in every 4th hole.
8. Install lower flange inner spokes and loosely install spoke nipples:
   a. Starting at the 2nd hole counterclockwise (2) from first spoke installed, install inner spoke.
   b. Install remaining inner spokes in every 4th hole.
9. Carefully release upper flange inner spokes and fan out around rim, rotating them clockwise.
10. Starting at the first hole counterclockwise (3) from first spoke installed, install inner spoke. Install all remaining inner spokes in every 4th hole.
11. Carefully release upper flange outer spokes and fan out around rim, rotating them counterclockwise
12. Install outer spokes in remaining holes (4).
13. Verify spoke heads are seated. Evenly hand-tighten spoke nipples until snug. Only tighten until slack is removed. Proper torque will be applied when the wheel is trued. Adjust offset and true the wheel. See 2.8 CHECKING AND TRUING WHEELS.

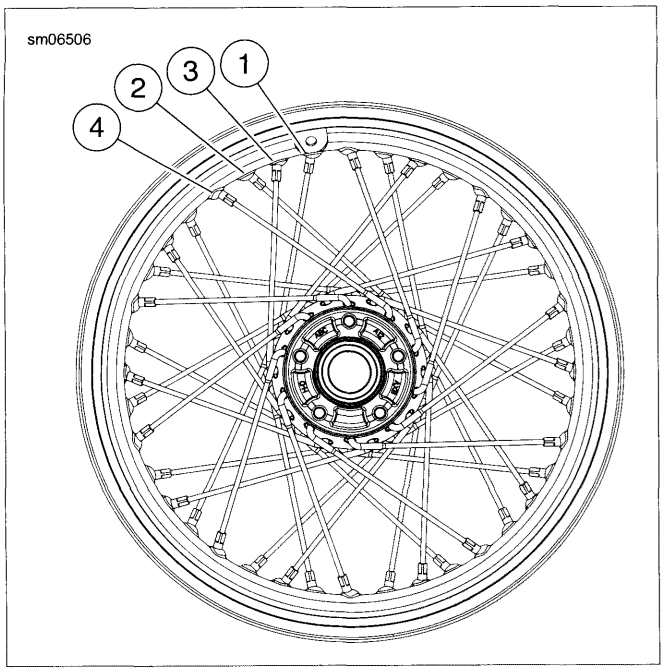

Figure 2-23. Side Valve Rim

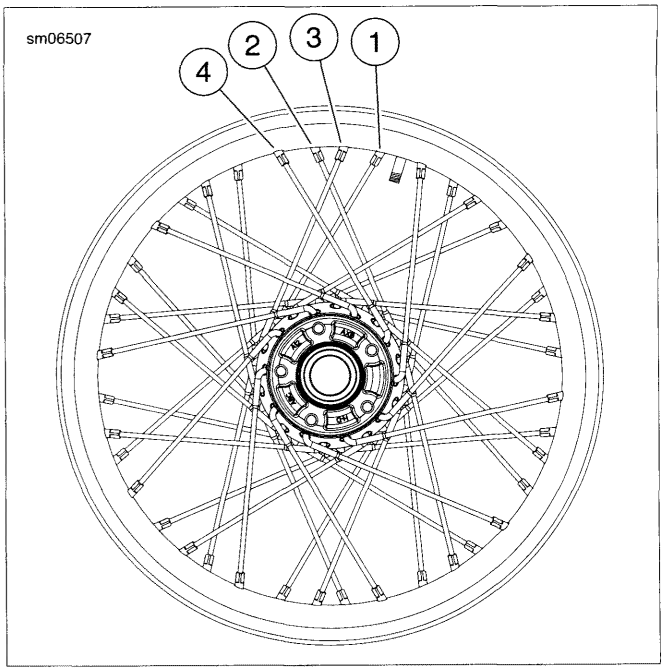

Figure 2-24. Center Valve Rim

WHEEL LACING: STRAIGHT FLANGE HUB, SINGLE HOLE CIRCLE

NOTES

- *See Figure 2-26. The following procedure is valid for 40-spoke wheels that use a straight flange, single spoke hole circle hub regardless of rim style or diameter.*
- *The primary brake side of the hub can be identified as having one or two grooves cut into the disc mounting surface.*

1. See Figure 2-25. Divide spokes into inner and outer groups.
   a. Inner spokes (2) have long heads.
   b. Outer spokes (1) have short heads.
2. See Figure 2-26. Place hub on bench with the primary brake disc side up. Insert one outer spoke (1) (short head) into any bottom flange hole and swing it clockwise. Insert an inner spoke (2) (long head) in the next hole counterclockwise from the outer spoke. Swing the inner spoke counterclockwise over the outer spoke.
3. Find the hole (3) in the upper flange directly above the two spokes and insert a long head inner spoke. Insert all remaining spokes in the upper flange, alternating the inner and outer spokes.
4. Flip the hub (primary brake side down) and install remaining spokes, again alternating inner and outer spokes.
5. See Figure 2-27. Group all spokes on the upper flange into two bundles of ten and secure each group with throttle grips.

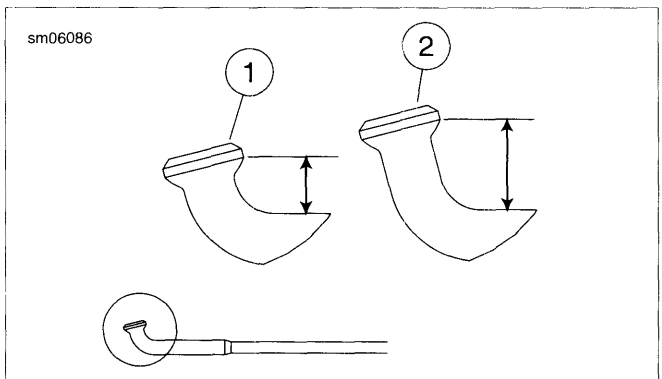

1. **Short head (outer spoke)**
2. **Long head (inner spoke)**

Figure 2-25. Spoke Heads

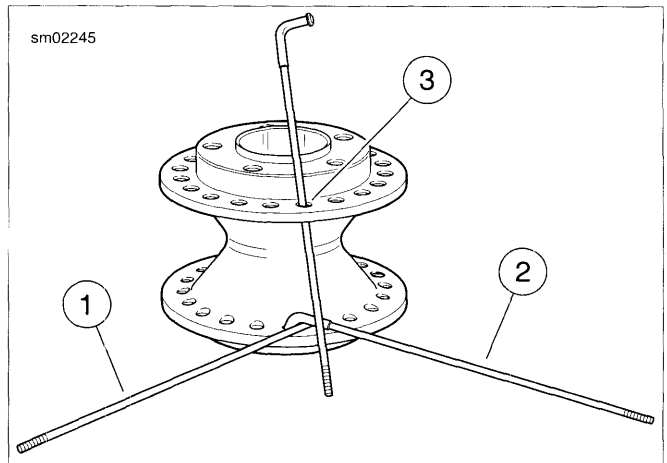

1. **Outer spoke (short head)**
2. **Inner spoke (long head)**
3. **Hole directly above two spokes**

Figure 2-26. Lacing Single Row Wheel Hub

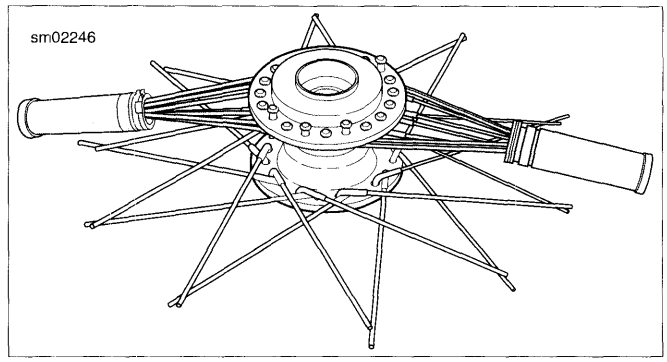

Figure 2-27. Bundling Top Spokes

6. Angle all lower flange spokes as far as they will go without overlapping a LIKE spoke (inner must not cross inner; outer must not cross outer):
   a. Outer spokes (short head) clockwise.
   b. Inner spokes (long head) counterclockwise. All inner spokes lay over outer spokes.
7. Support the rim on wooden blocks approximately 0.75 in (19 mm) thick.
8. Place the hub and spoke assembly into the rim and centered in the rim.

NOTE

Install nipples until approximately 1/8 in (3.2 mm) of spoke thread shows.

9. See Figure 2-28. Beginning with the 2nd hole counterclockwise (1) from valve stem hole, install lower flange outer spokes (short head) in every 4th hole. Loosely install spoke nipples.

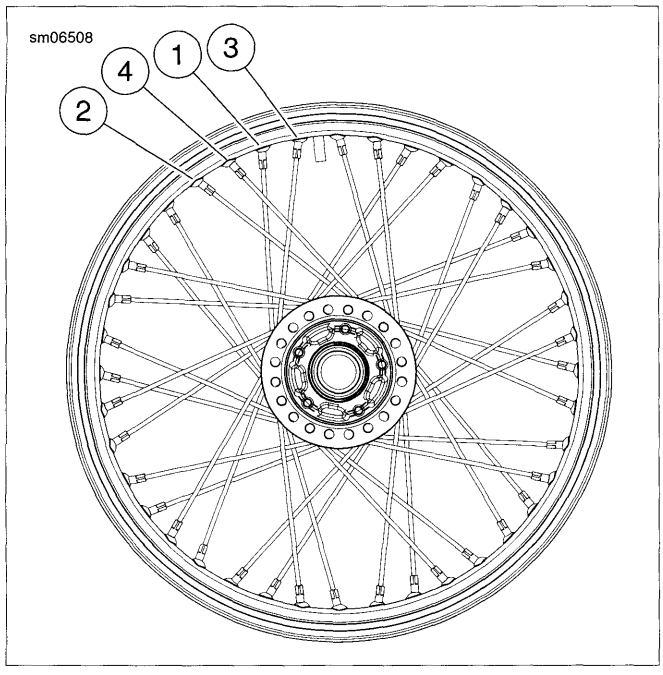

Figure 2-28. Flat Flange Hub, Single Row

10. Beginning with 4th hole counterclockwise (2) from valve stem hole, install lower flange inner spokes (long head) in every 4th hole. Loosely install spoke nipples. Each inner spoke will cross four outer spokes.

11. See Figure 2-29. Carefully release each top bundle and fan the spokes around the rim edge.

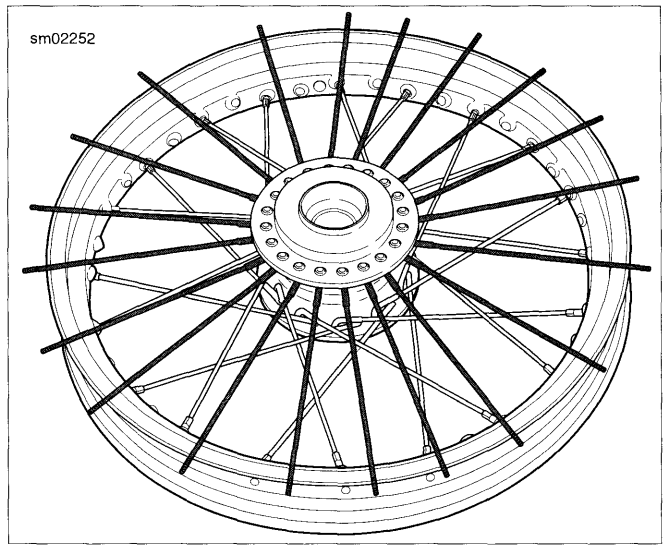

Figure 2-29. Fanning Top Flange Spokes

12. Rotate all the upper flange inner spokes (long head) clockwise, one at a time, leaving the outer spokes (short head) resting on the rim.

NOTE

Be sure outer spokes do not fall under the inner spoke and become trapped.

13. See Figure 2-28. Beginning with the first hole counterclockwise (3) from valve stem hole, install upper flange inner spokes (long head) in every 4th hole.

14. Rotate outer spokes (short head) counterclockwise and install in the remaining holes (4) in the rim.

15. Verify spoke heads are seated. Evenly hand-tighten spoke nipples until snug. Only tighten until slack is removed. Proper torque will be applied when the wheel is trued. Adjust rim offset and true the wheel. See 2.8 CHECKING AND TRUING WHEELS.

WHEEL LACING: STRAIGHT FLANGE HUB, DUAL HOLE CIRCLE

NOTES

- *See Figure 2-31. The following procedure is valid for 40-spoke wheels that use a straight flange, dual spoke hole circle hub regardless of rim style or diameter.*
- *The primary brake side of the hub can be identified as having one or two grooves cut into the disc mounting surface.*

1. See Figure 2-30. Divide spokes into inner and outer groups.
   a. Inner spokes (2) have long heads.
   b. Outer spokes (1) have short heads.
2. See Figure 2-31. Place hub on bench with the primary brake disc side up. Insert one outer spoke (short head) into any upper flange outer hole and swing it counterclockwise. Insert an inner spoke (long head) in the next hole counterclockwise from the outer spoke. Swing the inner spoke clockwise under the outer spoke.
3. Insert all remaining spokes in the upper flange, alternating the inner and outer spokes.
4. Flip the wheel hub (primary brake side down) and install remaining spokes in the same manner, again alternating inner and outer spokes.
5. See Figure 2-32. Group all spokes on the upper flange into two bundles of ten and secure each group with throttle grips.

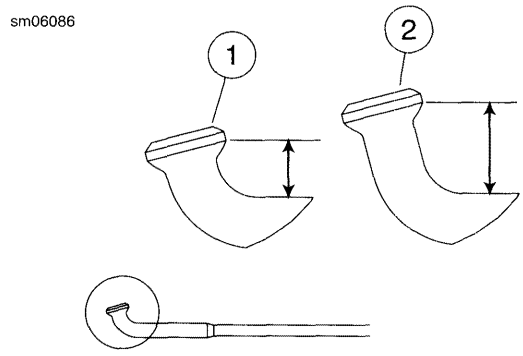

1. **Short head (outer spoke)**
2. **Long head (inner spoke)**

Figure 2-30. Spoke Heads

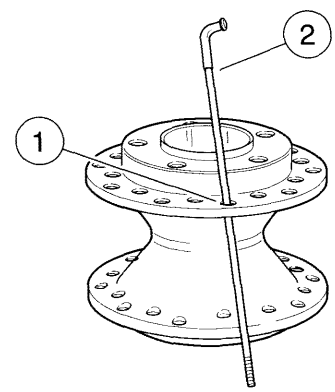

1. **Outer spoke hole**
2. **Outer spoke (short head)**

Figure 2-31. Lacing Dual Row Wheel Hub

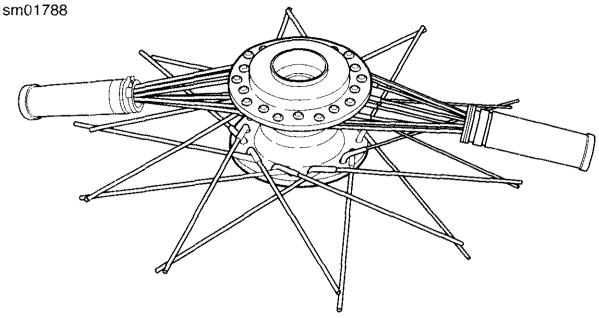

Figure 2-32. Bundling Top Spokes

6. Angle all lower flange spokes as far as they will go without overlapping a LIKE spoke (inner must not cross inner; outer must not cross outer):
   a. Outer spokes (short head) clockwise.
   b. Inner spokes (long head) counterclockwise. All inner spokes lay over outer spokes.
7. Support the rim on wooden blocks approximately 0.75 in (19 mm) thick.
8. Place the hub and spoke assembly into the rim and centered in the rim.

NOTE

Install nipples until approximately 1/8 in (3.2 mm) of spoke thread shows.

9. See Figure 2-33. Beginning with the 1st hole counterclockwise (1) from valve stem hole, install lower flange outer spokes (short head) in every 4th hole. Loosely install spoke nipples.

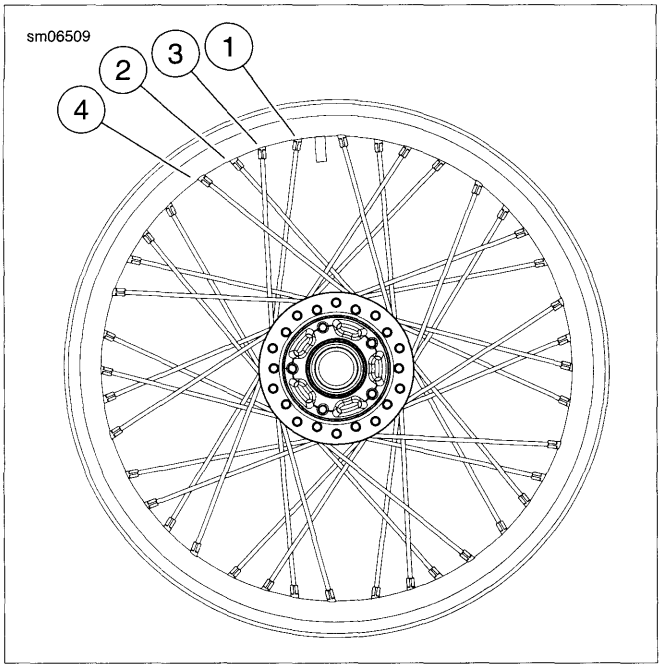

Figure 2-33. Flat Flange Hub, Dual Row

10. Beginning with 3rd hole counterclockwise (2) from valve stem hole, install lower flange inner spokes (long head) in every 4th hole. Loosely install spoke nipples. Each inner spoke will cross four outer spokes.

11. See Figure 2-34. Carefully release each top bundle and fan the spokes around the rim edge.

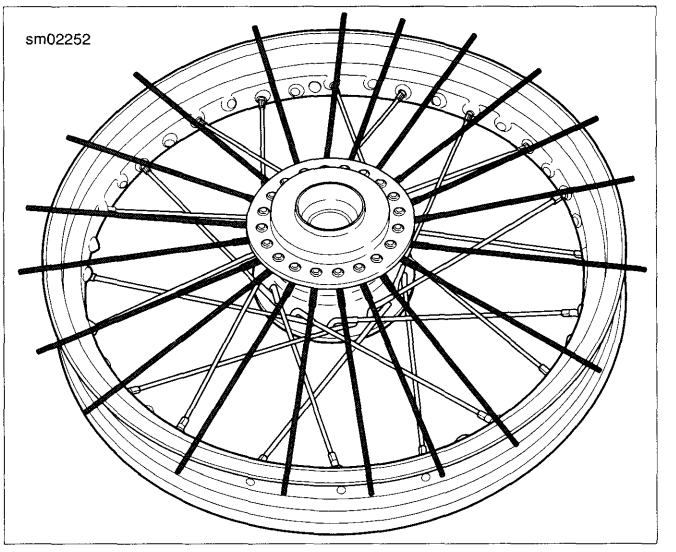

Figure 2-34. Fanning Top Flange Spokes

12. Rotate all the upper flange inner spokes (long head) clockwise, one at a time, leaving the outer spokes (short head) resting on the rim.

NOTE

Be sure outer spokes do not fall under the inner spoke and become trapped.

13. See Figure 2-33. Beginning with the 2nd hole counterclockwise (3) from valve stem hole, install upper flange inner spokes (long head) in every 4th hole.

14. Rotate outer spokes (short head) counterclockwise and install in the remaining holes (4) in the rim.

15. Verify spoke heads are seated. Evenly hand-tighten spoke nipples until snug. Only tighten until slack is removed. Proper torque will be applied when the wheel is trued. Adjust offset and true the wheel. See 2.8 CHECKING AND TRUING WHEELS.

GENERAL

Wheels should be checked for lateral and radial runout before installing a new tire or tube. Checking cast or laced wheels is performed using the same procedure.

Laced wheels having excess runout can be trued however, cast wheels must be replaced. Never attempt to straighten cast wheels.

Always check condition of the wheel bearings before checking or adjusting wheel runout. See 1.11 TIRES AND WHEELS, Wheel Bearings.

CHECKING WHEEL RUNOUT

PART NUMBER	TOOL NAME
HD-99500-80	WHEEL TRUING AND BALANCING STAND

Lateral Runout

See Figure 2-35. Mount wheel in WHEEL TRUING AND BALANCING STAND (Part No. HD-99500-80).

NOTE

To more accurately measure runout, a dial indicator can be used in place of the gauge rod.

To check lateral runout, place a gauge rod near, or dial indicator on the rim bead flange and measure distance at several locations. Lateral runout must not exceed 0.030 in. (0.76 mm).

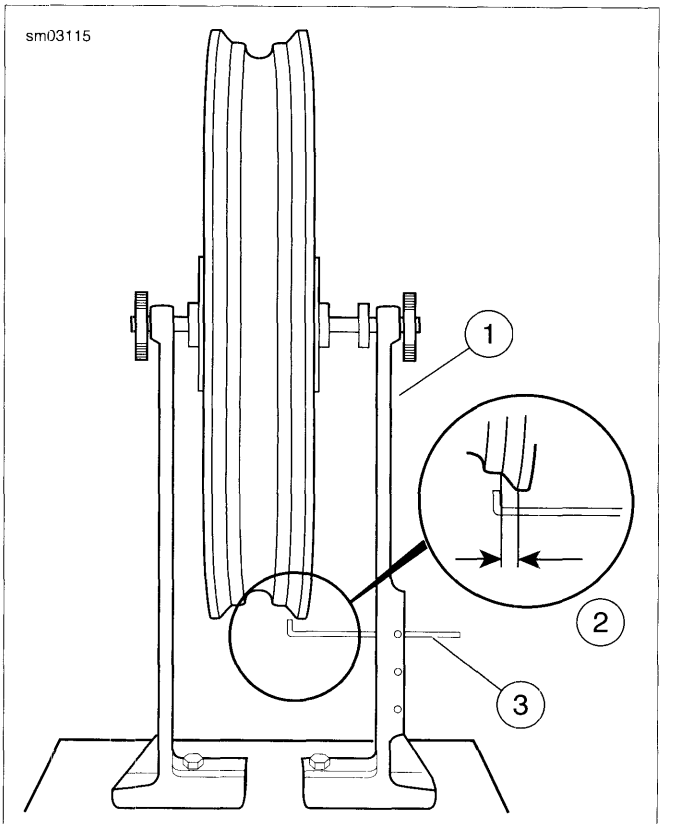

1. **Wheel truing and balancing stand**
2. **Lateral runout**
3. **Gauge rod**

Figure 2-35. Checking Lateral Runout

Radial Runout

See Figure 2-36. Adjust truing stand gauge to the rim's tire bead safety hump. Rotate wheel and measure distance at several locations. Runout must not exceed 0.030 in. (0.76 mm).

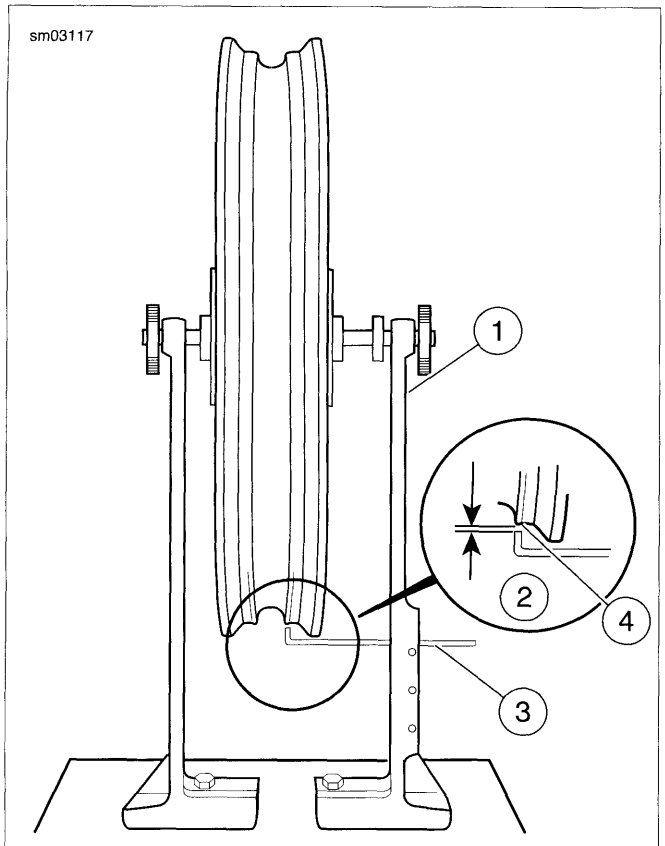

1. **Wheel truing and balancing stand**
2. **Radial runout**
3. **Gauge rod**
4. **Bead safety hump**

Figure 2-36. Checking Radial Runout

If either measurement is not within specification:

- Cast wheel: Replace the wheel.
- Laced wheel: Adjust spokes to true the wheel. See 2.8 CHECKING AND TRUING WHEELS.

SETTING RIM OFFSET

PART NUMBER	TOOL NAME
HD-94681-80	SPOKE WRENCH
HD-99500-80	WHEEL TRUING STAND

1. See Figure 2-37. Place a piece of tape to mark the center of each group of four spokes as shown. The groups should be directly opposite one another and approximately 90 degrees apart. Using different colors of tape or numbering each group is helpful.

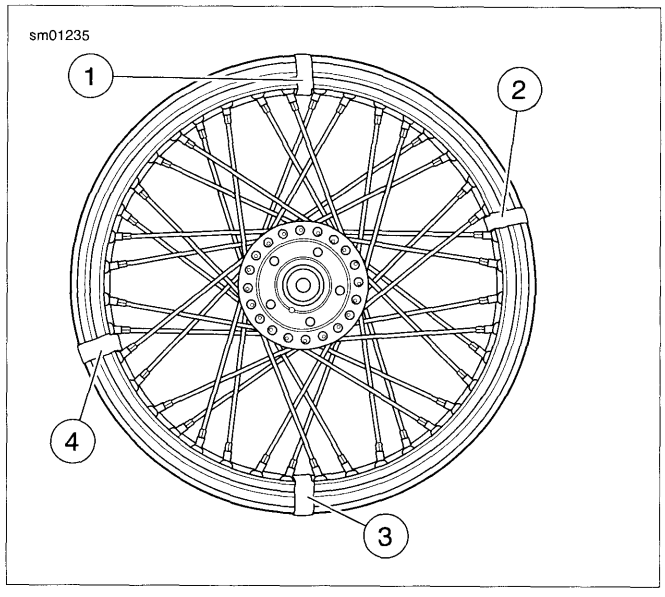

Figure 2-37. Marking Spoke Groups

2. See Figure 2-38. Mount wheel in WHEEL TRUING STAND (Part No. HD-99500-80) using truing arbor. Tighten arbor nuts so hub will turn on its bearings.

NOTE

The primary brake disc side of the hub can be identified by having one or two grooves cut into the disc mounting surface.

3. Lay a straightedge across the primary brake disc mounting surface of hub and one of the marked spoke groups.
4. See Figure 2-39. Measure the distance from the straightedge to the location shown, based on rim design, to determine distance "A". The measured offset should be within that shown in Table 2-16.

NOTES

- *Always loosen the appropriate spokes before tightening the other two. Reversing this procedure will cause the rim to become out-of-round.*
- *Tighten or loosen spokes one flat at a time and recheck measurement.*
- *Always work on groups that are opposite each other to maintain radial runout.*

5. If the dimension is not correct, adjust the four spokes using SPOKE WRENCH (Part No. HD-94681-80). For example, If the measurement on the rim **right** side is **less** than it should be, **loosen** the two spokes attached to the hub **right** side and **tighten** the two spokes attached to the hub **left** side. Turn all four spokes an equal number of turns until offset dimension is correct.
6. Repeat the previous step for all groups on the wheel.
7. Once offset is verified, proceed to 2.8 CHECKING AND TRUING WHEELS, Truing Wheels.

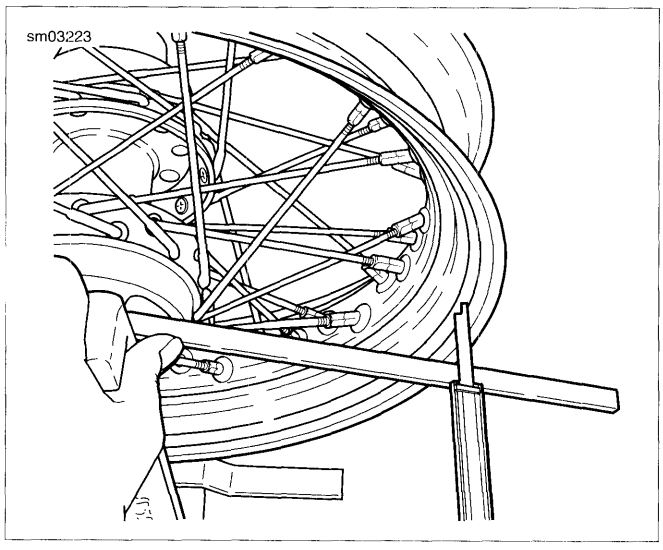

Figure 2-38. Checking Wheel Hub Offset Dimension (typical)

Table 2-16. Hub Positioning Dimensions

RIM		DIMENSION A VALUE	
TYPE	SIZE	IN.	MM
Steel laced	16 in.	1.472-1.492	37.39-37.90
	19 in.	0.837-0.857	21.26-21.77
	21 in.	0.719-0.739	18.26-18.77
Chrome aluminum profile laced	16 in.	1.188-1.207	30.17-30.67
	21 in.	0.749-0.769	19.03-19.53

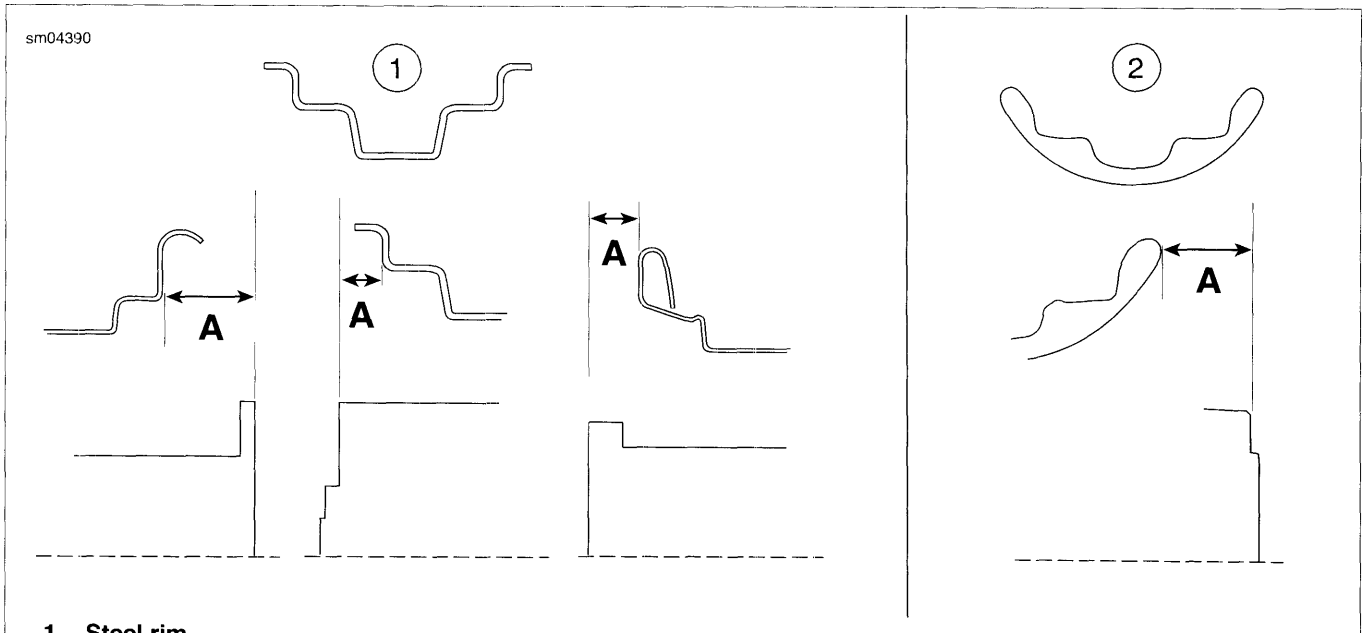

1. **Steel rim**
2. **Chrome aluminum profile rim**

Figure 2-39. Laced Wheel Hub Offset Dimensions

TRUING WHEELS

PART NUMBER	TOOL NAME
94681-80	SPOKE NIPPLE WRENCH
HD-48985	SPOKE TORQUE WRENCH
HD-99500-80	WHEEL TRUING STAND

NOTES

- *To more accurately measure runout, a dial indicator can be used in place of the gauge rod.*
- *Radial truing should be performed before lateral truing.*

Radial Truing

1. See Figure 2-40. With the wheel mounted in WHEEL TRUING STAND (Part No. HD-99500-80), adjust the truing stand gauge (3) near to the rim's tire bead safety hump (4). If using a dial indicator, place the tip on the safety bead hump.
2. If working with a straight flange hub, seat each spoke head in the hub flange using a flat nose punch and mallet.

NOTES

- *Always loosen the appropriate spokes, using SPOKE NIPPLE WRENCH (Part No. 94681-80), before tightening*

the other two. Reversing this procedure will cause the rim to become out-of-round.

- *Tighten or loosen spoke, one flat at a time, and recheck measurement. Small changes in the spokes can make large changes in the runout.*
- *Always work on groups that are opposite each other to maintain radial runout.*

3. Spin the rim slowly and check distance (2). The rim should be true within 0.030 in. (0.76 mm).
   a. If the rim contacts the gauge on or near a marked group of spokes, loosen the spokes in the group on the opposite side of the rim. Then tighten the spokes in the group where the rim makes contact an equal number of turns.
   b. If the rim contacts the gauge between two marked groups, loosen the spokes in both groups on the opposite side of the rim. Then tighten the spoke groups on the side of the rim that makes contact an equal number of turns.
4. When the wheel is centered and trued, start at the valve stem hole and tighten any loose spoke nipples one turn at a time until they are snug.
5. Working alternately across the wheel, use SPOKE TORQUE WRENCH (Part No. HD-48985) evenly tighten all spokes to specification listed in Table 2-17.
6. If working with a straight flange hub, verify each spoke head is seated in the hub flange using a flat nose punch and mallet.
7. Verify radial runout is still within specification.
8. Proceed to Lateral Truing.

⚠WARNING

Spokes that are too tight can draw nipples through the rim or distort hub flanges. Spokes that are too loose can continue to loosen when put in service. Either condition can adversely affect stability and handling, which could result in death or serious injury. (00286a)

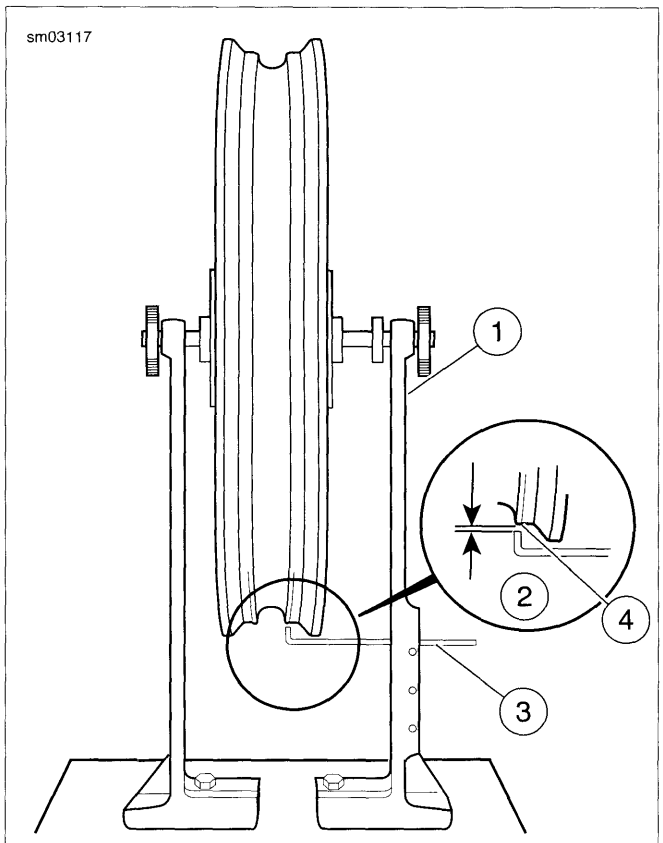

1. **Wheel truing and balancing stand**
2. **Radial runout**
3. **Gauge rod**
4. **Bead safety hump**

Figure 2-40. Checking Radial Runout

Table 2-17. Spoke Nipple Torque Specification

RIM TYPE	MINIMUM TORQUE
All	55 **in-lbs** (6.2 Nm)

Lateral Truing

NOTE

To more accurately measure runout, a dial indicator can be used in place of the gauge rod.

1. See Figure 2-41. With the wheel mounted in WHEEL TRUING STAND (Part No. HD-99500-80), adjust the gauge rod (3) near the rim bead flange.
2. Rotate the rim slowly and check lateral runout (2). If runout exceeds 0.030 in. (0.76 mm), adjust spokes as follows.

NOTES

- *Always loosen the appropriate spokes before tightening the other two. Reversing this procedure will cause the rim to become out-of-round.*
- *Tighten or loosen spoke, one flat at a time, and recheck measurement. Small changes in the spokes can make large changes in the runout.*

3. Again working in groups of four, loosen two spokes on the tight side and tighten the two spokes on the loose side.
4. Repeat with each group until wheel is within specification.

5. Verify all spoke nipples are tightened to the specification shown in Table 2-17.

6. If the tire is removed from the rim, file or grind off ends of spokes that protrude through the nipples to prevent puncturing tube when tire is mounted.

NOTE

After installation of the front wheel, visually check that it is approximately centered between the fork fender bosses.

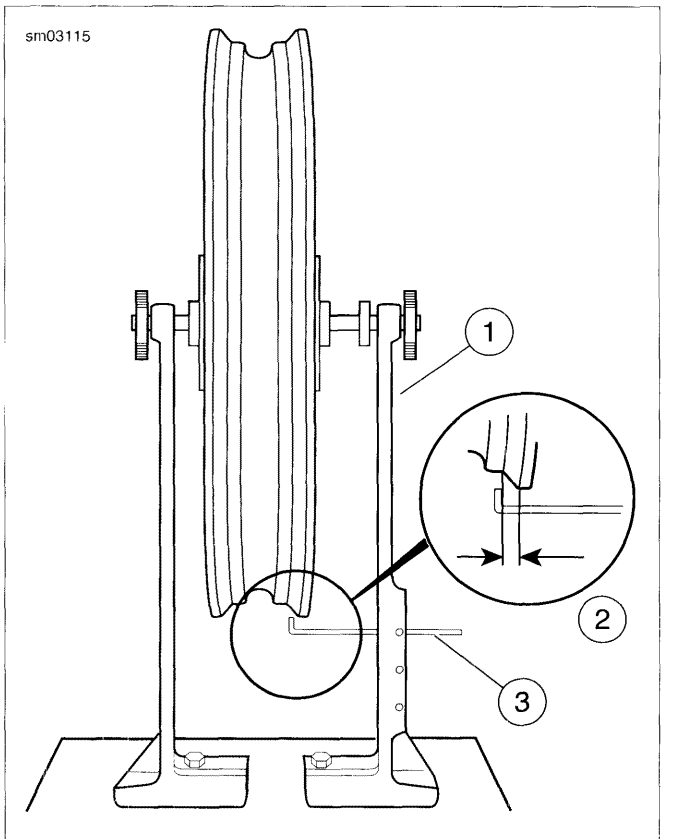

1. **Wheel truing and balancing stand**
2. **Lateral runout**
3. **Gauge rod**

Figure 2-41. Checking Lateral Runout

GENERAL

The front brake master cylinder designed for dual disc (two caliper) operation has a larger bore than the master cylinder designed for single disc (one caliper) operation.

See Figure 2-42. The bore size is cast into the side of the master cylinder body facing the handlebar.

- The single disc master cylinder has "11" (11 mm) cast into the body.
- The dual disc master cylinder has "1/2" (1/2 in.) cast in.

NOTE

Use only CCI #20 BRAKE GREASE to lubricate master cylinder bores, pistons, and primary and secondary cups. Use only KS62F assembly grease on caliper pistons and piston seals. Use only G40M BRAKE GREASE on sliding areas outside caliper and master cylinder: caliper pins and boots, pivot hole front brake lever, end of piston that contacts brake lever.

⚠WARNING

Do not use parts from single caliper repair kits (9/16 inch bore) on dual caliper models. Likewise, do not use parts from dual caliper repair kits (11/16 inch bore) on single caliper models. Using incorrect parts can cause brake failure, which could result in death or serious injury. (00278a)

CAUTION

D.O.T. 4 brake fluid will damage painted and body panel surfaces it comes in contact with. Always use caution and protect surfaces from spills whenever brake work is performed. Failure to comply can result in cosmetic damage. (00239b)

NOTE

If D.O.T. 4 brake fluid contacts painted surfaces, IMMEDIATELY flush area with clear water.

INSPECTION

1. Check the level of fluid in the front brake reservoir. If it is low, refill and bleed brake system. See 1.8 BLEEDING HYDRAULIC BRAKE SYSTEM.
2. Check for fluid leaks in the brake line, around banjo fittings or front brake caliper pistons or bleeder valve. Repair and bleed brake system.
   a. For brake line replacement procedure, see 2.17 BRAKE LINES.
   b. To repair front brake caliper, see procedure in 2.10 FRONT BRAKE CALIPER: XL MODELS or 2.11 FRONT BRAKE CALIPER: XR MODELS.
   c. See 1.8 BLEEDING HYDRAULIC BRAKE SYSTEM for hydraulic brake system bleeding procedure.
3. Check front brake friction pads and disc(s) for excessive wear or damage. Replace worn or damaged items.
   a. See 1.9 BRAKE PADS AND DISCS: XL MODELS or1.10 BRAKE PADS AND DISCS: XR MODELS for specifications and brake pad replacement procedure.
   b. See 2.4 WHEELS for brake disc replacement procedure.
4. Eliminate any air in the hydraulic brake assembly by bleeding the system. See 1.8 BLEEDING HYDRAULIC BRAKE SYSTEM.

If none of these conditions exist but the front brake system does not operate properly, the front brake master cylinder is most likely defective and must be repaired or replaced.

REMOVAL

1. See Figure 2-43. Loosen turn signal clamp screw (3) and remove turn signal assembly (5) from front brake master cylinder housing (1).
2. Loosen and remove lock nut and washer (4), and lift mirror (2) from master cylinder housing.

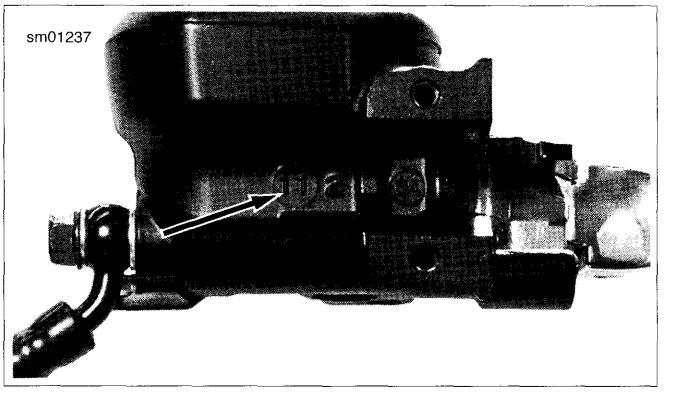

Figure 2-42. Verifying Front Brake Master Cylinder Bore Size (Single Disc Master Cylinder Shown)

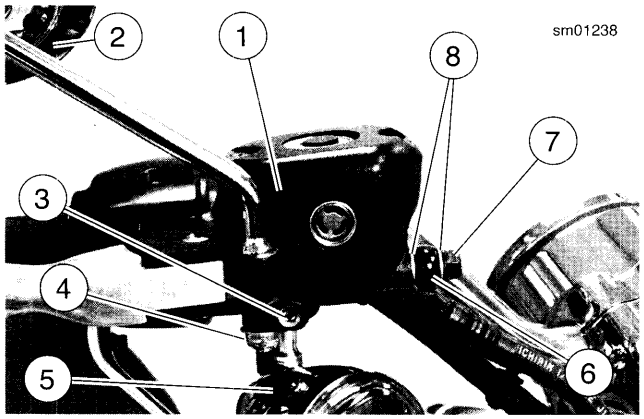

1. Front brake master cylinder and reservoir
2. Mirror
3. Turn signal clamp screw
4. Lock nut and washer
5. Turn signal assembly
6. Front brake banjo fitting
7. Banjo bolt
8. Washer (2)

Figure 2-43. Front Brake Master Cylinder (typical: XL model shown)

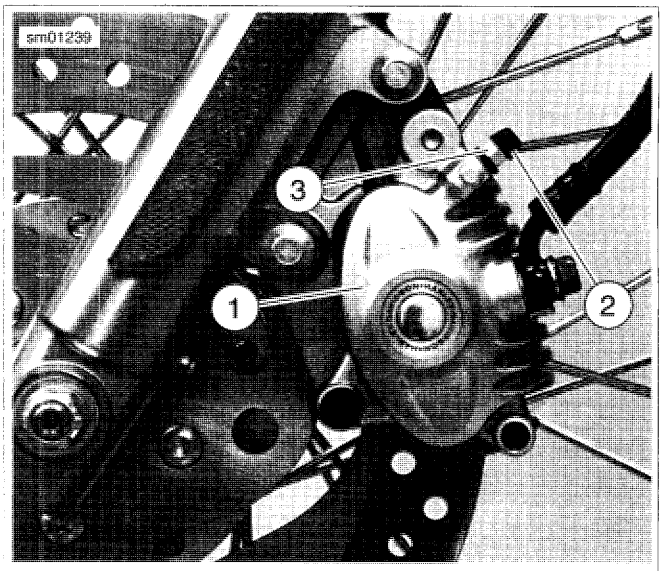

1. Front brake caliper
2. Bleeder nipple cap
3. Bleeder valve

Figure 2-44. Front Caliper Bleeder Valve (typical; XL shown)

⚠CAUTION

Direct contact of D.O.T. 4 brake fluid with eyes can cause irritation. Avoid eye contact. In case of eye contact flush with large amounts of water and get medical attention. Swallowing large amounts of D.O.T. 4 brake fluid can cause digestive discomfort. If swallowed, obtain medical attention. Use in well ventilated area. KEEP OUT OF REACH OF CHILDREN. (00240a)

3. See Figure 2-44. See Figure 2-45. Remove bleeder nipple cap (2) from bleeder valve (3) on front brake caliper (1). Install end of a length of 5/16 in. (7.9 mm) I.D. clear plastic tubing over caliper bleeder valve (3), while placing free end in a suitable container. Open bleeder valve about 1/2 turn. Pump brake hand lever several times to drain brake fluid. Close bleeder valve.

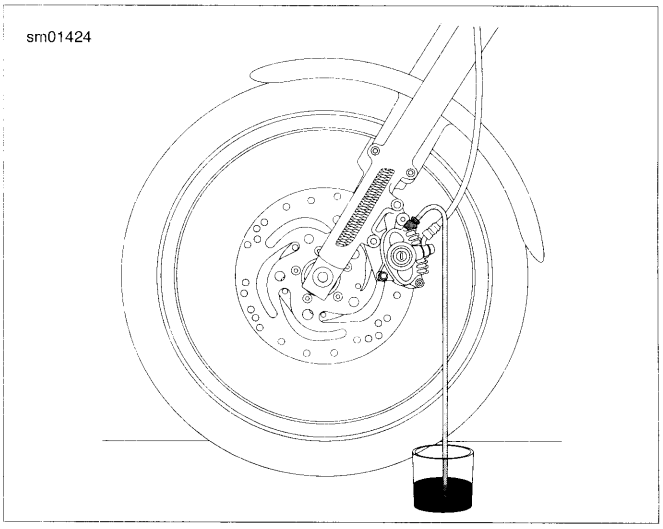

Figure 2-45. Bleeding Hydraulic System (typical; XL model shown)

4. See Figure 2-43. Remove banjo bolt (7) and two washers (8) to disconnect hydraulic brake line banjo fitting (6) from master cylinder (1). Discard washers.
5. See Figure 2-46. Squeeze front brake lever and place a 5/32 in. (4 mm) thick cardboard insert between brake lever and lever bracket. Release brake lever.

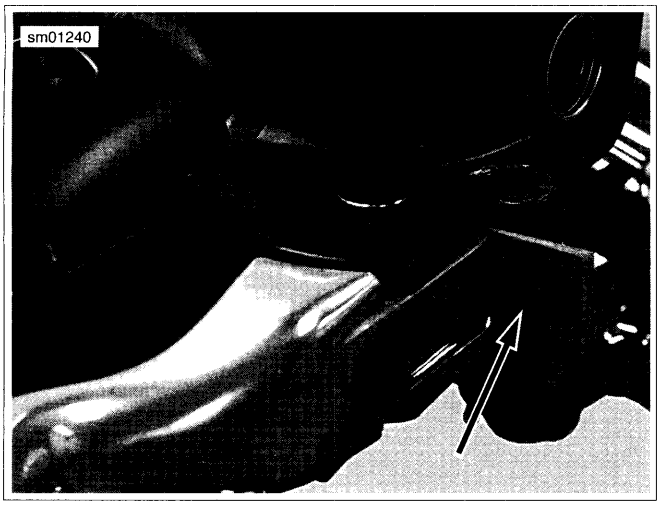

Figure 2-46. Install Cardboard Insert Before Removing Master Cylinder Assembly

CAUTION

Do not remove or install the master cylinder assembly without first positioning a 5/32-inch (4 mm) thick insert between the brake lever and lever bracket. Removing or installing the master cylinder assembly without the insert in place may result in damage to the rubber boot and plunger on the front stoplight switch. (00324a)

NOTE

Use the eyelet of an ordinary cable strap if the cardboard insert is not available.

6. See Figure 2-47. Using a T-27 TORX drive head, remove the two screws (6) and washers (7) securing the handlebar clamp (8) to the master cylinder housing (5). Remove the brake lever/master cylinder assembly and clamp from the handlebar.

DISASSEMBLY

⚠WARNING

Wear safety glasses or goggles when removing or installing retaining rings. Retaining rings can slip from the pliers and could be propelled with enough force to cause serious eye injury. (00312a)

NOTE

Use correct retaining ring pliers and correct tips. Verify that tips are not excessively worn or damaged.

1. See Figure 2-47. Remove retaining ring (17) from pivot pin (9) groove at bottom of master cylinder bracket. Discard retaining ring.
2. Remove pivot pin and brake hand lever (18) from master cylinder assembly.
3. Remove and discard dust boot (16).

NOTE

See Figure 2-48. Clamp front brake master cylinder in a vise by the mirror mounting boss only. Use brass or aluminum jaw covers or other protective device on vise jaws to prevent damage to master cylinder.

4. See Figure 2-48. Clamp master cylinder in a vise so that banjo fitting hole is pointing straight down.

⚠WARNING

Wear safety glasses or goggles when removing or installing retaining rings. Retaining rings can slip from the pliers and could be propelled with enough force to cause serious eye injury. (00312a)

NOTE

Use correct retaining ring pliers and correct tips. Verify that tips are not excessively worn or damaged.

5. See Figure 2-47. Press down on end of piston and remove retaining ring (15). Discard retaining ring.
6. **Single disc piston assembly:** remove stop plate (22).
7. Remove and discard piston assembly (12, 13, 14) and piston spring (11).

NOTES

- *See Figure 2-47. Both primary (12) and secondary (13) cups are fitted into grooves in the piston body (14). The piston spring (11) fits onto the end of the piston.*
- *To prevent dirt and other contaminants from entering the master cylinder reservoir, thoroughly clean the cover before removal*

8. Remove two screws (1), cover (2), diaphragm plate (3) and diaphragm (4) from the master cylinder reservoir.

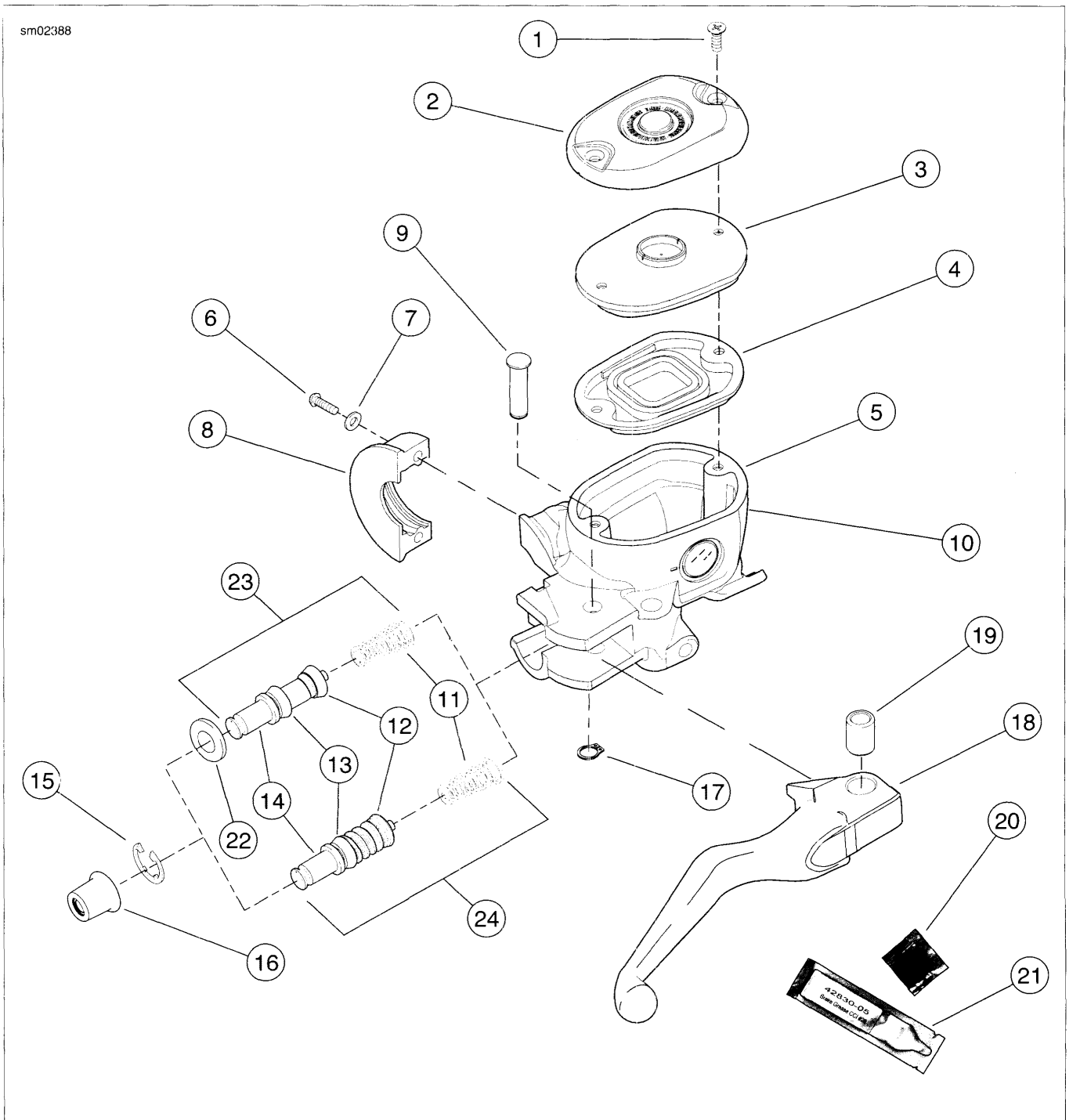

1. Screw (2)
2. Reservoir cover
3. Diaphragm plate
4. Diaphragm
5. Master cylinder housing
6. Screw (2)
7. Washer (2)
8. Handlebar clamp
9. Pivot pin
10. Brake line banjo fitting seating surface
11. Spring*
12. Primary cup*
13. Secondary cup*
14. Piston*
15. Retaining ring*
16. Dust boot*
17. Retaining ring
18. Brake hand lever
19. Bushing
20. G40M brake grease*
21. CCI #20 brake grease*
22. Stop plate (single disc piston only)*
23. Single disc piston assembly
24. Dual disc piston assembly

Figure 2-47. Front Brake Master Cylinder Assembly (*Provided in Service Parts Kit)

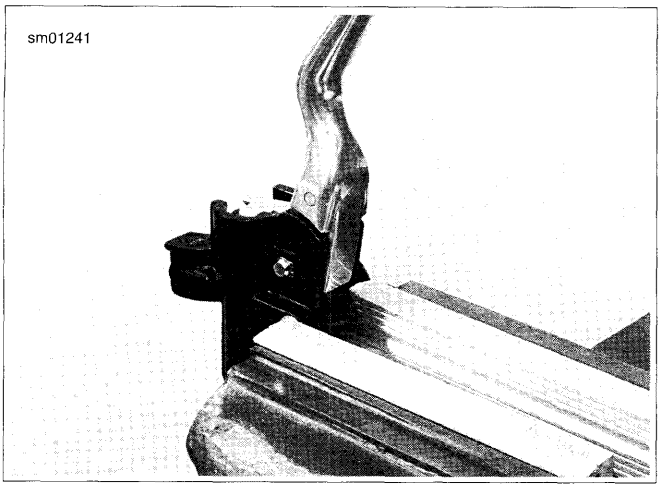

Figure 2-48. Clamping Front Master Cylinder

CLEANING, INSPECTION AND REPAIR

⚠WARNING

Compressed air can pierce the skin and flying debris from compressed air could cause serious eye injury. Wear safety glasses when working with compressed air. Never use your hand to check for air leaks or to determine air flow rates. (00061a)

1. Clean all brake system components with denatured alcohol. Do not contaminate with mineral oil or other solvents. Wipe dry with a clean, lint free cloth. Blow out drilled passages and piston bore with low pressure compressed air from a clean air supply. Do not use a wire or similar instrument to clean drilled passages in bottom of reservoir.

⚠WARNING

Use denatured alcohol to clean brake system components. Do not use mineral-based solvents (such as gasoline or paint thinner), which will deteriorate rubber parts even after assembly. Deterioration of these components can cause brake failure, which could result in death or serious injury. (00291a)

2. Carefully inspect all parts for wear or damage and replace as necessary.
   a. Inspect the piston bore in the master cylinder housing for scoring, pitting or corrosion. Replace the housing if any of these conditions are found.
   b. Inspect the outlet port that mates with the brake line banjo fitting. This is a critical sealing surface. Replace the housing if you find any scratches, dents or other damage.
   c. Inspect diaphragm for cuts, tears or general deterioration. Replace if necessary.

ASSEMBLY

⚠WARNING

Do not use parts from single caliper repair kits (9/16 inch bore) on dual caliper models. Likewise, do not use parts from dual caliper repair kits (11/16 inch bore) on single caliper models. Using incorrect parts can cause brake failure, which could result in death or serious injury. (00278a)

NOTES

- *Always reassemble the master cylinder using new parts from the correct service repair kit.*
- *CCI #20 BRAKE GREASE is recommended for lubrication of cylinder bore, cups and seals prior to assembly.*
- *See Figure 2-48. Clamp front brake master cylinder in a vise by the mirror mounting boss only. Use brass or aluminum jaw covers or other protective device on vise jaws to prevent damage to master cylinder.*

1. See Figure 2-48. Clamp master cylinder in a vise so that banjo fitting hole is pointing straight down.
2. See Figure 2-47. Coat piston bore of master cylinder housing (5), piston (14), primary cup (12) and secondary cup (13) with CCI #20 BRAKE GREASE (21) supplied in the service parts kit.
3. See Figure 2-49. Install piston assembly into master cylinder.
   a. Press small end of piston spring (4) onto mounting boss (6) on piston (1).
   b. Slide piston/spring assembly, flared end of spring first, into master cylinder bore so that spring seats against counter bore (recess) at bottom of cylinder.
   c. **Single disc piston:** Slide stop plate (7) down over end of piston.

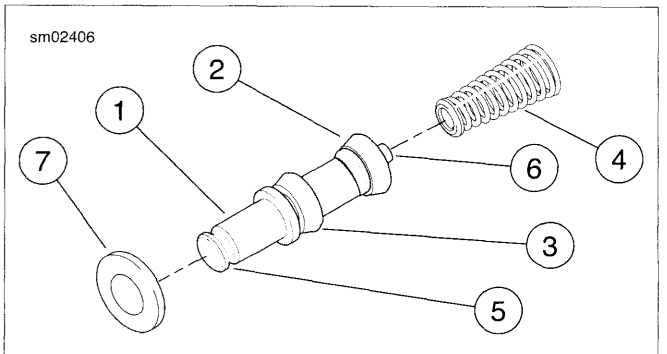

1. **Piston**
2. **Primary cup**
3. **Secondary cup**
4. **Piston spring**
5. **Dust boot groove**
6. **Piston spring mounting boss**
7. **Stop plate (single disc piston only)**

Figure 2-49. Front Brake Master Cylinder Piston (Typical-Single Disc Piston Shown)

⚠WARNING

Wear safety glasses or goggles when removing or installing retaining rings. Retaining rings can slip from the pliers and could be propelled with enough force to cause serious eye injury. (00312a)

NOTE

Use correct retaining ring pliers and correct tips. Verify that tips are not excessively worn or damaged.

4. See Figure 2-47.
   a. **Dual disc master cylinder:** Press down on piston (14) and install **new** retaining ring (15). Verify that retaining ring is fully seated in groove.
   b. **Single disc master cylinder:** Press down on piston (14) and stop plate (22), and install **new** retaining ring (15). Verify that retaining ring is fully seated in groove.
5. Install **new** dust boot (16). Large lip of dust boot fits down inside end of piston bore. Small lip of dust boot fits into groove in end of piston (item 5, Figure 2-49).
6. Apply approximately 0.1 g G40M BRAKE GREASE (from service parts kit) to each of the following two locations:
   a. Pivot hole in brake hand lever (18).
   b. End of piston (14).
7. Align hole in brake hand lever with hole in master cylinder bracket. From top of assembly, slide pivot pin (9) through bracket and hand lever.

⚠WARNING

Wear safety glasses or goggles when removing or installing retaining rings. Retaining rings can slip from the pliers and could be propelled with enough force to cause serious eye injury. (00312a)

NOTE

Use correct retaining ring pliers and correct tips. Verify that tips are not excessively worn or damaged.

8. Install **new** retaining ring (17) in pivot pin groove. Verify that retaining ring is fully seated in groove.
9. Remove master cylinder assembly from vise. Install cover (2), diaphragm plate (3) and diaphragm (4) on master cylinder reservoir. Install two screws (1) to fasten cover to reservoir, but do not tighten at this time.
10. See Figure 2-50. Squeeze front brake lever and place a 5/32 in. (4 mm) thick cardboard insert between brake lever and lever bracket. Release brake lever.

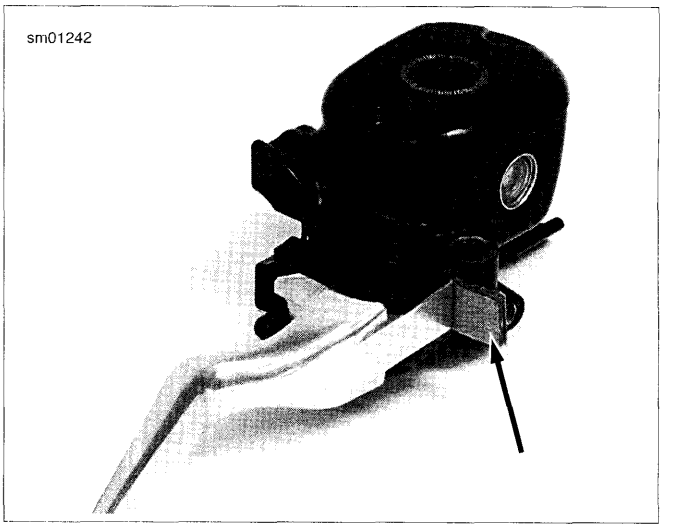

Figure 2-50. Install 5/32 in. (4 mm) Cardboard Insert Before Installing Master Cylinder Assembly

INSTALLATION

CAUTION

Do not remove or install the master cylinder assembly without first positioning a 5/32-inch (4 mm) thick insert between the brake lever and lever bracket. Removing or installing the master cylinder assembly without the insert in place may result in damage to the rubber boot and plunger on the front stoplight switch. (00324a)

1. See Figure 2-51. Position brake lever/master cylinder assembly inboard of switch housing assembly (1) engaging tab (5) on lower switch housing in slot (4) at top of brake lever bracket (3).
2. See Figure 2-47. Align holes in handlebar clamp (8) with those in master cylinder housing (5) and start two screws (6) with washers (7). Beginning with top screw, tighten screws to 108-132 **in-lbs** (12.2-14.9 Nm) using a T27 TORX drive head.

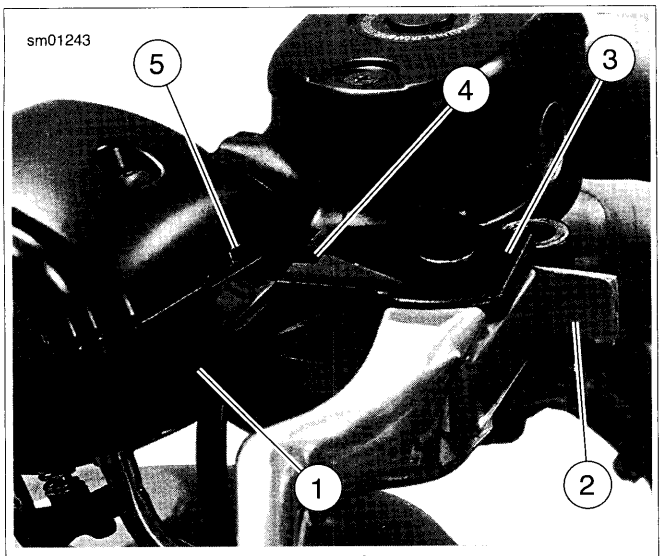

1. Switch housing assembly
2. 5/32 in. (4 mm) cardboard insert
3. Brake lever bracket
4. Slot
5. Tab

Figure 2-51. Fitting Brake Lever/Master Cylinder To Right Handlebar Switch Housing

CAUTION

Avoid leakage. Be sure gaskets, banjo bolt(s), brake line and master cylinder bore are clean and undamaged before assembly. (00322a)

NOTE

Master cylinder housings have various positive stops for banjo fittings, based on the model being repaired. The front brake systems as used on XR models and XL models employ different master cylinder housings as shown in Figure 2-52. Never intermix system components. When tightening the banjo bolt in the next step, ensure the banjo fitting is properly oriented and contacts the positive stop.

3. See Figure 2-53. Position a **new** washer (8) on each side of hydraulic brake line banjo fitting (6). Insert banjo bolt (7) through washers and fitting. Thread bolt into master cylinder housing. Tighten to 20-25 ft-lbs (27.1-33.9 Nm).

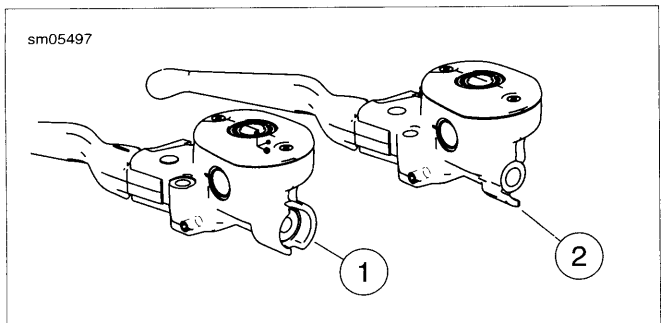

1. XR Models master cylinder
2. XL Models master cylinder

Figure 2-52. Front Brake Master Cylinder Identification

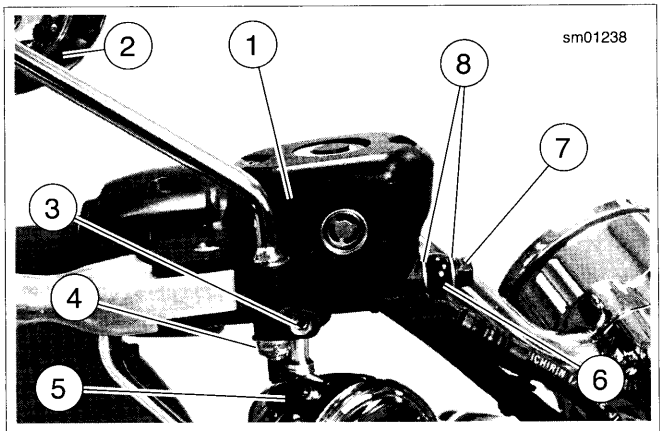

1. Front brake master cylinder and reservoir
2. Mirror
3. Turn signal clamp screw
4. Lock nut and washer
5. Turn signal assembly
6. Front brake banjo fitting
7. Banjo bolt
8. Washer (2)

Figure 2-53. Front Brake Master Cylinder (typical: XL model shown)

4. Position motorcycle so that top of master cylinder reservoir is level. See Figure 2-47. Remove two screws (1), front master cylinder reservoir cover (2), diaphragm plate (3) and diaphragm (4).

⚠CAUTION

Direct contact of D.O.T. 4 brake fluid with eyes can cause irritation. Avoid eye contact. In case of eye contact flush with large amounts of water and get medical attention. Swallowing large amounts of D.O.T. 4 brake fluid can cause digestive discomfort. If swallowed, obtain medical attention. Use in well ventilated area. KEEP OUT OF REACH OF CHILDREN. (00240a)

CAUTION

D.O.T. 4 brake fluid will damage painted and body panel surfaces it comes in contact with. Always use caution and protect surfaces from spills whenever brake work is performed. Failure to comply can result in cosmetic damage. (00239b)

NOTES

- *If D.O.T. 4 brake fluid contacts painted surfaces, IMMEDIATELY flush area with clear water.*
- *Cover handlebar switches with a shop towel before adding brake fluid to front master cylinder reservoir. Spilling brake fluid on handlebar switches may render them inoperative.*
- *See Figure 2-54. Do not use sight glass (2) to determine maximum fluid level. Sight glass should only be used as a visual indicator that fluid level is low and needs attention.*

A ridge (1) is cast into the inside of the reservoir to assist you in determining the correct maximum fluid level.

- *Fill master cylinder only with HARLEY-DAVIDSON D.O.T. 4 BRAKE FLUID from a sealed container.*
- *Do not overfill reservoir. Do not reuse old brake fluid.*

5. See Figure 2-54. Add enough HARLEY-DAVIDSON D.O.T. 4 BRAKE FLUID to reservoir to bring fluid level even with ridge (1) cast into inside of reservoir, about 1/4 in. (6.35 mm) below top edge.

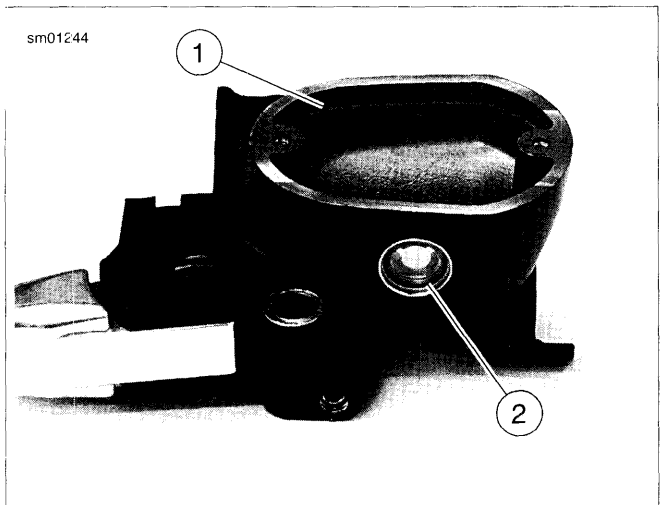

1. **Cast-in ridge**
2. **Sight glass**

Figure 2-54. Filling Front Master Cylinder Reservoir

⚠WARNING

A plugged or covered relief port can cause brake drag or lock-up, which could lead to loss of control, resulting in death or serious injury. (00288a)

6. Verify proper operation of master cylinder relief port. Slowly actuate brake hand lever with reservoir cover removed. A slight spurt of fluid will break fluid surface in reservoir compartment if all internal components are working properly.

7. See Figure 2-55. Install length of 5/16 in. (7.9 mm) I.D. clear plastic tubing over front brake caliper bleeder valve (3). Place free end of tube in a clean container.

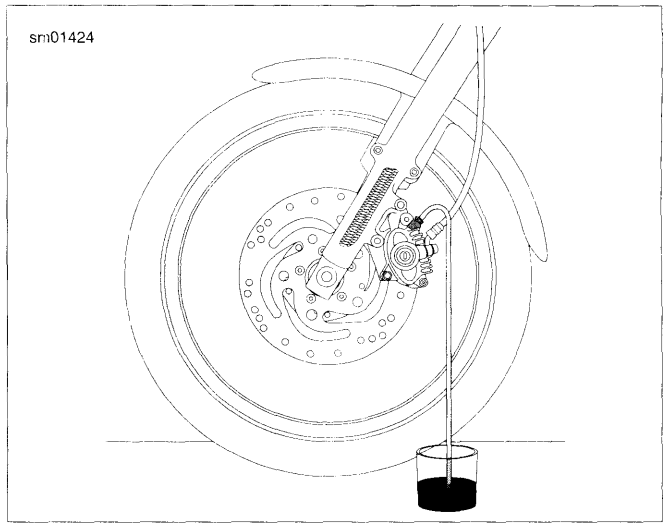

Figure 2-55. Bleeding Hydraulic System (typical; XL model shown)

8. See Figure 2-54. Add enough HARLEY-DAVIDSON D.O.T. 4 BRAKE FLUID to reservoir to bring fluid level even with ridge cast into inside of reservoir, about 1/4 in. (6.35 mm) below top edge.

9. Depress and hold brake hand lever to build up hydraulic pressure.

10. Open front caliper bleeder valve about 1/2-turn. Brake fluid will flow from bleeder valve through tubing. Close bleeder valve when brake hand lever has moved approximately 1/2 to 3/4 of its full range of travel. Allow brake hand lever to return slowly to its released position.

11. Repeat three previous steps until all air bubbles are purged.

12. Final tighten bleeder valve to 35-61 **in-lbs** (4.0-6.9 Nm). Install bleeder nipple cap.

NOTE

On models with two front brake calipers, repeat steps 7-12 on second caliper.

13. See Figure 2-54. Add enough HARLEY-DAVIDSON D.O.T. 4 BRAKE FLUID to reservoir to bring fluid level even with ridge (1) cast into inside of reservoir, about 1/4 in. (6.35 mm) below top edge.

14. See Figure 2-47. Note that angular shape of master cylinder cover (2) makes one side thicker than the other. Install cover with diaphragm plate (3) and diaphragm (4) on master cylinder housing (5) so that thicker side is positioned above brake line banjo fitting. Fasten cover to reservoir with two screws (1). Tighten to 9-17 **in-lbs** (1.0-2.0 Nm).

15. See Figure 2-53. Install mirror (2), secure with lock nut and washer (4). Position mirror for best rearward visibility. Tighten lock nut to 96-144 **in-lbs** (10.9-16.3 Nm).

16. Install turn signal assembly (5). Position so turn signal lens faces directly forward and turn signal does not strike fuel tank when handlebars are turned full right. Tighten clamp screw (3) to 96-120 **in-lbs** (10.9-13.6 Nm).

17. With Ignition/Light Key Switch turned to IGNITION, actuate front brake hand lever to verify operation of rear brake lamp.

⚠WARNING

After repairing the brake system, test brakes at low speed. If brakes are not operating properly, testing at high speeds can cause loss of control, which could result in death or serious injury. (00289a)

18. Test ride motorcycle at low speed. If brake feels spongy, repeat bleeding procedure.

REMOVAL

NOTE

If only replacing brake pads, do not remove front brake caliper(s). For brake pad replacement only, see 1.9 BRAKE PADS AND DISCS: XL MODELS.

⚠CAUTION

Direct contact of D.O.T. 4 brake fluid with eyes can cause irritation. Avoid eye contact. In case of eye contact flush with large amounts of water and get medical attention. Swallowing large amounts of D.O.T. 4 brake fluid can cause digestive discomfort. If swallowed, obtain medical attention. Use in well ventilated area. KEEP OUT OF REACH OF CHILDREN. (00240a)

NOTE

Damaged banjo bolt surfaces will leak when reassembled. Prevent damage to seating surfaces by carefully removing brake line components.

CAUTION

D.O.T. 4 brake fluid will damage painted and body panel surfaces it comes in contact with. Always use caution and protect surfaces from spills whenever brake work is performed. Failure to comply can result in cosmetic damage. (00239b)

NOTE

If D.O.T. 4 brake fluid contacts painted surfaces, IMMEDIATELY flush area with clear water.

1. See Figure 2-56. Remove bleeder nipple cap (9) from bleeder valve (8) on front brake caliper (4).
2. See Figure 2-57. Install end of a length of 5/16 in. (7.9 mm) I.D. clear plastic tubing over caliper bleeder valve, while placing free end in a suitable container. Open bleeder valve about 1/2 turn. Pump brake hand lever repeatedly to drain brake fluid. Close bleeder valve.
3. See Figure 2-56. Remove the banjo bolt (1) and both washers (2) to detach front brake line (3) from caliper (4). Discard washers.
4. Remove pad pin plug (7).
5. See Figure 2-58. Loosen, but do not remove, brake pad pin.
6. See Figure 2-56. Remove both mounting bolts (6) (12 pt/10 mm). Pull caliper and mounting bracket assembly rearward to disengage from brake disc.

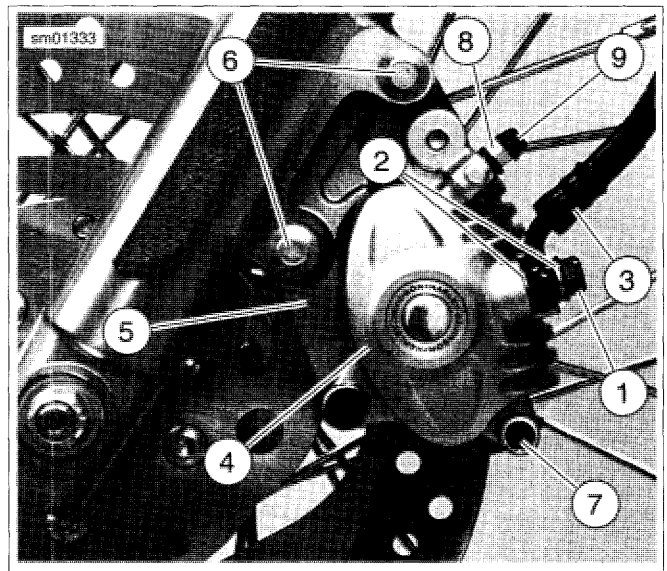

1. **Banjo bolt**
2. **Washer (2)**
3. **Front brake line**
4. **Brake caliper**
5. **Caliper mounting bracket**
6. **Mounting bolt (2) (12 pt/10 mm)**
7. **Pad pin plug**
8. **Bleeder valve**
9. **Bleeder nipple cap**

Figure 2-56. Front Caliper Assembly

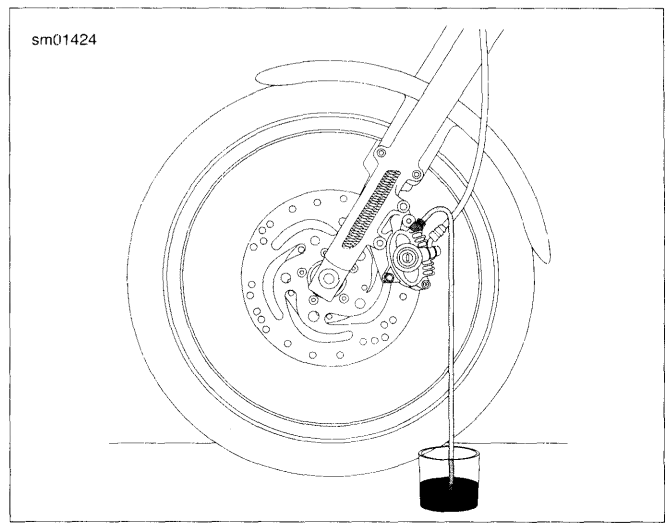

Figure 2-57. Bleeding Hydraulic System (typical; XL model shown)

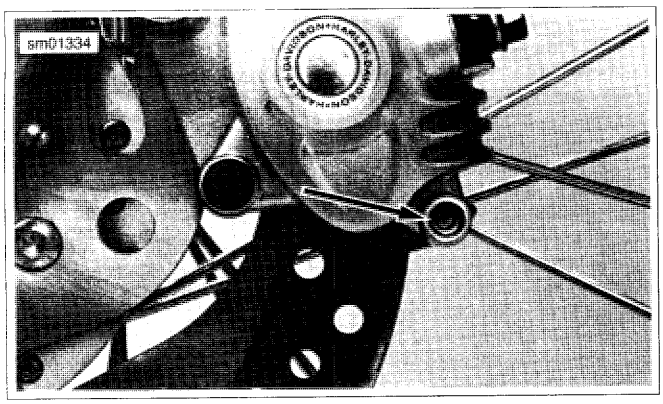

Figure 2-58. Brake Pad Pin (Plug Removed)

DISASSEMBLY

1. See Figure 2-59. Remove brake pad pin (14) and brake pads (8) from caliper body (15).
2. Slide brake caliper off mounting bracket (1).
3. Remove pad spring (16). Do not remove bleeder valve (10) at this time.
4. See Figure 2-60. Install a discarded brake pad in the caliper (1) with the backing plate (4) facing the pistons. Position the brake pad so the friction material (3) is against the back of the caliper, as shown.
5. Loosely install brake pad pin (2) to hold brake pad in place.

⚠WARNING

Compressed air can pierce the skin and flying debris from compressed air could cause serious eye injury. Wear safety glasses when working with compressed air. Never use your hand to check for air leaks or to determine air flow rates. (00061a)

NOTE

Be careful not to damage banjo bolt sealing surface or threads of banjo bolt hole in brake caliper. It is recommended that you use an air nozzle with a rubber tip to perform the next step in this procedure.

⚠CAUTION

When removing piston with compressed air, piston can develop considerable force and fly out of caliper bore. Keep hands away from piston to avoid possible injury. (00530b)

6. See Figure 2-61. Gently apply low pressure compressed air to banjo bolt hole (3) to force pistons from caliper bores.
7. Remove brake pad pin and brake pad.
8. See Figure 2-59. Remove both pistons (17) from caliper bores by hand. If necessary, wiggle pistons gently to completely remove.

NOTE

Damaged piston bores will leak when reassembled. Do not use metal objects to remove or install objects from piston bores. Prevent damage to pistons, seals and bores by only using a wooden toothpick when servicing calipers.

9. See Figure 2-62. Using a wooden toothpick (1), remove dust seal (2) and piston seal (3) from each caliper bore. Discard seals.
10. See Figure 2-59. If necessary, remove bleeder valve (10).

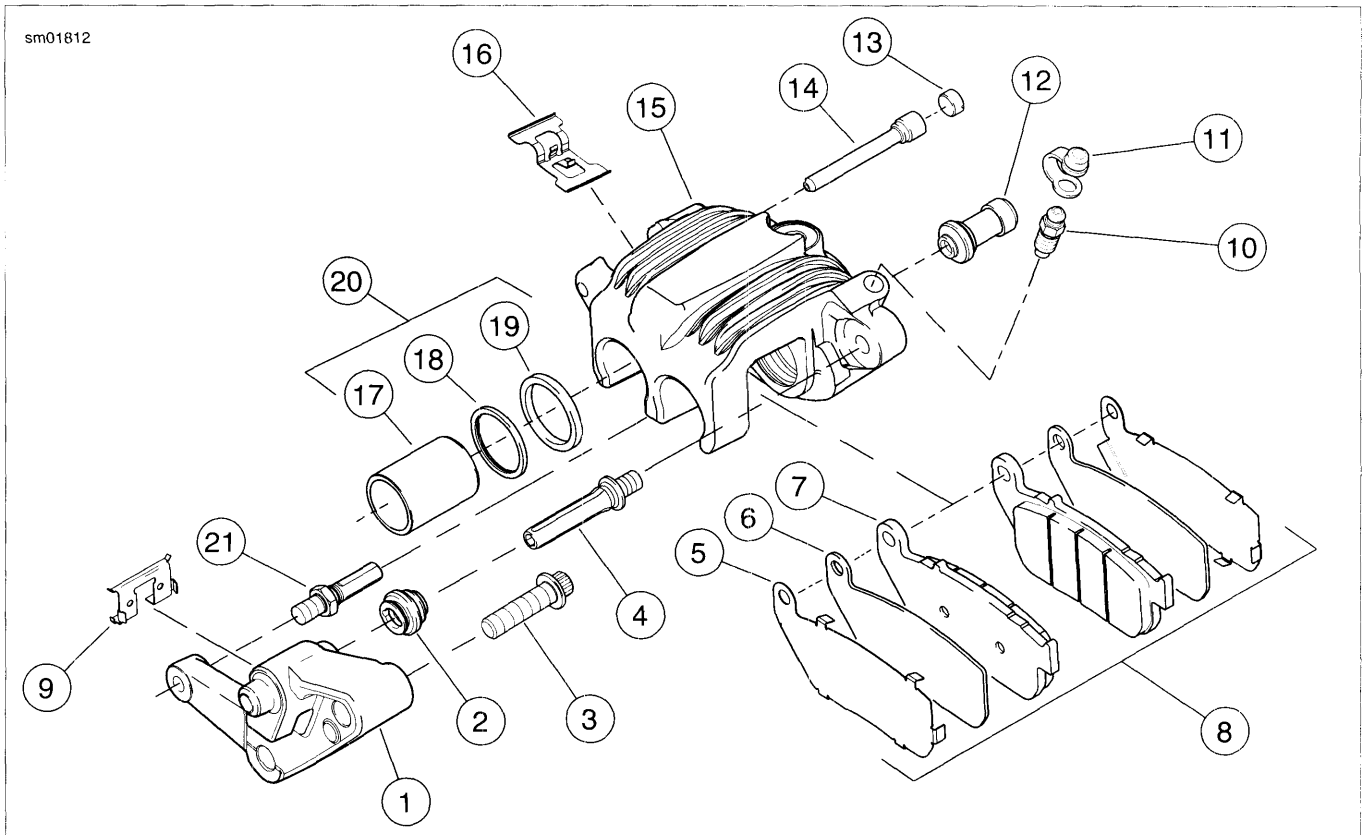

1. Caliper bracket
2. Caliper pin boot
3. Screw (2)
4. Bolt pin (caliper)
5. Pad retainer (2)
6. Insulator (2)
7. Brake pad (2)
8. Brake pad set (includes item 16)
9. Retainer clip (not sold separately)
10. Bleeder valve
11. Bleeder nipple cap
12. Caliper bushing boot
13. Pad pin plug
14. Pad pin
15. Caliper body
16. Pad spring
17. Piston (2)
18. Piston seal (2)
19. Dust seal (2)
20. Piston kit
21. Bolt pin (mounting bracket)

Figure 2-59. Front Brake Caliper Assembly

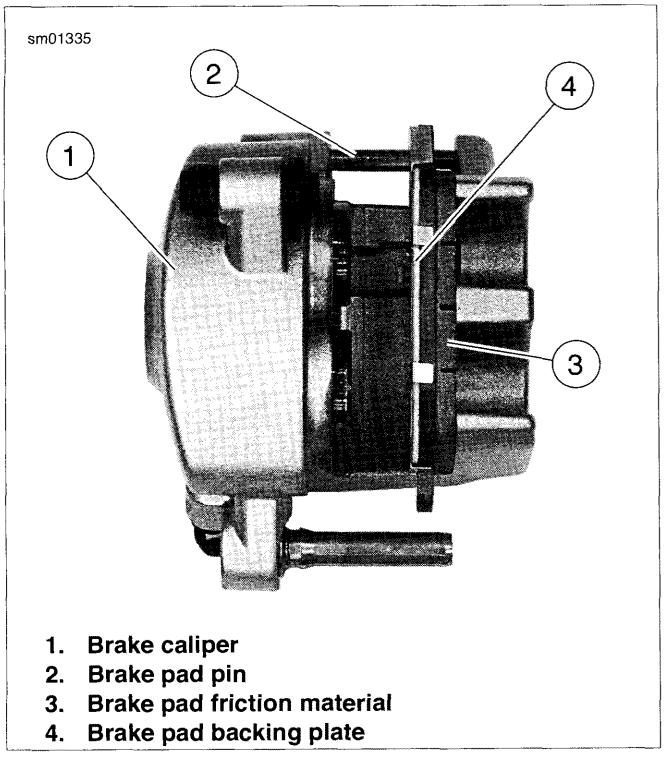

1. Brake caliper
2. Brake pad pin
3. Brake pad friction material
4. Brake pad backing plate

Figure 2-60. Preparing Caliper for Piston Removal

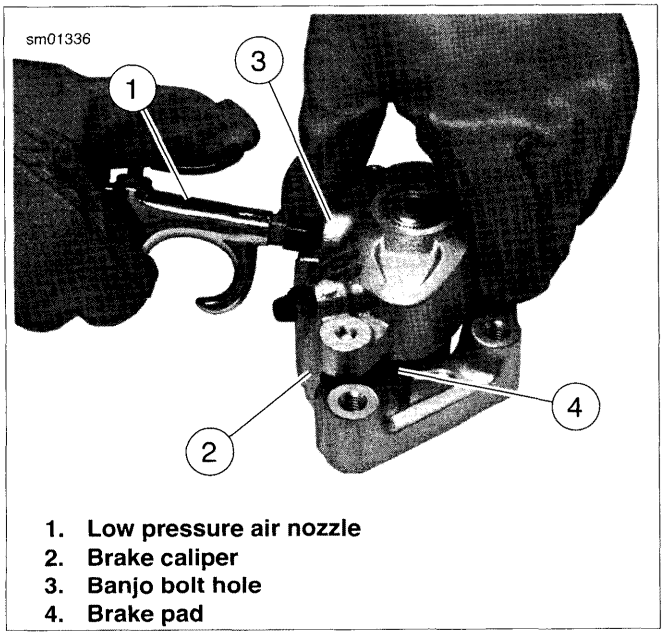

1. Low pressure air nozzle
2. Brake caliper
3. Banjo bolt hole
4. Brake pad

Figure 2-61. Removing Pistons

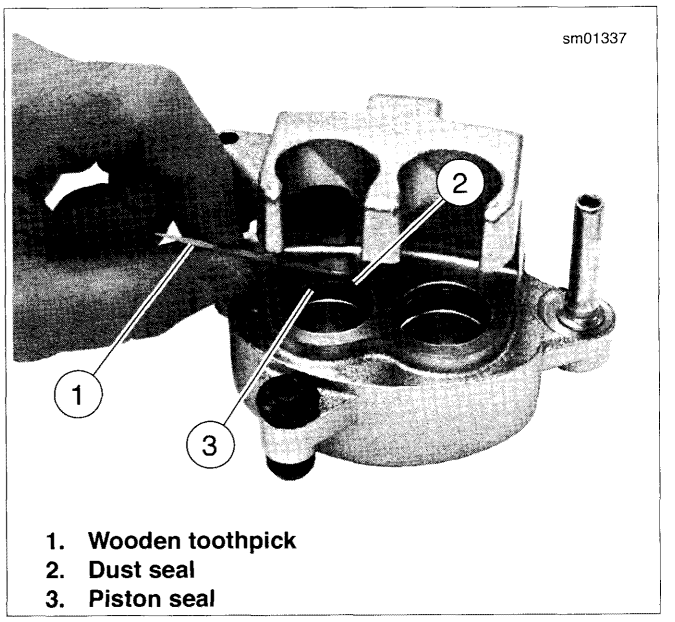

1. Wooden toothpick
2. Dust seal
3. Piston seal

Figure 2-62. Caliper Seals

CLEANING, INSPECTION AND REPAIR

⚠WARNING

Use denatured alcohol to clean brake system components. Do not use mineral-based solvents (such as gasoline or paint thinner), which will deteriorate rubber parts even after assembly. Deterioration of these components can cause brake failure, which could result in death or serious injury. (00291a)

1. See Figure 2-59. Wipe old lubrication from inside of caliper pin boot (2) and caliper bushing boot (12) with a soft, clean cloth.
2. Clean all other rubber parts with HARLEY-DAVIDSON D.O.T. 4 BRAKE FLUID. Do not contaminate with mineral oil or other solvents. Clean all metal parts with denatured alcohol. Wipe parts dry with a clean, lint free cloth.

⚠WARNING

Compressed air can pierce the skin and flying debris from compressed air could cause serious eye injury. Wear safety glasses when working with compressed air. Never use your hand to check for air leaks or to determine air flow rates. (00061a)

3. Blow out drilled passages and piston bore with low pressure compressed air from a clean air supply. Do not use a wire or similar instrument to clean drilled passages.

4. Carefully inspect all components. Replace any parts that appear damaged or worn.
   a. Check pistons (17) for pitting, scratching or corrosion on outside surfaces.
   b. Inspect caliper piston bores. Do not hone bores. If bores show pitting or corrosion, replace caliper.
   c. Inspect pad pin (14) for grooving and wear. Measure the pad pin diameter in an unworn area, and then in the area of any grooving or wear. If wear is more than 0.011 in. (0.28 mm), replace pad pin.
   d. Inspect caliper bolt pin (4). If damaged or excessively worn, replace brake caliper assembly.
   e. Inspect caliper bushing boot and caliper pin boot. If worn or damaged, replace.
   f. Always replace all seals after disassembly.

⚠WARNING

Always replace brake pads in complete sets for correct and safe brake operation. Improper brake operation could result in death or serious injury. (00111a)

5. Inspect brake pads and brake disc. Replace if necessary.
   a. See 1.9 BRAKE PADS AND DISCS: XL MODELS for specifications.
   b. See 2.4 WHEELS for brake disc replacement procedure.

ASSEMBLY

NOTE

Use ONLY KS62F assembly grease for lubrication. Use of D.O.T. 4 brake fluid will result in increased brake lever travel.

1. Lubricate the following parts prior to assembly using a light coat of KS62F assembly grease from the service parts kit. All other surfaces must be dry for assembly.
   a. Nose radius of pistons. See Figure 2-63.
   b. All surfaces of piston seals and dust seals.

NOTE

Damaged piston bores will leak when reassembled. Do not use metal objects to remove or install objects in piston bores. Prevent damage to bores by only using a wooden toothpick when servicing calipers.

2. See Figure 2-62. Install a **new** piston seal (3) and a **new** dust seal (2) into each piston bore.
3. Carefully insert pistons by hand, nose radius first (see Figure 2-63), into caliper bores. If installation shows resistance, remove piston(s) and check that seals are properly installed and fully seated in grooves.
4. See Figure 2-59. Install bleeder valve (10) on caliper housing if removed. Tighten bleeder valve to 35-61 **in-lbs** (4.0-6.9 Nm).
5. See Figure 2-64. Place caliper housing on workbench as shown. Install pad spring in channel. Press firmly into place.

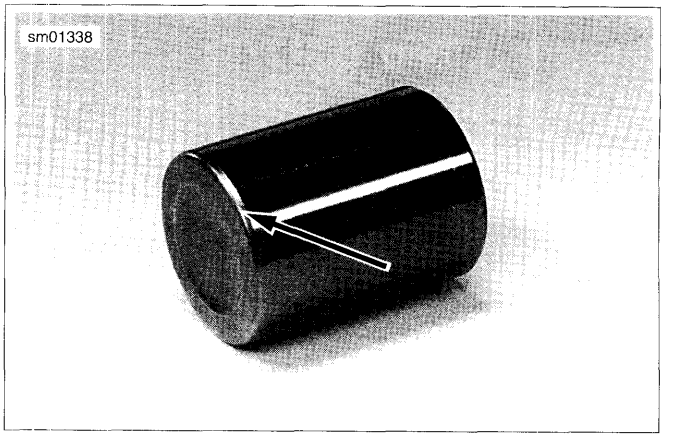

Figure 2-63. Piston Nose Radius

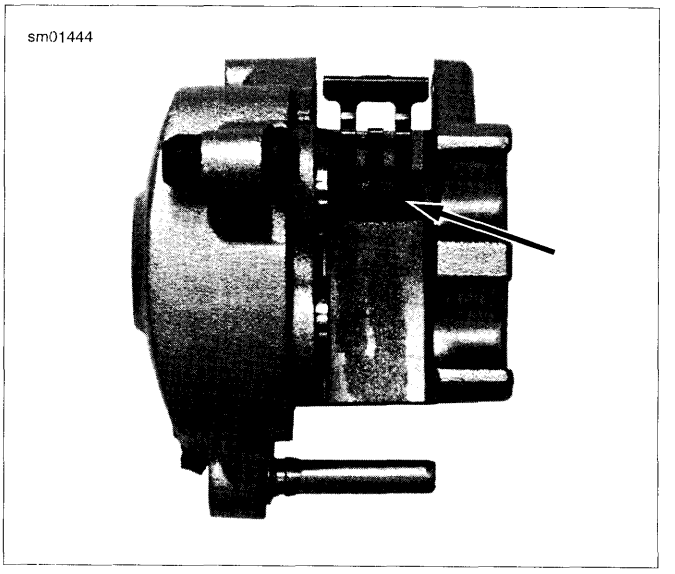

Figure 2-64. Front Caliper Pad Spring

LUBRICATING FRONT CALIPER BOLT PINS AND BOOTS

1. See Figure 2-65. Apply approximately 0.4 g of G40M BRAKE GREASE inside caliper bushing boot (3) and caliper pin boot (4).
2. See Figure 2-66. Apply G40M BRAKE GREASE inside boot lip (8) to prevent sticking between boots (3, 4) and bolt pins (5, 6).
3. Assemble brake caliper and mounting bracket, carefully sliding bolt pins into boots. Slide brake caliper all the way onto mounting bracket until boot lips fit over tapered shoulders (7) of bolt pins.

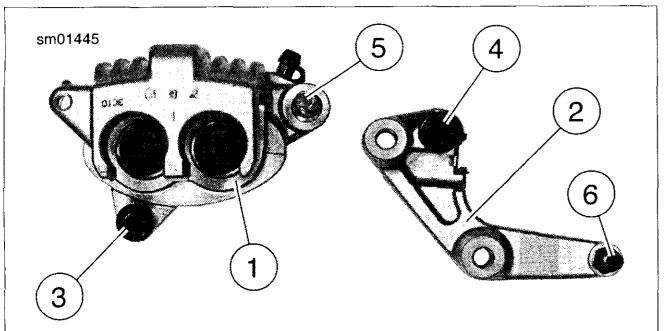

1. **Front brake caliper**
2. **Caliper mounting bracket**
3. **Caliper bushing boot**
4. **Caliper pin boot**
5. **Caliper bolt pin**
6. **Bracket bolt pin**

Figure 2-65. Lubricating Caliper Boots and Pins

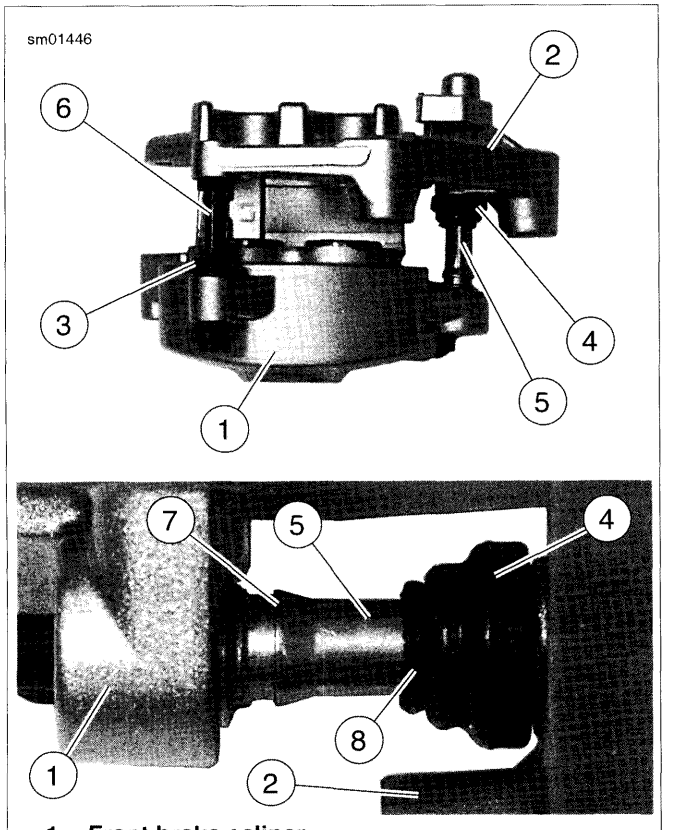

1. **Front brake caliper**
2. **Caliper mounting bracket**
3. **Caliper bushing boot**
4. **Caliper pin boot**
5. **Caliper bolt pin**
6. **Bracket bolt pin**
7. **Tapered shoulder**
8. **Boot lip**

Figure 2-66. Assembling Front Brake Caliper and Mounting Bracket

INSTALLING BRAKE PADS IN CALIPER

NOTE

The front left and front right (not present on all models) calipers do NOT use the same exact brake pad set as the rear brake caliper.

1. See Figure 2-67. Insert one set of brake pads (1) into caliper with friction material on pad facing opening for brake disc. Curved portion of pad fits into recessed area of caliper. Make sure brake pad front mounting tab (2) fits into slot (5) in caliper mounting bracket (4).
2. See Figure 2-59. Press brake pads (8) tightly up against pad spring (16) and install pad pin (14). Tighten to 131-173 **in-lbs** (14.8-19.6 Nm).

NOTE

If pad pin does not fit, check the following:

- *You are using a set of pads, not two identical pads.*
- *Pad spring orientation must match Figure 2-64.*
- *See Figure 2-67. Pad front mounting tabs (2) must be fully seated in mounting bracket slot (5).*
- *Pads must be pushed tight up against pad spring before pad pin is installed.*

3. See Figure 2-59. Install pad pin plug (13). Tighten to 18-25 **in-lbs** (2.0-2.9 Nm).

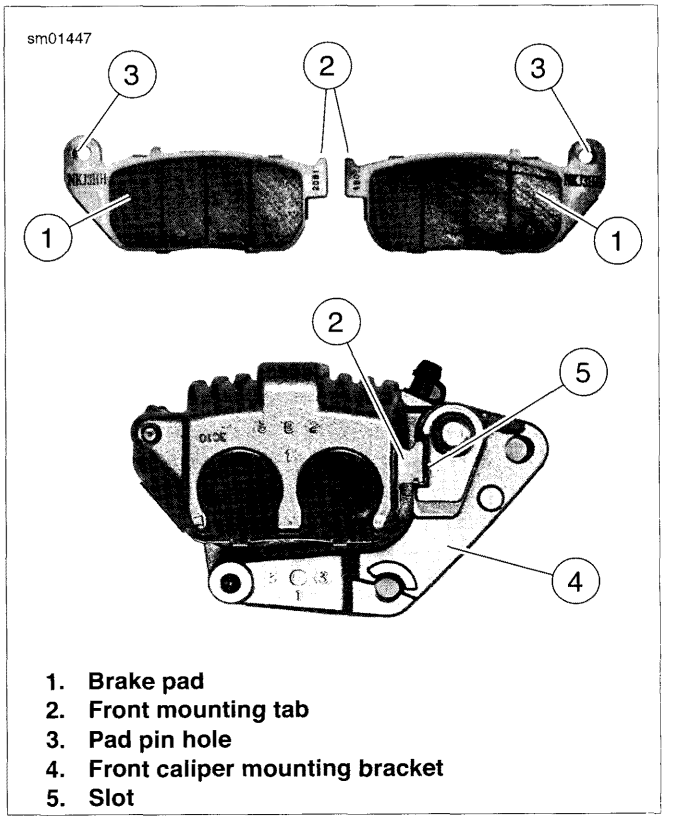

1. **Brake pad**
2. **Front mounting tab**
3. **Pad pin hole**
4. **Front caliper mounting bracket**
5. **Slot**

Figure 2-67. Front Brake Pads

⚠CAUTION

Direct contact of D.O.T. 4 brake fluid with eyes can cause irritation. Avoid eye contact. In case of eye contact flush with large amounts of water and get medical attention. Swallowing large amounts of D.O.T. 4 brake fluid can cause digestive discomfort. If swallowed, obtain medical attention. Use in well ventilated area. KEEP OUT OF REACH OF CHILDREN. (00240a)

CAUTION

D.O.T. 4 brake fluid will damage painted and body panel surfaces it comes in contact with. Always use caution and protect surfaces from spills whenever brake work is performed. Failure to comply can result in cosmetic damage. (00239b)

NOTE

If D.O.T. 4 brake fluid contacts painted surfaces, IMMEDIATELY flush area with clear water.

1. If servicing a vehicle with a single front brake caliper, advance to the next step. On models with dual front brakes, align calipers to brake discs.
   a. Tighten axle nut to 60-65 ft-lbs (81-88 Nm).
   b. Loosen axle pinch screw nut.
   c. Position right fork leg against bearing spacer. Tighten axle pinch screw to 21-27 ft-lbs (28.5-36.6 Nm).
2. See Figure 2-68. Place brake caliper (4) with mounting bracket (5) over brake disc with bleeder valve (8) facing upwards. Install mounting bolts (6) into mounting holes on fork leg. Tighten to 28-38 ft-lbs (38.0-51.6 Nm).

CAUTION

Avoid leakage. Be sure gaskets, banjo bolt(s), brake line and caliper bore are clean and undamaged before assembly. (00321a)

NOTE

Brake caliper housing has a positive stop for banjo fitting. When tightening banjo bolt into brake caliper in the next step, rotate banjo fitting clockwise until it contacts positive stop.

3. Position a **new** washer (2) on each side of hydraulic brake line (3) banjo fitting. Insert banjo bolt (1) through washers and fitting. Thread bolt into caliper housing. Tighten to 20-25 ft-lbs (27.1-33.9 Nm).
4. **Vehicles with dual front brake calipers:** repeat previous two steps for other brake caliper.
5. See Figure 2-69. Remove cover screws (3), top cover (2) and gasket from front brake master cylinder reservoir (1).

NOTES

- *See Figure 2-70. Do not use sight glass to determine maximum fluid level. Sight glass should only be used as a visual indicator that fluid level is low and needs attention.*
- *Cover handlebar switches with a shop towel before adding brake fluid to front master cylinder reservoir. Spilling brake fluid on handlebar switches may render them inoperative.*
- *Use only HARLEY-DAVIDSON D.O.T. 4 BRAKE FLUID from a sealed container.*
- *Do not overfill reservoir. Do not reuse old brake fluid.*

6. See Figure 2-70. Add enough HARLEY-DAVIDSON D.O.T. 4 BRAKE FLUID to reservoir to bring fluid level even with ridge cast into inside of reservoir, about 1/4 in. (6.35 mm) below top edge.

⚠WARNING

After repairing the brake system, test brakes at low speed. If brakes are not operating properly, testing at high speeds can cause loss of control, which could result in death or serious injury. (00289a)

7. Bleed brake system. See 1.8 BLEEDING HYDRAULIC BRAKE SYSTEM.

NOTE

On models with dual front brake calipers, make sure to perform brake system bleeding procedure on both calipers.

⚠WARNING

A plugged or covered relief port can cause brake drag or lock-up, which could lead to loss of control, resulting in death or serious injury. (00288a)

8. Verify proper operation of master cylinder relief port. With motorcycle positioned so that master cylinder reservoir is level, squeeze brake lever slowly with reservoir cover removed. A slight spurt of fluid will break the surface if all internal components are working properly.
9. See Figure 2-70. Add enough HARLEY-DAVIDSON D.O.T. 4 BRAKE FLUID to reservoir to bring fluid level even with ridge cast into inside of reservoir, about 1/4 in. (6.35 mm) below top edge.
10. Install gasket and cover on master cylinder. Tighten cover screws to 9-17 **in-lbs** (1.0-2.0 Nm).

⚠WARNING

After repairing the brake system, test brakes at low speed. If brakes are not operating properly, testing at high speeds can cause loss of control, which could result in death or serious injury. (00289a)

11. Test brake system.
    a. Turn ignition switch ON. Squeeze brake hand lever to verify operation of the brake lamp.
    b. Test ride the motorcycle. If the brakes feel spongy, bleed the system again. See 1.8 BLEEDING HYDRAULIC BRAKE SYSTEM.

NOTE
Avoid making hard stops for the first 100 miles (160 km). This allows the new pads to become conditioned to the brake discs.

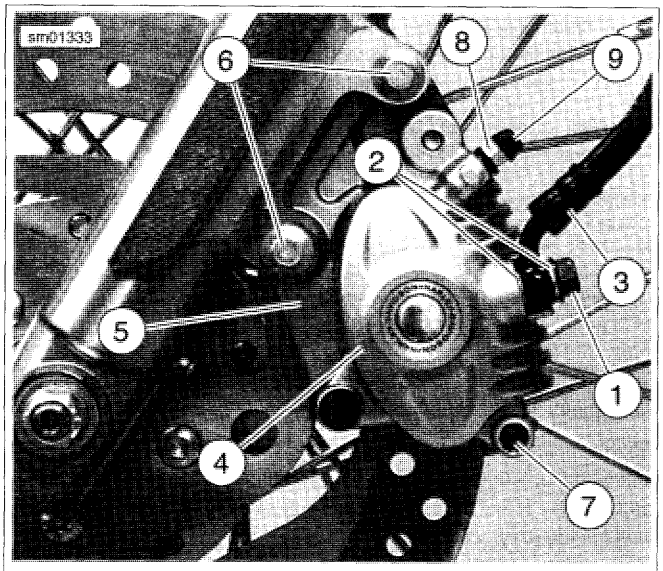

1. Banjo bolt
2. Washer (2)
3. Front brake line
4. Brake caliper
5. Caliper mounting bracket
6. Mounting bolt (2) (12 pt/10 mm)
7. Pad pin plug
8. Bleeder valve
9. Bleeder nipple cap

Figure 2-68. Front Caliper Assembly

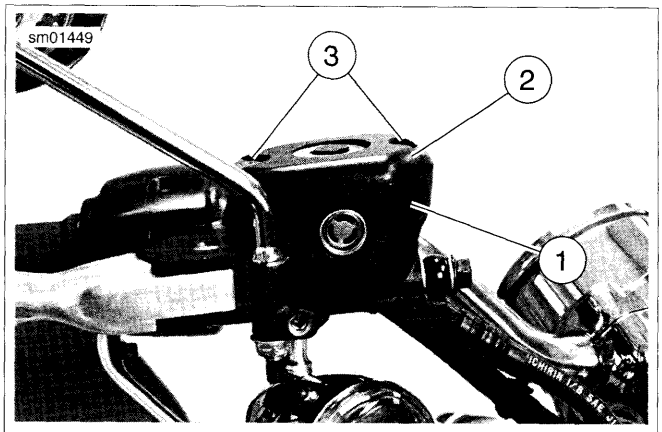

1. Front brake master cylinder and reservoir
2. Top cover
3. Cover screw (2)

Figure 2-69. Removing Master Cylinder Reservoir Cover

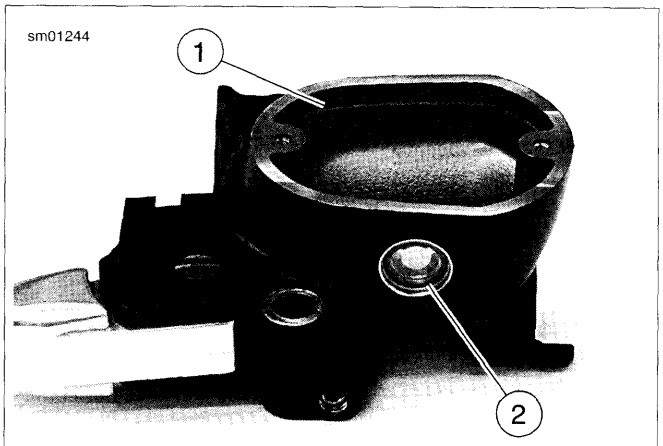

1. Cast-in ridge
2. Sight glass

Figure 2-70. Filling Front Master Cylinder Reservoir

REMOVAL

NOTE

If only replacing brake pads, do not remove front brake caliper(s). For brake pad replacement only, see 1.10 BRAKE PADS AND DISCS: XR MODELS.

⚠CAUTION

Direct contact of D.O.T. 4 brake fluid with eyes can cause irritation. Avoid eye contact. In case of eye contact flush with large amounts of water and get medical attention. Swallowing large amounts of D.O.T. 4 brake fluid can cause digestive discomfort. If swallowed, obtain medical attention. Use in well ventilated area. KEEP OUT OF REACH OF CHILDREN. (00240a)

NOTE

Damaged banjo bolt surfaces will leak when reassembled. Prevent damage to seating surfaces by carefully removing brake line components.

CAUTION

D.O.T. 4 brake fluid will damage painted and body panel surfaces it comes in contact with. Always use caution and protect surfaces from spills whenever brake work is performed. Failure to comply can result in cosmetic damage. (00239b)

NOTE

If D.O.T. 4 brake fluid contacts painted surfaces, IMMEDIATELY flush area with clear water.

1. See Figure 2-71. Remove bleeder nipple cap from bleeder valve (1) on front brake caliper.
2. See Figure 2-72. Install end of a length of 5/16 in. (7.9 mm) I.D. clear plastic tubing over caliper bleeder valve, while placing free end in a suitable container. Open bleeder valve about 1/2 turn. Pump brake hand lever repeatedly to drain brake fluid. Close bleeder valve.
3. See Figure 2-71. Remove the banjo bolt (2) (metric) and both washers (3) to detach front brake line from caliper. Discard washers.
4. Remove both mounting bolts (4) (metric). Pull caliper assembly rearward to remove from brake disc.

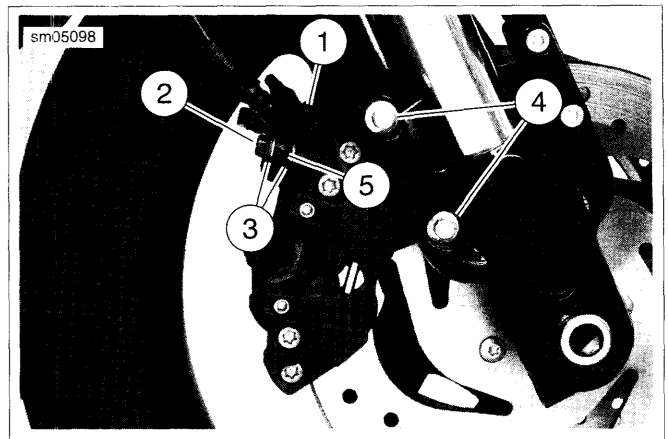

1. **Bleeder valve**
2. **Banjo bolt (metric)**
3. **Washer (2)**
4. **Mounting bolt (2) (metric)**
5. **Banjo fitting**

Figure 2-71. Front Caliper Assembly: XR Models

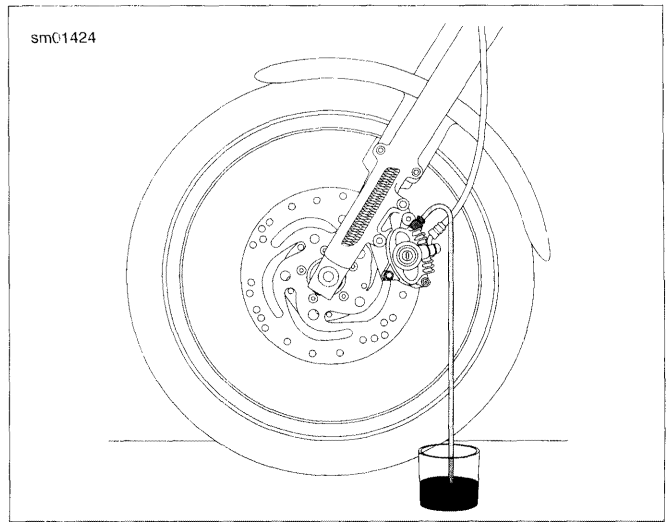

Figure 2-72. Bleeding Hydraulic System (typical; XL model shown)

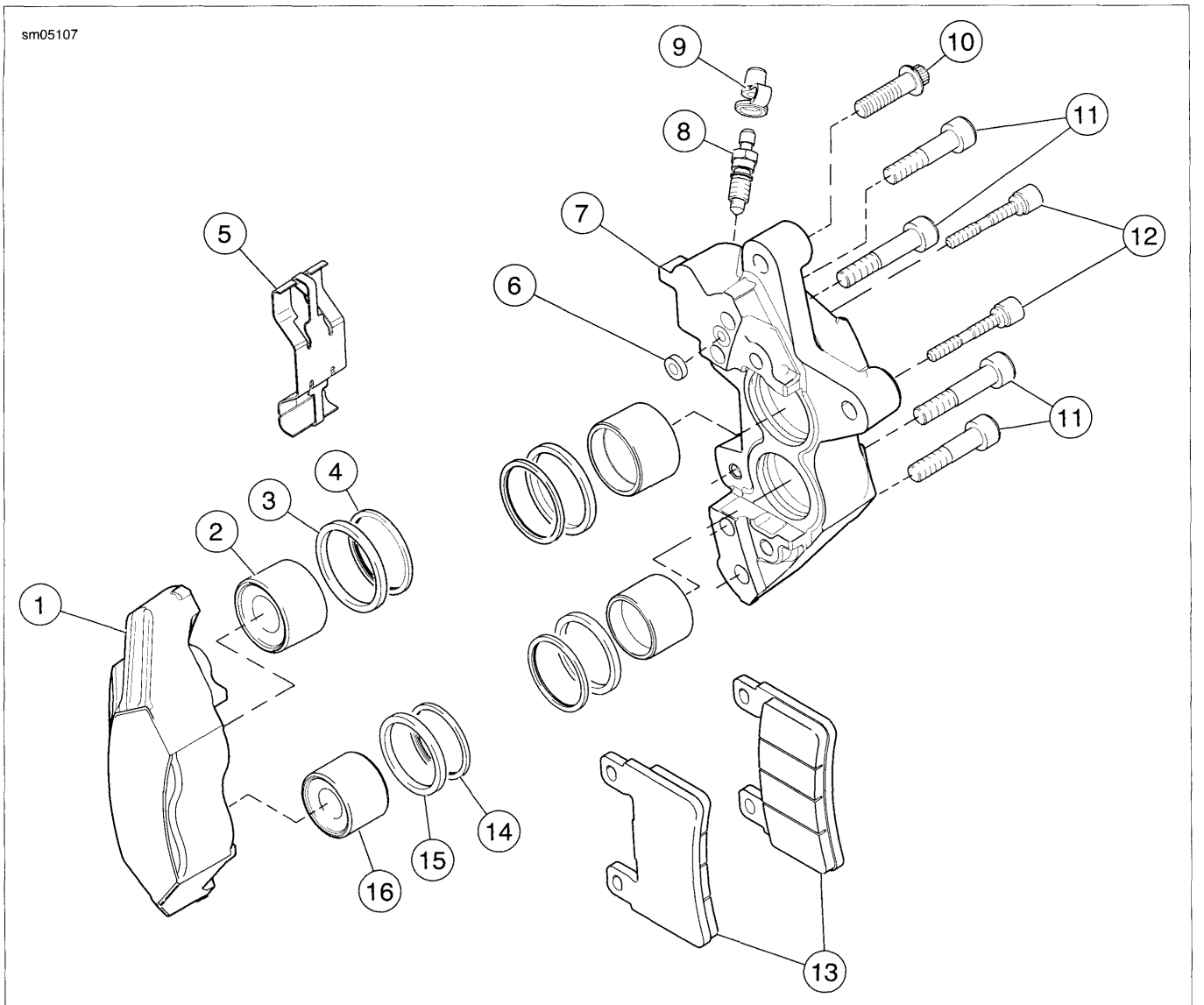

1. **inner caliper housing**
2. **Upper piston (large) (2)**
3. **Piston seal (large) (2)**
4. **Piston dust seal (large) (2)**
5. **Pad spring**
6. **Crossover seal**
7. **Outer caliper housing**
8. **Bleeder valve**
9. **Bleeder valve cap**
10. **Caliper mounting bolt (2)**
11. **Bridge bolt (4)**
12. **Pad pin (2)**
13. **Pad set**
14. **Piston dust seal (small) (2)**
15. **Piston seal (small) (2)**
16. **Lower piston (small) (2)**

Figure 2-73. Front Brake Caliper Assembly

DISASSEMBLY

1. See Figure 2-74. Remove brake pad pins (1) and anti-rattle spring (2).
2. Slide one brake pad out of caliper assembly. Do not remove bleeder valve (3) at this time.
3. With one brake pad in the caliper, loosely install brake pad pins (1) to hold brake pad in place.

⚠WARNING

Compressed air can pierce the skin and flying debris from compressed air could cause serious eye injury. Wear safety glasses when working with compressed air. Never use your hand to check for air leaks or to determine air flow rates. (00061a)

NOTE

Be careful not to damage banjo bolt sealing surface or threads of banjo bolt hole in brake caliper. It is recommended that you use an air nozzle with a rubber tip to perform the next step in this procedure.

⚠CAUTION

When removing piston with compressed air, piston can develop considerable force and fly out of caliper bore. Keep hands away from piston to avoid possible injury. (00530b)

4. See Figure 2-74. Gently apply low pressure compressed air to banjo bolt hole (4) to force pistons from caliper bores.
5. Remove brake pad pins and brake pad.
6. Remove bridge bolts (5, 6) and separate caliper housings.
7. Remove pistons from each housing by hand. If necessary, wiggle pistons gently to completely remove.

NOTE

Damaged piston bores will leak when reassembled. Do not use metal objects to remove or install objects from piston bores. Prevent damage to pistons, seals and bores by only using a wooden toothpick when servicing calipers.

8. See Figure 2-75. Using a wooden toothpick (1), remove dust seal (2) and piston seal (3) from each caliper bore. Discard seals.
9. See Figure 2-74. If necessary, remove bleeder valve (3).

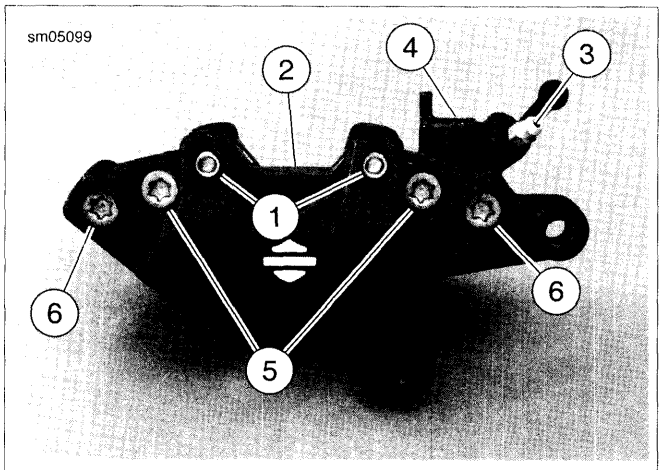

1. **Pad pins (2) (metric)**
2. **Spring**
3. **Bleeder valve**
4. **Banjo bolt hole**
5. **Bridge bolt, long (2)**
6. **Bridge bolt, short (2)**

Figure 2-74. Preparing Caliper for Piston Removal

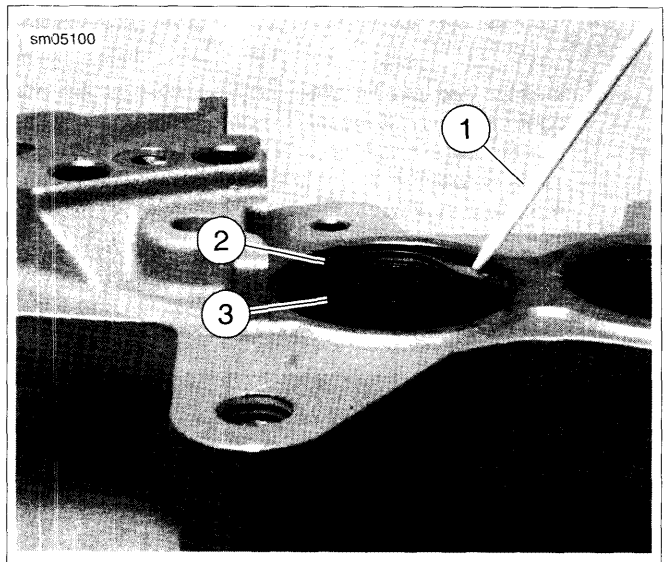

1. **Wooden toothpick**
2. **Dust seal**
3. **Piston seal**

Figure 2-75. Caliper Seals

CLEANING, INSPECTION AND REPAIR

⚠WARNING

Use denatured alcohol to clean brake system components. Do not use mineral-based solvents (such as gasoline or paint thinner), which will deteriorate rubber parts even after assembly. Deterioration of these components can cause brake failure, which could result in death or serious injury. (00291a)

1. Clean all rubber parts with HARLEY-DAVIDSON D.O.T. 4 BRAKE FLUID. Do not contaminate with mineral oil or other solvents. Clean all metal parts with denatured alcohol. Wipe parts dry with a clean, lint free cloth.

⚠WARNING

Compressed air can pierce the skin and flying debris from compressed air could cause serious eye injury. Wear safety glasses when working with compressed air. Never use your hand to check for air leaks or to determine air flow rates. (00061a)

2. Blow out drilled passages and piston bore with low pressure compressed air from a clean air supply. Do not use a wire or similar instrument to clean drilled passages.
3. Carefully inspect all components. Replace any parts that appear damaged or worn.
   a. Check pistons for pitting, scratches or corrosion on outside surfaces.
   b. Inspect piston bores. Do not hone bores. If bores show pitting or corrosion, replace caliper.

NOTE

The pad pins are manufactured with a relief near the center of their length, where the pad spring touches. Do not use

this area as a measurement point to determine pad pin wear.

c. Inspect pad pin for grooving and wear at the pad contact points. Measure the pad pin diameter in an unworn area, and then in an area of any grooving or wear. If wear is more than 0.011 in. (0.28 mm), replace pad pin.

d. Inspect pad spring for wear or cracks. If worn or damaged, replace.

e. Always replace all seals after disassembly.

⚠WARNING

Always replace brake pads in complete sets for correct and safe brake operation. Improper brake operation could result in death or serious injury. (00111a)

4. Inspect brake pads and brake disc. Replace if necessary.
   a. See 1.10 BRAKE PADS AND DISCS: XR MODELS for specifications.
   b. See 2.4 WHEELS for brake disc replacement procedure.

ASSEMBLY

NOTE

Use ONLY KS62F assembly grease for lubrication. Use of D.O.T. 4 brake fluid will result in increased brake lever travel.

1. Lubricate the following parts prior to assembly using a light coat of KS62F assembly grease from the service parts kit. All other surfaces must be dry for assembly.
   a. Nose radius of pistons.
   b. All surfaces of piston seals and dust seals.

NOTES

- *Damaged piston bores will leak when reassembled. Do not use metal objects to remove or install objects in piston bores. Prevent damage to bores by only using a wooden toothpick when servicing calipers.*
- *Pistons and bores differ slightly in diameter; one large and one small in each housing.*

2. See Figure 2-75. Install a **new** piston seal (3) and a **new** dust seal (2) into each piston bore.
3. See Figure 2-76.Carefully insert pistons (2, 3) by hand, nose radius first, into caliper bores. If installation shows resistance, remove piston(s) and check that seals are properly installed and fully seated in grooves. Press pistons completely into bores.
4. Install **new** crossover seal (1).
5. See Figure 2-74. Apply a drop of LOCTITE 569 Sealant to the threads of the bridge bolts (5, 6). Assemble caliper housings and secure with bridge bolts. Ensure the bridge bolts are in the correct locations based on length. Tighten bridge bolts to 12-18 ft-lbs (16.9-24.5 Nm).
6. See Figure 2-77. Install brake pads and pad spring. Ensure the spring is oriented as shown with the arrow and word "UP" (2) facing the banjo bolt hole (1). Secure with pad pins (3).
7. Tighten pad pins to 132-168 **in-lbs** (14.7-19.6 Nm).
8. Install bleeder valve on caliper housing if removed. Tighten bleeder valve to 35-61 **in-lbs** (4.0-6.9 Nm).

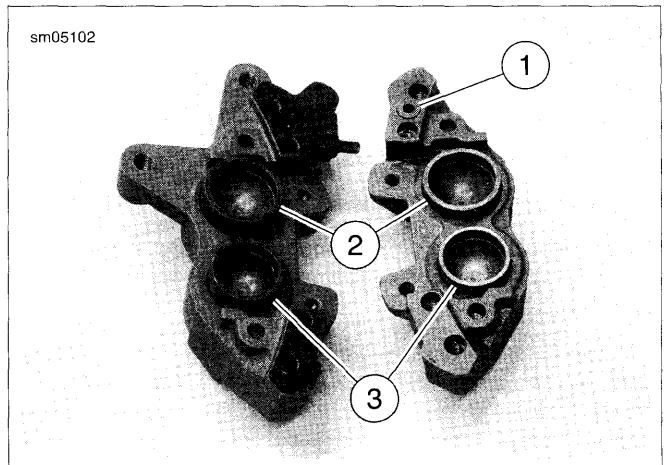

1. **Crossover seal**
2. **Large piston (2)**
3. **Small piston (2)**

Figure 2-76. Caliper Housings and Pistons

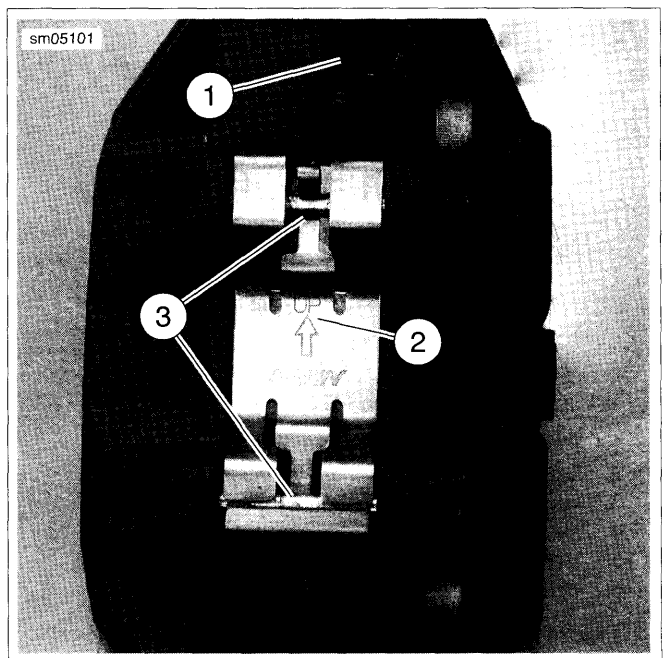

1. **Banjo bolt hole**
2. **Arrow and word "UP"**
3. **Pad pins (2)**

Figure 2-77. Front Caliper Pad Spring Orientation

INSTALLATION

⚠CAUTION

Direct contact of D.O.T. 4 brake fluid with eyes can cause irritation. Avoid eye contact. In case of eye contact flush with large amounts of water and get medical attention. Swallowing large amounts of D.O.T. 4 brake fluid can cause digestive discomfort. If swallowed, obtain medical attention. Use in well ventilated area. KEEP OUT OF REACH OF CHILDREN. (00240a)

CAUTION

D.O.T. 4 brake fluid will damage painted and body panel surfaces it comes in contact with. Always use caution and protect surfaces from spills whenever brake work is performed. Failure to comply can result in cosmetic damage. (00239b)

NOTE

If D.O.T. 4 brake fluid contacts painted surfaces, IMMEDIATELY flush area with clear water.

1. Align calipers to brake discs.
   a. Tighten axle nut to 60-65 ft-lbs (81-88 Nm).
   b. Loosen axle pinch screw nut.
   c. Position right fork leg against bearing spacer. Tighten axle pinch screw to 41-48 ft-lbs (55.6-65.1 Nm).
2. See Figure 2-78. Place brake caliper over brake disc with bleeder valve (1) facing upwards. Install mounting bolts (4) and tighten to 28-38 ft-lbs (38.0-51.6 Nm).

CAUTION

Avoid leakage. Be sure gaskets, banjo bolt(s), brake line and caliper bore are clean and undamaged before assembly. (00321a)

NOTE

Brake caliper housing has a positive stop for banjo fitting. When tightening banjo bolt into brake caliper in the next step, rotate banjo fitting clockwise until it contacts positive stop.

3. Position a **new** washer (3) on each side of hydraulic brake line banjo fitting (5). Insert banjo bolt (2) through washers and fitting. Tighten banjo bolt to 20-25 ft-lbs (27.1-33.9 Nm).
4. Fill and bleed brake system. See 1.8 BLEEDING HYDRAULIC BRAKE SYSTEM.

NOTE

Make sure to perform brake system bleeding procedure on both calipers.

⚠WARNING

A plugged or covered relief port can cause brake drag or lock-up, which could lead to loss of control, resulting in death or serious injury. (00288a)

5. Verify proper operation of master cylinder relief port. With motorcycle positioned so that master cylinder reservoir is level, squeeze brake lever slowly with reservoir cover removed. A slight spurt of fluid will break the surface if all internal components are working properly.
6. Install gasket and cover on master cylinder. Tighten cover screws to 9-17 **in-lbs** (1.0-2.0 Nm).

⚠WARNING

After repairing the brake system, test brakes at low speed. If brakes are not operating properly, testing at high speeds can cause loss of control, which could result in death or serious injury. (00289a)

7. Test brake system.
   a. Turn ignition switch ON. Squeeze brake hand lever to verify operation of the brake lamp.
   b. Test ride the motorcycle. If the brakes feel spongy, bleed the system again. See 1.8 BLEEDING HYDRAULIC BRAKE SYSTEM.

NOTE

Avoid making hard stops for the first 100 miles (160 km) to allow the new pads to become conditioned to the brake discs.

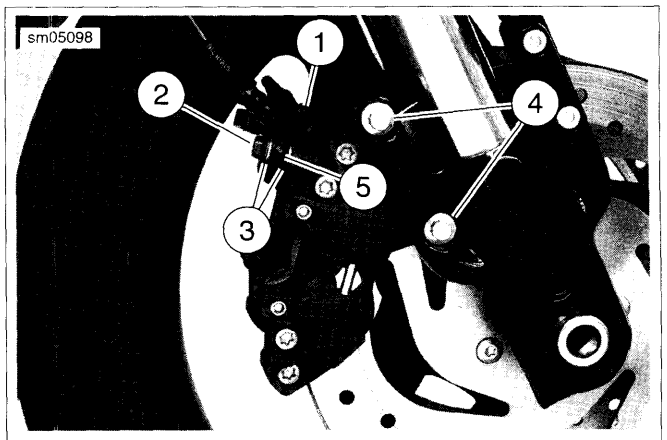

1. **Bleeder valve**
2. **Banjo bolt (metric)**
3. **Washer (2)**
4. **Mounting bolt (2) (metric)**
5. **Banjo fitting**

Figure 2-78. Front Caliper Assembly: XR Models

GENERAL

The rear brake master cylinder is mounted transverse to the centerline of the vehicle, beneath the rear fork pivot shaft assembly.

If the rear brake feels spongy or excessive pedal travel exists or the brake does not work at all, proceed with Inspection which follows.

NOTE

Use only CCI #20 BRAKE GREASE to lubricate master cylinder bores, pistons, and primary and secondary cups. Use only KS62F assembly grease on caliper pistons and piston seals. Use only G40M BRAKE GREASE on sliding areas outside caliper and master cylinder: caliper pins and boots, pivot hole front brake lever, end of piston that contacts brake lever.

⚠CAUTION

Direct contact of D.O.T. 4 brake fluid with eyes can cause irritation. Avoid eye contact. In case of eye contact flush with large amounts of water and get medical attention. Swallowing large amounts of D.O.T. 4 brake fluid can cause digestive discomfort. If swallowed, obtain medical attention. Use in well ventilated area. KEEP OUT OF REACH OF CHILDREN. (00240a)

CAUTION

D.O.T. 4 brake fluid will damage painted and body panel surfaces it comes in contact with. Always use caution and protect surfaces from spills whenever brake work is performed. Failure to comply can result in cosmetic damage. (00239b)

NOTE

If D.O.T. 4 brake fluid contacts painted surfaces, IMMEDIATELY flush area with clear water.

INSPECTION

1. Check the level of fluid in the rear brake reservoir. If it is low, refill and bleed brake system. See 1.8 BLEEDING HYDRAULIC BRAKE SYSTEM.
2. Check for fluid leaks in the brake line, around banjo fittings or rear brake caliper piston or bleeder valve. Repair and bleed brake system.
   a. For brake line replacement procedure, see 2.17 BRAKE LINES.
   b. To repair rear brake caliper, see procedure in 2.15 REAR BRAKE CALIPER: XL MODELS.
   c. See 1.8 BLEEDING HYDRAULIC BRAKE SYSTEM for hydraulic brake system bleeding procedure.
3. Check rear brake friction pads and disc for excessive wear or damage. Replace worn or damaged items.
   a. See 1.9 BRAKE PADS AND DISCS: XL MODELS for specifications.
   b. See 1.9 BRAKE PADS AND DISCS: XL MODELS, Brake Pad Replacement: Rear for brake pad replacement procedure.
   c. See 2.4 WHEELS for brake disc replacement procedure.
4. Check mechanical brake linkage from brake pedal to master cylinder for damage. Repair or replace worn or damaged items.
   a. **Models equipped with mid-mount foot controls:** see 2.39 RIDER FOOT CONTROLS: XL MID-MOUNT CONTROLS.
   b. **Models equipped with forward foot controls:** see 2.40 RIDER FOOT CONTROLS: XL FORWARD CONTROLS.
5. Eliminate any air in the hydraulic brake assembly by bleeding the system. See 1.8 BLEEDING HYDRAULIC BRAKE SYSTEM.

If none of these conditions exist but the rear brake system does not operate properly, the rear master cylinder is most likely defective and must be repaired or replaced.

REMOVAL

⚠CAUTION

Direct contact of D.O.T. 4 brake fluid with eyes can cause irritation. Avoid eye contact. In case of eye contact flush with large amounts of water and get medical attention. Swallowing large amounts of D.O.T. 4 brake fluid can cause digestive discomfort. If swallowed, obtain medical attention. Use in well ventilated area. KEEP OUT OF REACH OF CHILDREN. (00240a)

1. See Figure 2-79. Drain rear brake master cylinder reservoir (1) and remove hose clamp (4) and feed hose (3) from master cylinder feed hose port fitting (5). See 2.14 REAR BRAKE MASTER CYLINDER RESERVOIR. Discard hose clamp.
2. Remove bleeder nipple cap (21) from bleeder valve (22) on rear brake caliper (20). Install end of a length of 5/16 in. (7.9 mm) I.D. clear plastic tubing over caliper bleeder valve, while placing free end in a suitable container.
3. Open bleeder valve about 1/2-turn. Pump brake pedal to drain brake fluid. Close bleeder valve but do not tighten.

⚠WARNING

Wear safety glasses or goggles when removing or installing retaining rings. Retaining rings can slip from the pliers and could be propelled with enough force to cause serious eye injury. (00312a)

NOTE

Use correct retaining ring pliers and correct tips. Verify that tips are not excessively worn or damaged.

4. Remove retaining ring (11) from clevis pin (9). Remove clevis pin and disengage master cylinder yoke (10) from bell crank (12). Discard retaining ring.

NOTE

Damaged banjo bolt surfaces will leak when reassembled. Prevent damage to seating surfaces by carefully removing brake line components.

5. Remove banjo bolt (18) and washers (16) from master cylinder (6). Lift banjo fitting away from master cylinder. Discard washers.
6. Remove two screws (7) and two washers (8) securing rear master cylinder to master cylinder mounting bracket (15) and remove rear master cylinder.
7. If it is necessary to remove master cylinder mounting bracket:
   a. Remove retaining ring (14) and clevis pin (13). Disconnect bell crank (12) from mounting bracket.
   b. Remove two screws (23).
   c. Remove screw (24) and mounting bracket.

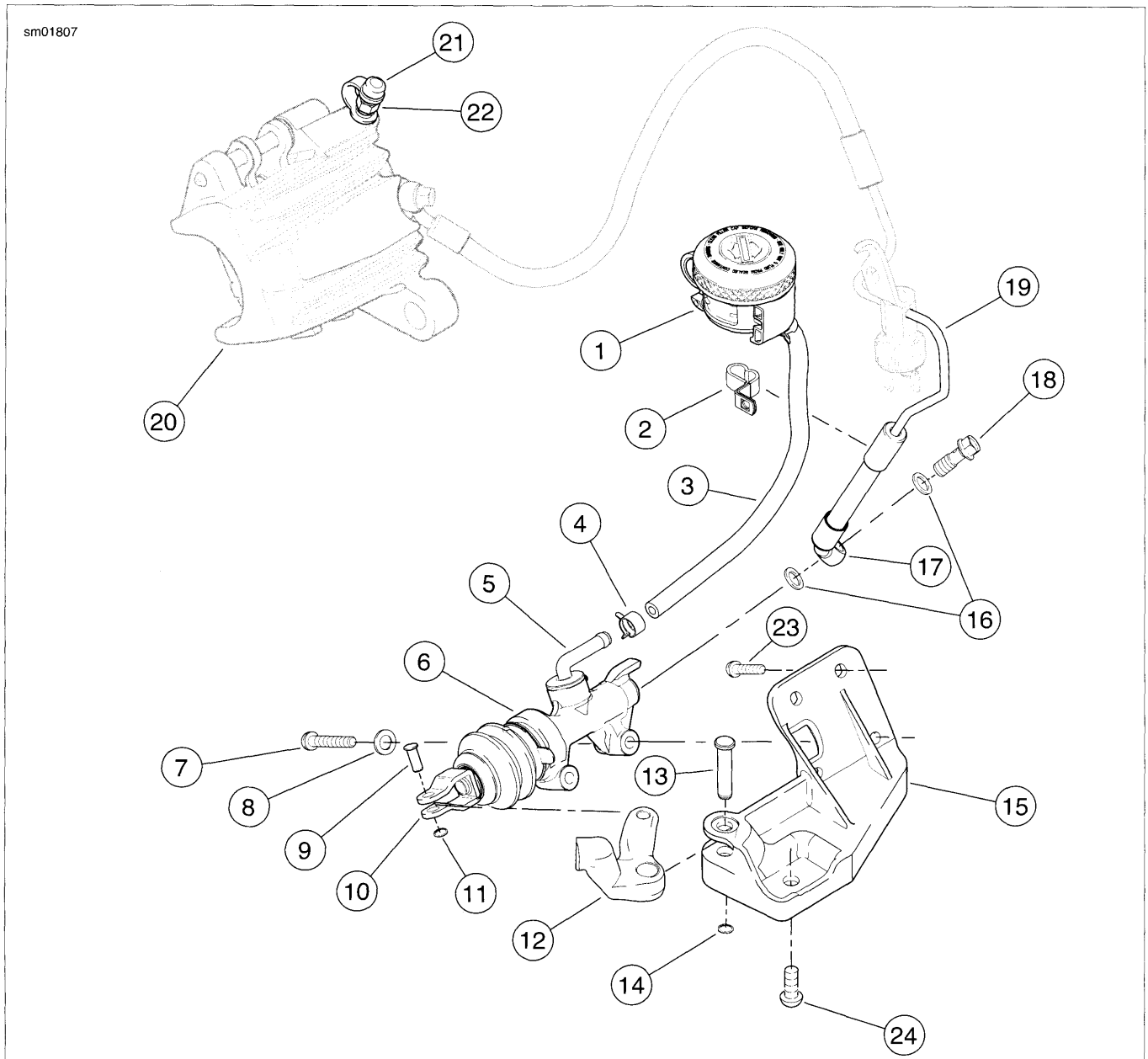

1. Rear brake master cylinder reservoir
2. B-clamp
3. Master cylinder feed hose
4. Hose clamp
5. Feed hose port fitting
6. Rear brake master cylinder
7. Screw (2)
8. Washer (2)
9. Clevis pin
10. Yoke
11. Retaining ring
12. Bell crank
13. Clevis pin
14. Retaining ring
15. Master cylinder mounting bracket
16. Washer (2)
17. Banjo fitting
18. Banjo bolt
19. Rear brake line including stoplight switch
20. Rear brake caliper
21. Bleeder nipple cap
22. Bleeder valve
23. Screw (2)
24. Screw

Figure 2-79. Rear Brake Master Cylinder and Reservoir

DISASSEMBLY

NOTE

- *Do not disassemble the rear master cylinder unless problems are being experienced. Discard all seals during the disassembly procedure. Install a complete rebuild kit when the unit is reassembled.*
- *See Figure 2-81. Clamp rear brake master cylinder (19) in a vise by its mounting bosses (18) only. Use brass or aluminum jaw covers or other protective device on vise jaws to prevent damage to master cylinder.*

1. See Figure 2-81. Clamp rear brake master cylinder (19) in a vise with yoke (3) pointing up.
2. Remove external boot (5). Remove spring pin (12) from end of push rod (13). Discard spring pin.

NOTE

See Figure 2-80. Grip yoke by the edges with an adjustable wrench. Do not grip yoke by the flats or the yoke may become deformed.

3. See Figure 2-80. Hold yoke with an adjustable wrench. Using an open-end wrench, loosen shoulder nut. Remove yoke.

⚠WARNING

Wear safety glasses or goggles when removing or installing spring. Spring tension can cause spring, attached components and/or hand tools to fly out which could result in death or serious injury. (00477c)

4. See Figure 2-81. Press down on spring retainer (6) to compress external return spring (7). While spring is compressed, remove shoulder nut from push rod. Carefully release pressure on external return spring. Remove spring retainer and external return spring.
5. Remove and discard inner boot (8).

NOTE

Do not remove boot collar nut (9) and push rod retainer (11) from push rod.

⚠WARNING

Wear safety glasses or goggles when removing or installing retaining rings. Retaining rings can slip from the pliers and could be propelled with enough force to cause serious eye injury. (00312a)

NOTE

Use correct retaining ring pliers and correct tips. Verify that tips are not excessively worn or damaged.

6. Thread shoulder nut back onto push rod several turns, to protect push rod threads. Press down on push rod to compress piston spring (17). Remove retaining ring (10), push rod with boot collar nut (9) and push rod retainer (11), piston (15) with secondary cup (14), primary cup (16) and piston spring. Discard retaining ring, piston with secondary cup, primary cup and piston spring.
7. Remove dust cover (23), retaining ring (22), feed port fitting (21) and O-ring (20). Discard retaining ring and O-ring.

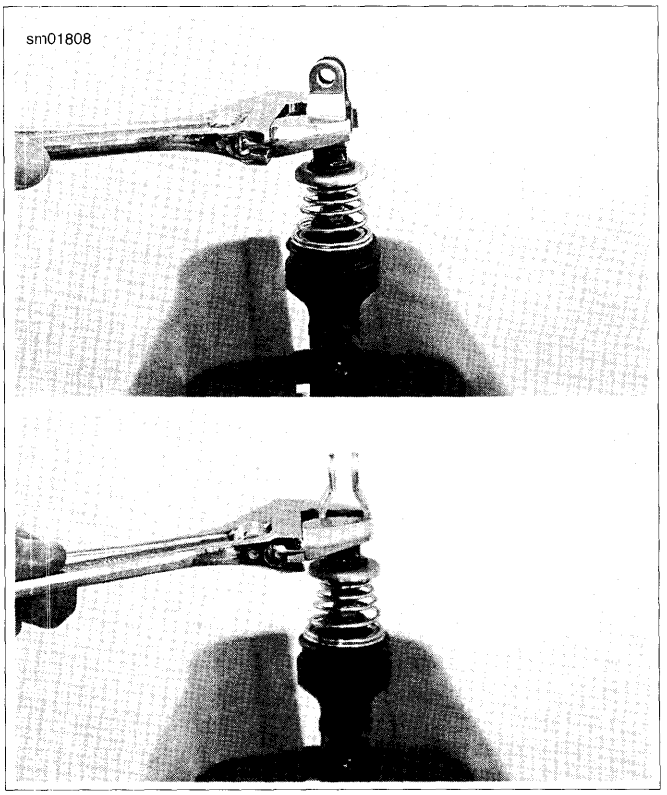

Figure 2-80. Tightening Yoke (Top: Incorrect, Bottom: Correct)

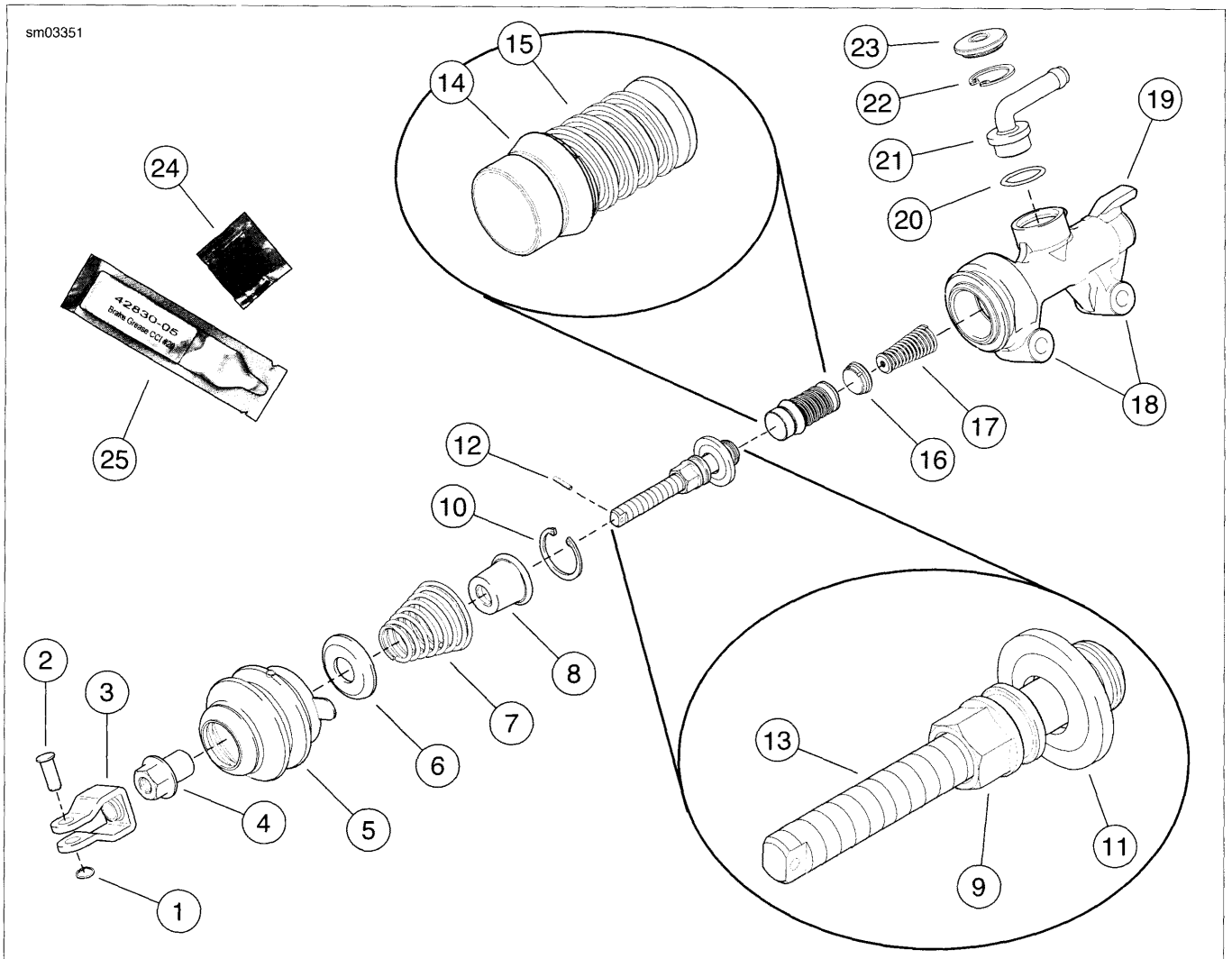

1. Retaining ring
2. Clevis pin
3. Yoke
4. Shoulder nut
5. External boot
6. Spring retainer
7. External return spring
8. Inner boot*
9. Boot collar nut
10. Retaining ring*
11. Push rod retainer
12. Spring pin*
13. Push rod
14. Secondary cup*
15. Piston*
16. Primary cup*
17. Piston spring*
18. Mounting boss (2)
19. Master cylinder body
20. O-ring
21. Feed port fitting
22. Retaining ring
23. Dust cover
24. G40M brake grease*
25. CCI #20 brake grease*

Figure 2-81. Rear Brake Master Cylinder (*Provided in Service Parts Kit)

CLEANING, INSPECTION AND REPAIR

⚠WARNING

Use denatured alcohol to clean brake system components. Do not use mineral-based solvents (such as gasoline or paint thinner), which will deteriorate rubber parts even after assembly. Deterioration of these components can cause brake failure, which could result in death or serious injury. (00291a)

⚠WARNING

Compressed air can pierce the skin and flying debris from compressed air could cause serious eye injury. Wear safety glasses when working with compressed air. Never use your hand to check for air leaks or to determine air flow rates. (00061a)

1. See Figure 2-81. Thoroughly clean master cylinder body (19) and all brake system components. Blow out drilled passages and piston bore in master cylinder body with

low pressure compressed air from a clean air supply. Do not use a wire or similar instrument to clean drilled passages.

2. Carefully inspect all parts for wear or damage and replace as necessary.
   a. Inspect piston bore in master cylinder housing for scratches, grooves, scoring, pitting or corrosion. Replace housing if any of these conditions are found.
   b. Inspect outlet port that mates with brake line banjo fitting. This is a critical sealing surface. Replace housing if any scratches, dents or other damage is found.
3. Verify that vent holes in master cylinder are completely open and free of dirt or debris.

ASSEMBLY

NOTES

- *When assembling rear brake master cylinder, always use **new** parts from the service parts kit. Consult the PARTS CATALOG for the correct kit part number.*
- *CCI #20 BRAKE GREASE is recommended for lubrication of cylinder bore, cups and seals prior to assembly.*
- *Stand master cylinder on wooden block or clean, lint-free towel to protect seating surfaces.*

⚠WARNING

Wear safety glasses or goggles when removing or installing retaining rings. Retaining rings can slip from the pliers and could be propelled with enough force to cause serious eye injury. (00312a)

NOTE

Use correct retaining ring pliers and correct tips. Verify that tips are not excessively worn or damaged.

1. See Figure 2-81. Coat **new** O-ring (20) with HARLEY-DAVIDSON D.O.T. 4 BRAKE FLUID. Install O-ring and feed port fitting (21) into feed port on top of master cylinder (19). Secure with **new** retaining ring (22). Verify that retaining ring is fully seated in groove.
2. Slide dust cover (23) onto feed port fitting and press into place in master cylinder feed port. See Figure 2-82. Turn feed port fitting (4) so it points toward banjo fitting (5) end of master cylinder body (1).

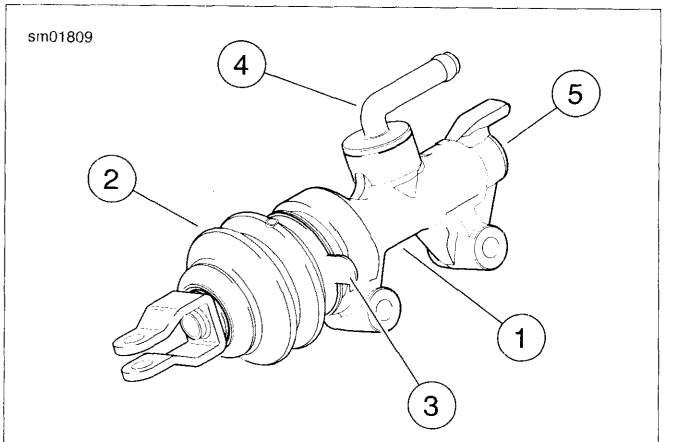

1. **Rear master cylinder assembly**
2. **External boot**
3. **Tabs (2)**
4. **Feed port fitting**
5. **Banjo fitting hole**

Figure 2-82. Assembled Rear Master Cylinder

NOTE

See Figure 2-81. Clamp rear brake master cylinder (19) in a vise by its mounting bosses (18) only. Use brass jaw covers or other protective device on vise jaws to prevent damage to master cylinder.

3. Clamp master cylinder in a vise with banjo fitting end pointing down.
4. See Figure 2-83. Lubricate master cylinder bore, **new** piston (1) with **new** secondary cup (3), and **new** primary cup (2) with CCI #20 BRAKE GREASE supplied in the service parts kit.

⚠WARNING

Wear safety glasses or goggles when removing or installing spring. Spring tension can cause spring, attached components and/or hand tools to fly out which could result in death or serious injury. (00477c)

5. Press small end of **new** piston spring (4) onto mounting boss (8) on piston (1).

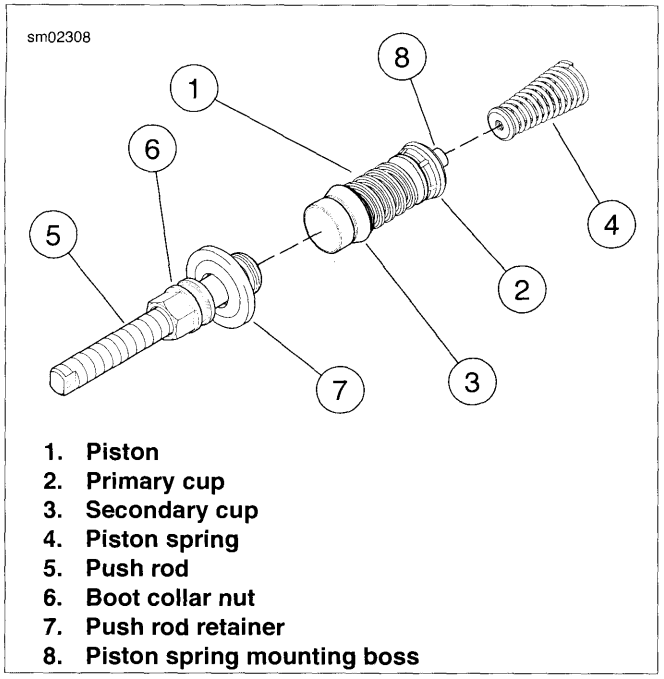

Figure 2-83. Rear Master Cylinder Piston, Push Rod and Spring Assembly

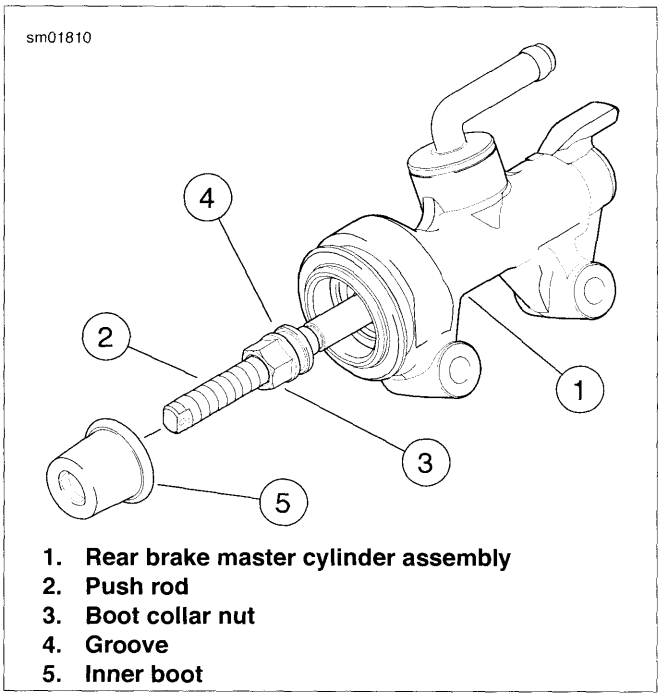

Figure 2-84. Lubricating and Installing Inner Boot

6. Slide piston/spring assembly, flared end of spring first, into cylinder bore so that spring seats against counter bore (recess) at bottom of cylinder.

7. Apply approximately 0.1 g of G40M BRAKE GREASE to ball end of push rod (5). Insert ball end of push rod into cupped end of piston.

⚠WARNING

Wear safety glasses or goggles when removing or installing retaining rings. Retaining rings can slip from the pliers and could be propelled with enough force to cause serious eye injury. (00312a)

NOTE

Use correct retaining ring pliers and correct tips. Verify that tips are not excessively worn or damaged.

8. See Figure 2-81. Temporarily thread shoulder nut (4) onto push rod (13) several turns to protect push rod threads. Press down on push rod to compress piston spring (17). Slide push rod retainer (11) down into master cylinder bore.

9. Secure push rod assembly with **new** retaining ring (10). Verify that retaining ring is fully seated in groove. Remove shoulder nut from push rod.

10. See Figure 2-84. Apply approximately 0.1 g of G40M BRAKE GREASE around groove (4) in boot collar nut (3). Carefully slide inner boot (5) down onto push rod (2) and into end of master cylinder bore. Press lip of inner boot down around groove in boot collar nut.

11. See Figure 2-81. Install external return spring (7) and spring retainer (6). Thread shoulder nut (4) shoulder-first onto push rod (13), several turns past flats.

12. Thread yoke (3) onto push rod, at least 2-3 turns past flats. Install **new** spring pin (12) into end of push rod.

13. See Figure 2-85. Measure distance from centerline of clevis pin hole (1) in yoke to centerline of master cylinder mounting boss hole (2) closest to yoke. This distance must be 3.40-3.48 in. (86.3-88.3 mm). Turn yoke on push rod in one direction or the other until this distance is obtained.

NOTE

See Figure 2-80. Grip yoke by the edges with adjustable wrench. do not grip yoke by the flats of the yoke may become deformed.

14. See Figure 2-80. Holding yoke with an adjustable wrench, turn shoulder nut back against yoke. Tighten to 130-173 **in-lbs** (14.7-19.6 Nm).

15. Remove master cylinder assembly from vise. See Figure 2-82. Slide external boot (2) over yoke/push rod assembly and external return spring.

16. Position external boot so that tabs (3) are at the 3-o'clock and 9-o'clock position when master cylinder body (1) is held upright. This assures that drain hole is at bottom of boot when master cylinder is mounted on motorcycle. Make sure that lip on large end of external boot fits fully in groove in end of master cylinder. Make sure that spring retainer is fully seated in groove in small end of external boot.

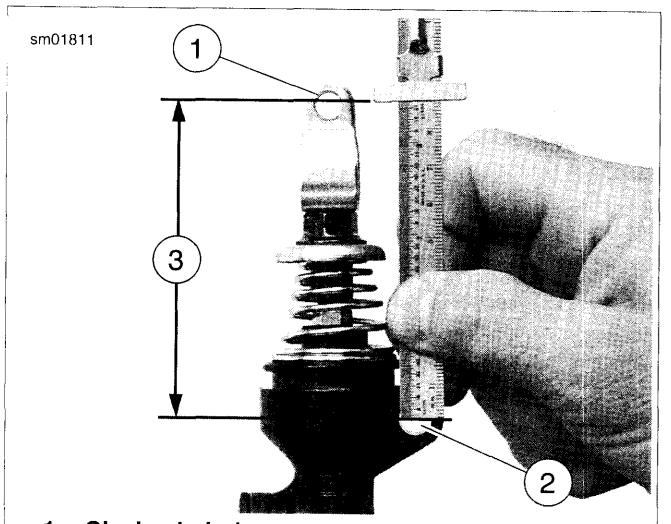

1. **Clevis pin hole**
2. **Mounting boss hole**
3. **3.40-3.48 in. (86.3-88.3 mm)**

Figure 2-85. Adjusting Push Rod Length

INSTALLATION

⚠WARNING

Wear safety glasses or goggles when removing or installing retaining rings. Retaining rings can slip from the pliers and could be propelled with enough force to cause serious eye injury. (00312a)

NOTE

Use correct retaining ring pliers and correct tips. Verify that tips are not excessively worn or damaged.

1. See Figure 2-79. If master cylinder mounting bracket (15) was removed:
   a. Attach mounting bracket to frame loosely with screws (23, 24). Then tighten two screws (23) to 17-22 ft-lbs (23.1-29.9 Nm). Tighten screw (24) to 17-22 ft-lbs (23.1-29.9 Nm).
   b. Install bell crank (12) with clevis pin (13). Secure with **new** retaining ring (14).
2. Install rear master cylinder assembly (6) on mounting bracket (15) with screws (7) and washers (8). Tighten to 17-22 ft-lbs (23.1-29.9 Nm).
3. Fit yoke (10) onto bell crank (12). Install clevis pin (9) and secure with **new** retaining ring (11).

NOTE

Master cylinder housing has a positive stop for banjo fitting. When tightening banjo bolt into master cylinder in the next step, rotate banjo fitting clockwise until it contacts positive stop.

4. Position a **new** washer (16) on each side of hydraulic brake line banjo fitting (17). Insert banjo bolt (18) through washers and fitting. Thread bolt into master cylinder housing. Tighten to 20-25 ft-lbs (27.1-33.9 Nm).
5. Install rear brake master cylinder feed hose (3) on master cylinder feed hose port fitting (5). Secure with new hose clamp (4). See 2.14 REAR BRAKE MASTER CYLINDER RESERVOIR.

⚠CAUTION

Direct contact of D.O.T. 4 brake fluid with eyes can cause irritation. Avoid eye contact. In case of eye contact flush with large amounts of water and get medical attention. Swallowing large amounts of D.O.T. 4 brake fluid can cause digestive discomfort. If swallowed, obtain medical attention. Use in well ventilated area. KEEP OUT OF REACH OF CHILDREN. (00240a)

CAUTION

D.O.T. 4 brake fluid will damage painted and body panel surfaces it comes in contact with. Always use caution and protect surfaces from spills whenever brake work is performed. Failure to comply can result in cosmetic damage. (00239b)

NOTES

- *If D.O.T. 4 brake fluid contacts painted surfaces, IMMEDIATELY flush area with clear water.*
- *Rear brake master cylinder reservoir must be in a level position when filling and checking fluid level.*
- *Reservoir cover may be removed from rear brake master cylinder reservoir to more easily verify fluid level in reservoir.*
- *Use only HARLEY-DAVIDSON D.O.T. 4 BRAKE FLUID from a sealed container.*
- *Do not overfill reservoir. Do not reuse old brake fluid.*

6. Position motorcycle upright (not resting on jiffy stand).
7. See Figure 2-92. Remove reservoir cap (4). If desired, remove reservoir cover: grasp cover (2) and gently pull straight out from reservoir (1).
8. Fill rear master cylinder reservoir with HARLEY-DAVIDSON D.O.T. 4 BRAKE FLUID until the fluid level reaches the UPPER mark on the reservoir.
9. Bleed brake system. See 1.8 BLEEDING HYDRAULIC BRAKE SYSTEM.
10. Turn ignition/light switch ON. Test operation of brake lamp with the rear brake applied.

⚠WARNING

After servicing brakes and before moving motorcycle, pump brakes to build brake system pressure. Insufficient pressure can adversely affect brake performance, which could result in death or serious injury. (00279a)

⚠WARNING

After repairing the brake system, test brakes at low speed. If brakes are not operating properly, testing at high speeds can cause loss of control, which could result in death or serious injury. (00289a)

11. Test ride motorcycle at low speed. If brake feels spongy, repeat bleeding procedure.

GENERAL

The rear brake master cylinder is mounted to the right side rider footrest/rear brake pedal bracket.

If the rear brake feels spongy or excessive pedal travel exists or the brake does not work at all, proceed with Inspection which follows.

⚠CAUTION

Direct contact of D.O.T. 4 brake fluid with eyes can cause irritation. Avoid eye contact. In case of eye contact flush with large amounts of water and get medical attention. Swallowing large amounts of D.O.T. 4 brake fluid can cause digestive discomfort. If swallowed, obtain medical attention. Use in well ventilated area. KEEP OUT OF REACH OF CHILDREN. (00240a)

CAUTION

D.O.T. 4 brake fluid will damage painted and body panel surfaces it comes in contact with. Always use caution and protect surfaces from spills whenever brake work is performed. Failure to comply can result in cosmetic damage. (00239b)

NOTE

If D.O.T. 4 brake fluid contacts painted surfaces, IMMEDIATELY flush area with clear water.

INSPECTION

1. Check the level of fluid in the rear brake reservoir. If it is low, refill and bleed brake system. See 1.8 BLEEDING HYDRAULIC BRAKE SYSTEM.
2. Check for fluid leaks in the brake line, around banjo fittings or rear brake caliper piston or bleeder valve. Repair and bleed brake system.
   a. For brake line replacement procedure, see 2.17 BRAKE LINES.
   b. To repair rear brake caliper, see procedure in 2.16 REAR BRAKE CALIPER: XR MODELS.
   c. See 1.8 BLEEDING HYDRAULIC BRAKE SYSTEM for hydraulic brake system bleeding procedure.
3. Check rear brake friction pads and disc for excessive wear or damage. Replace worn or damaged items.
   a. See 1.10 BRAKE PADS AND DISCS: XR MODELS for specifications.
   b. See 1.10 BRAKE PADS AND DISCS: XR MODELS, Brake Pad Replacement: Rear for brake pad replacement procedure.
   c. See 2.4 WHEELS for brake disc replacement procedure.
4. Eliminate any air in the hydraulic brake assembly by bleeding the system. See 1.8 BLEEDING HYDRAULIC BRAKE SYSTEM.

If none of these conditions exist but the rear brake system does not operate properly, the rear master cylinder is most likely defective and must be repaired or replaced.

REMOVAL

⚠CAUTION

Direct contact of D.O.T. 4 brake fluid with eyes can cause irritation. Avoid eye contact. In case of eye contact flush with large amounts of water and get medical attention. Swallowing large amounts of D.O.T. 4 brake fluid can cause digestive discomfort. If swallowed, obtain medical attention. Use in well ventilated area. KEEP OUT OF REACH OF CHILDREN. (00240a)

1. See Figure 2-86. Drain rear brake master cylinder reservoir (7) and remove feed hose (8) from master cylinder feed hose port fitting. See 2.14 REAR BRAKE MASTER CYLINDER RESERVOIR. Discard hose clamp.
2. Install end of a length of 5/16 in. (7.9 mm) I.D. clear plastic tubing over rear caliper bleeder valve and place free end of tubing in a suitable container.
3. Open bleeder valve about 1/2-turn. Pump brake pedal to drain brake fluid. Close bleeder valve but do not tighten.

⚠WARNING

Wear safety glasses or goggles when removing or installing retaining rings. Retaining rings can slip from the pliers and could be propelled with enough force to cause serious eye injury. (00312a)

4. Remove retaining ring (1) from clevis pin (2). Remove clevis pin and disengage master cylinder yoke (3) from brake pedal. Discard retaining ring.

NOTE

Damaged banjo bolt surfaces will leak when reassembled. Prevent damage to seating surfaces by carefully removing brake line components.

5. Remove banjo bolt (6) and washers (5). Lift banjo fitting away from master cylinder. Discard washers.
6. Remove two screws (4) securing rear master cylinder to master cylinder mounting bracket and remove rear master cylinder.
7. If it is necessary to remove master cylinder/footpeg mounting bracket, remove fasteners (9). Refer to 2.41 RIDER FOOT CONTROLS: XR MODELS for disassembly and repair procedures.

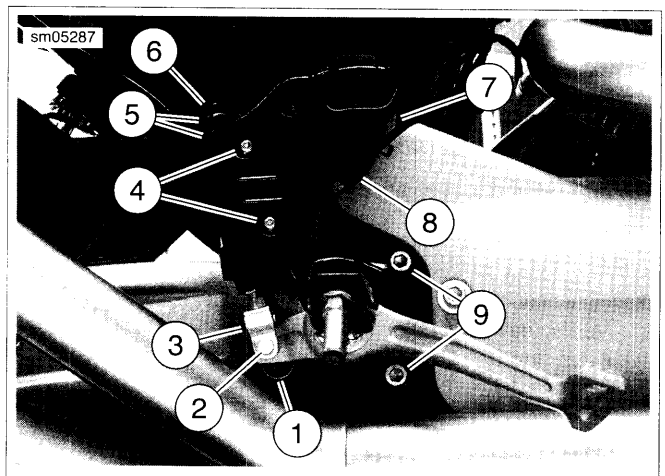

1. **Retaining ring**
2. **Clevis pin**
3. **Yoke**
4. **Screw and washer (2)**
5. **Washer (2)**
6. **Banjo bolt**
7. **Reservoir**
8. **Feed hose**
9. **Fastener (2)**

Figure 2-86. Rear Brake Master Cylinder and Reservoir

DISASSEMBLY

NOTE

- *Do not disassemble the rear master cylinder unless problems are being experienced. Discard all seals during the disassembly procedure. Install a complete rebuild kit when the unit is reassembled.*
- *Clamp rear brake master cylinder in a vise by its mounting bosses only. Use brass or aluminum jaw covers or other protective device on vise jaws to prevent damage to master cylinder.*

1. See Figure 2-87. Clamp rear brake master cylinder in a vise with yoke pointing up.

NOTE

Grip yoke by the edges with an adjustable wrench. Do not grip yoke by the flats or the yoke may become deformed.

2. Hold yoke with an adjustable wrench. Using an open-end wrench, loosen shoulder nut. Remove yoke.
3. See Figure 2-88. Remove nut (4) from push rod (5).
4. Remove and discard boot (6).

⚠WARNING

Wear safety glasses or goggles when removing or installing retaining rings. Retaining rings can slip from the pliers and could be propelled with enough force to cause serious eye injury. (00312a)

NOTES

- *Do not remove boot collar nut from push rod.*
- *Use correct retaining ring pliers and correct tips. Verify that tips are not excessively worn or damaged.*

5. Thread nut (4) back onto push rod several turns, to protect push rod threads.
6. Press down on push rod to compress piston spring (10). Remove retaining ring (7), push rod (5) with boot collar nut, piston (8) with secondary cup, primary cup (9) and piston spring (10). Discard retaining ring, piston/cup assembly and piston spring.
7. Remove dust cover (12), retaining ring (13), feed port fitting (15) and O-ring (14). Discard retaining ring and O-ring.

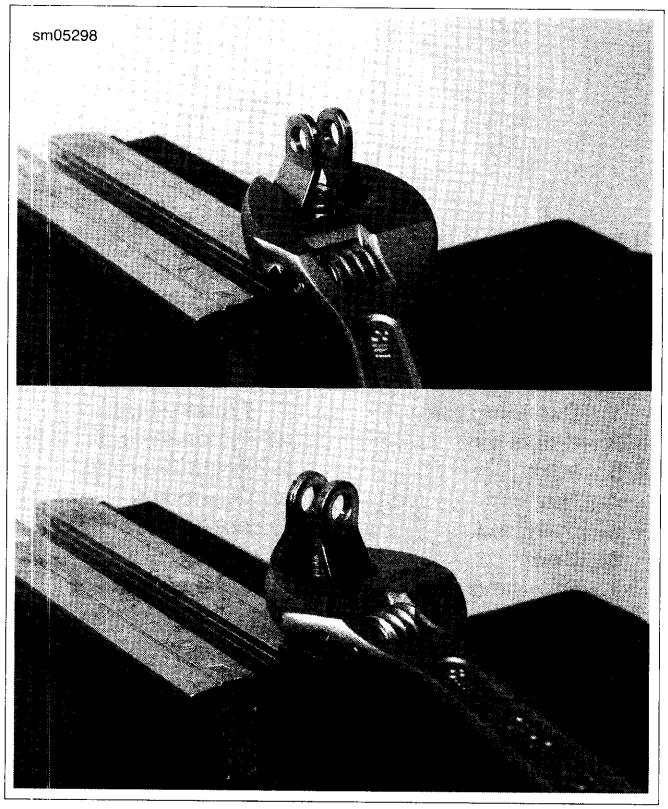

Figure 2-87. Holding Yoke (Top: Incorrect, Bottom: Correct)

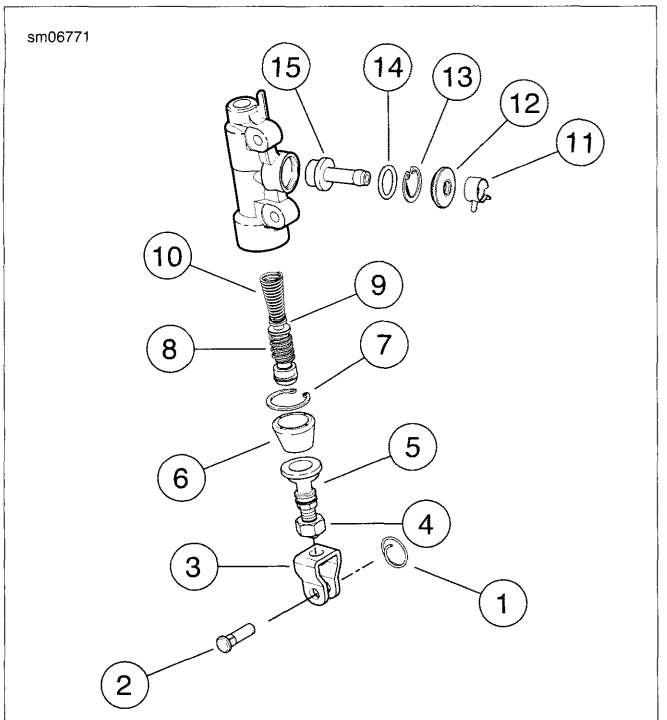

1. Retaining ring
2. Clevis pin
3. Yoke
4. Nut
5. Push rod
6. Boot
7. Retaining ring
8. Piston
9. Primary cup
10. Piston spring
11. Retaining clip
12. Dust cover
13. Push rod retainer
14. O-ring
15. Feed port fitting

Figure 2-88. Rear Brake Master Cylinder

CLEANING, INSPECTION AND REPAIR

⚠WARNING

Use denatured alcohol to clean brake system components. Do not use mineral-based solvents (such as gasoline or paint thinner), which will deteriorate rubber parts even after assembly. Deterioration of these components can cause brake failure, which could result in death or serious injury. (00291a)

⚠WARNING

Compressed air can pierce the skin and flying debris from compressed air could cause serious eye injury. Wear safety glasses when working with compressed air. Never use your hand to check for air leaks or to determine air flow rates. (00061a)

1. Thoroughly clean master cylinder body and all brake system components. Blow out drilled passages and piston bore in master cylinder body with low pressure compressed air from a clean air supply. Do not use a wire or similar instrument to clean drilled passages.
2. Carefully inspect all parts for wear or damage and replace as necessary.
   a. Inspect piston bore in master cylinder housing for scratches, grooves, scoring, pitting or corrosion. Replace housing if any of these conditions are found.
   b. Inspect outlet port that mates with brake line banjo fitting. This is a critical sealing surface. Replace housing if any scratches, dents or other damage is found.
3. Verify that vent holes in master cylinder are completely open and free of dirt or debris.

ASSEMBLY

NOTES

- *When assembling rear brake master cylinder, always use **new** parts from the service parts kit. Consult the PARTS CATALOG for the correct kit part number.*
- *CCI #20 BRAKE GREASE is recommended for lubrication of cylinder bore, cups and seals prior to assembly.*
- *Stand master cylinder on wooden block or clean, lint-free towel to protect seating surfaces.*

⚠WARNING

Wear safety glasses or goggles when removing or installing retaining rings. Retaining rings can slip from the pliers and could be propelled with enough force to cause serious eye injury. (00312a)

NOTE

Use correct retaining ring pliers and correct tips. Verify that tips are not excessively worn or damaged.

1. See Figure 2-88. Coat **new** O-ring (14) with HARLEY-DAVIDSON D.O.T. 4 BRAKE FLUID. Install O-ring and feed port fitting (15) into feed port on master cylinder body. Secure with **new** retaining ring (13). Verify that retaining ring is fully seated in groove.
2. Slide dust cover (12) onto feed port fitting and press into place in master cylinder feed port.

NOTE

Clamp rear brake master cylinder body in a vise by its mounting bosses only. Use brass jaw covers or other protective device on vise jaws to prevent damage to master cylinder.

3. Clamp master cylinder in a vise with banjo fitting end pointing down.
4. See Figure 2-89. Lubricate master cylinder bore, **new** piston (1) with **new** secondary cup (3), and **new** primary cup (2) with CCI #20 BRAKE GREASE supplied in the service parts kit.

⚠WARNING

Wear safety glasses or goggles when removing or installing spring. Spring tension can cause spring, attached components and/or hand tools to fly out which could result in death or serious injury. (00477c)

5. Press small end of **new** piston spring (4) onto mounting boss (8) on piston.

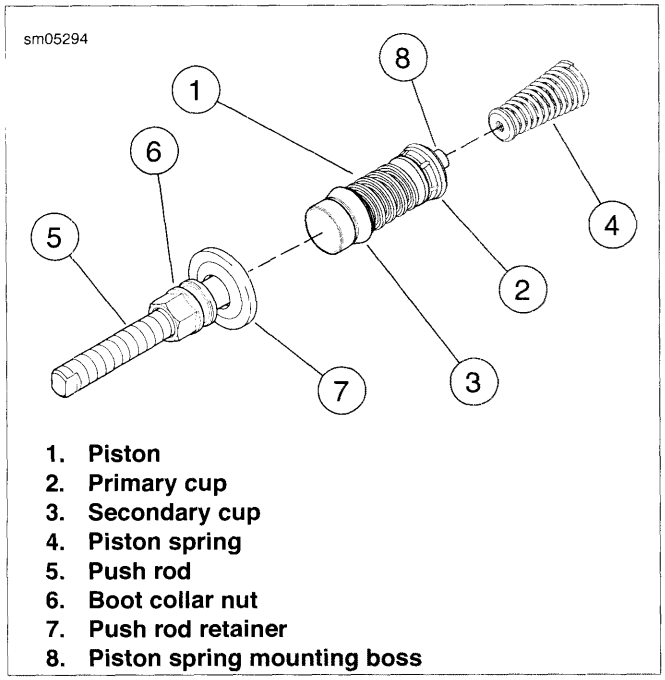

Figure 2-89. Rear Master Cylinder Piston, Push Rod and Spring Assembly

6. Slide piston/spring assembly, flared end of spring first, into cylinder bore so that spring seats against counter bore (recess) at bottom of cylinder.

7. Apply approximately 0.1 g of G40M BRAKE GREASE to ball end of push rod.

⚠WARNING

Wear safety glasses or goggles when removing or installing retaining rings. Retaining rings can slip from the pliers and could be propelled with enough force to cause serious eye injury. (00312a)

NOTE

Use correct retaining ring pliers and correct tips. Verify that tips are not excessively worn or damaged.

8. See Figure 2-88. Temporarily thread nut (4) onto push rod (5) several turns to protect push rod threads.

9. Insert push rod into master cylinder body. Press down on push rod to compress piston spring (10). Slide push rod retainer down into master cylinder bore and hold in place.

10. Secure push rod assembly with **new** retaining ring (7). Verify that retaining ring is fully seated in groove. Remove nut (4) from push rod.

11. Apply approximately 0.1 g of G40M BRAKE GREASE around groove in boot collar nut. Carefully slide boot (6) down onto push rod and into end of master cylinder bore. Press lip of boot down around groove in boot collar nut.

12. Thread nut (4) onto push rod (5), several turns past flats.

13. Thread yoke (3) onto push rod, at least 2-3 turns past flats.

14. See Figure 2-90. Measure distance (3) from centerline of clevis pin hole (1) in yoke to centerline of master cylinder mounting boss hole (2) closest to yoke. This distance must be 2.64-2.76 in. (67.1-70.1 mm). Adjust yoke until this distance is obtained.

NOTE

Grip yoke by the edges with adjustable wrench. do not grip yoke by the flats or the yoke may become deformed.

15. While holding yoke with an adjustable wrench, turn shoulder nut back against yoke. Tighten to 130-173 **in-lbs** (14.7-19.6 Nm).

16. Remove master cylinder assembly from vise.

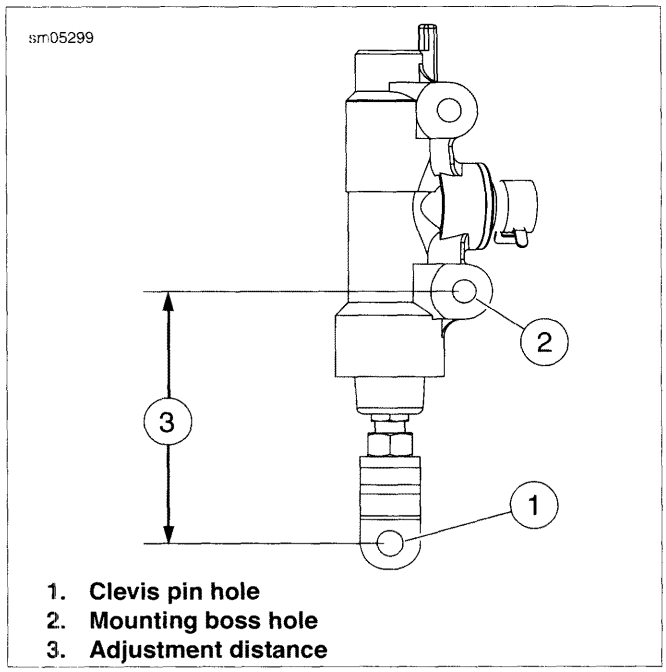

Figure 2-90. Adjusting Push Rod Length

INSTALLATION

⚠WARNING

Wear safety glasses or goggles when removing or installing retaining rings. Retaining rings can slip from the pliers and could be propelled with enough force to cause serious eye injury. (00312a)

1. See Figure 2-86. Assemble and install master cylinder/footpeg mounting bracket if it was removed. See 2.41 RIDER FOOT CONTROLS: XR MODELS.

2. Install rear master cylinder assembly to mounting bracket with screws and washers (4). Tighten to 72-96 **in-lbs** (8.1-10.9 Nm).

3. Fit yoke (3) onto foot pedal. Install clevis pin (2) and secure with **new** retaining ring (1).

NOTE

Master cylinder housing has a positive stop for banjo fitting. When tightening banjo bolt into master cylinder in the next step, rotate banjo fitting clockwise until it contacts positive stop.

4. Position a **new** washer (5) on each side of hydraulic brake line banjo fitting. Insert banjo bolt (6) through washers and fitting. Thread banjo bolt into master cylinder housing. Tighten to 20-25 ft-lbs (27.1-33.9 Nm).

5. Install rear brake master cylinder feed hose (8) on master cylinder feed hose port fitting. Secure with new hose clamp.

⚠CAUTION

Direct contact of D.O.T. 4 brake fluid with eyes can cause irritation. Avoid eye contact. In case of eye contact flush with large amounts of water and get medical attention. Swallowing large amounts of D.O.T. 4 brake fluid can cause digestive discomfort. If swallowed, obtain medical attention. Use in well ventilated area. KEEP OUT OF REACH OF CHILDREN. (00240a)

CAUTION

D.O.T. 4 brake fluid will damage painted and body panel surfaces it comes in contact with. Always use caution and protect surfaces from spills whenever brake work is performed. Failure to comply can result in cosmetic damage. (00239b)

NOTES

- *If D.O.T. 4 brake fluid contacts painted surfaces, IMMEDIATELY flush area with clear water.*
- *Rear brake master cylinder reservoir must be in a level position when filling and checking fluid level.*
- *Reservoir cover may be removed from rear brake master cylinder reservoir to more easily verify fluid level in reservoir.*
- *Use only HARLEY-DAVIDSON D.O.T. 4 BRAKE FLUID from a sealed container.*
- *Do not overfill reservoir. Do not reuse old brake fluid.*

6. Position motorcycle upright (not resting on jiffy stand).
7. See Figure 2-91. Remove reservoir cap (2).
8. Fill rear master cylinder reservoir (1) with HARLEY-DAVIDSON D.O.T. 4 BRAKE FLUID until the fluid level reaches the UPPER mark (3) on the reservoir.
9. Bleed brake system. See 1.8 BLEEDING HYDRAULIC BRAKE SYSTEM.
10. Turn ignition/light switch ON. Test operation of brake lamp with the rear brake applied.

⚠WARNING

After servicing brakes and before moving motorcycle, pump brakes to build brake system pressure. Insufficient pressure can adversely affect brake performance, which could result in death or serious injury. (00279a)

⚠WARNING

After repairing the brake system, test brakes at low speed. If brakes are not operating properly, testing at high speeds can cause loss of control, which could result in death or serious injury. (00289a)

11. Test ride motorcycle at low speed. If brake feels spongy, repeat bleeding procedure.

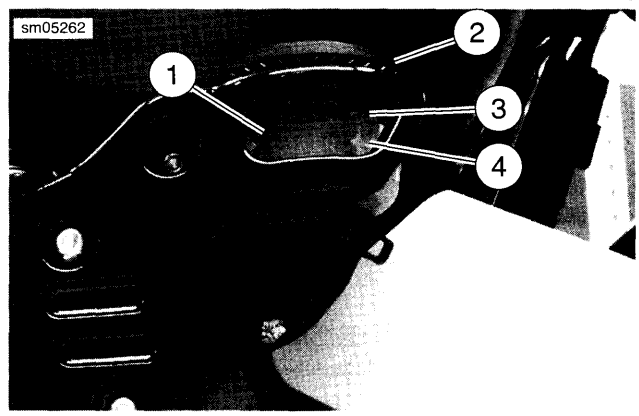

1. **Rear brake master cylinder reservoir**
2. **Reservoir cap**
3. **Upper fluid level**
4. **Lower fluid level**

Figure 2-91. Rear Brake Master Cylinder Reservoir (XR Models)

GENERAL

The rear brake master cylinder is equipped with a remote fluid reservoir. On XL models, this reservoir is located to the rear of the primary cover, below the left side cover. On XR models, the reservoir is mounted on the right side rider footrest/rear brake pedal bracket.

REMOVAL: XL MODELS

⚠CAUTION

Direct contact of D.O.T. 4 brake fluid with eyes can cause irritation. Avoid eye contact. In case of eye contact flush with large amounts of water and get medical attention. Swallowing large amounts of D.O.T. 4 brake fluid can cause digestive discomfort. If swallowed, obtain medical attention. Use in well ventilated area. KEEP OUT OF REACH OF CHILDREN. (00240a)

CAUTION

D.O.T. 4 brake fluid will damage painted and body panel surfaces it comes in contact with. Always use caution and protect surfaces from spills whenever brake work is performed. Failure to comply can result in cosmetic damage. (00239b)

NOTE

If D.O.T. 4 brake fluid contacts painted surfaces, IMMEDIATELY flush area with clear water.

1. Position motorcycle upright on suitable lift.
2. See Figure 2-92. Grasp reservoir cover (2) and gently pull straight out from reservoir (1).
3. Remove screw with captive washer (3).
4. Remove reservoir cap (4). Hold reservoir upside down over a suitable container and drain brake fluid.
5. Loosen hose clamp (5) and pull feed hose (6) from reservoir. Slide hose clamp off free end of feed hose.
6. See Figure 2-93. Slide feed hose (2) down through B-clamp (3). Hold free end of hose down over container and drain any brake fluid remaining in hose.
7. Loosen hose clamp (4) and pull feed hose off feed hose port (5) on master cylinder (1).
8. Cover feed hose port with a clean, lint-free cloth to keep dirt and debris out of master cylinder.

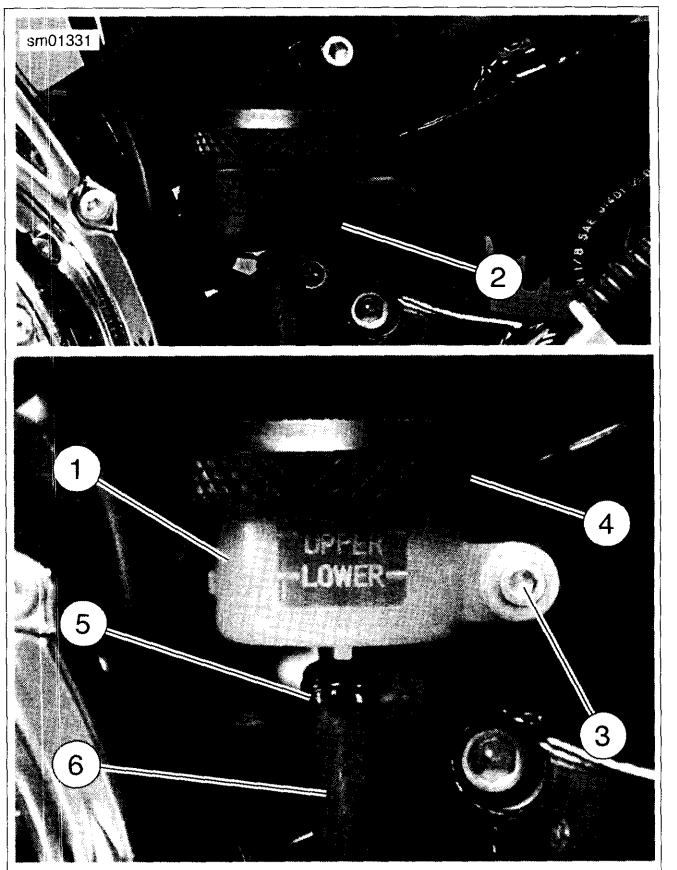

1. **Rear brake master cylinder reservoir**
2. **Reservoir cover**
3. **Mounting screw with captive washer**
4. **Reservoir cap**
5. **Hose clamp**
6. **Master cylinder feed hose**

Figure 2-92. Reservoir Mount

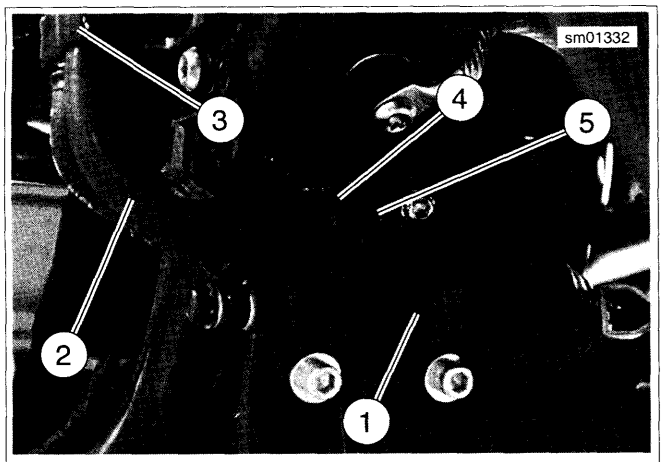

1. **Rear brake master cylinder**
2. **Master cylinder feed hose**
3. **B-clamp**
4. **Hose clamp**
5. **Feed hose port**

Figure 2-93. Master Cylinder Feed Hose

INSTALLATION: XL MODELS

⚠CAUTION

Direct contact of D.O.T. 4 brake fluid with eyes can cause irritation. Avoid eye contact. In case of eye contact flush with large amounts of water and get medical attention. Swallowing large amounts of D.O.T. 4 brake fluid can cause digestive discomfort. If swallowed, obtain medical attention. Use in well ventilated area. KEEP OUT OF REACH OF CHILDREN. (00240a)

CAUTION

D.O.T. 4 brake fluid will damage painted and body panel surfaces it comes in contact with. Always use caution and protect surfaces from spills whenever brake work is performed. Failure to comply can result in cosmetic damage. (00239b)

NOTE

If D.O.T. 4 brake fluid contacts painted surfaces, IMMEDIATELY flush area with clear water.

1. See Figure 2-93. Slide end of feed hose (2) onto feed hose port (5) on master cylinder (1). Secure feed hose to fitting with hose clamp (4).
2. Slide free end of feed hose up through B-clamp (3).
3. See Figure 2-92. Slide hose clamp (5) onto free end of feed hose (6).
4. Push feed hose onto fitting on reservoir (1) and secure with hose clamp.
5. Install reservoir using screw with captive washer (3). Tighten to 20-25 **in-lbs** (2.3-2.8 Nm).

NOTES

- *Rear brake master cylinder reservoir must be in a level position when filling and checking fluid level.*
- *Use only HARLEY-DAVIDSON D.O.T. 4 BRAKE FLUID from a sealed container.*
- *Do not overfill reservoir. Do not reuse old brake fluid.*

6. Position motorcycle upright (not resting on jiffy stand). Fill master cylinder reservoir with HARLEY-DAVIDSON D.O.T. 4 BRAKE FLUID until the fluid level reaches the UPPER mark on the reservoir.
7. Bleed brake system. See 1.8 BLEEDING HYDRAULIC BRAKE SYSTEM.
8. Install reservoir cover (2).
9. Turn ignition/light switch ON. Test operation of brake lamp with the rear brake applied.

⚠WARNING

After repairing the brake system, test brakes at low speed. If brakes are not operating properly, testing at high speeds can cause loss of control, which could result in death or serious injury. (00289a)

10. Test ride motorcycle. If brake feels spongy, repeat bleeding procedure.

REMOVAL: XR MODELS

⚠CAUTION

Direct contact of D.O.T. 4 brake fluid with eyes can cause irritation. Avoid eye contact. In case of eye contact flush with large amounts of water and get medical attention. Swallowing large amounts of D.O.T. 4 brake fluid can cause digestive discomfort. If swallowed, obtain medical attention. Use in well ventilated area. KEEP OUT OF REACH OF CHILDREN. (00240a)

CAUTION

D.O.T. 4 brake fluid will damage painted and body panel surfaces it comes in contact with. Always use caution and protect surfaces from spills whenever brake work is performed. Failure to comply can result in cosmetic damage. (00239b)

NOTE

If D.O.T. 4 brake fluid contacts painted surfaces, IMMEDIATELY flush area with clear water.

1. Position motorcycle upright on suitable lift.
2. See Figure 2-94. Loosen reservoir cap (2).
3. Remove screw (6).
4. Remove reservoir cap (2). Hold reservoir upside down over a suitable container and drain brake fluid.
5. Loosen hose clamp (3) and pull feed hose (4) from reservoir. Slide hose clamp off free end of feed hose.
6. Loosen hose clamp (5) and pull feed hose off master cylinder. Cover feed hose port with a clean, lint-free cloth to keep dirt and debris out of master cylinder.

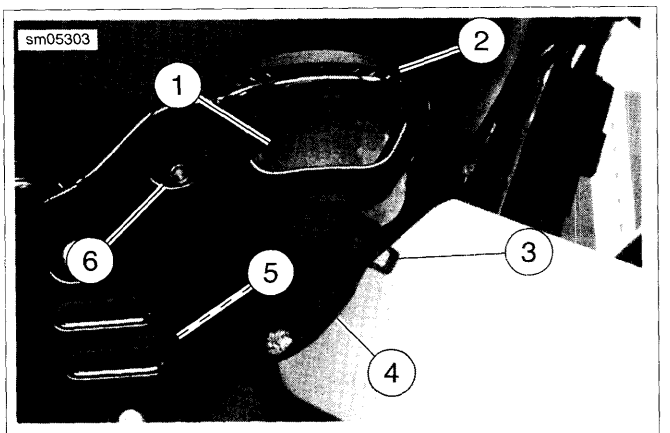

1. **Rear brake master cylinder reservoir**
2. **Reservoir cap**
3. **Hose clamp**
4. **Feed hose**
5. **Hose clamp (master cylinder)**
6. **Screw**

Figure 2-94. Rear Brake Master Cylinder Reservoir: XR Models

INSTALLATION: XR MODELS

⚠CAUTION

Direct contact of D.O.T. 4 brake fluid with eyes can cause irritation. Avoid eye contact. In case of eye contact flush with large amounts of water and get medical attention. Swallowing large amounts of D.O.T. 4 brake fluid can cause digestive discomfort. If swallowed, obtain medical attention. Use in well ventilated area. KEEP OUT OF REACH OF CHILDREN. (00240a)

CAUTION

D.O.T. 4 brake fluid will damage painted and body panel surfaces it comes in contact with. Always use caution and protect surfaces from spills whenever brake work is performed. Failure to comply can result in cosmetic damage. (00239b)

NOTE

If D.O.T. 4 brake fluid contacts painted surfaces, IMMEDIATELY flush area with clear water.

1. See Figure 2-94. Slide end of feed hose (4) onto feed hose port on master cylinder. Secure feed hose to fitting with hose clamp (5).
2. Slide hose clamp (3) onto free end of feed hose (4).
3. Push feed hose onto fitting on reservoir (1) and secure with hose clamp.
4. Install reservoir using screw (6). Tighten to 36-60 **in-lbs** (4.1-6.8 Nm).

NOTES

- *Rear brake master cylinder reservoir must be in a level position when filling and checking fluid level.*
- *Use only HARLEY-DAVIDSON D.O.T. 4 BRAKE FLUID from a sealed container.*
- *Do not overfill reservoir. Do not reuse old brake fluid.*

5. Position motorcycle upright (not resting on jiffy stand). Fill master cylinder reservoir with HARLEY-DAVIDSON D.O.T. 4 BRAKE FLUID until the fluid level reaches the UPPER mark on the reservoir.
6. Bleed brake system. See 1.8 BLEEDING HYDRAULIC BRAKE SYSTEM.
7. Install reservoir cover (2).
8. Turn ignition/light switch ON. Test operation of brake lamp with the rear brake applied.

⚠WARNING

After repairing the brake system, test brakes at low speed. If brakes are not operating properly, testing at high speeds can cause loss of control, which could result in death or serious injury. (00289a)

9. Test ride motorcycle. If brake feels spongy, repeat bleeding procedure.

REMOVAL

NOTE

If only replacing brake pads, do not remove rear brake caliper. For brake pad replacement only, see 1.9 BRAKE PADS AND DISCS: XL MODELS.

⚠CAUTION

Direct contact of D.O.T. 4 brake fluid with eyes can cause irritation. Avoid eye contact. In case of eye contact flush with large amounts of water and get medical attention. Swallowing large amounts of D.O.T. 4 brake fluid can cause digestive discomfort. If swallowed, obtain medical attention. Use in well ventilated area. KEEP OUT OF REACH OF CHILDREN. (00240a)

NOTE

Damaged banjo bolt surfaces will leak when reassembled. Prevent damage to seating surfaces by carefully removing brake line components.

CAUTION

D.O.T. 4 brake fluid will damage painted and body panel surfaces it comes in contact with. Always use caution and protect surfaces from spills whenever brake work is performed. Failure to comply can result in cosmetic damage. (00239b)

NOTES

- *Do **not** remove rear caliper from mounting bracket unless caliper mounting pins and boots require service. Removing caliper from mounting bracket unnecessarily increases the risk of contaminants falling into caliper boots and bushings which could damage caliper during vehicle operation.*
- *It is further **not** required or recommended to remove or loosen the caliper mounting pins.*
- *it is **not** necessary or recommended to remove the rear brake caliper from the caliper mounting bracket to perform caliper service.*
- *If D.O.T. 4 brake fluid contacts painted surfaces, IMMEDIATELY flush area with clear water.*

1. Position vehicle upright on a suitable lift.
2. Place a suitable container under the rear caliper brake line banjo fitting to catch any brake fluid that may leak out. Do not reuse brake fluid.
3. See Figure 2-95. Remove the banjo bolt (1) and both washers (2) to detach rear brake line (3) from brake caliper (4). Discard washers.
4. Remove pad pin plug (6).
5. See Figure 2-96. Remove brake pad pin.
6. See Figure 2-97. Remove brake pads (15).
7. Remove rear wheel. See 2.4 WHEELS, Rear Wheel.
8. See Figure 2-95. Remove rear brake caliper (4) and caliper mounting bracket (5) as an assembly.

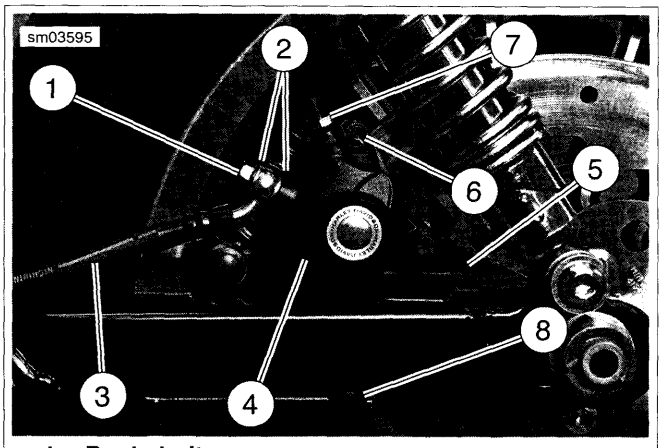

1. **Banjo bolt**
2. **Washer (2)**
3. **Rear brake line**
4. **Brake caliper**
5. **Caliper mounting bracket**
6. **Pad pin plug**
7. **Bleeder valve**
8. **Damper**

Figure 2-95. Rear Caliper Assembly

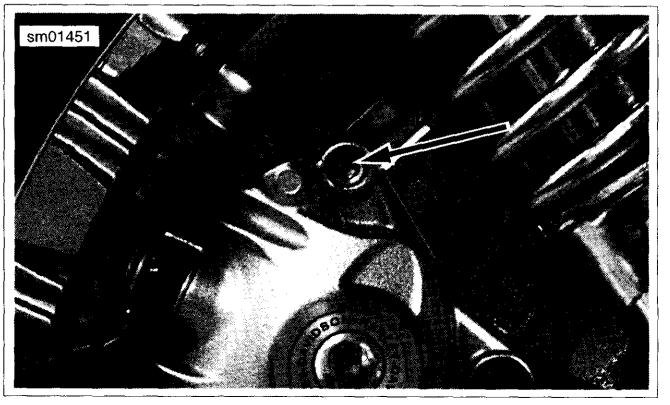

Figure 2-96. Brake Pad Pin (Plug Removed)

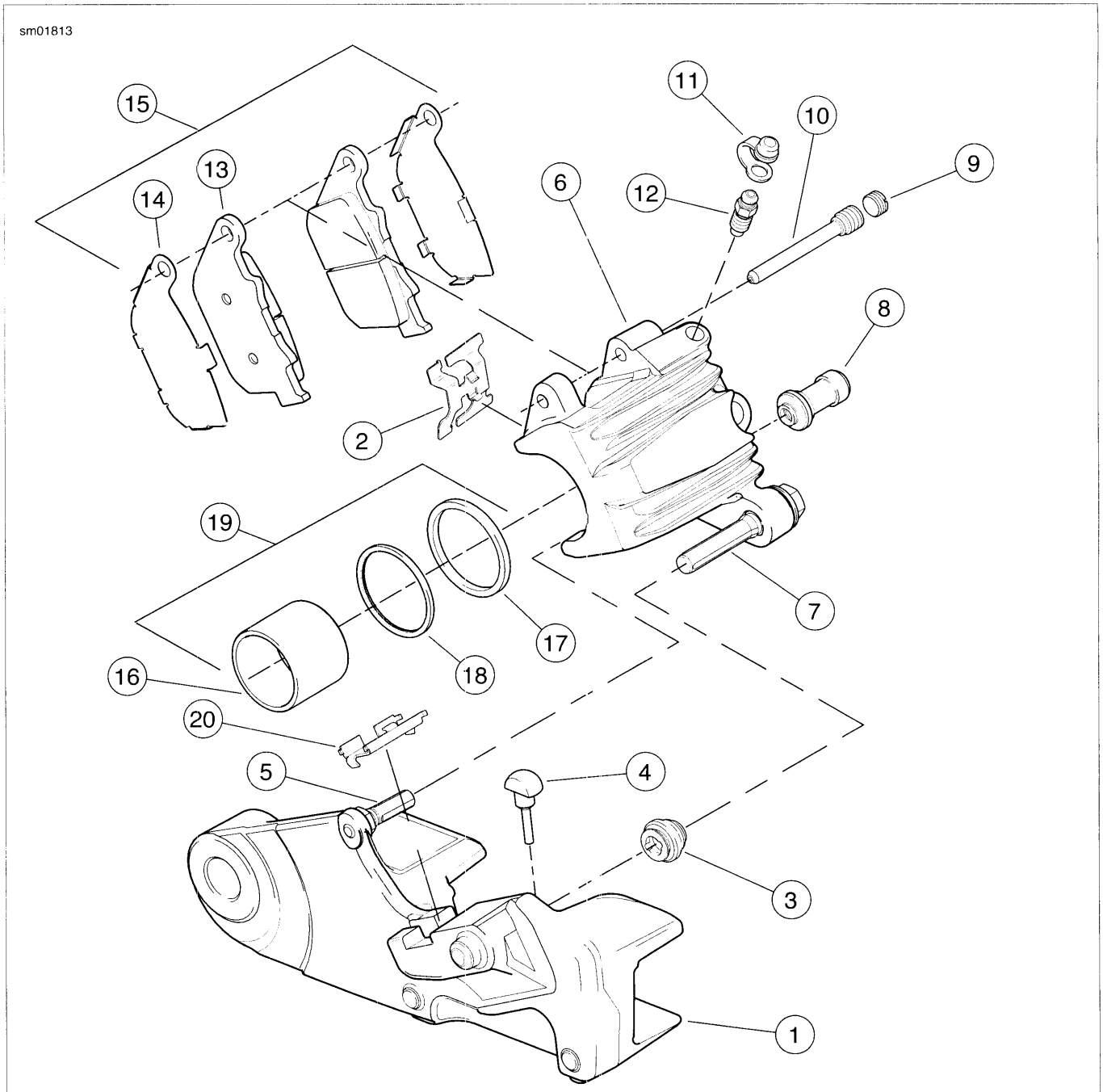

1. Caliper mounting bracket
2. Pad spring
3. Caliper pin boot
4. Damper
5. Mounting bracket bolt pin (do not remove)
6. Caliper body
7. Caliper bolt pin (do not remove)
8. Caliper bushing boot
9. Pad pin plug
10. Pad pin
11. Bleeder nipple cap
12. Bleeder valve
13. Brake pad (2)
14. Pad retainer (2)
15. Brake pad set (includes item 2)
16. Piston
17. Piston seal
18. Dust seal
19. Piston kit
20. Retainer clip (not sold separately)

Figure 2-97. Rear Brake Caliper Assembly

DISASSEMBLY

1. See Figure 2-97. Remove pad spring (2). Do not remove bleeder valve (12) at this time.
2. See Figure 2-98. Install a discarded brake pad in the caliper with the backing plate (4) facing the piston. Position the brake pad so the friction material (3) is against the back of the caliper, as shown.
3. Loosely install brake pad pin (2) to hold brake pad in place.

⚠WARNING

Compressed air can pierce the skin and flying debris from compressed air could cause serious eye injury. Wear safety glasses when working with compressed air. Never use your hand to check for air leaks or to determine air flow rates. (00061a)

⚠CAUTION

When removing piston with compressed air, piston can develop considerable force and fly out of caliper bore. Keep hands away from piston to avoid possible injury. (00530b)

NOTE

Be careful not to damage banjo bolt sealing surface or threads of banjo bolt hole in brake caliper. It is recommended that you use an air nozzle with a rubber tip to perform the next step in this procedure.

4. See Figure 2-99. Gently apply low pressure compressed air to banjo bolt hole (3) to force piston from caliper bore.
5. Remove brake pad pin and brake pad from caliper.
6. See Figure 2-97. Remove piston (16) from caliper bore by hand. If necessary, gently wiggle piston to completely remove.

NOTE

A damaged piston bore will leak when reassembled. Do not use metal objects to remove or install components in piston bore. Prevent damage to piston, seal and bore by only using a wooden toothpick when servicing caliper.

7. See Figure 2-100. Using a wooden toothpick (1), remove dust seal (2) and piston seal (3) from caliper bore. Discard seals.
8. See Figure 2-97. If necessary, remove bleeder valve (12).

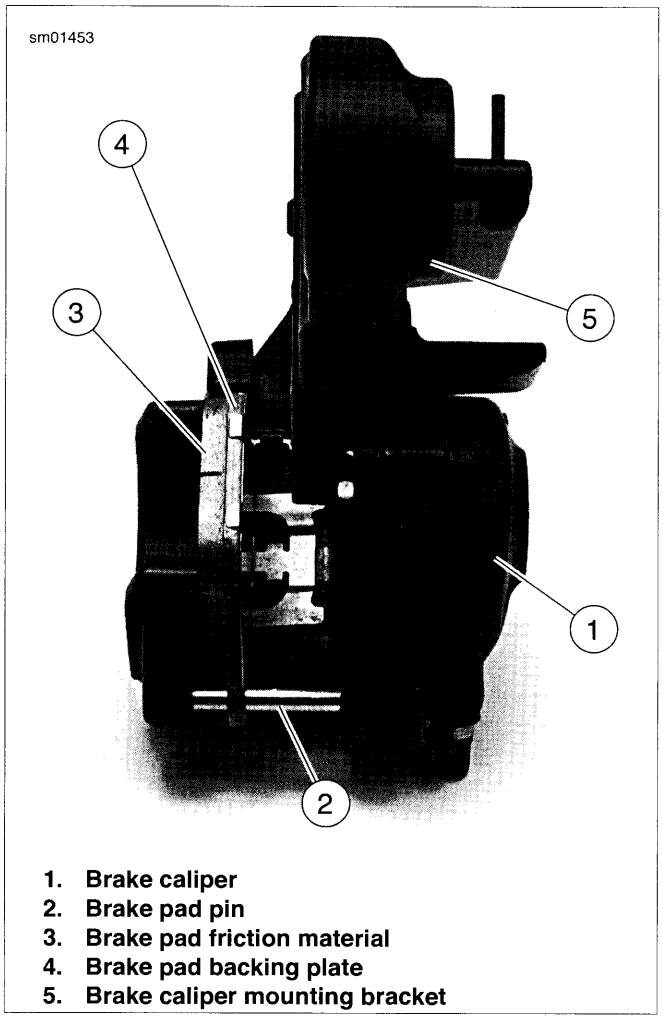

1. **Brake caliper**
2. **Brake pad pin**
3. **Brake pad friction material**
4. **Brake pad backing plate**
5. **Brake caliper mounting bracket**

Figure 2-98. Preparing Caliper for Piston Removal

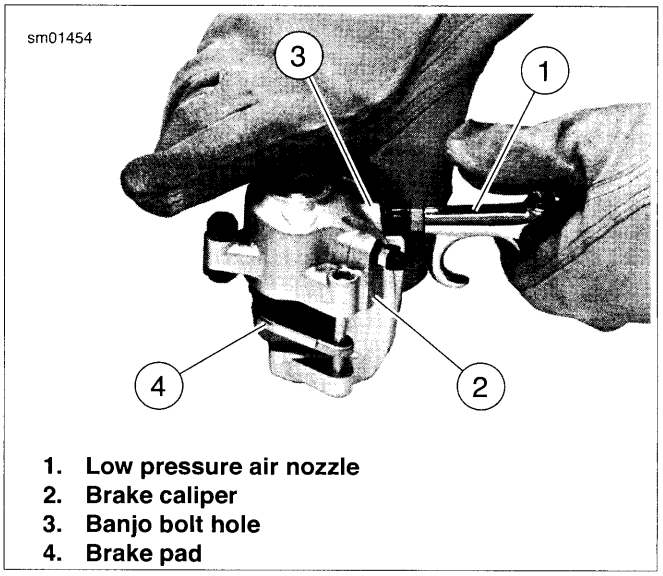

1. **Low pressure air nozzle**
2. **Brake caliper**
3. **Banjo bolt hole**
4. **Brake pad**

Figure 2-99. Removing Piston (Caliper Removed from Mounting Bracket for Clarity)

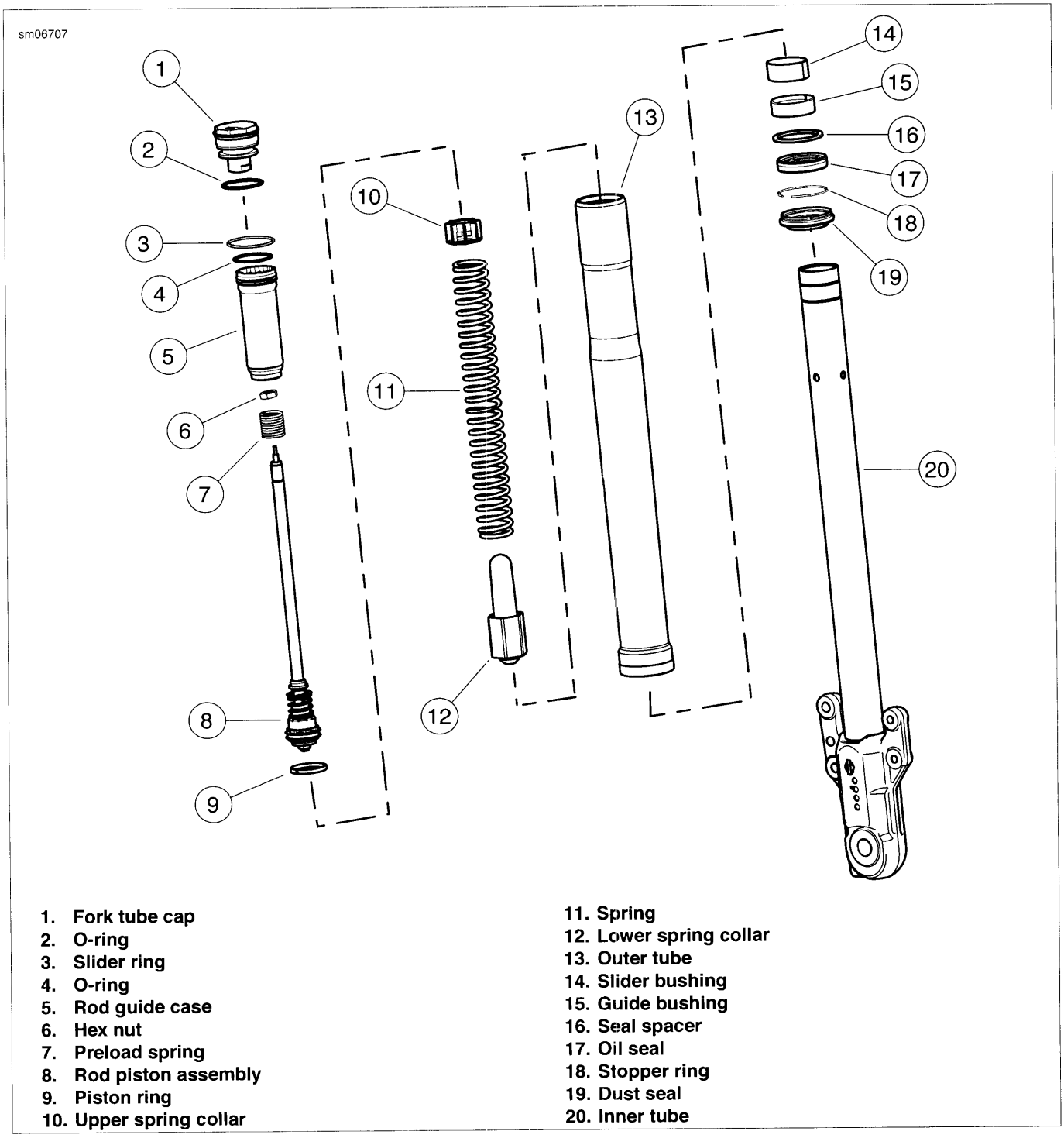

Figure 2-164. Fork Assembly: XR 1200X

CLEANING AND INSPECTION

1. Thoroughly clean and inspect each part. If inspection shows that any parts are bent or damaged, those parts should be repaired or replaced.
2. Inspect fork tube bushing and slider guide bushing and replace as required.
3. Always replace oil seals and O-rings.
4. Check dust cover where it rubs on fork tube. Dust cover should not show any wear.
5. If springs are damaged, replace springs.
6. If a fork tube or slider is bent or damaged, replace it.
7. Replace all other worn or damaged components as necessary.

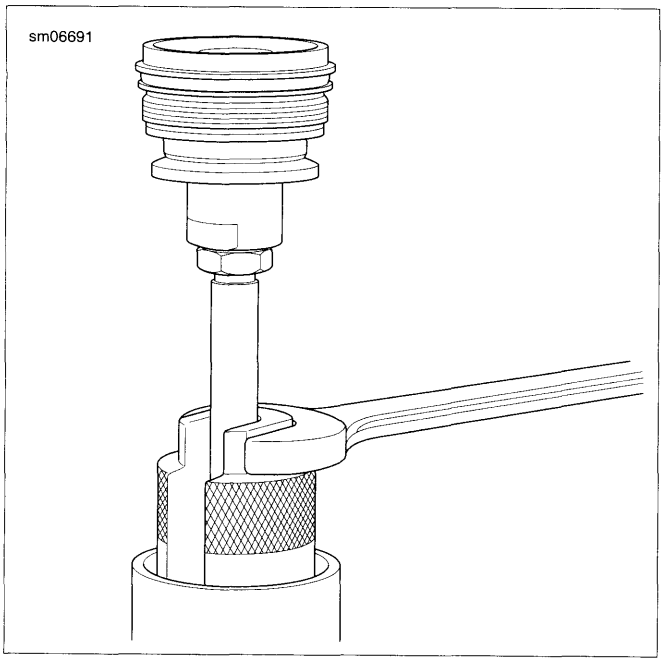

Figure 2-161. Rod Guide Nut Socket

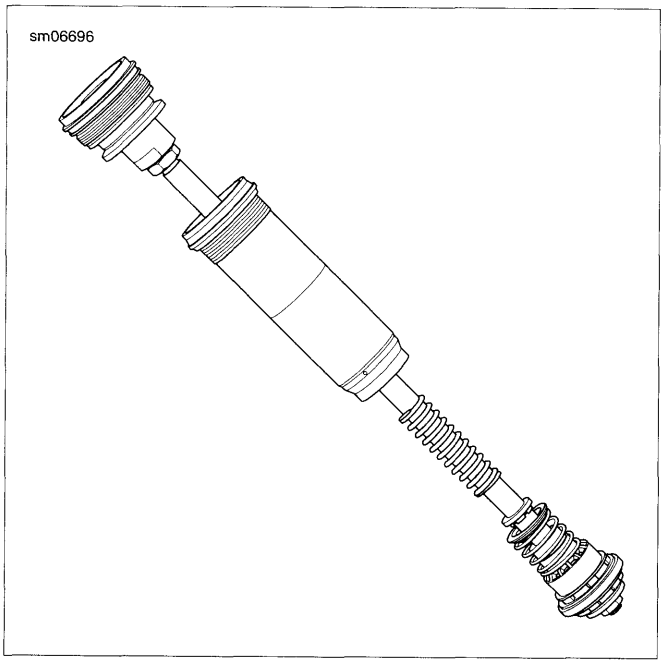

Figure 2-162. Piston Rod Assembly with Rod Case Guide

Drain the Fork Oil

1. See Figure 2-163. Drain the oil into a pan and remove:
   a. The upper spring collar
   b. The spring
   c. The lower spring collar
2. Pump the inner tube 10 or more times to empty the oil from the fork.

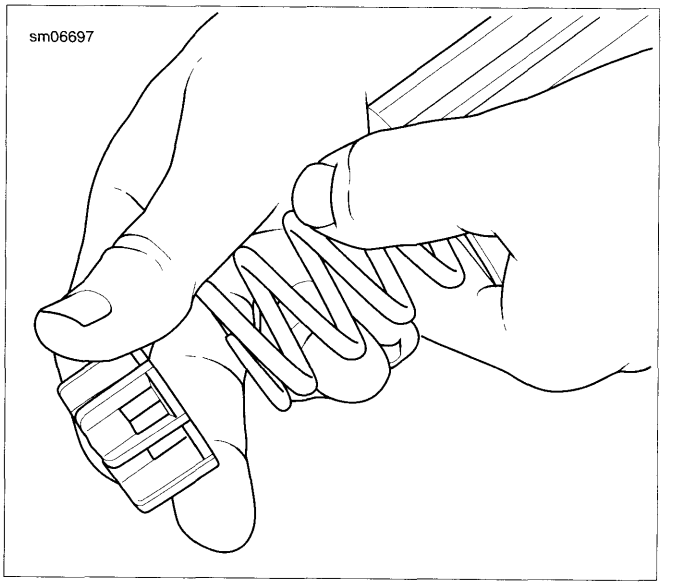

Figure 2-163. Remove the Upper Spring Collar and the Spring

Complete Disassembly

1. See Figure 2-164. Remove the stopper ring (18) from the groove inside the outer tube (13).
2. Slide the inner tube (20) out of the outer tube.
3. From the inner tube remove:
   a. Slide bushing (14)
   b. Guide bushing (15)
   c. Seal spacer (16)
   d. Oil seal (17)
   e. The stopper ring
   f. The dust seal (19)

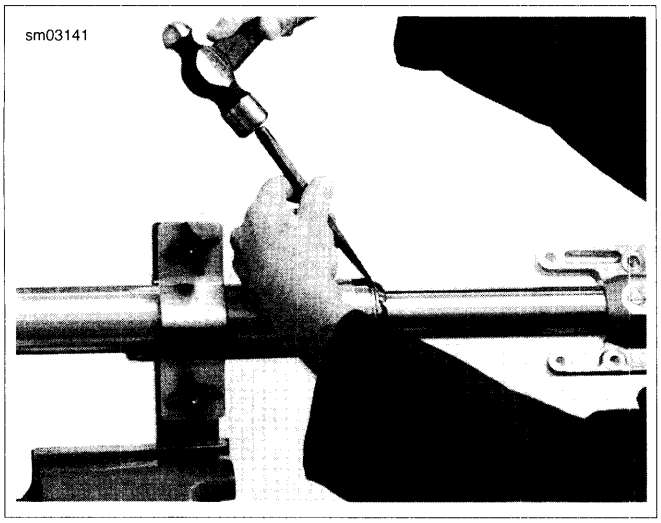

Figure 2-157. Remove Chrome Dust Cover

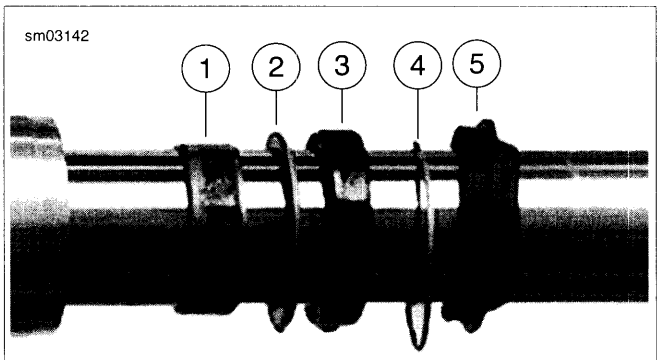

1. **Bushing**
2. **Spacer**
3. **Fork seal (chamfered lips must face oil)**
4. **Lock ring**
5. **Dust seal**

Figure 2-158. Seal Components

DISASSEMBLY: XR 1200X

PART NUMBER	TOOL NAME
HD-41177	FORK HOLDING TOOL
HD-50083	ROD CASE GUIDE SOCKET
HD-50084	FORK CAP WRENCH

Initial Disassembly

⚠WARNING

Wear safety glasses or goggles when servicing fork assembly. Do not remove slider tube caps without relieving spring preload or caps and springs can fly out, which could result in death or serious injury. (00297a)

NOTE

Count and record the rounds out (counterclockwise) for the preload adjuster.

1. See Figure 2-159. Back the preload off the fork spring.
2. Clamp the outer tube in the FORK HOLDING TOOL (Part No. HD-41177).
3. See Figure 2-160. Loosen the fork cap with the FORK CAP WRENCH (Part No. HD-50084).
4. See Figure 2-161. Pull the cap and piston rod up out of the outer tube and loosen the rod case guide with the ROD CASE GUIDE SOCKET (Part No. HD-50083).

NOTE

Hold the rod case guide and turn the axle clamp casting to unthread the case guide from the inner tube.

5. See Figure 2-162. Remove the piston rod assembly from the inner tube.

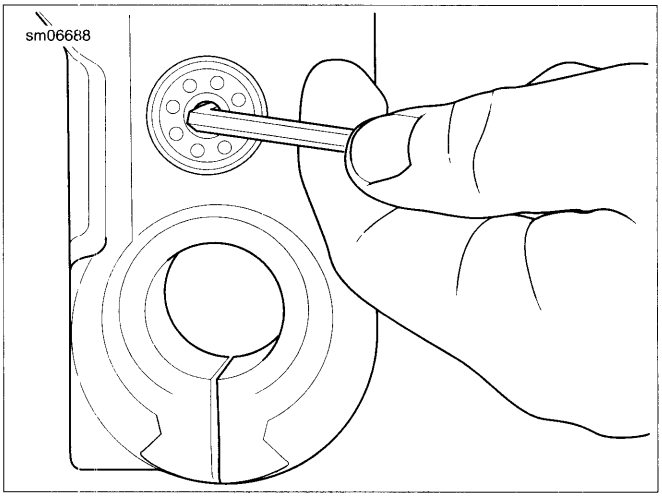

Figure 2-159. Preload Adjuster

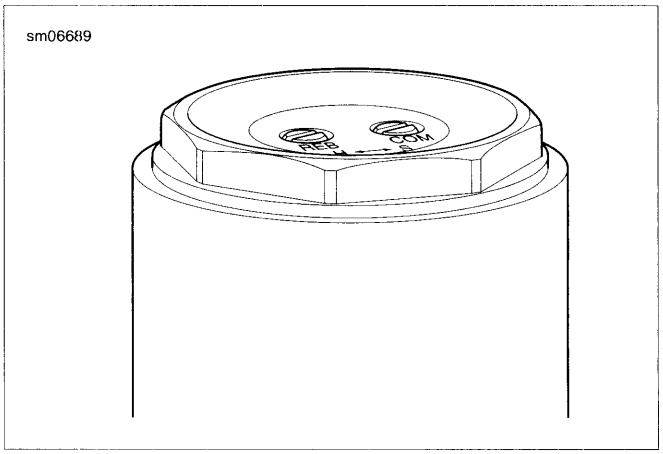

Figure 2-160. Loosen Fork Cap

4. See Figure 2-155. Using INNER FORK NUT REMOVER/INSTALLER (Part No. HD-47852) and remove inner fork nut assembly from fork tube.

NOTE

Note positioning of collar, washer and spring for assembly.

5. See Figure 2-156. Remove collar, washer and spring from fork assembly.

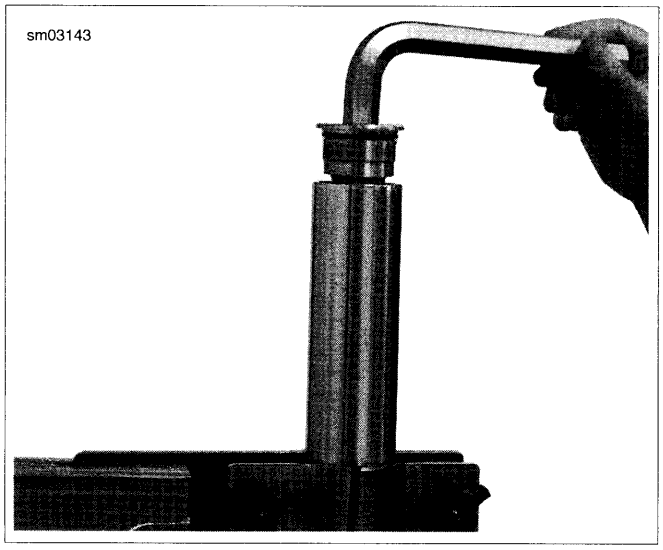

Figure 2-153. Clamp Fork and Loosen Fork Cap

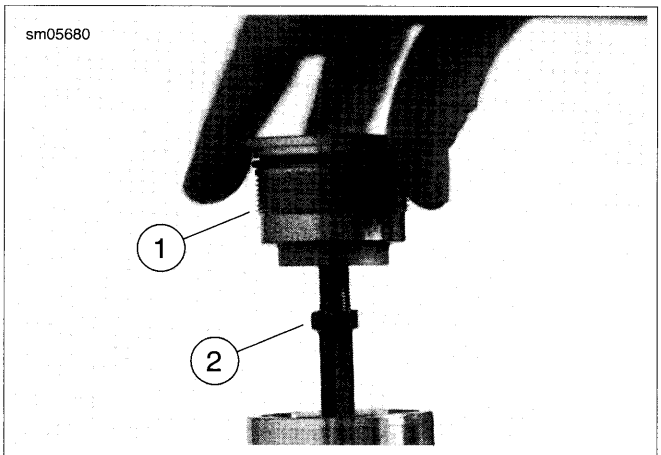

1. **Fork cap**
2. **Retaining nut**

Figure 2-154. Remove/Install Fork Cap and Retaining Nut

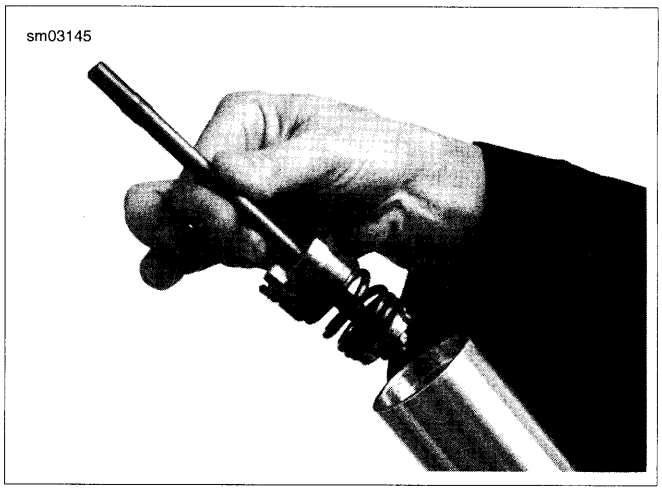

Figure 2-155. Inner Fork Nut

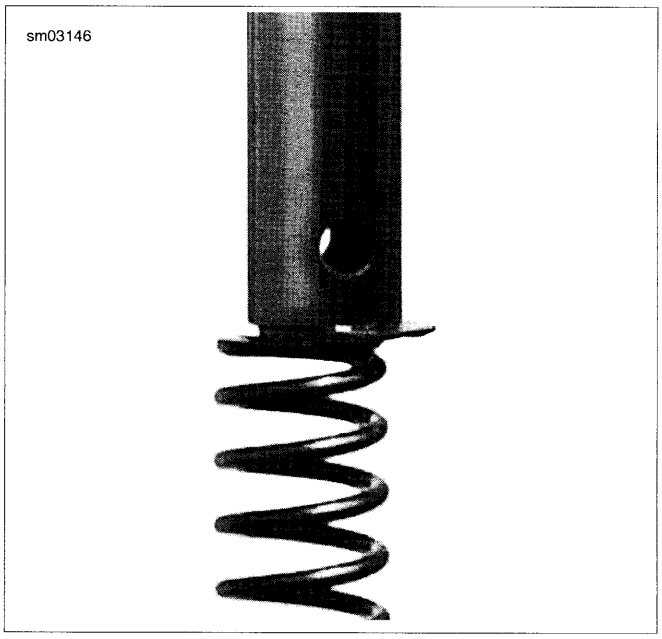

Figure 2-156. Remove Collar, Washer and Spring

Drain Fork Oil

1. Remove fork from vise.
2. Turn fork upside down and drain oil into a pan.

Right Fork: Complete Disassembly

1. See Figure 2-157. Using FORK HOLDING TOOL (Part No. HD-41177), mount fork assembly in vise.
2. Using a blunt soft object (such as a wood dowel, or chisel with duct tape), gently tap chrome dust cover away from seat, remove dust seal, lock ring, fork seal, spacer, and bushing from fork tube. Then, by expanding fork and slider against each other (in a slider-hammer effect) repeatedly, pull slider free from fork tube. Use caution not to damage components.
3. See Figure 2-158. Once fork tube and slider are separated, remove dust seal, lock ring, fork seal, spacer, bushing and chrome dust cover (not shown) from fork slider.

Left Fork: Final Disassembly

NOTE

Always use soft jaws for bench vise when placing any fork components into vise to prevent damage to components.

1. See Figure 2-149. Place fork slider into bench vise with soft-jaws and remove fastener and copper washer from bottom of fork assembly.
2. Remove fork from vise.
3. See Figure 2-150. Place fork in vise using FORK TUBE HOLDER (Part No. HD-41177). Remove cartridge assembly from fork slider.
4. See Figure 2-151. Using a blunt soft object (such as a wood dowel or chisel with duct tape), gently tap chrome dust cover away from seat, remove dust seal, lock ring, fork seal, spacer, and bushing from fork tube. Then, expand fork tube and slider against each other (in a slider-hammer effect) repeatedly to free fork slider from fork tube. Use caution not to damage components.
5. See Figure 2-152. Once fork tube and slider are separated, remove dust seal, lock ring, fork seal, spacer, bushing and chrome dust cover (not shown) from fork slider.

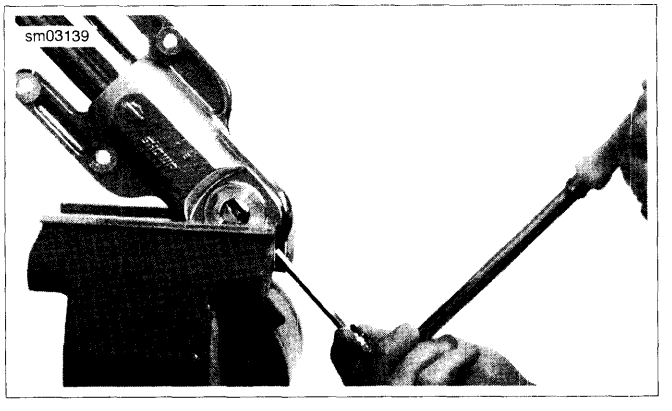

Figure 2-149. Remove Fastener and Copper Washer

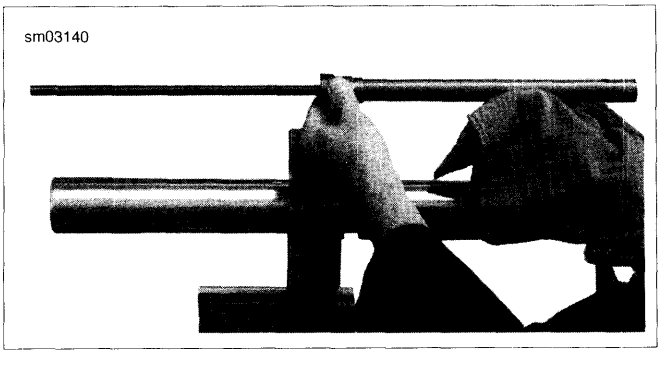

Figure 2-150. Cartridge Assembly

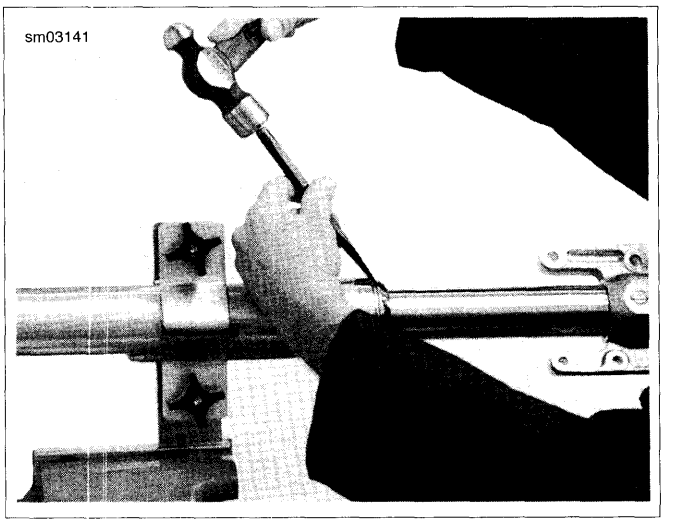

Figure 2-151. Remove Chrome Dust Cover

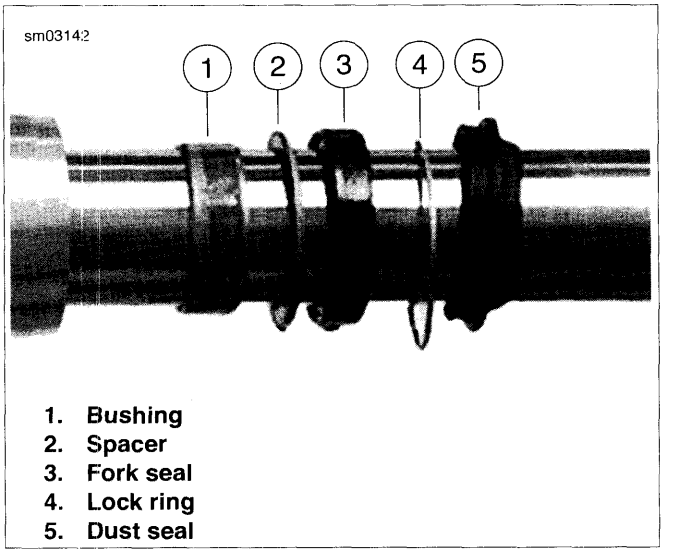

Figure 2-152. Seal Components

Right Fork: Initial Disassembly

⚠WARNING

Wear safety glasses or goggles when servicing fork assembly. Do not remove slider tube caps without relieving spring preload or caps and springs can fly out, which could result in death or serious injury. (00297a)

1. See Figure 2-153. Using FORK HOLDING TOOL (Part No. HD-41177), mount fork assembly in vise.
2. Loosen fork cap.
3. See Figure 2-154. Back retaining nut away from fork cap. Remove fork cap and retainer nut from inner fork nut threaded shaft.

NOTE

Do not fully extend fork assembly. Extending fork will cause oil to leak from bleed hole.

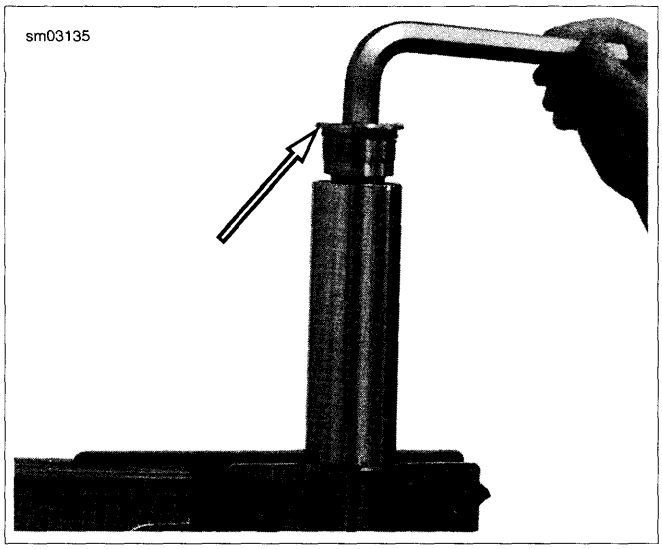

Figure 2-145. Clamp Fork and Remove Fork Cap

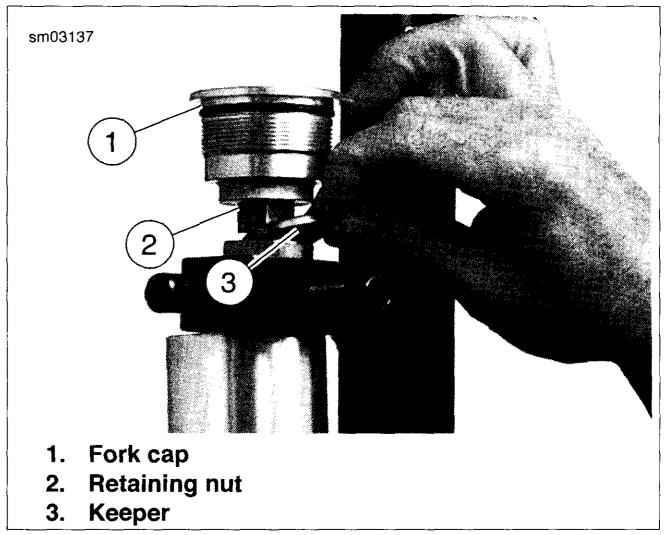

Figure 2-147. Remove Keeper

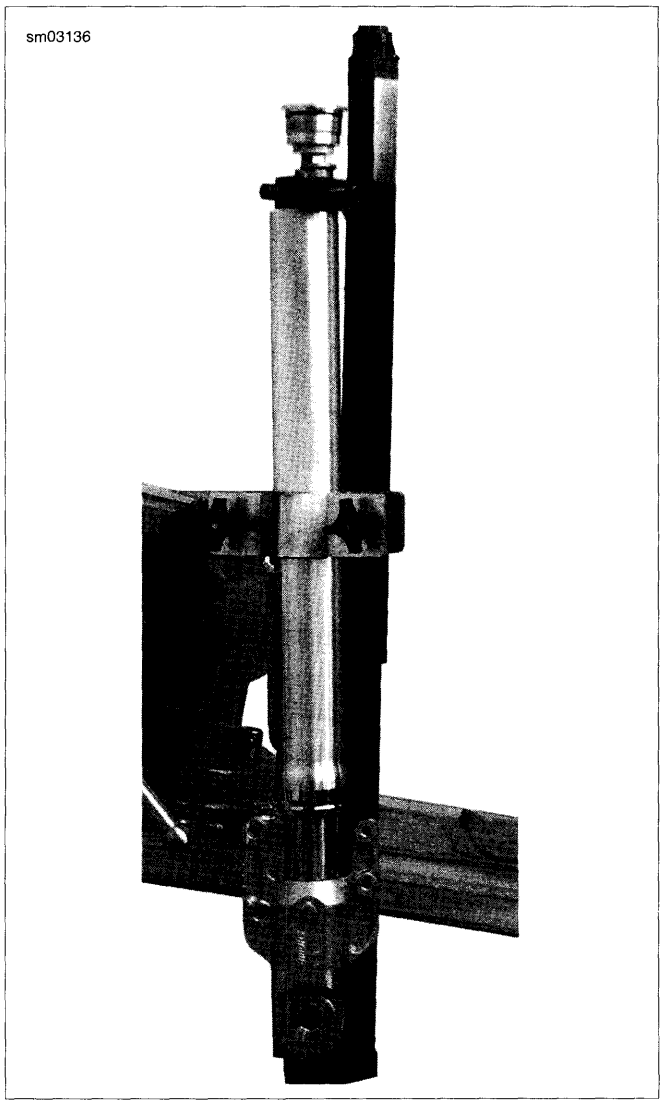

Figure 2-146. Compress Fork Assembly

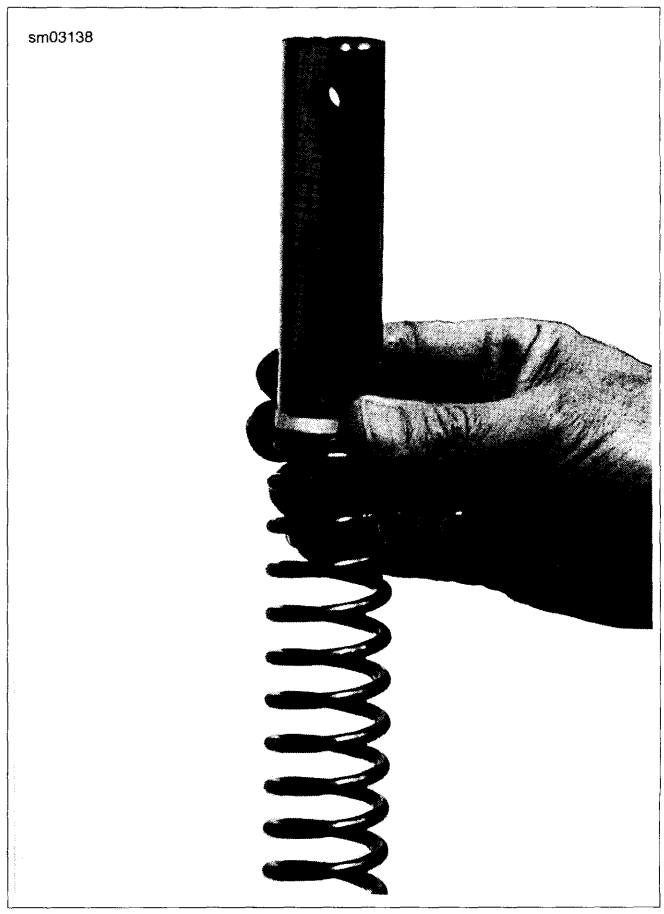

Figure 2-148. Remove Collar, and Spring Assembly

Drain Oil

1. Remove fork from vise.
2. Turn fork upside down and drain into a pan.
3. Stroke cartridge plunger to remove excess fork oil.

GENERAL

The front fork consists of two telescoping tube/slider assemblies. Each tube/slider assembly has an internal compression spring, which supports the forward weight of the vehicle/rider and extends and retracts to cushion the ride over rough or irregular road surfaces. An oil-filled damping mechanism controls the telescoping action of each tube/slider assembly.

REMOVAL

PART NUMBER	TOOL NAME
HD-48287	TRIPLE TREE WEDGE TOOL

1. Remove front brake calipers. See 2.11 FRONT BRAKE CALIPER: XR MODELS.
2. Remove front wheel assembly. See 2.4 WHEELS.
3. Remove front fender and bracket assembly. See 2.32 FRONT FENDER.
4. See Figure 2-144. Remove upper and lower fork bracket pinch bolts.
5. Using TRIPLE TREE WEDGE TOOL (Part No. HD-48287), insert wedge in fork brackets to relieve clamping pressure on fork tubes.
6. Remove fork from upper and lower fork brackets.
7. Repeat steps for other side.

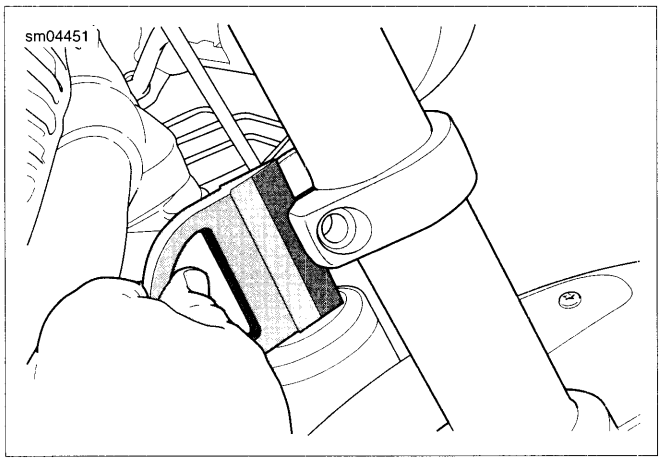

Figure 2-144. Insert Triple Tree Wedge (typical)

DISASSEMBLY: XR 1200

PART NUMBER	TOOL NAME
HD-41177	FORK HOLDING TOOL
HD-45966	FRONT FORK COMPRESSOR
HD-47852	INNER FORK NUT REMOVER/INSTALLER

Left Fork: Initial Disassembly

⚠WARNING

Wear safety glasses or goggles when servicing fork assembly. Do not remove slider tube caps without relieving spring preload or caps and springs can fly out, which could result in death or serious injury. (00297a)

NOTES

- *When using FRONT FORK COMPRESSOR be sure not to bind the outer fork tube on the tool.*
- *FRONT FORK COMPRESSOR (Part No. HD-45966) comes with a cup and screw that are for FLT models only and not to be used with this fork assembly.*

1. See Figure 2-145. Using FORK HOLDING TOOL (Part No. HD-41177), mount fork assembly in vise.
2. Remove fork cap.
3. See Figure 2-146. Compress fork using FRONT FORK COMPRESSOR (Part No. HD-45966).

NOTE

Note position of retaining nut with shoulder of nut facing away from fork cap. Be sure to install in the same manner.

4. See Figure 2-147. Remove keeper and loosen retaining nut, and fork cap from cartridge assembly.
5. Remove Front Fork Compressor.
6. See Figure 2-148. Remove collar and spring from fork assembly.

4. Install spring and slider tube cap with O-ring. Tighten to 22-58 ft-lbs (29.9-78.7 Nm).
5. Assemble fork and install in frame.
6. Install slider tube cap (7) with O-ring (6). Screw tube cap all the way into slider tube. Finger-tighten only at this time.

Table 2-19. Fork Oil Level Specifications: XL Models

/>MODEL	in	mm
XL 883L/XL 883N/XL 1200N	3.11	79
XL 1200L	4.80	122
All other XL models	5.75	146

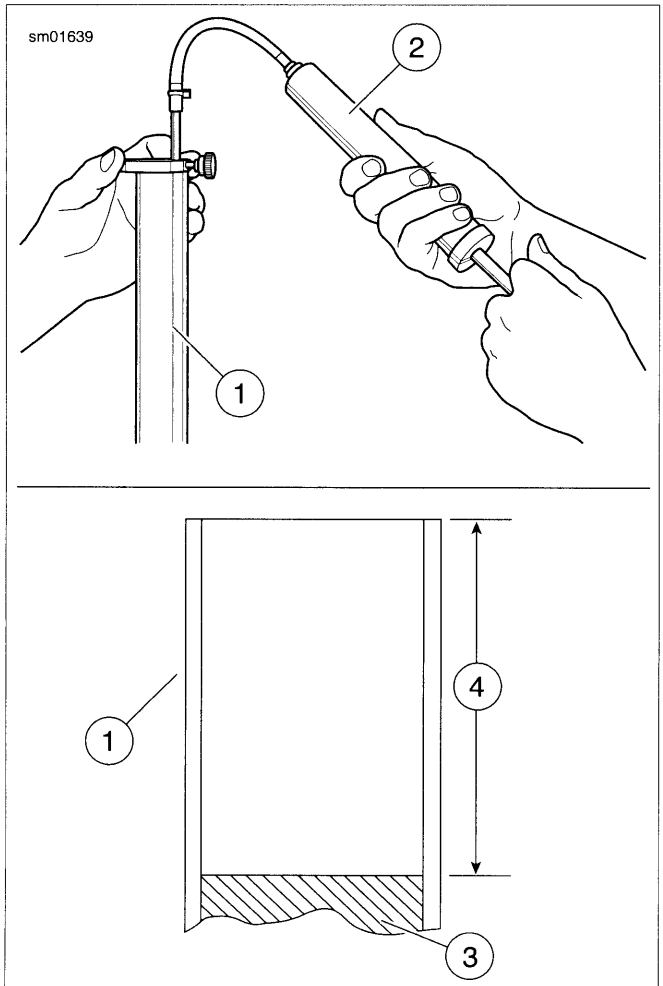

1. **Fork slider tube**
2. **Oil Level Gauge**
3. **Fork oil**
4. **Fork oil level**

Figure 2-142. Refilling Front Fork Oil

INSTALLATION

1. See Figure 2-140. Insert each fork assembly (12) through front fork lower (1) and upper (6) brackets. Position slider tubes so that top of each tube cap (11) extends 0.42-0.50 in. (10.7-12.7 mm) above top surface of front fork upper bracket.
2. Tighten front fork upper and lower bracket pinch screws (11 and 14) to 30-35 ft-lbs (40.7-47.5 Nm).
3. Now tighten slider tube caps to 22-58 ft-lbs (29.9-78.7 Nm).
4. **XL 883N/XL 1200N:** See Figure 2-143. Slide upper end of each fork gaiter (2) up until it contacts underside of front fork lower bracket (4).
5. Install front fender. See 2.32 FRONT FENDER. Tighten fasteners to 96-156 **in-lbs** (10.9-17.6 Nm).
6. Install front wheel assembly and front brake caliper. See 2.4 WHEELS.

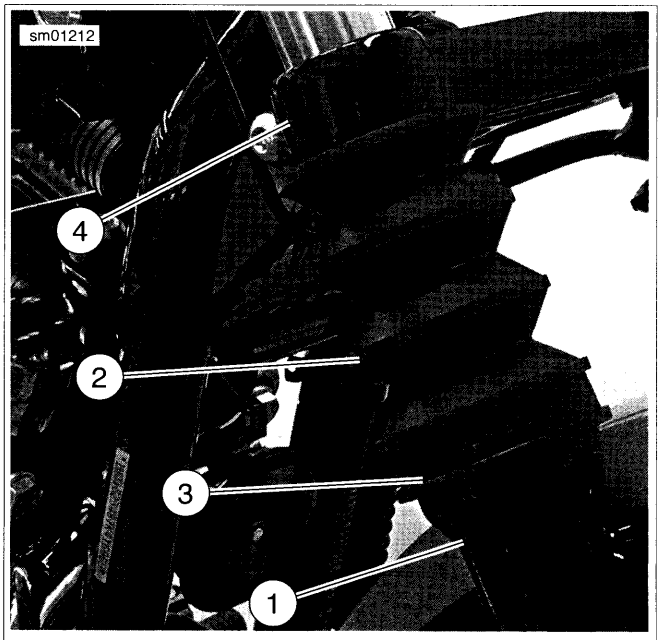

1. **Fork slider (2)**
2. **Fork gaiter (2)**
3. **Fork gaiter lower lip**
4. **Front fork lower bracket**

Figure 2-143. Fork Gaiter: XL 883N/XL 1200N Only

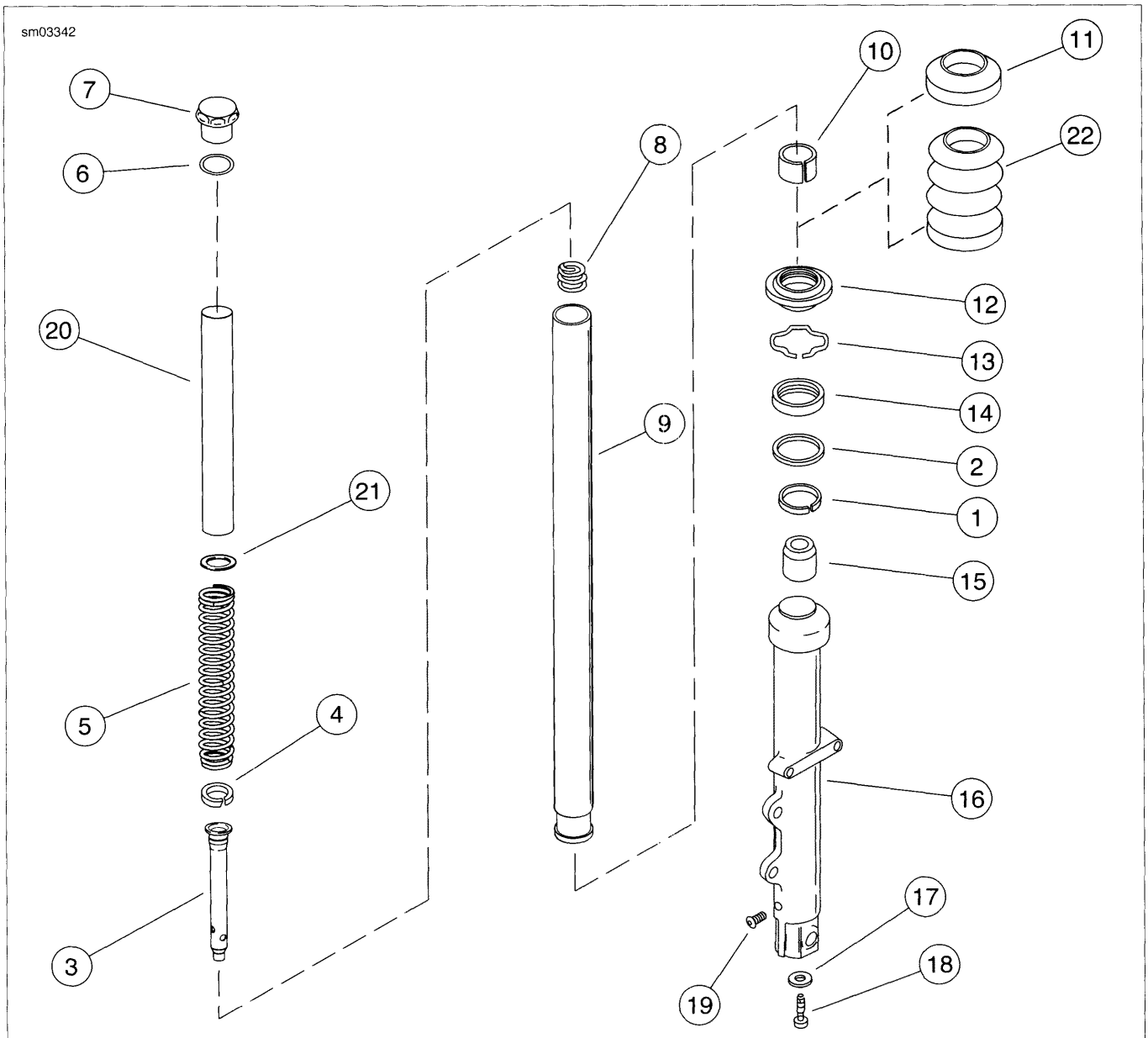

1. Upper bushing
2. Spacer
3. Damper tube
4. Damper tube ring
5. Spring
6. O-ring
7. Tube cap
8. Rebound spring
9. Slider tube
10. Lower bushing
11. Cover (all except XL 883N/XL 1200N)
12. Dust seal
13. Internal circle clip
14. Oil seal
15. Sleeve
16. Slider
17. Washer
18. Screw
19. Drain screw and washer
20. Spring collar (all except XL 1200L)
21. Spring washer (all except XL 1200L)
22. Fork gaiter (XL 883N/XL 1200N) only)

Figure 2-141. Front Slider Tube/Slider Assembly: XL Models

Fill with Fork Oil

1. Position fork tube assembly upright. Remove spring and compress assembly fully.
2. Pour approximately 14 fl oz. (414 mL) of HARLEY-DAVIDSON FORK OIL Type E into fork.
3. See Figure 2-143. Use the OIL LEVEL GAUGE (Part No. HD-59000-B) to draw off excess fork oil until it reaches the level specification. Refer to Table 2-19.

CLEANING, INSPECTION AND REPAIR

1. Thoroughly clean and inspect all parts. Replace any parts that are bent or damaged.
2. See Figure 2-141. Inspect the O-ring (6) for damage, wear or general deterioration; replace as necessary. Replace all other removed seals.
3. Inspect damper tube ring(s) (4). Replace ring(s) if damaged or excessively worn.
4. Check dust seal (12) where it contacts slider tube (9). Dust seal should provide continuous contact against slider tube and should not show excessive wear. Check slider tube where it is contacted by seal. Tube surface should be shiny, smooth and free of scoring or abrasions.
5. Inspect small hole in groove of slider tube lower end. Verify that hole is unobstructed.

ASSEMBLY

PART NUMBER	TOOL NAME
HD-36583	FORK SEAL AND BUSHING INSTALLATION TOOL
HD-59000-B	OIL LEVEL GAUGE

Initial Assembly

1. See Figure 2-141. If lower bushing (10) was removed, install **new** lower bushing in groove of slider tube (9). Expand bushing only enough to fit over tube.
2. Install damper tube ring(s) (4) into groove(s) of damper tube (3).
3. Place rebound spring (8) over damper tube (3). Insert damper tube into slider tube.
4. Insert spring (5) into slider tube with the tapered end down. Push damper tube through opening at bottom of slider tube using spring. Place sleeve (15) over end of damper tube.
5. **All except XL 1200L:** Install spring washer (21) and spring collar (20) into slider tube.
6. Install slider tube assembly into slider (16). Install screw (18) with washer (17) at bottom of slider. Move slider tube through its full range of travel within slider several times to verify proper component alignment. Then, applying downward force on spring, final tighten screw to 132-216 **in-lbs** (14.9-24.4 Nm).
7. Place upper bushing (1), spacer (2) (concave side downward), oil seal (14) (lettering side upward) and FORK SEAL AND BUSHING INSTALLATION TOOL (Part No. HD-36583) over slider tube. Install bushing, spacer and seal into slider bore by tapping components downward with the installation tool. Install internal circle clip (13) into groove in top of slider bore.
8. Install dust seal (12) at top of slider.
9. **All except XL 883N/XL 1200N:** Install cover (11).
10. **XL 883N/XL 1200N:** See Figure 2-143. Slide a fork gaiter (2) down each slider tube. Peal back lower lip (3) and slip over end of fork slider (1), fitting lower lip down over groove in upper end of fork slider. Slide upper end of fork gaiter down as far as possible.
11. See Figure 2-141. Install the drain screw and washer (19) into lower end of slider.

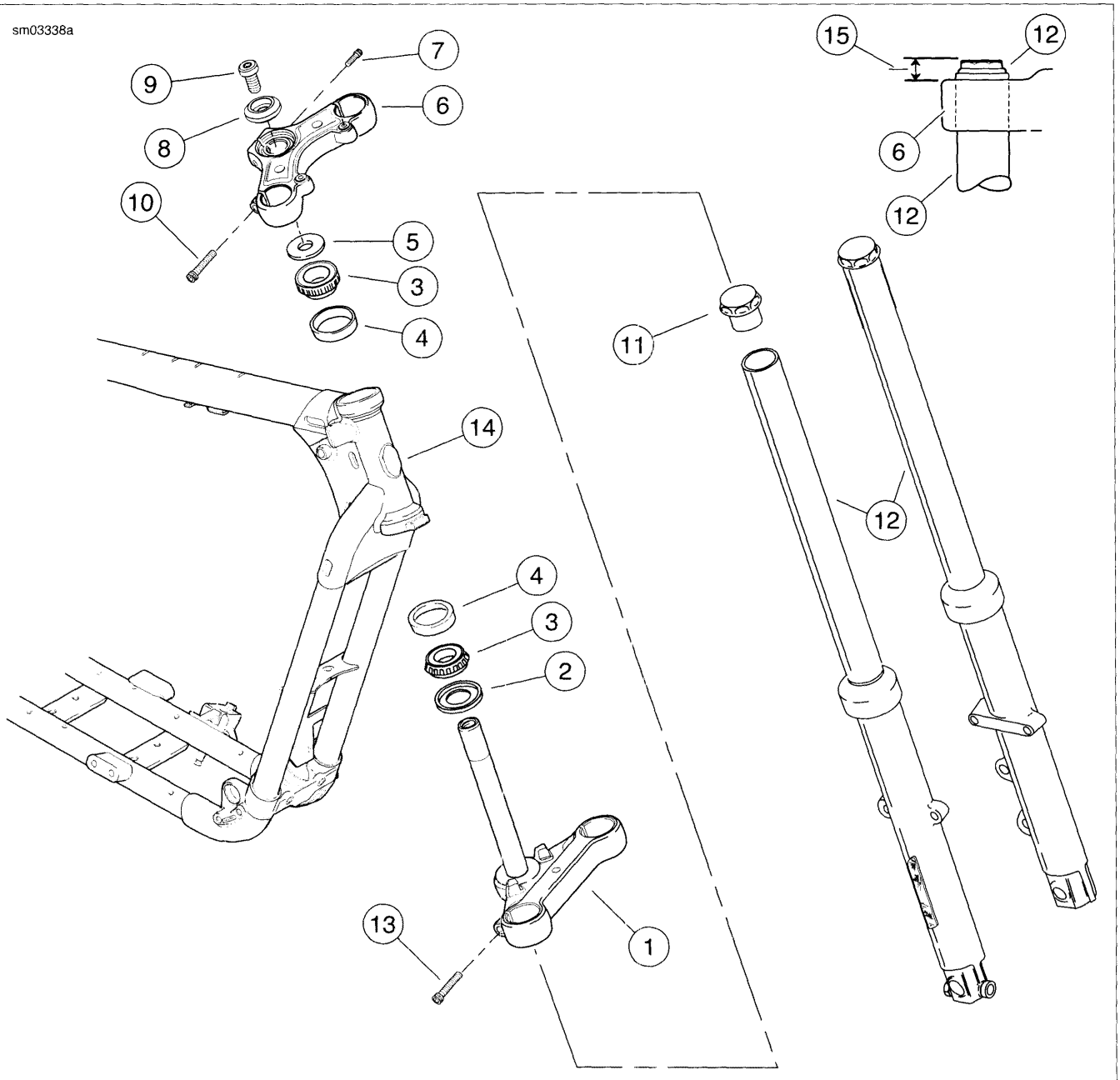

1. Front fork lower bracket and stem
2. Seal, lower
3. Bearing cone (2)
4. Bearing cup (2)
5. Seal, upper
6. Front fork upper bracket
7. Fork stem pinch screw
8. Washer
9. Fork stem bolt
10. Pinch screw, upper (2)
11. Slider tube cap (2)
12. Fork assembly (slider and tube assembly, RH and LH)
13. Pinch screw, lower (2)
14. Steering head (part of frame)
15. XL models: 0.42-0.50 in. (10.7-12.7 mm)

Figure 2-140. Front Fork Assembly: XL Models

2. Place a pan under the fork and remove the drain screw and washer (19) from slider (16). Drain the fork oil.

Fork Disassembly

1. See Figure 2-141. Remove spring (5) from slider tube.
2. **All except XL 1200L:** Remove spring collar (20) and spring washer (21) from slider tube.
3. **All except XL 883N/XL 1200N:** Remove cover (11).

NOTE

See Figure 2-143. The XL 883N and XL 1200N are equipped with fork gaiters (2) instead of metal covers. The lower lip (3) of the fork gaiter fits into the groove at the upper end of the fork slider (1). The upper end of the fork gaiter fits tightly around the slider tube, just below the front fork lower bracket (4).

4. **XL 883N/XL 1200N:** See Figure 2-143. Peel back lower lip (3) of fork gaiter (2) from slider groove and slide fork gaiter up and off end of slider tube.
5. See Figure 2-141. Remove dust seal (12). Compress internal circle clip (13). Remove clip from groove in top of slider bore.
6. Remove screw (18) and washer (17) from bottom of slider.

NOTE

Since there is little resistance to damper tube (3) rotation within slider tube (9) when removing screw (18), use an air impact wrench for best results.

7. Withdraw slider tube (9) from slider until lower bushing (10) on slider tube contacts upper bushing (1) in slider. Use lower bushing on slider tube in a slide hammer motion to gently tap out oil seal (14), spacer (2) and upper bushing from slider bore.
8. Remove sleeve (15). Sleeve will be found within slider or on bottom end of damper tube (3).
9. Insert a small diameter rod through opening in bottom of slider tube to remove damper tube assembly.
10. Remove rebound spring (8) from damper tube.
11. Remove damper tube ring(s) (4) from damper tube.
12. Remove lower bushing from damper tube only if replacement is necessary.

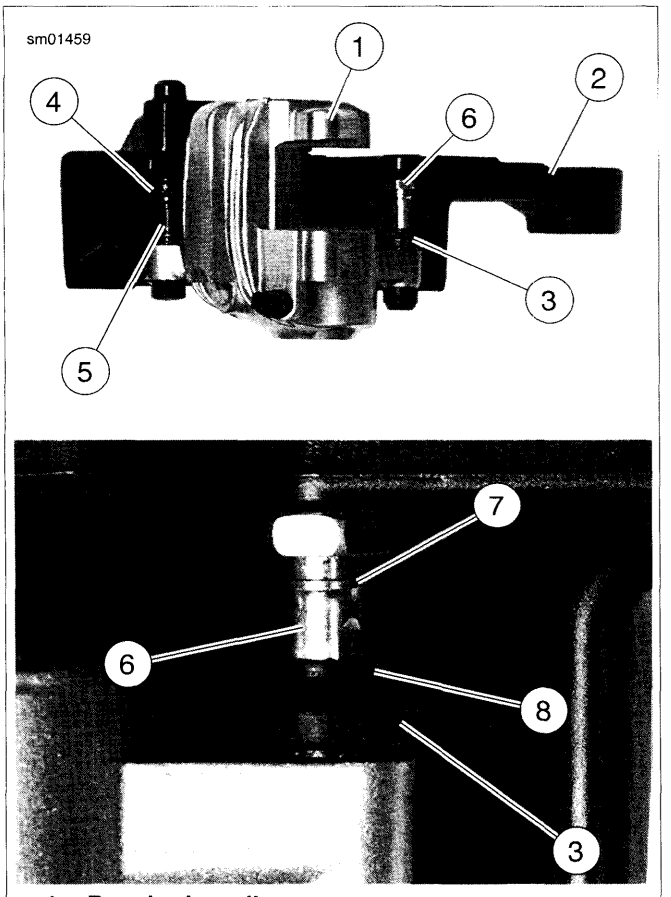

1. **Rear brake caliper**
2. **Caliper mounting bracket**
3. **Caliper bushing boot**
4. **Caliper pin boot**
5. **Bolt pin (caliper)**
6. **Bolt pin (mounting bracket)**
7. **Tapered shoulder**
8. **Boot lip**

Figure 2-102. Assembling Rear Brake Caliper to Mounting Bracket

ASSEMBLY

NOTE

Use ONLY KS62F assembly grease for lubrication. Use of D.O.T. 4 brake fluid will result in increased brake pedal travel.

1. Lubricate the following parts prior to assembly using a light coat of KS62F assembly grease from the service parts kit. All other surfaces must be dry for assembly.
   a. Nose radius of piston. See Figure 2-103.
   b. All surfaces of piston seal and dust seal.

NOTE

A damaged piston bore will leak when reassembled. Do not use metal objects to remove or install components in piston bore. Prevent damage to bore by only using a wooden toothpick when servicing caliper.

2. See Figure 2-100. Install a **new** piston seal (3) and a **new** dust seal (2) into piston bore.
3. Carefully insert piston by hand, nose radius first (see Figure 2-97), into caliper bore. If installation shows resistance, remove piston and check that seals are properly installed and fully seated in grooves.
4. See Figure 2-97. Install bleeder valve (12) on caliper housing if removed. Do not tighten bleeder valve at this time.
5. See Figure 2-104. Place caliper and mounting bracket assembly on workbench as shown. Install pad spring in channel. Press firmly into place.

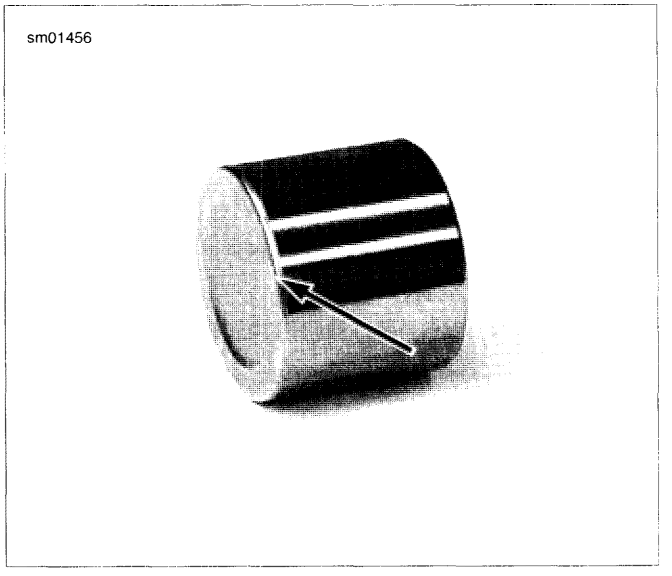

Figure 2-103. Piston Nose Radius

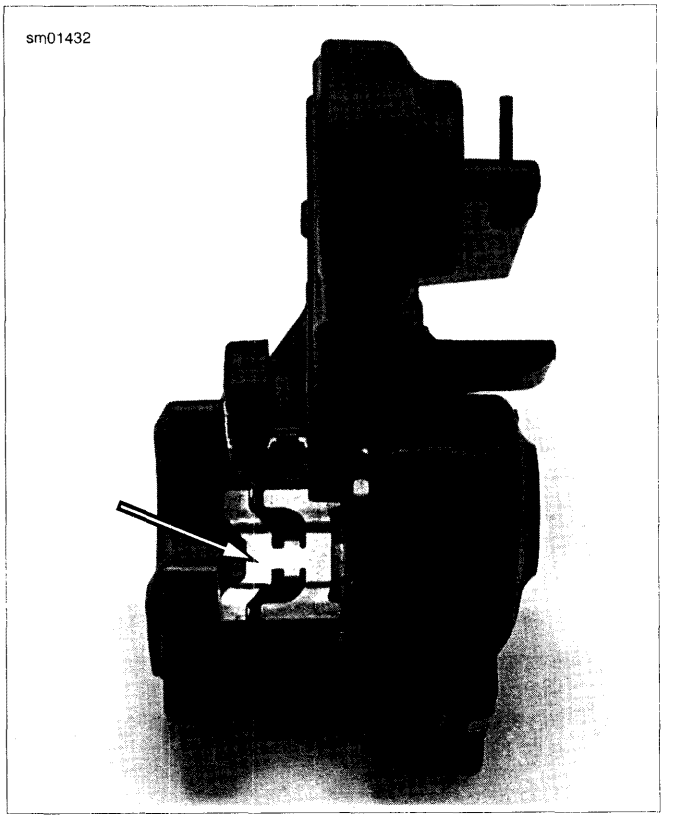

Figure 2-104. Rear Caliper Pad Spring

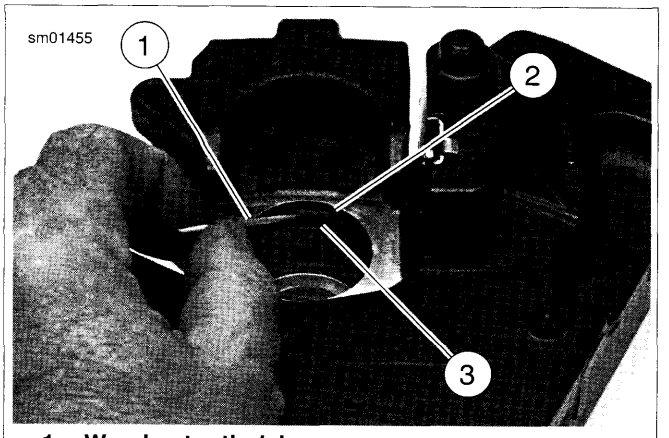

1. **Wooden toothpick**
2. **Dust seal**
3. **Piston seal**

Figure 2-100. Caliper Seals

CLEANING, INSPECTION AND REPAIR

⚠WARNING

Use denatured alcohol to clean brake system components. Do not use mineral-based solvents (such as gasoline or paint thinner), which will deteriorate rubber parts even after assembly. Deterioration of these components can cause brake failure, which could result in death or serious injury. (00291a)

1. Clean piston bore with denatured alcohol.
2. Clean all rubber parts with HARLEY-DAVIDSON D.O.T. 4 BRAKE FLUID. Do not contaminate with mineral oil or other solvents. Wipe parts dry with a clean, lint free cloth.

⚠WARNING

Compressed air can pierce the skin and flying debris from compressed air could cause serious eye injury. Wear safety glasses when working with compressed air. Never use your hand to check for air leaks or to determine air flow rates. (00061a)

3. Blow out drilled passages and piston bore with low pressure compressed air from a clean air supply. Do not use a wire or similar instrument to clean drilled passages.
4. Carefully inspect all components. Replace any parts that appear damaged or worn.
   a. Check piston (16) for pitting, scratching or corrosion on outside surfaces.
   b. Inspect caliper (6) piston bore. Do not hone bore. If bore shows pitting or corrosion, replace caliper.
   c. Inspect pad pin (10) for grooving and wear. Measure the pad pin diameter in an unworn area, and then in the area of any grooving or wear. If wear is more than 0.011 in. (0.28 mm), replace pad pin.
   d. Always replace all seals after disassembly.

⚠WARNING

Always replace brake pads in complete sets for correct and safe brake operation. Improper brake operation could result in death or serious injury. (00111a)

5. Inspect brake pads (13) and brake disc. Replace if necessary.
   a. See 1.9 BRAKE PADS AND DISCS: XL MODELS for specifications.
   b. See 2.4 WHEELS for brake disc replacement procedure.

LUBRICATING REAR CALIPER BOLT PINS AND BOOTS

1. See Figure 2-101. Apply approximately 0.4 g of G40M BRAKE GREASE inside caliper bushing boot (3) and caliper pin boot (4).
2. See Figure 2-102. Apply G40M BRAKE GREASE inside boot lip (8) to prevent sticking between boots (3, 4) and bolt pins (5, 6).
3. Insert mounting bracket bolt pin (6) into caliper bushing boot (3).

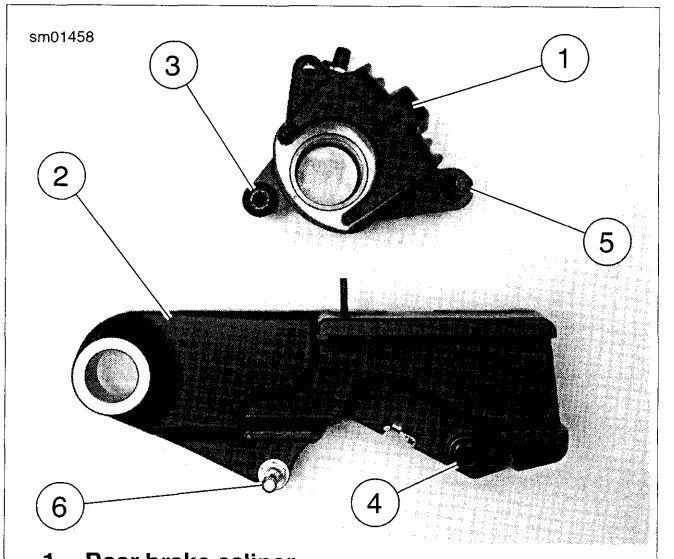

1. **Rear brake caliper**
2. **Caliper mounting bracket**
3. **Caliper bushing boot**
4. **Caliper pin boot**
5. **Bolt pin (caliper)**
6. **Bolt pin (mounting bracket)**

Figure 2-101. Lubricating Caliper Boots and Pins

INSTALLATION

1. See Figure 2-105. Before installing caliper, make sure that retainer clip is properly installed on mounting bracket.
2. See Figure 2-97. Install rear caliper onto the mounting bracket:
   a. Apply a small amount of LOCTITE 272 THREAD-LOCKER to threads of mounting bracket bolt pin (5).
   b. Place the rear caliper assembly (6) onto the mounting bracket (1). Using an open end wrench, thread mounting bracket bolt pin into caliper mounting bracket. Tighten to 87-130 **in-lbs** (9.8-14.7 Nm).
   c. Apply a small amount of LOCTITE 272 THREAD-LOCKER to threads of caliper bolt pin (7).
   d. Slide caliper bolt pin through front mounting hole in caliper (6). Carefully insert bolt pin shaft into caliper pin boot (3) in mounting bracket (1).
   e. Screw bolt pin into caliper and tighten to 15-18 ft-lbs (19.6-24.5 Nm).
3. Install rear brake caliper and mounting bracket assembly onto vehicle.

NOTE

Brake caliper housing has a positive stop for banjo fitting. When tightening banjo bolt into brake caliper in the next step, rotate banjo fitting clockwise until it contacts positive stop.

4. See Figure 2-106. Position a **new** washer (2) on each side of hydraulic brake line (3) banjo fitting. Insert banjo bolt (1) through washers and fitting. Thread bolt into caliper housing. Tighten to 20-25 ft-lbs (27.1-33.9 Nm).

NOTE

The rear brake caliper does NOT use the same exact brake pad set as the front left and front right (not present on all models) calipers.

5. See Figure 2-107. Insert brake pads (1) into caliper with friction material on pad facing brake disc. Curved portion of pad fits into recessed area of caliper. Make sure brake pad front mounting tab (2) fits into slot (5) in caliper mounting bracket (4).
6. See Figure 2-97. Press brake pads (15) tightly up against pad spring (2) and install pad pin (10). Tighten to 131-173 **in-lbs** (14.8-19.6 Nm).

NOTES

If pad pin does not fit, check the following:

- *You are using a set of pads, not two identical pads.*
- *Pad spring orientation must match Figure 2-104.*
- *See Figure 2-107. Pad front mounting tabs (2) must be fully seated in mounting bracket slot (5).*
- *Pads must be pushed tight up against pad spring before pad pin is installed.*

7. See Figure 2-97. Install pad pin plug (9). Tighten to 18-25 **in-lbs** (2.0-2.9 Nm).

⚠CAUTION

Direct contact of D.O.T. 4 brake fluid with eyes can cause irritation. Avoid eye contact. In case of eye contact flush with large amounts of water and get medical attention. Swallowing large amounts of D.O.T. 4 brake fluid can cause digestive discomfort. If swallowed, obtain medical attention. Use in well ventilated area. KEEP OUT OF REACH OF CHILDREN. (00240a)

CAUTION

D.O.T. 4 brake fluid will damage painted and body panel surfaces it comes in contact with. Always use caution and protect surfaces from spills whenever brake work is performed. Failure to comply can result in cosmetic damage. (00239b)

NOTES

- *If D.O.T. 4 brake fluid contacts painted surfaces, IMMEDIATELY flush area with clear water.*
- *Rear brake master cylinder reservoir must be in a level position when filling and checking fluid level.*
- *See Figure 2-108. Reservoir cover (2) may be removed from rear brake master cylinder reservoir (1) to more easily verify fluid level in reservoir.*

8. See Figure 2-108. If desired, remove reservoir cover: grasp cover (2) and gently pull straight out from reservoir (1).
9. Remove rear brake master cylinder reservoir cap (5). Add HARLEY-DAVIDSON D.O.T. 4 BRAKE FLUID to reservoir until fluid reaches upper fluid level (3). Do not overfill reservoir. Do not reuse brake fluid.

⚠WARNING

After servicing brakes and before moving motorcycle, pump brakes to build brake system pressure. Insufficient pressure can adversely affect brake performance, which could result in death or serious injury. (00279a)

10. Bleed brake system. See 1.8 BLEEDING HYDRAULIC BRAKE SYSTEM.

⚠WARNING

A plugged or covered relief port can cause brake drag or lock-up, which could lead to loss of control, resulting in death or serious injury. (00288a)

11. Verify proper operation of master cylinder relief port.
    a. Press against rear brake caliper to push caliper piston back into its bore. This pushes brake fluid back through master cylinder and verifies that relief port is not plugged.
    b. Pump brake pedal until caliper piston pushes pads against disc and pressure is returned to brake system.
12. Add HARLEY-DAVIDSON D.O.T. 4 BRAKE FLUID to reservoir until fluid reaches upper fluid level.
13. If reservoir cover was removed, install cover on reservoir.

⚠WARNING

After repairing the brake system, test brakes at low speed. If brakes are not operating properly, testing at high speeds can cause loss of control, which could result in death or serious injury. (00289a)

14. Test brake system.
    a. Turn ignition switch ON. Pump brake pedal to verify operation of brake lamp.
    b. Test ride motorcycle at low speed. If brakes feel spongy, bleed system again. See 1.8 BLEEDING HYDRAULIC BRAKE SYSTEM.

NOTE

Avoid making hard stops for the first 100 miles (160 km). This allows the new pads to become conditioned to the brake discs.

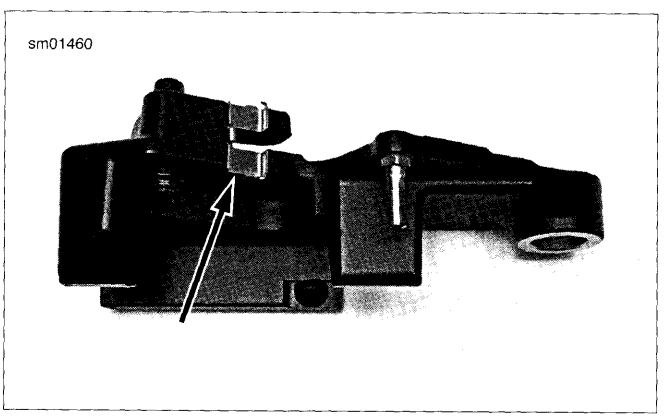

Figure 2-105. Retainer Clip

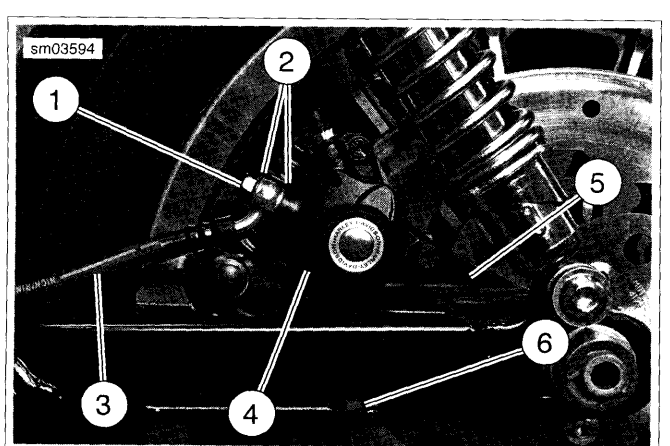

1. **Banjo bolt**
2. **Washer (2)**
3. **Rear brake line**
4. **Brake caliper**
5. **Caliper mounting bracket**
6. **Damper**

Figure 2-106. Rear Caliper Assembly

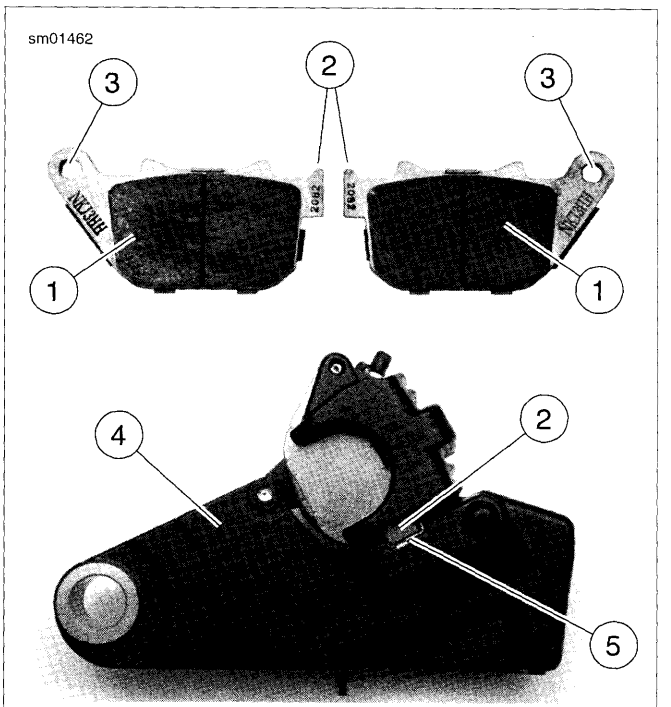

1. **Brake pad**
2. **Front mounting tab**
3. **Pad pin hole**
4. **Rear caliper mounting bracket**
5. **Slot**

Figure 2-107. Installing Rear Brake Pads

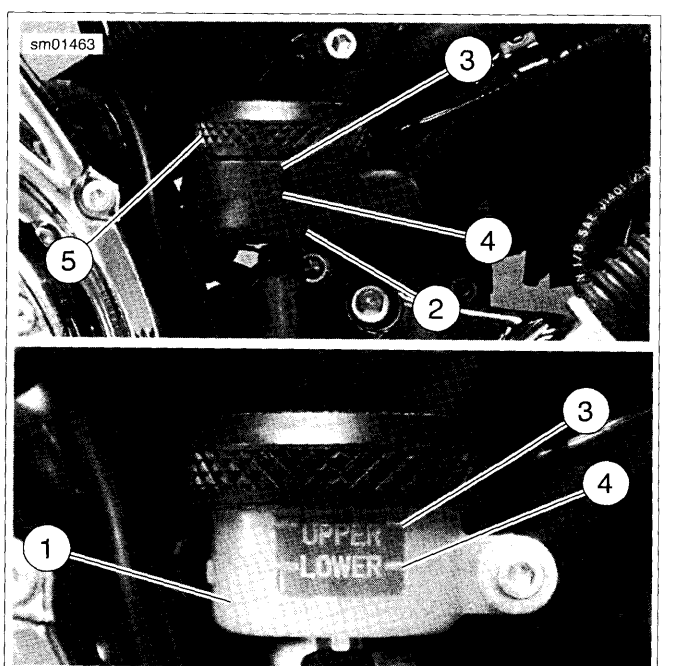

1. **Rear brake master cylinder reservoir**
2. **Reservoir cover**
3. **Upper fluid level**
4. **Lower fluid level**
5. **Reservoir cap**

Figure 2-108. Rear Brake Master Cylinder Reservoir

REMOVAL

NOTE

If only replacing brake pads, do not remove rear brake caliper. For brake pad replacement only, see 1.10 BRAKE PADS AND DISCS: XR MODELS.

⚠CAUTION

Direct contact of D.O.T. 4 brake fluid with eyes can cause irritation. Avoid eye contact. In case of eye contact flush with large amounts of water and get medical attention. Swallowing large amounts of D.O.T. 4 brake fluid can cause digestive discomfort. If swallowed, obtain medical attention. Use in well ventilated area. KEEP OUT OF REACH OF CHILDREN. (00240a)

NOTE

Damaged banjo bolt surfaces will leak when reassembled. Prevent damage to seating surfaces by carefully removing brake line components.

CAUTION

D.O.T. 4 brake fluid will damage painted and body panel surfaces it comes in contact with. Always use caution and protect surfaces from spills whenever brake work is performed. Failure to comply can result in cosmetic damage. (00239b)

NOTES

If D.O.T. 4 brake fluid contacts painted surfaces, IMMEDIATELY flush area with clear water.

1. Position vehicle upright on a suitable lift.
2. Place a suitable container under the rear caliper brake line banjo fitting to catch any brake fluid that may leak out. Do not reuse brake fluid.
3. Disconnect left shock absorber from rear fork and rotate shock absorber out of the way.
4. Loosen rear axle nut and turn adjuster nuts to allow the rear wheel to move forward to the adjustment limit.
5. See Figure 2-109. Remove the banjo bolt (2) and both washers (3) to detach rear brake line (1) from brake caliper. Discard washers.
6. Remove mounting bolt (5) and bolt pin (6).
7. Remove caliper assembly from motorcycle.

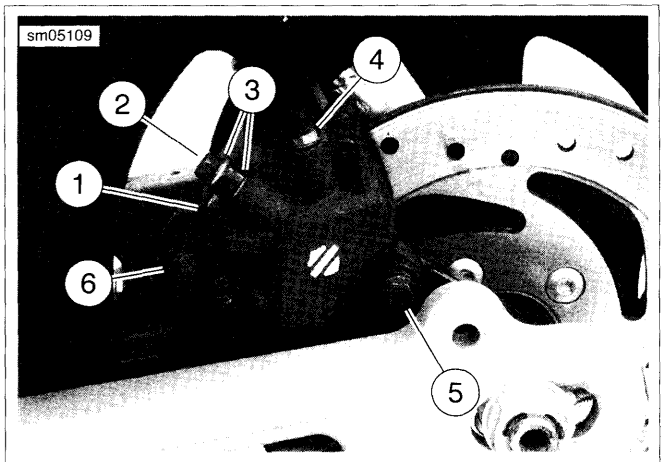

1. **Rear brake line**
2. **Banjo bolt**
3. **Washer (2)**
4. **Bleeder valve**
5. **Mounting bolt**
6. **Bolt pin**

Figure 2-109. Rear Caliper Assembly

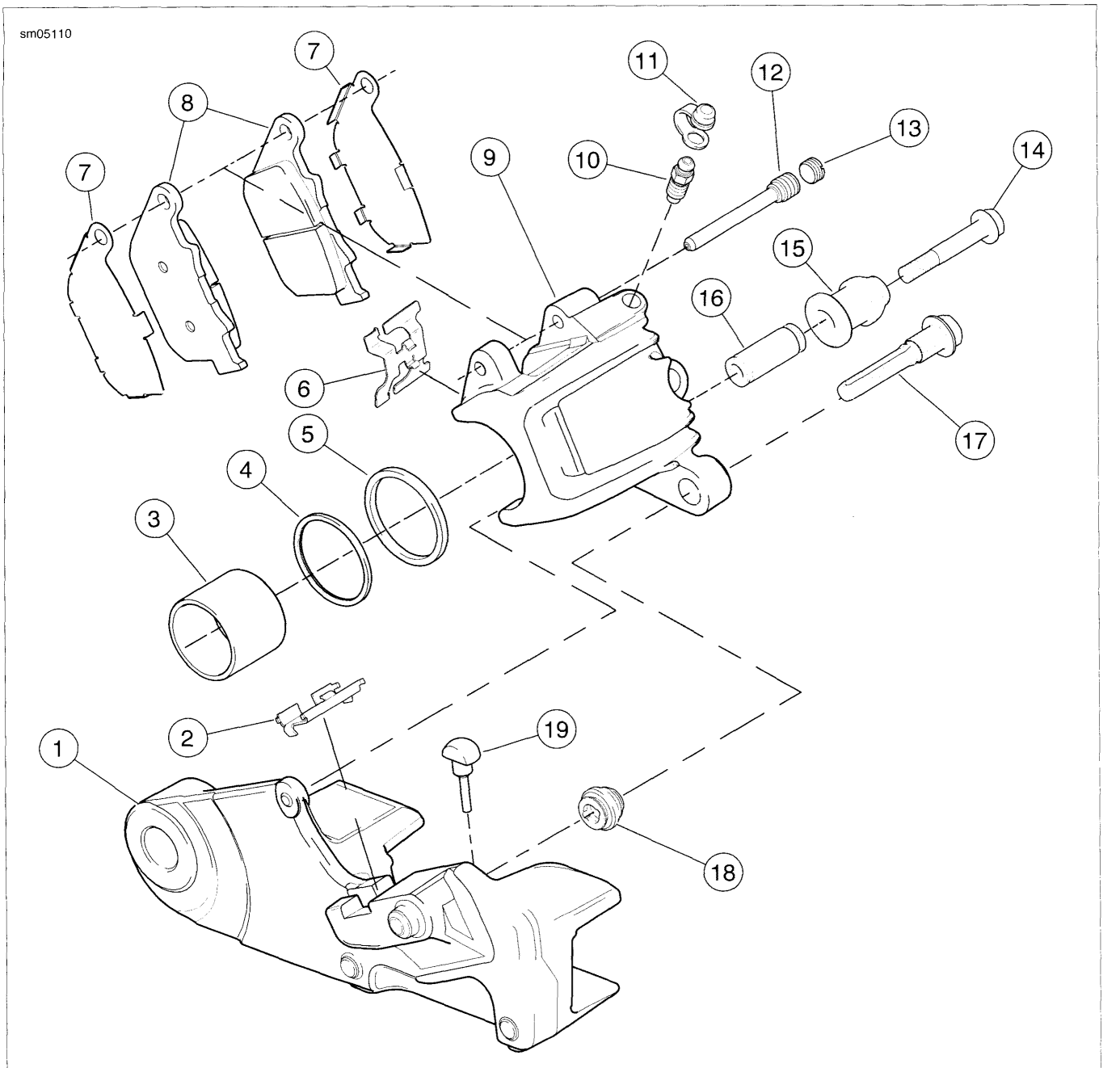

1. **Caliper mounting bracket**
2. **Wear plate (not available separately)**
3. **Piston**
4. **Dust seal**
5. **Piston seal**
6. **Pad spring**
7. **Pad retainer**
8. **Brake pad**
9. **Caliper housing**
10. **Bleeder valve**
11. **Bleeder nipple cap**
12. **Pad pin**
13. **Pad pin plug**
14. **Mounting bolt**
15. **Boot**
16. **Bushing**
17. **Bolt pin**
18. **Boot**
19. **Damper**

Figure 2-110. Rear Brake Caliper Assembly

DISASSEMBLY

1. See Figure 2-111. Remove brake pad pin plug to expose brake pad pin (1). Remove brake pad pin and pads (2).
2. See Figure 2-112. Remove pad spring (1).
3. Remove bushing (2) from boot (3). Remove boot from mounting hole (4). Do not remove bleeder valve at this time.
4. See Figure 2-113. Install a discarded brake pad (1) in the caliper with the backing plate facing the piston. Position

the brake pad so the friction material is against the back of the caliper, as shown.

5. Loosely install brake pad pin (2) to hold brake pad in place.

⚠WARNING

Compressed air can pierce the skin and flying debris from compressed air could cause serious eye injury. Wear safety glasses when working with compressed air. Never use your hand to check for air leaks or to determine air flow rates. (00061a)

⚠CAUTION

When removing piston with compressed air, piston can develop considerable force and fly out of caliper bore. Keep hands away from piston to avoid possible injury. (00530b)

NOTE

Be careful not to damage banjo bolt sealing surface or threads of banjo bolt hole in brake caliper. It is recommended that you use an air nozzle with a rubber tip to perform the next step in this procedure.

6. Gently apply low pressure compressed air to banjo bolt hole (3) to force piston from caliper bore.
7. Remove brake pad pin and brake pad from caliper.
8. Remove piston from caliper bore by hand. If necessary, gently wiggle piston to completely remove.

NOTE

A damaged piston bore will leak when reassembled. Do not use metal objects to remove or install components in piston bore. Prevent damage to piston, seal and bore by only using a wooden toothpick when servicing caliper.

9. See Figure 2-114. Using a wooden toothpick (1), remove dust seal (2) and piston seal (3) from caliper bore. Discard seals.
10. If necessary, remove bleeder valve.

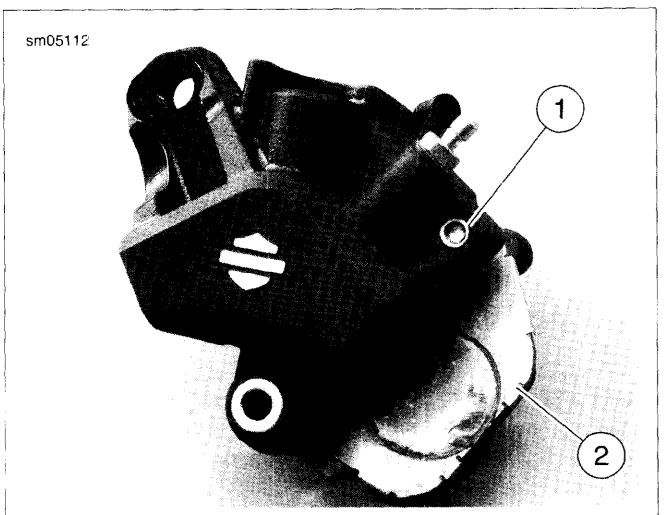

1. **Pad pin (plug removed)**
2. **Brake pad**

Figure 2-111. Pad Pin

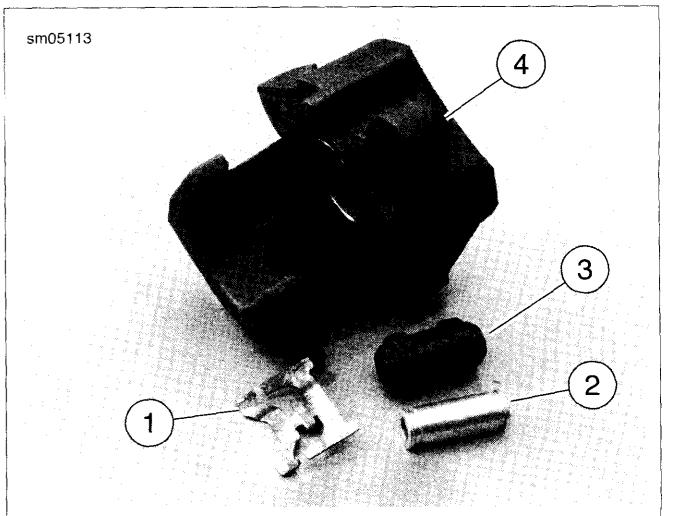

1. **Pad spring**
2. **Bushing**
3. **Boot**
4. **Mounting hole**

Figure 2-112. Spring, Bushing and Boot

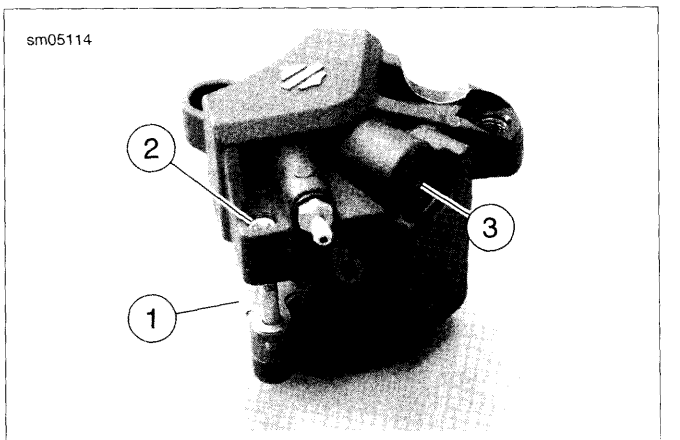

1. **Discarded brake pad**
2. **Pad pin**
3. **Banjo bolt hole**

Figure 2-113. Removing Piston: XR Models

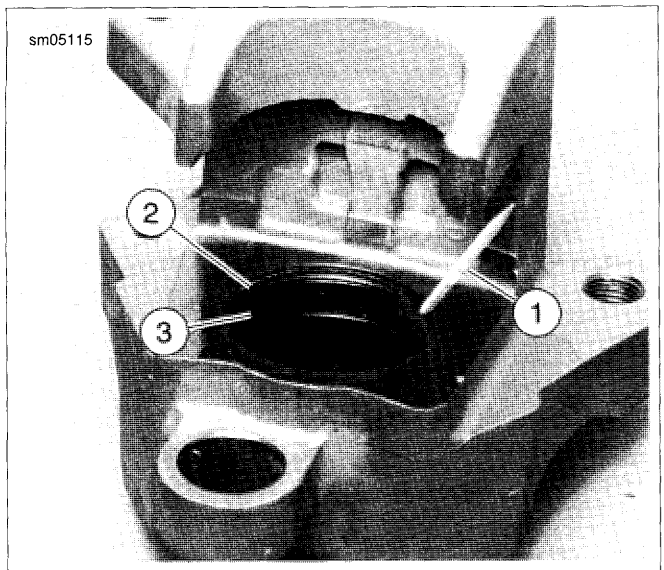

1. **Wooden toothpick**
2. **Dust seal**
3. **Piston seal**

Figure 2-114. Caliper Seals

CLEANING, INSPECTION AND REPAIR

⚠WARNING

Use denatured alcohol to clean brake system components. Do not use mineral-based solvents (such as gasoline or paint thinner), which will deteriorate rubber parts even after assembly. Deterioration of these components can cause brake failure, which could result in death or serious injury. (00291a)

1. Clean piston bore with denatured alcohol.
2. Clean all rubber parts with HARLEY-DAVIDSON D.O.T. 4 BRAKE FLUID. Do not contaminate with mineral oil or other solvents. Wipe parts dry with a clean, lint free cloth.

⚠WARNING

Compressed air can pierce the skin and flying debris from compressed air could cause serious eye injury. Wear safety glasses when working with compressed air. Never use your hand to check for air leaks or to determine air flow rates. (00061a)

3. Blow out drilled passages and piston bore with low pressure compressed air from a clean air supply. Do not use a wire or similar instrument to clean drilled passages.
4. Carefully inspect all components. Replace any parts that appear damaged or worn.
   a. Check piston for pitting, scratching or corrosion on outside surfaces.
   b. Inspect caliper piston bore. Do not hone bore. If bore shows pitting or corrosion, replace caliper.
   c. Inspect pad pin for grooving and wear. Measure the pad pin diameter in an unworn area, and then in the area of any grooving or wear. If wear is more than 0.011 in. (0.28 mm), replace pad pin.
   d. Always replace all seals after disassembly.
5. Inspect bushing boot and bolt pin boot for deterioration or damage. Replace as necessary.
6. Inspect wear plate on caliper mount for wear. Replace as necessary.

⚠WARNING

Always replace brake pads in complete sets for correct and safe brake operation. Improper brake operation could result in death or serious injury. (00111a)

7. Inspect brake pads and brake disc. Replace if necessary.
   a. See 1.10 BRAKE PADS AND DISCS: XR MODELS for specifications.
   b. See 2.4 WHEELS for brake disc replacement procedure.

ASSEMBLY

1. See Figure 2-115. If removed, install bushing boot (3) in caliper.
2. Apply approximately 0.4 g of G40M BRAKE GREASE inside caliper bushing boot (3).
3. Insert caliper bushing (2) into boot. Ensure lips of boot are engaged in grooves at either end of bushing.
4. Install pad spring (1) in caliper housing. Ensure spring is installed in the orientation shown.

NOTE

Use ONLY KS62F assembly grease for lubrication of internal brake parts. Use of D.O.T. 4 brake fluid will result in increased brake pedal travel.

5. Lubricate the following parts prior to assembly using a light coat of KS62F assembly grease from the service parts kit. All other surfaces must be dry for assembly.
   a. Nose radius of piston.
   b. All surfaces of piston seal and dust seal.

NOTE

A damaged piston bore will leak when reassembled. Do not use metal objects to remove or install components in piston bore. Prevent damage to bore by only using a wooden toothpick when servicing caliper.

6. See Figure 2-116. Install a **new** piston seal (3) and a **new** dust seal (2) into piston bore.
7. Carefully insert piston by hand, nose radius first, into caliper bore. If installation shows resistance, remove piston

and check that seals are properly installed and fully seated in grooves.

8. Install bleeder valve if removed. Do not tighten bleeder valve at this time.

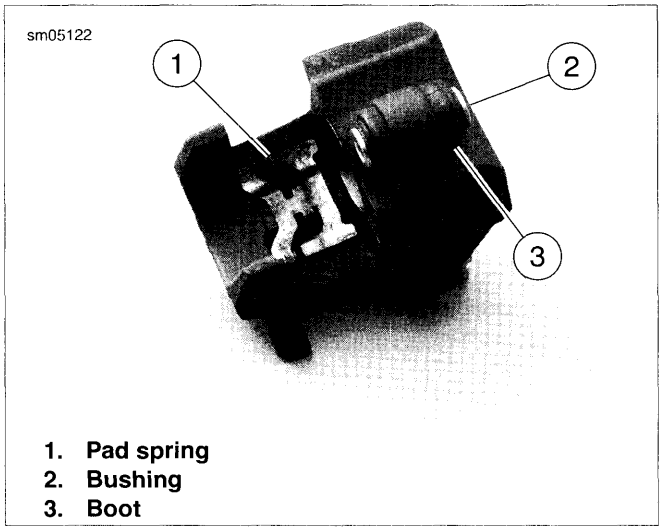

1. **Pad spring**
2. **Bushing**
3. **Boot**

Figure 2-115. Assemble Caliper

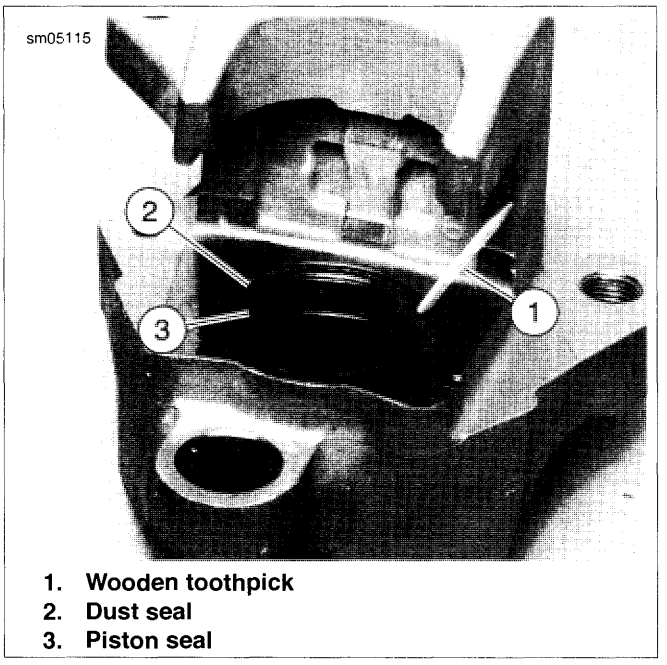

1. **Wooden toothpick**
2. **Dust seal**
3. **Piston seal**

Figure 2-116. Caliper Seals

INSTALLATION

1. See Figure 2-117. If removed, install bolt pin boot (1).
2. Apply approximately 0.4 g of G40M BRAKE GREASE inside bolt pin boot.
3. If removed, install wear plate (2) on mounting bracket.
4. See Figure 2-118. Apply a drop of LOCTITE 272 Thread Lock to threads of bolt pin (6).
5. Place rear caliper assembly onto mounting bracket. Install bolt pin (6), being careful not to pinch or roll boot over. Tighten bolt pin to 14-18 ft-lbs (19.6-24.5 Nm). See Figure 2-119. Ensure lip of boot (1) properly engages the groove (2) in the bolt pin.
6. See Figure 2-118. Install mounting bolt (5) and tighten to 14-18 ft-lbs (19.6-24.5 Nm).

NOTE

Brake caliper housing has a positive stop for banjo fitting. When tightening banjo bolt into brake caliper in the next step, rotate banjo fitting clockwise until it contacts positive stop.

7. Position a **new** washer (3) on each side of hydraulic brake line (1) banjo fitting. Insert banjo bolt (2) through washers and fitting and thread bolt into caliper housing. Tighten to 20-25 ft-lbs (27.1-33.9 Nm).
8. Install brake pads. See 1.10 BRAKE PADS AND DISCS: XR MODELS, Brake Pad Replacement: Rear.
9. Secure lower end of shock absorber to rear fork. Tighten to 45-50 ft-lbs (61.0-67.8 Nm).
10. Adjust drive belt and check vehicle alignment. See 1.16 WHEEL ALIGNMENT.

⚠CAUTION

Direct contact of D.O.T. 4 brake fluid with eyes can cause irritation. Avoid eye contact. In case of eye contact flush with large amounts of water and get medical attention. Swallowing large amounts of D.O.T. 4 brake fluid can cause digestive discomfort. If swallowed, obtain medical attention. Use in well ventilated area. KEEP OUT OF REACH OF CHILDREN. (00240a)

CAUTION

D.O.T. 4 brake fluid will damage painted and body panel surfaces it comes in contact with. Always use caution and protect surfaces from spills whenever brake work is performed. Failure to comply can result in cosmetic damage. (00239b)

NOTES

- *If D.O.T. 4 brake fluid contacts painted surfaces, IMMEDIATELY flush area with clear water.*
- *Rear brake master cylinder reservoir must be in a level position when filling and checking fluid level.*

11. Remove rear brake master cylinder reservoir cap. Add HARLEY-DAVIDSON D.O.T. 4 BRAKE FLUID to reservoir until fluid reaches upper fluid level (3). Do not overfill reservoir. Do not reuse brake fluid.
12. Bleed brake system. See 1.8 BLEEDING HYDRAULIC BRAKE SYSTEM.

⚠WARNING

A plugged or covered relief port can cause brake drag or lock-up, which could lead to loss of control, resulting in death or serious injury. (00288a)

13. Verify proper operation of master cylinder relief port.
    a. Press against rear brake caliper to push caliper piston back into its bore. This pushes brake fluid back through master cylinder and verifies that relief port is not plugged.
    b. Pump brake pedal until caliper piston pushes pads against disc and pressure is returned to brake system.
14. Add HARLEY-DAVIDSON D.O.T. 4 BRAKE FLUID to reservoir until fluid reaches upper fluid level.

⚠WARNING

After servicing brakes and before moving motorcycle, pump brakes to build brake system pressure. Insufficient pressure can adversely affect brake performance, which could result in death or serious injury. (00279a)

⚠WARNING

After repairing the brake system, test brakes at low speed. If brakes are not operating properly, testing at high speeds can cause loss of control, which could result in death or serious injury. (00289a)

15. Test brake system.
    a. Turn ignition switch ON. Pump brake pedal to verify operation of brake lamp.
    b. Test ride motorcycle at low speed. If brakes feel spongy, bleed system again. See 1.8 BLEEDING HYDRAULIC BRAKE SYSTEM.

NOTE

Avoid making hard stops for the first 100 miles (160 km). This allows the new pads to become conditioned to the brake discs.

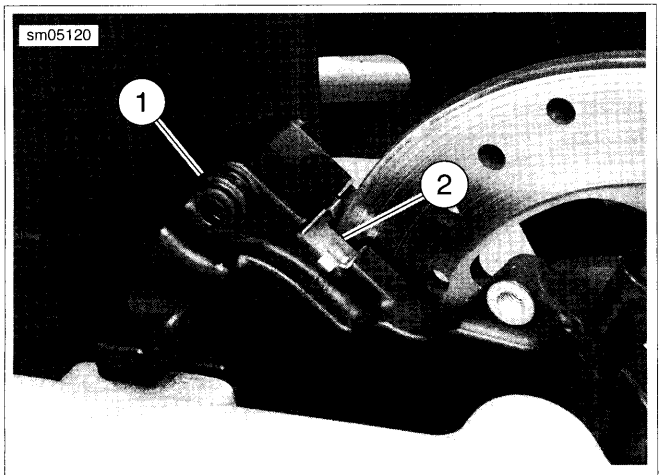

1. **Bolt pin boot**
2. **Wear plate**

Figure 2-117. Caliper Mount

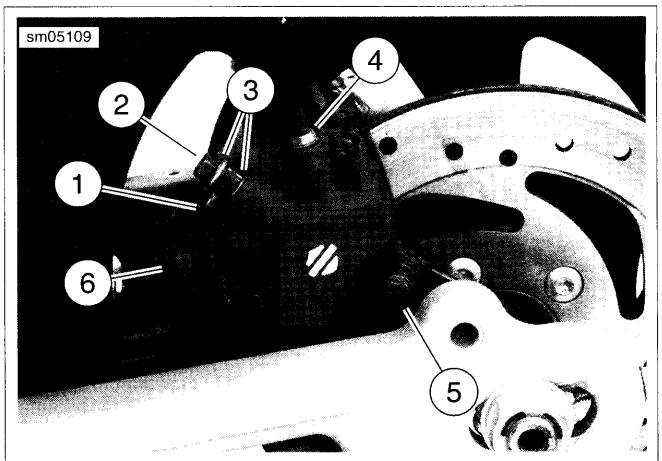

1. **Rear brake line**
2. **Banjo bolt**
3. **Washer (2)**
4. **Bleeder valve**
5. **Mounting bolt**
6. **Bolt pin**

Figure 2-118. Rear Caliper Assembly

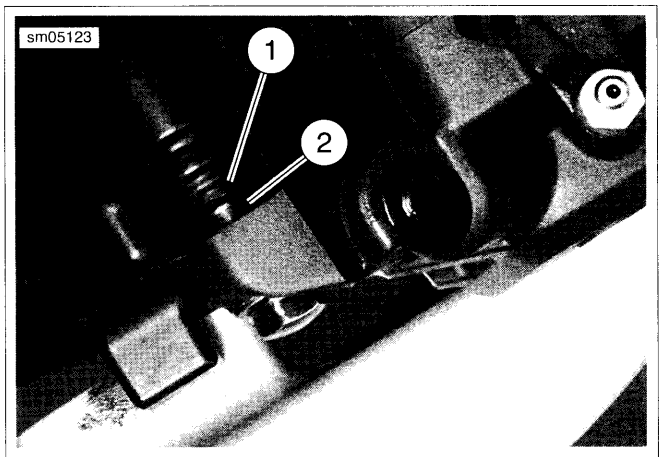

1. **Boot**
2. **Bolt pin groove**

Figure 2-119. Bolt Pin and Boot

FRONT BRAKE LINE: ALL MODELS

⚠CAUTION

Direct contact of D.O.T. 4 brake fluid with eyes can cause irritation. Avoid eye contact. In case of eye contact flush with large amounts of water and get medical attention. Swallowing large amounts of D.O.T. 4 brake fluid can cause digestive discomfort. If swallowed, obtain medical attention. Use in well ventilated area. KEEP OUT OF REACH OF CHILDREN. (00240a)

CAUTION

D.O.T. 4 brake fluid will damage painted and body panel surfaces it comes in contact with. Always use caution and protect surfaces from spills whenever brake work is performed. Failure to comply can result in cosmetic damage. (00239b)

NOTE

If D.O.T. 4 brake fluid contacts painted surfaces, IMMEDIATELY flush area with clear water.

Removal

1. See Figure 2-120 or Figure 2-121, and Figure 2-122. Remove bleeder nipple cap (3) from bleeder valve (2) on front brake caliper (1). Install end of a length of 5/16 in. (7.9 mm) I.D. clear plastic tubing over caliper bleeder valve (3), while placing free end in a suitable container. Open bleeder valve about 1/2 turn. Pump brake hand lever to drain brake fluid. Close bleeder valve.
2. See Figure 2-124. Remove screw (5) to detach brake line clamp (4) from front fork upper bracket (XL models) or lower fork bracket (XR models).
3. Detach brake line from stem at bottom of front fork lower bracket.
   a. Dual front disc models: Remove screw with captive washer (8) and clamp (9) to detach brake line manifold (11).
   b. Single front disc models: Remove screw with captive washer (8) and clamp (7) to detach brake line.

NOTE

Damaged banjo bolt surfaces will leak when reassembled. Prevent damage to seating surfaces by carefully removing brake line components.

4. Remove banjo bolt (2) and washers (1) to detach brake line from master cylinder body. Discard washers.
5. Remove banjo bolt (2, 3) and washers (1) to detach brake line from front brake caliper(s). Discard washers.
6. Carefully inspect brake line for dents, cuts or other defects. Replace brake line if any damage is found.

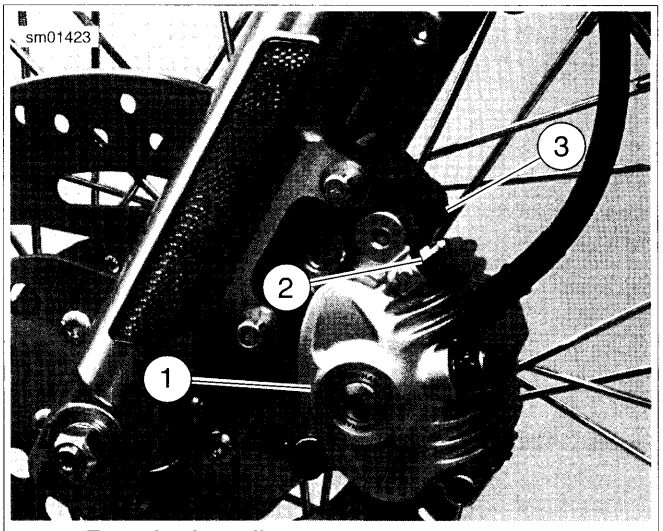

1. Front brake caliper
2. Bleeder valve
3. Bleeder cap

Figure 2-120. Front Brake Caliper: XL Models

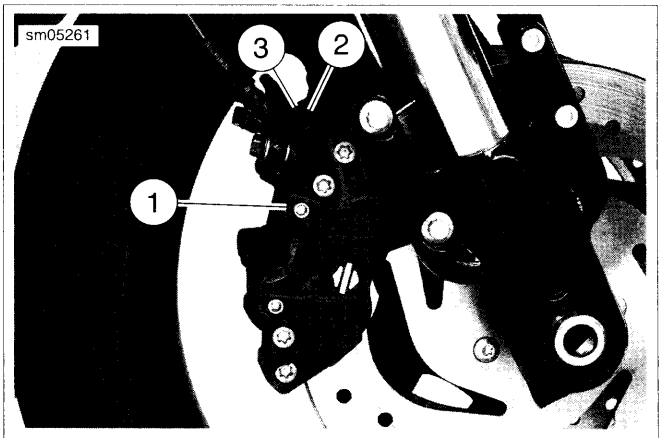

1. Front brake caliper
2. Bleeder valve
3. Bleeder cap

Figure 2-121. Front Caliper Assembly: XR Models

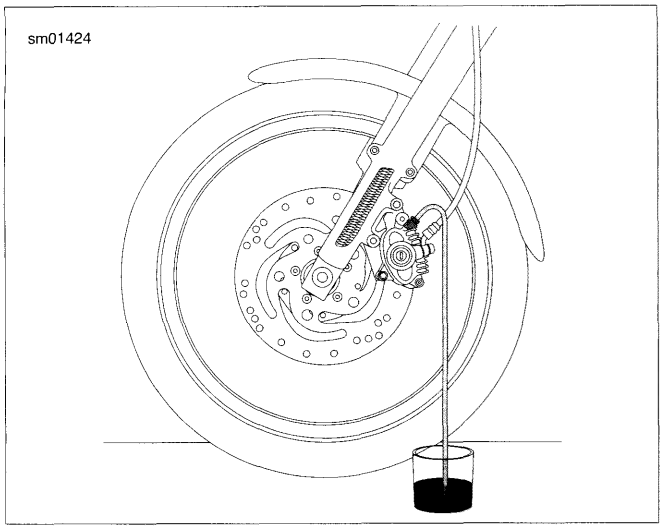

Figure 2-122. Bleeding Hydraulic System (typical; XL model shown)

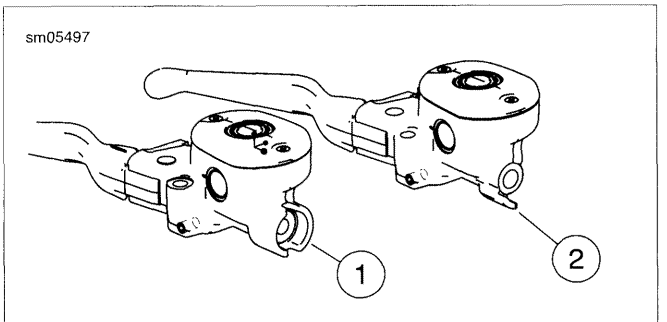

1. **XR Models master cylinder**
2. **XL Models master cylinder**

Figure 2-123. Front Brake Master Cylinder Identification

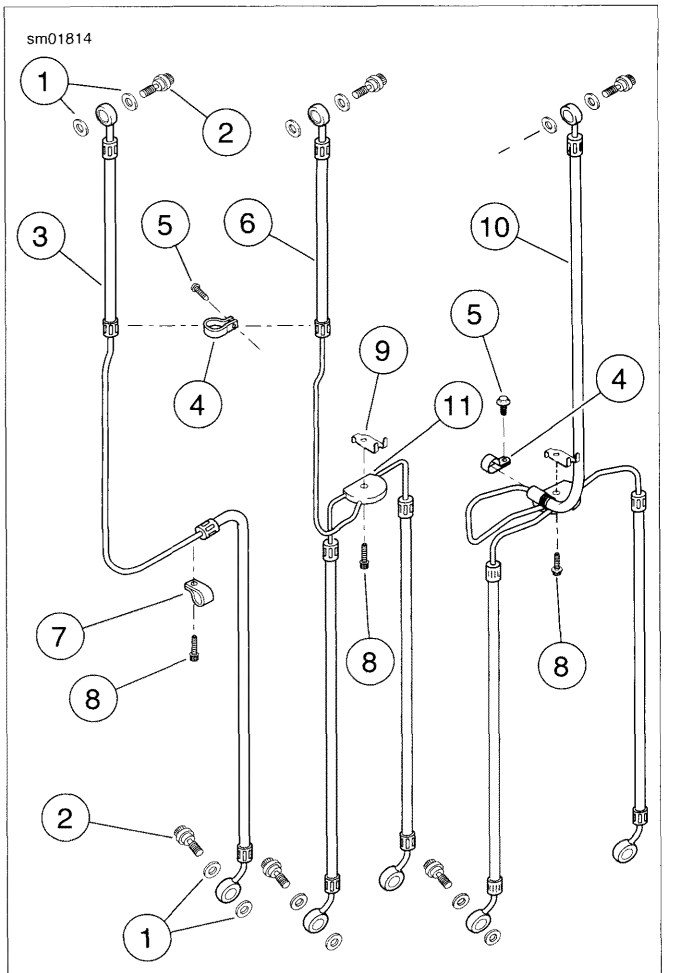

1. **Washer (dual front disc models: 6, all others: 4)**
2. **Banjo bolt (dual front disc models: 3, all others: 2)**
3. **Hydraulic brake line (single front disc models)**
4. **Clamp**
5. **Screw**
6. **Hydraulic brake line (dual front disc XL models)**
7. **Clamp (single front disc models)**
8. **Screw with captive washer**
9. **Clamp (dual front disc models)**
10. **Hydraulic brake line (dual front disc XR models)**
11. **Brake line manifold (dual front disc models)**

Figure 2-124. Front Brake Line (typical)

Installation

NOTE

Master cylinder housings have various positive stops for banjo fittings, based on the model being repaired. The front brake systems as used on XR models and XL models employ different master cylinder housings as shown in Figure 2-123. Never intermix system components. When tightening the banjo bolt in the next step, verify the banjo fitting is properly oriented and contacts the positive stop.

1. See Figure 2-124. Note that hydraulic brake line is made up of thin tube construction and flexible hose sections. Position **new** washers (1) on each side of banjo fitting on end of brake line with shortest flexible hose section. Insert

banjo bolt (2) through washers and banjo fitting. Loosely install banjo bolt into master cylinder.

2. Route brake line downward in front of right handlebar, and inward behind fork brackets. Install clamp (4) around lower fitting of upper flexible hose section. Loosely attach clamp to front fork upper bracket (XL models) or lower bracket (XR models) with screw (5).

3. Continue routing brake line downward crossing to left side of the vehicle under front fork lower bracket.

4. Clamp brake line to stem at bottom of front fork lower bracket.
   a. Dual front disc models: Install screw with captive washer (8) through brake line manifold (11) and clamp (9). Loosely thread screw into front fork lower bracket stem.
   b. Single front disc models: Install clamp (7) around top fitting of long flexible hose section. Loosely attach clamp to front fork lower bracket stem with screw with captive washer (8).

NOTE

Single front disc models must have line positioned to maintain a gap between line and lower fork bracket. Dual front disc models will self-align creating a gap by default, but the gap should be visually confirmed.

5. **Single front disc models:** See Figure 2-125. Measure distance between front brake line metal tubing and lower fork bracket adjacent to pinch bolt. Move brake line assembly forward or back until there is a 1/4 in. (6.35 mm) gap between brake line and lower fork bracket.

⚠WARNING

Do not bend metal brake line. Bending brake line could cause metal fatigue and brake failure, which could result in death or serious injury. (00543b)

6. See Figure 2-124. While maintaining proper gap between brake line and lower fork bracket, tighten screw (8) to 120-168 **in-lbs** (13.6-19.0 Nm).

7. Position **new** washers (1) on each side of banjo fitting at free end of brake line. Insert banjo bolt(s) (2, 3) through washers and banjo fitting of each caliper. Loosely install banjo bolt into each caliper.

NOTE

Master cylinder housing has a positive stop for banjo fitting. When tightening banjo bolt into master cylinder in the next step, rotate banjo fitting clockwise until it contacts positive stop.

8. Tighten banjo bolt (2) into master cylinder to 20-25 ft-lbs (27.1-33.9 Nm).

9. Tighten screw (5) to 45-65 **in-lbs** (5.1-7.4 Nm).

NOTE

Brake caliper housing has a positive stop for banjo fitting. When tightening banjo bolt into brake caliper in the next step, rotate banjo fitting clockwise until it contacts positive stop.

10. Tighten banjo bolt into brake caliper to 20-25 ft-lbs (27.1-33.9 Nm). Dual front disc models: repeat this step for other front brake caliper.

11. Fill master cylinder with **new** HARLEY-DAVIDSON D.O.T. 4 BRAKE FLUID and bleed brakes. See 1.8 BLEEDING HYDRAULIC BRAKE SYSTEM. Test operation of brake lever.

12. Tighten bleeder valve to 35-61 **in-lbs** (4.0-6.9 Nm). Install bleeder nipple cap. Dual front disc models: repeat this step for other front brake caliper.

⚠WARNING

After repairing the brake system, test brakes at low speed. If brakes are not operating properly, testing at high speeds can cause loss of control, which could result in death or serious injury. (00289a)

13. Test ride motorcycle. If front brake feels spongy, bleed system again. See 1.8 BLEEDING HYDRAULIC BRAKE SYSTEM.

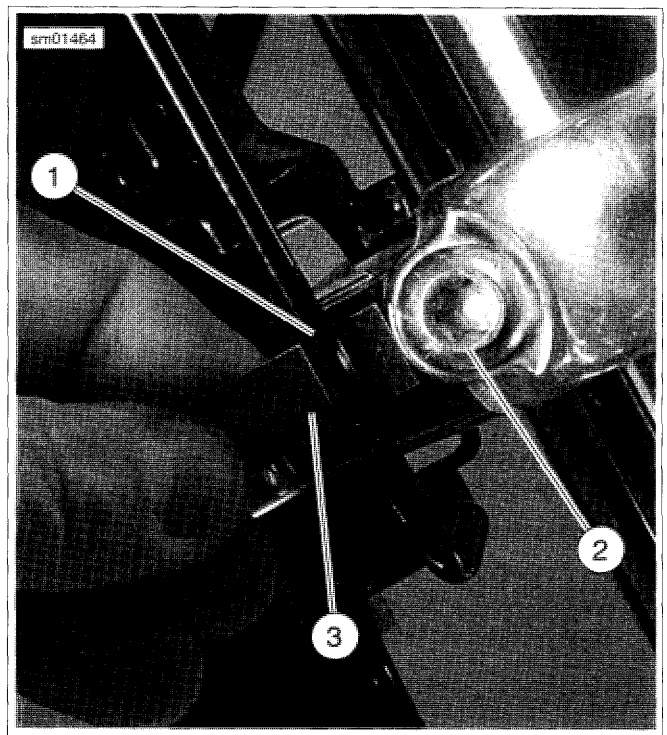

1. **Front brake line**
2. **Lower fork bracket pinch bolt**
3. **Ruler**

Figure 2-125. Measuring Front Brake Line Clearance

REAR BRAKE LINE: XL MODELS

⚠CAUTION

Direct contact of D.O.T. 4 brake fluid with eyes can cause irritation. Avoid eye contact. In case of eye contact flush with large amounts of water and get medical attention. Swallowing large amounts of D.O.T. 4 brake fluid can cause digestive discomfort. If swallowed, obtain medical attention. Use in well ventilated area. KEEP OUT OF REACH OF CHILDREN. (00240a)

CAUTION

D.O.T. 4 brake fluid will damage painted and body panel surfaces it comes in contact with. Always use caution and protect surfaces from spills whenever brake work is performed. Failure to comply can result in cosmetic damage. (00239b)

NOTE

If D.O.T. 4 brake fluid contacts painted surfaces, IMMEDIATELY flush area with clear water.

Removal

1. Drain rear brake master cylinder reservoir. See 2.14 REAR BRAKE MASTER CYLINDER RESERVOIR.
2. Remove bleeder nipple cap from bleeder valve on rear brake caliper. Install end of a length of 5/16 in. (7.9 mm) I.D. clear plastic tubing over caliper bleeder valve, while placing free end in a suitable container. Open bleeder valve about 1/2 turn. Pump brake pedal to drain brake fluid. Close bleeder valve.
3. See Figure 2-126. Unplug harness connectors [121] from stop lamp switch (7).
4. Remove banjo bolt (2) and washers (1) to detach rear brake line (3) from master cylinder body and rear brake caliper. Discard washers.
5. Remove screw (5) to detach brake line clamp (4) with bushing (12) from rear fork.
6. Remove screw (10) to detach brake line clamp (9) from battery tray bracket.
7. Remove screw (11) securing brake line/switch tee (6) to battery tray bracket.
8. Feed brake line up through B-clamp (8).
9. Hold hex body of brake line/switch tee with an open-end wrench. Using a 1.0-in. six-point deep socket, remove stop lamp switch from brake line/switch tee.

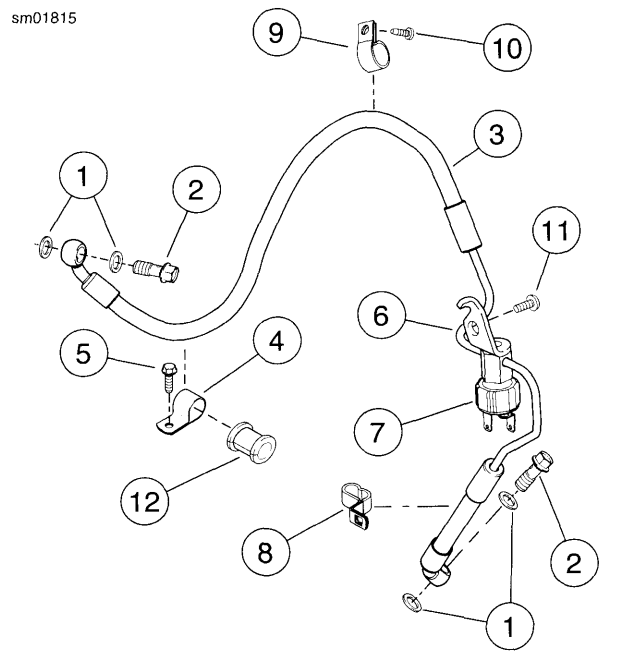

1. **Washer (4)**
2. **Banjo bolt (2)**
3. **Rear brake line**
4. **Clamp**
5. **Screw**
6. **Brake line/switch tee**
7. **Stop lamp switch assembly**
8. **B-clamp**
9. **Clamp**
10. **Screw**
11. **Screw**
12. **Bushing**

Figure 2-126. Rear Brake Line: XL Models

Installation

1. See Figure 2-126. Thread stop lamp switch (7) into brake line/switch tee (6) on **new** rear brake line (3). Hold hex body of brake line/switch tee with an open-end wrench. Using a 1.0-in. six-point deep socket, tighten stop lamp switch assembly to 132-168 **in-lbs** (14.9-18.9 Nm).
2. Feed rear brake line down through B-clamp (8).
3. Position brake line/switch tee mounting bracket on battery tray bracket. Secure with screw (11). Tighten to 72-120 **in-lbs** (8.14-13.6 Nm).
4. Install clamp (9) and screw (10) to secure rear brake hose to battery tray bracket. Tighten screw to 30-40 **in-lbs** (3.4-4.5 Nm).

NOTE

When installing clamp (4), bushing (12) and screw (5) in the next step, make sure to adjust brake hose length between rear caliper and clamp so there is no extra length. Do not twist or stretch brake hose. Make sure bushing sits squarely in clamp and around hose.

5. Install clamp (4) with bushing (12) and screw (5), to secure rear brake hose to rear fork. Tighten screw to 30-40 **in-lbs** (3.4-4.5 Nm).

NOTE

Master cylinder and brake caliper housings have a positive stop for banjo fitting. When tightening banjo bolt into master cylinder and brake caliper in the next step, rotate banjo fitting clockwise until it contacts positive stop.

6. Position **new** washers (1) on each side of banjo fittings by rear brake master cylinder and rear brake caliper. Insert banjo bolts (2) through washers and banjo fittings. Tighten to 20-25 ft-lbs (27.1-33.9 Nm).

⚠WARNING

After servicing brakes and before moving motorcycle, pump brakes to build brake system pressure. Insufficient pressure can adversely affect brake performance, which could result in death or serious injury. (00279a)

NOTE

Rear brake master cylinder reservoir must be in a level position when filling and checking fluid level.

7. Position motorcycle upright (not resting on jiffy stand). Fill rear brake master cylinder reservoir with HARLEY-DAVIDSON D.O.T. 4 BRAKE FLUID and bleed brake system. See 1.8 BLEEDING HYDRAULIC BRAKE SYSTEM.
8. Tighten bleeder valve to 35-61 **in-lbs** (4.0-6.9 Nm). Install bleeder nipple cap.
9. Turn the ignition/light switch ON. Test operation of brake lamp with the rear brake applied.

⚠WARNING

After repairing the brake system, test brakes at low speed. If brakes are not operating properly, testing at high speeds can cause loss of control, which could result in death or serious injury. (00289a)

10. Test ride motorcycle. If rear brake feels spongy, bleed system again. See 1.8 BLEEDING HYDRAULIC BRAKE SYSTEM.

REAR BRAKE LINE: XR MODELS

⚠CAUTION

Direct contact of D.O.T. 4 brake fluid with eyes can cause irritation. Avoid eye contact. In case of eye contact flush with large amounts of water and get medical attention. Swallowing large amounts of D.O.T. 4 brake fluid can cause digestive discomfort. If swallowed, obtain medical attention. Use in well ventilated area. KEEP OUT OF REACH OF CHILDREN. (00240a)

CAUTION

D.O.T. 4 brake fluid will damage painted and body panel surfaces it comes in contact with. Always use caution and protect surfaces from spills whenever brake work is performed. Failure to comply can result in cosmetic damage. (00239b)

NOTE

If DOT 4 brake fluid contacts painted surfaces, IMMEDIATELY flush area with clear water.

Removal

1. Drain rear brake master cylinder reservoir. See 2.14 REAR BRAKE MASTER CYLINDER RESERVOIR.
2. Remove bleeder nipple cap from bleeder valve on rear brake caliper. Install end of a length of 5/16 in. (7.9 mm) I.D. clear plastic tubing over caliper bleeder valve, while placing free end in a suitable container. Open bleeder valve about 1/2 turn. Pump brake pedal to drain brake fluid. Close bleeder valve.
3. See Figure 2-127. Unplug harness connectors [121] from stop lamp switch (2).
4. Remove banjo bolts (4) and washers (5) to detach rear brake line (3) from master cylinder body and rear brake caliper. Discard washers.
5. Remove fasteners (7) to detach brake line clamps (6) from rear fork.
6. Remove fasteners (8) securing brake line bracket/switch tee (1) to lower frame.
7. Hold hex body of brake line bracket/switch tee with an open-end wrench. Using a 1.0-in. six-point deep socket, remove stop lamp switch from brake line bracket/switch tee assembly.
8. If necessary, remove clamp and bushing (9).

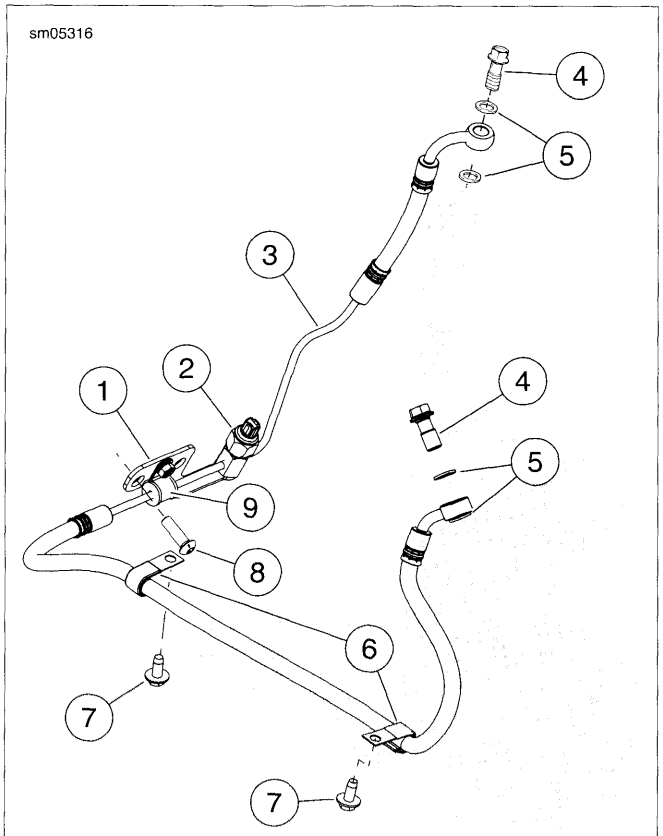

1. **Brake line bracket/switch tee**
2. **Stop lamp switch assembly**
3. **Rear brake line**
4. **Banjo bolt (2)**
5. **Washer (4)**
6. **Clamp (2)**
7. **Fastener (2)**
8. **Fastener (2)**
9. **Clamp and bushing**

Figure 2-127. Rear Brake Line: XR Models

Installation

1. See Figure 2-127. Thread stop lamp switch (2) into brake line bracket/switch tee (1) on rear brake line (3). Hold hex body of brake line bracket/switch tee with an open-end wrench. Using a 1.0-in. six-point deep socket, tighten stop lamp switch assembly to 132-168 **in-lbs** (14.9-18.9 Nm).
2. If removed, install clamp and bushing (9).
3. Route brake line assembly to master cylinder and brake caliper. Loosely install **new** washers (5) and banjo bolts (4) to hold line in place.
4. Position brake line bracket/switch tee on lower frame and secure with fasteners (8). Tighten to 17-22 **in-lbs** (1.9-2.5 Nm).
5. Connect harness connectors [121] to brake lamp switch (2).

NOTE

Master cylinder and brake caliper housings have a positive stop for banjo fitting. When tightening banjo bolt into master cylinder and brake caliper in the next step, rotate banjo fitting clockwise until it contacts positive stop.

6. With **new** washers (5) on each side of banjo fittings, tighten banjo bolts (4) to 20-25 ft-lbs (27.1-33.9 Nm).
7. Secure brake line to bottom of rear fork with clamps (6) and fasteners (7).

⚠WARNING

After servicing brakes and before moving motorcycle, pump brakes to build brake system pressure. Insufficient pressure can adversely affect brake performance, which could result in death or serious injury. (00279a)

NOTE

Rear brake master cylinder reservoir must be in a level position when filling and checking fluid level.

8. Position motorcycle upright (not resting on jiffy stand). Fill rear brake master cylinder reservoir with HARLEY-DAVIDSON D.O.T. 4 BRAKE FLUID and bleed brake system. See 1.8 BLEEDING HYDRAULIC BRAKE SYSTEM.
9. Tighten bleeder valve to 35-61 **in-lbs** (4.0-6.9 Nm). Install bleeder nipple cap.
10. Turn the ignition/light switch ON. Test operation of brake lamp with the rear brake applied.

⚠WARNING

After repairing the brake system, test brakes at low speed. If brakes are not operating properly, testing at high speeds can cause loss of control, which could result in death or serious injury. (00289a)

11. Test ride motorcycle. If rear brake feels spongy, bleed system again. See 1.8 BLEEDING HYDRAULIC BRAKE SYSTEM.

GENERAL

⚠WARNING

Use only Harley-Davidson approved tires. See a Harley-Davidson dealer. Using non-approved tires can adversely affect stability, which could result in death or serious injury. (00024a)

⚠WARNING

Be sure tires are properly inflated, balanced and have adequate tread. Inspect your tires regularly and see a Harley-Davidson dealer for replacements. Riding with excessively worn, unbalanced or under-inflated tires can adversely affect stability and handling, which could result in death or serious injury. (00014a)

New tires should be stored on a horizontal tire rack. Avoid stacking new tires in a vertical stack. The weight of the stack compresses the tires and closes down the beads.

Tires should be inspected for punctures, cuts, breaks and wear at least weekly.

See Figure 2-128. The tread wear indicator bars will appear on tire tread surfaces when 1/32 in. (0.8 mm) or less of tread remains. Always remove tires from service before they reach the tread wear indicator bars.

New tires are needed if any of the following conditions exist. See 1.11 TIRES AND WHEELS.

1. Tire wear indicator bars are visible on the tread surfaces.
2. Tire cords or fabric are visible through cracked sidewalls, snags or deep cuts.
3. A bump, bulge or split in the tire.
4. Puncture, cut or other damage to the tire that cannot be repaired.

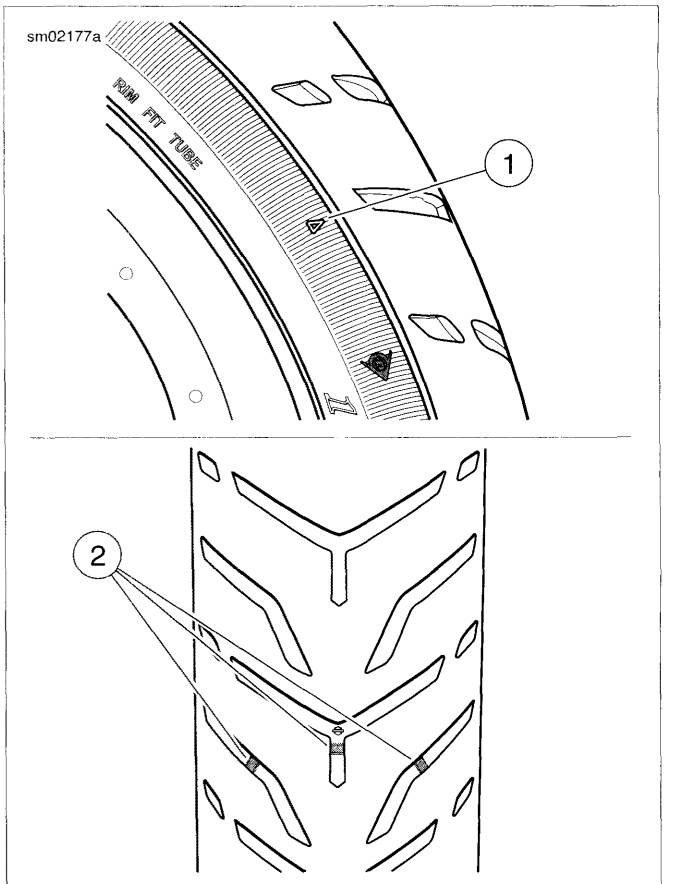

1. **Sidewall**
2. **Tread surface**

Figure 2-128. Tread Wear Indicators (Typical)

REMOVAL

NOTE

Care must be taken when removing and installing tire to prevent cosmetic damage to wheel. This is especially true with wheels that feature painted surfaces.

1. Remove wheel from motorcycle:
   a. **Front wheel:** see 2.4 WHEELS, Front Wheel.
   b. **Rear wheel:** see 2.4 WHEELS, Rear Wheel.
2. Deflate tire.

NOTE

On tube type wheels, it is not necessary to completely remove tire from rim to replace the tube only. Removing one side allows the tube to be replaced and allows for inspection of tire.

3. Loosen both tire beads from rim flange. In most cases, a bead breaker machine will be required to loosen the beads from the rim.
4. Remove tire.

CLEANING, INSPECTION AND REPAIR

1. Clean the inside of tire and outer surface of tube.

2. If rim is dirty or rusty, clean with a stiff wire brush.
3. Check wheels for lateral and radial runout before installing a new tire. See 2.8 CHECKING AND TRUING WHEELS.
4. Inspect the tire and tube for wear and damage. Inspect tread depth. Replace worn tires. Replace damaged tubes.

⚠WARNING

Replace punctured or damaged tires. In some cases, small punctures in the tread area may be repaired from within the demounted tire by a Harley-Davidson dealer. Speed should NOT exceed 50 mph (80 km/h) for the first 24 hours after repair, and the repaired tire should NEVER be used over 80 mph (130 km/h). Failure to follow this warning could result in death or serious injury. (00015a)

5. Tubeless tires may be repaired in the tread area only if the puncture is 1/4 in. (6.4 mm) or smaller. All repairs must be made from inside the tire.
6. Acceptable repair method involves the use of a patch and plug combination.

INSTALLATION

⚠WARNING

Harley-Davidson front and rear tires are not the same. Interchanging front and rear tires can cause tire failure, which could result in death or serious injury. (00026a)

⚠WARNING

Do not exceed manufacturer's recommended pressure to seat beads. Exceeding recommended bead seat pressure can cause tire rim assembly to burst, which could result in death or serious injury. (00282a)

⚠WARNING

Do not inflate tire beyond maximum pressure as specified on sidewall. Over inflated tires can blow out, which could result in death or serious injury. (00027a)

For tire pressures, see 1.11 TIRES AND WHEELS, Tires.

Some tires have arrows molded into the tire sidewall. These tires should be mounted on the rim with the arrow pointing in the direction of forward rotation. The colored dot on the sidewall is a balance mark and should be located next to the valve stem hole.

Tube Type Tires

⚠WARNING

Match tires, tubes, air valves and caps to the correct wheel rim. Contact a Harley-Davidson dealer. Mismatching can result in damage to the tire bead, allow tire slippage on the rim or cause tire failure, which could result in death or serious injury. (00023a)

⚠WARNING

Use inner tubes on laced (wire spoked) wheels. Using tubeless tires on laced wheels can cause air leaks, which could result in death or serious injury. (00025a)

NOTES

- *For correct tire and tube types, see 2.2 SPECIFICATIONS.*
- *Whenever a tube type tire is replaced, the tube should also be replaced. Inner tubes should be patched only as an emergency measure. Replace a damaged or patched tube as soon as possible. Rim bands must be used on all laced wheels.*

1. See Figure 2-129. On laced wheels, install a rim strip into the rim well. Make sure no spokes protrude through nipples, and be sure to align the valve stem hole in rim strip with valve stem hole in rim.
2. Install tube and tire.

Figure 2-129. Installing Rim Strip

Tubeless Tires

⚠WARNING

Only install original equipment tire valves and valve caps. A valve, or valve and cap combination, that is too long or too heavy can strike adjacent components and damage the valve, causing rapid tire deflation. Rapid tire deflation can cause loss of vehicle control, which could result in death or serious injury. (00281a)

1. See Figure 2-130. On tubeless wheels, damaged or leaking valve stems must be replaced. Install rubber grommet (3) on valve stem.
2. Insert valve stem into rim hole.

3. Install metal washer (2).
4. Install nut and tighten to 12-15 **in-lbs** (1.4-1.7 Nm).
5. Install tire.

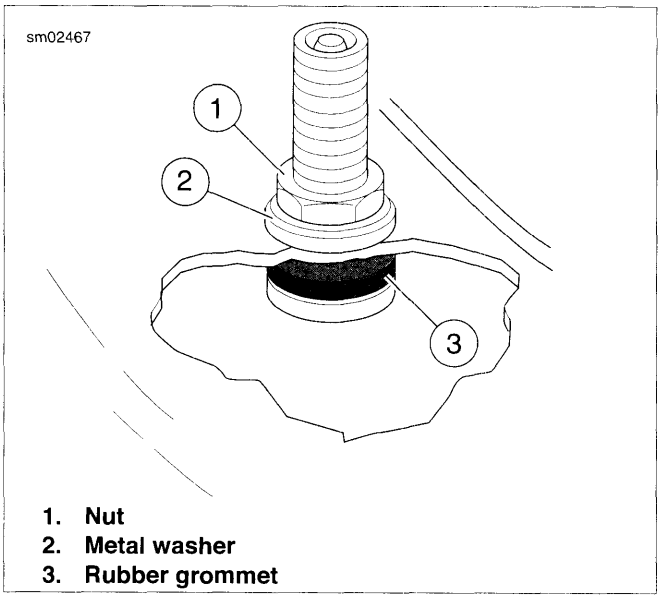

1. **Nut**
2. **Metal washer**
3. **Rubber grommet**

Figure 2-130. Tubeless Tire Valve Stem

CHECKING TIRE RUNOUT

Lateral Runout

1. Verify that the tire is inflated to the proper pressure.
2. See Figure 2-131. Turn the wheel on the axle and measure tire lateral runout from a fixed point to a smooth area on the tire sidewall. Avoid measuring on raised letters or vents.
3. Tire lateral runout should not exceed 0.090 in. (2.29 mm). If tire runout exceeds specification, remove tire from rim and check rim lateral runout. See 2.8 CHECKING AND TRUING WHEELS.
4. If rim lateral runout is within specification, the tire is at fault and must be replaced. If rim lateral runout is not within specification, correct by adjusting selected spokes on laced wheels (see 2.8 CHECKING AND TRUING WHEELS) or replace cast wheels.
5. Install the tire and recheck tire lateral runout.

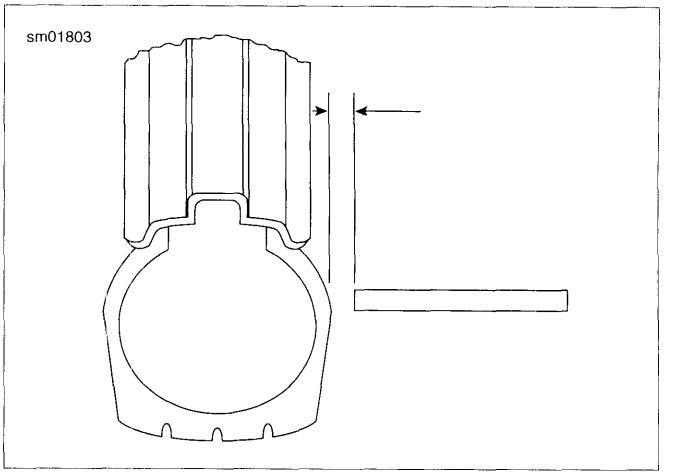

Figure 2-131. Checking Tire Lateral Runout

Radial Runout

1. Verify that the tire is inflated to the proper pressure.
2. See Figure 2-132. Turn the wheel on the axle and measure tire radial runout at the tread centerline.
3. Tire radial runout should not exceed 0.090 in. (2.29 mm). If tire runout exceeds this specification, remove tire from rim. and check rim radial runout. See 2.8 CHECKING AND TRUING WHEELS.
4. If rim radial runout is within specification, the tire is at fault and must be replaced. If rim bead radial runout is not within specification, correct by adjusting selected spokes on laced wheels (see 2.8 CHECKING AND TRUING WHEELS) or replace cast wheels.
5. Install the tire and recheck tire radial runout.

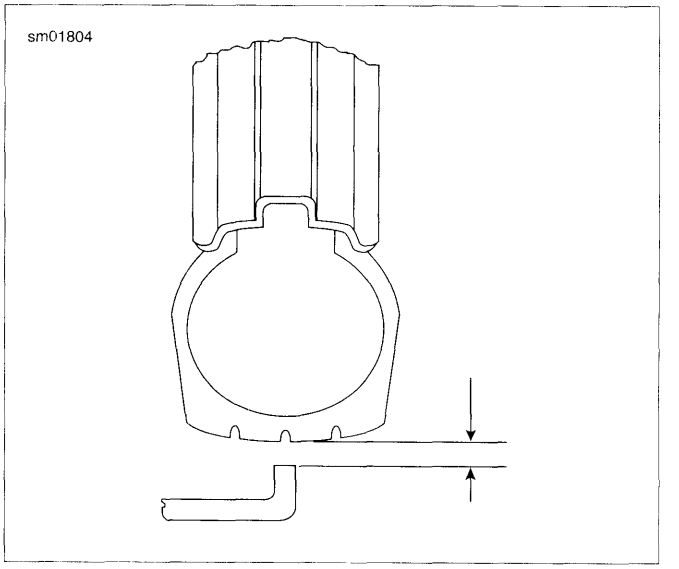

Figure 2-132. Checking Tire Radial Runout

WHEEL BALANCING

PART NUMBER	TOOL NAME
HD-99500-80	WHEEL TRUING STAND

Wheel balancing is recommended to improve handling, and to reduce vibration, especially at high road speeds.

Static balancing using WHEEL TRUING STAND (Part No. HD-99500-80) will produce satisfactory results for normal highway speeds. Dynamic balancing can produce better results for high speed operation but is not typically required.

The maximum weight permissible to accomplish balance is 3.5 oz. (99.2 g) (total weight applied to the rim). If more than 3.5 oz. (99.2 g) of weight is required to accomplish balance, rotate the tire 180 degrees on the rim and again balance the assembly. Wheels should be balanced to within 0.5 oz. (14 g).

Weights

Use self-adhesive wheel balance weights for all Harley-Davidson wheels, placed as indicated in Figure 2-133 depending on wheel style.

NOTES

- *If 1 oz. (28 g) or more of weight must be added at one location, split the amount so that half is applied to each side of rim.*
- *On cast wheels without a flat area near the bead, such as the cast special wheel (4) shown in Figure 2-133, it is acceptable to place them crosswise through the opening.*

1. See Figure 2-133. Place weights on a smooth surface of the wheel rim such that centrifugal force will help keep them in place. Make sure the area of application is completely clean, dry, and free of oil and grease.
2. Remove paper backing from the weight. Press firmly in place and hold for ten seconds.

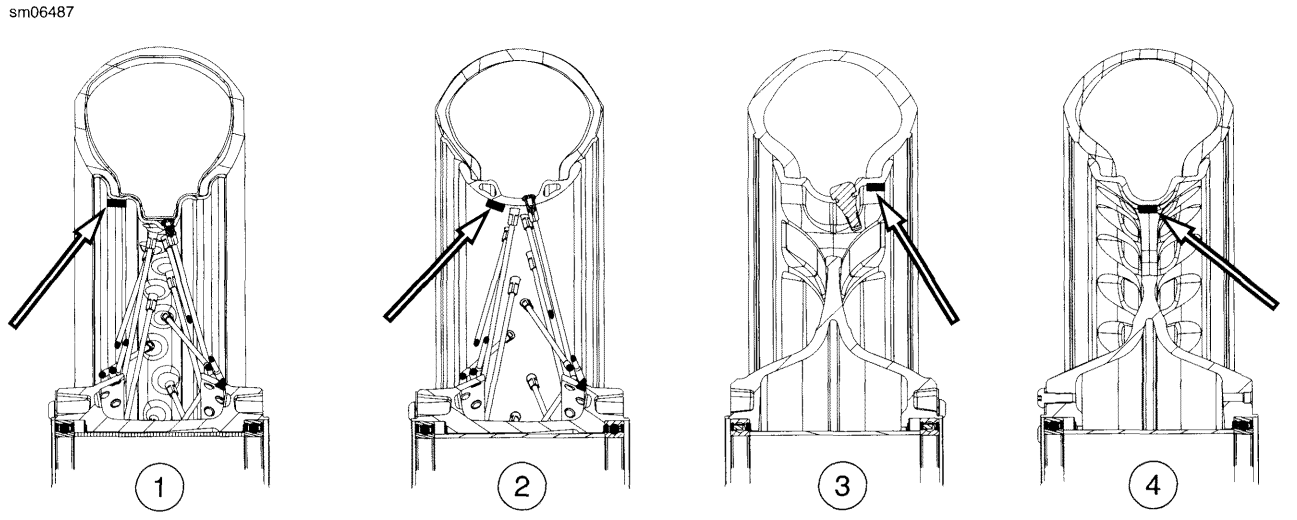

1. **Laced steel**
2. **Laced profile**
3. **Cast (typical with flat bead area)**
4. **Cast (special with no flat bead area)**

Figure 2-133. Wheel Weight Placement

GENERAL

See Figure 2-134. The left side cover provides access to the battery (1), fuses (3, 4) and diagnostic electrical connector (5). No tools are required to open or close the cover.

See Figure 2-135 or Figure 2-136. The left side cover is secured to the motorcycle by two barrel clips secured to two upper slots that fit into socket clips mounted to the frame (XL models) or two molded-in posts that fit into grommets (XR models). The side cover is also secured to the vehicle by a bottom slot that fits onto a mounting tab on the battery tray.

NOTE

The left side cover does not need to be completely removed from the vehicle to access the battery or fuses.

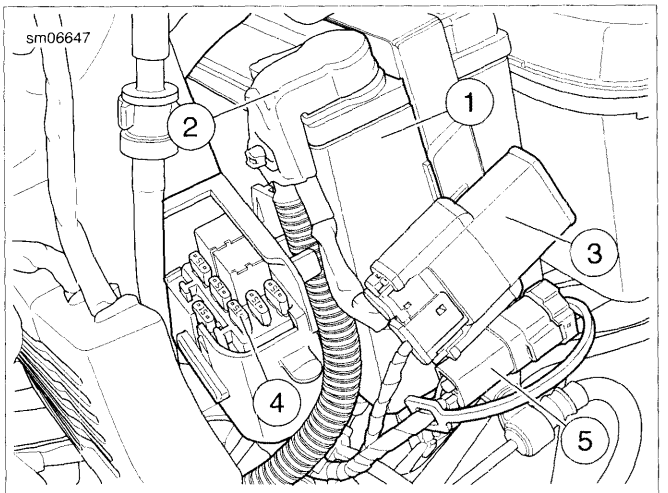

1. **Battery**
2. **Positive (+) battery terminal (under protective rubber boot)**
3. **Main fuse and holder**
4. **System fuses and relays**
5. **Diagnostic connector (data link)**

Figure 2-134. Main Fuse and Battery Location: All Models

OPENING LEFT SIDE COVER

1. Place a clean, dry cloth over rear brake master cylinder reservoir and left passenger foot peg (if equipped). This will protect left side cover from damage.

NOTE

On XL models, disengage the rear clip first for easier opening.

2. See Figure 2-135 or Figure 2-136. Grasp left side cover at upper corners and pull away from plastic socket clips (XL models) or grommets (XR models) on frame.

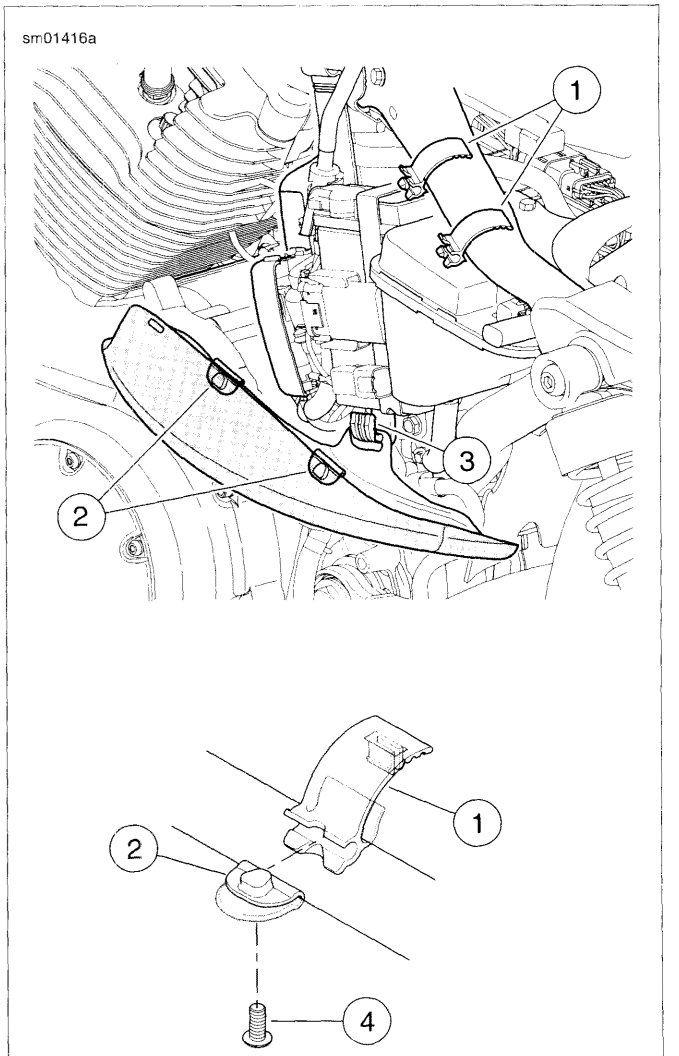

1. **Socket clips (on frame)**
2. **Side cover barrel clips (top)**
3. **Mounting tab (on battery tray)**
4. **Side cover barrel clips mounting screw (bottom)**

Figure 2-135. Left Side Cover: XL Models

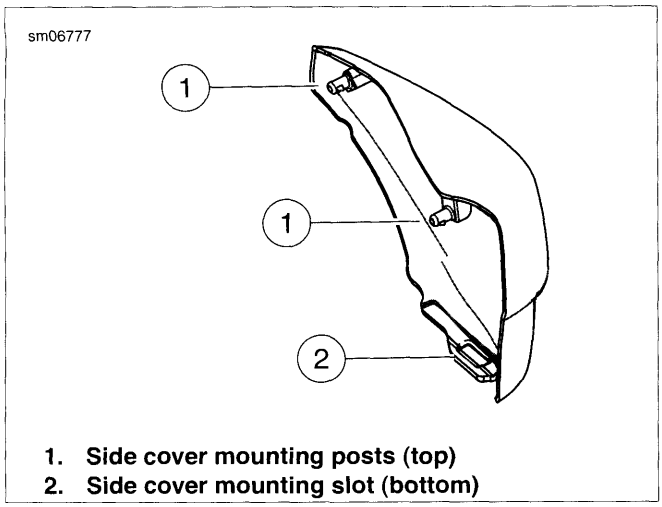

Figure 2-136. Left Side Cover: XR Models

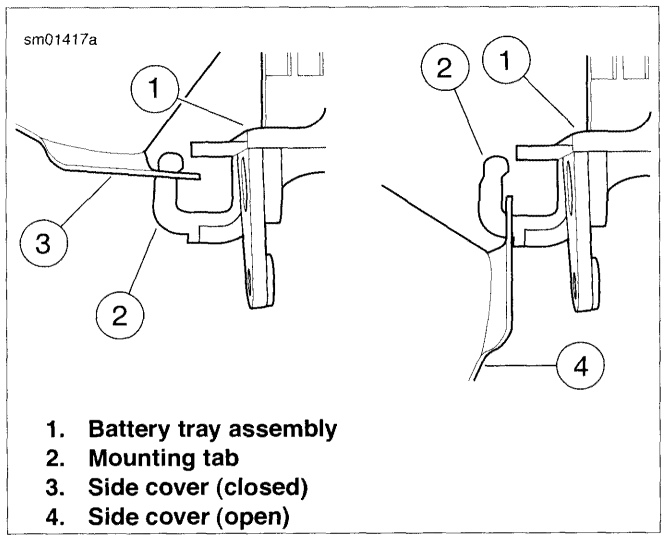

Figure 2-137. Left Side Cover Bottom Mount: All Models

3. See Figure 2-137. While rotating top of cover out away from motorcycle, slide cover down slightly so mounting slot on cover slides down mounting tab (2) on battery tray assembly (1). Side cover (4) will now rest on top of rear brake master cylinder reservoir and left passenger footrest (if equipped) with side cover (4) hanging off bottom of mounting tab (2).

CAUTION

Leaning or placing tools on side cover could cause damage to cover and/or mounting tab on battery tray. (00523b)

CLOSING LEFT SIDE COVER

1. Grasp top corners of side cover. While rotating top of cover up toward motorcycle, gently pull cover up so that mounting slot slides up mounting tab (1).
2. Press top of side cover into place:
   a. **XL models:** see Figure 2-135. Line up barrel clips on side cover with socket clips on motorcycle frame, aligning with front clip first. Press top of side cover into clips until you hear an audible snap.
   b. **XR models:** see Figure 2-136. Line up molded-in posts in top of side cover with mounting grommets on motorcycle frame. Press posts in side cover into grommets until snug.

NOTE

Side cover should snap into place with minimal pressure. Using excessive force or striking side cover to close it can damage mounting clips (XL models) or molded-in posts (XR models).

REMOVING LEFT SIDE COVER

NOTE

It is rarely necessary to remove the left side cover completely. However, if left side cover removal is necessary, use the following procedure.

1. See Figure 2-135 or Figure 2-136. Grasp side cover at upper corners and gently pull away from plastic mounting clips (XL models) or grommets (XR models) on frame.

NOTE

On XL models, disengage the rear clip first for easier opening.

2. See Figure 2-138. Lift side cover up and tilt cover to the rear of the motorcycle. With a slight back and forth rocking motion, pull up gently until cover disengages from mounting tab on battery tray.

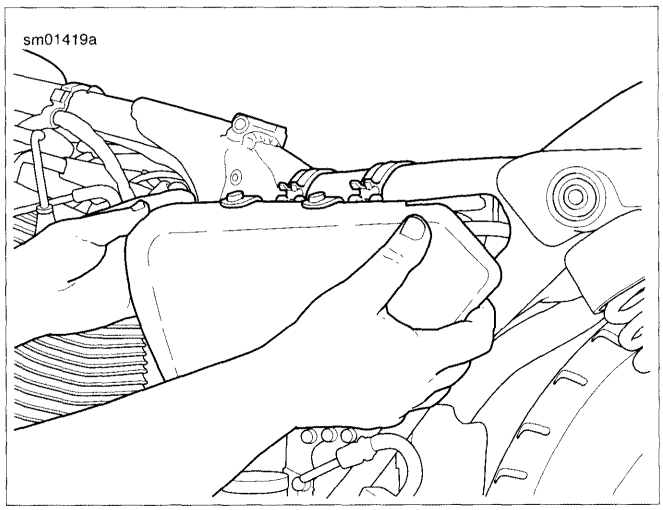

Figure 2-138. Removing Left Side Cover: All Models (XL Model Shown)

INSTALLING LEFT SIDE COVER

NOTE

It is rarely necessary to remove the left side cover completely. However, if left side cover has been removed, install cover as described in the following procedure.

1. Position side cover over battery tray assembly with slot in bottom of cover resting on mounting tab on battery tray.
2. Gently guide the side cover down over mounting tab.

3. Now close left side cover. See 2.19 LEFT SIDE COVER, Closing Left Side Cover.

GENERAL

The front fork consists of two telescoping tube/slider assemblies. Each tube/slider assembly has an internal compression spring, which supports the forward weight of the vehicle/rider and extends and retracts to cushion the ride over rough or irregular road surfaces. An oil-filled damping mechanism controls the telescoping action of each tube/slider assembly.

CHANGING FORK OIL: XL MODELS

Drain Forks

1. Place a drain pan under bottom of the fork slider.
2. See Figure 2-139. WIth the motorcycle upright (not resting on jiffy stand) and with the front fork pointed straight ahead, remove the drain screw and washer (1) from the bottom of the slider (4).
3. Drain fork oil by repeatedly compressing front suspension slowly.

NOTE

If fork oil is emulsified, aerated or light brown in color, it has been contaminated by water. Replace the fork oil seals.

4. Replace the drain screw and washer. Tighten to 13-17 **in-lbs** (1.5-2.0 Nm).

Fill Forks

⚠WARNING

Incorrect amount of fork oil can adversely affect handling and lead to loss of vehicle control, which could result in death or serious injury. (00298a)

NOTE

Extend the forks to relieve the spring preload by raising the motorcycle off the ground.

1. See Figure 2-139. Remove fork slider tube cap (2) with O-ring (3) from each slider tube (4). Replace the O-ring if damaged or worn.
2. Fill each fork with type HARLEY-DAVIDSON FORK OIL (HD-99884-80) type E to specification. Refer to Table 2-18.
3. Install each slider tube cap. Tighten to 22-58 ft-lbs (29.9-78.7 Nm).

Table 2-18. Fork Oil Specifications

MODEL	oz	mL
XL 883L/XL 883N/XL 1200N	13.6	401
XL 1200L	12.3	364
All other XL models	11.6	343

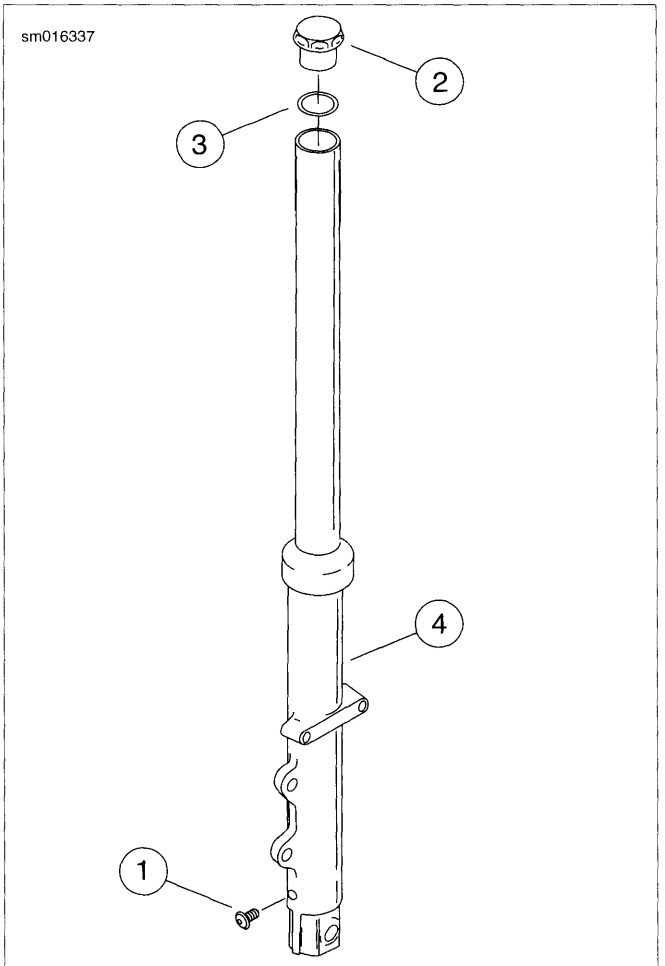

1. **Drain screw with washer**
2. **Fork slider tube cap**
3. **O-ring**
4. **Slider tube**

Figure 2-139. Draining Front Fork Oil

REMOVAL

1. Remove front brake caliper(s). See 2.10 FRONT BRAKE CALIPER: XL MODELS.
2. Remove front wheel assembly. See 2.4 WHEELS.
3. Remove front fender mounting screws and lock nuts. Remove fender. See 2.32 FRONT FENDER.
4. See Figure 2-140. Loosen, but do not remove, slider tube caps (11).
5. Loosen front fork upper and lower bracket pinch screws (10 and 13). Remove fork assemblies (12) from fork brackets.

DISASSEMBLY

Drain Fork Oil

1. See Figure 2-141. Remove tube cap (7) from slider tube (9). Remove O-ring (6) from tube cap.

2. Place a pan under the fork and remove the drain screw and washer (19) from slider (16). Drain the fork oil.

Fork Disassembly

1. See Figure 2-141. Remove spring (5) from slider tube.
2. **All except XL 1200L:** Remove spring collar (20) and spring washer (21) from slider tube.
3. **All except XL 883N/XL 1200N:** Remove cover (11).

NOTE

See Figure 2-143. The XL 883N and XL 1200N are equipped with fork gaiters (2) instead of metal covers. The lower lip (3) of the fork gaiter fits into the groove at the upper end of the fork slider (1). The upper end of the fork gaiter fits tightly around the slider tube, just below the front fork lower bracket (4).

4. **XL 883N/XL 1200N:** See Figure 2-143. Peel back lower lip (3) of fork gaiter (2) from slider groove and slide fork gaiter up and off end of slider tube.
5. See Figure 2-141. Remove dust seal (12). Compress internal circle clip (13). Remove clip from groove in top of slider bore.
6. Remove screw (18) and washer (17) from bottom of slider.

NOTE

Since there is little resistance to damper tube (3) rotation within slider tube (9) when removing screw (18), use an air impact wrench for best results.

7. Withdraw slider tube (9) from slider until lower bushing (10) on slider tube contacts upper bushing (1) in slider. Use lower bushing on slider tube in a slide hammer motion to gently tap out oil seal (14), spacer (2) and upper bushing from slider bore.
8. Remove sleeve (15). Sleeve will be found within slider or on bottom end of damper tube (3).
9. Insert a small diameter rod through opening in bottom of slider tube to remove damper tube assembly.
10. Remove rebound spring (8) from damper tube.
11. Remove damper tube ring(s) (4) from damper tube.
12. Remove lower bushing from damper tube only if replacement is necessary.

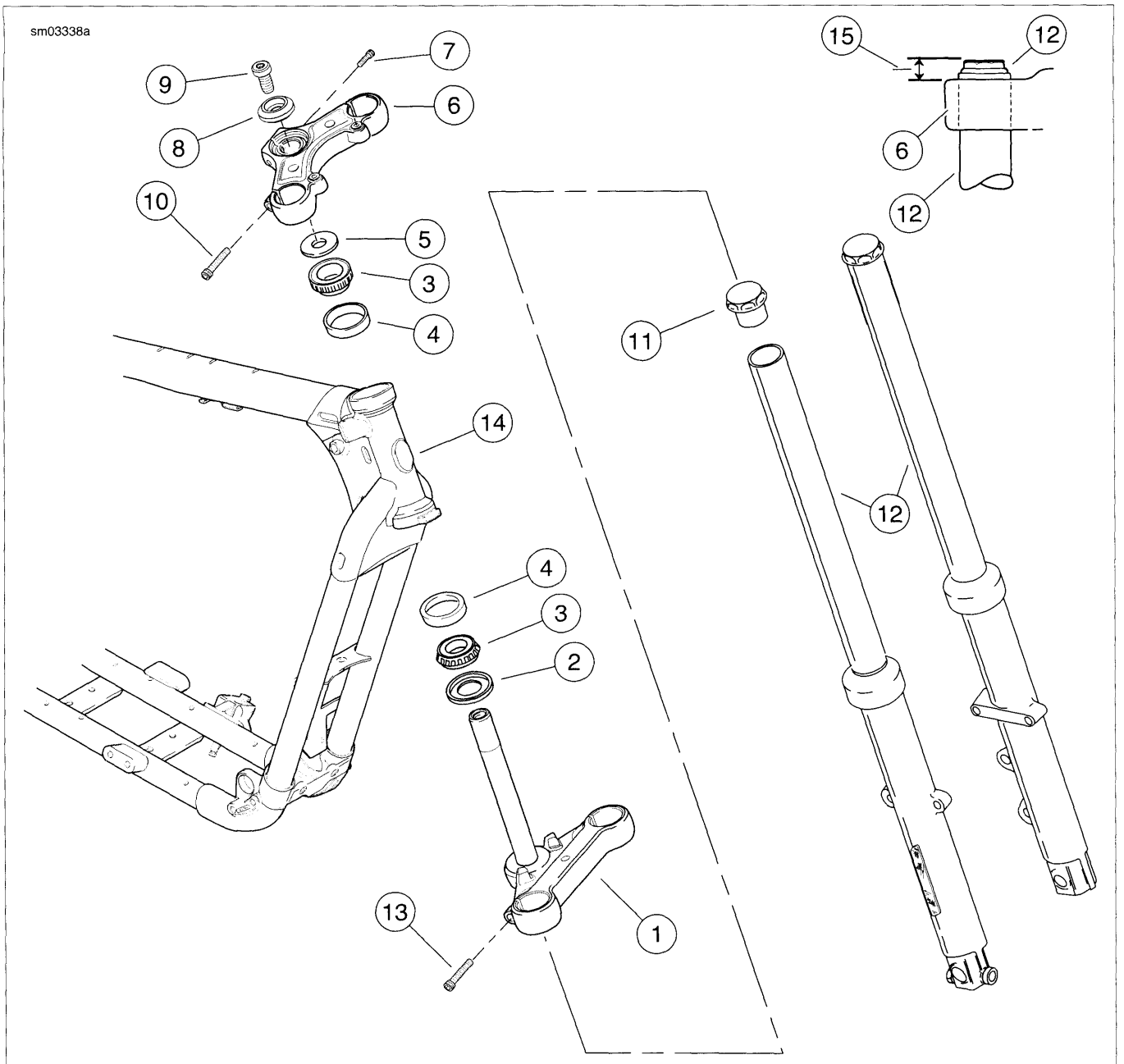

1. Front fork lower bracket and stem
2. Seal, lower
3. Bearing cone (2)
4. Bearing cup (2)
5. Seal, upper
6. Front fork upper bracket
7. Fork stem pinch screw
8. Washer
9. Fork stem bolt
10. Pinch screw, upper (2)
11. Slider tube cap (2)
12. Fork assembly (slider and tube assembly, RH and LH)
13. Pinch screw, lower (2)
14. Steering head (part of frame)
15. XL models: 0.42-0.50 in. (10.7-12.7 mm)

Figure 2-140. Front Fork Assembly: XL Models

CLEANING, INSPECTION AND REPAIR

1. Thoroughly clean and inspect all parts. Replace any parts that are bent or damaged.
2. See Figure 2-141. Inspect the O-ring (6) for damage, wear or general deterioration; replace as necessary. Replace all other removed seals.
3. Inspect damper tube ring(s) (4). Replace ring(s) if damaged or excessively worn.
4. Check dust seal (12) where it contacts slider tube (9). Dust seal should provide continuous contact against slider tube and should not show excessive wear. Check slider tube where it is contacted by seal. Tube surface should be shiny, smooth and free of scoring or abrasions.
5. Inspect small hole in groove of slider tube lower end. Verify that hole is unobstructed.

ASSEMBLY

PART NUMBER	TOOL NAME
HD-36583	FORK SEAL AND BUSHING INSTALLATION TOOL
HD-59000-B	OIL LEVEL GAUGE

Initial Assembly

1. See Figure 2-141. If lower bushing (10) was removed, install **new** lower bushing in groove of slider tube (9). Expand bushing only enough to fit over tube.
2. Install damper tube ring(s) (4) into groove(s) of damper tube (3).
3. Place rebound spring (8) over damper tube (3). Insert damper tube into slider tube.
4. Insert spring (5) into slider tube with the tapered end down. Push damper tube through opening at bottom of slider tube using spring. Place sleeve (15) over end of damper tube.
5. **All except XL 1200L:** Install spring washer (21) and spring collar (20) into slider tube.
6. Install slider tube assembly into slider (16). Install screw (18) with washer (17) at bottom of slider. Move slider tube through its full range of travel within slider several times to verify proper component alignment. Then, applying downward force on spring, final tighten screw to 132-216 **in-lbs** (14.9-24.4 Nm).
7. Place upper bushing (1), spacer (2) (concave side downward), oil seal (14) (lettering side upward) and FORK SEAL AND BUSHING INSTALLATION TOOL (Part No. HD-36583) over slider tube. Install bushing, spacer and seal into slider bore by tapping components downward with the installation tool. Install internal circle clip (13) into groove in top of slider bore.
8. Install dust seal (12) at top of slider.
9. **All except XL 883N/XL 1200N:** Install cover (11).
10. **XL 883N/XL 1200N:** See Figure 2-143. Slide a fork gaiter (2) down each slider tube. Peal back lower lip (3) and slip over end of fork slider (1), fitting lower lip down over groove in upper end of fork slider. Slide upper end of fork gaiter down as far as possible.
11. See Figure 2-141. Install the drain screw and washer (19) into lower end of slider.

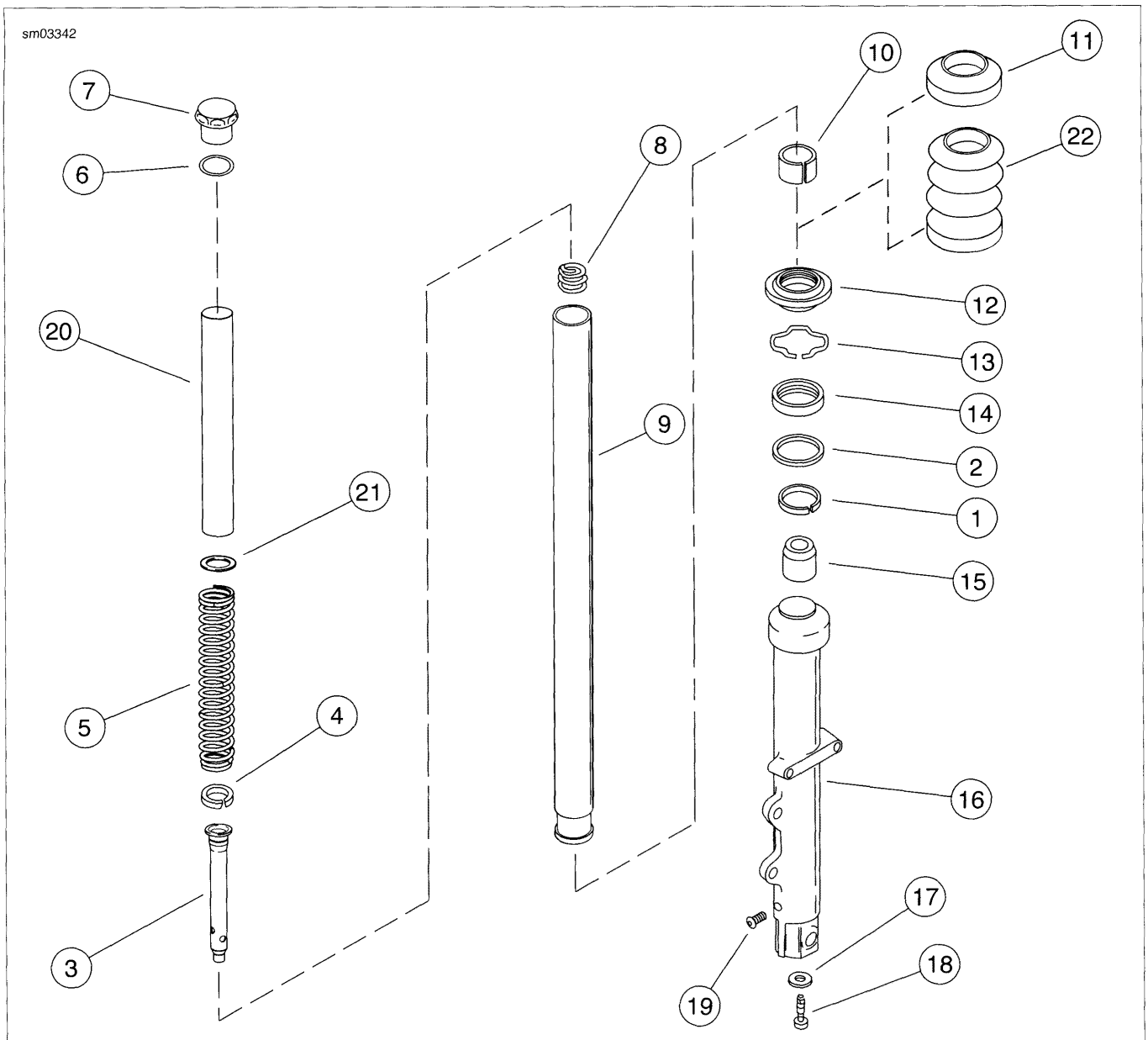

1. Upper bushing
2. Spacer
3. Damper tube
4. Damper tube ring
5. Spring
6. O-ring
7. Tube cap
8. Rebound spring
9. Slider tube
10. Lower bushing
11. Cover (all except XL 883N/XL 1200N)
12. Dust seal
13. Internal circle clip
14. Oil seal
15. Sleeve
16. Slider
17. Washer
18. Screw
19. Drain screw and washer
20. Spring collar (all except XL 1200L)
21. Spring washer (all except XL 1200L)
22. Fork gaiter (XL 883N/XL 1200N) only)

Figure 2-141. Front Slider Tube/Slider Assembly: XL Models

Fill with Fork Oil

1. Position fork tube assembly upright. Remove spring and compress assembly fully.
2. Pour approximately 14 fl oz. (414 mL) of HARLEY-DAVIDSON FORK OIL Type E into fork.
3. See Figure 2-143. Use the OIL LEVEL GAUGE (Part No. HD-59000-B) to draw off excess fork oil until it reaches the level specification. Refer to Table 2-19.

4. Install spring and slider tube cap with O-ring. Tighten to 22-58 ft-lbs (29.9-78.7 Nm).
5. Assemble fork and install in frame.
6. Install slider tube cap (7) with O-ring (6). Screw tube cap all the way into slider tube. Finger-tighten only at this time.

Table 2-19. Fork Oil Level Specifications: XL Models

MODEL	in	mm
XL 883L/XL 883N/XL 1200N	3.11	79
XL 1200L	4.80	122
All other XL models	5.75	146

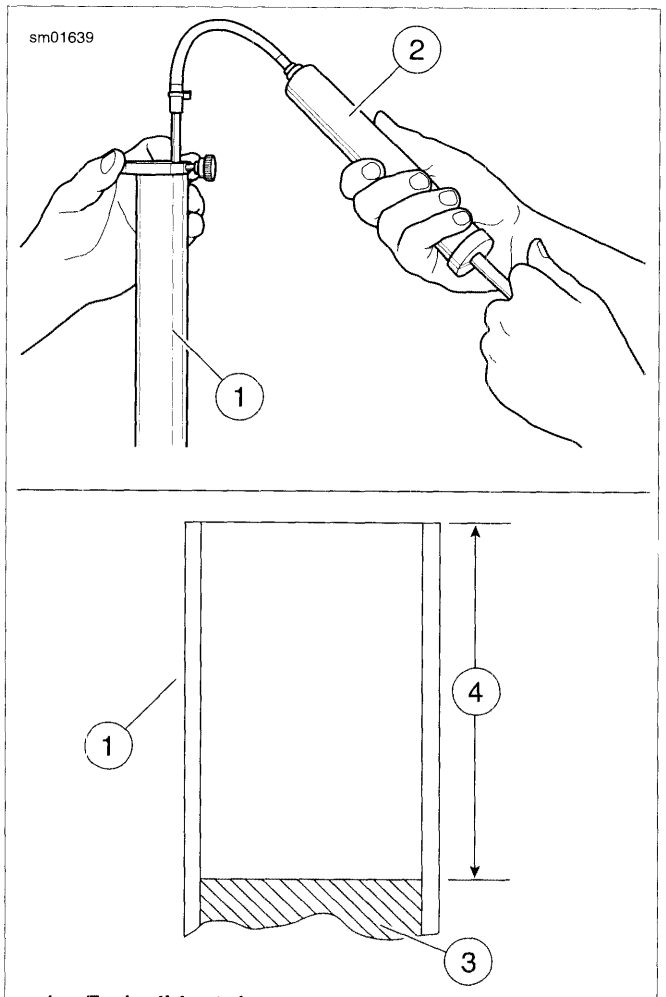

1. **Fork slider tube**
2. **Oil Level Gauge**
3. **Fork oil**
4. **Fork oil level**

Figure 2-142. Refilling Front Fork Oil

INSTALLATION

1. See Figure 2-140. Insert each fork assembly (12) through front fork lower (1) and upper (6) brackets. Position slider tubes so that top of each tube cap (11) extends 0.42-0.50 in. (10.7-12.7 mm) above top surface of front fork upper bracket.
2. Tighten front fork upper and lower bracket pinch screws (11 and 14) to 30-35 ft-lbs (40.7-47.5 Nm).
3. Now tighten slider tube caps to 22-58 ft-lbs (29.9-78.7 Nm).
4. **XL 883N/XL 1200N:** See Figure 2-143. Slide upper end of each fork gaiter (2) up until it contacts underside of front fork lower bracket (4).
5. Install front fender. See 2.32 FRONT FENDER. Tighten fasteners to 96-156 **in-lbs** (10.9-17.6 Nm).
6. Install front wheel assembly and front brake caliper. See 2.4 WHEELS.

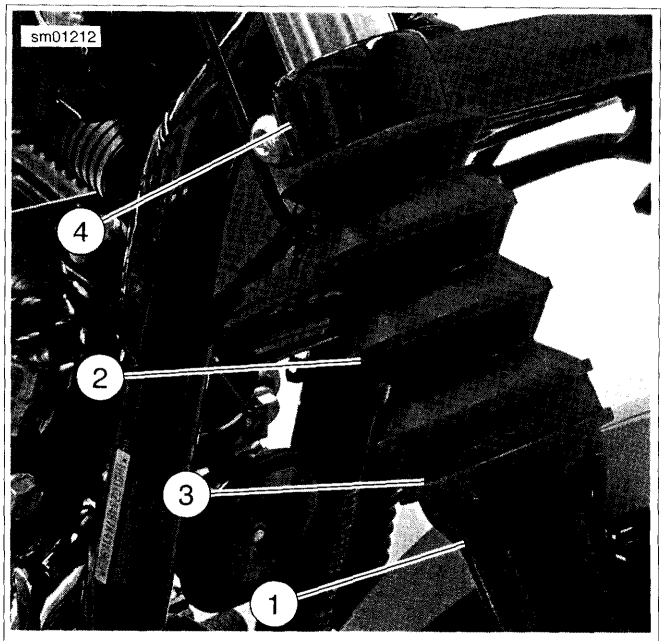

1. **Fork slider (2)**
2. **Fork gaiter (2)**
3. **Fork gaiter lower lip**
4. **Front fork lower bracket**

Figure 2-143. Fork Gaiter: XL 883N/XL 1200N Only

GENERAL

The front fork consists of two telescoping tube/slider assemblies. Each tube/slider assembly has an internal compression spring, which supports the forward weight of the vehicle/rider and extends and retracts to cushion the ride over rough or irregular road surfaces. An oil-filled damping mechanism controls the telescoping action of each tube/slider assembly.

REMOVAL

PART NUMBER	TOOL NAME
HD-48287	TRIPLE TREE WEDGE TOOL

1. Remove front brake calipers. See 2.11 FRONT BRAKE CALIPER: XR MODELS.
2. Remove front wheel assembly. See 2.4 WHEELS.
3. Remove front fender and bracket assembly. See 2.32 FRONT FENDER.
4. See Figure 2-144. Remove upper and lower fork bracket pinch bolts.
5. Using TRIPLE TREE WEDGE TOOL (Part No. HD-48287), insert wedge in fork brackets to relieve clamping pressure on fork tubes.
6. Remove fork from upper and lower fork brackets.
7. Repeat steps for other side.

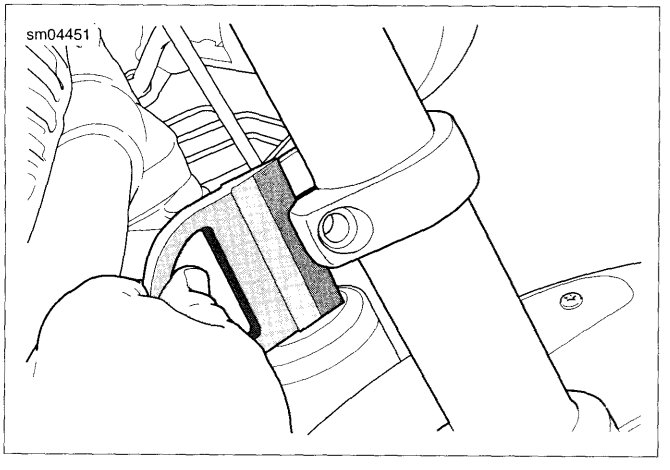

Figure 2-144. Insert Triple Tree Wedge (typical)

DISASSEMBLY: XR 1200

PART NUMBER	TOOL NAME
HD-41177	FORK HOLDING TOOL
HD-45966	FRONT FORK COMPRESSOR
HD-47852	INNER FORK NUT REMOVER/INSTALLER

Left Fork: Initial Disassembly

⚠WARNING

Wear safety glasses or goggles when servicing fork assembly. Do not remove slider tube caps without relieving spring preload or caps and springs can fly out, which could result in death or serious injury. (00297a)

NOTES

- *When using FRONT FORK COMPRESSOR be sure not to bind the outer fork tube on the tool.*
- *FRONT FORK COMPRESSOR (Part No. HD-45966) comes with a cup and screw that are for FLT models only and not to be used with this fork assembly.*

1. See Figure 2-145. Using FORK HOLDING TOOL (Part No. HD-41177), mount fork assembly in vise.
2. Remove fork cap.
3. See Figure 2-146. Compress fork using FRONT FORK COMPRESSOR (Part No. HD-45966).

NOTE

Note position of retaining nut with shoulder of nut facing away from fork cap. Be sure to install in the same manner.

4. See Figure 2-147. Remove keeper and loosen retaining nut, and fork cap from cartridge assembly.
5. Remove Front Fork Compressor.
6. See Figure 2-148. Remove collar and spring from fork assembly.

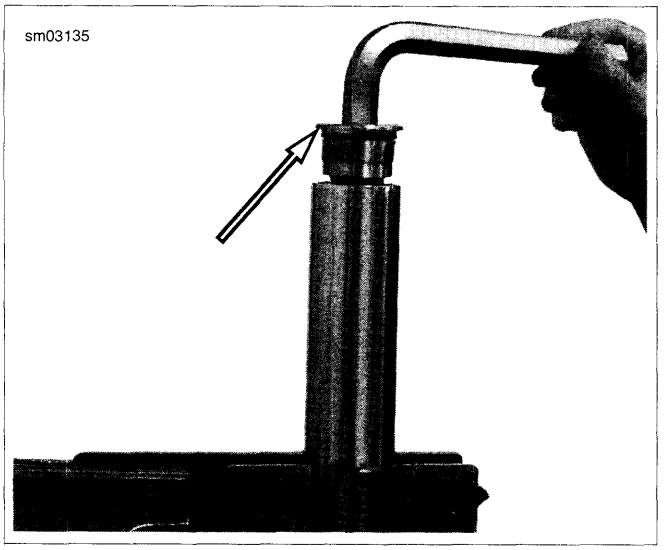

Figure 2-145. Clamp Fork and Remove Fork Cap

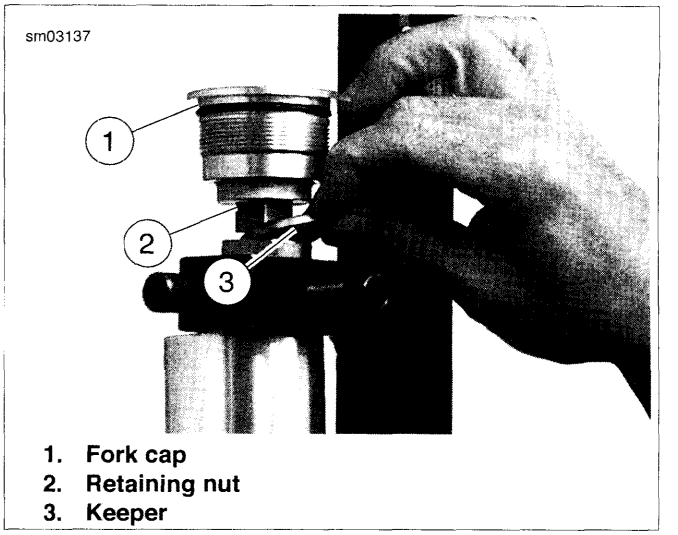

1. Fork cap
2. Retaining nut
3. Keeper

Figure 2-147. Remove Keeper

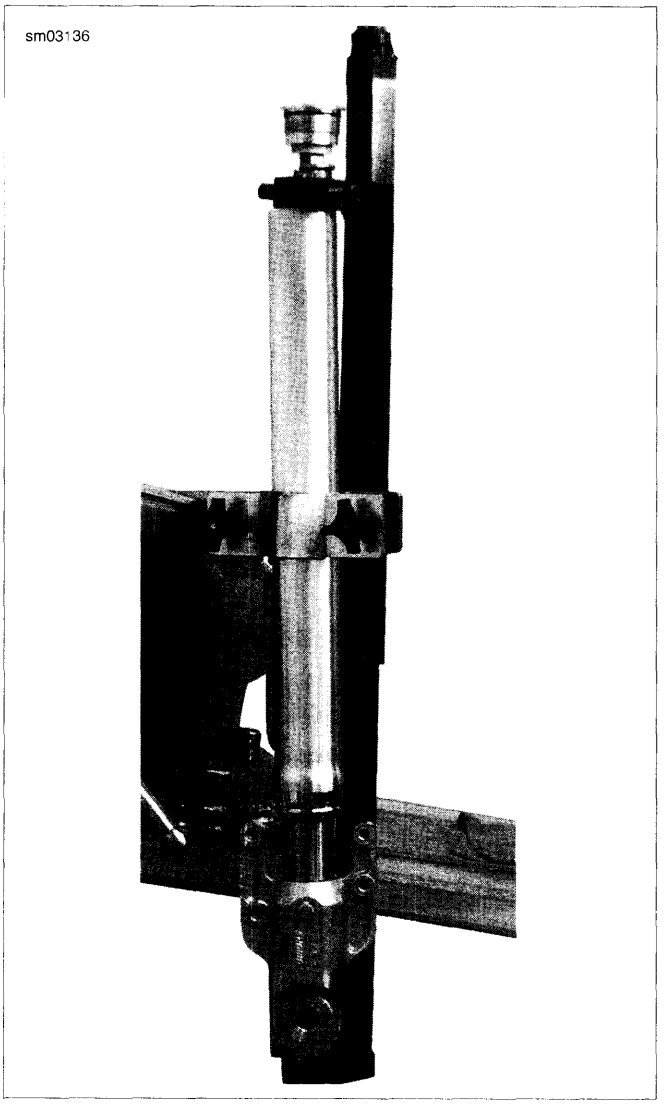

Figure 2-146. Compress Fork Assembly

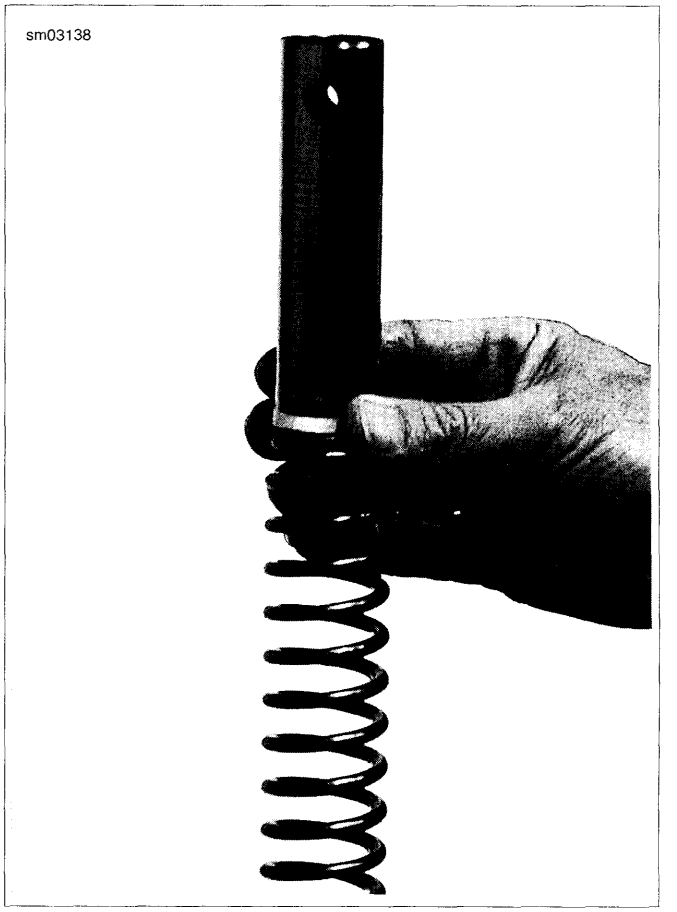

Figure 2-148. Remove Collar, and Spring Assembly

Drain Oil

1. Remove fork from vise.
2. Turn fork upside down and drain into a pan.
3. Stroke cartridge plunger to remove excess fork oil.

Left Fork: Final Disassembly

NOTE

Always use soft jaws for bench vise when placing any fork components into vise to prevent damage to components.

1. See Figure 2-149. Place fork slider into bench vise with soft-jaws and remove fastener and copper washer from bottom of fork assembly.
2. Remove fork from vise.
3. See Figure 2-150. Place fork in vise using FORK TUBE HOLDER (Part No. HD-41177). Remove cartridge assembly from fork slider.
4. See Figure 2-151. Using a blunt soft object (such as a wood dowel or chisel with duct tape), gently tap chrome dust cover away from seat, remove dust seal, lock ring, fork seal, spacer, and bushing from fork tube. Then, expand fork tube and slider against each other (in a slider-hammer effect) repeatedly to free fork slider from fork tube. Use caution not to damage components.
5. See Figure 2-152. Once fork tube and slider are separated, remove dust seal, lock ring, fork seal, spacer, bushing and chrome dust cover (not shown) from fork slider.

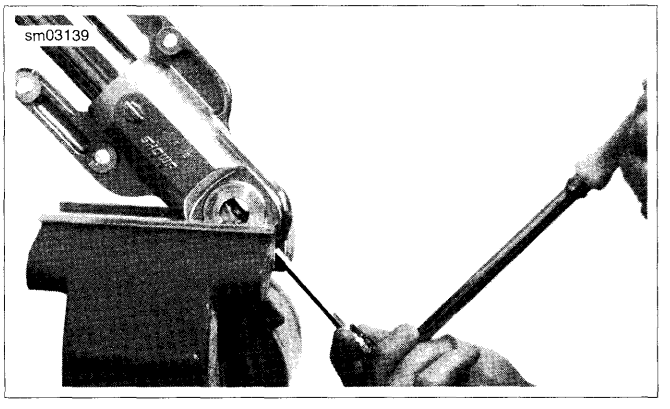

Figure 2-149. Remove Fastener and Copper Washer

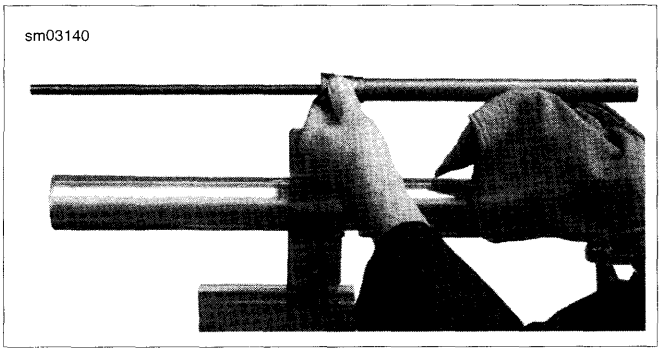

Figure 2-150. Cartridge Assembly

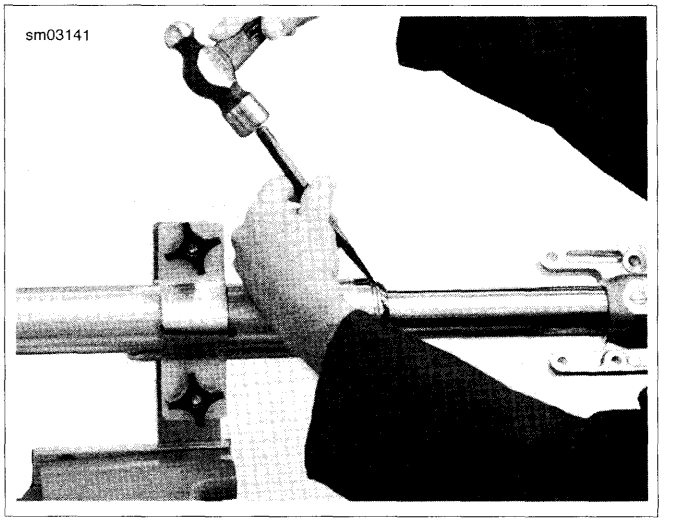

Figure 2-151. Remove Chrome Dust Cover

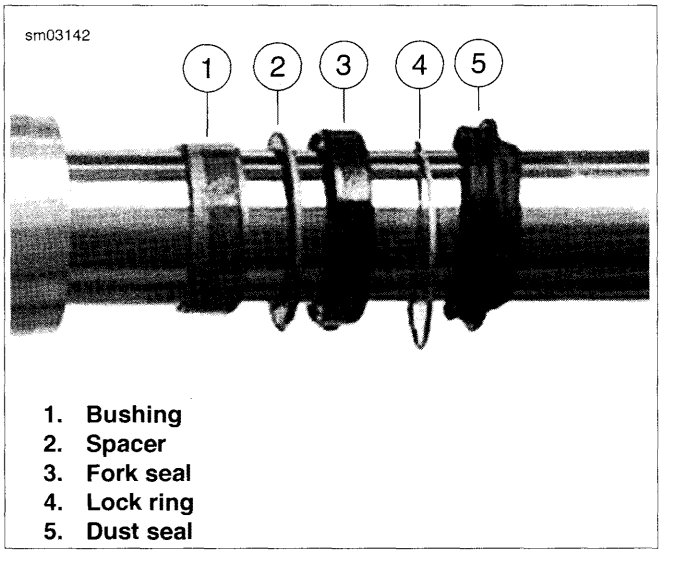

Figure 2-152. Seal Components

Right Fork: Initial Disassembly

⚠WARNING

Wear safety glasses or goggles when servicing fork assembly. Do not remove slider tube caps without relieving spring preload or caps and springs can fly out, which could result in death or serious injury. (00297a)

1. See Figure 2-153. Using FORK HOLDING TOOL (Part No. HD-41177), mount fork assembly in vise.
2. Loosen fork cap.
3. See Figure 2-154. Back retaining nut away from fork cap. Remove fork cap and retainer nut from inner fork nut threaded shaft.

NOTE

Do not fully extend fork assembly. Extending fork will cause oil to leak from bleed hole.

4. See Figure 2-155. Using INNER FORK NUT REMOVER/INSTALLER (Part No. HD-47852) and remove inner fork nut assembly from fork tube.

NOTE

Note positioning of collar, washer and spring for assembly.

5. See Figure 2-156. Remove collar, washer and spring from fork assembly.

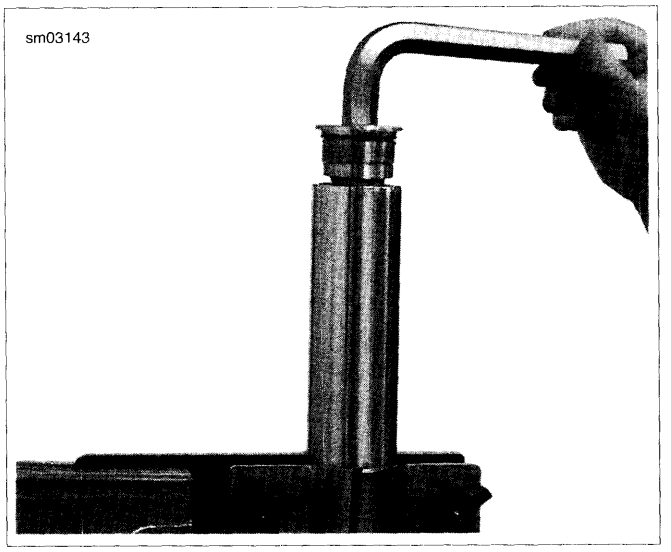

Figure 2-153. Clamp Fork and Loosen Fork Cap

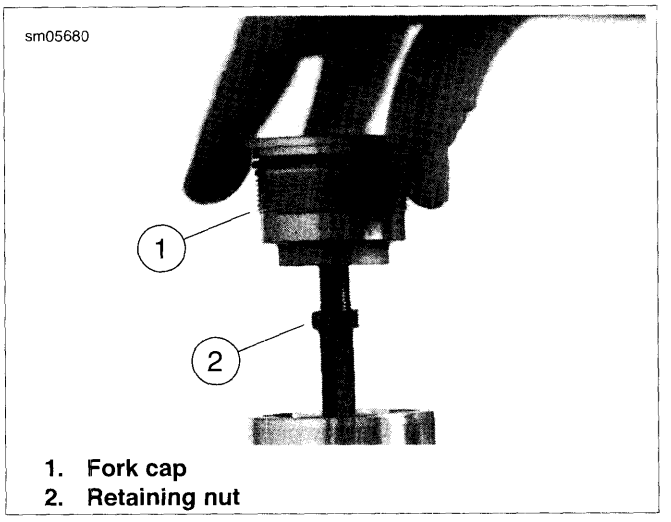

1. **Fork cap**
2. **Retaining nut**

Figure 2-154. Remove/Install Fork Cap and Retaining Nut

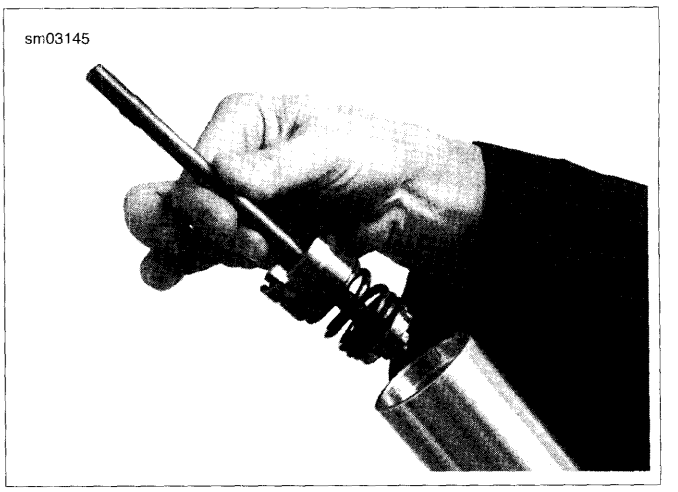

Figure 2-155. Inner Fork Nut

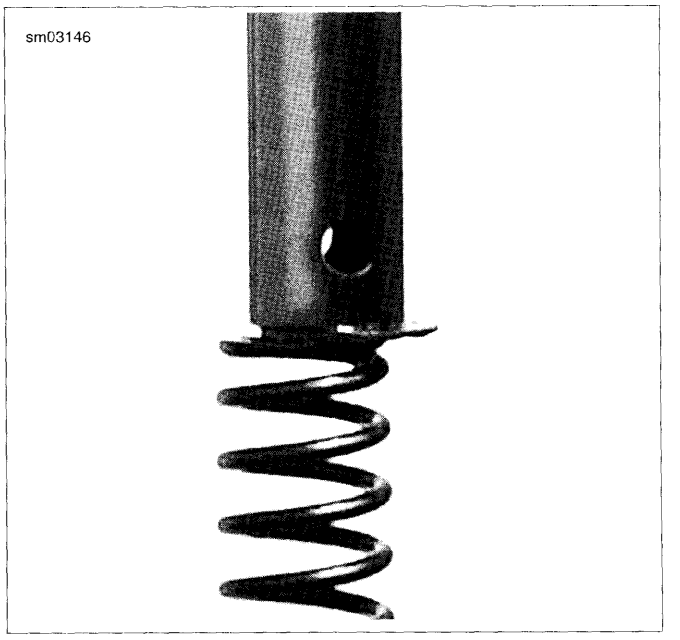

Figure 2-156. Remove Collar, Washer and Spring

Drain Fork Oil

1. Remove fork from vise.
2. Turn fork upside down and drain oil into a pan.

Right Fork: Complete Disassembly

1. See Figure 2-157. Using FORK HOLDING TOOL (Part No. HD-41177), mount fork assembly in vise.
2. Using a blunt soft object (such as a wood dowel, or chisel with duct tape), gently tap chrome dust cover away from seat, remove dust seal, lock ring, fork seal, spacer, and bushing from fork tube. Then, by expanding fork and slider against each other (in a slider-hammer effect) repeatedly, pull slider free from fork tube. Use caution not to damage components.
3. See Figure 2-158. Once fork tube and slider are separated, remove dust seal, lock ring, fork seal, spacer, bushing and chrome dust cover (not shown) from fork slider.

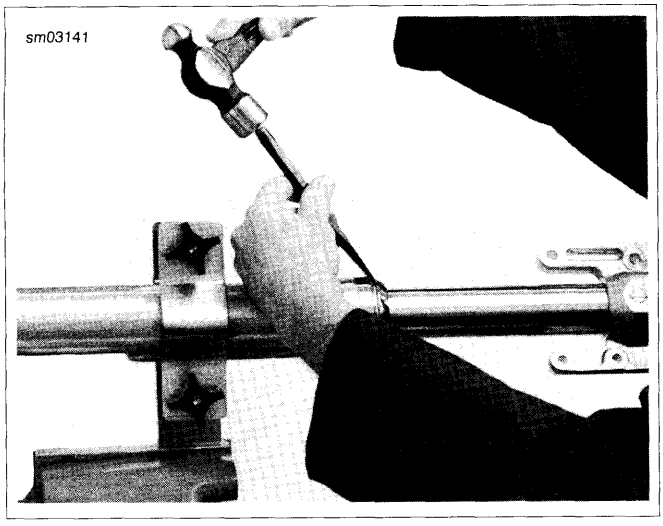

Figure 2-157. Remove Chrome Dust Cover

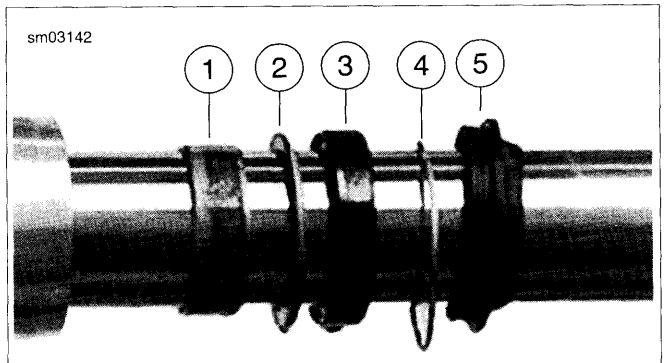

1. **Bushing**
2. **Spacer**
3. **Fork seal (chamfered lips must face oil)**
4. **Lock ring**
5. **Dust seal**

Figure 2-158. Seal Components

DISASSEMBLY: XR 1200X

PART NUMBER	TOOL NAME
HD-41177	FORK HOLDING TOOL
HD-50083	ROD CASE GUIDE SOCKET
HD-50084	FORK CAP WRENCH

Initial Disassembly

⚠WARNING

Wear safety glasses or goggles when servicing fork assembly. Do not remove slider tube caps without relieving spring preload or caps and springs can fly out, which could result in death or serious injury. (00297a)

NOTE

Count and record the rounds out (counterclockwise) for the preload adjuster.

1. See Figure 2-159. Back the preload off the fork spring.
2. Clamp the outer tube in the FORK HOLDING TOOL (Part No. HD-41177).
3. See Figure 2-160. Loosen the fork cap with the FORK CAP WRENCH (Part No. HD-50084).
4. See Figure 2-161. Pull the cap and piston rod up out of the outer tube and loosen the rod case guide with the ROD CASE GUIDE SOCKET (Part No. HD-50083).

NOTE

Hold the rod case guide and turn the axle clamp casting to unthread the case guide from the inner tube.

5. See Figure 2-162. Remove the piston rod assembly from the inner tube.

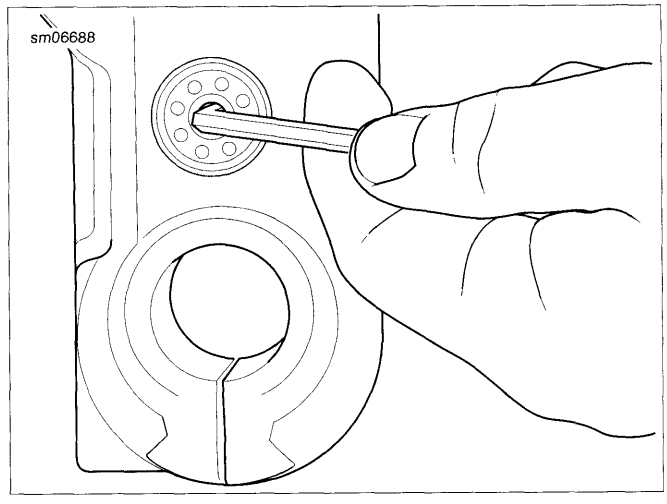

Figure 2-159. Preload Adjuster

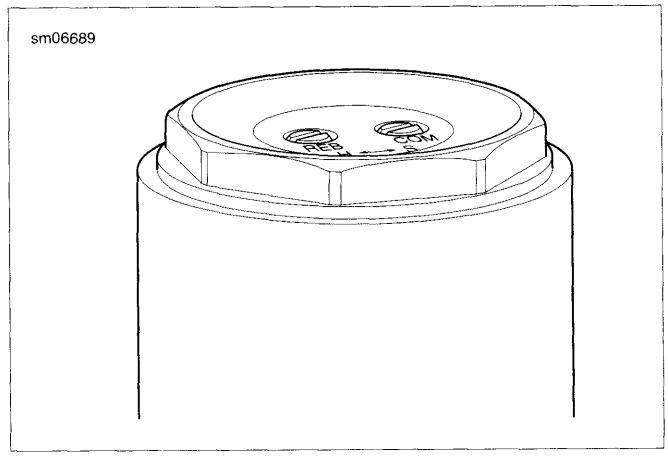

Figure 2-160. Loosen Fork Cap

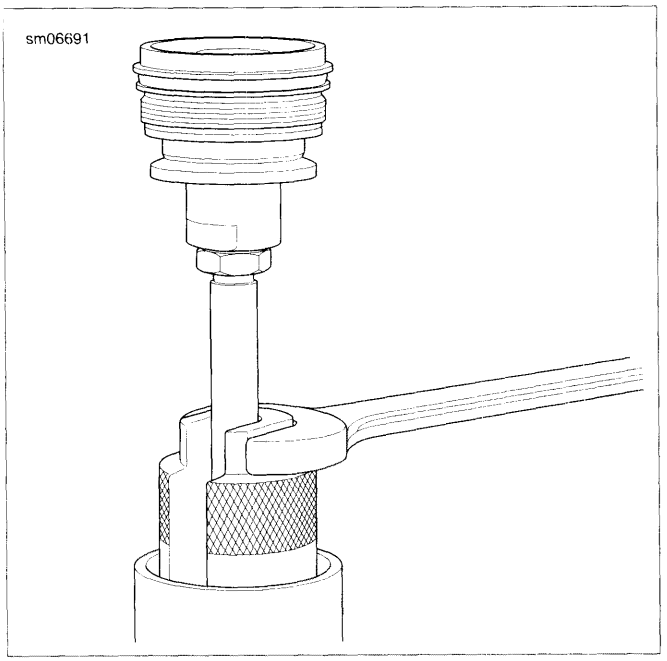

Figure 2-161. Rod Guide Nut Socket

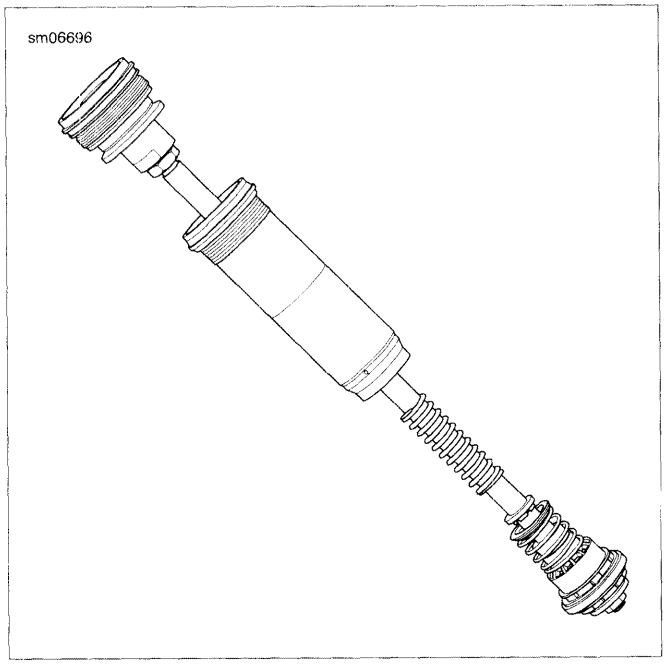

Figure 2-162. Piston Rod Assembly with Rod Case Guide

Drain the Fork Oil

1. See Figure 2-163. Drain the oil into a pan and remove:
   a. The upper spring collar
   b. The spring
   c. The lower spring collar
2. Pump the inner tube 10 or more times to empty the oil from the fork.

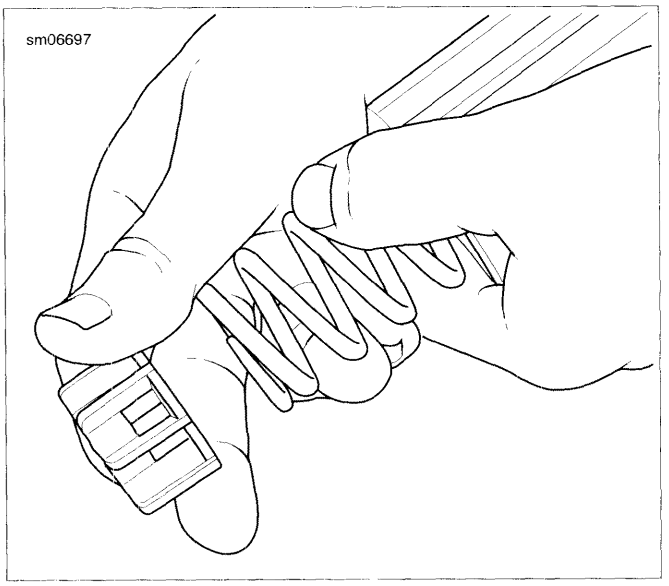

Figure 2-163. Remove the Upper Spring Collar and the Spring

Complete Disassembly

1. See Figure 2-164. Remove the stopper ring (18) from the groove inside the outer tube (13).
2. Slide the inner tube (20) out of the outer tube.
3. From the inner tube remove:
   a. Slide bushing (14)
   b. Guide bushing (15)
   c. Seal spacer (16)
   d. Oil seal (17)
   e. The stopper ring
   f. The dust seal (19)

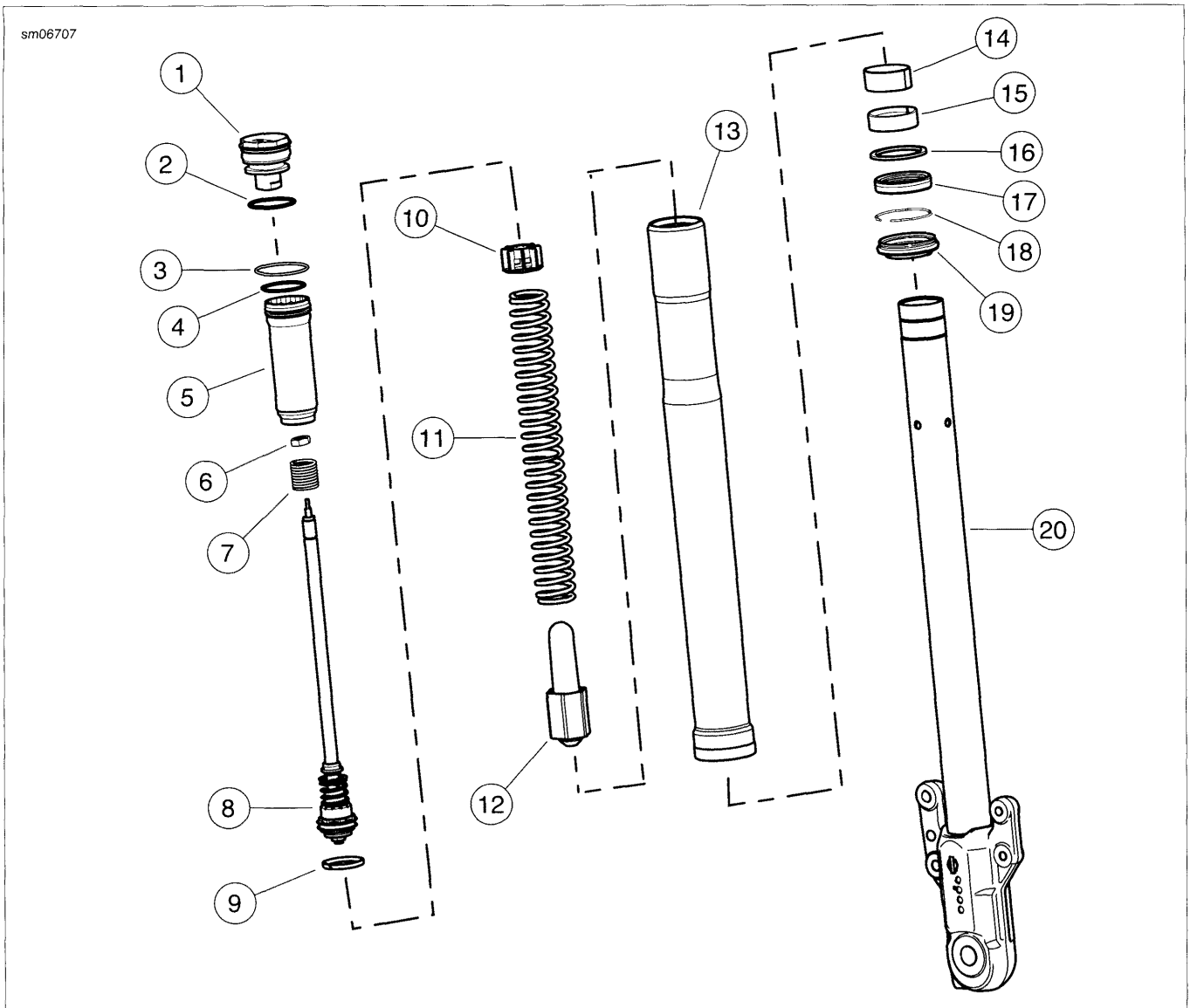

1. Fork tube cap
2. O-ring
3. Slider ring
4. O-ring
5. Rod guide case
6. Hex nut
7. Preload spring
8. Rod piston assembly
9. Piston ring
10. Upper spring collar
11. Spring
12. Lower spring collar
13. Outer tube
14. Slider bushing
15. Guide bushing
16. Seal spacer
17. Oil seal
18. Stopper ring
19. Dust seal
20. Inner tube

Figure 2-164. Fork Assembly: XR 1200X

CLEANING AND INSPECTION

1. Thoroughly clean and inspect each part. If inspection shows that any parts are bent or damaged, those parts should be repaired or replaced.
2. Inspect fork tube bushing and slider guide bushing and replace as required.
3. Always replace oil seals and O-rings.
4. Check dust cover where it rubs on fork tube. Dust cover should not show any wear.
5. If springs are damaged, replace springs.
6. If a fork tube or slider is bent or damaged, replace it.
7. Replace all other worn or damaged components as necessary.

ASSEMBLY: XR 1200

PART NUMBER	TOOL NAME
B-42571	FORK SEAL DRIVER
HD-41177	FORK HOLDING TOOL
HD-45966	FRONT FORK COMPRESSOR
HD-47852	INNER FORK NUT REMOVER/INSTALLER
HD-59000B	OIL LEVEL GAUGE

Left Fork: Initial Assembly

NOTE

Chamfered lips on oil seal MUST face towards oil in fork.

1. See Figure 2-165. Use sleeve from fork seal driver and install chrome dust cover (not shown) and components onto fork slider in order shown.
2. Lightly coat fork slider and bushing with fork oil and gently install slider into fork tube.
3. See Figure 2-166. Using FORK HOLDING TOOL (Part No. HD-41177), mount fork assembly in vise.
4. Make sure cap (centering plate) is on bottom end of fork cartridge and install fork cartridge (big end first) into fork slider.
5. Remove fork and FORK HOLDING TOOL from vise.

NOTE

Always use soft jaws for bench vise when placing any fork components into vise to prevent damage to components.

6. See Figure 2-167. Using a vise with soft jaws, clamp fork slider in vise. Install **new** fastener and copper washer to hold fork cartridge in place inside fork tube. Tighten to 132-216 **in-lbs** (14.9-24.4 Nm).
7. Remove fork from vise.
8. Using FORK HOLDING TOOL (Part No. HD-41177), mount fork assembly in vise.
9. See Figure 2-168. Assemble the FORK SEAL DRIVER (Part No. B-42571) over fork slider in front of oil seal with the long end of tool facing seal. Install parts in the following order: bushing, spacer, and drive fork seal into fork tube bore with tool until tool is flush with fork slider.
10. Install lock ring into groove in top of oil seal. Verify lock ring is properly seated.
11. See Figure 2-169. Remove FORK SEAL DRIVER, reverse tool to short side of tool to prepare to install chrome dust cover. Rotate slider cover to match any removal burrs in slider and tap chrome dust cover into place.

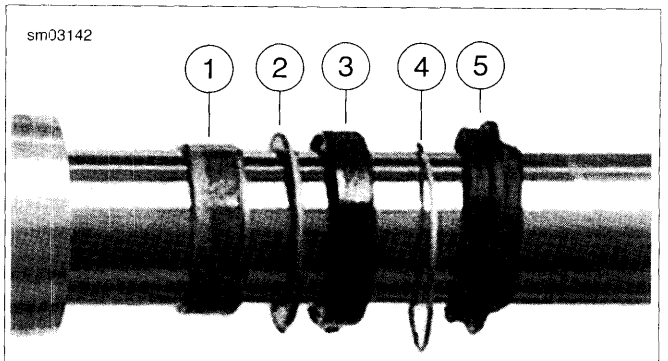

1. **Bushing**
2. **Spacer**
3. **Fork seal (chamfered lips must face oil)**
4. **Lock ring**
5. **Dust seal**

Figure 2-165. Fork Tube Shown Installed In Order of Installation

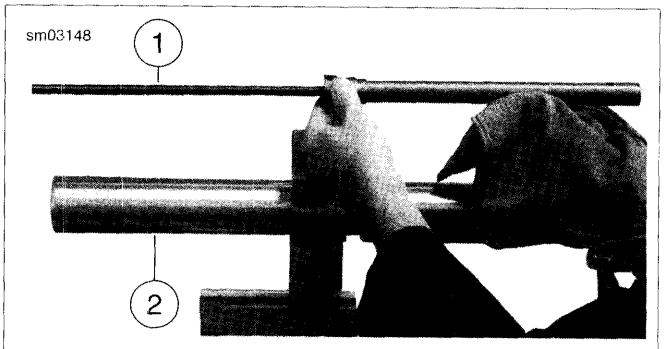

1. **Fork cartridge**
2. **Fork tube**

Figure 2-166. Install Fork Cartridge

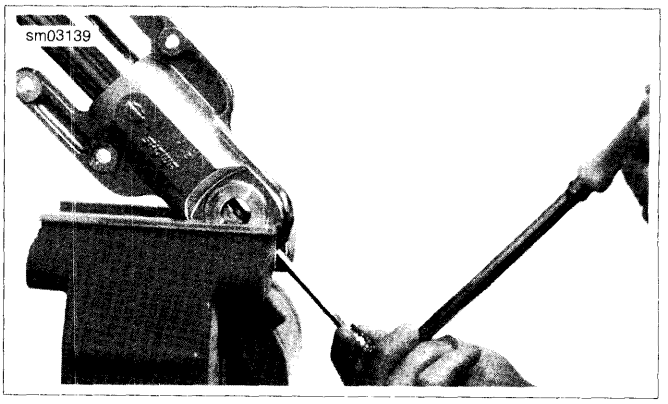

Figure 2-167. Install Fastener and Copper Washer

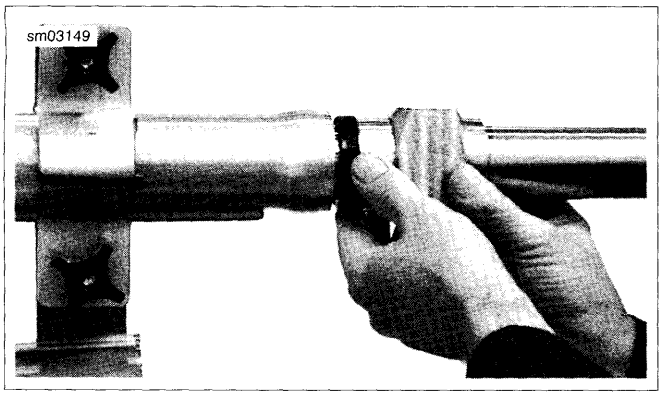

Figure 2-168. Install Bushing, Spacer, and Install Fork Seal in Place with Seal Driver

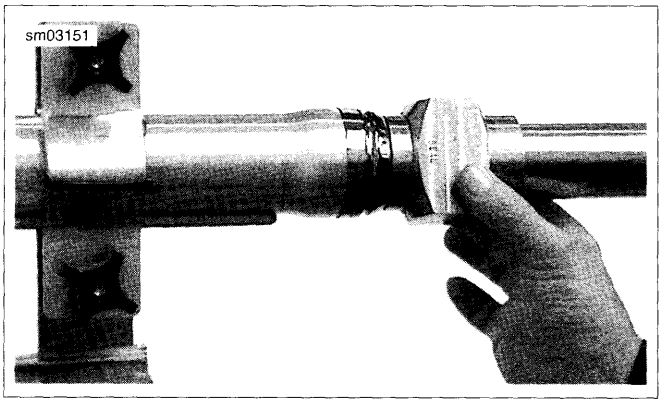

Figure 2-169. Install Chrome Dust Cover

Left Fork: Fill with Fork Oil

1. Adjust fork assembly to be vertical in vise and fully compressed.
2. Fill fork with Harley-Davidson TYPE E FORK OIL (Part No. 99884-80) until it is approximately 2.0 in. (50.8 mm) from top of fork tube.
3. See Figure 2-170. Slowly pump cartridge 8 to 10 times to exhaust air from assembly.

NOTE

Fork oil level is measured from top of fork tube, with spacer and spring removed and fork fully compressed.

4. See Figure 2-171. Fully compress fork and adjust the oil level to specification from top of fork tube using OIL LEVEL GAUGE (Part No. HD-59000B). Refer to Table 2-20.

Table 2-20. Oil Level, Left Fork

MEASUREMENT		VOLUME	
2.8 in.	71 mm	20.7 oz	613 cc

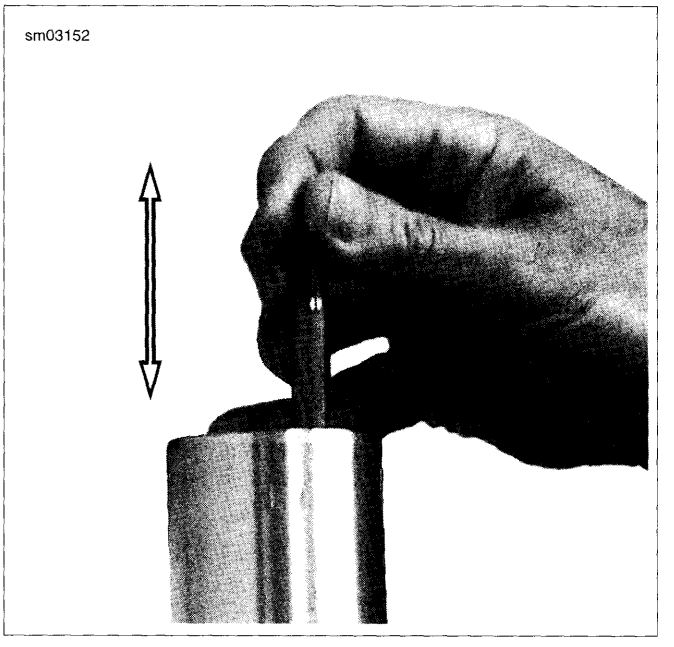

Figure 2-170. Pump Cartridge

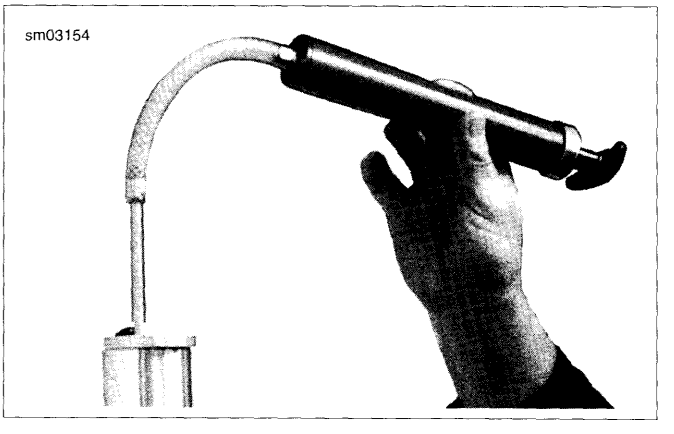

Figure 2-171. Measure Fork Oil

Left Fork: Complete Assembly

NOTE

Spring coils tighten at bottom of spring. Be sure to install in this manner.

1. See Figure 2-172. Fully extend fork and install spring in fork tube (with tightly wound end at bottom), washer and collar.

⚠WARNING

Wear safety glasses or goggles when servicing fork assembly. Do not remove slider tube caps without relieving spring preload or caps and springs can fly out, which could result in death or serious injury. (00297a)

2. See Figure 2-173. Compress fork using FRONT FORK COMPRESSOR (Part No. HD-45966).
3. Install keeper.

NOTE

Note position of retaining nut with shoulder of nut facing away from fork cap.

4. Install retainer nut on cartridge rod 0.551 in. (14 mm) from top of rod and install fork cap onto cartridge rod.
5. Install fork cap on inner rod and tighten against the retainer nut to 12.5-16.25 **ft-lbs** (17-22 Nm) while holding retainer nut with wrench.
6. Release tension and remove fork compressing tool.
7. See Figure 2-174. Install fork cap and tighten to 21-29 ft-lbs (29-39 Nm).

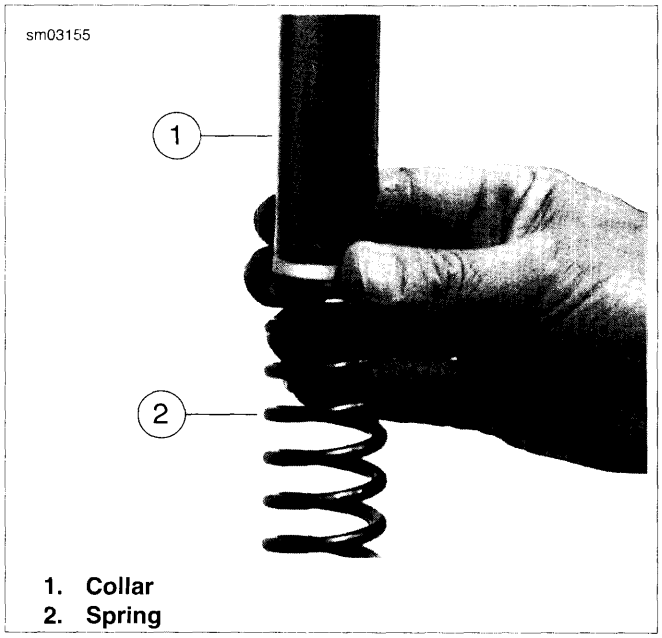

1. **Collar**
2. **Spring**

Figure 2-172. Collar and Spring Assembly

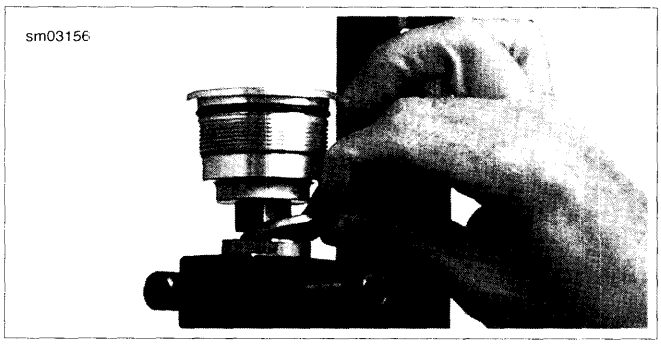

Figure 2-173. Install Keeper

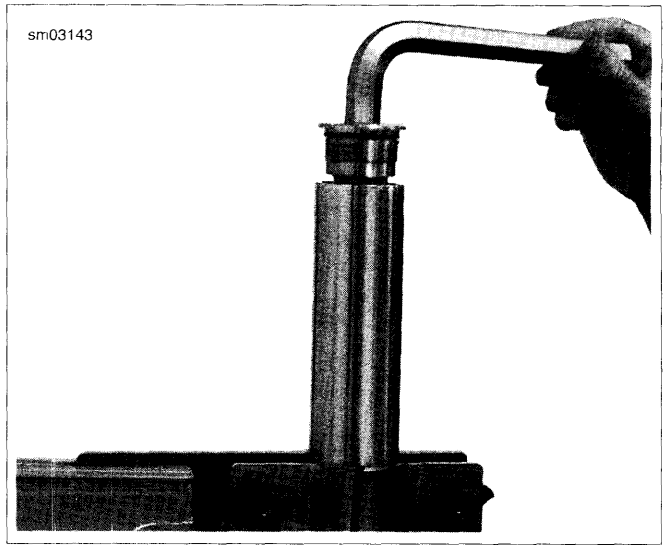

Figure 2-174. Install Fork Cap

Right Fork: Initial Assembly

1. Using FORK HOLDING TOOL (Part No. HD-41177), mount fork assembly in vise vertically and fully compress fork.
2. See Figure 2-175. Install chrome dust cover (not shown) and components onto fork slider in order shown.
3. Lightly coat fork slider and bushing with fork oil and gently install slider into fork tube.

NOTE

Chamfered lips on oil seal MUST face towards oil in fork.

4. See Figure 2-176. Assemble the FORK SEAL DRIVER (Part No. B-42571) over fork slider in front of oil seal with the long end of tool facing seal and assemble in the following order: Install bushing, spacer, and drive fork seal into fork tube bore with tool until tool is flush with fork slider.
5. Install lock ring into groove in top of oil seal. Verify lock ring is properly seated.
6. See Figure 2-177. Remove FORK SEAL DRIVER and reverse tool to short side of tool to prepare to install chrome dust cover. Rotate slider cover to match any removal burrs in slider and tap chrome dust cover into place.

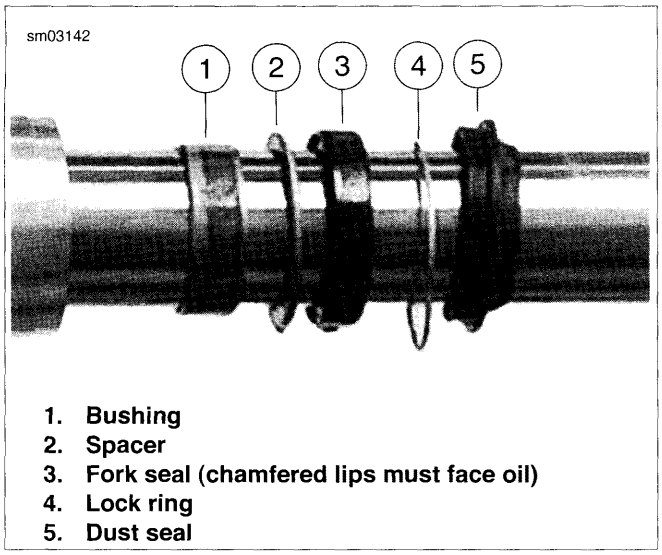

Figure 2-175. Seal Components

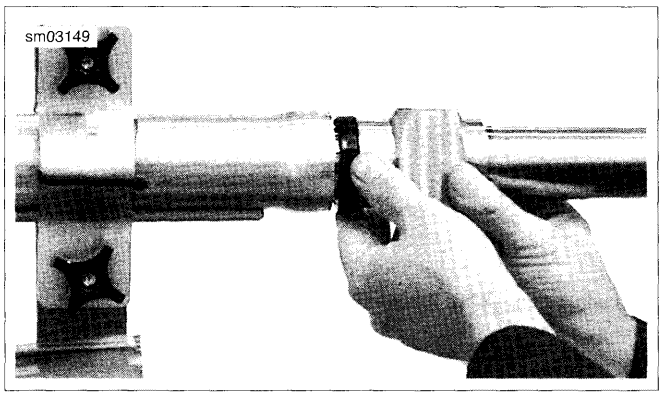

Figure 2-176. Install Seal Components

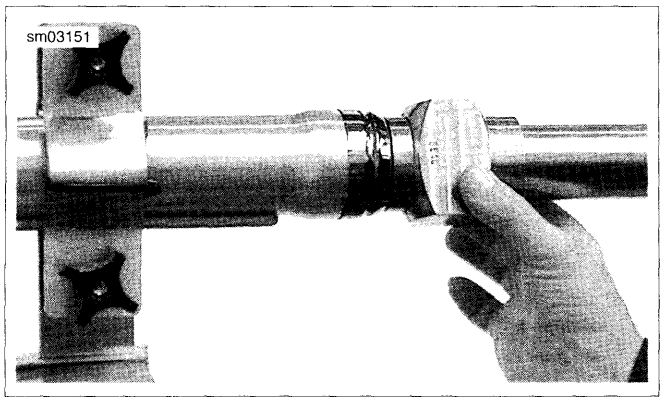

Figure 2-177. Install Chrome Dust Cover

Right Fork: Fill with Fork Oil

1. Using FORK HOLDING TOOL (Part No. HD-41177), mount fork assembly in vise vertically and fully compress fork.

NOTE

Measure fork oil level from top of fork tube using the OIL LEVEL GAUGE (Part No. HD-59000B).

2. Fill fork with Harley-Davidson TYPE E FORK OIL (Part No. 99884-80) to specification. Refer to Table 2-21.

Table 2-21. Oil Level, Right Fork

MEASUREMENT		VOLUME	
3.7 in.	99 mm	23.1 oz	654 cc

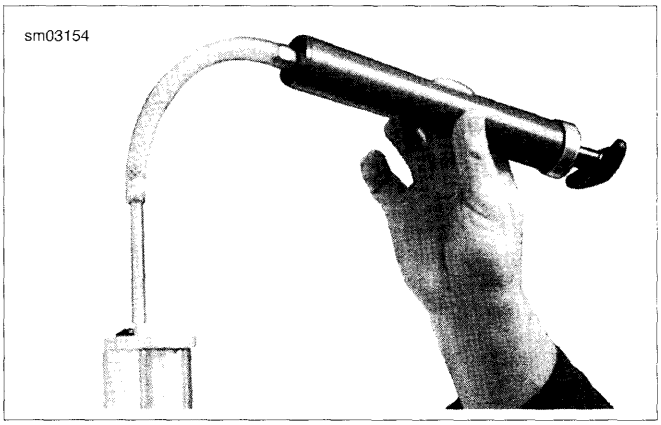

Figure 2-178. Measure Fork Oil

Right Fork: Complete Assembly

1. Fully extend fork.
2. See Figure 2-179. Install rebound spring in fork tube (with tightly wound end at bottom), washer, and spring collar.
3. Verify that washer has properly seated on top of spring.
4. See Figure 2-180. Insert inner fork nut and finger tighten.

⚠WARNING

Wear safety glasses or goggles when servicing fork assembly. Do not remove slider tube caps without relieving spring preload or caps and springs can fly out, which could result in death or serious injury. (00297a)

NOTE

To prevent cross threading fork tube damper cups and caps, use caution when threading in the caps with the spring compressed. It may be helpful to use a palm-ratchet during this process.

5. See Figure 2-181. Final tighten inner fork nut to 69-83 ft-lbs (93-113 Nm) using INNER FORK NUT REMOVER/INSTALLER (Part No. HD-47852).
6. See Figure 2-182. Install retainer nut (retainer nut must be installed 0.551 in (14 mm) from top of threaded shaft).
7. Install fork cap on inner rod and tighten against the retainer nut to 13-16 ft-lbs (17-22 Nm) while holding retainer nut with wrench.
8. Apply a light coat of fork oil on O-ring and thread cap into fork tube. Tighten fork cap to 21-29 ft-lbs (29-39 Nm).

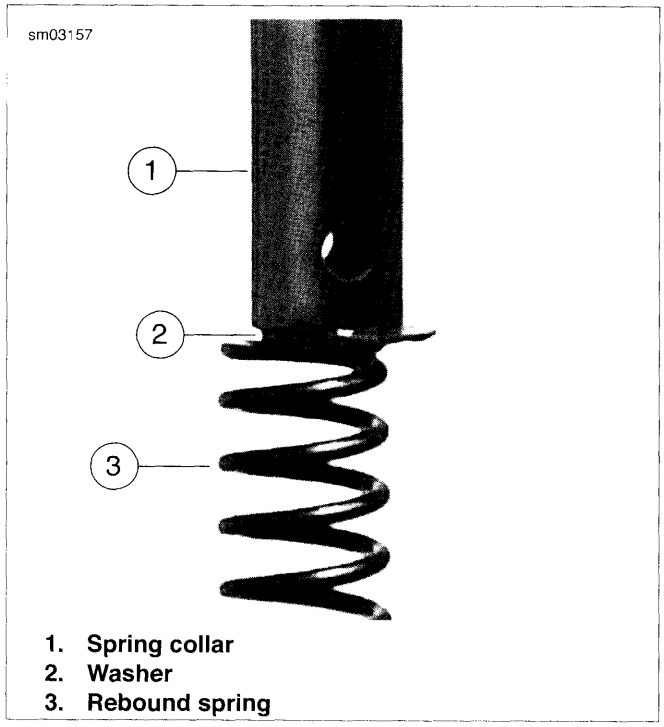

1. Spring collar
2. Washer
3. Rebound spring

Figure 2-179. Collar, Washer and Spring Assembly

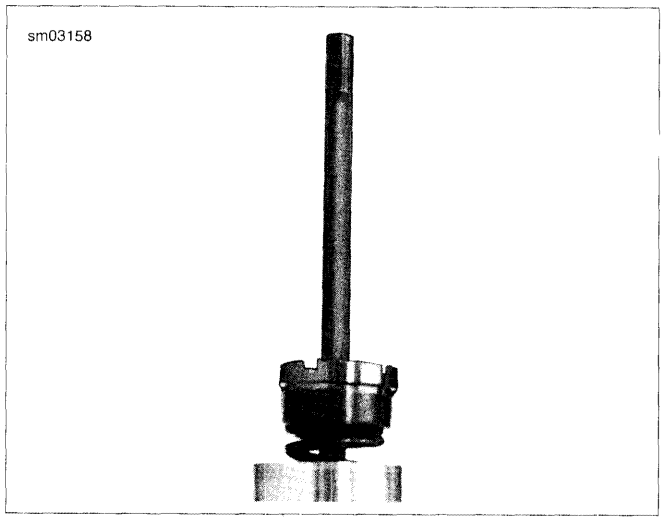

Figure 2-180. Inner Fork Nut

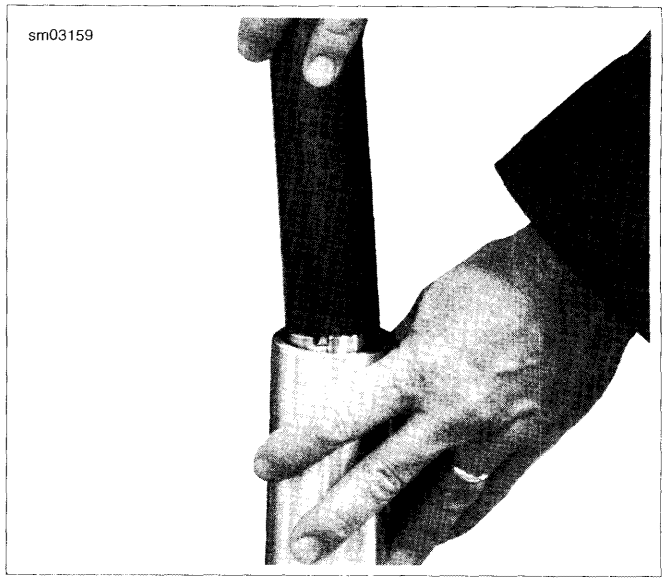

Figure 2-181. Hand Tighten

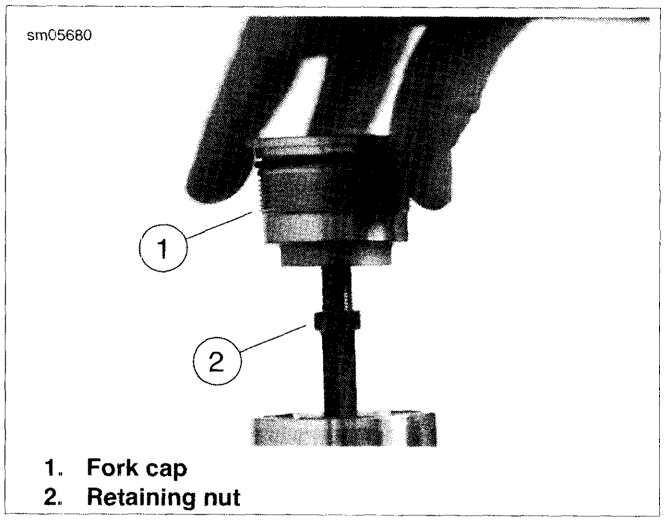

1. Fork cap
2. Retaining nut

Figure 2-182. Remove/Install Fork Cap and Retaining Nut

ASSEMBLY: XR 1200X

PART NUMBER	TOOL NAME
B-42571	FORK SEAL DRIVER AND DUST BOOT INSTALLER
B-59000B	OIL LEVEL GAUGE
HD-41177	FORK HOLDING TOOL
HD-50083	ROD CASE GUIDE SOCKET
HD-50084	FORK CAP WRENCH

Piston Rod Service

1. Separate the hex nut from the fork cap and remove the fork cap and hex nut from the piston rod assembly.

NOTES

- *The piston rod assembly should not be disassembled any further than is described.*
- *Do not use Harley-Davidson TYPE E FORK OIL to lubricate the components for assembly. Use Harley-Davidson BPF PERFORMANCE FORK OIL (Part No. HD-99885-10).*

2. See Figure 2-183. Replace the O-ring on the fork cap.
3. See Figure 2-184. Replace the rod guide case O-ring (1) and the slider ring (2).
4. Replace the rebound spring.
5. See Figure 2-185. Replace the fork piston ring.
6. Install the hex nut and the fork cap on the piston rod assembly.
7. Tighten to 18.4-22.1 ft-lbs (25-30 Nm).

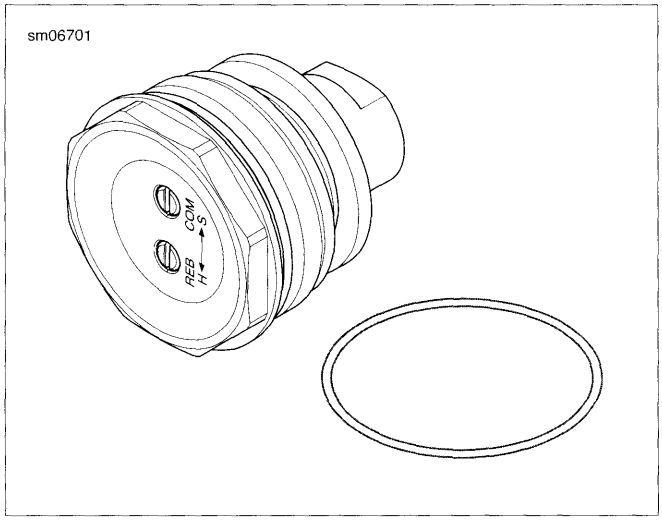

Figure 2-183. Fork Cap and O-Ring

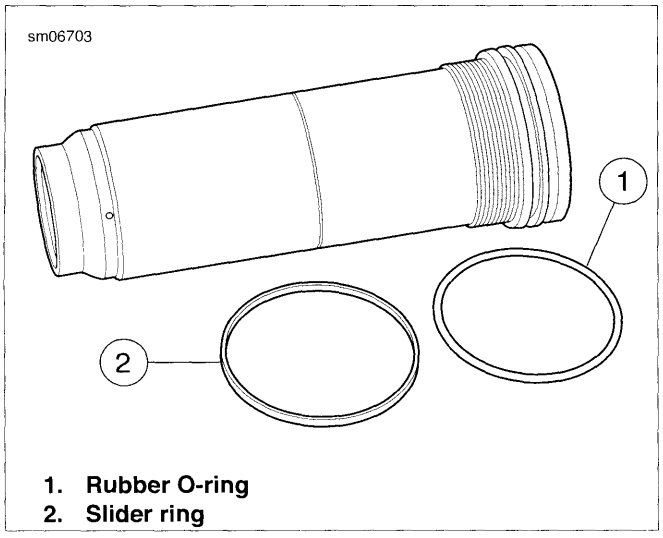

1. **Rubber O-ring**
2. **Slider ring**

Figure 2-184. Rod Guide Case and O-Rings

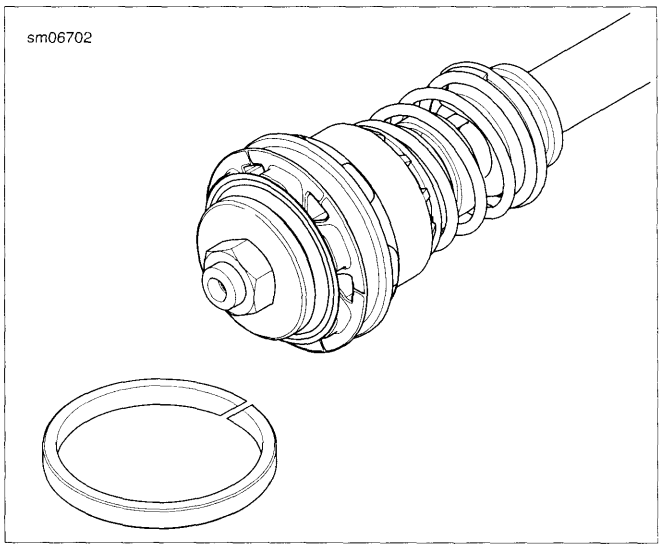

Figure 2-185. Fork Rod Piston and Ring

Initial Assembly

1. See Figure 2-186. Install on the inner fork tube:
   a. The dust seal (1)
   b. The oil seal stopper ring (2)
   c. The seal with the stamp side down (3)
   d. The seal spacer with the chamfer up (4)
   e. The guide bushing (6)
   f. The slide bushing (5)

NOTE

Do not use Harley-Davidson TYPE E FORK OIL to lubricate the components for assembly. Use Harley-Davidson BPF PERFORMANCE FORK OIL (Part No. HD-99885-10) to lubricate the components for assembly.

2. Spread fork oil or sealing grease inside the lip of the oil seal.
3. Slide the inner tube into the outer tube.
4. See Figure 2-187. Seat the oil seal with the FORK SEAL DRIVER AND DUST BOOT INSTALLER (Part No. B-42571).
5. Snap the stopper ring into the groove in the outer tube.
6. Seat the dust seal with the seal driver.

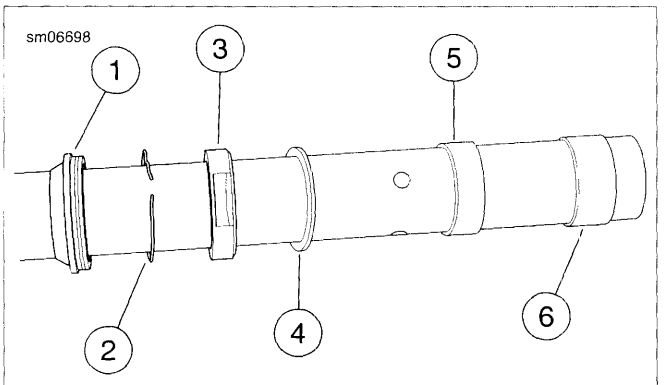

1. **Dust seal**
2. **Stopper ring**
3. **Oil seal**
4. **Spacer ring**
5. **Slide bushing**
6. **Guide bushing**

Figure 2-186. Inner Tube Components

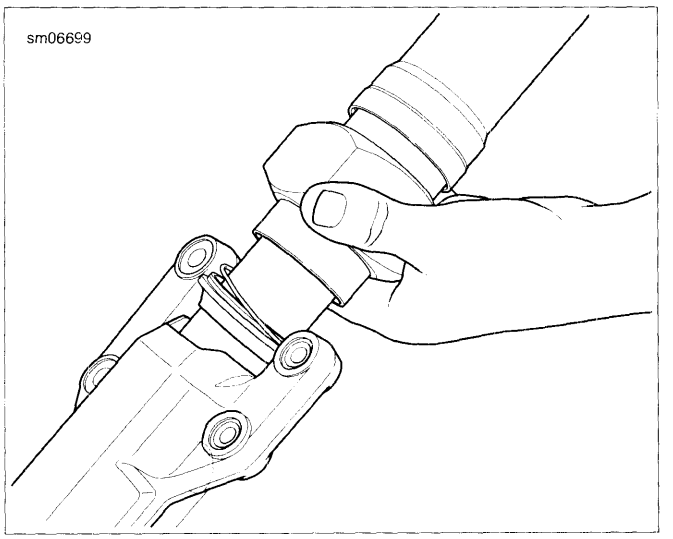

Figure 2-187. Seating the Oil Seal

Fill with Fork Oil

1. Mount the fork assembly in the FORK HOLDING TOOL (Part No. HD-41177) and fully compress the inner tube.

NOTE

Measure the fork spring and replace if required. Refer to Table 2-22.

2. Install:
   a. Lower spring collar
   b. The fork spring
   c. The upper spring collar

NOTE

Do not use Harley-Davidson TYPE E FORK OIL in the XR 1200X forks.

3. Fill fork with Harley-Davidson BPF PERFORMANCE FORK OIL (Part No. HD-99885-10) until the oil reaches the side hole in the inner tube.
4. Pump the inner (outer) tube 8-10 times to expel the air from the assembly.

NOTE

Do not damage the slide ring on the rod guide case.

5. Install the piston assembly:
   a. Guide the piston rod into the inner tube.
   b. Hand tighten the rod guide case to the inner tube.
   c. Gently pull up on the outer tube to fit the slider ring to the outer tube.
6. Using the ROD CASE GUIDE SOCKET (Part No. HD-50083), tighten to 66 ft-lbs (90 Nm).
7. Fill fork with addition Harley-Davidson BPF PERFORMANCE FORK OIL (Part No. HD-99885-10) until the oil spills over the rod guide case.
8. Pump the piston assembly/outer tube several times to expel any additional air.

9. See Figure 2-188. Use the OIL LEVEL GAUGE (Part No. B-59000B) to set the level of the oil in the outer fork tube to specification. Refer to Table 2-23.

Table 2-22. Minimum Spring Service Length

MODEL	in	mm
XR 1200X	13.65	346.6

Table 2-23. Fork Oil Volume

MODEL	oz	cc
XR 1200X	19.6	580

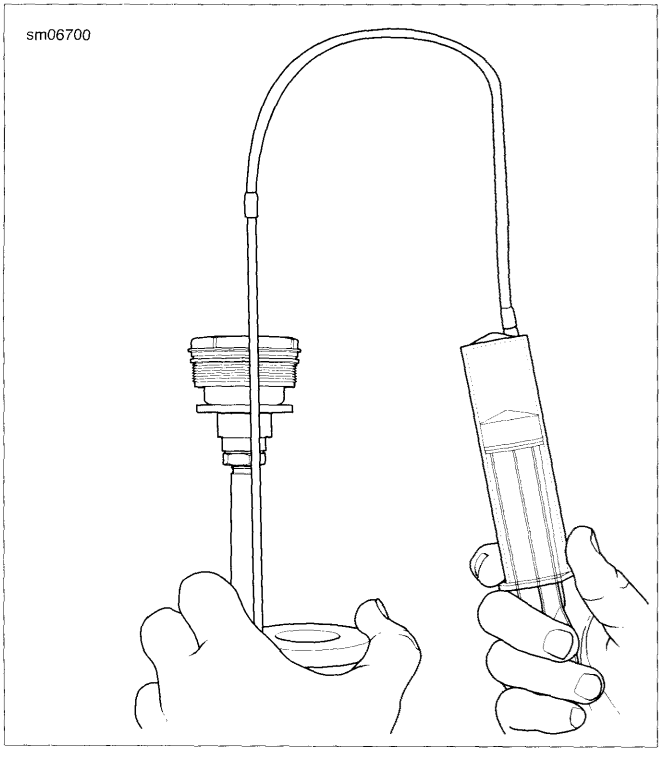

Figure 2-188. Drawing Off Excess Fork Oil

Complete Assembly

1. Use the FORK CAP WRENCH (Part No. HD-50084) to install the fork cap and tighten to 21-29 ft-lbs (29-39 Nm).
2. Adjust the preload to identical settings on both forks.

INSTALLATION

PART NUMBER	TOOL NAME
HD-48287	TRIPLE TREE WEDGE TOOL

NOTES

- *Fork tube installation height is also critical and must match the opposite side exactly for proper vehicle operation, reliability and performance.*
- *When installing fork leg in triple trees, do not twist fork leg to avoid damage to cosmetic finishes.*

1. Identify left and right side fork assemblies.
2. Insert fork assembly from the lower fork bracket upward through the upper fork bracket.
3. Remove TRIPLE TREE WEDGE TOOL (Part No. HD-48287) used during removal process.
4. See Figure 2-189. Measure distance from top of upper fork bracket to top of fork assembly to specification. Both sides must be exactly the same. Refer to Table 2-24.

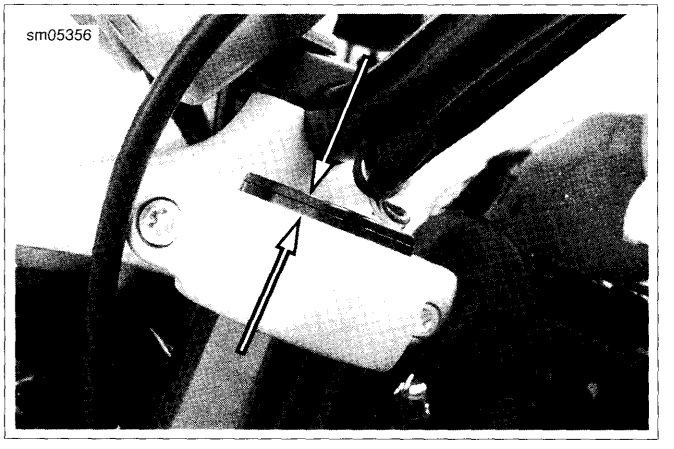

Figure 2-189. Fork Installation Height Measurement

Table 2-24. Fork Installation Height Measurement Specifications

MODEL	in	mm
XR 1200	0.250-0.330	6.35-8.38
XR 1200X	0.388-0.468	9.86-11.88

5. Verify fork tube installation measurement is to specification. Refer to Table 2-24.
6. Tighten pinch bolts to 30-35 ft-lbs (40.7-47.5 Nm).
7. Install front fender and bracket. See 2.32 FRONT FENDER.
8. Install front brake caliper hydraulic lines and install front brake calipers. See 2.11 FRONT BRAKE CALIPER: XR MODELS.
9. Install front wheel and align the wheel to the forks. See 2.4 WHEELS.

GENERAL SUSPENSION ADJUSTMENT: XR 1200X

The front and rear preload setting will need to be adjusted for the rider's weight and cargo. This adjustment should be made before the motorcycle is ridden any distance and after changing the overall vehicle weight (adding saddlebags, etc.).

Damping is set at the factory for the average solo rider under normal riding conditions. The rider may make adjustments to compensate for individual riding styles and varying road conditions.

Evaluating and changing the rebound and compression damping is a very subjective process with many variables and should be approached carefully.

Changes in Load

Changes in the load carried requires changes in the preload settings. Carrying less weight than was used for setting up the suspension requires decreasing the amount of preload. Increasing the load carried requires adding more preload.

FRONT FORK SUSPENSION ADJUSTMENT: XR 1200X

⚠WARNING

Adjust both forks equally. Improper fork adjustment can lead to loss of control, which could result in death or serious injury. (00124c)

CAUTION

Compression and rebound adjusting valves may be damaged if too much force is used at either end of the adjustment range. (00237a)

NOTE

Do not force suspension adjusters beyond mechanical stops.

Front Fork Preload Adjustment

1. See Figure 2-190. Using a metric hex key, turn preload adjuster counterclockwise until it stops. This is the minimum preload setting.
2. Refer to Table 2-25. Turn preload adjuster clockwise the recommended amount specified for the rider weight.

Front Fork Rebound Damping Adjustment

1. See Figure 2-191. Turn rebound damping adjuster clockwise until it stops. This is the maximum rebound setting.
2. Refer to Table 2-26. Turn adjuster counterclockwise to the desired setting.

Front Fork Compression Damping Adjustment

1. See Figure 2-191. Turn compression damping adjuster clockwise until it stops. This is the maximum compression setting.
2. See Table 2-26. Turn adjuster counterclockwise to the desired setting.

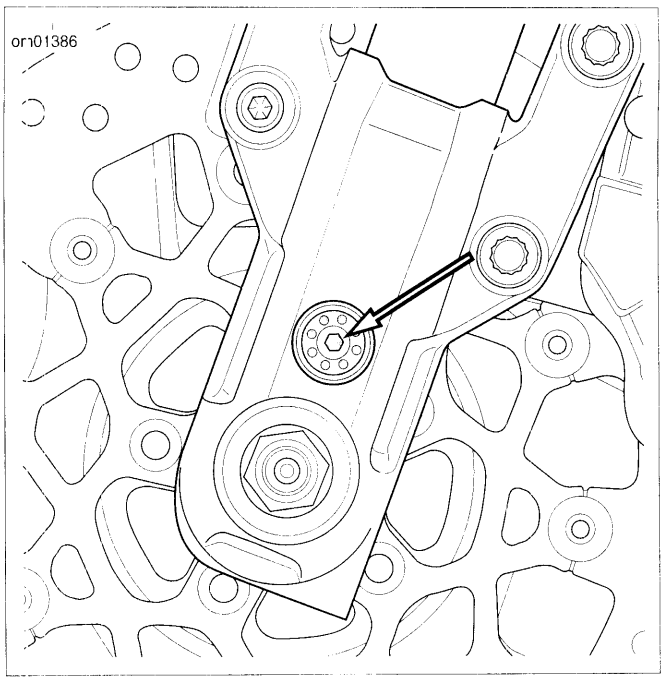

Figure 2-190. Fork Preload Adjuster: XR 1200X

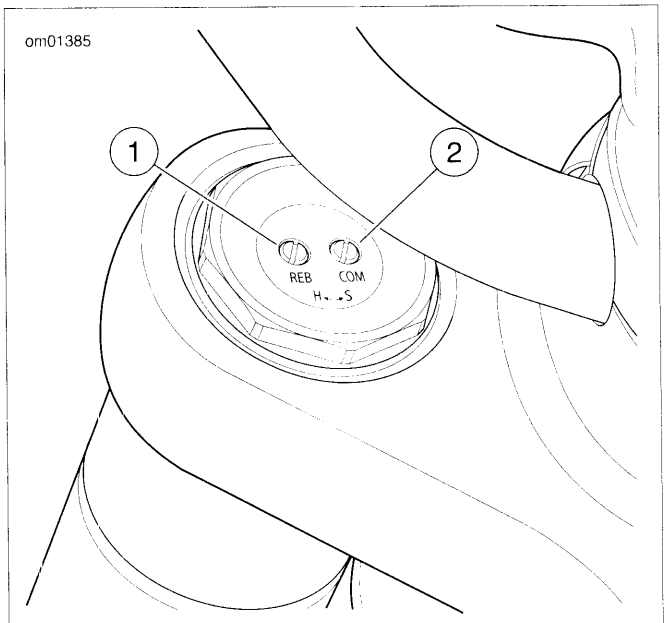

1. **Rebound damping adjuster**
2. **Compression damping adjuster**

Figure 2-191. Fork Rebound and Compression Damping Adjusters: XR 1200X

Table 2-25. Recommended Fork Preload Adjustment: XR 1200X

RIDER WEIGHT	PRELOAD*
Less than 165 lbs (75 kg)	0-4 turns in
165-195 lbs (75-89 kg)	4-6 turns in
195-225 lbs (89-102 kg)	6-8 turns in
225-255 lbs (102-116 kg)	8-10 turns in
Greater than 255 lbs (116 kg)	More than 10 turns
*Values shown are clockwise turns in from minimum. Rotate adjuster clockwise to increase preload or counterclockwise to decrease preload.	

Table 2-26. Recommended Fork Rebound and Compression Damping Adjustment: XR 1200X

DAMPING*	NOMINAL (FROM MAXIMUM)
Rebound (REB)	3 turns
Compression (COM)	5 turns
*Values shown are counterclockwise turns out from maximum. Rotate adjuster clockwise to increase damping or counterclockwise to decrease damping.	

REMOVAL AND DISASSEMBLY

1. Place a protective cover over fuel tank. Remove the fork assemblies. See 2.20 FRONT FORK: XL MODELS or 2.21 FRONT FORK: XR MODELS.
2. See Figure 2-192. Remove fork stem bolt (9) and washer (8). Loosen fork stem pinch screw (7).
3. Lift handlebar assembly from steering head with fork upper bracket (6) attached. Carefully position assembly out of the way. Exercise caution to avoid damaging control cables, wiring harnesses, clutch cable or brake lines.

NOTE

It is not necessary to disconnect clutch and brake hand levers, wiring harnesses or control cables from handlebar, unless the handlebar assembly is to be removed from the motorcycle.

4. Remove upper seal (5) and upper bearing cone (3). Slide fork stem and lower bracket (1) from frame.

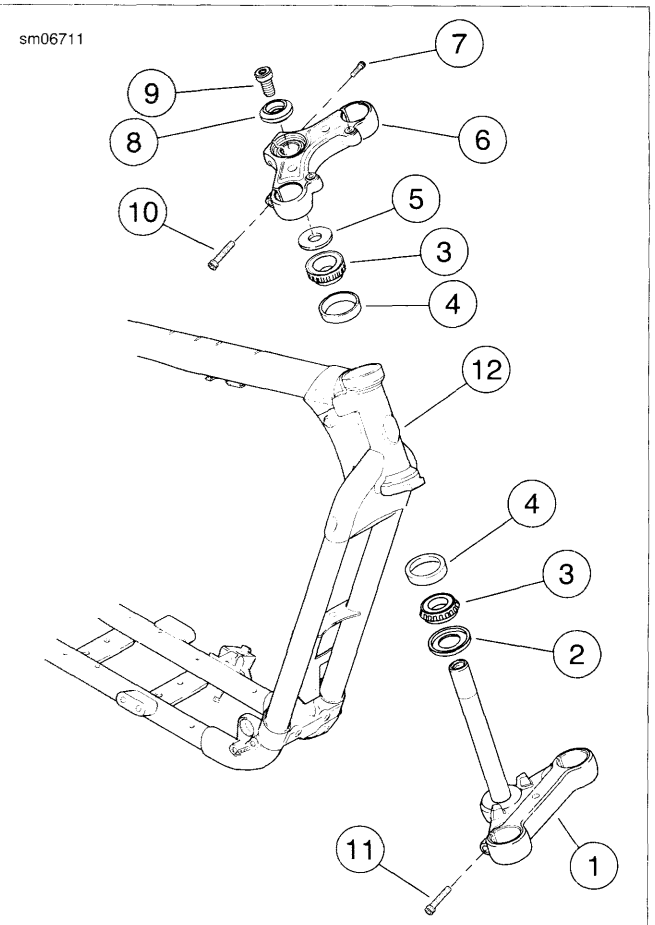

1. **Front fork stem and lower bracket**
2. **Seal, lower**
3. **Bearing cone (2)**
4. **Bearing cup (2)**
5. **Seal, upper**
6. **Front upper bracket**
7. **Fork stem pinch screw**
8. **Washer**
9. **Fork stem bolt**
10. **Pinch screw, upper (2)**
11. **Pinch screw, lower (2)**
12. **Steering head (part of frame)**

Figure 2-192. Fork Stem and Bracket Assembly: Typical

CLEANING, INSPECTION AND REPAIR

PART NUMBER	TOOL NAME
HD-33416	UNIVERSAL DRIVER HANDLE
HD-39301-A	STEERING HEAD BEARING RACE REMOVAL TOOL

1. See Figure 2-192. Clean the seals (2, 5), bearing cones (3), fork stem and lower bracket (1) and steering head (12) with solvent.
2. Inspect fork stem and lower bracket (1). Replace if damaged.

3. Carefully inspect bearing races and assemblies for pitting, scoring, wear and other damage. Check for roughness of bearings by turning them in their races. Replace bearings and bearing cups if bearings do not turn freely and smoothly. Replace damaged bearings as a set.

CAUTION

Replace both bearing assemblies even if one assembly appeares to be good. Mismatched bearings can lead to excessive wear and premature replacement. (00532b)

4. Replace bearings and bearing cups as follows:
   a. The lower bearing cone is a slip fit on the fork stem. Remove lower bearing cone by sliding it up and off fork stem. If necessary, gently pry bearing cone off fork stem with a pair of flat blade screw drivers. Remove lower seal (2).
   b. Drive bearing cups from steering head using STEERING HEAD BEARING RACE REMOVAL TOOL (Part No. HD-39301-A) and UNIVERSAL DRIVER HANDLE (Part No. HD-33416). **If bearing cups are removed, the bearings cannot be reused. They must be replaced.**

ASSEMBLY AND INSTALLATION

PART NUMBER	TOOL NAME
HD-39302	STEERING HEAD BEARING RACE INSTALLATION TOOL

1. See Figure 2-192. If bearing cups (4) were removed, obtain **new** bearings and bearing cups. Install **new** bearing cups into frame steering head using STEERING HEAD BEARING RACE INSTALLATION TOOL (Part No. HD-39302).

⚠WARNING

Properly seat bearing cups in steering head bore. Improper seating can loosen fork stem bearings adversely affecting stability and handling, which could result in death or serious injury. (00302a)

2. Liberally coat the bearing cones (3) with HARLEY-DAVIDSON SPECIAL PURPOSE GREASE. Work the grease thoroughly into the bearing rollers.
3. Place lower bearing seal (2) over fork stem. Install lower bearing cone (3) onto fork stem and bracket (1).
4. Insert fork stem and bracket (1) through the steering head. Install bearing cone (3) and seal (5) onto the stem.
5. Install the upper bracket (6) including the handlebar assembly and loosely install fork stem bolt (9) with washer (8).
6. Install fork slider and tube assemblies. See 2.20 FRONT FORK: XL MODELS or 2.21 FRONT FORK: XR MODELS. Leave both lower fork bracket pinch screws (11) loose.
7. Tighten fork stem bolt (9) to 23-27 ft-lbs (31.2-36.6 Nm). Loosen fork stem bolt, then retighten to 72-96 **in-lbs** (8.1-10.9 Nm).
8. Tighten lower fork bracket pinch screws to 30-35 ft-lbs (40.7-47.5 Nm).
9. Tighten fork stem pinch screw (7) to 30-35 ft-lbs (40.7-47.5 Nm).

BELT GUARD: XL MODELS

Removal

1. See Figure 2-193. Remove right side lower shock absorber mount lock nut (1). Pull shock absorber mounting screw (2) out slightly until it clears mounting hole in belt guard (4).
2. Remove screw (5), washer (6) and nut (7) securing front of belt guard to rear fork (10).
3. Remove belt guard from vehicle.

Installation

1. See Figure 2-193. Slide belt guard (4) into place on vehicle. Tab on front of belt guard mounts outboard of mounting bracket on rear fork.
2. Secure front of belt guard to rear fork (10) with screw (5), washer (6) and nut (7). Tighten to 120-180 **in-lbs** (13.6-20.4 Nm).
3. Push lower shock absorber mounting screw (2) through rear belt guard mounting hole. Thread lock nut (1) on screw. Tighten to 45-50 ft-lbs (61-68 Nm).

DEBRIS DEFLECTOR: XL MODELS

Removal

1. See Figure 2-193. Loosen, but do not remove, three screws with captive washers (9) securing debris deflector (8) to underside of rear fork (10).
2. Slide debris deflector forward until keyway slots in deflector clear screw heads. Remove debris deflector.

Installation

1. See Figure 2-193. Position debris deflector (8) in place on underside of rear fork (10).
2. Fit large end of keyway slots in deflector over screw heads and captive washers (9). Slide deflector rearward to lock screws in slots. Tighten screws to 36-60 **in-lbs** (4.1-6.8 Nm).

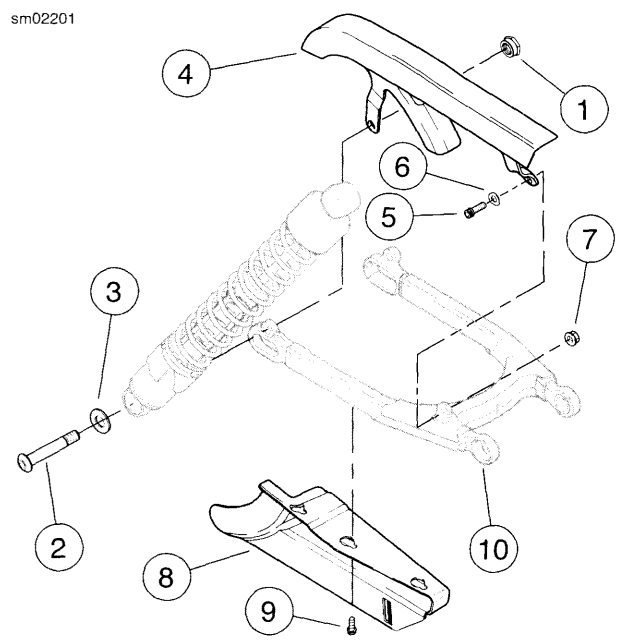

1. **Lock nut**
2. **Screw**
3. **Washer**
4. **Belt guard**
5. **Screw**
6. **Washer**
7. **Nut**
8. **Debris deflector**
9. **Screw w/captive washer (3)**
10. **Rear fork**

Figure 2-193. Belt Guard/Debris Deflector: XL Models

BELT GUARD: XR MODELS

Removal

1. See Figure 2-194. Remove two screws with captive washers (2) securing belt guard to top of rear fork (5).
2. Remove belt guard from vehicle.

Installation

1. See Figure 2-194. Slide belt guard (1) into place on top of rear fork (5).
2. Secure belt guard using two screws with captive washers (2). Tighten to 72-96 **in-lbs** (8.1-10.8 Nm).

DEBRIS DEFLECTOR: XR MODELS

Removal

1. See Figure 2-194. Remove three screws with captive washers (4) securing debris deflector (3) to underside of rear fork (5). Note that front screw is located inboard of debris deflector.
2. Remove debris deflector from vehicle.

Installation

1. See Figure 2-194. Position debris deflector (3) in place on underside of rear fork (5).
2. Secure with three screws (4). Tighten screws to 72-96 **in-lbs** (8.1-10.8 Nm).

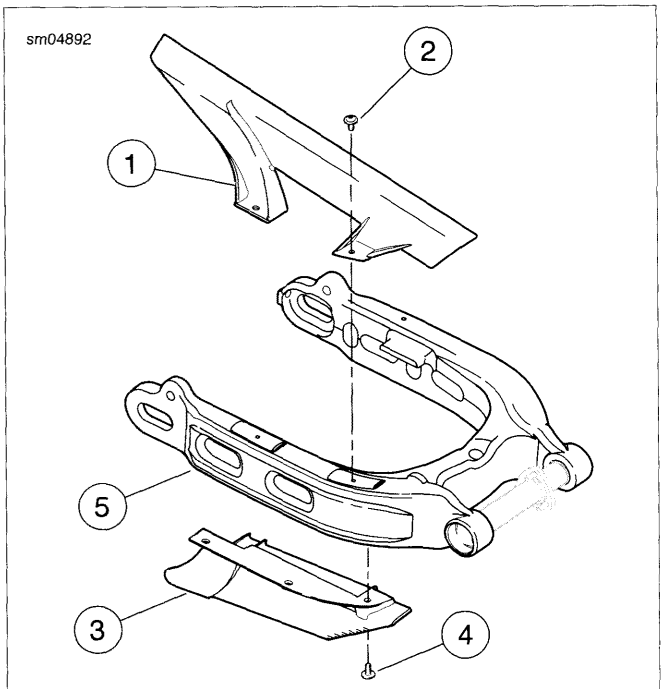

1. **Belt guard**
2. **Screw with captive washer (2)**
3. **Debris deflector**
4. **Screw with captive washer (3) (front screw inboard of debris deflector)**
5. **Rear fork**

Figure 2-194. Belt Guard/Debris Deflector: XR Models

GENERAL

The rear fork used on the XR model differs in appearance from the XL model rear fork. However, the removal, servicing and installation procedures are functionally identical.

REMOVAL

NOTE

Mark all hardware as it is removed so that it may be returned to its original location.

1. Support motorcycle under frame with suitable lifting device so that rear wheel is off the ground.
2. **XL models:** remove rear exhaust pipe and muffler. See 4.14 EXHAUST SYSTEM: XL MODELS.
3. **XR models:** remove exhaust system. See 4.15 EXHAUST SYSTEM: XR MODELS.
4. Remove rear wheel. See 2.4 WHEELS.
5. Remove rear brake caliper assembly from rear fork. See 2.15 REAR BRAKE CALIPER: XL MODELS or 2.16 REAR BRAKE CALIPER: XR MODELS. Remove screw(s) securing brake line clamp(s) to rear fork.
6. **XR Models:** Remove fasteners securing brake line to left side of rear fork.
7. Remove both shock absorber screws, washers and nuts from rear fork. See 2.25 SHOCK ABSORBERS.
8. Remove rear belt guard and debris deflector. See 2.23 BELT GUARD AND DEBRIS DEFLECTOR.
9. **XL Models:** Remove rear brake reservoir cover by grasping cover and gently pulling straight out from reservoir. Remove reservoir mounting screw and pull reservoir back out of the way. See 2.14 REAR BRAKE MASTER CYLINDER RESERVOIR.
10. **XL Models:** Loosen, but do not remove, top mounting screw from left passenger footrest bracket. Remove bottom mounting screw. Move brake hoses and B-clamp forward slightly to gain access to left rear fork/engine mount bolt.
11. **XR Models:** Remove left and right rider footrests. See 2.41 RIDER FOOT CONTROLS: XR MODELS.
12. See Figure 2-195. Support rear fork (3). Remove rear fork/engine mount bolts (1) and pull fork assembly from frame.

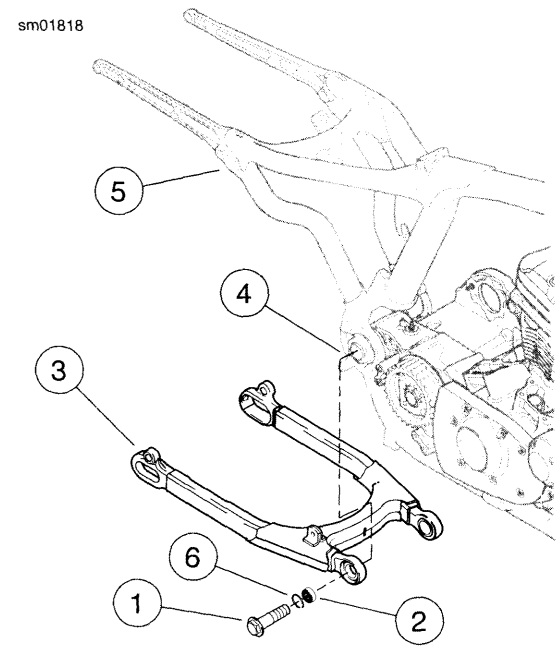

1. **Bolt (2)**
2. **Bearing (2)**
3. **Rear fork**
4. **Pivot shaft**
5. **Frame**
6. **Retaining ring**

Figure 2-195. Rear Fork Assembly: All Models (XL Shown)

DISASSEMBLY

PART NUMBER	TOOL NAME
HD-46281	BEARING REMOVER/INSTALLER TOOL

NOTE

See Figure 2-195. Remove pivot bearings (2) only if replacement is required.

1. See Figure 2-196. Using BEARING REMOVER/INSTALLER TOOL (Part No. HD-46281) (4, 5, 6), carefully press bearing assemblies from fork bearing bosses (2):
   a. Place receiver cup (6) on press bed, with recessed end of cup facing up.
   b. Place rear fork pivot bearing boss (2) over cup as shown in the photo.
   c. Slide pilot (5) through bearing and into receiver cup.
   d. Insert handle (4) through other rear fork pivot bearing boss and bearing, down into pilot.
   e. Engage press ram on end of handle and press bearing out.
2. Turn rear fork over and press out other pivot bearing in the same manner.

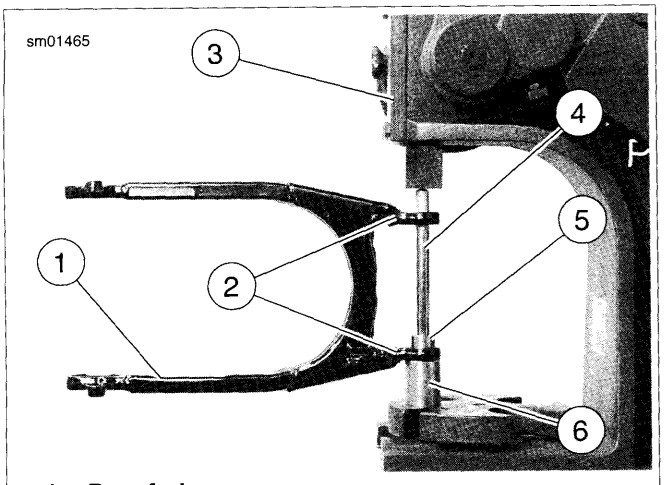

1. **Rear fork**
2. **Pivot bearing boss**
3. **Press**
4. **Handle**
5. **Pilot**
6. **Receiver cup**

Figure 2-196. Removing Rear Fork Pivot Bearings: All Models (XL Shown)

CLEANING AND INSPECTION

⚠WARNING

Compressed air can pierce the skin and flying debris from compressed air could cause serious eye injury. Wear safety glasses when working with compressed air. Never use your hand to check for air leaks or to determine air flow rates. (00061a)

1. Clean all components in solvent and blow dry with low pressure compressed air. Carefully inspect bearings for wear and/or corrosion. Replace bearing assembly if damaged.
2. See Figure 2-195. Make sure pivot bearing retaining ring (6) is not bent or damaged. If it is, replace it with a **new** retaining ring. Make sure retaining ring is fully seated in the groove in each bearing (2).
3. Check that rear fork (3) is not bent, twisted or cracked. Replace if damaged.

ASSEMBLY

PART NUMBER	TOOL NAME
HD-46281	BEARING REMOVER/INSTALLER TOOL

1. See Figure 2-195. If necessary, press **new** bearings (2) into position in rear fork, using BEARING REMOVER/INSTALLER TOOL (Part No. HD-46281):
   a. See Figure 2-197. Place receiver cup (7) on press bed, with recessed end of cup facing up.
   b. Place rear fork pivot bearing boss (2) over cup as shown in the photo.
   c. Place **new** pivot bearing (6) over pivot bearing boss, with retaining ring side of bearing up.
   d. Slide pilot (5) through **new** pivot bearing, through pivot bearing boss, and into receiver cup.
   e. Insert handle (4) down into pilot.
   f. Engage press ram on end of handle and press bearing down until retaining ring bottoms out in rear fork pivot bearing boss.
2. Turn rear fork over and in the same manner, press in other pivot bearing into rear fork pivot bearing boss.

INSTALLATION

1. Slide rear fork assembly into position on motorcycle.
2. See Figure 2-195. Holding rear fork assembly in position, install rear fork/engine mount bolts (1). Tighten to 60-70 ft-lbs (81.4-95.0 Nm).
3. **XL models:** Position rear brake hose B-clamp and left passenger footrest bracket in place and install lower mounting screw. Tighten both mounting screws to 45-50 ft-lbs (61-68 Nm).
4. **XL models:** Install rear brake reservoir using screw with captive washer. Tighten to 20-25 **in-lbs** (2.3-2.8 Nm). Place reservoir cover over reservoir and gently press cover into place. See 2.14 REAR BRAKE MASTER CYLINDER RESERVOIR.
5. **XR models:** Install left and right rider footrests. See 2.41 RIDER FOOT CONTROLS: XR MODELS.
6. Install belt guard and debris deflector. See 2.23 BELT GUARD AND DEBRIS DEFLECTOR.
7. Install shock absorbers onto rear fork. See 2.25 SHOCK ABSORBERS.
8. Install rear brake caliper assembly. See 2.15 REAR BRAKE CALIPER: XL MODELS or 2.16 REAR BRAKE CALIPER: XR MODELS.
9. **XR models:** Secure rear brake line to left side of fork. See 2.17 BRAKE LINES.
10. Install rear wheel and adjust rear belt. See 2.4 WHEELS.
11. **XL models:** install rear exhaust pipe and muffler. See 4.14 EXHAUST SYSTEM: XL MODELS.
12. **XR models:** install exhaust system. See 4.15 EXHAUST SYSTEM: XR MODELS.

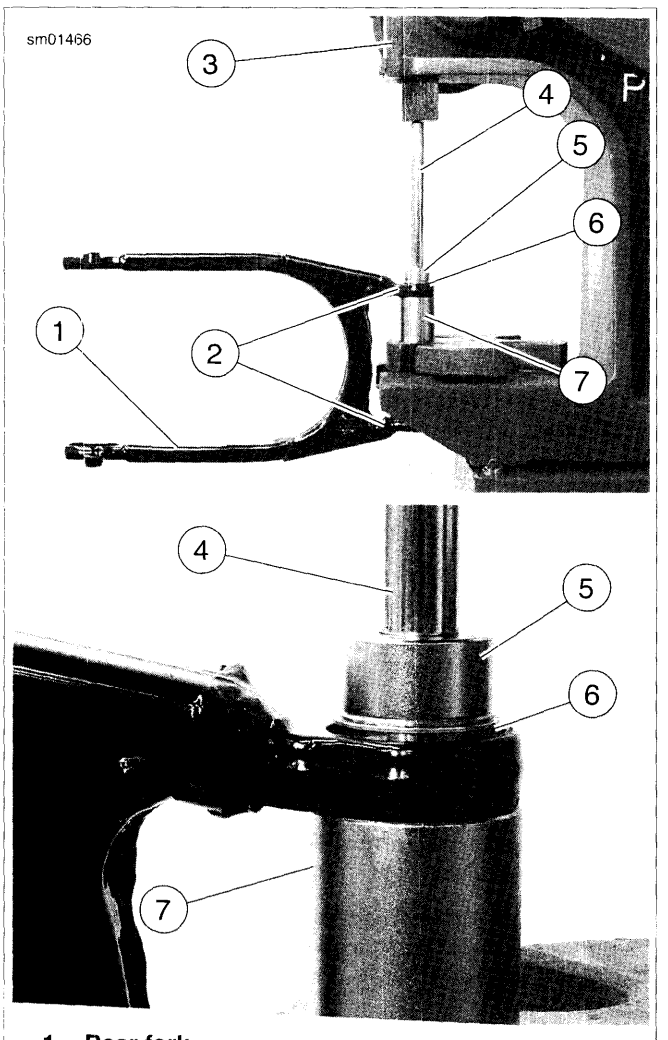

1. Rear fork
2. Pivot bearing boss
3. Press
4. Handle
5. Pilot
6. Bearing
7. Receiver cup

Figure 2-197. Installing Rear Fork Pivot Bearings: All Models (XL Shown)

GENERAL

When removing shock absorbers, remove and install one shock absorber first, then the other. This will eliminate the need to raise the rear end of the motorcycle. If it is necessary to remove both shock absorbers at once, place the motorcycle on a suitable lift with the rear wheel raised off the ground.

NOTE

If the shock absorber is leaking or damaged, it must be replaced as an assembly.

REMOVAL

1. If necessary, raise the motorcycle with a lifting device. If not available, remove one shock absorber at a time. The remaining shock absorber will hold the rear fork and frame in place.
2. See Figure 2-198. Remove screw (1), washer (7) and lock nut (9) from bottom end of shock absorber (6, 11, or 12).
3. Remove screw (2), washer (3) and stud cover (4) (XL models) from top end of shock absorber.
4. Remove shock absorber.
5. If shock absorber is to be replaced, take note of the position and adjust the replacement shock absorber to the same settings.

CLEANING AND INSPECTION

Clean and inspect all parts for wear and damage. Check rubber components for wear, cracking and stiffness. Examine shock assembly for signs of leakage. Replace both shock absorbers as a set if either shock absorber assembly is excessively worn, leaking or damaged.

INSTALLATION

1. See Figure 2-198. Install shock absorber upper mounting screw (2), washer (3), stud cover (4) (XL models) and shock absorber (6, 11, or 12).
2. Position bottom end of shock absorber against outboard side of rear fork mount. Insert screw (1) and washer (7) through damper bushing (8) and rear fork mount flange. Install lock nut (9) on end of bolt.
3. Remove upper mounting screw (2). Apply 2-3 drops of LOCTITE THREADLOCKER 243 (blue) to threads of upper mounting screw.
4. Install washer (3) onto upper mounting screw. Insert screw through stud cover (4), upper shock absorber damper bushing (5) and into frame boss. Tighten to 45-50 ft-lbs (61-68 Nm).
5. Tighten lower shock absorber mounting screw to 45-50 ft-lbs (61-68 Nm).
6. If the shock absorber just installed is a replacement, adjust the settings to the same as the original shock absorber.

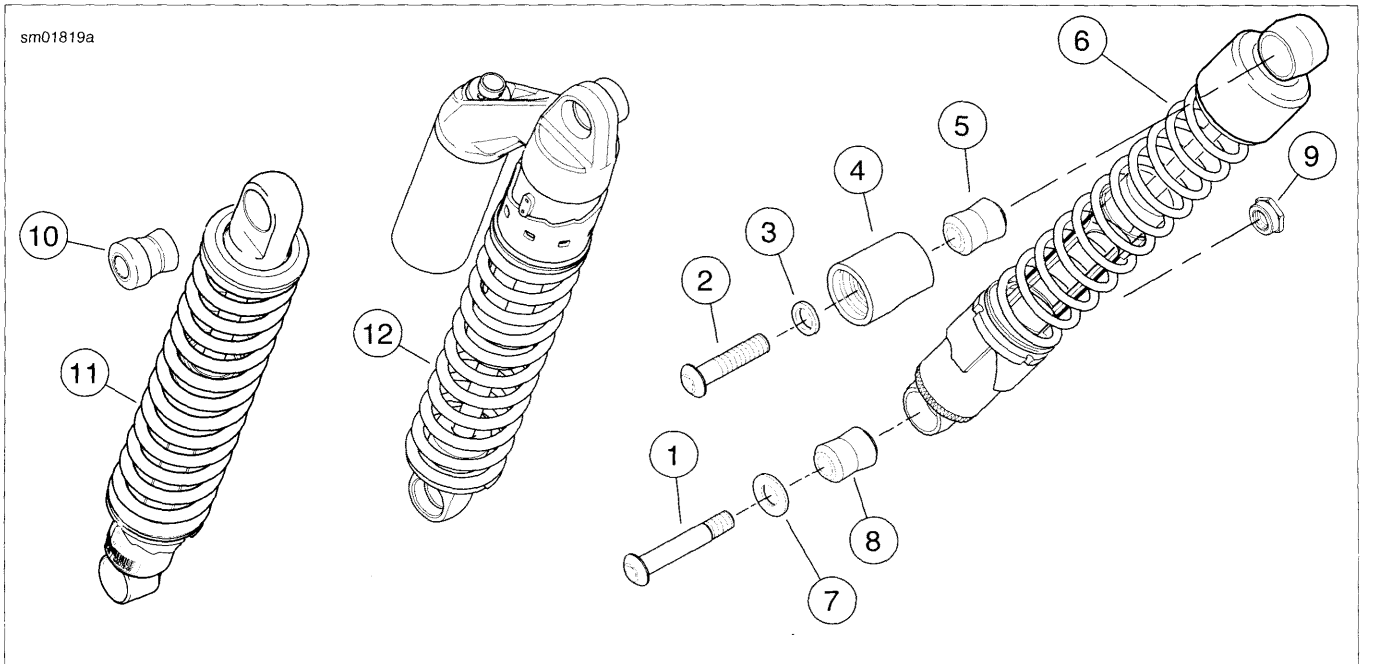

1. **Screw**
2. **Screw**
3. **Washer**
4. **Stud cover: XL models**
5. **Upper bushing: XL models**
6. **Shock absorber: XL models**
7. **Washer**
8. **Lower bushing**
9. **Nut**
10. **Upper bushing: XR models**
11. **Shock absorber: XR 1200 models**
12. **Shock absorber: XR 1200X models**

Figure 2-198. Shock Absorber: All Models (Right Side Shown)

SHOCK DISPOSAL: SCHRADER VALVE MODELS

1. Remove the shock.
2. See Figure 2-199. Locate the valve.

NOTE

Cap may require pliers to remove.

3. Remove the valve cap.

⚠WARNING

Discharging pressurized oil and gas can pierce skin and cause flying debris, which could cause serious injury. Wear safety glasses and gloves. (00601b)

4. Press the valve stem with a flat blade screwdriver to release the gas.
5. Dispose of the shock.

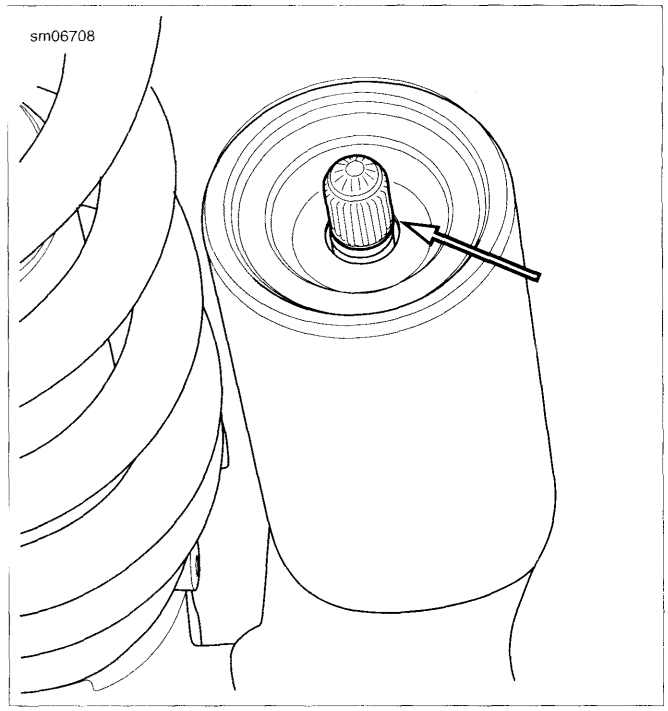

Figure 2-199. Schrader Valve Location (XR 1200X shown)

GENERAL

The stabilizer link system allows the engine to "float" on its rubber engine mounts while maintaining engine-to-frame alignment. The stabilizer links provide a fixed alignment, and no adjustment is necessary or possible.

The spherical ball end of the stabilizer may rotate loosely, but should not have lateral movement. Replace the link if lateral movement exists.

UPPER FRONT STABILIZER LINK

Removal

1. Position motorcycle upright on suitable lift.
2. See Figure 2-200. Remove screws (4) and stabilizer link (2).
3. Remove upper frame bracket:
   a. **Models with front mounted horn:** remove screws (5), washers (8), horn bracket (9), and upper frame bracket (3) from frame.
   b. **Models with side mounted horn:** remove screws (5), washers (8) and upper frame bracket (3) from frame.
4. Remove screws (6), lock washers (7) and engine bracket (1) from front cylinder head.

Installation

1. See Figure 2-200. Install screws (6), lock washers (7) and engine bracket (1) to front cylinder head. Tighten to 55-65 ft-lbs (74.6-88.2 Nm).
2. Install upper frame bracket:
   a. **Models with front mounted horn:** install upper frame bracket (3), horn bracket (9), screws (5) and washers (8).
   b. **Models with side mounted horn:** install upper frame bracket (3), screws (5) and washers (8).
   c. Tighten screws to 25-35 ft-lbs (33.9-47.5 Nm).
3. Install stabilizer link (2). Secure with screws (4). Tighten to 25-35 ft-lbs (33.9-47.5 Nm).

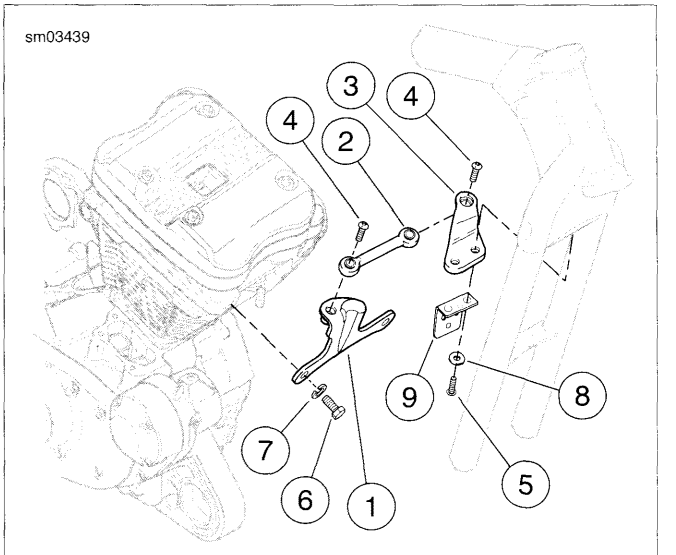

1. **Engine bracket**
2. **Upper stabilizer link**
3. **Upper frame bracket**
4. **Screw**
5. **Screw (2)**
6. **Screw (2)**
7. **Lock washer (2)**
8. **Washer (2)**
9. **Horn bracket (models with front mounted horn)**

Figure 2-200. Upper Front Stabilizer Link Assembly: Typical (XL Model Shown)

LOWER FRONT STABILIZER LINK

Removal

1. Position motorcycle upright on suitable lift.
2. See Figure 2-201. Remove screws (3) and stabilizer link (1).
3. Remove screws (4), washers (5) and lower frame bracket (2) from frame.

Installation

1. See Figure 2-201. Install screws (4), washers (5) and lower frame bracket (2) to frame. Tighten to 25-35 ft-lbs (33.9-47.5 Nm).
2. Install stabilizer link (1). Secure with screws (3). Tighten to 25-35 ft-lbs (33.9-47.5 Nm).

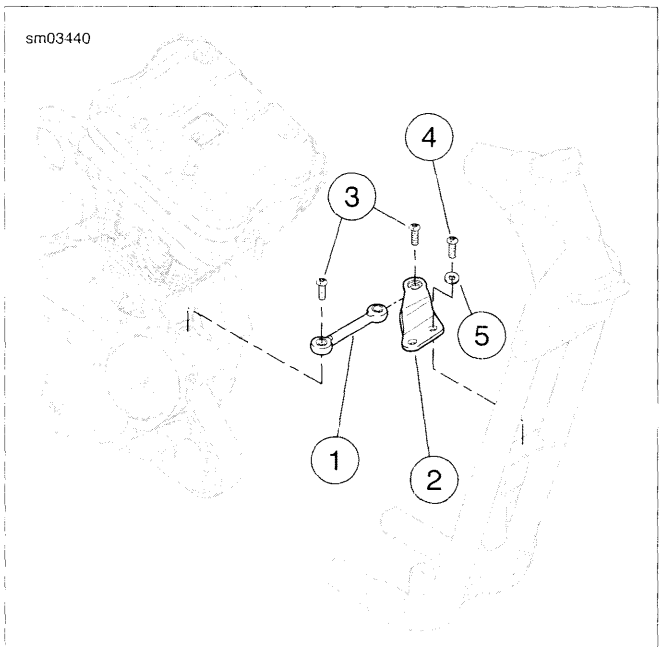

1. **Lower stabilizer link**
2. **Lower frame bracket**
3. **Screw (2)**
4. **Screw (2)**
5. **Washer (2)**

Figure 2-201. Lower Front Stabilizer Link Assembly: Typical (XL Model Shown)

REAR STABILIZER LINK

Removal

1. **California vehicles:** remove EVAP canister and mounting bracket. See 4.20 EVAPORATIVE EMISSIONS CONTROL (CA MODELS), Charcoal Canister.
2. See Figure 2-202. Remove short screw (3), long screw (4), ground strap (2), stabilizer link (1) and spacer (5).

Installation

1. See Figure 2-202. Install short screw (3) through ground strap (2) and stabilizer link (1). Thread screw into frame on right side of motorcycle. Do not tighten at this time.
2. Install long screw (4) through ground strap, stabilizer link and spacer (5) into engine case.

NOTE

XR1200 models: *Check that the ground strap does not contact the rear stop switch harness before tightening stabilizer link screws.*

3. Tighten both screws to 25-35 ft-lbs (33.9-47.5 Nm).
4. **California vehicles:** Install EVAP canister and mounting bracket. See 4.20 EVAPORATIVE EMISSIONS CONTROL (CA MODELS), Charcoal Canister.

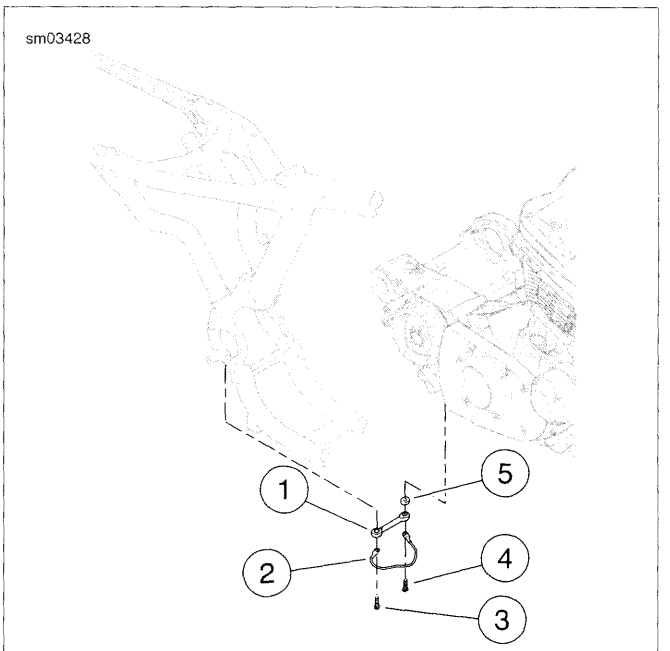

1. **Stabilizer link**
2. **Grounding strap**
3. **Screw**
4. **Screw**
5. **Spacer**

Figure 2-202. Rear Stabilizer Link Assembly: Typical (XL Model Shown)

REMOVAL

PART NUMBER	TOOL NAME
HD-45968	FAT JACK

1. Position motorcycle upright on a suitable lift.
2. **XL Custom models:** Remove both forward foot control assemblies. See 2.40 RIDER FOOT CONTROLS: XL FORWARD CONTROLS.
3. Support front of engine with FAT JACK (Part No. HD-45968) and suitable blocks.
4. See Figure 2-200. Remove screw (4) securing upper front stabilizer link (2) to stabilizer link bracket (3).
5. See Figure 2-201. Remove screw (3) securing lower front stabilizer link (1) to stabilizer link bracket (2).
6. See Figure 2-202. Remove screw (4) from left end of rear stabilizer link (1) and ground strap (2). Remove spacer (5).

NOTE

See Figure 2-203. In the next step, the engine may need to be jacked up or down slightly to aid in removing bolt (3).

7. See Figure 2-203. Remove nut (4) and bolt (3) from front engine mount/isolator assembly.
8. Remove screws (5) from front isolator mount (2) on left side of motorcycle. Remove isolator mount and left front isolator (1).
9. Carefully pry front end of engine to the left approximately 1.0 in. (25.4 mm). Remove right front isolator (1) from crankcase.

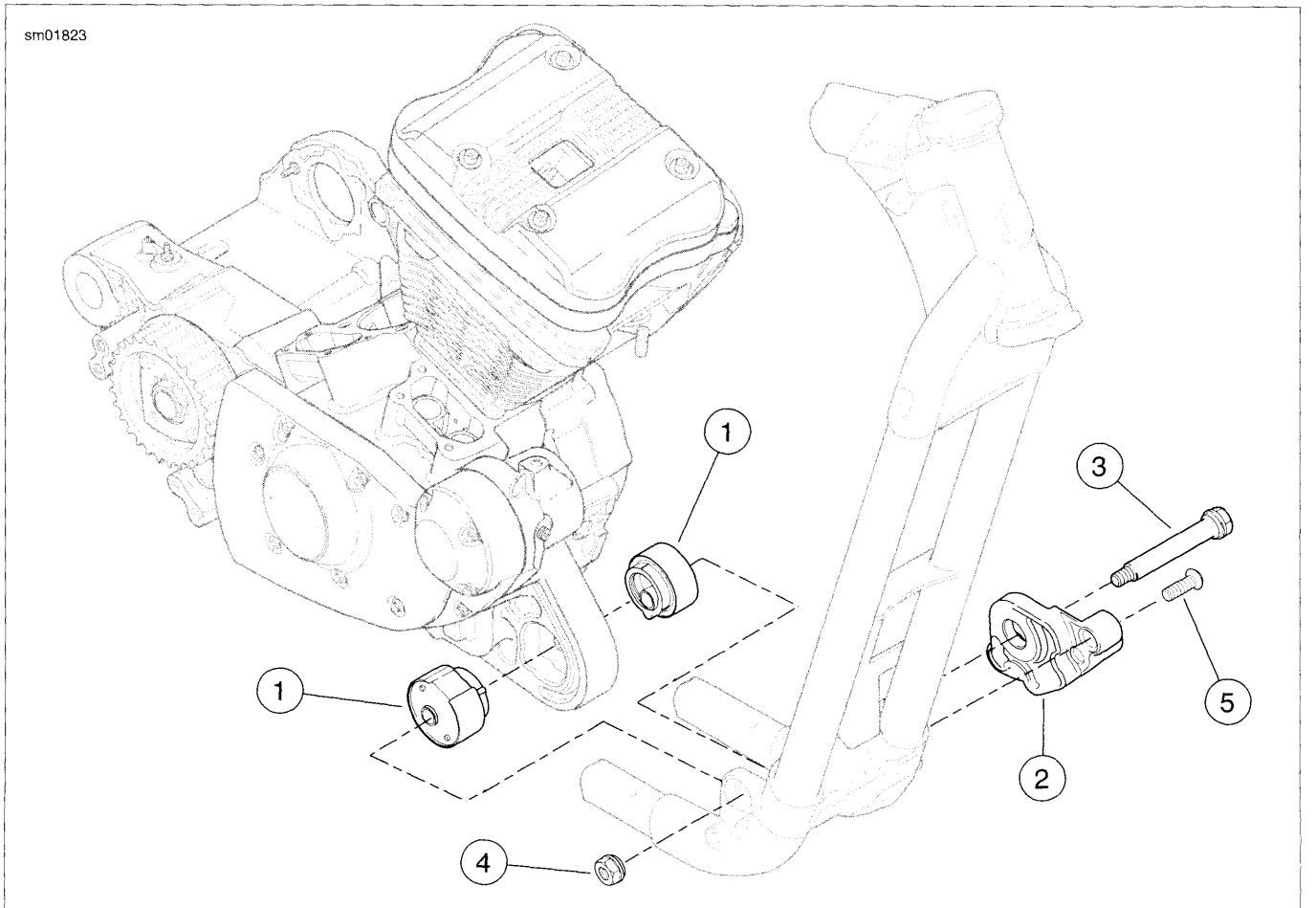

1. **Isolator (2)**
2. **Front isolator mount**
3. **Bolt**
4. **Nut**
5. **Screw (2)**

Figure 2-203. Front Engine Mount/Isolator: Typical (XL Model Shown)

INSTALLATION

PART NUMBER	TOOL NAME
HD-45968	FAT JACK

1. See Figure 2-203. Install both front isolators (1) in engine mounting boss on front of crankcase. Note that each isolator has a half-moon tab and fits into engine mounting boss in only one way. Push engine to the right until right isolator contacts frame boss.
2. Install front isolator mount (2) over left front isolator.
3. Install screws (5) through front isolator mount and thread into frame. Tighten to 25-35 ft-lbs (33.9-47.5 Nm).
4. Insert bolt (3) through front isolator/engine mount assembly from left side. Thread nut (4) onto bolt. Tighten to 95-105 ft-lbs (129-142 Nm).
5. See Figure 2-201. Attach lower front stabilizer link (1) to bracket (2) with screw (3). Tighten to 25-35 ft-lbs (33.9-47.5 Nm).
6. See Figure 2-200. Attach upper front stabilizer link (2) to bracket (3) with screw (4). Tighten to 25-35 ft-lbs (33.9-47.5 Nm).
7. See Figure 2-202. Install screw (4) through free end of ground strap (2), rear stabilizer link (1), spacer (5), and into engine crankcase. Tighten to 25-35 ft-lbs (33.9-47.5 Nm).
8. Remove FAT JACK (Part No. HD-45968) and blocks from under engine.
9. **XL Custom models:** Install both forward foot control assemblies. See 2.40 RIDER FOOT CONTROLS: XL FORWARD CONTROLS.

REMOVAL

PART NUMBER	TOOL NAME
HD-45967	SHOP DOLLY
HD-45968	FAT JACK

1. Remove seat.
2. Open left side cover. See 2.19 LEFT SIDE COVER.

⚠WARNING

Prevent accidental vehicle start-up, which could cause death or serious injury. First disconnect negative (-) battery cable at engine and then positive (+) cable from battery. (00280b)

3. Disconnect both battery cables, negative cable first. See 1.17 BATTERY MAINTENANCE.
4. Remove exhaust system. See 4.14 EXHAUST SYSTEM: XL MODELS or 4.15 EXHAUST SYSTEM: XR MODELS.
5. With the aid of a FAT JACK (Part No. HD-45968), support motorcycle on SHOP DOLLY (Part No. HD-45967).

NOTE

Position vehicle on SHOP DOLLY so that FAT JACK may be used (with the aid of suitable blocks) to support engine when rear engine mount is removed.

6. Remove sprocket cover.
   a. **XL models:** see Figure 2-204. Remove screw (6), washer (5) and exhaust pipe clamp bracket (4). Remove two screws (2, 3). Remove sprocket cover (1).
   b. **XR models:** see Figure 2-205. Remove screw and washer (2) and screws (3, 4). Remove sprocket cover (1).
7. Loosen rear axle and remove rear drive belt. See 5.7 DRIVE BELT.
8. **XL models equipped with passenger footrests:** Remove left passenger footrest assembly. See 2.42 PASSENGER FOOTRESTS.
9. **XR models:** Remove left and right rider controls and brackets. See 2.41 RIDER FOOT CONTROLS: XR MODELS.
10. Unbolt rear brake master cylinder remote reservoir. Do not disconnect hose from reservoir. Secure reservoir to vehicle in an upright position, out of the way. See 2.14 REAR BRAKE MASTER CYLINDER RESERVOIR.
11. Support rear fork assembly using vehicle tiedown straps.
12. See Figure 2-206. Remove rear fork pivot bolts (1).
13. Pull rear fork back far enough to clear rear engine mounts and isolators.
14. **California vehicles:** remove EVAP canister and mounting bracket. See 4.20 EVAPORATIVE EMISSIONS CONTROL (CA MODELS), Charcoal Canister.
15. See Figure 2-202. Remove screws (3, 4) securing rear stabilizer link (1). Remove stabilizer link, ground strap (2), and spacer (5).
16. See Figure 2-200. Remove screw (4) securing upper front stabilizer link (2) to stabilizer link bracket (3).
17. See Figure 2-201. Remove screw (3) securing lower front stabilizer link (1) to stabilizer link bracket (2).
18. Support rear of engine with lifting device and suitable blocks.
19. See Figure 2-206. Remove two screws (7) securing rear isolator mount (2) to left side of frame. Remove isolator mount and left isolator (3).
20. Remove three screws (6) securing rear pivot lockplate (5) to rear of engine case. Remove lockplate and rear fork pivot shaft (4).

NOTE

Engine may need to be jacked up or down slightly to aid in removing pivot shaft.

21. Carefully pry rear end of engine to the left approximately 1.0 in. (25.4 mm). Remove right rear isolator (3) from frame.

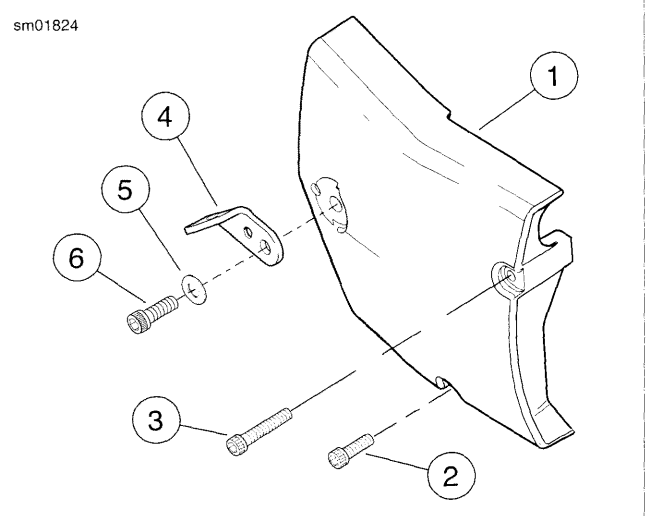

1. **Sprocket cover**
2. **Screw**
3. **Screw**
4. **Exhaust pipe clamp bracket**
5. **Washer**
6. **Screw**

Figure 2-204. Sprocket Cover: XL Models

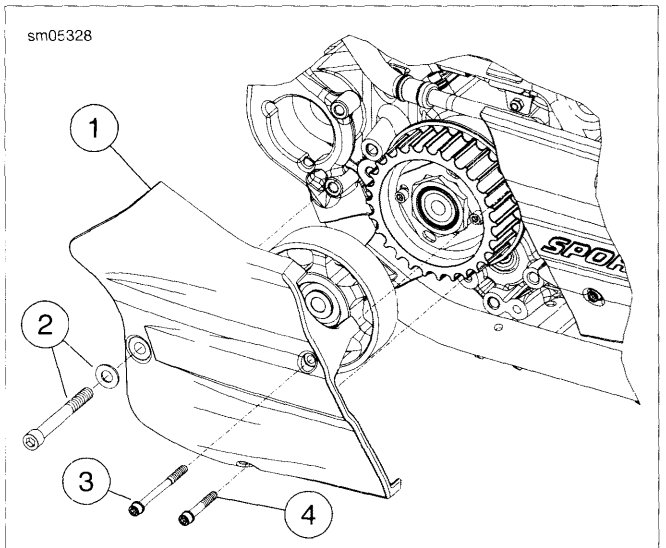

1. Sprocket cover
2. Rear screw and washer
3. Front screw
4. Lower screw

Figure 2-205. Sprocket Cover: XR Models

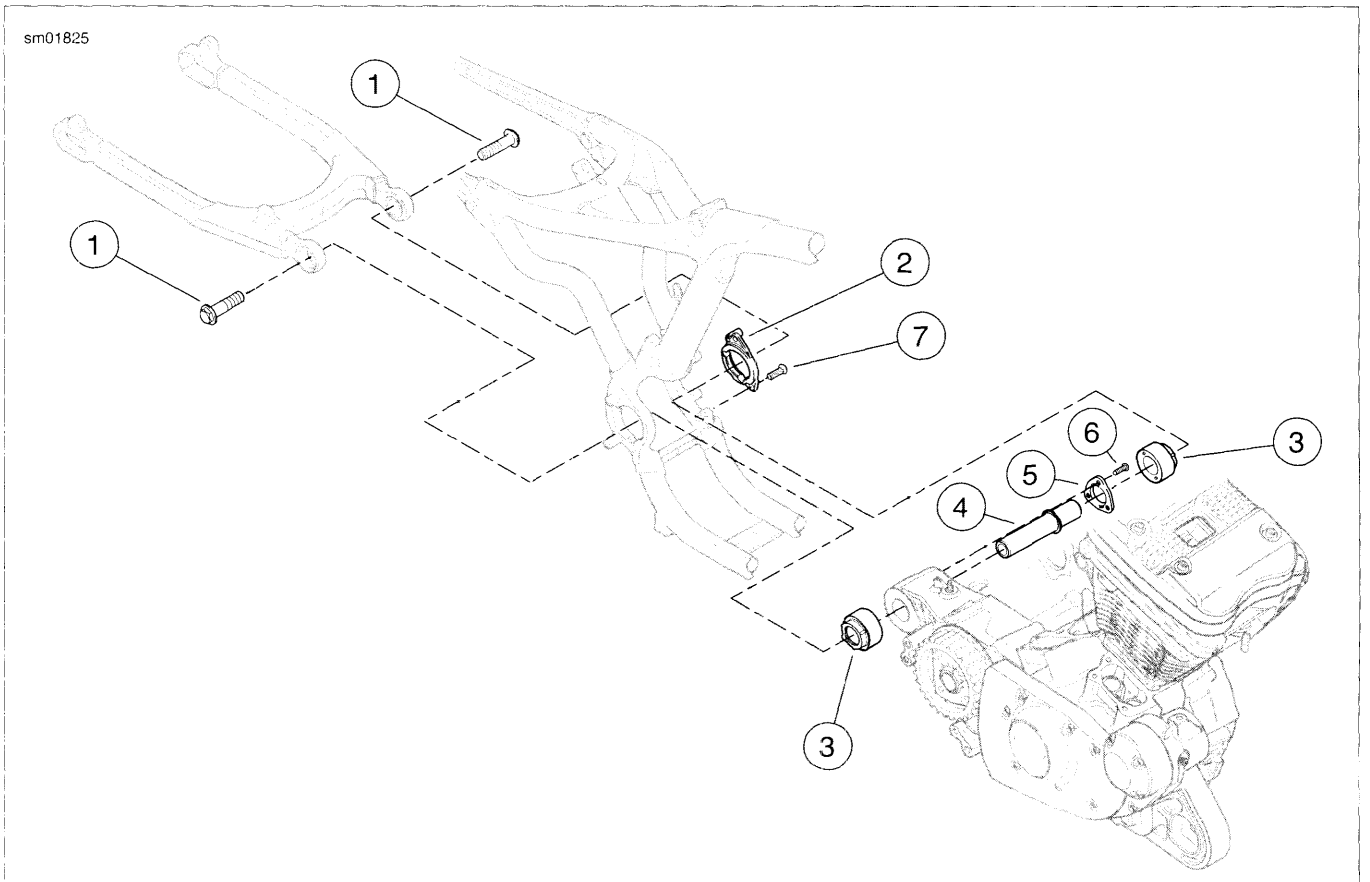

1. Bolt (2)
2. Rear isolator mount
3. Isolator (2)
4. Rear fork pivot shaft
5. Rear pivot lockplate
6. Screw (3)
7. Screw (2)

Figure 2-206. Rear Engine Mount/Isolator: Typical (XL Model Shown)

INSTALLATION

PART NUMBER	TOOL NAME
HD-45968	FAT JACK

1. See Figure 2-206. Install **new** right rear isolator (3) into frame, lining up tabs on isolator with slots in frame. Slide rear end of engine to the right until engine mounting boss on rear of crankcase contacts right isolator.
2. Slide rear fork pivot shaft (4) through engine mounting boss.

NOTE

Engine may need to be moved slightly in one direction or another in order to line up pivot shaft with isolator.

3. Install rear pivot lockplate (5) over pivot shaft with ridges on lockplate engaging flats on pivot shaft flange. Secure to crankcase with three screws (6). Tighten to 80-120 **in-lbs** (9.0-13.6 Nm).
4. Install **new** left rear isolator (3) on rear fork pivot shaft.
5. Place rear isolator mount (2) over left rear isolator, lining up tabs on isolator with slots in isolator mount. Install screws (7). Tighten to 25-35 ft-lbs (33.9-47.5 Nm).
6. Remove FAT JACK (Part No. HD-45968) and blocks.
7. See Figure 2-200. Attach upper front stabilizer link (2) to bracket (3) with screw (4). Tighten to 25-35 ft-lbs (33.9-47.5 Nm).
8. See Figure 2-201. Attach lower front stabilizer link (1) to bracket (2) with screw (3). Tighten to 25-35 ft-lbs (33.9-47.5 Nm).
9. See Figure 2-202. Install short screw (3) through ground strap (2) and rear stabilizer link (1) into frame on right side of motorcycle. Install long screw (4) through free end of ground strap, stabilizer link and spacer (5) into engine case. Tighten both screws to 25-35 ft-lbs (33.9-47.5 Nm).

NOTE

XR 1200 models: *Check that the ground strap does not contact the rear stop switch harness before tightening stabilizer link screws.*

10. **California vehicles:** Install EVAP canister and mounting bracket. See 4.20 EVAPORATIVE EMISSIONS CONTROL (CA MODELS), Charcoal Canister.
11. See Figure 2-206. Slide rear fork forward into position. Install rear fork pivot/engine mount bolts (1). Tighten to 60-70 ft-lbs (81.4-95.0 Nm). Remove vehicle tiedown straps supporting rear fork.
12. Install rear brake master cylinder remote reservoir. See 2.14 REAR BRAKE MASTER CYLINDER RESERVOIR.
13. **XL models equipped with passenger footrests:** Install left passenger footrest assembly. See 2.42 PASSENGER FOOTRESTS.
14. **XR models:** Install left and right rider foot controls and brackets. See 2.41 RIDER FOOT CONTROLS: XR MODELS.
15. Install and adjust rear drive belt and tighten rear axle. See 5.7 DRIVE BELT.
16. **XL Models:** Install sprocket cover.
    a. See Figure 2-204. Install sprocket cover (1). Secure with two screws (2, 3). Note that long screw goes in top hole, short screw in bottom hole. Do not tighten screws at this time.
    b. Install exhaust pipe clamp bracket (4), washer (5) and screw (6). Tighten to 30-33 ft-lbs (40.7-44.8 Nm). Now tighten screws (2, 3) to 80-120 **in-lbs** (9.0-13.6 Nm).
17. **XR Models:** Install sprocket cover.
    a. See Figure 2-205. Tighten screw (2) to 30-33 ft-lbs (40.7-44.7 Nm).
    b. Tighten screws (3, 4) to 80-120 **in-lbs** (9.0-13.6 Nm).
18. Install exhaust system. See 4.14 EXHAUST SYSTEM: XL MODELS or 4.15 EXHAUST SYSTEM: XR MODELS.

⚠WARNING

Connect positive (+) battery cable first. If positive (+) cable should contact ground with negative (-) cable connected, the resulting sparks can cause a battery explosion, which could result in death or serious injury. (00068a)

19. Connect both battery cables, positive (+) cable first. See 1.17 BATTERY MAINTENANCE.
20. Close left side cover. See 2.19 LEFT SIDE COVER.

⚠WARNING

After installing seat, pull upward on seat to be sure it is locked in position. While riding, a loose seat can shift causing loss of control, which could result in death or serious injury. (00070b)

21. Install seat.

REMOVAL AND DISASSEMBLY

⚠WARNING

To prevent spray of fuel, purge system of high-pressure fuel before supply line is disconnected. Gasoline is extremely flammable and highly explosive, which could result in death or serious injury. (00275a)

1. Purge the fuel supply hose of high pressure gasoline. Disconnect fuel supply hose from fuel pump module. See 4.5 FUEL TANK: XL MODELS or 4.6 FUEL TANK: XR MODELS.

⚠WARNING

To prevent accidental vehicle start-up, which could cause death or serious injury, remove main fuse before proceeding. (00251b)

2. Unplug main fuse. See 6.35 MAIN FUSE.
3. Remove seat.
4. Remove fuel tank. See 4.5 FUEL TANK: XL MODELS or 4.6 FUEL TANK: XR MODELS.
5. **XL Models:**
   a. See Figure 2-207. Remove screw (3) securing left wire harness caddy (2) to right wire harness caddy (1). See 6.30 ELECTRICAL CADDIES. Separate left wire harness caddy from right wire harness caddy.
   b. Cut cable straps (5) securing throttle cables (4) to right wire harness caddy. Remove and discard cable straps.
   c. Disengage ignition coil bracket (6) uprights from frame bosses and remove throttle cables from recess in right wire harness caddy.
6. See Figure 2-208. Slide rubber boot off each cable adjuster (4).
7. See Figure 2-209. Loosen jam nut (5) on each adjuster (6). Turn adjusters in direction which will shorten cable housings to minimum length.
8. See Figure 2-208. Remove two screws (7) and separate upper housing (9) from lower housing (11).
9. Unhook ferrules (1) and cables (2, 3) from throttle control grip (12) and lower housing (11).
10. **XR Models:** See Figure 2-211. Disengage cables from retainer (2) on lower fork bracket. Disengage cables from loop retainer (3) located under fuel tank.
11. Remove air cleaner assembly. See 4.3 AIR CLEANER: XL MODELS or 4.4 AIR BOX: XR MODELS.
12. Disconnect cables from induction module.
13. See Figure 2-208. Remove friction spring (8), throttle friction screw (13) and spring (5) from lower housing.

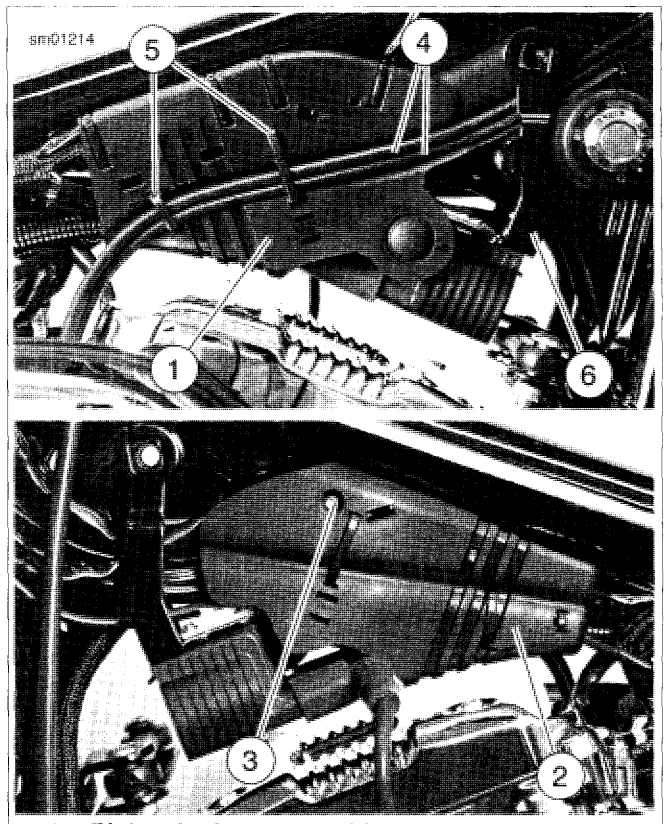

1. **Right wire harness caddy**
2. **Left wire harness caddy**
3. **Screw**
4. **Throttle cables**
5. **Cable straps**
6. **Ignition coil bracket**

Figure 2-207. Wire Harness Caddy Assembly: XL Models

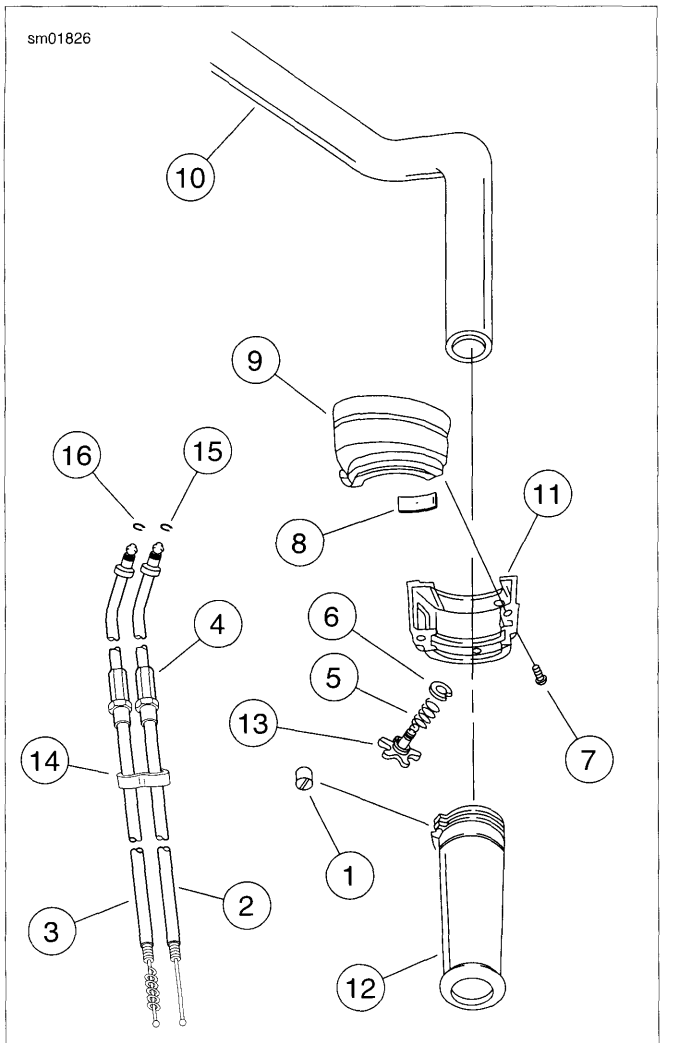

1. Ferrule (2)
2. Throttle control cable assembly
3. Idle control cable assembly
4. Cable adjuster (2)
5. Spring
6. Retaining ring
7. Screw (2)
8. Friction spring
9. Upper housing
10. Handlebar
11. Lower housing
12. Throttle control grip
13. Throttle friction screw
14. Throttle cable clip
15. Throttle retaining ring
16. Idle retaining ring

Figure 2-208. Throttle Control, Right Handlebar

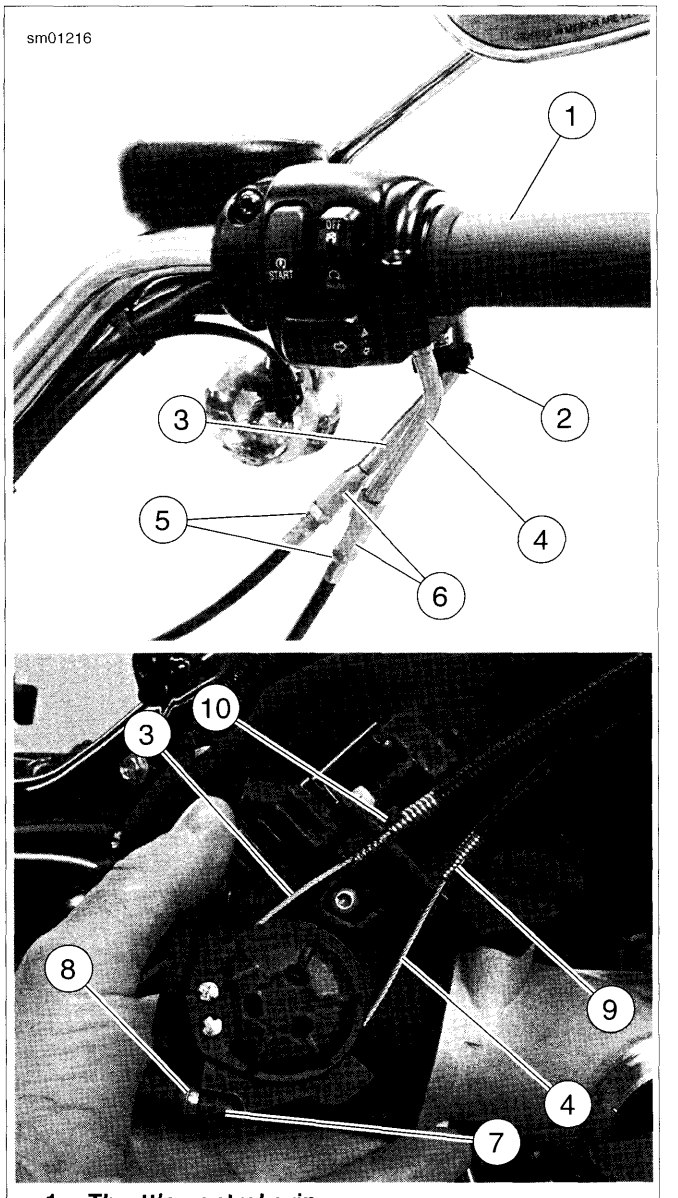

1. Throttle control grip
2. Throttle friction screw
3. Idle control (pull-close) cable
4. Throttle control (pull-open) cable
5. Jam nut (2)
6. Cable adjuster (2)
7. Throttle cam
8. Cam stop
9. Idle control cable guide (on throttle body)
10. Throttle control cable guide (on throttle body)

Figure 2-209. Throttle/Idle Control Cable (typical, XL model shown)

CLEANING, INSPECTION AND REPAIR

⚠WARNING

Compressed air can pierce the skin and flying debris from compressed air could cause serious eye injury. Wear safety glasses when working with compressed air. Never use your hand to check for air leaks or to determine air flow rates. (00061a)

Clean all parts in a non-flammable cleaning solvent. Blow dry with low pressure compressed air. Replace cables if frayed, kinked or bent.

ASSEMBLY AND INSTALLATION

1. See Figure 2-208. Apply a light coating of graphite to the handlebar (10) and the inside surface of the upper and lower housings (9, 11).
2. Install spring (5), throttle friction screw (13) and friction spring (8) in lower housing (11).
3. Attach cable assemblies (2, 3) to lower housing. See Figure 2-209. Throttle control cable (4) has a 5/16 in. (7.9 mm) fitting end and is positioned to front of lower housing. Idle control cable (3) has a 1/4 in. (6.3 mm) fitting end and is positioned to rear of lower housing.
4. See Figure 2-208. Install throttle control grip (12) over end of right handlebar (10). Position lower housing (11) onto right handlebar, engaging lower housing with throttle control grip. Position ferrules (1) over cable ball ends, then seat ferrules (with cables attached) in their respective notches of the throttle control grip.
5. Install upper housing (9) over right handlebar and secure to lower housing using screws (7). Tighten screws to 35-45 **in-lbs** (4.0-5.1 Nm).
6. **XL Models:** See Figure 2-210. Route control cables forward from throttle control grip, forward of front fork upper bracket, downward between right slider tube and headlamp, rearward along right side of frame steering head and frame backbone, over ignition switch housing, between coil bracket and frame, and downward to induction module.
7. **XR Models:** See Figure 2-211. Route cables forward between right fork and brake hose (1), then back between the forks above the lower fork bracket. Pass cables through wire retainer (2) on lower fork and continue above the front cylinder toward the induction module.
8. See Figure 2-209. Install idle control cable (3) housing into inboard (idle) cable guide (9) on induction module.
9. Install throttle control cable (4) housing and spring into outboard cable guide (10) on induction module.
10. **XL Models:** See Figure 2-207. Place throttle cables (4) into channel in right wire harness caddy (1) and secure with two cable straps (5). Note that forward cable strap also secures instrument connector [20] and rear cable strap secures wiring harnesses on other side of caddy wall.

⚠WARNING

Be sure that steering is smooth and free without interference. Interference with steering could result in loss of vehicle control and death or serious injury. (00371a)

- Be sure cables are not pinched between the frame and/or forks.
- Be sure throttle/idle control cables do not pull tight when handlebars are turned fully to left or right fork stops.

11. **XL Models:** See Figure 2-207. Mount left wire harness caddy (2) to right wire harness caddy (1). Secure with screw (3) and tighten.
12. Adjust control cables. See 1.25 THROTTLE CONTROL, Cable Adjustment.
13. Install air cleaner assembly.
14. Install fuel tank and connect fuel hose. See 4.5 FUEL TANK: XL MODELS or 4.6 FUEL TANK: XR MODELS.
15. **XR Models:** See Figure 2-211. Secure cables in loop retainer (3) and attach retainer to the bottom of the fuel tank.

⚠WARNING

After installing seat, pull upward on seat to be sure it is locked in position. While riding, a loose seat can shift causing loss of control, which could result in death or serious injury. (00070b)

16. Install seat.
17. Plug in main fuse. See 6.35 MAIN FUSE.

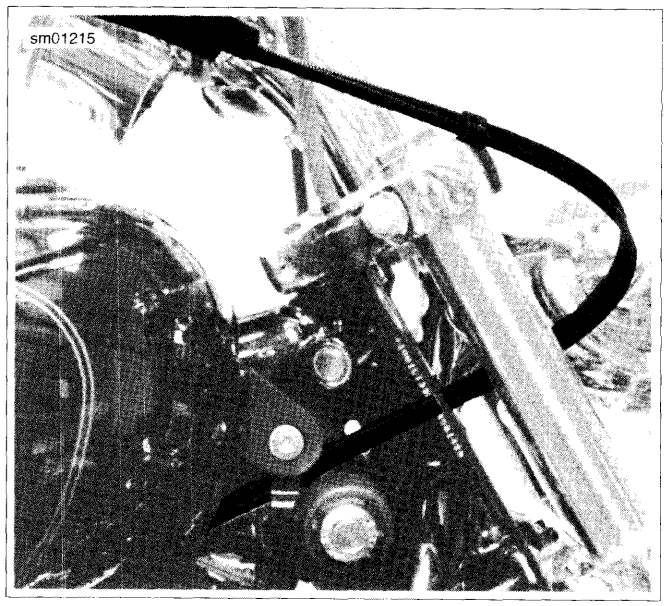

Figure 2-210. Throttle Control Cable Routing: XL Models

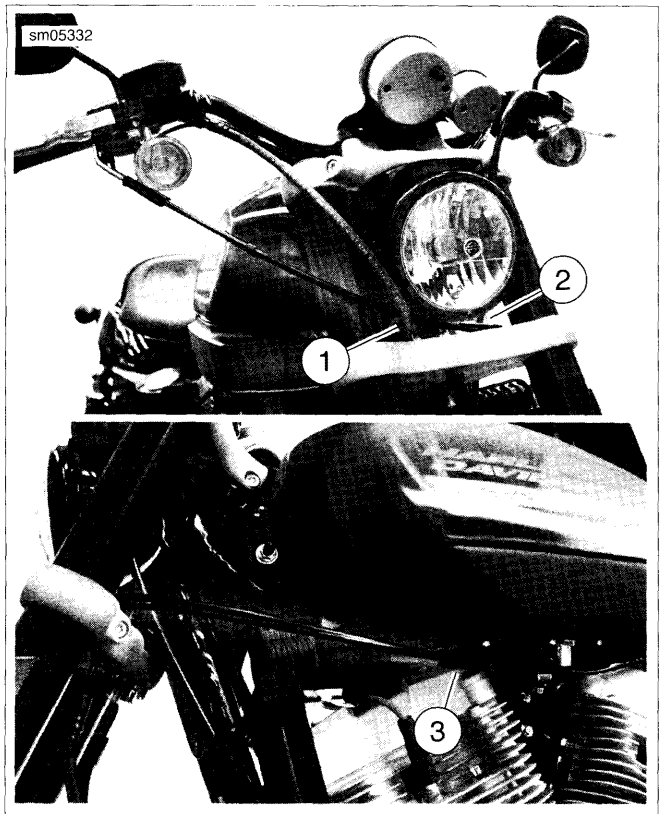

1. Brake hose
2. Wire retainer
3. Loop retainer

Figure 2-211. Throttle Control Cable Routing: XR Models

REMOVAL AND DISASSEMBLY

⚠WARNING

To prevent accidental vehicle start-up, which could cause death or serious injury, remove main fuse before proceeding. (00251b)

Unplug main fuse. See 6.35 MAIN FUSE.

Clutch Cable: Lower

1. **Models equipped with mid-mount foot controls:** remove left side rider footrest and mounting bracket assembly. See 2.39 RIDER FOOT CONTROLS: XL MID-MOUNT CONTROLS or 2.41 RIDER FOOT CONTROLS: XR MODELS for removal procedure.
2. See Figure 2-212. Slide rubber boot (1) on clutch cable adjuster (2) upward to expose adjuster mechanism. Loosen jam nut (3) from adjuster. Turn adjuster to shorten cable housing until there is a large amount of freeplay at clutch hand lever. See 1.13 CLUTCH.
3. See Figure 2-213. Remove six screws (1) and clutch inspection cover (2). Exercise caution to avoid damaging or dislodging quad ring (7) from groove in primary cover (9).
4. Slide hex lockplate with attached spring (3) from flats of adjusting screw assembly (8).
5. Turn adjusting screw assembly clockwise to release ramp assembly (5) and coupling (6). As the adjusting screw is turned, ramp assembly moves forward. Remove nut (4) from end of adjusting screw.
6. Remove hook of ramp from cable coupling. Remove clutch cable end (11) from slot in coupling. Remove coupling and ramp assembly.
7. Remove cable end fitting (12) and remove clutch cable (13) lower section from primary cover. Remove O-ring (10) from cable end fitting. Discard O-ring.
8. Clean all metal parts in a non-volatile cleaning solution or solvent.

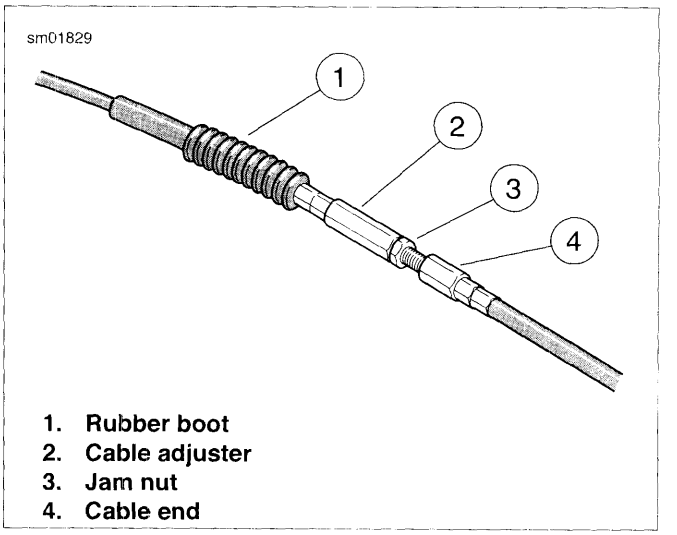

Figure 2-212. Clutch Cable Adjuster Mechanism

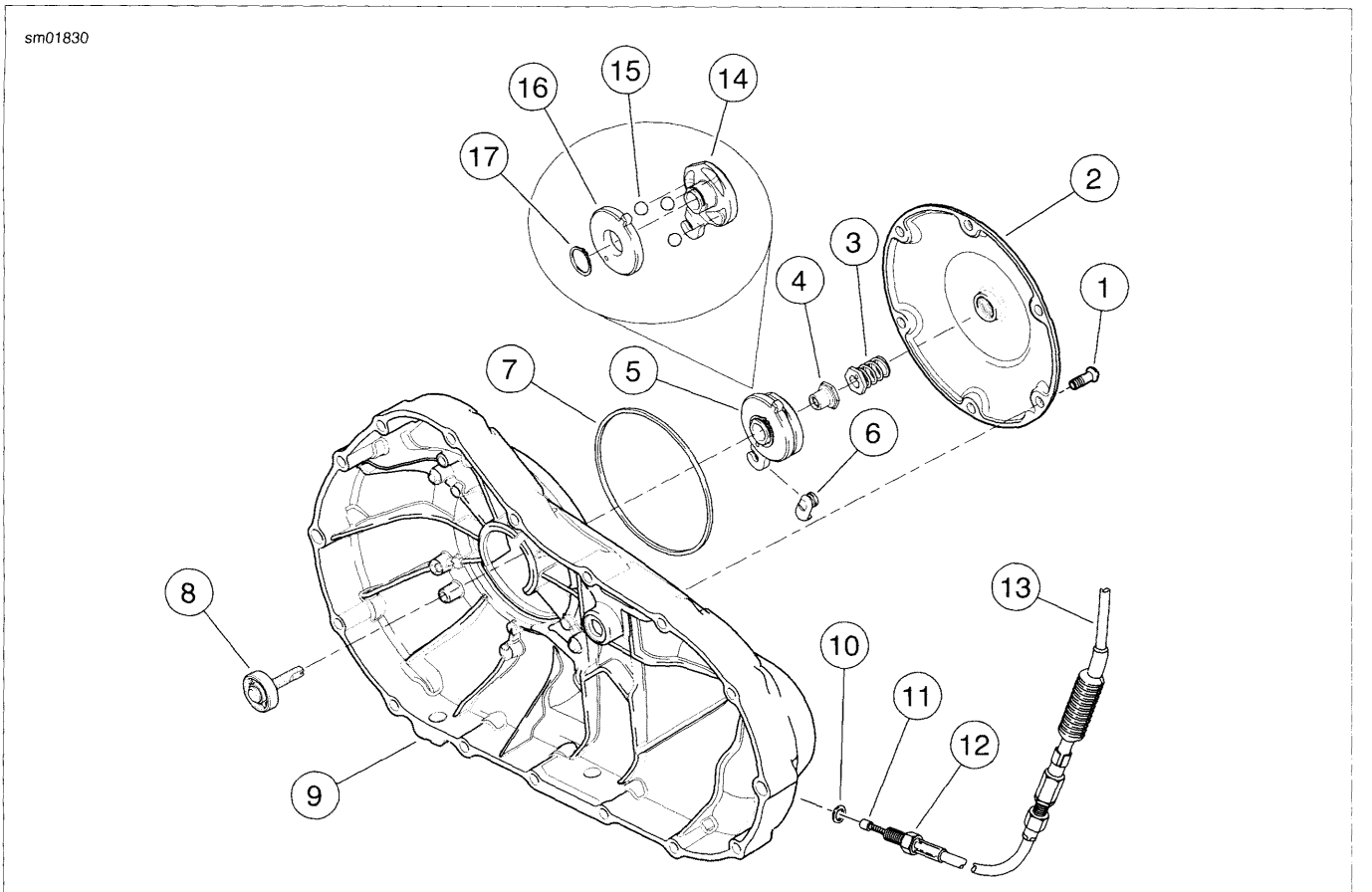

1. Screw (6)
2. Clutch inspection cover
3. Hex lockplate and spring
4. Nut
5. Ramp assembly (see items 14-17)
6. Coupling
7. Quad ring
8. Clutch adjusting screw assembly
9. Primary cover
10. O-ring
11. Clutch cable end
12. Cable end fitting
13. Clutch cable
14. Outer ramp
15. Ball (3)
16. Inner ramp
17. Retaining ring

Figure 2-213. Clutch Release Mechanism

Clutch Lever and Clutch Cable: Upper

1. See Figure 2-214. Remove retaining ring (3) and pivot pin (6). Discard retaining ring.
2. Remove clutch lever (1) from clutch lever bracket (5).
3. Remove clutch cable pin (2). Disconnect clutch cable (4) upper section from lever.
4. Remove bushing (9) from clutch lever. Bushing has a collar on one end and can only be removed from top of lever.
5. Remove screw (10) and anti-rattle spring (11).

Clutch Hand Control

1. See Figure 2-214. Loosen set screw (12) and remove turn signal assembly (16) from clutch lever bracket (5).
2. Loosen and remove lock nut (14) and lock washer (13), and lift mirror (15) from clutch lever bracket.
3. Remove two screws and washers (7) and retainers (17) from clutch control clamp (8).
4. Remove clutch control clamp (8) and clutch lever bracket from left handlebar.

NOTE

See Figure 2-214. You may need to loosen two screws of left handlebar switch housing to remove clutch control clamp (8) and clutch lever bracket (5) from left handlebar.

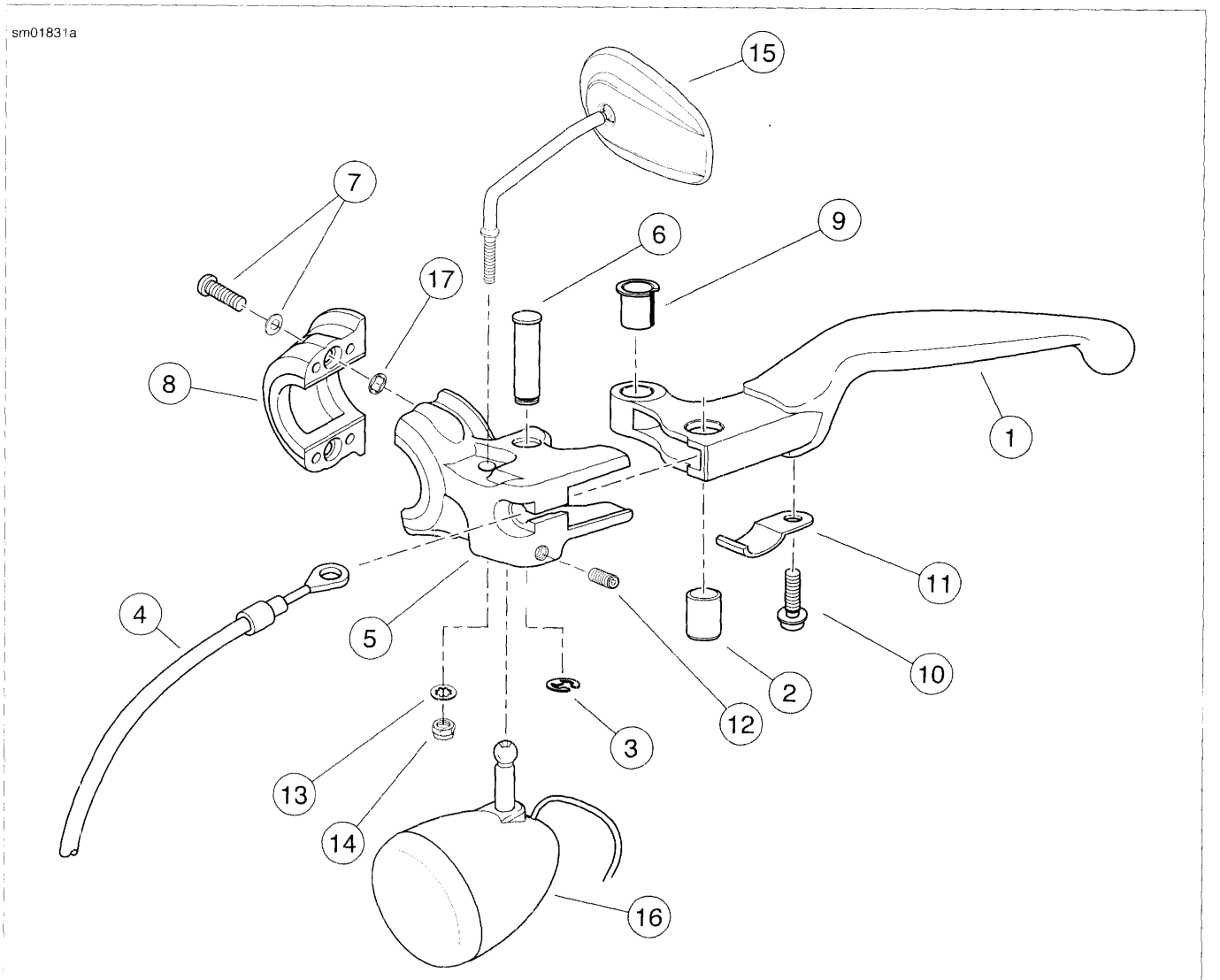

1. **Clutch lever**
2. **Clutch cable pin**
3. **Retaining ring**
4. **Clutch cable**
5. **Clutch lever bracket**
6. **Pivot pin**
7. **Screw and washer (2)**
8. **Clutch control clamp**
9. **Bushing**
10. **Screw**
11. **Anti-rattle spring**
12. **Set screw**
13. **Lock washer**
14. **Lock nut**
15. **Mirror**
16. **Turn signal assembly**
17. **Retainer (2)**

Figure 2-214. Clutch Hand Control

ASSEMBLY AND INSTALLATION

Clutch Hand Control

1. See Figure 2-214. Position clutch control clamp (8) and clutch lever bracket (5) onto left handlebar. Hold clamp and bracket assembly firmly against left handlebar switch housing.
2. Secure components to left handlebar using two screws and washers (7) and retainers (17). Tighten to 108-132 **in-lbs** (12.2-14.9 Nm).
3. Install mirror (15), secure with lock nut (14) and lock washer (13). Position mirror for best rearward visibility. Tighten lock nut to 96-144 **in-lbs** (10.9-16.3 Nm).
4. Install turn signal (16) and secure with set screw (12). Position so turn signal lens faces directly forward and turn signal does not strike fuel tank when handlebars are turned full left. Tighten set screw to 96-120 **in-lbs** (10.9-13.6 Nm).

NOTE

If two screws of left handlebar switch housing were loosened during clutch hand control removal, tighten to 35-45 ***in-lbs*** *(4.0-5.1 Nm).*

Clutch Lever and Clutch Cable: Upper

1. See Figure 2-214. Install anti-rattle spring (11) and screw (10) onto clutch lever (1). Tighten screw to 8-13 **in-lbs** (0.9-1.5 Nm).
2. Install bushing (9) in clutch lever. Bushing has a collar on one end and must be installed from top of lever.
3. Connect end of clutch cable (4) upper section to clutch lever (1) using clutch cable pin (2).
4. Position lever within clutch lever bracket (5), install pivot pin (6) and secure with **new** retaining ring (3).

Clutch Cable: Lower

1. **XL Models:** See Figure 2-215. Route clutch cable (3) forward from clutch lever (1) downward to outboard side of left front fork slider tube, through two clips (6) on left front frame downtube, and rearward to primary cover (4).

   XR Models: See Figure 2-214. Route clutch cable down between the fork tubes and clamps, downward to outboard side of left front fork slider tube and through the two clips in the oil cooler mounting bracket. Check that cable is not pinched between the lower steering head bracket and frame and left and right lock.
2. See Figure 2-213. Install **new** O-ring (10) over cable end fitting (12) of clutch cable (13) lower section. Screw fitting into primary cover (9). Tighten to 36-108 **in-lbs** (4.1-12.2 Nm).
3. Fit coupling (6) over cable end (11) with the rounded side inboard, the ramp connector button outboard. With retaining ring side of ramp assembly (5) facing inward, place hook of ramp around coupling button and rotate assembly counterclockwise until tang on inner ramp (16) fits in slot of primary cover.
4. Thread nut (4) on adjusting screw assembly (8) until slot of screw is accessible with a screwdriver. Fit nut hex into recess of outer ramp (14). Turn adjusting screw counterclockwise until resistance is felt. Then back off adjusting screw 1/4 turn.
5. Install hex lockplate with spring (3) onto flats of adjusting screw assembly (8). If necessary, turn adjusting screw clockwise slightly so that lockplate slides onto flats while also fitting within recess of outer ramp.
6. Verify that quad ring (7) is fully seated in groove of primary cover (9). Install clutch inspection cover (2) and secure with six screws (1). Tighten screws in a crosswise pattern to 84-120 **in-lbs** (9.5-13.6 Nm).
7. **Models equipped with mid-mount foot controls:** install left side rider footrest and mounting bracket assembly. Tighten footrest bracket mounting screws to 45-50 ft-lbs (61-68 Nm). See 2.39 RIDER FOOT CONTROLS: XL MID-MOUNT CONTROLS or 2.41 RIDER FOOT CONTROLS: XR MODELS for installation procedure.
8. Plug in main fuse. See 6.35 MAIN FUSE.

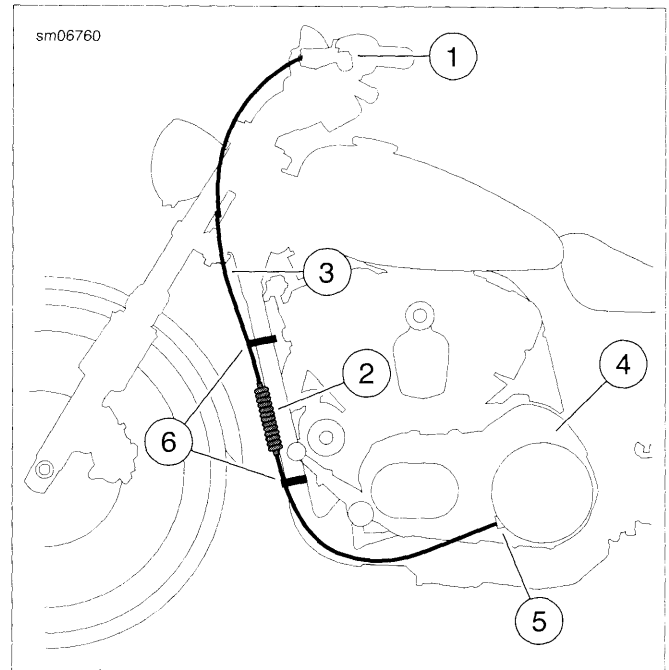

1. **Clutch lever**
2. **Cable adjuster boot**
3. **Clutch cable**
4. **Primary cover**
5. **Cable end fitting**
6. **Clip (2)**

Figure 2-215. Clutch Cable Routing: XL Models

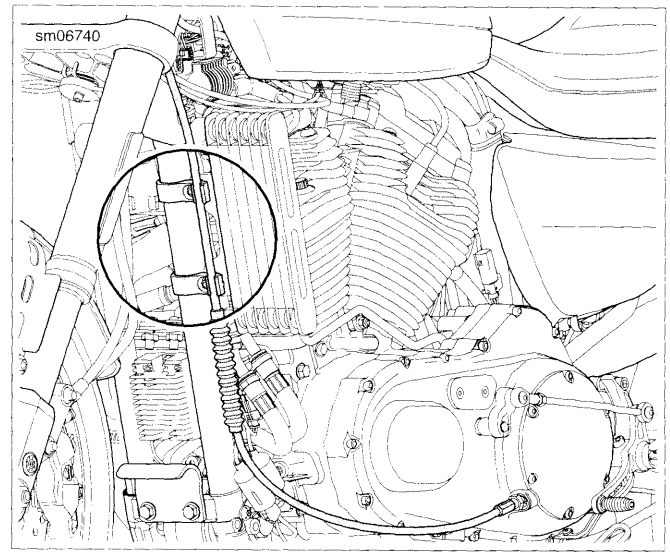

Figure 2-216. Clutch Cable Clips: XR Models

REMOVAL

⚠WARNING

To prevent accidental vehicle start-up, which could cause death or serious injury, remove main fuse before proceeding. (00251b)

All Models

1. Unplug main fuse. See 6.35 MAIN FUSE.
2. Remove two screws securing clutch control assembly to left side of handlebar. See 2.30 CLUTCH CONTROL.
3. Remove two screws securing left handlebar switch assembly to handlebar. See 6.38 LEFT HANDLEBAR SWITCHES. Let wires carefully support the switch assembly.
4. Remove left handlebar grip.
5. Remove front brake master cylinder assembly from right handlebar. See 2.9 FRONT BRAKE MASTER CYLINDER.

XL 883C and XL 1200C

1. See Figure 2-217. Cut and remove four wiring harness retainers (10). When cutting retainers, be careful not to cut into wiring harnesses. Discard retainers.
2. Loosen, but do not remove, two control housing screws (8).
3. Remove two screws (16) and riser cover (15).
4. Remove four screws (3) and upper handlebar clamp/speedometer housing (2). Detach handlebar (5) from riser.
5. Slide right hand control and throttle assembly (4, 6, 9) off detached handlebar.
6. If removing riser (14), remove bolts (11), washers (12) and riser from upper fork bracket (13).

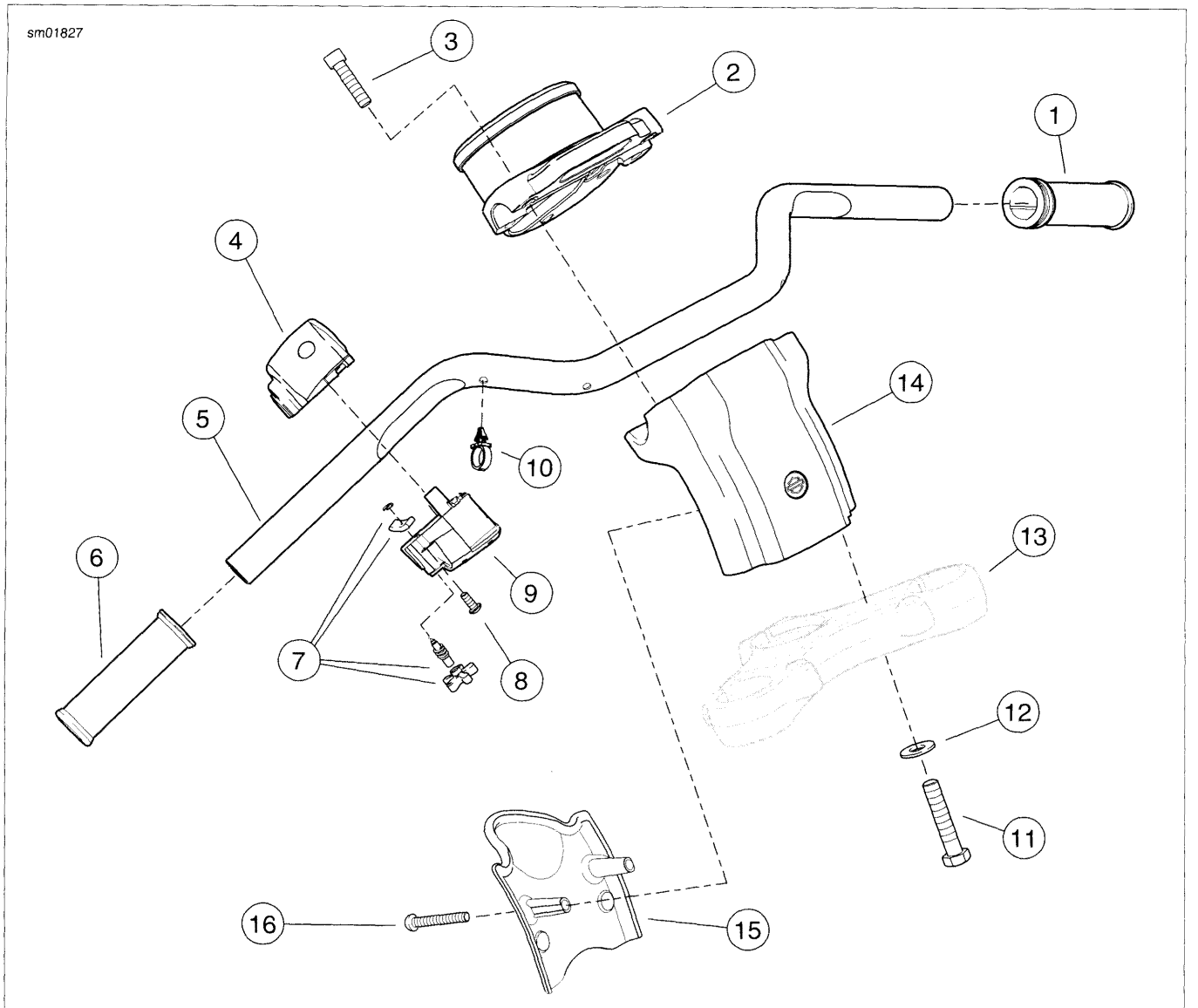

1. **Handlebar grip**
2. **Upper handlebar clamp/Speedometer housing**
3. **Screw (4)**
4. **Upper control housing**
5. **Handlebar**
6. **Throttle grip and sleeve**
7. **Throttle adjusting assembly**
8. **Screw (2)**
9. **Lower control housing**
10. **Wire harness retainer (4)**
11. **Bolt (2)**
12. **Washer (2)**
13. **Upper fork bracket**
14. **Handlebar riser**
15. **Riser cover**
16. **Screw (2)**

Figure 2-217. Handlebars: XL 883C; XL 1200C

All XL Models Except XL 883C, XL 1200C

1. See Figure 2-218. Cut and remove four wiring harness retainers (12). When cutting retainers, be careful not to cut into wiring harnesses. Discard retainers.
2. Loosen, but do not remove, two control housing screws (10).
3. If removing lower handlebar clamps (13, 17), loosen, but do not remove, two bolts (15) securing lower handlebar clamps to upper fork bracket (16).
4. Remove screws (4) and instrument bracket (3) (if equipped), upper handlebar clamp (5) or instrument bracket (2).
5. Detach handlebar (7) from lower handlebar clamps.
6. Slide right hand control housing and throttle assembly (6, 8, 11) off detached handlebar.
7. If removing lower handlebar clamps (13, 17), remove two bolts (15), washers (14) and lower handlebar clamps from upper fork bracket (16).

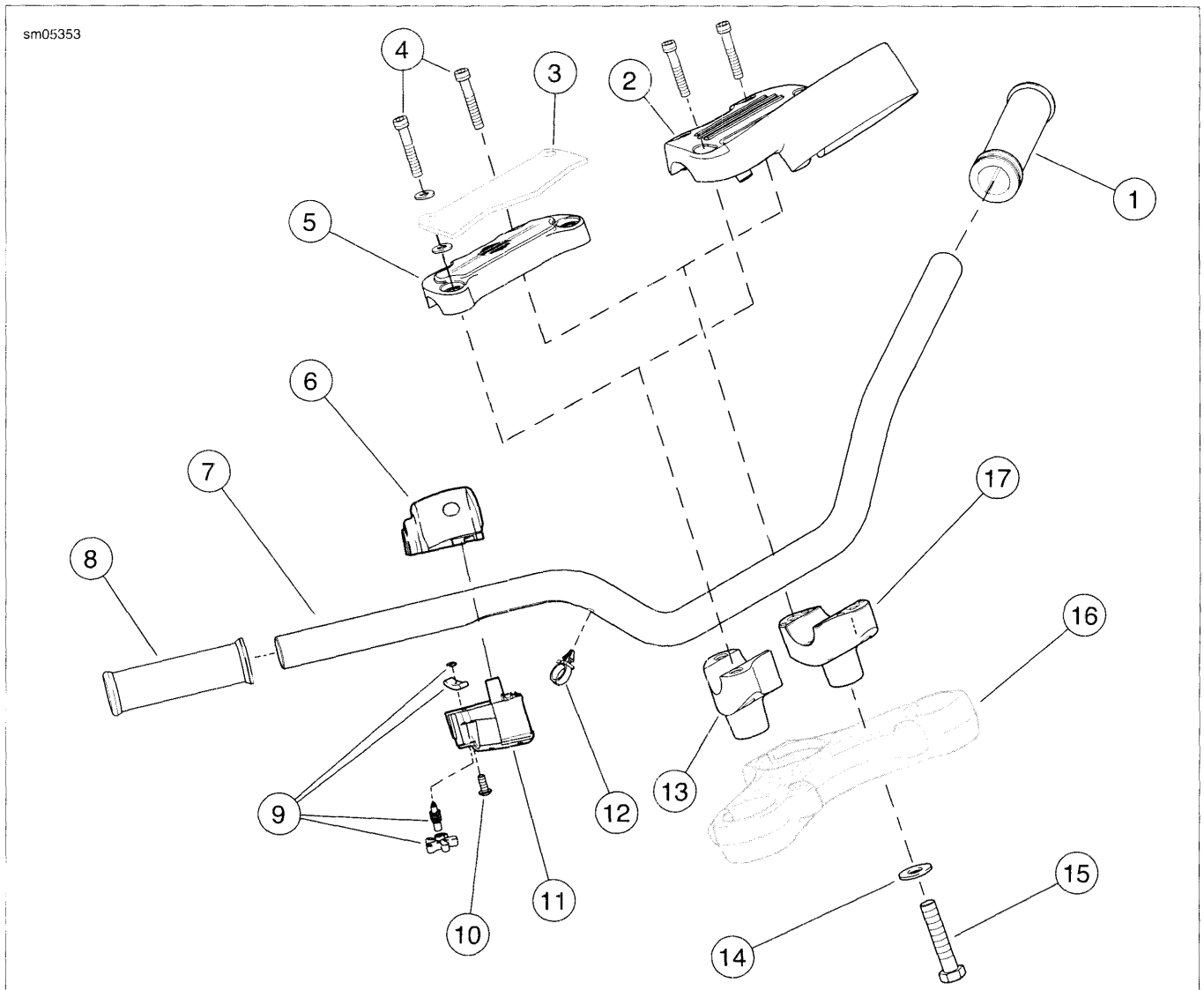

1. **Handlebar grip**
2. **Upper handlebar clamp/instrument bracket (XL 883N/XL 1200L/N)**
3. **Bolt-on instrument bracket (XL 883L/R)**
4. **Screw (4)**
5. **Upper handlebar clamp**
6. **Upper control housing**
7. **Handlebar**
8. **Throttle grip and sleeve**
9. **Throttle adjusting assembly**
10. **Screw (2)**
11. **Lower control housing**
12. **Wire harness retainer (4)**
13. **Lower right handlebar clamp**
14. **Washer (2)**
15. **Bolt (2)**
16. **Upper fork bracket**
17. **Lower left handlebar clamp**

Figure 2-218. Handlebars: XL 883L/N/R; XL 1200L/N

XR 1200

1. See Figure 2-219. Cut and remove four wiring harness retainers (12). When cutting retainers, be careful not to cut into wiring harnesses. Discard retainers.
2. Loosen, but do not remove, two control housing screws (10).
3. Remove two front screws (3) and washers (4). Remove instrument bracket (2).
4. Remove two rear screws (3) and upper clamp (5).
5. Detach handlebar (7) from upper fork bracket (13).
6. Slide right hand control housing and throttle assembly (6, 8, 11) off detached handlebar.

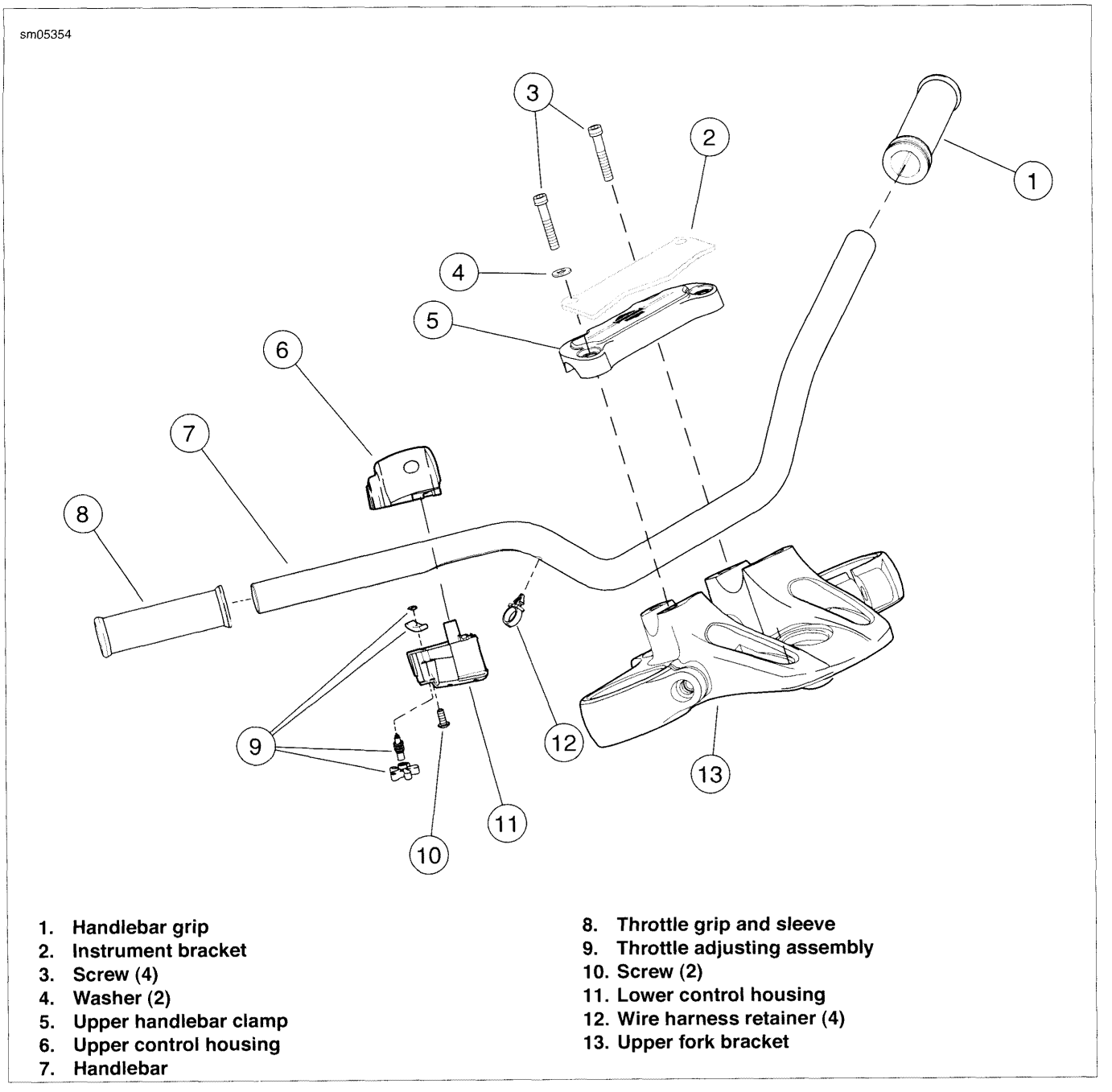

1. **Handlebar grip**
2. **Instrument bracket**
3. **Screw (4)**
4. **Washer (2)**
5. **Upper handlebar clamp**
6. **Upper control housing**
7. **Handlebar**
8. **Throttle grip and sleeve**
9. **Throttle adjusting assembly**
10. **Screw (2)**
11. **Lower control housing**
12. **Wire harness retainer (4)**
13. **Upper fork bracket**

Figure 2-219. Handlebars: XR Models

INSTALLATION

XL 883C and XL 1200C

1. See Figure 2-217. If riser (14) was removed, secure riser to upper fork bracket (13) with two bolts (11) and washers (12). Make sure handlebar wiring harnesses are routed behind and inside riser. Tighten bolts to 30-40 ft-lbs (40.7-54.3 Nm).
2. Slide right handlebar control housing and throttle assembly (4, 6, 9) onto right end of handlebar (5). Position handlebar on lower handlebar clamp.
3. Place upper handlebar clamp/speedometer housing (2) in position and thread four screws (3) in place.
4. See Figure 2-220. Adjust handlebars to desired position. Tighten front screws (2) first, to 12-18 ft-lbs (16.3-24.4 Nm). Then tighten rear screws (3) to 12-18 ft-lbs (16.3-24.4 Nm).
5. See Figure 2-217. Be sure handlebar wiring harnesses are routed properly and are not pinched. Install riser cover (15) and screws (16). Tighten to 8-12 **in-lbs** (0.9-1.4 Nm).

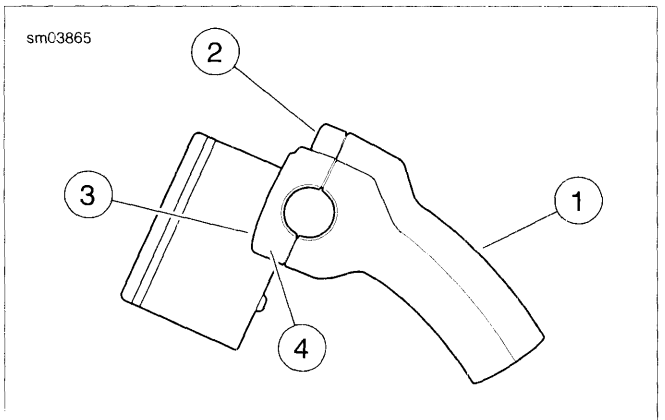

1. **Lower clamp**
2. **Front screw (2) (tighten first)**
3. **Rear screw (2)**
4. **Upper clamp**

Figure 2-220. Handlebar Riser: XL 883C/XL 1200C

All XL Models Except XL 883C, XL 1200C

1. See Figure 2-218. If lower handlebar clamps (13, 17) were removed, secure clamps to upper fork bracket (16) with bolts (15) and washers (14). Finger tighten bolts only at this time. Make sure wiring harnesses are routed between lower handlebar clamps.
2. Slide right handlebar control housing and throttle assembly (6, 8, 11) onto right end of handlebar (7). Position handlebar on lower handlebar clamps.
3. Place upper handlebar clamp (5) or clamp/instrument bracket (2) in position and install four screws (4).
4. **Models with bolt-on instrument bracket:**
   a. See Figure 2-222. Place spacers (6) over two front mounting holes of upper handlebar clamp.
   b. Position instrument bracket (5) over two front holes of upper handlebar clamp and install two screws (4) and washers (8).
5. See Figure 2-221. Adjust handlebars to desired position. Tighten rear screws first, to 12-18 ft-lbs (16.3-24.4 Nm). Then tighten front screws to 12-18 ft-lbs (16.3-24.4 Nm).
6. See Figure 2-218. Tighten lower handlebar clamp bolts (15) to 30-40 ft-lbs (40.7-54.3 Nm).

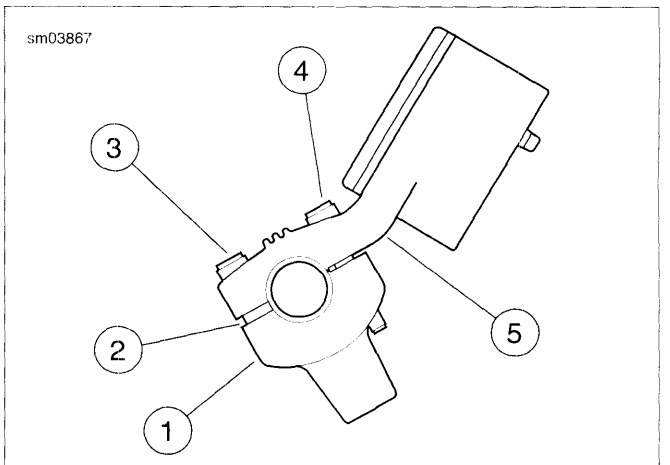

1. **Lower clamp (2)**
2. **Cast-in spacer (2)**
3. **Rear screw (2) (tighten first)**
4. **Front screw (2)**
5. **Upper clamp**

Figure 2-221. Handlebar Riser: XL 1200L/XL 1200N

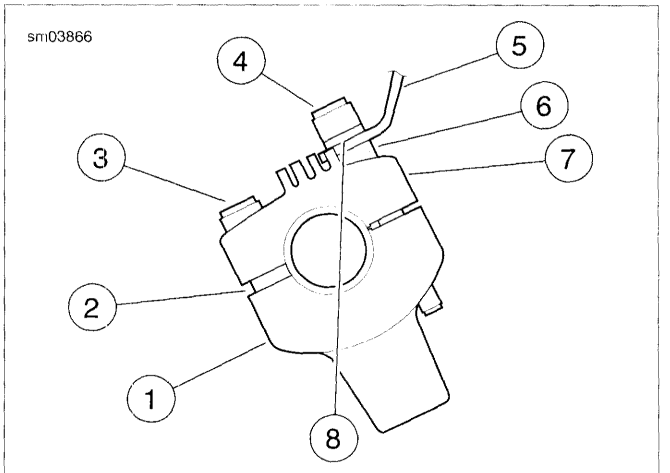

1. **Lower clamp (2)**
2. **Cast-in spacer (2)**
3. **Rear screw (2) (tighten first)**
4. **Front screw (2)**
5. **Instrument bracket**
6. **Spacer**
7. **Upper clamp**
8. **Washer (2)**

Figure 2-222. Handlebar Clamp: XL Models with Bolt-On Instrument Bracket

XR 1200

1. See Figure 2-219. Slide right handlebar control housing and throttle assembly (6, 8, 11) onto right end of handlebar (7). Position handlebar on upper fork bracket (13).
2. Place upper handlebar clamp (5) in position and install rear screws (3).
3. Place instrument bracket in position and install front screws (3) and washers (4).

4. Adjust handlebars to desired position. Tighten rear screws first, to 12-18 ft-lbs (16.3-24.4 Nm). Then tighten front screws to 12-18 ft-lbs (16.3-24.4 Nm).

All Models

1. Install front brake master cylinder assembly. See 2.9 FRONT BRAKE MASTER CYLINDER.
2. Install **new** left hand grip in place as follows:
   a. Using a piece of emery cloth, rough grip end of left handlebar.

   NOTE

   Before applying adhesive in the next step, clean the left handlebar with acetone.

   b. Apply LOCTITE PRISM PRIMER (770) to inside of hand grip. Remove any excess PRISM PRIMER with a clean cloth. Wait two minutes for PRISM PRIMER to set before attempting the next step.
   c. Apply LOCTITE PRISM SUPERBONDER (411) to inside of hand grip. Install **new** hand grip on left handlebar.

   NOTE

   SUPERBONDER will set in four minutes and be fully cured in 24 hours.

3. Position left hand control and loosely install hand control clamp screws. See 6.38 LEFT HANDLEBAR SWITCHES.
4. Attach clutch control assembly to left side of handlebar. Tighten screws to 108-132 **in-lbs** (12.2-14.9 Nm). See 2.30 CLUTCH CONTROL.
5. Tighten left hand control clamp screws to 35-45 **in-lbs** (4.0-5.1 Nm).
6. Tighten right hand control clamp screws to 35-45 **in-lbs** (4.0-5.1 Nm).
7. Wrap four **new** wiring harness retainers (item 12, Figure 2-219, item 11, Figure 2-218 or item 10, Figure 2-217.) around handlebar wiring harnesses and push retainers into holes in handlebar.
8. Plug in main fuse. See 6.35 MAIN FUSE.
9. Verify the following:
   a. Clutch cable adjustment/operation.
   b. Proper throttle cable operation.
   c. All electrical switch functions.
   d. Proper brake operation and brake lamp function.

XL MODELS

NOTE

Be careful when removing or installing fender assembly, to avoid scratching the paint. If necessary, cover the fender with a clean shop towel to prevent damage.

Removal

1. See Figure 2-223. Remove four screws (1) and lock nuts (2) to detach front fender (3) from front fork sliders.
2. Carefully remove fender from between front fork sliders.

Installation

1. See Figure 2-223. Carefully position front fender (3) between right and left front fork sliders.
2. Secure fender using four screws (1) and lock nuts (2). Tighten to 96-156 **in-lbs** (10.9-17.6 Nm).

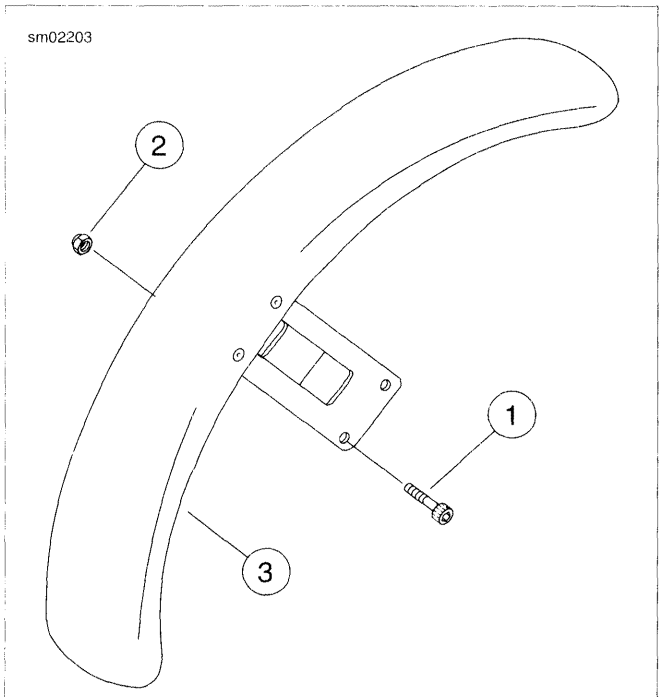

1. **Screw (4)**
2. **Lock nuts (4)**
3. **Front fender**

Figure 2-223. Front Fender: XL Models

XR MODELS

NOTE

Be careful when removing or installing fender assembly, to avoid scratching the paint. If necessary, cover the fender with a clean shop towel to prevent damage.

Removal

1. See Figure 2-224. Remove four screws (2) to detach front fender (5) from front fork sliders.
2. Carefully remove fender and fender bracket assembly from between front fork sliders.
3. Remove four screws (1) and nuts (3) to detach front fender from fender bracket.

Installation

1. See Figure 2-224. carefully position fender bracket (4) over front fender (5). Secure with four screws (1) and nuts (3). Tighten to 36-60 **in-lbs** (4.1-6.8 Nm).
2. Carefully position front fender and fender bracket assembly between right and left front fork sliders.
3. Secure front fender assembly using four screws (2). Tighten to 15-19 ft-lbs (20.4-25.8 Nm).

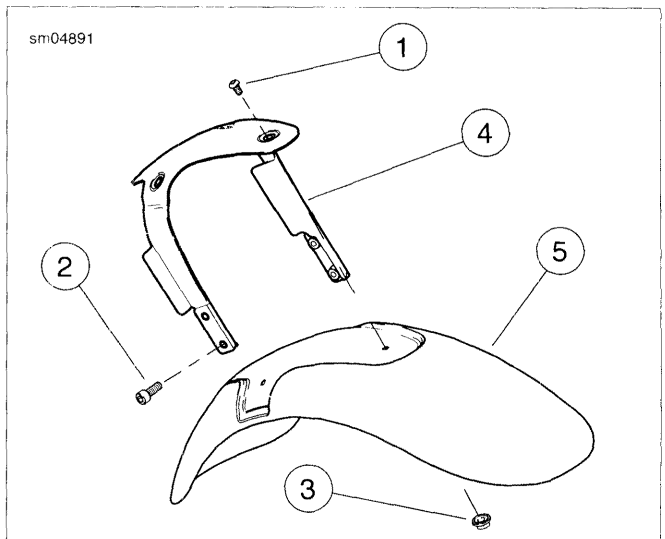

1. **Screw (4)**
2. **Screw (4)**
3. **Nut (4)**
4. **Fender bracket**
5. **Front fender**

Figure 2-224. Front Fender: XR Models

REAR FENDER: ALL XL MODELS EXCEPT XL 883N/XL 1200N

GENERAL

For rear fender and convertible side mount license plate bracket removal and installation on XL 883N and XL 1200N models, see 2.34 REAR FENDER AND LICENSE PLATE BRACKET: XL 883N/XL 1200N.

REMOVAL

1. Remove seat.

⚠WARNING

To prevent accidental vehicle start-up, which could cause death or serious injury, remove main fuse before proceeding. (00251b)

2. Unplug main fuse. See 6.35 MAIN FUSE.
3. See Figure 2-225. Remove two screws (6) and tail lamp lens (7) from tail lamp base assembly (11). Twist tail lamp bulb socket (9) 1/4 turn counterclockwise and remove from lens.

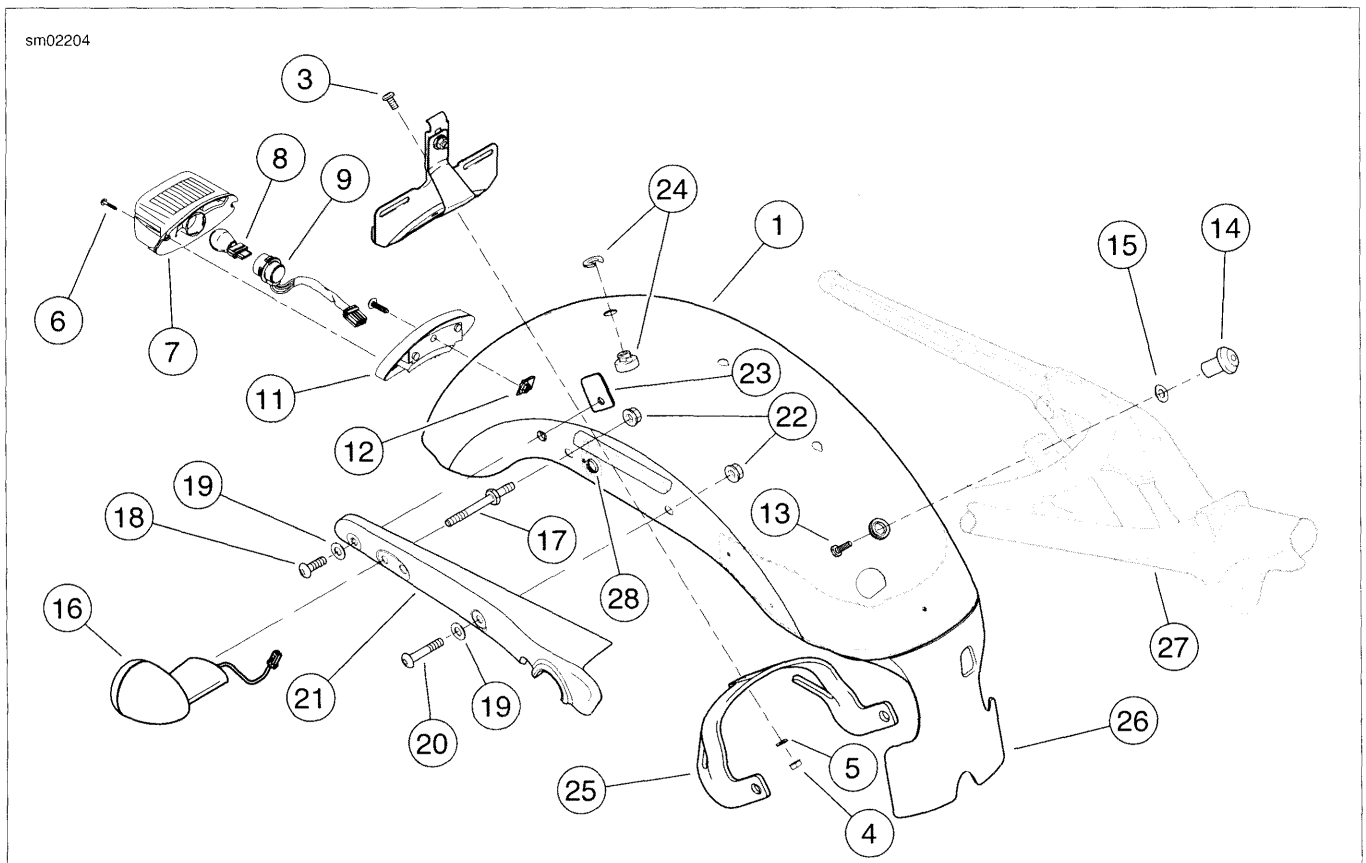

1. Rear fender
2. License plate bracket assembly
3. Screw (3)
4. Nut (3)
5. Washer
6. Screw (2)
7. Tail lamp lens
8. Bulb
9. Socket assembly
10. Screw w/captive washer
11. Tail lamp base assembly
12. Clip nut
13. Screw
14. Seat post
15. Washer
16. Turn signal assembly
17. Turn signal stalk (2)
18. Screw (2)
19. Washer (4)
20. Screw (2)
21. Rear fender strut cover (2)
22. Nut (4)
23. Nut plate (2)
24. Fender seat nut kit
25. Rear fender brace
26. Rear fender extension
27. Frame
28. Wire retention bracket (2)

Figure 2-225. Rear Fender Assembly

4. See Figure 2-226. Note location of electrical connectors on tail lamp circuit board. Depress latches on turn signal connectors (1, 2) and tail lamp connector (4). Unplug connectors from rear lighting circuit board.

5. See Figure 2-228. Unplug rear lighting connector assembly [7] (2). Depress external latch and use a rocking motion to separate connector halves.

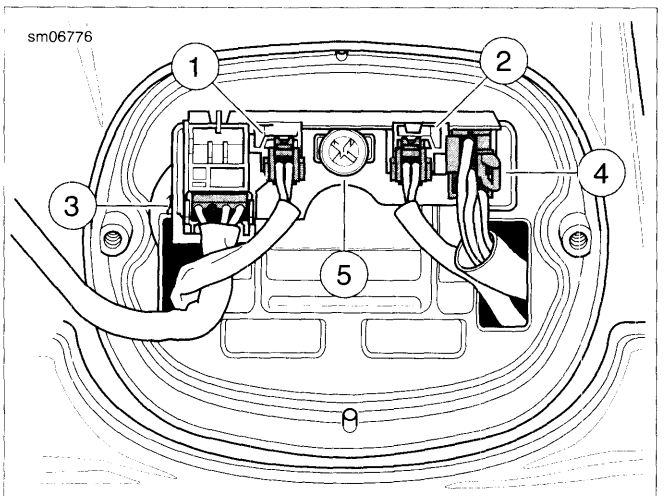

1. **Left turn signal connector [18]**
2. **Right turn signal connector [19]**
3. **Rear lighting power connector [94]**
4. **Tail lamp connector [93]**
5. **Screw with washer**

Figure 2-226. Tail Lamp Housing

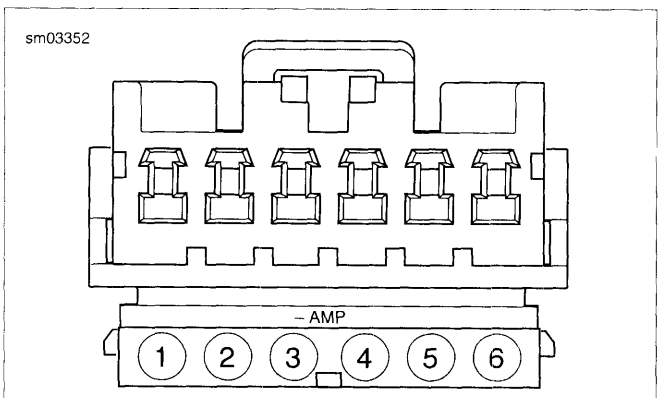

1. **Orange with white tracer**
2. **Brown**
3. **Blue**
4. **Red with yellow tracer**
5. **Violet**
6. **Black**

Figure 2-227. Tail Lamp Connector [94] (Secondary Lock Open)

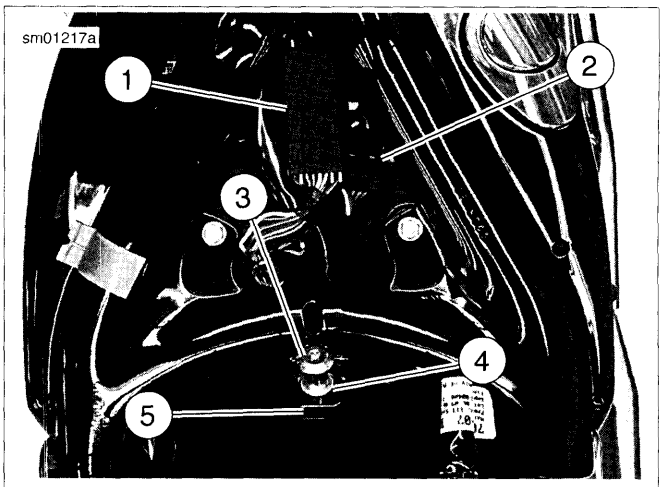

1. **Engine harness connector [145]**
2. **Rear lighting connector [7]**
3. **Seat post**
4. **Flat washer**
5. **Frame crossmember tab**

Figure 2-228. Rear Lighting Connector Location

6. See Figure 2-229. Remove rear turn signal stalk nuts (1) from inside rear fender on both sides.

7. Remove forward fender support screw with washer (2) and nut (4), and aft fender support screw with washer (3) and nut plate (5) on both sides.

8. Pull turn signal wiring harnesses through holes in tail lamp base and rear fender. Disengage turn signal wiring harnesses from wire retention brackets (6).

9. See Figure 2-225. Remove rear fender strut covers (21) with attached turn signal assemblies (16) from rear fender struts.

10. Remove screw (13), seat post (14) and flat washer (15) to detach top of rear fender (1) from frame cross member tab.

11. Carefully remove rear fender with attached tail/brake lamp assembly from motorcycle.

12. See Figure 2-226. Depress latch on rear lighting power connector [94] (3) and unplug connector from rear lighting circuit board.

13. Remove screw with washer (5) and lift tail/brake lamp base from fender.

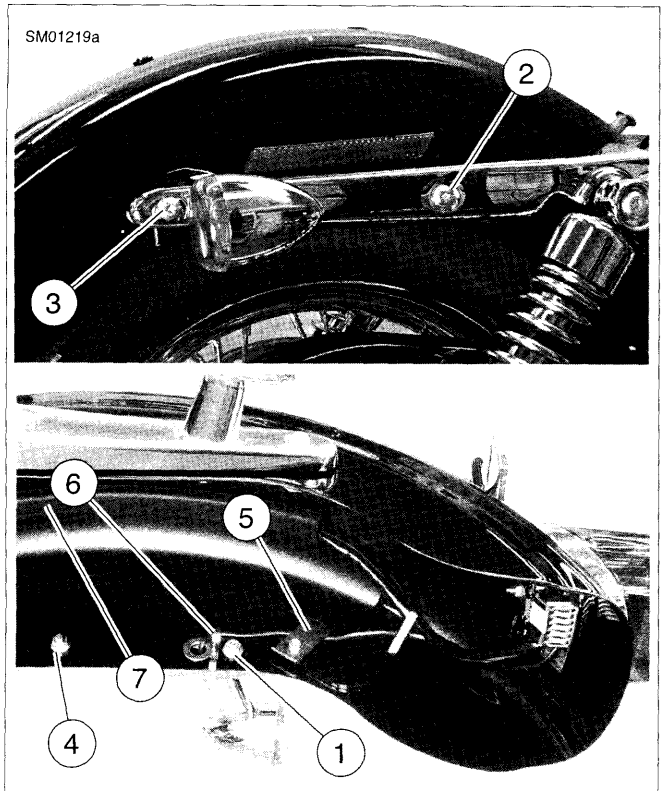

1. **Rear turn signal stalk nut (2)**
2. **Forward fender support screw with washer (2)**
3. **Aft fender support screw with washer (2)**
4. **Forward fender support nut (2)**
5. **Aft fender support nut plate (2)**
6. **Wire retention bracket**
7. **Rear lighting wiring harness and conduit**

Figure 2-229. Rear Fender, Strut Cover and Turn Signal Lamp Assembly

INSTALLATION

NOTE

*If a **new** fender is being installed, complete steps 1-7. Otherwise proceed directly to step 8.*

1. See Figure 2-225. Install license plate assembly on **new** rear fender:
   a. Remove three screws (3), three nuts (4) and one washer (5) securing license plate bracket assembly (2) and rear fender brace (25) to old fender (1).
   b. Position assembly on **new** fender and secure with screws, nuts and washer.
   c. Align remaining holes in rear fender brace with aft fender support screw holes in fender.
   d. Tighten license plate bracket mounting screws to 20-25 **in-lbs** (2.3-2.8 Nm).
2. Carefully drill out pop rivets securing rear fender extension (26) to old fender with a 1/4-in diameter drill bit. Rivet rear fender extension to **new** fender.
3. Carefully drill out pop rivets securing wire retention brackets (28) to old fender with a 1/4-in diameter drill bit. Rivet brackets to **new** fender.
4. Remove fender seat nut kit (24) from old fender and install on **new** fender.
5. Place fender upside down on clean, soft towel or mat to protect the finish. Clean inside area of fender where wiring harness/conduit will be placed, with a mixture of alcohol and water. Allow to air-dry thoroughly.
6. Position **new** wire harness and conduit inside fender at the same approximate position where harness/conduit assembly is located in old fender. Insert end of wiring harness with 'D' plug through 'D' hole in front of fender. Insert plug into hole.
7. Slide conduit toward 'D' plug as far as it will go. Insert other end of wiring harness through tail lamp housing hole in rear of fender. Remove adhesive tape backing from conduit and press conduit in place along right side curve of fender.
8. Carefully install rear fender onto motorcycle. Align holes in fender with those in struts. Temporarily install screws (18, 20) through fender struts and fender to hold fender in place. Route rear lighting harness connector [7B] between frame cross member and top of oil tank. Plug connector into socket [7A].
9. See Figure 2-225. Secure front of fender with screw (13), washer (15) and seat post (14). Finger-tighten screw only, at this time.
10. **H-DSSS equipped models:** Make sure antenna harness is not pinched between fender and frame crossmember.
11. Remove screws from right side of fender that were temporarily installed in step 8. Install right side rear fender strut cover (21) with attached turn signal assembly to fender strut. Push turn signal wiring harness through appropriate hole in strut and fender. Install nut (22) onto turn signal stalk (17) from inside fender. Finger-tighten only at this time.
12. Secure fender to strut with screw (20), washer (19) and nut (22) in forward mounting hole. Install screw (18), washer (19) and nut plate (23) in aft mounting hole. Finger-tighten screws only at this time.
13. Repeat steps 11. and 12. on left side of fender.
14. Now tighten all fender mounting hardware in the following sequence:
    a. Tighten screw (13) and seat post (14) to 96-156 **in-lbs** (10.9-17.6 Nm).
    b. Tighten turn signal stalk nuts to 132-216 **in-lbs** (14.9-24.4 Nm).
    c. Tighten screws (18, 20) to 132-216 **in-lbs** (14.9-24.4 Nm).
15. Install tail lamp base (11) to fender with screw (10) and clip nut (12). Tighten screw to 45-48 **in-lbs** (5.1-5.4 Nm).
16. See Figure 2-226. Push 6-pin Amp connector [94] (3) and left [18] (1) and right [19] (2) turn signal connectors through access holes in tail lamp base and connect as shown.
17. Insert tail lamp connector [93] (4) in tail lamp base socket.
18. See Figure 2-225. Screw tail lamp socket assembly (9) into lens (7). Attach tail lamp lens (7) to base (11) with two screws (6).

19. Plug in main fuse. See 6.35 MAIN FUSE.

⚠WARNING

Be sure headlamp, tail and stop lamp and turn signals are operating properly before riding. Poor visibility of rider to other motorists can result in death or serious injury. (00478b)

20. Turn ignition switch ON. Verify all rear lighting is operating properly: license plate lamp, tail lamps, brake lamps and turn signals.

⚠WARNING

After installing seat, pull upward on seat to be sure it is locked in position. While riding, a loose seat can shift causing loss of control, which could result in death or serious injury. (00070b)

21. Install seat.

REAR FENDER AND LICENSE PLATE BRACKET: XL 883N/XL 1200N 2.34

GENERAL

Unlike all domestic Sportster models, XL 883N and XL 1200N models sold in the dometic market are equipped with a convertible side-mount license plate bracket assembly. Incorporated into the bracket is a license plate lamp module.

NOTE

Due to local regulations, this side mount license plate bracket may not be offered in all markets.

The standard rear fender-mounted tail lamp and brake lamp assembly common to all other XL models is not present on the domestic XL 883N and XL 1200N models. Instead, the rear turn signals also function as tail lamps and brake lamps and are controlled by a rear lighting converter module located under the seat.

For instructions on replacing the rear lighting converter module, see 6.23 REAR LIGHTING CONVERTER MODULE: XL 883N/XL 1200N (DOMESTIC ONLY).

NOTES

- *XL 883N and XL 1200N models sold in the international market are equipped with a center mounted license plate bracket that incorporates a license plate lamp assembly.*
- *XL 883N and XL 1200N models sold in the international market are not equipped with a rear lighting converter module. Instead, they incorporate discrete LED assemblies in the rear turn signal housings for brake lamp, tail lamp and turn signal functions.*

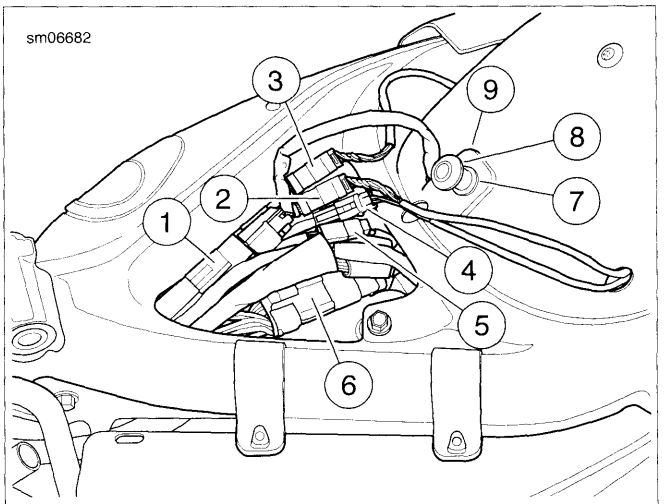

1. **Antenna [209] (H-DSSS equippped vehicles only)**
2. **Right rear lighting harness connector [18]**
3. **Left rear lighting harness connector [19]**
4. **License plate lamp harness [40]**
5. **Main wiring harness connector [7]**
6. **Engine harness connector [145]**
7. **Flat washer**
8. **Seat post**
9. **Frame crossmember tab**

Figure 2-230. Rear Lighting Harness Connectors: XL 883N/XL 1200N

REMOVAL AND DISASSEMBLY

⚠WARNING

To prevent accidental vehicle start-up, which could cause death or serious injury, remove main fuse before proceeding. (00251b)

1. Unplug main fuse. See 6.35 MAIN FUSE.
2. Position motorcycle upright on suitable lift.
3. Remove seat.

NOTE

For this procedure it will not be necessary to remove the rear wheel.

4. Using a jack, raise motorcycle enough to remove pressure on upper shock bolts.
5. Remove upper shock bolts. See 2.25 SHOCK ABSORBERS, Removal.
6. Using jack, raise motorcycle in order to gain clearance between rear wheel and fender.
7. Unplug license plate lamp connector (1) [40]. Unplug right rear lighting harness connector (3) [19]. This connector is identified by a brown band (4) on the harness near the connector. Unplug left rear lighting harness connector (2) [18].
8. See Figure 2-231. Carefully pull both rear lighting harnesses (2, 3) and license plate lamp harness (6) through feed-through holes (4, 5) in rear fender.
9. Remove both rear lighting harnesses and license plate lamp harness from fender harness clips (1).
10. See Figure 2-232. Remove left rear lighting harness (5) from harness clips (2) on lower side of bracket on left side of fender. Repeat this step for right side of fender.
11. See Figure 2-233. Remove rear turn signal stalk nuts (6) from inside rear fender on both sides.
12. Remove forward fender support screw with washer (2) and nut (4), and aft fender support screw with washer (3) and nut plate (5) (domestic only) on both sides.
13. Remove screw with washer (10) and rear fender brace (7).
14. **HDI models:** Remove license plate lamp module harness from upper harness clips on bracket inside fender (left side). Separate license plate bracket from rear fender brace.
15. Remove rear fender strut covers (1) with attached turn signal assemblies from rear fender struts. Carefully pull turn signal wiring harnesses through holes in rear fender and strut as each strut cover is removed.

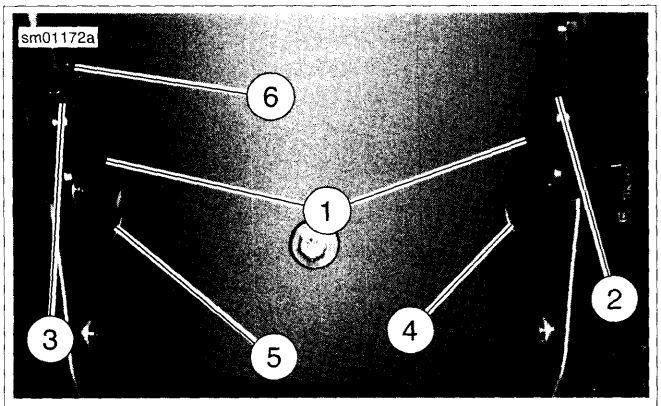

1. Harness bracket (2)
2. Right rear lighting harness
3. Left rear lighting harness
4. Right feed-through hole
5. Left feed-through hole
6. License plate lamp harness

Figure 2-231. Lighting Harnesses and Harness Brackets (View from Inside Rear Fender): XL 883N/XL 1200N

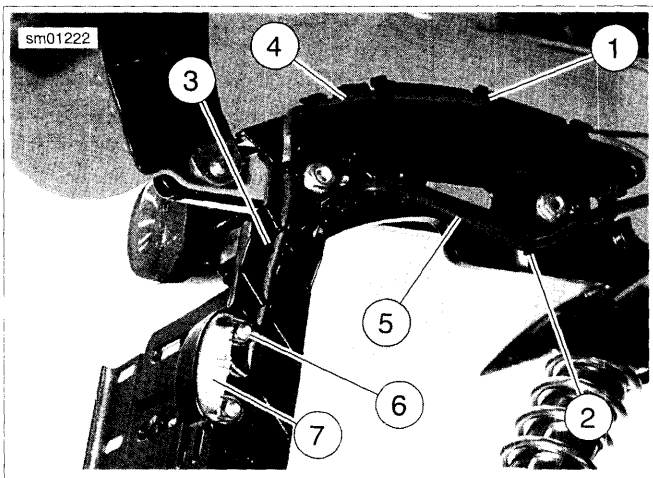

1. Upper license plate bracket harness clip (5)
2. Lower license plate bracket harness clip (3)
3. Harness channel
4. License plate lamp harness
5. Left rear lighting harness
6. Screw (2)
7. License plate lamp module

Figure 2-232. Removing/Installing License Plate Lamp Module (Domestic Only)

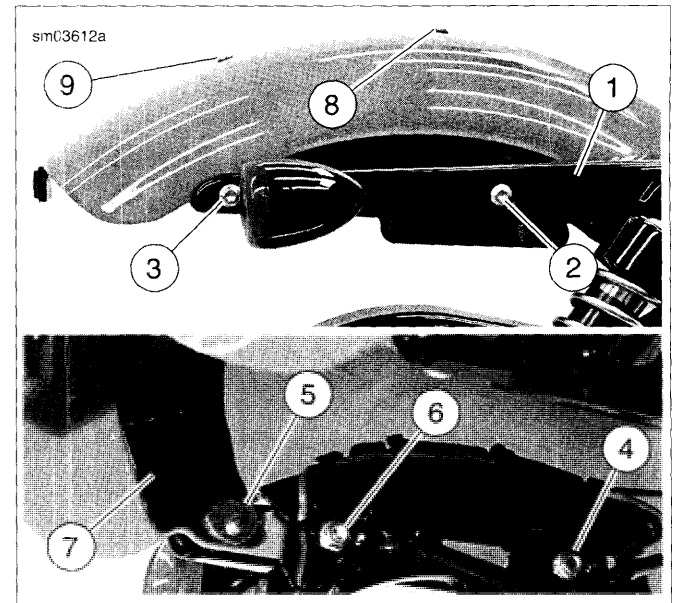

1. Rear fender strut cover
2. Forward fender support screw with washer (2)
3. Aft fender support screw with washer (2)
4. Forward fender support nut (2)
5. Aft fender support nut plate (2)
6. Rear turn signal stalk nut (2)
7. Rear fender brace
8. Fender seat nut kit (2)
9. Screw with washer

Figure 2-233. Rear Fender, Strut Cover and Turn Signal Lamp Assembly (Typical, Domestic Shown)

16. Place a clean shop towel between each fender strut and fender to protect paint.

17. Have an assistant hold rear fender in place. See Figure 2-234. Remove seat post (1), washer (2) and screw (5). Remove rear fender from vehicle, being careful not to damage paint. Lay rear fender on a soft, clean surface.

18. **Domestic models:** Remove convertible side mount license plate bracket from rear fender.
    a. See Figure 2-232. Remove license plate lamp module harness from upper harness clips (1) and harness channel (3) in license plate bracket. Remove two screws (6) and license plate lamp module (7).
    b. See Figure 2-235. Carefully drill out two pop rivets (3) securing license plate bracket assembly (2) to left side of fender.

19. See Figure 2-233. If rear fender is being replaced, do the following:
    a. Remove fender seat nut kit (8).
    b. Carefully drill out pop rivets securing rear fender extension to old fender with a 1/4-in (6.35 mm) diameter drill bit.
    c. Set nut kit and fender extension aside for now.

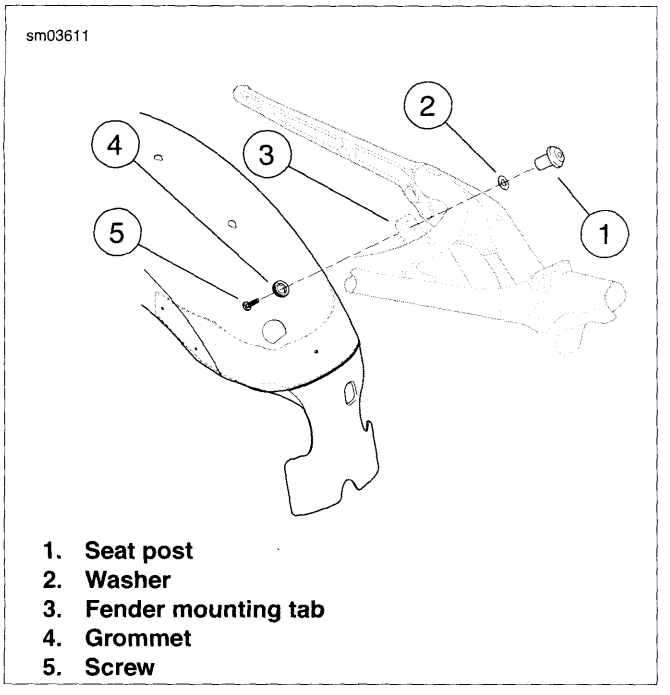

Figure 2-234. Seat Post/Rear Fender Mount Hardware

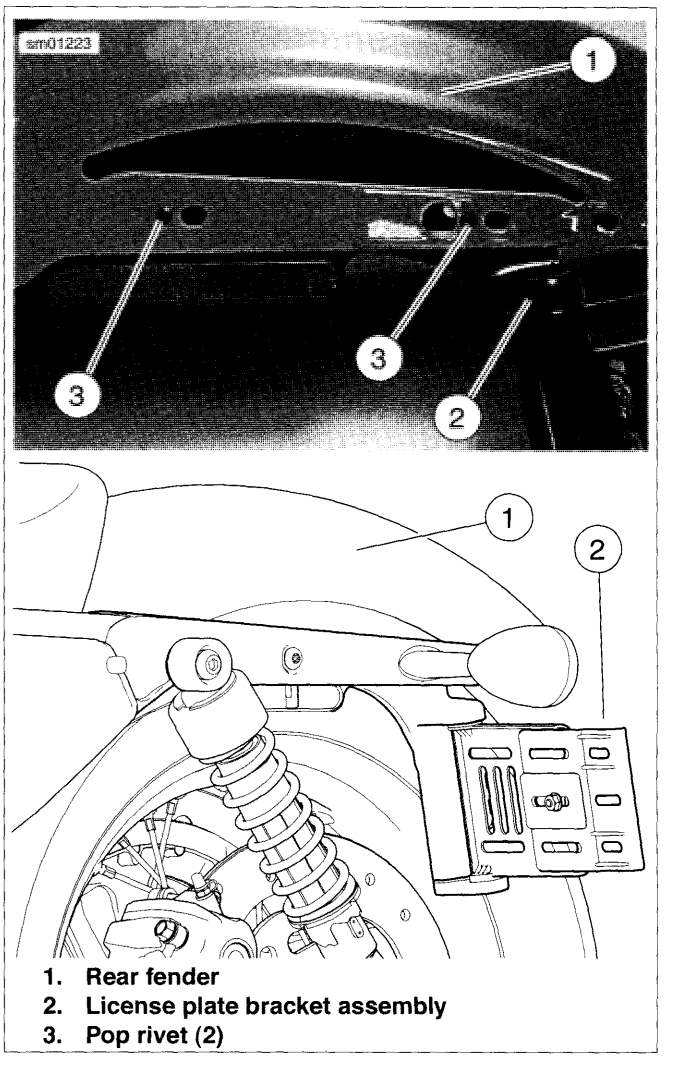

Figure 2-235. Removing/Installing License Plate Bracket Assembly (Domestic Only)

ASSEMBLY AND INSTALLATION

1. See Figure 2-233. If **new** rear fender is being installed, do the following:
   a. Install fender seat nut kit (8).
   b. Rivet rear fender extension to fender.
2. **Domestic models:** Install convertible side mount license plate bracket on fender.
   a. See Figure 2-235. Position license plate bracket assembly (2) against inside of rear fender (1) on left side. Line up holes in bracket with holes in fender and secure bracket to fender with two **new** pop rivets (3).
   b. See Figure 2-232. Install license plate lamp module (7) on to license plate bracket. Secure with two screws (6). Feed license plate lamp harness (4) up through harness channel (3). Insert harness into upper license plate bracket harness clips (1).
3. Place clean shop towels over fender struts. With the aid of an assistant, carefully install rear fender onto vehicle.
4. See Figure 2-234. With assistant holding rear fender in place, install screw (5) through fender and frame tab.

Install washer (2) on screw. Thread seat post (1) onto screw. Tighten seat post only finger tight at this time.

5. **H-DSSS equipped vehicles:** Make sure antenna harness feeds up between oil tank and fender on right side of vehicle. and is not pinched between fender and frame crossmember.

6. Remove shop towels from fender struts.

7. See Figure 2-233. Install fender strut covers (1) with attached turn signal lamp assemblies. Carefully feed each turn signal harness through appropriate hole in fender strut and fender as you install each strut cover.

8. Thread nut (6) onto each rear turn signal stalk finger-tight. Install two forward fender support screws with washers (2). Thread nut (4) onto each screw finger-tight.

9. **HDI models:** hook tab of license plate bracket into slot in rear fender brace.

10. Place rear fender brace (7) in position under fender and secure with screw and washer (10) finger-tight. Install two aft fender support screws with washers (3).
    a. **HDI models:** thread each mounting screw through rear fender brace, into threaded inserts in license plate bracket. Install finger-tight. Make sure threaded inserts in license plate bracket fit into holes in rear fender brace.
    b. **Domestic models:** see Figure 2-236. Install nut plate (2) on each mounting screw (5) finger-tight.

NOTE

Domestic models: *see Figure 2-236. Make certain that tab (3) on each nut plate (2) fits into slot (4) in fender brace (1) when securing nut plate with rearmost fender mounting screw (5).*

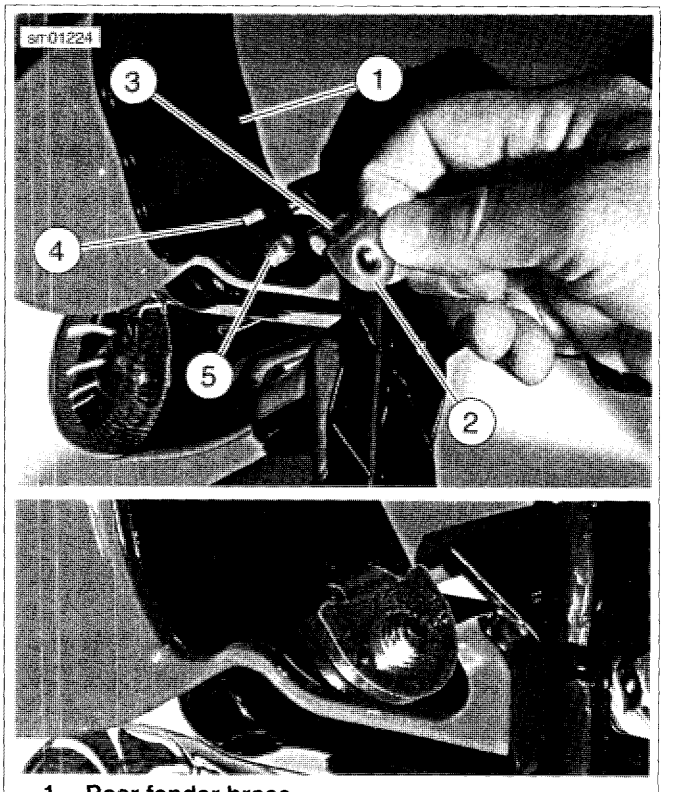

1. **Rear fender brace**
2. **Nut plate (2)**
3. **Tab**
4. **Slot**
5. **Mounting screw (2)**

Figure 2-236. Rear Fender Nut Plate (Domestic Only)

11. Now tighten all fender mounting hardware in the following sequence:
    a. See Figure 2-234. Tighten screw (5) and seat post (1) to 96-156 **in-lbs** (10.9-17.6 Nm).
    b. See Figure 2-233. Tighten left and right turn signal stalk nuts (6) to 132-216 **in-lbs** (14.9-24.4 Nm).
    c. Tighten forward and aft fender support screws (2, 3) on both sides of fender to 132-216 **in-lbs** (14.9-24.4 Nm).
    d. Tighten rear fender brace screw (10) to 20-25 **in-lbs** (2.3-2.8 Nm).

12. See Figure 2-231. Install left rear lighting harness (3) and license plate lamp harness (6) into fender harness clip (1) on left side of fender. Install right rear lighting harness (2) into fender harness clip on right side of fender.

13. Carefully feed both rear lighting harnesses and license plate lamp harness through feed-through holes (4, 5) in rear fender.

14. Plug in license plate lamp connector [40]. Plug in left rear lighting harness connector [18].

15. Plug in right rear lighting harness connector [19]. This connector is identified by a brown band on the harness near the connector.

⚠WARNING

After installing seat, pull upward on seat to be sure it is locked in position. While riding, a loose seat can shift causing loss of control, which could result in death or serious injury. (00070b)

16. Install seat.

17. Lower motorcycle enough to install upper shock bolts. See 2.25 SHOCK ABSORBERS, Installation.

18. Plug in main fuse. See 6.35 MAIN FUSE.

⚠WARNING

Be sure headlamp, tail and stop lamp and turn signals are operating properly before riding. Poor visibility of rider to other motorists can result in death or serious injury. (00478b)

19. Turn ignition switch ON. Verify all rear lighting is operating properly: license plate lamp, tail lamps, brake lamps and turn signals.

REMOVAL

1. Remove rider's seat and passenger pillion.

⚠WARNING

To prevent accidental vehicle start-up, which could cause death or serious injury, remove main fuse before proceeding. (00251b)

2. Unplug main fuse. See 6.35 MAIN FUSE.
3. See Figure 2-237. Remove three bolts and washers (1). Remove two bolts (2) and retainers (3). Lift tail section (4) off from motorcycle.
4. Remove screw (5). Rotate inner fender (6) down and release tabs (7) from notches in frame.
5. Disconnect ECM connector and remove inner fender and ECM as an assembly. Remove ECM from inner fender if necessary.

INSTALLATION

1. See Figure 2-237. If removed, install passenger pillion retainer post (9). Tighten screw (8) to 36-60 **in-lbs** (4.1-6.8 Nm).
2. If removed, install ECM on inner fender.
3. While holding inner fender/ECM assembly in place, connect ECM connector.
4. Ensure tabs (7) are located in notches in frame and secure inner fender with screw (5). Tighten to 72-120 **in-lbs** (8.1-13.6 Nm).

NOTE

Washers and retainers (3) are installed with shoulder down.

5. Install tail section (4) and secure with bolts, washers, and seat retainers. Tighten bolts to 72-120 **in-lbs** (8.1-13.6 Nm).

⚠WARNING

After installing seat, pull upward on seat to be sure it is locked in position. While riding, a loose seat can shift causing loss of control, which could result in death or serious injury. (00070b)

6. Install passenger pillion and rider's seat.
7. Install main fuse.

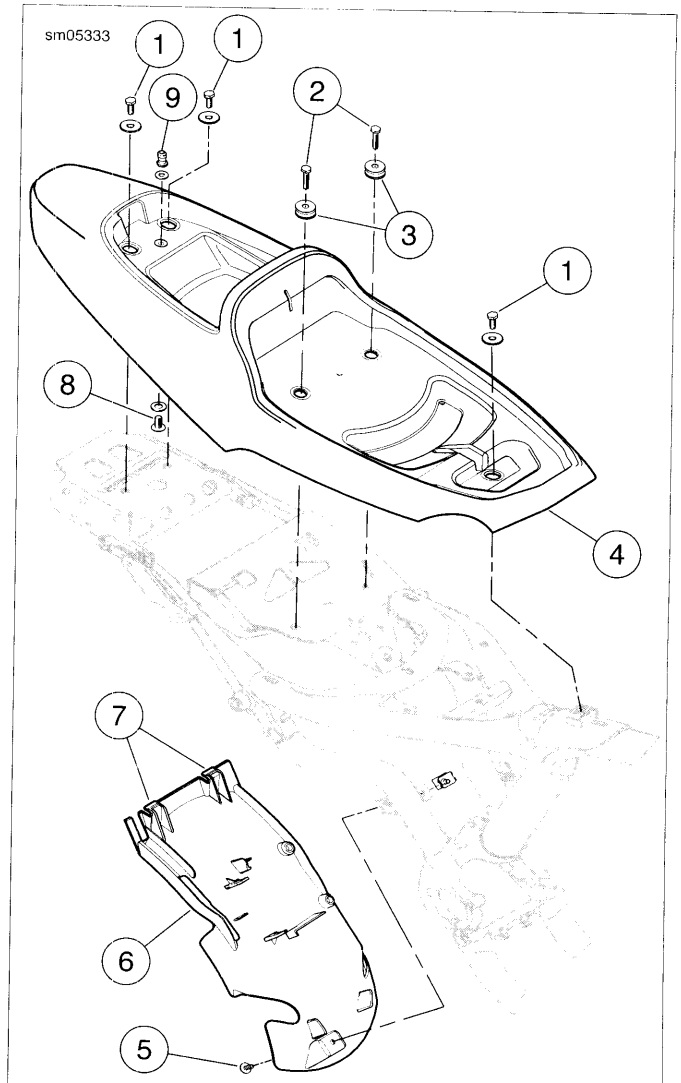

1. **Bolt and washer, short (3)**
2. **Bolt, long (2)**
3. **Seat retainer (2)**
4. **Tail section**
5. **Screw, inner fender**
6. **Inner fender**
7. **Tabs**
8. **Pillion retainer post screw**
9. **Passenger pillion retainer post**

Figure 2-237. Rear Fender: XR Models

GENERAL

See Figure 2-238. The vehicle is equipped with a jiffy stand (or side stand) that locks when placed in the full forward position (down) with the full weight of the vehicle resting on it.

⚠WARNING

The jiffy stand locks when placed in the full forward (down) position with vehicle weight on it. If the jiffy stand is not in the full forward (down) position with vehicle weight on it, the vehicle can fall over which could result in death or serious injury. (00006a)

⚠WARNING

Always park motorcycle on a level, firm surface. An unbalanced motorcycle can fall over, which could result in death or serious injury. (00039a)

⚠WARNING

Be sure jiffy stand is fully retracted before riding. If jiffy stand is not fully retracted, it can contact the road surface causing a loss of vehicle control, which could result in death or serious injury. (00007a)

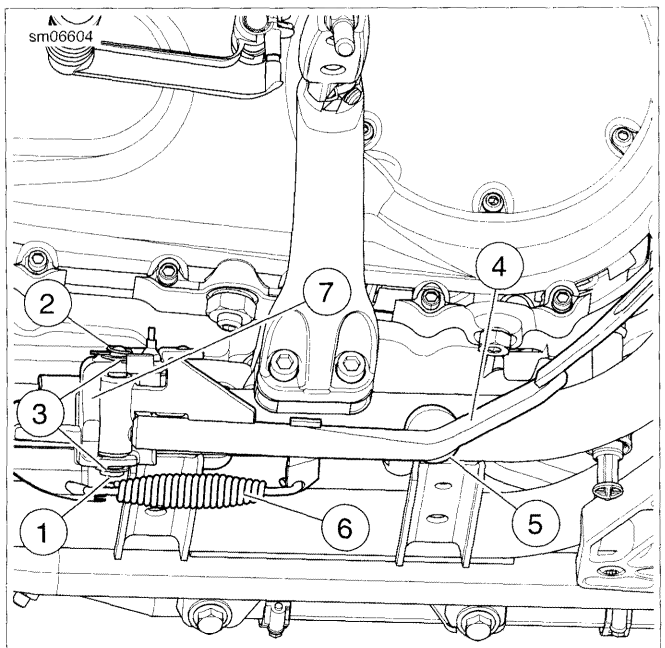

1. **Clevis pin**
2. **Pretzel clip**
3. **Bushing (2)**
4. **Jiffy stand leg**
5. **Rubber bumper**
6. **Spring**
7. **Jiffy stand yoke**

Figure 2-238. Jiffy Stand (Retracted Position) (Typical)

JIFFY STAND INTERLOCK: INTERNATIONAL MODELS

Some international models are equipped with a jiffy stand interlock feature.

The vehicle will start and run with the jiffy stand down while the transmission is in neutral. If the jiffy stand is down, the transmission is in gear, and the clutch is released, the vehicle will stall. The message "SidE StAnd" will scroll across the odometer to indicate this to the rider. Raising the jiffy stand (or putting the transmission in neutral) will permit the engine to run and clear the message.

If the jiffy stand falls out of the fully retracted position while riding at speeds greater than 10 mph (15 km/h), then the jiffy stand interlock system will maintain engine operation and alert the rider about this by illuminating the indicators (flash twice) and scroll the message "SidE StAnd" across the odometer. The message will remain until the system detects the jiffy stand in the fully retracted position again. The rider may continue to operate the vehicle while in this mode.

The rider may clear the text messages at any time by pressing the function switch once while the vehicle is powered up.

REMOVAL

1. Block motorcycle under frame so that motorcycle is securely resting upright and jiffy stand may be moved through its full range of travel.
2. See Figure 2-238. Remove rubber bumper (5) from frame to permit further retraction of jiffy stand leg (4). Additional spring tension relief allows for easier spring removal.
3. See Figure 2-239. Place jiffy stand leg in retracted position. Remove and discard pretzel clip (3).

⚠WARNING

Wear safety glasses or goggles when removing or installing spring. Spring tension can cause spring, attached components and/or hand tools to fly out which could result in death or serious injury. (00477c)

4. While firmly holding jiffy stand leg (5) in fully retracted position, withdraw clevis pin (1) until it disengages from upper pivot hole of jiffy stand yoke (4).
5. Detach spring (6) from anchor pin (7) using pliers. Unhook other end of spring from jiffy stand leg.
6. Remove clevis pin from lower pivot hole of jiffy stand yoke. Remove jiffy stand leg. Remove upper and lower bushings (2).

CLEANING AND LUBRICATION

PART NUMBER	TOOL NAME
98960-97	SILVER GRADE ANTI-SEIZE

Clean and lubricate jiffy stand assembly every 5000 miles (8000 km). Proceed as follows:

1. See Figure 2-239. See 2.36 JIFFY STAND, Removal above to remove jiffy stand from motorcycle frame.

2. Thoroughly clean all jiffy stand components, including frame-mounted anchor pin and jiffy stand yoke (4).

3. Apply a small amount of SILVER GRADE ANTI-SEIZE (Part No. 98960-97) to pivot holes of jiffy stand leg (5) and yoke, groove of anchor pin and O.D. of clevis pin (1).

4. See 2.36 JIFFY STAND, Installation to install jiffy stand to motorcycle frame.

INSTALLATION

1. Clean and lubricate jiffy stand components according to procedure listed in 2.36 JIFFY STAND, Cleaning and Lubrication above.

NOTE

See Figure 2-238. When installing jiffy stand spring (6), make sure open ends of spring hooks face inward toward centerline of vehicle, as shown in the figure.

WARNING

Wear safety glasses or goggles when removing or installing spring. Spring tension can cause spring, attached components and/or hand tools to fly out which could result in death or serious injury. (00477c)

2. See Figure 2-239. Hook either end of spring (6) into spring mounting hole on jiffy stand leg (5). Install other end of spring over frame mounted anchor pin (7).

3. Install bushing (2) onto clevis pin (1) with shoulder of bushing facing head of clevis pin.

4. While holding end of spring in groove of anchor pin and holding jiffy stand leg in its retracted position, place pivot end of jiffy stand leg into yoke (4) on motorcycle frame. Insert clevis pin (1) up through lower pivot hole of yoke and halfway into pivot hole of jiffy stand leg.

5. See Figure 2-238. Lift jiffy stand leg (4) upward, aligning pivot hole of jiffy stand leg with slotted upper hole of yoke (7). Push clevis pin through upper hole in yoke. Make certain that shank of lower bushing (3) fits inside lower pivot hole in yoke.

6. Install upper bushing with shoulder facing up, over end of clevis pin and against upper surface of yoke. Insert new pretzel clip (2) through hole in end of clevis pin.

NOTE

See Figure 2-240. Make sure the loop of the pretzel clip snaps over the end of the clevis pin.

7. See Figure 2-238. Press rubber bumper (5) onto mounting stud on motorcycle frame.

8. Extend and retract jiffy stand leg several times to check for proper operation. In retracted position (up), jiffy stand leg should be securely seated against frame-mounted rubber bumper.

9. Place jiffy stand in its full forward position (down). Carefully remove support blocking from beneath motorcycle frame. Rest motorcycle on jiffy stand.

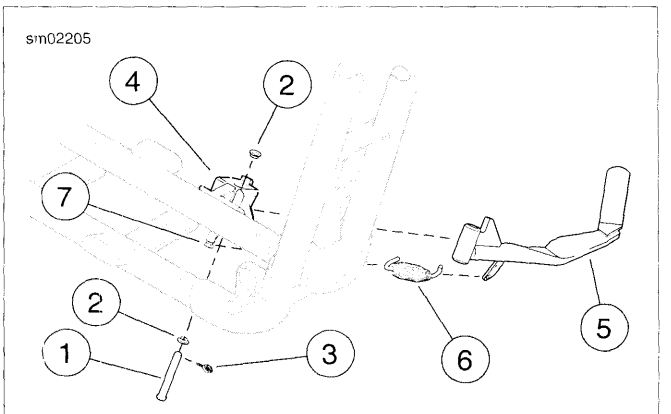

1. **Clevis pin**
2. **Bushing (2)**
3. **Pretzel clip**
4. **Jiffy stand yoke**
5. **Jiffy stand leg**
6. **Spring**
7. **Anchor pin**

Figure 2-239. Jiffy Stand

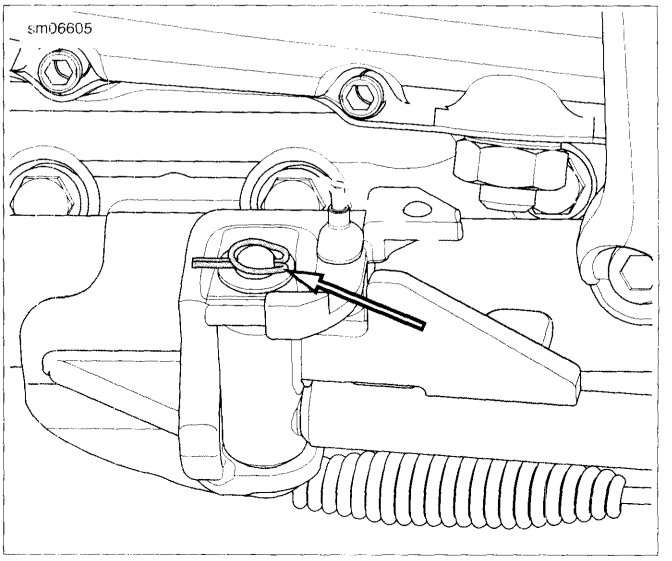

Figure 2-240. Pretzel Clip

GENERAL

The seat is attached to the vehicle at three points.

1. See Figure 2-241. The tongue (1) fits under the rear fuel tank bracket.
2. The keyhole (2) locks into the seat post (See Figure 2-242).
3. See Figure 2-243. The mounting bracket (2) bolts to the seat with two screws (5) and lock washers (6), and attaches to a seat nut (4) in the rear fender with a screw (1).

SEAT REMOVAL: XL MODELS

1. See Figure 2-243. Remove screw (1) to detach seat from rear fender.
2. Slide seat forward and lift up slightly to detach keyhole bracket from seat post. Then slide seat rearward to detach seat tongue from rear fuel tank bracket.
3. See Figure 2-241. Verify that tongue (1) and keyhole bracket (2) are tightly secured to seat bottom and that no rivets are loose or missing.
4. See Figure 2-243. If two-up seat (8), inspect passenger strap (9) for damage or excessive wear.

NOTE

The passenger strap is not sold separately. If it is damaged, excessively worn or otherwise unusable, the entire seat assembly must be replaced.

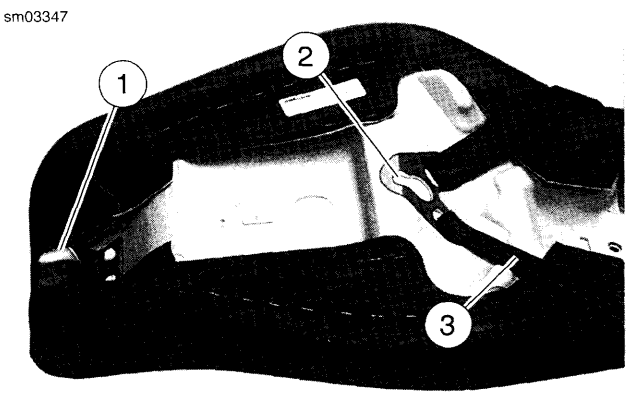

1. **Tongue**
2. **Keyhole bracket**
3. **Passenger strap**

Figure 2-241. Seat

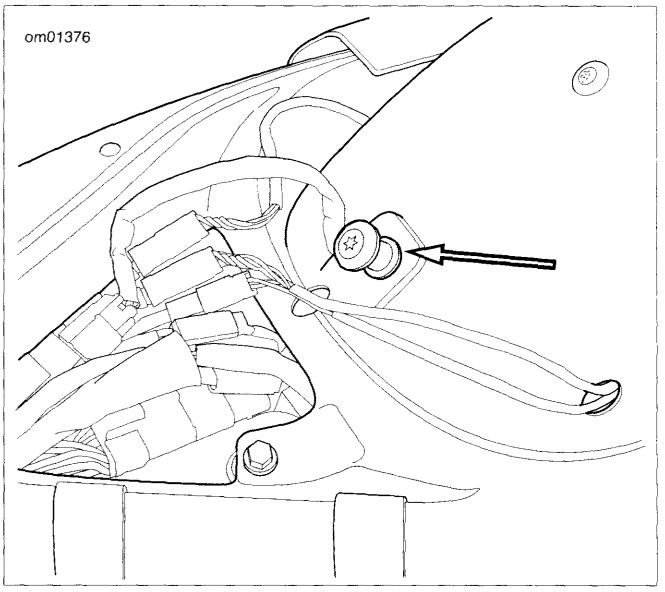

Figure 2-242. Seat Post: XL Models

SEAT INSTALLATION: XL MODELS

1. See Figure 2-243. Position seat on frame with mounting bracket at rear.
2. Slide seat forward until the tongue fits snugly under rear fuel tank bracket.
3. See Figure 2-242. Push seat forward, engage keyhole onto seat post, then pull seat back slightly.
4. See Figure 2-243. Install seat mounting screw with captive washer (1) to fasten seat mounting bracket to top of rear fender. Mounting bracket of solo seat uses forward hole in rear fender; dual seat uses rearward hole.
5. Pull up on seat to verify that it is locked in place.
6. Tighten seat mounting screw.

⚠WARNING

After installing seat, pull upward on seat to be sure it is locked in position. While riding, a loose seat can shift causing loss of control, which could result in death or serious injury. (00070b)

7. Pull up on seat again to verify that it is properly secured at all three points.

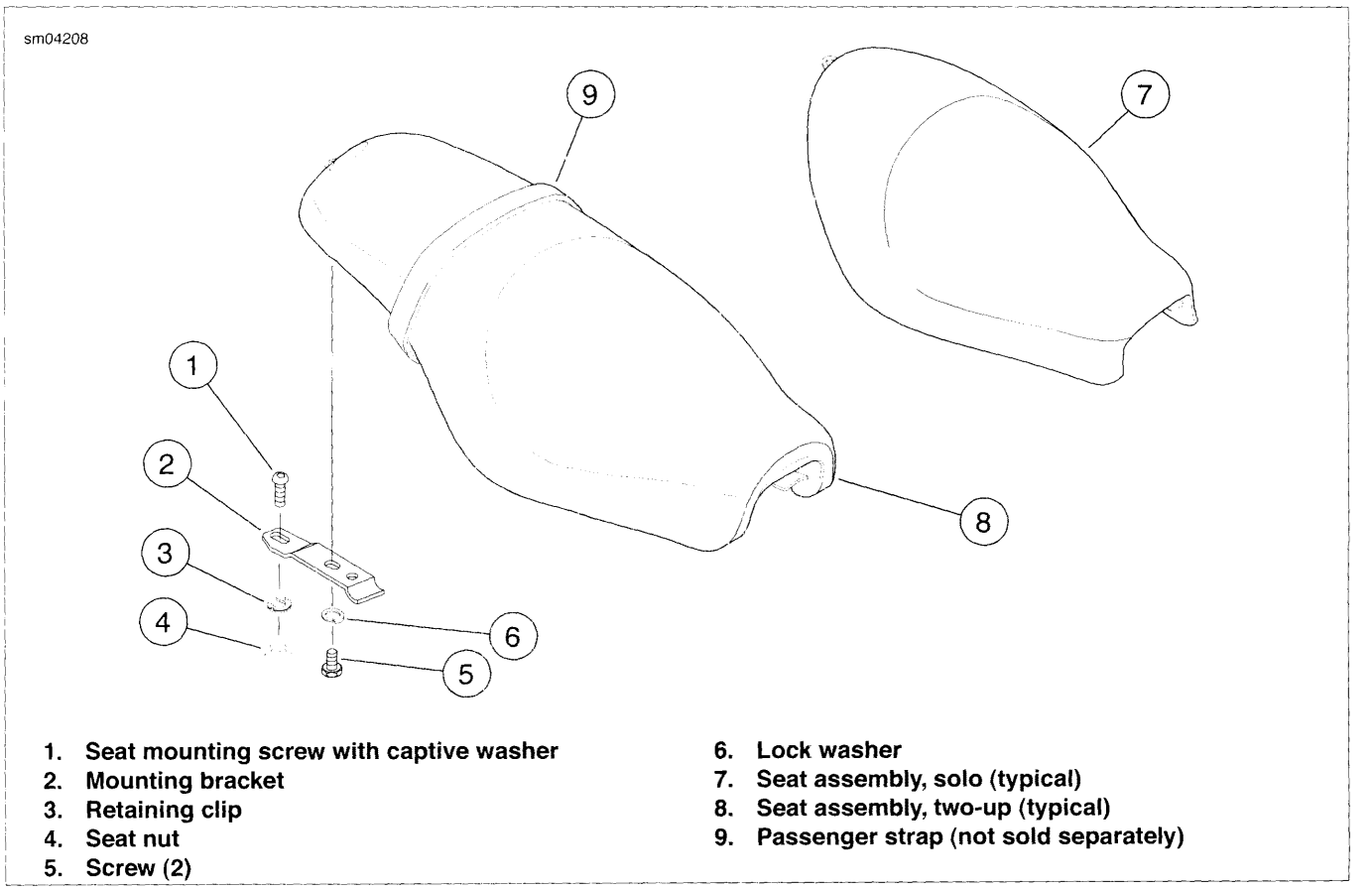

1. Seat mounting screw with captive washer
2. Mounting bracket
3. Retaining clip
4. Seat nut
5. Screw (2)
6. Lock washer
7. Seat assembly, solo (typical)
8. Seat assembly, two-up (typical)
9. Passenger strap (not sold separately)

Figure 2-243. Seat Assembly: Sportster XL Models

SEAT REMOVAL: XR MODELS

1. See Figure 2-244. Reach under front end of tail section and press the two seat tabs inward.
2. Pull front of seat upward to disengage seat from the front end of the tail section.
3. Pull seat forward over fuel tank.

NOTES

- *When removing the seat, verify that the mounting bracket under the seat is tightly secured to the seat bottom and that no rivets are loose or missing. Inspect passenger strap for damage or excessive wear.*
- *The passenger strap is not sold separately. If it is damaged, excessively worn, or otherwise unusable, the entire seat must be replaced.*

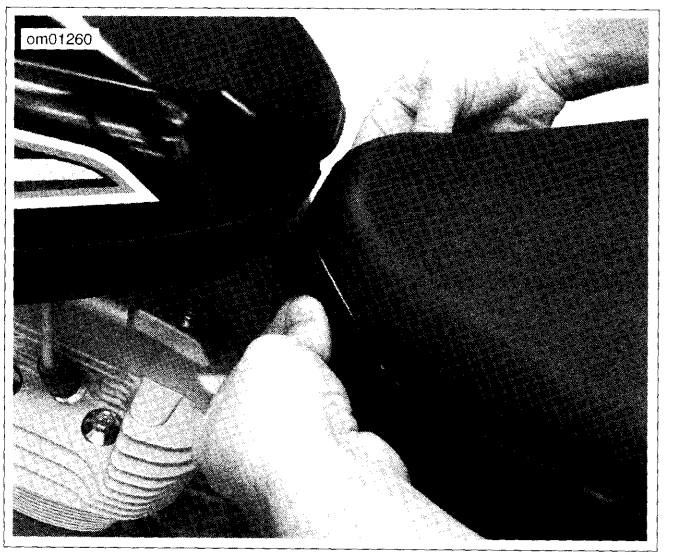

Figure 2-244. Front Seat Tabs (Under Tail Section): XR Models

SEAT INSTALLATION: XR MODELS

1. See Figure 2-245. Place rear of seat into tail section, aligning the guides in the seat bracket with the two seat posts.
2. Push down on front of seat until the two tabs engage the front end of tail section.

⚠WARNING

After installing seat, pull upward on seat to be sure it is locked in position. While riding, a loose seat can shift causing loss of control, which could result in death or serious injury. (00070b)

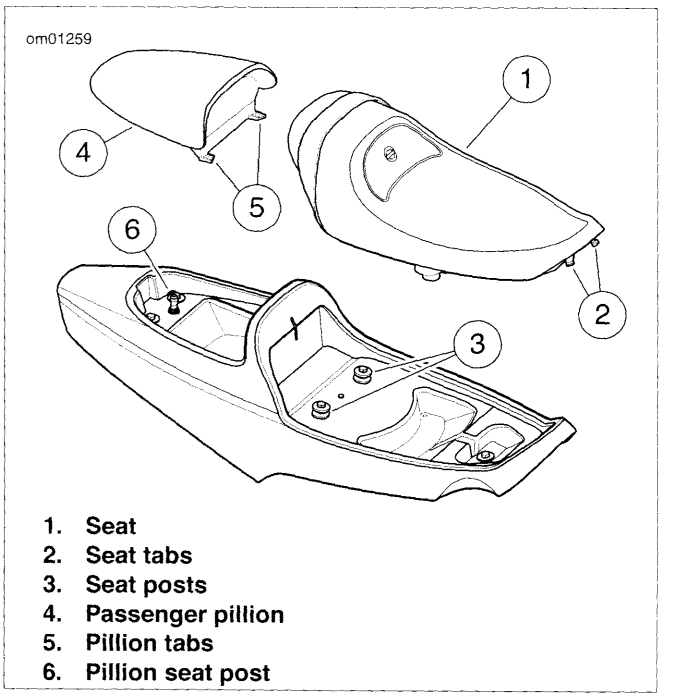

1. **Seat**
2. **Seat tabs**
3. **Seat posts**
4. **Passenger pillion**
5. **Pillion tabs**
6. **Pillion seat post**

Figure 2-245. Seat and Pillion: XR Models

PASSENGER PILLION: XR MODELS

Removal

1. See Figure 2-246. Lift the rear of pillion to disengage grommet from the seat post.
2. Pull pillion out from tail section.

Installation

1. See Figure 2-246. Insert pillion into trunk, aligning tabs on pillion with the slots in the trunk.
2. Push down firmly on rear of pillion until grommet fully engages the seat post.

⚠WARNING

After installing seat, pull upward on seat to be sure it is locked in position. While riding, a loose seat can shift causing loss of control, which could result in death or serious injury. (00070b)

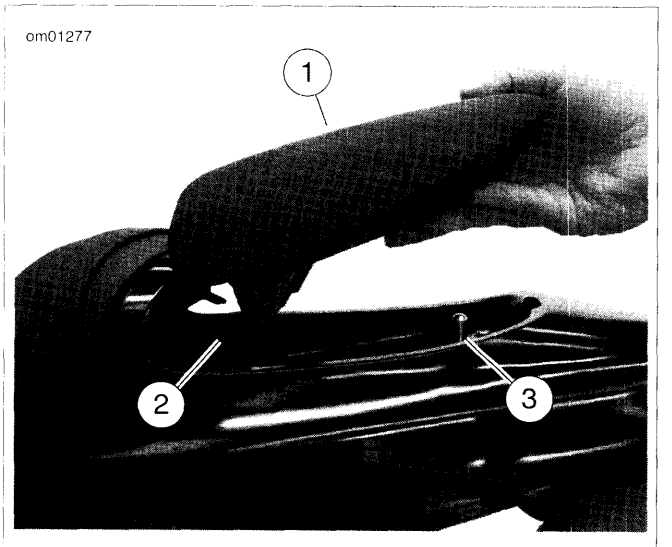

1. Pillion
2. Tabs
3. Seat post

Figure 2-246. Passenger Pillion: XR Models

RIGHT FOOTREST AND REAR BRAKE PEDAL ASSEMBLY

Removal

1. Remove front muffler. See 4.14 EXHAUST SYSTEM: XL MODELS.
2. See Figure 2-247. Remove retaining ring (3), clevis pin (5), footrest (1) and spring washer (2). Discard retaining ring.
3. Remove brake rod (7) from brake pedal (8) and master cylinder bell crank (19).
4. Remove retaining ring (26), screw (11) and clevis (4). Slide brake pedal (8) off clevis. Discard retaining ring.
5. Remove two screws (9) and right rider footrest/brake pedal support bracket (10) from frame (12).

Installation

1. See Figure 2-247. Mount right rider footrest/brake pedal support bracket (10) to frame (12) with two screws (9). Tighten to 45-50 ft-lbs (61-68 Nm).
2. Slide brake pedal (8) onto clevis (4). Mount clevis on right rider footrest/brake pedal support bracket. Line up hole in clevis with hole in support bracket. Secure with screw (11). Tighten to 13-17 ft-lbs (17.6-23.0 Nm). Install **new** retaining ring (26) on end of clevis.
3. Install footrest (1) on clevis with spring washer (2). Make sure spring washer is positioned inside clevis with the square edge toward the inside. Align holes and push clevis pin (5) from top down through hole in clevis. Secure with **new** retaining ring (3).
4. Apply two drops of LOCTITE THREADLOCKER 243 (blue) to threads of both brake rod ball stud screws.
5. Thread one end of brake rod (7) into master cylinder bell crank (19). Tighten to 120-180 **in-lbs** (13.6-20.4 Nm).
6. Thread other end of brake rod into brake pedal. Tighten to 120-180 **in-lbs** (13.6-20.4 Nm).
7. Install front muffler. See 4.14 EXHAUST SYSTEM: XL MODELS.

LEFT FOOTREST AND SHIFT LEVER ASSEMBLY

Removal

1. See Figure 2-247. Remove retaining ring (15), clevis pin (17), footrest (18) and spring washer (16). Discard retaining ring.
2. Remove two screws (14) and left rider footrest support bracket (13) from frame (12).
3. Remove screw (27) and shifter peg (25).
4. Remove pinch screw (22) and washer (23). Remove shift lever assembly (24) and rubber washer (21).

Installation

1. See Figure 2-247. Install rubber washer (21) and shift lever (24) on transmission shift lever shaft. Secure with washer (23) and pinch screw (22). Tighten to 16-20 ft-lbs (21.7-27.1 Nm).
2. If re-using shifter peg screw (27), clean screw threads and apply one or two drops of LOCTITE THREADLOCKER 243 (blue) to threads.

NOTE

*The previous step is not necessary for a **new** shifter peg screw as it has a built-in lock patch.*

3. Install shifter peg (25) and secure with screw (27). Tighten screw to 96-144 **in-lbs** (10.9-16.3 Nm).
4. Attach rider footrest support bracket (13) to frame (12) with two screws (14). Tighten to 45-50 ft-lbs (61-68 Nm).
5. Install footrest (18) on footrest support bracket with spring washer (16). Make sure spring washer is positioned inside support bracket mounting boss with the square edge toward the inside. Align holes and push clevis pin (17) from top down through hole in support bracket. Secure with **new** retaining ring (15).

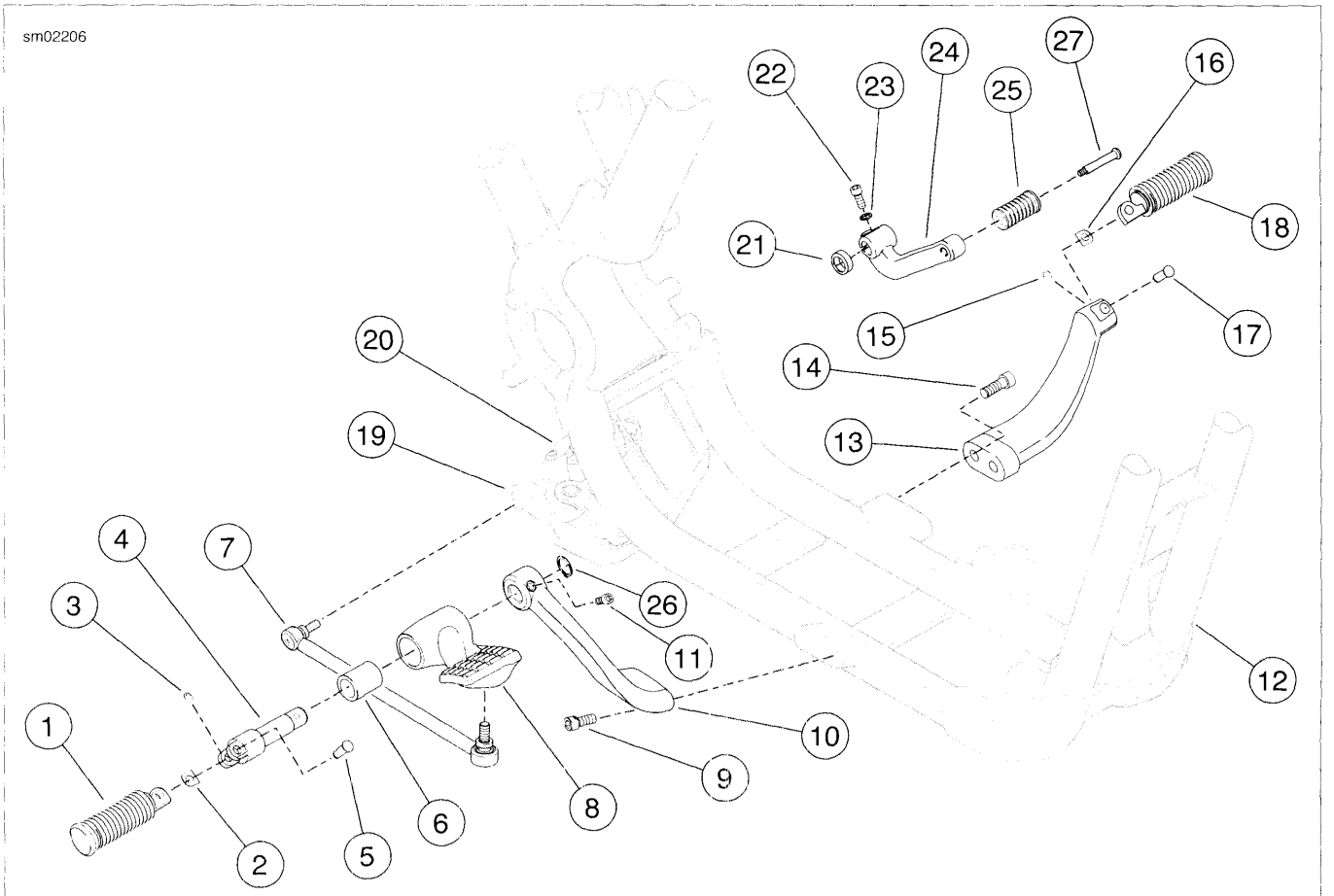

1. Footrest
2. Spring washer
3. Retaining ring
4. Rider footrest clevis
5. Clevis pin
6. Bushing
7. Rear brake rod assembly
8. Rear brake pedal
9. Screw (2)
10. Right rider footrest/brake pedal support bracket
11. Screw
12. Frame
13. Left rider footrest support bracket
14. Screw (2)
15. Retaining ring
16. Spring washer
17. Clevis pin
18. Footrest
19. Bell crank
20. Rear brake master cylinder and bracket assembly
21. Rubber washer
22. Pinch screw
23. Washer
24. Shift lever
25. Shifter peg
26. Retaining ring
27. Screw, shifter peg

Figure 2-247. Mid-Mount Controls: Rider Footrests/Foot Controls

RIGHT FOOTREST AND REAR BRAKE PEDAL ASSEMBLY

Removal

1. See Figure 2-248. Remove retaining ring (2), clevis pin (5), footrest (1) and spring washer (3). Discard retaining ring.
2. Remove brake rod (8) from brake pedal (7) and master cylinder bell crank (14).
3. Remove retaining ring (16), screw (11) and clevis (4). Slide brake pedal off clevis. Discard retaining ring.
4. Remove two screws (9), footrest/brake pedal support bracket (10) and j-clip (12) from frame (13).

Installation

1. See Figure 2-248. Position j-clip (12) against frame as shown. Mount footrest/brake pedal support bracket (10) and j-clip to frame (13) with screws (9). Tighten to 45-50 ft-lbs (61-68 Nm).
2. Slide brake pedal (7) onto clevis (4). Mount clevis on footrest/brake pedal support bracket. Line up hole in clevis with hole in support bracket. Secure with screw (11). Tighten to 13-17 ft-lbs (17.6-23.0 Nm). Install **new** retaining ring (16) on end of clevis.
3. Install footrest (1) on clevis with spring washer (3). Make sure spring washer is positioned inside clevis with the square edge toward the inside. Align holes and push clevis pin (5) from top down through hole in clevis. Secure with **new** retaining ring (2).
4. Apply two drops of LOCTITE THREADLOCKER 243 (blue) to threads of both brake rod ball stud screws.
5. Thread one end of brake rod (8) into master cylinder bell crank (14). Tighten to 120-180 **in-lbs** (13.6-20.4 Nm).
6. Thread other end of brake rod into brake pedal. Tighten to 120-180 **in-lbs** (13.6-20.4 Nm).

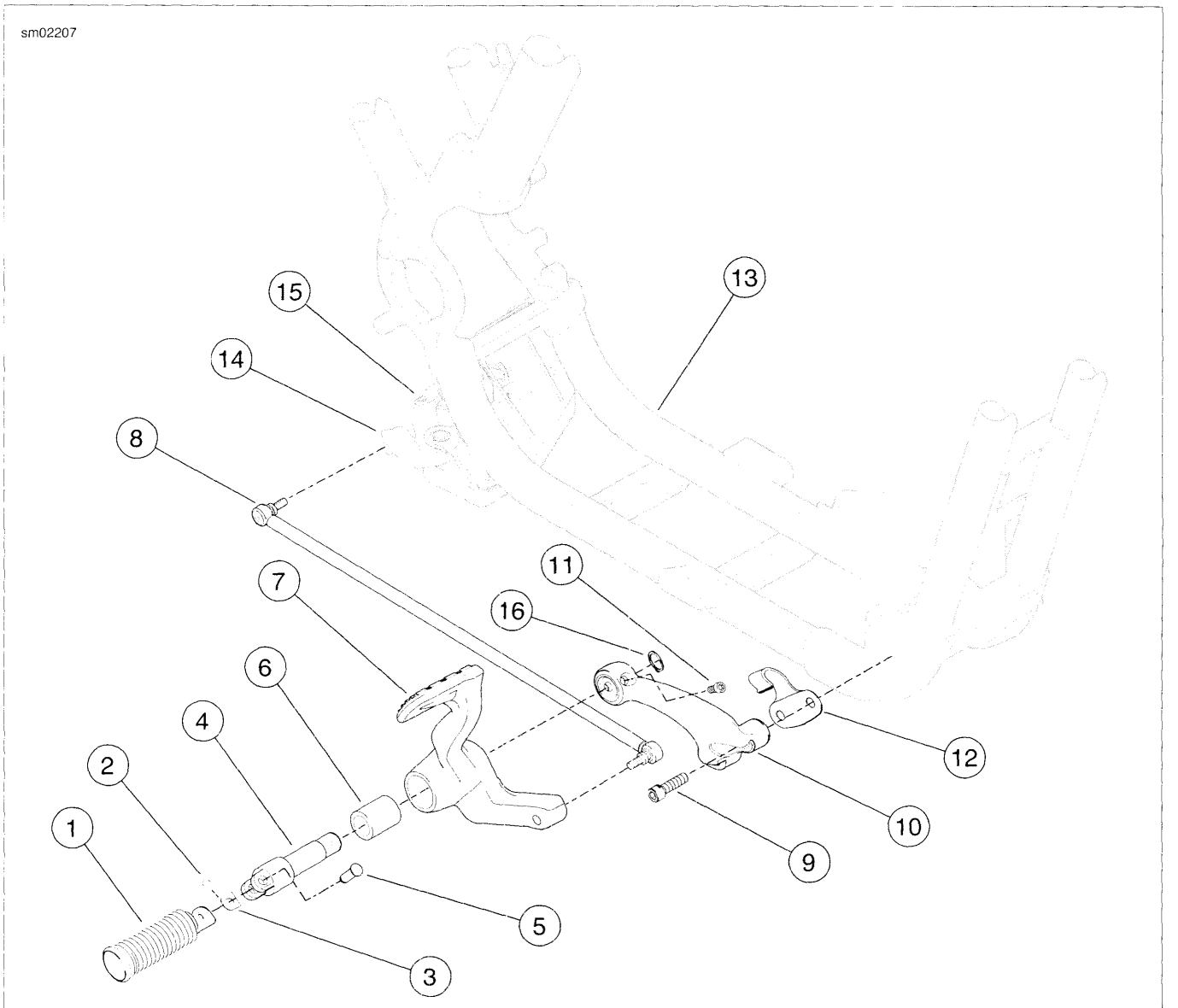

1. Footrest
2. Retaining ring
3. Spring washer
4. Clevis
5. Clevis pin
6. Bushing
7. Brake pedal
8. Brake rod assembly
9. Screw (2)
10. Footrest/brake pedal support bracket
11. Screw
12. J-clip
13. Frame
14. Bell crank
15. Rear brake master cylinder and bracket assembly
16. Retaining ring

Figure 2-248. Forward Controls - Brake Side

LEFT FOOTREST AND SHIFT LEVER ASSEMBLY

Removal

1. See Figure 2-249. Remove retaining ring (13), clevis pin (17), footrest (16) and spring washer (15). Discard retaining ring.
2. Remove screw (21) and shifter peg (18).
3. Remove shifter rod assembly (4) from shifter lever assembly (12) and shift lever (3).
4. Remove retaining ring (20), screw (10) and clevis (14). Slide shifter lever assembly off clevis. Discard retaining ring.
5. Remove two screws (9), footrest/shifter lever support bracket (8) and j-clip (7) from frame.
6. Remove pinch screw (1), washer (2), shift lever (3) and rubber washer (19) from transmission shift shaft.

Installation

1. See Figure 2-249. Install rubber washer (19) and shift lever (3) onto transmission shifter shaft, with shift lever arm pointing straight down. Secure with pinch screw (1) and washer (2). Tighten pinch screw to 16-20 ft-lbs (21.7-27.1 Nm).
2. Mount j-clip (7) and footrest/shift lever support bracket (8) to frame with two screws (9). Tighten to 45-50 ft-lbs (61-68 Nm).
3. Slide shifter lever assembly (12) onto clevis (14). Mount clevis on footrest/shifter lever support bracket. Line up hole in clevis with hole in support bracket. Secure with screw (10). Tighten to 13-17 ft-lbs (17.6-23.0 Nm). Install retaining ring (20) on end of clevis.
4. Mount footrest (16) on clevis with spring washer (15). Make sure spring washer is positioned inside clevis with the square edge toward the inside. Align holes and push clevis pin (17) from top down through hole in clevis. Secure with **new** retaining ring (13).
5. Thread screw (5) in one end of shifter rod assembly (4) into shift lever (3). Tighten to 120-180 **in-lbs** (13.6-20.4 Nm).
6. Thread screw (6) in other end of shifter rod into shift lever assembly. Tighten to 120-180 **in-lbs** (13.6-20.4 Nm).
7. If re-using shifter peg screw (21), clean screw threads and apply one or two drops of LOCTITE THREADLOCKER 243 (blue) to threads.

NOTE

*The previous step is not necessary for a **new** shifter peg screw as it has a built-in lock patch.*

8. Install shifter peg (18) and secure with screw (21). Tighten screw to 96-144 **in-lbs** (10.9-16.3 Nm).

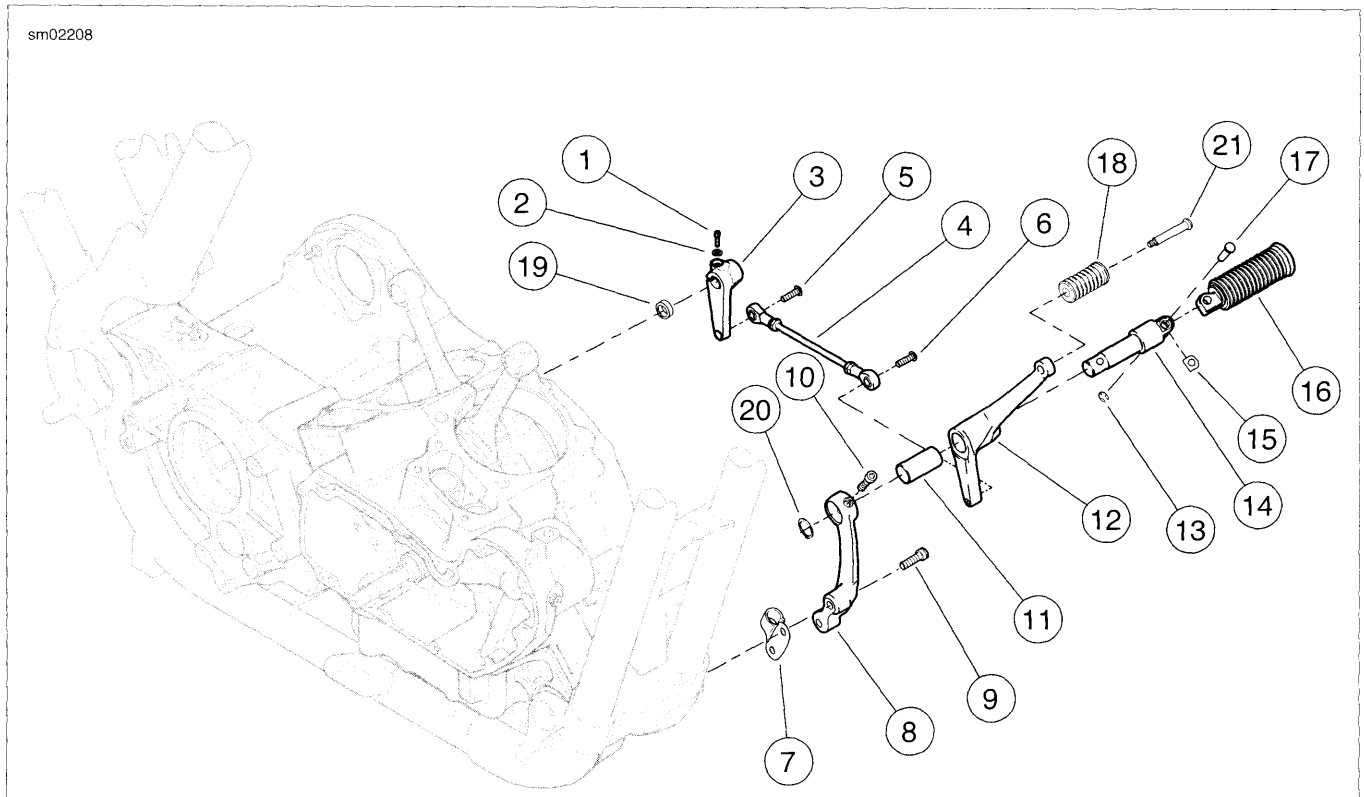

1. **Pinch screw**
2. **Washer**
3. **Shift lever**
4. **Shifter rod assembly**
5. **Screw**
6. **Screw**
7. **J-clip**
8. **Footrest/shifter lever support bracket**
9. **Screw (2)**
10. **Screw**
11. **Bushing**
12. **Shifter lever assembly**
13. **Retaining ring**
14. **Clevis**
15. **Spring washer**
16. **Footrest**
17. **Clevis pin**
18. **Shifter peg**
19. **Rubber washer**
20. **Retaining ring**
21. **Screw, shifter peg**

Figure 2-249. Forward Controls - Shifter Side

ADJUSTING SHIFT PEDAL

The foot shift linkage is set at the factory and normally should need no adjustment. However, the shift linkage can be adjusted for rider preference.

See Figure 2-250. Adjust shifter rod assembly (4) length until shifter lever assembly (5) is at 45° as shown in the figure:

1. Loosen lock nuts (3) on both ends of shifter rod.
2. Remove screw (1) securing ball joint (2) to shifter lever assembly.
3. Turn ball joint or shifter rod to adjust rod length. Temporarily attach ball joint to shifter lever assembly and check angle. Make sure an equal number of threads are visible on both ends of shifter rod.
4. When angle of shift lever assembly is at 45 degrees, install screw (1). Tighten to 120-180 **in-lbs** (13.6-20.4 Nm).
5. Holding shifter rod so that it does not turn, tighten lock nuts on both ends to 84-132 **in-lbs** (9.5-14.9 Nm) .

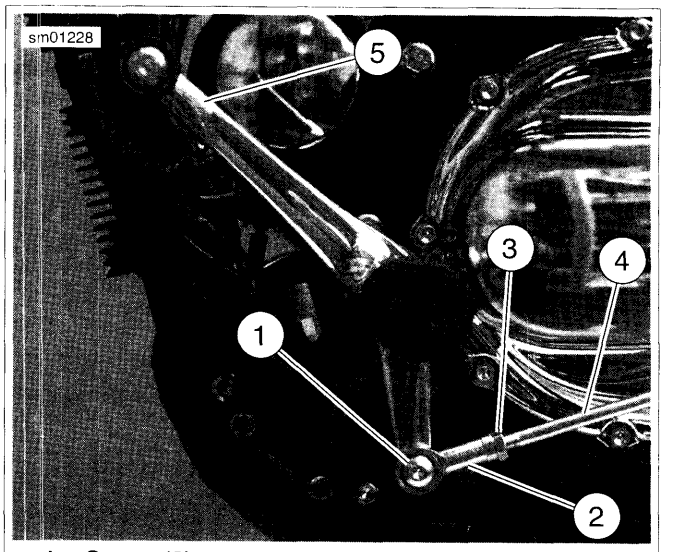

1. **Screw (2)**
2. **Ball joint (2)**
3. **Lock nut (2)**
4. **Shifter rod assembly**
5. **Shifter lever assembly**

Figure 2-250. Adjusting Shift Pedal: Models with Forward Controls

RIGHT FOOTREST AND REAR BRAKE PEDAL ASSEMBLY

Removal

1. Remove clevis pin connecting master cylinder to brake pedal. See 2.13 REAR BRAKE MASTER CYLINDER: XR MODELS.
2. If necessary, remove wear peg (11).
3. See Figure 2-251. Remove retaining ring (10) and washer (9). Discard retaining ring.
4. Remove clevis pin (5), spring (7), and footrest (8).
5. Remove bolt (3), footrest clevis (6), and brake pedal (4).
6. If necessary, remove bracket (1). The master cylinder must be disconnected from the bracket or brake line disconnected prior to removing the two fasteners (2). See 2.13 REAR BRAKE MASTER CYLINDER: XR MODELS.

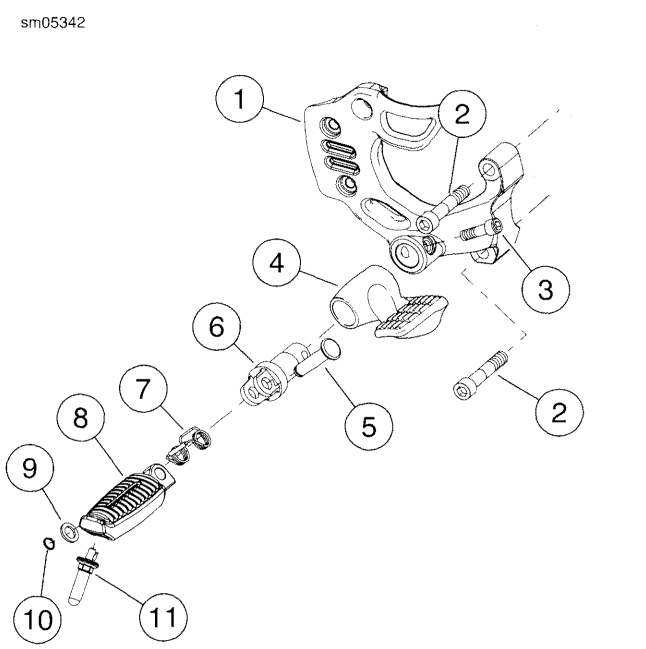

1. **Master cylinder/footrest bracket**
2. **Fastener**
3. **Footrest clevis bolt**
4. **Brake pedal**
5. **Clevis pin**
6. **Footrest clevis**
7. **Spring**
8. **Footrest**
9. **Washer**
10. **Retaining ring**
11. **Wear peg**

Figure 2-251. Rider Foot Control, Right Side: XR Models

Installation

1. If removed, install master cylinder/footrest bracket. See 2.13 REAR BRAKE MASTER CYLINDER: XR MODELS.
2. See Figure 2-251. Install brake pedal on footrest clevis and install footrest clevis. Tighten bolt (3) to 13-17 ft-lbs (17.6-23.0 Nm).
3. Install footrest (8) and spring (7) on clevis and secure with clevis pin (5). Install washer (9) and **new** retaining ring (10).
4. If removed, install wear peg and tighten to 72-108 **in-lbs** (8.1-12.2 Nm).
5. Connect brake pedal to master cylinder. See 2.13 REAR BRAKE MASTER CYLINDER: XR MODELS.

LEFT FOOTREST AND SHIFT LEVER ASSEMBLY

Removal

1. See Figure 2-252. Remove fasteners (11) and remove linkage (12).
2. If necessary, remove wear peg (9).
3. Remove retaining ring (4) and washer (5). Discard retaining ring.
4. Remove clevis pin (10), spring (7), and footrest (8).
5. Remove bolt (3), footrest clevis (6), and foot shift lever (15).
6. Remove shifter peg (13).
7. If necessary, remove fasteners (2) and bracket (1).

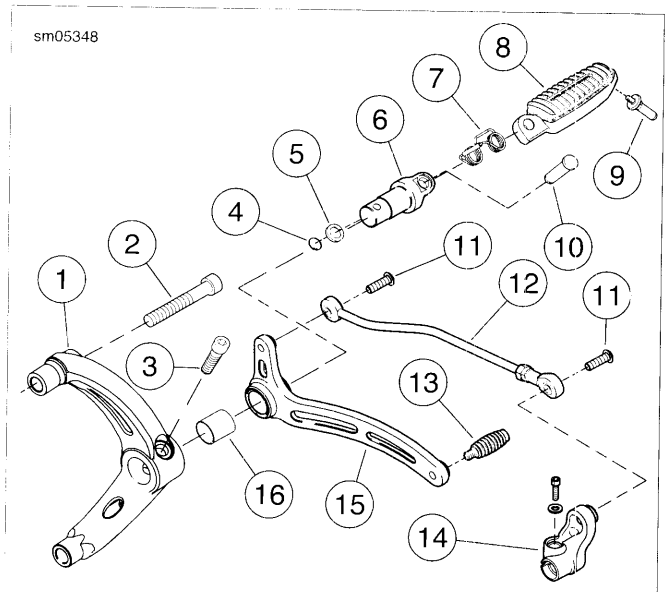

1. **Bracket**
2. **Fastener (2)**
3. **Footrest clevis bolt**
4. **Retaining ring**
5. **Washer**
6. **Footrest clevis**
7. **Spring**
8. **Footrest**
9. **Wear peg**
10. **Clevis pin**
11. **Fastener (2)**
12. **Shift linkage**
13. **Shifter peg**
14. **Transmission shift lever**
15. **Foot shift lever**
16. **Bushing**

Figure 2-252. Rider Foot Control, Left Side: XR Models

Installation

1. See Figure 2-252. If removed, install bracket (1). Tighten fasteners (2) to 45-50 ft-lbs (61.0-67.8 Nm).
2. Install foot shift lever on footrest clevis and install footrest clevis. Tighten bolt (3) to 13-17 ft-lbs (17.6-23.0 Nm).
3. Install footrest (8) and spring (7) on clevis and secure with clevis pin (10). Install washer (5) and **new** retaining ring (4).
4. Install shifter peg (13) and tighten to 96-144 **in-lbs** (10.9-16.3 Nm).
5. If removed, install wear peg and tighten to 72-108 **in-lbs** (8.1-12.2 Nm).
6. Connect linkage (12) between foot shift lever (15) and transmission shift lever (14) using fasteners (11). Tighten to 120-180 **in-lbs** (13.6-20.3 Nm).
7. Check shift linkage adjustment and adjust as necessary.

ADJUSTING SHIFT PEDAL

The foot shift linkage is set at the factory and normally should need no adjustment. However, the shift linkage can be adjusted for rider preference.

See Figure 2-253. Adjust shifter rod assembly (4) length until shifter lever assembly (5) is at approximately 20 degrees from horizontal as shown in the figure.

1. Loosen jam nut (3) on front end of shifter rod.
2. Remove screw (1) securing ball joint (2) to shifter arm (6).
3. Turn ball joint in one direction or the other to adjust rod length as necessary. Temporarily attach ball joint to shifter arm and check angle.
4. When angle of shift lever assembly is at 20 degrees, install screw (1). Tighten to 120-180 **in-lbs** (13.6-20.4 Nm).
5. Holding ball joint with a wrench on the flats, tighten the jamnuts to 84-132 **in-lbs** (9.5-14.9 Nm).

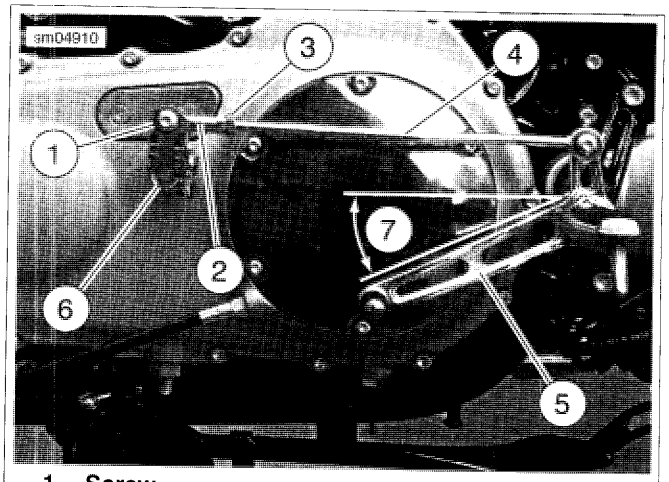

1. **Screw**
2. **Ball joint**
3. **Jam nut**
4. **Shifter rod**
5. **Shifter lever assembly**
6. **Shifter arm**
7. **20°**

Figure 2-253. Adjusting Shift Pedal: XR Models

GENERAL

Passenger footrest assemblies are standard equipment on certain models only.

XL MODELS

Removal

1. See Figure 2-254. Remove retaining ring (1), clevis pin (2), footrest (3) and spring washer (4). Discard retaining ring.
2. Remove two screws (5) and footrest support bracket (6) from frame (7).

Installation

NOTE

See Figure 2-254. On left side of vehicle, a B-clip (8) is positioned between footrest support bracket (6) and lower support bracket hole on frame (7). Make sure this clip is positioned between footrest support bracket and frame when attaching support bracket in the next step.

1. See Figure 2-254. Attach footrest support bracket (6) to frame (7) with two screws (5). Tighten to 45-50 ft-lbs (61-68 Nm).
2. Install footrest (3) on footrest support bracket with spring washer (4). Make sure spring washer is positioned inside support bracket mounting boss with the square edge toward the inside.
3. Align holes and push clevis pin (2) from top down through hole in support bracket. Secure with **new** retaining ring (1).

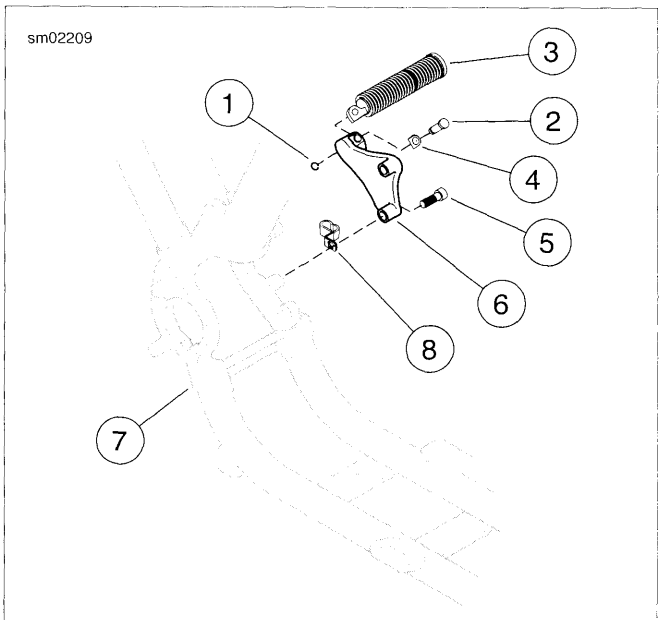

1. **Retaining ring**
2. **Clevis pin**
3. **Footrest**
4. **Spring washer**
5. **Screw (2)**
6. **Footrest support bracket**
7. **Frame**
8. **B-clip (left side only)**

Figure 2-254. Passenger Footrest Assembly (Not Standard Equipment on Some Models)

XR MODELS

Removal

1. See Figure 2-255. Remove retaining ring (1), clevis pin (2), footrest (3) and spring washer (4). Discard retaining ring.
2. On right side of vehicle, remove screw (8) securing muffler bracket (6) to footrest support bracket (7).
3. Remove two screws (5) and footrest support bracket from frame.

Installation

1. See Figure 2-255. Attach footrest support bracket (7) to frame with two screws (5). Tighten to 45-50 ft-lbs (61-68 Nm).
2. Attach muffler bracket (6) to footrest support bracket with screw (8). Tighten to 15-19 ft-lbs (20.4-25.8 Nm).
3. Install footrest (3) on footrest support bracket with spring washer (4). Make sure spring washer is positioned inside support bracket mounting boss with the square edge toward the inside.
4. Align holes in footrest and support bracket and push clevis pin (2) from top down through hole in support bracket. Secure with **new** retaining ring (1).

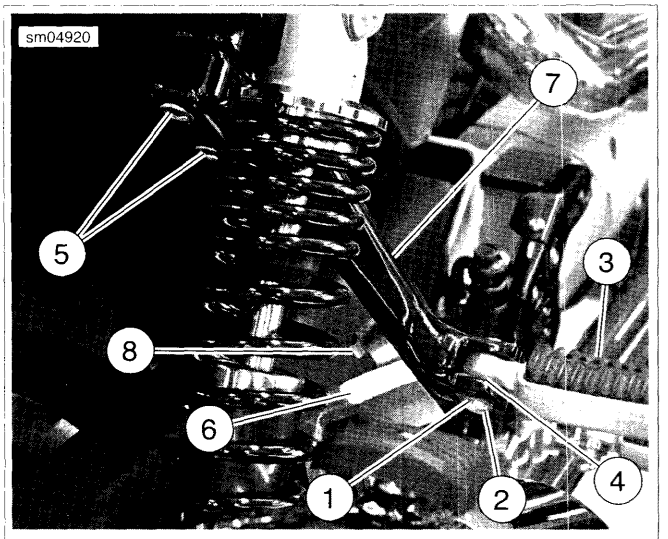

1. Retaining ring
2. Clevis pin
3. Footrest
4. Spring washer
5. Screw (2)
6. Muffler bracket (right side only)
7. Footrest support bracket
8. Screw (right side only)

Figure 2-255. Passenger Footrest Assembly: (XR 1200 Only/Right Side Shown)

REMOVAL

⚠WARNING

To prevent spray of fuel, purge system of high-pressure fuel before supply line is disconnected. Gasoline is extremely flammable and highly explosive, which could result in death or serious injury. (00275a)

1. Purge the fuel supply hose of high pressure gasoline. Disconnect fuel supply hose from fuel pump module. See 4.5 FUEL TANK: XL MODELS or 4.6 FUEL TANK: XR MODELS.

⚠WARNING

To prevent accidental vehicle start-up, which could cause death or serious injury, remove main fuse before proceeding. (00251b)

2. Unplug main fuse. See 6.35 MAIN FUSE.
3. Prepare vehicle for fork lock replacement.
   a. **All models:** remove fuel tank. See 4.5 FUEL TANK: XL MODELS or 4.6 FUEL TANK: XR MODELS. Turn front forks fully to the left.
   b. **XL 883C/XL 1200C models:** remove handlebar upper clamp/speedometer housing. See 2.31 HANDLEBARS. Secure handlebar assembly out of the way.
4. See Figure 2-256. See Figure 2-257. Using a 5/64 in. drill bit, carefully drill a hole in the center of the lock pin.

NOTE

Take time to carefully orient drill bit to center of lock pin. If drill bit slides off-center, removal of lock pin will be difficult.

5. See Figure 2-258. To remove lock pin, insert a screw extractor into the 5/64 in. hole. Hold body of screw extractor with a pliers or tap handle and using a small hammer gently "tap" on the pliers or tap handle to remove lock pin.
6. Remove lock assembly.

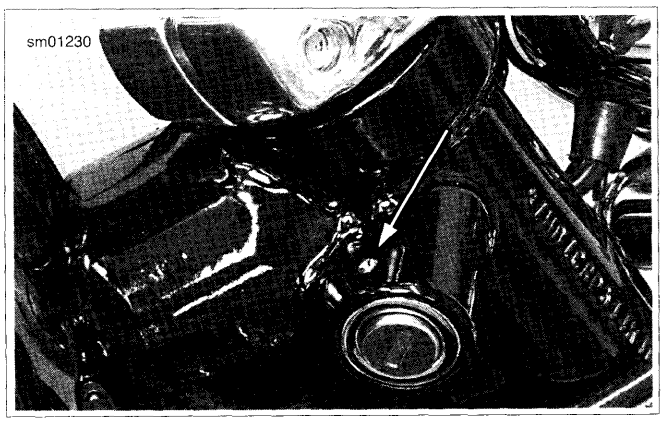

Figure 2-256. Fork Lock Pin

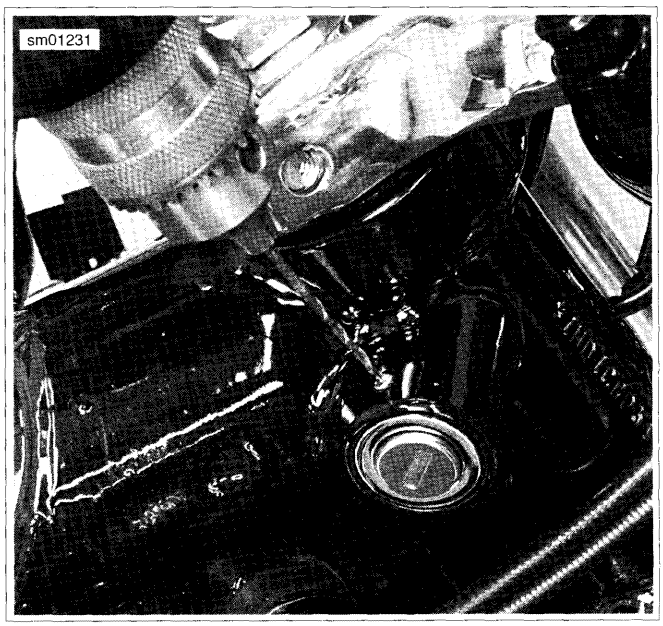

Figure 2-257. Drilling Lock Pin

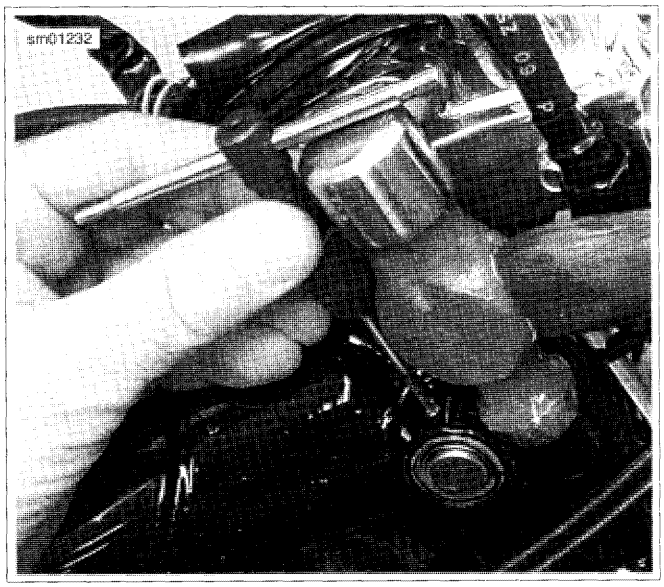

Figure 2-258. Removing Lock Pin

INSTALLATION

1. Insert **new** lock assembly in frame lock housing.
2. Align lock pin hole in **new** lock assembly with hole in the frame lock housing.
3. Drive **new** lock pin in position (flush with frame lock housing).

4. Reassemble motorcycle.
   a. **XL 883C/XL 1200C models:** Install handlebar assembly and upper clamp/speedometer housing. See 2.31 HANDLEBARS.
   b. **All models:** install fuel tank. See 4.5 FUEL TANK: XL MODELS or 4.6 FUEL TANK: XR MODELS.
5. Verify proper operation of fork lock.
   a. Turn front forks fully to the left.
   b. Insert key into fork lock. Turn key 90 degrees clockwise.
   c. Verify that front forks are locked and cannot be turned.
   d. Turn key 90 degrees counterclockwise and remove from fork lock.
   e. Verify that front forks are now free to fully turn right and left.
6. Plug in main fuse. See 6.35 MAIN FUSE.

NOTES

SUBJECT	PAGE NO.
3.1 FASTENER TORQUE VALUES	3-1
3.2 SPECIFICATIONS	3-5
3.3 ENGINE	3-11
3.4 OIL PRESSURE	3-12
3.5 CRANKCASE BREATHING SYSTEM: XL MODELS	3-15
3.6 CRANKCASE BREATHING SYSTEM: XR MODELS	3-16
3.7 TROUBLESHOOTING	3-18
3.8 ENGINE LUBRICATION SYSTEM	3-20
3.9 HOW TO USE THIS SECTION	3-29
3.10 TOP END SERVICE	3-30
3.11 BOTTOM END SERVICE	3-32
3.12 REMOVING ENGINE FROM CHASSIS	3-34
3.13 INSTALLING ENGINE IN CHASSIS	3-43
3.14 PRECISION COOLING SYSTEM: XR MODELS	3-48
3.15 TOP END OVERHAUL: DISASSEMBLY	3-54
3.16 TOP END OVERHAUL: ASSEMBLY	3-63
3.17 BOTTOM END OVERHAUL: DISASSEMBLY	3-74
3.18 BOTTOM END OVERHAUL: ASSEMBLY	3-79
3.19 VALVE TAPPETS	3-92
3.20 GEARCASE COVER AND CAM GEARS	3-93
3.21 CYLINDER HEAD	3-99
3.22 CYLINDER AND PISTON	3-113
3.23 CRANKCASE	3-121
3.24 OIL PUMP: XL MODELS	3-129
3.25 OIL PUMP: XR MODELS	3-132
3.26 OIL FILTER MOUNT	3-136
3.27 OIL TANK	3-137

FASTENER TORQUE VALUES IN THIS CHAPTER

The table below lists torque values for all fasteners presented in this chapter.

FASTENER	TORQUE VALUE		NOTES
Anti-rotation device mounting screw	80-110 **in-lbs**	9.0-12.4 Nm	3.18 BOTTOM END OVERHAUL: ASSEMBLY, Tappets
Axle nut, rear	95-105 ft-lbs	129-142 Nm	3.13 INSTALLING ENGINE IN CHASSIS, Procedure: XL Models
Axle nut, rear	95-105 ft-lbs	129-142 Nm	3.13 INSTALLING ENGINE IN CHASSIS, Procedure: XR Models
Brake (rear) hose clamp-to-frame screw	30-40 **in-lbs**	3.4-4.5 Nm	3.13 INSTALLING ENGINE IN CHASSIS, Procedure: XL Models
Brake rear master cylinder reservoir mounting screw	20-25 **in-lbs**	2.3-2.8 Nm	3.13 INSTALLING ENGINE IN CHASSIS, Procedure: XL Models
Breather screw	35-55 **in-lbs**	4.0-6.2 Nm	3.16 TOP END OVERHAUL: ASSEMBLY, Rocker Covers
Crankcase fastener	15-19 ft-lbs	20.3-25.8 Nm	3.18 BOTTOM END OVERHAUL: ASSEMBLY, Crankcase
Cylinder head bolts	96-120 **in-lbs**	11-14 Nm	3.16 TOP END OVERHAUL: ASSEMBLY, Cylinder Head/See procedure
Cylinder head bolts	13-15 ft-lbs	18-20 Nm	3.16 TOP END OVERHAUL: ASSEMBLY, Cylinder Head/See procedure
Cylinder head bolts	96-120 **in-lbs**	11-14 Nm	3.16 TOP END OVERHAUL: ASSEMBLY, Cylinder Head/See procedure
Cylinder head bolts	13-15 ft-lbs	18-20 Nm	3.16 TOP END OVERHAUL: ASSEMBLY, Cylinder Head/See procedure
Cylinder head bracket screw	17-24 ft-lbs	23.1-32.6 Nm	3.13 INSTALLING ENGINE IN CHASSIS, Procedure: XL Models
Cylinder head bracket screw	17-24 ft-lbs	23.1-32.6 Nm	3.16 TOP END OVERHAUL: ASSEMBLY, Assembling Motorcycle After Top End Repair
Cylinder head oil feed flare fitting, Precision Cooling	22-26 ft-lbs	29.8-35.3 Nm	3.14 PRECISION COOLING SYSTEM: XR MODELS, Cylinder Head Oil Feed Assembly
Cylinder head oil feed line flare nut, Precision Cooling	13-17 ft-lbs	17.6-23.0 Nm	3.14 PRECISION COOLING SYSTEM: XR MODELS, Cylinder Head Oil Feed Assembly
Cylinder stud	120-240 **in-lbs**	13.6-27.1 Nm	3.18 BOTTOM END OVERHAUL: ASSEMBLY, Crankcase
Exhaust pipe clamp bracket screw	30-33 ft-lbs	40.7-44.8 Nm	3.13 INSTALLING ENGINE IN CHASSIS, Procedure: XL Models
Footrest bracket fastener	45-50 ft-lbs	61.0-67.8 Nm	3.13 INSTALLING ENGINE IN CHASSIS, Procedure: XR Models
Footrest mount fastener	45-50 ft-lbs	61.0-67.8 Nm	3.13 INSTALLING ENGINE IN CHASSIS, Procedure: XR Models
Front cylinder oil line retainer nut	84-108 **in-lbs**	9.5-12.2 Nm	3.14 PRECISION COOLING SYSTEM: XR MODELS, Cylinder Head Oil Return Lines
Front engine mount bolt	95-105 ft-lbs	129-142 Nm	3.13 INSTALLING ENGINE IN CHASSIS, Procedure: XL Models
Front engine mount bolt	95-105 ft-lbs	129 -142 Nm	3.13 INSTALLING ENGINE IN CHASSIS, Procedure: XR Models

FASTENER	TORQUE VALUE		NOTES
Fuel tank mounting screw	15-20 ft-lbs	20.4-27.1 Nm	3.13 INSTALLING ENGINE IN CHASSIS, Procedure: XL Models
Fuel tank mounting screw	15-20 ft-lbs	20.4-27.1 Nm	3.13 INSTALLING ENGINE IN CHASSIS, Procedure: XR Models
Fuel tank mounting screw	15-20 ft-lbs	20.4-27.1 Nm	3.16 TOP END OVERHAUL: ASSEMBLY, Assembling Motorcycle After Top End Repair
Gearcase/oil pump housing cover fastener	80-110 **in-lbs**	9.0-12.4 Nm	3.25 OIL PUMP: XR MODELS, Assembly
Gearcase and oil pump cover fastener	80-110 **in-lbs**	9.0-12.4 Nm	3.18 BOTTOM END OVERHAUL: ASSEMBLY, Cam Gears and Gearcase Cover: XR Models
Gearcase cover fastener: XR models	80-110 **in-lbs**	9.0-12.4 Nm	3.18 BOTTOM END OVERHAUL: ASSEMBLY, Cam Gears and Gearcase Cover: XR Models
Gearcase cover screw	80-110 **in-lbs**	9.0-12.4 Nm	3.18 BOTTOM END OVERHAUL: ASSEMBLY, Cam Gears and Gearcase Cover: XL Models
Gearcase housing plug	108-156 **in-lbs**	12.2-17.6 Nm	3.25 OIL PUMP: XR MODELS, Assembly
High pressure feed hose fitting (to crankcase)	60-90 **in-lbs**	6.8-10.2 Nm	3.24 OIL PUMP: XL MODELS, Installation
High pressure feed hose fitting nut	85-105 **in-lbs**	9.6-11.8 Nm	3.24 OIL PUMP: XL MODELS, Installation
Ignition switch mounting screw	34-45 **in-lbs**	4.0-5.1 Nm	3.13 INSTALLING ENGINE IN CHASSIS, Procedure: XL Models
Ignition switch mounting screw	34-45 **in-lbs**	4.0-5.1 Nm	3.13 INSTALLING ENGINE IN CHASSIS, Procedure: XR Models
Induction module cover-to-cylinder head fastener	20-24 ft-lbs	27.1-32.5 Nm	3.13 INSTALLING ENGINE IN CHASSIS, Procedure: XR Models
Induction module cover-to-induction module fastener	84-108 **in-lbs**	9.5-12.2 Nm	3.13 INSTALLING ENGINE IN CHASSIS, Procedure: XR Models
Induction module cover-to-wire form fastener	84-108 **in-lbs**	9.5-12.2 Nm	3.13 INSTALLING ENGINE IN CHASSIS, Procedure: XR Models
Inner rocker cover bolt, large	18-22 ft-lbs	24.4-29.8 Nm	3.16 TOP END OVERHAUL: ASSEMBLY, Rocker Covers
Inner rocker cover bolt, small	135-155 **in-lbs**	15.3-17.5 Nm	3.16 TOP END OVERHAUL: ASSEMBLY, Rocker Covers
Inner rocker cover screw	135-155 **in-lbs**	15.3-17.5 Nm	3.16 TOP END OVERHAUL: ASSEMBLY, Rocker Covers
Isolator mount screw, front	25-35 ft-lbs	33.9-47.5 Nm	3.13 INSTALLING ENGINE IN CHASSIS, Procedure: XL Models
Isolator mount screw, front	25-35 ft-lbs	33.9-47.5 Nm	3.13 INSTALLING ENGINE IN CHASSIS, Procedure: XR Models
Isolator mount screw, rear	25-35 ft-lbs	33.9-47.5 Nm	3.13 INSTALLING ENGINE IN CHASSIS, Procedure: XL Models
Isolator mount screw, rear	25-35 ft-lbs	33.9-47.5 Nm	3.13 INSTALLING ENGINE IN CHASSIS, Procedure: XR Models
Lower front retainer plate fastener	45-50 ft-lbs	61.0-67.8 Nm	3.13 INSTALLING ENGINE IN CHASSIS, Procedure: XR Models
Lower shock absorber fastener	45-50 ft-lbs	61.0-67.8 Nm	3.13 INSTALLING ENGINE IN CHASSIS, Procedure: XR Models
Oil cooler fastener	36-60 **in-lbs**	4.1-6.8 Nm	3.13 INSTALLING ENGINE IN CHASSIS, Procedure: XR Models/Apply Loctite Threadlocker 243 (blue)

FASTENER	TORQUE VALUE		NOTES
Oil cooler fastener	36-60 **in-lbs**	4.1-6.8 Nm	3.14 PRECISION COOLING SYSTEM: XR MODELS, Oil Cooler/Apply Loctite Threadlocker 243 (blue)
Oil deflector plate screw	25-35 **in-lbs**	2.8-3.9 Nm	3.18 BOTTOM END OVERHAUL: ASSEMBLY, Crankcase
Oil filter adapter	96-144 **in-lbs**	10.9-16.3 Nm	3.26 OIL FILTER MOUNT, Assembly
Oil pressure indicator switch	50-70 **in-lbs**	5.6-7.9 Nm	3.26 OIL FILTER MOUNT, Assembly
Oil pump cover screws	70-80 **in-lbs**	7.9-9.0 Nm	3.24 OIL PUMP: XL MODELS, Assembly
Oil pump feed fitting	100-120 **in-lbs**	11.3-13.6 Nm	3.24 OIL PUMP: XL MODELS, Installation
Oil pump rotor cover screw: XR models	80-110 **in-lbs**	9.0-12.4 Nm	3.18 BOTTOM END OVERHAUL: ASSEMBLY, Cam Gears and Gearcase Cover: XR Models
Oil pump rotor cover screw: XR models	80-110 **in-lbs**	9.0-12.4 Nm	3.25 OIL PUMP: XR MODELS, Assembly
Oil pump-to-crankcase screw	125-150 **in-lbs**	14.1-16.9 Nm	3.24 OIL PUMP: XL MODELS, Installation
Oil tank mounting screw	36-60 **in-lbs**	4.1-6.8 Nm	3.27 OIL TANK, Installation
Outer rocker cover screw	120-168 **in-lbs**	13.5-19.0 Nm	3.16 TOP END OVERHAUL: ASSEMBLY, Rocker Covers
Passenger footrest support bracket screw	45-50 ft-lbs	61-68 Nm	3.13 INSTALLING ENGINE IN CHASSIS, Procedure: XL Models
Pinion shaft locking nut	19-21 ft-lbs	26-29 Nm	3.18 BOTTOM END OVERHAUL: ASSEMBLY, Cam Gears and Gearcase Cover: XL Models/ plus an additional 15-19 degrees of rotation
Pinion shaft locking nut	19-21 ft-lbs	26-29 Nm	3.18 BOTTOM END OVERHAUL: ASSEMBLY, Cam Gears and Gearcase Cover: XR Models/ plus an additional 15-19 degrees of rotation
Piston oil jet screw	25-35 **in-lbs**	2.8-4.0 Nm	3.18 BOTTOM END OVERHAUL: ASSEMBLY, Crankcase
Precision cooling check valve housing fastener	84-108 **in-lbs**	9.5-12.2 Nm	3.14 PRECISION COOLING SYSTEM: XR MODELS, Cylinder Head Oil Feed Assembly
Precision cooling check valve housing fastener	84-108 **in-lbs**	9.5-12.2 Nm	3.18 BOTTOM END OVERHAUL: ASSEMBLY, Cam Gears and Gearcase Cover: XR Models
Precision cooling check valve plug fitting	15-21 ft-lbs	20.3-28.5 Nm	3.14 PRECISION COOLING SYSTEM: XR MODELS, Cylinder Head Oil Feed Assembly
Push rod retainer screw	80-110 **in-lbs**	9.0-12.4 Nm	3.16 TOP END OVERHAUL: ASSEMBLY, Push Rods, Covers, and Retainers
Quick connect fitting	108-156 **in-lbs**	12.2-17.6 Nm	3.14 PRECISION COOLING SYSTEM: XR MODELS, Oil Pump Lines
Quick connect fitting, cylinder head return oil	108-156 **in-lbs**	12.2-17.6 Nm	3.14 PRECISION COOLING SYSTEM: XR MODELS, Cylinder Head Oil Return Lines
Rear fork pivot/engine mount bolt	60-70 ft-lbs	81.4-95.0 Nm	3.13 INSTALLING ENGINE IN CHASSIS, Procedure: XL Models
Rear fork pivot/engine mount bolt	60-70 ft-lbs	81.4-95.0 Nm	3.13 INSTALLING ENGINE IN CHASSIS, Procedure: XR Models
Rear rigid oil line retainer screw	84-108 **in-lbs**	9.5-12.2 Nm	3.14 PRECISION COOLING SYSTEM: XR MODELS, Cylinder Head Oil Return Lines
Rear rigid oil line retainer screw	84-108 **in-lbs**	9.5-12.2 Nm	3.14 PRECISION COOLING SYSTEM: XR MODELS, Oil Pump Lines
Rear stop light switch bracket screw	72-120 **in-lbs**	8.1-13.6 Nm	3.13 INSTALLING ENGINE IN CHASSIS, Procedure: XL Models

FASTENER	TORQUE VALUE		NOTES
Return oil manifold screw	84-108 **in-lbs**	9.5-12.2 Nm	3.14 PRECISION COOLING SYSTEM: XR MODELS, Return Oil Manifold
Shift linkage pivot bolt	10-15 ft-lbs	13.6-20.3 Nm	3.13 INSTALLING ENGINE IN CHASSIS, Procedure: XR Models
Siren/canister bracket; rear brake line fastener	17-22 ft-lbs	23.0-29.8 Nm	3.13 INSTALLING ENGINE IN CHASSIS, Procedure: XR Models
Sprocket cover fastener, large: XR models	30-33 ft-lbs	40.7-44.8 Nm	3.13 INSTALLING ENGINE IN CHASSIS, Procedure: XR Models
Sprocket cover fastener, small: XR models	80-120 **in-lbs**	9.0-13.6 Nm	3.13 INSTALLING ENGINE IN CHASSIS, Procedure: XR Models
Sprocket cover screw	80-120 **in-lbs**	9.0-13.6 Nm	3.13 INSTALLING ENGINE IN CHASSIS, Procedure: XL Models
Stabilizer link (lower front) frame bracket mounting screw	25-35 ft-lbs	33.9-47.5 Nm	3.13 INSTALLING ENGINE IN CHASSIS, Procedure: XL Models
Stabilizer link (lower front) frame bracket mounting screw	25-35 ft-lbs	33.9-47.5 Nm	3.13 INSTALLING ENGINE IN CHASSIS, Procedure: XR Models
Stabilizer link (lower front) frame bracket mounting screw	25-35 ft-lbs	33.9-47.5 Nm	3.16 TOP END OVERHAUL: ASSEMBLY, Assembling Motorcycle After Top End Repair
Stabilizer link (upper front) frame bracket mounting screw	25-35 ft-lbs	33.9-47.5 Nm	3.13 INSTALLING ENGINE IN CHASSIS, Procedure: XL Models
Stabilizer link (upper front) frame bracket mounting screw	25-35 ft-lbs	33.9-47.5 Nm	3.13 INSTALLING ENGINE IN CHASSIS, Procedure: XR Models
Stabilizer link (upper front) frame bracket mounting screw	25-35 ft-lbs	33.9-47.5 Nm	3.16 TOP END OVERHAUL: ASSEMBLY, Assembling Motorcycle After Top End Repair
Stabilizer link bracket to front head screws and lock washers	55-65 ft-lbs	74.6-88.2 Nm	3.21 CYLINDER HEAD, Assembly
Stabilizer link screw	25-35 ft-lbs	33.9-47.5 Nm	3.13 INSTALLING ENGINE IN CHASSIS, Procedure: XL Models
Stabilizer link screw	25-35 ft-lbs	33.9-47.5 Nm	3.13 INSTALLING ENGINE IN CHASSIS, Procedure: XL Models
Stabilizer link screw	25-35 ft-lbs	33.9-47.5 Nm	3.13 INSTALLING ENGINE IN CHASSIS, Procedure: XL Models
Stabilizer link screw	25-35 ft-lbs	33.9-47.5 Nm	3.13 INSTALLING ENGINE IN CHASSIS, Procedure: XR Models
Stabilizer link screw	25-35 ft-lbs	33.9-47.5 Nm	3.13 INSTALLING ENGINE IN CHASSIS, Procedure: XR Models
Stabilizer link screw	25-35 ft-lbs	33.9-47.5 Nm	3.13 INSTALLING ENGINE IN CHASSIS, Procedure: XR Models

SPECIFICATIONS: SPORTSTER MODELS

Service wear limits are given as a guideline for measuring components that are not new. Replace components when their measurements exceed values listed in the SERVICE WEAR LIMITS columns.

Table 3-1. Engine

ITEM	XL 883 MODELS		XL 1200 MODELS		XR 1200 MODELS	
Number of cylinders	2					
Type	4-cycle, 45 degree, V-Type, air cooled					
Compression ratio	8.9-1		9.7-1		10.0-1	
Bore	3.000 in.	76.20 mm	3.500 in.	88.90 mm	3.500 in.	88.90 mm
Stroke	3.812 in.	96.82 mm	3.812 in.	96.82 mm	3.812 in.	96.82 mm
Displacement	53.89 cu. in.	883.10 cu. cm	73.40 cu. in.	1202.81 cu. cm	73.40 cu. in.	1202.81 cu. cm
Torque (North America)	55.00 ft-lbs @ 3500 RPM	74.58 Nm @ 3500 RPM	79.00 ft-lbs @ 4000 RPM	107.12 Nm @ 4000 RPM	73.91 ft-lbs @ 4000 RPM	100.21 Nm @ 4000 RPM
Torque (World)	51.29 ft-lbs @ 3750 RPM	69.55 Nm @ 3750 RPM	72.26 ft-lbs @ 3200 RPM	97.98 Nm @ 3200 RPM	72.43 ft-lbs @ 3600 RPM	98.22 Nm @ 3600 RPM
Torque (Japan)	49.07 ft-lbs @ 3500 RPM	66.54 Nm @ 3500 RPM	66.19 ft-lbs @ 3250 RPM	89.75 Nm @ 3250 RPM	67.69 ft-lbs @ 3500 RPM	91.79 Nm @ 3500 RPM

Table 3-2. Cylinder Heads-883 cc/1200 cc

ITEM	NEW COMPONENTS		SERVICE WEAR LIMITS	
Valve guide in head (tight)	0.0033-0.0020 in.	0.084-0.051 mm	-	-
Valve seat in head	0.0035-0.0010 in.	0.089-0.025 mm	-	-
Head gasket surface (flatness)	0.006 in.	0.152 mm	Replace if more than 0.006 in.	Replace if more than 0.152 mm

Table 3-3. Rocker Arms and Shafts-883 cc/1200 cc

ITEM	NEW COMPONENTS		SERVICE WEAR LIMITS	
Shaft in bushing (loose)	0.0005-0.0020 in.	0.013-0.051 mm	0.0035 in.	0.0889 mm
End clearance	0.003-0.013 in.	0.08-0.33 mm	0.025 in.	0.635 mm
Bushing fit in rocker arm	0.004-0.002 in.	0.10-0.05 mm	-	-
Shaft fit in rocker cover	0.0007-0.0022 in.	0.018-0.056 mm	0.0035 in.	0.0889 mm

Table 3-4. Valves-883 cc/1200 cc

ITEM	NEW COMPONENTS		SERVICE WEAR LIMITS	
Fit in guide (intake/exhaust)	0.001-0.003 in.	0.0254-0.0762 mm	0.0038 in.	0.0965 mm
Seat width	0.040-0.062 in.	1.02-1.57 mm	0.090 in.	2.286 mm
Stem protrusion from cylinder valve pocket	2.028-2.064 in.	51.511-52.426 mm	2.082 in.	52.883 mm

Table 3-5. Valve Springs (Intake/Exhaust)-883 cc/1200 cc

ITEM	NEW COMPONENTS		SERVICE WEAR LIMITS	
Closed	135 lbs @ 1.850 in.	61.2 kg @ 47.0 mm	-	-
Open	312 lbs @ 1.300 in.	141.5 kg @ 33.0 mm	-	-
Free length	2.325 in.	59.1 mm	2.325 in. (min)	59.1 mm (min)

Table 3-6. Tappets-883 cc/1200 cc

ITEM	NEW COMPONENTS		SERVICE WEAR LIMITS	
Fit in guide	0.0008-0.0023 in.	0.020-0.058 mm	0.003 in.	0.0762 mm
Roller fit	0.0006-0.0013 in.	0.015-0.033 mm	-	-
Roller end clearance	0.008-0.022 in.	0.203-0.559 mm	0.026 in.	0.660 mm

Table 3-7. Cylinder Bore-883 cc

BORE DIAMETER	NEW COMPONENTS		SERVICE WEAR LIMITS	
Standard +/-0.0002 in. (0.0051 mm)	3.0005 in.	76.213 mm	3.0035 in.	76.289 mm
0.005 in. O.S. (oversize) +/-0.0002 in. (0.0051 mm)	3.0048 in.	76.323 mm	3.0078 in.	76.398 mm
0.010 in. O.S. +/-0.0002 in. (0.0051 mm)	3.0098 in.	76.449 mm	3.0128 in.	76.525 mm
0.020 in. O.S. +/-0.0002 in. (0.0051 mm)	3.0198 in.	76.703 mm	3.0228 in.	76.779 mm
Taper	-	-	0.002 in.	0.0508 mm
Out of round	-	-	0.003 in.	0.0762 mm
Top gasket surface warpage	-	-	0.006 in.	0.152 mm
Base gasket surface warpage	-	-	0.008 in.	0.203 mm

Table 3-8. Cylinder Bore-1200 cc

BORE DIAMETER	NEW COMPONENTS		SERVICE WEAR LIMITS	
Standard +/-0.0002 in. (0.0051 mm)	3.4978 in.	88.844 mm	3.5008 in.	88.920 mm
0.005 in. O.S. (oversize) +/-0.0002 in. (0.0051 mm)	3.502 in.	88.95 mm	3.505 in.	89.027 mm
0.010 in. O.S. +/-0.0002 in. (0.0051 mm)	3.507 in.	89.08 mm	3.510 in.	89.154 mm
0.020 in. O.S. +/-0.0002 in. (0.0051 mm)	3.517 in.	89.33 mm	3.520 in.	89.408 mm
Taper	-	-	0.002 in.	0.0508 mm
Out of round	-	-	0.003 in.	0.0762 mm
Top gasket surface warpage	-	-	0.006 in.	0.152 mm
Base gasket surface warpage	-	-	0.008 in.	0.203 mm
XR Models: Oversized pistons are not available. Replace piston and/or cylinder as needed.				

Table 3-9. Pistons-883 cc

ITEM	NEW COMPONENTS		SERVICE WEAR LIMITS	
Compression ring gap (top and 2nd)	0.010-0.023 in.	0.25-0.58 mm	0.032 in.	0.813 mm
Oil control ring rail gap	0.010-0.053 in.	0.25-1.35 mm	0.065 in.	1.651 mm
Top compression ring side clearance	0.0020-0.0045 in.	0.051-0.114 mm	0.0065 in.	0.165 mm
2nd compression ring side clearance	0.0020-0.0045 in.	0.051-0.114 mm	0.0065 in.	0.165 mm
Oil control ring side clearance	0.0014-0.0074 in.	0.036-0.188 mm	0.0094 in.	0.239 mm
Piston pin fit (loose; room temperature)	0.00005-0.00045 in.	0.0013-0.0114 mm	-	-
Piston fit in cylinder (loose; room temperature)	0.0015-0.0026 in.	0.038-0.066	0.0030 in.	0.076 mm

Table 3-10. Pistons-1200 cc

ITEM	NEW COMPONENTS		SERVICE WEAR LIMITS	
Compression ring gap (top and 2nd)	0.007-0.020 in.	0.18-0.51 mm	0.032 in.	0.813 mm
Oil control ring rail gap	0.009-0.052 in.	0.23-1.32 mm	0.065 in.	1.651 mm
Top compression ring side clearance	0.0020-0.0045 in.	0.051-0.114 mm	0.0065 in.	0.165 mm
2nd compression ring side clearance	0.0016-0.0041 in.	0.041-0.104 mm	0.0065 in.	0.165 mm
Oil control ring side clearance	0.0016-0.0076 in.	0.041-0.193 mm	0.0094 in.	0.239 mm

Table 3-10. Pistons-1200 cc

ITEM	NEW COMPONENTS		SERVICE WEAR LIMITS	
Piston pin fit (loose; room temperature)	0.00005-0.00045 in.	0.0013-0.0114 mm	-	-
Piston fit in cylinder (loose; room temperature)	0.0015-0.0026 in.	0.038-0.066	0.0030 in.	0.076 mm

Table 3-11. Connecting Rods-883 cc/1200 cc

ITEM	NEW COMPONENTS		SERVICE WEAR LIMITS	
Piston pin fit (loose)	0.00125-0.00175 in.	0.0318-0.0445 mm	0.00200 in.	0.0508 mm
Side play between flywheels	0.005-0.025 in.	0.013-0.64 mm	0.030 in.	0.762 mm
Fit on crankpin	0.0004-0.0017 in.	0.010-0.043 mm	0.0027 in.	0.0686 mm

Table 3-12. Flywheels-883 cc/1200 cc

ITEM	NEW COMPONENTS		SERVICE WEAR LIMITS	
Runout (flywheels at rim)	0.000-0.010 in.	0.00-0.254 mm	0.010 in.	0.254 mm
Runout (shaft at flywheel end)	0.000-0.002 in.	0.00-0.0508 mm	0.002 in.	0.0508 mm
End play	0.003-0.013 in.	0.076-0.330 mm	0.013 in.	0.330 mm

Table 3-13. Pinion Shaft Bearing-883 cc/1200 cc

ITEM	NEW COMPONENTS		SERVICE WEAR LIMITS	
Pinion shaft journal diameter	1.2500-1.2496 in.	31.750-31.740 mm	1.2494 in.	31.735 mm
Outer race diameter in right crankcase	1.5646-1.5652 in.	39.741-39.756 mm	1.5656 in.	39.776 mm
Bearing running clearance	0.00012-0.00088 in.	0.0030-0.0224 mm	-	-
Fit in cover bushing (loose)	0.0023-0.0043 in.	0.058-0.109 mm	0.0050 in.	0.127 mm

Table 3-14. Gearcase-883 cc/1200 cc

ITEM	NEW COMPONENTS		SERVICE WEAR LIMITS	
Cam gear shaft in bushing (loose)	0.0007-0.0022 in.	0.018-0.056 mm	0.003 in.	0.0762 mm
Cam gear shaft endplay (except rear intake) (min.)	0.005-0.024 in.	0.13-0.61 mm	0.025 in.	0.635 mm
Rear intake cam gear shaft end play (min.)	0.006-0.024 in.	0.15-0.61 mm	0.040 in.	1.016 mm

Table 3-15. Oil Pump-883 cc/1200 cc

ITEM	NEW COMPONENTS		SERVICE WEAR LIMITS	
Feed/scavenger inner/outer gerotor clearance	0.003 in.	0.08 mm	0.004 in.	0.102 mm
Shaft to pump clearance	0.0025 in.	0.064 mm	-	-

Table 3-16. Sprocket Shaft Bearing-883 cc/1200 cc

ITEM	SPECIFICATION (INTERFERENCE FIT)	
Outer race fit in crankcase (tight)	0.006 in.	0.152 mm
Inner race fit on shaft (tight)	0.006 in.	0.152 mm

Table 3-17. Oil Pressure: At OperatingTemperature

RPM	XL MODELS*		XR MODELS**	
	psi	kPa	psi	kPa
1000	7-12	43.3-82.7	16-20	110.3-137.9
2500	10-17	68.9-117	40-44	275.8-303.4

* Pressure reading taken at oil pressure switch fitting.
** Pressure reading taken at oil cooler inlet.

Table 3-18. Electrical: XL Models

COMPONENT	SPECIFICATION	
Ignition timing	not adjustable	
Battery	12 volt, 12 amp-hr, sealed and maintenance free	
Charging system	Single-phase, 30-amp system (357W @ 13.5V, 2000 rpm, 405W max power @ 13.5V)	
Spark plug type	6R12	
Spark plug size	12 mm	
Spark plug gap	0.038-0.043 in.	0.97-1.09 mm
Spark plug torque	12-18 ft-lbs	16.3-24.4 Nm

Table 3-19. Electrical: XR Models

COMPONENT	SPECIFICATION	
Ignition timing	not adjustable	
Battery	12 volt, 12 amp-hr, sealed and maintenance free	
Charging system	Single-phase, 30-amp system (357W @ 13.5V, 2000 rpm, 405W max power @ 13.5V)	
Spark plug type	10R12X	
Spark plug size	12 mm	
Spark plug gap	0.032-0.038 in.	0.81-0.97 mm
Spark plug torque	12-18 ft-lbs	16.3-24.4 Nm

GENERAL

The engine is a two-cylinder, four-cycle, air-cooled, overhead-valve V-twin. It has three major component assemblies: **cylinder, crankcase,** and **gear case.**

The **cylinder** assembly includes cylinder head, valves, rocker arm cover, rocker arms, and piston. Cylinders mount on the crankcase in a 45 degree "V", with both connecting rods connected to a single crank pin.

The up-and-down motion of the piston in the cylinder is converted to circular motion in the **crankcase.** The multi-piece crankshaft consists of a crank pin mounted between two counterweighted flywheels, which rotate on two end shaft bearings. The lower end of the rear cylinder connecting rod is forked to fit around the single-end front cylinder connecting rod, allowing a single connecting rod crank pin connection to the flywheel.

The **gear case** is located on the right side of the crankcase. The gear case houses the gear train which operates and times the valves and ignition. The cam gear train, consisting of four cam shafts with one cam lobe on each shaft, is gear driven. The engine valves are opened and closed through the mechanical linkage of tappets, push rods, and rocker arms. Hydraulic lifters, located in the tappets, automatically compensate for heat expansion to maintain the no-lash fit of valve train components. Tappets serve to transmit the cam action to the valve linkage. Valve timing is obtained by aligning timing marks when installing cam gears.

Ignition spark is produced by the operation of a microprocessor-controlled Electronic Control Module (ECM), ignition coil, and spark plugs. Spark timing is determined primarily by crankshaft rotation, triggering a magnetic sensing unit.

Each spark plug fires independently at the end of that cylinder's compression stroke, igniting the air/fuel mixture in the cylinder.

The engine has a force-feed (pressure) type oiling system, incorporating oil feed and return pumps in one pump body, with one check valve on the oil feed side. The feed pump forces oil to the engine, lubricating lower connecting rod bearings, rocker arm bushings, valve stems, valve springs, push rods, and tappets. Cylinder walls, pistons, piston pins, timing gears and bushings, and main bearings are lubricated by oil spray thrown off connecting rods and crankshaft, and by oil draining from each rocker box through an internal drain passage in each cylinder and each tappet guide. Piston jets spray oil on the underside of the pistons to cool the piston crown and skirt area.

A small amount of oil is sprayed through an oil galley jet onto the rear intake cam gear in the gear case; oil is transferred to the teeth of all the cam gears by way of the gear meshing action. The oil-scavenging section of the pump returns oil to the tank from the engine. See 3.8 ENGINE LUBRICATION SYSTEM later in this section for further information.

GENERAL

XL Models: The oil pump is non regulatory and delivers its entire volume of oil under pressure to the oil filter mount.

XR Models: The feed oil pump incorporates a bypass valve that will open at approximately 50 psi (345 kPa), preventing overpressure in the oil cooler and related components. The XR Models also incorporate a thermostat in the oil cooler return path, and can have an effect on measured oil pressure.

When an engine is cold, the engine oil will be more viscous (i.e., thicker). During start-up of a cold engine, oil pressure will be higher than normal and oil circulation will be somewhat restricted within the oiling system. As the engine warms to normal operating temperature, the engine oil will warm up and become less viscous; oil pressure decreases.

When an engine is operated at high speeds, the pump rotors rotate faster, increasing the volume of oil circulated through the oiling system, resulting in higher oil pressure. As engine speed is reduced, the volume of oil pumped is also reduced, resulting in lower oil pressure.

Oil Pressure Indicator Lamp

See Figure 3-1. The red OIL PRESSURE indicator lamp illuminates to indicate improper circulation of the engine oil.

Refer to Table 3-20. The oil pressure indicator lamp turns ON when:

- Ignition switch is turned on prior to starting engine.
- Oil is not circulating through the running engine.
- Oil pressure is abnormally low on the running engine.
- Engine is idling far below 1000 RPM.

The oil pressure indicator lamp turns OFF when oil is circulating with adequate pressure through the engine running at 1000 RPM or greater.

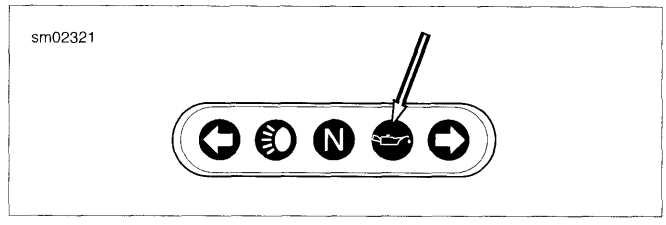

Figure 3-1. Oil Pressure Indicator Lamp

CAUTION

If the oil pressure indicator lamp remains lit, always check the oil supply first. If the oil supply is normal and the lamp is still lit, stop the engine at once and do not ride further until the trouble is located and the necessary repairs are made. Failure to do so may result in engine damage. (00157a)

NOTE

If the ignition is turned back on immediately after the engine is stopped, the oil pressure indicator lamp may not turn on right away because of oil pressure retained in the filter housing.

Table 3-20. Oil Lamp Troubleshooting

OIL PRESSURE INDICATOR LAMP	PROBABLE CAUSES
Stays on at speeds above idle.	• Empty oil tank. • Clogged feed line (ice and sludge, freezing temperatures). • Air-bound oil line. • Grounded oil pressure switch wire. • Malfunctioning oil pressure switch. • Diluted oil. • Malfunctioning check valve. See 3.26 OIL FILTER MOUNT and 3.14 PRECISION COOLING SYSTEM: XR MODELS, Cylinder Head Oil Feed Assembly • Malfunctioning or improperly installed pressure relief valve.
Flickers at idle.	• Incorrect idle speed. Malfunctioning or improperly installed check valve. See 3.26 OIL FILTER MOUNT and 3.14 PRECISION COOLING SYSTEM: XR MODELS, Cylinder Head Oil Feed Assembly • Malfunctioning or improperly installed pressure relief valve.
Does not glow when ignition is turned on (prior to operating engine).	• Malfunctioning signal switch. • Malfunction in wiring. • Burned-out signal bulb. • Dead battery. • See NOTE before this table.

CHECKING OIL PRESSURE

PART NUMBER	TOOL NAME
HD-48386	OIL PRESSURE SENDING UNIT WRENCH
HD-96921-125	OIL PRESSURE GAUGE ADAPTER
HD-96921-52D	OIL PRESSURE TEST GAUGE KIT
HD-96925-58	OIL PRESSURE GAUGE ADAPTER

Check operating oil pressure as follows:

1. Fill oil tank to proper level. See 1.6 ENGINE OIL AND FILTER.
2. Place a container under vehicle to catch any oil that may leak out.
3. Obtain OIL PRESSURE TEST GAUGE KIT (Part No. HD-96921-52D).

Connecting Gauge: XL Models

1. Remove voltage regulator DC output connector and neutral switch wiring harness from voltage regulator caddy. Remove caddy. See 6.29 MAIN WIRING HARNESS.
2. See Figure 3-2. Unplug connector [120] (3) from oil pressure indicator lamp switch (2) located under oil filter (1) by pulling elbow connector straight down from stud on oil pressure switch.
3. Using OIL PRESSURE SENDING UNIT WRENCH (Part No. HD-48386), remove oil pressure switch.
4. See Figure 3-3. Install OIL PRESSURE GAUGE ADAPTER (Part No. HD-96925-58) (2) in oil pressure indicator lamp switch mounting hole. Tighten adapter snugly. DO NOT OVERTIGHTEN.

Connecting Gauge: XR Models

1. See Figure 3-5. Disconnect the quick connect fitting from the inlet side of the oil cooler (4). See 3.14 PRECISION COOLING SYSTEM: XR MODELS, General.
2. Connect OIL PRESSURE GAUGE ADAPTER (Part No. HD-96921-125) (5) to the oil hose (6).
3. Connect the other end of the adapter to the oil cooler fitting (4).

Testing Pressure

1. See Figure 3-4 or Figure 3-5. Assemble banjo bolt (2), washer (3), OIL PRESSURE GAUGE banjo fitting (1) and second washer onto adapter and tighten snugly.

NOTE

For an accurate reading, engine oil should be at normal operating temperature: 230 °F (110 °C).

2. Temporarily secure oil pressure gauge and hose to motorcycle frame with cable straps. Make sure gauge and hose assembly do not interfere with normal operation of the vehicle. Start engine and ride motorcycle at least 20 miles (32 km) at or above 50 mph (80 km/h) to allow engine to reach operating temperature.
3. Check and record the pressure readings at normal idle (approximately 1000 RPM) and again at 2500 RPM. Compare the readings with the specifications in Table 3-21.

Table 3-21. Oil Pressure: At OperatingTemperature

RPM	XL MODELS*		XR MODELS**	
	psi	kPa	psi	kPa
1000	7-12	43.3-82.7	16-20	110.3-137.9
2500	10-17	68.9-117	40-44	275.8-303.4

* Pressure reading taken at oil pressure switch fitting.
** Pressure reading taken at oil cooler inlet.

Removing Gauge: XL Models

1. Stop engine. Remove OIL PRESSURE GAUGE assembly from oil pressure indicator lamp switch mounting hole in crankcase. Cut cable straps securing gauge and hose. Remove banjo bolt, gauge assembly, washers and adapter from vehicle.
2. See Figure 3-2. Coat threads of oil pressure switch (2) with LOCTITE 565 HIGH PERFORMANCE PIPE SEALANT with TEFLON. Replace the oil pressure switch. Using OIL PRESSURE SENDING UNIT WRENCH, tighten switch snugly. DO NOT OVERTIGHTEN.
3. Plug in connector [120] (3) by pushing elbow connector straight up onto stud on oil pressure switch.
4. Install voltage regulator caddy and attach DC output connector and neutral switch wiring harness to caddy. See 6.29 MAIN WIRING HARNESS.

Removing Gauge: XR Models

1. Stop engine. Cut cable straps securing gauge and hose. Remove banjo bolt, gauge assembly, washers and adapter from vehicle.
2. Connect oil hose to oil cooler fitting, making sure it is securely latched.

Finalize Test

NOTE

If an appreciable amount of oil leaked out when oil pressure switch was removed, it will have to be replaced with fresh oil.

1. Check oil level in oil tank. See 1.6 ENGINE OIL AND FILTER. Top off oil level if necessary.
2. Start engine and test oil pressure switch for proper operation. Check for oil leaks.

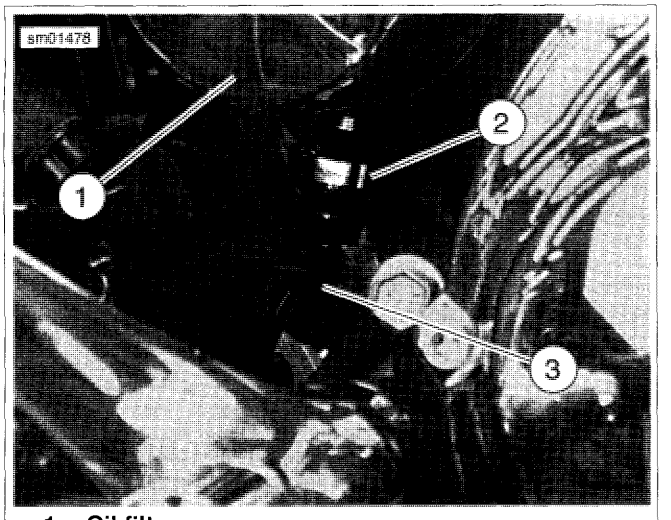

1. Oil filter
2. Oil pressure indicator lamp switch
3. Oil pressure switch connector [120]

Figure 3-2. Oil Pressure Indicator Lamp Switch

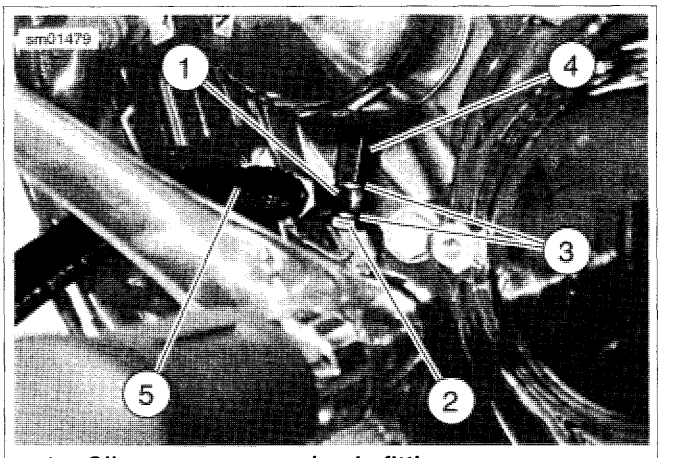

1. Oil pressure gauge banjo fitting
2. Banjo bolt
3. Washer (2)
4. Adapter
5. Oil pressure gauge hose

Figure 3-4. Oil Pressure Test Connections: XL Models

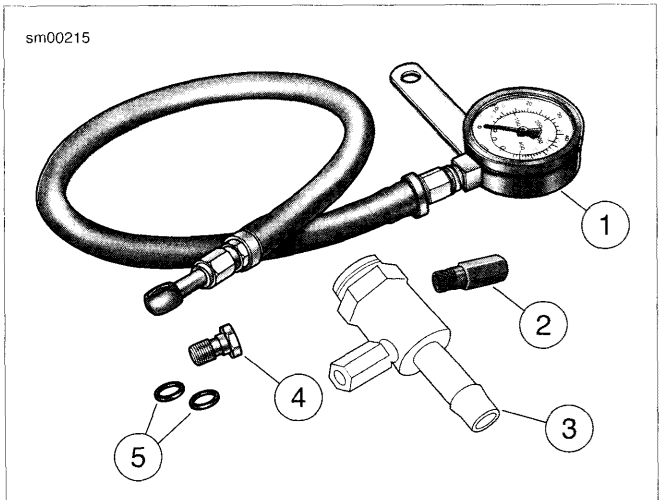

1. Gauge
2. Adapter, pressure switch hole (XL models)
3. Adapter, oil cooler line (XR models)
4. Banjo bolt
5. Washers (2)

Figure 3-3. Oil Pressure Test Gauge Set

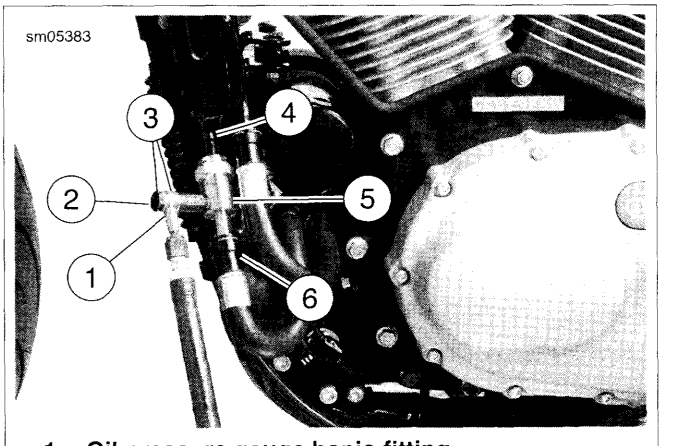

1. Oil pressure gauge banjo fitting
2. Banjo bolt
3. Washer (2)
4. Oil cooler connector
5. Adapter
6. Oil cooler hose fitting

Figure 3-5. Oil Pressure Test Connections: XR Models

CRANKCASE BREATHING SYSTEM: XL MODELS

3.5

GENERAL

See Figure 3-6. On the piston downstroke, a mixture of crankcase air and oil mist is vented up the push rod covers (1) through a breather valve (2) in each inner rocker box section.

The oil mist separates from the crankcase air, collects and passes through a small drain hole adjacent to the exhaust valve in the head where it eventually returns to the crankcase.

The crankcase air is routed through a passage in each cylinder head. The crankcase air then travels through each air cleaner backing plate mounting bolt (3) into the filtered side of the air cleaner.

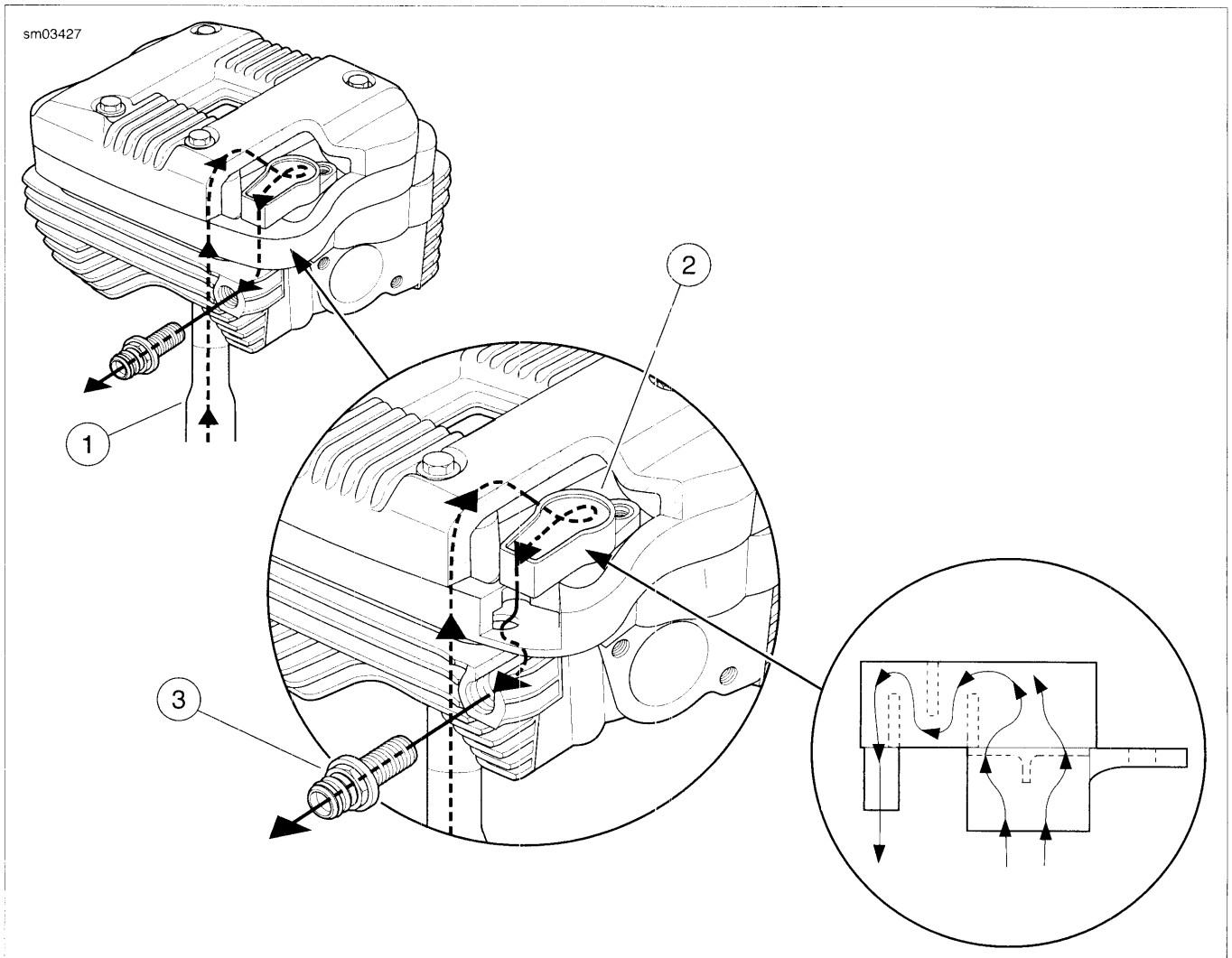

1. **Push rod cover (2)**
2. **Breather valve**
3. **Bolt, air cleaner backing plate mounting**

Figure 3-6. Crankcase Breathing System: XL Models

CRANKCASE BREATHING SYSTEM: XR MODELS 3.6

GENERAL

During engine operation, internal crankcase pressure increases due to the reciprocating components and also any combustion gas that passes by the piston rings. Along with increased pressures, a mixture of air and oil mist develops in the crankcase. The Crankcase Breathing System will vent the pressure and separate the air from the oil. The following description is for one cylinder however, each cylinder is equipped the same.

See Figure 3-7. During the piston downstroke, internal crankcase pressure increases, forcing a vapor (9) of crankcase air and oil mist into the area around the rocker arms and valve springs. The vapor travels down through two passages (6) in the inner rocker cover into a cavity (7) between the cylinder head and inner rocker cover. The vapor then moves into the filter media (8) of the breather valve (3).

As the oil-laden vapor passes through the filter media (8) of the breather valve assembly, the oil mist separates from the crankcase air, drains back into cavity (7) where it flows toward the exhaust valve area. The oil then passes through a small drain hole adjacent to the exhaust valve in the head where it eventually returns to the crankcase.

The air pressure forces the umbrella valve (5) of the breather valve to open and air is routed through a fitting (4) in the outer rocker cover. The umbrella valve prevents the air from moving back into the crankcase during piston upstroke. The crankcase air then travels through a vapor hose (2) which is connected to a hose and tee assembly (10) in the airbox. The air eventually exits into the intake air stream above the induction module and is consumed by the engine.

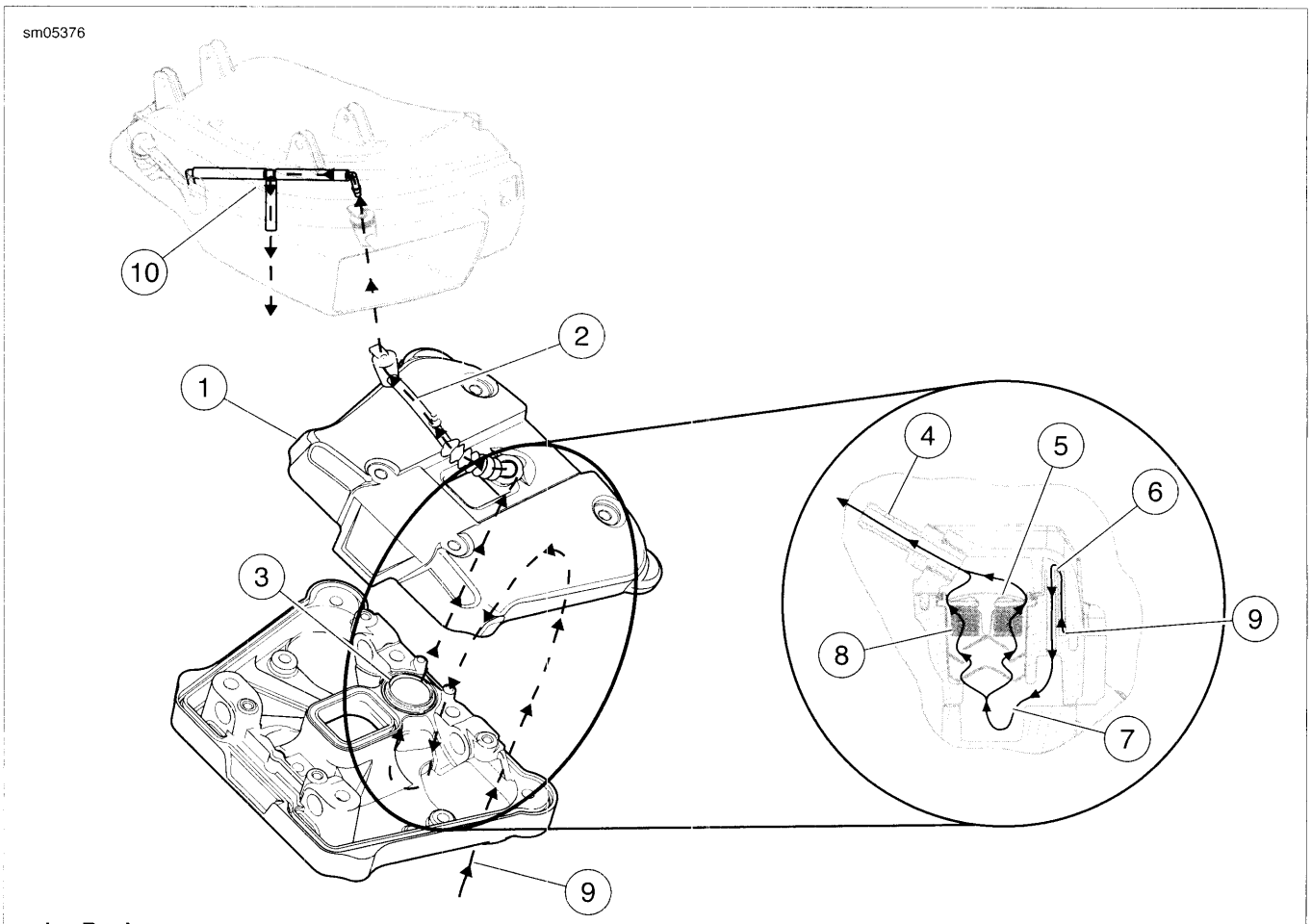

1. Rocker cover
2. Vapor hose
3. Breather valve assembly
4. Vapor hose fitting
5. Umbrella valve
6. Passage (2)
7. Cavity
8. Filter media
9. Vapor from crankcase
10. Hose and tee assembly

Figure 3-7. Crankcase Breathing System: XR Models

DIAGNOSING VALVE TRAIN NOISE

To diagnose and correct noisy hydraulic lifters and valve train components, use the following procedures:

1. With engine and oil at normal operating temperature, check oil pressure at 2000 RPM. If oil pressure is above 50 PSI (345 kN/m^2) or below 5 PSI (34 kN/m^2), inspect oil pump, crankcase passages and oil hoses for restrictions or blockage. Repair or replace parts as necessary.
2. If oil is reaching the hydraulic lifters, remove and inspect. See 3.19 VALVE TAPPETS. Clean lifter bore of all foreign material. Replace hydraulic lifter if required.
3. Examine pushrod, lifter and lifter bore for proper fit and any signs of unusual wear. Replace parts as necessary.
4. Visually inspect camshaft lobes for abnormal wear.
5. Remove camshafts and pinion gear, clean and inspect for wear and fit. Replace parts as necessary.
6. Remove cylinder head and rocker box assemblies. Check rocker arm end play and check for binding. Inspect valve stems for scuffing and check stem to guide clearance. Check valve seats for signs of looseness or shifting.
7. Reface valves and valve seats.

COMPRESSION TEST

PART NUMBER	TOOL NAME
HD-33223-1	CYLINDER COMPRESSION GAUGE

Satisfactory engine performance depends upon a mechanically sound engine. In many cases, unsatisfactory performance is caused by combustion chamber leakage. A compression test can help determine the source of cylinder leakage.

A proper compression test should be performed with the engine at normal operating temperature when possible.

1. Disconnect spark plug wires. Clean around spark plug base and remove spark plugs.
2. Connect CYLINDER COMPRESSION GAUGE (Part No. HD-33223-1) to front cylinder per manufacturer's instructions.
3. Make sure transmission is in neutral. With throttle plate in wide open position, crank engine continuously through 5 to 7 full compression strokes.
4. Note gauge readings at the end of the first and last compression strokes. Record test results.
5. Connect CYLINDER COMPRESSION GAUGE to rear cylinder and repeat Steps 3 and 4.
   a. Compression is normal if final readings are within the range specified in Table 3-22, and do not indicate more than a 10 psi (0.689 Bar) variance between cylinders.
   b. If compression is below 100 psi (6.89 Bar) for 883 cc engines or 150 psi (10.3 Bar) for 1200 cc engines, refer to Table 3-23.
6. Inject approximately 1/2 oz. (15 ml) SAE 30 engine oil into each cylinder and repeat the compression tests on both cylinders. Readings that are considerably higher during the second test indicate worn piston rings.

NOTE

After completing the compression test(s) and reinstalling the spark plugs, make sure the throttle plate is in the closed position before starting the engine.

Table 3-22. Normal Compression Ranges

ENGINE	COMPRESSION	
	psi	bar
XL 883 cm^3	165-180	11.4-12.4
XL 1200 cm^3	200-225	13.8-15.5
XR 1200 cm^3	170-185	11.7-12.8

Table 3-23. Compression Test Results

DIAGNOSIS	TEST RESULTS
Ring trouble	Compression low on first stroke, tends to build up on the following strokes, but does not reach normal. Improves considerably when oil is added to cylinder.
Valve trouble	Compression low on first stroke, does not build up much on following strokes. Does not improve considerably with the addition of oil. Check for correct pushrod length.
Head gasket leak	Same reaction as valve trouble.

CYLINDER LEAKAGE TEST

PART NUMBER	TOOL NAME
HD-35667-A	CYLINDER LEAKDOWN TESTER

The cylinder leakage test pinpoints engine problems including leaking valves, worn, broken or stuck piston rings and blown head gaskets. The cylinder leakage tester applies compressed air to the cylinder at a controlled pressure and volume and measures the percent of leakage from the cylinder.

Use CYLINDER LEAKDOWN TESTER (Part No. HD-35667-A) and follow the specific instructions supplied with the tester.

The following are some general instructions that apply to Harley-Davidson V-twin engines:

1. Run engine until it reaches normal operating temperature.
2. Stop engine. Clean dirt from around spark plugs and remove the spark plugs.
3. Remove the air cleaner and set the throttle in the wide open position.
4. The piston in the cylinder being tested must be at top dead center of compression stroke (both valves closed) during the test.

5. To keep the engine from turning over when air pressure is applied to the cylinder, engage transmission in fifth gear and lock the rear brake.

NOTE

Before performing the cylinder leakage test, verify that the tester itself is free from leakage to obtain the most accurate test results. With a soap solution [applied around all tester fittings], connect the cylinder leakdown tester to the compressed air source and look for any bubbles that would indicate leakage from the tester.

6. Following the manufacturer's instructions, perform a cylinder leakage test on the front cylinder. Make a note of the percent of leakage. Leakage greater than 12% indicates internal engine problems.

7. Listen for air leaks at induction module intake, exhaust pipe and head gasket. Air escaping through the induction module indicates a leaking intake valve. Air escaping through the exhaust pipe indicates a leaking exhaust valve.

NOTE

If air is escaping through valves, check push rod length.

8. Repeat procedure on rear cylinder.

NOTE

After completing the cylinder leakage test(s) and reinstalling the spark plugs, make sure the throttle plate is in the closed position before starting the engine.

DIAGNOSING SMOKING ENGINE OR HIGH OIL CONSUMPTION

Perform 3.7 TROUBLESHOOTING, Compression Test or 3.7 TROUBLESHOOTING, Cylinder Leakage Test as described previously. If further testing is needed, remove suspect head(s) and inspect for the following:

Check Prior to Cylinder Head Removal

1. Oil tank overfilled.
2. Oil carryover.
3. Breather hose restricted.
4. Restricted oil filter.

Check After Cylinder Head Removal

1. Oil return passages for clogging.
2. Valve guide seals.
3. Valve guide to valve stem clearance.
4. Gasket surface of both head and cylinder.
5. Cylinder head casting's porosity allowing oil to drain into combustion chamber.
6. O-ring damaged or missing from oil pump/crankcase junction.

ADJUSTMENT AND TESTING

General

When an engine needs repair, it is not always possible to determine definitely beforehand whether repair is possible with only cylinder heads, cylinders, and pistons disassembled, or whether complete engine disassembly is required for crankcase repair.

Most commonly, only cylinder head and cylinder repair is needed (valves, rings, piston, etc.), and it is recommended procedure to service these units first, allowing engine crankcase to remain in frame.

Follow the procedure outlined in 3.15 TOP END OVERHAUL: DISASSEMBLY, Stripping Motorcycle for Top End Repair, to strip motorcycle for removal of cylinder heads, cylinders, and pistons.

After disassembling "upper end" only, it may be found that crankcase repair is necessary; this requires removal of engine crankcase from chassis outlined in 3.12 REMOVING ENGINE FROM CHASSIS.

NOTE

If engine is removed from chassis, do not lay engine on primary side. Laying engine on primary side will damage the clutch cable end fitting. If fitting is damaged, clutch cable must be replaced.

Symptoms indicating a need for engine repair are often misleading; but generally, if more than one symptom is present, possible causes can be narrowed down to make at least a partial diagnosis. An above-normal consumption of oil, for example, could be caused by several mechanical faults. See 1.31 TROUBLESHOOTING. However, when accompanied by blue-gray exhaust smoke and low engine compression, it indicates the piston rings need replacing. Low compression by itself, however, may indicate improperly seated valves, in addition to or in lieu of worn piston rings.

Piston slap is a condition where piston and/or cylinder are worn out-of-round and are loose fitting, allowing the piston to slap from front to rear of the cylinder as it moves up and down.

Most frequently, valves, rings, pins, bushings, and bearings need attention at about the same time. If the possible causes can be narrowed down through the process of elimination to indicate any one of the above components is worn, it is best to give attention to all of the cylinder head and cylinder parts.

OIL PUMP OPERATION

See Figure 3-8 or Figure 3-9. The oil pump consists of two gerotor gear sets, feed and scavenge (return), housed in one pump body. The feed pump distributes oil to the engine and has fewer lobes than the scavenge pump, allowing for greater pressure development. The scavenge pump returns oil to the tank and has more lobes than the feed pump allowing for greater oil flow.

XL Models: Both rotor sets are driven off a common shaft that is coupled by gears to the crankshaft.

XR Models: The feed rotor set is driven by flats on the front intake camshaft. The scavenge rotor set is driven by flats on the rear exhaust camshaft.

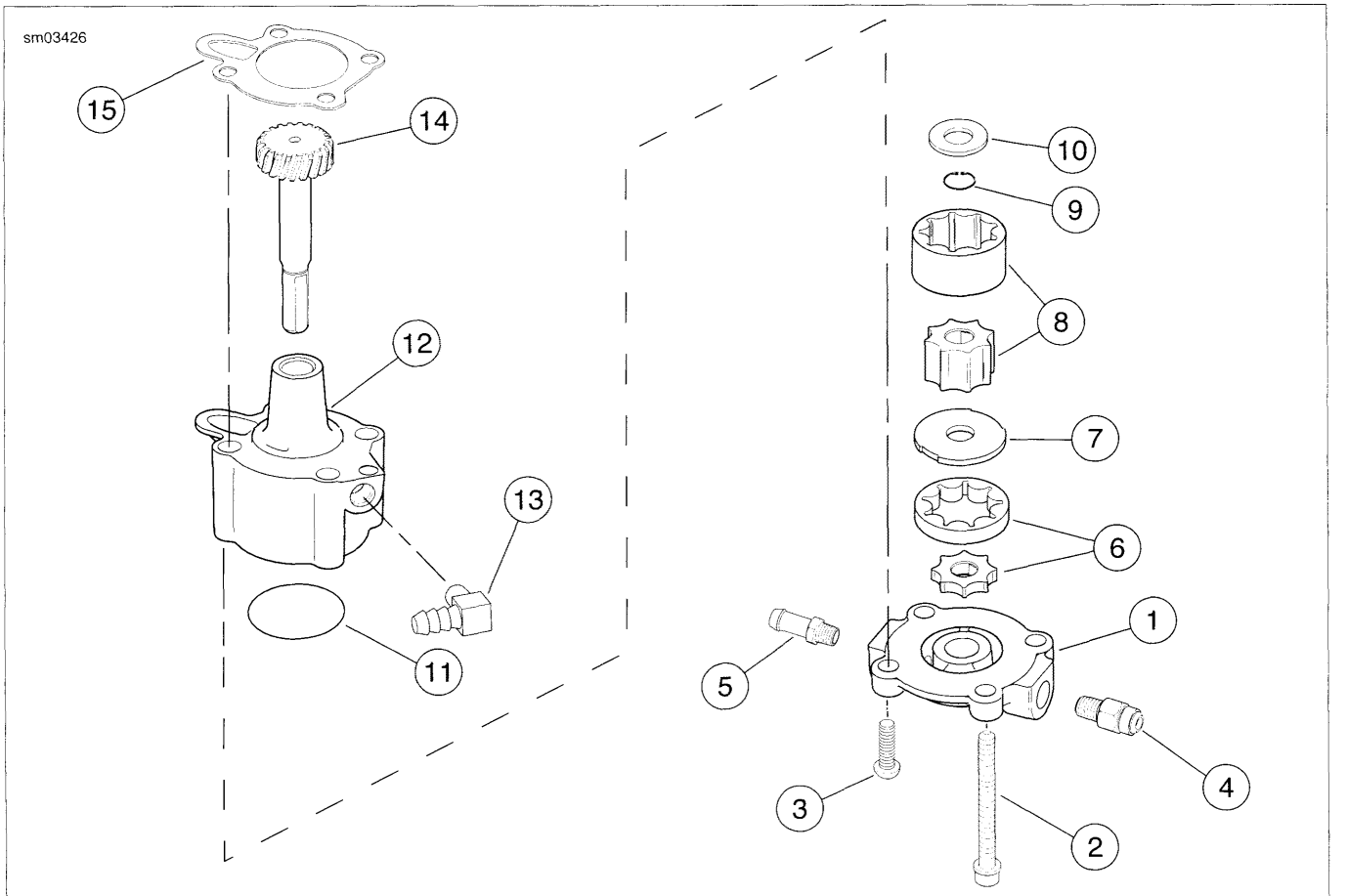

1. **Cover, oil pump**
2. **Screw, w/ washer (2)**
3. **Screw, Torx (2)**
4. **Connector**
5. **Hose fitting**
6. **Gerotor assy, feed**
7. **Gerotor separator plate**
8. **Gerotor assy, scavenge**
9. **Retaining ring**
10. **Washer, thrust**
11. **O-ring**
12. **Body, oil pump**
13. **Elbow fitting**
14. **Gear shaft**
15. **Gasket**

Figure 3-8. Oil Pump: XL Models

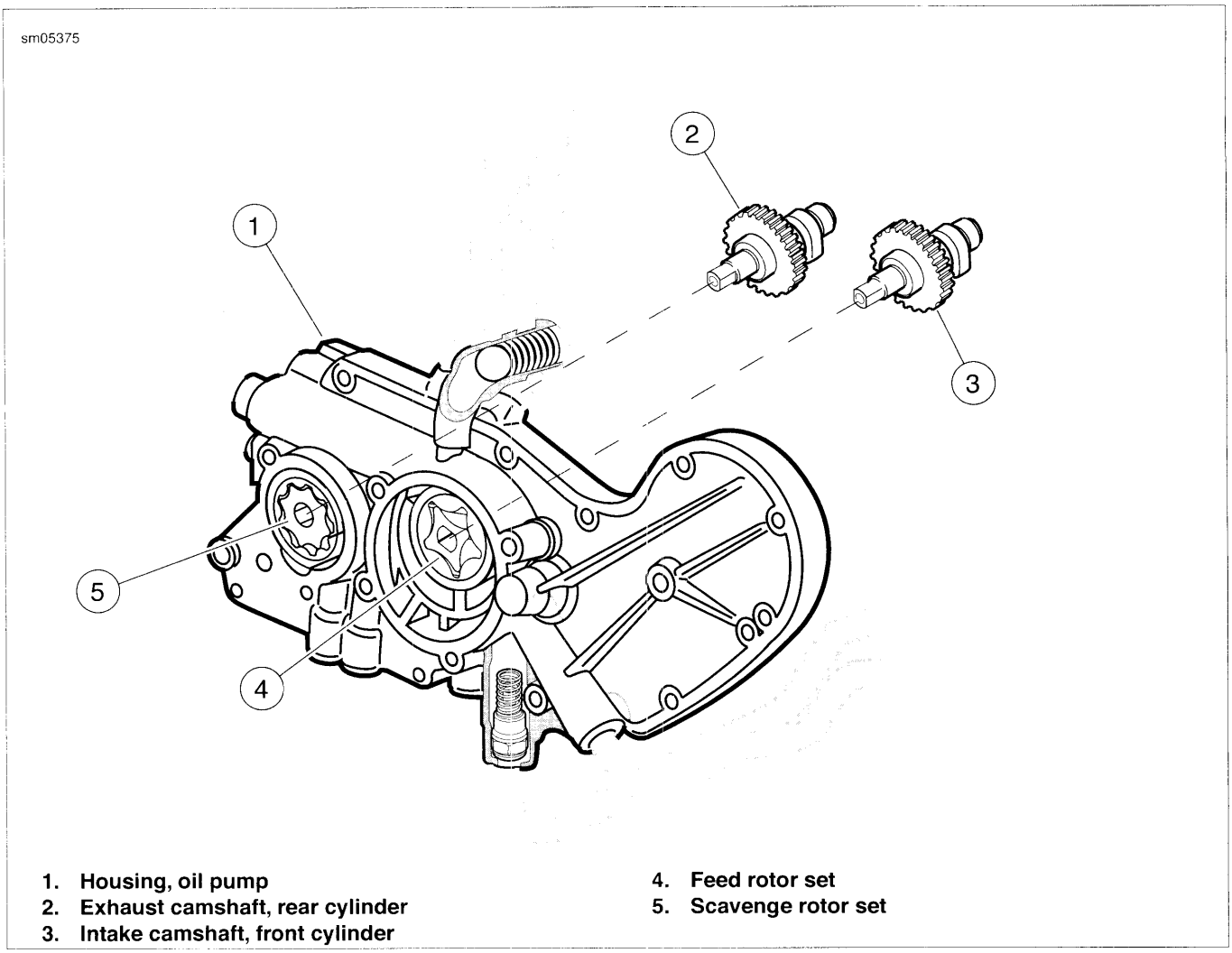

1. **Housing, oil pump**
2. **Exhaust camshaft, rear cylinder**
3. **Intake camshaft, front cylinder**
4. **Feed rotor set**
5. **Scavenge rotor set**

Figure 3-9. Oil Pump: XR Models

Each gerotor-type gear set has two parts; an inner and an outer gerotor. The inner gerotor has one less lobe than the outer gerotor. Both gerotors have fixed centers which are offset to each other.

See Figure 3-10. As the crankshaft rotates, the cavity between the inner and outer gerotors on the inlet side of the pump increases in volume. This creates a vacuum causing oil to be drawn in. The cavity continues to increase until the volume is equivalent to that of the missing lobe on the inner gerotor. Note that the inlet and outlet sides of the pump are sealed by the tips and lobes of the inner and outer gerotors.

See Figure 3-11. Continued rotation moves the pocket of oil to the outlet side of the pump. In this area, the cavity decreases in volume as the gerotor lobes mesh causing the oil to be squeezed out the discharge port. As the cavity on the outlet side is emptied, a second seal formed by the tips and lobes of the inner and outer gerotors prevents oil on the outlet side (high pressure) from being transferred to the inlet side (low pressure). In operation, the gerotors provide a continuous flow of oil.

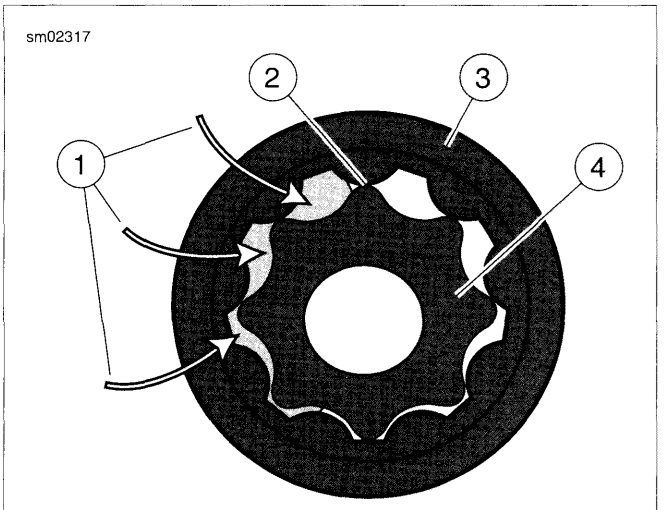

1. Oil in
2. Seal
3. Outer gerotor
4. Inner gerotor

Figure 3-10. Inlet Side Oil Flow

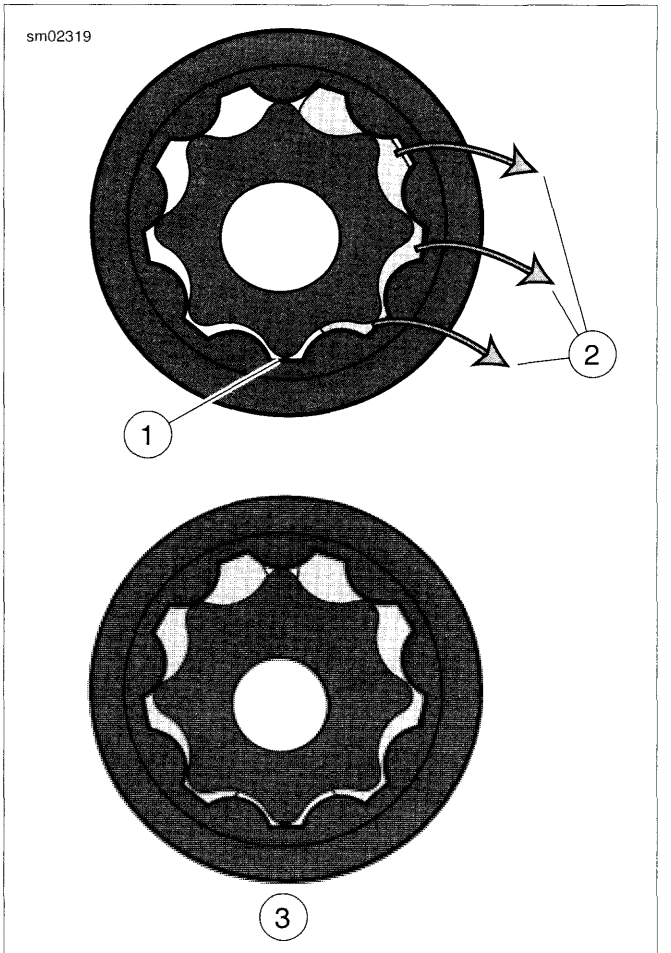

1. Seal
2. Oil out
3. Continuous flow

Figure 3-11. Outlet Side Oil Flow

OIL FLOW: XL MODELS

NOTE

The following paragraph numbers correspond with the numbered callouts in the Figure 3-12 foldout.

1. Oil is gravity-fed from the oil tank to the gerotor-style oil pump through a **feed hose.** Oil enters the **feed section** and fills a cavity located under the feed pump.

NOTE

See 3.24 OIL PUMP: XL MODELS for a complete explanation of the gerotor pump.

2. The feed pump transfers oil from the inlet cavity through the **feed hose** to the oil filter mount.
3. Oil flows through the **filter mount cavity** to the oil filter.
4. Oil enters the peripheral cavity of the **oil filter,** passes through the filtering medium into the central cavity of the oil filter, and flows into the filter adapter (fitting which connects filter to filter mount).
5. Adequate oil pressure in the filter mount cavity activates the **oil pressure indicator lamp switch** and shuts off the oil pressure indicator lamp.
6. Oil flowing from the filter adapter opens the **check ball.** The check ball opens at 10-13 psi (69-90 kPa) oil pressure.
7. With the check ball open, oil flows into the **crankcase feed galley.**
8. Oil flows through the feed galley in the crankcase to the tappet blocks and hydraulic lifters. **Cross-drilled passages** intersect the main feed galley and carry oil to each hydraulic lifter. From this cavity, oil is also fed to the piston jets.
9. Oil also enters an **intersecting passage** in the gearcase cover. Oil flow is then routed to the crankshaft area.
10. Oil enters a hole in the end of the **pinion gear shaft** and travels to the right flywheel where it is routed through the flywheel to the **crank pin.** Oil is forced through the crank pin to properly lubricate the rod bearing assembly.
11. Oil flows up passages in the **push rods** to the rocker arm shafts and bushings.
12. The valve stems are lubricated by oil supplied through drilled oil holes in the **rocker arms**.
13. Oil collected in the push rod areas of the cylinder heads flows down the **push rod covers,** through drain holes in the **tappet blocks** and into the gearcase. After providing lubrication to the gearcase components the oil flows to the return side of the oil pump.
14. Feed oil to the rocker area is returned to the gearcase through a **passage** in the head, cylinder, and crankcase.
15. Oil collected in the **sump** is splash-fed to the pistons, cylinder walls and flywheel components.
16. Oil collected in the sump area returns to the scavenge section of the oil pump through a **passage** located in the rear section of the sump. Oil flow to the pump is accomplished by the scavenging effect of the pump and by the pressure created by the downward stroke of the pistons.
17. Return oil fills a **cavity** above the pump's return gears. The return gears pump oil back to the oil tank.
18. A small amount of oil flows from the feed galley in the right crankcase through a **restricted orifice,** which sprays the oil onto the rear intake cam gear in the gearcase. Oil is transferred to the teeth of all the cam gears through the gear meshing action.

OIL FLOW: XR MODELS

NOTE

The following paragraph numbers correspond with the numbered callouts in the Figure 3-13 foldout.

1. Oil is gravity-fed from the oil tank to the gerotor-style oil pump through a **feed hose and internal passages.** Oil enters the inlet cavity of the **feed pump**.

NOTE

See 3.25 OIL PUMP: XR MODELS for a complete explanation of the gerotor pump.

2. The feed pump transfers oil through a **passage** in the pump housing to a point where it splits direction. The pump is capable of delivering more oil than can flow through the engine. When oil pressure exceeds approximately 50 psi (345 kPa), the **bypass valve** will open allowing oil to circulate back into the inlet side of the feed pump.
3. Part of the oil passes through an **internal passage** toward the oil filter and part heads toward the oil cooler line.
4. Oil flowing toward the oil cooler exits the oil pump housing through a **line** that is connected via a quick connect fitting at each end, and enters the lower end of the oil cooler. Oil flows up through the oil cooler and exits the upper end where it flows back to the oil pump housing.
5. A **thermostat** is located where the oil cooler return line connects to the oil pump housing. No oil from the oil cooler will flow past the thermostat until the engine oil temperature reaches 190°F (88°C). Once the **thermostat** begins to open, oil from the oil cooler flows past it while oil flow directly from the feed pump is restricted, providing cooled oil for engine lubrication. When the **thermostat** reaches full open position, a seal on the end seals off oil flow directly from the pump and all oils passes through the oil cooler, past the **thermostat**, and towards the oil filter.
6. Oil flowing to the filter passes through an **internal passage** to the oil filter mount.
7. Oil flows through the **filter mount cavity** to the oil filter.
8. Oil enters the peripheral cavity of the **oil filter,** passes through the filtering medium into the central cavity of the oil filter, and flows into the filter adapter (fitting which attaches the filter to filter mount).
9. Adequate oil pressure in the filter supply passage activates the **oil pressure indicator lamp switch** and shuts off the oil pressure indicator lamp.
10. Oil flowing from the filter adapter opens the **check ball.** The check ball opens at 5-7 psi (34-48 kPa) oil pressure.
11. With the check ball open, oil flows into the **crankcase feed galley.**
12. Oil flows through the feed galley in the crankcase to the tappet blocks and hydraulic lifters. **Cross-drilled pas-**

sages intersect the main feed galley and carry oil to each hydraulic lifter. From this cavity, oil is also fed to the piston jets.

13. Also from the feed galley in the crankcase, oil flows through a cross drilled passage to the **check valve assembly** and to the cylinder heads through **flexible lines**. Oil across the cylinder heads and through passages that surround the exhaust ports. Oil exits each cylinder head near the exhaust port.
14. **Oil exiting** the heads flows to the **return oil manifold** where it is mixed with the scavenge oil from the scavenge pump (25) and is pushed back to the tank.
15. Also from the feed galley in the crankcase, oil enters an **intersecting passage** in the oil pump body and cam support. Oil flow is then routed to the **outer bearing** of the rear intake camshaft. A cast-in passage allows oil into a cavity that surrounds the end of the pinion gear shaft.
16. From the same **cavity** near the end of the pinion shaft, oil enters the center hole in the **oil pump rotor cover** which intersects with a passage that carries oil to the outer bearings of the front intake camshaft and rear exhaust camshaft and is used to lubricate the cam bearings.
17. The outer bearing of the front exhaust camshaft is lubricated through a **drilled passage** that intersects with the feed galley.
18. Crankcase end of bearings of the cams are fed through holes in the camshaft.
19. A small amount of oil flows from the feed galley in the right crankcase through a **restricted orifice,** which sprays the oil onto the rear intake cam gear in the gearcase. Oil is transferred to the teeth of all the cam gears through the gear meshing action.
20. Oil enters a hole in the end of the **pinion gear shaft** and travels to the right flywheel where it is routed through the flywheel to the **crank pin.** Oil is forced through the crank pin to properly lubricate the rod bearing assembly.
21. Oil flows up passages in the **push rods** to the rocker arm shafts and bushings.
22. The valve stems are lubricated by oil supplied through drilled oil holes in the **rocker arms**.
23. Oil collected in the push rod areas of the cylinder heads flows down the **push rod covers,** through drain holes in the **tappet blocks** and into the gearcase. After providing lubrication to the gearcase components the oil settles to the bottom of the gearcase where the scavenge pump will collect it.
24. Feed oil to the rocker area is returned to the gearcase through a **passage** in the cylinder head, cylinder, and crankcase.
25. Oil collected in the **sump** is splash-fed to the pistons, cylinder walls and flywheel components.
26. Oil collected in the sump area returns to the scavenge pump through an **internal passage** located in the rear section of the sump housing. Oil flow to the pump is accomplished by the scavenging effect of the pump and by the pressure created by the downward stroke of the pistons.
27. Oil collected in the gearcase passes through a **passage** in the oil pump body and cam support and is also collected by the scavenge pump.
28. The **scavenge pump** pushes the collected oil back to the oil tank.
29. Crankcase vents to oil tank.

Figure 3-12.
Lubrication Diagram: XL Models (Red=Feed Oil, Blue=Return Oil)

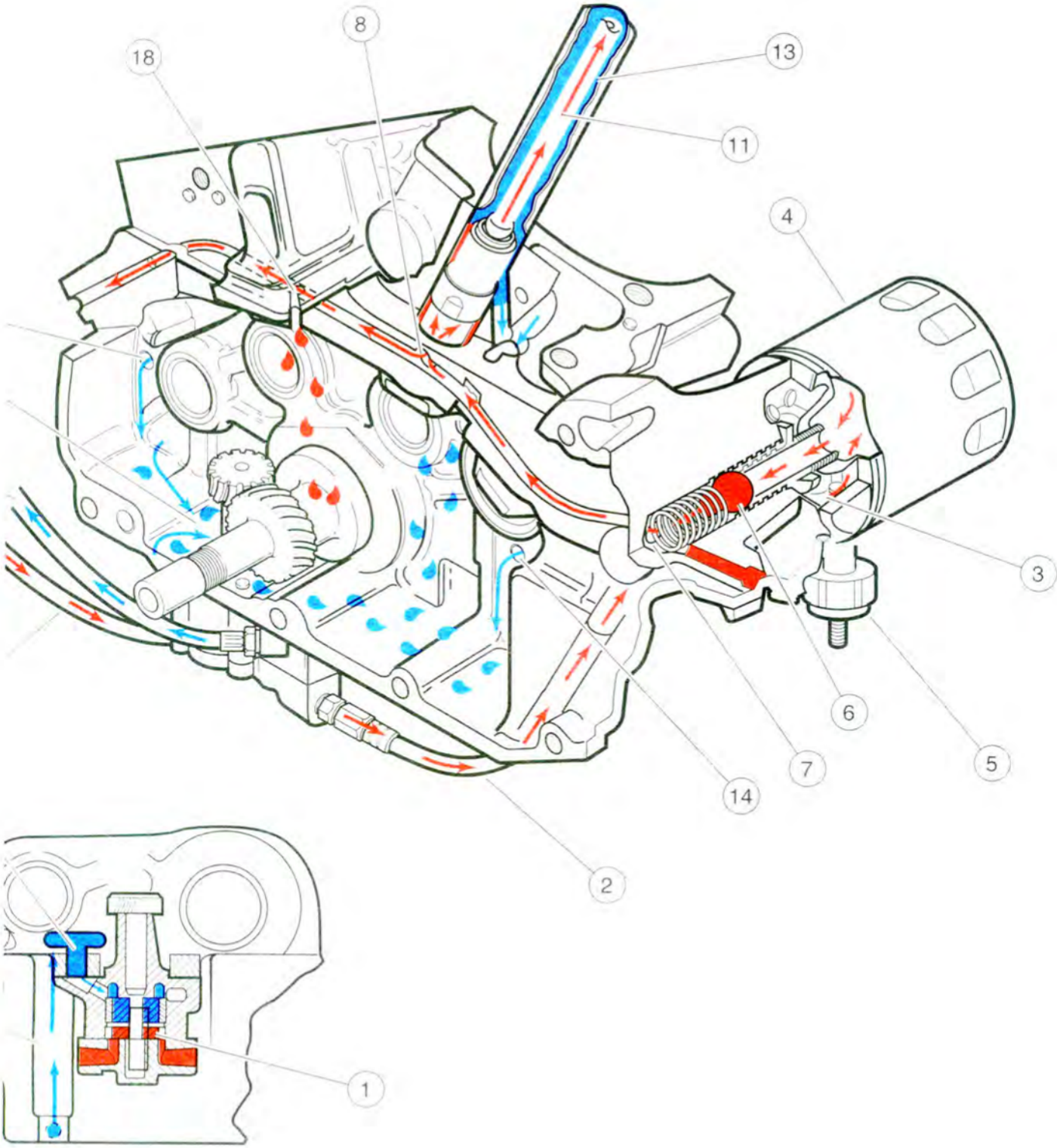

L Models (Red=Feed Oil, Blue=Return Oil)

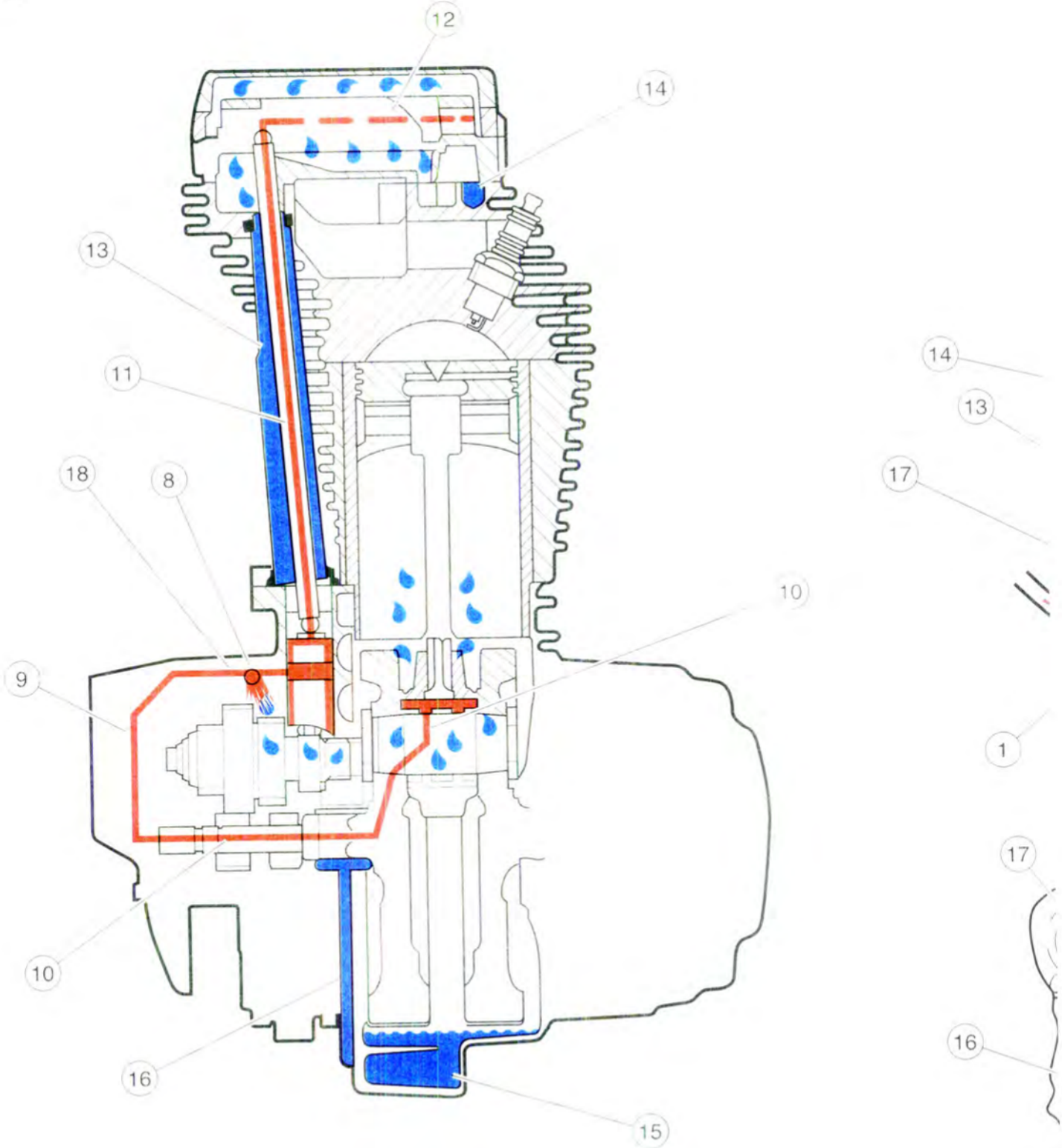

Figure 3-12. Lubrication Diagram: X

Figure 3-12.
Lubrication Diagram: XL Models (Red=Feed Oil, Blue=Return Oil)

Figure 3-13.
Lubrication Diagram: XR Models (Red=Feed Oil, Blue=Return Oil)

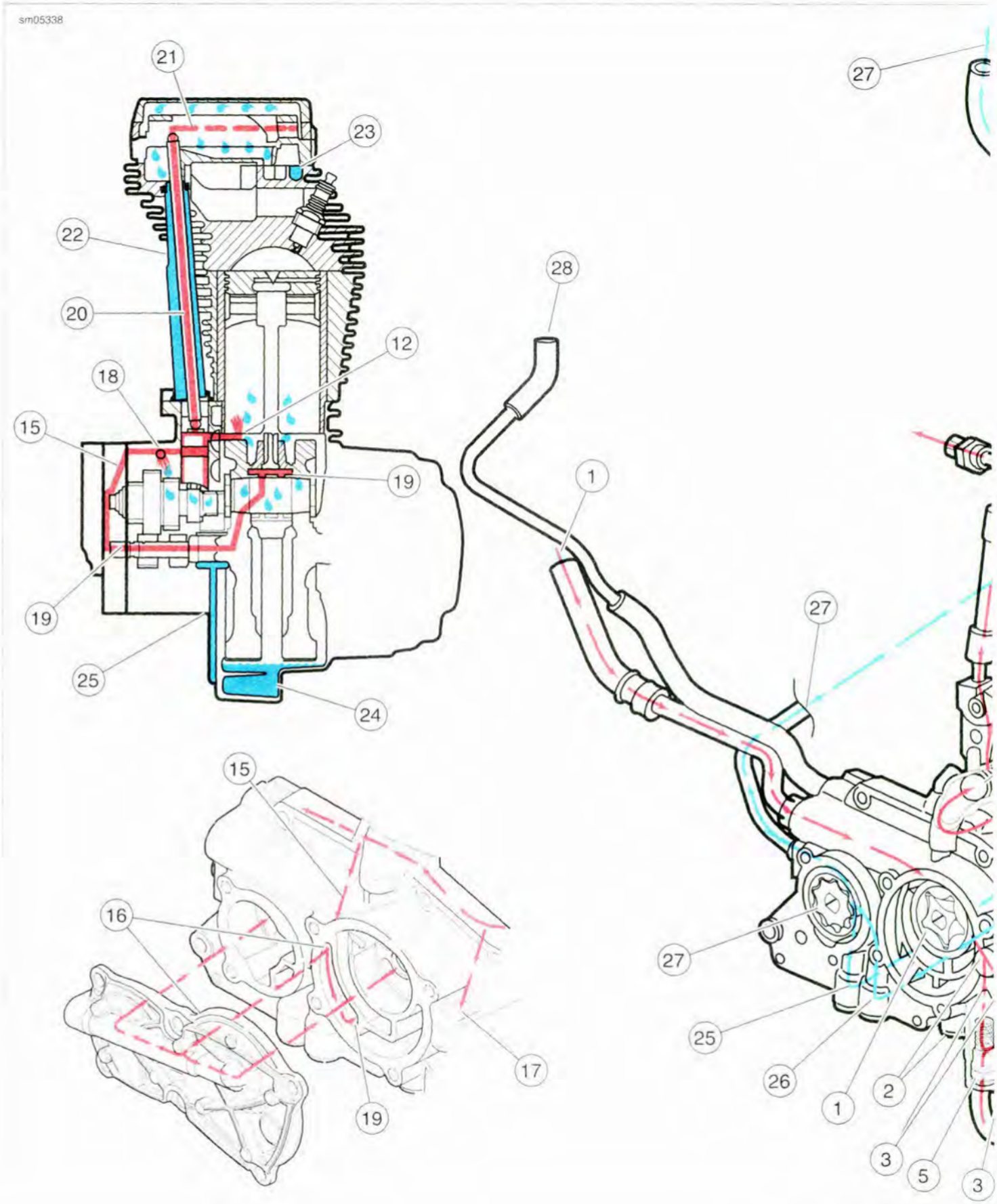

Figure 3-13. Lubrication Diagram: XF

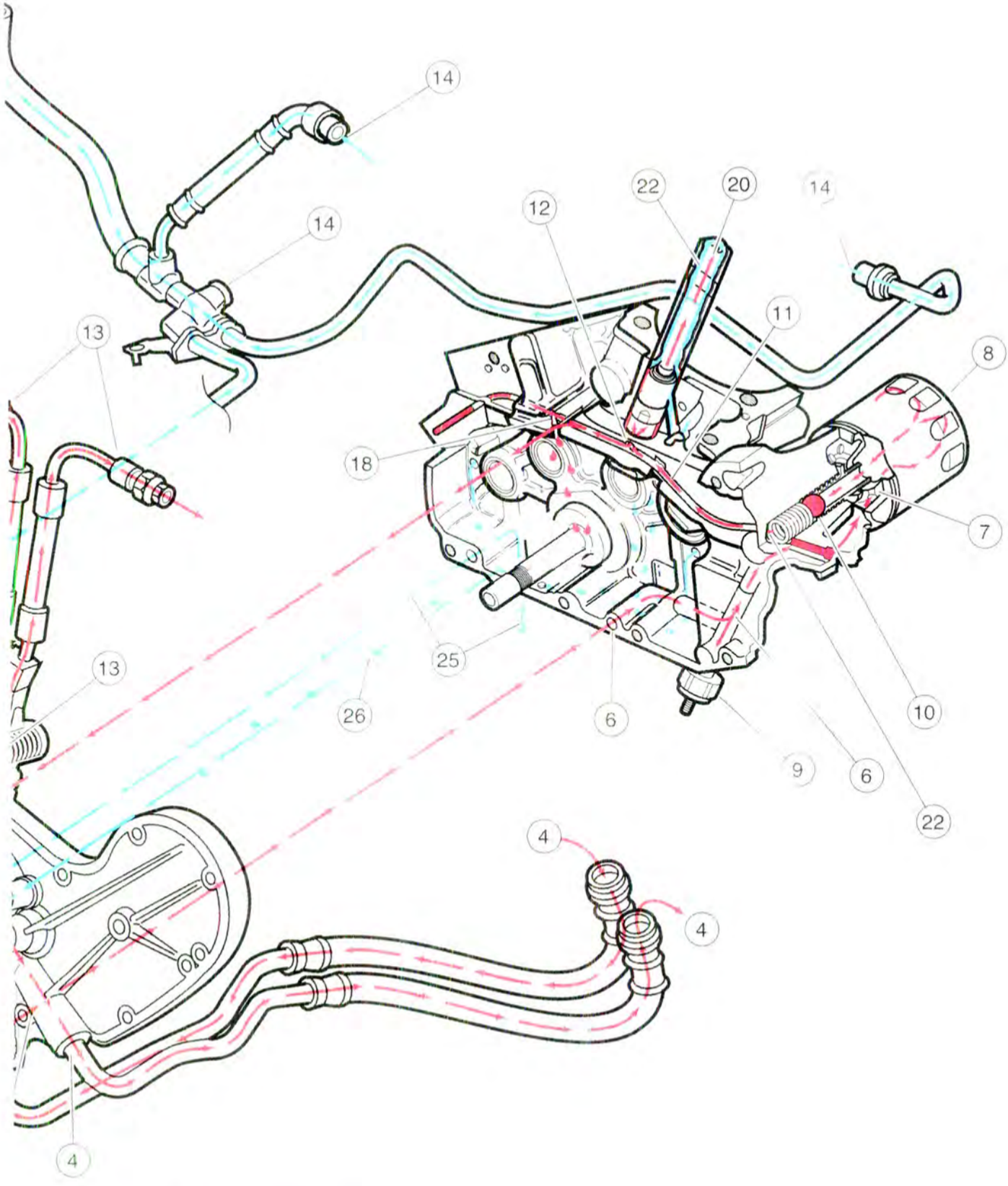

Models (Red=Feed Oil, Blue=Return Oil)

Figure 3-13.
Lubrication Diagram: XR Models (Red=Feed Oil, Blue=Return Oil)

TYPICAL SYMPTOMS

Symptoms indicating a need for engine repair are often misleading, but generally if more than one symptom is present, possible causes can be narrowed down to make at least a partial diagnosis. An above normal consumption of oil, for example, could be caused by several mechanical faults (see 1.31 TROUBLESHOOTING). But when accompanied by a blue-gray smoke from the exhaust, and when low compression is present, it indicates the rings need replacing. Low compression by itself, however, indicates improperly seated valves, not worn rings.

Certain knocking noises may be caused by loose bearings, others by piston slap, a condition where piston or cylinder or both out of tolerance, allowing the piston to slap from front to rear of the cylinder as it moves up and down.

Most frequently, valves, rings, pins, bushings, and bearings need attention at about the same time. If the symptoms can be narrowed down through the process of elimination to indicate that any one of the above components is worn, it is best to give attention to all of the cylinder head and cylinder parts.

TOP END REPAIR

NOTE

During top end disassembly, the engine may be left in the chassis for service.

If servicing only cylinder head components, pistons, cylinders and/or upper rod bushings, see 3.10 TOP END SERVICE. Two options are available depending upon engine status.

- 3.10 TOP END SERVICE, Engine in Chassis.
- 3.10 TOP END SERVICE, Engine Removed from Chassis.

BOTTOM END REPAIR

NOTE

Servicing components in the cam compartment requires only partial disassembly. This can be done with the engine left in the chassis.

After disassembling as far as the cylinder heads you may find that bottom end repair is necessary. Bottom end service may require either partial or complete disassembly of the engine.

- To service the cam compartment, see 3.11 BOTTOM END SERVICE, Engine in Chassis.
- To service components in the flywheel compartment, the engine must be removed and the crankcase halves split. See 3.11 BOTTOM END SERVICE, Engine Removed From Chassis.

ENGINE IN CHASSIS

Table 3-24. Engine in Chassis

SERVICE PROCEDURE	COMPONENT REPAIR PROCEDURES
Remove parts necessary to gain access to all components above cylinder deck. See 3.15 TOP END OVERHAUL: DISASSEMBLY, Stripping Motorcycle for Top End Repair.	
Continue with 3.15 TOP END OVERHAUL: DISASSEMBLY. Remove/repair sub-assembly components only if necessary.	
Remove rocker arm outer covers. Remove crankcase breathers. See 3.15 TOP END OVERHAUL: DISASSEMBLY, Cylinder Heads.	*Inspect and repair as necessary. See 3.5 CRANKCASE BREATHING SYSTEM: XL MODELS or 3.6 CRANKCASE BREATHING SYSTEM: XR MODELS.
Remove cylinder heads. See 3.15 TOP END OVERHAUL: DISASSEMBLY, Cylinder Heads.	*Inspect and repair as necessary. See 3.21 CYLINDER HEAD.
Remove push rods, push rod covers and tappet covers. See 3.15 TOP END OVERHAUL: DISASSEMBLY, Cylinder Heads. Remove tappets. See 3.19 VALVE TAPPETS, Removal.	*Inspect and repair as necessary. See 3.19 VALVE TAPPETS.
Remove cylinders and pistons. See 3.15 TOP END OVERHAUL: DISASSEMBLY, Cylinder and Piston.	*Inspect and repair as necessary. See 3.22 CYLINDER AND PISTON. Inspect upper connecting rod and repair as necessary. See 3.22 CYLINDER AND PISTON, Connecting Rod Bushings.
Complete all appropriate steps under 3.16 TOP END OVERHAUL: ASSEMBLY.	
Complete motorcycle assembly. See 3.16 TOP END OVERHAUL: ASSEMBLY, Assembling Motorcycle After Top End Repair.	
* When this step is completed during top end service, you may advance to 3.16 TOP END OVERHAUL: ASSEMBLY. if no other work is to be done.	

Table 3-25. Engine Removed from Chassis

SERVICE PROCEDURE	COMPONENT REPAIR PROCEDURES
Remove engine from chassis. See 3.12 REMOVING ENGINE FROM CHASSIS.	
Start 3.15 TOP END OVERHAUL: DISASSEMBLY. Remove and repair subassembly components as necessary.	
Remove rocker arm outer covers. Remove crankcase breathers. See 3.15 TOP END OVERHAUL: DISASSEMBLY, Cylinder Heads.	*Inspect and repair as necessary. See 3.5 CRANKCASE BREATHING SYSTEM: XL MODELS or 3.6 CRANKCASE BREATHING SYSTEM: XR MODELS.
Remove cylinder heads. See 3.15 TOP END OVERHAUL: DISASSEMBLY, Cylinder Heads.	*Inspect and repair as necessary. See 3.21 CYLINDER HEAD.
Remove push rods, push rod covers and tappet covers. See 3.15 TOP END OVERHAUL: DISASSEMBLY, Cylinder Heads. Remove tappets. See 3.19 VALVE TAPPETS, Removal.	*Inspect and repair as necessary. See 3.19 VALVE TAPPETS.
Remove cylinders and pistons. See 3.15 TOP END OVERHAUL: DISASSEMBLY, Cylinder and Piston.	*Inspect and repair as necessary. See 3.22 CYLINDER AND PISTON. Inspect upper connecting rod and repair as necessary. See 3.22 CYLINDER AND PISTON, Connecting Rod Bushings.
Complete all appropriate steps under 3.16 TOP END OVERHAUL: ASSEMBLY.	
Install engine in motorcycle. Complete all appropriate steps under 3.13 INSTALLING ENGINE IN CHASSIS.	
Complete motorcycle assembly. See 3.16 TOP END OVERHAUL: ASSEMBLY, Assembling Motorcycle After Top End Repair.	
* When this step is completed during top end service, you may advance to 3.16 TOP END OVERHAUL: ASSEMBLY. if no other work is to be done.	

ENGINE IN CHASSIS

Table 3-26. Engine in Chassis: Cam Compartment Service

SERVICE PROCEDURE	COMPONENT REPAIR PROCEDURES
Remove parts necessary to gain access to all components above cylinder deck. See 3.15 TOP END OVERHAUL: DISASSEMBLY, Stripping Motorcycle for Top End Repair.	
Continue with 3.15 TOP END OVERHAUL: DISASSEMBLY. Remove/repair sub-assembly components only if necessary.	
Remove rocker arm outer covers. Remove crankcase breathers. See 3.15 TOP END OVERHAUL: DISASSEMBLY, Cylinder Heads.	Inspect and repair as necessary. See 3.5 CRANKCASE BREATHING SYSTEM: XL MODELS or 3.6 CRANKCASE BREATHING SYSTEM: XR MODELS.
Remove push rods, push rod covers and tappet covers. See 3.15 TOP END OVERHAUL: DISASSEMBLY, Cylinder Heads. Remove tappets. See 3.17 BOTTOM END OVERHAUL: DISASSEMBLY, Tappets.	Inspect and repair as necessary. See 3.19 VALVE TAPPETS.
Continue with 3.17 BOTTOM END OVERHAUL: DISASSEMBLY.	
Remove gear case cover and cam gears. See 3.20 GEARCASE COVER AND CAM GEARS.	*Inspect and repair as necessary. See 3.20 GEARCASE COVER AND CAM GEARS.
Remove oil pump components. See 3.24 OIL PUMP: XL MODELS or 3.25 OIL PUMP: XR MODELS.	Inspect and repair as necessary. See 3.24 OIL PUMP: XL MODELS or 3.25 OIL PUMP: XR MODELS.
Complete all appropriate steps under 3.18 BOTTOM END OVERHAUL: ASSEMBLY.	
Complete motorcycle assembly. See 3.16 TOP END OVERHAUL: ASSEMBLY, Assembling Motorcycle After Top End Repair.	
* When this step is completed during bottom end service, you may advance to 3.18 BOTTOM END OVERHAUL: ASSEMBLY. if no other work is to be done.	

Table 3-27. Engine Removed from Chassis: Flywheel Compartment Service or Complete Engine Overhaul

SERVICE PROCEDURE	COMPONENT REPAIR PROCEDURES
Remove engine from chassis. See 3.12 REMOVING ENGINE FROM CHASSIS.	
Start 3.15 TOP END OVERHAUL: DISASSEMBLY. Remove and repair subassembly components as necessary.	
Remove rocker arm outer covers. Remove crankcase breathers. See 3.15 TOP END OVERHAUL: DISASSEMBLY, Cylinder Heads.	Inspect and repair as necessary. See 3.5 CRANKCASE BREATHING SYSTEM: XL MODELS or 3.6 CRANKCASE BREATHING SYSTEM: XR MODELS.
Remove cylinder heads. See 3.15 TOP END OVERHAUL: DISASSEMBLY, Cylinder Heads.	Inspect and repair as necessary. See 3.21 CYLINDER HEAD.
Remove push rods, push rod covers and tappet covers. See 3.15 TOP END OVERHAUL: DISASSEMBLY, Cylinder Heads. Remove tappets. See 3.17 BOTTOM END OVERHAUL: DISASSEMBLY, Tappets.	Inspect and repair as necessary. See 3.19 VALVE TAPPETS.
Remove cylinders and pistons. See 3.15 TOP END OVERHAUL: DISASSEMBLY, Cylinder and Piston.	Inspect and repair as necessary. See 3.22 CYLINDER AND PISTON. Inspect upper connecting rod and repair as necessary. See 3.22 CYLINDER AND PISTON, Connecting Rod Bushings.
Continue with 3.17 BOTTOM END OVERHAUL: DISASSEMBLY. Remove and repair subassembly components as necessary.	
Remove gearcase cover and cam gears. See 3.20 GEARCASE COVER AND CAM GEARS.	Inspect and repair as necessary. See 3.20 GEARCASE COVER AND CAM GEARS.
Remove oil pump. See 3.24 OIL PUMP: XL MODELS or 3.25 OIL PUMP: XR MODELS.	Inspect and repair as necessary. See 3.24 OIL PUMP: XL MODELS or 3.25 OIL PUMP: XR MODELS.
Complete all appropriate steps under 3.17 BOTTOM END OVERHAUL: DISASSEMBLY, Crankcase to split crankcases and remove flywheel assembly, piston jets, etc.	Inspect and repair as necessary. See 3.23 CRANKCASE. Inspect and repair transmission assembly as necessary. See 5.10 TRANSMISSION REMOVAL AND DISASSEMBLY, 5.11 TRANSMISSION ASSEMBLY, 5.15 TRANSMISSION INSTALLATION and related subjects.
Complete all appropriate steps under 3.18 BOTTOM END OVERHAUL: ASSEMBLY.	
Complete all appropriate steps under 3.16 TOP END OVERHAUL: ASSEMBLY.	
Install engine in motorcycle. Complete all appropriate steps under 3.13 INSTALLING ENGINE IN CHASSIS.	
Complete motorcycle assembly. See 3.16 TOP END OVERHAUL: ASSEMBLY, Assembling Motorcycle After Top End Repair.	

GENERAL

If it becomes necessary to remove the engine from the motorcycle, follow the step-by-step procedure below. It is important to follow the procedure as outlined, particularly in the areas of stabilizer link and engine mount disassembly.

PROCEDURE: XL MODELS

PART NUMBER	TOOL NAME
HD-45967	SHOP DOLLY
HD-45968	FAT JACK
HD-46284	ENGINE HOOK

⚠WARNING

To prevent spray of fuel, purge system of high-pressure fuel before supply line is disconnected. Gasoline is extremely flammable and highly explosive, which could result in death or serious injury. (00275a)

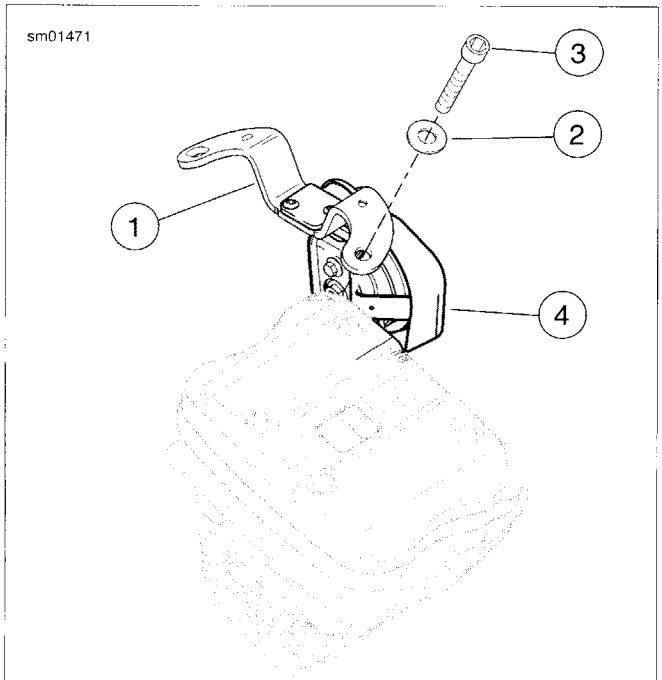

1. **Cylinder head bracket**
2. **Washer (2)**
3. **Screw (2)**
4. **Horn assembly**

Figure 3-14. Horn and Cylinder Head Bracket (Models With Side Mounted Horn Only)

1. Position vehicle upright. Purge the fuel supply hose of high pressure gasoline. Disconnect fuel supply hose from fuel pump module. See 4.5 FUEL TANK: XL MODELS.
2. Remove seat.
3. Remove left side cover. See 2.19 LEFT SIDE COVER.

⚠WARNING

Prevent accidental vehicle start-up, which could cause death or serious injury. First disconnect negative (-) battery cable at engine and then positive (+) cable from battery. (00280b)

4. Disconnect negative (-) battery cable from ground stud on crankcase. Disconnect positive (+) battery cables at battery. See 1.17 BATTERY MAINTENANCE.
5. Drain primary chaincase/transmission fluid. See 1.14 TRANSMISSION LUBRICANT.
6. Drain oil tank. See 1.6 ENGINE OIL AND FILTER. Do not install drain plug back in end of drain hose at this time.
7. Unplug O2 sensor connectors [137], [138] and remove exhaust pipes and mufflers. See 4.14 EXHAUST SYSTEM: XL MODELS.
8. Remove right front footrest assembly and rear brake linkage.
   a. **Models equipped with mid-mount foot controls:** see 2.39 RIDER FOOT CONTROLS: XL MID-MOUNT CONTROLS.
   b. **Models equipped with forward foot controls:** see 2.40 RIDER FOOT CONTROLS: XL FORWARD CONTROLS.
9. Remove screw, washer and exhaust pipe clamp bracket from sprocket cover. Remove two screws securing sprocket cover to engine case. Remove sprocket cover.
10. Loosen rear axle nut and move rear axle all the way forward. Tighten axle nut enough to hold the axle and wheel in position in the rear fork. Remove rear drive belt from transmission sprocket. See 5.7 DRIVE BELT.
11. Remove transmission sprocket. See 5.16 TRANSMISSION SPROCKET.
12. Remove exhaust system interconnect. See 4.14 EXHAUST SYSTEM: XL MODELS.
13. Disconnect oil tank feed, drain and return hoses from oil tank. See 3.27 OIL TANK. Pull drain hose up through drain hose sleeve in rear of engine crankcase and remove hose from vehicle.
14. Drain and remove fuel tank. See 4.5 FUEL TANK: XL MODELS.
15. **Models with side mounted horn:** unplug wiring harness connectors from horn. See Figure 3-14. Remove two screws (3) and washers (2). Remove cylinder head bracket (1) with horn (4) from cylinder heads as a unit.
16. **Models with front mounted horn:** unplug horn connectors and remove horn from horn bracket. See 6.34 HORN.
17. Remove air cleaner cover, air filter and air cleaner backing plate. See 4.3 AIR CLEANER: XL MODELS. California models: remove EVAP purge hose from induction module. See 4.20 EVAPORATIVE EMISSIONS CONTROL (CA MODELS).

18. See 4.9 INDUCTION MODULE: XL MODELS and unplug the following connectors from the induction module:
    a. Fuel injector connectors [84], [85].
    b. Temperature/Manifold absolute pressure (TMAP) sensor connector [80].
    c. Idle Air Control (IAC) connector [87].
    d. Throttle Position (TP) sensor connector [88].
19. Unplug the following electrical connectors from the engine:
    a. Ground wire at powertrain ground stud on crankcase.
    b. Spark plug wires.
    c. Oil pressure switch connector [120]. See 6.33 OIL PRESSURE SWITCH.
    d. Crank position (CKP) sensor connector [79]. See 6.25 CRANK POSITION SENSOR (CKP).
    e. Alternator AC connector [46]. See 6.3 VOLTAGE REGULATOR.
    f. Neutral indicator switch connector [136]. See 6.28 NEUTRAL INDICATOR SWITCH.
    g. Vehicle speed sensor (VSS) connector [65]. See 6.27 VEHICLE SPEED SENSOR (VSS).
    h. Starter relay wire (GN) at starter motor. See 6.13 STARTER.
    i. Engine Temperature (ET) sensor connector [90]. Cut and remove barbed cable strap securing sensor harness to ECM caddy. See 4.8 ENGINE TEMPERATURE (ET) SENSOR.
20. Disconnect clutch cable and remove from clutch lever on left handlebar. See 2.30 CLUTCH CONTROL. Remove cable clips securing clutch cable to frame left front downtube.
21. Remove push-in fastener securing right wire harness caddy to coil bracket. Discard push-in fastener. Remove screw securing ignition switch to coil bracket. Unplug spark plug wires from coil. Unplug ignition coil harness connector [83] from coil. Remove coil and bracket from frame. See 6.17 IGNITION COIL.
22. Remove screw securing left wire harness caddy to right wire harness caddy. Separate caddies. See 6.30 ELECTRICAL CADDIES, Wire Harness Caddy: XL Models.
23. Unplug the following harness connectors located in the wire harness caddies:
    a. Instruments connector [20].
    b. Headlamp connector [38].
    c. Right hand control connector (black) [22].
    d. Left hand control connector (gray) [24].
    e. Front turn signal connector [31].
24. Slide left wire harness caddy between frame and engine, toward right side of vehicle. Move wire harness caddies and wiring harnesses out of the way.
25. Remove induction module and intake manifold as a unit. See 4.9 INDUCTION MODULE: XL MODELS. Secure induction module/intake manifold assembly and throttle cables out of the way.
26. **California models:** remove EVAP canister and disconnect hoses. See 4.20 EVAPORATIVE EMISSIONS CONTROL (CA MODELS).
27. See Figure 3-15. Remove screws (3, 4), grounding strap (2), stabilizer link (1) and spacer (5).

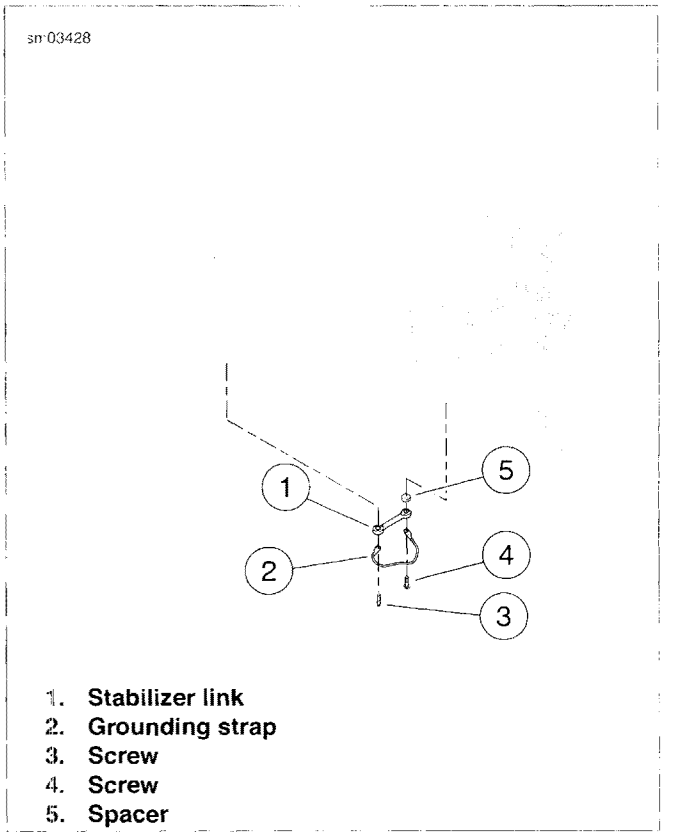

Figure 3-15. Rear Stabilizer Link Assembly: Typical (XL Model Shown)

28. See Figure 3-16. Remove upper stabilizer link (2) and upper frame bracket (3):
    a. Remove screw (4) securing stabilizer link to engine bracket (1).
    b. Remove screws (5) and washers (8). Remove horn bracket (9) (models with front mounted horn) and upper stabilizer link bracket with stabilizer link.
29. See Figure 3-17. Remove lower stabilizer link (1) and lower frame bracket (2):
    a. Remove screw (3) securing stabilizer link to engine crankcase boss.
    b. Remove screws (4), washers (5) and lower frame bracket with stabilizer link.

30. Remove rider left footrest and mounting bracket assembly and shift lever.
    a. **Models equipped with mid-mount foot controls:** see 2.39 RIDER FOOT CONTROLS: XL MID-MOUNT CONTROLS.
    b. **Models equipped with forward foot controls:** see 2.40 RIDER FOOT CONTROLS: XL FORWARD CONTROLS.

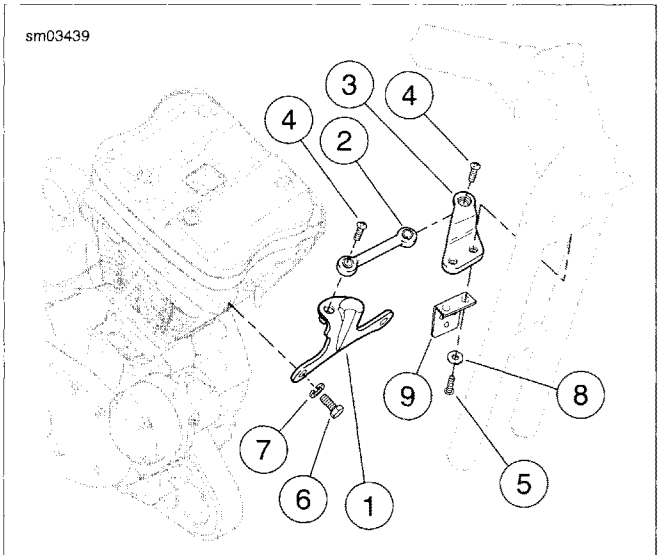

1. **Engine bracket**
2. **Upper stabilizer link**
3. **Upper frame bracket**
4. **Screw**
5. **Screw (2)**
6. **Screw (2)**
7. **Lock washer (2)**
8. **Washer (2)**
9. **Horn bracket (models with front mounted horn)**

Figure 3-16. Upper Front Stabilizer Link Assembly: Typical (XL Model Shown)

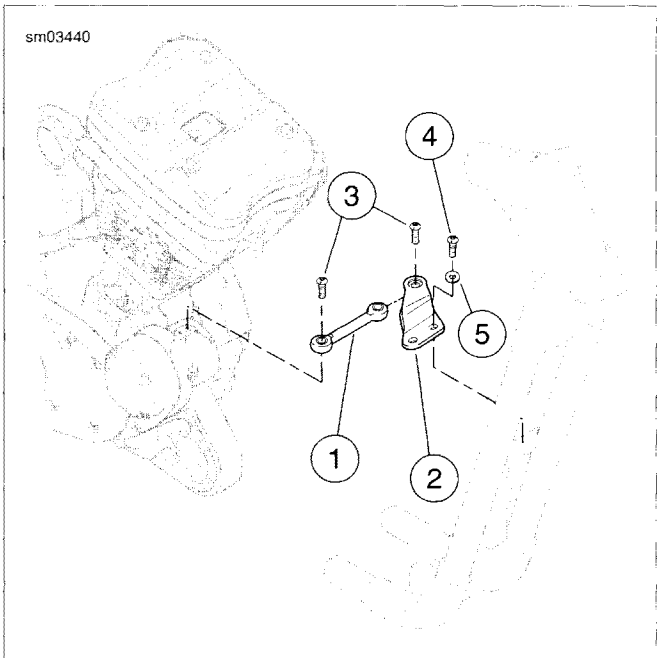

1. **Lower stabilizer link**
2. **Lower frame bracket**
3. **Screw (2)**
4. **Screw (2)**
5. **Washer (2)**

Figure 3-17. Lower Front Stabilizer Link Assembly: Typical (XL Model Shown)

31. **Models equipped with passenger foot rests:** remove left passenger footrest and mounting bracket assembly. See 2.42 PASSENGER FOOTRESTS.

NOTE

When removing rear brake master cylinder reservoir and securing it out of the way in the next step, make sure to keep the reservoir upright. If the reservoir is allowed to hang upside down, air bubbles could be introduced into the rear master cylinder via the feed hose. If this happens, the rear brake must be bled to remove all air from the hydraulic brake system. See 1.8 BLEEDING HYDRAULIC BRAKE SYSTEM.

32. Remove rear brake master cylinder remote reservoir. Do not disconnect hose from reservoir. See 2.14 REAR BRAKE MASTER CYLINDER RESERVOIR. Secure reservoir upright, out of the way.

33. Remove rear stop lamp switch from battery tray. Unplug rear stop lamp switch connectors [121].

    Remove screw and p-clamp securing rear brake hose to battery tray.

    Carefully pull rear stop lamp switch and brake lines out of the way. Be careful not to bend or kink metal brake lines. See 6.24 REAR STOP LAMP SWITCH.

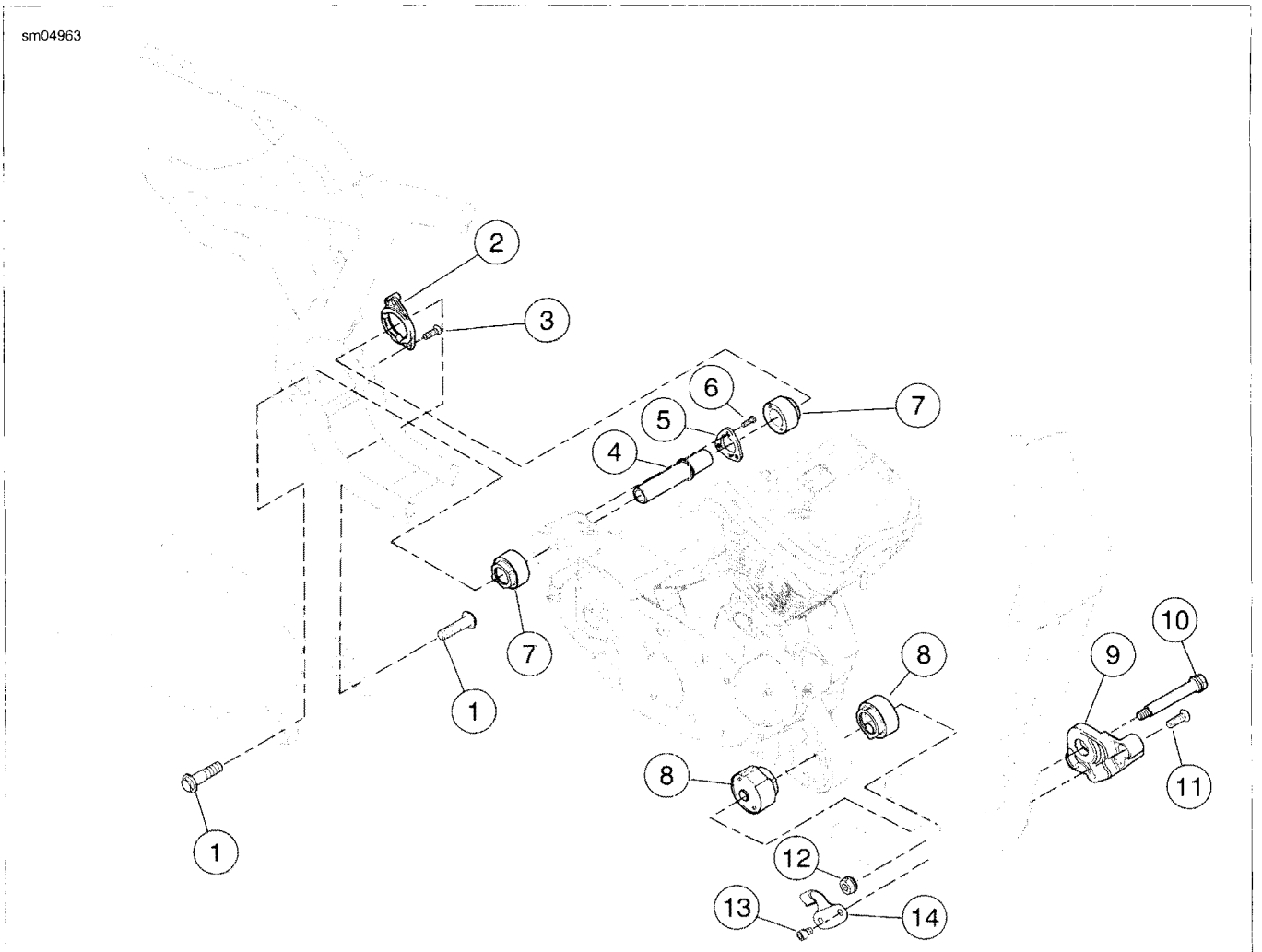

1. **Bolt (2)**
2. **Rear isolator mount**
3. **Screw (2)**
4. **Rear fork pivot shaft**
5. **Rear pivot lockplate**
6. **Screw (3)**
7. **Rear isolator (2)**
8. **Front isolator (2)**
9. **Front isolator mount**
10. **Front mount bolt**
11. **Screw (2)**
12. **Nut**
13. **Screw**
14. **J-clip (2)**

Figure 3-18. Engine Mount/Isolator Components (typical)

34. With the aid of a FAT JACK (Part No. HD-45968), support motorcycle on SHOP DOLLY (Part No. HD-45967).
35. See Figure 3-18. Remove fasteners (13) and j-clip (14) from each side of frame.
36. Loosen, but do not remove, two front isolator mounting bracket screws (11) on left side of engine.
37. Loosen, but do not remove, two rear isolator mounting bracket screws (3) on left side of engine.
38. Attach ENGINE HOOK (Part No. HD-46284) and engine hoist. Carefully raise engine enough to relieve pressure from mounting bolts.
39. Remove front engine mount bolt (10) and nut (12).
40. Remove two screws (11) and front isolator mount (9).
41. Remove two rear engine mount/rear fork pivot bolts (1). Pull rear fork back until fork pivot bosses clear the frame.
42. Remove oil tank vent hose from oil tank. See 3.27 OIL TANK.
43. Remove two screws (3) and rear isolator mounting bracket (2) from frame.
44. Lift engine as necessary and swing assembly out from chassis toward the left side. Swing rear of engine out first. Then remove engine from chassis.

PROCEDURE: XR MODELS

PART NUMBER	TOOL NAME
HD-45967	SHOP DOLLY
HD-45968	FAT JACK
HD-46284	ENGINE HOOK

⚠WARNING

To prevent spray of fuel, purge system of high-pressure fuel before supply line is disconnected. Gasoline is extremely flammable and highly explosive, which could result in death or serious injury. (00275a)

1. Position vehicle upright. Purge the fuel supply hose of high pressure gasoline. Disconnect fuel supply hose from fuel pump module. See 4.6 FUEL TANK: XR MODELS.
2. Remove seat. See 2.38 SEAT: XR MODELS.
3. Remove left side cover. See 2.19 LEFT SIDE COVER.

⚠WARNING

Prevent accidental vehicle start-up, which could cause death or serious injury. First disconnect negative (-) battery cable at engine and then positive (+) cable from battery. (00280b)

4. Disconnect negative (-) battery cable from ground stud on crankcase. Disconnect positive (+) battery cables at battery. Remove battery. See 1.17 BATTERY MAINTENANCE.
5. Drain primary chaincase/transmission fluid. See 1.14 TRANSMISSION LUBRICANT.
6. Drain oil tank. See 1.6 ENGINE OIL AND FILTER. Do not install drain plug back in end of drain hose at this time.
7. See Figure 3-19. Remove fasteners (1, 2, 3) and remove induction module cover. Cut tie strap securing TP sensor harness to side plate.

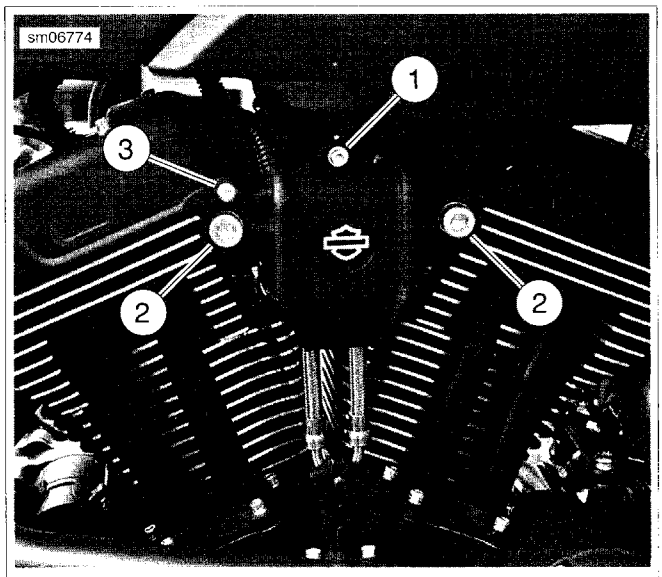

1. **Fastener, to induction module**
2. **Fastener, to cylinder head (2)**
3. **Fastener, wire form**

Figure 3-19. Induction Module Cover and Wire Form

8. Disconnect O2 sensor connectors [137], [138] and remove exhaust pipes and mufflers as an assembly. See 4.14 EXHAUST SYSTEM: XL MODELS.
9. Remove these parts if present:
   a. **California models:** remove EVAP canister and disconnect hoses. See 4.20 EVAPORATIVE EMISSIONS CONTROL (CA MODELS).
   b. **All other models:** remove siren if equipped. See 6.32 OPTIONAL SECURITY SIREN.
10. See Figure 3-20. Remove two fasteners (1) retaining siren/canister mount plate and brake line (2) retainer.
11. Remove three screws securing sprocket cover to engine case. Remove sprocket cover.
12. Remove belt guard and debris deflector from rear fork.
13. Remove fastener securing right shock absorber to the rear fork.
14. Loosen rear axle nut and move rear axle all the way forward. Tighten axle nut enough to hold the axle and wheel in position in the rear fork. Remove rear drive belt. See 5.7 DRIVE BELT.
15. Remove transmission sprocket only if transmission or engine are to be disassembled. See 5.16 TRANSMISSION SPROCKET.
16. Disconnect rear stop lamp switch connectors [121].
17. Remove rear brake line from clamps at the bottom of left rear fork.

NOTE

When securing rear master cylinder out of the way in the next step, make sure to keep the reservoir upright. If the reservoir is allowed to hang upside down, air bubbles could be introduced into the rear master cylinder. If this happens, the rear brake must be bled to remove all air from the hydraulic brake system.

18. See Figure 3-21. Remove fasteners (1) and remove rider's right footrest including master cylinder assembly and rear brake linkage. Be careful not to bend or kink metal brake line and remove assembly out left side of motorcycle. Tie assembly, with master cylinder upright, out of the way.

19. Disconnect oil tank feed, drain and return hoses from oil tank. See 3.27 OIL TANK. Pull drain hose up through drain hose sleeve in rear of engine crankcase and remove hose from vehicle.

20. Unplug horn connectors and remove horn from horn bracket. See 6.34 HORN.

21. Remove fasteners securing air cleaner to fuel tank. Drain and remove fuel tank. See 4.6 FUEL TANK: XR MODELS.

22. Remove air cleaner from induction module as an assembly. See 4.4 AIR BOX: XR MODELS. California models: remove EVAP purge hose from induction module. See 4.20 EVAPORATIVE EMISSIONS CONTROL (CA MODELS).

23. See 4.10 INDUCTION MODULE: XR MODELS and unplug the following connectors from the induction module:
    a. Fuel injector connectors [84], [85].
    b. Temperature/Manifold absolute pressure (TMAP) sensor connector [80].
    c. Idle Air Control (IAC) connector [87].
    d. Throttle Position (TP) sensor connector [88].

24. Unplug the following electrical connectors from the engine:
    a. Ground wire at powertrain ground stud on crankcase.
    b. Spark plug wires.
    c. Oil pressure switch connector [120]. See 6.33 OIL PRESSURE SWITCH.
    d. Crank position (CKP) sensor connector [79]. See 6.25 CRANK POSITION SENSOR (CKP).
    e. Alternator AC connector [46] and DC connector [77]. See 6.3 VOLTAGE REGULATOR.
    f. Neutral indicator switch connector [136]. See 6.28 NEUTRAL INDICATOR SWITCH.
    g. Vehicle speed sensor (VSS) connector [65]. See 6.27 VEHICLE SPEED SENSOR (VSS).
    h. Starter relay wire (GN) at starter motor. See 6.13 STARTER.
    i. Engine Temperature (ET) sensor connector [90]. Cut and remove barbed cable strap securing sensor harness to H-bracket. See 4.8 ENGINE TEMPERATURE (ET) SENSOR.

25. If equipped, disconnect jiffy stand sensor connector [133] and remove sensor. See 6.31 JIFFY STAND SWITCH: INTERNATIONAL MODELS.

26. Disconnect clutch cable and remove from clutch lever on left handlebar. See 2.30 CLUTCH CONTROL. Remove cable from oil cooler mount and clips securing clutch cable to left front downtube.

27. See Figure 3-22. Remove oil cooler fasteners (1) from frame mounts (2) and remove oil cooler. It is not necessary to disconnect the oil hoses attached to the oil cooler. Tie oil cooler to engine.

28. Remove fastener retaining coil bracket to backbone electrical caddy. Remove screw securing ignition switch to coil bracket. Unplug spark plug wires from coil. Unplug ignition coil harness connector [83] from coil. Remove coil and bracket from frame. Position ignition switch out of the way. See 6.17 IGNITION COIL.

29. Remove induction module, leaving cables attached. See 4.10 INDUCTION MODULE: XR MODELS. Secure induction module assembly and throttle cables out of the way.

30. See Figure 3-23. Remove screws (3, 4), grounding strap (2), stabilizer link (1) and spacer (5).

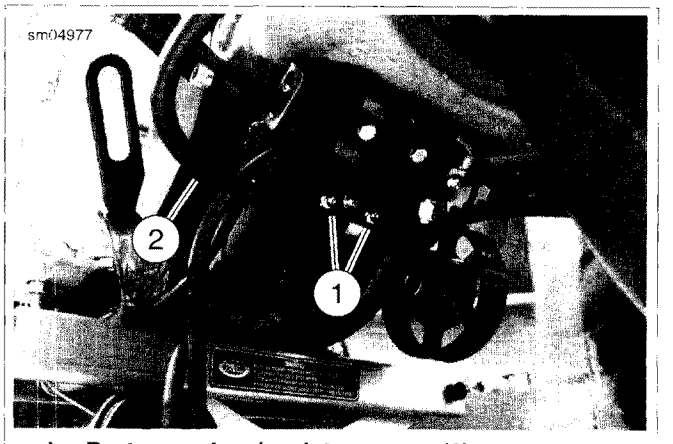

1. **Fastener, siren/canister mount (2)**
2. **Rear brake line**

Figure 3-20. Siren/Canister Mount Plate and Brake Line

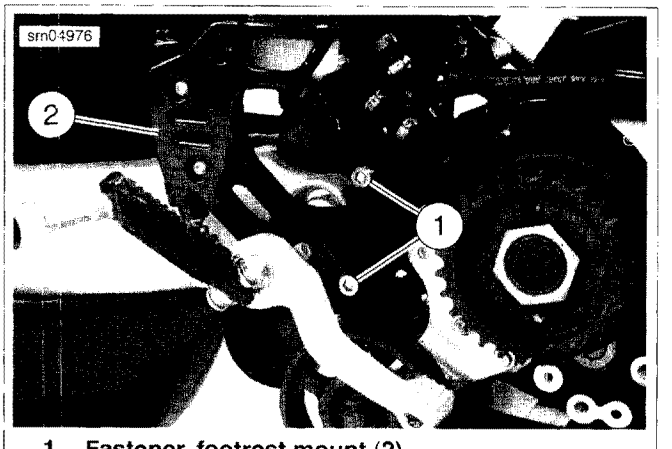

1. **Fastener, footrest mount (2)**
2. **Footrest and master cylinder bracket**

Figure 3-21. Right Footrest and Rear Master Cylinder

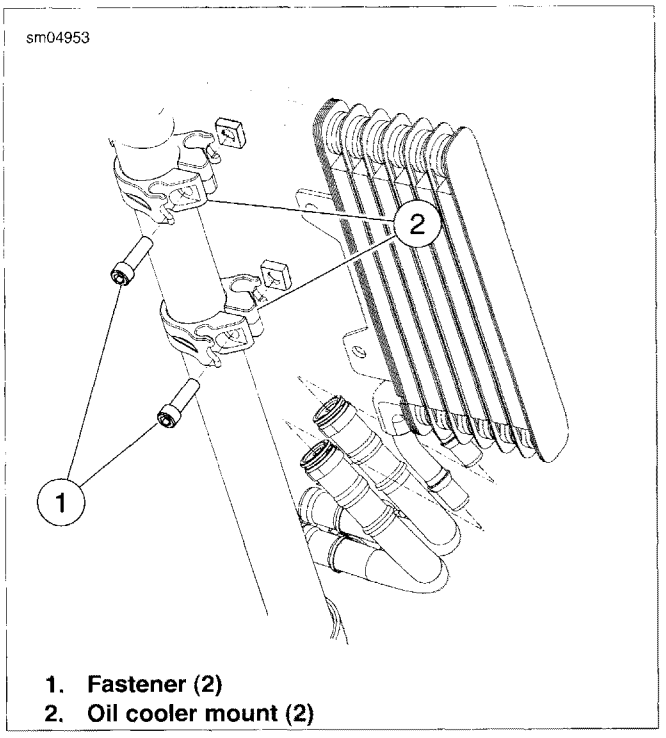

1. **Fastener (2)**
2. **Oil cooler mount (2)**

Figure 3-22. Oil Cooler Mounts

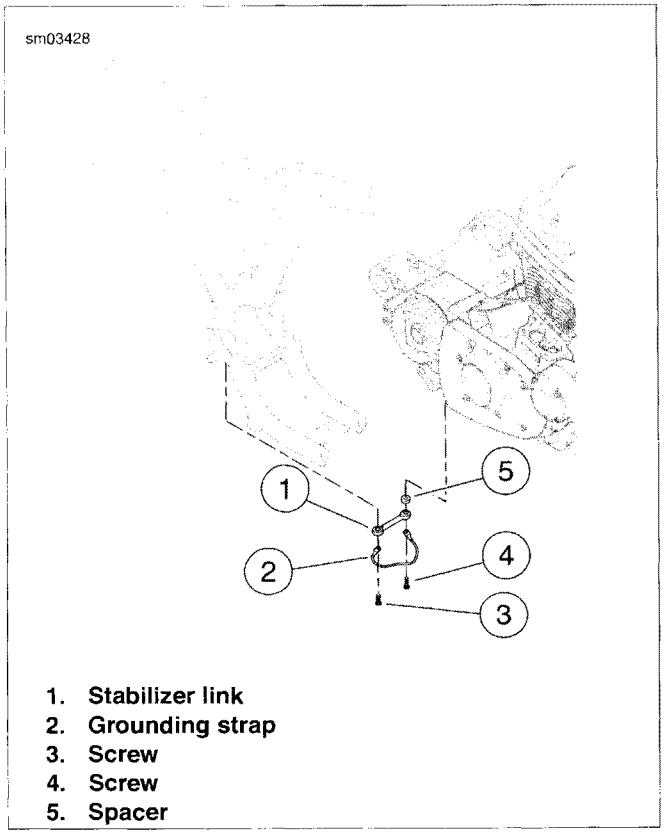

1. **Stabilizer link**
2. **Grounding strap**
3. **Screw**
4. **Screw**
5. **Spacer**

Figure 3-23. Rear Stabilizer Link Assembly: Typical (XL Model Shown)

31. See Figure 3-24. Remove upper stabilizer link (2) and upper frame bracket (3):
    a. Remove screw (4) securing stabilizer link to engine bracket (1).
    b. Remove screws (5) and washers (8). Remove horn bracket (9) and upper stabilizer link bracket (3) with stabilizer link.
32. See Figure 3-25. Remove lower stabilizer link (1) and lower frame bracket (2) as an assembly:
    a. Remove screw (3) securing stabilizer link to engine crankcase boss.
    b. Remove screws (4), washers (5) and lower frame bracket with stabilizer link.
33. See Figure 3-26. Remove fastener (1) and disconnect shift linkage from transmission shift lever.
34. Remove fasteners (2) and remove rider left footrest and mounting bracket assembly along with foot shift lever and linkage.

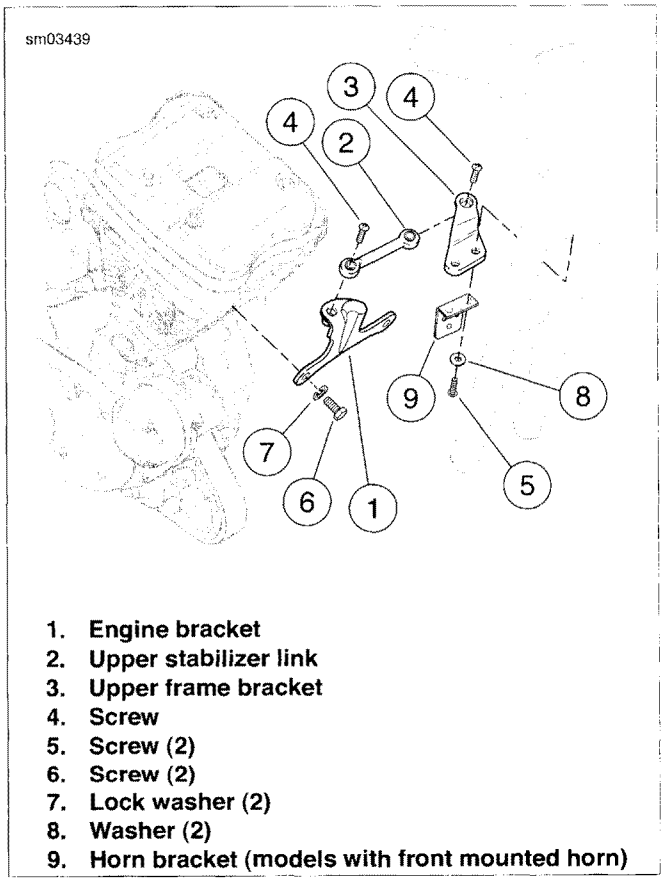

1. **Engine bracket**
2. **Upper stabilizer link**
3. **Upper frame bracket**
4. **Screw**
5. **Screw (2)**
6. **Screw (2)**
7. **Lock washer (2)**
8. **Washer (2)**
9. **Horn bracket (models with front mounted horn)**

Figure 3-24. Upper Front Stabilizer Link Assembly: Typical (XL Model Shown)

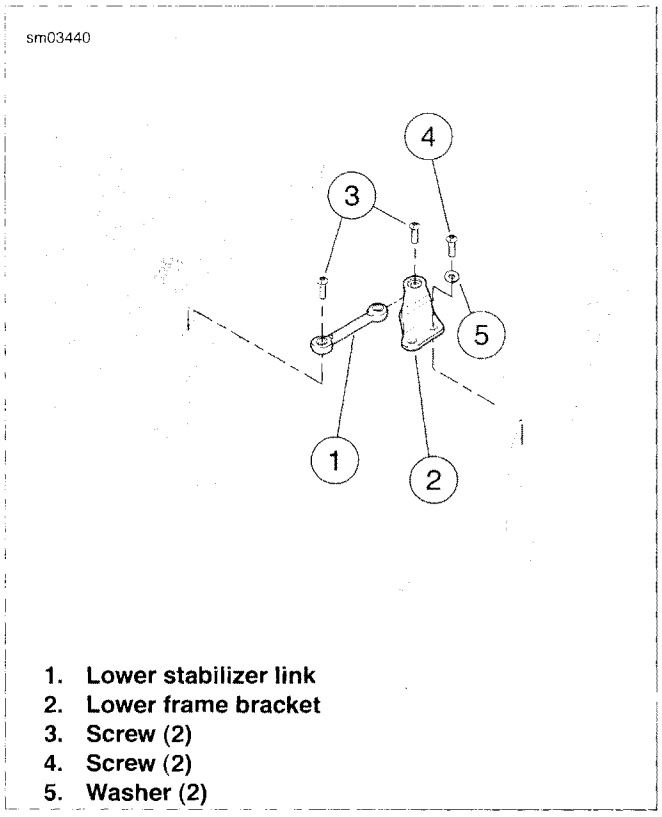

1. **Lower stabilizer link**
2. **Lower frame bracket**
3. **Screw (2)**
4. **Screw (2)**
5. **Washer (2)**

Figure 3-25. Lower Front Stabilizer Link Assembly: Typical (XL Model Shown)

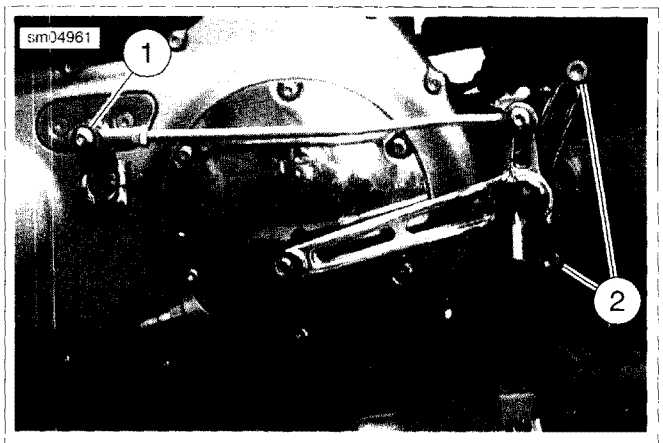

1. **Fastener, shift linkage**
2. **Fastener, footrest mount (2)**

Figure 3-26. Left Footrest and Shift Linkage

35. With the aid of a FAT JACK (Part No. HD-45968), support motorcycle on SHOP DOLLY (Part No. HD-45967).
36. See Figure 3-27. Remove fasteners (13) and j-clip (14) from each side of frame.
37. Loosen, but do not remove, two front isolator mounting bracket screws (11) on left side of engine.
38. Loosen, but do not remove, two rear isolator mounting bracket screws (3) on left side of engine.
39. Attach ENGINE HOOK (Part No. HD-46284) and engine hoist. Carefully raise engine enough to relieve pressure from mounting bolts.
40. Remove front engine mount bolt (10) and nut (12).
41. Remove two screws (11) and front isolator mount (9).
42. Remove two rear engine mount/rear fork pivot bolts (1). Pull rear fork back until fork pivot bosses clear the frame.
43. Remove oil tank vent hose from oil tank. See 3.27 OIL TANK.
44. Remove two screws (3) and rear isolator mounting bracket (2) from frame.

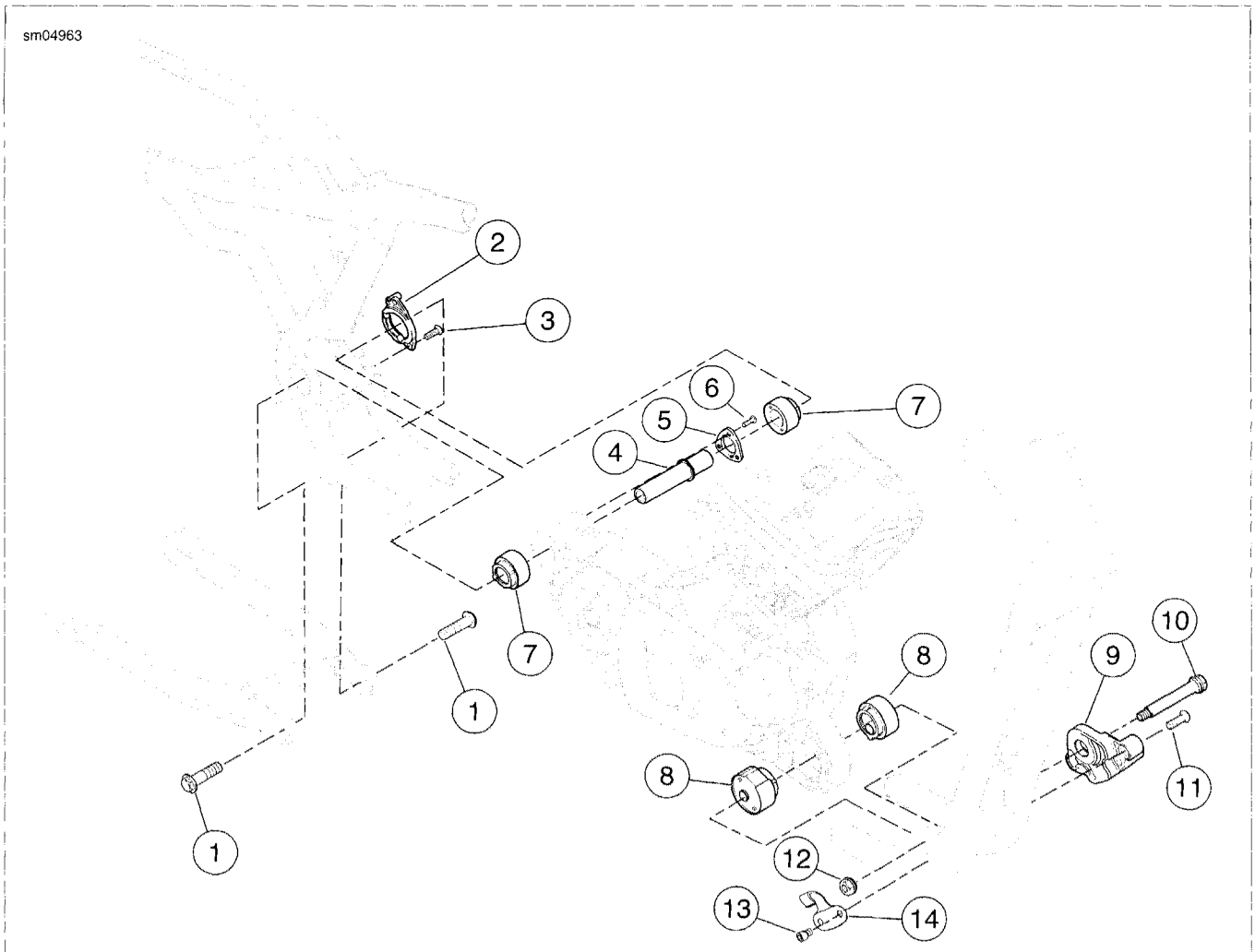

1. Bolt (2)
2. Rear isolator mount
3. Screw (2)
4. Rear fork pivot shaft
5. Rear pivot lockplate
6. Screw (3)
7. Rear isolator (2)
8. Front isolator (2)
9. Front isolator mount
10. Front mount bolt
11. Screw (2)
12. Nut
13. Screw
14. J-clip (2)

Figure 3-27. Engine Mount/Isolator Components (typical)

45. Rotate backbone electrical caddy to the left to allow room to lift the engine.
46. Lift engine as necessary and swing assembly out from left side of chassis, rear of engine first. Remove engine from chassis.

GENERAL

When installing the engine in the motorcycle, follow the step-by-step procedure below. It is important to follow the procedure as outlined, particularly in the areas of stabilizer link and engine mount assembly.

PROCEDURE: XL MODELS

PART NUMBER	TOOL NAME
HD-45967	SHOP DOLLY
HD-45968	FAT JACK
HD-46284	ENGINE HOOK

1. See Figure 3-18. Make sure pivot shaft (4) and rear pivot lockplate (5) are mounted on engine mounting boss at rear of engine. Position right rear isolator (7) on pivot shaft on rear of engine. Do not install left rear isolator at this time.
2. Position right front isolator (8) on front of engine. Do not install left front isolator at this time.
3. Attach ENGINE HOOK (Part No. HD-46284) and engine hoist to engine.
4. Lift engine and swing assembly into chassis from left side. Swing front of engine in first.
5. Install left rear isolator (7) over pivot shaft (4). Install rear isolator mount (2) over left rear isolator and attach to frame with two screws (3). Do not tighten screws at this time.
6. Raise or lower engine until right front isolator lines up with mounting hole in frame.
7. Install left front isolator (8) and front isolator mount (9) to left side of frame with two screws (11). Do not tighten screws at this time.
8. Insert front engine mount bolt (10) from left side, through isolators and crankcase boss. Place nut (12) on bolt but do not tighten at this time.
9. Tighten two screws (11) securing front isolator mount (9) to 25-35 ft-lbs (33.9-47.5 Nm).
10. Tighten two screws (3) securing rear isolator mount (2) to 25-35 ft-lbs (33.9-47.5 Nm).
11. Using **new** hose clamp, install oil tank vent hose at oil tank. See 3.27 OIL TANK.
12. Swing rear fork into position and install rear fork pivot/engine mount bolts (1). Tighten to 60-70 ft-lbs (81.4-95.0 Nm).
13. Tighten front engine mount bolt (10) and nut (12) to 95-105 ft-lbs (129-142 Nm).
14. Remove ENGINE HOOK (Part No. HD-46284).
15. With the aid of a FAT JACK (Part No. HD-45968), remove motorcycle from SHOP DOLLY (Part No. HD-45967).
16. Carefully move rear stop lamp switch and brake lines into place and secure switch assembly to battery tray with bolt. Tighten to 72-120 **in-lbs** (8.1-13.6 Nm). Secure flexible brake hose to battery tray with p-clamp and screw. Tighten to 30-40 **in-lbs** (3.4-4.5 Nm). Plug rear stop lamp switch connectors [121] into rear stop lamp switch. See 6.24 REAR STOP LAMP SWITCH.
17. Install rear brake master cylinder remote reservoir. Secure with screw with captive washer. Tighten to 20-25 **in-lbs** (2.3-2.8 Nm). Install reservoir cover. See 2.14 REAR BRAKE MASTER CYLINDER RESERVOIR.
18. **Models equipped with passenger foot rests:** Install left passenger footrest assembly. Tighten mounting screws to 45-50 ft-lbs (61-68 Nm). See 2.42 PASSENGER FOOTRESTS.
19. Install shift lever and rider left footrest and mounting bracket assembly:
    a. **Models equipped with mid-mount foot controls:** see 2.39 RIDER FOOT CONTROLS: XL MID-MOUNT CONTROLS.
    b. **Models equipped with forward foot controls:** see 2.40 RIDER FOOT CONTROLS: XL FORWARD CONTROLS.

NOTE

Check each end of the stabilizer links for excessive wear prior to installation. The spherical ball end may rotate loosely, but should not have any lateral movement. Replace the link if lateral movement exists.

20. See Figure 3-17. Install lower front stabilizer link and frame bracket:
    a. Install lower frame bracket (2) with stabilizer link (1), and secure with screws (4) and washers (5). Tighten screws to 25-35 ft-lbs (33.9-47.5 Nm).
    b. Install screw (3) securing stabilizer link to engine crankcase boss. Tighten screw to 25-35 ft-lbs (33.9-47.5 Nm).
21. See Figure 3-16. Install upper stabilizer link (2) and upper frame bracket (3):
    a. Install upper frame bracket with stabilizer link, horn bracket (9) (models with front mounted horn), screws (5) and washers (8). Tighten screws to 25-35 ft-lbs (33.9-47.5 Nm).
    b. Install screw (4) securing stabilizer link to engine bracket (1). Tighten screw to 25-35 ft-lbs (33.9-47.5 Nm).
22. See Figure 3-15. Install spacer (5), rear stabilizer link (1), grounding strap (2) and screws (3, 4). Tighten screws to 25-35 ft-lbs (33.9-47.5 Nm).
23. California models: install EVAP canister and hoses. See 4.20 EVAPORATIVE EMISSIONS CONTROL (CA MODELS).
24. Install induction module and intake manifold. See 4.9 INDUCTION MODULE: XL MODELS.

25. Position left and right wire harness caddies on either side of frame backbone. Plug in the following connectors, located in the caddies:
    a. Instruments connector [20].
    b. Headlamp connector [38].
    c. Right hand control connector (black) [22].
    d. Left hand control connector (gray) [24].
    e. Front turn signal connector [31].
26. Mount caddies together. Make sure tabs on caddies engage each other and frame backbone bracket. Secure with screw. See 6.29 MAIN WIRING HARNESS.
27. Position ignition coil and bracket on frame behind steering head. Be certain all wiring harnesses from front end of motorcycle, as well as right wire harness caddy mounting boss and throttle cables are positioned properly between coil bracket uprights.
28. Plug ignition coil harness connector [83] into coil. See 6.17 IGNITION COIL. Mount ignition switch to coil bracket with screw. Tighten screw to 34-45 **in-lbs** (4.0-5.1 Nm). Secure right wire harness caddy to coil bracket with new push-in fastener.
29. Connect clutch cable to clutch lever on left handlebar. Attach clutch cable (along with wiring harness and front O2 sensor harness) to frame front left downtube with cable clips. Adjust clutch. See 2.30 CLUTCH CONTROL.
30. Plug the following electrical connectors into the engine:
    a. Engine Temperature (ET) sensor connector [90]. Secure sensor harness to ECM caddy with barbed cable strap. To avoid damage to sensor when vehicle is in operation, position cable strap on harness so there is a loop in harness between sensor and ECM caddy. Press barbed prong of cable strap into hole in boss in ECM caddy. See 4.8 ENGINE TEMPERATURE (ET) SENSOR.
    b. Starter relay wire (GN) at starter motor. See 6.13 STARTER.
    c. Vehicle speed sensor (VSS) connector [65]. See 6.27 VEHICLE SPEED SENSOR (VSS).
    d. Neutral indicator switch connector [136]. See 6.28 NEUTRAL INDICATOR SWITCH.
    e. Alternator AC connector [46]. See 6.3 VOLTAGE REGULATOR.
    f. Crank position (CKP) sensor connector [79]. See 6.25 CRANK POSITION SENSOR (CKP).
    g. Oil pressure switch connector [120]. See 6.33 OIL PRESSURE SWITCH.
    h. Spark plug wires.
    i. Ground wire at powertrain ground stud on crankcase.
31. See 4.9 INDUCTION MODULE: XL MODELS and plug the following connectors into the induction module:
    a. Throttle position (TP) sensor connector [88].
    b. Idle air control (IAC) connector [87].
    c. Temperature/manifold absolute pressure (TMAP) sensor connector [80].
    d. Fuel injector connectors [84], [85].
32. **Models with front mounted horn:** install horn. See 6.34 HORN.
33. **Models with side mounted horn:** See Figure 3-14. Install cylinder head bracket (1) with horn (4) onto cylinder heads as a unit. Secure with two screws (3) and washers (2). Tighten screws to 17-24 ft-lbs (23.1-32.6 Nm). Plug wiring harness connectors into horn.
34. Install air cleaner backing plate, air filter and air cleaner cover. See 4.3 AIR CLEANER: XL MODELS. California models: install EVAP purge hose on induction module. See 4.20 EVAPORATIVE EMISSIONS CONTROL (CA MODELS).

⚠WARNING

When servicing the fuel system, do not smoke or allow open flame or sparks in the vicinity. Gasoline is extremely flammable and highly explosive, which could result in death or serious injury. (00330a)

35. Install fuel tank. Tighten screws to 15-20 ft-lbs (20.4-27.1 Nm). Attach quick-connect fitting on fuel line to fuel tank fitting. Gently tug on quick-connect fitting to make sure it is securely locked in place. See 4.5 FUEL TANK: XL MODELS.
36. Feed oil drain hose down through drain hose sleeve in rear of engine crankcase. Using new hose clamps, install oil tank feed, drain and return hoses onto oil tank. Install drain plug in end of drain hose and secure with worm drive clamp. Tighten clamp securely. See 3.27 OIL TANK.
37. Install exhaust system interconnect. See 4.14 EXHAUST SYSTEM: XL MODELS.
38. Install transmission sprocket. See 5.16 TRANSMISSION SPROCKET.
39. Install rear drive belt and hand-tighten rear axle. Final belt adjustment will be performed later. See 5.7 DRIVE BELT.
40. Install sprocket cover. Secure with two screws. Note that long screw goes in top hole, short screw in bottom hole. Do not tighten screws at this time.
41. Install exhaust pipe clamp bracket, washer and screw to sprocket cover. Tighten to 30-33 ft-lbs (40.7-44.8 Nm). Now tighten other two sprocket cover screws to 80-120 **in-lbs** (9.0-13.6 Nm).
42. Install right front footrest assembly and rear brake linkage.
    a. **Models equipped with mid-mount foot controls:** see 2.39 RIDER FOOT CONTROLS: XL MID-MOUNT CONTROLS.
    b. **Models equipped with forward foot controls:** see 2.40 RIDER FOOT CONTROLS: XL FORWARD CONTROLS.

43. Install exhaust pipes and mufflers. Plug in O2 sensor connectors [137], [138]. Make sure rear O2 sensor harness is routed toward left side of motorcycle before looping back to harness connector so that harness does not contact exhaust pipe or port. See 4.14 EXHAUST SYSTEM: XL MODELS.

44. Fill oil tank. See 1.6 ENGINE OIL AND FILTER, Changing Oil and Filter.

45. Fill primary chaincase/transmission with transmission lubricant. See 1.14 TRANSMISSION LUBRICANT.

46. Adjust belt tension and rear wheel alignment. Tighten rear axle nut to 95-105 ft-lbs (129-142 Nm). Install **new** e-clip. See 1.16 WHEEL ALIGNMENT.

⚠WARNING

Connect positive (+) battery cable first. If positive (+) cable should contact ground with negative (-) cable connected, the resulting sparks can cause a battery explosion, which could result in death or serious injury. (00068a)

47. Connect positive (+) battery cables to battery. Connect negative (-) battery cable to ground point on engine crankcase. See 1.17 BATTERY MAINTENANCE.

48. Install left side cover. See 2.19 LEFT SIDE COVER.

⚠WARNING

After installing seat, pull upward on seat to be sure it is locked in position. While riding, a loose seat can shift causing loss of control, which could result in death or serious injury. (00070b)

49. Install seat.

PROCEDURE: XR MODELS

PART NUMBER	TOOL NAME
HD-45967	SHOP DOLLY
HD-45968	FAT JACK
HD-46284	ENGINE HOOK

1. See Figure 3-27. Make sure pivot shaft (4) and rear pivot lockplate (5) are mounted on engine mounting boss at rear of engine. Position right rear isolator (7) on pivot shaft on rear of engine. Do not install left rear isolator at this time.

2. Position right front isolator (8) on front of engine. Do not install left front isolator at this time.

3. Attach ENGINE HOOK (Part No. HD-46284) and engine hoist to engine.

4. Lift engine and swing assembly into chassis from left side. Swing front of engine in first.

5. Install left rear isolator (7) over pivot shaft (4). Install rear isolator mount (2) over left rear isolator and attach to frame with two screws (3). Do not tighten screws at this time.

6. Raise or lower engine until right front isolator lines up with mounting hole in frame.

7. Install left front isolator (8) and front isolator mount (9) to left side of frame with two screws (11). Do not tighten screws at this time.

8. Insert front engine mount bolt (10) from left side, through isolators and crankcase boss. Place nut (12) on bolt but do not tighten at this time.

9. Tighten two screws (11) securing front isolator mount (9) to 25-35 ft-lbs (33.9-47.5 Nm).

10. Tighten two screws (3) securing rear isolator mount (2) to 25-35 ft-lbs (33.9-47.5 Nm).

11. Using **new** hose clamp, install oil tank vent hose at oil tank. See 3.27 OIL TANK.

12. Swing rear fork into position and install rear fork pivot/engine mount bolts (1). Tighten to 60-70 ft-lbs (81.4-95.0 Nm).

13. Tighten front engine mount bolt (10) and nut (12) to 95-105 ft-lbs (129 -142 Nm).

14. Install j-clip (14) to each side of frame. Tighten fasteners (13) to 45-50 ft-lbs (61.0-67.8 Nm).

15. Remove ENGINE HOOK (Part No. HD-46284).

16. With the aid of a FAT JACK (Part No. HD-45968), remove motorcycle from SHOP DOLLY (Part No. HD-45967).

17. See Figure 3-25. Install lower front stabilizer link and frame bracket:
    a. Install lower frame bracket (2) with stabilizer link (1), and secure with screws (4) and washers (5). Tighten screws to 25-35 ft-lbs (33.9-47.5 Nm).
    b. Install screw (3) securing stabilizer link to engine crankcase boss. Tighten screw to 25-35 ft-lbs (33.9-47.5 Nm).

18. See Figure 3-24. Install upper stabilizer link (2) and upper frame bracket (3):
    a. Install upper frame bracket with stabilizer link, horn bracket (9) (models with front mounted horn), screws (5) and washers (8). Tighten screws to 25-35 ft-lbs (33.9-47.5 Nm).
    b. Install screw (4) securing stabilizer link to engine bracket (1). Tighten screw to 25-35 ft-lbs (33.9-47.5 Nm).

19. See Figure 3-23. Install spacer (5), rear stabilizer link (1), grounding strap (2) and screws (3, 4). Tighten screws to 25-35 ft-lbs (33.9-47.5 Nm).

20. See Figure 3-26. Install shift lever and rider left footrest and mounting bracket assembly. Tighten fasteners (2) to 45-50 ft-lbs (61.0-67.8 Nm)

21. Connect shift linkage to transmission shift lever. Tighten fastener (1) to 10-15 ft-lbs (13.6-20.3 Nm).

22. Install induction module and intake manifold. See 4.10 INDUCTION MODULE: XR MODELS.

23. Rotate backbone wire harness caddy down into place.

24. See 6.17 IGNITION COIL. Position ignition coil and bracket on backbone caddy behind steering head. Be certain all wiring harnesses from front end of motorcycle, as well as

right wire harness caddy mounting boss and throttle cables are positioned properly between coil bracket uprights.

25. Plug ignition coil harness connector [83] into coil. Mount ignition switch to coil bracket with screw. Tighten screw to 34-45 **in-lbs** (4.0-5.1 Nm). Secure right wire harness caddy to coil bracket with new push-in fastener.

26. Connect clutch cable to clutch lever on left handlebar and secure to lower oil cooler mount. Attach clutch cable (along with wiring harness and front O2 sensor harness) to frame front left downtube with cable clips. Adjust clutch. See 2.30 CLUTCH CONTROL.

27. See Figure 3-22. Install the oil cooler to the frame mounts. Tighten fasteners (1) to 36-60 **in-lbs** (4.1-6.8 Nm)

28. Plug the following electrical connectors into the engine:
    a. Engine Temperature (ET) sensor connector [90]. Secure sensor harness to H-bracket with barbed cable strap. To avoid damage to sensor when vehicle is in operation, position cable strap on harness so there is a loop in harness between sensor and H-bracket. Press barbed prong of cable strap into hole in boss in H-bracket. See 4.8 ENGINE TEMPERATURE (ET) SENSOR.
    b. Starter relay wire (GN) at starter motor. See 6.13 STARTER.
    c. Vehicle speed sensor (VSS) connector [65]. See 6.27 VEHICLE SPEED SENSOR (VSS).
    d. Neutral indicator switch connector [136]. See 6.28 NEUTRAL INDICATOR SWITCH.
    e. Alternator AC connector [46]. Secure to right downtube with a tie strap. See 6.3 VOLTAGE REGULATOR.
    f. Connect voltage regulator DC connector [77] and secure to frame cross member with tie strap. See 6.3 VOLTAGE REGULATOR.
    g. Crank position (CKP) sensor connector [79]. See 6.25 CRANK POSITION SENSOR (CKP).
    h. Oil pressure switch connector [120]. See 6.33 OIL PRESSURE SWITCH.
    i. Spark plug wires.
    j. Ground wire at powertrain ground stud on crankcase.

29. See 4.10 INDUCTION MODULE: XR MODELS and plug the following connectors into the induction module:
    a. Throttle Position (TP) sensor connector [88].
    b. Idle Air Control (IAC) connector [87].
    c. Temperature/Manifold absolute pressure (TMAP) sensor connector [80].
    d. Fuel injector connectors [84], [85].

30. Install and connect jiffy stand sensor. See 6.31 JIFFY STAND SWITCH: INTERNATIONAL MODELS.

31. Install and connect horn. See 6.34 HORN.

32. See Figure 3-19. Install induction module cover. Secure TP sensor harness to cover during installation. Tighten fasteners (2) to 20-24 ft-lbs (27.1-32.5 Nm). Tighten fastener (1) to 84-108 **in-lbs** (9.5-12.2 Nm). Tighten fastener (3) to 84-108 **in-lbs** (9.5-12.2 Nm).

33. Install air cleaner assembly on induction module. Connect breather hoses to rocker box fittings. See 4.4 AIR BOX: XR MODELS. California models: install EVAP purge hose on induction module. See 4.20 EVAPORATIVE EMISSIONS CONTROL (CA MODELS).

⚠WARNING

When servicing the fuel system, do not smoke or allow open flame or sparks in the vicinity. Gasoline is extremely flammable and highly explosive, which could result in death or serious injury. (00330a)

34. Install fuel tank. Tighten screws to 15-20 ft-lbs (20.4-27.1 Nm). Attach quick-connect fitting on fuel line to fuel tank fitting. Gently tug on quick-connect fitting to make sure it is securely locked in place. See 4.6 FUEL TANK: XR MODELS.

35. Secure air filter assembly to fuel tank with two screws.

36. Feed oil drain hose down through drain hose sleeve in rear of engine crankcase. Using new hose clamps, install oil tank feed, drain and return hoses onto oil tank. Install drain plug in end of drain hose and secure with worm drive clamp. Tighten clamp securely. See 3.27 OIL TANK.

37. See Figure 3-21. Install right rider footrest assembly and rear master cylinder assembly. Tighten fasteners (1) to 45-50 ft-lbs (61.0-67.8 Nm).

38. See Figure 3-20. Secure brake line and siren/canister mount plate to frame and rear fork. Tighten fasteners (1) to 17-22 ft-lbs (23.0-29.8 Nm). Connect rear brake light switch connectors.

39. Install these parts if present:
    a. **California models:** install EVAP canister and hoses. See 4.20 EVAPORATIVE EMISSIONS CONTROL (CA MODELS).
    b. **All other models:** install siren if equipped. See 6.32 OPTIONAL SECURITY SIREN.

40. If removed, install transmission sprocket. See 5.16 TRANSMISSION SPROCKET.

41. Install rear drive belt and hand-tighten rear axle. Final belt adjustment will be performed later. See 5.7 DRIVE BELT.

42. Secure right shock absorber to rear fork and tighten fastener to 45-50 ft-lbs (61.0-67.8 Nm)

43. Install belt guard and debris deflector.

44. Install sprocket cover. Tighten rear (larger) screw to 30-33 ft-lbs (40.7-44.8 Nm).Tighten forward and lower (smaller) screws to 80-120 **in-lbs** (9.0-13.6 Nm).

45. Install exhaust pipes and mufflers. See 4.15 EXHAUST SYSTEM: XR MODELS.

NOTE

It is important to route and secure the front O2 sensor harness correctly to prevent premature harness failure. Closely follow the procedure in 4.13 OXYGEN SENSOR, Installation.

46. Plug in O2 sensor connectors [137], [138]. Make sure each O2 sensor harness is routed and secured correctly. See 4.13 OXYGEN SENSOR, Installation.

47. Fill oil tank. See 1.6 ENGINE OIL AND FILTER, Changing Oil and Filter.

48. Fill primary chaincase/transmission with transmission lubricant. See 1.14 TRANSMISSION LUBRICANT.

49. Adjust belt tension and rear wheel alignment. Tighten rear axle nut to 95-105 ft-lbs (129-142 Nm). Install **new** e-clip. See 1.16 WHEEL ALIGNMENT.

⚠WARNING

Connect positive (+) battery cable first. If positive (+) cable should contact ground with negative (-) cable connected, the resulting sparks can cause a battery explosion, which could result in death or serious injury. (00068a)

50. Connect positive (+) battery cables to battery. Connect negative (-) battery cable to ground point on engine crankcase. See 1.17 BATTERY MAINTENANCE.

51. Install left side cover. See 2.19 LEFT SIDE COVER.

⚠WARNING

After installing seat, pull upward on seat to be sure it is locked in position. While riding, a loose seat can shift causing loss of control, which could result in death or serious injury. (00070b)

52. Install seat.

GENERAL

PART NUMBER	TOOL NAME
HD-46503	OIL LINE REMOVER, 1/2 IN.
HD-49096	OIL LINE REMOVER, 3/8 IN.

See Figure 3-28. The oil lines used in the Precision Cooling System incorporate flanged oil lines and quick connect fittings. These fittings can be separated using either the OIL LINE REMOVER, 1/2 IN. (Part No. HD-46503) or OIL LINE REMOVER, 3/8 IN. (Part No. HD-49096) like that shown in Figure 3-29, depending on line diameter.

1. See Figure 3-29. Close the OIL LINE REMOVER over the oil line. Match the notches in the tool flange to the U-bends in the retainer clip.
2. Rotate the tool to expand the spring clip.
3. Use finger and thumb to hold the OIL LINE REMOVER squarely against the fitting to keep the spring clip expanded. Use only enough pressure to hold the tool square. Excess pressure will prevent simultaneously pulling the line and tool from the fitting.
4. Pull the oil line and the tool from the fitting.
5. To assemble, push the oil line squarely into quick connect fitting to connect. Always apply a light film of clean engine oil to the oil line to ease assembly and prevent damage to the connector O-ring.

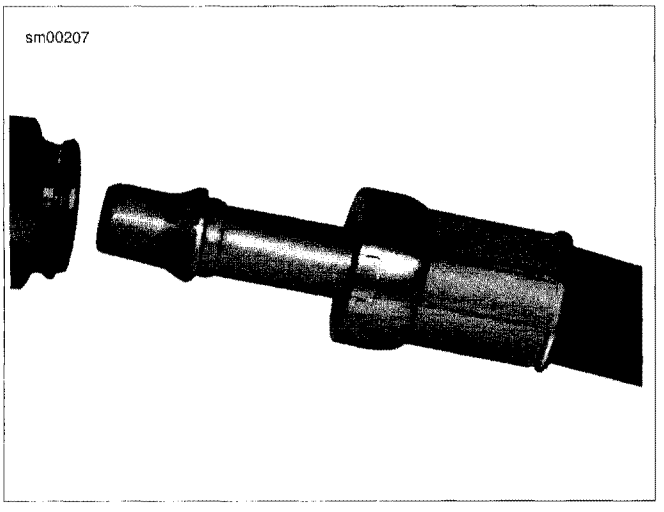

Figure 3-28. Flanged Oil Line

Figure 3-29. Oil Line Remover

RETURN OIL MANIFOLD

PART NUMBER	TOOL NAME
HD-49096	OIL LINE REMOVER, 3/8 IN.

Removal

1. Disconnect and remove battery. See 1.17 BATTERY MAINTENANCE.
2. Remove exhaust system. See 4.15 EXHAUST SYSTEM: XR MODELS.
3. Drain oil tank. See 1.6 ENGINE OIL AND FILTER.
4. Remove oil drain hose from sleeve in rear engine crankcase.
5. Remove battery positive (+) cable from starter motor. See 6.13 STARTER.
6. See Figure 3-31. From right side of motorcycle, remove fastener (1) securing oil manifold.
7. See Figure 3-30. Disconnect oil return hose (2) from oil tank.
8. Remove rear cylinder head oil line (1) from quick connect fitting using OIL LINE REMOVER, 3/8 IN. (Part No. HD-49096) while sliding return oil manifold back off from rigid oil lines and remove assembly from engine.

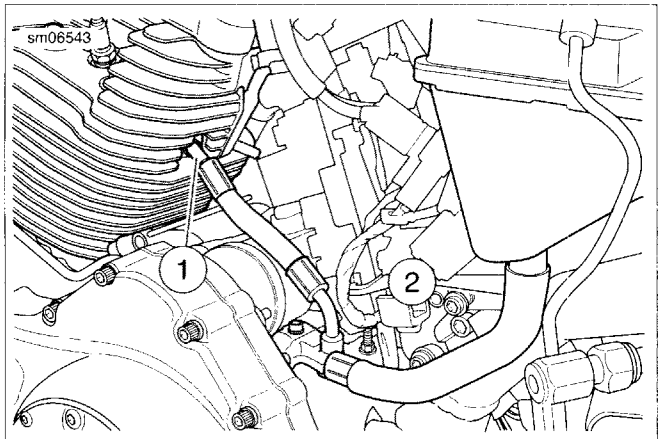

1. **Rear cylinder head oil line**
2. **Return oil hose to tank**

Figure 3-30. Rear Cylinder Oil Line

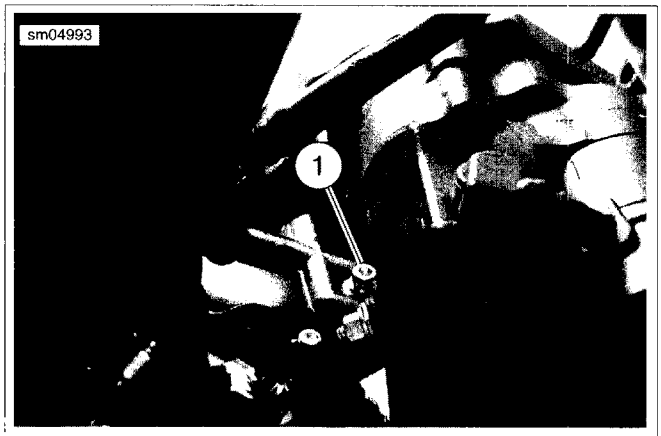

1. **Fastener**

Figure 3-31. Return Oil Manifold

Installation

NOTE

*Used O-rings can leak. Always install **new** O-rings when performing repairs.*

1. Install **new** O-rings in manifold assembly and apply a light film of oil to them.
2. Start return oil manifold on rigid lines and install rear cylinder head oil line in quick connect fitting. Ensure it is securely held by the retainer clip.
3. See Figure 3-31. Slide oil manifold onto rigid lines and secure with screw (1). Tighten to 84-108 **in-lbs** (9.5-12.2 Nm).
4. Connect oil return hose to oil tank. Secure with clamp.
5. Install and connect oil tank drain hose. Install and secure plug in drain hose.
6. Connect battery positive (+) cable to starter. See 6.13 STARTER.
7. Install and connect battery. See 1.17 BATTERY MAINTENANCE.
8. Fill oil tank with the appropriate oil. See 1.6 ENGINE OIL AND FILTER.

CYLINDER HEAD OIL RETURN LINES

PART NUMBER	TOOL NAME
HD-49096	OIL LINE REMOVER, 3/8 IN.

Removal

1. Remove return oil manifold. See 3.14 PRECISION COOLING SYSTEM: XR MODELS, Return Oil Manifold.
2. See Figure 3-32. Remove fastener (1) and raise retainer until alignment pin (2) is clear of bore in crankcase. Roll retainer out from beneath rigid oil lines to remove.
3. See Figure 3-33. Remove nut (1) and washer.
4. Separate front oil line (2) from cylinder head using OIL LINE REMOVER, 3/8 IN. (Part No. HD-49096).
5. Separate rear oil line (3) from cylinder head using OIL LINE REMOVER, 3/8 IN. (Part No. HD-49096).
6. If front oil line needs to be completely removed, remove electric starter. See 6.13 STARTER.
7. If necessary, remove quick connect fitting from cylinder head.

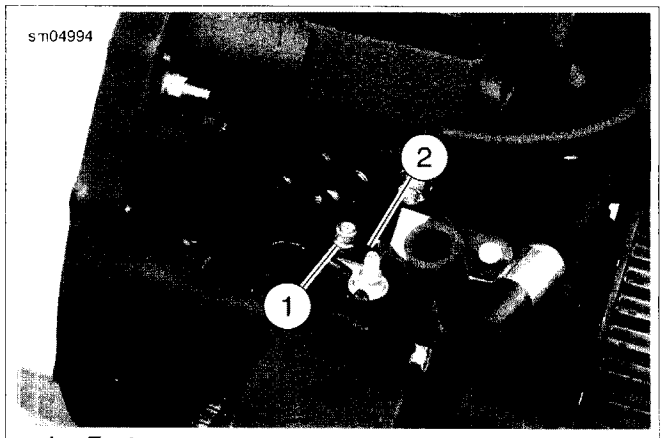

1. **Fastener**
2. **Alignment pin (hidden)**

Figure 3-32. Rigid Oil Line Retainer

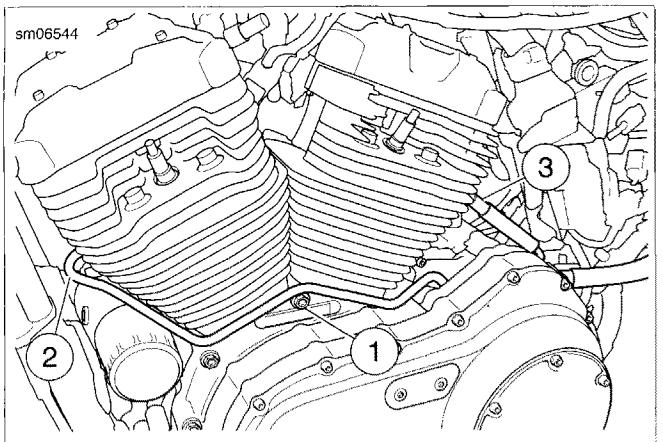

1. **Locknut**
2. **Front oil line**
3. **Rear oil line**

Figure 3-33. Cylinder Head Oil Lines

Installation

NOTE

*Used o-rings can leak. Always install **new** o-rings when performing repairs.*

1. If removed from cylinder head, install quick connect fittings with **new** o-rings. Tighten to 108-156 **in-lbs** (12.2-17.6 Nm).
2. Install new internal o-rings in quick connect fittings.
3. If removed, place front cylinder head oil line on engine and install electric starter. See 6.13 STARTER.

NOTE

Apply a light film of oil to the end of the line before inserting it into the fitting.

4. See Figure 3-33. Connect front oil line (2) to cylinder head. Ensure it is securely held by the retainer clip.
5. Secure front line to crankcase with locknut (1) and washer. Tighten to 84-108 **in-lbs** (9.5-12.2 Nm).
6. See Figure 3-32. Roll retainer under rigid lines at rear of crankcase and orient so alignment pin is in bore in case. Ensure flanges on lines are on the manifold side of the retainer. Secure with fastener (1) and tighten to 84-108 **in-lbs** (9.5-12.2 Nm)
7. Install return oil manifold. See 3.14 PRECISION COOLING SYSTEM: XR MODELS, Return Oil Manifold.
8. See Figure 3-33. Connect rear oil line (3) to cylinder head. Ensure it is securely held by the retainer clip.

CYLINDER HEAD OIL FEED ASSEMBLY

Removal

1. Disconnect the battery. See 1.17 BATTERY MAINTENANCE.
2. Drain oil tank. See 1.6 ENGINE OIL AND FILTER.
3. See Figure 3-34. Disconnect flare nuts (1) from each cylinder head.
4. Pull oil feed hose connector (2) straight up to remove feed hose assembly from check valve assembly (3).
5. Remove two fasteners (4) and remove check valve assembly (3).
6. See Figure 3-35. Carefully clamp assembly in vise and remove plug fitting (7).
7. Remove spring (5) and ball (4).
8. If necessary, remove flare fittings from cylinder heads.
9. Inspect components for wear or damage and replace as necessary.

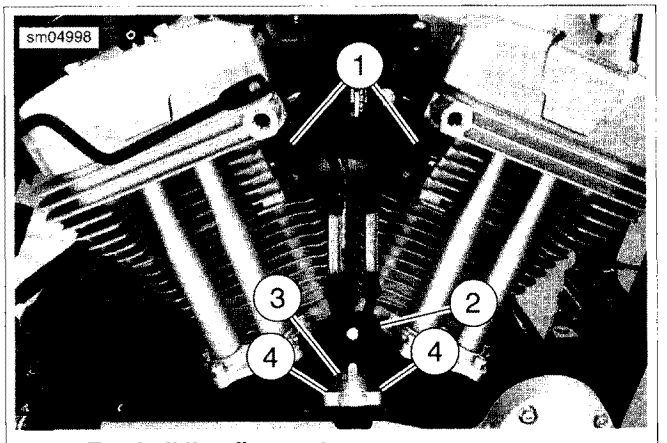

1. **Feed oil line flare nut**
2. **Feed oil line connector**
3. **Check valve assembly**
4. **Fastener (2)**

Figure 3-34. Cylinder Head Oil Feed Assembly

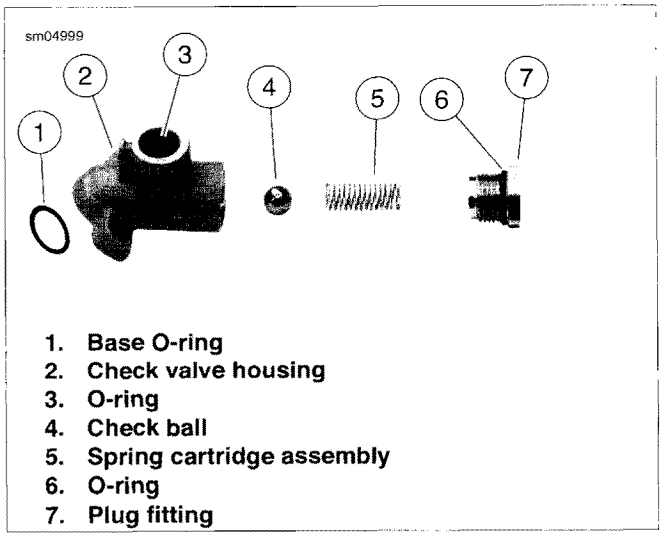

1. **Base O-ring**
2. **Check valve housing**
3. **O-ring**
4. **Check ball**
5. **Spring cartridge assembly**
6. **O-ring**
7. **Plug fitting**

Figure 3-35. Check Valve Components

Installation

1. See Figure 3-35. Install ball (4) and spring (5) into housing (2).

NOTE

*Used O-rings can leak. Always install **new** O-rings when performing repairs.*

2. Install **new** O-ring (6) on check valve plug fitting (7) and install fitting. Tighten to 15-21 ft-lbs (20.3-28.5 Nm).
3. Install **new** O-ring (3) in bore of housing.
4. Install housing (2) with **new** base O-ring (1). Tighten fasteners to 84-108 **in-lbs** (9.5-12.2 Nm).
5. If removed, apply Loctite Threadlocker and Sealant (243) to the flare fittings and install in cylinder heads with **new** O-rings. Tighten fittings to 22-26 ft-lbs (29.8-35.3 Nm).

NOTE

Apply a light film of oil to the end of the line before inserting it into the fitting.

6. See Figure 3-34. Push oil feed hose assembly straight down to install. Connect oil line flare nuts (1) to cylinder head flare fittings. Hold lines to prevent rotation and tighten to 13-17 ft-lbs (17.6-23.0 Nm).
7. Install and connect battery. See 1.17 BATTERY MAINTENANCE.
8. Fill oil tank with the appropriate oil. See 1.6 ENGINE OIL AND FILTER.

OIL PUMP LINES

PART NUMBER	TOOL NAME
HD-46503	OIL LINE REMOVER, 1/2 IN.
HD-49096	OIL LINE REMOVER, 3/8 IN.

Removal

1. Remove return oil manifold. See 3.14 PRECISION COOLING SYSTEM: XR MODELS, Return Oil Manifold.
2. See Figure 3-36. Remove fastener (1) and raise retainer until alignment pin (2) is clear of bore in crankcase. Roll retainer out from beneath rigid oil lines to remove.
3. See Figure 3-37. Remove return oil line (1) from gearcase cover using OIL LINE REMOVER, 3/8 IN. (Part No. HD-49096).
4. If return oil line needs to be completely removed, remove electric starter. See 6.13 STARTER.
5. Remove feed oil line (2) from gearcase cover using OIL LINE REMOVER, 1/2 IN. (Part No. HD-46503).
6. Disconnect vent hose (3) from fitting on oil pump.
7. See Figure 3-38. Remove locknut (1) and washer. Remove oil cooler line retainer (2) from lines.
8. See Figure 3-37. Release each oil cooler line (4, 5) from bottom of gearcase cover using OIL LINE REMOVER, 1/2 IN. (Part No. HD-46503).
9. If necessary, remove quick connect fittings.

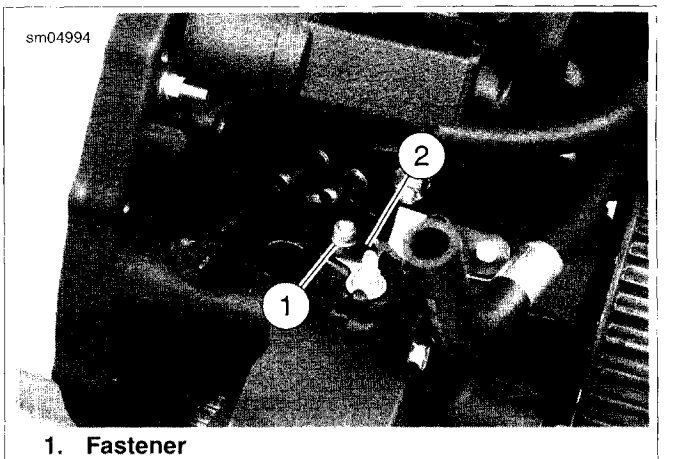

1. **Fastener**
2. **Alignment pin (hidden)**

Figure 3-36. Rigid Oil Line Retainer

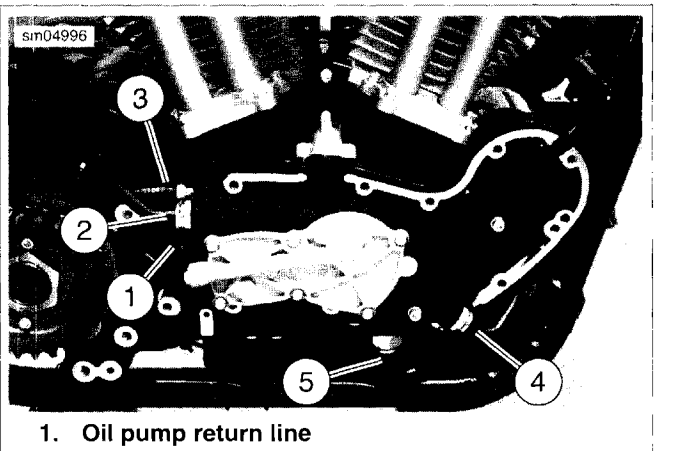

1. **Oil pump return line**
2. **Oil pump feed line**
3. **Vent hose**
4. **Oil cooler line, to cooler**
5. **Oil cooler line, from cooler**

Figure 3-37. Oil Pump Lines

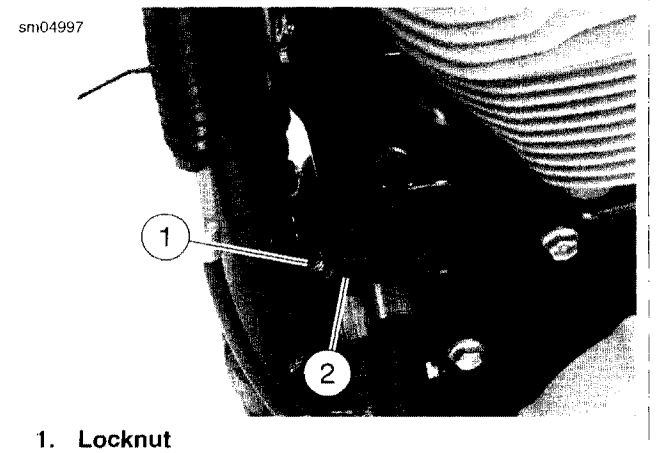

1. **Locknut**
2. **Line retainer (partially hidden)**

Figure 3-38. Oil Cooler Line Retainer

Installation

NOTE

*Used o-rings can leak. Always install **new** o-rings when performing repairs.*

1. If removed, install quick connect fittings with **new** o-rings. Tighten to 108-156 **in-lbs** (12.2-17.6 Nm).
2. Install **new** o-rings in quick connect fittings.

NOTE

Apply a light film of oil to the end of each line before inserting it into the fitting.

3. See Figure 3-37. Connect oil cooler lines (4, 5) to lower gearcase cover. Ensure each is securely held by the retainer clip.
4. See Figure 3-38. Install oil cooler line retainer (2) and tighten nut (1) securely.
5. See Figure 3-37. If removed, place return line (1) on engine and install electric starter. See 6.13 STARTER.
6. Connect vent (3), feed oil (2) and return oil (1) lines to oil pump body and cam support. Ensure each is securely held by the retainer clip.
7. See Figure 3-36. Roll retainer under rigid lines at rear of crankcase and orient so alignment pin (2) is in bore in case. Ensure flanges on lines are on the manifold side of the retainer. Secure with screw (1) and tighten to 84-108 **in-lbs** (9.5-12.2 Nm).
8. Install return oil manifold. See 3.14 PRECISION COOLING SYSTEM: XR MODELS, Return Oil Manifold.
9. Fill oil tank with the appropriate oil. See 1.6 ENGINE OIL AND FILTER.

OIL COOLER

PART NUMBER	TOOL NAME
HD-46503	OIL LINE REMOVER, 1/2 IN.

Removal

1. Disconnect the battery. See 1.17 BATTERY MAINTENANCE.
2. Drain oil tank. See 1.6 ENGINE OIL AND FILTER.
3. Using OIL LINE REMOVER, 1/2 IN. (Part No. HD-46503), separate oil cooler lines from oil cooler.
4. See Figure 3-39. Remove fasteners (1) securing oil cooler to frame brackets.
5. Remove oil cooler from motorcycle.
6. If necessary, remove oil cooler rigid lines from gearcase cover. See 3.14 PRECISION COOLING SYSTEM: XR MODELS, Oil Pump Lines.

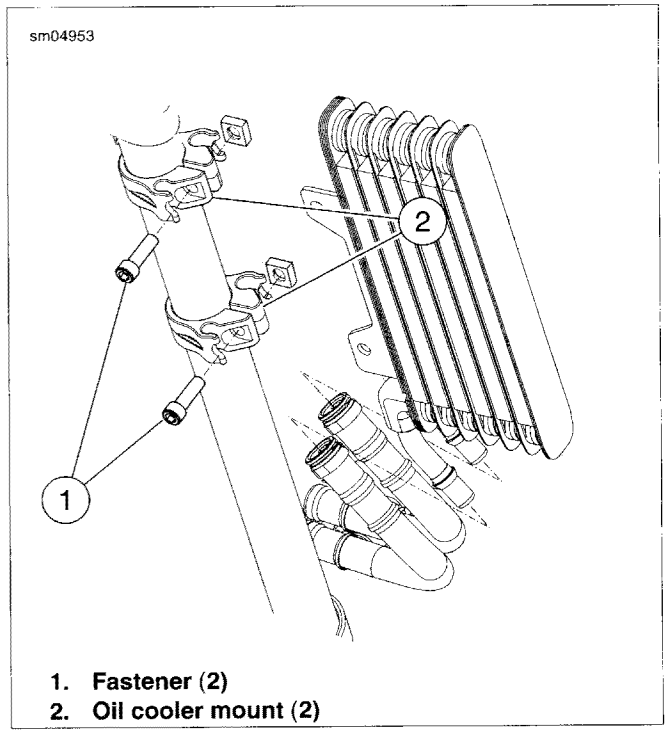

1. **Fastener (2)**
2. **Oil cooler mount (2)**

Figure 3-39. Oil Cooler Mounts

Installation

NOTE

*Used O-rings can leak. Always install **new** O-rings when performing repairs.*

1. Install **new** O-rings in quick connect fittings.
2. If removed, install oil cooler rigid lines. See 3.14 PRECISION COOLING SYSTEM: XR MODELS, Oil Pump Lines.

NOTE

See Figure 3-40. Position oil cooler parallel with down tubes as shown. Do not orient oil cooler forward of down tubes or clutch cable damage will result.

3. See Figure 3-39. Secure oil cooler to frame brackets. Tighten fasteners (1) to 36-60 **in-lbs** (4.1-6.8 Nm).

NOTE

Apply a light film of oil to the end of the line before inserting it into the fitting.

4. Connect oil lines to oil cooler fittings. Ensure each is securely held by the retainer clip.
5. Fill the oil tank. See 1.6 ENGINE OIL AND FILTER.
6. Connect the battery. See 1.17 BATTERY MAINTENANCE.

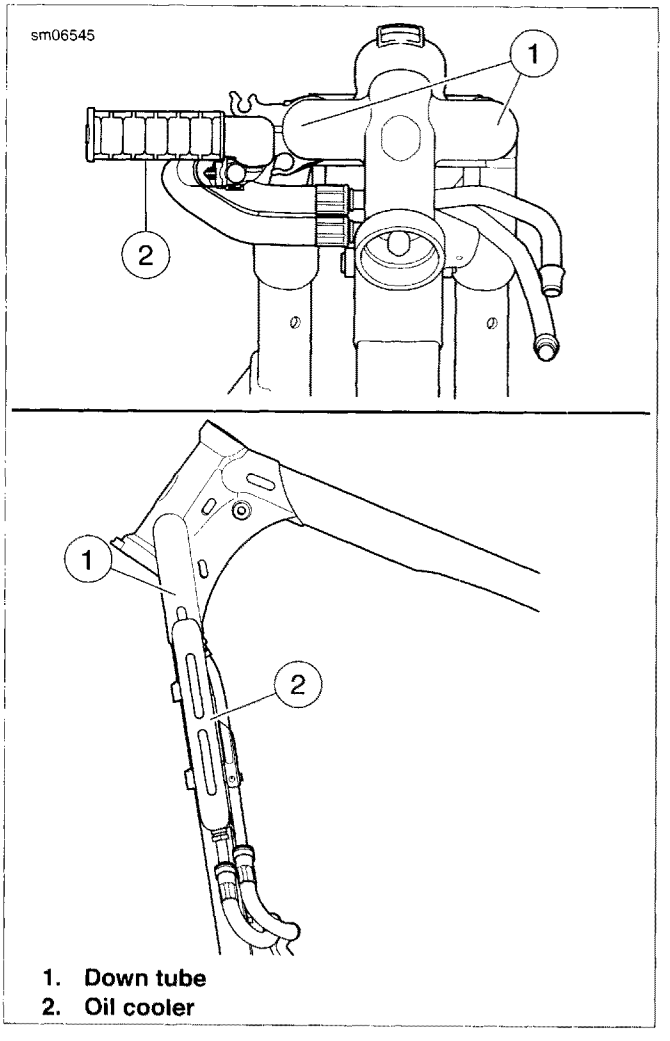

1. Down tube
2. Oil cooler

Figure 3-40. Oil Cooler Orientation

GENERAL

This section describes disassembling the top end of the engine, from the cylinder deck up. To perform a complete top end overhaul, follow all steps listed in this section. Then follow all steps listed in the following sections, including inspection and repair procedures: 3.21 CYLINDER HEAD, 3.22 CYLINDER AND PISTON, and 3.19 VALVE TAPPETS.

NOTE

Dirt caked on cooling fins and other areas of engine can fall into crankcase bore or stick to subassemblies as parts are removed. Abrasive particles can damage machined surfaces or plug oil passageways. Remove all dirt and particles before disassembly to prevent component damage.

STRIPPING MOTORCYCLE FOR TOP END REPAIR

⚠WARNING

When servicing the fuel system, do not smoke or allow open flame or sparks in the vicinity. Gasoline is extremely flammable and highly explosive, which could result in death or serious injury. (00330a)

1. Purge the fuel supply hose of high pressure gasoline. Disconnect fuel supply hose from fuel pump module. See 4.5 FUEL TANK: XL MODELS or 4.6 FUEL TANK: XR MODELS.
2. Remove seat.

⚠WARNING

To prevent accidental vehicle start-up, which could cause death or serious injury, remove main fuse before proceeding. (00251b)

3. Unplug main fuse. See 6.35 MAIN FUSE.
4. Unplug O2 sensor connectors [137], [138] and remove exhaust pipes and mufflers. See 4.14 EXHAUST SYSTEM: XL MODELS or 4.15 EXHAUST SYSTEM: XR MODELS.
5. Disconnect spark plug cables from spark plugs.
6. Drain and remove fuel tank. See 4.5 FUEL TANK: XL MODELS or 4.6 FUEL TANK: XR MODELS.
7. **Models with side mounted horn:** unplug wiring harness connectors from horn. See Figure 3-14. Remove two screws (3) and washers (2). Remove cylinder head bracket (1) and horn (4) from cylinder heads as an assembly.

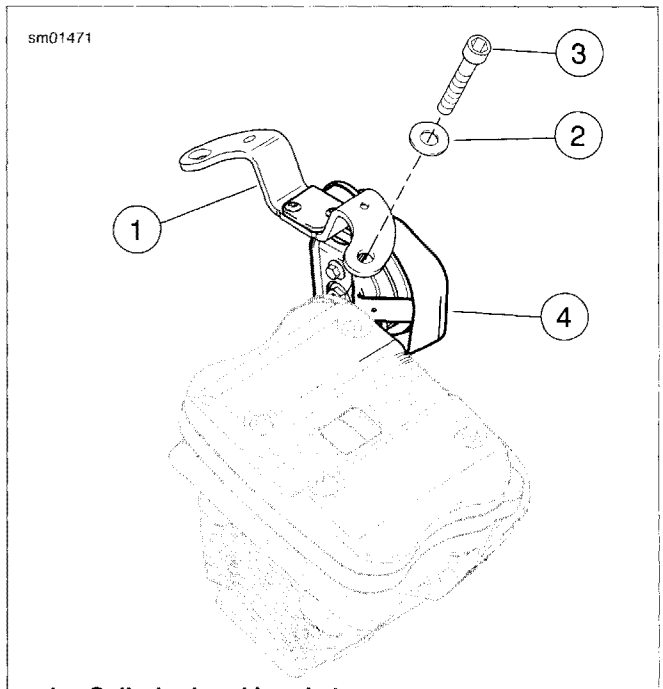

1. **Cylinder head bracket**
2. **Washer (2)**
3. **Screw (2)**
4. **Horn assembly**

Figure 3-41. Horn and Cylinder Head Bracket (Models With Side Mounted Horn Only)

8. **Models with front mounted horn:** unplug horn connectors and remove horn from horn bracket. See 6.34 HORN.
9. Remove air cleaner assembly:
   a. **XL models:** remove cover, air filter and air cleaner backing plate. See 4.3 AIR CLEANER: XL MODELS.
   b. **California models:** remove EVAP purge hose from induction module. See 4.20 EVAPORATIVE EMISSIONS CONTROL (CA MODELS).
10. See 4.9 INDUCTION MODULE: XL MODELS or 4.10 INDUCTION MODULE: XR MODELS and unplug the following connectors from the induction module and remove induction module:
    a. Fuel injector connectors [84], [85].
    b. Temperature/Manifold absolute pressure (TMAP) sensor connector [80].
    c. Idle Air Control (IAC) connector [87].
    d. Throttle Position (TP) sensor connector [88].
11. Secure induction module assembly and throttle cables out of the way.

12. See Figure 3-42. Remove upper front stabilizer link and frame bracket:
    a. Remove screw (4) securing stabilizer link (2) to engine bracket (1).
    b. Remove screws (5) and washers (8). Remove horn bracket (9) (models with front mounted horn) and frame bracket (3) with stabilizer link.

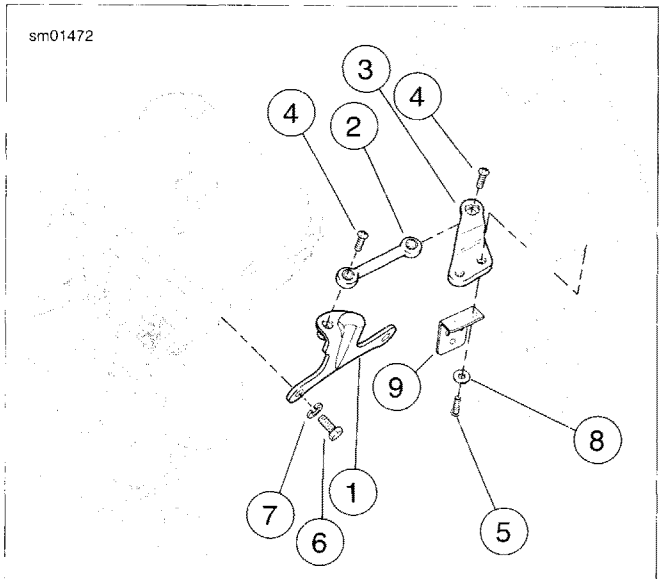

1. **Engine bracket**
2. **Upper stabilizer link**
3. **Upper frame bracket**
4. **Screw**
5. **Screw (2)**
6. **Screw (2)**
7. **Lock washer (2)**
8. **Washer (2)**
9. **Horn bracket (models with front mounted horn only)**

Figure 3-42. Upper Front Stabilizer Link Assembly (typical)

CYLINDER HEADS

Disassembling Rocker Covers

CAUTION

Prevent engine damage. Washers and fasteners used in the engine are hardened parts. Do not use unhardened parts. (00544b)

1. Remove spark plugs.
2. See Figure 3-43. Remove four screws with captive washers (1) and sealing washers (2). Remove outer rocker cover (3) or (20). Discard sealing washers.
3. Remove and discard gaskets (4, 5).
4. Rotate crankshaft until both valves are closed on head being removed.

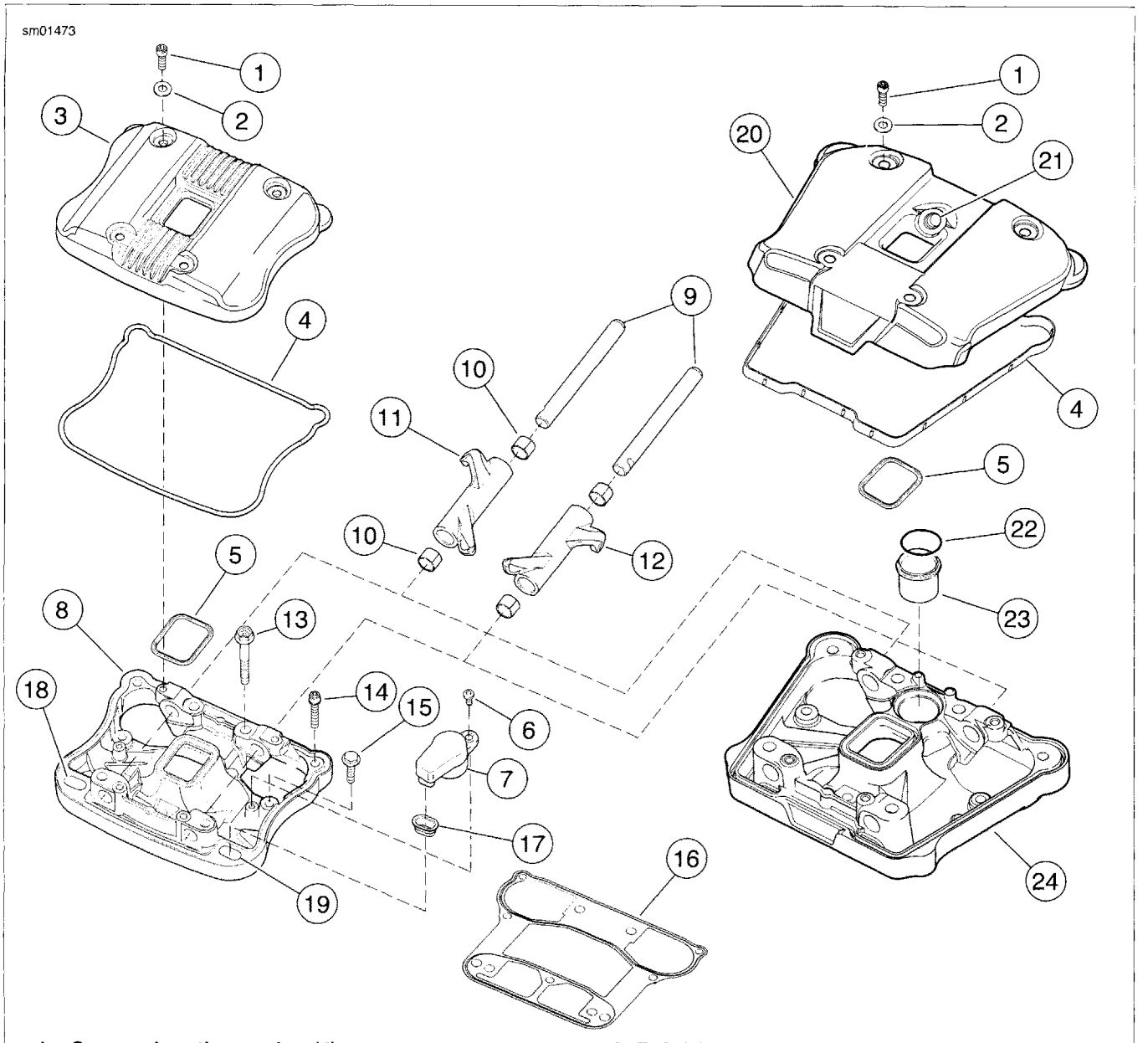

1. Screw w/ captive washer (4)
2. Sealing washer (4)
3. Outer rocker cover: XL Models
4. Gasket
5. Gasket
6. Screw
7. Breather assembly: XL Models
8. Inner rocker cover: XL Models
9. Rocker arm shaft (2)
10. Rocker arm bushing (4)
11. Rocker arm
12. Rocker arm
13. Bolt (4)
14. Screw (2)
15. Bolt (3)
16. Gasket
17. Breather seal: XL Models
18. Breather location: Front Cylinder: XL Models
19. Breather location: Rear Cylinder: XL Models
20. Outer rocker cover: XR Models
21. Breather hose fitting hole: XR Models
22. O-ring: XR Models
23. Breather filter and valve assembly: XR Models
24. Inner rocker cover: XR Models

Figure 3-43. Rocker Cover Assembly

5. See Figure 3-44. Remove hardware securing inner rocker cover to cylinder head in the following order.
   a. Remove two screws and washers (1).
   b. Remove three bolts and washers (2).
   c. Loosen four rocker arm bolts (3) in 1/4-1/2 turn increments using a cross pattern. This relieves valve spring pressure evenly on inner rocker cover.

NOTE

Remove each inner rocker cover as an assembly; then disassemble as required.

6. See Figure 3-43. Remove inner rocker cover (8) or (24). Remove and discard gasket (16).
7. Remove breather assembly:
   a. **XL models:** remove screw (6), breather assembly (7) and breather seal (17). Discard seal.
   b. **XR models:** push breather assembly (23) and O-ring (22) out from the under side.

NOTE

Mark rocker arm shafts for reassembly in their original positions. Valve train components must be reinstalled in their original positions during reassembly or increased engine wear may result.

8. See Figure 3-45. Remove rocker arm shafts by tapping them out using a hammer and a soft metal punch.

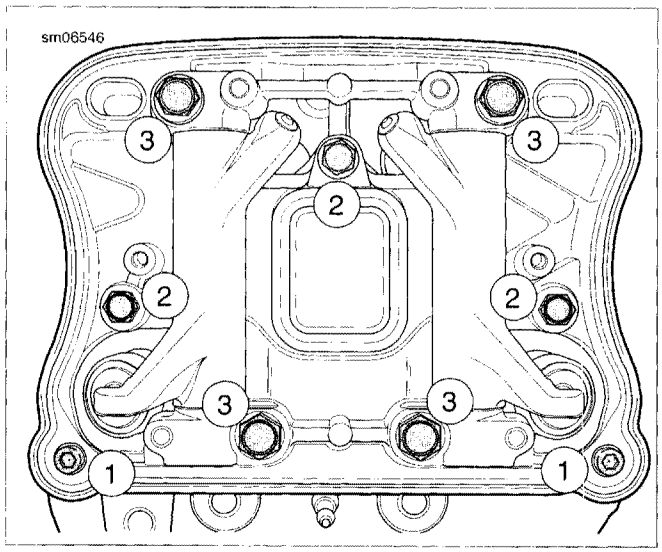

Figure 3-44. Inner Rocker Cover Fasteners (typical - XL shown)

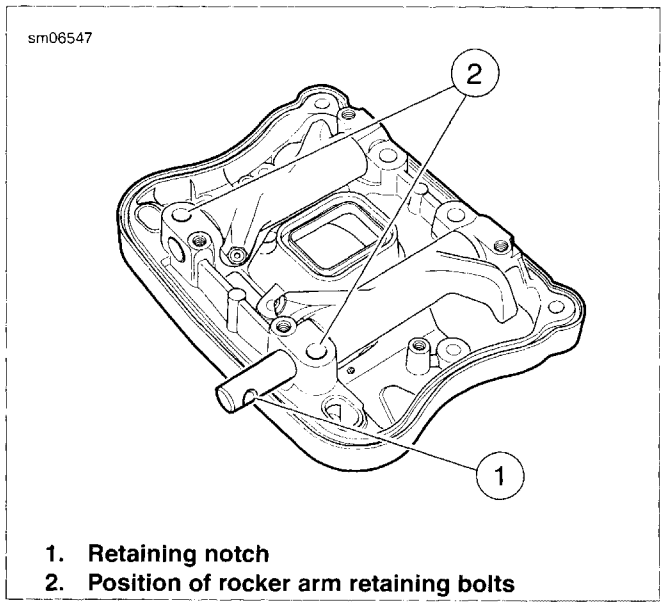

Figure 3-45. Removing Rocker Arm Shafts (typical - XL shown)

9. See Figure 3-43. Remove rocker arms (11, 12); mark them for reassembly in their original locations.
10. Repeat these steps for other rocker cover.

Removing Cylinder Head

NOTE

See Figure 3-46 or Figure 3-47. To avoid distortion of the cylinder head, cylinder and crankcase studs, gradually loosen (or tighten) head screws in the sequence shown.

1. **XR Models:** Remove Precision Cooling lines. See 3.14 PRECISION COOLING SYSTEM: XR MODELS, Cylinder Head Oil Return Lines.
2. See Figure 3-46 and Figure 3-47. Loosen each head bolt 1/8-turn following the sequence shown.

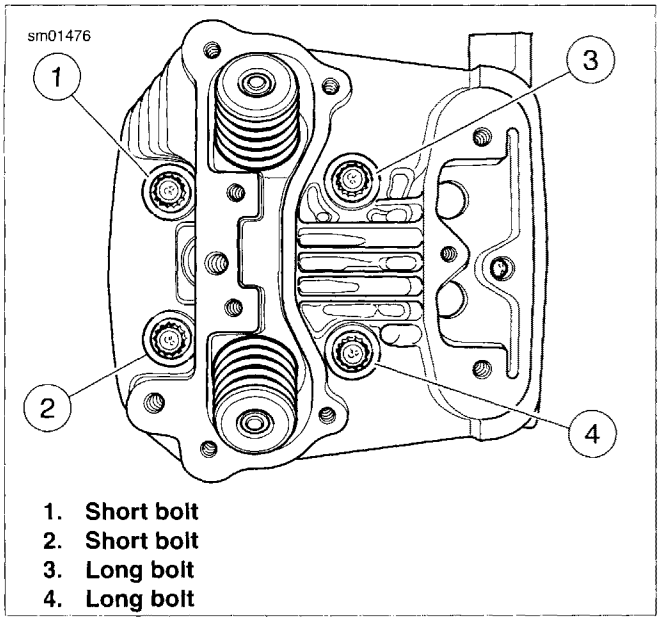

Figure 3-46. Front Cylinder Head Screw Loosening/Tightening Sequence (typical)

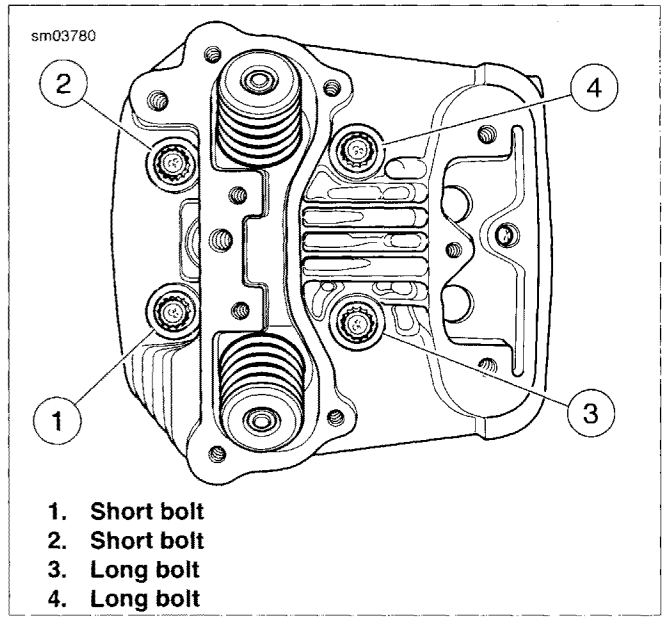

Figure 3-47. Rear Cylinder Head Screw Loosening/Tightening Sequence (typical)

3. Continue loosening in 1/8-turn increments until screws are loose. Remove head screws.
4. See Figure 3-48. Remove cylinder head (8) and head gasket (10). Discard head gasket.
5. Repeat previous steps for other head.

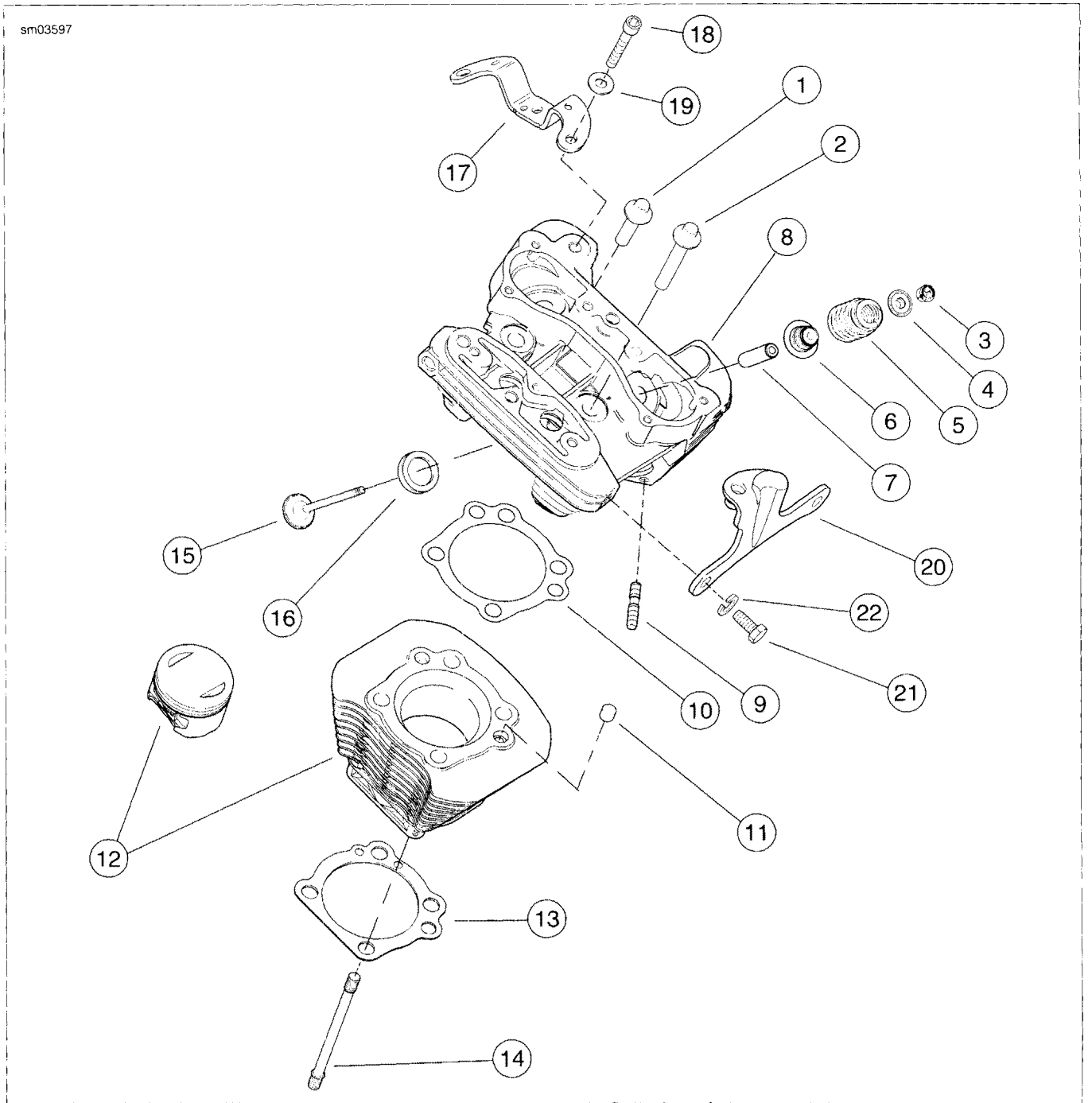

1. Head bolt, short (2)
2. Head bolt, long (2)
3. Valve collar retainer (4)
4. Upper valve spring collar (2)
5. Valve spring (2)
6. Valve seal and lower valve spring collar assembly (2)
7. Valve guide, intake and exhaust (2)
8. Cylinder head
9. Exhaust port stud (2)
10. Cylinder head gasket
11. Dowel (2)
12. Cylinder w/ piston and rings
13. Cylinder base gasket
14. Cylinder base stud (4)
15. Valve (1) intake, (1) exhaust
16. Valve seat (2)
17. Cylinder head bracket*
18. Screw (2)*
19. Washer (2)*
20. Stabilizer link bracket (front cylinder head only)
21. Screw (2)
22. Lock washer (2)

Figure 3-48. Cylinder Head, Cylinder and Piston Assembly (typical) (*Models with Side Mounted Horn Only)

Disassembling Push Rods and Covers

1. See Figure 3-49. Remove push rod covers (2), O-rings (1, 3) and push rods (4). Mark the location and orientation (top and bottom) of each push rod. Discard O-rings.
2. Remove socket screws (5) and washers (6). Remove retainer (7) and gasket (8). Discard gasket.
3. Repeat above steps for other cylinder.

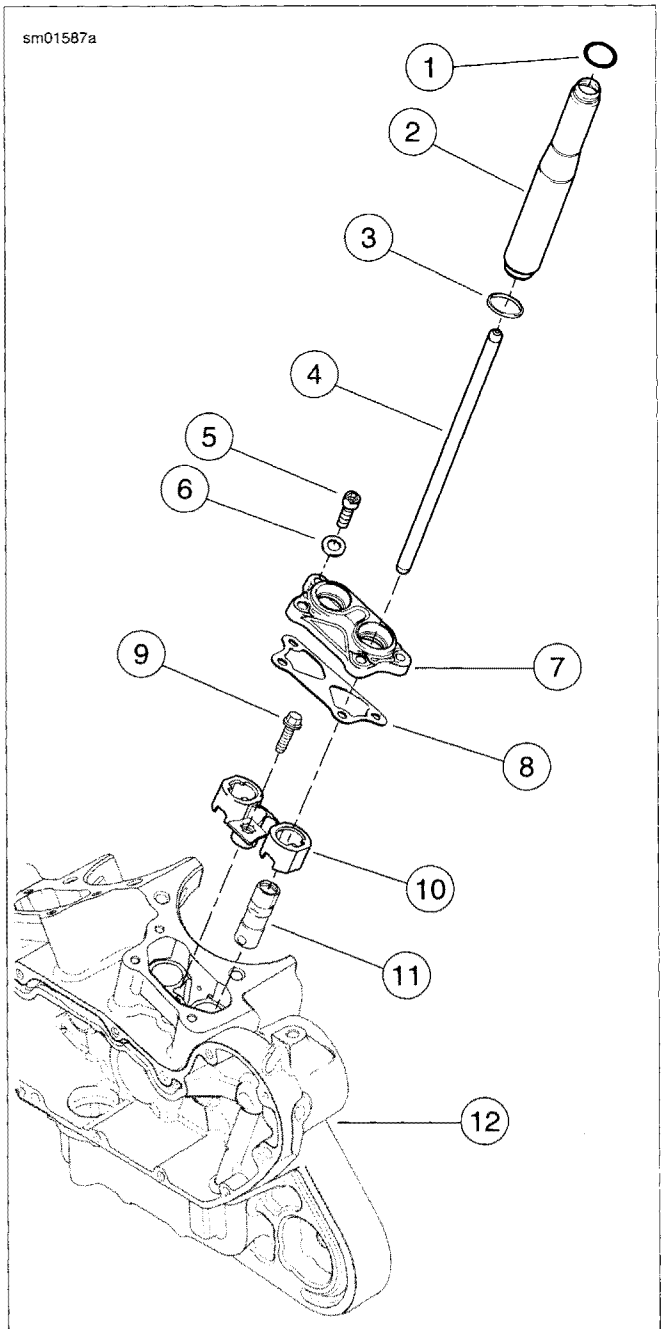

1. O-ring (4)
2. Push rod cover (4)
3. O-ring (4)
4. Push rod (4)
5. Screw (8)
6. Washer (8)
7. Retainer (2)
8. Gasket (2)
9. Screw (2)
10. Anti-rotation device (2)
11. Tappet (4)
12. Right crankcase

Figure 3-49. Middle Valve Train Components

CYLINDER AND PISTON

PART NUMBER	TOOL NAME
HD-34623-C	PISTON PIN LOCK RING REMOVER/INSTALLER
HD-42320-A	PISTON PIN REMOVER
HD-42322	PISTON SUPPORT PLATE

1. See Figure 3-50. Clean crankcase around base of cylinder (7) to prevent dirt and debris from entering crankcase while removing cylinder.

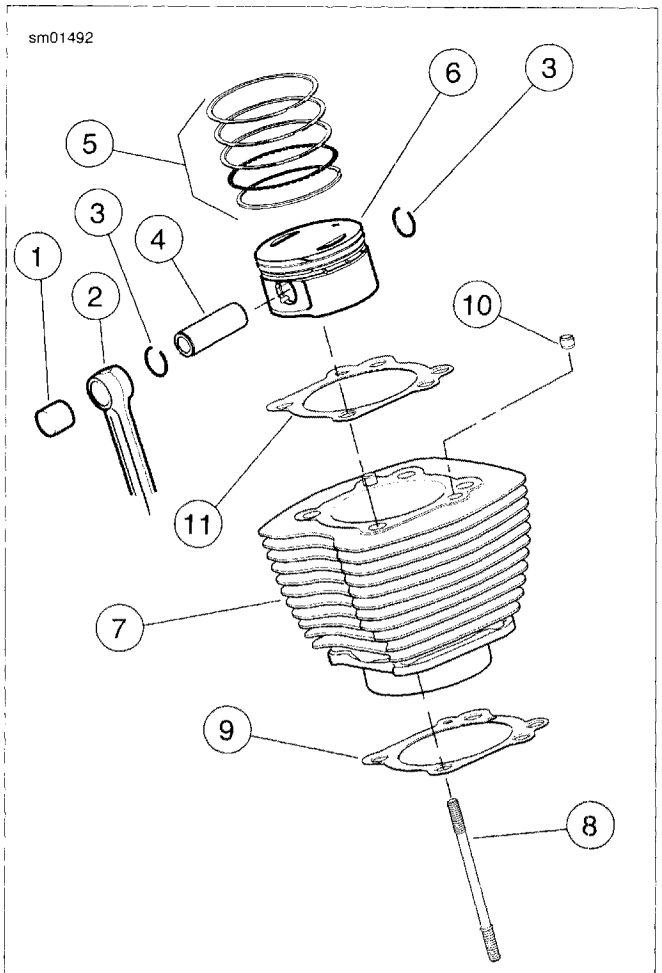

1. **Piston pin bushing**
2. **Connecting rod**
3. **Lock ring (2)**
4. **Piston pin**
5. **Piston ring set**
6. **Piston**
7. **Cylinder**
8. **Cylinder stud (4)**
9. **Cylinder base gasket**
10. **Dowel (2)**
11. **Head gasket**

Figure 3-50. Cylinder and Piston

2. Turn engine over until piston (6) of cylinder being removed is at bottom of its stroke.

3. Carefully raise cylinder just enough to permit placing clean towel under piston to prevent any foreign matter from falling into crankcase.

NOTE

If cylinder does not come loose, tap lightly with rawhide or plastic hammer perpendicular to cylinder fins. Never try to pry cylinder up.

4. Carefully lift cylinder over piston and cylinder studs (8). Do not allow piston to fall against cylinder studs.

NOTE

To avoid damage to piston assembly and/or cylinder studs, do not allow piston to fall against studs.

5. Discard cylinder base gasket (9).

NOTE

With cylinder removed, be careful not to bend the cylinder studs. The slightest bend could cause a stress riser and could lead to stud failure.

6. Install a 6.0 in. (150 mm) length of 1/2 in. (12.7 mm) I.D. plastic or rubber hose over each cylinder stud. This will protect the studs and the pistons.

CAUTION

Handle piston with extreme care. The alloy used in these pistons is very hard. Any scratches, gouges or other marks in the pistons could score the cylinder during engine operation and cause engine damage. (00546b)

⚠WARNING

Wear safety glasses or goggles when removing or installing piston pin retaining rings. Piston pin retaining rings are compressed in the ring groove and can fly out when removed from the groove, which could result in serious eye injury. (00293a)

7. See Figure 3-51. Remove piston pin lock ring as follows:
   a. Insert PISTON PIN LOCK RING REMOVER/INSTALLER (Part No. HD-34623-C) into piston pin bore until claw on tool is positioned in slot of piston (directly under lock ring).
   b. Squeeze handles of tool together and pull from bore. Hold a shop towel over bore during removal in the event that the lock ring should fly out. Remove lock ring from claw and discard.

NOTES

- *It is not necessary to remove both piston pin lock rings during piston removal. Leave second lock ring in piston pin bore.*
- *Do not reuse piston pin lock rings. Removal may weaken lock rings and they may break or dislodge if reused, resulting in engine damage.*

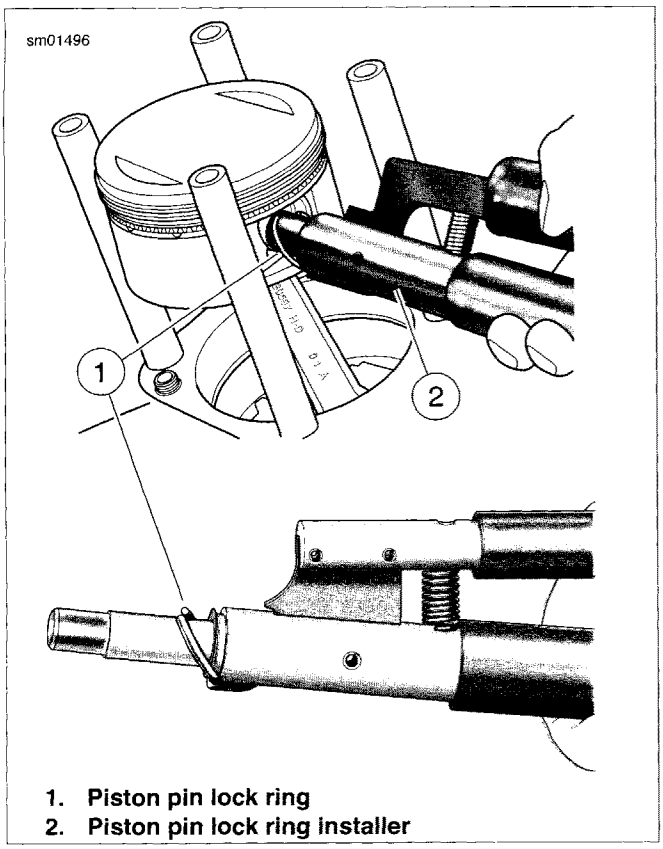

1. **Piston pin lock ring**
2. **Piston pin lock ring installer**

Figure 3-51. Removing Piston Pin Lock Ring

NOTE

To avoid damage to piston or cylinder base studs, use PISTON SUPPORT PLATE (Part No. HD-42322) to secure piston in place while removing piston pin.

8. Remove piston pin. Since pin is a loose fit in piston, pin should easily slide out. If pin is difficult to remove, use PISTON PIN REMOVER (Part No. HD-42320-A), as follows:
   a. See Figure 3-52. Remove acorn nut and spacer (1) from rod end of tool.
   b. Slide rod end through piston pin. Install spacer and acorn nut on end of rod.
   c. Position rubber coated tips (2) of tool on flat on each side of piston pin bore.
   d. Hold tool body (3) and turn handle (4) clockwise until piston pin is pulled free of bore.
9. Remove piston from connecting rod. Be sure to hold connecting rod shank upright to prevent it from striking crankcase.
10. Place a 3.0 in. (76.2 mm) length of 1.0 in. (25.4 mm) I.D. foam-type water pipe insulation around each connecting rod to prevent damage.
11. Mark each pin boss with either an "F" or an "R" to indicate front or rear cylinder, respectively.
12. See Figure 3-53. Spread piston rings outward until they clear grooves in piston and lift off.

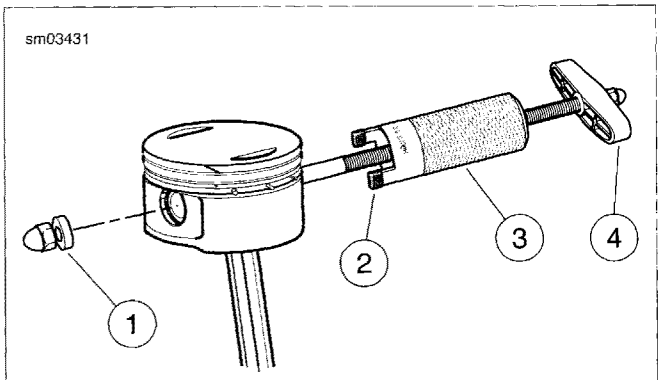

1. **Acorn nut and spacer**
2. **Rubber coated tip (2)**
3. **Tool body**
4. **Handle**

Figure 3-52. Removing Piston Pin with HD-42320-A Piston Pin Remover

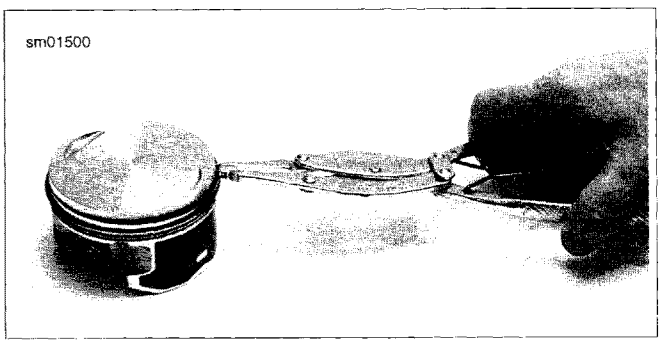

Figure 3-53. Removing Piston Rings (typical; XL shown)

GENERAL

This section describes assembling the top end of the engine, from the cylinder deck up. If the engine crankcase has been disassembled for repair, it must be assembled before assembling the top end of the engine. See 3.18 BOTTOM END OVERHAUL: ASSEMBLY.

PISTON AND CYLINDER

PART NUMBER	TOOL NAME
HD-34623-C	PISTON PIN LOCK RING REMOVER/INSTALLER
HD-42322	PISTON SUPPORT PLATE
HD-96333-51E	PISTON RING COMPRESSOR

1. Slide approximately 6.0 in. (152 mm) of plastic tubing, rubber hose or conduit over each cylinder stud to protect cylinder studs and piston from damage.

NOTE

See Figure 3-54. ***New*** *883 cc and 1200 cc pistons must be installed with the arrows on the top and side of the piston pointing toward the front of the engine.*

2. Install piston assembly over connecting rod.
3. Install piston pin.

NOTE

You may wish to place clean shop towels over cylinder and lifter bores prior to the next step, to prevent the piston pin lock ring from falling into the crankcase.

4. See Figure 3-55. Install **new** piston pin lock rings with the PISTON PIN LOCK RING REMOVER/INSTALLER (Part No. HD-34623-C). Make sure the ring groove is clean and that the ring is fully seated in the groove with the gap away from the slot at the bottom.

NOTE

Avoid damage to cylinder and piston. Always use ***new*** *lock ring. Make sure lock ring groove is clean and lock ring seats firmly in groove. If it does not, discard the lock ring. Never install a used lock ring or a* ***new*** *one if it has been installed and then removed for any reason. A loosely installed ring will come out of the piston groove and damage cylinder and piston beyond repair.*

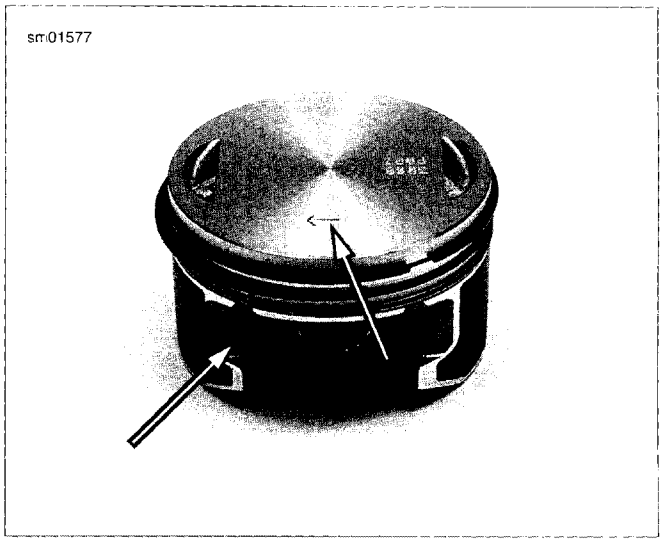

Figure 3-54. Arrows on Piston Must Point Toward Front of Engine (typical; XL shown)

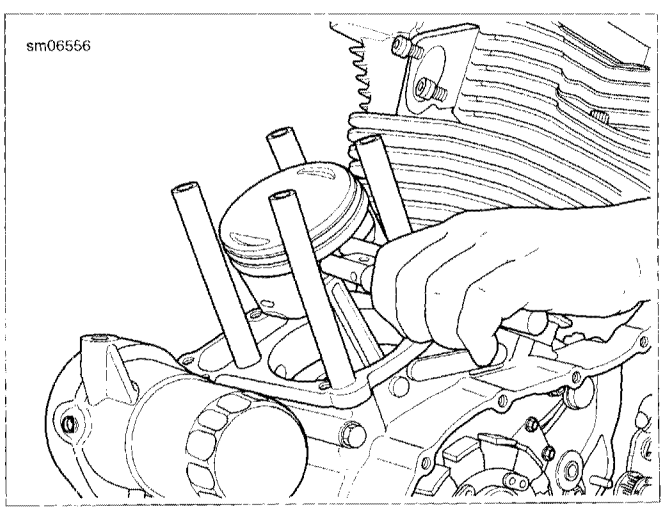

Figure 3-55. Installing Piston Lock Rings

5. See Figure 3-56. Make sure the piston ring end gaps are properly positioned as shown.
6. Lubricate cylinder wall, piston, pin and rod bushing with engine oil.
7. Remove cylinder stud sleeves. Install a **new** cylinder base gasket. Make sure the piston does not bump the studs or crankcase.

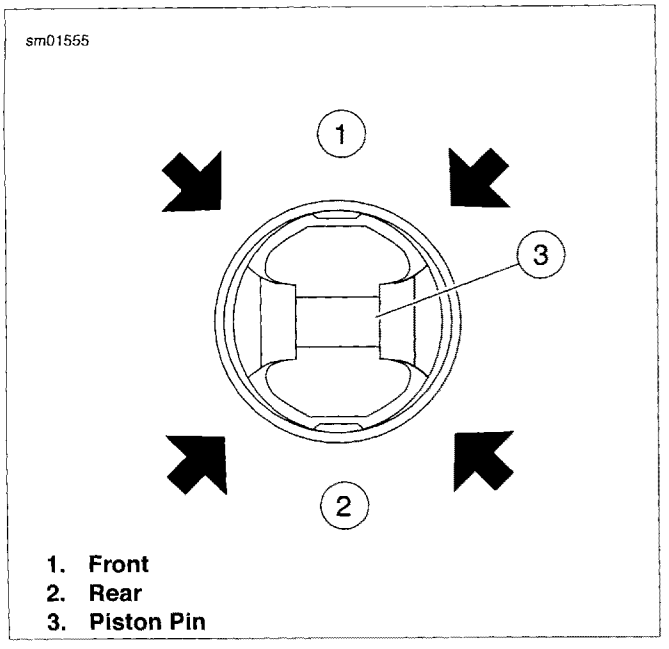

Figure 3-56. Position Ring End Gaps at Arrows

8. See Figure 3-57. Install PISTON SUPPORT PLATE (Part No. HD-42322) as shown. Turn engine to rest piston on support plate.
9. See Figure 3-58. Compress the piston rings using PISTON RING COMPRESSOR (Part No. HD-96333-51E).
10. Gently slide cylinder over cylinder base studs and piston crown, resting it on the top of the ring compressor band as shown.
11. Push the cylinder down with a firm, quick motion until the bottom of the cylinder bore slides below the piston ring area.
12. Remove the piston ring compressor and piston support plate, and push the cylinder all the way down onto the crankcase cylinder deck.
13. Repeat above procedure for other piston and cylinder.

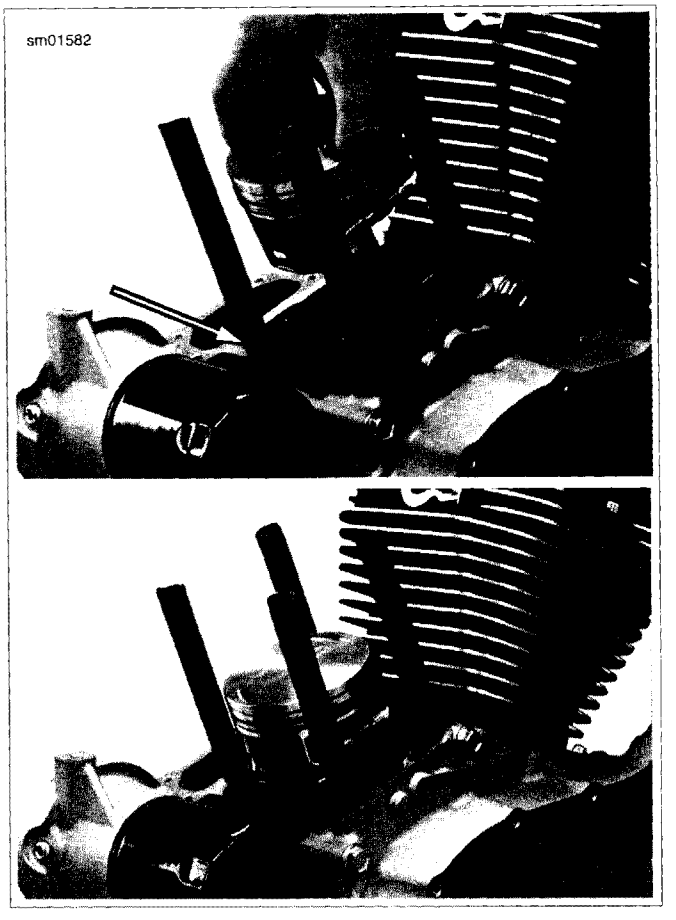

Figure 3-57. Piston Support Plate

Figure 3-58. Installing Cylinder Over Piston

PUSH RODS, COVERS, AND RETAINERS

1. See Figure 3-59. If anti-rotation devices (10) and tappets (11) have been removed, install them now. See 3.18 BOTTOM END OVERHAUL: ASSEMBLY, Tappets.
2. Install retainer (7) with **new** gasket (8). Secure with screws (5) and washers (6). Tighten to 80-110 **in-lbs** (9.0-12.4 Nm).

3. Install **new** o-rings (3) in recesses in retainer. Press push rod covers (2) into o-rings.
4. Repeat previous steps for other cylinder.
5. Identify push rod color coding and length, and respective push rod positions in engine (refer to Table 3-28). Slide intake and exhaust push rods (4) down inside push rod covers until they rest on seat at top of tappet (11).

Table 3-28. Push Rod Specifications

POSITION	COLOR CODE	LENGTH		PART NO.
		IN.	CM	
Intake (front and rear)	1 band: orange	10.746	27.295	17909-02
Exhaust (front and rear)	1 band: purple	10.800	27.432	17908-02

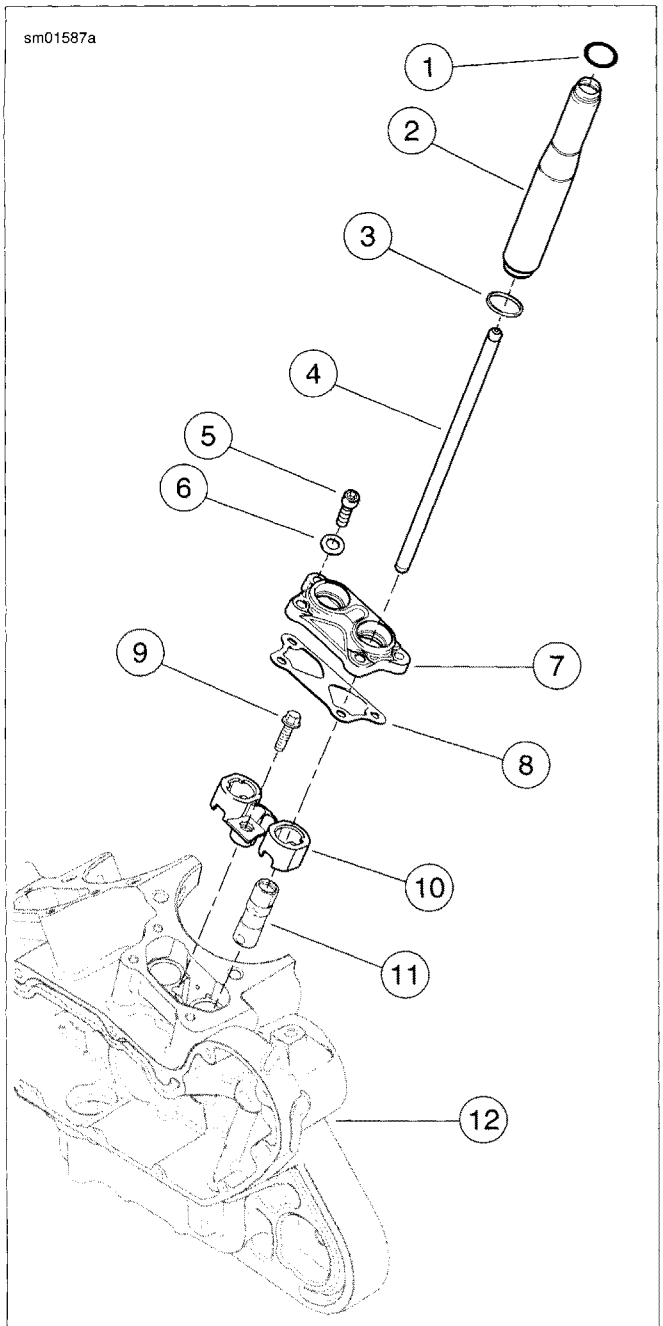

1. **O-ring (4)**
2. **Push rod cover (4)**
3. **O-ring (4)**
4. **Push rod (4)**
5. **Screw (8)**
6. **Washer (8)**
7. **Retainer (2)**
8. **Gasket (2)**
9. **Screw (2)**
10. **Anti-rotation device (2)**
11. **Tappet (4)**
12. **Right crankcase**

Figure 3-59. Middle Valve Train Components

CYLINDER HEAD

NOTES

- *Push rod covers and lower cover retainers MUST be installed prior to installing cylinder heads. If this has not been done, see 3.16 TOP END OVERHAUL: ASSEMBLY, Push Rods, Covers, and Retainers.*
- *Thoroughly clean and lubricate threads of cylinder head screws before installation. Friction caused by dirt and grime will result in a false torque indication.*

1. See Figure 3-61. Coat mating surfaces of cylinder base studs (14) and head bolts (1 and 2) with parts cleaning solution.
2. Scrape old oil and any carbon deposits from threads by using a back-and-forth motion, threading each head screw onto its mating cylinder stud.
3. Remove head bolts from studs. Wipe or blow dry thread surfaces.
4. Thoroughly clean and dry gasket surfaces of cylinder (12) and cylinder head (8).

NOTE

See Figure 3-60. The cylinder head gasket is unique for XR models and has metal patches (2) that must be installed against the cylinder head. When installing the gasket on the cylinder, be sure the words "THIS SIDE UP" (1) and the metal patches (2) are visible.

5. Install a **new** head gasket to cylinder.
6. Carefully lower cylinder head over studs and position on dowels. Use great care so as not to disturb head gasket.

NOTE

Only oil film must remain on the cylinder head screw surfaces. Too much oil will pool in the head screw sleeve preventing full thread engagement.

7. Lightly coat threads, underside of flange and bottom face of cylinder head bolts in clean Harley-Davidson 20W50 engine oil. Wipe off excess oil.
8. Start cylinder head bolts (1 and 2) onto cylinder studs, two short bolts on left side of engine, two long bolts on right. Tighten all bolts only finger tight at this time.

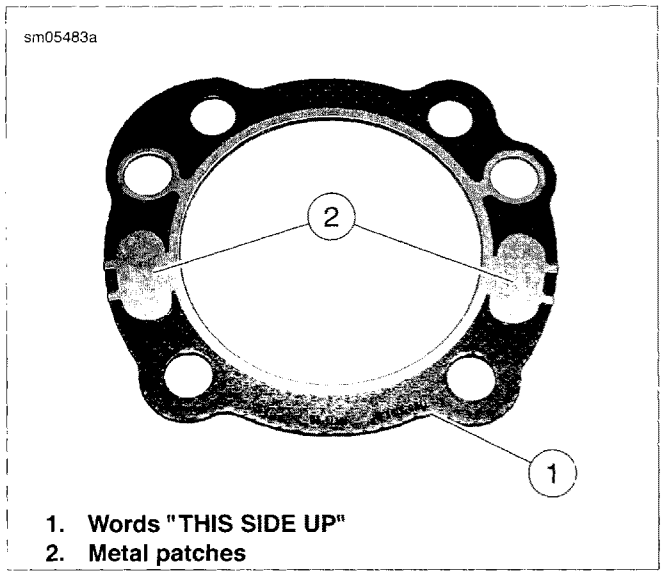

1. Words "THIS SIDE UP"
2. Metal patches

Figure 3-60. Cylinder Head Gasket: XR Models

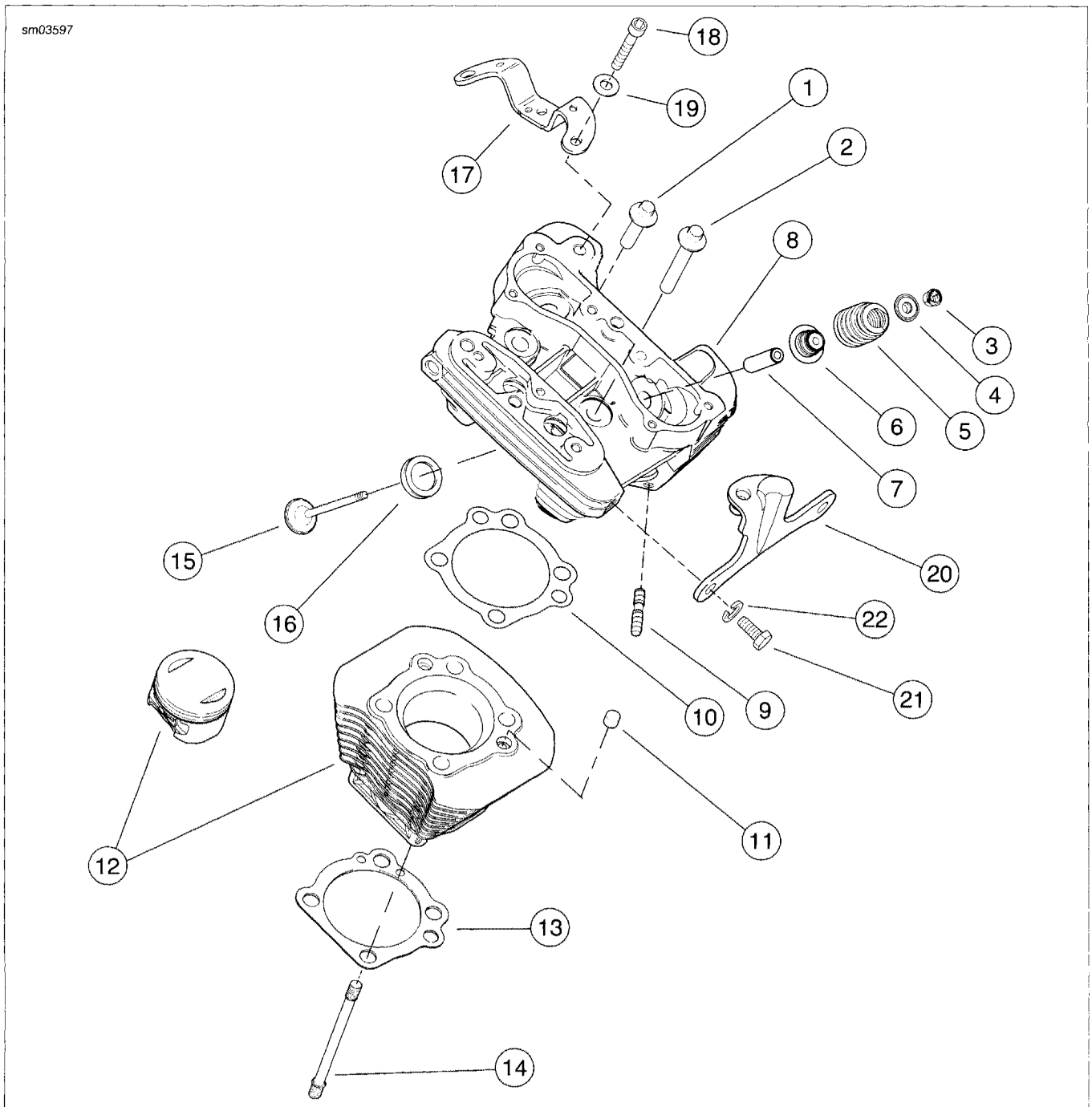

1. Head bolt, short (2)
2. Head bolt, long (2)
3. Valve collar retainer (4)
4. Upper valve spring collar (2)
5. Valve spring (2)
6. Valve seal and lower valve spring collar assembly (2)
7. Valve guide, intake and exhaust (2)
8. Cylinder head
9. Exhaust port stud (2)
10. Cylinder head gasket
11. Dowel (2)
12. Cylinder w/ piston and rings
13. Cylinder base gasket
14. Cylinder base stud (4)
15. Valve (1) intake, (1) exhaust
16. Valve seat (2)
17. Cylinder head bracket*
18. Screw (2)*
19. Washer (2)*
20. Stabilizer link bracket (front cylinder head only)
21. Screw (2)
22. Lock washer (2)

Figure 3-61. Cylinder Head, Cylinder and Piston Assembly (typical) (*Models with Side Mounted Horn Only)

NOTE

The procedure for tightening the head screws is critical to proper distribution of pressure over gasket area. It prevents gasket leaks, stud failure, and head and cylinder distortion.

9. See Figure 3-62 and Figure 3-63. For each cylinder head, start with bolt numbered one, as shown. In increasing numerical sequence (i.e.: 1, 2, 3, 4), tighten head bolts in the following steps:
   a. Tighten each bolt to 96-120 **in-lbs** (11-14 Nm).
   b. Tighten each bolt to 13-15 ft-lbs (18-20 Nm).
   c. **Loosen all bolts.**
10. After head bolts are loosened from initial torque, tighten bolts in three stages. Tighten in increasing numerical sequence (i.e.: 1, 2, 3, 4), as follows:
   a. Tighten each bolt to 96-120 **in-lbs** (11-14 Nm).
   b. Tighten each bolt to 13-15 ft-lbs (18-20 Nm).
   c. See Figure 3-64. Mark cylinder head and head bolt shoulder with a line as shown (View A).
   d. Tighten each bolt an additional 85°-95° (View B).
11. Repeat above procedure for other cylinder head.
12. **XR Models:** Install Precision Cooling oil lines. See 3.14 PRECISION COOLING SYSTEM: XR MODELS, Cylinder Head Oil Return Lines.

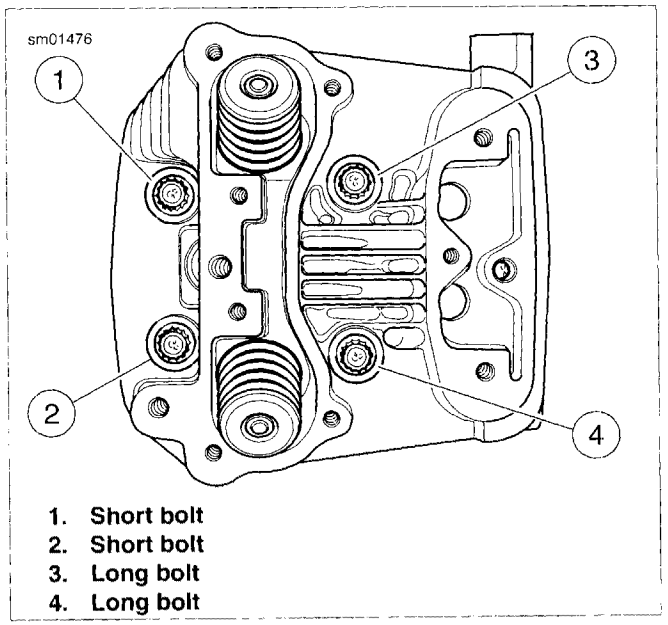

Figure 3-62. Front Cylinder Head Screw Loosening/Tightening Sequence (typical)

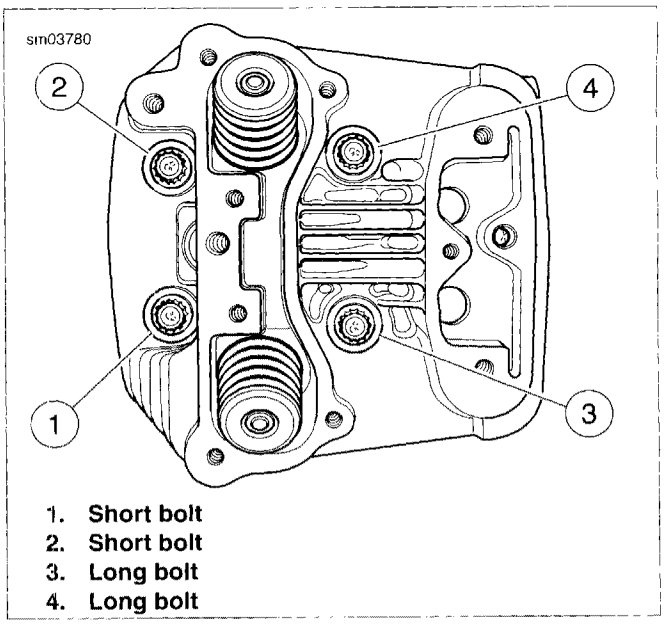

Figure 3-63. Rear Cylinder Head Screw Loosening/Tightening Sequence (typical)

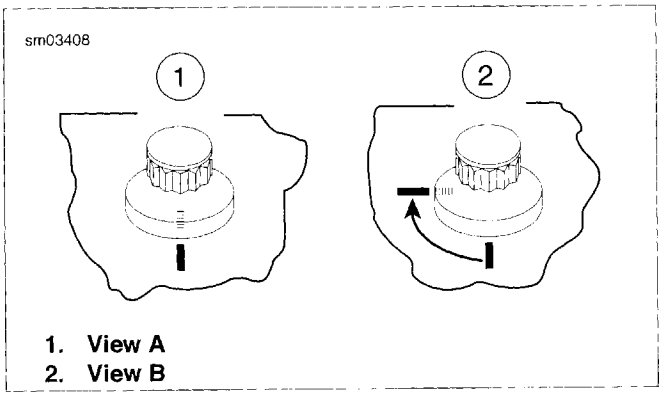

Figure 3-64. Tightening Head Bolts

ROCKER COVERS

NOTES

- *Before installing a rocker cover assembly on a cylinder head, turn engine over so that both lifters for that cylinder are on the base circle (the lowest position) of the cams.*
- *See Figure 3-65. Gasket (16) is marked "FRONT HEAD" on one side and "REAR HEAD" on the other. Make certain to install gasket with the correct marking facing up.*

1. See Figure 3-65. Install **new** gasket (16). Place inner rocker cover assembly (8) or (24) (with rocker arms and shafts) into position, fitting ends of push rods in rocker arm sockets.

NOTE

To avoid damage to push rods or rocker arms, do not turn engine over until both push rods can be turned with fingers.

2. Install fasteners (13, 15, 14). Slowly snug all fasteners in small increments (one turn at a time). Use a cross pattern on the four large bolts (13) that fasten the inner rocker

cover to the head. This will bleed the lifters. Tighten fasteners in the following sequence:

a. Tighten bolts (13) to 18-22 ft-lbs (24.4-29.8 Nm).

b. Tighten bolts (15) to 135-155 **in-lbs** (15.3-17.5 Nm).

c. Tighten screws (14) to 135-155 **in-lbs** (15.3-17.5 Nm).

NOTE

XL models: *See Figure 3-65. Breather location in inner rocker cover is different between front and rear cylinders.*

3. Install breather:

   a. **XL models:** Install breather (7) with **new** breather seal (17) and secure with screw (6). Tighten to 35-55 **in-lbs** (4.0-6.2 Nm).

   b. **XR models:** Install **new** O-ring (22) on breather assembly (23) and install in cavity in inner rocker cover.

4. Place **new** gaskets (4, 5) on inner rocker cover.

5. Install outer rocker cover (3) or (20) on inner rocker cover. Install screws with captive washers (1) and **new** sealing washers (2). Tighten screws to 120-168 **in-lbs** (13.5-19.0 Nm).

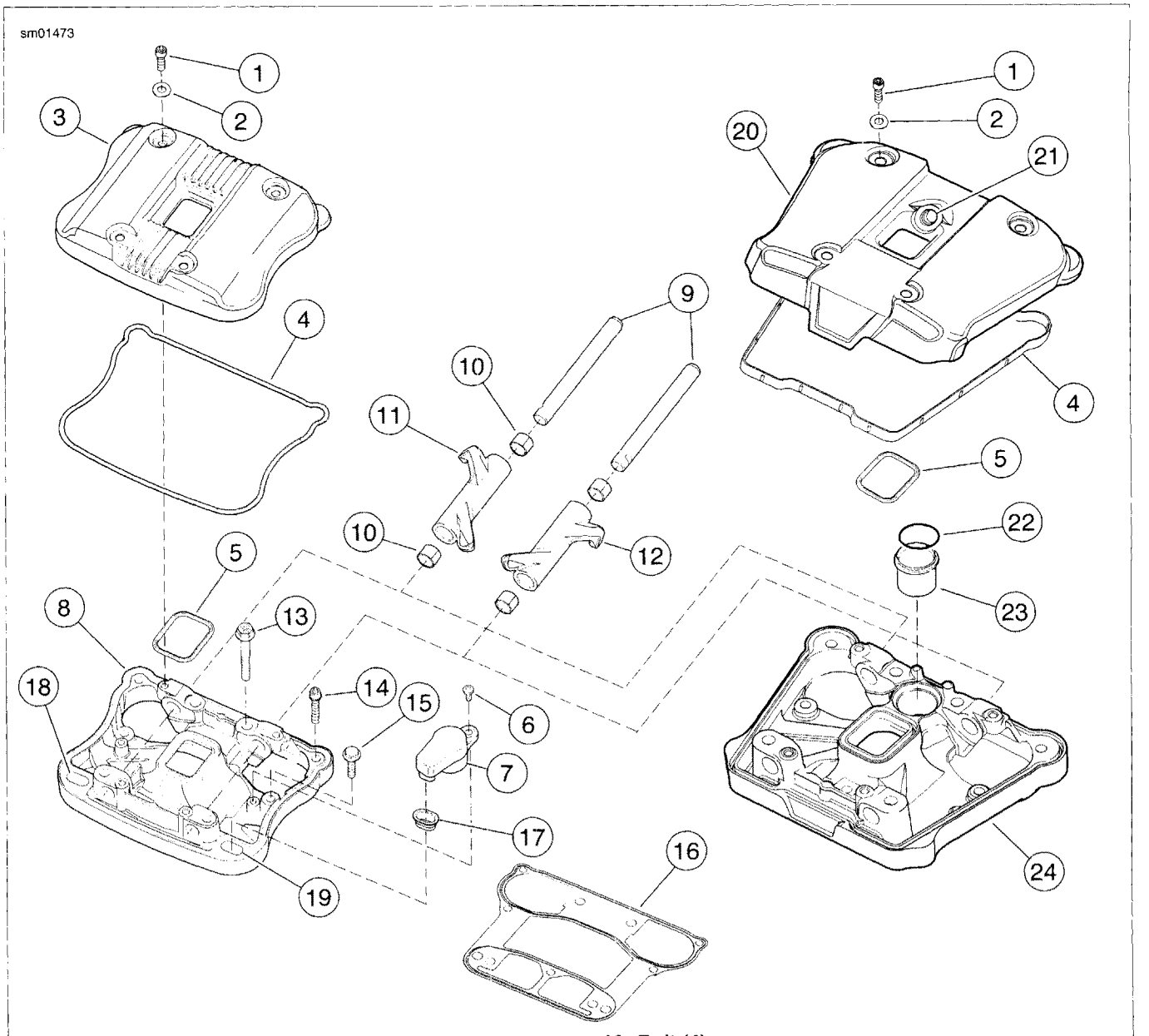

1. Screw w/ captive washer (4)
2. Sealing washer (4)
3. Outer rocker cover: XL Models
4. Gasket
5. Gasket
6. Screw
7. Breather assembly: XL Models
8. Inner rocker cover: XL Models
9. Rocker arm shaft (2)
10. Rocker arm bushing (4)
11. Rocker arm
12. Rocker arm
13. Bolt (4)
14. Screw (2)
15. Bolt (3)
16. Gasket
17. Breather seal: XL Models
18. Breather location: Front Cylinder: XL Models
19. Breather location: Rear Cylinder: XL Models
20. Outer rocker cover: XR Models
21. Breather hose fitting hole: XR Models
22. O-ring: XR Models
23. Breather filter and valve assembly: XR Models
24. Inner rocker cover: XR Models

Figure 3-65. Rocker Cover Assembly

ASSEMBLING MOTORCYCLE AFTER TOP END REPAIR

1. See Figure 3-66. Install upper front stabilizer link and frame bracket:
   a. Install upper frame bracket (3) with upper stabilizer link (2), horn bracket (9) (models with front mounted horn), screws (5) and washers (8). Tighten screws to 25-35 ft-lbs (33.9-47.5 Nm).
   b. Install screw (4) securing stabilizer link to engine bracket (1). Tighten screw to 25-35 ft-lbs (33.9-47.5 Nm).
2. Install induction module assembly. See 4.9 INDUCTION MODULE: XL MODELS or 4.10 INDUCTION MODULE: XR MODELS. Plug the following connectors into the induction module:
   a. Throttle Position (TP) sensor connector [88].
   b. Idle Air Control (IAC) connector [87].
   c. Temperature/Manifold absolute pressure (TMAP) sensor connector [80].
   d. Fuel injector connectors [84], [85].
3. Install air cleaner assembly:
   a. **XL models:** Install backing plate, air filter and air cleaner cover. See 4.3 AIR CLEANER: XL MODELS.
   b. **XR models:** Install airbox assembly and connect crankcase vent hoses. See 4.4 AIR BOX: XR MODELS.
   c. **California models:** install EVAP purge hose on induction module. See 4.20 EVAPORATIVE EMISSIONS CONTROL (CA MODELS).
4. **Models with front mounted horn:** install horn. See 6.34 HORN.
5. **Models with side mounted horn:** See Figure 3-67. Install cylinder head bracket (1) with horn (4) onto cylinder heads as a unit. Secure with two screws (3) and washers (2). Tighten screws to 17-24 ft-lbs (23.1-32.6 Nm). Plug wiring harness connectors into horn.

⚠WARNING

When servicing the fuel system, do not smoke or allow open flame or sparks in the vicinity. Gasoline is extremely flammable and highly explosive, which could result in death or serious injury. (00330a)

6. Install fuel tank. Tighten screws to 15-20 ft-lbs (20.4-27.1 Nm). Attach quick-connect fitting on fuel line to fuel tank fitting. Gently tug on quick-connect fitting to make sure it is securely locked in place. See 4.5 FUEL TANK: XL MODELS or 4.6 FUEL TANK: XR MODELS.
7. Install exhaust pipes and mufflers. Plug in O2 sensor connectors [137], [138]. See 4.14 EXHAUST SYSTEM: XL MODELS or 4.15 EXHAUST SYSTEM: XR MODELS.
8. Connect spark plug cables to spark plugs.
9. Plug in main fuse. See 6.35 MAIN FUSE.

⚠WARNING

After installing seat, pull upward on seat to be sure it is locked in position. While riding, a loose seat can shift causing loss of control, which could result in death or serious injury. (00070b)

10. Install seat.

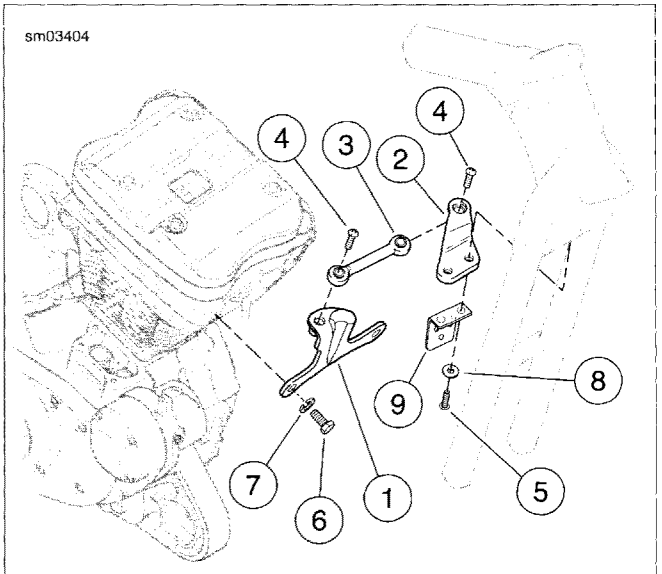

1. **Engine bracket**
2. **Upper stabilizer link**
3. **Upper frame bracket**
4. **Screw**
5. **Screw (2)**
6. **Screw (2)**
7. **Lock washer (2)**
8. **Washer (2)**
9. **Horn bracket (models with front mounted horn)**

Figure 3-66. Upper Front Stabilizer Link Assembly (typical)

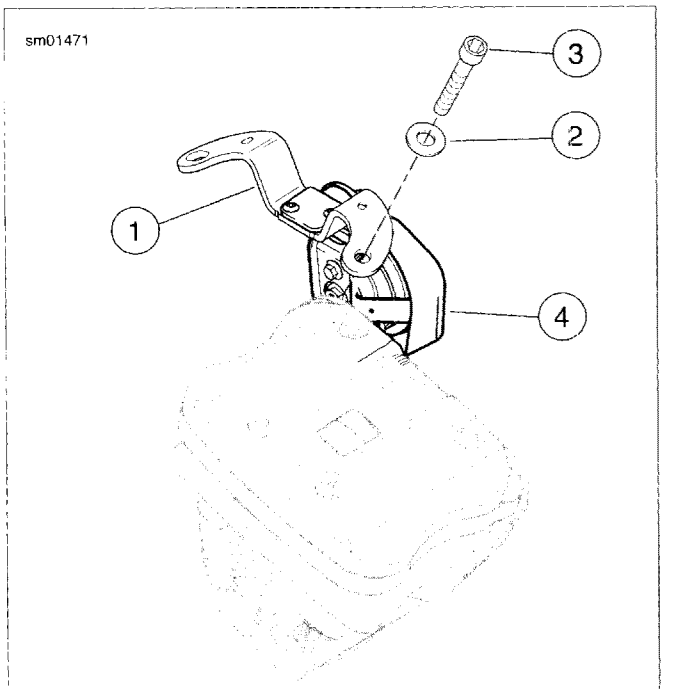

1. Cylinder head bracket
2. Washer (2)
3. Screw (2)
4. Horn assembly

Figure 3-67. Horn and Cylinder Head Bracket (Models With Side Mounted Horn Only)

GENERAL

This section describes disassembling the bottom end of the engine. If engine overhaul requires disassembly of crankcases, remove engine from vehicle as described in 3.12 REMOVING ENGINE FROM CHASSIS. Then disassemble top end of engine. See 3.15 TOP END OVERHAUL: DISASSEMBLY, Cylinder Heads and 3.15 TOP END OVERHAUL: DISASSEMBLY, Cylinder and Piston.

Thoroughly clean area around gearcase cover and tappets. Blow loose dirt from crankcase with low pressure compressed air.

The oil pump design and function differs between XL and XR models. See 3.8 ENGINE LUBRICATION SYSTEM for more information.

TAPPETS

1. See Figure 3-68. Remove screw (1).
2. Remove anti-rotation device (2). Tag anti-rotation device for location (front/rear cylinder) as it is removed.
3. Remove tappet (3). Tag tappet for location (front/rear cylinder) and function (intake/exhaust) as it is removed. This will simplify installation.
4. Repeat previous steps for other cylinder.
5. Place tappets in clean plastic bags to keep out dust, dirt and debris.

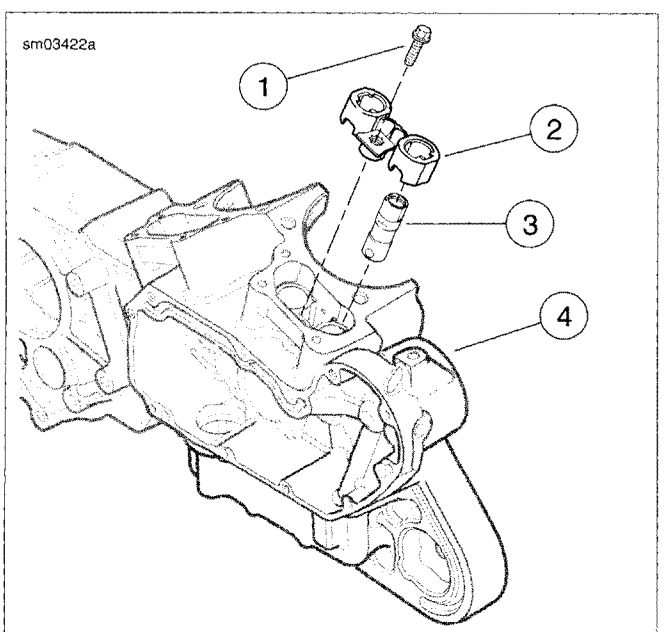

1. **Screw (2)**
2. **Anti-rotation device (2)**
3. **Tappet (4)**
4. **Right crankcase**

Figure 3-68. Tappet Components

OIL PUMP: XL MODELS

1. Remove oil pump feed and return hoses. Mark hoses for later installation. Discard hose clamps.
2. See Figure 3-69. Carefully remove two screws (2) that secure pump to crankcase. Pump will drop with screws removed. Discard mounting gasket.
3. If oil pump requires repair, see 3.24 OIL PUMP: XL MODELS.

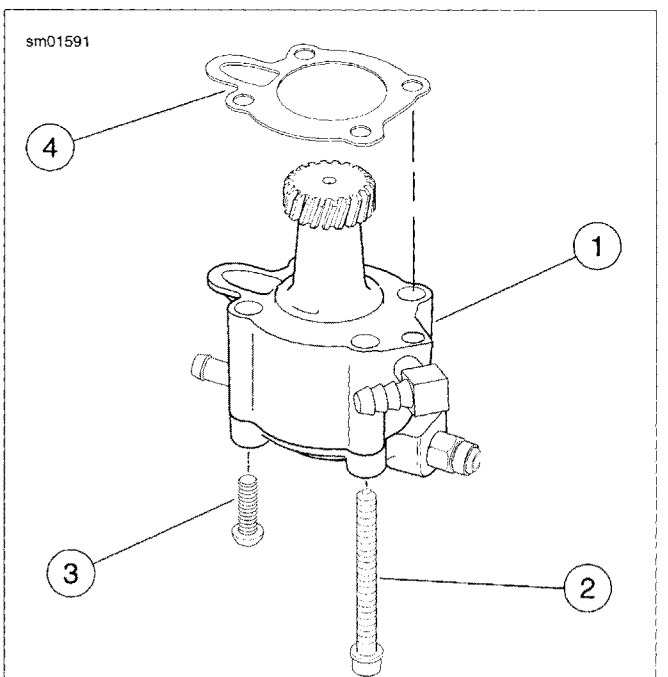

1. **Oil pump**
2. **Screw w/ washer (2)**
3. **Screw, Torx (2)**
4. **Gasket**

Figure 3-69. Oil Pump: XL Models

GEARCASE COVER AND CAM GEARS: XL MODELS

⚠WARNING

Compressed air can pierce the skin and flying debris from compressed air could cause serious eye injury. Wear safety glasses when working with compressed air. Never use your hand to check for air leaks or to determine air flow rates. (00061a)

1. Remove any parts that will interfere with gearcase disassembly (i.e., exhaust pipe, footrest, air cleaner, brake pedal, etc.).
2. Check for minimum cam gear end play; see 3.20 GEARCASE COVER AND CAM GEARS, Assembly and Installation. Record readings.

3. See Figure 3-70. Place a pan under gearcase to collect oil. Remove cover screws (6). Carefully remove gearcase cover. Discard old gasket (9).

NOTE

If cover does not come loose on removal of screws, tap lightly with a rawhide hammer. Never pry cover off.

4. Remove cam gears (1, 2, 3, and 4). Carefully mark each component for installation reference.

NOTE

Nut (11) is secured by Loctite-262 on the nut threads.

5. Remove nut (11). Slide pinion gear (5) and oil pump drive gear (12) off pinion shaft.

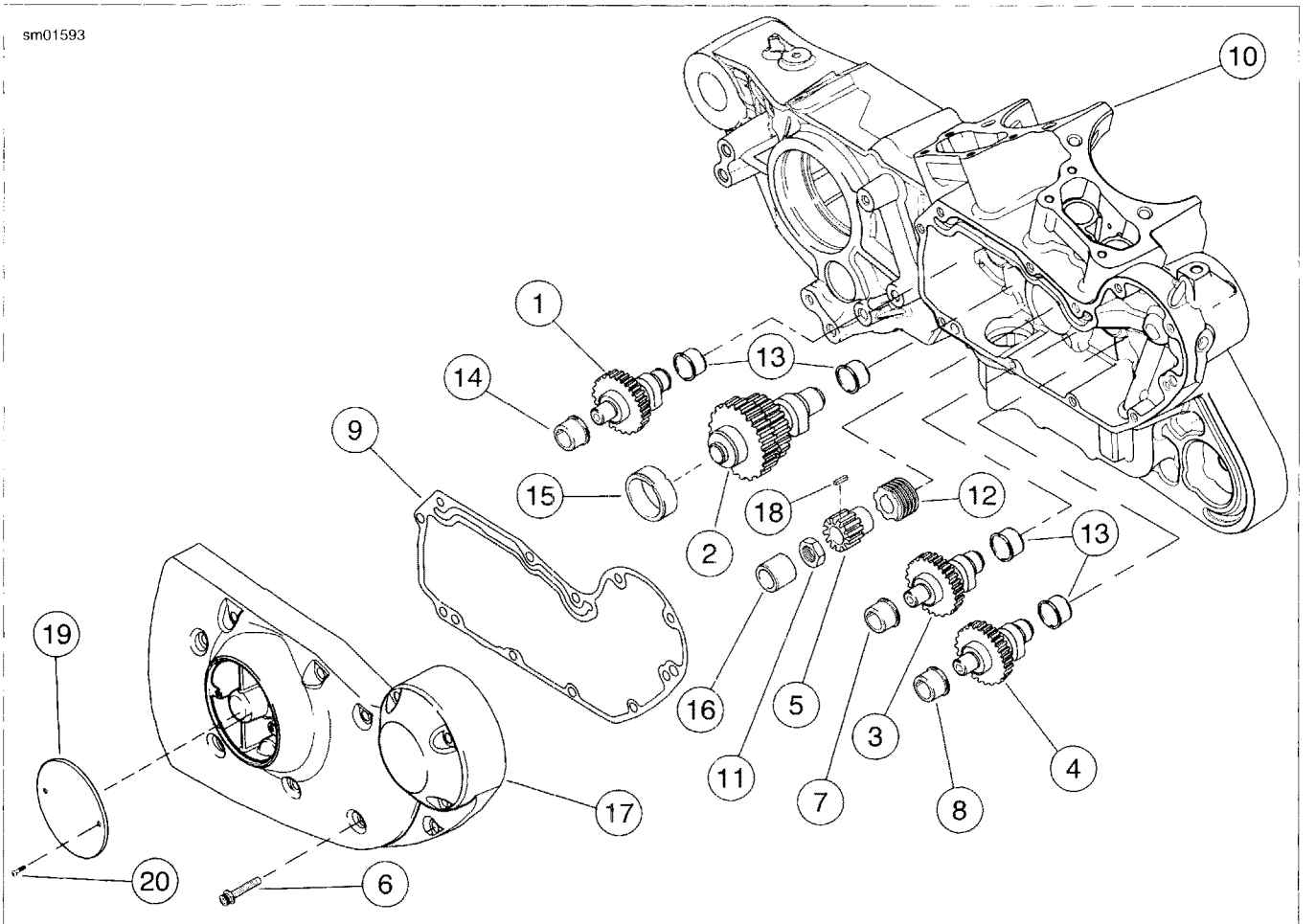

1. **Rear exhaust cam gear**
2. **Rear intake cam gear**
3. **Front intake cam gear**
4. **Front exhaust cam gear**
5. **Pinion gear**
6. **Screw (11)**
7. **Front intake cam gear bushing**
8. **Front exhaust cam gear bushing**
9. **Gearcase cover gasket**
10. **Right crankcase**
11. **Nut**
12. **Oil pump drive gear**
13. **Cam gear bushing (4)**
14. **Rear exhaust cam gear bushing**
15. **Rear intake cam gear bushing**
16. **Pinion shaft bushing**
17. **Gearcase cover**
18. **T-key**
19. **Cover plate**
20. **Screw (2)**

Figure 3-70. Gearcase and Valve Train Components: XL Models

OIL PUMP HOUSING/GEARCASE COVER AND CAM GEARS: XR MODELS

The oil pump on XR models is integrated into the gearcase cover. The oil pump rotors can be removed with the gearcase cover in place if necessary however, it is not necessary to remove the oil pump rotors to remove the gearcase cover.

⚠WARNING

Compressed air can pierce the skin and flying debris from compressed air could cause serious eye injury. Wear safety glasses when working with compressed air. Never use your hand to check for air leaks or to determine air flow rates. (00061a)

1. Remove any parts that will interfere with gearcase disassembly (i.e., exhaust pipe, footrest, air cleaner, brake pedal, etc.).
2. Remove inner rocker cover to remove valve spring pressure from camshafts. See 3.15 TOP END OVERHAUL: DISASSEMBLY, General
3. Check cam gear end play; see 3.20 GEARCASE COVER AND CAM GEARS, Assembly and Installation. Record readings.
4. Place a pan under gearcase to collect oil.
5. See Figure 3-71. Remove nine fasteners (1) and remove cover (2).
6. See Figure 3-72. Remove rigid lines (1) and vent hose (2) from gearcase cover. See 3.14 PRECISION COOLING SYSTEM: XR MODELS, Oil Pump Lines. Mark lines and hoses for later installation. Discard hose clamps.
7. Remove two check valve housing screws (3).
8. Remove six screws (4) and remove oil pump cover (5). Discard O-rings.
9. Remove three fasteners (6). Loosely install oil pump cover to prevent rotors from falling out unexpectedly.

NOTE

Never pry gearcase cover off. If gearcase cover is difficult to remove, tap lightly with a rawhide hammer.

10. Carefully remove gearcase cover. Discard old gasket.

NOTE

If oil pump requires repair, see 3.25 OIL PUMP: XR MODELS.

11. See Figure 3-73. Remove cam gears (1, 2, 3, and 4). Carefully mark each component to verify correct installation.

NOTE

Nut (5) is secured by Loctite-262.

12. Remove nut (5). Slide pinion gear (6) and spacer (7) off pinion shaft.
13. Remove oil pump cover. Mark rotors with a permanent marker to identify outer surfaces. Remove rotors from housing.

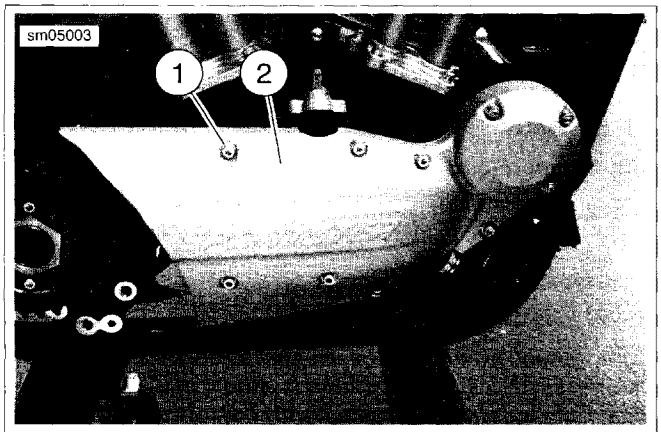

1. **Fastener (9)**
2. **Cover**

Figure 3-71. Oil Pump Cover: XR Models

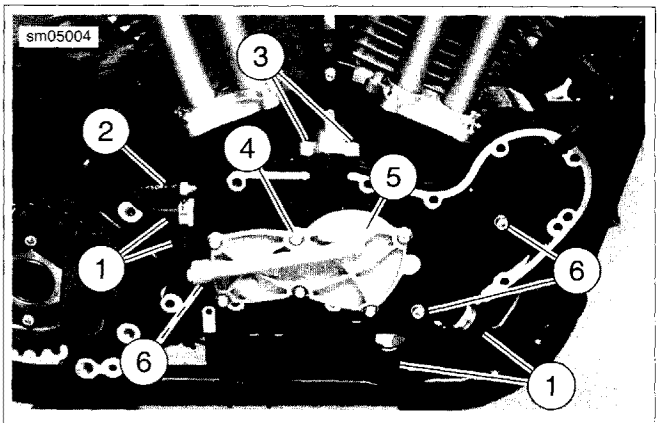

1. **Rigid lines (4)**
2. **Vent hose**
3. **Check valve screws (2)**
4. **Oil pump cover screw (6)**
5. **Oil pump cover**
6. **Gearcase cover fastener (3)**

Figure 3-72. Gearcase Cover and Oil Pump: XR Models

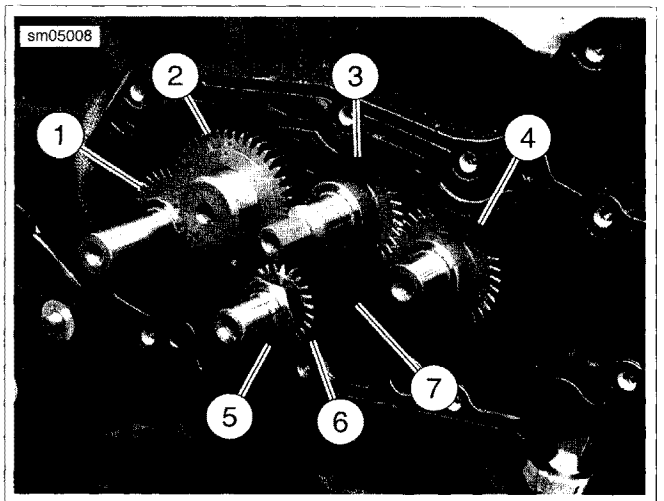

1. **Rear exhaust cam gear**
2. **Rear intake cam gear**
3. **Front intake cam gear**
4. **Front exhaust cam gear**
5. **Nut**
6. **Pinion gear**
7. **Spacer**

Figure 3-73. Cam Gears: XR Models

CRANKCASE

1. Remove clutch and primary drive components. See 5.5 PRIMARY DRIVE AND CLUTCH: XL MODELS.
2. Remove starter motor. See 6.13 STARTER.
3. Mount crankcase assembly in engine stand. Position crankcase so that it is tilted at a 45° angle, right side down.

⚠CAUTION

Do not rotate right crankcase half in engine stand such that flywheel sprocket shaft is facing down. The flywheel assembly can fall out, resulting in parts damage or moderate injury. (00553b)

NOTE

See Figure 3-74. Crankcase assembly has 17 fasteners; 15 inserted from left side and two inserted from right side.

4. See Figure 3-74. Remove 15 crankcase fasteners (eleven long and four short) from left side of crankcase assembly.

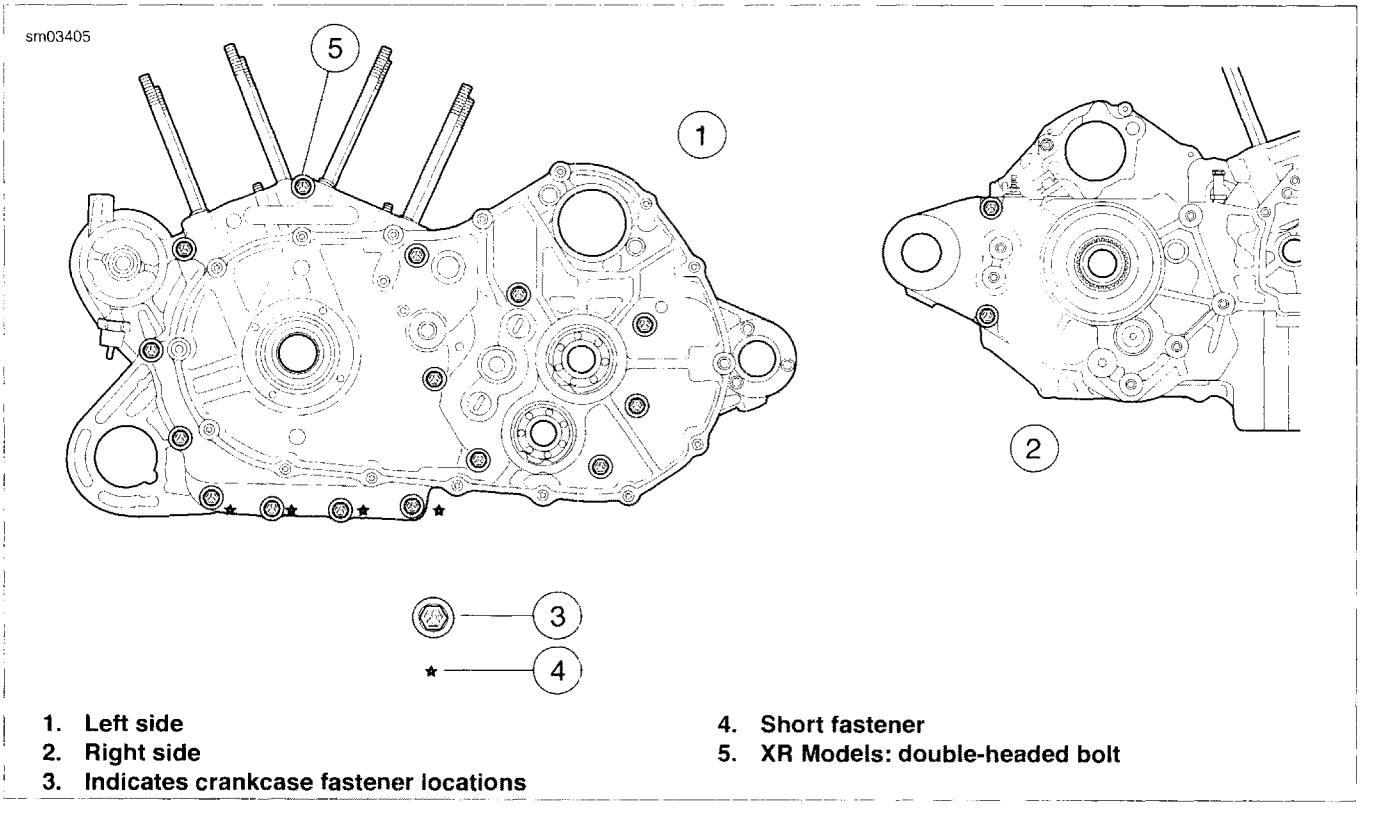

1. **Left side**
2. **Right side**
3. **Indicates crankcase fastener locations**
4. **Short fastener**
5. **XR Models: double-headed bolt**

Figure 3-74. Crankcase Fasteners

5. Remove two fasteners from right side of crankcase assembly.
6. Tap crankcase gently with rawhide mallet to loosen and separate the halves. See Figure 3-75. Remove left crankcase assembly with transmission.

NOTE

Flywheel assembly slides off left main bearing by hand. No tools are required for this operation.

7. See Figure 3-76. Remove the flywheel assembly from right crankcase.
8. Remove transmission assembly from left crankcase. See 5.10 TRANSMISSION REMOVAL AND DISASSEMBLY.

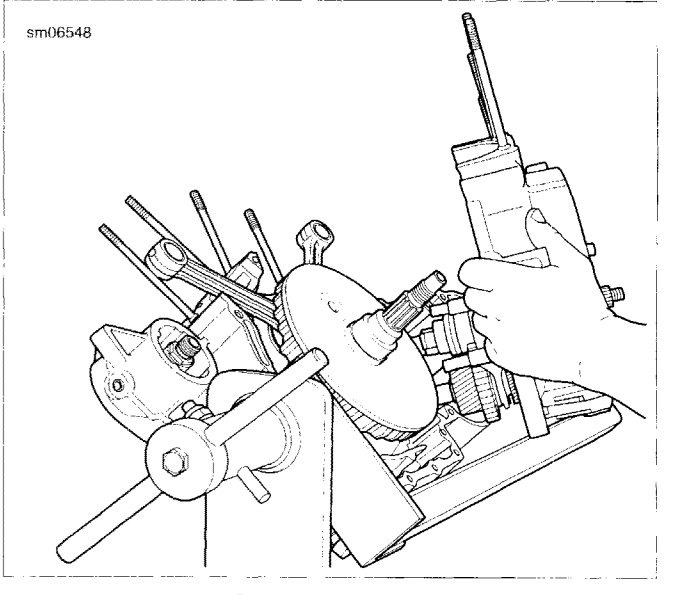

Figure 3-75. Separating Crankcase Halves

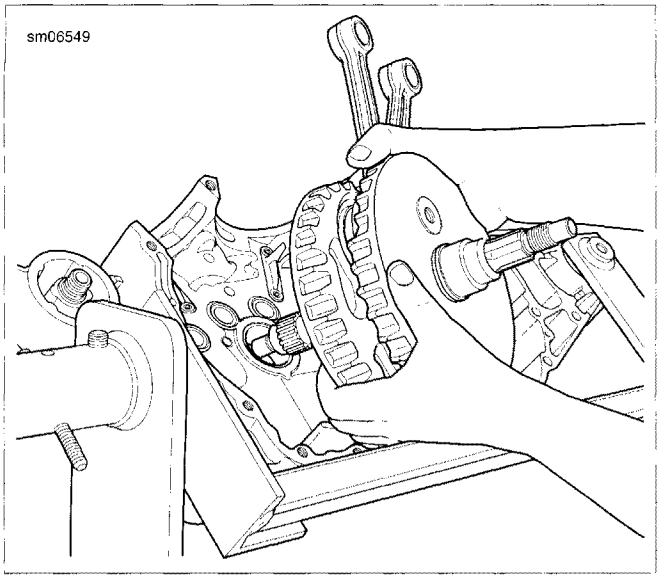

Figure 3-76. Removing Flywheels from Right Crankcase

Removing Piston Oil Jets

1. See Figure 3-77. Remove two TORX screws (3) from each piston oil jet assembly (2) to free piston oil jets from right crankcase (1).
2. Remove piston oil jets and gaskets (4) from right crankcase. Discard gaskets.
3. **XR Models:** Remove three screws (6) and oil deflector plate (5).

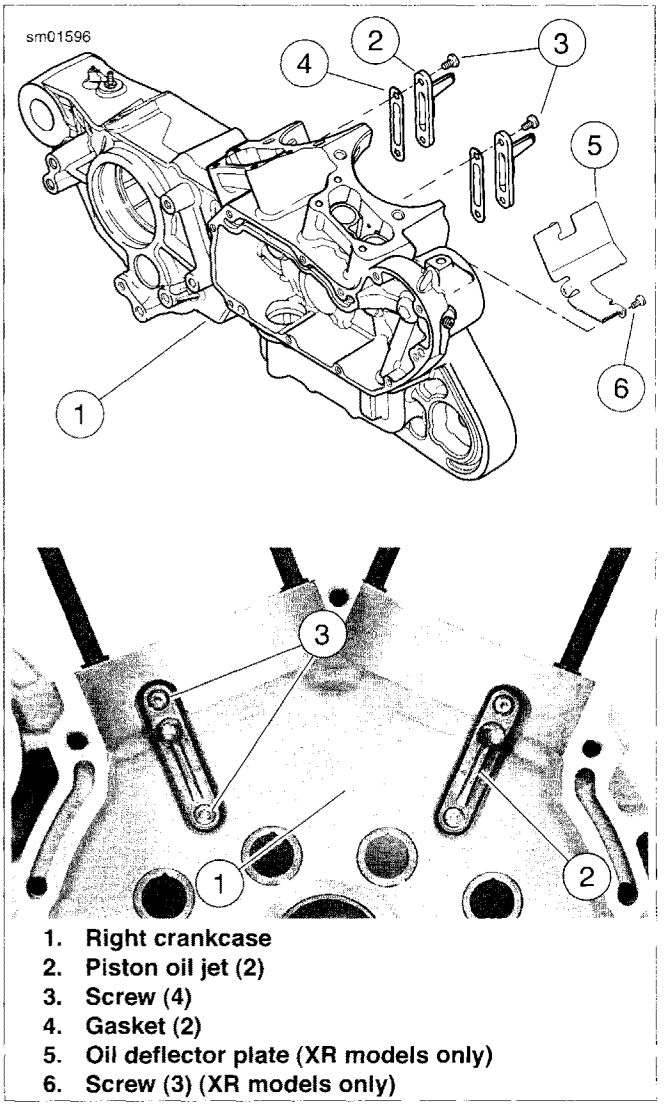

1. **Right crankcase**
2. **Piston oil jet (2)**
3. **Screw (4)**
4. **Gasket (2)**
5. **Oil deflector plate (XR models only)**
6. **Screw (3) (XR models only)**

Figure 3-77. Piston Oil Jet Assemblies

Removing Cylinder Base Studs

If cylinder base studs require replacement, proceed as follows.

1. Thread a 3/8"-16 nut onto cylinder base stud.
2. Thread a second nut onto stud until it contacts the first nut.
3. Tighten nuts against each other.
4. Placing wrench on first (lower) nut installed, remove stud from cylinder deck.
5. Loosen nuts and remove from cylinder base stud.

CRANKCASE

PART NUMBER	TOOL NAME
B-45520	GEAR DETENT ASSEMBLY AID
B-45655	CRANKCASE BEARING REMOVER/INSTALLER
B-45676-A	SPROCKET SHAFT SEAL/SPACER INSTALLER
HD-42326-B	CRANKSHAFT GUIDE TOOL
HD-42579-6	SPROCKET SHAFT ADAPTER
HD-42579-A	SPROCKET SHAFT BEARING/SEAL INSTALLATION TOOL
HD-42720-2	CRANKCASE BEARING REMOVER/INSTALLER BASE
J-5586-A	TRANSMISSION SHAFT RETAINING RING PLIERS

Installing Piston Oil Jets

NOTES

- *Gaskets that are missing, distorted, pinched or otherwise damaged will result in either oil leakage or low oil pressure.*
- *See Figure 3-78. Gasket (4) is part of piston oil jet (2) assembly and is not sold separately.*

1. See Figure 3-78. With oil jet pointed upward, install **new** piston oil jet assemblies (2) with gaskets (4) in right crankcase.
2. Apply Loctite Low Strength Threadlocker 222 (purple) to threads of TORX screws (3) and screws (6).
3. Install TORX screws to secure piston oil jet assembly to crankcase. Tighten to 25-35 **in-lbs** (2.8-4.0 Nm).
4. **XR Models:** Install oil deflector plate (5) using three screws (6). Tighten screws to 25-35 **in-lbs** (2.8-3.9 Nm)

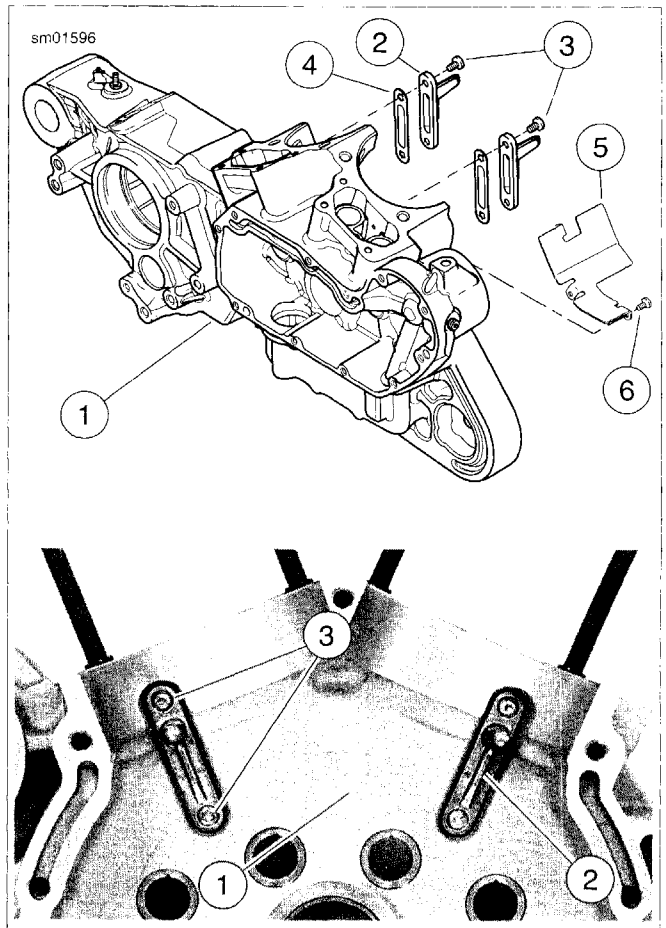

1. **Right crankcase**
2. **Piston oil jet (2)**
3. **Screw (4)**
4. **Gasket (2)**
5. **Oil deflector plate (XR models only)**
6. **Screw (3) (XR models only)**

Figure 3-78. Piston Oil Jet Assemblies

Installing Pinion Shaft Bearings

1. See Figure 3-79 and Figure 3-80. Lubricate pinion shaft and pinion shaft bearing with clean Harley-Davidson 20W50 engine oil.
2. Slip bearing on pinion shaft.
3. Using TRANSMISSION SHAFT RETAINING RING PLIERS (Part No. J-5586-A), install **new** retaining ring (10) in groove of pinion shaft bearing inner race. Make sure retaining ring is fully seated in groove.

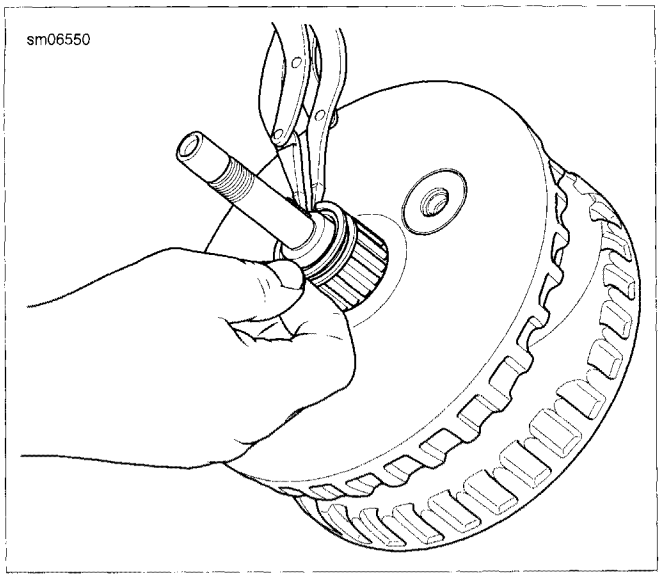

Figure 3-79. Installing Pinion Shaft Bearing and Retaining Ring

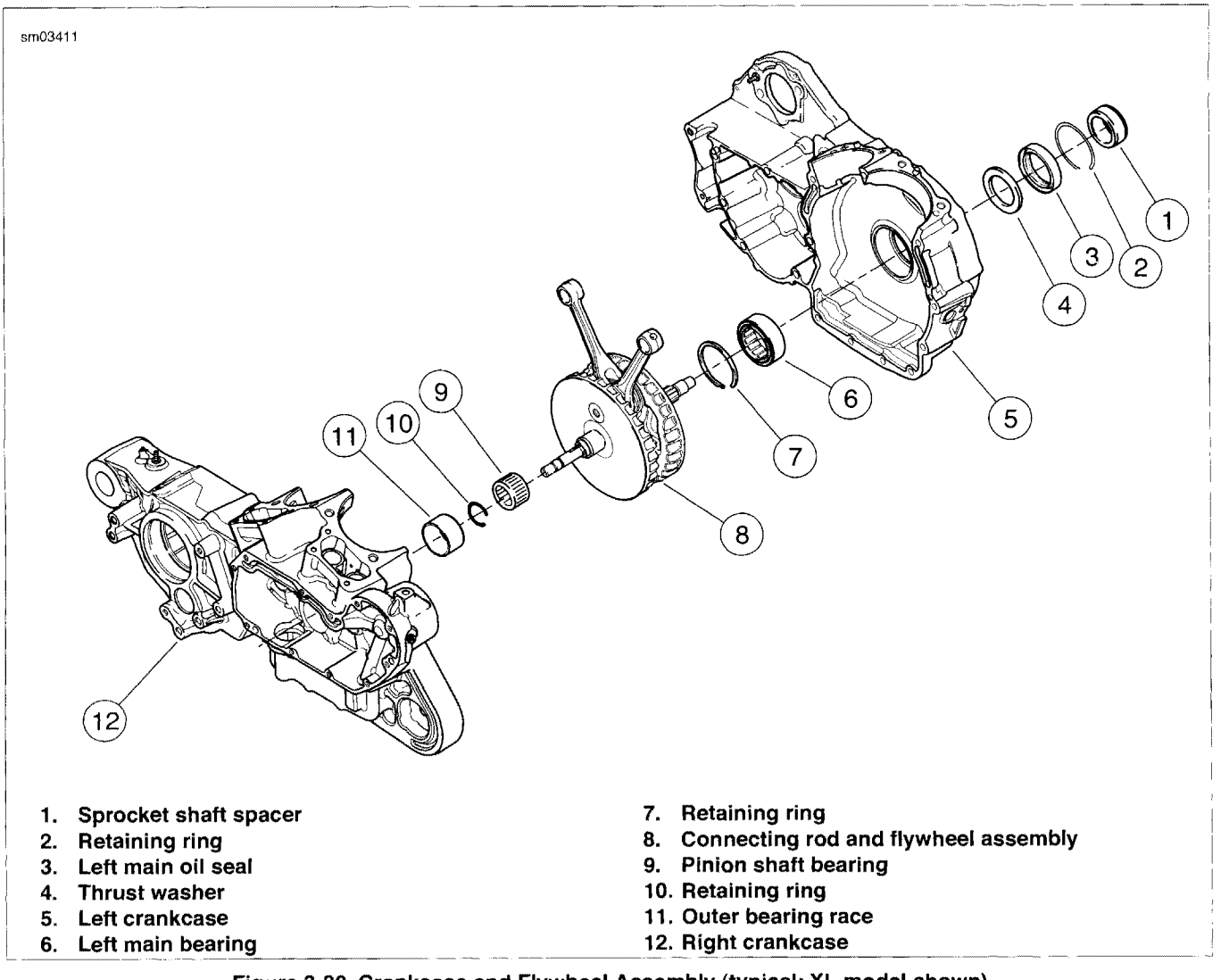

1. Sprocket shaft spacer
2. Retaining ring
3. Left main oil seal
4. Thrust washer
5. Left crankcase
6. Left main bearing
7. Retaining ring
8. Connecting rod and flywheel assembly
9. Pinion shaft bearing
10. Retaining ring
11. Outer bearing race
12. Right crankcase

Figure 3-80. Crankcase and Flywheel Assembly (typical; XL model shown)

Installing Left Main Bearing

NOTE

When installing the left main bearing, the bearing presses from the inside of the left crankcase toward the outside. A shoulder is incorporated into the left crankcase which allows the bearing to be installed in one direction only.

1. See Figure 3-81. Using CRANKCASE BEARING REMOVER/INSTALLER (Part No. B-45655) and CRANKCASE BEARING REMOVER/INSTALLER BASE (Part No. HD-42720-2), press left main bearing into the left crankcase.
   a. Place support tube (1) on press bed with recessed cup end facing up.
   b. With the inboard side of the left crankcase (2) facing upward, position crankshaft bearing bore (3) over support tube.
   c. Place left main bearing (4) over bearing bore. Insert pilot/driver (5) through left main bearing, through crankshaft bearing bore and into support tube.
   d. Apply pressure with press ram (6) until left main bearing bottoms out in bearing bore.
2. See Figure 3-82. See Figure 3-80. Install **new** retaining ring (7) from the inside of the left crankcase.

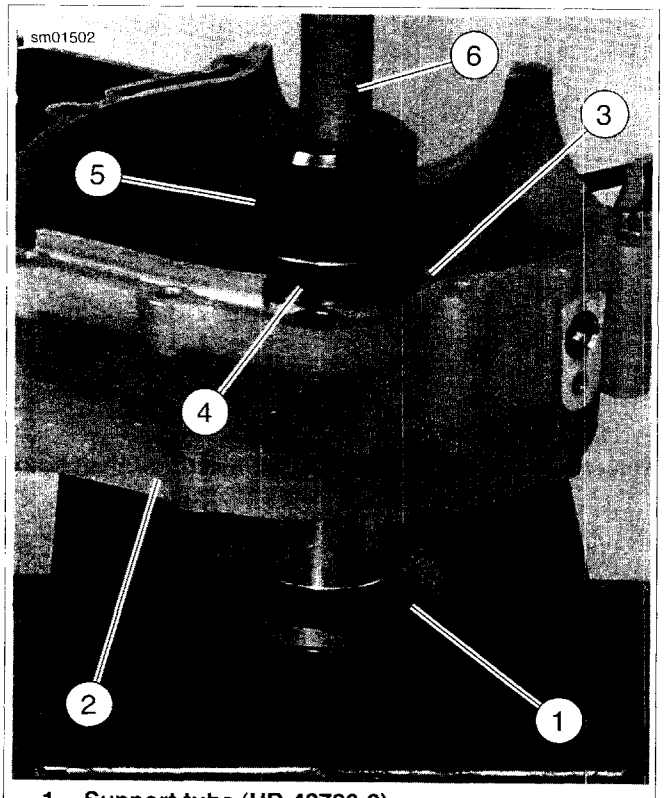

1. **Support tube (HD-42720-2)**
2. **Left crankcase**
3. **Crankshaft bearing bore**
4. **Left main bearing**
5. **Pilot/driver (B-45655)**
6. **Press ram**

Figure 3-81. Installing Left Main Bearing in Crankcase

Assembling Crankcase Halves

1. If not already done, install transmission assembly in left crankcase. See 5.15 TRANSMISSION INSTALLATION.

NOTE

See Figure 3-83. The Gear Detent Assembly Aid is used to move the gear detent lever clear of the shifter drum for assembly purposes.

2. See Figure 3-83. Retract detent assembly in right case half and install GEAR DETENT ASSEMBLY AID (Part No. B-45520) until it has bottomed in right case half.

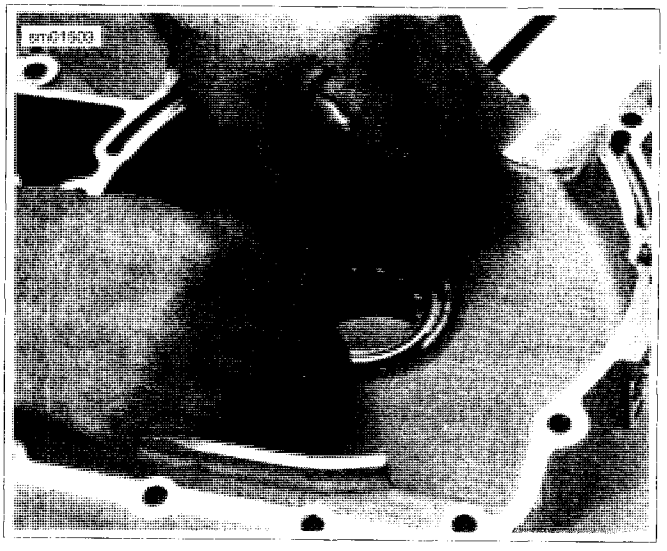

Figure 3-82. Installing Left Main Bearing Retaining Ring

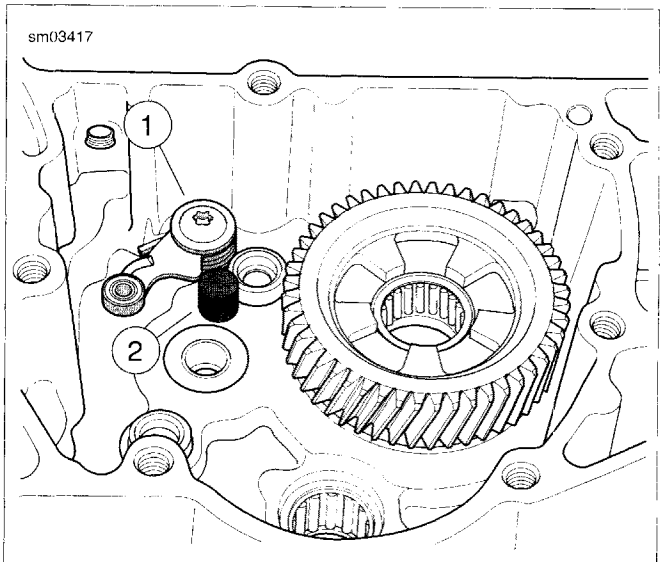

1. **Detent assembly**
2. **Detent assembly aid**

Figure 3-83. Using Gear Detent Assembly Aid (Part No. B-45520)

3. Shift transmission to 1st gear.
4. Lubricate left main bearing with clean Harley-Davidson 20W-50 engine oil.

5. Assemble crankcase halves together.
   a. See Figure 3-84. Install flywheel assembly in right crankcase. Slide pinion shaft through outer race in right crankcase.
   b. Slide CRANKSHAFT GUIDE TOOL (Part No. HD-42326-B) onto flywheel sprocket shaft.
   c. Apply a thin coat of GRAY HIGH-PERFORMANCE SEALANT (Part No. 99650-02) to crankcase joint faces.
   d. See Figure 3-85. Carefully fit crankcases together.

NOTE

See Figure 3-86. XR models have a double-ended bolt in position 8 used to secure the front cylinder head oil return line.

   e. See Figure 3-86. Apply a few drops of LOCTITE 271 (red) to last few threads of each crankcase fastener and install fasteners (thirteen long and four short) in crankcase assembly, in locations shown.
   f. Tighten fasteners to 15-19 ft-lbs (20.3-25.8 Nm) in the sequence shown in Figure 3-86.
6. Remove transmission gear detent assembly aid.

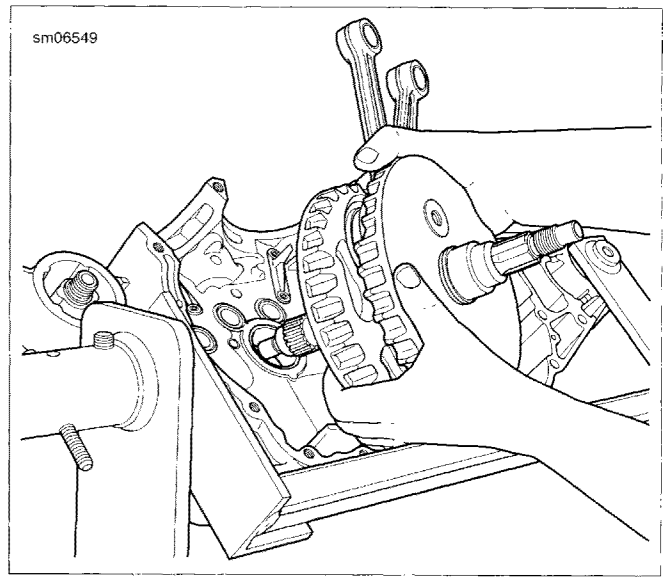

Figure 3-84. Installing Flywheels in Right Crankcase

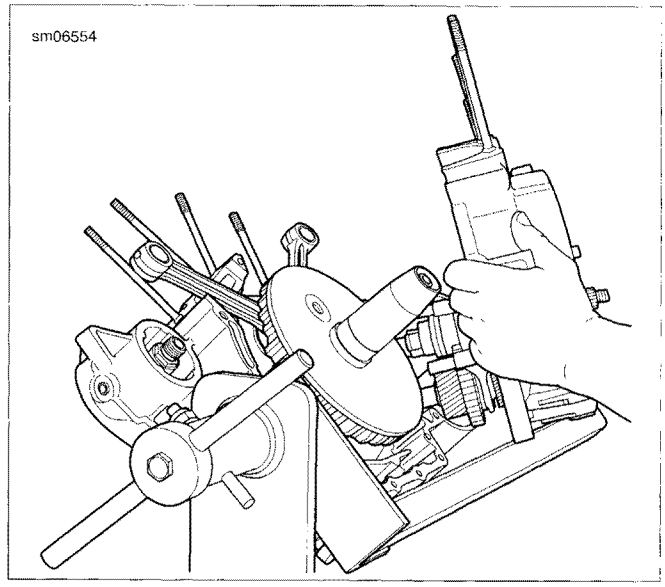

Figure 3-85. Assembling Crankcases with Crankshaft Guide Tool (Part No. HD-42326-B)

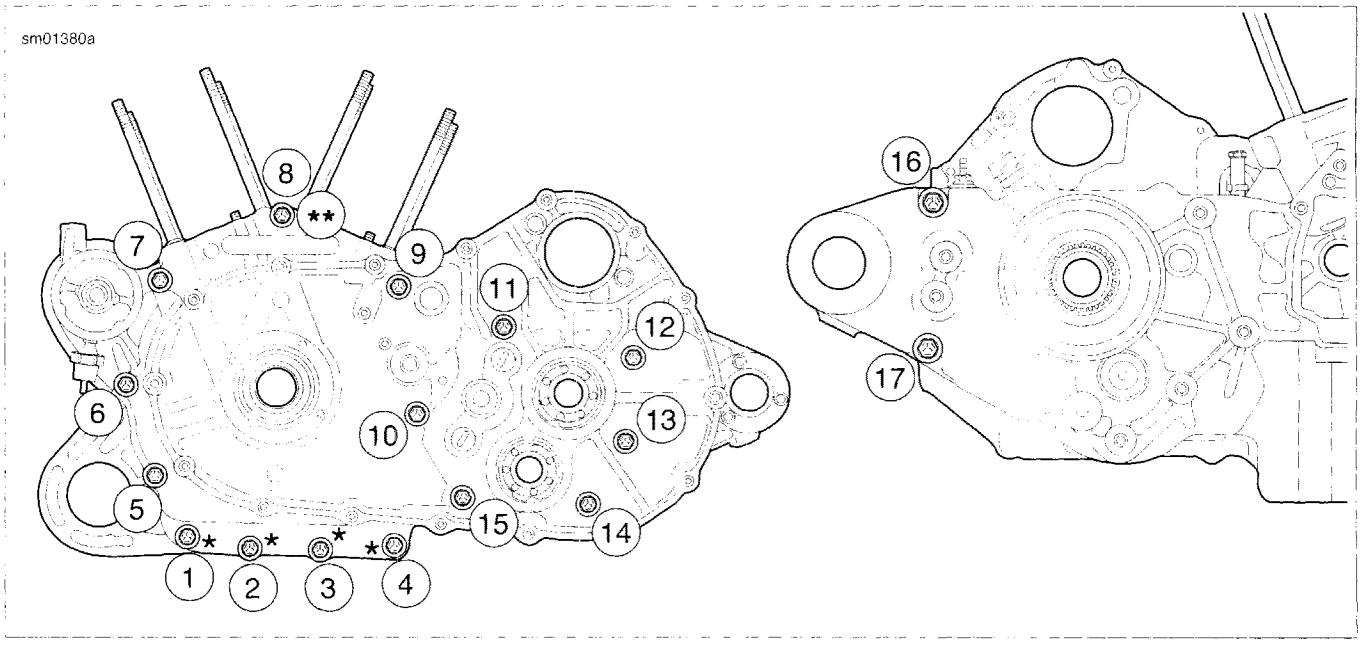

Figure 3-86. Crankcase Fastener Torque Sequence (* - Short Fasteners; ** - Double-ended Bolt: XR Models)

7. See Figure 3-87 and Figure 3-88. Install spacer in I.D. of **new** seal. With the open (lipped) side of seal facing outward, center seal/spacer assembly over bearing bore.

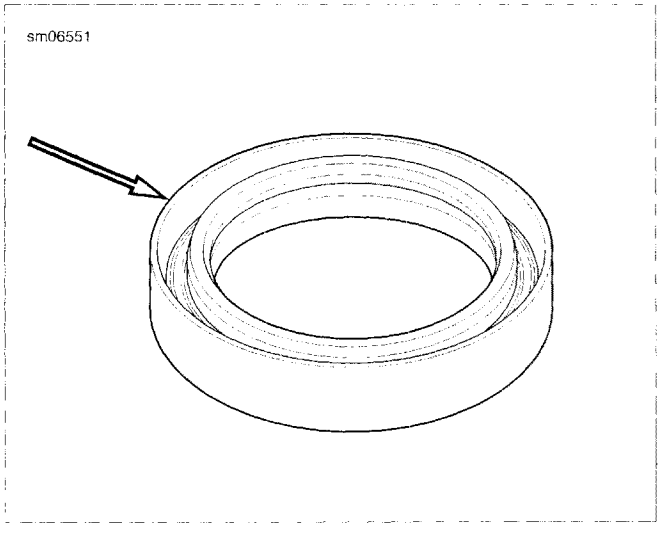

Figure 3-87. Open (Lipped) Side of Seal Faces Out

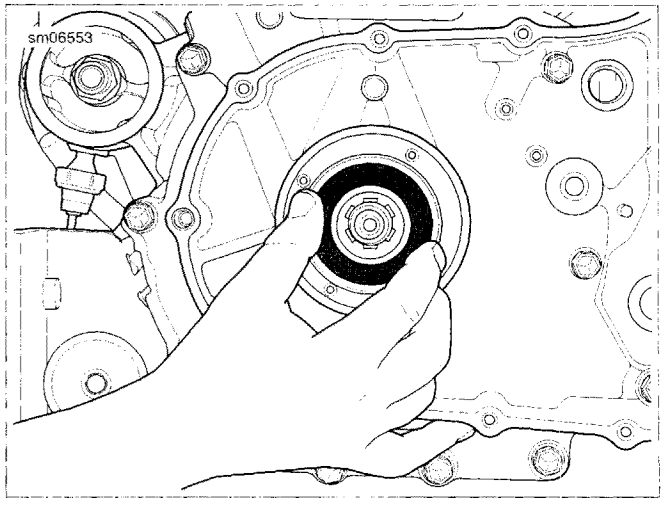

Figure 3-88. Install Spacer and Seal

NOTES

- *Do not remove the spacer after installation or the new seal will have to be discarded and the procedure repeated.*
- *XR models require the use of the SPROCKET SHAFT ADAPTER (Part No. HD-42579-6).*

8. See Figure 3-89. Install bearing seal and spacer.
   a. Center seal/spacer driver (2) over seal, so that the sleeve (smaller O.D.) seats between seal wall and garter spring.
   b. Assemble SPROCKET SHAFT BEARING/SEAL INSTALLATION TOOL (Part No. HD-42579-A) (1) and SPROCKET SHAFT SEAL/SPACER INSTALLER (Part No. B-45676-A) onto sprocket shaft.
   c. Rotate handle clockwise until the spacer makes contact with the bearing. Remove tool from sprocket shaft.

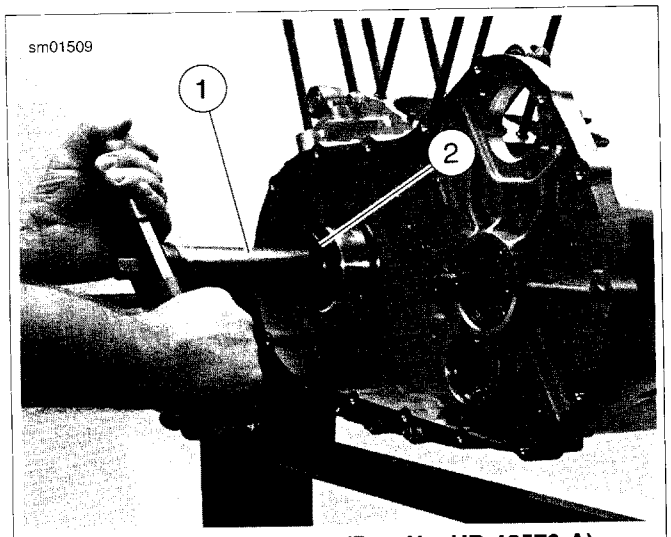

1. **Bearing/seal installer (Part No. HD-42579-A)**
2. **Seal/spacer installer (Part No. B-45676-A)**

Figure 3-89. Install Bearing Seal/Spacer

9. See Figure 3-80. Install retaining ring (2) into groove in sprocket shaft bearing bore.

Installing Cylinder Base Studs

See Figure 3-90. If cylinder studs were removed, install them as follows.

1. Pack clean towels into crankcase opening.
2. Place a steel ball into a head screw (1).
3. The cylinder studs (2) have a shoulder (3) at the lower end. Place the end of the stud without the shoulder into the head screw.
4. Install the stud in the crankcase with the shoulder end down. Use an air gun (4) to drive the stud until the shoulder reaches the crankcase.
5. Remove air gun. Use a torque wrench to tighten stud to 120-240 **in-lbs** (13.6-27.1 Nm).

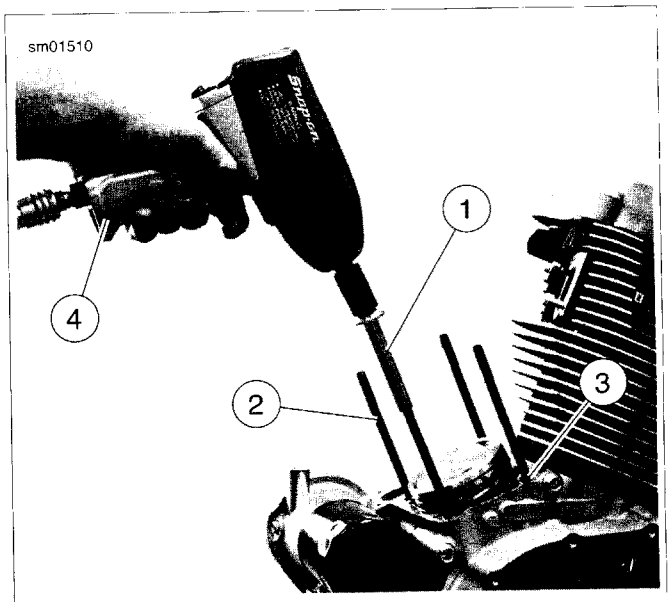

1. **Head screw with ball inside**
2. **Cylinder stud**
3. **Shoulder on cylinder stud**
4. **Air gun**

Figure 3-90. Cylinder Studs

CAM GEARS AND GEARCASE COVER: XL MODELS

PART NUMBER	TOOL NAME
HD-43984	CRANKSHAFT LOCKING TOOL

1. See Figure 3-91. Make sure shaft key (18) is installed on flywheel pinion shaft. Install oil pump drive gear (12) and pinion gear (5) on pinion shaft.

NOTE

Timing mark on pinion gear tooth is aligned with keyway in I.D. of pinion gear, as shown in Figure 3-92. The timing mark will allow you to easily position pinion gear over shaft key and against oil pump drive gear on pinion shaft.

2. See Figure 3-91. Clean threads on pinion shaft and nut (11). Apply several drops of LOCTITE THREADLOCKER 262 (red) to threads of nut.

NOTE

See Figure 3-91. When using CRANKSHAFT LOCKING TOOL, Do NOT use impact wrench to drive nut (11) onto pinion shaft.

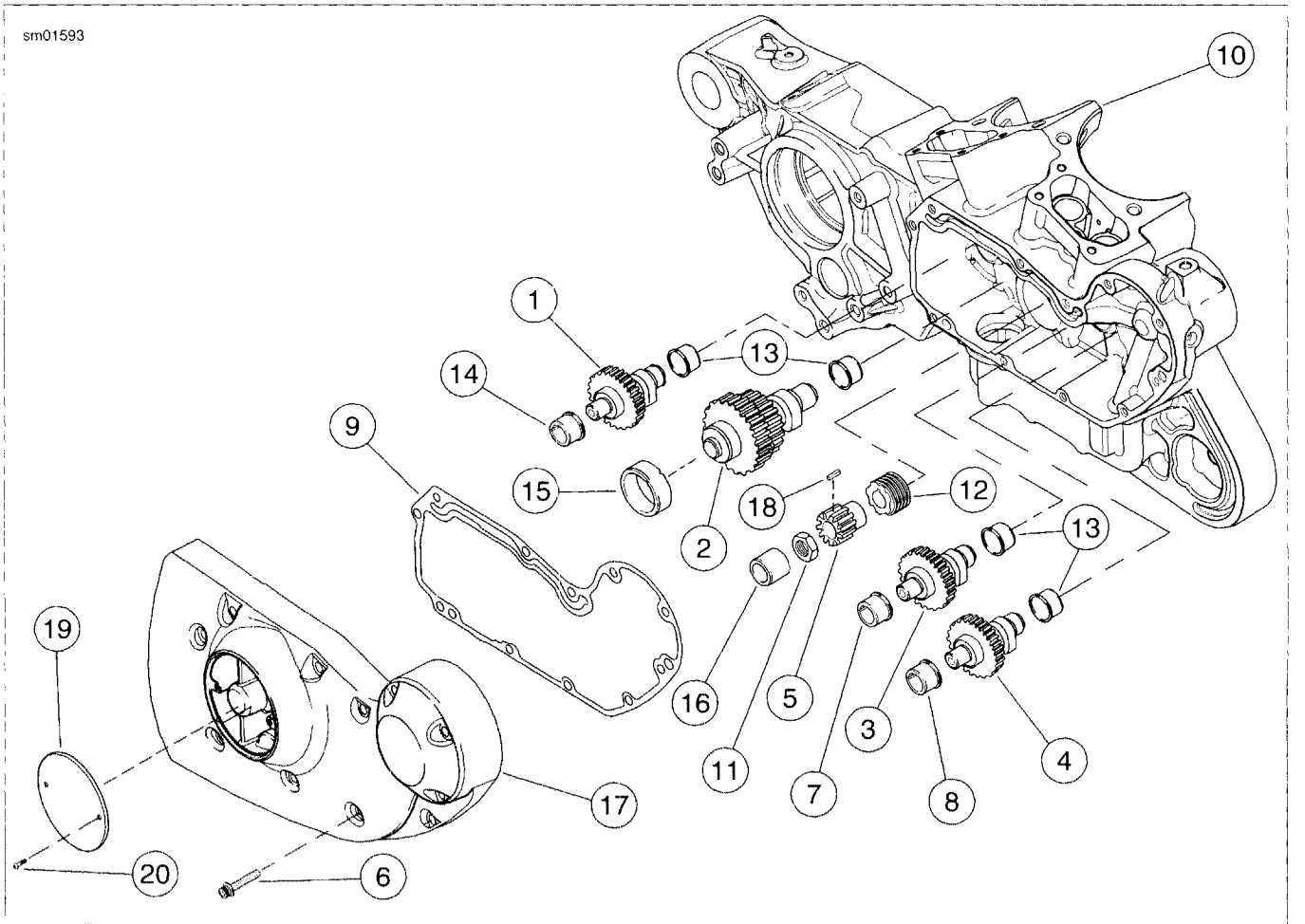

1. Rear exhaust cam gear
2. Rear intake cam gear
3. Front intake cam gear
4. Front exhaust cam gear
5. Pinion gear
6. Screw (11)
7. Front intake cam gear bushing
8. Front exhaust cam gear bushing
9. Gearcase cover gasket
10. Right crankcase
11. Nut
12. Oil pump drive gear
13. Cam gear bushing (4)
14. Rear exhaust cam gear bushing
15. Rear intake cam gear bushing
16. Pinion shaft bushing
17. Gearcase cover
18. T-key
19. Cover plate
20. Screw (2)

Figure 3-91. Gearcase and Valve Train Components: XL Models

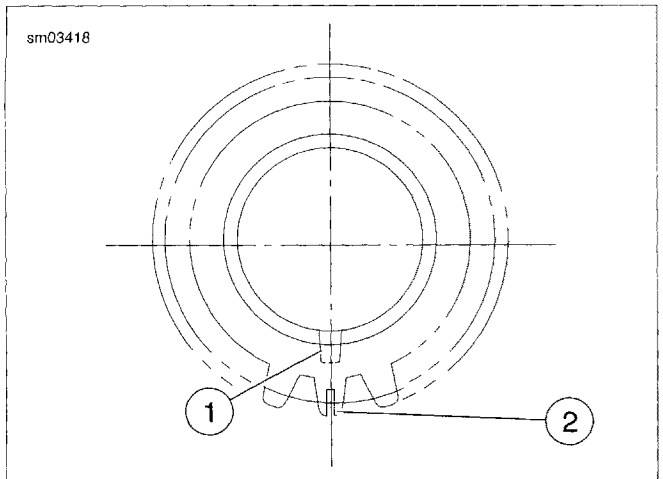

1. **Keyway**
2. **Timing mark at centerline of keyway**

Figure 3-92. Pinion Gear Timing Mark and Keyway

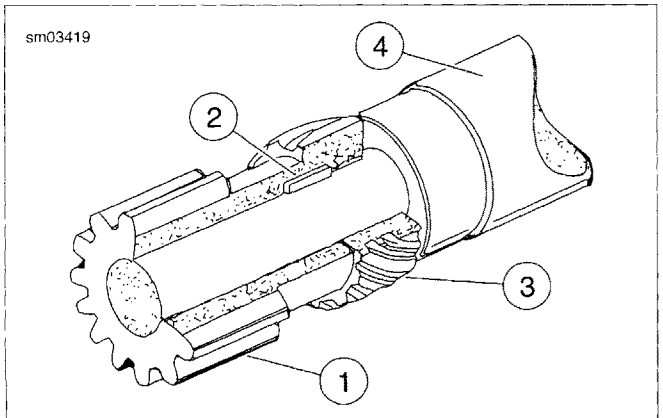

1. **Pinion Gear**
2. **Shaft key**
3. **Oil pump drive gear**
4. **Pinion shaft**

Figure 3-93. Oil Pump Drive Gear and Pinion Gear Installed on Pinion Shaft

3. See Figure 3-94. Install CRANKSHAFT LOCKING TOOL (Part No. HD-43984) over pinion shaft. Install nut on pinion shaft. Tighten nut to 19-21 ft-lbs (26-29 Nm). Then tighten nut an additional 15-19 degrees of rotation. Remove CRANKSHAFT LOCKING TOOL (Part No. HD-43984).

NOTE

See Figure 3-95. Because of the larger diameter additional gear (which meshes with the pinion gear) on the outboard end of the rear intake (2) cam gear, the rear exhaust (1) and front intake (3) cam gears must both be installed before the rear intake cam gear is installed.

4. Lubricate all cams and all cam bushings in right crankcase with clean Harley-Davidson 20W-50 engine oil.

5. See Figure 3-95. Rotate crankshaft until timing mark on pinion gear (5) points exactly at centerline of rear intake cam bushing.

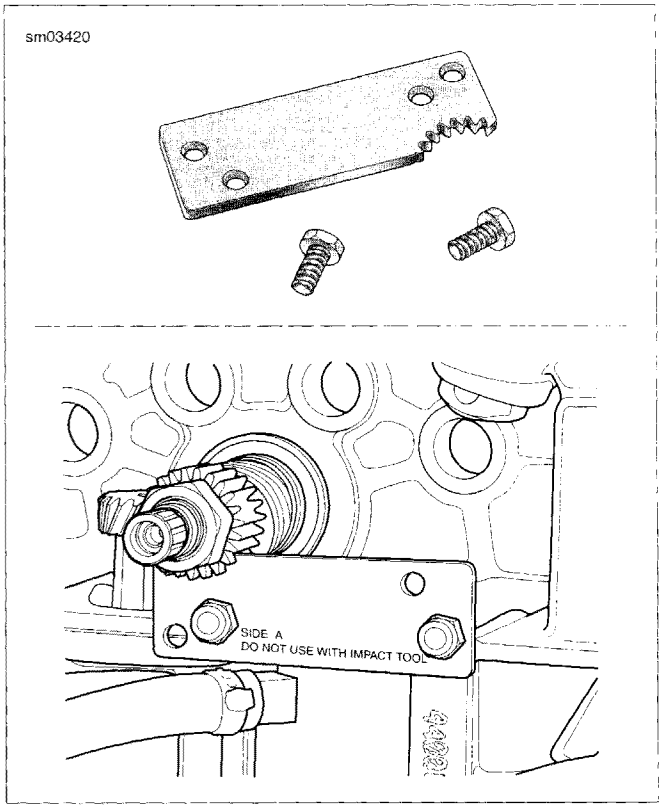

Figure 3-94. Crankshaft Locking Tool (Part No. HD-43984)

6. Install rear exhaust cam (1). Rotate cam until timing mark (a slot) points exactly at centerline of rear intake cam bushing.

7. Install front intake cam (3). Rotate cam until slotted timing mark points exactly at centerline of rear intake cam bushing.

NOTE

See Figure 3-95. "V" marks on rear intake cam (2) are not used for timing of Sportster model engines.

8. Install rear intake cam (2). As you install this cam, rotate it so that the three timing marks (dots) line up exactly with timing marks on the pinion gear, rear exhaust cam and front intake cam.

9. Install front exhaust cam (4). As you install this cam, rotate it so that its timing mark (a dot) lines up with timing mark (dot) of front intake cam.

NOTE

Make sure all timing marks on cams just installed line up correctly, as shown in Figure 3-95. If necessary, remove a cam, rotate it slightly, and re-install it. If timing marks are off even one tooth, engine will not run correctly.

10. See Figure 3-91. Install a **new** dry gasket (9) on gearcase cover (17).

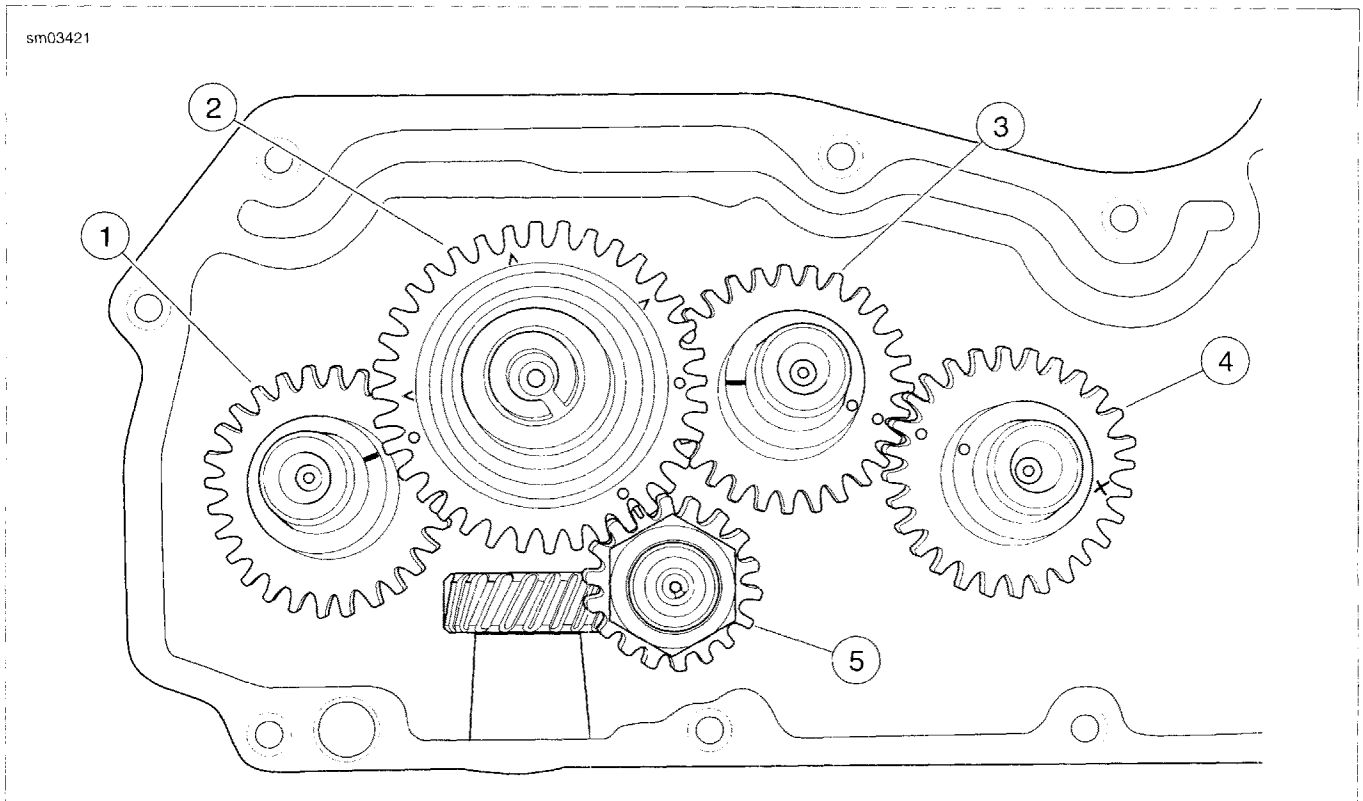

1. **Rear exhaust cam gear (1W)**
2. **Rear intake cam gear (2W)**
3. **Front intake cam gear (3W)**
4. **Front exhaust cam gear (4W)**
5. **Pinion gear**

Figure 3-95. Cam, Pinion Gear and Timing Mark Indexing (Cam #2 "V" marks are not used for timing)

11. Lubricate all cam bushings in gearcase cover with clean Harley-Davidson 20W-50 engine oil.
12. Install gearcase cover over all gears and onto right crankcase. Secure cover to crankcase with 11 socket head screws. Tighten screws evenly to 80-110 **in-lbs** (9.0-12.4 Nm) according to the tightening sequence shown in Figure 3-96.

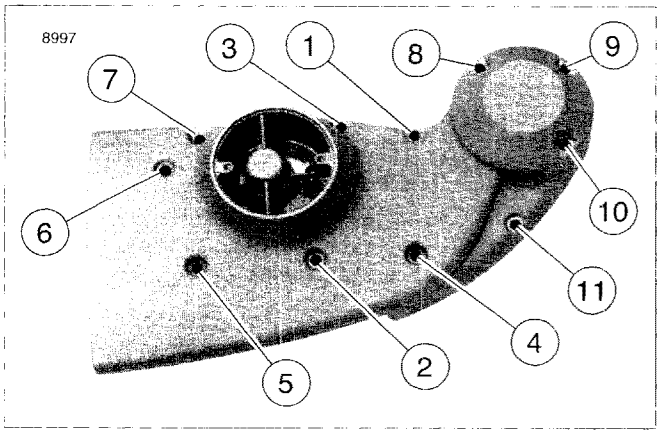

Figure 3-96. Gearcase Cover Mounting Screw Torque Sequence

13. Check cam gear end play through tappet bores in right crankcase, for each cam gear as follows:
    a. Turn engine over until lobe of cam gear being checked is pointing toward its respective tappet guide hole.
    b. Using a flat blade screwdriver, gently pry cam gear toward gearcase cover.
    c. Using a feeler gauge, measure gap between bushing (in crankcase) and cam gear shaft thrust face (shoulder). This is cam gear end play.
    d. Compare your cam gear end play measurements with the 3.2 SPECIFICATIONS. Make repairs as required if end gap is less than the minimum specified, or greater than the maximum specified (Service Wear Limits).

CAM GEARS AND GEARCASE COVER: XR MODELS

PART NUMBER	TOOL NAME
HD-43984	CRANKSHAFT LOCKING TOOL

1. See Figure 3-97. Make sure shaft key (10) is installed on flywheel pinion shaft. Install spacer (7) and pinion gear (6) on pinion shaft.

NOTE

Timing mark on pinion gear tooth is aligned with keyway in I.D. of pinion gear, as shown in Figure 3-98. The timing mark will allow you to easily position pinion gear over shaft key and against oil pump drive gear on pinion shaft.

2. See Figure 3-97. Clean threads on pinion shaft and nut (5). Apply several drops of LOCTITE THREADLOCKER 262 (red) to threads of nut.

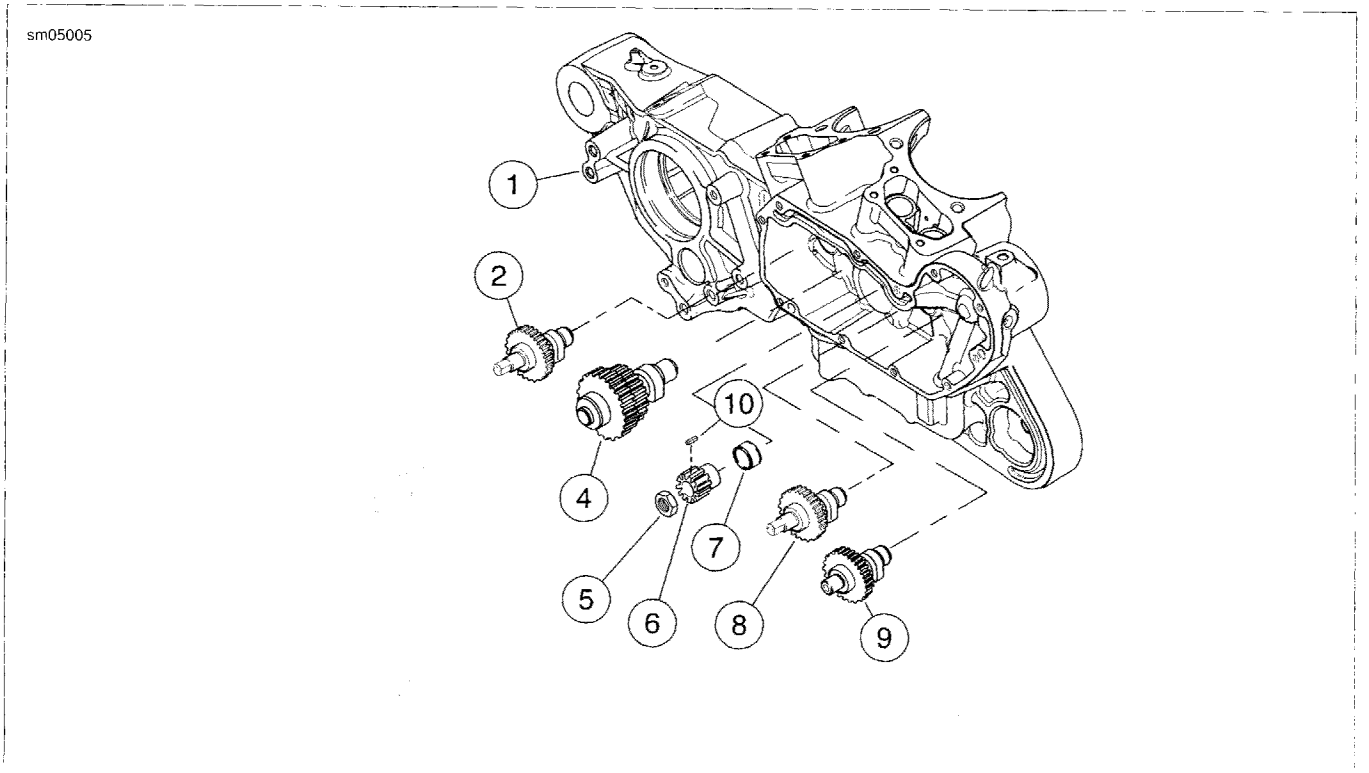

1. **Right crankcase half**
2. **Rear exhaust cam gear**
3. **Cam gear bushing (4)**
4. **Rear intake cam gear**
5. **Nut**
6. **Pinion gear**
7. **Spacer**
8. **Front intake cam gear**
9. **Front exhaust cam gear**
10. **T-key**

Figure 3-97. Gearcase and Valve Train Components: XR Models

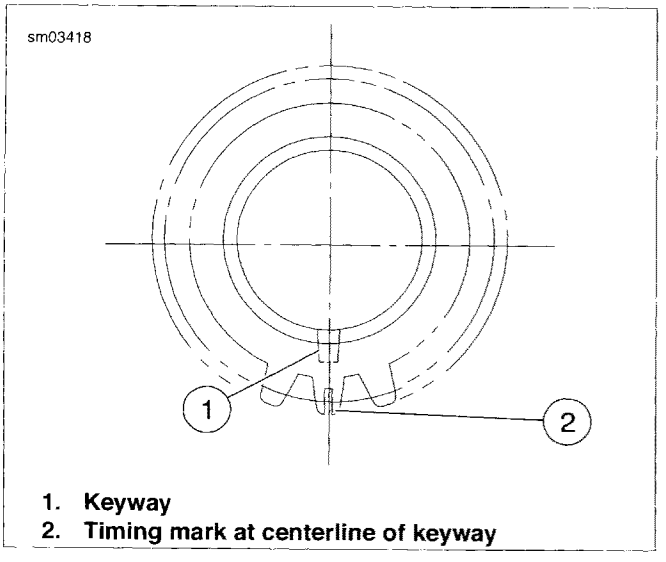

1. **Keyway**
2. **Timing mark at centerline of keyway**

Figure 3-98. Pinion Gear Timing Mark and Keyway

NOTE

See Figure 3-99. When using CRANKSHAFT LOCKING TOOL, Do NOT use impact wrench to drive nut onto pinion shaft.

3. See Figure 3-99. Install CRANKSHAFT LOCKING TOOL (Part No. HD-43984) over pinion shaft. Install nut on pinion shaft. Tighten nut to 19-21 ft-lbs (26-29 Nm). Then tighten nut an additional 15-19 degrees of rotation. Remove CRANKSHAFT LOCKING TOOL (Part No. HD-43984).

NOTE

See Figure 3-100. Because of the larger diameter gear on the outboard end of the rear intake cam gear (2), the rear exhaust (1) and front intake (3) cam gears must be installed before the rear intake cam gear is installed.

4. Lubricate all cams and all cam bores in right crankcase with clean Harley-Davidson 20W-50 engine oil.

5. See Figure 3-100. Rotate crankshaft until timing mark on pinion gear (5) points exactly at centerline of rear intake cam bore.

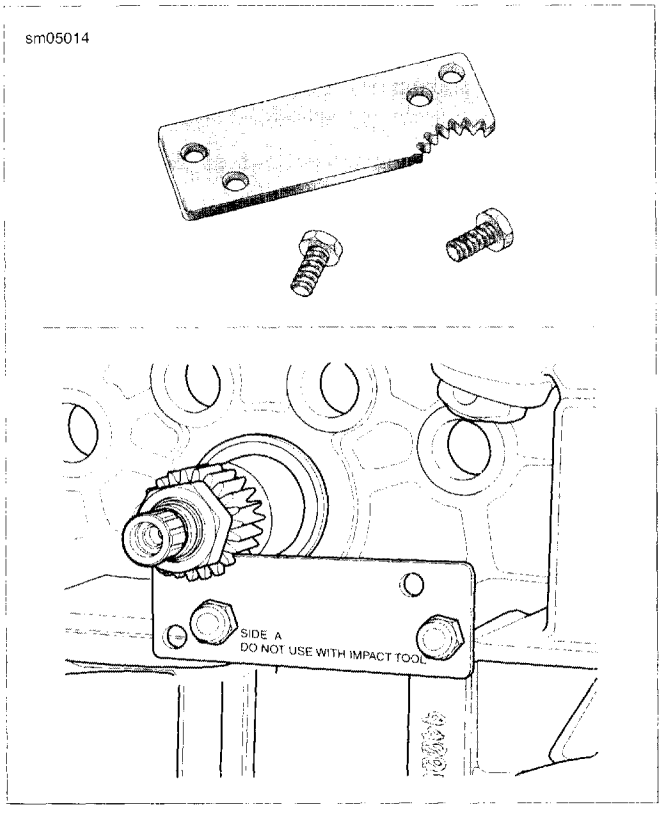

Figure 3-99. Crankshaft Locking Tool (Part No. HD-43984)

6. Install rear exhaust cam (1). Rotate cam until timing mark (a slot) points exactly at centerline of rear intake cam bore.
7. Install front intake cam (3). Rotate cam until slotted timing mark points exactly at centerline of rear intake cam bore.

NOTE

See Figure 3-100. "V" marks on rear intake cam (2) are not used for timing of Sportster model engines.

8. Install rear intake cam (2). As you install this cam, rotate it so that the three timing marks (dots) line up exactly with timing marks on the pinion gear, rear exhaust cam and front intake cam.
9. Install front exhaust cam (4). As you install this cam, rotate it so that its timing mark (a dot) lines up with timing mark (dot) of front intake cam.

NOTE

Make sure all timing marks on cams line up correctly, as shown in Figure 3-100. If necessary, remove a cam, rotate it slightly, and replace it. If timing marks are off even one tooth, engine will not run correctly.

10. Lubricate all cam bores in gearcase cover with engine oil.
11. Figure 3-101. Install gearcase cover with **new** gasket and secure with three fasteners (6). Tighten fasteners to 80-110 **in-lbs** (9.0-12.4 Nm).

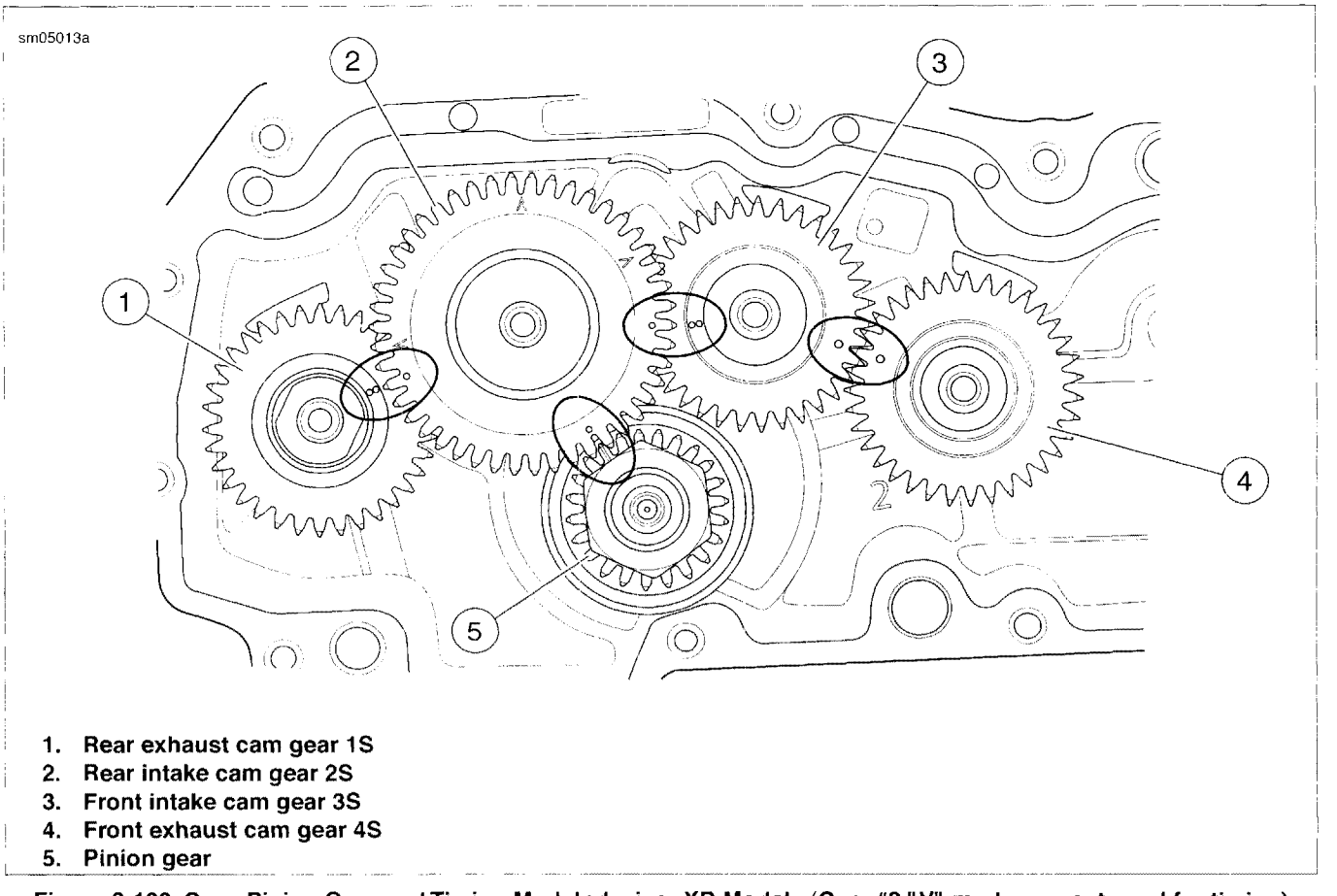

1. **Rear exhaust cam gear 1S**
2. **Rear intake cam gear 2S**
3. **Front intake cam gear 3S**
4. **Front exhaust cam gear 4S**
5. **Pinion gear**

Figure 3-100. Cam, Pinion Gear and Timing Mark Indexing: XR Models (Cam #2 "V" marks are not used for timing)

12. Install oil pump rotors. Be sure they are oriented the same as when they were removed.

13. Install new o-rings in oil pump cover and install using six fasteners (4). Tighten fasteners to 80-110 **in-lbs** (9.0-12.4 Nm).

14. Install check valve housing using a new base O-ring. Tighten fasteners (3) to 84-108 **in-lbs** (9.5-12.2 Nm).

15. Connect rigid lines (1) and vent hose (2). See 3.14 PRECISION COOLING SYSTEM: XR MODELS, Oil Pump Lines.

16. See Figure 3-102. Install gearcase and oil pump cover. Secure with 9 socket fasteners. Tighten in the sequence shown to 80-110 **in-lbs** (9.0-12.4 Nm).

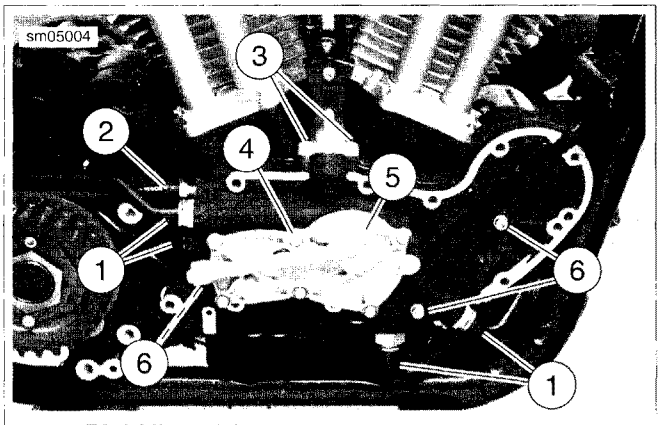

1. **Rigid lines (4)**
2. **Vent hose**
3. **Check valve screws (2)**
4. **Oil pump cover screw (6)**
5. **Oil pump cover**
6. **Gearcase cover fastener (3)**

Figure 3-101. Gearcase Cover and Oil Pump: XR Models

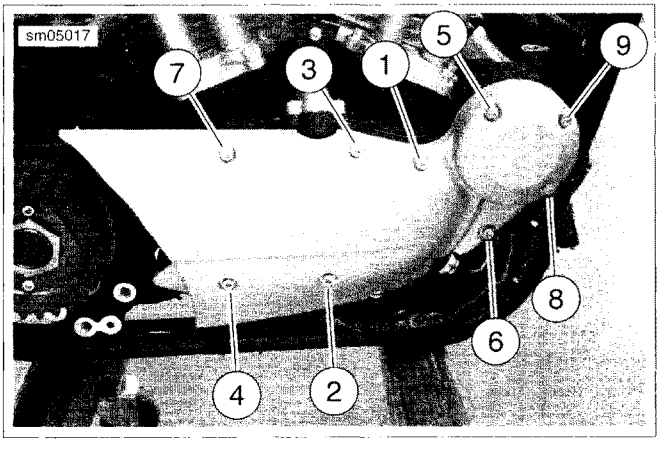

Figure 3-102. Oil Pump Cover Torque Sequence: XR Models

17. Check cam gear end play through tappet bores in right crankcase, for each cam gear as follows:
    a. Turn engine over until lobe of cam gear being checked is pointing toward its respective tappet guide hole.
    b. Using a flat blade screwdriver, gently pry cam gear toward gearcase cover.
    c. Using a feeler gauge, measure gap between bore (in crankcase) and cam gear shaft thrust face (shoulder). This is cam gear end play.
    d. Compare your cam gear end play measurements with the 3.2 SPECIFICATIONS. Make repairs as required if end gap is less than the minimum specified, or greater than the maximum specified (Service Wear Limits).

TAPPETS

1. See Figure 3-103. Rotate engine so that both tappets (3) from the cylinder being serviced will be installed on the base circle (lowest position) of the cam.

2. Apply a liberal amount of engine oil to tappet assembly (especially roller needles) for smooth initial operation.

3. Insert both tappets (intake and exhaust) into anti-rotation device (2) with flats at upper end of each tappet positioned so they will be facing front and rear when assembly is installed in engine, and the tappet oil feed hole is facing toward the gear cover.

4. Install anti-rotation device with tappets into bore in right crankcase (4). Secure with screw (1). Tighten to 80-110 **in-lbs** (9.0-12.4 Nm).

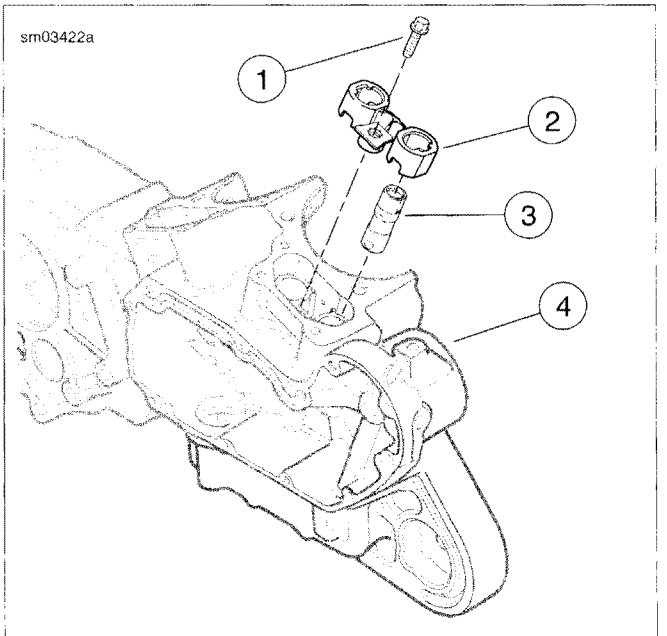

1. **Screw (2)**
2. **Anti-rotation device (2)**
3. **Tappet (4)**
4. **Right crankcase**

Figure 3-103. Tappet Components

ASSEMBLING TOP END OF ENGINE

To continue with engine assembly, see 3.16 TOP END OVERHAUL: ASSEMBLY.

GENERAL

See Figure 3-104. The tappet assembly consists of tappet and roller. The tappet and roller, under compression force from valve spring, follow the surface of the revolving cam. The up-and-down motion produced is transmitted to the valve by the push rod and rocker arm. The tappet contains a piston (or plunger) and cylinder; it also contains a check valve, which allows the unit to fill with engine oil, thereby reducing clearance in the valve train.

When a tappet is functioning properly, the assembly operates with minimal tappet clearance. The unit automatically compensates for heat expansion to maintain a no-clearance condition.

It is normal for tappets to click when engine is started after standing for some time. Tappets have a definite leakdown rate which permits the oil in the tappets to escape. This is necessary to allow units to compensate for various expansion conditions of parts and still maintain correct clearance operation. Tappets are functioning properly if they become quiet after a few minutes of engine operation.

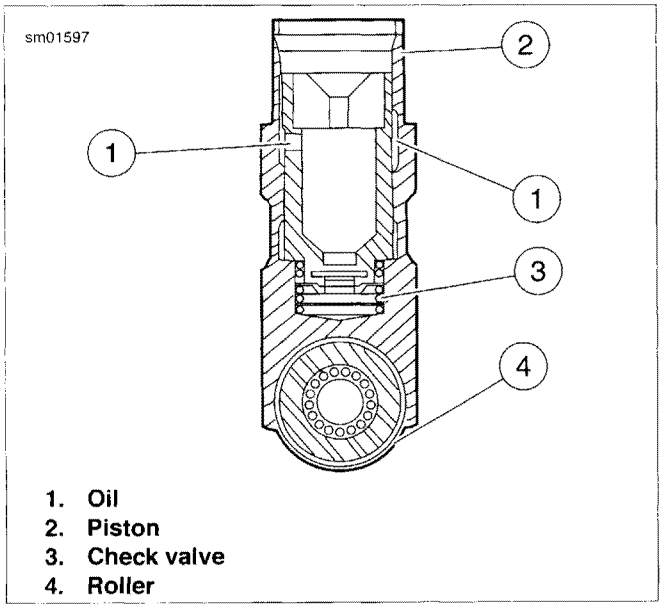

Figure 3-104. Tappet Assembly

REMOVAL

See 3.17 BOTTOM END OVERHAUL: DISASSEMBLY, Tappets to remove tappets from engine.

CLEANING AND INSPECTION

⚠WARNING

Compressed air can pierce the skin and flying debris from compressed air could cause serious eye injury. Wear safety glasses when working with compressed air. Never use your hand to check for air leaks or to determine air flow rates. (00061a)

1. Clean all parts, except roller/tappet assembly, thoroughly in solvent. Blow dry with compressed air.
2. Refer to Table 3-29. Inspect valve tappets for excessive clearance in guide. Accurately measure tappet bore inner diameter with a gauge. Excessive tappet guide clearance is corrected by fitting a new tappet and/or replacing crankcases.

NOTE

Inside and outside micrometers used for measuring tappets and tappet guides must be calibrated to ensure accurate readings.

3. Check tappet roller free play. Recommended service practice is tappet replacement.
4. Check tappet roller end clearance.
5. Tappets should be soaked in clean engine oil and kept covered until assembly.

Table 3-29. Valve Tappet Specifications

ITEM	VALUE	SERVICE WEAR LIMIT
Tappet clearance in guide	0.0008-0.0020 in. (0.020-0.051 mm)	0.0030 in. (0.076 mm)
Tappet roller free play (clearance on pin)	0.0006-0.0010 in. (0.015-0.025 mm)	0.0015 in. (0.038 mm)
Tappet roller end clearance	0.008-0.022 in. (0.203-0.559 mm)	0.026 in. (0.660 mm)

INSTALLATION

To install tappets, see 3.18 BOTTOM END OVERHAUL: ASSEMBLY, Tappets.

GENERAL

Read the complete gearcase section carefully before you begin any service work.

For the gearcase components to operate at their optimum, all components must be properly fitted and matched. Changing one component can affect many others. It is important to know and understand all inspection procedures and how components interact.

REMOVAL AND DISASSEMBLY

See 3.17 BOTTOM END OVERHAUL: DISASSEMBLY, Gearcase Cover and Cam Gears: XL Models or 3.17 BOTTOM END OVERHAUL: DISASSEMBLY, Oil Pump Housing/Gearcase Cover and Cam Gears: XR Models to remove gearcase cover and cam gears from engine.

CLEANING, INSPECTION AND REPAIR

1. Thoroughly clean gearcase compartment, gearcase cover and gears in solvent to remove oil and carbon deposits.

⚠WARNING

Compressed air can pierce the skin and flying debris from compressed air could cause serious eye injury. Wear safety glasses when working with compressed air. Never use your hand to check for air leaks or to determine air flow rates. (00061a)

2. Blow out all gearcase cover oil passages and bushings with low pressure compressed air.
3. Clean old gasket material from gearcase and gearcase cover faces with cleaning solvent.

Cam and Pinion Gear Identification, Inspection and Selection

See Figure 3-105. Cam lobes are stamped with a number (1, 2, 3, or 4) followed by a letter. The number identifies the cam location/function:

The letter indicates the cam lobe profile. Use only "W" cams in all XL models. Use only "S" cams in XR models.

Table 3-30. Cam Identification

CAM LOCATION	XL	XR
Rear Exhaust	1W	1S
Rear Intake	2W	2S
Front Intake	3W	3S
Front Exhaust	4W	4S

NOTE

Prior to changing any cam gears, check gear shaft fit within corresponding bushings. Worn bushings can cause excessive backlash.

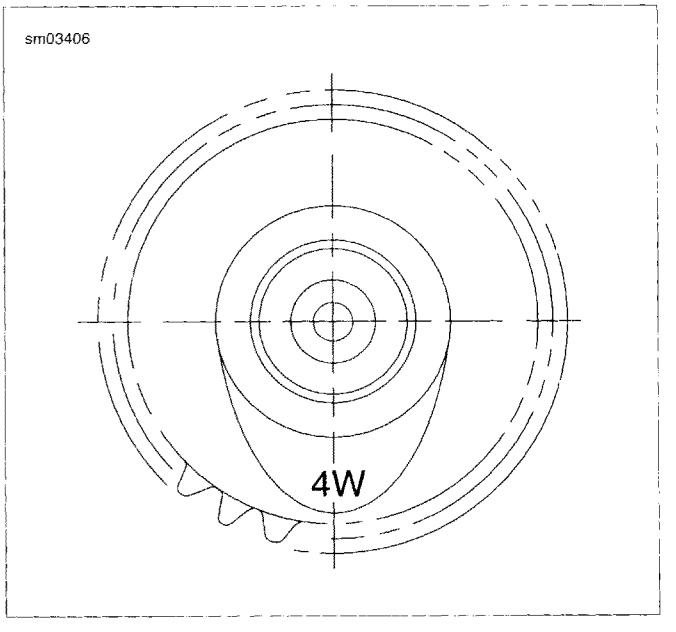

Figure 3-105. Cam Identification (typical; XL shown)

BUSHING INSPECTION AND REMOVAL: XL ONLY

PART NUMBER	TOOL NAME
HD-95760-69A	BUSHING AND BEARING PULLER

1. See Figure 3-106. Bushings (7, 8, 13, 14, 15, 16) are press fit in gearcase cover and crankcase. Inspect each bushing against its corresponding cam gear shaft or pinion gear shaft. Refer to Table 3-31 for clearances and service wear limits.
2. See Figure 3-107. Use BUSHING AND BEARING PULLER (Part No. HD-95760-69A) to remove bushings from gearcase cover and crankcase.

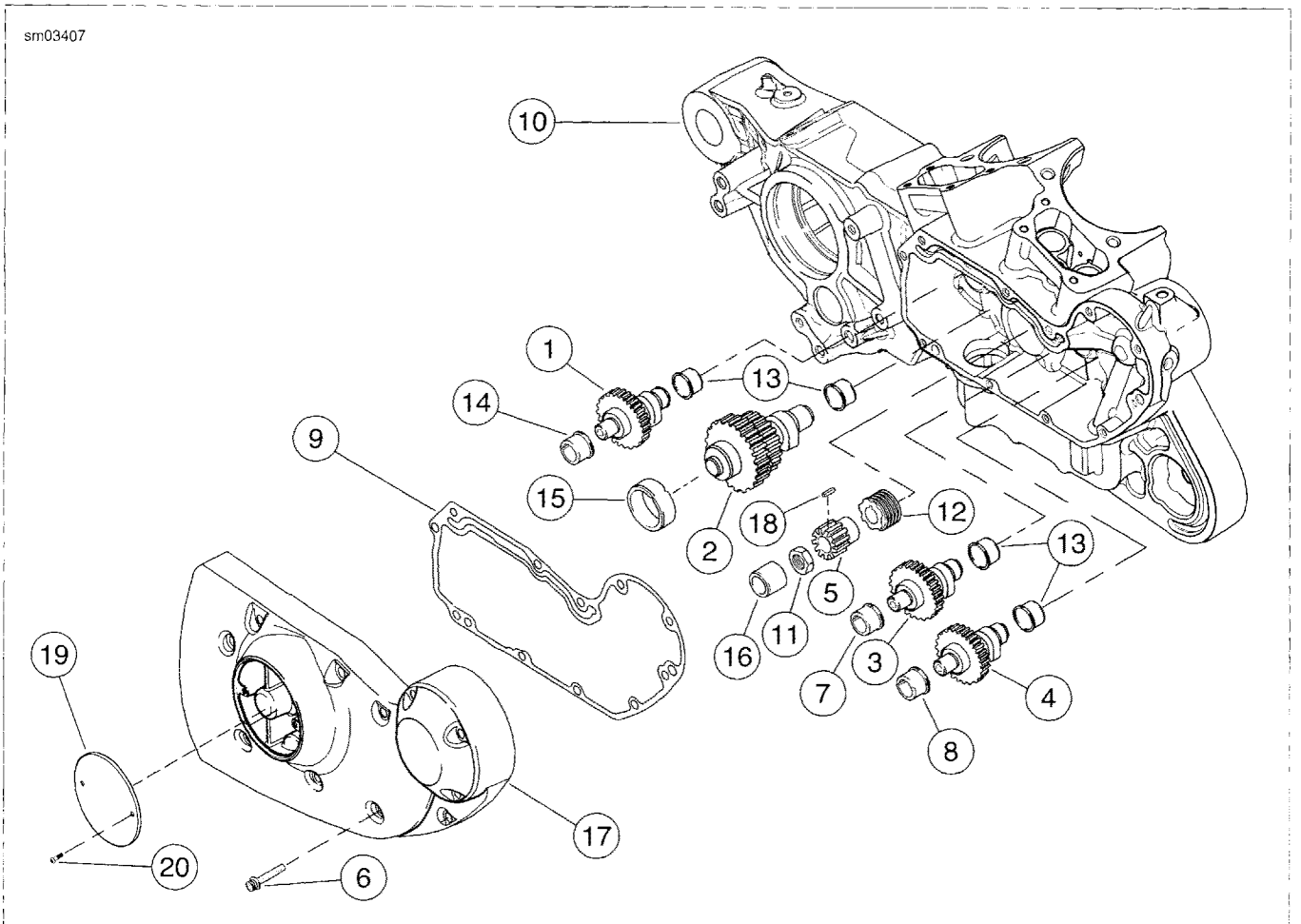

1. Rear exhaust cam gear
2. Rear intake cam gear
3. Front intake cam gear
4. Front exhaust cam gear
5. Pinion gear
6. Screw (11)
7. Front intake cam gear bushing (XL models only)
8. Front exhaust cam gear bushing (XL models only)
9. Gearcase cover gasket
10. Right crankcase
11. Nut
12. Oil pump drive gear
13. Cam gear bushing (4) (XL models only)
14. Rear exhaust cam gear bushing (XL models only)
15. Rear intake cam gear bushing (XL models only)
16. Pinion shaft bushing (XL models only)
17. Gearcase cover
18. T-key
19. Cover plate
20. Screw (2)

Figure 3-106. Gearcase and Valve Train Components (XL model shown)

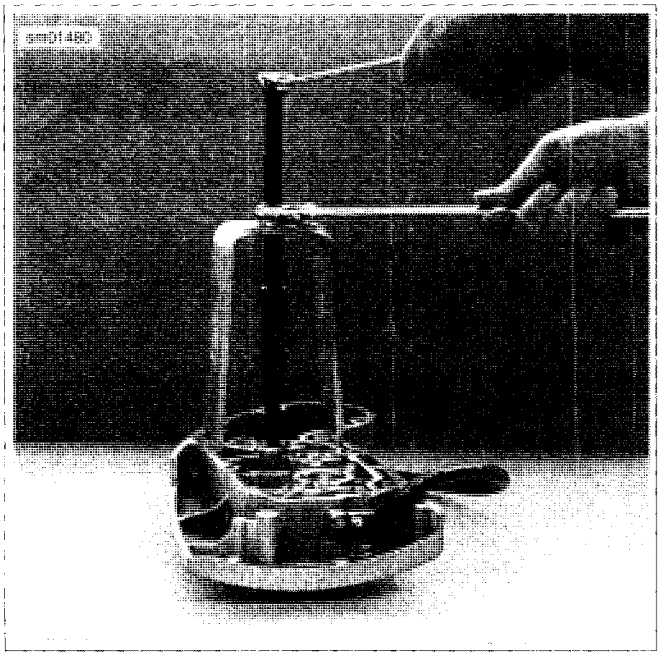

Figure 3-107. Removing Cam Bushing from Gearcase Cover

BUSHING INSTALLATION: XL ONLY

NOTE

Installing and reaming crankcase and gearcase cover bushings may alter the center distances between mating gears and may result in an increase in gear noise. For quiet-running gears, the gears should be matched to the center distances.

Cam Gear Bushings in Right Crankcase

See Figure 3-108. Each cam gear bushing, to be installed in right crankcase, must be positioned in crankcase bore with its oiling slot at exact top of bore (12 o'clock position).

1. Using an arbor press, install each bushing in its crankcase bore so that bushing shoulder contacts crankcase boss.
2. After you install a **new** bushing in right crankcase, ream the bushing to correct size. See 3.20 GEARCASE COVER AND CAM GEARS, Bushing Reaming: XL Only.

Table 3-31. Inspection

GEAR SHAFT	CORRECT CLEARANCE		SERVICE WEAR LIMIT	
	IN.	MM	IN.	MM
Cam	0.0007-0.0022	0.018-0.056	0.003	0.08
Pinion	0.0023-0.0043	0.058-0.109	0.005	0.13

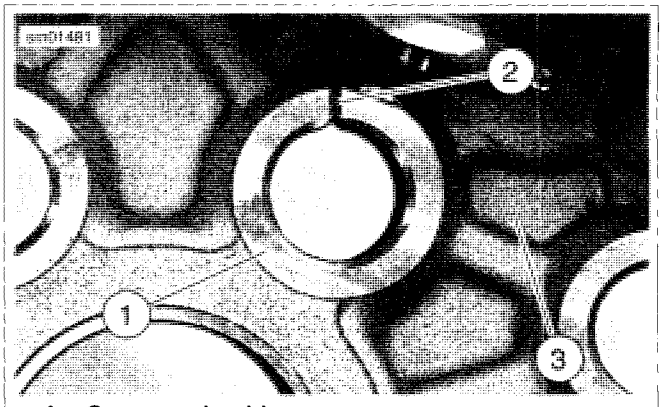

1. Cam gear bushing
2. Slot at top
3. Right crankcase

Figure 3-108. Cam Gear Bushing Installed in Crankcase

Cam Gear Bushings (Except Rear Intake Bushing) in Gearcase Cover

1. See Figure 3-106. Using an arbor press, install each bushing (7, 8, and 14) in its gearcase cover (17) bore so that bushing shoulder contacts cover boss. There is no need to orient these particular bushings in any specific position of rotation within gearcase cover bores.
2. After you install a **new** bushing in gearcase cover, line-ream the bushing to correct size. See 3.20 GEARCASE COVER AND CAM GEARS, Bushing Reaming: XL Only.

Rear Intake Cam Gear Bushing in Gearcase Cover

See Figure 3-106. Rear intake cam gear bushing (15) must be installed in its gearcase cover (17) bore using an arbor press. You will need to orient the bushing in a specific position of rotation within the cover bore.

1. See Figure 3-109. Position bushing (1) over bore of gearcase cover (2) with chamfered edge downward and slot upward. Align slot in bushing with slot in gearcase cover boss. Press bushing into cover bore until bushing is flush with cover boss.
2. After you install the **new** bushing in the gearcase cover, line-ream the bushing to the correct size. See 3.20 GEARCASE COVER AND CAM GEARS, Bushing Reaming: XL Only.

Pinion Shaft Bushing in Gearcase Cover

1. See Figure 3-106. Using an arbor press, install pinion shaft bushing (16) in gearcase cover (17) so that bushing is flush with cover boss. There is no need to orient this particular bushing in any specific position of rotation within the gearcase cover bore.
2. See Figure 3-110. Although the original pinion shaft bushing is not "pinned," the replacement bushing must be secured from possible rotation within the cover bore, by installation of a dowel pin. Drill a No. 31 hole, 0.281 in. (7.14 mm) deep, at top side of boss (side toward top of gearcase cover), centering the drill bit on the cover bore circle (hole is drilled half in bushing O.D. and half in cover bore I.D.).

3. Drive a **new** dowel pin no more than 0.20 in. (5.1 mm) below the bushing face. Carefully peen edges of hole to lock the pin in place.

4. After you install a **new** bushing in gearcase cover, line-ream the bushing to the correct size. See 3.20 GEARCASE COVER AND CAM GEARS, Bushing Reaming: XL Only.

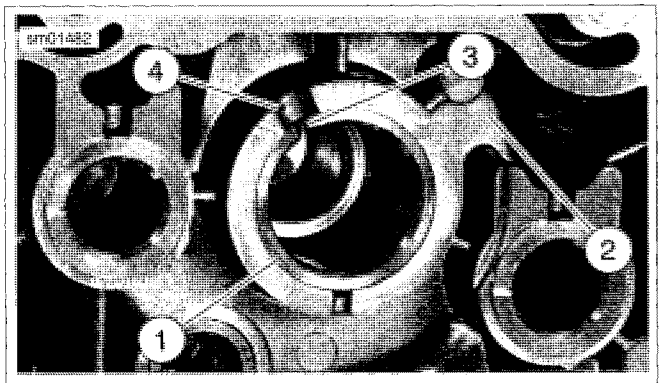

1. **Rear intake cam gear bushing**
2. **Gearcase cover**
3. **Cam bushing slot**
4. **Gearcase cover slot**

Figure 3-109. Rear Intake Cam Gear Bushing Installed in Gearcase Cover

Figure 3-110. Drilling Pinion Bushing Dowel Pin Hole in Gearcase Cover

BUSHING REAMING: XL ONLY

PART NUMBER	TOOL NAME
HD-38871	CAMSHAFT BUSHING REAMER PILOT
HD-94803-67	REAR INTAKE CAM GEAR BUSHING REAMER
HD-94812-1	PINION SHAFT BUSHING REAMER
HD-94812-87	PINION SHAFT BUSHING REAMER

NOTES

- *Installing and reaming crankcase and gearcase cover bushings may alter the center distances between mating gears and may result in an increase in gear noise. Mating distances that are too close will cause cam gear damage.*
- *Bushings in right crankcase serve as pilots for reaming gearcase cover bushings and must, therefore, be reamed to size first.*
- *After reaming any bushing, check shaft fit in the bushing. It may be necessary to make a second pass with reamer to attain proper fit.*

Cam Gear Bushings in Right Crankcase

1. Separate two halves of crankcase, if not already done. Place right crankcase on flat surface with gearcase side up.

2. See Figure 3-111. Position CAMSHAFT BUSHING REAMER PILOT (Part No. HD-38871) onto gearcase side of crankcase; upper right and lower left indexing holes in pilot must be placed over dowels in crankcase. Insert two bolts (supplied with pilot) through two remaining holes in pilot, and into threaded holes of crankcase. Tighten bolts securely.

3. Insert a standard 11/16-in. diameter reamer through pilot hole and into bushing while turning reamer clockwise. Continue turning reamer clockwise through bushing until smooth shank of reamer passes through hole in pilot.

4. Detach reamer from handle. Pull reamer out opposite side of crankcase.

⚠WARNING

Compressed air can pierce the skin and flying debris from compressed air could cause serious eye injury. Wear safety glasses when working with compressed air. Never use your hand to check for air leaks or to determine air flow rates. (00061a)

5. Thoroughly clean right crankcase, removing all metal chips/shavings. Blow out all bushing bores and oil passages using low pressure compressed air.

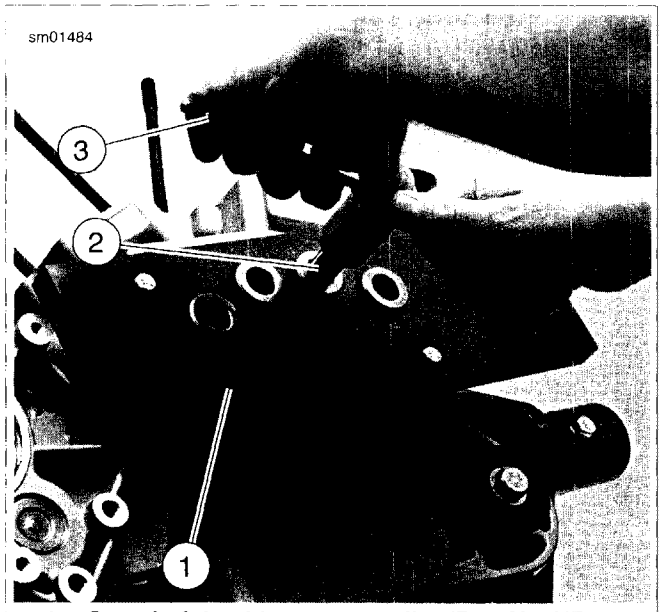

1. **Camshaft bushing reamer pilot (Part No. HD-38871)**
2. **Standard 11/16-in. reamer**
3. **Reamer handle**

Figure 3-111. Reaming Cam Gear Bushing in Right Crankcase

Cam Gear Bushings (Except Rear Intake Bushing) in Gearcase Cover

NOTE

Newly installed cam gear bushings in the gearcase cover must be line reamed, using the right crankcase as a pilot for the reamer, to establish correct clearance and to produce perfect alignment. If crankcase halves are not separated on your motorcycle, use a spare right crankcase to perform the following line reaming procedures.

1. See Figure 3-106. Bushings (7, 8 and 14) to be reamed must be installed in gearcase cover (17) as described in 3.20 GEARCASE COVER AND CAM GEARS, Bushing Installation: XL Only. Attach gearcase cover to right crankcase (10), which has been disassembled from left crankcase, securing with a minimum of three mounting screws.
2. Insert a standard 11/16-in. diameter reamer through the previously reamed cam gear bushing (13) in right crankcase, which is in line with one of the bushings to be reamed in gearcase cover.
3. Turn reamer clockwise through bushing in cover until reamer bottoms. Then give reamer one complete clockwise turn to size the bushing. Continue turning reamer clockwise while extracting reamer from bushing.
4. Repeat two previous steps for remaining two cam gear bushings (except rear intake bushing) in gearcase cover, if required.
5. Separate gearcase cover from right crankcase. Inspect bushings for proper cam gear shaft fit. Repeat line reaming operation if necessary.

⚠WARNING

Compressed air can pierce the skin and flying debris from compressed air could cause serious eye injury. Wear safety glasses when working with compressed air. Never use your hand to check for air leaks or to determine air flow rates. (00061a)

6. Thoroughly clean gearcase cover, removing all metal chips/shavings. Blow out all bushing bores and oil passages using low pressure compressed air.

Rear Intake Cam Gear Bushing in Gearcase Cover

NOTE

A newly installed rear intake cam gear bushing in the gearcase cover must be line reamed, using the right crankcase as a pilot for the reamer, to establish correct clearance and to produce perfect alignment. If crankcase halves are not separated on your motorcycle, use a spare right crankcase to perform the following line reaming procedures.

1. See Figure 3-106. Rear intake cam gear bushing (15) must be installed in gearcase cover (17) as described in 3.20 GEARCASE COVER AND CAM GEARS, Bushing Installation: XL Only.
2. Identify the previously reamed rear intake cam gear bushing (13) in right crankcase (10), which has been disassembled from left crankcase. Insert the shank end of REAR INTAKE CAM GEAR BUSHING REAMER (Part No. HD-94803-67) through gearcase side of this bushing.
3. With reamer inserted into bushing in right crankcase, attach gearcase cover to right crankcase, securing with a minimum of three mounting screws.
4. Turn reamer clockwise through bushing in gearcase cover until reamer bottoms. Then give reamer one complete clockwise turn to size the bushing. Continue turning reamer clockwise while extracting reamer from bushing.
5. Separate gearcase cover from right crankcase. Inspect bushing for proper cam gear shaft fit. Repeat line reaming operation if necessary.

⚠WARNING

Compressed air can pierce the skin and flying debris from compressed air could cause serious eye injury. Wear safety glasses when working with compressed air. Never use your hand to check for air leaks or to determine air flow rates. (00061a)

6. Thoroughly clean gearcase cover, removing all metal chips/shavings. Blow out all bushing bores and oil passages using low pressure compressed air.

Pinion Shaft Bushing in Gearcase Cover

NOTE

A newly installed pinion shaft bushing in the gearcase cover must be line reamed, using both the right crankcase and PINION SHAFT BUSHING REAMER (Part No. HD-94812-87) as pilots for the reamer, to establish correct clearance and to produce proper alignment. If crankcase halves are not separ-

ated on your motorcycle, use a spare right crankcase to perform the following line reaming procedure.

1. See Figure 3-106. Pinion shaft bushing (16) must be installed in gearcase cover (17) as described in 3.20 GEARCASE COVER AND CAM GEARS, Bushing Installation: XL Only. Attach gearcase cover to right crankcase (10), which has been disassembled from left crankcase, securing with a minimum of three mounting screws.
2. See Figure 3-112. Install PINION SHAFT BUSHING REAMER PILOT (Part No. HD-94812-87) into right crankcase roller race. Insert PINION SHAFT BUSHING REAMER (Part No. HD-94812-1) through the pilot.
3. Turn reamer clockwise through bushing in gearcase cover until reamer bottoms. Then give reamer one complete clockwise turn to size the bushing. Continue turning reamer clockwise while extracting reamer from bushing.
4. Separate gearcase cover from right crankcase. Inspect bushing for proper pinion shaft fit. Repeat line reaming operation if necessary.

⚠WARNING

Compressed air can pierce the skin and flying debris from compressed air could cause serious eye injury. Wear safety glasses when working with compressed air. Never use your hand to check for air leaks or to determine air flow rates. (00061a)

5. Remove pilot from right crankcase roller race. Thoroughly clean gearcase cover, removing all metal chips/shavings. Blow out all bushing bores and oil passages using low pressure compressed air.

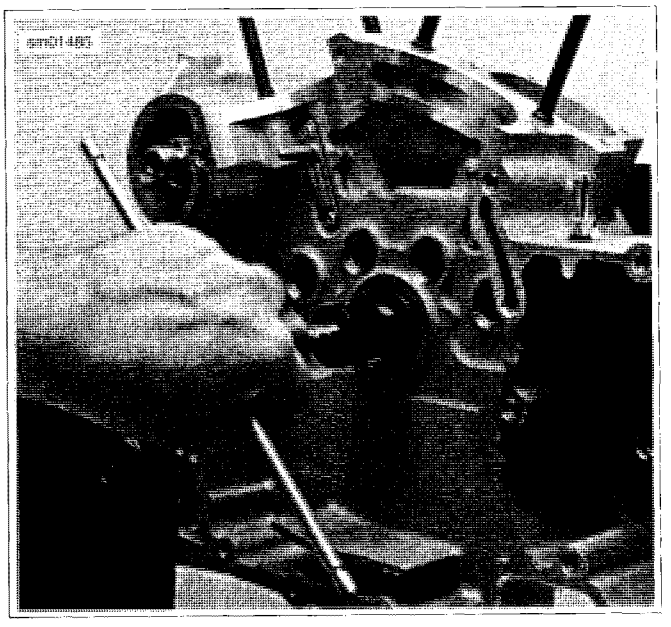

Figure 3-112. Line Reaming Pinion Shaft Bushing

ASSEMBLY AND INSTALLATION

See 3.18 BOTTOM END OVERHAUL: ASSEMBLY, Cam Gears and Gearcase Cover: XL Models or 3.18 BOTTOM END OVERHAUL: ASSEMBLY, Cam Gears and Gearcase Cover: XR Models to install cam gears and gearcase cover in engine.

REMOVAL

See 3.15 TOP END OVERHAUL: DISASSEMBLY, Cylinder Heads to remove cylinder head from engine.

DISASSEMBLY

PART NUMBER	TOOL NAME
HD-34736-B	VALVE SPRING COMPRESSOR

1. See Figure 3-114. Remove two screws (17), lock washers (18) and stabilizer link bracket (16) from front head.
2. See Figure 3-113. Clamp VALVE SPRING COMPRESSOR (Part No. HD-34736-B) in vise and compress valve spring (item 5, Figure 3-114).
3. See Figure 3-114. Remove valve collar retainers (3), upper valve spring collar (4) and valve spring (5). Mark valve collar retainers for reassembly in original positions.
4. Use a fine tooth file to remove any burrs on the valve stem at the retainer groove. Mark valve to ensure that it will be reassembled in the same head.
5. Remove valve (11), and valve seal and lower valve spring collar assembly (6) by hand. No special tools are required to remove valve seal and lower valve spring collar assembly.
6. Repeat above procedure for other valve. Then disassemble other head following same procedure.

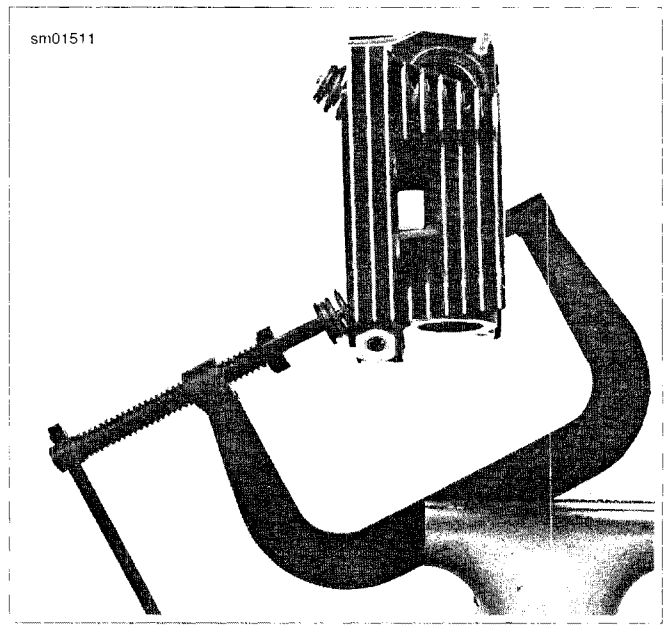

Figure 3-113. Compressing Valve Springs (Valve Spring Compressor, Part No. HD-34376-B)

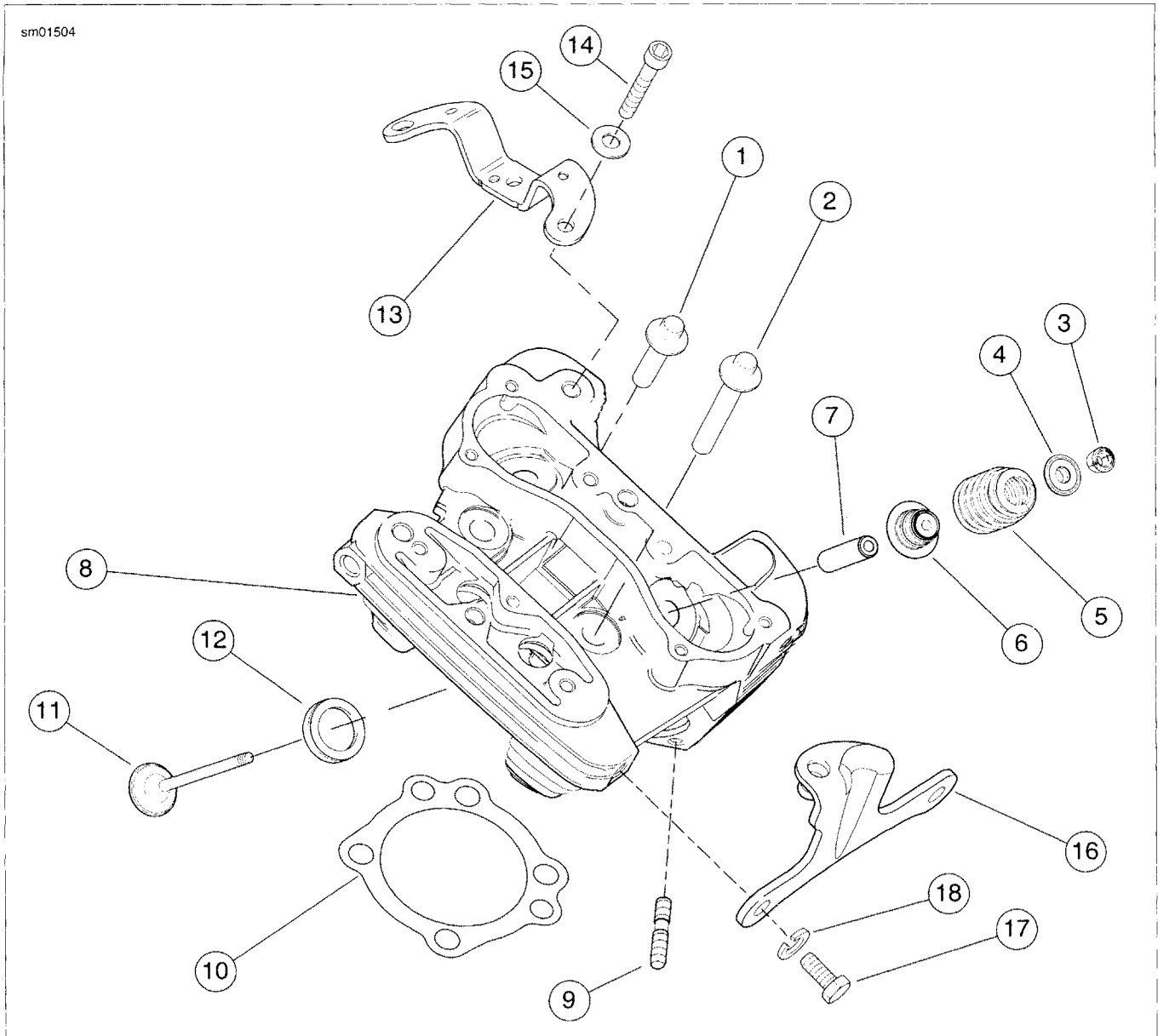

1. Head bolt, short (2)
2. Head bolt, long (2)
3. Valve collar retainer (4)
4. Upper valve spring collar (2)
5. Valve spring (2)
6. Valve seal and lower valve spring collar assembly (2)
7. Valve guide, intake and exhaust (2)
8. Cylinder head
9. Exhaust port stud (2)
10. Cylinder head gasket
11. Valve (1) intake, (1) exhaust
12. Valve seat (2)
13. Cylinder head bracket*
14. Screw (2)*
15. Washer (2)*
16. Stabilizer link bracket (front cylinder head only)
17. Screw (2)
18. Lock washer (2)

Figure 3-114. Cylinder Head Assembly (typical) (* Vehicles with Side Mounted Horn Only)

CLEANING AND INSPECTION

PART NUMBER	TOOL NAME
B-45525	VALVE GUIDE HONE
HD-34751	VALVE GUIDE CLEANING BRUSH
HD-96796-47	VALVE SPRING TESTER

Cylinder Heads

⚠WARNING

Compressed air can pierce the skin and flying debris from compressed air could cause serious eye injury. Wear safety glasses when working with compressed air. Never use your hand to check for air leaks or to determine air flow rates. (00061a)

1. Bead blast or scrape carbon from head and valve ports. Be careful to avoid scratching or nicking cylinder head-to-cylinder joint faces. Blow off loosened carbon or dirt with compressed air.
2. Soak cylinder head in an aluminum-compatible cleaner/solvent to loosen carbon deposits.
3. Wash all parts in non-flammable solvent, followed by a thorough washing with hot, soapy water. Blow out oil passages in head. Be sure they are free of sludge and carbon particles. Remove loosened carbon from valve head and valve stem using a wire wheel. Never use a file or other hardened tool which could scratch or nick valve. Polish valve stem with very fine emery cloth or steel wool.
4. See Figure 3-115. Check head gasket surface on head for flatness. Machine or replace any head which exceeds SERVICE WEAR LIMIT of 0.006 in. (0.152 mm).

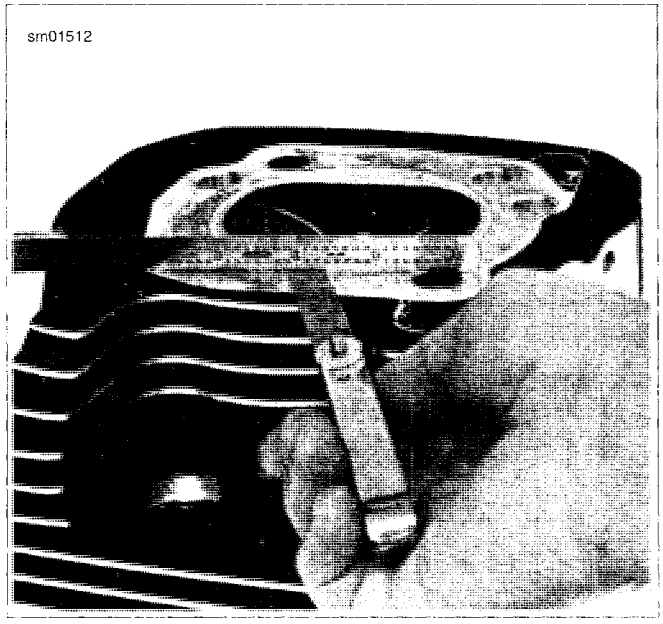

Figure 3-115. Checking Gasket Surface: Must Be Flat Within 0.006 in. (0.152 mm)

Rocker Arm Assemblies

1. Check each rocker arm at pad end and push rod end for uneven wear or pitting. Replace rocker arm if either condition exists.

NOTE

Most of the wear in rocker arm shafts and bores results from the up and down movement of the pushrods and valves. Therefore, the following measurements should be taken top-to-bottom on rocker arm shafts and bores.

2. See Figure 3-116. Measure and record rocker arm shaft diameter at the positions where rocker arm bushings ride and where shaft fits in inner rocker cover.

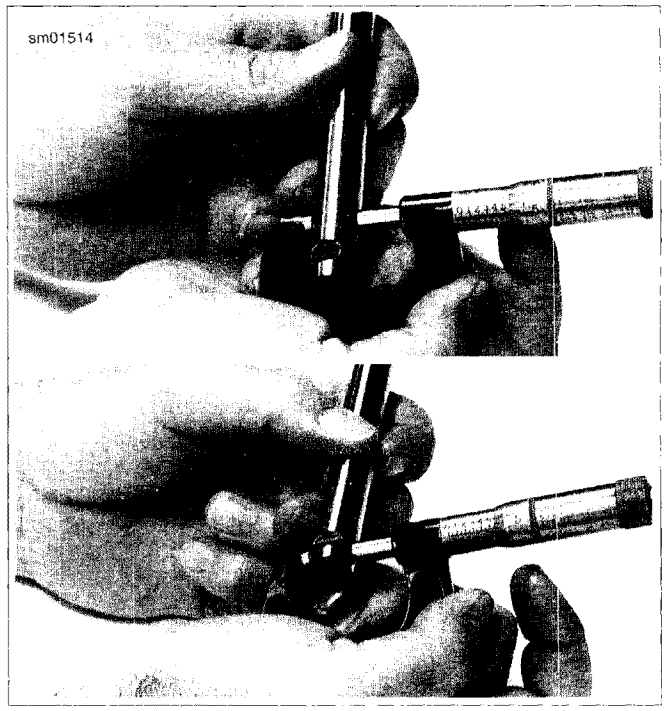

Figure 3-116. Measuring Rocker Arm Shaft Diameter at Bushing Position (top) and Cover Position (bottom)

3. Measure and record rocker arm shaft bore diameters.
   a. See Figure 3-117. Measure rocker arm shaft bore in inner rocker cover.
   b. See Figure 3-118. Measure rocker arm bushing inner diameter.
4. Check clearances and measurements obtained in step 3 against specifications in 3.2 SPECIFICATIONS. Repair or replace parts exceeding Service Wear Limits. If rocker arm bushings require replacement, see 3.21 CYLINDER HEAD, Replacing Rocker Arm Bushings.
5. See Figure 3-119. Assemble rocker arms and rocker arm shafts into inner rocker cover.
6. Check end play of rocker arm with feeler gauge. Replace rocker arm or inner rocker cover or both if end play exceeds 0.025 in. (0.635 mm).

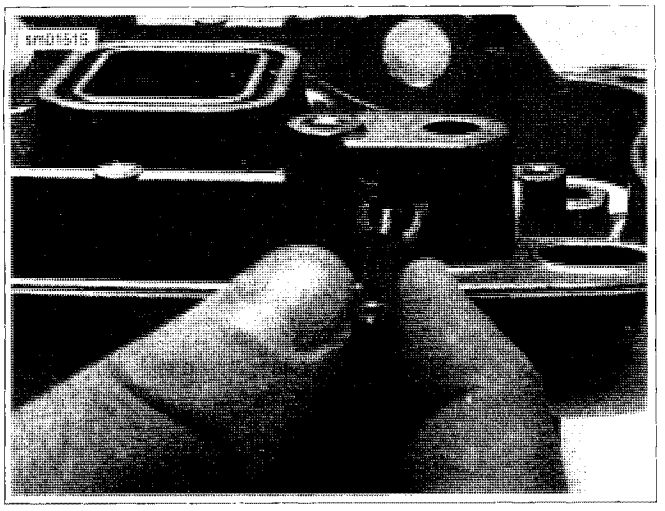

Figure 3-117. Measuring Rocker Arm Shaft Bore Diameter in Inner Rocker Cover

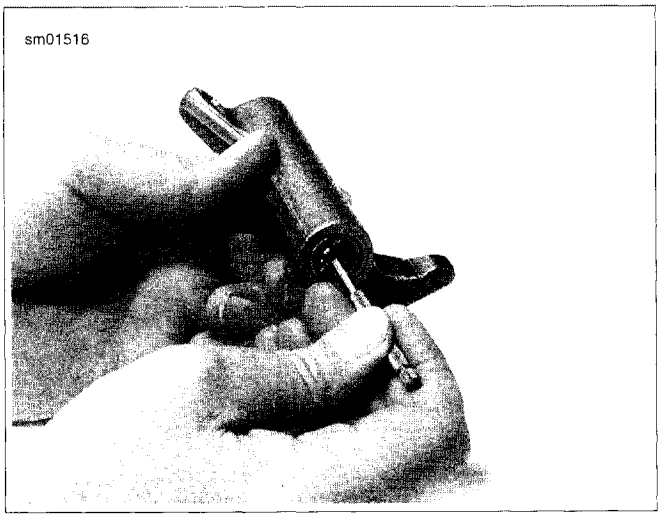

Figure 3-118. Measuring Rocker Arm Bushing Inner Diameter

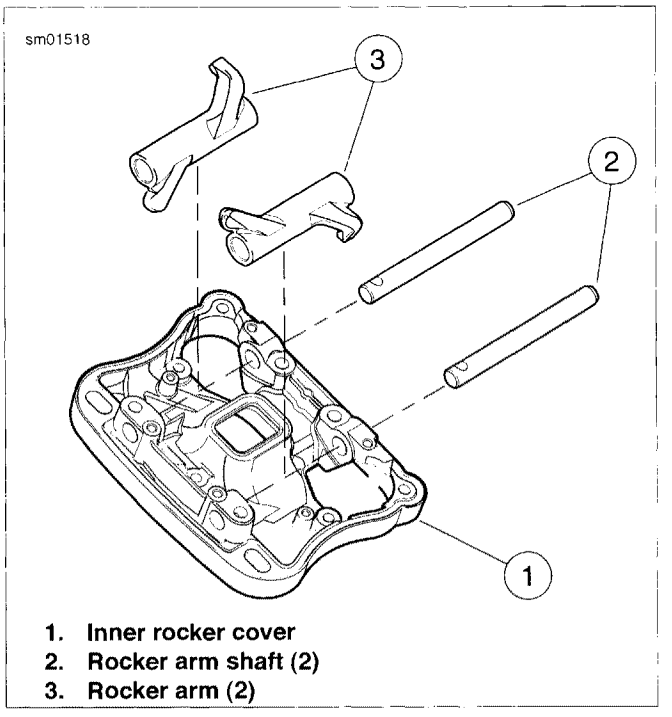

1. **Inner rocker cover**
2. **Rocker arm shaft (2)**
3. **Rocker arm (2)**

Figure 3-119. Assembling Inner Rocker Cover (typical; XL shown)

Valves

1. Replace the valve if there is evidence of burning or cracking.
2. Inspect the end of the valve stem for pitting or uneven wear. Replace the valve if either of these conditions exist.
3. Inspect for burrs around the valve stem retainer groove. Remove burrs with a fine tooth file if found.
4. Valve heads should have a seating surface width of 0.040-0.062 in. (1.02-1.57 mm), and should be free of pit marks and burn spots. The color of carbon on exhaust valves should be black or dark brown. White or light buff carbon indicates excessive heat and burning.

Valve Seats

NOTE

Valve seats are subject to wear, pitting, and burning. Resurface valve seats whenever valves are refinished.

1. Inspect valve seats for cracking, chipping or burning. Replace valve seats if any evidence of these conditions exists.

Figure 3-120. Measuring Valve Stem Protrusion

2. See Figure 3-120. Check valve seats for recession by measuring valve stem protrusion.
   a. Wipe valve seats and valve faces clean. Insert valve into valve guide.
   b. Measure valve stem protrusion from end of valve stem to machined surface of head upon which the lower valve collar sits, as shown. If valve stem protrudes more than 2.082 in. (52.883 mm), replace valve seat or cylinder head.

NOTE

If the valve seat is loose or is not fully seated in the head, seat movement will prevent the proper transfer of heat from the valve. The valve seat surface must be flush with (or below) the head surface. See 3.2 SPECIFICATIONS for valve seat-to-cylinder head fit.

Valve Guides

1. Clean valve guides by lightly honing with VALVE GUIDE HONE (Part No. B-45525).
2. Scrub valve guides with VALVE GUIDE CLEANING BRUSH (Part No. HD-34751) and hot soapy water. Measure valve stem outer diameter and valve guide inner diameter. Check measurements against See 3.2 SPECIFICATIONS.

Valve Springs

1. Inspect valve springs for damaged or discolored coils.

NOTE

A single valve spring is used for each valve. The inner and outer springs are combined into one progressively wound, tapered spring.

2. See Figure 3-121. Check free length of each spring with caliper as shown. Test compression force of spring using VALVE SPRING TESTER (Part No. HD-96796-47). Compare with 3.2 SPECIFICATIONS. If spring length is shorter than specification, or if spring compression force is below specification, replace spring.

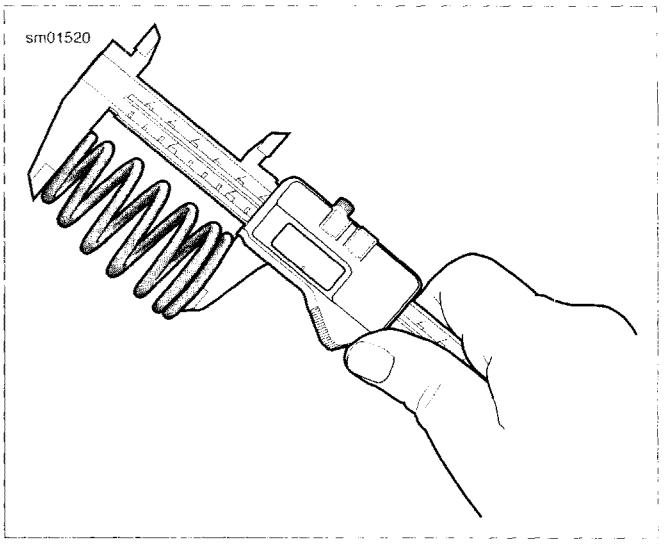

Figure 3-121. Checking Spring Free Length

Spark Plug Threads

Inspect spark plug threads for damage. If threads in cylinder head are damaged, a special plug type insert can be installed using a 12 mm spark plug repair kit.

Push Rods

Examine push rods, particularly the ball ends. Replace any rods that are bent, worn, discolored, or damaged.

REPLACING ROCKER ARM BUSHINGS

PART NUMBER	TOOL NAME
HD-94804-57	ROCKER ARM BUSHING REAMER

1. See Figure 3-122. To replace worn bushings, press or drive them from the rocker arm. If bushing is difficult to remove, turn a 9/16-18 tap into bushing. From opposite side of rocker arm, press out bushing and tap using a discarded rocker arm shaft.
2. Press replacement bushing into rocker arm, flush with rocker arm end, and split portion of bushing towards top of rocker arm.
3. Using remaining old bushing as a pilot, line ream **new** bushing with ROCKER ARM BUSHING REAMER (Part No. HD-94804-57).
4. Repeat for other end of rocker arm.

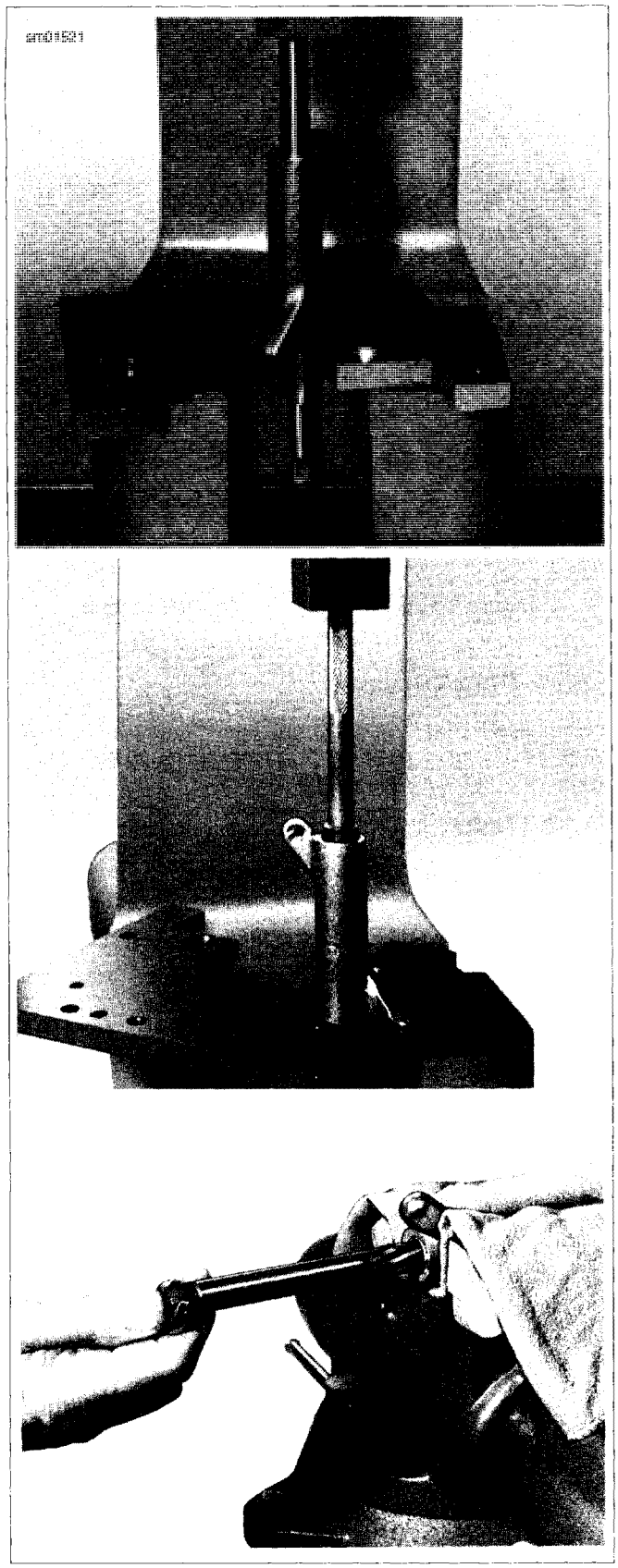

Figure 3-122. Replacing Rocker Arm Bushings

REPLACING VALVE GUIDES

PART NUMBER	TOOL NAME
B-45523	VALVE GUIDE REAMER
B-45524	VALVE GUIDE REMOVER/INSTALLER
B-45525	VALVE GUIDE HONE
HD-34751	VALVE GUIDE CLEANING BRUSH
HD-39782-A	CYLINDER HEAD SUPPORT STAND
HD-39786	CYLINDER HEAD HOLDING FIXTURE
HD-39847	REAMER T-HANDLE
HD-39964	REAMER LUBRICANT

Valve guide replacement, if necessary, must be done before valve seat is ground. It is the valve stem bore in valve guide that determines valve seat grinding location. Valve stem-to-valve guide clearances are listed in Table 3-32. If valve stems and/or valve guides are worn beyond service wear limits, install new parts.

Removal

NOTES

- *Cylinder head support stand keeps valve guide and valve seat perpendicular. If perpendicularity is not achieved, the cylinder head valve guide bore will be damaged during the press procedure.*
- *Lock ring is present on OEM intake and exhaust valve guides on XR models only.*

1. See Figure 3-123. Prepare cylinder head for valve guide replacement.
   a. **XR models:** Remove and discard lock ring from valve guide groove.
   b. Insert sleeve of intake (4 or 6) or exhaust (5 or 7) seat adapter into tube at top of CYLINDER HEAD SUPPORT STAND (Part No. HD-39782-A) (3).
   c. Position cylinder head so that valve seat is centered on seat adapter.

NOTE

Do not press out the valve guide from the bottom of the cylinder head. Carbon buildup on the combustion chamber side of the valve guide can deeply gouge the cylinder head bore diminishing the likelihood of achieving the proper interference fit and possibly requiring replacement of the cylinder head casting.

2. See Figure 3-124. At top of the cylinder head, insert VALVE GUIDE REMOVER/INSTALLER (Part No. B-45524) (1) into valve guide bore until tool shoulder contacts end of valve guide.

NOTE

Installer sleeve (item 2, Figure 3-123) is not used for removal of valve guide.

3. Center VALVE GUIDE REMOVER/INSTALLER under ram (3) of press. Apply pressure until valve guide drops free of cylinder head. Discard valve guide.

Table 3-32. Valve Stem Clearance/Service Wear Limits

VALVE	CLEARANCE	SERVICE WEAR LIMIT
Intake	0.001-0.003 in. (0.0254-0.0762 mm)	0.0035 in. (0.0965 mm)
Exhaust	0.001-0.003 in. (0.0254-0.0762 mm)	0.0035 in. (0.0965 mm)

Table 3-33. Valve Guide Remover/Installer Components

PART NO	ITEM
B-45524	Valve guide remover/installer with installer sleeve
HD-39782-A	Cylinder head support stand
HD-39782-2	Intake seat adapter, 883
HD-39782-3	Exhaust seat adapter, 883
HD-39782-6	Intake seat adapter, 1200
HD-39782-7	Exhaust seat adapter, 1200

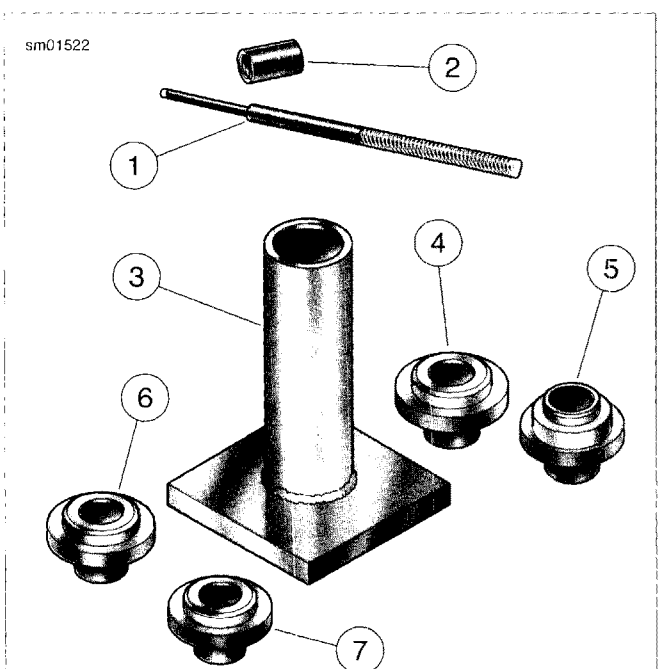

1. Valve guide remover/installer
2. Installer sleeve
3. Cylinder head support stand
4. Intake seat adapter, 883
5. Exhaust seat adapter, 883
6. Intake seat adapter, 1200
7. Exhaust seat adapter, 1200

Figure 3-123. Valve Guide Replacement Tools

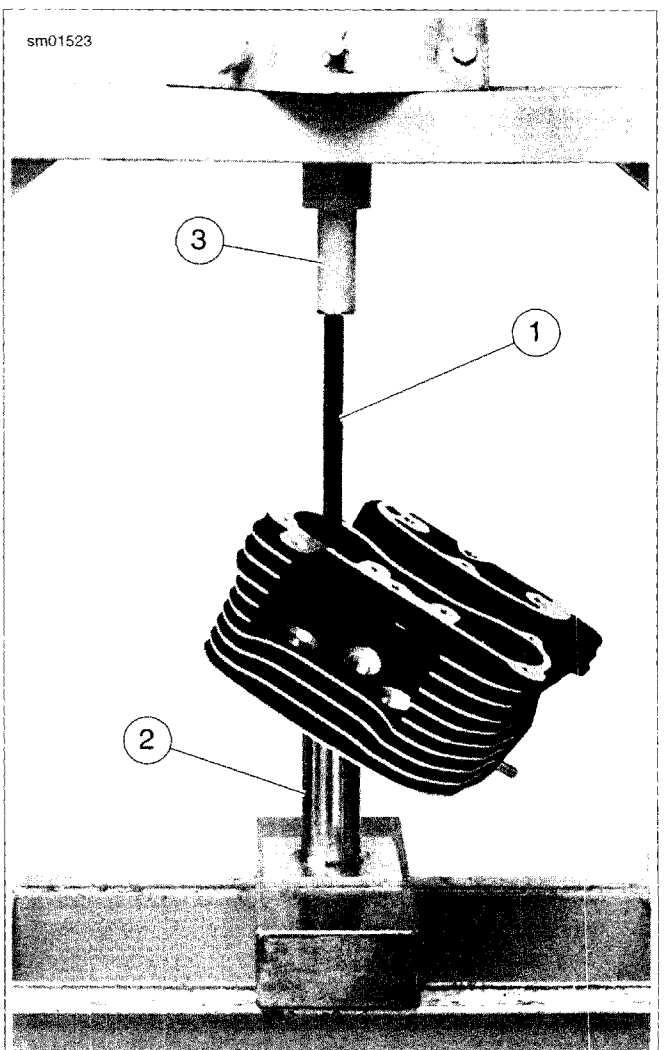

1. Valve guide remover/installer
2. Cylinder head support stand
3. Ram

Figure 3-124. Removing Shoulderless Valve Guide

Installation

1. Check valve guide to valve guide bore clearance.
   a. Measure outer diameter of a new standard valve guide.
   b. Measure the cylinder head valve guide bore. The valve guide diameter should be 0.0020-0.0033 in. (0.0508-0.0838 mm) larger than cylinder head valve guide bore.
   c. If interference fit is within specification, a replacement valve guide will be used. If interference fit is not within specification, the cylinder head must be replaced.
2. Measure cylinder head bore and outside diameter of replacement valve guide to verify correct interference fit.

NOTE

Cylinder head support stand keeps valve guide and valve seat perpendicular. If perpendicularity is not achieved, cylinder head valve guide bore will be damaged during the press procedure.

3. Prepare cylinder head for valve guide replacement.
   a. See Figure 3-123. Insert sleeve of intake (4 or 6) or exhaust (5 or 7) seat adapter into tube at top of cylinder head support stand (3). Position cylinder head so that valve seat is centered on seat adapter.
   b. Apply Vaseline to lightly lubricate external surfaces of valve guide. Spread lubricant so that thin film covers entire surface area.
   c. At top of cylinder head, start valve guide into bore.
   d. Place installer sleeve (2) over valve guide and then insert VALVE GUIDE REMOVER/INSTALLER (1) into installer sleeve.
   e. See Figure 3-125. Center VALVE GUIDE REMOVER/INSTALLER (1) under ram of press and apply pressure only until valve guide is started in bore and then back off ram slightly to allow valve guide to center itself.

NOTE

Always back off ram to allow the valve guide to find center. Pressing valve guide into cylinder head in one stroke can bend remover/installer, break valve guide, distort cylinder head casting and/or damage cylinder head valve guide bore.

   f. Verify that cylinder head support stand (3) and VALVE GUIDE REMOVER/INSTALLER are square. Center VALVE GUIDE REMOVER/INSTALLER under ram and press valve guide further into bore, then back off ram again to allow valve guide to find center.
   g. Repeat previous step and then apply pressure to VALVE GUIDE REMOVER/INSTALLER until installer sleeve (2) contacts machined area of cylinder head surrounding valve guide.
   h. **XR models:** Install **new** lock ring into valve guide groove. Make sure that lock ring is square and fully seated in the groove.

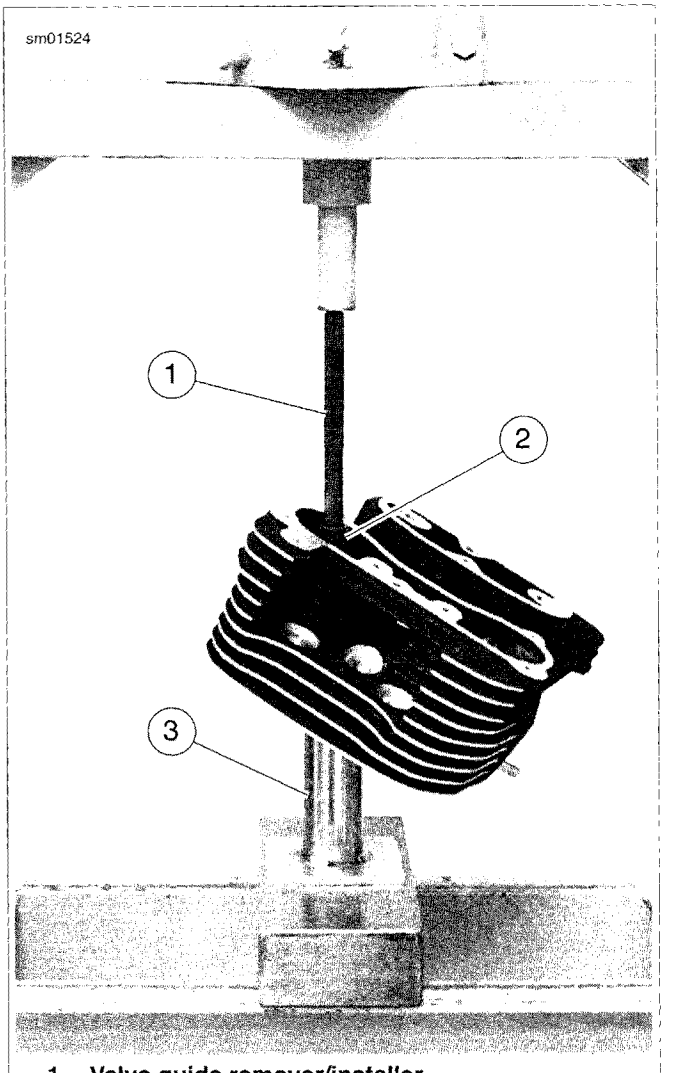

1. **Valve guide remover/installer**
2. **Installer sleeve**
3. **Cylinder head support stand**

Figure 3-125. Installing Shoulderless Valve Guide

4. Secure cylinder head for service.
   a. See Figure 3-126. Thread 12 mm end of CYLINDER HEAD HOLDING FIXTURE (Part No. HD-39786) into cylinder head spark plug hole.
   b. Clamp tool in vise at a 45 degree angle or one that offers a comfortable working position.

NOTE

Valve guides must be reamed to within 0.0005-0.0001 in. (0.013-0.0025 mm) of finished size.

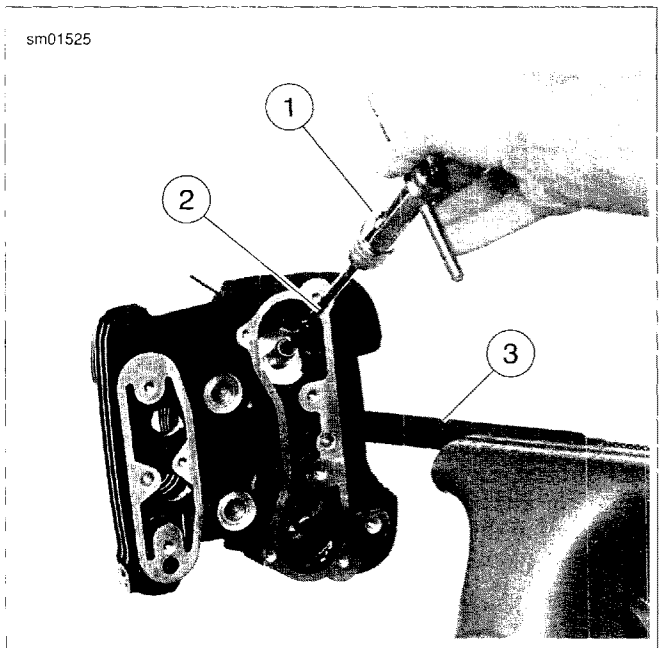

1. **T-handle**
2. **Valve guide reamer**
3. **Cylinder head holding fixture**

Figure 3-126. Reaming Valve Guide Bore

NOTES

- *Avoid damage to valve guide bore. Never back reamer out of valve guide.*
- *For best results, do not push on reamer or apply pressure to the reamer handle. While excessive pressure results in a rough cut, bore will be tapered if pressure is not centrally applied.*

5. Obtain the VALVE GUIDE REAMER (Part No. B-45523) (2) and REAMER T-HANDLE (Part No. HD-39847) (1).
   a. Install T-handle on reamer.
   b. Start bit of reamer into bore at top of cylinder head.
   c. Placing thumb on drive socket of REAMER T-HANDLE, apply slight pressure on reamer while rotating in a clockwise direction.
   d. Continue rotating REAMER T-HANDLE until entire bit has passed through valve guide bore and shank of reamer rotates freely.
   e. Remove T-handle from reamer. Carefully pulling on bit, draw shaft of reamer out combustion chamber side of valve guide.

NOTE

Abrasive particles can damage machined surfaces and plug oil passageways possibly resulting in engine failure.

⚠WARNING

Compressed air can pierce the skin and flying debris from compressed air could cause serious eye injury. Wear safety glasses when working with compressed air. Never use your hand to check for air leaks or to determine air flow rates. (00061a)

6. Direct compressed air into the valve guide bore to remove any metal shavings or debris.
7. See Figure 3-127. Clean valve guide bore with the VALVE GUIDE CLEANING BRUSH (Part No. HD-34751) (1).
8. See Figure 3-128. Obtain the VALVE GUIDE HONE (Part No. B-45525) and REAMER LUBRICANT (Part No. HD-39964).
   a. Install hone in a high speed electric drill.
   b. Apply REAMER LUBRICANT to finishing stones of hone and valve guide bore.
   c. Start finishing stones of hone into bore.
   d. Activating the drill, move the entire length of the finishing stone arrangement forward and backward through the bore for 10 to 12 complete strokes. Work for a crosshatch pattern of approximately 60°.

NOTE

The hone is not intended for the removal of material.

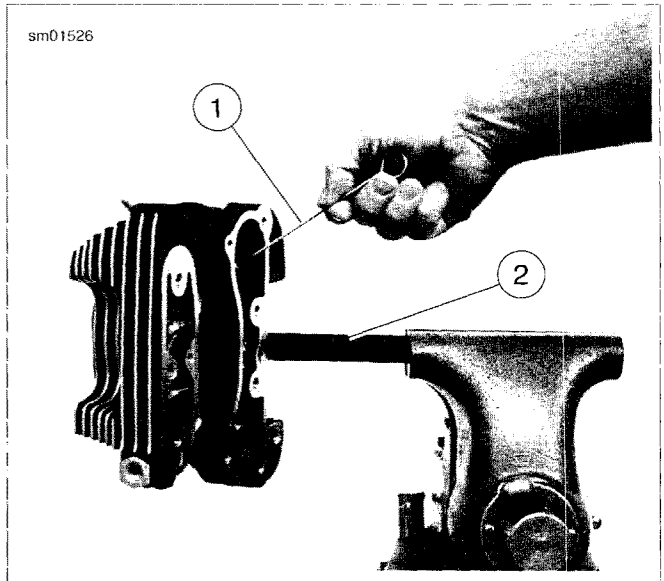

1. **Valve guide brush**
2. **Cylinder head holding fixture**

Figure 3-127. Scrubbing Valve Guide Bore

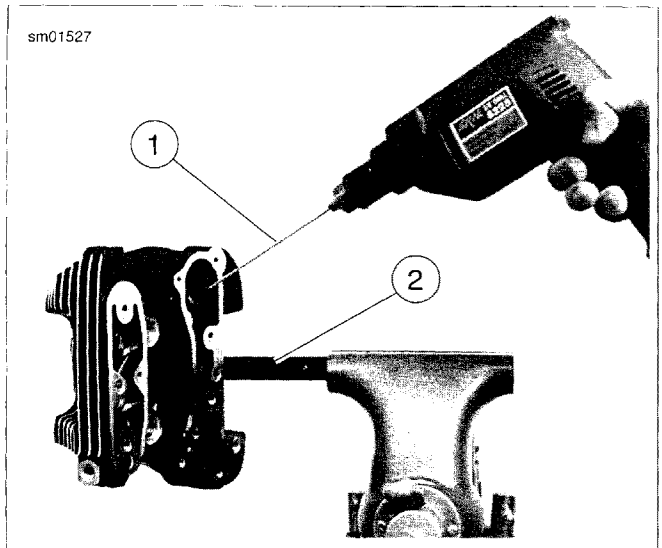

1. **Valve guide hone**
2. **Cylinder head holding fixture**

Figure 3-128. Honing Valve Guide Bore

NOTE

Abrasive particles can damage machined surfaces and plug oil passageways possibly resulting in engine failure.

⚠WARNING

Compressed air can pierce the skin and flying debris from compressed air could cause serious eye injury. Wear safety glasses when working with compressed air. Never use your hand to check for air leaks or to determine air flow rates. (00061a)

9. Direct low pressure compressed air into the valve guide bore to remove any debris.
10. See Figure 3-127. Clean bore with the VALVE GUIDE CLEANING BRUSH (1).

NOTE

Always verify valve stem to valve guide clearance after honing, since a worn reamer may cut the bore undersize.

11. Check valve stem to valve guide clearance.
    a. Measure the inside diameter of the valve guide with an inside ball micrometer.
    b. Measure the outside diameter of the valve stem with an outside micrometer.
    c. Refer to Table 3-32. If the clearance between valve stem and valve guide is not within the limits shown, the low end being preferable, then the valve stem may be excessively worn or the valve guide bore undercut.
12. Clean cylinder head assembly again.
    a. Using cleaning solvent, thoroughly clean cylinder head and valve guide bore.
    b. Scrub valve guide bore with the VALVE GUIDE CLEANING BRUSH. For best results, use a thin engine oil and clean valve guide bore with the type of swabs or patches found in gun cleaning kits.
    c. Continue to wipe bore until clean cloth shows no evidence of dirt or debris. Follow up with a thorough wash in hot soapy water.

⚠WARNING

Compressed air can pierce the skin and flying debris from compressed air could cause serious eye injury. Wear safety glasses when working with compressed air. Never use your hand to check for air leaks or to determine air flow rates. (00061a)

13. Blow parts dry with low pressure compressed air.

REFACING VALVE SEATS

PART NUMBER	TOOL NAME
B-35758-52A	CUTTER PILOT
HD-34751	VALVE GUIDE CLEANING BRUSH
HD-35758-C	NEWAY VALVE SEAT CUTTER SET
HD-39786	CYLINDER HEAD HOLDING FIXTURE

NOTES

- *Check that valve stem to valve guide clearance is correct before refacing. Refer to Table 3-32. If new valve guides must be installed, see 3.21 CYLINDER HEAD, Replacing Valve Guides and complete that task before refacing valve seats.*
- *This procedure is not based on the lapping of valves. The end result is an interference fit between the 45° valve face and the valve seat which will be 46°.*
- *Obtain a new valve if grinding leaves the margin less than 0.0313 in (0.795 mm). A valve in this condition does not seat normally, burns easily and may crack or cause pre-ignition.*

1. Secure cylinder head for servicing.
    a. Thread 12 mm end of CYLINDER HEAD HOLDING FIXTURE (Part No. HD-39786) into cylinder head spark plug hole.
    b. Clamp fixture in vise and further tighten cylinder head onto the fixture to prevent any movement during operation.
    c. Place cylinder head at a 45° angle or one that offers a comfortable working position.
2. In order to determine the correct location of the 46° valve seat in the head, measure the width of the valve to be used and subtract 0.080 in. (2.032 mm) from that number.
3. Set your dial caliper to the lesser measurement and lock it down for quick reference. This is the location of your valve seat.

4. Use a permanent magic marker to highlight the valve seat area that is going to be cut. Be sure to highlight all three angles. Allow marker to dry before proceeding.

NOTES

- *Always make sure cutter blades and cutter pilot are clean before beginning the cutting process. The correct cleaning brush is supplied with the Neway tool set.*
- *Always make sure the inside of the valve guide is clean by using VALVE GUIDE BRUSH.*

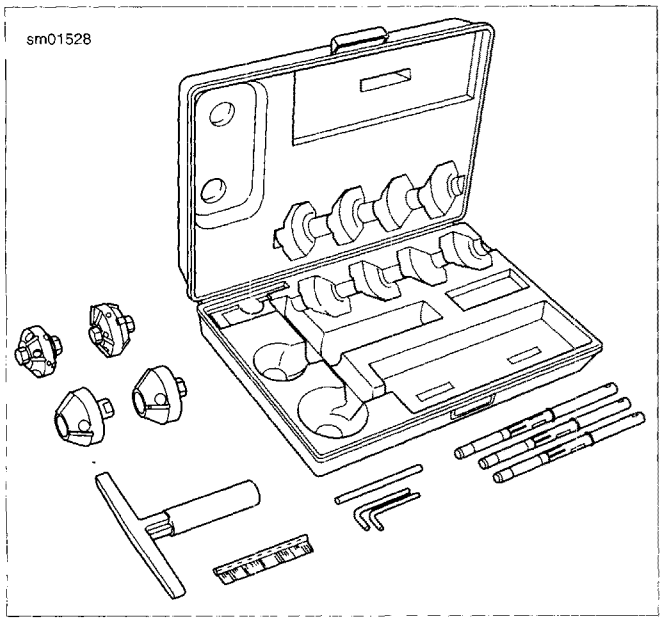

Figure 3-129. Neway Valve Seat Cutter Set (Part no. HD-35758-C)

5. See Figure 3-129. Obtain the NEWAY VALVE SEAT CUTTER SET (Part No. HD-35758-C). Select the correct CUTTER PILOT (Part No. B-35758-52A). Securely seat the pilot by pushing down and turning using the installation tool supplied in the tool set.
6. Choose the proper 46° cutter (intake or exhaust) and gently slide the cutter onto the pilot. Be careful not to drop the cutter onto the valve seat.
7. While applying a constant and consistent pressure, remove just enough material to show a complete clean-up on the 46° angle. Do not remove any more metal than is necessary to clean up the valve seat (that is, to provide a uniform finish and remove pitting).

NOTES

- *If the width of the clean-up angle is greater on one side of the valve seat than the other, the valve guide may need to be replaced due to improper installation.*
- *After making the 46° cut, if you discover a groove cut completely around the valve seat, this means the blades of the cutter are in alignment and need to be staggered. This is accomplished by loosening all of the blades from the cutter body and moving each blade slightly in its cradle in opposite directions on the cutter. The tool needed to loosen the blades is supplied in the tool set. A permanent magic marker mark every 90° will help in determining where new angles are.*

8. Next, with your dial caliper locked to the predetermined setting, measure the 46° cut at the outermost edge at the widest point of the circle to determine what cut needs to be made next.
   a. If the 46° cut is too high (towards the combustion chamber), use the 31° cutter to lower the valve seat closer to the port.
   b. If the 46° cut is too low, use the 60° cutter to raise the valve seat or move it away from the port.

NOTES

- *Because you are using the top measurement of the valve seat as a reference point, it will usually be necessary to use the 31° cutter following the initial 46° cut.*
- *Always highlight the valve seat with the permanent magic marker in order to verify the location of the 46° valve seat.*

9. If the location of the valve seat is not correct, repeat previous two steps.
10. When you accomplish a complete clean-up of the 46° angle and the width is at least 0.062 in. (1.575 mm), proceed to the next step.
11. Select the proper 60° cutter and gently slide the cutter down the cutter pilot to the valve seat.
12. Remove just enough material to provide an even valve seat width of 0.040-0.062 in. (1.016-1.575 mm).
13. Remove cutter and cutter pilot.
14. Repeat the process on any valve seat that needs service.
15. Insert valve to be used in the valve guide and bottom on the valve seat. Positioning the cylinder head port upwards and with slight thumb pressure against the valve, completely fill the port with solvent to make sure there is a proper seal between the valve and the valve seat.

NOTE

Hold pressure against the valve for a minimum of 10 seconds. If any leakage occurs, examine the valve seat for irregularities or defects and if necessary repeat the above cutting process.

16. Clean valves, cylinder head and valve seats in solvent. Follow up with a thorough wash in hot soapy water.
17. Scrub valve guide bores with VALVE GUIDE CLEANING BRUSH (Part No. HD-34751) and hot, soapy water.

⚠WARNING

Compressed air can pierce the skin and flying debris from compressed air could cause serious eye injury. Wear safety glasses when working with compressed air. Never use your hand to check for air leaks or to determine air flow rates. (00061a)

18. Blow parts dry with low pressure compressed air.

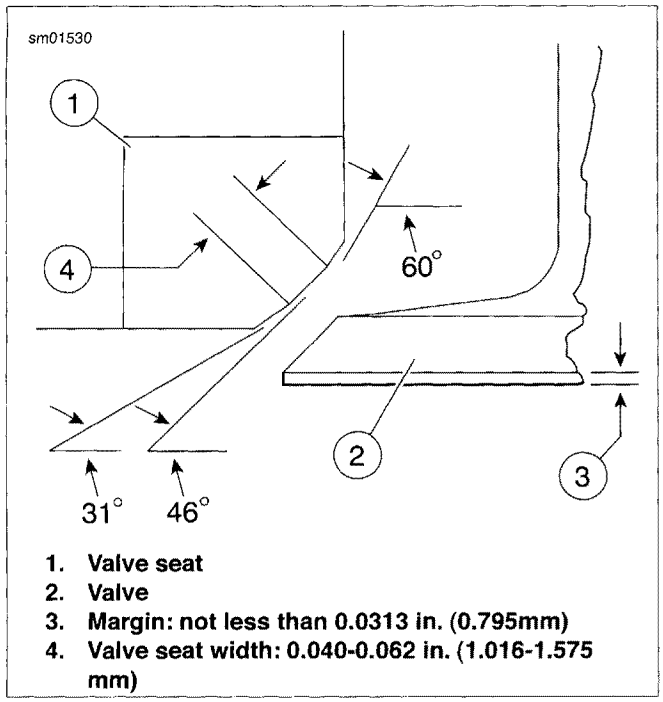

Figure 3-130. Intake and Exhaust Valve and Seat Dimensions

Replacing Valve Seats

Replacing a valve seat is a complex operation requiring special equipment. If the valve seat is loose or is not fully seated in the head, then valve seat movement will prevent the proper transfer of heat from the valve. The valve seat surface must be flush with (or below) the head surface. See 3.2 SPECIFICATIONS for valve seat-to-cylinder head fit.

ASSEMBLY

PART NUMBER	TOOL NAME
HD-34736-B	VALVE SPRING COMPRESSOR

1. Apply a liberal amount of engine oil to the valve stem.
2. See Figure 3-131. Insert valve (11) into valve guide (7) and bottom valve on valve seat (12).

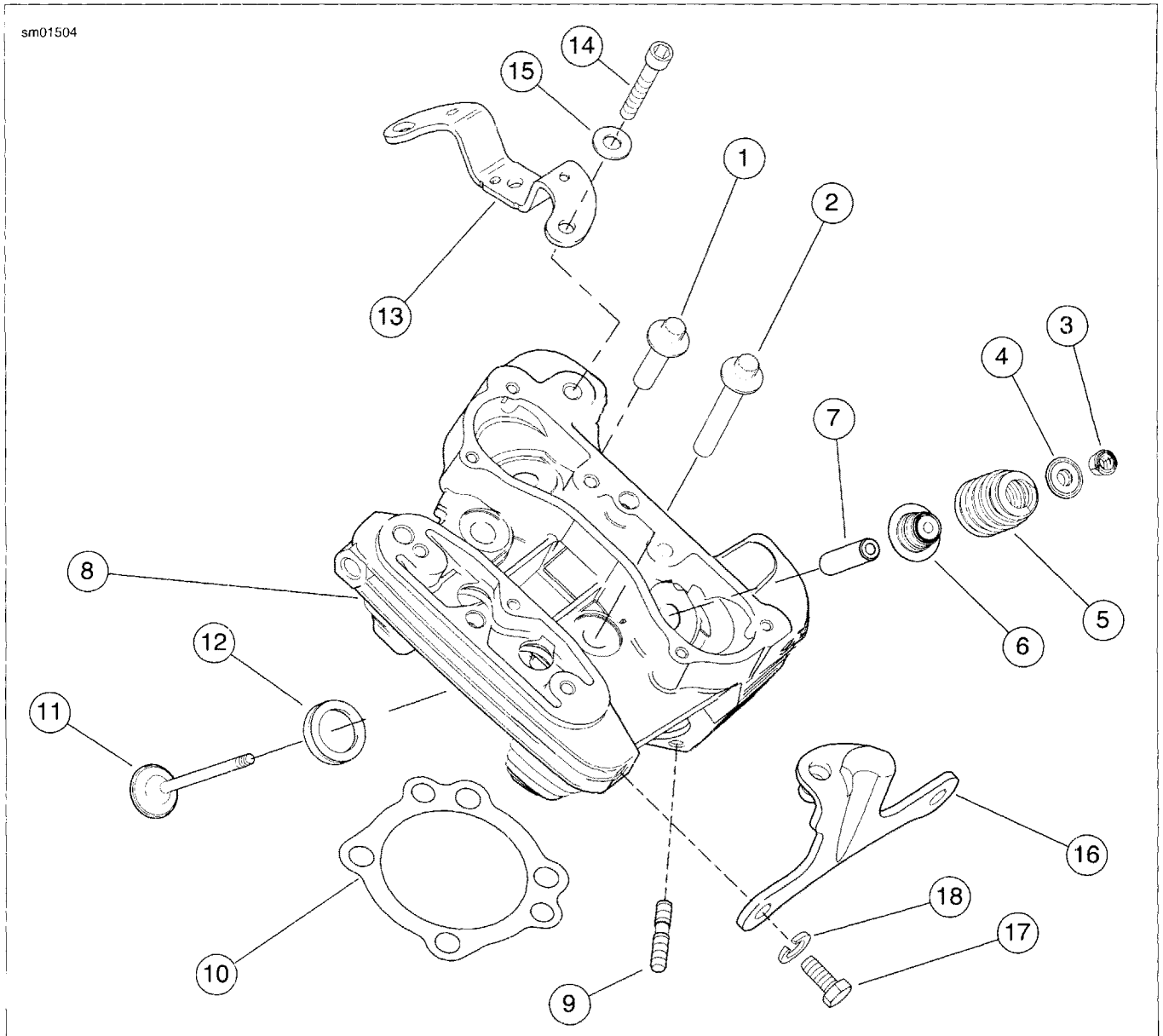

1. **Head bolt, short (2)**
2. **Head bolt, long (2)**
3. **Valve collar retainer (4)**
4. **Upper valve spring collar (2)**
5. **Valve spring (2)**
6. **Valve seal and lower valve spring collar assembly (2)**
7. **Valve guide, intake and exhaust (2)**
8. **Cylinder head**
9. **Exhaust port stud (2)**
10. **Cylinder head gasket**
11. **Valve (1) intake, (1) exhaust**
12. **Valve seat (2)**
13. **Cylinder head bracket***
14. **Screw (2)***
15. **Washer (2)***
16. **Stabilizer link bracket (front cylinder head only)**
17. **Screw (2)**
18. **Lock washer (2)**

Figure 3-131. Cylinder Head Assembly (typical) (* Vehicles with Side Mounted Horn Only)

3. See Figure 3-132. Place a protective sleeve over the valve stem keeper groove. Coat the protective sleeve with oil.

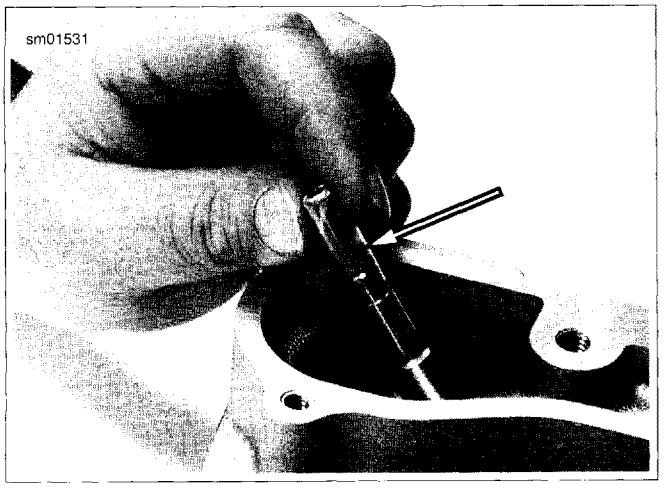

Figure 3-132. Valve Guide Seal Protector Sleeve

NOTES

- *Always use a protective sleeve on the valve stem keeper groove when installing valve stem seal. If the seal is installed without using the protective sleeve, the seal will be damaged, causing leakage around the valve stem, excessive oil consumption and valve sticking.*
- *See Figure 3-133. The valve seal is incorporated into the lower valve collar and is installed by hand. NO SPECIAL TOOLS ARE REQUIRED.*
- *The valve seal is completely installed when the lower valve collar contacts the machined surface of the head.*

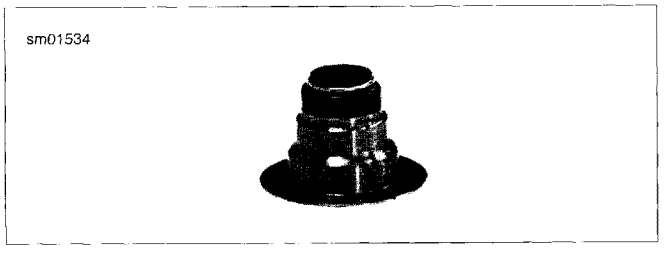

Figure 3-133. Valve Seal and Lower Valve Collar Assembly (seal and lower collar replaced as assembly only)

Figure 3-134. Valve Seal and Lower Valve Collar Assembly Installation

4. See Figure 3-134. Place a **new** seal and lower valve collar assembly over valve stem and onto valve guide.

NOTES

- *Do not remove valve after seal is installed. Otherwise, sharp edges on keeper groove will damage seal.*
- *A single valve spring is used for each valve. The inner and outer springs are combined into one progressively wound, tapered spring.*

5. See Figure 3-131. Install valve spring (5) and upper collar (4).
6. See Figure 3-135. Compress valve spring with VALVE SPRING COMPRESSOR (Part No. HD-34736-B).
7. See Figure 3-131. Insert valve collar retainers (3) into upper collar (4), making sure they engage groove in valve stem. The retainer gaps should be equal.
8. Release and remove VALVE SPRING COMPRESSOR.
9. Repeat previous steps for remaining valve(s).
10. Install stabilizer link bracket (16) to front head with two screws (17) and lock washers (18). Tighten to 55-65 ft-lbs (74.6-88.2 Nm).

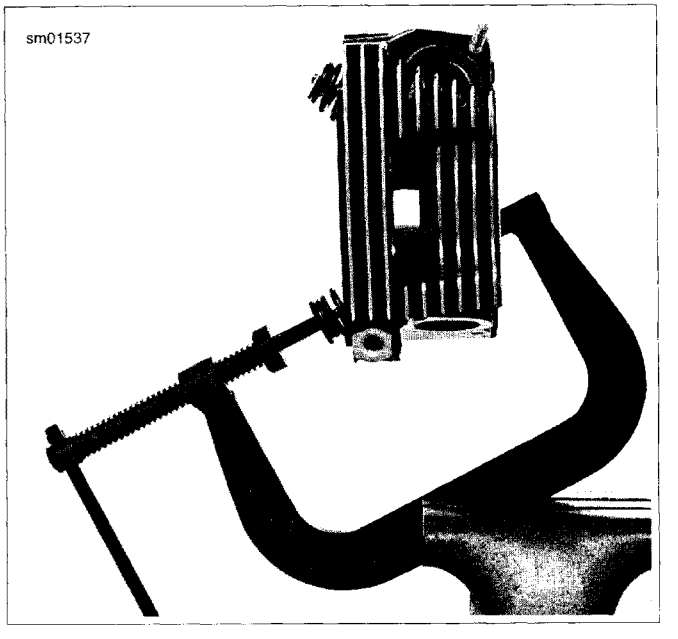

Figure 3-135. Compress Valve Spring with Valve Spring Compressor (Part No. HD-34736-B)

INSTALLATION

NOTE

Push rod covers and lower cover retainers MUST be installed prior to installing cylinder heads. See 3.16 TOP END OVERHAUL: ASSEMBLY, Cylinder Head.

See 3.16 TOP END OVERHAUL: ASSEMBLY, Cylinder Head to install cylinder head onto engine.

REMOVAL AND DISASSEMBLY

See 3.15 TOP END OVERHAUL: DISASSEMBLY, Cylinder and Piston to remove cylinder and piston from engine.

CLEANING, INSPECTION AND REPAIR

PART NUMBER	TOOL NAME
HD-33446-86	TORQUE PLATE BOLTS
HD-33446-B	CYLINDER TORQUE PLATES

1. Soak cylinder and piston in an aluminum-compatible cleaner/solvent until deposits are soft, then clean with a brush. Blow off loosened carbon and dirt particles and wash in solvent.

⚠WARNING

Compressed air can pierce the skin and flying debris from compressed air could cause serious eye injury. Wear safety glasses when working with compressed air. Never use your hand to check for air leaks or to determine air flow rates. (00061a)

2. Clean oil passage in cylinder with low pressure compressed air.
3. Clean piston ring grooves with a piece of compression ring ground to a chisel shape.
4. Examine piston pin to see that it is not pitted or scored.
5. Check piston pin bushing to see that it is not loose in connecting rod, grooved, pitted or scored.
   a. A piston pin properly fitted to upper connecting rod bushing has a 0.00125-0.00175 in. (0.0317-0.0444 mm) clearance in bushing.
   b. If piston pin-to-bushing clearance exceeds 0.002 in. (0.0508 mm), replace worn parts. See 3.22 CYLINDER AND PISTON, Connecting Rod Bushings.
6. Clean piston pin lock ring grooves.
7. Examine piston and cylinder for cracks, burnt spots, grooves and gouges.

NOTE

Check connecting rod for up and down play in lower bearings. When up and down play is detected, flywheel and connecting rod assembly must be replaced. This requires removing and disassembling engine crankcase.

Checking Gasket Surface

NOTE

If either cylinder gasket surface does not meet flatness specifications, replace cylinder and piston.

1. See Figure 3-136. Check that cylinder top (head) gasket surface is flat within 0.006 in. (0.15 mm). Lay a straight edge across the surface, then try to insert a feeler gauge between the straightedge and the gasket surface.
2. Check that the cylinder base gasket surface is flat within 0.008 in. (0.20 mm). Lay a straightedge across the surface, then try to insert a feeler gauge between the straightedge and the gasket surface.

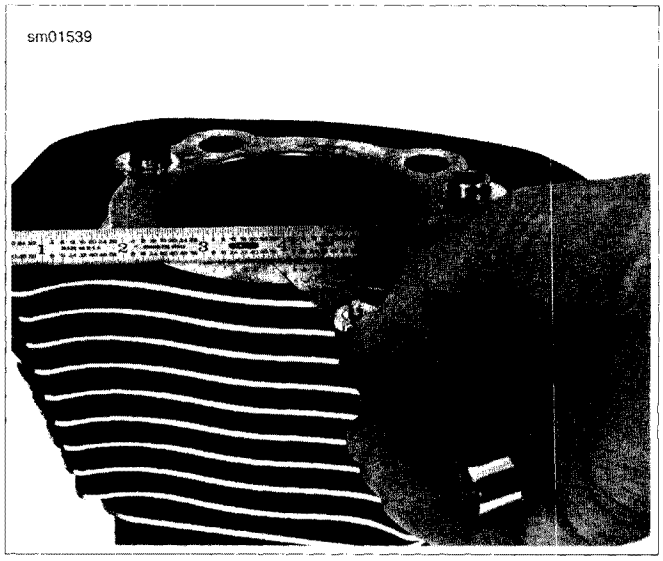

Figure 3-136. Checking Gasket Surfaces

Measuring Cylinder Bore

1. See Figure 3-137. Remove any burrs from the cylinder gasket surfaces.
2. Install a head and base gasket, and CYLINDER TORQUE PLATES (Part No. HD-33446-B) and TORQUE PLATE BOLTS (Part No. HD-33446-86) . Tighten the bolts using the same method used when installing the cylinder head screws. See 3.21 CYLINDER HEAD, Installation.

NOTE

Torque plates, properly tightened and installed with gaskets, simulate engine operating conditions. Measurements will vary as much as 0.001 in. (0.025 mm) without torque plates.

3. Take cylinder bore measurement in ring path, starting about 1/2 in. (13 mm) from top of cylinder, measuring from front to rear, and then side to side. Record readings.
4. Repeat measurement at center, and then at bottom of ring path. Record readings. This process will determine if cylinder is out-of-round (or "egged") and will also show any cylinder taper or bulge. Refer to Table 3-34. If cylinder is not scuffed or scored and is within service limit, see 3.22 CYLINDER AND PISTON.

Table 3-34. Cylinder Bore Service Wear Limits

BORE SIZE	883 CC	1200 CC
Standard bore	3.0035 in. (76.289 mm)	3.5008 in. (88.920 mm)
0.005 in. (0.13 mm) OS bore	3.0078 in. (76.398 mm)	3.5050 in. (89.027 mm)
0.010 in. (0.25 mm) OS bore	3.0128 in. (76.525 mm)	3.5100 in. (89.154 mm)
XR 1200 Models: Oversized pistons are not available. Replace piston and/or cylinder if exceeds wear limits.		

NOTE

If piston clearance exceeds service limit, cylinders should be re-bored and/or honed to next standard oversize, and refitted with the corresponding piston and rings. Do not fit piston tighter than 0.0007 in. (0.018 mm). See 3.2 SPECIFICATIONS.

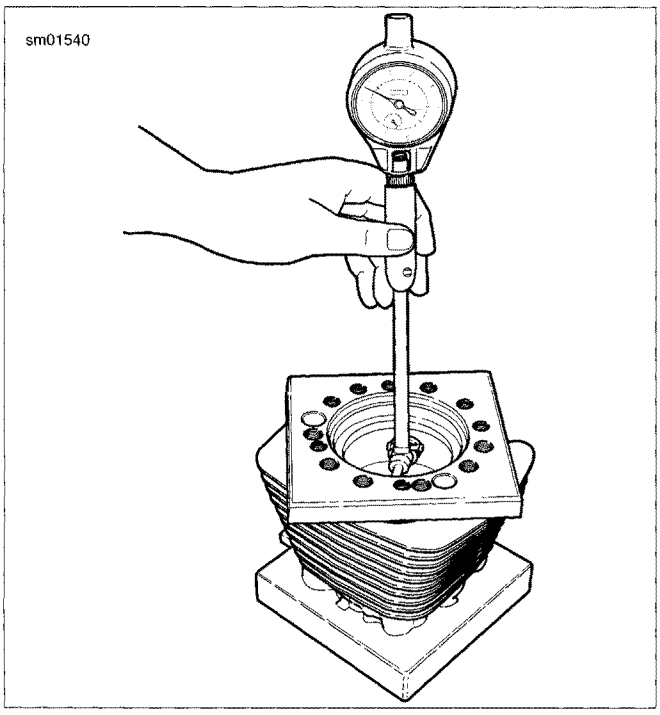

Figure 3-137. Measuring Cylinder Bore

Measuring Piston to Cylinder Fit

NOTE

This inspection is very heat sensitive. Do not check piston running clearance immediately after honing or deglazing cylinder. Even holding the piston in your hand for too long can cause measurements to vary by as much as 0.002 in. (0.051 mm). Both piston and cylinder must be at room temperatures before proceeding.

Measure the piston running clearance. Proceed as follows:

NOTE

Check the piston clearance in the cylinder in which the piston will run. The torque plates must be installed on the cylinder to simulate an assembled cylinder for accurate measurement of cylinder.

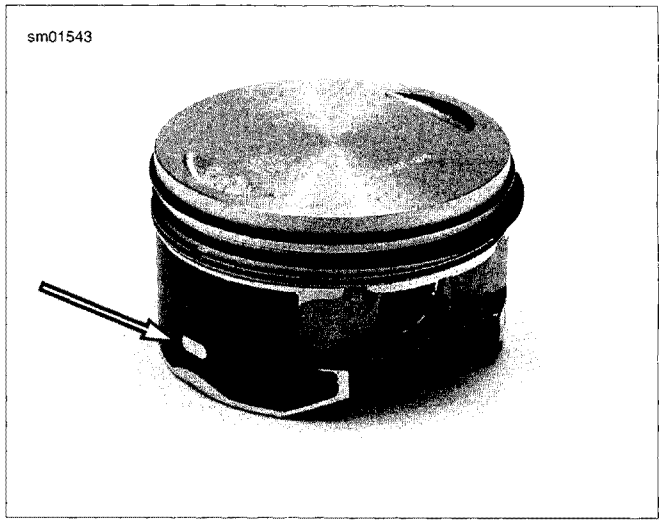

Figure 3-138. Measurement Area (typical; XL model shown)

1. See Figure 3-138. the measurement is taken on bare aluminum to avoid measuring errors. An oval-shaped opening in the coating is present on each side of the piston for proper placement of the micrometer.

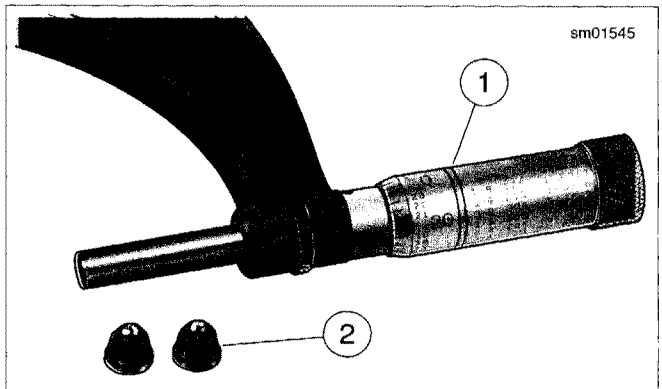

1. **4-5 inch micrometer**
2. **Spherical ball anvil adapter (2)**

Figure 3-139. Micrometer with Anvil Adapters

NOTE

The oval openings are too small for a standard flat anvil micrometer. Using such a device would result in measuring errors. See Figure 3-139. Use a 3-4 inch blade or ball anvil style micrometer, or a 4-5 inch micrometer with spherical ball anvil adapters.

2. Measure the piston skirt at the oval openings and then transfer that measurement to a dial bore gauge.
3. Using a grease pencil, mark the top, middle and bottom of the piston ring travel zone in the cylinder bore. Measure at markings in cylinder parallel and perpendicular to crankshaft.
4. Replace piston and/or cylinder if running clearance exceeds 0.003 in. (0.076 mm).

Boring and Honing Cylinder

1. The cylinder must be bored with gaskets and torque plates attached. Bore the cylinder to 0.003 in. (0.08 mm) under the desired finished size.
2. Hone the cylinder to its finished size using a 280 grit rigid hone followed by a 240 grit flexible ball hone. Honing must be done with the torque plates attached. All honing must be done from the bottom (crankcase) end of the cylinder. Work for a 60 degree crosshatch pattern.

Final cylinder bore sizes are measured after honing. Refer to Table 3-35.

NOTES

- *When cylinder requires oversize re-boring to beyond 0.010 in. (0.25 mm), the oversize limit has been exceeded and cylinder must be replaced.*
- *The same piston may be used if cylinder bore was not changed, unless it is scuffed or grooved. However, replace rings and hone the cylinder walls with a No. 240 grit flexible ball hone.*

CAUTION

Failure to remove all abrasive particles may result in premature cylinder, piston and ring wear and engine failure. (00537b) .

3. Thoroughly wash the cylinder bore with liquid dishwashing soap and warm water to remove all abrasive particles and residual grit. Continue cleaning until a clean cloth shows no remaining dirt or debris.

⚠WARNING

Compressed air can pierce the skin and flying debris from compressed air could cause serious eye injury. Wear safety glasses when working with compressed air. Never use your hand to check for air leaks or to determine air flow rates. (00061a)

4. Hot rinse the cylinder and dry with moisture free low pressure compressed air.
5. Immediately apply a thin film of clean engine oil to a clean white paper towel and thoroughly wipe the inside of the cylinder.

NOTE

After wiping the cylinder with a clean, oiled paper towel, the towel will be dark with contamination. Repeat this process using a new lightly oiled paper towel each time until the towel remains white. The cylinder is now clean.

6. With the cylinder at room temperature, check the piston clearance in the cylinder in which the piston will run.

Table 3-35. Cylinder Final Bore Sizes

BORE SIZE	883 CC		1200 CC	
	IN.	MM	IN.	MM
Standard bore*	3.0005	76.213	3.4978	88.844
0.005 in. (0.13 mm) OS bore	3.0048	76.323	3.502	88.95
0.010 in. (0.25 mm) OS bore	3.0098	76.449	3.507	89.08
* All bore sizes + 0.0002 in. (0.00508 mm)				
XR 1200 Models: Oversized pistons are not available. Replace piston and/or cylinder if exceeds wear limits.				

Fitting Piston Rings

See Figure 3-140. Piston rings are of two types: compression and oil control. The two compression rings are positioned in the two upper piston ring grooves. The dot on the second compression ring must face upward. Ring sets are available to fit standard and oversize pistons.

Piston ring sets must be properly fitted to piston and cylinder:

1. See Figure 3-141. Place piston in cylinder about 1/2 in. (13 mm) from top. Set ring to be checked inside cylinder, squarely against piston. Remove piston and check ring end gap with thickness gauge. See 3.2 SPECIFICATIONS for tolerance.

NOTES

- *Always deglaze or hone the cylinder before installing **new** rings.*
- *Always use **new** pistons. Piston rings take a set and must not be reused if the engine has been operated.*
- *Replace a ring if the end gap exceeds specification. Excessive ring gap results in high oil consumption and blow-by of exhaust gases. Blow-by contaminates the oil and leaves sludge in the crankcase. Excessive ring gap reduces engine efficiency by weakening the combustion seal necessary for efficient transfer of engergy to the piston. See 3.2 SPECIFICATIONS for end gap dimensions.*
- *If end gap is under specification, file the ring gap. Insufficient ring gap may cause the ends to abut at engine*

operating temperatures, resulting in ring breakage, cylinder scuffing and/or piston seizure.

- *Ring end gap specifications are applicable to rings for oversized pistons.*

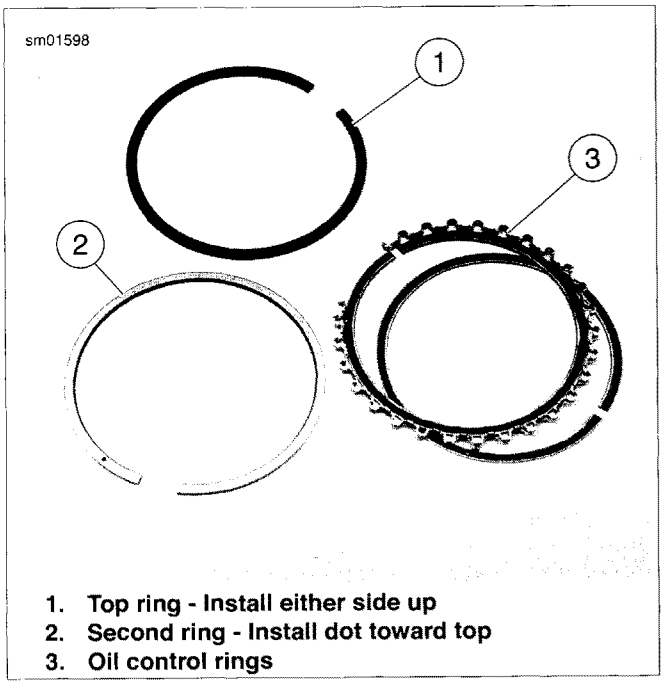

1. **Top ring - Install either side up**
2. **Second ring - Install dot toward top**
3. **Oil control rings**

Figure 3-140. Piston Rings

Figure 3-141. Measuring Ring End Gap

⚠WARNING

Compressed air can pierce the skin and flying debris from compressed air could cause serious eye injury. Wear safety glasses when working with compressed air. Never use your hand to check for air leaks or to determine air flow rates. (00061a)

2. Use low pressure compressed air to remove any dirt or dust that may have settled in piston oil drain holes and ring grooves. Apply clean engine oil to piston ring grooves.
3. See Figure 3-142. Install oil control ring expander spring. Make sure ends of spring point upward. Spiral bottom oil control ring into space in ring groove below expander spring. Position oil control ring gap 90 degrees from gap in expander spring. Spiral top oil control ring into space in ring groove above expander spring. Position oil control ring gap 180 degrees from gap in bottom oil control ring

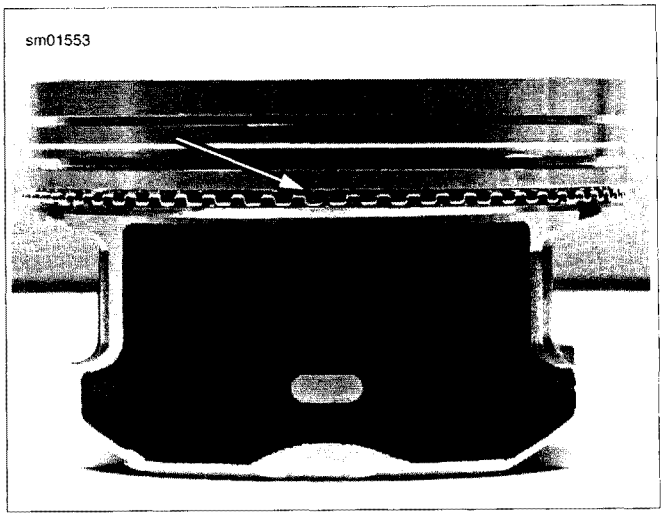

Figure 3-142. Installing Oil Control Ring Expander Spring (typical; XL model shown)

4. See Figure 3-143. Use a piston ring expander tool to slip compression rings over piston into their respective grooves. Install second compression ring first, then top compression ring. Be extremely careful not to over expand or twist rings, or damage piston surface when installing rings.

NOTE

Install second compression ring with dot towards top of piston.

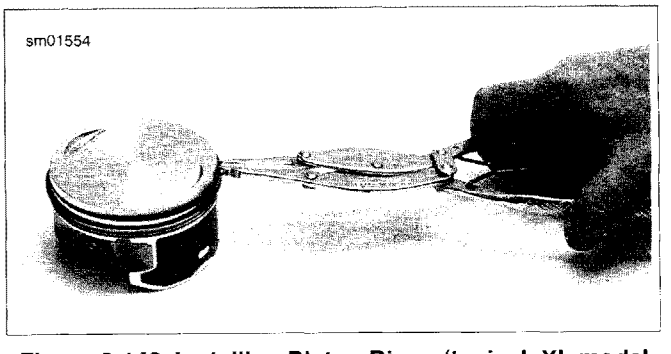

Figure 3-143. Installing Piston Rings (typical; XL model shown)

5. See Figure 3-144. Position rings so end gaps of adjacent rings are a minimum of 90 degrees apart. Ring gaps are not to be within 10 degrees; of the thrust face centerline.

6. See Figure 3-145. Check for proper side clearance with thickness gauge, as shown. See 3.2 SPECIFICATIONS for tolerance.

NOTE

If the ring grooves are clean, and the side play is still not correct, replace the rings, the piston, or both.

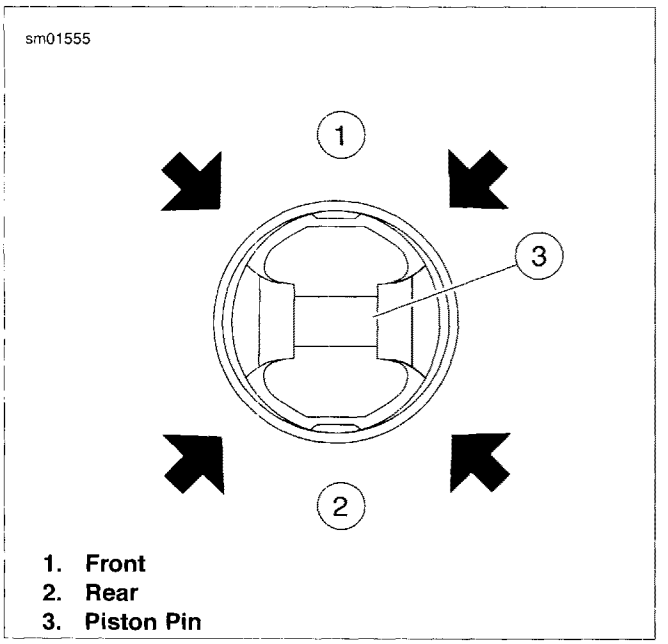

Figure 3-144. Position Ring End Gaps at Arrows

Figure 3-145. Measuring Ring Clearance in Groove (typical; XL model shown)

CONNECTING ROD BUSHINGS

PART NUMBER	TOOL NAME
HD-35102	WRIST PIN BUSHING HONE
HD-39964	REAMER LUBRICANT
HD-94800-26A	CONNECTING ROD BUSHING REAMER
HD-95952-33C	CONNECTING ROD CLAMPING TOOL
HD-95970-32D	CONNECTING ROD BUSHING REMOVER/INSTALLER

Removing Upper Connecting Rod Bushings

NOTES

- *Replace the upper connecting rod bushing if the piston pin to rod bushing clearance exceeds 0.002 in. (0.051 mm).*
- *Place clean shop towels in and around the crankcase bore to prevent chips and shavings from falling into the crankcase.*
- *If CONNECTING ROD CLAMPING TOOL (Part No. HD-95952-33C) holes are too small, enlarge the holes in the tool.*

1. See Figure 3-146. Obtain the CONNECTING ROD CLAMPING TOOL and install as follows:
   a. Slide clamp (2) over connecting rod so that slots engage cylinder head studs. Exercise caution to avoid scratching or bending studs.
   b. With the knurled side up, screw threaded cylinders (1) onto studs to secure position of clamp.
   c. Alternately turn each clamp thumbscrew (3) a few turns to gradually fix position of connecting rod. Turning only one thumbscrew will move rod off-center, while tightening second thumbscrew can cause rod to flex or bend.
2. Install rubber hoses over remaining two cylinder studs.
3. See Figure 3-147. Obtain the CONNECTING ROD BUSHING REMOVER/INSTALLER (Part No. HD-95970-32D).
   a. Sparingly apply graphite lubricant to threads of bolt (6) to prolong service life and provide smooth operation.
   b. Slide receiver cup (5) onto bolt with the closed side facing bolt head.
   c. Insert bolt through upper connecting rod bushing.

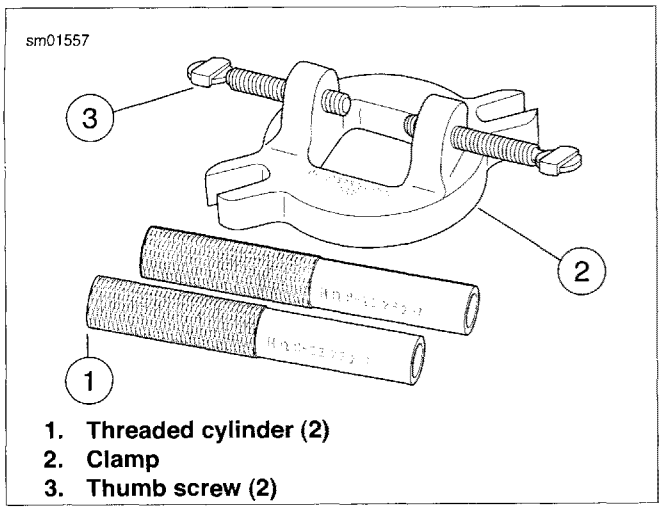

1. **Threaded cylinder (2)**
2. **Clamp**
3. **Thumb screw (2)**

Figure 3-146. Connecting Rod Clamping Tool (Part No. HD-95952-33C)

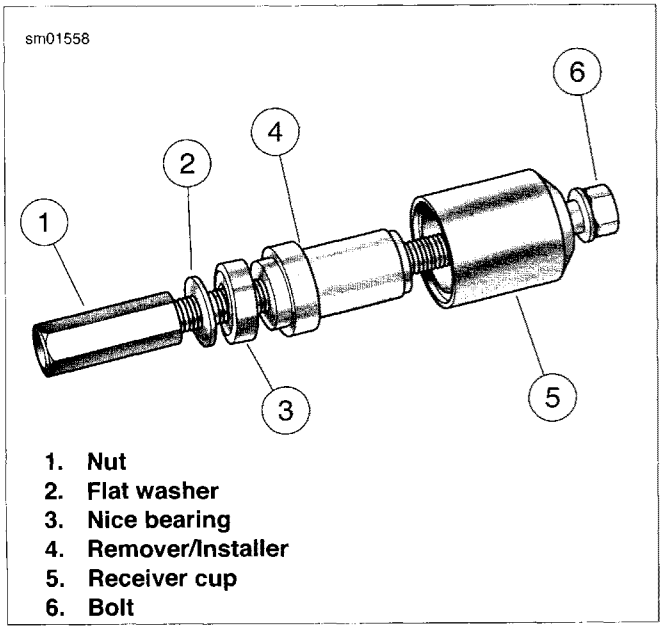

1. **Nut**
2. **Flat washer**
3. **Nice bearing**
4. **Remover/Installer**
5. **Receiver cup**
6. **Bolt**

Figure 3-147. Connecting Rod Bushing Remover/Installer (Part No. HD-95970-32D)

4. Remove bushing as follows:
   a. See Figure 3-148. Slide remover side of remover/installer onto bolt. The driver is stamped to verify proper orientation.
   b. See Figure 3-147. Slide Nice bearing (3) and flat washer (2) onto bolt (6) until they contact remover/installer (4).
   c. Thread nut (1) onto bolt until assembly is snug.
   d. Using two box end wrenches, tighten nut on bolt until bushing is free.
   e. Remove nut from bolt. Remove flat washer, Nice bearing and remover/installer. Remove bolt from bushing bore.
   f. Remove bushing from receiver cup and discard.

NOTE

Leave CONNECTING ROD CLAMPING TOOL installed during bushing installation procedure which follows.

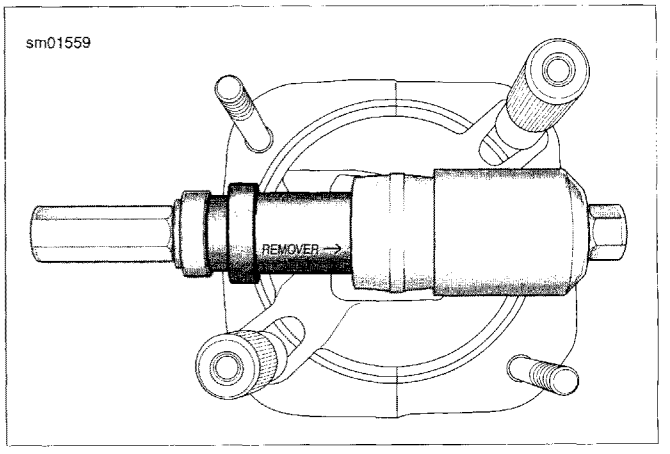

Figure 3-148. Remover Stackup. Use Remover Side Of Remover/Installer

Installing Upper Connecting Rod Bushings

1. See Figure 3-147. Obtain the CONNECTING ROD BUSHING REMOVER/INSTALLER (Part No. HD-95970-32D).
   a. Sparingly apply graphite lubricant to threads of bolt (6) to prolong service life and provide smooth operation.
   b. Slide receiver cup (5) onto bolt with the closed side facing bolt head.
   c. Insert bolt through upper connecting rod bushing bore.
   d. See Figure 3-149. Slide **new** bushing onto bolt. Start bushing into bore. Be sure that bushing is square in bore and not cocked.
   e. Slide installer side of remover/installer onto bolt until shoulder contacts bushing. The remover/installer is stamped to verify proper orientation.
   f. Slide Nice bearing and flat washer onto bolt until they contact remover/installer.
   g. Thread nut onto bolt until assembly is snug.
   h. See Figure 3-150. Using two box end wrenches, tighten nut on bolt until collar on remover/installer bottoms against connecting rod.
2. Remove nut from bolt and remove flat washer, Nice bearing and remover/installer. Remove bolt from bushing bore, but exercise caution to avoid scratching or gouging bushing.

NOTE

Leave CONNECTING ROD CLAMPING TOOL installed during bushing reaming procedure which follows.

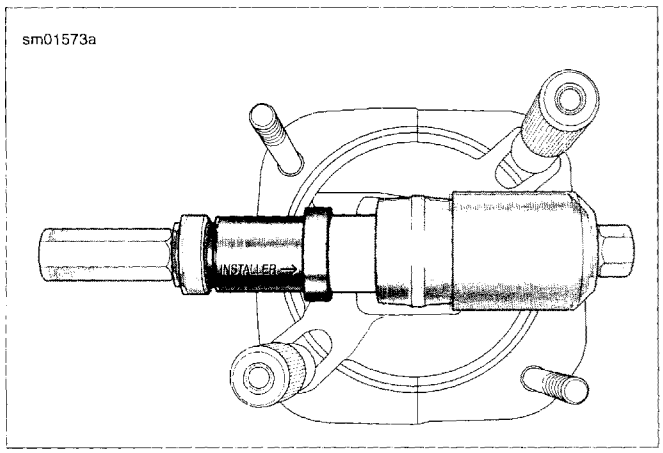

Figure 3-149. Installer Stackup

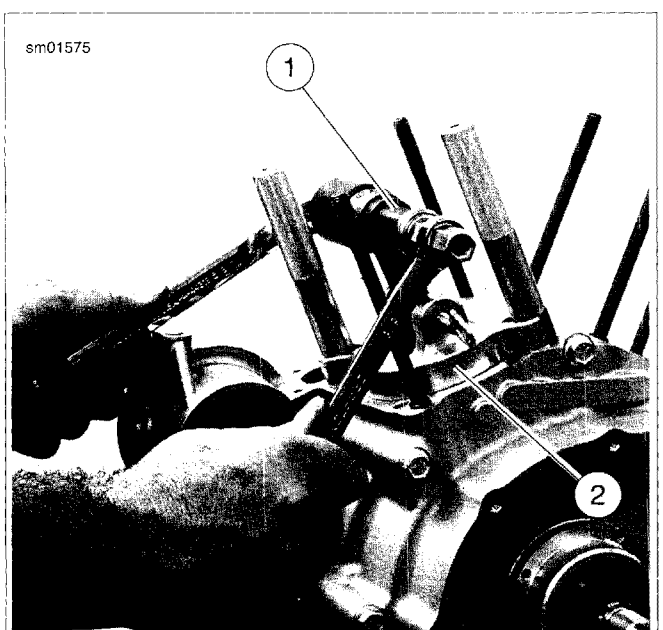

1. **Piston bushing tool**
2. **Rod clamping fixture**

Figure 3-150. Installing New Piston Pin Bushing

Reaming Upper Connecting Rod Bushings

NOTE

Sizing bushing with less than 0.00125 in. (0.0317 mm) clearance can result in a bushing loosening and/or seized pin in rod.

1. Clean up and size bushing to 0.0010-0.0005 in. (0.025-0.013 mm) undersize using the CONNECTING ROD BUSHING REAMER (Part No. HD-94800-26A) .
   a. Carefully insert bit of reamer into upper connecting rod bushing. Do not apply lubricant to reamer or bushing. Ream the bushing dry or cut will not be accurate.
   b. Install a 11/16-inch 12-pt socket and T-handle on reamer lug.
   c. Placing thumb on drive socket, apply slight pressure on reamer while rotating handle/drive socket in a clockwise direction.

   NOTE

   For best results, do not push on reamer or apply pressure to the reamer handle. While excessive pressure results in a rough cut, bushing bore will be tapered if pressure is not centrally applied.

   d. Continue rotating handle/drive socket until entire bit has passed through bushing and shank of reamer rotates freely in the bore.

NOTE

Never back reamer out of connecting rod or bushing will be damaged.

2. Remove T-handle and socket, and carefully pulling on bit, draw shaft of reamer out of connecting rod bushing.

NOTE

Abrasive particles can damage machined surfaces and plug oil passageways possibly resulting in engine failure.

3. Using contact cleaner or cleaning solvent, thoroughly wipe upper connecting rod and bushing of any metal shavings or debris.

NOTE

Leave CONNECTING ROD CLAMPING TOOL installed during bushing honing procedure which follows.

Honing Upper Connecting Rod Bushings

1. Obtain the WRIST PIN BUSHING HONE (Part No. HD-35102) and REAMER LUBRICANT (Part No. HD-39964) to hone bushing to final size. Use a liberal amount of honing oil to prevent damage to hone or bushing. Use care to prevent foreign material from falling into the crankcase.
   a. Install hone in a high speed electric drill.
   b. Apply reamer lubricant to finishing stones of hone and inside of upper connecting rod bushing.
   c. Start finishing stones of hone into bushing.
   d. Activating the drill, move the entire length of the finishing stone arrangement forward and backward through the bushing bore for 10 to 12 complete strokes. Work for a crosshatch pattern of approximately 60°.

   NOTE

   Abrasive particles can damage machined surfaces and plug oil passageways possibly resulting in engine failure.

2. Using contact cleaner or cleaning solvent, thoroughly wipe upper connecting rod and bushing of any metal shavings

or debris. Continue wiping until a clean cloth shows no evidence of dirt or debris.

3. Lightly oil a good piston pin and insert it into the upper connecting rod bushing bore to feel for the proper interference fit. The pin should slide in and out of the bushing without binding, but also without pivoting or rocking.
4. Remove CONNECTING ROD CLAMPING TOOL.
5. Remove shop towels exercising caution that shavings, chips and other debris do not fall into crankcase.

Repair

If connecting rod is bent, do not attempt to straighten. Flywheel and connecting rod assembly must be replaced. Straightening connecting rods by bending will damage the bearing on the crank pin and the piston pin bushing.

ASSEMBLY AND INSTALLATION

See 3.16 TOP END OVERHAUL: ASSEMBLY, Piston and Cylinder to install piston and cylinder onto engine.

GENERAL

When connecting rod and flywheel assembly, pinion shaft bearing, or sprocket shaft bearing are in need of replacement, it is recommended procedure to check and make repairs to cylinder heads, cylinders, gear case and transmission at the same time (perform entire engine overhaul).

NOTE

When engine is removed from chassis, do not lay engine on primary side. Laying engine on primary side will damage the clutch cable end fitting. If fitting is damaged, clutch cable must be replaced.

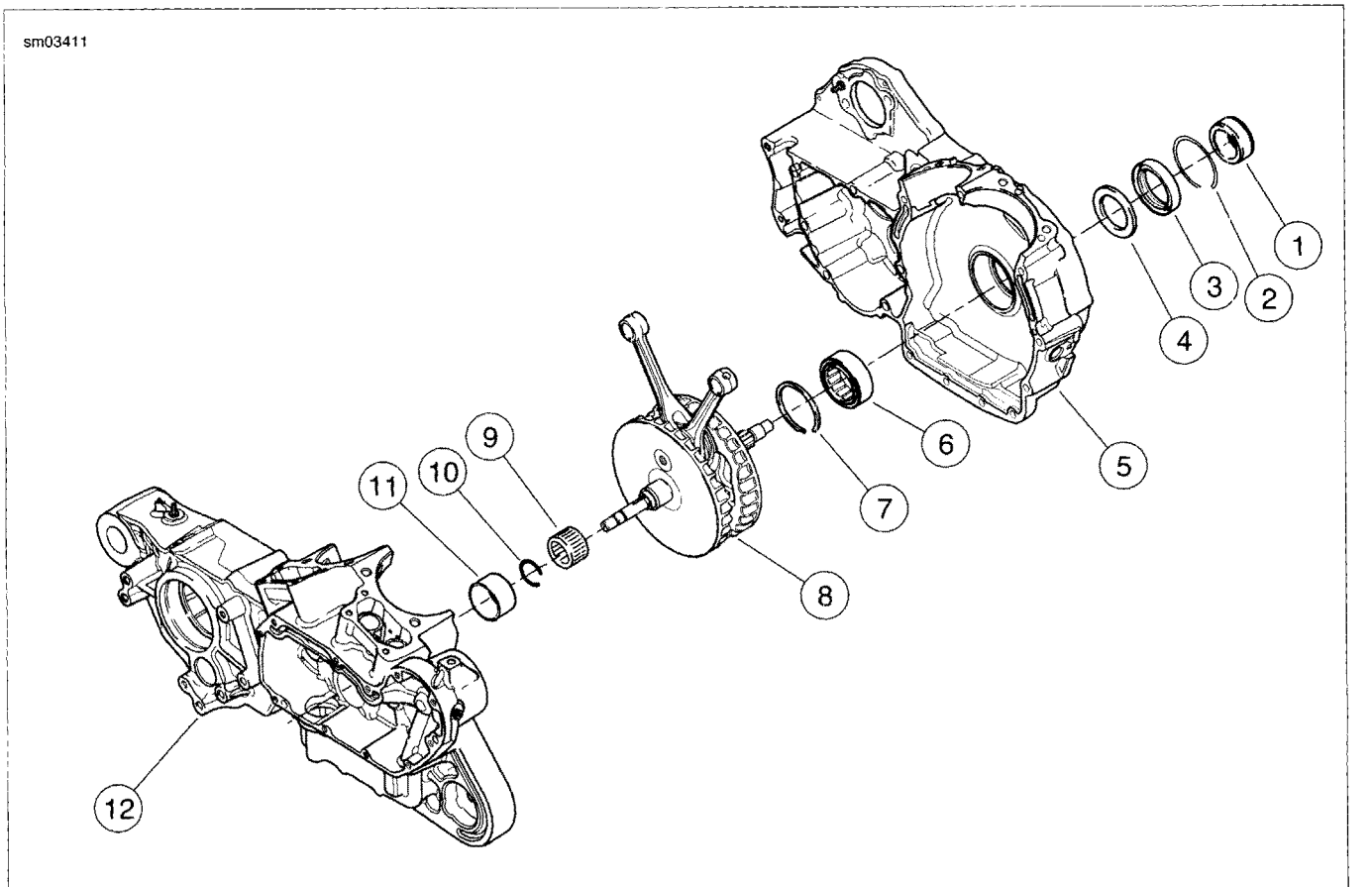

1. **Sprocket shaft spacer**
2. **Retaining ring**
3. **Left main oil seal**
4. **Thrust washer**
5. **Left crankcase**
6. **Left main bearing**
7. **Retaining ring**
8. **Connecting rod and flywheel assembly**
9. **Pinion shaft bearing**
10. **Retaining ring**
11. **Outer bearing race**
12. **Right crankcase**

Figure 3-151. Crankcase and Flywheel Assembly (typical; XL model shown)

REMOVAL

1. Remove engine from motorcycle. See 3.12 REMOVING ENGINE FROM CHASSIS.
2. Disassemble top end of engine. See 3.15 TOP END OVERHAUL: DISASSEMBLY, Cylinder Heads and 3.15 TOP END OVERHAUL: DISASSEMBLY, Cylinder and Piston.

DISASSEMBLY

PART NUMBER	TOOL NAME
B-45655, HD-42720-2, HD-46663	CRANKCASE BEARING REMOVER/INSTALLER WITH ADAPTER
J-5586-A	TRANSMISSION SHAFT RETAINING RING PLIERS

1. Disassemble crankcase, see 3.17 BOTTOM END OVERHAUL: DISASSEMBLY, Crankcase.

NOTE

See Figure 3-151. If it is necessary to remove either the pinion shaft bearing (9) or left main bearing (6), proceed as follows:

2. See Figure 3-152. Pinion shaft bearing assembly (3) will remain on pinion shaft (2) when flywheel assembly (1) is removed from right crankcase. Using TRANSMISSION SHAFT RETAINING RING PLIERS (Part No. J-5586-A), remove retaining ring (4) and slip bearing off pinion shaft.

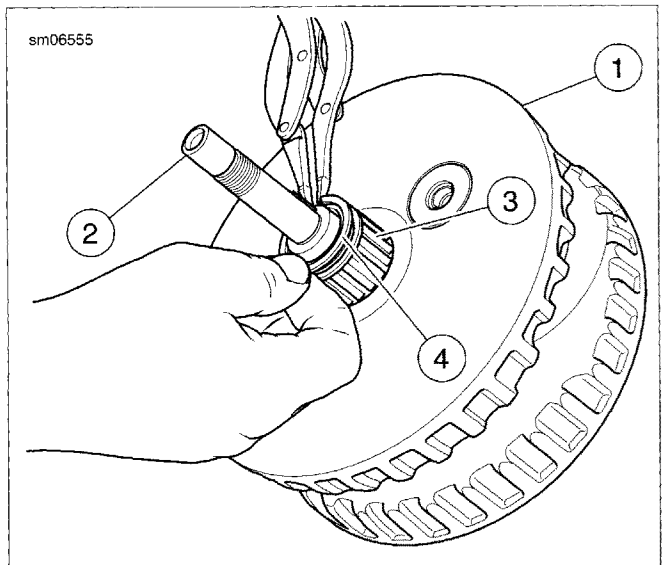

1. **Flywheel assembly**
2. **Pinion shaft**
3. **Pinion shaft bearing assembly**
4. **Retaining ring**

Figure 3-152. Removing Pinion Shaft Bearing Retaining Ring

NOTE

The sprocket shaft inner race is not replaceable. If it is worn or damaged, the crankshaft assembly must be replaced.

3. See Figure 3-153. See Figure 3-151. Remove outer left main bearing retaining ring (2).
4. See Figure 3-151. Remove left main oil seal (3) from left crankcase using Snap-On Tool (Part No. CJ 114, Body Dent Puller).
5. Remove thrust washer (4) next to left main bearing (6).

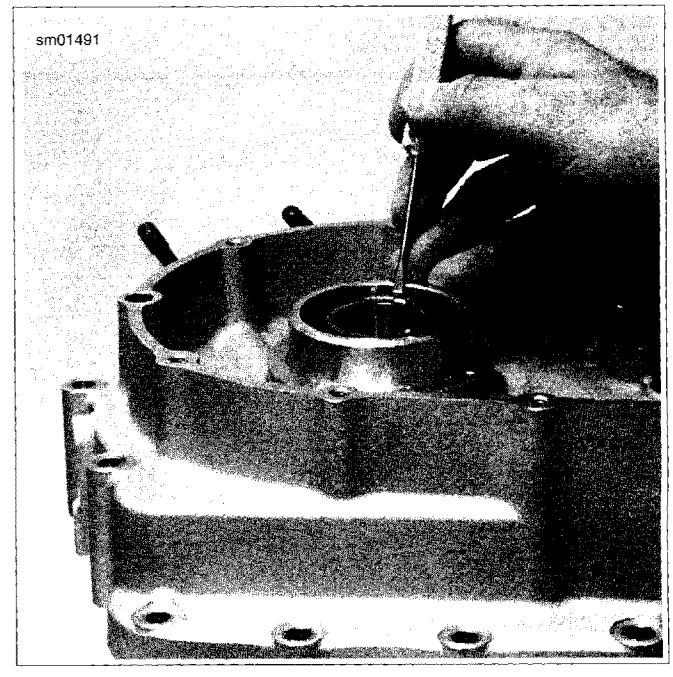

Figure 3-153. Removing Left Main Oil Seal Retaining Ring

6. See Figure 3-154 and Figure 3-151. Remove left main bearing retaining ring (7) from the inside of the left crankcase (5).

NOTE

When removing the left main bearing, the bearing presses from the outside of the left crankcase toward the inside. A shoulder is incorporated into the left crankcase which allows the bearing to be removed in one direction only.

7. See Figure 3-155. Using CRANKCASE BEARING REMOVER/INSTALLER WITH ADAPTER (Part No. B-45655, HD-42720-2, HD-46663) press left main bearing out of the left crankcase.
   a. Place support tube (1) on press bed with recessed cup end facing up.
   b. With the outboard side of the left crankcase (2) facing upward, position crankshaft bearing bore (3) over support tube.
   c. Place adapter (4) over left main bearing. Insert pilot/driver (5) through adapter, through left main bearing and into support tube.
   d. Carefully apply pressure with press ram (6) until left main bearing drops free.

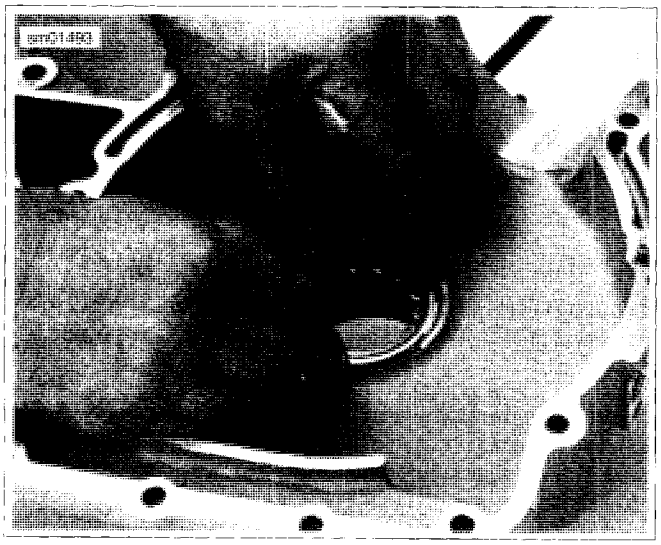

Figure 3-154. Removing Left Main Bearing Retaining Ring

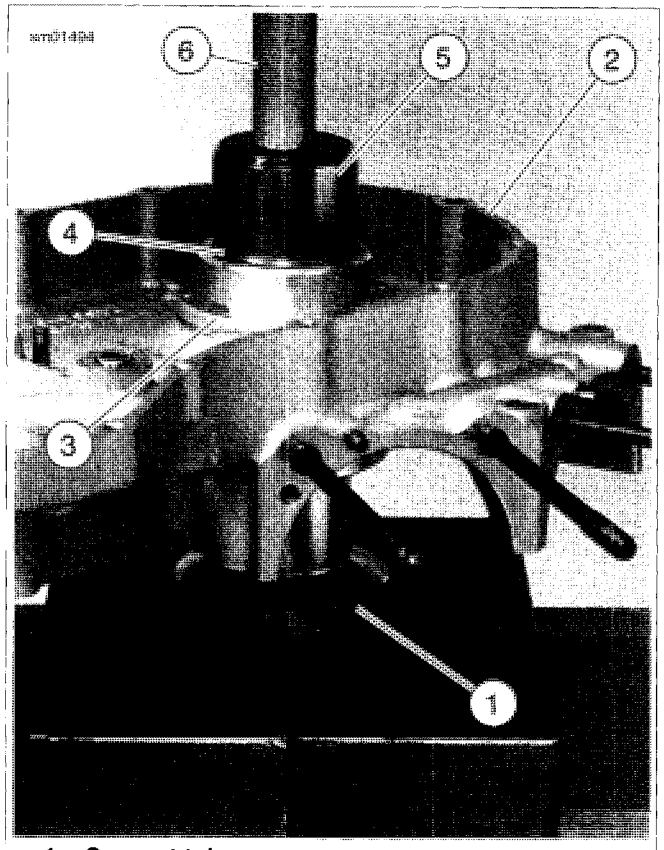

1. Support tube
2. Left crankcase
3. Crankshaft bearing bore
4. Adapter
5. Pilot/driver
6. Press ram

Figure 3-155. Removing Left Main Bearing from Crankcase

FITTING PINION BEARINGS

PART NUMBER	TOOL NAME
HD-34902-7	END CAP
J-21686-12	FORCING SCREW
J-7830-5	BRIDGE
SNAP-ON TOOLS STOCK NO. CJ950	BEARING SEPARATOR

See Figure 3-151. The outer race (11) is a pressed-in bushing in the right crankcase. The inner race is pressed on the pinion shaft.

See Figure 3-156. To remove pinion shaft inner race, use BEARING SEPARATOR (Part No. Snap-on Tools Stock No. CJ950), three items from END CAP (Part No. HD-34902-7), BRIDGE (Part No. J-7830-5) and FORCING SCREW (Part No. J-21686-12), and two bolts. Apply heat to race to aid removal. Four sizes of pinion bearings are available.

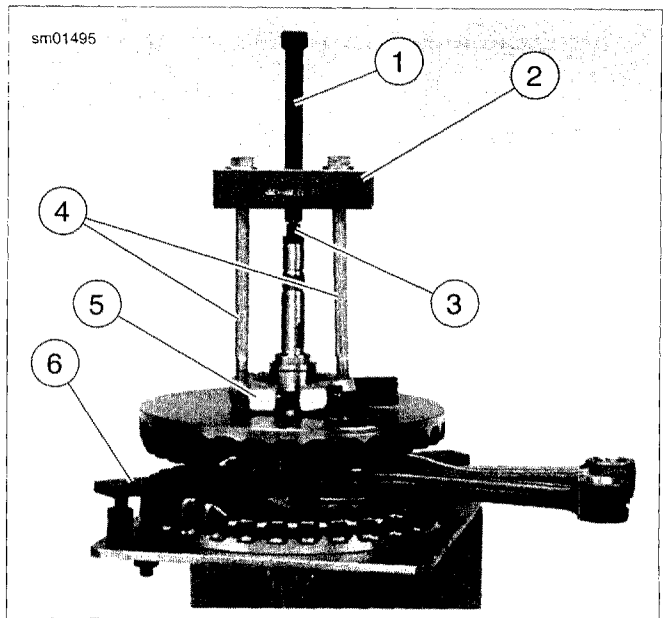

1. Forcing screw
2. Bridge
3. End cap
4. Bolts (2)
5. Bearing separator
6. Flywheel support fixture

Figure 3-156. Pulling Pinion Shaft Inner Bearing

Pinion bearing selection at the factory, during engine rebuild, or replacement of crankcase set or flywheel assembly, is based on the largest measured outside diameter (O.D.) of the inner race and the smallest measured inside diameter (I.D.) of the outer race (crankcase bushing).

A running clearance of 0.0002-0.0008 in. (0.005-0.020 mm) is established during crankcase set or flywheel assembly replacement and engine rebuild.

See Figure 3-157. Installed inner races are identified at the factory as shown.

See Figure 3-158. Outer races are identified at the factory as shown.

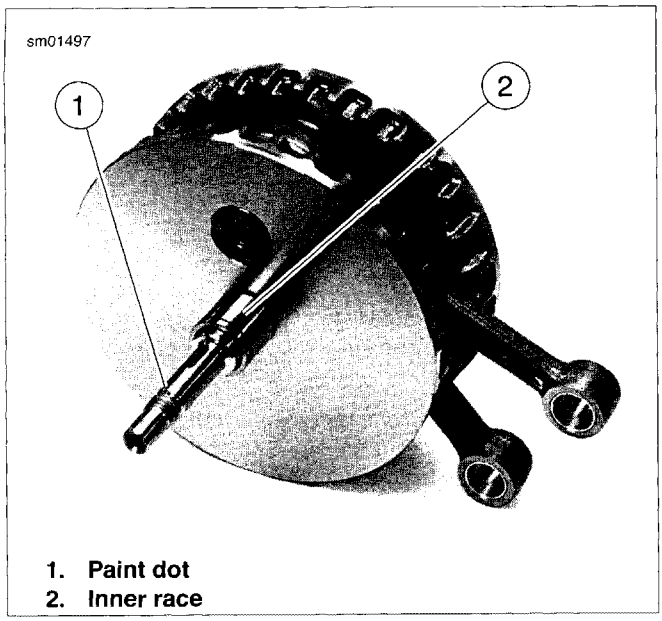

1. **Paint dot**
2. **Inner race**

Figure 3-157. Factory Inner Race Sizes

NOTE

The different sizes of crankcase sets and flywheel assemblies will not have separate part numbers. That is, a replacement crankcase set may have a class 1, 2 or 3 pinion outer race. Replacement flywheel assemblies will have either a class A or B inner race.

See Figure 3-159. Pinion bearings are identified as shown.

Bearing Selection

Select bearings using the identification information given for inner and outer races and bearings. Refer to Table 3-39.

NOTE

If either inner or outer race show wear, measure both races to confirm correct bearing fit of 0.0002-0.0008 in. (0.005-0.020 mm). The service wear limit of the outer race I.D. is 1.5656 in. (39.776 mm).

Table 3-36. Inner Race Specifications

RACE O.D.		CLASS	IDENTIFICATION*
IN.	MM		
1.2498-1.2500	31.745-31.750	A	White
1.2496-1.2498	31.740-31.745	B	Green

* Paint dot on end of spline.

Table 3-37. Roller Specifications

ROLLER O.D. (A)	IDENTIFICATION (PACKAGE COLOR)
Largest	Red
	Blue
	White (Grey)
Smallest	Green

Table 3-38. Outer Race Specifications

RACE I.D.		CLASS NO.	STAMPED IDENTIFICATION*
IN.	MM		
1.5646-1.5648	39.741-39-746	1	1
1.5648-1.5650	39.746-39.751	2	2
1.5650-1.5652	39.751-39.756	3	3

* Stamped number inside crankcase near race.

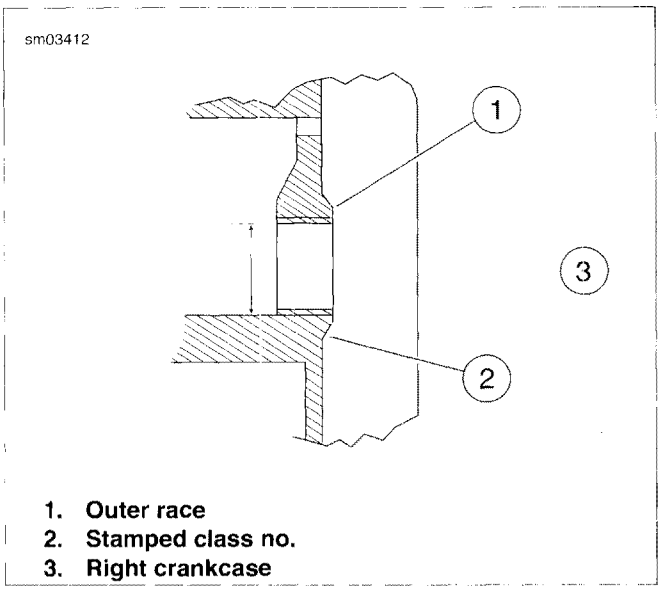

1. Outer race
2. Stamped class no.
3. Right crankcase

Figure 3-158. Factory Outer Race Sizes

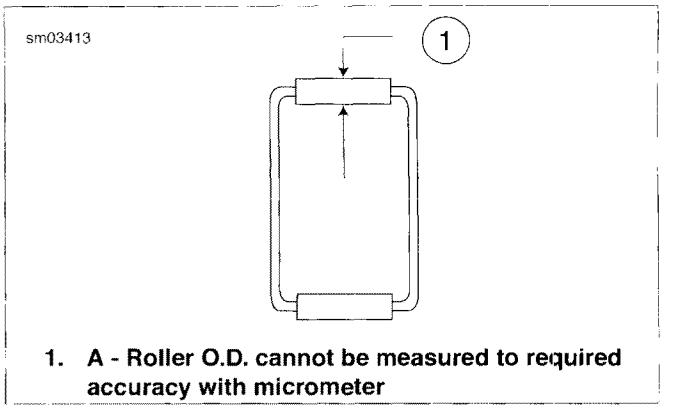

1. A - Roller O.D. cannot be measured to required accuracy with micrometer

Figure 3-159. Bearing Identification

Table 3-39. Pinion Shaft Bearing Selection

FACTORY STAMPED NUMBER	OUTER RACE I.D.	BEARING SIZE AS IDENTIFIED BY COLOR CODING		
	1.5654-1.5656 in. (39.761-39.766 mm)			Red
	1.5652-1.5654 in. (39.756-39.761 mm)		Red	Blue
3	**1.5650-1.5652 in. (39.751-39.756 mm)**	**Red**	**Blue**	White-Gray
2	**1.5648-1.5650 in. (39.746-39.751 mm)**	**Blue**	**White-Gray**	Green
1	**1.5646-1.5648 in. (39.741-39.746 mm)**	**White-Gray**	**Green**	
Inner Race O.D. (in.)		**1.2496-1.2498**	**1.2498-1.2500**	1.2500-1.2502
Inner Race O.D. (mm)		31.740-31.745	31.745-31.750	31.750-31.755
Factory Color Code		**Green**	**White**	

NOTE

Removal and installation of the inner and outer bearing races require the use of shop-made tools. Dimensions for fabricating the tools are shown in Figure 3-161, Figure 3-162, and Figure 3-163.

1. See Table 3-40. Measure I.D. of outer race at four places with a dial bore gauge. Take measurement on I.D. where bearing rollers ride. Record the four measurements.

Table 3-40. Used Pinion Bearing Outer Race Specifications

ITEM	SPECIFICATION
Largest I.D. allowed	1.5656 in. (39.776 mm)
Roundness of I.D.	within 0.0002 in. (0.005 mm)
Taper	within 0.0002 in. (0.005 mm)

2. If the largest measurement is larger than 1.5656 in. (39.776 mm) or the required lapping to remove wear marks would enlarge bore beyond 1.5656 in. (39.776 mm), continue at Step 8.
3. If the largest measurement is 1.5656 in. (39.776 mm) or less, cover the cam bearings with masking tape to prevent debris from entering bearings. Assemble crankcase halves.

NOTE

The next step requires lapping the outer race. To keep sprocket shaft and pinion shaft bearings aligned, the lap must be supported by an adaptor or pilot in the left crankcase.

4. Lap the outer race. See 3.23 CRANKCASE, Lapping Engine Main Bearing Races. The race must be lapped until all wear marks are removed.
5. After lapping race, again measure I.D. of race at four places and record the measurements.

6. Check measurements against the specifications listed in Table 3-40.

7. If lapping increased bore I.D. to larger than 1.5656 in. (39.776 mm), go to next step. If roundness or taper do not meet specifications, continue lapping until specifications are met. If all specifications are met, continue at Step 10 to remove and size inner race.

NOTE

Always use the smallest outer race I.D. measurement and the largest O.D. inner race measurement when selecting bearings.

8. Press the outer race from the right crankcase. Press **new** outer race into crankcase flush with inside edge of cast-in insert.

9. The **new** outer race must be lapped slightly to true and align with left case bearing, and to meet the specifications in Table 3-41. See 3.23 CRANKCASE, Lapping Engine Main Bearing Races.

Table 3-41. New Pinion Bearing Outer Race Fit and Finish

ITEM	SPECIFICATION
I.D.	1.5646-1.5652 in. (39.741-39.756 mm)
Roundness	within 0.0002 in (0.005 mm)
Taper	within 0.0002 in (0.005 mm)
Surface Finish	16 RMS

10. See Figure 3-156. Pull inner race from pinion shaft using BEARING SEPARATOR (Part No. Snap-on Tools Stock No. CJ950), three items from END CAP (Part No. HD-34902-7), BRIDGE (Part No. J-7830-5) and FORCING SCREW (Part No. J-21686-12), and two bolts. Apply heat to race to aid removal.

11. Press **new** inner race on pinion shaft using shop-made tool. When the tool bottoms against the flywheel, the correct inner race location is automatically established as shown in Figure 3-160. The **new** inner race must be ground by a machinist to an O.D. dimension range based on the finished lapped I.D. of the outer race, as shown in Table 3-39. See the example that follows.

Table 3-42. Inner Race Fit and Finish

ITEM	SPECIFICATION
Roundness	within 0.0002 in. (0.005 mm)
Taper	within 0.0002 in. (0.005 mm)
Surface finish	16 RMS

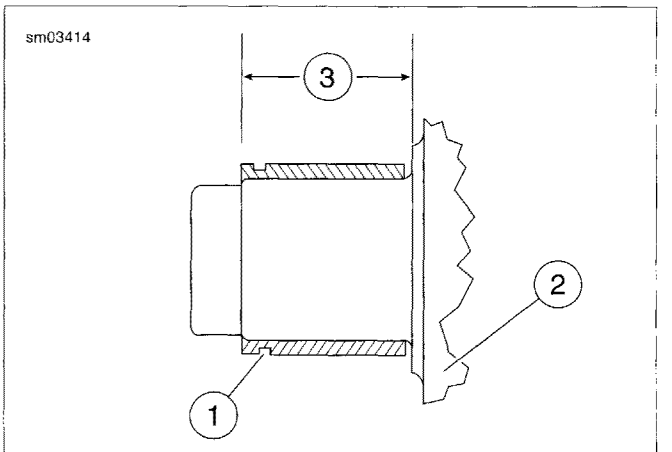

1. **Pinion shaft inner race**
2. **Flywheel (gear side)**
3. **1.135-1.145 in. (28.83-29.08 mm)**

Figure 3-160. Inner Race Location

Inner Bearing Finish Example

The following example illustrates how to determine the required inner race O.D.

1. If smallest measured I.D. of outer race is 1.5651 in. (39.754 mm) the Table 3-39 indicates an inner race O.D. range of 1.2496-1.2504 in. (31.740-31.760 mm) is required.

NOTE

Have machinist grind outer race to center or middle of required O.D. range. This will prevent grinding outer race undersize and gives a more easily achieved tolerance range.

2. Grind inner race O.D. to the middle of the desired range as determined by Table 3-39. Measure O.D. at four places and check that specifications in Table 3-42 are met.

3. For example purposes:
   a. the largest measured O.D. of inner race after grinding is 1.2499 in. (31.747 mm) O.D.
   b. Refer to Table 3-39. With a 1.5651 in. (39.754 mm) I.D. outer race and a 1.2499 in. (31.747 mm) O.D. inner race, a blue bearing is required.

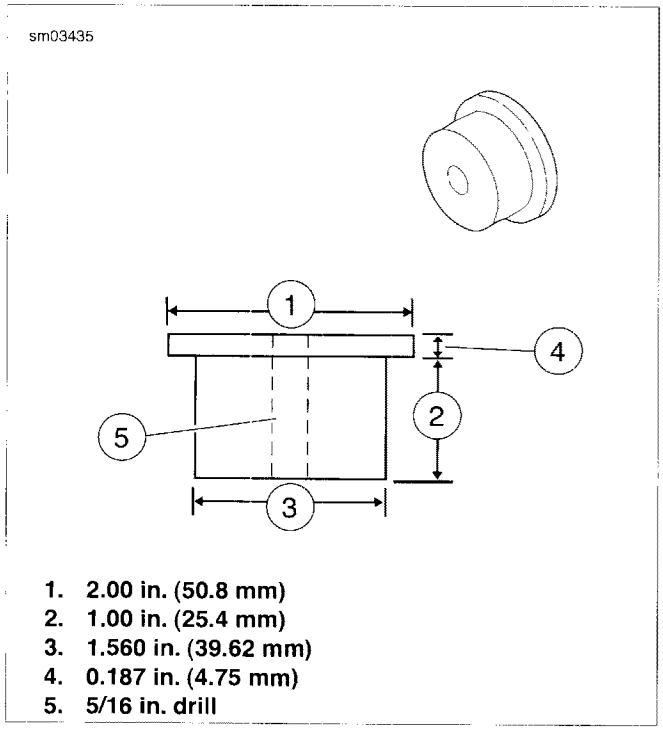

1. 2.00 in. (50.8 mm)
2. 1.00 in. (25.4 mm)
3. 1.560 in. (39.62 mm)
4. 0.187 in. (4.75 mm)
5. 5/16 in. drill

Figure 3-161. Pinion Shaft Outer Race Installation Tool

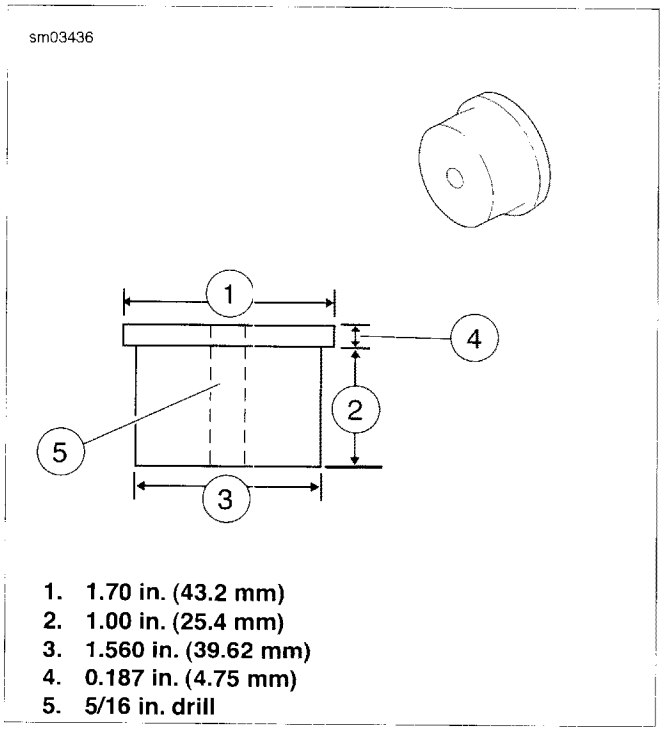

1. 1.70 in. (43.2 mm)
2. 1.00 in. (25.4 mm)
3. 1.560 in. (39.62 mm)
4. 0.187 in. (4.75 mm)
5. 5/16 in. drill

Figure 3-162. Pinion Shaft Outer Race Removal Tool

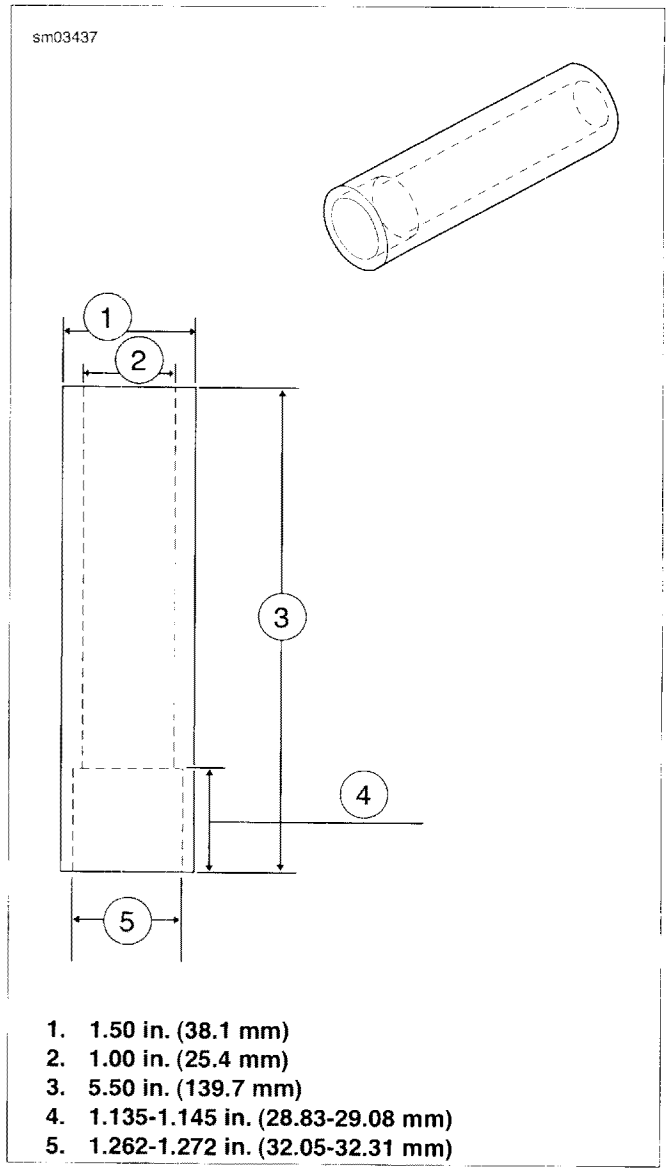

1. 1.50 in. (38.1 mm)
2. 1.00 in. (25.4 mm)
3. 5.50 in. (139.7 mm)
4. 1.135-1.145 in. (28.83-29.08 mm)
5. 1.262-1.272 in. (32.05-32.31 mm)

Figure 3-163. Pinion Shaft Inner Race Installation Tool

LAPPING ENGINE MAIN BEARING RACES

PART NUMBER	TOOL NAME
HD-46287	LAPPING TOOL ADAPTER
HD-96710-40C	CRANKCASE MAIN BEARING LAPPING TOOL
HD-96718-87	CRANKCASE MAIN BEARING LAP

1. See Figure 3-164. Obtain CRANKCASE MAIN BEARING LAPPING TOOL (Part No. HD-96710-40C). Assemble CRANKCASE MAIN BEARING LAP (Part No. HD-96718-87) to lapping handle.

NOTE

Left main bearing must be installed in left crankcase in order to use LAPPING TOOL ADAPTER (Part No. HD-46287) in the next step. See 3.18 BOTTOM END OVERHAUL: ASSEMBLY, Crankcase.

2. Assemble LAPPING TOOL ADAPTER (Part No. HD-46287) to left main bearing.

3. Secure right and left crankcase halves with three crankcase stud bolts (top center and bottom left and right).
4. Insert lap shaft with arbor assembled through pinion bearing bushing and into lapping tool adapter. Tighten arbor expansion collars using a length of 0.156 in. (3.96 mm) rod as spanner until arbor begins to drag. Do not adjust arbor snug in bushing or bushing will bell, a condition where hole is larger at ends than it is in the center.
5. Withdraw arbor far enough to coat lightly with 220 grit lapping compound. Do not apply a heavy coat. Reposition lap in bushing and turn handle at moderate hand speed. Work lap back and forth in bushing, as it is revolved, to avoid grooving and tapering.
6. At frequent intervals, remove lap from crankcase, wash and inspect bushing. Lapping is completed when entire bushing surface has a dull, satin finish rather than a glossy, smooth appearance.
7. When finished, flush off lap tool using cleaning solvent and dry using compressed air. Apply fresh, light coat of fine lapping compound.

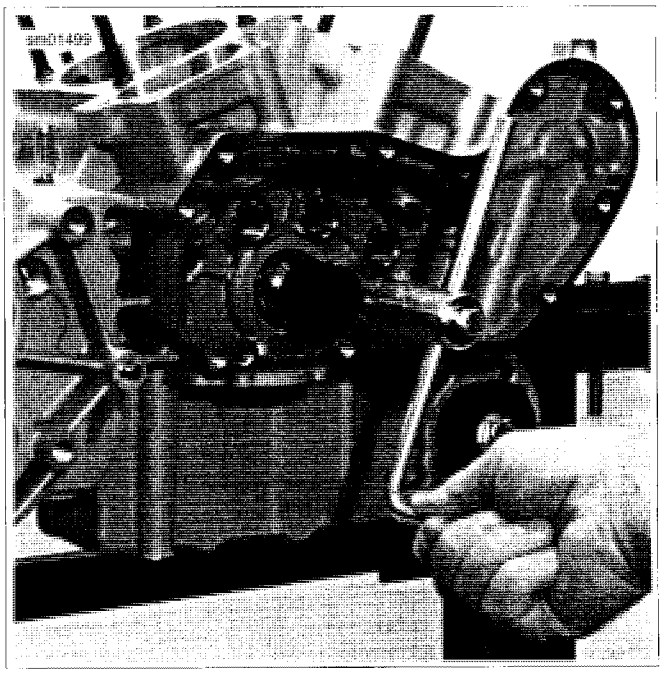

Figure 3-164. Lapping Pinion Shaft Main Bearing

ASSEMBLING CRANKCASE HALVES

To assemble bottom end, see 3.18 BOTTOM END OVERHAUL: ASSEMBLY.

GENERAL

The oil pump seldom needs servicing. Before you disassemble an oil pump suspected of not producing adequate oil pressure, be sure that all possible related malfunctions have been eliminated.

1. Make sure all oil line connections are tight and that lines are not pinched or damaged.
2. Check level and condition of oil in tank. Pressure will be affected if oil is diluted. In freezing weather, proper circulation of oil can be affected if the oil feed line becomes clogged with ice or sludge.
3. Check for a grounded oil pressure switch wire [120] or faulty switch if oil pressure indicator light fails to go out with engine running.

See 3.8 ENGINE LUBRICATION SYSTEM, 3.27 OIL TANK and 6.33 OIL PRESSURE SWITCH for additional information.

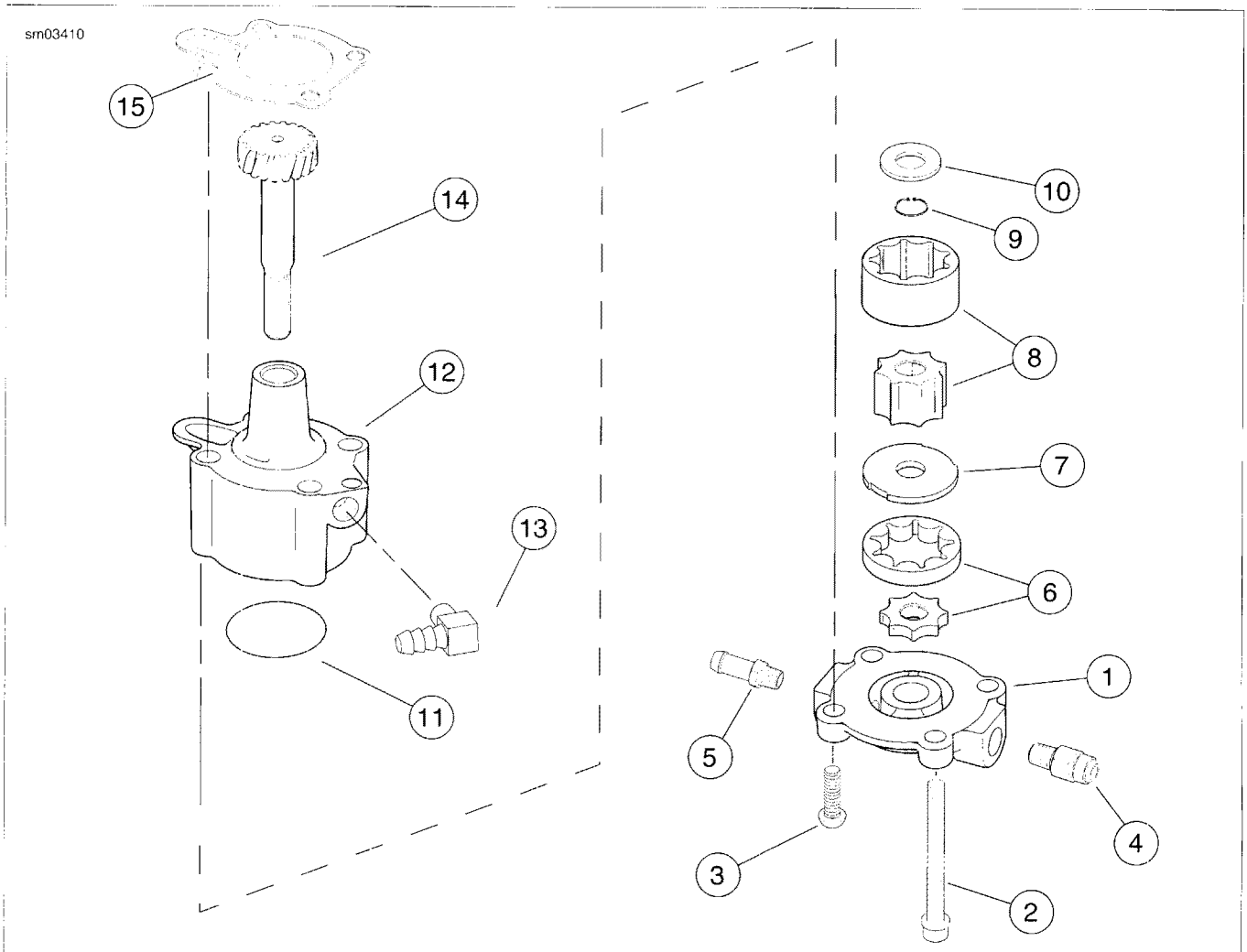

1. **Oil pump cover**
2. **Screw w/ washer (2)**
3. **Torx screw (2)**
4. **Connector**
5. **Hose fitting**
6. **Feed gerotor set**
7. **Gerotor separator plate**
8. **Scavenge gerotor set**
9. **Retaining ring**
10. **Thrust washer**
11. **O-ring**
12. **Oil pump body**
13. **Elbow fitting**
14. **Gear shaft**
15. **Gasket**

Figure 3-165. Oil Pump: XL Models

REMOVAL

NOTE

The oil pump can be removed with engine in frame and without removing gearcase cover.

1. Drain oil from oil tank.

NOTE

See Figure 3-166. Do not remove oil pump feed fitting (2) from the pump (1). Hold oil pump feed fitting and loosen large high pressure hose fitting nut (3). Then remove high pressure hose (4) from oil pump feed fitting.

2. See Figure 3-166. Remove high pressure feed hose (4) from oil pump (1).

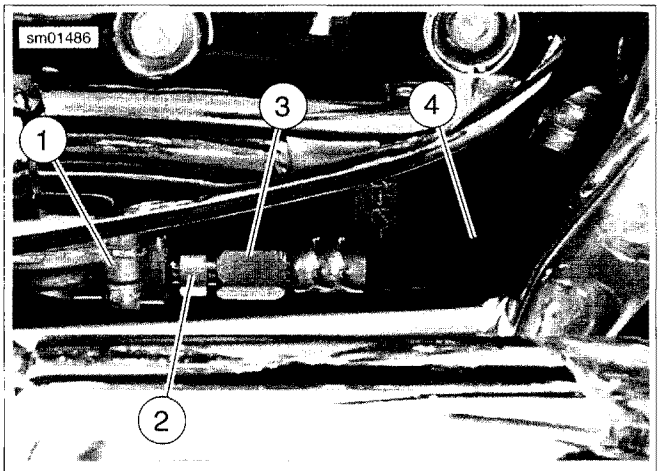

1. **Oil pump**
2. **Oil pump feed fitting**
3. **High pressure hose fitting nut**
4. **High pressure feed hose (to oil filter)**

Figure 3-166. Oil Pump Feed Hose

NOTE

See Figure 3-165. The oil pump is designed to be removed as a complete assembly by removing the two long screws (2) at opposite corners of the pump. The other two screws (3) hold the pump together so that it may be removed and installed as a unit.

3. See Figure 3-165. Carefully remove two screws (2) that secure oil pump to crankcase. Pump will drop with screws removed. Discard mounting gasket (15).
4. Disconnect and tag the two remaining oil hoses from the pump.

DISASSEMBLY

1. See Figure 3-165. Remove two Torx screws (3). Lift cover (1) off body (12). Remove and discard O-ring (11).
2. Slide both pieces of feed gerotor set (6), separator plate (7) and both pieces of scavenge gerotor set (8) off gear shaft (14).
3. Remove and discard retaining ring (9). Remove thrust washer (10) and gear shaft.

CLEANING AND INSPECTION

⚠WARNING

Compressed air can pierce the skin and flying debris from compressed air could cause serious eye injury. Wear safety glasses when working with compressed air. Never use your hand to check for air leaks or to determine air flow rates. (00061a)

1. Clean all parts in cleaning solvent. Blow out holes and oil passages with compressed air.
2. See Figure 3-167. Inspect both gerotor sets for wear.
   a. Mesh pieces of each set together as shown.
   b. Use a feeler gauge to determine clearance.
   c. The SERVICE WEAR LIMIT between gerotors is 0.004 in. (0.102 mm). Replace gerotors as a set if clearance exceeds this dimension.
   d. Measure thickness of feed gerotors with a micrometer. Replace gerotors as a set if they are not the same thickness.

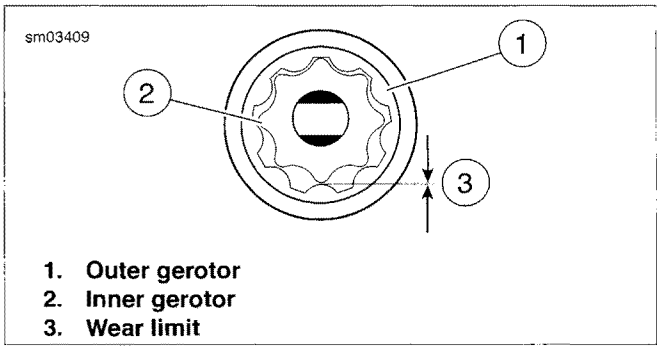

1. **Outer gerotor**
2. **Inner gerotor**
3. **Wear limit**

Figure 3-167. Gerotor Wear Limits

ASSEMBLY

NOTE

Liberally coat all moving parts with clean engine oil to ensure easy assembly and smooth operation at start-up.

1. See Figure 3-165. Install gear shaft (14) through oil pump body (12). Position thrust washer (10) over end of shaft. Install **new** retaining ring (9) into groove in shaft.
2. Insert inner gerotor of the scavenge gerotor set (8) over gear shaft.
3. Place outer gerotor over inner to complete scavenge set.
4. Position separator plate (7) into case and line up slots on perimeter with tabs inside oil pump body.
5. Place feed gerotor set (6) over gear shaft.
6. Install a **new** O-ring (11) into groove in oil pump cover (1). Place cover onto pump body. Install two Torx cover screws (3). Tighten to 70-80 **in-lbs** (7.9-9.0 Nm).

INSTALLATION

1. See Figure 3-165. Place **new** mounting gasket (15) in position.

2. Secure pump to crankcase with two screws (2). Tighten to 125-150 **in-lbs** (14.1-16.9 Nm).

NOTE

*Use **new** hose clamps to secure oil tank feed hose and vent hose to oil pump fittings. If fittings were removed, use TEFLON PIPE SEALANT or HYLOMAR on fitting threads.*

3. Install hoses on oil pump. Attach oil tank feed hose to hose fitting (5) with **new** clamp. Attach oil tank vent hose to elbow fitting (13) with **new** clamp.

4. See Figure 3-166. If oil pump feed fitting (2) was removed for any reason, install fitting in oil pump (1) cover. Tighten to 100-120 **in-lbs** (11.3-13.6 Nm).

5. If high pressure feed hose (4), was removed completely, install end opposite high pressure fitting nut (3) in crankcase. Tighten to 60-90 **in-lbs** (6.8-10.2 Nm).

6. Install high pressure feed hose fitting nut (3) onto feed fitting on front of oil pump. Hold oil pump feed fitting with a wrench and tighten high pressure hose fitting nut to 85-105 **in-lbs** (9.6-11.8 Nm).

7. Fill oil tank with proper oil. See 1.6 ENGINE OIL AND FILTER.

GENERAL

The oil pump seldom needs servicing. Before you disassemble an oil pump suspected of not producing adequate oil pressure, be sure that all possible related malfunctions have been eliminated.

1. Make sure all oil line connections are tight and that lines are not pinched or damaged.
2. Check level and condition of oil in tank. Pressure will be affected if oil is diluted. In freezing weather, proper circulation of oil can be affected if the oil feed line becomes clogged with ice or sludge.
3. Check for a grounded oil pressure switch wire [120] or faulty switch if oil pressure indicator light fails to go out with engine running.

See 3.8 ENGINE LUBRICATION SYSTEM, 3.27 OIL TANK and 6.33 OIL PRESSURE SWITCH for additional information.

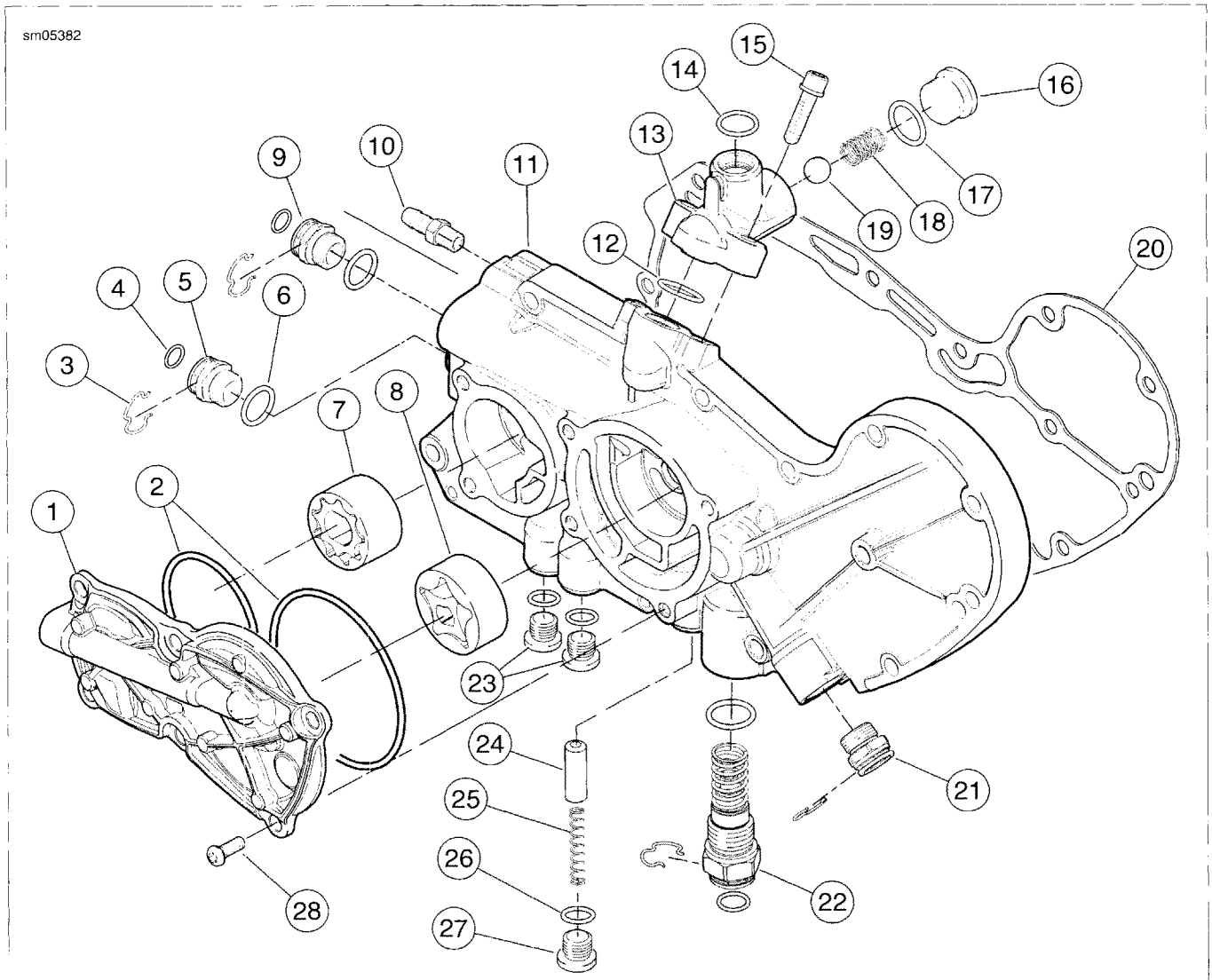

1. **Oil pump rotor cover**
2. **O-rings, rotor cover**
3. **Retainer**
4. **O-ring, internal (1 each fitting)**
5. **Line connector fitting, return oil**
6. **O-ring, external (1 each fitting)**
7. **Scavenge gerotor set**
8. **Feed gerotor set**
9. **Line connector fitting, supply oil**
10. **Vent line fitting**
11. **Oil pump/gearcase housing**
12. **O-ring**
13. **Check valve housing, cylinder head oil**
14. **O-ring**
15. **Fastener (2)**
16. **Plug**
17. **O-ring**
18. **Spring**
19. **Check ball**
20. **Gasket**
21. **Line connector fitting, oil to cooler**
22. **Thermostat (oil from cooler)**
23. **Plugs**
24. **Bypass valve shuttle**
25. **Spring, bypass valve**
26. **O-ring**
27. **Plug**
28. **Fastener (6)**

Figure 3-168. Oil Pump: XR Models

DISASSEMBLY

NOTE

The oil pump can be removed with engine in frame and without removing gearcase cover.

1. Remove the exhaust system. See 4.15 EXHAUST SYSTEM: XR MODELS.
2. Drain oil from oil tank.
3. Place pan under oil pump to collect oil.
4. See Figure 3-169. Remove nine fasteners (1) and remove gearcase and oil pump cover (2).
5. See Figure 3-170. Remove oil cooler rigid lines (3) from gearcase cover. See 3.14 PRECISION COOLING SYSTEM: XR MODELS, Oil Pump Lines.
6. Remove six screws (1) and remove oil pump cover (2). Discard cover O-rings.

NOTE

If oil pump rotors are to be re-used, they must be installed in the original location and orientation as when they are removed. Failure to do so can result in accelerated wear and possible engine failure.

7. See Figure 3-171. Wipe the oil film from the exposed surfaces of the rotors (1, 2) and mark each rotor using a permanent marker to aid in reassembly.

NOTE

The surface tension of the remaining oil film will make the rotors "stick" against the bottom of the bore. Never use a metallic tool to remove oil pump rotors because damage may result, requiring that the rotors or gearcase cover be replaced with new parts.

8. Grasp the outer rotor (1) of each stage and pull from housing bore.
9. Remove each inner rotor (2).
10. Remove the thermostat fitting (3) and spring.
11. Remove the plug and bypass valve components (4).
12. If necessary, remove remaining line connector fittings from gearcase cover.
13. Remove and discard all used O-rings.

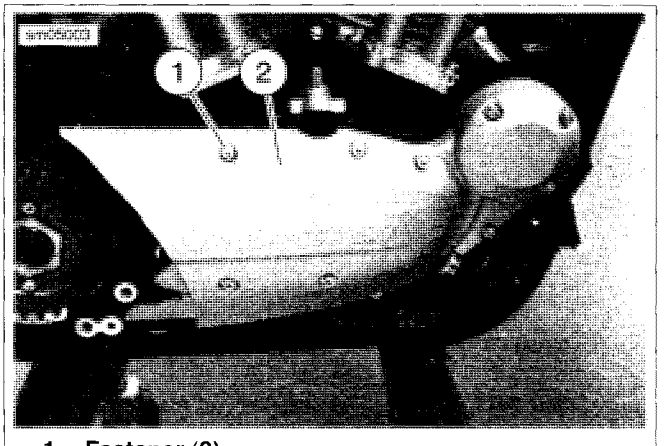

1. **Fastener (9)**
2. **Cover**

Figure 3-169. Oil Pump Cover: XR Models

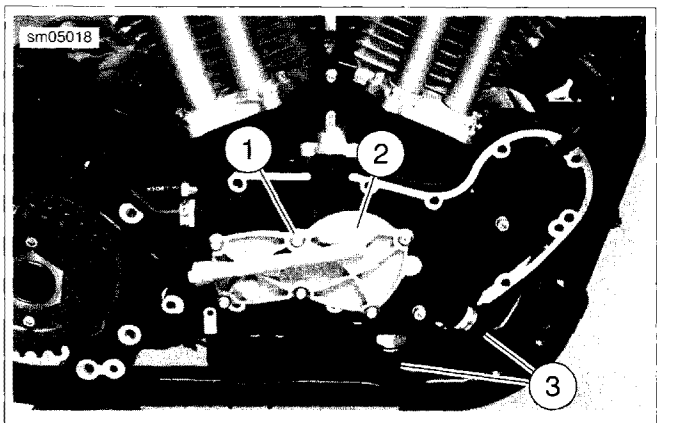

1. **Oil pump cover screw (6)**
2. **Oil pump rotor cover**
3. **Oil cooler rigid lines**

Figure 3-170. Oil Pump Rotor Cover: XR Models

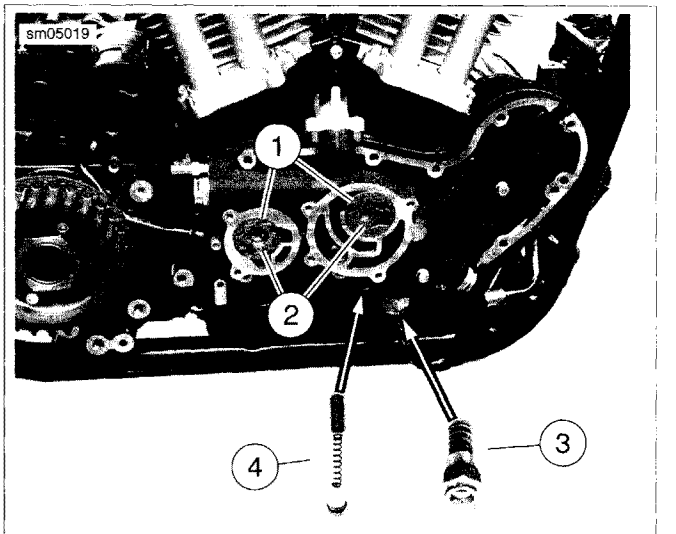

1. **Outer rotor**
2. **Inner rotor**
3. **Thermostat**
4. **Bypass valve plug and components**

Figure 3-171. Oil Pump: XR Models

CLEANING AND INSPECTION

⚠WARNING

Compressed air can pierce the skin and flying debris from compressed air could cause serious eye injury. Wear safety glasses when working with compressed air. Never use your hand to check for air leaks or to determine air flow rates. (00061a)

1. Clean all parts in cleaning solvent. Blow out holes and oil passages with compressed air.

2. See Figure 3-172. Inspect both gerotor sets for wear.
   a. Mesh pieces of each set together as shown.
   b. Use a feeler gauge to determine clearance.
   c. The SERVICE WEAR LIMIT between gerotors is 0.004 in. (0.102 mm). Replace gerotors as a set if clearance exceeds this dimension.
   d. Measure thickness of feed gerotors with a micrometer. Replace gerotors as a set if they are not the same thickness.
3. See Figure 3-173. Inspect thermostat spring for distortion or cracks. Inspect rubber seal for damage. Replace thermostat assembly as necessary.

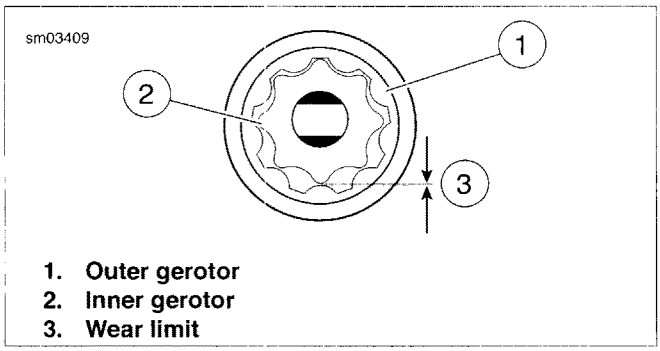

Figure 3-172. Gerotor Wear Limits

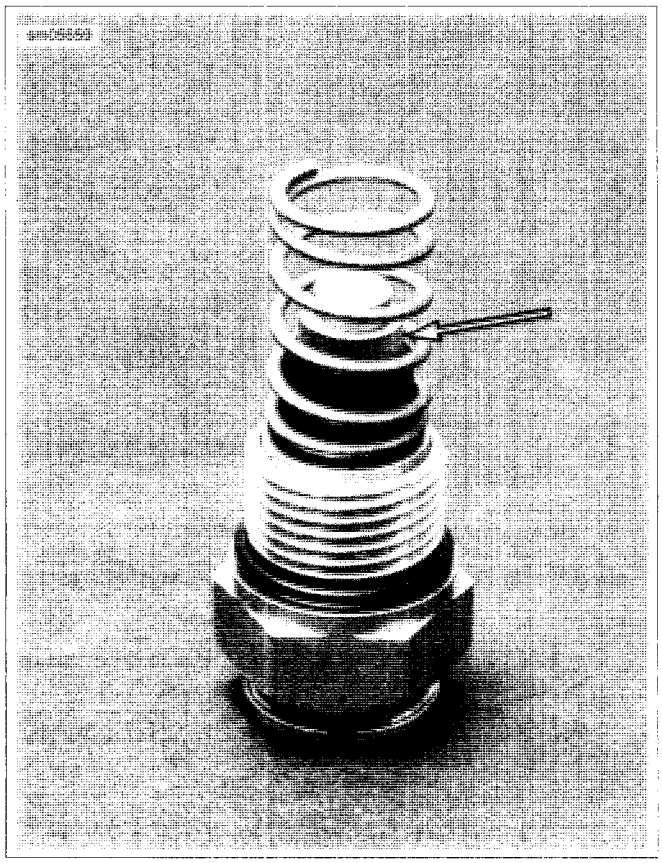

Figure 3-173. Thermostat: XR Models

ASSEMBLY

NOTE

*Used O-rings can leak. Always install **new** O-rings when performing repairs.*

1. Install **new** internal O-rings in each line connector fitting.
2. Install **new** external O-rings on all connector fittings that have been removed.

NOTE

Apply a light coat of new engine oil to the shuttle valve components and oil pump rotors during assembly.

3. See Figure 3-171. Install bypass valve components (4). Tighten plug to 108-156 **in-lbs** (12.2-17.6 Nm).
4. Install thermostat and oil cooler line fitting (3).

NOTE

If oil pump rotors are to be re-used, they must be installed in the original location and orientation as when they were removed. Make sure the mark made during disassembly is visible when installing the rotors. Failure to do so can result in accelerated wear and possible engine failure.

5. Install each outer rotor (1) in its original location.
6. Install each inner rotor (2) in its original location.
7. See Figure 3-170. Install **new** O-rings in oil pump rotor cover and install cover using six fasteners (1). Tighten fasteners to 80-110 **in-lbs** (9.0-12.4 Nm).
8. Install oil cooler rigid lines (3) to quick connect fittings. See 3.14 PRECISION COOLING SYSTEM: XR MODELS, Oil Pump Lines.
9. See Figure 3-174. Install oil pump/cam support housing cover. Secure with 9 socket fasteners. Tighten in the sequence shown to 80-110 **in-lbs** (9.0-12.4 Nm).
10. Install the exhaust system. See 4.15 EXHAUST SYSTEM: XR MODELS.

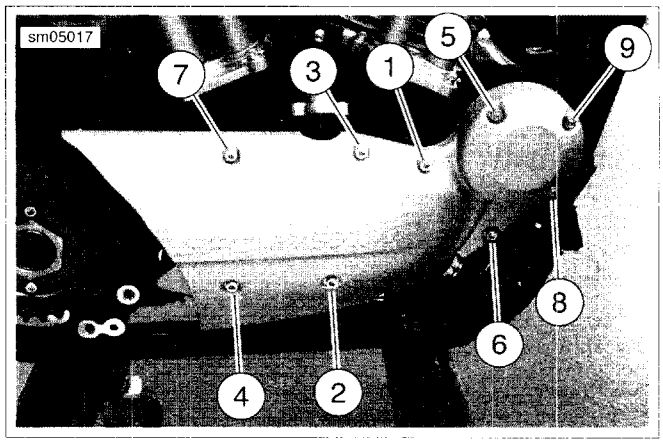

Figure 3-174. Oil Pump Cover Torque Sequence: XR Models

GENERAL

Oil is pressure-fed from the oil pump to the oil filter mount via a hose connection. Oil travels through the filter mount into the filter via outer filter holes.

Adequate oil pressure activates the oil pressure indicator lamp switch in the filter mount, which turns off the oil pressure indicator lamp.

The check ball in the filter adapter opens at:

- **XL Models:** 10-13 psi (69-90 kPa) oil pressure.
- **XR Models:** 5-7 psi (34-48 kPa) oil pressure.

Filtered oil leaves the filter, flowing past the check ball.

DISASSEMBLY

1. Remove oil filter. See 1.6 ENGINE OIL AND FILTER.

NOTE

The engine oil check valve components are located in the Precision Cooling System cylinder head feed circuit. See 3.14 PRECISION COOLING SYSTEM: XR MODELS, Cylinder Head Oil Feed Assembly for service information.

2. See Figure 3-175. Remove oil filter adapter (1) from oil filter mount (2).
3. Remove check ball (3) and spring (4).
4. **XL Models:** Remove oil pressure indicator lamp switch (5).

CLEANING AND INSPECTION

⚠WARNING

Compressed air can pierce the skin and flying debris from compressed air could cause serious eye injury. Wear safety glasses when working with compressed air. Never use your hand to check for air leaks or to determine air flow rates. (00061a)

Thoroughly clean all parts in cleaning solvent. Blow out holes and passages using compressed air.

ASSEMBLY

NOTE

Use TEFLON® PIPE SEALANT or HYLOMAR® on all fittings installed to oil filter mount.

1. See Figure 3-175. **XL Models:** Install oil pressure indicator lamp switch (5). Tighten to 50-70 **in-lbs** (5.6-7.9 Nm).
2. Place spring (4) and check ball (3) into threaded hole at center of mount (2). Push oil filter adapter against ball to compress spring.

NOTE

*The **new** oil filter adapter has one end coated with pre-applied LOCTITE on the threads; that end must be installed into the oil filter mount.*

3. Install threaded end (with LOCTITE 242) into threaded hole at center of mount. Tighten oil filter adapter to 96-144 **in-lbs** (10.9-16.3 Nm).

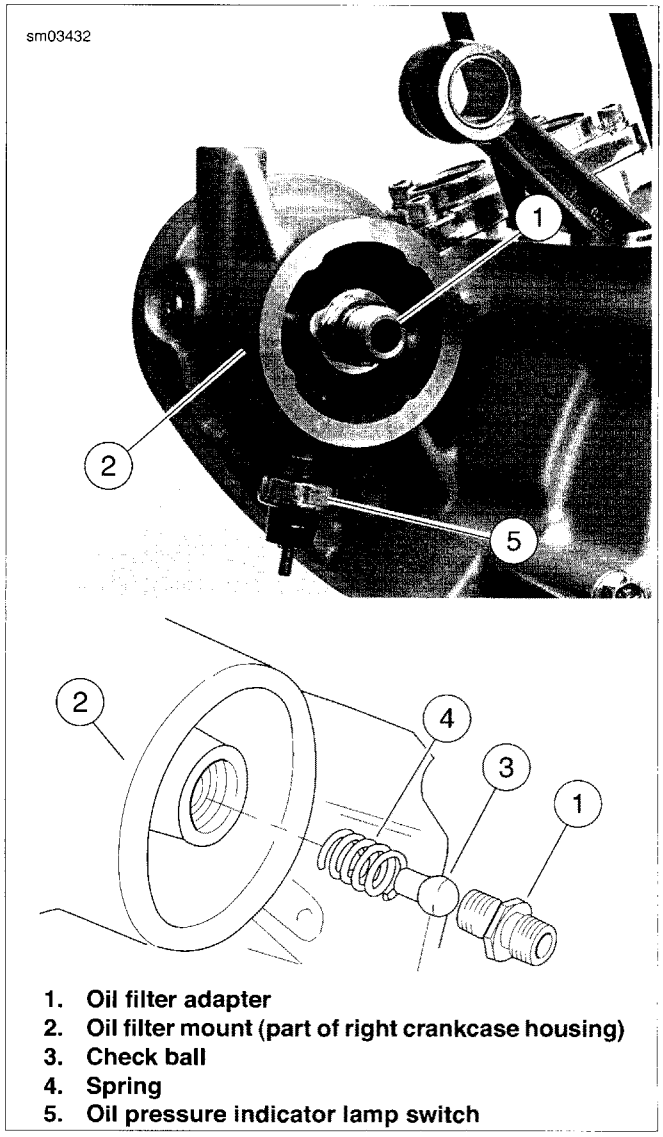

1. **Oil filter adapter**
2. **Oil filter mount (part of right crankcase housing)**
3. **Check ball**
4. **Spring**
5. **Oil pressure indicator lamp switch**

Figure 3-175. Oil Filter Mount, Typical (XL model shown)

4. Connect oil pressure switch wire [120] to oil pressure indicator lamp switch.
5. Install oil filter. Fill oil tank with proper oil. See 1.6 ENGINE OIL AND FILTER, Changing Oil and Filter.

PRESSURE RELIEF VALVE

The oil tank has a pressure relief valve in the top of the tank. If the vent line is pinched, restricted or if the tank is overfilled, excessive pressure is created in the oil tank. The valve opens if the pressure in the tank exceeds 10 psi.

OIL LINE ROUTING: XR MODELS

See Figure 3-176. The feed, vent and return ports are located on the bottom of the oil tank to reduce under seat congestion. A hose routes the oil from the feed port at the lower right front corner to a fitting on the oil pump.

Oil travels to the feed pump through an internal passage in the pump housing. The feed pump pushes oil to the oil cooler, oil filter, and cylinder heads. Oil used for lubricating internal engine components eventually drains into the sump where the scavenge pump collects it and routes it back to the oil tank. Oil used to cool the cylinder heads joins with return oil from the scavenge pump and is also returned to the oil tank. For a more detailed explanation, see 3.8 ENGINE LUBRICATION SYSTEM, Oil Flow: XR Models.

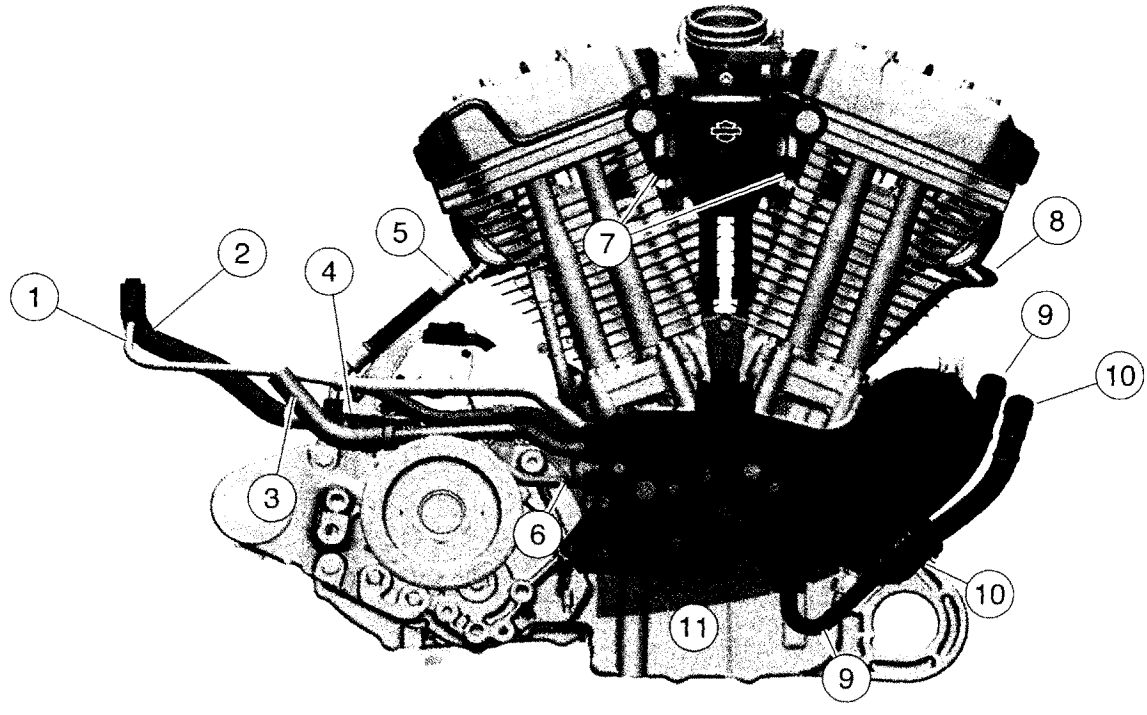

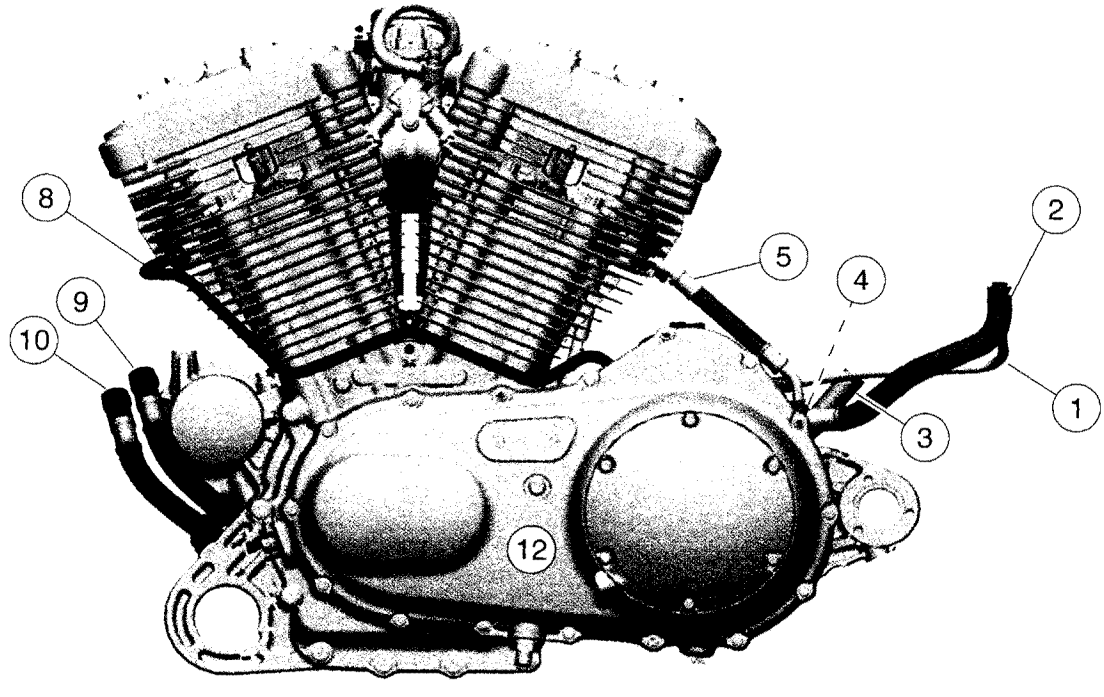

1. Vent line
2. Return oil to tank
3. Supply oil from tank
4. Return oil manifold
5. Rear cylinder head return oil line
6. Return oil from pump
7. Cylinder head feed oil lines
8. Front cylinder head return oil line
9. Oil from oil cooler
10. Oil to oil cooler
11. Engine view, right side
12. Engine view, left side

Figure 3-176. Engine Oil Line Routing: XR Models

REMOVAL

1. Remove seat.
2. Remove left side cover. See 2.19 LEFT SIDE COVER.

⚠WARNING

Prevent accidental vehicle start-up, which could cause death or serious injury. First disconnect negative (-) battery cable at engine and then positive (+) cable from battery. (00280b)

3. Disconnect negative (-) battery cable from ground stud on crankcase. Disconnect positive (+) battery cables at battery. See 1.17 BATTERY MAINTENANCE.
4. Drain oil tank as follows (the oil filter need not be removed unless it is due to be replaced):
   a. Remove filler cap/dipstick assembly from oil tank.
   b. See Figure 3-177. Place a suitable container directly under the drain hose (1) at the bottom rear of the engine crankcase. The container must be able to hold approximately 4 quarts (3.8 liters).
   c. Loosen worm drive clamp (2) and pull drain plug (3) from end of drain hose. Completely drain engine oil from oil tank.
   d. Replace drain plug into end of drain hose and tighten worm drive clamp securely.
5. Remove right side cover by gently prying bottom lip off tab on oil tank. Then lift top of cover off two stanchions molded into top of oil tank.
6. Remove rear belt guard. See 2.23 BELT GUARD AND DEBRIS DEFLECTOR.

NOTE

For ease of assembly, mark oil tank hoses for identification; oil feed, drain, vent and return, as they are removed from oil tank.

7. See Figure 3-178. Remove clamp (17) and disconnect drain hose (9) from oil tank (1).
8. Remove clamp (16) from upper end of feed oil hose (8) and disconnect hose from oil tank.
9. Remove clamp (15) from upper end of return oil hose (6) and disconnect hose from oil tank.
10. Remove rear fender. See 2.33 REAR FENDER: ALL XL MODELS EXCEPT XL 883N/XL 1200N, 2.34 REAR FENDER AND LICENSE PLATE BRACKET: XL 883N/XL 1200N or 2.35 REAR FENDER: XR MODELS.
11. See Figure 3-178. Remove clamp (15) from upper end of vent oil hose (7) and disconnect hose from oil tank (1).
12. Remove three screws (5) and remove oil tank from right side of motorcycle.

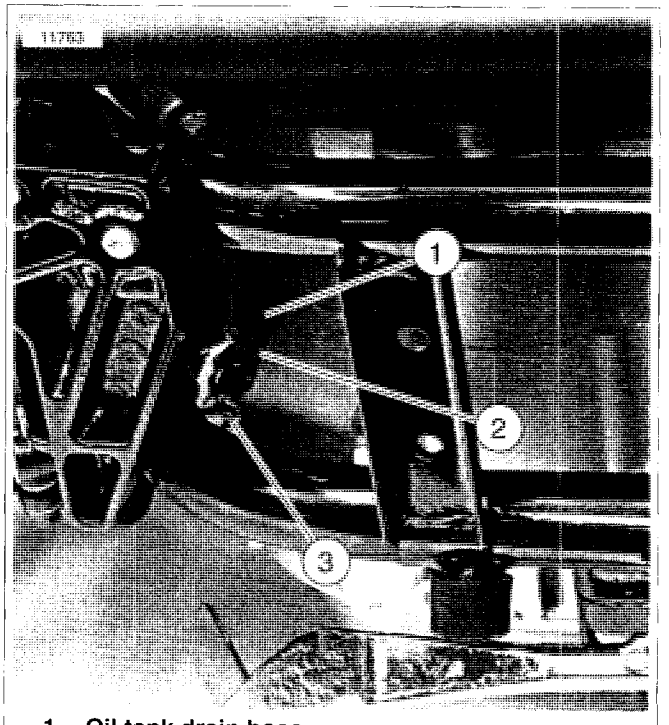

1. **Oil tank drain hose**
2. **Worm drive clamp**
3. **Drain plug**

Figure 3-177. Oil Tank Drain Hose

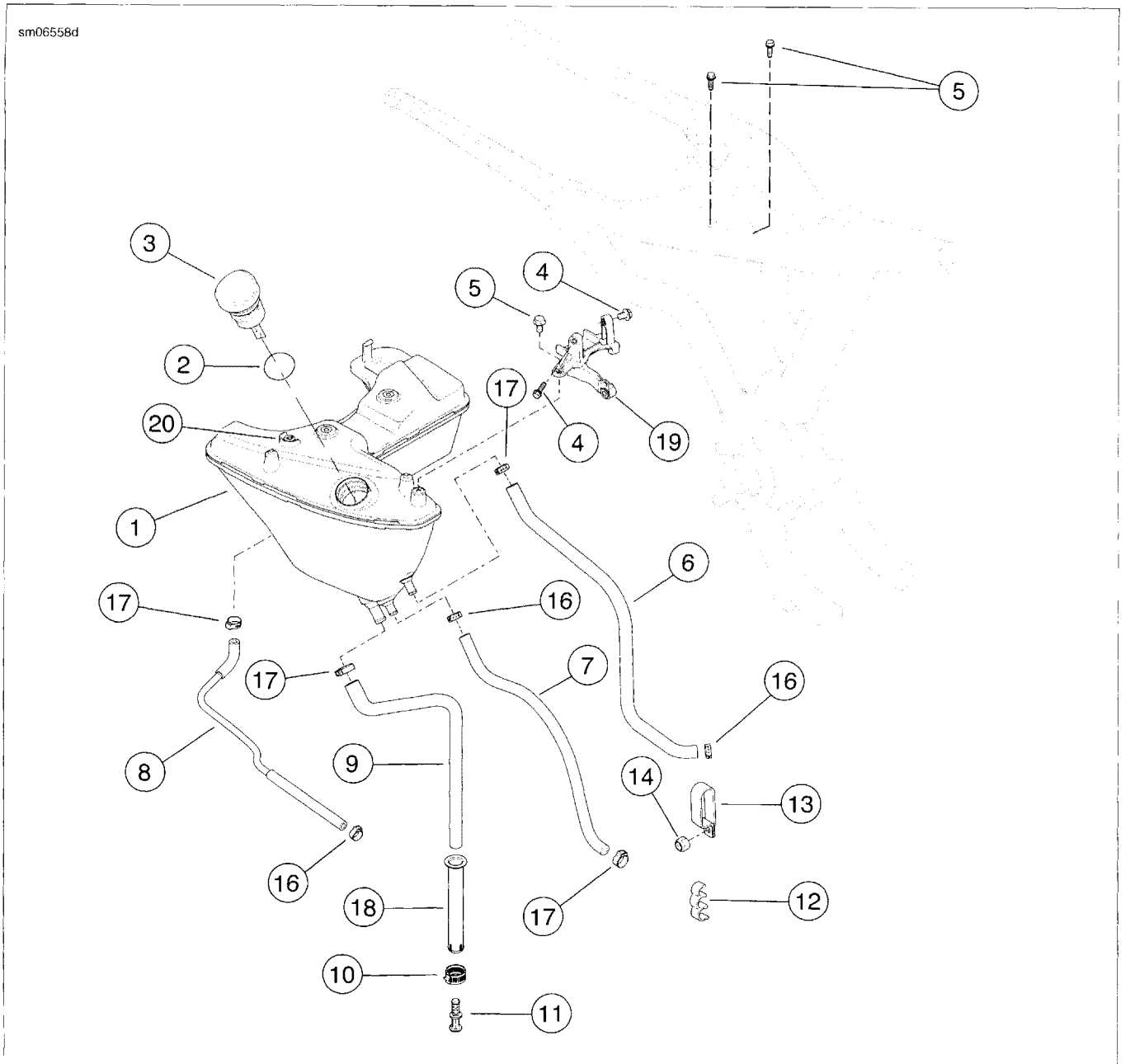

1. Oil tank
2. O-ring
3. Filler cap/dipstick
4. Screw
5. Oil tank mounting screw
6. Return oil hose
7. Vent oil hose
8. Feed oil hose
9. Drain oil hose
10. Worm drive clamp
11. Drain plug
12. Hose clip
13. Clamp
14. Lock nut
15. Clamp (3)
16. Clamp (3)
17. Clamp
18. Oil drain hose sleeve
19. Bracket
20. Relief valve

Figure 3-178. Engine Oil Tank Assembly: XL Models

INSTALLATION

NOTE

See Figure 3-178. The vent oil hose (7) is composed of a flexible hose originating at the gearcase cover elbow fitting (15), mated to a hard plastic line, then another flexible hose at the oil tank vent fitting.

1. See Figure 3-178. Slide oil tank (1) into position in frame from right side of vehicle.

2. Install oil tank mounting screw (5) through bracket (20) and loosely screw into oil tank to hold tank in place. Install remaining two mounting screws (5) through frame and screw into oil tank. Tighten all three fasteners to 36-60 **in-lbs** (4.1-6.8 Nm).

3. Install marked oil vent hose (7), feed hose (8), drain hose (9) and return hose (6) in their proper locations on oil tank fittings. Secure with new clamps (15, 16, 17).

4. Install rear fender. See 2.33 REAR FENDER: ALL XL MODELS EXCEPT XL 883N/XL 1200N, 2.34 REAR FENDER AND LICENSE PLATE BRACKET: XL 883N/XL 1200N or 2.35 REAR FENDER: XR MODELS.

5. Install rear belt guard. See 2.23 BELT GUARD AND DEBRIS DEFLECTOR.

6. Install right side cover.
   a. Engage two holes on top of cover onto stanchions on top of oil tank.
   b. Rotate bottom end of cover downward until bottom lip of cover snaps in place on tab on bottom of oil tank.

7. Fill oil tank and install filler cap/dipstick. See 1.6 ENGINE OIL AND FILTER, Checking and Adding Oil.

⚠WARNING

Connect positive (+) battery cable first. If positive (+) cable should contact ground with negative (-) cable connected, the resulting sparks can cause a battery explosion, which could result in death or serious injury. (00068a)

8. Connect positive (+) battery cables to battery. Connect negative (-) battery cable to ground point on engine crankcase. See 1.17 BATTERY MAINTENANCE.

9. Install left side cover. See 2.19 LEFT SIDE COVER.

⚠WARNING

After installing seat, pull upward on seat to be sure it is locked in position. While riding, a loose seat can shift causing loss of control, which could result in death or serious injury. (00070b)

10. Install seat.

NOTES

SUBJECT	PAGE NO.

4.1 FASTENER TORQUE VALUES....4-1
4.2 SPECIFICATIONS: FUEL SYSTEM....4-4
4.3 AIR CLEANER: XL MODELS....4-5
4.4 AIR BOX: XR MODELS....4-7
4.5 FUEL TANK: XL MODELS....4-8
4.6 FUEL TANK: XR MODELS....4-15
4.7 THROTTLE POSITION (TP) SENSOR....4-20
4.8 ENGINE TEMPERATURE (ET) SENSOR....4-24
4.9 INDUCTION MODULE: XL MODELS....4-26
4.10 INDUCTION MODULE: XR MODELS....4-33
4.11 IDLE AIR CONTROL (IAC)....4-37
4.12 TEMPERATURE MANIFOLD ABSOLUTE PRESSURE (TMAP) SENSOR....4-41
4.13 OXYGEN SENSOR....4-45
4.14 EXHAUST SYSTEM: XL MODELS....4-47
4.15 EXHAUST SYSTEM: XR MODELS....4-51
4.16 FUEL INJECTORS....4-53
4.17 FUEL PUMP....4-56
4.18 FUEL PRESSURE TEST....4-61
4.19 INTAKE LEAK TEST....4-63
4.20 EVAPORATIVE EMISSIONS CONTROL (CA MODELS)....4-65

FASTENER TORQUE VALUES IN THIS CHAPTER

The table below lists torque values for all fasteners presented in this chapter.

FASTENER	TORQUE VALUE		NOTES
Air cleaner breather screw	84-120 **in-lbs**	9.5-13.6 Nm	4.3 AIR CLEANER: XL MODELS, Installation
Air cleaner cover screw	36-60 **in-lbs**	4.1-6.8 Nm	4.3 AIR CLEANER: XL MODELS, Installation
Air filter screw	40-60 **in-lbs**	4.5-6.8 Nm	4.3 AIR CLEANER: XL MODELS, Installation
Brake rod-to-bell crank screw	120-180 **in-lbs**	13.6-20.4 Nm	4.14 EXHAUST SYSTEM: XL MODELS, Installation
Cylinder head bracket screw	17-24 ft-lbs	23.1-32.6 Nm	4.9 INDUCTION MODULE: XL MODELS, Installation
Cylinder head bracket screw	17-24 ft-lbs	23.1-32.6 Nm	4.16 FUEL INJECTORS, Installation
Cylinder head exhaust port nut	96-120 **in-lbs**	10.9-13.6 Nm	4.14 EXHAUST SYSTEM: XL MODELS, Installation
Cylinder head oil feed flare fitting, Precision Cooling	22-26 ft-lbs	29.8-35.3 Nm	4.10 INDUCTION MODULE: XR MODELS, Installation
Cylinder head oil feed line flare nut, Precision Cooling	13-17 ft-lbs	17.6-23.0 Nm	4.10 INDUCTION MODULE: XR MODELS, Installation
Engine temperature sensor	120-168 **in-lbs**	13.6-19.0 Nm	4.8 ENGINE TEMPERATURE (ET) SENSOR, Installation
EVAP canister clip mounting screw	36-60 **in-lbs**	4.1-6.8 Nm	4.20 EVAPORATIVE EMISSIONS CONTROL (CA MODELS), Charcoal Canister
EVAP canister guard screw	35-45 **in-lbs**	4.0-5.1 Nm	4.20 EVAPORATIVE EMISSIONS CONTROL (CA MODELS), Charcoal Canister
EVAP canister mounting bracket screw	17-22 ft-lbs	23.1-29.9 Nm	4.20 EVAPORATIVE EMISSIONS CONTROL (CA MODELS), Charcoal Canister
EVAP canister mounting bracket screw	17-22 ft-lbs	23.1-29.9 Nm	4.20 EVAPORATIVE EMISSIONS CONTROL (CA MODELS), Charcoal Canister
Exhaust flange nut	96-120 **in-lbs**	10.8-13.6 Nm	4.15 EXHAUST SYSTEM: XR MODELS, Installation/SPECIAL SEQUENCE TO TIGHTEN
Exhaust flange nut	96-120 **in-lbs**	10.8-13.6 Nm	4.15 EXHAUST SYSTEM: XR MODELS, Installation/SPECIAL SEQUENCE TO TIGHTEN
Exhaust flange nut	96-120 **in-lbs**	10.8-13.6 Nm	4.15 EXHAUST SYSTEM: XR MODELS, Installation/SPECIAL SEQUENCE TO TIGHTEN
Exhaust flange nut: XR Models	96-120 **in-lbs**	10.8-13.6 Nm	4.15 EXHAUST SYSTEM: XR MODELS, Installation/SPECIAL SEQUENCE TO TIGHTEN
Exhaust pipe clamp (rear) nut	20-30 ft-lbs	27.1-40.7 Nm	4.14 EXHAUST SYSTEM: XL MODELS, Installation
Exhaust pipe clamp bracket screw	30-33 ft-lbs	40.7-44.8 Nm	4.14 EXHAUST SYSTEM: XL MODELS, Installation
Filler housing screws	40-45 **in-lbs**	4.5-5.1 Nm	4.6 FUEL TANK: XR MODELS, Assemble Fuel Tank
Front muffler mount-to-frame fastener	45-50 ft-lbs	61.0-67.8 Nm	4.15 EXHAUST SYSTEM: XR MODELS, Installation
Fuel hose retaining bracket screw	60 **in-lbs**	6.8 Nm	4.16 FUEL INJECTORS, Installation
Fuel pump/sender harness grounding screw	19-36 **in-lbs**	2.1-4.1 Nm	4.17 FUEL PUMP, Assembly
Fuel pump bracket mounting screw	19-36 **in-lbs**	2.1-4.1 Nm	4.17 FUEL PUMP, Assembly
Fuel pump module mounting screw	40-45 **in-lbs**	4.5-5.1 Nm	4.17 FUEL PUMP, Installation
Fuel tank cover fastener	24-30 **in-lbs**	2.7-3.4 Nm	4.6 FUEL TANK: XR MODELS, Installing Fuel Tank
Fuel tank front fastener	15-20 ft-lbs	20.3-27.1 Nm	4.6 FUEL TANK: XR MODELS, Installing Fuel Tank

FASTENER	TORQUE VALUE		NOTES
Fuel tank mounting screw	15-20 ft-lbs	20.4-27.1 Nm	4.5 FUEL TANK: XL MODELS, Installing Fuel Tank
Fuel tank mounting screw	15-20 ft-lbs	20.4-27.1 Nm	4.9 INDUCTION MODULE: XL MODELS, Installation
Fuel tank mounting screw	15-20 ft-lbs	20.4-27.1 Nm	4.16 FUEL INJECTORS, Installation
Fuel tank rear fastener	15-20 ft-lbs	20.3-27.1 Nm	4.6 FUEL TANK: XR MODELS, Installing Fuel Tank
IAC mounting screw	60 **in-lbs**	6.8 Nm	4.9 INDUCTION MODULE: XL MODELS, Assembly
IAC mounting screw	60 **in-lbs**	6.8 Nm	4.10 INDUCTION MODULE: XR MODELS, Assembly
IAC mounting screw	60 **in-lbs**	6.8 Nm	4.11 IDLE AIR CONTROL (IAC), Installation: XL Models
IAC mounting screw (XR models)	60 **in-lbs**	6.8 Nm	4.11 IDLE AIR CONTROL (IAC), Installation: XR Models
Induction module cable bracket screw	60 **in-lbs**	6.8 Nm	4.9 INDUCTION MODULE: XL MODELS, Assembly
Induction module cover-to-cylinder head fastener	20-24 ft-lbs	27.1-32.5 Nm	4.10 INDUCTION MODULE: XR MODELS, Installation
Induction module cover-to-cylinder head fastener	20-24 ft-lbs	27.1-32.5 Nm	4.12 TEMPERATURE MANIFOLD ABSOLUTE PRESSURE (TMAP) SENSOR, Installation: XR Models
Induction module cover-to-induction module fastener	84-108 **in-lbs**	9.5-12.2 Nm	4.10 INDUCTION MODULE: XR MODELS, Installation
Induction module cover-to-induction module fastener	84-108 **in-lbs**	9.5-12.2 Nm	4.12 TEMPERATURE MANIFOLD ABSOLUTE PRESSURE (TMAP) SENSOR, Installation: XR Models
Induction module cover-to-wire form fastener	84-108 **in-lbs**	9.5-12.2 Nm	4.10 INDUCTION MODULE: XR MODELS, Installation
Induction module cover-to-wire form fastener	84-108 **in-lbs**	9.5-12.2 Nm	4.12 TEMPERATURE MANIFOLD ABSOLUTE PRESSURE (TMAP) SENSOR, Installation: XR Models
Induction module mounting bracket screw	80-110 **in-lbs**	9.0-12.4 Nm	4.9 INDUCTION MODULE: XL MODELS, Installation
Induction module-to-intake manifold screw	35 **in-lbs**	4.0 Nm	4.9 INDUCTION MODULE: XL MODELS, Assembly
Intake manifold mounting screw	96-120 **in-lbs**	10.9-13.6 Nm	4.9 INDUCTION MODULE: XL MODELS, Installation
Intake manifold mounting screw	96-120 **in-lbs**	10.9-13.6 Nm	4.10 INDUCTION MODULE: XR MODELS, Installation
Interconnect bracket-to-frame fastener	30-33 ft-lbs	40.7-44.7 Nm	4.15 EXHAUST SYSTEM: XR MODELS, Installation
Lower exhaust clamp nut: XR Models	30-33 ft-lbs	40.7-44.7 Nm	4.15 EXHAUST SYSTEM: XR MODELS, Installation
Master cylinder screw	17-22 ft-lbs	23.0-29.8 Nm	4.20 EVAPORATIVE EMISSIONS CONTROL (CA MODELS), Charcoal Canister
Muffler interconnect bracket mounting screw	30-33 ft-lbs	40.7-44.8 Nm	4.14 EXHAUST SYSTEM: XL MODELS, Installation
Muffler-to-front muffler mount fastener: XR Models	120-180 **in-lbs**	16.9-20.3 Nm	4.15 EXHAUST SYSTEM: XR MODELS, Installation
Muffler-to-interconnect bracket screw	15-19 ft-lbs	20.4-25.8 Nm	4.14 EXHAUST SYSTEM: XL MODELS, Installation
Muffler-to-muffler bolt: XR Models	120-180 **in-lbs**	16.9-20.3 Nm	4.15 EXHAUST SYSTEM: XR MODELS, Installation
Muffler torca clamp nut	38-43 ft-lbs	51.6-58.4 Nm	4.14 EXHAUST SYSTEM: XL MODELS, Installation
Muffler-to-rear muffler mount fastener	120-180 **in-lbs**	16.9-20.3 Nm	4.15 EXHAUST SYSTEM: XR MODELS, Installation

FASTENER	TORQUE VALUE		NOTES
O2 sensor	29-44 ft-lbs	39.3-59.7 Nm	4.14 EXHAUST SYSTEM: XL MODELS, Installation
Oxygen sensor	29-44 ft-lbs	39.3-59.7 Nm	4.13 OXYGEN SENSOR, Installation
Rear muffler mount-to-frame fastener	15-20 ft-lbs	20.3-27.1 Nm	4.15 EXHAUST SYSTEM: XR MODELS, Installation
Sprocket cover screw: XL models	80-120 **in-lbs**	9.0-13.6 Nm	4.14 EXHAUST SYSTEM: XL MODELS, Installation
Throttle cable bracket screw: XR models	60 **in-lbs**	6.8 Nm	4.10 INDUCTION MODULE: XR MODELS, Assembly
TMAP sensor screw	80 **in-lbs**	9.0 Nm	4.12 TEMPERATURE MANIFOLD ABSOLUTE PRESSURE (TMAP) SENSOR, Installation: XR Models
TP sensor mounting screw (XR models)	29 **in-lbs**	3.3 Nm	4.7 THROTTLE POSITION (TP) SENSOR, Installation: XR Models
TP sensor screw	35 **in-lbs**	4.0 Nm	4.7 THROTTLE POSITION (TP) SENSOR, Installation: XL Models
TP sensor screw	35 **in-lbs**	4.0 Nm	4.12 TEMPERATURE MANIFOLD ABSOLUTE PRESSURE (TMAP) SENSOR, Installation: XL Models

SPECIFICATIONS

Table 4-1. Capacities: 883 Models

ITEM	XL 883R		XL 883C		XL 883L		XL 883N	
	U.S.	LITERS	U.S.	LITERS	U.S.	LITERS	U.S.	LITERS
Fuel tank (total)	3.30 gal.	12.49	4.50 gal.	17.03	3.30 gal.	12.49	3.30 gal.	12.49
Oil tank with filter	2.80 qt.	2.65	2.80 qt.	2.65	2.80 qt.	2.65	2.80 qt.	2.65
Transmission (approximate)	1.00 qt.	0.95	1.00 qt.	0.95	1.00 qt.	0.95	1.00 qt.	0.95
Low fuel warning light on	0.80 gal.	3.03	1.00 gal.	3.79	0.80 gal.	3.03	0.80 gal.	3.03

Table 4-2. Capacities: 1200 Models

ITEM	XL 1200C		XL 1200L		XL 1200N		XR 1200		XR 1200X	
	U.S.	LITERS	U.S.	LITERS	U.S.	LITERS	U.S.	LITERS	U.S.	LITERS
Fuel tank (total)	4.50 gal.	17.03	4.50 gal.	17.03	3.30 gal.	12.49	3.50 gal.	13.25	3.50 gal.	13.25
Oil tank with filter	2.80 qt.	2.65	2.80 qt.	2.65	2.80 qt.	2.65	2.80 qt.	2.65	2.80 qt.	2.65
Transmission (approximate)	1.00 qt.	0.95	1.00 qt.	0.95	1.00 qt.	0.95	1.00 qt.	0.95	1.00 qt.	0.95
Low fuel warning light on	1.00 gal.	3.79	1.00 gal.	3.79	0.80 gal.	3.03	0.50 gal.	1.89	0.50 gal.	1.89

REMOVAL

1. See Figure 4-1. Remove two screws (1) and trim insert (2) from air cleaner cover (3).
2. Remove air cleaner cover from air cleaner backplate (10). Remove air cleaner seal (4) from air cleaner cover.
3. Remove three screws (5). Remove air filter element (6) and gasket (7) from air cleaner backplate. Discard gasket. If filter element is being removed for cleaning only, proceed to 4.3 AIR CLEANER: XL MODELS, Cleaning, Inspection and Repair which follows.

CAUTION

Install air filter before running engine. Failure to do so can draw debris into the engine and could result in engine damage. (00207a)

4. Remove two breather screws (9) from air cleaner backplate.
5. Remove air cleaner backplate and gasket (11).

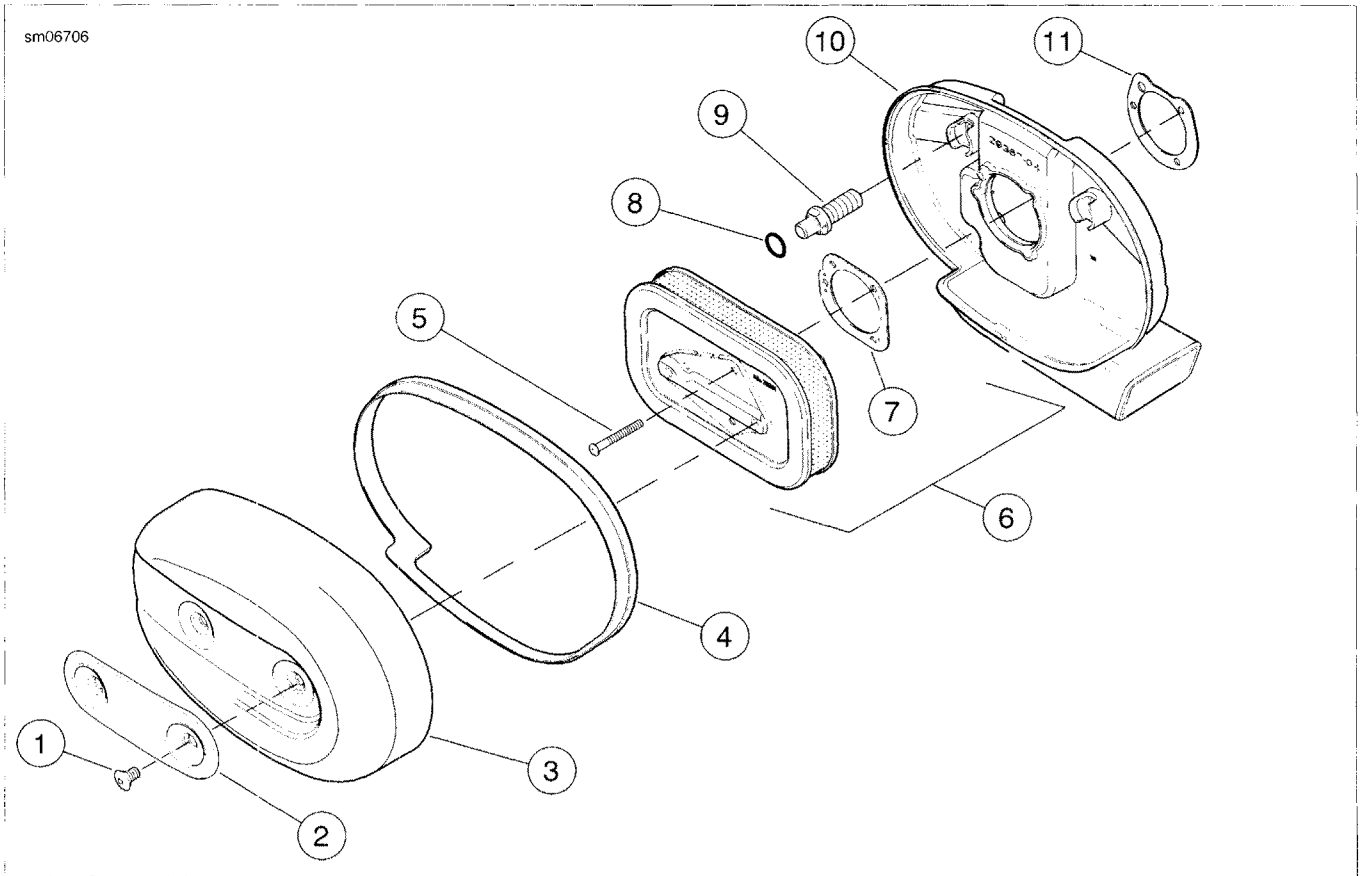

1. **Screw (2)**
2. **Trim insert**
3. **Air cleaner cover**
4. **Air cleaner seal**
5. **Screw (3)**
6. **Air filter element (includes item 7)**
7. **Filter element gasket**
8. **O-ring (2)**
9. **Breather screw (2)**
10. **Air cleaner backplate**
11. **Backplate gasket**

Figure 4-1. Air Cleaner Assembly

CLEANING, INSPECTION AND REPAIR

1. See Figure 4-1. Thoroughly clean air cleaner backplate (10) and inside of air cleaner cover (3).
2. If air filter element (6) is damaged or if filter media cannot be adequately cleaned, replace element and proceed to step 6.

⚠WARNING

Do not use gasoline or solvents to clean filter element. Flammable cleaning agents can cause an intake system fire, which could result in death or serious injury. (00101a)

3. Wash air filter element thoroughly in warm, soapy water. To remove soot and carbon, soak air filter element for 30 minutes in warm water with mild detergent.

⚠WARNING

Compressed air can pierce the skin and flying debris from compressed air could cause serious eye injury. Wear safety glasses when working with compressed air. Never use your hand to check for air leaks or to determine air flow rates. (00061a)

4. Dry air filter element using low-pressure compressed air. Rotate air filter element while moving air nozzle up and down filter element interior. Do not tap air filter element on hard surface.
5. Hold air filter element up to strong light source. Element can be considered sufficiently clean if light is uniformly visible through filter material.
6. Examine o-rings (8). If damaged, replace with **new** o-ring(s).
7. Examine air cleaner seal (4). If cracked, torn or otherwise damaged, replace with **new** seal.

INSTALLATION

1. See Figure 4-1. Position **new** gasket (11) and air cleaner backplate (10) at induction module air inlet.
2. Obtain **new** breather screws (9) or apply LOCTITE THREADLOCKER 243 to existing screws. Secure air cleaner backplate to engine heads. Tighten to 84-120 **in-lbs** (9.5-13.6 Nm).
3. Apply a thin coat of engine oil or light grease to O-rings (8). This will help prevent them from being damaged when air filter element is installed.
4. Position **new** gasket (7) on air cleaner backplate. Make sure gasket holes are lined up with backplate holes.
5. Install air filter element (6) onto backplate. Secure with three **new** screws (5) or apply LOCTITE THREADLOCKER 243 to existing screws. Tighten to 40-60 **in-lbs** (4.5-6.8 Nm).
6. Install air cleaner seal (4) on air cleaner cover (3). For proper sealing, make sure air cleaner seal covers the entire edge of the air cleaner cover.
7. Install air cleaner cover onto backplate. Make sure air cleaner seal fits inside backplate and is not pinched or distorted.
8. Install trim insert (2), and secure insert and air cleaner cover with two screws (1). Tighten to 36-60 **in-lbs** (4.1-6.8 Nm).

REMOVAL

1. Remove the fuel tank. See 4.6 FUEL TANK: XR MODELS.
2. On International models only, disconnect active intake solenoid connector located at the rear of the airbox.
3. Lift airbox off induction module, trying to leave the interface grommet attached to the induction module.
4. Disconnect crankcase vent hoses from the front and rear rocker cover fittings and remove airbox assembly from motorcycle.
5. Remove filter element as necessary. See 1.23 AIR CLEANER: XR MODELS.
6. Inspect hoses, interface grommet and housings for deterioration, cracks, or other damage. Repair or replace as necessary.

INSTALLATION

1. See Figure 4-2. Install any hoses that have been removed from the airbox assembly. Ensure the anchor barb (1) of the front crankcase vent hose is securely installed in the hole (2) in the airbox bottom.
2. If removed, install air filter element and cover. See 1.23 AIR CLEANER: XR MODELS.
3. See Figure 4-3. If removed, install interface grommet on induction module. Ensure it is completely seated on the throat (1) of the induction module.
4. While holding airbox in approximate installed location, connect crankcase vent hoses to the fittings (2) on the front and rear rocker covers. Ensure clamps are in place.

NOTE

It is extremely important that the interface grommet be correctly and securely installed on the induction module and the airbox. Failure to do so will result in ingestion of dirt and debris that would otherwise be caught by the filter element, resulting in possible decrease of engine life.

5. Place airbox assembly over interface grommet and work grommet into airbox opening until securely seated. Edge of hole in airbox will completely encircle the groove molded in the grommet when installed correctly.
6. On International models only, mate active air solenoid connector.
7. Install fuel tank. See 4.6 FUEL TANK: XR MODELS.

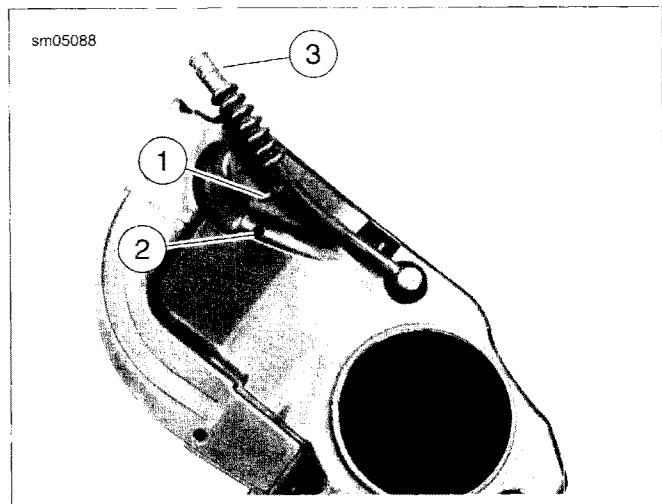

1. **Anchor barb**
2. **Anchor hole in airbox**
3. **Vent hose clamp**

Figure 4-2. Front Crankcase Vent Hose

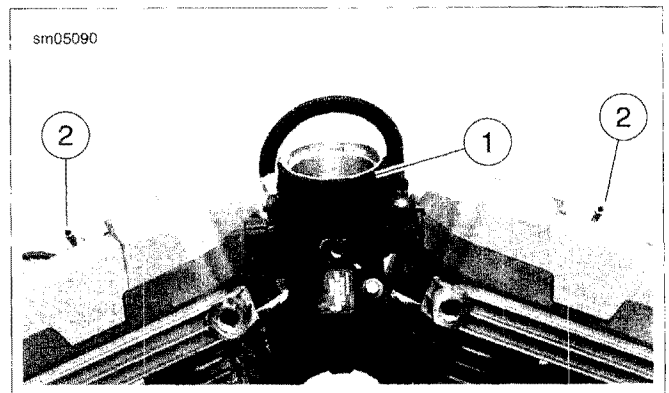

1. **Induction module throat**
2. **Fittings on rocker covers**

Figure 4-3. Airbox Connections

GENERAL

⚠WARNING

Stop the engine when refueling or servicing the fuel system. Do not smoke or allow open flame or sparks near gasoline. Gasoline is extremely flammable and highly explosive, which could result in death or serious injury. (00002a)

NOTE

See Figure 4-4. Turn the fuel filler cap (2 or 13) clockwise until at least three clicks are heard in order to verify that it is securely fastened to the fuel tank (1 or 12).

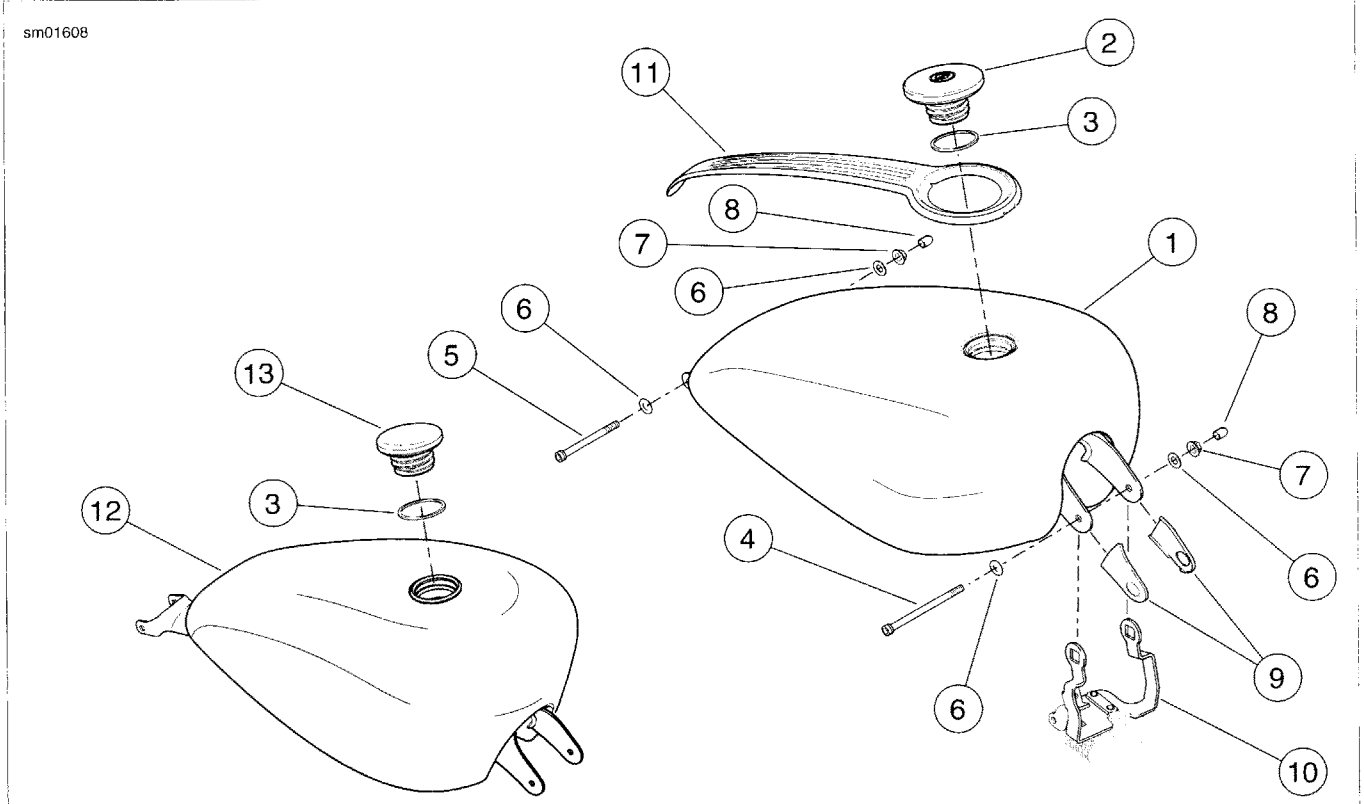

1. Fuel tank (XL 883C/XL 1200C/XL 1200L)
2. Fuel tank filler cap (XL 883C/XL 1200C/XL 1200L)
3. Gasket
4. Screw (long)
5. Screw (short)
6. Washer (4)
7. Locknut (2)
8. Protective cap (2)
9. Cosmetic cover (2)
10. Ignition coil bracket
11. Console (XL 1200C)
12. Fuel tank (XL 883L/XL 883R/XL 883N/XL 1200N)
13. Fuel tank filler cap (XL 883L/XL 883R/XL 883N/XL 1200N)

Figure 4-4. Fuel Tank and Mounting Hardware

PURGING AND DISCONNECTING FUEL SUPPLY HOSE

⚠WARNING

When servicing the fuel system, do not smoke or allow open flame or sparks in the vicinity. Gasoline is extremely flammable and highly explosive, which could result in death or serious injury. (00330a)

⚠WARNING

To prevent spray of fuel, purge system of high-pressure fuel before supply line is disconnected. Gasoline is extremely flammable and highly explosive, which could result in death or serious injury. (00275a)

1. Purge the fuel supply line of high pressure gasoline.
   a. Remove left side cover. See 2.19 LEFT SIDE COVER.
   b. See Figure 4-5. Remove fuel pump connector from ECM caddy cover (2).
   c. Unplug fuel pump connector [141].
   d. Start engine and allow vehicle to run.
   e. When engine stalls, operate starter for 3 seconds to remove any remaining fuel from fuel hose.
   f. Shut off ignition.
2. See Figure 4-6. Push up on release sleeve (1) on fuel pump quick-connect fitting and pull down on fuel supply hose fitting (2) to disconnect fuel supply hose (3) from fuel pump module (4). Immediately clean up any fuel spills.

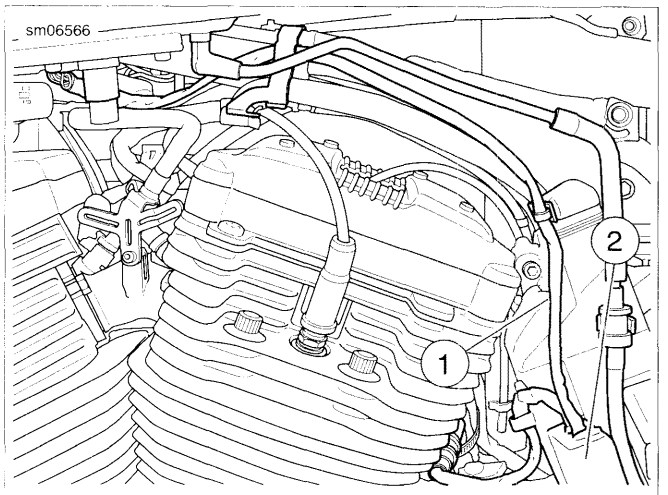

1. **Fuel pump wiring**
2. **ECM caddy cover**

Figure 4-5. Fuel Pump Connector Location (all except XR1200 models)

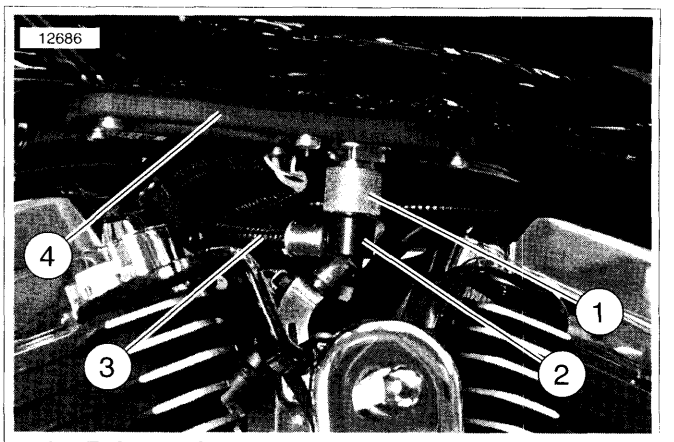

1. **Release sleeve (quick-connect fitting)**
2. **Fuel supply hose fitting**
3. **Fuel supply hose**
4. **Fuel pump module**

Figure 4-6. Fuel Tank Quick-Connect Fitting

REMOVING FUEL TANK

⚠WARNING

To prevent accidental vehicle start-up, which could cause death or serious injury, remove main fuse before proceeding. (00251b)

1. Remove main fuse. See 6.35 MAIN FUSE.
2. Remove seat.

NOTE

If the fuel tank is being removed only to gain access to items otherwise hidden, it is not necessary to drain the fuel from the tank. If the fuel tank is to be disassembled or repaired, follow the step below to drain the fuel.

3. Drain fuel tank:
   a. Obtain a suitable fuel transfer pump with a long, flexible nozzle.
   b. Position vehicle upright. Remove fuel tank filler cap.
   c. Insert fuel transfer pump nozzle into fuel tank filler spout. Aim nozzle toward right side of fuel tank to avoid contacting and damaging fuel pump assembly.
   d. Direct the pump output into a suitable container.
   e. Pump fuel until fuel tank is empty.
   f. Immediately wipe up any spilled fuel.
4. See Figure 4-7. Remove vent hose from fuel tank vent nipple. Remove cable clip (3) securing fuel pump wiring harness (2) to mounting boss on H-bracket.
5. See Figure 4-5. Unplug fuel pump connector (2) [141].
6. See Figure 4-4. Remove protective caps (8), lock nuts (7), screws (4, 5) and washers (6) from front and rear of fuel tank.
7. Place a clean, soft cloth over front of fuel tank to keep tank from contacting top fork clamp and damaging paint. Lift up rear of fuel tank. Remove fuel pump harness from clip on wire harness caddy latch clip on frame backbone.

8. Lift fuel tank off motorcycle.
9. Remove fuel pump assembly. See 4.17 FUEL PUMP.

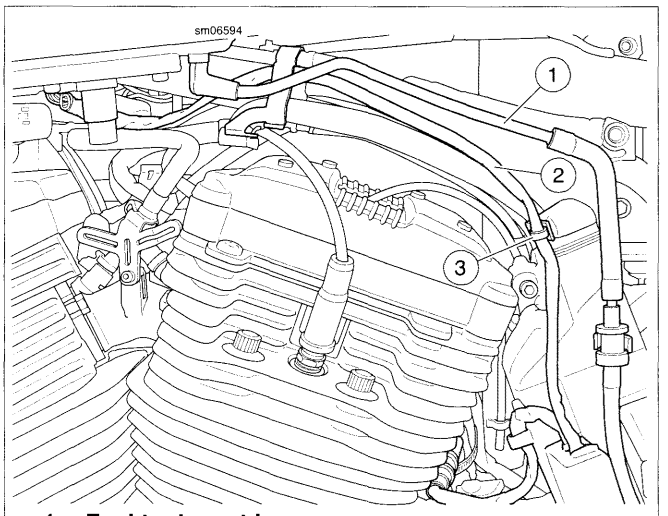

1. **Fuel tank vent hose**
2. **Fuel pump wiring harness**
3. **Cable clip**

Figure 4-7. Fuel Tank Vent Hose

CLEANING AND INSPECTION

⚠WARNING

When servicing the fuel system, do not smoke or allow open flame or sparks in the vicinity. Gasoline is extremely flammable and highly explosive, which could result in death or serious injury. (00330a)

1. Clean fuel tank interior with commercial cleaning solvent or a soap and water solution. Shake fuel tank to agitate cleaning agent.
2. Thoroughly flush fuel tank after cleaning. Allow fuel tank to air dry.
3. Carefully inspect fuel hose and vent hose for damage, cuts, cracks, holes, wear or general deterioration. Replace as necessary.
4. Inspect the fuel tank for leaks or other damage. If a damaged fuel tank cannot be successfully repaired, replace it.

INSTALLING FUEL TANK

NOTES

- *Be sure wiring harnesses do not get pinched between fuel tank and frame during tank installation.*
- *See Figure 4-8. XL models with the 3.30 gal (12.49 L) fuel tank require protective tape in location shown.*

1. Install fuel pump into fuel tank using **new** gasket. See 4.17 FUEL PUMP.
2. See Figure 4-8. Position fuel tank on motorcycle. Make certain that front fuel tank brackets are located outboard of ignition coil bracket (8).
3. Place washer (4) on long screw (2). Push screw through front fuel tank bracket, ignition coil bracket and frame, from right to left. Place second washer over screw and hand-start lock nut (5).

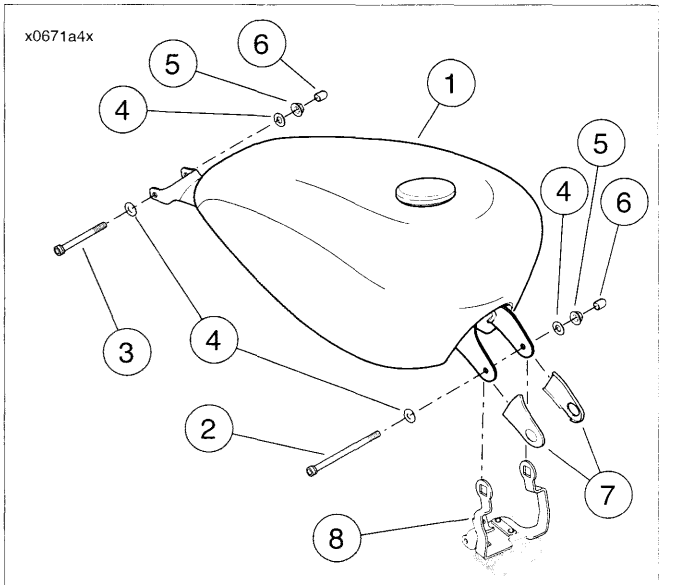

1. **Fuel tank (typical)**
2. **Screw (long)**
3. **Screw (short)**
4. **Washer (4)**
5. **Lock nut (2)**
6. **Protective cap (2)**
7. **Cosmetic cover (2)**
8. **Ignition coil bracket**

Figure 4-8. Fuel Tank Mounting (Typical)

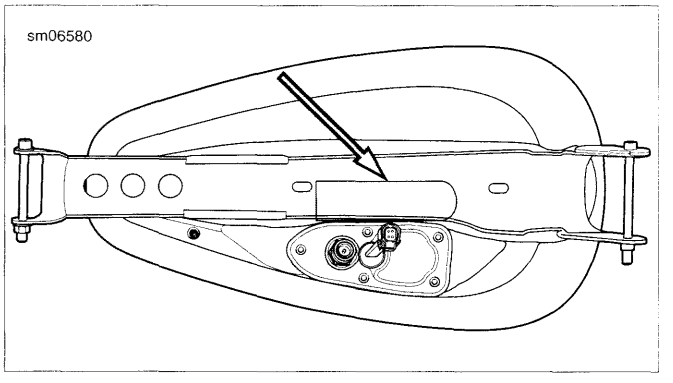

Figure 4-9. Fuel Tank Protective Tape Location

4. See Figure 4-10. Place a clean, soft cloth over front of fuel tank to keep tank from contacting top fork clamp and damaging paint. Lift up rear of fuel tank. Place fuel pump wiring harness (1) into clip on wire harness caddy latch clip on frame backbone tube. Make sure harness forms a loop (5) between caddy latch clip and fuel pump module (6) to avoid pinching harness between fuel tank and frame backbone tube.
5. Route fuel pump wiring harness down along left side of H-bracket. Secure with cable clip (3). Push clip into hole in mounting boss (2) on H-bracket.

6. Lower rear of fuel tank into position. See Figure 4-8. Place washer (4) on short screw (3). Push screw through rear fuel tank bracket and frame, from right to left. Place second washer over screw and hand-start lock nut (5).
7. Tighten both front and rear fuel tank mounting screws to 15-20 ft-lbs (20.4-27.1 Nm). Install protective caps (6) on screw ends.
8. See Figure 4-7. Install vent hose onto fuel tank vent nipple.

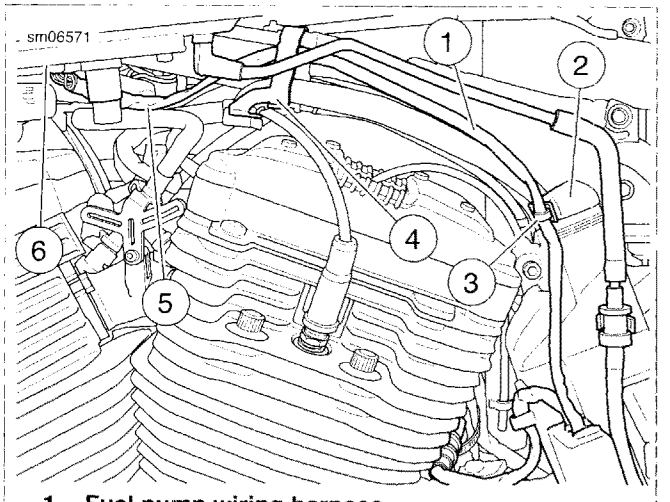

1. Fuel pump wiring harness
2. Cable clip mounting boss on ECM caddy
3. Cable clip
4. Wire harness caddy latch clip
5. Fuel pump wiring harness loop
6. Fuel pump module

Figure 4-10. Fuel Pump Wiring Harness Routing

RECONNECTING FUEL HOSE AND FILLING FUEL TANK

⚠WARNING

To prevent spray of fuel, be sure quick-connect fittings are properly mated. Gasoline is extremely flammable and highly explosive, which could result in death or serious injury. (00268a)

1. See Figure 4-6. Push up on release sleeve (1) and push fuel hose fitting (2) into fuel pump module fuel pump quick-connect fitting. Pull down on release sleeve to lock quick-connect fitting. Tug on fuel hose fitting to make sure it is securely locked in place.
2. See Figure 4-7. Install vent hose onto vent nipple on fuel tank.

⚠WARNING

Use care when refueling. Pressurized air in fuel tank can force gasoline to escape through filler tube. Gasoline is extremely flammable and highly explosive, which could result in death or serious injury. (00029a)

⚠WARNING

Avoid spills. Slowly remove filler cap. Do not fill above bottom of filler neck insert, leaving air space for fuel expansion. Secure filler cap after refueling. Gasoline is extremely flammable and highly explosive, which could result in death or serious injury. (00028a)

3. Fill fuel tank and carefully inspect for leaks around fuel pump module.
4. Install main fuse. See 6.35 MAIN FUSE.
5. Turn ignition switch ON and verify fuel pump is activated. Carefully inspect for leaks at quick-connect fitting. Turn ignition switch OFF.

⚠WARNING

After installing seat, pull upward on seat to be sure it is locked in position. While riding, a loose seat can shift causing loss of control, which could result in death or serious injury. (00070b)

6. Install seat.

VAPOR VALVE

⚠WARNING

Excessive pressure can build in the fuel tank if vapor valve is not mounted vertically with long fitting to top. Leaks due to excessive pressure can cause a fire or explosion, which could result in death or serious injury. (00265a)

See Figure 4-11. The fuel tank (1) is vented through a standpipe (vent tube) within the tank. A hose (2) at the base of the fuel tank is connected to the standpipe.

⚠WARNING

Keep vent and vapor valve lines away from exhaust and engine. Gasoline is extremely flammable and highly explosive, which could result in death or serious injury. (00263a)

The fuel tank vent hose (2) is connected to a vapor valve (3) located beneath the seat in front of the battery tray. On non-California models, another hose (5) vents the vapor valve to the atmosphere. On California models, that hose is routed to the charcoal canister. See 4.20 EVAPORATIVE EMISSIONS CONTROL (CA MODELS).

NOTES

- *Mount the vapor valve in an upright position with the longer fitting positioned at the top or excessive fuel vapor pressure may build up within the fuel tank.*
- *Do NOT force vapor valve into clip (4). Forcing valve in to clip could cause clip to break, necessitating replacement of entire wiring harness guide (4).*

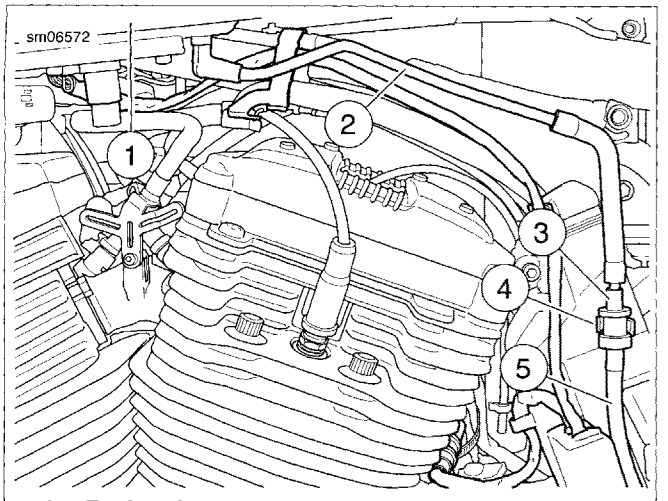

1. **Fuel tank**
2. **Fuel-to-vapor valve hose**
3. **Vapor valve**
4. **Vapor valve clip**
5. **Vapor valve-to-atmosphere hose (non-California models)**

Figure 4-11. Vapor Valve Assembly

CONSOLE REPLACEMENT

PART NUMBER	TOOL NAME
HD-47114	CONSOLE ALIGNMENT RING

In addition to the CONSOLE ALIGNMENT RING (Part No. HD-47114), other special tools are needed:

- Temporary use of a smaller diameter fuel filler cap (H-D Part Number 61272-92B). This is the original equipment cap found on 2004 or later XL 883L and XL 883R models, as well as many other Harley-Davidson models.
- Approximately 18 in. (460 mm) fishing line (or string) to aid in removing the existing console.

Removal

⚠WARNING

Stop the engine when refueling or servicing the fuel system. Do not smoke or allow open flame or sparks near gasoline. Gasoline is extremely flammable and highly explosive, which could result in death or serious injury. (00002a)

1. Remove seat.
2. See Figure 4-12. Remove the original fuel filler cap (2) from the fuel tank (1) and set it aside. Obtain a small diameter Harley-Davidson fuel filler cap (5) and screw it into the fuel filler opening.
3. See Figure 4-13. Insert the fishing line (2) between the rear of the fuel tank and the plastic liner (1) on the underside of the original console.

NOTE

Raise the ends of the fishing line away from the fuel tank to avoid scuffing the tank finish.

4. Using a side-to-side "sawing" motion, work the fishing line toward the front of the fuel tank to break the adhesive bond between the console and the tank.
5. Carefully remove the console and liner from the fuel tank and discard it.

NOTES

- *Be careful not to scratch the paint on the fuel tank when removing the adhesive.*
- *To avoid damaging the fuel tank finish, do not use tools or abrasive cleaners to remove the adhesive residue that remains on the fuel tank surface. Try to stay within the area that will be covered by the* ***new*** *console.*

6. See Figure 4-14. To remove any adhesive residue remaining on the fuel tank surface:
   a. Carefully peel off as much adhesive as possible, using your thumb and fingers only.

   NOTE

   Use of cleaning compounds other than isopropyl alcohol may damage fuel tank finish. Test in inconspicuous area.

   b. Clean the top of the fuel tank with a mixture of 50% to 70% isopropyl alcohol and 30% to 50% distilled water or, if necessary, straight isopropyl alcohol.
   c. Allow the fuel tank surface to dry thoroughly.

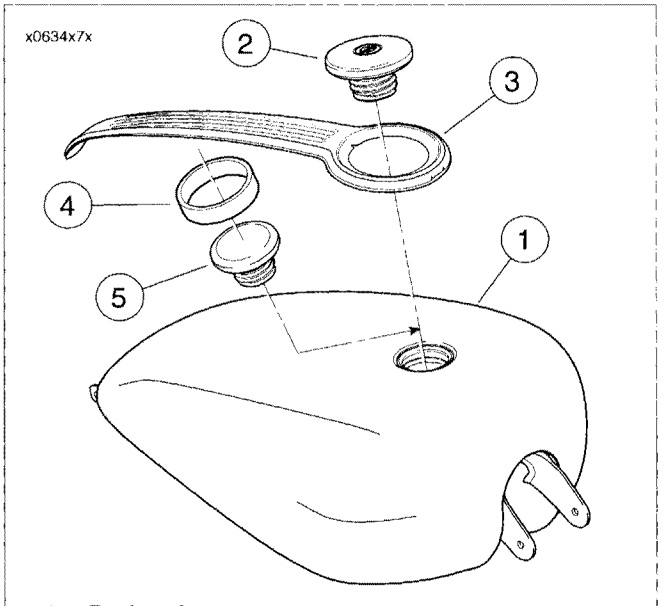

1. **Fuel tank**
2. **Original equipment fuel filler cap**
3. **Fuel tank console**
4. **Console alignment ring (Part No. HD-47114)**
5. **Small-diameter fuel filler cap**

Figure 4-12. Replacing Console: XL 1200C

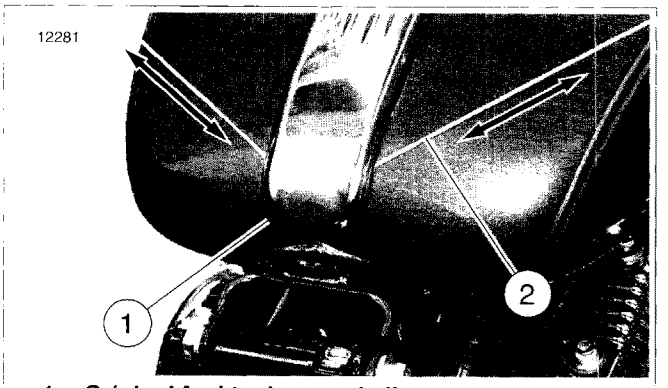

1. **Original fuel tank console liner**
2. **Fishing line or string**

Figure 4-13. Removing Existing Console

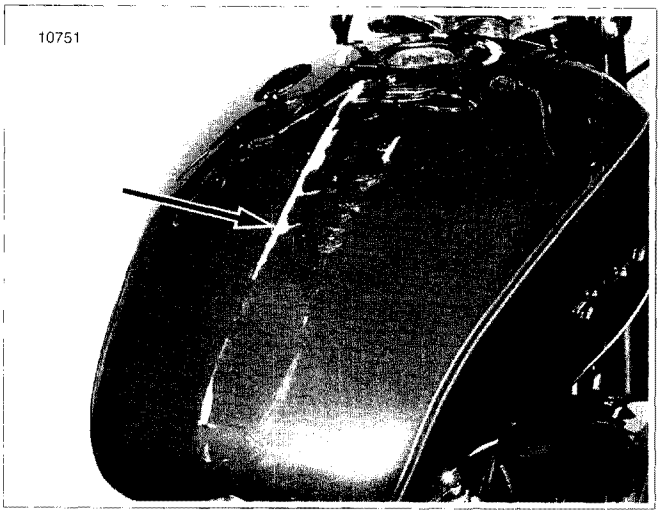

Figure 4-14. Removing Adhesive Residue

Installation

1. See Figure 4-15. Measure and mark the centerline of the fuel tank at the rear of the tank.
2. Obtain the **new** fuel tank console. Measure and mark the centerline of the console at the rear of the panel.
3. See Figure 4-16. Place CONSOLE ALIGNMENT RING (Part No. HD-47114) over the fuel filler cap.
4. Peel the liner from the adhesive backing of the console.
5. See Figure 4-17. Position the console over the fuel tank without touching the adhesive to the tank surface. Center the large hole over the CONSOLE ALIGNMENT RING (Part No. HD-47114) tool, and align the mark on the rear of the console with the mark made on the rear of the fuel tank.
6. Slide the front of the console down over the CONSOLE ALIGNMENT RING (Part No. HD-47114) tool onto the fuel tank. Bring the rear of the console down, keeping the marks aligned.
7. Press the console firmly against the top of the fuel tank and hold pressure for 30 seconds. After releasing pressure, avoid direct contact with the console for about 20 minutes, then remove the CONSOLE ALIGNMENT RING (Part No. HD-47114) tool.
8. Remove the small-diameter fuel filler cap and install the original fuel filler cap.

⚠WARNING

After installing seat, pull upward on seat to be sure it is locked in position. While riding, a loose seat can shift causing loss of control, which could result in death or serious injury. (00070b)

9. Install seat.
10. Allow AT LEAST 24 hours after applying the console before exposing the area to vigorous washing, strong water spray or extreme weather. The adhesive bond will increase to maximum strength after about 72 hours at normal room temperatures.

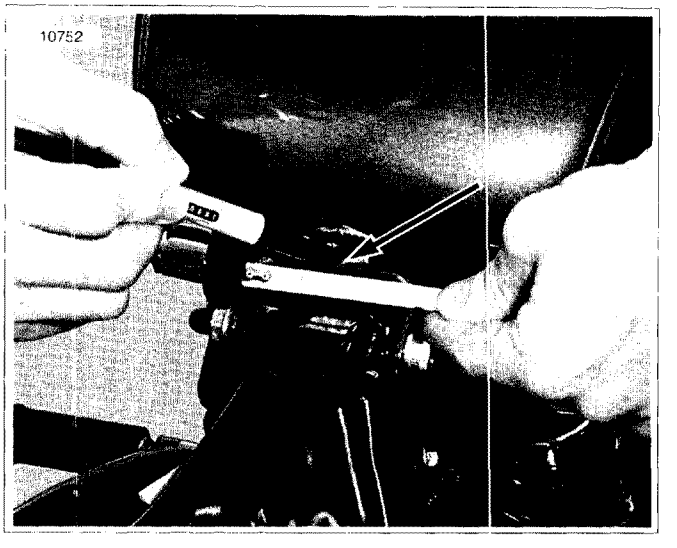

Figure 4-15. Marking Fuel Tank Centerline

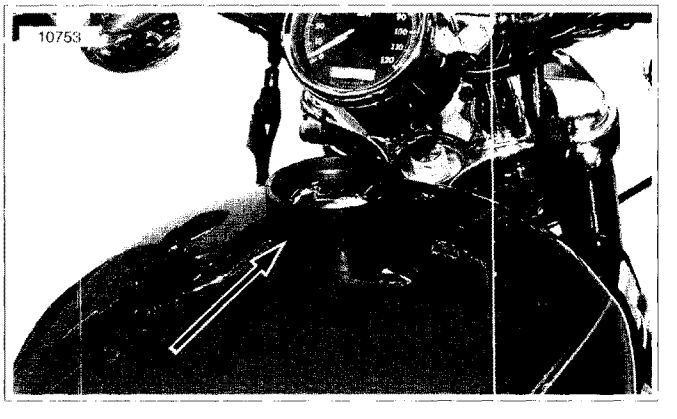

Figure 4-16. Placing Console Alignment Ring Tool (Part No. HD-47114)

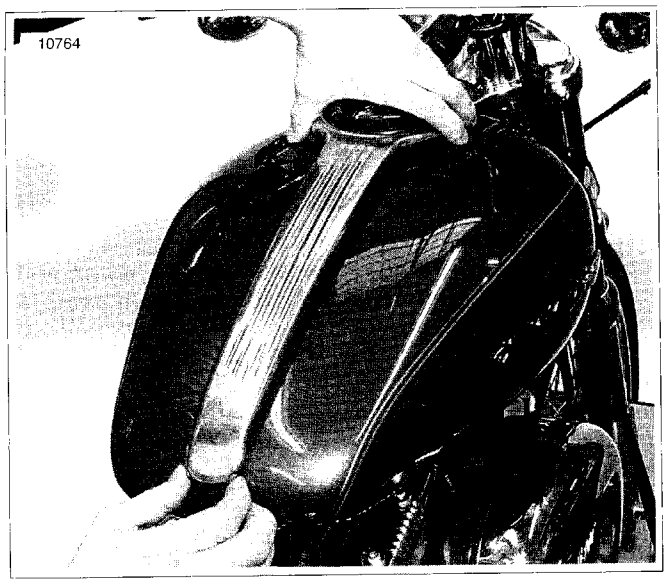

Figure 4-17. Positioning Console on Fuel Tank

GENERAL

⚠WARNING

Stop the engine when refueling or servicing the fuel system. Do not smoke or allow open flame or sparks near gasoline. Gasoline is extremely flammable and highly explosive, which could result in death or serious injury. (00002a)

PURGING AND DISCONNECTING FUEL SUPPLY HOSE

⚠WARNING

When servicing the fuel system, do not smoke or allow open flame or sparks in the vicinity. Gasoline is extremely flammable and highly explosive, which could result in death or serious injury. (00330a)

⚠WARNING

To prevent spray of fuel, purge system of high-pressure fuel before supply line is disconnected. Gasoline is extremely flammable and highly explosive, which could result in death or serious injury. (00275a)

1. Purge the fuel supply line of high pressure gasoline.
   a. See Figure 4-18. Unplug fuel pump connector [141].
   b. Start engine and allow vehicle to run.
   c. When engine stalls, operate starter for 3 seconds to remove any remaining fuel from fuel hose.
   d. Shut off ignition.

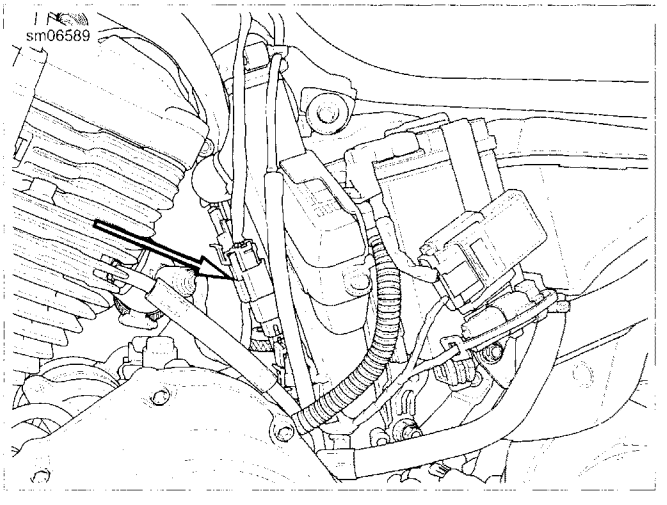

Figure 4-18. Fuel Pump Connector Location

⚠WARNING

Gasoline can drain from quick-connect fitting when removing fuel line. Gasoline is extremely flammable and highly explosive, which could result in death or serious injury. Wipe up spilled fuel immediately and dispose of rags in a suitable manner. (00267a)

2. See Figure 4-19. Push up on release sleeve (1) on fuel pump quick-connect fitting and pull down on fuel supply hose fitting (2) to disconnect fuel supply hose (3). Immediately clean up any fuel spills.

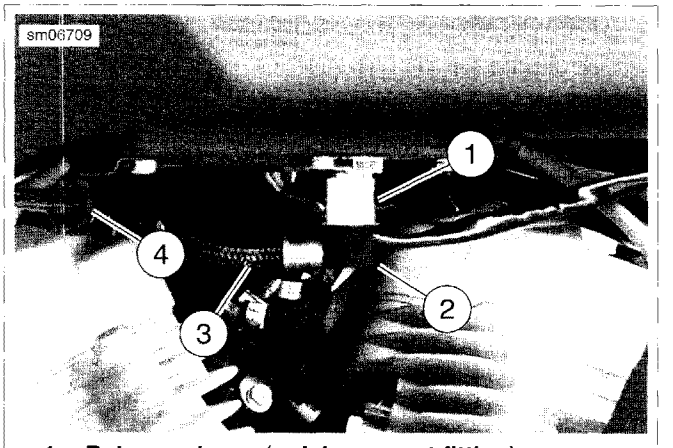

1. **Release sleeve (quick-connect fitting)**
2. **Fuel supply hose fitting**
3. **Fuel supply hose**
4. **Throttle cable retainer**

Figure 4-19. Fuel Tank Quick-Connect Fitting

REMOVING FUEL TANK

1. Purge the fuel supply line of high pressure gasoline. Disconnect fuel line from fuel tank. See 4.6 FUEL TANK: XR MODELS, Purging and Disconnecting Fuel Supply Hose.

⚠WARNING

To prevent accidental vehicle start-up, which could cause death or serious injury, remove main fuse before proceeding. (00251b)

2. Remove main fuse. See 6.35 MAIN FUSE.

NOTE

If the fuel tank is being removed only to gain access to items otherwise hidden, it is not necessary to drain the fuel from the tank. If the fuel tank is to be disassembled or repaired, follow the steps below to drain the fuel.

3. Drain fuel tank:
   a. Obtain a suitable fuel transfer pump with a long, flexible nozzle.
   b. Position vehicle upright. Remove fuel tank filler cap.
   c. Insert fuel transfer pump nozzle into fuel tank filler spout. Aim nozzle toward right side of fuel tank to avoid contacting and damaging fuel pump assembly.
   d. Direct the pump output into a suitable container.
   e. Pump fuel until fuel tank is empty.
   f. Replace fuel tank filler cap.
   g. Immediately wipe up any spilled fuel.
4. See Figure 4-19. Remove retainer (4) securing throttle cables to plate on bottom of fuel tank.

NOTE

See Figure 4-20. Short screws (2) secure trim ring to fuel tank cover only. It is not necessary to remove these screws unless either trim ring or fuel tank cover is being replaced.

5. See Figure 4-20. Remove four long screws (1) that secure trim ring (4) and fuel tank cover (5) to fuel tank.
6. Carefully lift fuel tank cover off fuel tank. Slide cover forward slightly as it is lifted to clear sides of fuel tank.
7. See Figure 4-21. Remove vent hose (3) from fuel tank vent fitting (4). With a gentle twisting motion, pull ground wire connector [210] (5) straight up off pin on fuel tank retaining ring (6).
8. Remove vent hose and ground wire from trough in center of fuel tank. Pull vent hose and ground wire back out of the way.

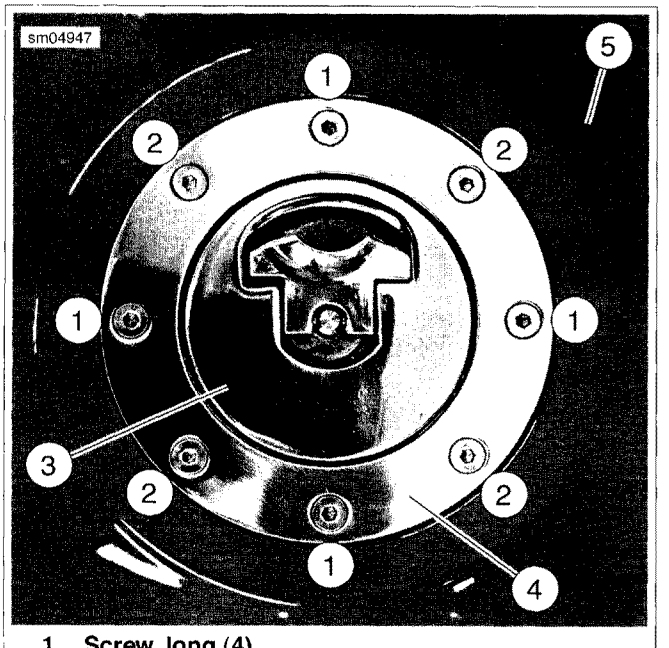

1. **Screw, long (4)**
2. **Screw, short (4)**
3. **Fuel cap**
4. **Trim ring**
5. **Fuel tank cover**

Figure 4-20. Fuel Cap and Trim Ring

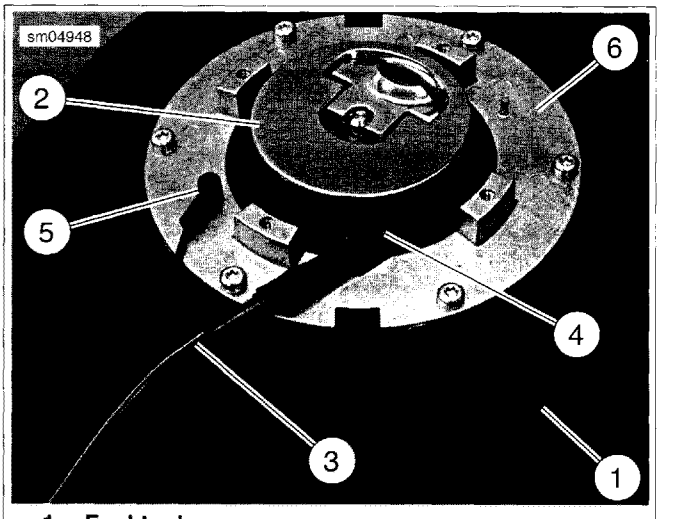

1. **Fuel tank**
2. **Fuel cap**
3. **Vent hose**
4. **Vent fitting**
5. **Ground wire connector [210]**
6. **Retaining ring**

Figure 4-21. Fuel Tank Vent Hose and Ground Wire

9. See Figure 4-22. Remove two screws and washers (3) securing airbox to bottom of fuel tank.
10. Remove screw with washer (4) from rear of fuel tank. Remove protective plastic cap (not shown) from threaded end of screw (6). Remove screw, washers and lock nut.
11. See Figure 4-19. Remove throttle cable retainer (4) from fuel tank.

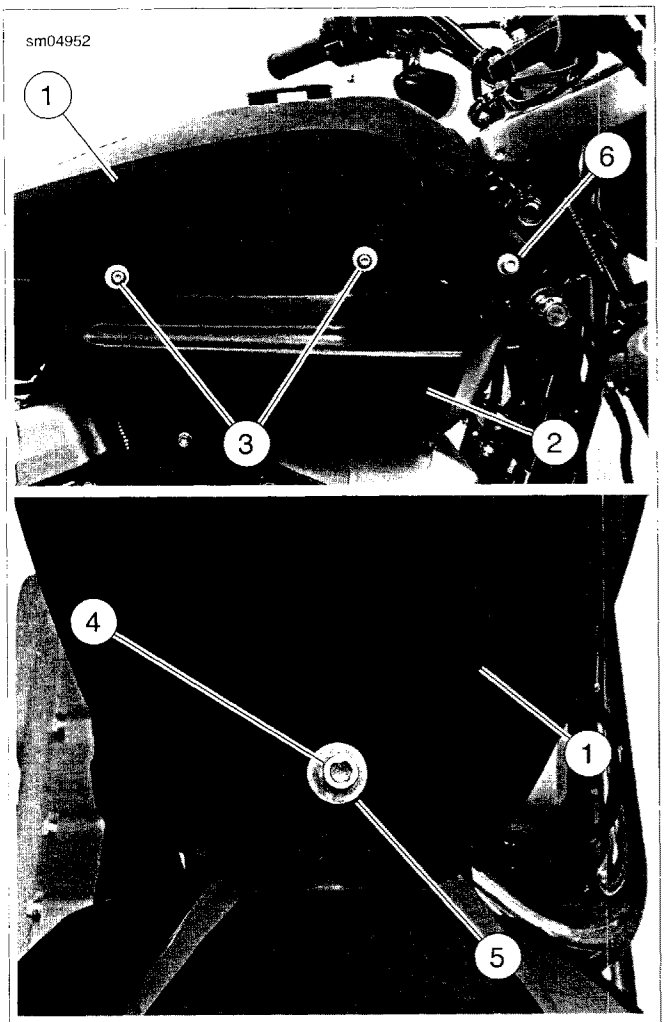

1. **Fuel tank**
2. **Airbox**
3. **Screw w/washer (2)**
4. **Screw w/washer**
5. **Rubber grommet**
6. **Screw w/washers and lock nut**

Figure 4-22. Fuel Tank and Airbox Mounting Fasteners

12. Lift fuel tank off motorcycle.

NOTE

See Figure 4-25. Metal bushings (4) inside the grommets (3) may fall when fuel tank is lifted off vehicle. Make sure they do not fall out and become lost.

13. Remove fuel pump assembly from fuel tank. See 4.17 FUEL PUMP.

DISASSEMBLE FUEL TANK

⚠WARNING

When servicing the fuel system, do not smoke or allow open flame or sparks in the vicinity. Gasoline is extremely flammable and highly explosive, which could result in death or serious injury. (00330a)

1. See Figure 4-23. Remove filler cap (1) with O-ring (2).
2. Remove screws (7) and clamp ring (3).
3. Remove top ring (4).
4. Remove O-ring (5).

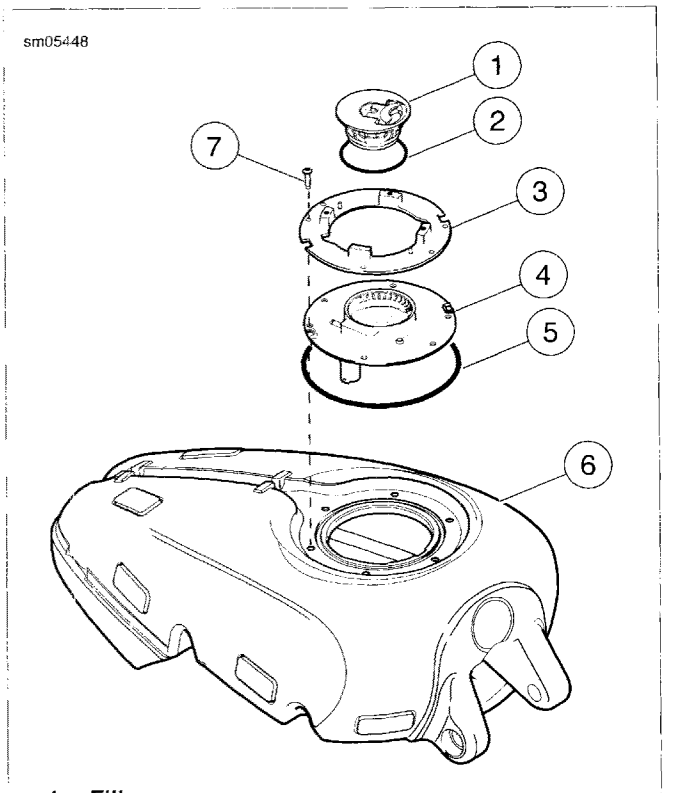

1. **Filler cap**
2. **O-ring**
3. **Clamp ring**
4. **Top ring**
5. **O-ring**
6. **Fuel tank**
7. **Screw (6)**

Figure 4-23. Fuel Tank Assembly

CLEANING AND INSPECTION

⚠WARNING

When servicing the fuel system, do not smoke or allow open flame or sparks in the vicinity. Gasoline is extremely flammable and highly explosive, which could result in death or serious injury. (00330a)

1. Clean fuel tank interior with commercial cleaning solvent or a soap and water solution. Shake fuel tank to agitate cleaning agent.
2. Thoroughly flush fuel tank after cleaning. Allow fuel tank to air dry.
3. Carefully inspect fuel hose and vent hose for damage, cuts, cracks, holes, wear or general deterioration. Replace as necessary.
4. Inspect the fuel tank for leaks or other damage. If a damaged fuel tank cannot be successfully repaired, replace it.

ASSEMBLE FUEL TANK

⚠WARNING

When servicing the fuel system, do not smoke or allow open flame or sparks in the vicinity. Gasoline is extremely flammable and highly explosive, which could result in death or serious injury. (00330a)

1. See Figure 4-23. Install O-ring (5) on top ring (4). Ensure it is seated properly.
2. Install top ring and clamp ring with screws (7).
3. See Figure 4-24. Tighten screws in the sequence shown to 40-45 **in-lbs** (4.5-5.1 Nm).
4. See Figure 4-23. Install filler cap (1) with O-ring (2).

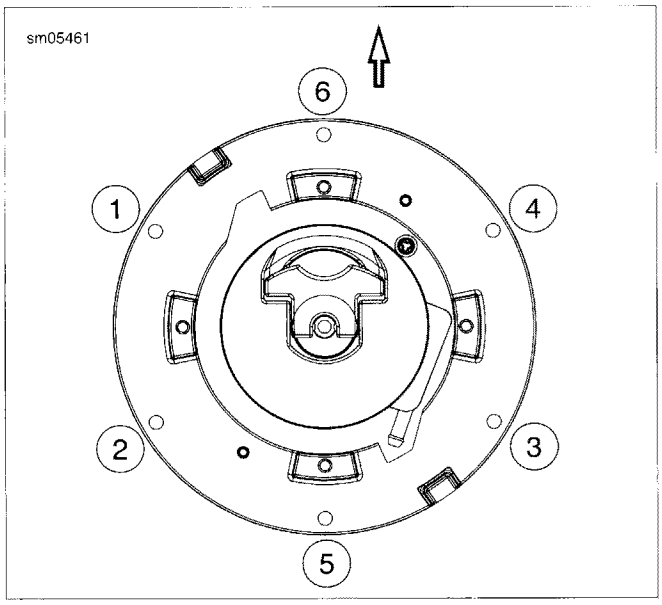

Figure 4-24. Filler Housing Torque Sequence

INSTALLING FUEL TANK

NOTE

Be sure that wiring harnesses do not get pinched between fuel tank and frame during tank installation.

1. Install fuel pump into fuel tank using **new** gasket. See 4.17 FUEL PUMP.
2. See Figure 4-25. Install rubber grommets (3) in both front mounting holes of fuel tank. Insert metal bushings (4) into rubber grommets, oriented as shown. Make certain clip nut (5) is installed on frame bracket.
3. Position fuel tank on motorcycle. Make certain that ignition coil bracket is positioned between tank mount and frame and that airbox mounting brackets are correctly mated.
4. Insert screw (6) with washer (2) through fuel tank front mounting brackets and vehicle frame. Install remaining washer and lock nut (7) on other end of screw. Do not tighten at this time.
5. Secure pump harness to main harness retainer located under fuel tank.
6. Make certain metal bushing (4) is located inside rear lower rubber grommet (3) of fuel tank. Install screw (1), washer (2), and upper grommet (3) and thread into clip nut (5). Tighten to 15-20 ft-lbs (20.3-27.1 Nm).
7. Tighten front screw (6) and nut (7) to 15-20 ft-lbs (20.3-27.1 Nm).

NOTE

Be sure airbox grommet is securely installed on induction module and airbox opening. See 4.4 AIR BOX: XR MODELS. An improperly seated grommet could lead to accelerated engine wear.

8. Secure airbox to brackets on bottom of fuel tank.
9. See Figure 4-19. Secure throttle cables to bottom of fuel tank using a **new** loop retainer.
10. See Figure 4-21. Connect vent hose (3) and ground wire (5) as shown. Route ground wire and vent hose in trough in top of tank.
11. See Figure 4-20. Install fuel tank cover and secure with four screws (1). Tighten screws to 24-30 **in-lbs** (2.7-3.4 Nm).
12. Connect fuel pump connector [141].
13. Connect fuel supply fitting. See 4.6 FUEL TANK: XR MODELS, Reconnecting Fuel Hose and Filling Fuel Tank.

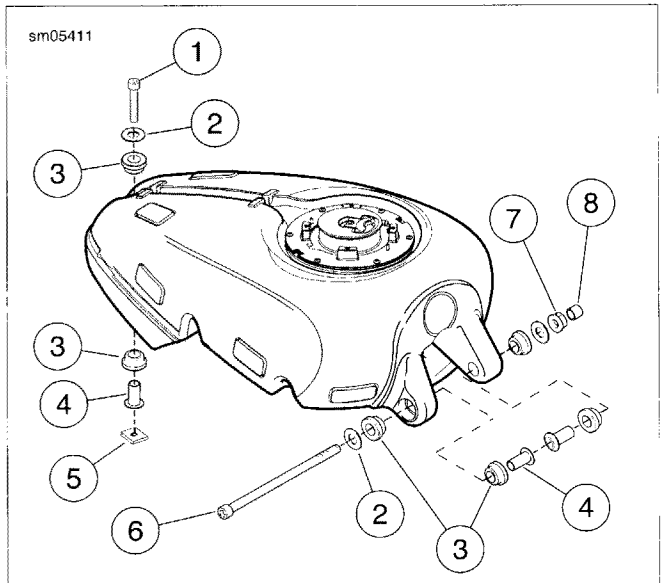

1. **Rear screw**
2. **Washer (3)**
3. **Rubber grommet (6)**
4. **Metal bushing**
5. **Clip nut**
6. **Front screw**
7. **Locknut**
8. **Cap**

Figure 4-25. Fuel Tank Mounting

RECONNECTING FUEL HOSE AND FILLING FUEL TANK

⚠WARNING

To prevent spray of fuel, be sure quick-connect fittings are properly mated. Gasoline is extremely flammable and highly explosive, which could result in death or serious injury. (00268a)

1. See Figure 4-19. Push up on release sleeve (1) and push fuel hose fitting (2) into fuel pump module fuel pump quick-connect fitting. Pull down on release sleeve to lock quick-connect fitting. Tug on fuel hose fitting to make sure it is securely locked in place.

⚠WARNING

Use care when refueling. Pressurized air in fuel tank can force gasoline to escape through filler tube. Gasoline is extremely flammable and highly explosive, which could result in death or serious injury. (00029a)

⚠WARNING

Avoid spills. Slowly remove filler cap. Do not fill above bottom of filler neck insert, leaving air space for fuel expansion. Secure filler cap after refueling. Gasoline is extremely flammable and highly explosive, which could result in death or serious injury. (00028a)

2. Fill fuel tank and carefully inspect for leaks around fuel pump module.
3. Install main fuse. See 6.35 MAIN FUSE.
4. Turn ignition switch ON and verify fuel pump is activated. Carefully inspect for leaks at quick-connect fitting and induction module. Turn ignition switch OFF.
5. Install left side cover.

GENERAL

⚠WARNING

Stop the engine when refueling or servicing the fuel system. Do not smoke or allow open flame or sparks near gasoline. Gasoline is extremely flammable and highly explosive, which could result in death or serious injury. (00002a)

See Figure 4-26. The Throttle Position (TP) sensor is located on the side of the induction module and monitors the physical position of the throttle shaft.

Refer to the electrical diagnostic manual for information on the function and testing of the TP sensor.

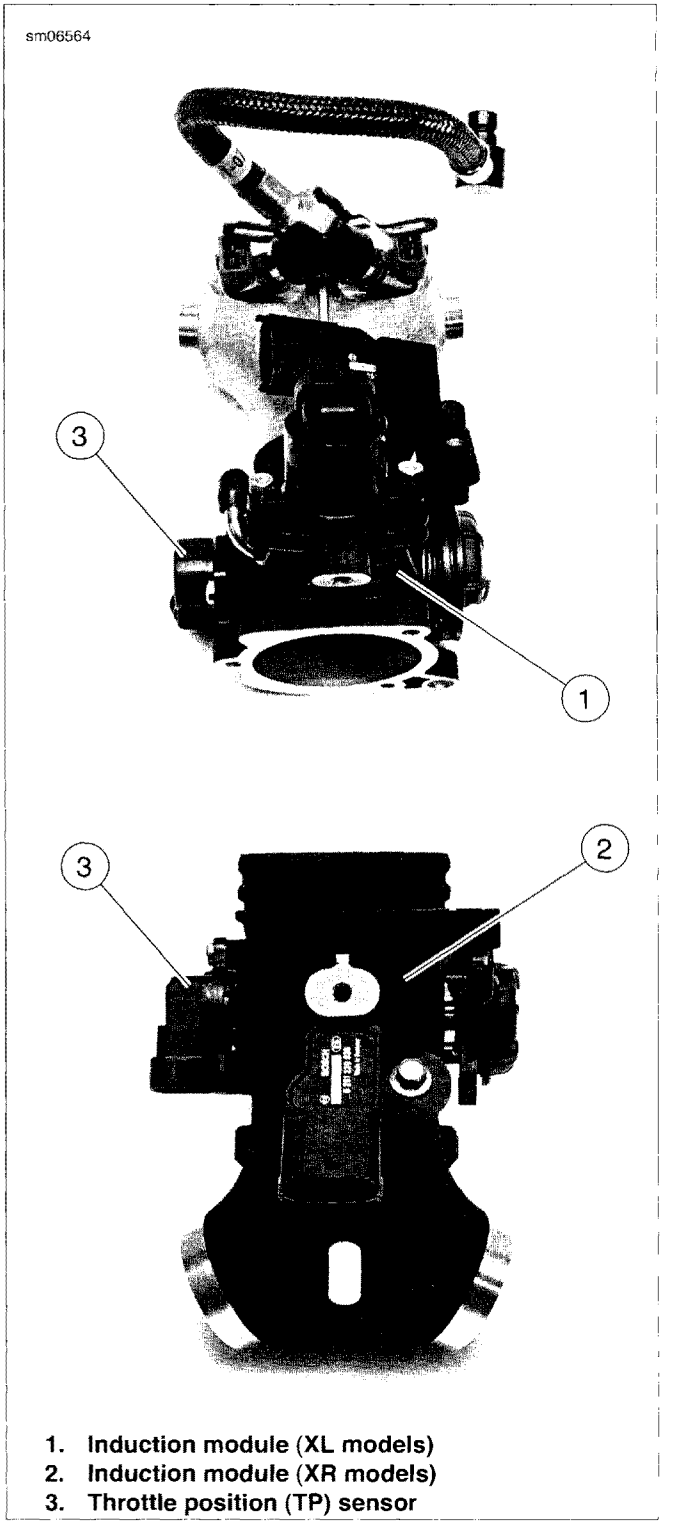

1. **Induction module (XL models)**
2. **Induction module (XR models)**
3. **Throttle position (TP) sensor**

Figure 4-26. Throttle Position (TP) Sensor Location (Induction Module Removed From Vehicle for Clarity)

REMOVAL: XL MODELS

NOTE

It is not necessary to remove the induction module from XL model vehicles in order to replace the TP sensor.

⚠WARNING

To prevent accidental vehicle start-up, which could cause death or serious injury, remove main fuse before proceeding. (00251b)

1. Unplug main fuse. See 6.35 MAIN FUSE.
2. Remove air cleaner cover, air filter element and backing plate assembly. See 4.3 AIR CLEANER: XL MODELS.

NOTE

It is important to prevent contaminants from entering the TPS connectors. Cover both the harness connector and the TPS connector cavity with tape immediately after disconnecting harness.

3. See Figure 4-27. Unplug TP sensor harness connector [88B] from connector socket [88A] (4). Cover both connectors with tape.
4. Remove two screws (5) and detach TP sensor (3) from induction module (1).

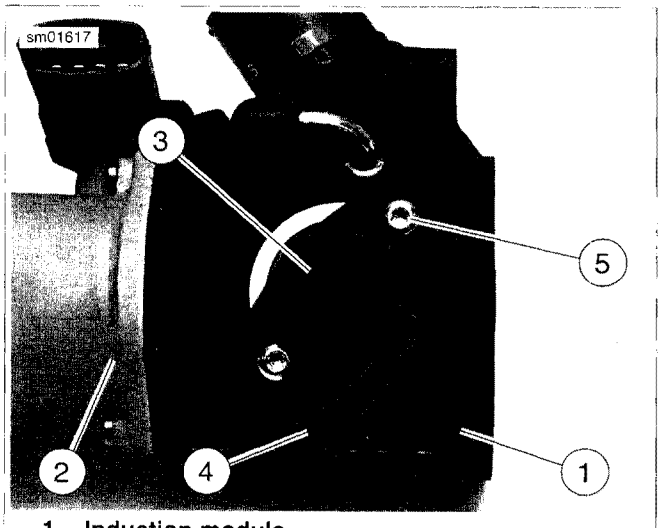

1. **Induction module**
2. **Intake manifold**
3. **Throttle position (TP) sensor**
4. **TP connector socket [88A]**
5. **Screw (2)**

Figure 4-27. Throttle Position (TP) Sensor Removal (XL Models)

INSTALLATION: XL MODELS

NOTES

- *Throttle must be closed for proper installation of throttle position sensor.*
- *See Figure 4-27. Note orientation of TP sensor (3) relative to induction module (1) body; connector socket is at approximately the 7 o'clock position, facing toward intake manifold (2).*

1. See Figure 4-28. Fit pocket (3) of TP sensor (2) over throttle shaft (4). Orient TP sensor correctly and line up mounting holes in sensor with holes in body of induction module (1).
2. Make sure TP sensor body is flush against mounting boss on induction module body. Install two screws (5) to fasten sensor to induction module. Tighten screws to 35 **in-lbs** (4.0 Nm).
3. Open and close throttle plates and check for proper operation. Be sure mechanism operates smoothly without binding or sticking.
4. Connect TP sensor harness socket connector [88B] to sensor pin connector [88A].
5. Install air cleaner backing plate assembly, air filter element and air cleaner cover. See 4.3 AIR CLEANER: XL MODELS.
6. Install main fuse and close left side cover. See 6.35 MAIN FUSE.
7. Start vehicle and check for proper throttle operation and correct idle speed.

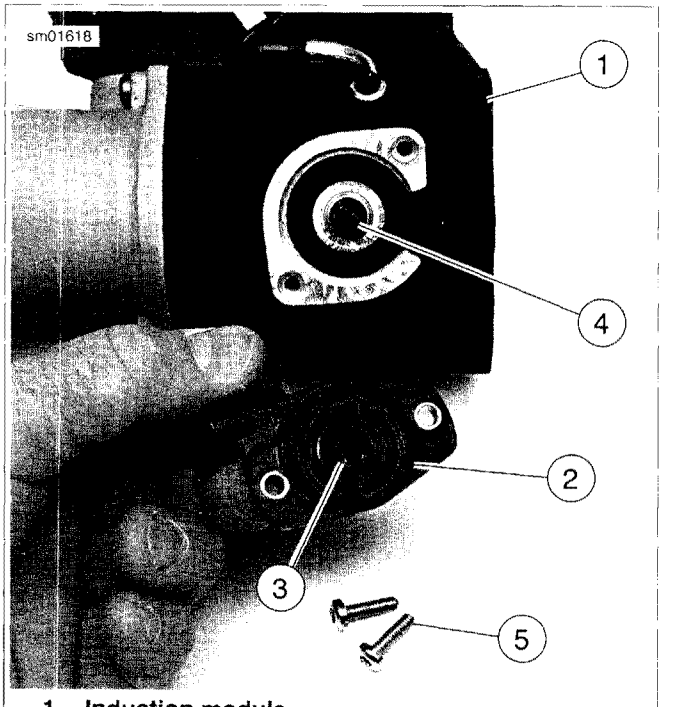

1. **Induction module**
2. **Throttle position (TP) sensor**
3. **Pocket**
4. **Throttle shaft**
5. **Screw (2)**

Figure 4-28. Throttle Position (TP) Sensor Installation (XL Models)

REMOVAL: XR MODELS

⚠WARNING

To prevent spray of fuel, purge system of high-pressure fuel before supply line is disconnected. Gasoline is extremely flammable and highly explosive, which could result in death or serious injury. (00275a)

⚠WARNING

Gasoline can drain from quick-connect fitting when removing fuel line. Gasoline is extremely flammable and highly explosive, which could result in death or serious injury. Wipe up spilled fuel immediately and dispose of rags in a suitable manner. (00267a)

1. Purge the fuel supply hose of high pressure gasoline. Disconnect fuel supply hose from fuel pump module. See 4.6 FUEL TANK: XR MODELS.

⚠WARNING

To prevent accidental vehicle start-up, which could cause death or serious injury, remove main fuse before proceeding. (00251b)

2. Unplug main fuse. See 6.35 MAIN FUSE.
3. Remove fuel tank and airbox. See 4.6 FUEL TANK: XR MODELS and 4.4 AIR BOX: XR MODELS.

NOTE

It is important to prevent contaminants from entering the TPS connectors. Cover both the harness connector and the TPS connector cavity with tape immediately after disconnecting harness.

4. See Figure 4-29. Remove induction module from vehicle. See 4.10 INDUCTION MODULE: XR MODELS.
5. Remove two screws (4) and detach TP sensor (2) from induction module (1).

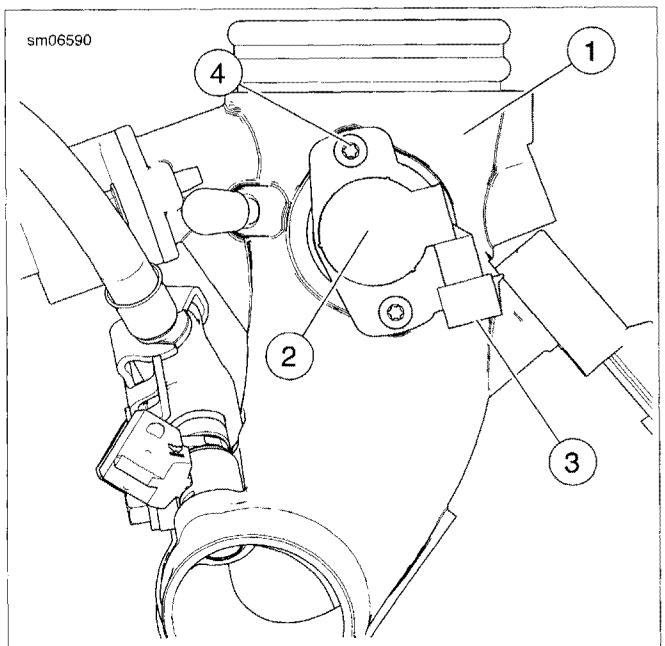

1. **Induction module**
2. **Throttle position (TP) sensor**
3. **TP sensor connector socket [88A]**
4. **Screw (2)**

Figure 4-29. Throttle Position (TP) Sensor Removal (XR Models)

INSTALLATION: XR MODELS

NOTES

- *Throttle must be closed for proper installation of throttle position sensor.*
- *See Figure 4-29. Note installed orientation of TP sensor (2) relative to induction module (1) body; connector socket is at approximately the 5:00 o'clock position.*

1. See Figure 4-30. Place sensor over throttle shaft with the connector housing (1) facing toward the mounting flange (2) as shown.
2. Rotate the TP sensor counterclockwise into position as shown in Figure 4-29.
3. Make sure TP sensor body is flush against mounting boss on induction module body. Install two screws (4). Tighten to 29 **in-lbs** (3.3 Nm).
4. Open and close throttle plate and check for proper operation. Be sure mechanism operates smoothly without binding or sticking.

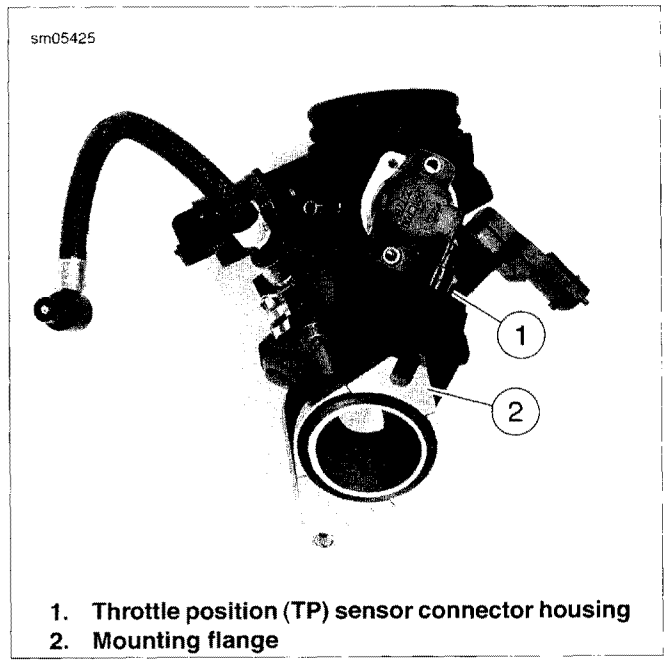

1. **Throttle position (TP) sensor connector housing**
2. **Mounting flange**

Figure 4-30. Throttle Position (TP) Sensor Installation (XR Models)

5. Install induction module. See 4.10 INDUCTION MODULE: XR MODELS.
6. Install airbox assembly and fuel tank. See 4.4 AIR BOX: XR MODELS and 4.6 FUEL TANK: XR MODELS.

⚠WARNING

To prevent spray of fuel, be sure quick-connect fittings are properly mated. Gasoline is extremely flammable and highly explosive, which could result in death or serious injury. (00268a)

7. Connect fuel hose to fuel pump module. Fill fuel tank and carefully check for leaks around fuel hose fitting. See 4.6 FUEL TANK: XR MODELS

8. Plug in main fuse. See 6.35 MAIN FUSE.
9. Turn ignition switch on and again check for leaks at the quick connect fitting and at the induction module.
10. Start vehicle and check for proper throttle operation and correct idle speed.

GENERAL

See Figure 4-31. The engine temperature (ET) sensor is located in the top of the rear cylinder head.

Refer to the electrical diagnostic manual for information on the function and testing of the ET sensor.

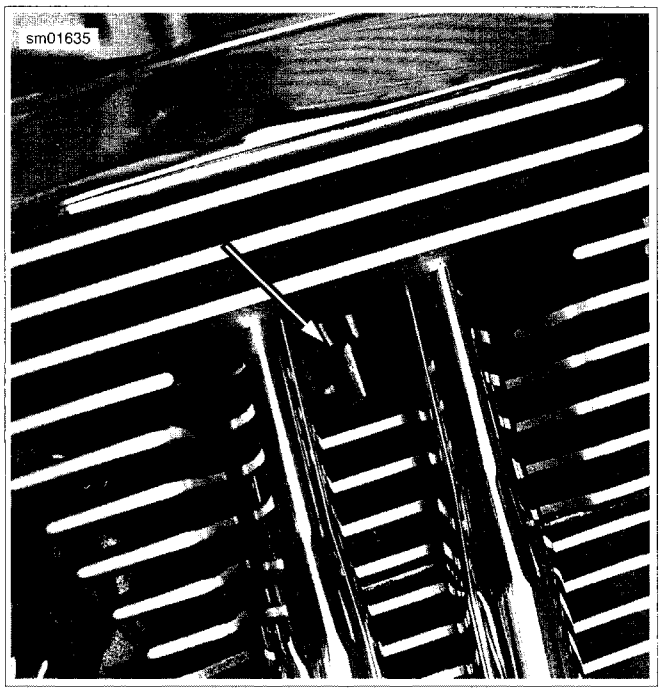

Figure 4-31. Engine Temperature (ET) Sensor Location

REMOVAL

PART NUMBER	TOOL NAME
HD-48116-A	TEMPERATURE SENSOR SOCKET

⚠WARNING

To prevent spray of fuel, purge system of high-pressure fuel before supply line is disconnected. Gasoline is extremely flammable and highly explosive, which could result in death or serious injury. (00275a)

⚠WARNING

Gasoline can drain from quick-connect fitting when removing fuel line. Gasoline is extremely flammable and highly explosive, which could result in death or serious injury. Wipe up spilled fuel immediately and dispose of rags in a suitable manner. (00267a)

1. Purge the fuel supply hose of high pressure gasoline. Disconnect fuel supply hose from fuel pump module. See 4.5 FUEL TANK: XL MODELS or 4.6 FUEL TANK: XR MODELS.

⚠WARNING

To prevent accidental vehicle start-up, which could cause death or serious injury, remove main fuse before proceeding. (00251b)

2. Unplug main fuse. See 6.35 MAIN FUSE.
3. Remove fuel tank. See 4.5 FUEL TANK: XL MODELS or 4.6 FUEL TANK: XR MODELS.
4. See Figure 4-32 or Figure 4-33. Disconnect the ET sensor connector [90] (3) located on right side of H-bracket.
5. Cut barbed cable strap (2) to free sensor harness from H-bracket.
6. **XR models:** See Figure 4-33. Disconnect the breather hose (1) from the rear cylinder to gain access to the sensor.
7. Remove ET sensor as follows:
   a. Attach a universal joint, 6-in. extension and ratchet to TEMPERATURE SENSOR SOCKET (Part No. HD-48116-A).
   b. See Figure 4-34. Fit engine temperature sensor harness (2) into slot in temperature sensor socket (3).
   c. Slide socket down harness, through square hole in center of rear rocker cover assembly and fit onto ET sensor (1).
   d. See Figure 4-35. Once you have installed the temperature sensor socket (1) onto the sensor (4), secure the sensor harness to the socket extension (3) with tape (6). This will facilitate removal of the sensor.
   e. Remove ET sensor from rear cylinder head.

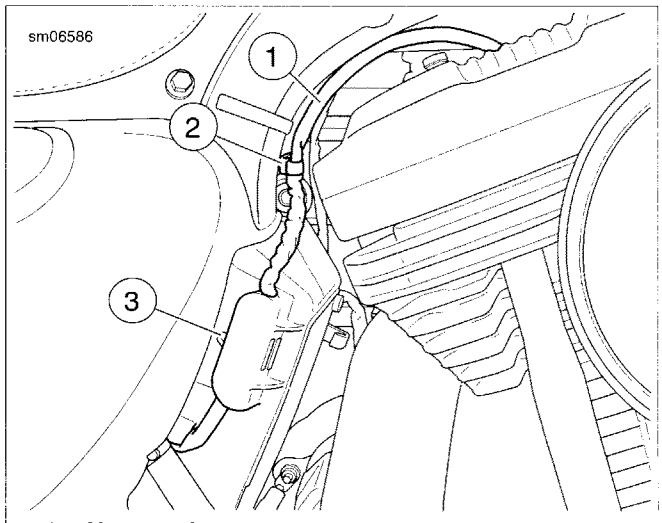

1. **Harness loop**
2. **Barbed cable strap**
3. **Engine Temperature Sensor Connector Location**

Figure 4-32. Engine Temperature Sensor Harness: XL Models

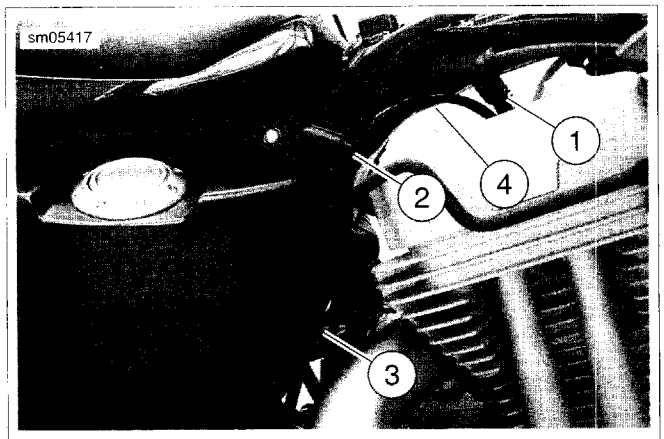

1. Breather hose
2. Barbed cable strap
3. Sensor harness connector [90]
4. Harness Loop

Figure 4-33. Engine Temperature Sensor Harness: XR Models

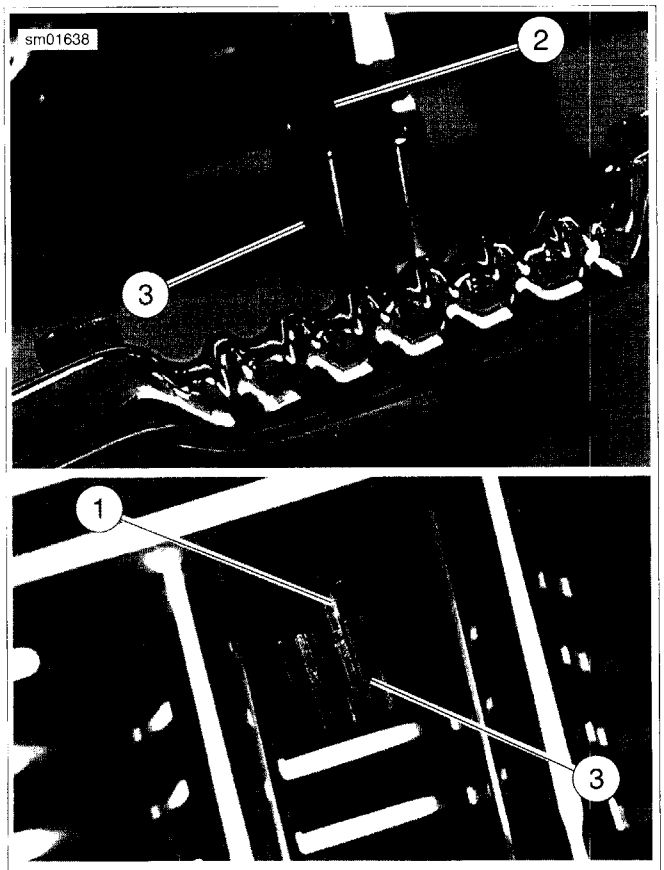

1. ET sensor
2. Sensor harness
3. Temperature sensor socket

Figure 4-34. Installing Engine Temperature Sensor Socket (XL shown)

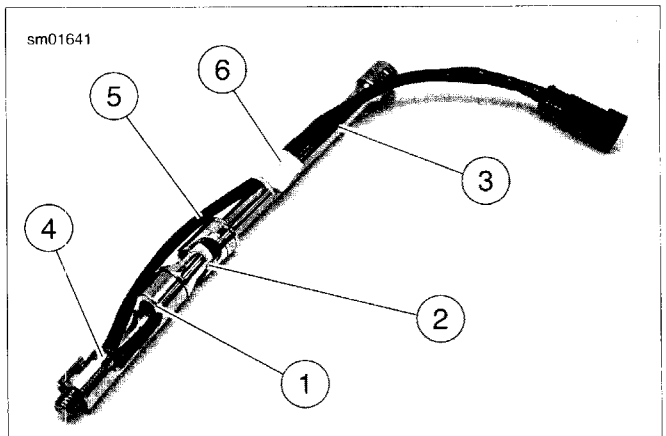

1. Temperature sensor socket
2. Universal joint
3. Socket extension
4. Engine temperature sensor
5. Sensor harness
6. Tape

Figure 4-35. Tape Sensor Harness to Extension (Sensor Removed from Vehicle for Clarity)

INSTALLATION

1. See Figure 4-35. Fit engine temperature sensor (4) into temperature sensor socket (1).

NOTE

The next step is very important. The sensor harness MUST be able to turn with the socket and extension. If it does not, it will be damaged when the sensor is installed in the cylinder head.

2. Holding sensor in place in socket, wrap a piece of tape (6) around sensor harness (5) and socket extension (3).
3. Slide assembly down into top of rear head and carefully thread sensor into head. Do not cross-thread. Tighten to 120-168 **in-lbs** (13.6-19.0 Nm).

NOTE

See Figure 4-32. Make sure there is a loop (4) in sensor harness when securing harness. If harness is pulled tight or contacting the rear rocker cover, it could be damaged during vehicle operation.

4. See Figure 4-32 or Figure 4-33. Use a barbed cable strap (2) to secure sensor harness. Position cable strap so harness forms a loop (4) between sensor and cable strap.
5. Connect sensor connector [90] (3) and secure to caddy.
6. Install fuel tank and connect fuel supply hose. See 4.5 FUEL TANK: XL MODELS or 4.6 FUEL TANK: XR MODELS.
7. Install main fuse and close left side cover. See 6.35 MAIN FUSE.

⚠WARNING

After installing seat, pull upward on seat to be sure it is locked in position. While riding, a loose seat can shift causing loss of control, which could result in death or serious injury. (00070b)

8. Install seat.

GENERAL

The XL model induction module is a side-draft unit with a separate intake manifold. The induction module includes the throttle body, fuel injectors, TMAP sensor, TP sensor and IAC.

REMOVAL

⚠WARNING

Stop the engine when refueling or servicing the fuel system. Do not smoke or allow open flame or sparks near gasoline. Gasoline is extremely flammable and highly explosive, which could result in death or serious injury. (00002a)

⚠WARNING

To prevent spray of fuel, purge system of high-pressure fuel before supply line is disconnected. Gasoline is extremely flammable and highly explosive, which could result in death or serious injury. (00275a)

⚠WARNING

Gasoline can drain from quick-connect fitting when removing fuel line. Gasoline is extremely flammable and highly explosive, which could result in death or serious injury. Wipe up spilled fuel immediately and dispose of rags in a suitable manner. (00267a)

1. Purge the fuel supply hose of high pressure gasoline. Disconnect fuel supply hose from fuel pump module. See 4.5 FUEL TANK: XL MODELS.

⚠WARNING

To prevent accidental vehicle start-up, which could cause death or serious injury, remove main fuse before proceeding. (00251b)

2. Unplug main fuse. See 6.35 MAIN FUSE.
3. Remove air cleaner cover, air filter and backing plate assembly. See 4.3 AIR CLEANER: XL MODELS.
4. Remove seat.
5. Loosen (but do not remove) front fuel tank mounting screw. Remove rear fuel tank mounting screw, washers and nut. Carefully pivot rear of fuel tank upward and prop in position. See 4.5 FUEL TANK: XL MODELS.
6. See Figure 4-36. Remove screw (2) and mounting bracket (1).

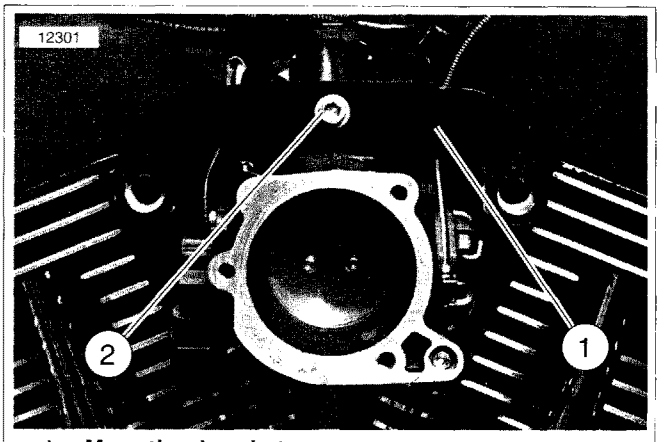

1. **Mounting bracket**
2. **Screw**

Figure 4-36. Induction Module Mounting Bracket

7. See Figure 4-37. Unplug the following connectors:
   a. front fuel injector (4) connector [84],
   b. rear fuel injector (5) connector [85],
   c. TMAP sensor (6) connector [80],
   d. IAC (7) connector [87],

   NOTE

   It is important to prevent contaminants from entering the TPS connectors. Cover both the harness connector and the TPS connector cavity with tape immediately after disconnecting harness.

   e. TP sensor (8) connector [88].
8. **California models only:** remove purge hose from fitting (9) on induction module (1).

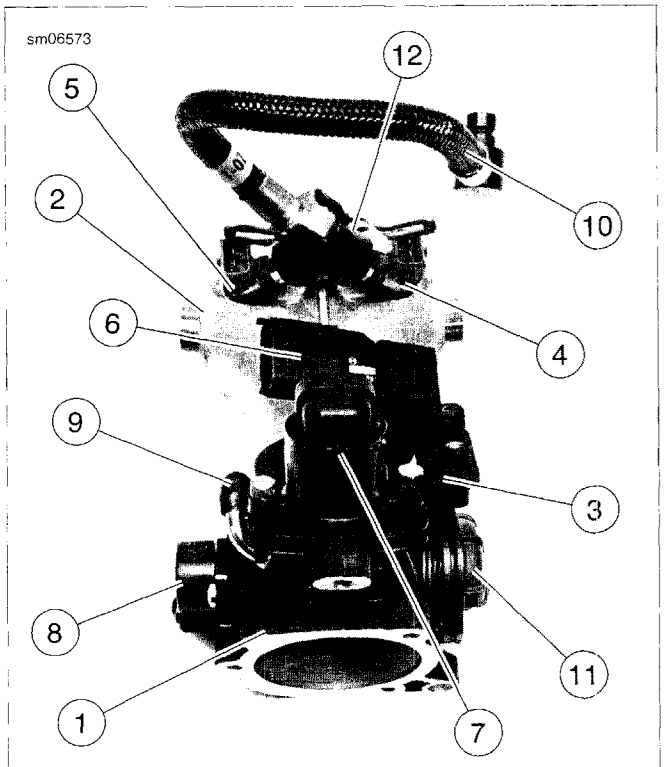

1. **Induction module**
2. **Intake manifold**
3. **Throttle cable bracket**
4. **Front fuel injector [84A]**
5. **Rear fuel injector [85A]**
6. **TMAP sensor [80A]**
7. **IAC [87A]**
8. **TP sensor [88A]**
9. **Purge hose fitting (California models only)**
10. **Fuel supply hose**
11. **Throttle wheel**
12. **Fuel rail**

Figure 4-37. Induction Module Assembly (Removed from Vehicle for Clarity)

9. See Figure 4-38. Slide rubber boot off idle control cable assembly (1).
10. Loosen jam nut (3).
11. Loosen cable adjuster as far as possible to provide maximum slack in idle cable.

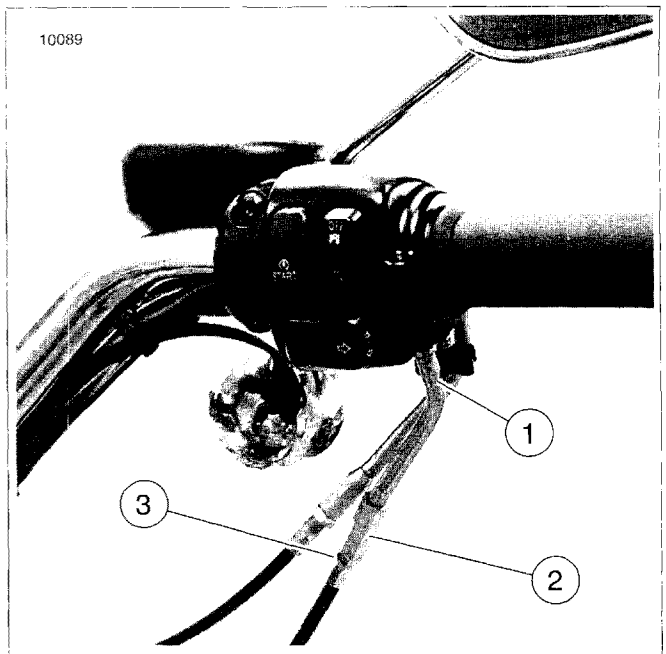

1. **Idle control (pull close) cable assembly**
2. **Cable adjuster**
3. **Jam nut**

Figure 4-38. Idle Control Cable Adjustment

12. **XL Models with side mounted horn:** See Figure 4-39. Remove screws (3), washers (2) and cylinder head bracket (1) from engine. Unplug harness connectors [122] from horn (4).
13. See Figure 4-40. Loosen two screws (2) securing intake manifold to heads on left side of vehicle, but do not remove screws.
14. See Figure 4-41. Remove two screws (3) securing intake manifold to heads on right side of vehicle.
15. Pull mounting flanges (4) away from heads as much as possible and pull induction module and intake manifold assembly toward the right side, away from vehicle.

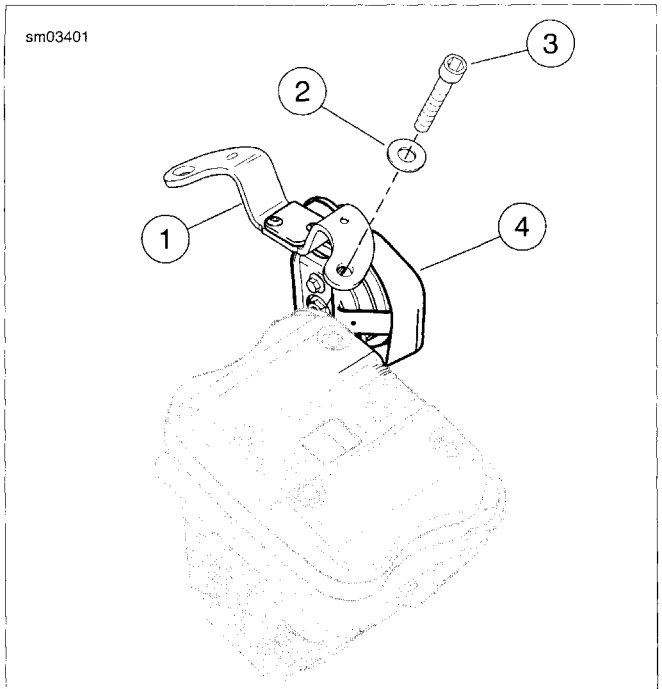

1. Cylinder head bracket
2. Washer (2)
3. Screw (2)
4. Horn assembly

Figure 4-39. Horn and Cylinder Head Bracket (XL Models With Side Mounted Horn Only)

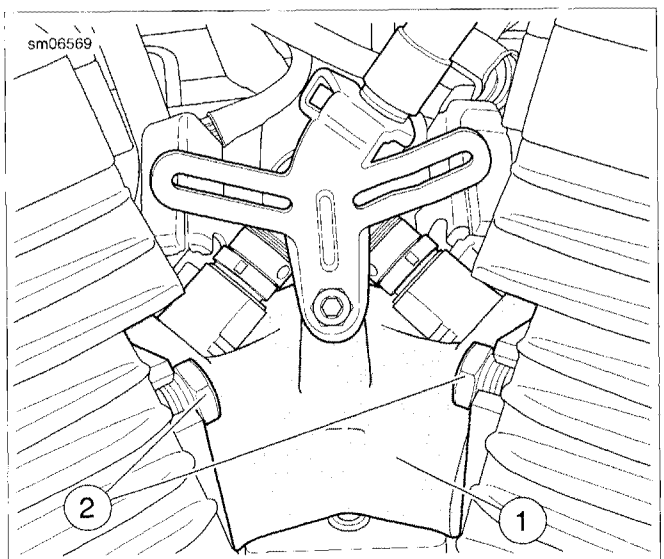

1. Intake manifold
2. Screw (2)

Figure 4-40. Intake Manifold Mounting Screws: Left Side

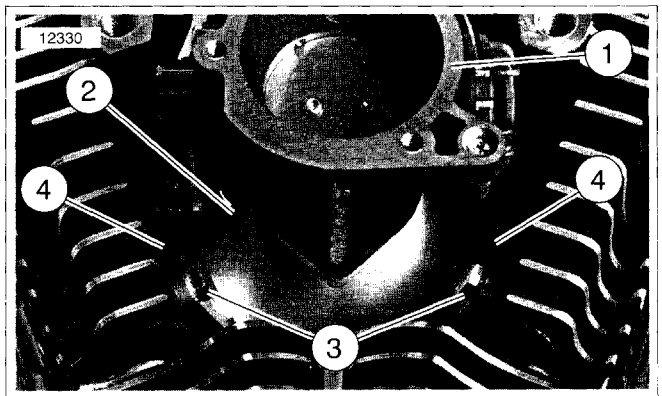

1. Induction module
2. Intake manifold
3. Screw (2)
4. Mounting flange (2)

Figure 4-41. Intake Manifold Mounting Screws: Right Side

16. See Figure 4-42. Remove throttle cable (5) from throttle wheel (7)
    a. Lift throttle cable housing (1) up out of cable guide (3) in throttle/idle cable bracket (2).
    b. Slide throttle cable (5) out through slot (4) in cable guide.
    c. Unwind throttle cable from groove in throttle wheel (7).
    d. Slide cable out through slot (8) and remove throttle cable barrel (6) from throttle wheel.

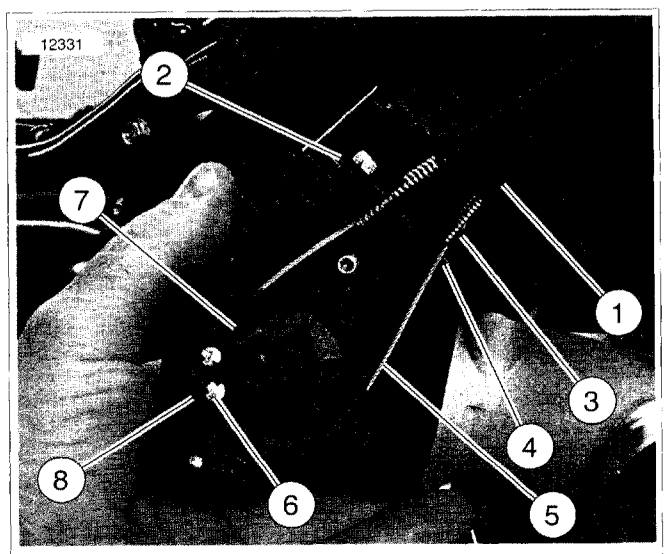

1. Throttle cable housing
2. Throttle/idle cable bracket
3. Cable guide
4. Slot
5. Throttle cable
6. Cable barrel
7. Throttle wheel
8. Slot

Figure 4-42. Removing/Installing Throttle Cable

17. See Figure 4-43. In a similar fashion, remove idle cable (3) from throttle wheel (6):
    a. Lift idle cable housing (1) and spring (2) up out of cable guide (7) in throttle/idle cable bracket.
    b. Slide idle cable (3) out through slot in cable guide.
    c. Unwind idle cable from groove in throttle wheel (6).
    d. Slide cable out through slot (5) and remove idle cable barrel (4) from throttle wheel.
18. Remove induction module and intake manifold from vehicle.

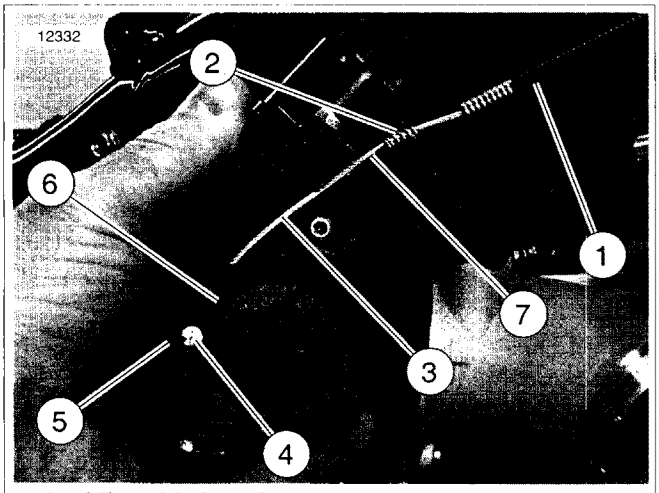

1. **Idle cable housing**
2. **Spring**
3. **Idle cable**
4. **Cable barrel**
5. **Slot**
6. **Throttle wheel**
7. **Cable guide**

Figure 4-43. Removing/Installing Idle Cable

DISASSEMBLY

PART NUMBER	TOOL NAME
HD-25070	HEAT GUN

⚠WARNING

Gasoline can drain from the fuel line when disconnected from induction module. Gasoline is extremely flammable and highly explosive, which could result in death or serious injury. Wipe up spilled fuel immediately and dispose of rags in a suitable manner. (00269a)

1. Remove fuel hose, fuel rail and fuel injectors. See 4.16 FUEL INJECTORS.
2. See Figure 4-44. Remove screws (1, 2) and cable bracket (3) from induction module (4).

NOTE

When removing the IAC, the mounting screws MUST be heated to soften the thread sealant and avoid breakage during removal. Use ONLY HEAT GUN (Part No. HD-25070) to heat the screws. NEVER use an open flame.

3. Remove the following assemblies:
    a. TP Sensor. See 4.7 THROTTLE POSITION (TP) SENSOR.
    b. TMAP sensor. See 4.12 TEMPERATURE MANIFOLD ABSOLUTE PRESSURE (TMAP) SENSOR.
    c. IAC. See 4.11 IDLE AIR CONTROL (IAC).
4. See Figure 4-45. Remove two screws (3) to separate induction module (1) from intake manifold (2). Discard o-ring (4).

NOTE

At this level of disassembly, induction module contains no more serviceable parts. If induction module is determined to be damaged or defective, replace it.

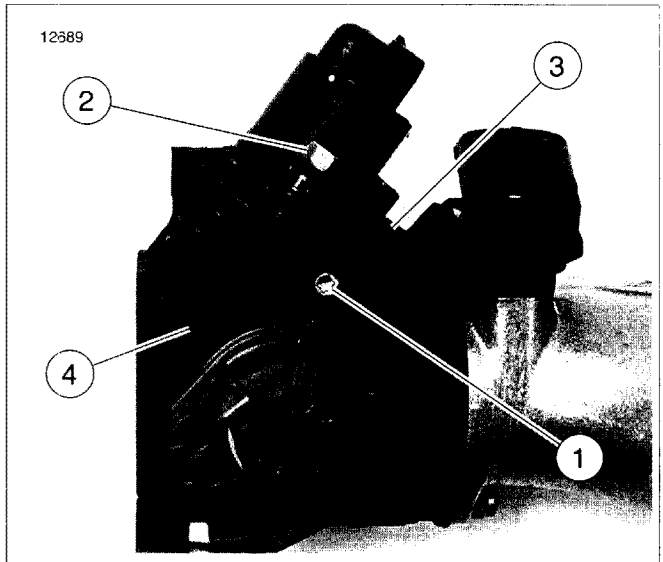

1. **Screw**
2. **Screw**
3. **Cable bracket**
4. **Induction module**

Figure 4-44. Removing/Installing Cable Bracket

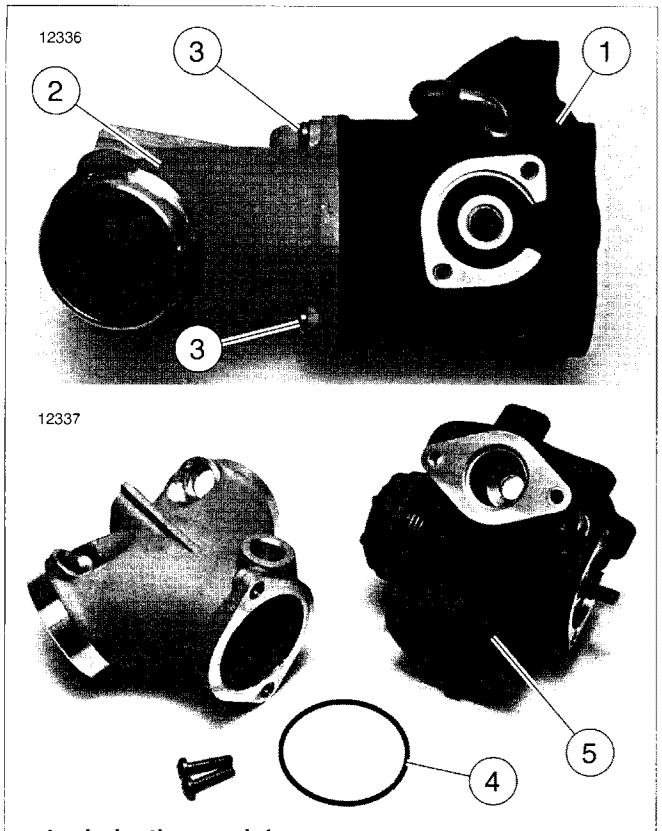

1. **Induction module**
2. **Intake manifold**
3. **Screw (2)**
4. **O-ring**
5. **Groove**

Figure 4-45. Induction Module Assembly

ASSEMBLY

1. See Figure 4-45. Place **new** O-ring (4) into groove (5) in induction module (1) mating surface.
2. Mate induction module to intake manifold (2). Secure with two screws (3). Tighten screws to 35 **in-lbs** (4.0 Nm).
3. Install the following assemblies:
   a. TP Sensor. See 4.7 THROTTLE POSITION (TP) SENSOR.
   b. TMAP sensor. See 4.12 TEMPERATURE MANIFOLD ABSOLUTE PRESSURE (TMAP) SENSOR.
   c. IAC. See 4.11 IDLE AIR CONTROL (IAC).

NOTE

Do not install IAC mounting screw on throttle wheel side of induction module until cable bracket is installed in the next step. Install other IAC mounting screw but do not tighten at this time.

4. See Figure 4-44. Install cable bracket (3) onto induction module (4). Obtain **new** screws (1, 2) or apply LOCTITE 243 to existing screws. Install both screws finger-tight. Then tighten both IAC mounting screws to 60 **in-lbs** (6.8 Nm). Tighten side screw (1) to 60 **in-lbs** (6.8 Nm).
5. Install fuel injectors, fuel rail and fuel hose. See 4.16 FUEL INJECTORS.

INSTALLATION

1. See Figure 4-40. Make sure two mounting screws (2) are screwed into heads two or three turns.
2. See Figure 4-46. Install mounting flanges (1) on intake manifold (5) with counterbore (2) facing away from manifold and open slotted ends of flanges facing away from induction module (6) as shown in the figure.
3. Place a **new** seal (3) into each mounting flange with the beveled edge (4) facing the mounting flange counterbore.

NOTE

When induction module is positioned on manifold mounting screws, be sure the flanges are installed correctly on the manifold. Also be sure the rubber seals are in place.

4. See Figure 4-40. Place induction module assembly in position between engine heads. Slide open slotted ends of mounting flanges under heads of two mounting screws (2) on left side of engine.
5. See Figure 4-41. Holding induction module/intake manifold assembly in place, install two mounting screws (3) into remaining mounting flange holes. Tighten all four screws finger-tight.
6. See Figure 4-36. Install mounting bracket (1) and screw (2). Tighten screw finger-tight.
7. Temporarily install two breather screws through mounting bracket. Thread breather screws into cylinder heads finger-tight. This will properly line up induction module assembly.
8. Tighten screw installed in step 6. to 80-110 **in-lbs** (9.0-12.4 Nm).
9. Tighten all four intake manifold mounting screws to 96-120 **in-lbs** (10.9-13.6 Nm).
10. See Figure 4-43. Install idle cable barrel (4) into throttle wheel (6). Slide idle cable (3) through slot (5) and wind around groove in throttle wheel.
11. Pull cable through slot in cable guide (7). Slide spring (2) and end of idle cable housing (1) down into cable guide.
12. See Figure 4-42. Install throttle cable barrel (6) into throttle wheel (7). Slide throttle cable through slot (8) and wind around groove in throttle wheel.
13. Pull cable through slot (4) in cable guide (3). Slide end of throttle cable housing (1) down into cable guide.
14. Adjust throttle and idle cables. See 1.25 THROTTLE CONTROL.
15. **XL Models with side mounted horn:** See Figure 4-47. Plug harness connectors [122] into horn (4). Mount cylinder head bracket (1) on engine. Secure with washers (2) and screws (3). Tighten to 17-24 ft-lbs (23.1-32.6 Nm).

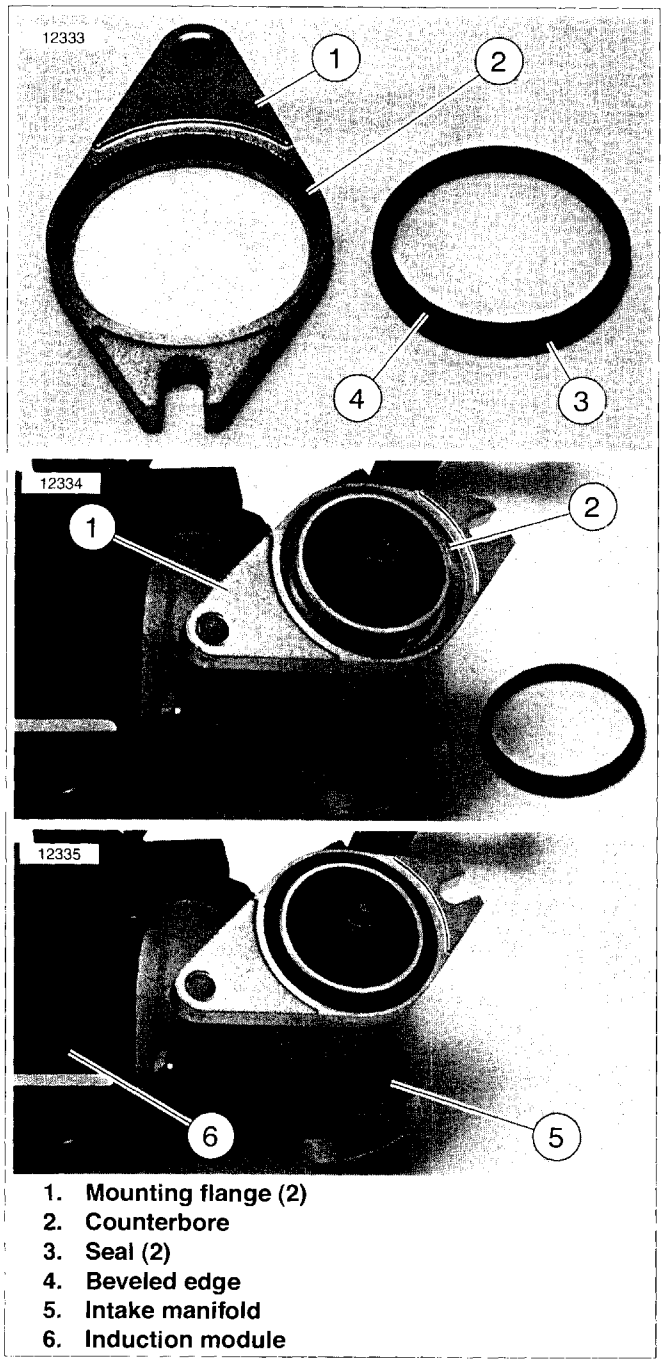

1. **Mounting flange (2)**
2. **Counterbore**
3. **Seal (2)**
4. **Beveled edge**
5. **Intake manifold**
6. **Induction module**

Figure 4-46. Installing Mounting Flange and Seal

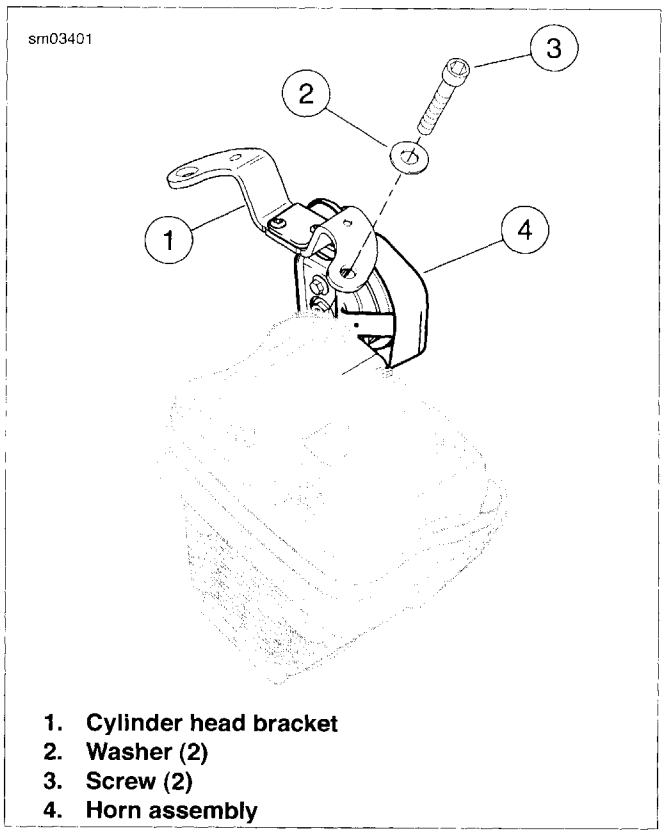

1. **Cylinder head bracket**
2. **Washer (2)**
3. **Screw (2)**
4. **Horn assembly**

Figure 4-47. Horn and Cylinder Head Bracket (XL Models With Side Mounted Horn Only)

16. **California models only:** See Figure 4-48. Install purge hose onto fitting (2) on induction module (1).
17. See Figure 4-49. Plug in the following connectors:
    a. Front fuel injector (1) connector [84],
    b. Rear fuel injector (2) connector [85],
    c. TMAP sensor (3) connector [80],
    d. IAC (4) connector [87],
    e. TP sensor (5) connector [88].
18. Remove prop from under rear of fuel tank. Lower rear of fuel tank into position and install screw, washer and nut in fuel tank rear mounting holes. Tighten front and rear mounting screws to 15-20 ft-lbs (20.4-27.1 Nm). Install protective caps on screw ends. See 4.5 FUEL TANK: XL MODELS.
19. Remove breather screws that were temporarily installed in step 7. Install air cleaner backing plate assembly, air filter element and air cleaner cover. See 4.3 AIR CLEANER: XL MODELS.

⚠WARNING

To prevent spray of fuel, be sure quick-connect fittings are properly mated. Gasoline is extremely flammable and highly explosive, which could result in death or serious injury. (00268a)

20. Connect fuel hose to fuel pump module. Fill fuel tank and carefully check for leaks around fuel pump module. See 4.5 FUEL TANK: XL MODELS.

21. Install main fuse and close left side cover. See 6.35 MAIN FUSE.

22. Turn Ignition/Light Key Switch to ON and then back to OFF to reset idle air control to park position.

⚠WARNING

After installing seat, pull upward on seat to be sure it is locked in position. While riding, a loose seat can shift causing loss of control, which could result in death or serious injury. (00070b)

23. Install seat.

24. Road test vehicle.

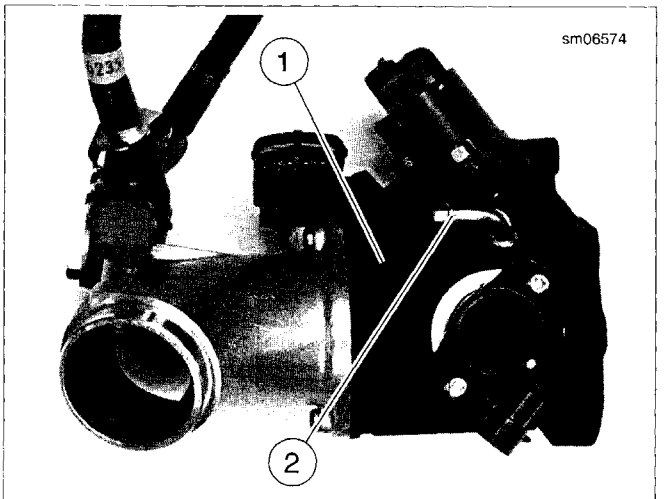

1. **Induction module**
2. **Purge hose (to canister) fitting**

Figure 4-48. Purge Hose Fitting (California Models Only)

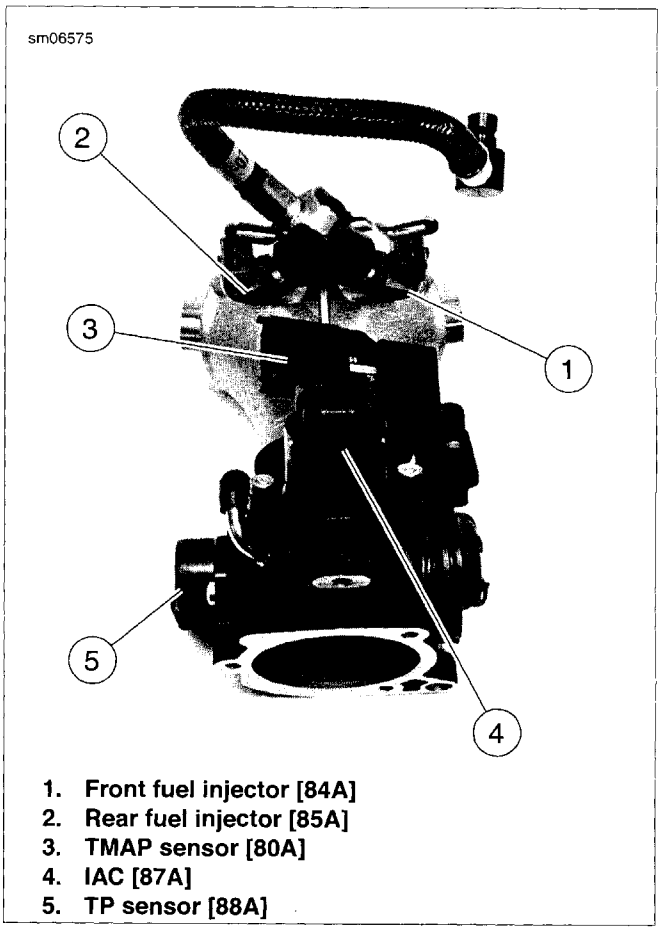

1. **Front fuel injector [84A]**
2. **Rear fuel injector [85A]**
3. **TMAP sensor [80A]**
4. **IAC [87A]**
5. **TP sensor [88A]**

Figure 4-49. Induction Module Electrical Connectors

GENERAL

XR models use a down-draft induction module. The induction module and intake manifold are incorporated into a one-piece unit that includes the throttle body, fuel injectors, TMAP sensor, TP sensor and IAC.

REMOVAL

⚠WARNING

Stop the engine when refueling or servicing the fuel system. Do not smoke or allow open flame or sparks near gasoline. Gasoline is extremely flammable and highly explosive, which could result in death or serious injury. (00002a)

1. Purge the fuel supply hose of high pressure gasoline. Disconnect fuel supply hose from fuel pump module. See 4.6 FUEL TANK: XR MODELS.

⚠WARNING

To prevent accidental vehicle start-up, which could cause death or serious injury, remove main fuse before proceeding. (00251b)

2. Unplug main fuse. See 6.35 MAIN FUSE.
3. Remove fuel tank and airbox. See 4.6 FUEL TANK: XR MODELS and 4.4 AIR BOX: XR MODELS.
4. See Figure 4-50. Remove socket head bolts (3), fastener (1) and fastener (2).
5. Pull cover away from induction module and disengage cable retainer from back side of cover. Remove cover.
6. Disengage throttle cables from induction module. See 2.29 THROTTLE CABLES: ALL MODELS.
7. See Figure 4-51. Unplug the following connectors:
   a. front fuel injector (3) connector [84],
   b. rear fuel injector (4) connector [85],
   c. TMAP sensor (5) connector [80],
   d. IAC (6) connector [87],

   NOTE

   It is important to prevent contaminants from entering the TPS connectors. Cover both the harness connector and the TPS connector cavity with tape immediately after disconnecting harness.

   e. TP sensor (7) connector [88].
8. **California models:** Remove purge hose from fitting (8).
9. See Figure 4-52. Disconnect oil line flare nuts (1) from flare fittings (2) in cylinder heads. Remove flare fittings (2) from cylinder heads.
10. Loosen screws that secure induction module to cylinder heads on left side of vehicle several turns. It is not necessary to remove them completely.
11. Remove two screws (3) securing induction module to cylinder heads on right side of vehicle.
12. Remove induction module from engine.

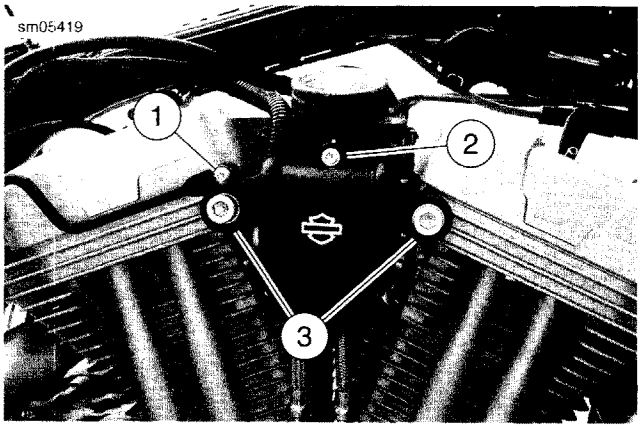

1. **Fastener, wire form**
2. **Fastener, to induction module**
3. **Socket head bolts (2)**

Figure 4-50. Induction Module Cover

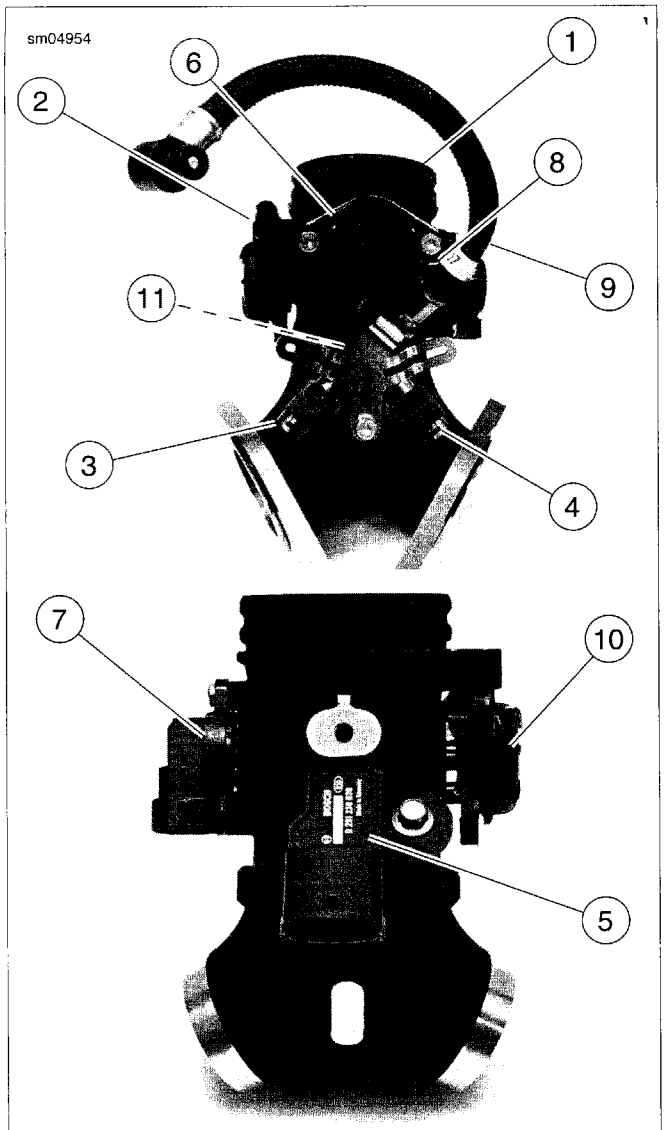

1. Induction module
2. Throttle cable bracket
3. Front fuel injector [84A]
4. Rear fuel injector [85A]
5. TMAP sensor [80A]
6. IAC [87A]
7. TP sensor [88A]
8. Purge hose fitting (California models only)
9. Fuel supply hose
10. Throttle wheel
11. Fuel rail (not visible)

Figure 4-51. Induction Module Assembly (Removed from Vehicle for Clarity)

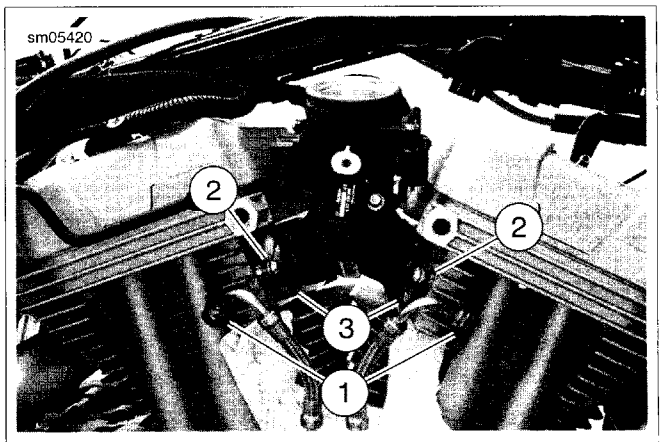

1. Flare nuts
2. Flare fittings
3. Fastener

Figure 4-52. Remove Induction Module

DISASSEMBLY

PART NUMBER	TOOL NAME
HD-25070	HEAT GUN

1. See Figure 4-53. Remove retainer (7). Remove fuel rail (8) with hose (4) and injectors (10) from the induction module.
2. Remove hose (4) and injectors (10) from fuel rail.
3. Remove cable bracket (12).

NOTE

Screws (16) MUST be heated to soften the thread sealant and avoid breakage during removal. Use ONLY HEAT GUN (Part No. HD-25070) to heat the screws. NEVER use an open flame.

4. Remove IAC (3). See 4.11 IDLE AIR CONTROL (IAC), Removal: XR Models.
5. Remove TMAP (15), and TP sensor (1).
6. Remove mounting flanges (14) and seals (13).

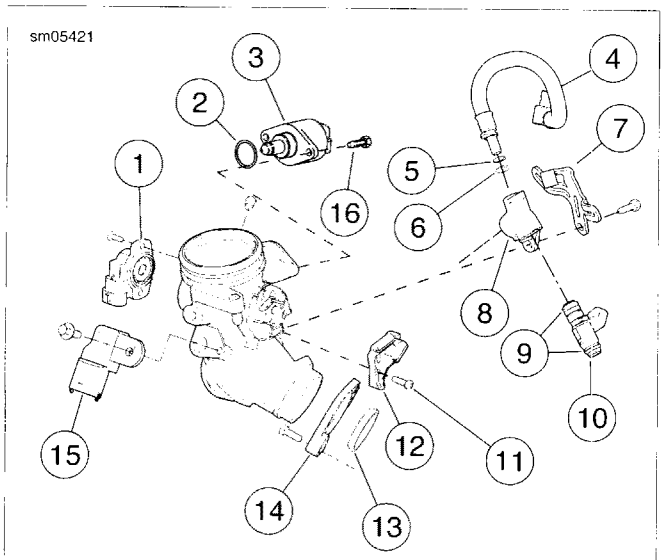

1. **TP sensor**
2. **O-ring**
3. **IAC**
4. **Fuel hose**
5. **Nylon washer (included with hose (4))**
6. **O-ring (included with hose (4))**
7. **Retainer**
8. **Fuel rail**
9. **O-ring (4) (included in hardware and O-ring kit)**
10. **Fuel injector (2)**
11. **Screw**
12. **Throttle cable bracket**
13. **Intake seal**
14. **Mounting flange**
15. **TMAP sensor**
16. **Screw, IAC (2)**

Figure 4-53. Induction Module

ASSEMBLY

1. See Figure 4-53. Install the following assemblies:
   a. TP Sensor. See 4.7 THROTTLE POSITION (TP) SENSOR.
   b. TMAP sensor. See 4.12 TEMPERATURE MANIFOLD ABSOLUTE PRESSURE (TMAP) SENSOR.
   c. IAC. See 4.11 IDLE AIR CONTROL (IAC).

NOTE

Do not install IAC mounting screw on throttle wheel side of induction module until cable bracket is installed in the next step. Install other IAC mounting screw but do not tighten at this time.

2. Install cable bracket (12) onto induction module. Apply Loctite Threadlocker 243 (blue) to the threads of screw (11). Install screw finger-tight. Then tighten both IAC mounting screws to 60 **in-lbs** (6.8 Nm). Tighten screw (11) to 60 **in-lbs** (6.8 Nm).
3. Install fuel injectors, fuel rail and fuel hose. See 4.16 FUEL INJECTORS.

INSTALLATION

1. Make sure the two left side mounting screws are installed two or three turns into the heads.
2. See Figure 4-54. Install mounting flanges (3) on induction module with counterbore (1) facing toward the engine.
3. Place a **new** seal (4) into each mounting flange with the beveled edge (2) facing the mounting flange counterbore. Rotate the flanges so the slotted mounting hole is on the same side as the IAC solenoid.

NOTE

When induction module is positioned on manifold mounting screws, be sure the flanges are installed correctly on the manifold. Also be sure the rubber seals are in place.

4. See Figure 4-52. Place induction module assembly in position between engine heads. Slide open slotted ends of mounting flanges under heads of two mounting screws on left side of engine.
5. While holding induction module assembly in place, install two mounting screws (3) into remaining mounting flange holes. Tighten all four screws finger-tight.
6. Tighten all four mounting screws to 96-120 **in-lbs** (10.9-13.6 Nm).
7. Inspect O-rings on flare fittings (2) and replace as necessary. Install flare fittings in cylinder heads and tighten to 22-26 ft-lbs (29.8-35.3 Nm).
8. Connect oil line flare nuts (1) to flare fittings (2) and tighten to 13-17 ft-lbs (17.6-23.0 Nm).
9. Install throttle cables. See 2.29 THROTTLE CABLES: ALL MODELS.
10. Adjust throttle and idle cables. See 1.25 THROTTLE CONTROL.

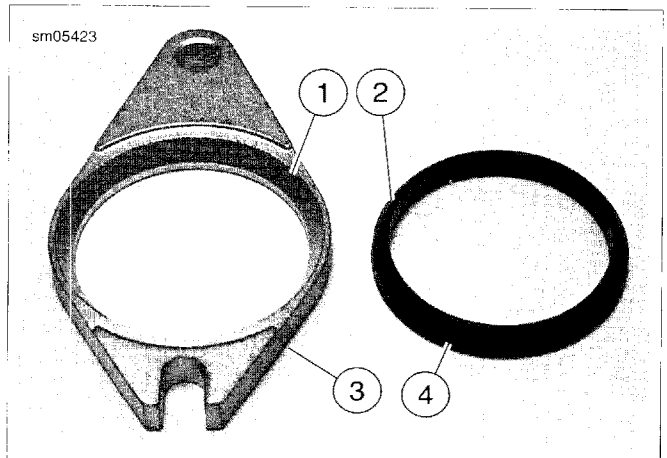

1. **Beveled counterbore**
2. **Beveled edge**
3. **Mounting flange**
4. **Tapered seal**

Figure 4-54. Mounting Flange and Seal

11. **California models only:** See Figure 4-51. Install purge hose onto fitting (8) on induction module (1).

NOTE

XR Models: *See Figure 4-53. The fuel injector harness leads must NEVER be routed between the retaining bracket (7) and induction module body. Improper routing will result in chafing of the insulation resulting in poor engine performance.*

12. Plug in the following connectors:
    a. Front fuel injector (3) connector [84],
    b. Rear fuel injector (4) connector [85],
    c. TMAP sensor (5) connector [80],
    d. IAC (6) connector [87],
    e. TP sensor (7) connector [88].
13. See Figure 4-50. Install induction module cover. Secure TP sensor harness to cover during installation using a **new** cable strap with anchor. Install all fasteners finger tight before final tightening any. Tighten socket head bolts (3) to 20-24 ft-lbs (27.1-32.5 Nm). Tighten fastener (2) to 84-108 **in-lbs** (9.5-12.2 Nm). Tighten fastener (1) to 84-108 **in-lbs** (9.5-12.2 Nm).
14. Install airbox. See 4.4 AIR BOX: XR MODELS.
15. Install fuel tank. See 4.5 FUEL TANK: XL MODELS.
16. Fill fuel tank and carefully check for leaks around fuel pump module and quick connector. See 4.5 FUEL TANK: XL MODELS.
17. Install main fuse and close left side cover. See 6.35 MAIN FUSE.
18. Turn key switch to ON and then back to OFF to reset idle air control to park position.
19. Start vehicle and check for fuel leaks.
20. Road test vehicle.

GENERAL

⚠WARNING

Stop the engine when refueling or servicing the fuel system. Do not smoke or allow open flame or sparks near gasoline. Gasoline is extremely flammable and highly explosive, which could result in death or serious injury. (00002a)

See Figure 4-55. The Electronic Control Module (ECM) uses the Idle Air Control (IAC) to control engine idle speed.

Refer to the electrical diagnostic manual for information on the function and testing of the IAC.

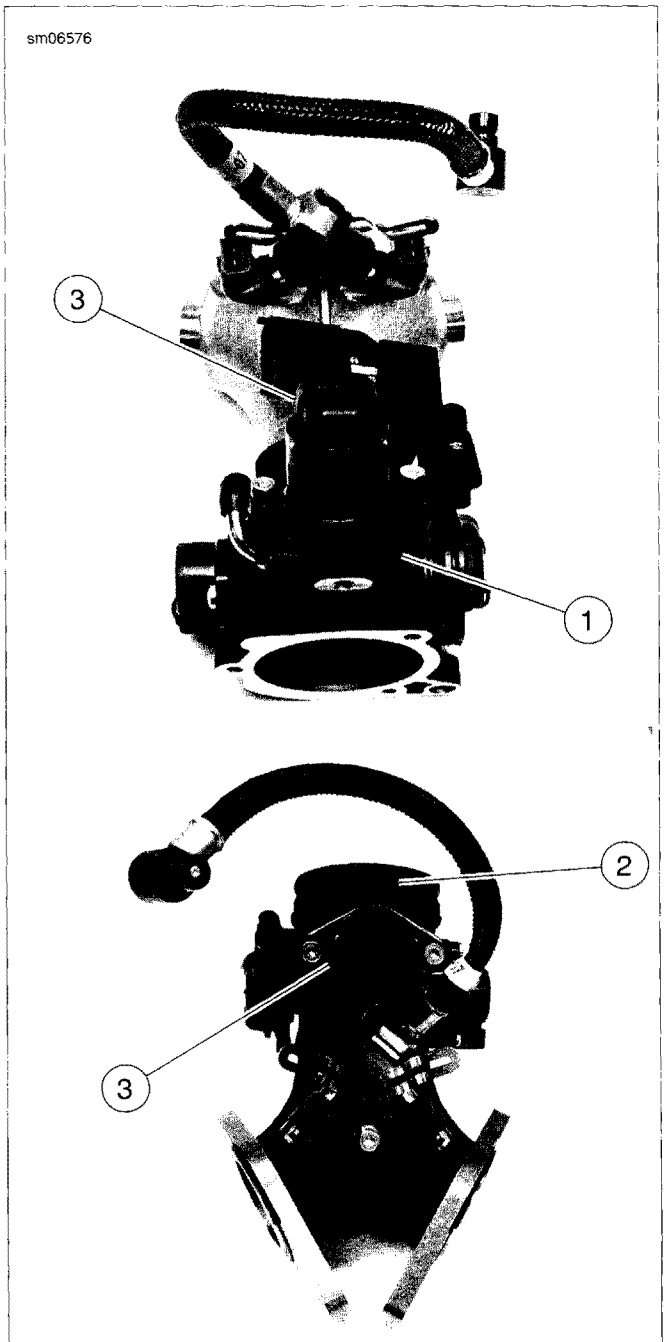

1. Induction module: XL models
2. Induction module: XR models
3. IAC

Figure 4-55. Idle Air Control (IAC) Location (Induction Module Removed From Vehicle for Clarity)

REMOVAL: XL MODELS

PART NUMBER	TOOL NAME
HD-25070	HEAT GUN

NOTE

It is not necessary to remove the fuel tank, induction module or induction module mounting bracket in order to replace the IAC.

⚠WARNING

To prevent accidental vehicle start-up, which could cause death or serious injury, remove main fuse before proceeding. (00251b)

1. Unplug main fuse. See 6.35 MAIN FUSE.
2. Remove air cleaner cover, air filter element and backing plate assembly. See 4.3 AIR CLEANER: XL MODELS.
3. See Figure 4-56. Unplug harness connector [87B] from IAC connector [87A] (1).

NOTE

Screws (2) MUST be heated to soften the thread sealant and avoid breakage during removal. Use ONLY HEAT GUN (Part No. HD-25070) to heat the screws. NEVER use an open flame.

4. Using a six-point socket (not a Torx wrench), remove two screws (2) in the following order:
   a. Heat fastener nearest to throttle bracket for two minutes using HEAT GUN (Part No. HD-25070). Remove screw.
   b. Heat remaining screw for one minute and remove.
5. See Figure 4-57. Grasp IAC and rotate clockwise until IAC mounting tab (1) clears throttle cable bracket (2).
6. With a gentle twisting motion, pull IAC straight out of induction module body.

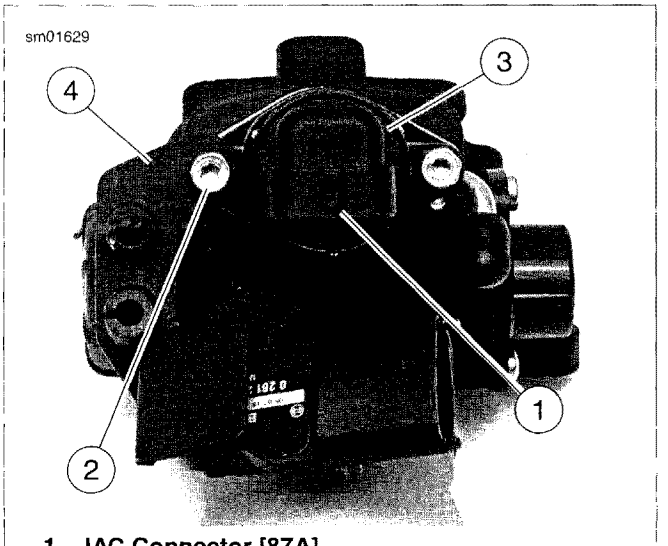

1. **IAC Connector [87A]**
2. **Screw (2)**
3. **IAC**
4. **Throttle cable bracket**

Figure 4-56. IAC Removal/Installation (XL Models)

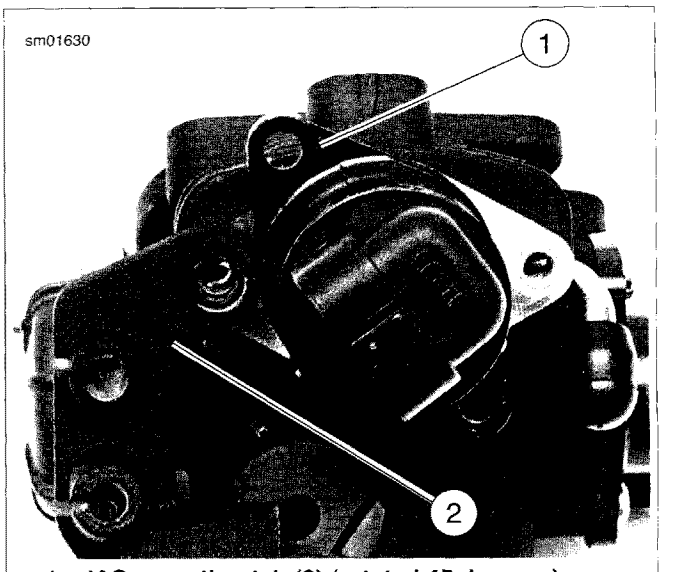

1. **IAC mounting tab (2) (rotated 45 degrees)**
2. **Throttle cable bracket**

Figure 4-57. Removing/Installing IAC (XL Models)

INSTALLATION: XL MODELS

1. See Figure 4-58. If re-using IAC (1), inspect O-ring (2) for cuts, tears or signs of deterioration. Install **new** O-ring if necessary.
2. Clean all locking agent from the threads of the attachment screws and holes. Blow debris from screw holes using low-pressure compressed air.
3. Apply a thin coat of **clean** engine oil to O-ring.
4. Note orientation and position of IAC, shown in Figure 4-56. Rotate IAC approximately 45 degrees clockwise from this position (see Figure 4-57.) so IAC mounting tab will clear throttle cable bracket (4) when IAC is installed.
5. With a gentle twisting motion, insert IAC into induction module.
6. Rotate IAC so that harness connector faces intake manifold and mounting tab is underneath tab on throttle cable bracket.
7. See Figure 4-56. Apply a drop of Loctite Threadlocker and Sealant 243 (blue) the threads of each screw (2).
8. Install two screws (2). Using a six-point socket (not a Torx wrench), tighten to 60 **in-lbs** (6.8 Nm).
9. Plug harness connector [87B] into IAC connector [87A] (1).
10. Install air cleaner backing plate assembly, air filter element and air cleaner cover. See 4.3 AIR CLEANER: XL MODELS.
11. Install main fuse and close left side cover. See 6.35 MAIN FUSE.
12. Road test vehicle.

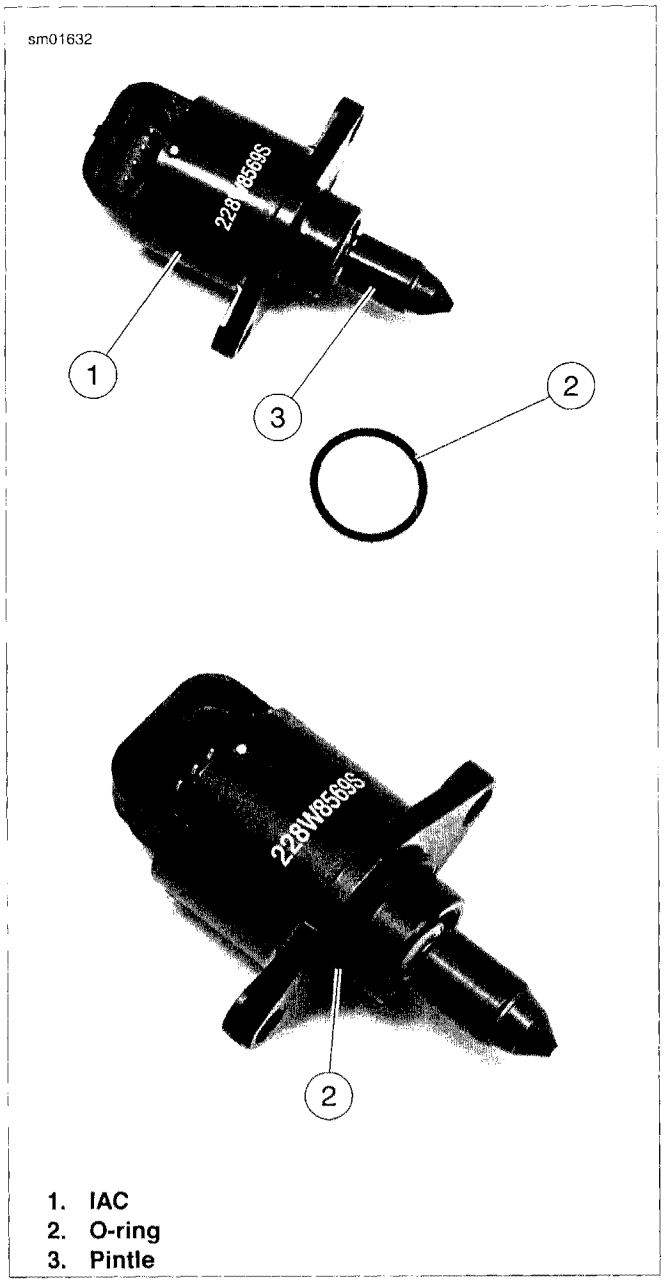

1. IAC
2. O-ring
3. Pintle

Figure 4-58. IAC and O-ring (All Models)

REMOVAL: XR MODELS

PART NUMBER	TOOL NAME
HD-25070	HEAT GUN

NOTE

It is not necessary to remove the fuel tank, airbox or induction module from the vehicle in order to replace the IAC.

⚠WARNING

Gasoline can drain from quick-connect fitting when removing fuel line. Gasoline is extremely flammable and highly explosive, which could result in death or serious injury. Wipe up spilled fuel immediately and dispose of rags in a suitable manner. (00267a)

1. Purge the fuel supply hose of high pressure gasoline. Disconnect fuel supply hose from fuel pump module. See 4.6 FUEL TANK: XR MODELS.

⚠WARNING

To prevent accidental vehicle start-up, which could cause death or serious injury, remove main fuse before proceeding. (00251b)

2. Unplug main fuse. See 6.35 MAIN FUSE.
3. See Figure 4-59. Unplug harness connector [87B] from IAC connector [87A] (1).

NOTE

Screws (2) MUST be heated to soften the thread sealant and avoid breakage during removal. Use ONLY HEAT GUN (Part No. HD-25070) to heat the screws. NEVER use an open flame.

4. Using a six-point socket (not a Torx wrench), remove two screws (2) in the following order:
   a. Heat fastener nearest to throttle bracket for two minutes using HEAT GUN (Part No. HD-25070). Remove screw.
   b. Heat remaining screw for one minute and remove.
5. See Figure 4-60. Grasp IAC and rotate counterclockwise until IAC mounting tab (1) clears throttle cable bracket (2).
6. With a gentle twisting motion, pull IAC straight out of induction module body.

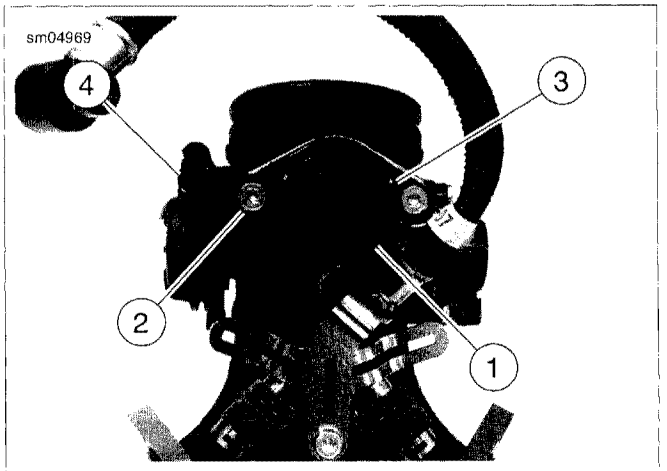

1. IAC Connector [87A]
2. Screw (2)
3. IAC
4. Throttle cable bracket

Figure 4-59. IAC Removal/Installation (XR Models)

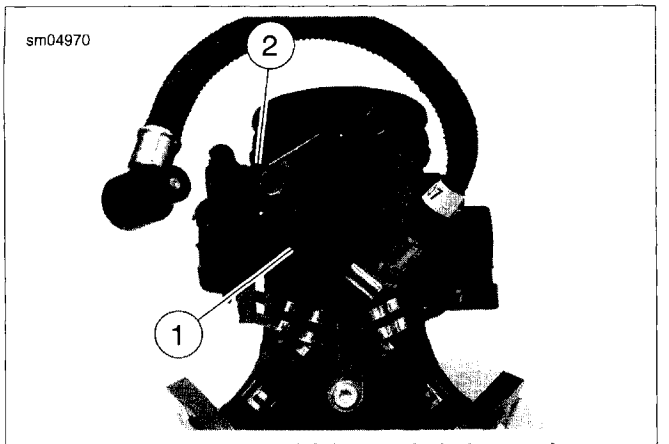

1. **IAC mounting tab (2) (rotated 45 degrees)**
2. **Throttle cable bracket**

Figure 4-60. Removing/Installing IAC (XR Models)

INSTALLATION: XR MODELS

1. See Figure 4-58. If re-using IAC (1), inspect O-ring (2) for cuts, tears or signs of deterioration. If necessary, replace with **new** O-ring.
2. Clean all locking agent from the threads of the attachment screws and holes. Blow debris from screw holes using low-pressure compressed air.
3. Apply a thin coat of **clean** engine oil to O-ring.
4. Note orientation and position of IAC, shown in Figure 4-59. Rotate IAC approximately 45 degrees counterclockwise from this position (see Figure 4-60.) so IAC mounting tab will clear throttle cable bracket (4) when IAC is installed.
5. With a gentle twisting motion, insert IAC into induction module.
6. Rotate IAC so that harness connector points straight down and mounting tab is underneath tab on throttle cable bracket.
7. See Figure 4-59. Apply a drop of Loctite Threadlocker and Sealant 243 (blue) the threads of each screw (2).
8. See Figure 4-59. Install two screws (2). Using a six-point socket (not a TORX wrench), tighten to 60 **in-lbs** (6.8 Nm).
9. Plug harness connector [87B] into IAC connector [87A] (1).
10. Connect fuel hose to fuel pump module. See 4.6 FUEL TANK: XR MODELS.
11. Plug in main fuse and close left side cover. See 6.35 MAIN FUSE.
12. Turn on ignition switch and start vehicle. Carefully check for leaks around fuel hose fitting.
13. Road test vehicle.

TEMPERATURE MANIFOLD ABSOLUTE PRESSURE (TMAP) SENSOR 4.12

GENERAL

⚠WARNING

Stop the engine when refueling or servicing the fuel system. Do not smoke or allow open flame or sparks near gasoline. Gasoline is extremely flammable and highly explosive, which could result in death or serious injury. (00002a)

See Figure 4-61. The Temperature Manifold Absolute Pressure (TMAP) sensor (1) performs the dual functions of monitoring air temperature and air pressure in the intake manifold.

Refer to the electrical diagnostic manual for information on the function and testing of the TMAP sensor.

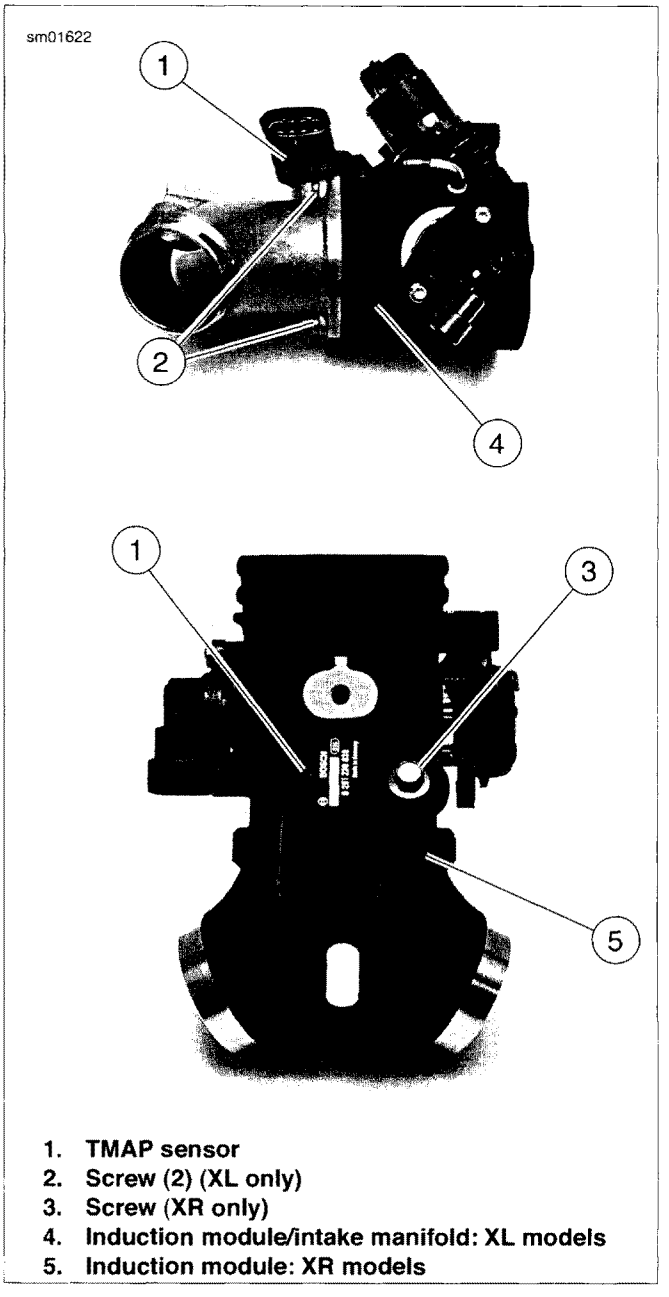

1. **TMAP sensor**
2. **Screw (2) (XL only)**
3. **Screw (XR only)**
4. **Induction module/intake manifold: XL models**
5. **Induction module: XR models**

Figure 4-61. TMAP Sensor Location (Induction Module Removed From Vehicle for Clarity)

REMOVAL: XL MODELS

NOTE

It is not necessary to remove the fuel tank from the vehicle in order to replace the TMAP sensor.

⚠WARNING

To prevent spray of fuel, purge system of high-pressure fuel before supply line is disconnected. Gasoline is extremely flammable and highly explosive, which could result in death or serious injury. (00275a)

⚠WARNING

Gasoline can drain from quick-connect fitting when removing fuel line. Gasoline is extremely flammable and highly explosive, which could result in death or serious injury. Wipe up spilled fuel immediately and dispose of rags in a suitable manner. (00267a)

1. Unplug main fuse. See 6.35 MAIN FUSE.
2. Remove air cleaner cover, air filter element and backing plate assembly. See 4.3 AIR CLEANER: XL MODELS.
3. Remove fuel rail and fuel injectors. See 4.16 FUEL INJECTORS. This will allow access to the two screws that secure the induction module to the intake manifold.
4. See Figure 4-61. Remove two screws (2) and separate induction module from intake manifold. See 4.9 INDUCTION MODULE: XL MODELS.
5. See Figure 4-62. Pull induction module away from intake manifold far enough so that TMAP sensor retaining bracket (1) clears TMAP sensor body (2).
6. Unplug harness connector [80B] from TMAP connector [80A] (3).
7. Grasp TMAP sensor and with a gentle twisting motion, pull sensor straight up out of intake manifold body.

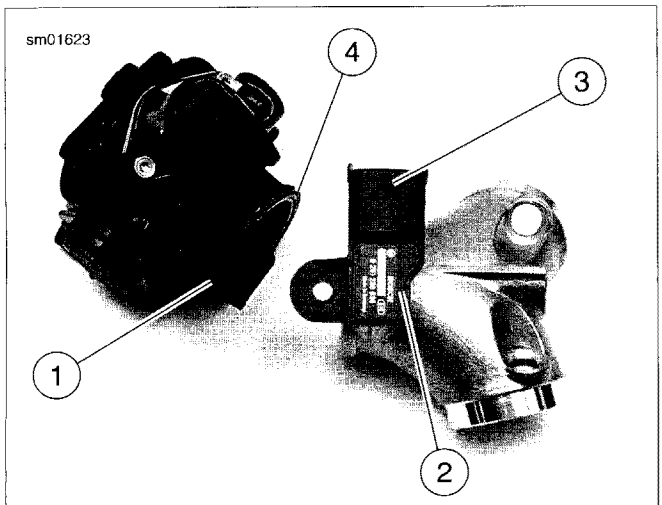

1. **TMAP sensor retaining bracket**
2. **TMAP sensor**
3. **Sensor connector [80A]**
4. **O-ring**

Figure 4-62. TMAP Sensor Removal/Installation (Induction Module Removed From Vehicle for Clarity)

INSTALLATION: XL MODELS

1. See Figure 4-63. If re-using TMAP sensor (1), inspect O-ring (2) in groove of sensor for cuts, tears or signs of deterioration. Install **new** O-ring if necessary.
2. Apply a thin coat of **clean** engine oil to TMAP sensor O-ring.
3. See Figure 4-62. With a gentle twisting motion, insert sensor (2) into intake manifold with connector [80A] (3) facing rear cylinder head.
4. Plug harness connector [80B] into TMAP sensor.
5. Examine O-ring (4) between induction module and intake manifold for cuts, tears or signs of deterioration. Install **new** O-ring if necessary. Make certain O-ring is fully seated in its grove in induction module body.
6. See Figure 4-61. Mate induction module to intake manifold and secure with two screws (2) Tighten to 35 **in-lbs** (4.0 Nm).
7. Install fuel injectors and fuel rail. See 4.16 FUEL INJECTORS.
8. Install air cleaner backing plate assembly, air filter element and air cleaner cover. See 4.3 AIR CLEANER: XL MODELS.

⚠WARNING

To prevent spray of fuel, be sure quick-connect fittings are properly mated. Gasoline is extremely flammable and highly explosive, which could result in death or serious injury. (00268a)

⚠WARNING

Use care when refueling. Pressurized air in fuel tank can force gasoline to escape through filler tube. Gasoline is extremely flammable and highly explosive, which could result in death or serious injury. (00029a)

⚠WARNING

Avoid spills. Slowly remove filler cap. Do not fill above bottom of filler neck insert, leaving air space for fuel expansion. Secure filler cap after refueling. Gasoline is extremely flammable and highly explosive, which could result in death or serious injury. (00028a)

9. Connect fuel hose to fuel pump module. Fill fuel tank and carefully check for leaks around fuel pump module. See 4.5 FUEL TANK: XL MODELS, Reconnecting Fuel Hose and Filling Fuel Tank.
10. Install main fuse and close left side cover. See 6.35 MAIN FUSE.

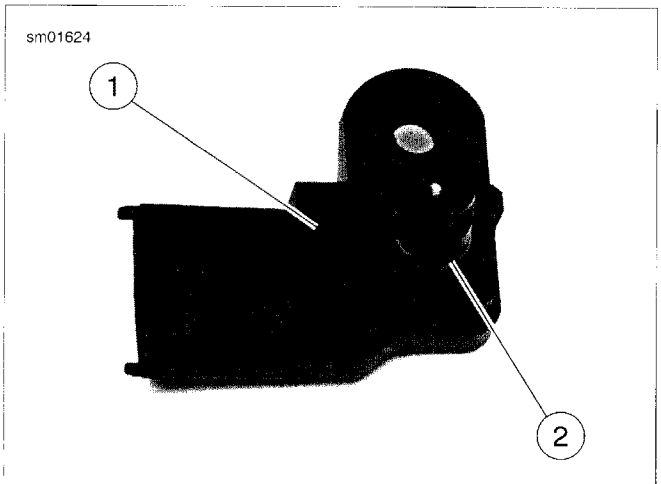

1. **TMAP sensor**
2. **O-ring**

Figure 4-63. TMAP Sensor

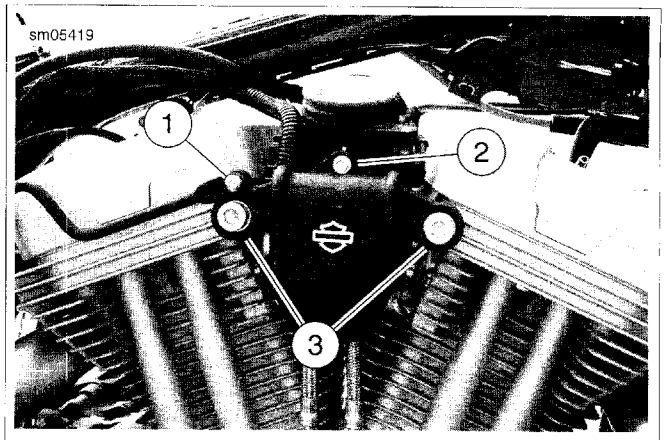

1. **Fastener, wire form**
2. **Fastener, to induction module**
3. **Socket head bolts (2)**

Figure 4-64. Induction Module Cover

REMOVAL: XR MODELS

NOTE

It is not necessary to remove the fuel tank, airbox or induction module from the vehicle in order to replace the TMAP sensor.

⚠WARNING

To prevent accidental vehicle start-up, which could cause death or serious injury, remove main fuse before proceeding. (00251b)

1. Unplug main fuse. See 6.35 MAIN FUSE.

NOTE

See Figure 4-65. TMAP sensor harness and TP sensor harness are attached to inside of induction module cover (1). It is not necessary to remove the retainer securing these harnesses to the induction module cover in order to access TMAP sensor.

2. See Figure 4-64. Remove socket head bolts (3), fastener (1) and fastener (2).
3. See Figure 4-65. Carefully rotate induction module cover (1) out of the way.
4. Unplug TMAP sensor harness connector [80B] (2). Remove screw (4).
5. Grasp TMAP sensor (3) and with a gentle twisting motion, pull sensor straight up out of induction module body.

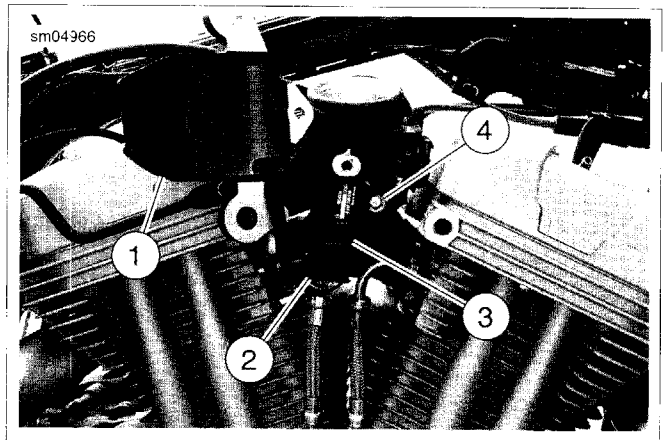

1. **Induction module cover**
2. **Sensor harness connector [80B]**
3. **TMAP sensor [80A]**
4. **Screw**

Figure 4-65. TMAP Sensor: XR Models (airbox removed for clarity of photo)

INSTALLATION: XR MODELS

1. See Figure 4-63. If re-using TMAP sensor (1), inspect O-ring (2) for cuts, tears or signs of deterioration. If necessary, replace with **new** O-ring.
2. Apply a thin coat of **clean** engine oil to TMAP sensor O-ring.
3. See Figure 4-65. With a gentle twisting motion, insert sensor (3) into induction module with connector [80A] pointing down. Secure sensor to induction module with screw (4). Tighten to 80 **in-lbs** (9.0 Nm).
4. Plug sensor harness connector [80B] (2) into TMAP sensor.

NOTE

Install all fasteners finger tight before final tightening any.

5. See Figure 4-64. Rotate induction module cover into place between cylinder heads. Install fasteners (1, 2, 3) finger tight.

6. Tighten socket head bolts (3) to 20-24 ft-lbs (27.1-32.5 Nm). Tighten fastener (2) to 84-108 **in-lbs** (9.5-12.2 Nm). Tighten fastener (1) to 84-108 **in-lbs** (9.5-12.2 Nm).

7. Plug in main fuse. See 6.35 MAIN FUSE.

GENERAL

NOTE

Photographs of XL models will be used throughout this process. Although the exact location of the O2 sensors vary slightly between XL models and XR models, replacement procedures are essentially the same. For ease of installation, note harness routing prior to removal.

See Figure 4-66. The oxygen (O2) sensors are installed in threaded bosses on the inboard side of front and rear exhaust pipes.

NOTE

Both Oxygen sensors are identical. However, if they will be reused, it is best to mark them FRONT or REAR and return each to the exhaust pipe in which it was originally mounted.

Refer to the electrical diagnostic manual for information on the function and testing of the O2 sensors.

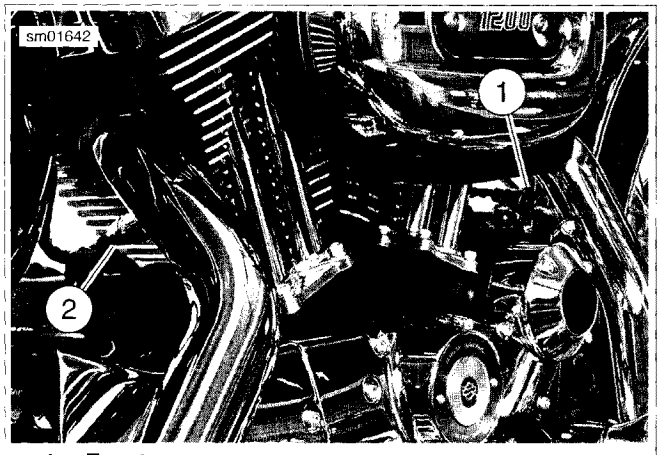

1. **Front oxygen sensor**
2. **Rear oxygen sensor**

Figure 4-66. Oxygen Sensor Locations, typical (XL model shown)

REMOVAL

PART NUMBER	TOOL NAME
HD-48262	OXYGEN SENSOR SOCKET
HD-48647	OXYGEN SENSOR SOCKET

1. Unplug sensor connector:
   a. **Front O2 sensor:** see Figure 4-67. Remove frame clip (2). Unplug sensor connector [138A] (3) from wiring harness connector [138B].
   b. **Rear O2 sensor:** see Figure 4-68. Disengage connector [137] (2) from mounting tab. Unplug connector [137A] from wiring harness connector [137B].
2. Using the appropriate tool, remove sensor from mounting boss on exhaust pipe. If reusing sensor, be careful not to damage sensor harness.
   a. **XL Models:** OXYGEN SENSOR SOCKET (Part No. HD-48262).
   b. **XR Models:** OXYGEN SENSOR SOCKET (Part No. HD-48647).

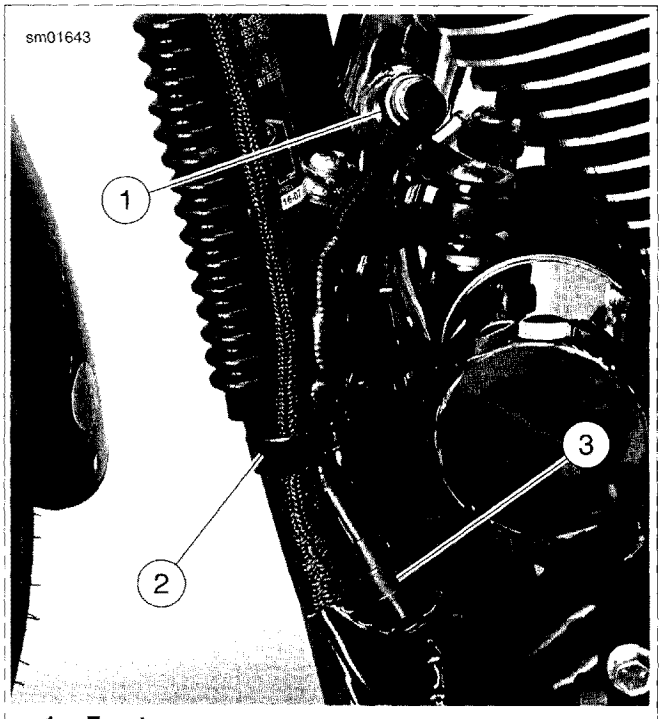

1. **Front oxygen sensor**
2. **Frame clip**
3. **Sensor connector [138]**

Figure 4-67. Front Oxygen Sensor and Connector, typical (XL model shown)

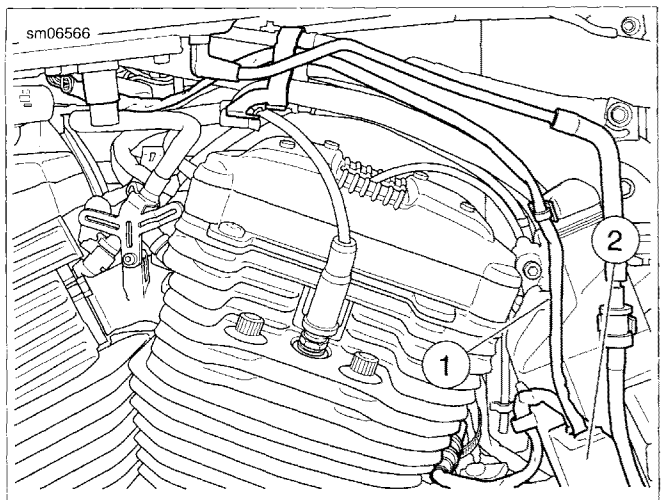

1. **Rear oxygen sensor wiring**
2. **ECM caddy cover**

Figure 4-68. Rear Oxygen Sensor Connector Location, typical (XL model shown)

INSTALLATION

NOTES

- *Do not install sensors that have been dropped or impacted by other components. Damage to the sensor element may have occurred. Replacement sensor assemblies have threads coated with anti-seize lubricant and* ***new*** *seal rings.*
- *Apply a thin coat of anti-seize to threads of each oxygen sensor prior to installing in header. Do not use any other grease or sealant product on sensor threads. The electrical connector must also be clean and free of any dielectric grease.*

1. If sensor is being reused, install **new** seal ring and coat sensor threads with anti-seize.
2. Install sensor into threaded boss on exhaust pipe and tighten to 29-44 ft-lbs (39.3-59.7 Nm).
3. Route sensor harness to mating connector and connect:
   a. **Front O2 sensor:** see Figure 4-67. Plug sensor connector [138A] (3) into wiring harness connector [138B]. Install frame clip (2) over sensor harness, clutch cable and wiring harness on left frame downtube.
   b. **Rear O2 sensor:** see Figure 4-68. Plug connector [137A] (2) into wiring harness connector [137B]. Engage connector assembly onto mounting tab on bracket.

NOTE

Route rear O2 sensor harness in a loop away from exhaust system, toward left side of vehicle (as shown in the photo) to avoid contact with exhaust port or exhaust pipe.

GENERAL

PART NUMBER	TOOL NAME
PFSX916	SNAP-ON WRENCH

To facilitate removing exhaust pipe header nuts, use SNAP-ON WRENCH (Part No. PFSX916).

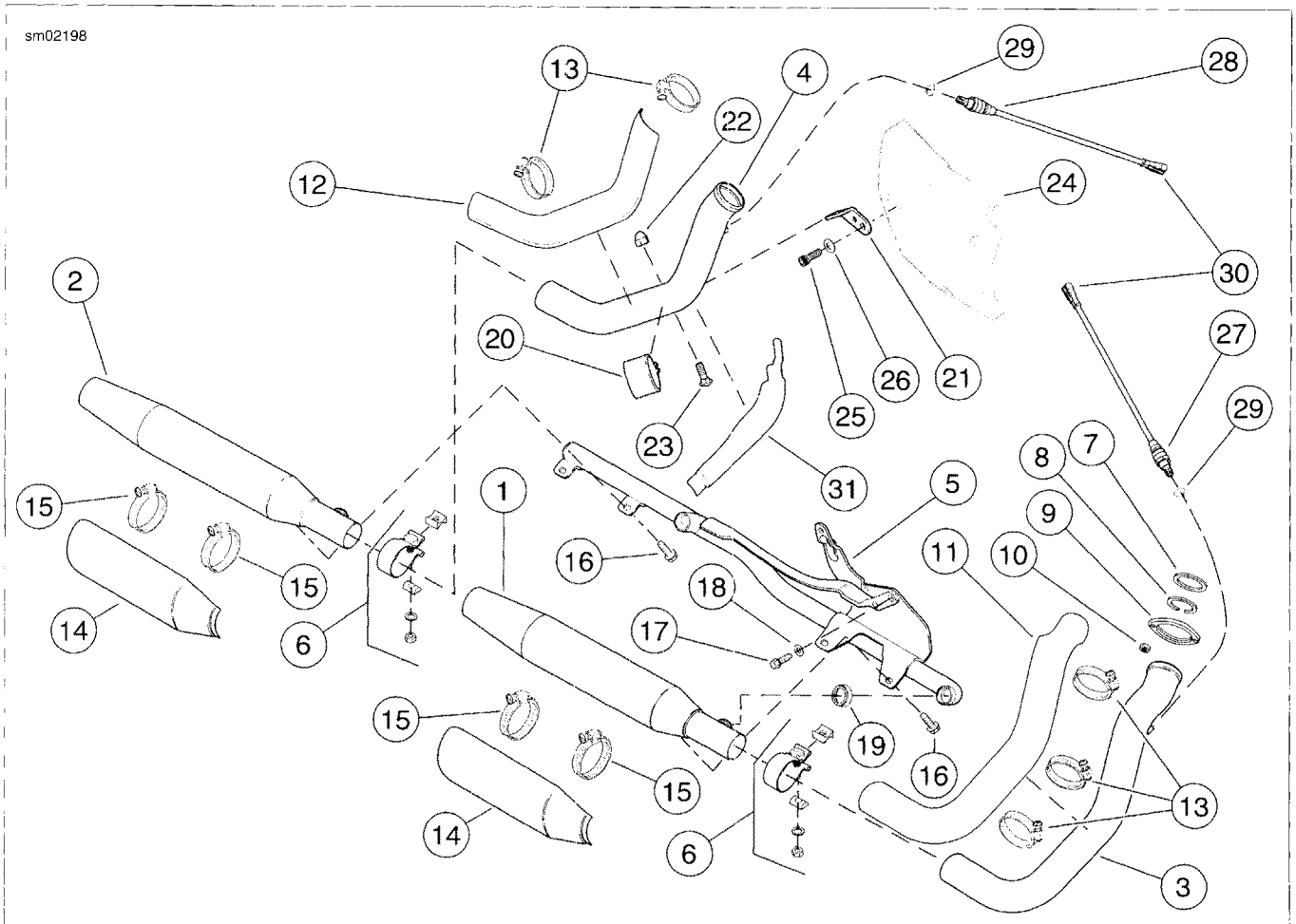

1. Muffler, front
2. Muffler, rear
3. Exhaust pipe, front
4. Exhaust pipe, rear
5. Muffler interconnect bracket
6. Torca muffler clamp assembly (2)
7. Exhaust port gasket (2)
8. Exhaust gasket retaining ring (2)
9. Exhaust pipe flange (2)
10. Nut (4)
11. Heat shield, front exhaust pipe
12. Heat shield, rear exhaust pipe
13. Worm drive clamp (5)
14. Muffler heat shield (2) (California, HDI, England only)
15. Worm drive clamp (4)
16. Flanged bolt (4)
17. Screw (3)
18. Washer (3)
19. Muffler interconnect gasket (2)
20. Exhaust pipe clamp
21. Exhaust pipe clamp bracket
22. Acorn nut
23. Screw
24. Engine sprocket cover
25. Screw
26. Washer
27. Front O2 sensor assembly
28. Rear O2 sensor assembly
29. Seal ring (2)
30. O2 sensor connectors (2): [137], [138]
31. Heat shield, rear exhaust pipe (mid-control vehicles only)

Figure 4-69. Exhaust System, All XL Models

REMOVAL

Mufflers and Exhaust Pipes

NOTE

See Figure 4-70. Vehicles with mid controls are equipped with an extra heat shield (2) on the rear exhaust pipe.

1. See Figure 4-69. Remove heat shields:
   a. **Vehicles with mid controls:** remove worm drive clamps (13) from heat shield (12) completely. Remove bottom heat shield.
   b. **All vehicles:** open worm drive clamps (13) and remove exhaust pipe heat shields (11, 12).
   c. **California, HDI, England and Japan models:** open worm drive clamps (15) and remove muffler heat shields (14).
2. Unplug O2 sensor connectors (30). Front connector [138] is mounted on left front frame downtube. Rear connector [137] is attached to the ECM caddy on the left side of the vehicle.
3. Remove nuts (10) from front and rear cylinder head exhaust studs.
4. Remove flanged bolts (16) securing front and rear mufflers (1, 2) to muffler interconnect bracket (5).
5. Loosen Torca muffler clamp assemblies (6) on front and rear mufflers. Remove mufflers. Discard muffler interconnect gaskets (19).
6. Remove and discard Torca clamp assemblies; they are one time usage only.

NOTE

***New** Torca muffler clamps have eliminated the need for silicone or graphite tape during assembly. To maintain sealing integrity of muffler clamps and prevent the possibility of leakage, Harley-Davidson recommends that torca muffler clamp assemblies be discarded and replaced each time they are removed.*

7. Remove nut (22) and screw (23) from exhaust pipe clamp (20). Separate exhaust pipe clamp from clamp bracket (21).
8. Remove front and rear exhaust pipes (3, 4). Slide exhaust pipe clamp off rear exhaust pipe.
9. Remove exhaust port gasket (7), retaining ring (8) and exhaust pipe flange (9) from each exhaust pipe. Discard gasket.
10. Remove O2 sensor assemblies (27, 28) from front and rear exhaust pipes. Discard gaskets (29). See 4.13 OXYGEN SENSOR.

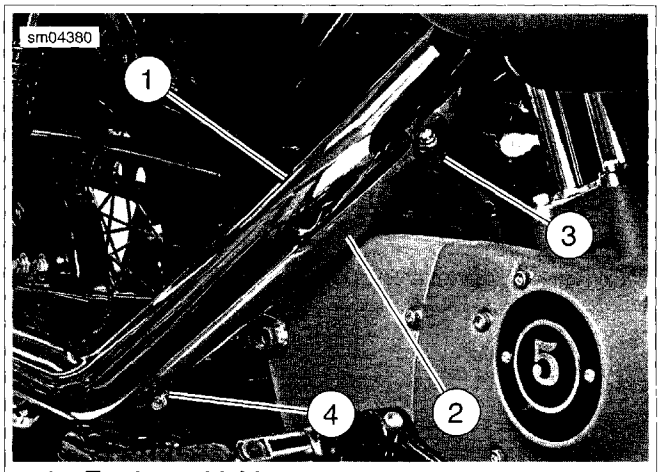

1. **Top heat shield**
2. **Bottom heat shield**
3. **Upper worm drive clamp**
4. **Lower worm drive clamp**

Figure 4-70. Rear Exhaust Pipe Heat Shields: Vehicles with Mid Controls

Muffler Interconnect Bracket

1. See Figure 4-71. Remove screw (6), washer (5) and exhaust pipe clamp bracket (4). Remove two screws (2, 3). Remove sprocket cover (1).
2. See Figure 4-72. Remove rear brake rod (1) at bell crank (2).
3. See Figure 4-69. Remove three screws (17) and washers (18) securing muffler interconnect bracket (5) to engine crankcase. Remove muffler interconnect bracket.

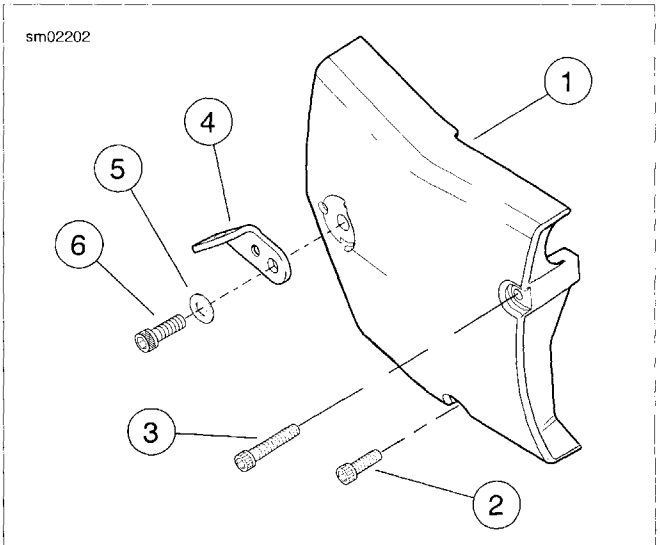

1. **Sprocket cover**
2. **Screw**
3. **Screw**
4. **Exhaust pipe clamp bracket**
5. **Washer**
6. **Screw**

Figure 4-71. Sprocket Cover

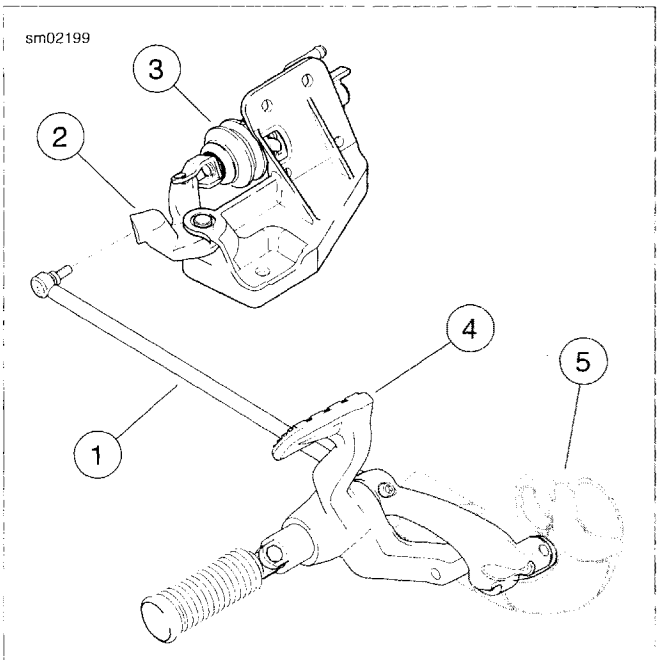

1. **Rear brake rod**
2. **Bell crank**
3. **Rear brake master cylinder assembly**
4. **Rear brake pedal**
5. **Frame**

Figure 4-72. Rear Brake Linkage

INSTALLATION

PART NUMBER	TOOL NAME
PFSX916	SNAP-ON SWIVEL BALL SOCKET EXTENSION

Muffler Interconnect Bracket

1. See Figure 4-69. Install muffler interconnect bracket (5) to engine case with three screws (17) and washers (18). Tighten to 30-33 ft-lbs (40.7-44.8 Nm).
2. See Figure 4-72. Apply two drops of LOCTITE 243 (Part. No. 99642-97) to rear brake rod ball stud screw. Attach rear brake rod (1) to bell crank (2). Tighten screw to 120-180 **in-lbs** (13.6-20.4 Nm).
3. See Figure 4-71. Install sprocket cover (1). Secure with two screws (2, 3). Note that long screw goes in top hole, short screw in bottom hole. Do not tighten screws at this time.
4. Install exhaust pipe clamp bracket (4), washer (5) and screw (6). Tighten to 30-33 ft-lbs (40.7-44.8 Nm). Now tighten screws (2, 3) to 80-120 **in-lbs** (9.0-13.6 Nm).

Exhaust Pipes and Mufflers

NOTES

- *To facilitate installing exhaust pipe header nuts, use SNAP-ON SWIVEL BALL SOCKET EXTENSION (Part No. PFSX916).*
- *If the O2 sensors are being reused, apply a thin coat of anti-seize to threads of each sensor prior to installing in header. Do not use any other grease or sealant product on sensor threads. The electrical connector must also be clean and free of any dielectric grease.*

1. See Figure 4-69. If the front and rear O2 sensor assemblies (27, 28) are being reused, install **new** seal rings (29) onto each sensor. Apply a thin coat of anti-seize to the sensor threads.
2. Install sensor assemblies into front and rear exhaust pipes. Tighten to 29-44 ft-lbs (39.3-59.7 Nm). See 4.13 OXYGEN SENSOR.
3. Place exhaust pipe flange (9), exhaust gasket retaining ring (8) and **new** exhaust port gasket (7) over front end of each exhaust pipe (3, 4). Position flange so that inside counterbore faces cylinder head exhaust port.
4. Position front ends of front and rear exhaust pipes into front and rear cylinder heads, respectively. Position holes in flanges over mounting studs and loosely install nuts (10). Do not tighten nuts at this time.
5. Install exhaust pipe clamp (20) on rear exhaust pipe (4) with square hole facing down. Assemble exhaust pipe clamp to exhaust pipe clamp bracket (21) with screw (23) and acorn nut (22). Make sure bracket fits between ends of clamp. Do not tighten at this time.
6. Install **new** muffler interconnect gaskets (19) in interconnect mating holes in mufflers (1, 2).
7. Place **new** Torca clamp assemblies (6) over slotted end of each muffler. Install each muffler onto the end of its respective exhaust pipe.
8. Rotate both mufflers until their mounting bosses line up with holes in muffler interconnect bracket. Carefully mate each muffler with exhaust port in interconnect bracket. Loosely install flanged bolts (16). Do not tighten at this time.
9. Tighten exhaust system fasteners in the following sequence:
   a. Tighten four flanged bolts securing mufflers to interconnect bracket to 15-19 ft-lbs (20.4-25.8 Nm).
   b. Tighten four nuts at cylinder head exhaust studs to 96-120 **in-lbs** (10.9-13.6 Nm).
   c. Tighten two Torca clamps to 38-43 ft-lbs (51.6-58.4 Nm).
   d. Tighten rear exhaust pipe clamp nut (22) to 20-30 ft-lbs (27.1-40.7 Nm).
10. Plug in O2 sensor connectors (30). Front connector [138] is mounted on left front frame downtube. Rear connector [137] is attached to the ECM caddy on the left side of the vehicle. See 4.13 OXYGEN SENSOR.

11. Install heat shields:
    a. Open worm drive clamps (13) and install heat shields (11, 12) on exhaust pipes. Position each clamp so that screw is on the outboard side in the most accessible position.
    b. **Vehicles with mid controls:** See Figure 4-70. Tighten lower worm drive clamp (4) a few turns. Slide lower portion of bottom heat shield (2) into lower worm drive clamp. Engage upper portion of bottom heat shield into upper worm drive clamp (3).
    c. **All vehicles:** Tighten all exhaust pipe heat shield clamps securely.
    d. **California, HDI, England and Japan models:** open worm drive clamps (15) and install muffler heat shields (14) on mufflers. Position each clamp so that screw is on the outboard side in the most accessible position. Tighten clamps securely.

GENERAL

PART NUMBER	TOOL NAME
PFSX916	SNAP-ON WRENCH

To facilitate removing exhaust pipe header nuts, use SNAP-ON WRENCH (Part No. PFSX916).

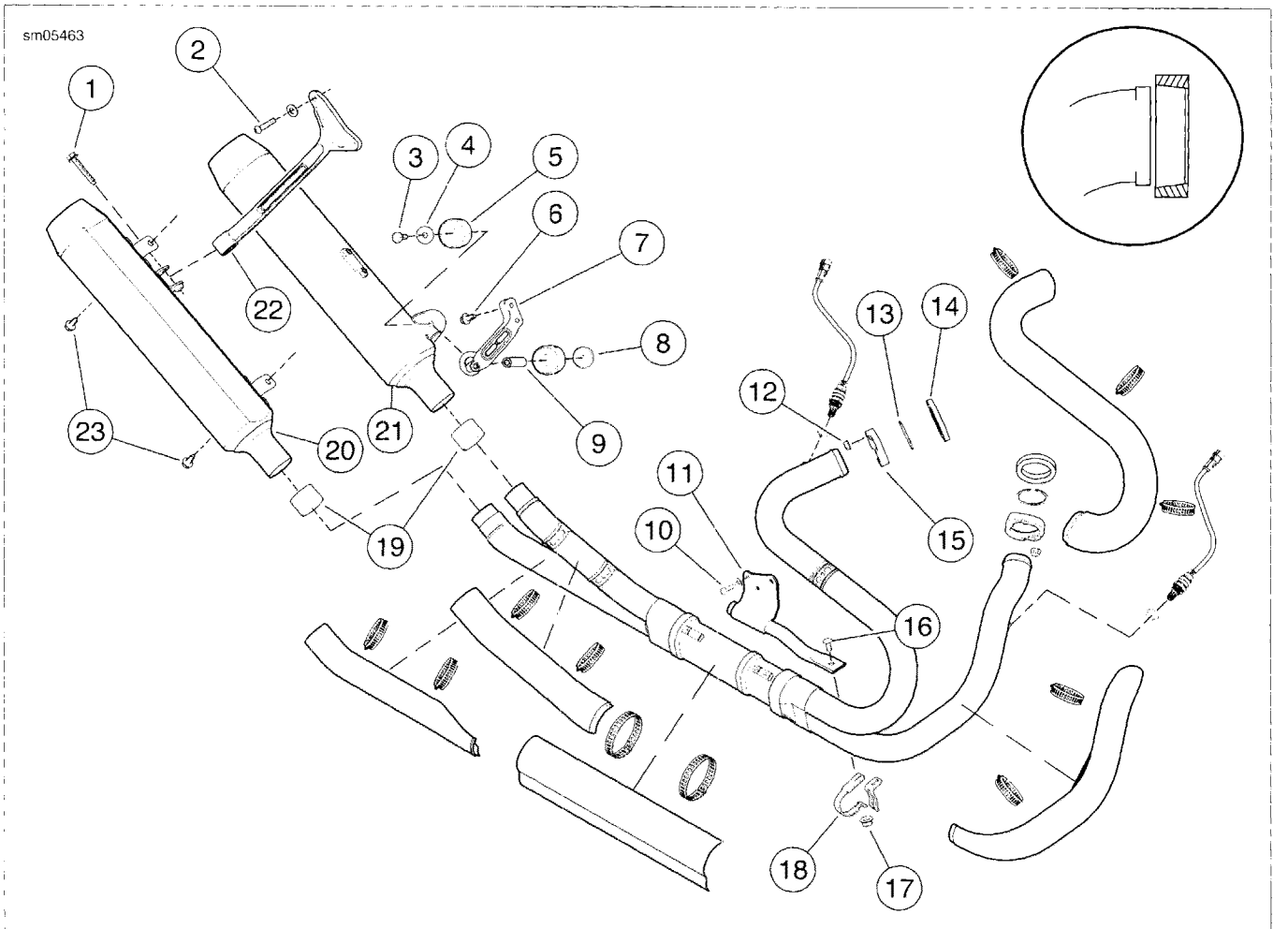

1. Fastener, rear muffler mount
2. Fastener, mount to frame
3. Fastener, front muffler mount
4. Flat washer
5. Grommet, front mount (2)
6. Fastener, front muffler mount (2)
7. Front muffler mount
8. Washer-nut
9. Sleeve
10. Fastener, interconnect bracket (3)
11. Interconnect bracket
12. Nut (4)
13. Retaining ring (2)
14. Exhaust port gasket (2)
15. Exhaust pipe flange (2)
16. Carriage bolt
17. Flanged nut
18. Lower clamp
19. Muffler gasket (2)
20. Lower muffler
21. Upper muffler
22. Rear muffler mount
23. Bolt, muffler-to-muffler (2)

Figure 4-73. Exhaust System: XR Models

REMOVAL

Mufflers

1. See Figure 4-73. Remove forward muffler mount fastener (3) and washer-nut (8).
2. Remove two bolts (23) fastening mufflers together.
3. Slide upper muffler (21) back off header pipe to remove.
4. Remove rear muffler mount fastener (1).
5. Rotate lower muffler (20) counterclockwise to disengage from the rear mount (22) and slide back off header pipe to remove.

6. Remove mount grommets (5) and sleeve (9).
7. Inspect rear mount (22) and replace if damaged.
8. Inspect muffler seals (19) and replace if necessary:
   a. Pull seal out of muffler using a hook-type tool.
   b. Push **new** seal into place being careful not to distort or damage the new seal.

Header Pipes

1. Remove mufflers.
2. Disconnect O2 sensor connectors. Remove sensor if necessary. See 4.13 OXYGEN SENSOR.
3. See Figure 4-73. Loosen or remove head pipe heat shields to gain access to header pipe flange nuts (12).
4. Remove flange nuts (12) and pull flanges (15) off from studs.
5. Remove nut (17) and carriage bolt (16) from lower clamp (18).

NOTE

Be careful not to drop or hit header pipe assembly. Damage to the catalytic converter may result.

6. Remove header pipe assembly from vehicle.
7. Inspect exhaust port gasket (14) and replace if necessary.
   a. Pry gasket from exhaust port in cylinder head being careful not to damage the bore.
   b. Push **new** gasket into place with the larger ID facing the header pipe, as shown in the inset in Figure 4-73.
8. Remove retainer rings (13) and flanges (15) if necessary.
9. If necessary, remove mount brackets (7, 22) and interconnect bracket (11).

INSTALLATION

1. See Figure 4-73. If removed, install flanges (15) and retaining rings (13).
2. If removed, install rear mount (22), front mount (7), and interconnect bracket (11).
   a. Tighten fasteners (2) to 15-20 ft-lbs (20.3-27.1 Nm).
   b. Tighten fasteners (6) to 45-50 ft-lbs (61.0-67.8 Nm).
   c. Tighten fasteners (10) to 30-33 ft-lbs (40.7-44.7 Nm).

NOTE

Use care not to damage exhaust port gaskets (14) when positioning header pipes in exhaust port area.

3. Install **new** exhaust port gaskets (14).
4. Place head pipe assembly in position and loosely secure lower clamp (18) with carriage bolt (16) and flange nut (17).
5. Install flanges (15) and secure with nuts (12) finger tight. do not tighten until mufflers are installed.
6. Install mufflers.
7. Place lower muffler (20) on header pipe. Rotate until rear mount fastener (1) can be installed. Loosely install fastener (1).
8. Place upper muffler (21) on header pipe.
9. Install muffler-to-muffler bolts (23) finger tight.
10. Install grommets (5), sleeve (9), fastener (3), washer (4) and washer nut (8). Tighten assembly finger tight.
11. Tighten the exhaust flange nuts (12) in the following sequence:
    a. Tighten the front exhaust pipe lower exhaust flange nut to 96-120 **in-lbs** (10.8-13.6 Nm).
    b. Tighten the front exhaust pipe upper exhaust flange nut to 96-120 **in-lbs** (10.8-13.6 Nm).
    c. Tighten the rear exhaust pipe lower exhaust flange nut to 96-120 **in-lbs** (10.8-13.6 Nm).
    d. Tighten the rear exhaust pipe upper exhaust flange nut to 96-120 **in-lbs** (10.8-13.6 Nm).
12. Verify the exhaust header pipes do not contact the drive belt idler pulley and that there is sufficient clearance for proper operation of the rear brake pedal. Tighten nut (17) to: 30-33 ft-lbs (40.7-44.7 Nm).
13. Tighten fastener (3) to: 120-180 **in-lbs** (16.9-20.3 Nm).
14. Tighten muffler-to-muffler bolts (23) to 120-180 **in-lbs** (16.9-20.3 Nm).
15. Tighten rear mount fastener (1) to 120-180 **in-lbs** (16.9-20.3 Nm).
16. Install heat shields.
17. Install and connect the O2 sensors. See 4.13 OXYGEN SENSOR.

GENERAL

⚠WARNING

Stop the engine when refueling or servicing the fuel system. Do not smoke or allow open flame or sparks near gasoline. Gasoline is extremely flammable and highly explosive, which could result in death or serious injury. (00002a)

Refer to the ELECTRICAL DIAGNOSTIC MANUAL for information on the function and testing of the fuel injectors.

REMOVAL

⚠WARNING

To prevent spray of fuel, purge system of high-pressure fuel before supply line is disconnected. Gasoline is extremely flammable and highly explosive, which could result in death or serious injury. (00275a)

1. Purge the fuel supply hose of high pressure gasoline. Disconnect fuel supply hose from fuel pump module. See 4.5 FUEL TANK: XL MODELS or 4.6 FUEL TANK: XR MODELS.

⚠WARNING

To prevent accidental vehicle start-up, which could cause death or serious injury, remove main fuse before proceeding. (00251b)

2. Unplug main fuse. See 6.35 MAIN FUSE.
3. **XL Models with side-mounted horn:** See Figure 4-74. Remove screws (3), washers (2) and cylinder head bracket (1) from engine. Unplug harness connectors [122] from horn (4).
4. **XL Models with 4.5 gallon (17.0 liter) fuel tank**: Access to the fuel injectors and fuel rail may be easier if the fuel tank is raised up as follows:
   a. Remove seat.
   b. Loosen (but do not remove) front fuel tank mounting screw. Remove rear fuel tank mounting screw, washers and nut. See 4.5 FUEL TANK: XL MODELS.
   c. Place a clean shop cloth between front of fuel tank and front fork upper bracket to protect fuel tank finish. Carefully pivot rear of fuel tank upward and prop in position with a block of soft wood or other suitable device.
5. See Figure 4-77. Unplug engine sub-harness connectors from fuel injector connectors [84A], [85A] (7, 8).
6. Remove screw (5) and retaining bracket (2).

NOTE

See Figure 4-77. If the fuel supply hose (1) or fuel rail (6) are not to be replaced, it is not necessary to separate them. Skip the next step.

7. Disassemble fuel supply hose (1) from fuel rail (6) as follows:
   a. Hold fuel rail in place and with a gentle twisting motion, pull fuel supply hose straight up out of fuel rail.
8. Hold fuel injectors (9, 10) in place by pressing down on harness connectors (7, 8) and with a gentle rocking motion, pull fuel rail off injectors.
9. With a gentle twisting motion, pull fuel injectors out of intake manifold (XL models) or induction module (XR models).
10. Remove and discard O-rings (11).

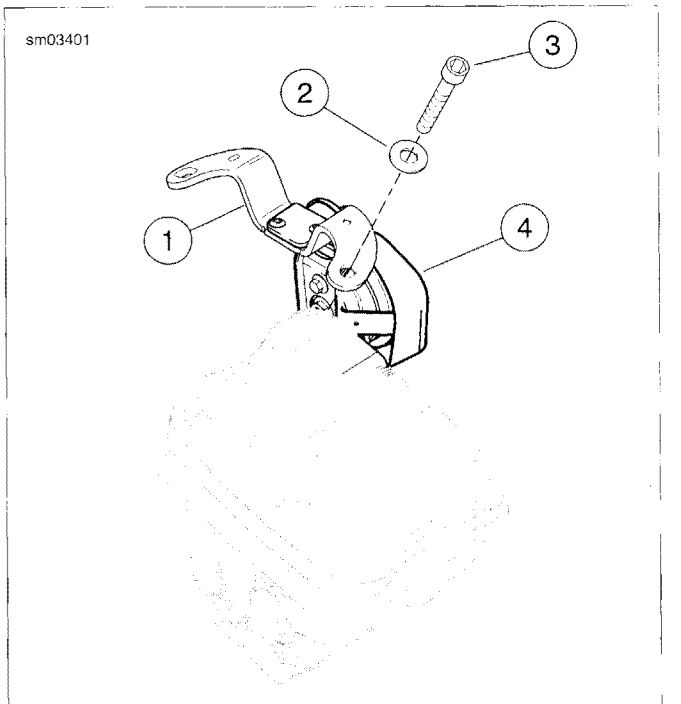

1. **Cylinder head bracket**
2. **Washer (2)**
3. **Screw (2)**
4. **Horn assembly**

Figure 4-74. Horn and Cylinder Head Bracket (XL Models With Side Mounted Horn Only)

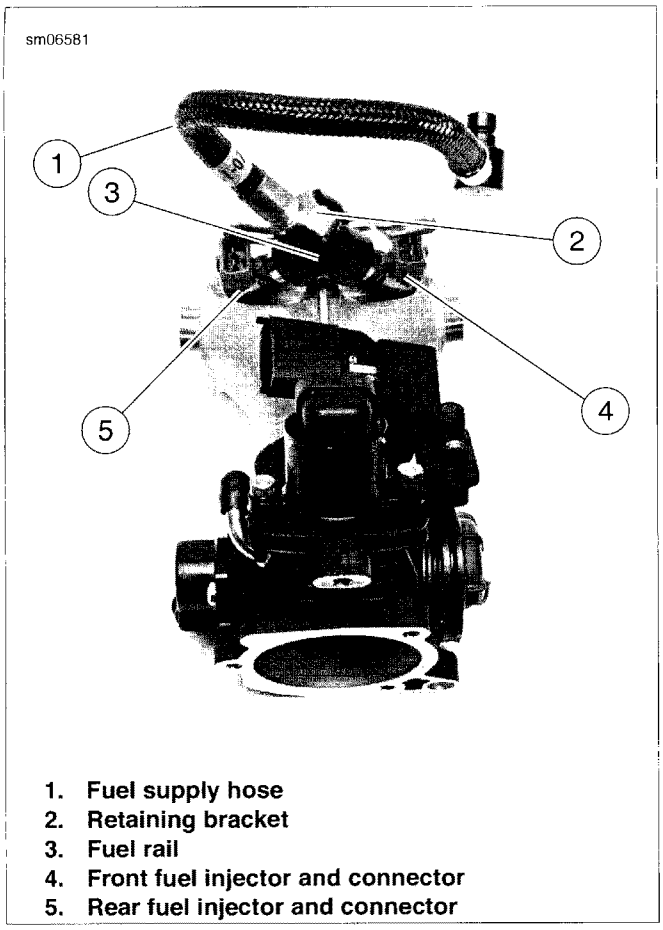

1. **Fuel supply hose**
2. **Retaining bracket**
3. **Fuel rail**
4. **Front fuel injector and connector**
5. **Rear fuel injector and connector**

Figure 4-75. Fuel Injector Assembly Location: XL Models

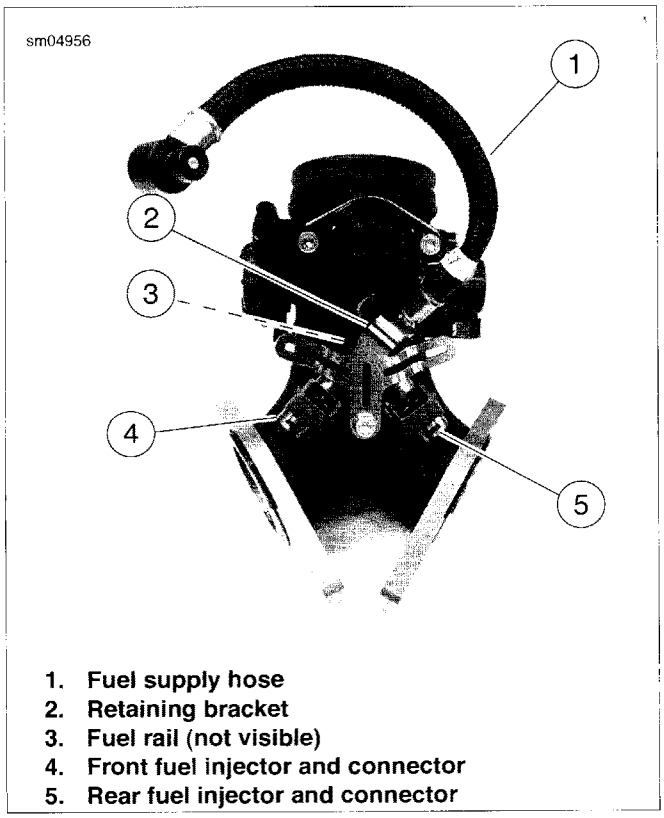

1. **Fuel supply hose**
2. **Retaining bracket**
3. **Fuel rail (not visible)**
4. **Front fuel injector and connector**
5. **Rear fuel injector and connector**

Figure 4-76. Fuel Injector Assembly Location: XR Models

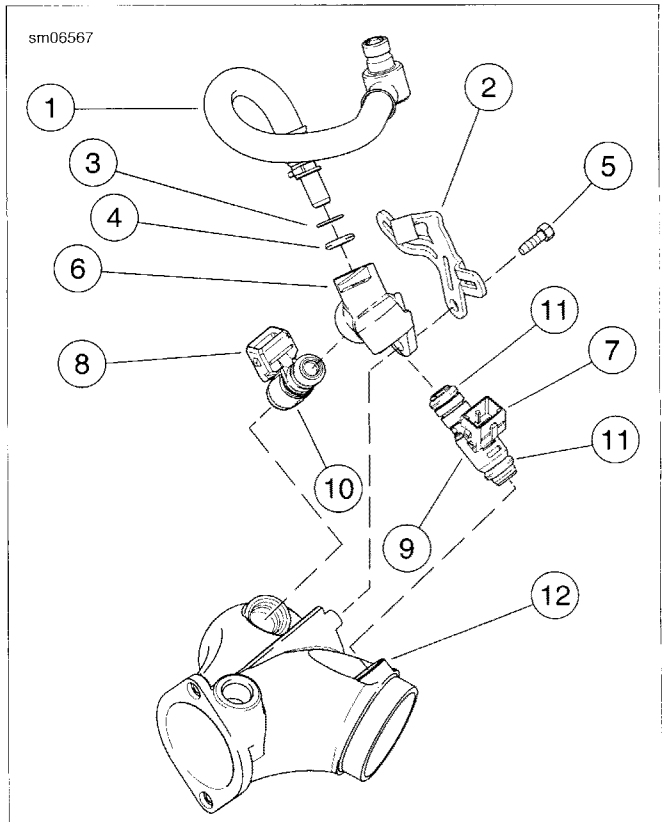

1. **Fuel supply hose**
2. **Retaining bracket**
3. **Sealing washer (only available with fuel supply hose)**
4. **O-ring (only available with fuel supply hose)**
5. **Screw**
6. **Fuel rail**
7. **Front injector connector [84A]**
8. **Rear injector connector [85A]**
9. **Front fuel injector**
10. **Rear fuel injector**
11. **O-ring (4) (provided in repair kit)**
12. **Intake manifold**

Figure 4-77. Fuel Injector Assemblies (typical: XL model shown)

INSTALLATION

1. See Figure 4-77. Apply a thin coat of clean engine oil to **new** fuel injector O-rings (11). Install O-rings onto fuel injectors (9, 10).
2. Push fuel injectors into intake manifold (XL models) or induction module (XR models) with harness connectors (7, 8) facing up. Rotate fuel injectors so that harness connectors are positioned, as shown in either Figure 4-75 or Figure 4-76 depending on model being serviced.
3. Gently press fuel rail onto free end of fuel injectors. Press fuel rail down until hole in fuel rail molded-in bracket lines up with mounting hole in intake manifold (12).

NOTE

An alternate method of assembly is to first install rear fuel injector in the intake manifold (XL models) or induction module (XR models) and front fuel injector in the fuel rail. Then install

the assembly onto the intake manifold (XL models) or induction module (XR models).

4. If the fuel supply hose and fuel rail were separated in the disassembly procedure, reassemble as follows:
   a. See Figure 4-77. Inspect sealing washer (3) and O-ring (4) for damage. If either require replacement, install a **new** fuel line kit.
   b. Lightly coat O-ring with clean engine oil. Push fuel supply hose into fuel rail bore until collar on hose is flush with top of fuel rail.

NOTE

The fuel supply hose must be oriented properly when installing the retaining bracket. See Figure 4-78.

5. See Figure 4-77. Install retaining bracket (2) and fastener (5) as follows:
   a. See Figure 4-78. Orient fuel supply hose so that locating flange (2) is positioned as shown.
   b. Install retaining bracket (3) so that U-shaped opening in bracket fits around fuel supply hose and locating flange as shown.
   c. See Figure 4-77. Secure retaining bracket (2) with screw (5). Tighten to 60 **in-lbs** (6.8 Nm).

NOTE

XR Models: *See Figure 4-76. Do not route the fuel injector harness leads between the retaining bracket (2) and induction module body. Improper routing will result in chafing of the insulation resulting in poor engine performance.*

6. Connect engine sub-harness connectors to the fuel injectors. Ensure wire harnesses are routed outside the wings of retaining bracket (2) on XR models.

⚠WARNING

After installing seat, pull upward on seat to be sure it is locked in position. While riding, a loose seat can shift causing loss of control, which could result in death or serious injury. (00070b)

7. **XL Models with 4.5 gallon (17.0 liter) fuel tank:** if the fuel tank was raised up to gain access to the fuel injectors, install fuel tank and seat:
   a. Remove prop from under rear of fuel tank. Lower rear of fuel tank into position and install screw, washer and nut in fuel tank rear mounting holes. Tighten front and rear mounting screws to 15-20 ft-lbs (20.4-27.1 Nm). Install protective caps on screw ends. See 4.5 FUEL TANK: XL MODELS.
   b. Install seat.
8. Connect fuel hose to fuel pump module. Fill fuel tank and carefully check for leaks around fuel pump module. See 4.5 FUEL TANK: XL MODELS.
9. **XL Models with side-mounted horn:** See Figure 4-74. Plug harness connectors [122] into horn (4). Mount cylinder head bracket (1) on engine. Secure with washers (2) and screws (3). Tighten to 17-24 ft-lbs (23.1-32.6 Nm).
10. Install main fuse and close left side cover. See 6.35 MAIN FUSE.

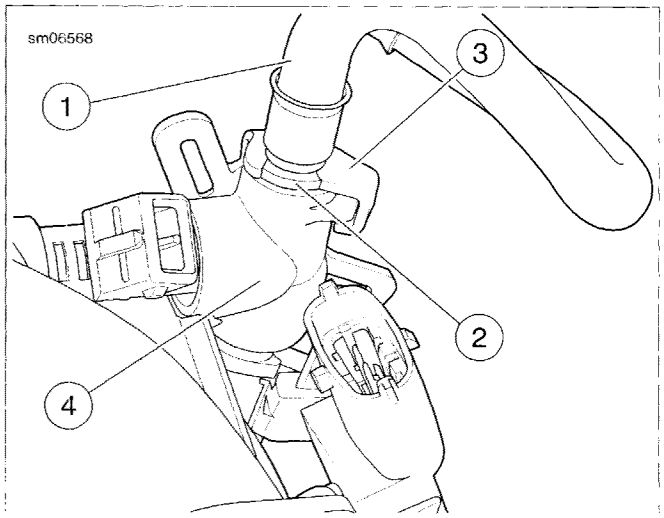

1. **Fuel supply hose**
2. **Locating flange**
3. **Retaining bracket**
4. **Fuel rail**

Figure 4-78. Mounting Fuel Hose and Fuel Rail (Typical: XL Model Shown)

GENERAL

⚠WARNING

Stop the engine when refueling or servicing the fuel system. Do not smoke or allow open flame or sparks near gasoline. Gasoline is extremely flammable and highly explosive, which could result in death or serious injury. (00002a)

⚠WARNING

Do not replace the special Teflon coated fuel pump wiring with ordinary bulk wire. Ordinary insulation materials can deteriorate when put in contact with gasoline and cause an explosion, which could result in death or serious injury. (00566b)

NOTE

Carefully inspect fuel hose for cuts, tears, holes or other damage. Replace hose if any damage is found. Even a small hole can cause a reduction in fuel pressure.

Refer to the electrical diagnostic manual for information on the function and testing of the fuel pump.

REMOVAL

⚠WARNING

To prevent spray of fuel, purge system of high-pressure fuel before supply line is disconnected. Gasoline is extremely flammable and highly explosive, which could result in death or serious injury. (00275a)

1. Purge the fuel supply hose of high pressure gasoline. Disconnect fuel supply hose from fuel pump module. See 4.5 FUEL TANK: XL MODELS or 4.6 FUEL TANK: XR MODELS.

⚠WARNING

To prevent accidental vehicle start-up, which could cause death or serious injury, remove main fuse before proceeding. (00251b)

2. Unplug main fuse. See 6.35 MAIN FUSE.
3. See Figure 4-79. Unplug fuel pump harness connector [141] (1), located forward of fuse/relay block on left side of vehicle.
4. **XL Models:** Remove seat.
5. Drain and remove fuel tank from vehicle. See 4.5 FUEL TANK: XL MODELS or 4.6 FUEL TANK: XR MODELS.
6. See Figure 4-80. Lay fuel tank upside-down on a soft cloth.
7. Remove five screws (3).
8. Carefully lift fuel pump module out of fuel tank. See Figure 4-81. To facilitate removal, tilt module when it is almost completely free of fuel tank.
9. See Figure 4-79. Remove and discard cover plate seal (7).

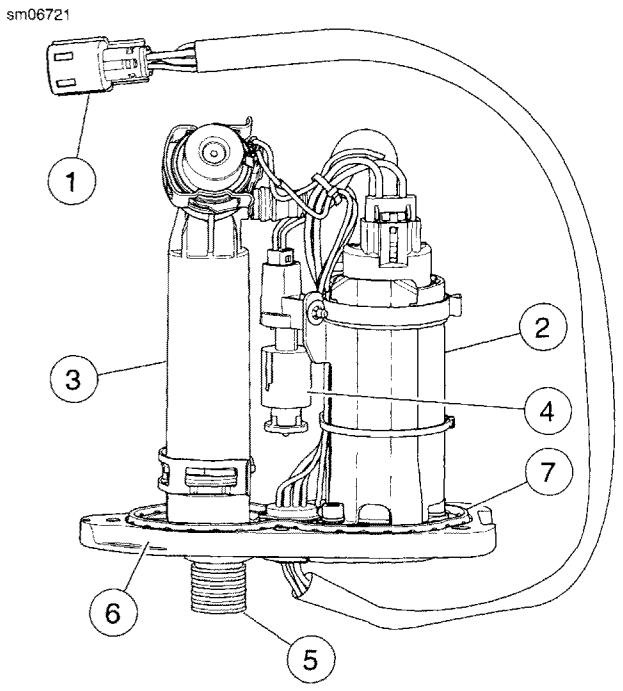

1. **Fuel pump harness connector [141]**
2. **Fuel pump**
3. **Fuel filter housing**
4. **Sending unit float**
5. **Quick-connect fitting**
6. **Cover plate**
7. **Cover plate seal**

Figure 4-79. Fuel Pump Module

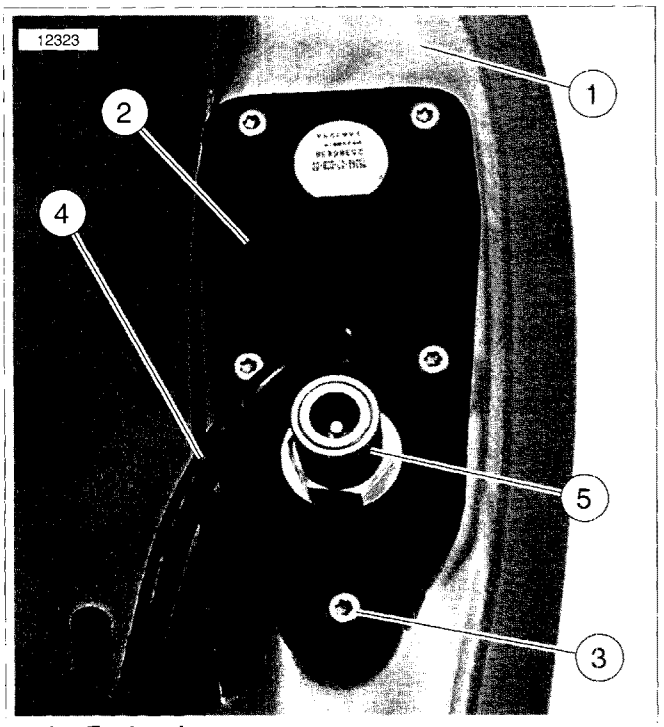

1. Fuel tank
2. Fuel pump module
3. Screw (5)
4. Fuel pump harness
5. Quick-connect fitting

Figure 4-80. Fuel Pump Module: All Models (XL Shown)

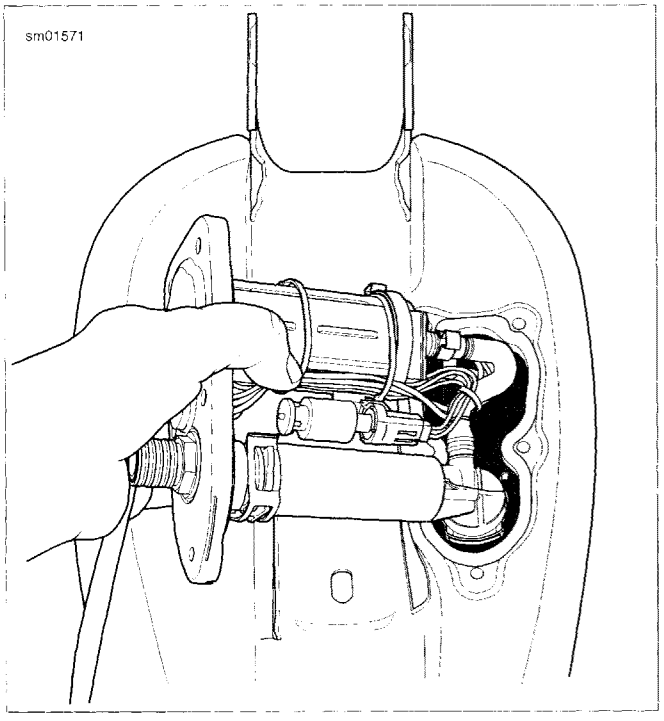

Figure 4-81. Removing/Installing Fuel Pump Module: All Models (XL Shown)

DISASSEMBLY

The disassembly procedure consists of the following groups:

- Pressure regulator and filter housing.
- Fuel pump assembly and pump bracket.
- Low fuel level sensor assembly.
- Fuel pump/sender harness.

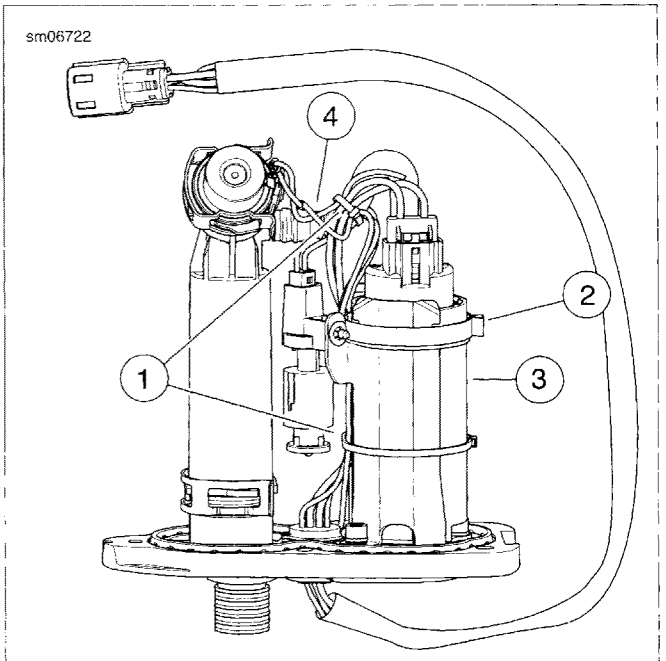

1. Cable strap (3)
2. Pump assembly clamp
3. Pump bracket
4. Filter housing hose

Figure 4-82. Fuel Pump Assembly: Location of Cable Straps and Pump Clamp

NOTE

See Figure 4-82. When disassembling or assembling the fuel pump and sender assembly, refer to this figure for the relative positions of the wiring harness cable straps (1) and pump assembly clamp (2).

Pressure Regulator and Filter Housing

1. See Figure 4-82. Cut and discard cable strap (1) securing wiring harness to the filter housing hose (4).
2. See Figure 4-83. Remove ground clip (12) from top of filter housing (23).
3. Remove and discard clamp (1). Remove filter housing hose from top of fuel pump (2).
4. Remove retaining clip (24) from top of filter housing and remove pressure regulator (22).
5. Remove second retaining clip (24) from bottom of filter housing and remove filter housing. Remove fuel filter element (25) from housing.
6. Remove O-ring (26) from filter housing mount (19).

Fuel Pump Assembly and Pump Bracket

1. See Figure 4-82. Make note of the location of any cable straps securing wiring harness to the fuel pump bracket (3). Cut and discard cable straps.
2. See Figure 4-83. Unplug fuel pump harness connector [86] (13).
3. Unplug low fuel level sensor connector from fuel pump/sender harness (14).
4. Remove and discard clamp (1). Remove filter housing hose (11) from top of fuel pump (2).
5. Remove and discard pump assembly clamp (7). Remove pump assembly with pump insulator (3) from pump bracket (5).
6. Remove push nut (16) and low fuel level sensor assembly (17) from pump bracket.
7. Remove three screws w/lock washers (6) and remove pump bracket from cover plate (9).

Low Fuel Level Sensor Assembly

1. See Figure 4-82. Make note of the location of cable strap (1) securing low fuel level sensor connector to filter housing hose (4). Cut and discard cable strap.
2. See Figure 4-83. Unplug the fuel pump/sender harness connector (15) from the low fuel level sensor (17).
3. Remove push nut (16) and low fuel level sensor assembly (17) from pump bracket (5).

Fuel Pump/Sender Harness

1. See Figure 4-82. Make note of the location of cable straps (1) securing fuel pump/sender harness to fuel pump bracket (3) and filter housing hose (4). Cut and discard cable straps.
2. See Figure 4-83. Unplug low fuel level sensor connector (15) from fuel pump/sender harness (14). Unplug fuel pump harness connector [86] (13) from fuel pump.
3. Remove screw w/lock washer (6) securing fuel pump/sender harness grounding eyelet to pump bracket (5).
4. Remove retaining ring (18). Remove fuel pump/sender harness from cover plate (9).

ASSEMBLY

The assembly procedure consists of the following groups:

- Fuel pump/sender harness.
- Low fuel level sensor assembly.
- Fuel pump assembly and pump bracket.
- Pressure regulator and filter housing.

Fuel Pump/Sender Harness

1. See Figure 4-83. Install fuel pump/sender harness (14) into cover plate (9). Secure with retaining ring (18).
2. Secure fuel pump/sender harness grounding eyelet to pump bracket (5) using screw w/lock washer (6). Tighten to 19-36 **in-lbs** (2.1-4.1 Nm).
3. Plug low fuel level sensor connector (15) into fuel pump/sender harness. Plug fuel pump harness connector [86] (13) into fuel pump (2).
4. See Figure 4-82. Secure wiring harness to fuel pump bracket (3) and filter housing hose (4) with cable straps (1).

Low Fuel Level Sensor Assembly

1. See Figure 4-83. Install low fuel level sensor assembly (17) onto pump bracket (5). Secure with push nut (16).
2. Plug the fuel pump/sender harness connector (15) into the low fuel level sensor (17).
3. See Figure 4-82. Secure low fuel level sensor connector and fuel pump/sender harness to filter housing hose (4) with cable strap (1).

Fuel Pump Assembly and Pump Bracket

1. See Figure 4-83. Install pump bracket (5) onto cover plate (9). Secure with three screws w/lock washers (6). Tighten to 19-36 **in-lbs** (2.1-4.1 Nm).
2. Install low fuel level sensor assembly (17) onto pump bracket. Secure with push nut (16).
3. Install fuel pump assembly (2) with pump insulator (3) onto pump bracket. Secure with pump assembly clamp (7) (for relative position of clamp, see Figure 4-82.)
4. Install filter housing hose (11) on top of fuel pump. Secure with clamp (1).
5. Plug in fuel pump harness connector [86] (13).
6. See Figure 4-82. Secure fuel pump/sender harness to fuel pump bracket (3) with cable straps (1).

Pressure Regulator and Filter Housing

1. See Figure 4-83. Examine O-ring (26) for cuts, tears, cracking or other damage. Replace with **new** O-ring if necessary (only available as part of filter kit). Install O-ring onto filter housing mount (19).
2. Install fuel filter element (25) into filter housing (23). Install filter housing onto filter housing mount. Secure with retaining clip (24) at bottom of housing, making sure that clip is oriented exactly as shown in Figure 4-83.
3. Install pressure regulator (22) on top of filter housing. Secure with second retaining clip (24), making sure that clip is oriented exactly as shown in Figure 4-83.
4. Install filter housing hose (11) on top of fuel pump (2). Secure with clamp (1).
5. Install ground clip (12) on top of filter housing.
6. See Figure 4-82. Secure fuel pump/sender harness to filter housing hose (4) with cable strap (1).

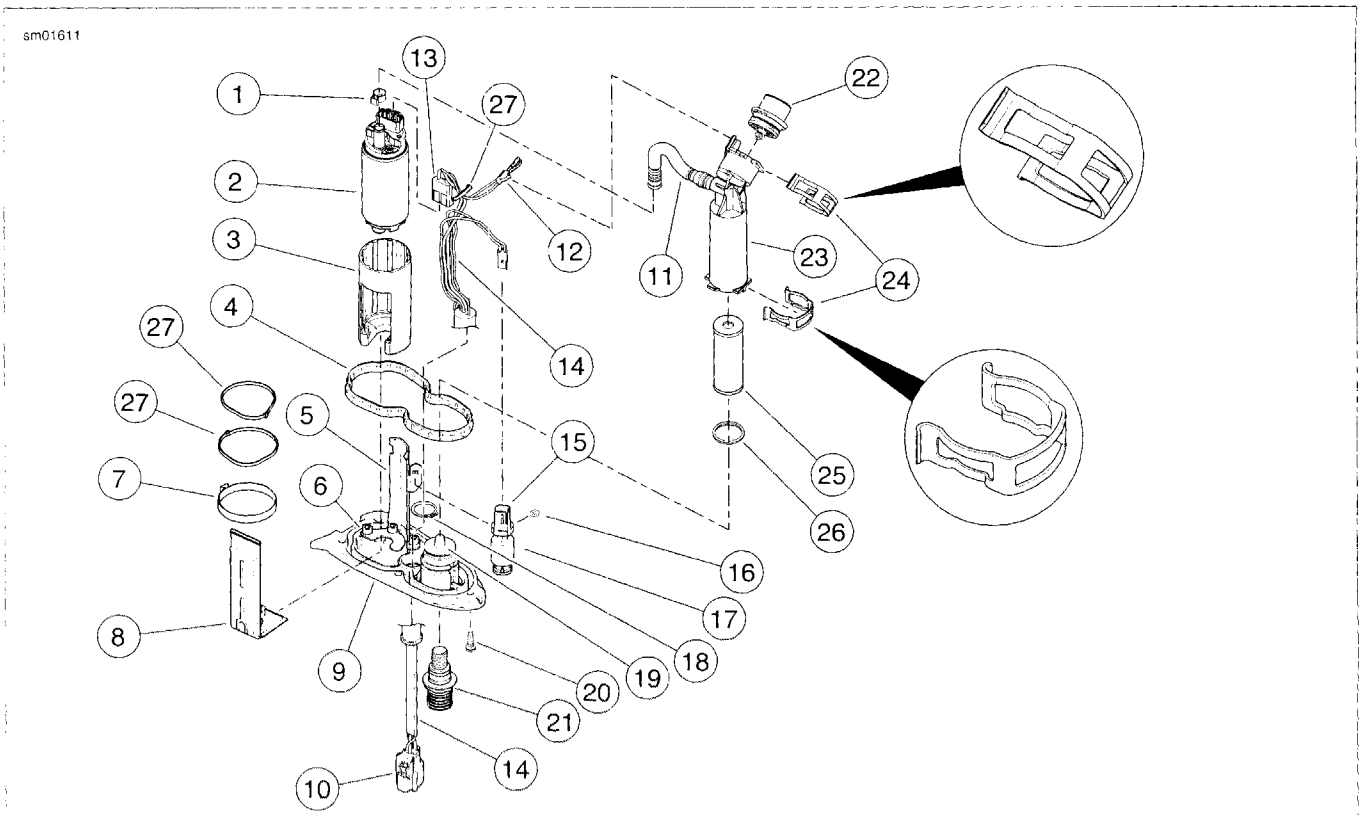

1. Clamp
2. Fuel pump
3. Pump insulator
4. Cover plate seal
5. Pump bracket
6. Screw w/ lock washer (3)
7. Pump assembly clamp
8. Inlet sock
9. Cover plate
10. Fuel pump/sender harness connector [141]
11. Filter housing hose
12. Ground clip
13. Fuel pump harness connector [86]
14. Fuel pump/sender harness
15. Low fuel level sensor connector
16. Push nut
17. Low fuel level sensor
18. Retaining ring
19. Filter housing mount
20. Screw (5)
21. Fuel outlet quick-connect fitting
22. Pressure regulator
23. Filter housing
24. Retaining clip (2)
25. Fuel filter element
26. O-ring
27. Cable strap

Figure 4-83. Fuel Pump and Sender Assembly

INSTALLATION

1. See Figure 4-83. Install **new** cover plate seal (4) into groove in cover plate (9).
2. Carefully install fuel pump module into fuel tank. See Figure 4-81. To facilitate installation, tilt module as you begin to lower it into fuel tank, as shown in the photo. Then straighten module to complete installation.
3. See Figure 4-80. Install five screws (3). Tighten to 40-45 **in-lbs** (4.5-5.1 Nm).
4. Install fuel tank on vehicle. See 4.5 FUEL TANK: XL MODELS or 4.6 FUEL TANK: XR MODELS.
   a. Make sure fuel pump harness fits in wire harness caddy latch clip with loop in harness between latch clip and fuel pump module to avoid harness being pinched between fuel tank and frame backbone.
   b. Plug in fuel pump harness connector [141].
   c. Connect vent hose to fuel tank vent nipple.
5. Connect fuel hose to fuel tank. Fill fuel tank and carefully check for leaks around fuel pump module. See 4.5 FUEL TANK: XL MODELS or 4.6 FUEL TANK: XR MODELS.
6. Install main fuse. Close left side cover. See 6.35 MAIN FUSE.

7. Turn ignition switch ON and verify fuel pump is activated. Carefully inspect for leaks at quick-connect fitting. Turn ignition switch OFF.

⚠WARNING

After installing seat, pull upward on seat to be sure it is locked in position. While riding, a loose seat can shift causing loss of control, which could result in death or serious injury. (00070b)

8. **XL Models:** Install seat.

GENERAL

PART NUMBER	TOOL NAME
HD-48650	DIGITAL TECHNICIAN II

⚠WARNING

Stop the engine when refueling or servicing the fuel system. Do not smoke or allow open flame or sparks near gasoline. Gasoline is extremely flammable and highly explosive, which could result in death or serious injury. (00002a)

The fuel pump delivers fuel to the fuel hose, a cavity in the induction module that supplies the fuel injectors, and to the pressure regulator. Excess fuel pressure is bypassed to the fuel tank through the pressure regulator.

The fuel pump can be turned on with DIGITAL TECHNICIAN II (Part No. HD-48650).

Improper fuel system pressure may contribute to one of the following conditions:

- Cranks, but won't run.
- Cuts out (may feel like ignition problem).
- Hesitation, loss of power or poor fuel economy.

NOTE

Refer to the electrical diagnostic manual for further information on the function and testing of the fuel system.

TESTING

PART NUMBER	TOOL NAME
HD-41182	FUEL PRESSURE GAUGE
HD-44061	FUEL PRESSURE GAUGE ADAPTER

NOTE

Be sure to avoid kinking the fuel hose when installing or removing fuel pressure gauge and adapter.

1. Purge the fuel supply hose of high pressure gasoline. Disconnect fuel supply hose from fuel pump module. See 4.5 FUEL TANK: XL MODELS or 4.6 FUEL TANK: XR MODELS.
2. Connect fuel pump connector.
3. See Figure 4-84. Attach FUEL PRESSURE GAUGE ADAPTER (Part No. HD-44061) (1) as follows:
   a. See Figure 4-85. Pull up on sleeve of fuel tank quick-connect fitting (2) and insert neck of FUEL PRESSURE GAUGE ADAPTER (3) into quick-connect fitting.
   b. While pushing up on bottom of adapter, pull down on sleeve until it "clicks" into the locked position. Tug on adapter to be sure that it is locked in place and will not come free.
   c. In the same manner, connect vehicle's fuel supply hose fitting (1) to quick-connect fitting (4) on FUEL PRESSURE GAUGE ADAPTER.

⚠WARNING

To prevent spray of fuel, be sure quick-connect fittings are properly mated. Gasoline is extremely flammable and highly explosive, which could result in death or serious injury. (00268a)

4. See Figure 4-85. Verify that the fuel valve (6) and air bleed petcock on the FUEL PRESSURE GAUGE (Part No. HD-41182) are closed.
5. See Figure 4-84. Remove protective cap from free end of fuel pressure gauge adapter. Connect fuel pressure gauge to Schroeder valve.
6. Start and idle engine to pressurize the fuel system. Open the fuel valve to allow the flow of fuel down the hose of the pressure gauge.
7. Position the clear air bleed tube in a suitable container and open and close the air bleed petcock to purge the gauge and hose of air. Repeat this step several times until only solid fuel (without bubbles) flows from the air bleed tube. Close the petcock.
8. Open and close throttle to change engine speed. Note the reading of the pressure gauge. Fuel pressure should remain steady at 55-62 psi (380-425 kPa).

NOTE

If fuel pressure gauge reading is not within specifications, see electrical diagnostic manual for further diagnosis.

9. Turn the engine OFF. Position the air bleed tube in a suitable container. Open the air bleed petcock to relieve the fuel system pressure and purge the pressure gauge of gasoline.

⚠WARNING

Gasoline can drain from the adapter when gauge is removed. Gasoline is extremely flammable and highly explosive, which could result in death or serious injury. Wipe up spilled fuel immediately and dispose of rags in a suitable manner. (00254a)

10. Remove fuel pressure gauge from the adapter. Install protective cap over Schroeder valve.

⚠WARNING

Gasoline can drain from the fuel line and adapter when removed. Gasoline is extremely flammable and highly explosive, which could result in death or serious injury. Wipe up spilled fuel immediately and dispose of rags in a suitable manner. (00255a)

11. Pull up on knurled sleeve of FUEL PRESSURE GAUGE ADAPTER quick-connect fitting and remove vehicle's fuel supply hose from adapter. Release adapter from fuel tank in the same manner.

⚠WARNING

To prevent spray of fuel, be sure quick-connect fittings are properly mated. Gasoline is extremely flammable and highly explosive, which could result in death or serious injury. (00268a)

12. Push up on release sleeve of fuel pump quick-connect fitting and push fuel hose fitting into quick-connect fitting. Pull down on release sleeve to lock quick-connect fitting. Tug on fuel hose fitting to make sure it is securely locked in place.

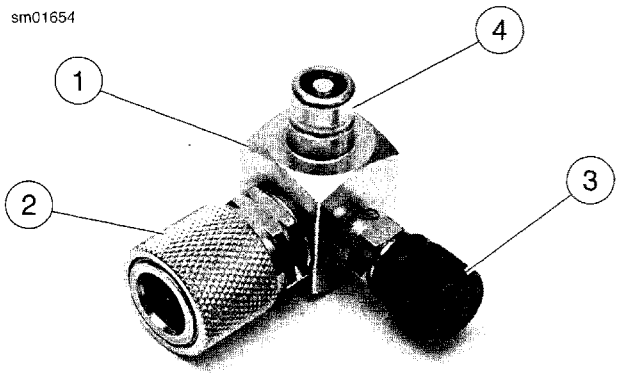

1. **Adapter**
2. **Quick-connect fitting**
3. **Protective cap**
4. **Fuel tank fitting (neck)**

Figure 4-84. Fuel Pressure Gauge Adapter (Part No. HD-44061)

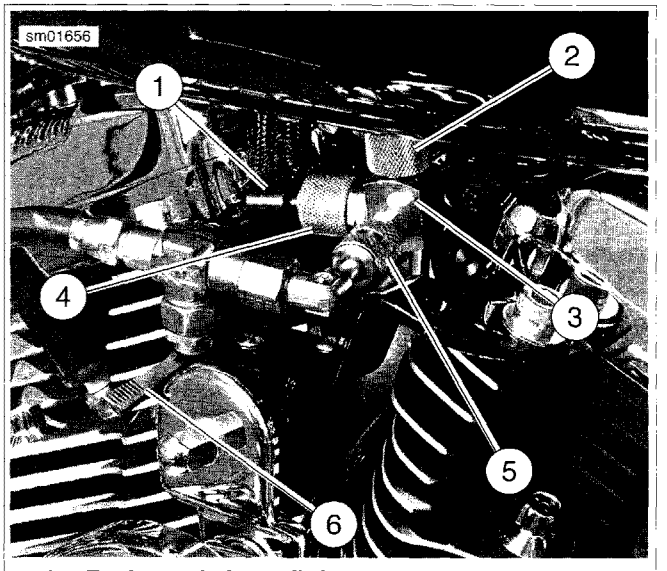

1. **Fuel supply hose fitting**
2. **Fuel tank quick-connect fitting**
3. **Fuel pressure guage adapter**
4. **Adapter quick-connect fitting**
5. **Pressure adapter/Schroeder valve fitting**
6. **Fuel valve (closed position)**

Figure 4-85. Assembling Adapter, Gauge and Fuel Supply Hose to Fuel Tank: All Models (XL 1200C Shown)

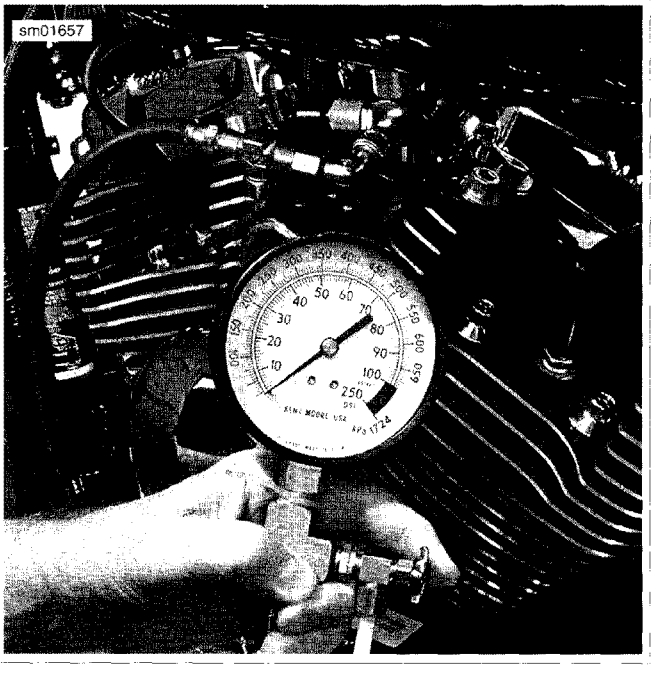

Figure 4-86. Fuel Pressure Gauge Installed: All Models (XL 1200C Shown)

GENERAL

⚠WARNING

Do not allow open flame or sparks near propane. Propane is extremely flammable, which could cause death or serious injury. (00521b)

⚠WARNING

Read and follow warnings and directions on propane bottle. Failure to follow warnings and directions can result in death or serious injury. (00471b)

NOTES

- *To prevent false readings, keep air cleaner cover installed when performing test.*
- *Do not direct propane into air cleaner; false readings will result.*
- *Be careful when testing vehicle with Screamin' Eagle air cleaner assembly. This type of air cleaner has an open backing plate. Even with air cleaner cover on, directing nozzle too close to backing plate can give false readings.*

LEAK TESTER

PART NUMBER	TOOL NAME
HD-41417	PROPANE ENRICHMENT KIT

Parts List

- Standard 14 oz. propane cylinder.
- PROPANE ENRICHMENT KIT (Part No. HD-41417).

Tester Assembly

1. See Figure 4-87. Make sure valve knob (6) is closed (fully clockwise).
2. Screw valve assembly (5) onto propane bottle (1).

Tester Adjustment

1. See Figure 4-87. Press and hold trigger button (8).
2. Slowly open valve knob (6) until pellet in flow gauge (7) rises to between 5 and 10 SCFH on gauge.
3. Release trigger button.

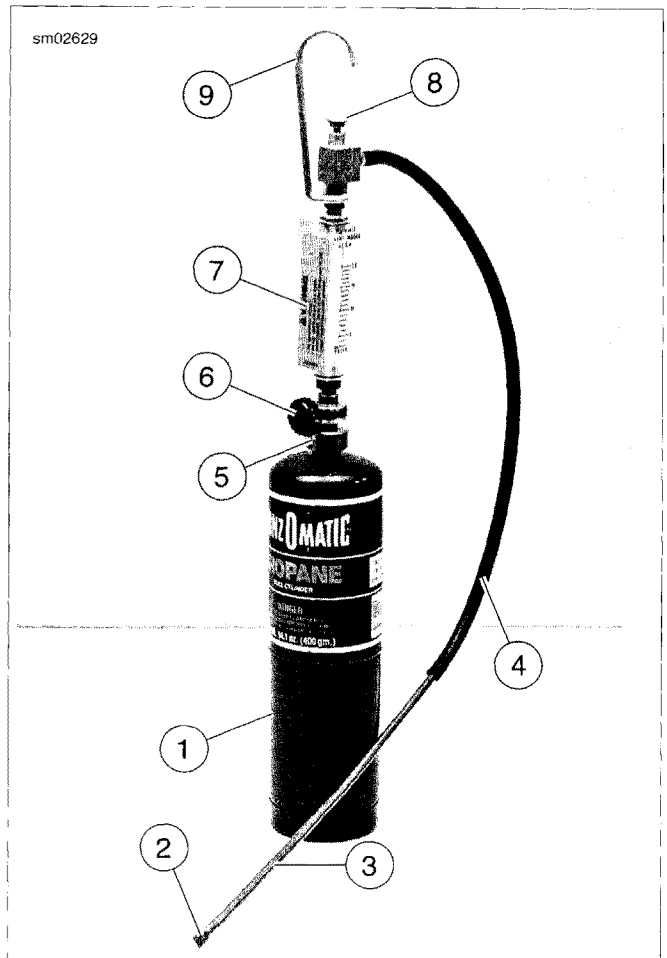

1. **Propane bottle**
2. **Nozzle**
3. **Copper tube**
4. **Hose**
5. **Valve assembly**
6. **Valve knob**
7. **Flow gauge**
8. **Trigger button**
9. **Hanger**

Figure 4-87. Leak Tester

PROCEDURE

1. Start engine.
2. Warm up engine to operating temperature.

NOTE

Do not direct propane stream toward air cleaner. If propane enters air cleaner, a false reading will be obtained.

3. See Figure 4-88. Aim nozzle (3) toward possible sources of leak such as intake manifold mating surfaces.
4. Press and release trigger button (2) to dispense propane. Tone of engine will change when propane enters source of leak. Repeat as necessary to detect leak.
5. When test is finished, close valve knob (turn knob fully clockwise).

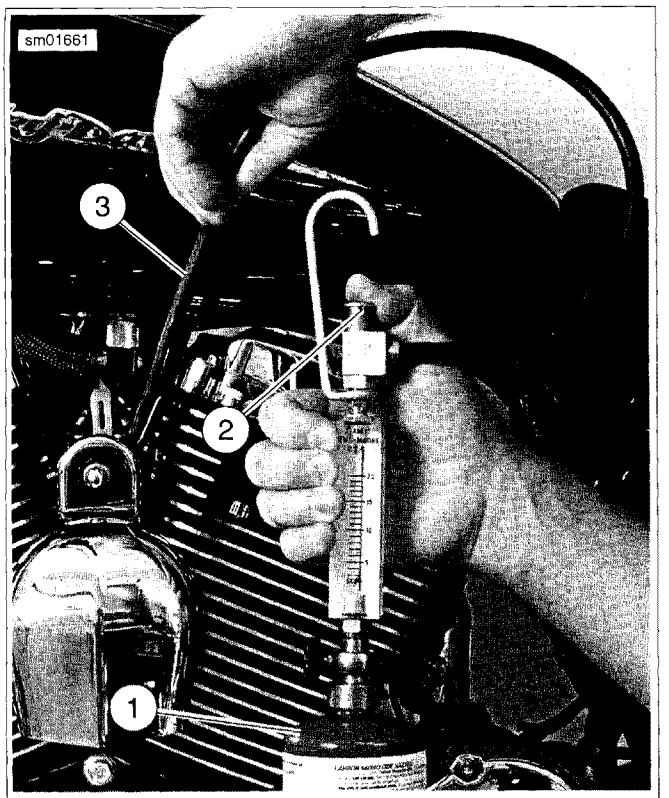

1. Propane bottle
2. Trigger button
3. Nozzle

Figure 4-88. Checking for Leaks: All Models (XL 1200C Shown)

EVAPORATIVE EMISSIONS CONTROL (CA MODELS) 4.20

GENERAL

Harley-Davidson motorcycles sold in the state of California are equipped with an evaporative (EVAP) emissions control system. The EVAP system prevents fuel hydrocarbon vapors from escaping into the atmosphere and is designed to meet the California Air Resource Board (CARB) regulations in effect at the time of manufacture.

See Figure 4-89. The EVAP functions in the following manner:

- Hydrocarbon vapors in the fuel tank (2, 10) are directed through the vapor valve (4) or vent fitting (9) and stored in the charcoal canister (3). If the vehicle is tipped at an abnormal angle, the vapor valve closes to prevent liquid gasoline from leaking out of the fuel tank into the charcoal canister through the vapor valve hoses (5, 6).
- When the engine is running, intake venturi negative pressure (vacuum) slowly draws off the hydrocarbon vapors from the charcoal canister through the canister-to-induction module purge hose. These vapors pass through the intake and are burned as part of normal combustion in the engine.

⚠WARNING

Keep evaporative emissions vent lines away from exhaust and engine. Gasoline is extremely flammable and highly explosive, which could result in death or serious injury. (00266a)

NOTE

The EVAP system has been designed to operate with a minimum of maintenance. Check that all hoses are properly connected, are not pinched, kinked, cracked or torn, and are routed properly. Improper connections could leak charcoal from canister.

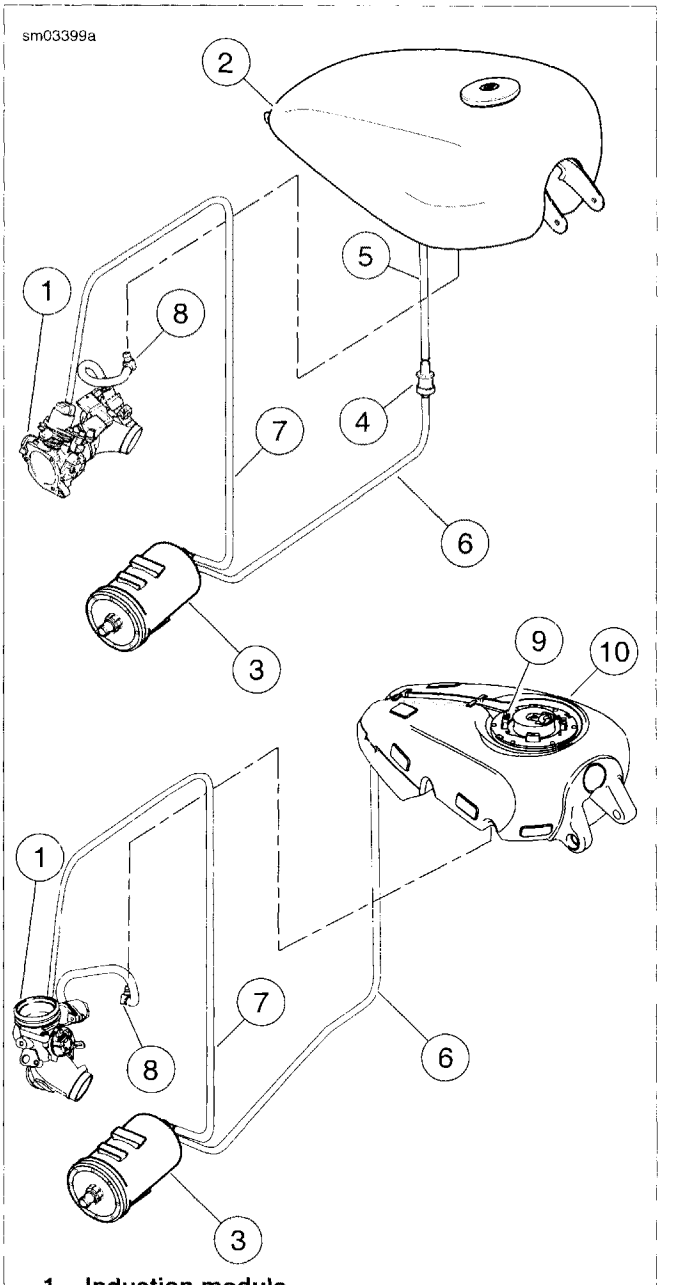

1. Induction module
2. Fuel tank (XL models only)
3. Charcoal canister
4. External vapor valve (XL models only)
5. Fuel tank-to-vapor valve hose
6. Vapor valve-to-canister hose
7. Purge hose
8. Fuel supply hose
9. Vent fitting (XR models only)
10. Fuel tank (XR models only)

Figure 4-89. California Evaporative Emissions Control System (typical)

CHARCOAL CANISTER

The charcoal canister is mounted to a bracket attached to the rear brake master cylinder bracket, near the bottom of the frame in front of the rear fork pivot point.

Removal

1. See Figure 4-90. Remove two screws (1) and canister guard (2).
2. Mark the two hoses (9, 10) connected to charcoal canister (6). Disconnect hoses from canister.
3. Depress locking tabs at left end of canister clip (5). Slide canister towards left side of vehicle until it disengages from canister clip.
4. Remove two screws (7) and washers (8) to detach canister clip from canister mounting bracket (3).
5. **XL Models:** If canister mounting bracket requires repair/replacement, proceed as follows:
   a. Remove two screws (13) and washers (14) securing rear master cylinder to mounting bracket. This will allow you to move the rear master cylinder to access the remaining fasteners.
   b. Remove two screws (4) to detach canister mounting bracket from rear master cylinder mounting bracket.
6. **XR Models:** See Figure 4-91. If canister mounting bracket requires repair/replacement, remove two screws (2) to detach canister mounting bracket from frame.

NOTE

It is not necessary to remove brake line clamp screw (1).

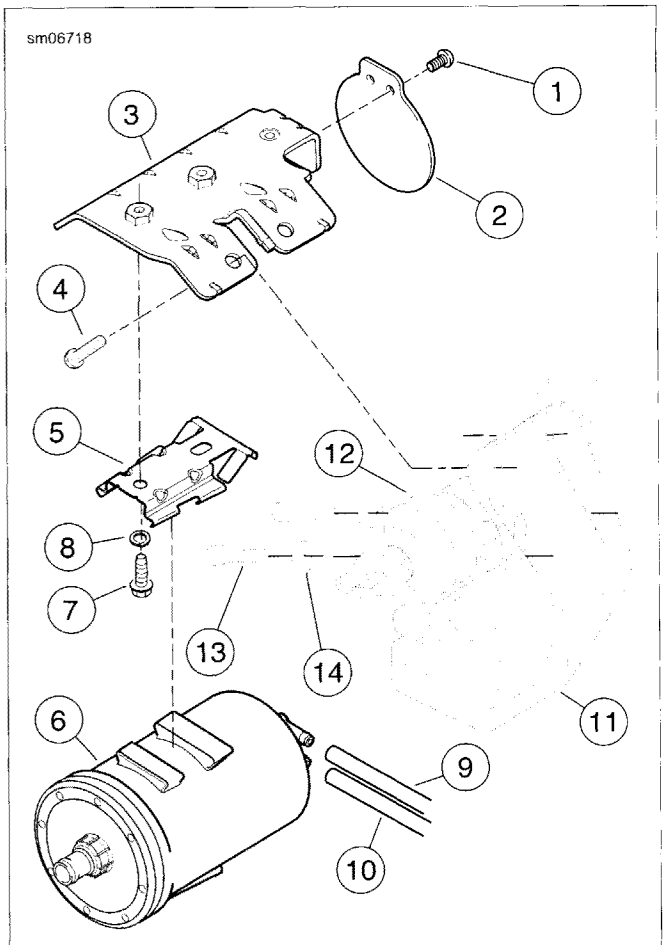

1. **Screw (2)**
2. **Canister guard**
3. **Canister mounting bracket**
4. **Screw (2)**
5. **Canister clip**
6. **Charcoal canister**
7. **Screw (2)**
8. **Washer (2)**
9. **Purge hose from induction module**
10. **Vent hose from vapor valve**
11. **Rear master cylinder bracket**
12. **Rear master cylinder**
13. **Screw (2)**
14. **Washer (2)**

Figure 4-90. Charcoal Canister Mounting (Typical)

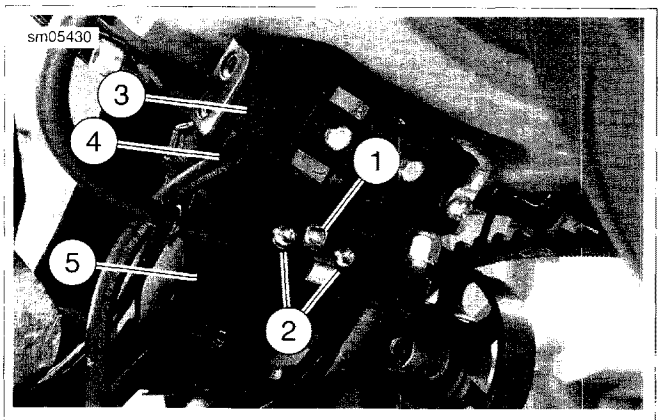

1. **Screw**
2. **Canister mounting bracket screws (2)**
3. **Canister mounting bracket**
4. **Fuel tank-to-canister hose**
5. **Canister-to-induction module hose**

Figure 4-91. Charcoal Canister Mount: XR Models

Installation

1. **XL Models:** See Figure 4-90. If canister mounting bracket (3) was removed, proceed as follows:
   a. Attach bracket (3) to rear master cylinder mounting bracket and frame with two screws (4). Tighten to 17-22 ft-lbs (23.1-29.9 Nm).
   b. Apply one or two drops of LOCTITE 243 to screws (13). Install rear master cylinder (12) to mounting bracket (11) with screws and washers (14). Tighten to 17-22 ft-lbs (23.0-29.8 Nm).
2. **XR Models:** See Figure 4-91. If canister mounting bracket (3) was removed, proceed as follows:
   a. Apply Loctite Threadlocker 243 (blue) to the threads of the mounting screws (2).
   b. Install bracket and tighten screws (2) to 17-22 ft-lbs (23.1-29.9 Nm).
3. See Figure 4-90. Attach canister clip (5) to canister mounting bracket with two screws (7) and two washers (8). Tighten to 36-60 **in-lbs** (4.1-6.8 Nm).
4. Starting at left side of canister clip, slide charcoal canister (6) to the right until tabs on canister clip lock canister in place. Bend tabs outward somewhat if canister is not held securely.
5. See Figure 4-92. Connect two hoses (1, 2), marked during disassembly, to their proper fittings on canister.
6. See Figure 4-90. Install canister guard (2) using two screws (1). Tighten to 35-45 **in-lbs** (4.0-5.1 Nm).

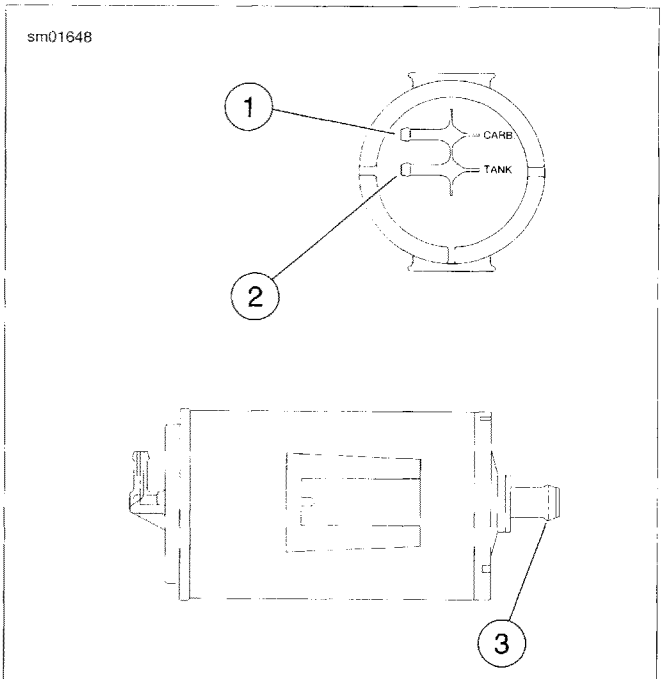

1. **Purge hose from induction module**
2. **Vent hose from fuel tank and vapor valve**
3. **Clean air port (no hose connection)**

Figure 4-92. Charcoal Canister Connections

VAPOR VALVE: XL MODELS

Removal

NOTES

- *On XL Models, the vapor valve is located beneath the seat in front of the battery, in a clip molded into frame-mounted H-bracket.*
- *On XR Models, the vapor valve in incorporated in the fuel tank filler housing. See 4.6 FUEL TANK: XR MODELS.*

1. Open left side cover. See 2.19 LEFT SIDE COVER.
2. See Figure 4-93. Carefully remove vapor valve (2) from clip (4) molded into H-bracket (6).
3. Mark two hoses (1, 3) connected to upper and lower fittings of vapor valve. Remove hoses from fittings.

NOTE

On non-California models, charcoal canister is absent and bottom hose of vapor valve is vented to the atmosphere.

Installation

⚠WARNING

Keep vent and vapor valve lines away from exhaust and engine. Gasoline is extremely flammable and highly explosive, which could result in death or serious injury. (00263a)

NOTE

Mount the vapor valve in an upright position with the longer fitting positioned at the top or excessive fuel vapor pressure

may build up within the fuel tank. Mounting the vapor valve upside down will result in fuel flow problems.

1. See Figure 4-93. Hold vapor valve (2) in an upright position with the long necked end pointing up. Insert top fitting of vapor valve into fuel tank-to-vapor valve hose (1). Install bottom vapor valve fitting into vapor valve-to-canister hose (3).
2. Carefully push body of vapor valve into clip (4) molded into H-bracket (6).

NOTE

Do NOT force vapor valve into clip. Forcing valve in to clip could cause clip to break, necessitating replacement of entire wiring harness guide.

3. Close left side cover.

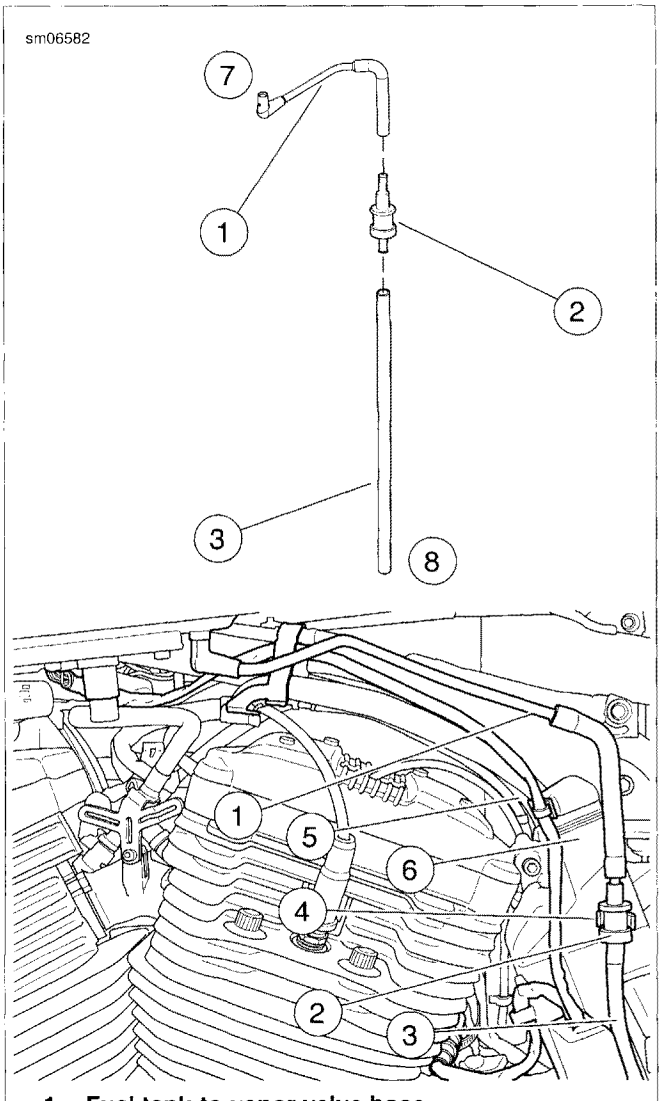

1. **Fuel tank-to-vapor valve hose**
2. **Vapor valve**
3. **Vapor-valve-to-canister hose**
4. **Vapor valve clip**
5. **Canister-to-induction module purge hose**
6. **ECM caddy**
7. **To fuel tank**
8. **To charcoal canister**

Figure 4-93. Vapor Valve and Hose Routing: XL California Models

HOSE ROUTING

See Figure 4-89, and then see Canister Hose Routings.

Induction Module

See Figure 4-94. Route the evaporative emissions control hose at the induction module as shown. **For XL models:** to access the hose, remove the fuel tank and air cleaner/backplate assembly as necessary.

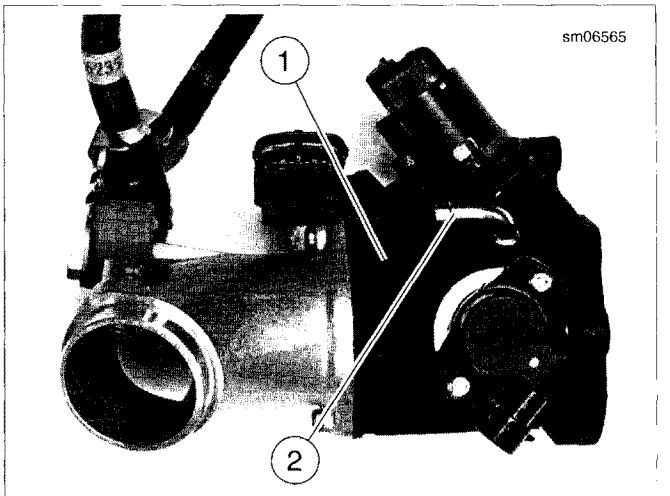

1. **Induction module**
2. **Purge hose (to canister) fitting**

Figure 4-94. Emissions Hose Routing at Induction Module

Canister Hose Routings: XL Models

1. See Figure 4-93. Connect vapor valve-to-canister hose (3) and canister-to-induction module purge hose (5) to labeled fittings on left side of charcoal canister.
2. Route both hoses up behind rear brake reservoir hose, between rear fork pivot point and rear end of crankcase.
3. Connect vapor valve-to-canister hose to bottom of vapor valve (2).
4. Connect fuel tank-to-vapor valve hose (1) at top of vapor valve.
5. See Figure 4-95. Route fuel tank-to-vapor valve hose (2) forward along left side of frame backbone and connect to fitting on bottom of fuel tank (1).
6. Route canister-to-induction module purge hose up right side of frame rear downtube. Continue routing hose forward along right side of frame backbone tube and down, connecting hose to induction module fitting.
7. Secure hose to boss on rear end of right wire harness caddy with a barbed cable strap. Press barbed prong of cable strap into hole in caddy boss. Ensure that hose is positioned up against engine sub-harness. Hose should be routed as far from rear rocker cover as possible.

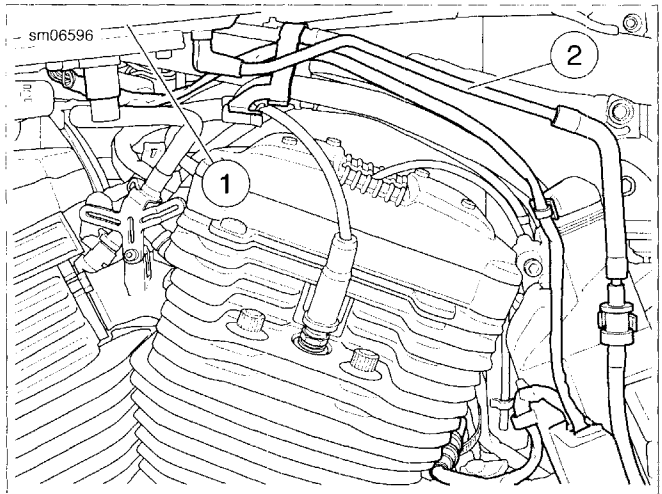

1. Fuel tank
2. Fuel tank-to-vapor valve hose

Figure 4-95. Fuel Tank-To-Vapor Valve Hose Routing

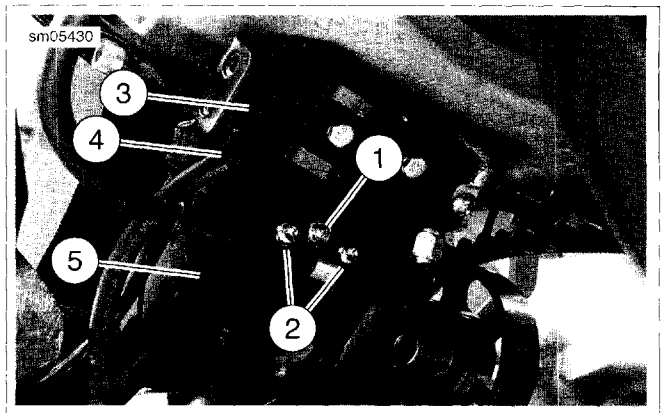

1. Screw
2. Canister mounting bracket screws (2)
3. Canister mounting bracket
4. Fuel tank-to-canister hose
5. Canister-to-induction module hose

Figure 4-96. Charcoal Canister Mount: XR Models

Canister Hose Routings: XR Models

1. See Figure 4-96. Route both hoses up past canister mount and between rear fork pivot point and rear end of crankcase as shown.
2. See Figure 4-97. Route fuel vapor hose (4) up along left side of frame rear downtube and outside the left electrical caddy. Connect to vapor tube (2).
3. Connect vapor tube (2) to fitting (1) on fuel tank filler housing and place in channel on top of fuel tank.
4. Secure to electrical caddy with barbed clamp (3).
5. See Figure 4-98. Route canister-to-induction module purge hose (1) up right side of frame rear downtube. Continue routing hose forward along right side of frame backbone tube and down, connecting hose to induction module fitting (3).
6. Secure hose to channels on rear end of right wire harness caddy (4). Ensure that hose is positioned up against engine sub-harness. Secure hose and harness with clamp (2).
7. Connect hoses to labeled fittings on left side of charcoal canister.

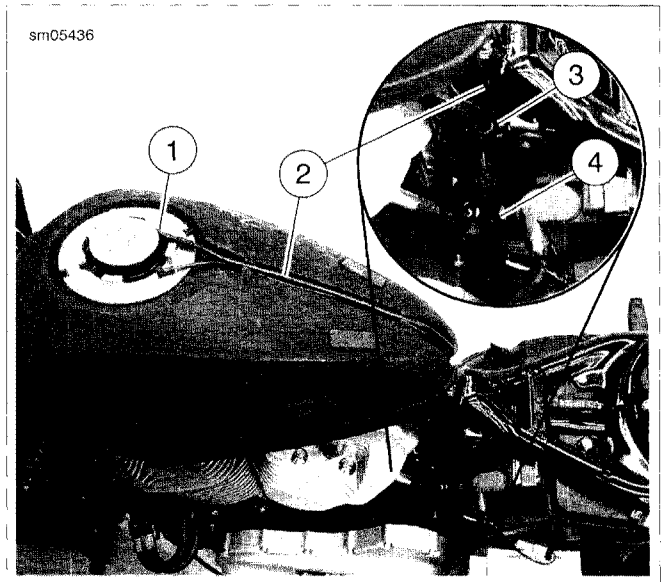

1. Vapor fitting
2. Vapor tube
3. Clamp
4. Vapor hose

Figure 4-97. Vapor Hose Routing

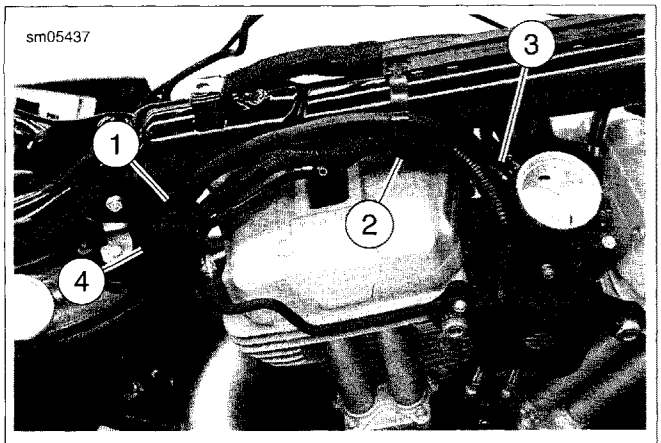

1. Purge hose
2. Clamp
3. Induction module fitting
4. Right wire harness caddy

Figure 4-98. Purge Hose Routing

SUBJECT	PAGE NO.
5.1 FASTENER TORQUE VALUES	5-1
5.2 SPECIFICATIONS: DRIVE	5-3
5.3 PRIMARY CHAIN ADJUSTER	5-4
5.4 CLUTCH RELEASE MECHANISM	5-9
5.5 PRIMARY DRIVE AND CLUTCH: XL MODELS	5-12
5.6 PRIMARY DRIVE AND CLUTCH: XR MODELS	5-20
5.7 DRIVE BELT	5-30
5.8 TRANSMISSION	5-34
5.9 CASE DISASSEMBLY FOR TRANSMISSION REMOVAL	5-35
5.10 TRANSMISSION REMOVAL AND DISASSEMBLY	5-39
5.11 TRANSMISSION ASSEMBLY	5-46
5.12 MAIN DRIVE GEAR AND BEARING	5-48
5.13 TRANSMISSION RIGHT CASE BEARINGS	5-57
5.14 TRANSMISSION LEFT CASE BEARINGS	5-58
5.15 TRANSMISSION INSTALLATION	5-59
5.16 TRANSMISSION SPROCKET	5-64

FASTENER TORQUE VALUES IN THIS CHAPTER

The table below lists torque values for all fasteners presented in this chapter.

FASTENER	TORQUE VALUE		NOTES
Axle nut, rear	95-105 ft-lbs	129-142 Nm	5.7 DRIVE BELT, Installation
Axle nut, rear	95-105 ft-lbs	129-142 Nm	5.7 DRIVE BELT, Installation
Belt guard screw, front	120-180 **in-lbs**	13.6-20.3 Nm	5.7 DRIVE BELT, Installation
Clutch cable end fitting	36-108 **in-lbs**	4.1-12.2 Nm	5.3 PRIMARY CHAIN ADJUSTER, Installation
Clutch inspection cover screw	84-108 **in-lbs**	9.5-12.2 Nm	5.3 PRIMARY CHAIN ADJUSTER, Installation
Clutch inspection cover screw	84-108 **in-lbs**	9.5-12.2 Nm	5.4 CLUTCH RELEASE MECHANISM, Assembly and Installation
Countershaft retaining screw	33-37 ft-lbs	44.8-50.2 Nm	5.15 TRANSMISSION INSTALLATION, Shifter Shaft Installation
Crankcase fastener	15-19 ft-lbs	20.3-25.8 Nm	5.15 TRANSMISSION INSTALLATION, Assembling Crankcases
Engine sprocket bolt: XR Models	155-165 ft-lbs	210.0-224.0 Nm	5.6 PRIMARY DRIVE AND CLUTCH: XR MODELS, Installation
Engine sprocket nut	240-260 ft-lbs	326-353 Nm	5.5 PRIMARY DRIVE AND CLUTCH: XL MODELS, Installation
Exhaust pipe clamp bracket fastener, XL models	30-33 ft-lbs	40.7-44.8 Nm	5.7 DRIVE BELT, Installation
Exhaust pipe clamp bracket fasteners, XL models	30-33 ft-lbs	40.7-44.8 Nm	5.16 TRANSMISSION SPROCKET, Installation
Gear detent assembly screw	90-110 **in-lbs**	10.2-12.4 Nm	5.15 TRANSMISSION INSTALLATION, Installation
Gear shift lever pinch screw	16-20 ft-lbs	21.7-27.1 Nm	5.3 PRIMARY CHAIN ADJUSTER, Installation
Idler pulley bracket flanged nut: XR models	33-35 ft-lbs	45-47 Nm	5.7 DRIVE BELT, Idler Pulley: XR Models Only
Idler pulley fastener: XR models	70-80 ft-lbs	95-109 Nm	5.7 DRIVE BELT, Idler Pulley: XR Models Only
Lower shock absorber screw	45-50 ft-lbs	61-68 Nm	5.7 DRIVE BELT, Installation
Lower shock absorber screw	45-50 ft-lbs	61-68 Nm	5.7 DRIVE BELT, Installation
Muffler interconnect bracket mounting screw	30-33 ft-lbs	40.7-44.8 Nm	5.16 TRANSMISSION SPROCKET, Installation
Neutral indicator switch	120-180 **in-lbs**	13.6-20.3 Nm	5.15 TRANSMISSION INSTALLATION, Assembling Crankcases
Primary chain adjuster lock nut	20-25 ft-lbs	27.1-33.9 Nm	5.3 PRIMARY CHAIN ADJUSTER, Installation
Primary cover screw	100-120 **in-lbs**	11.3-13.5 Nm	5.3 PRIMARY CHAIN ADJUSTER, Installation
Primary drain plug	14-30 ft-lbs	19.0-40.7 Nm	5.3 PRIMARY CHAIN ADJUSTER, Installation
Rider footrest support bracket mounting screw	45-50 ft-lbs	61-68 Nm	5.4 CLUTCH RELEASE MECHANISM, Assembly and Installation
Rider footrest support mounting bracket	45-50 ft-lbs	61-68 Nm	5.16 TRANSMISSION SPROCKET, Installation
Secondary drive belt deflector screws	36-60 **in-lbs**	4.1-6.8 Nm	5.7 DRIVE BELT, Installation
Sprocket cover fastener, large: XR models	30-33 ft-lbs	40.7-44.8 Nm	5.7 DRIVE BELT, Idler Pulley: XR Models Only
Sprocket cover fastener, small: XR models	80-120 **in-lbs**	9.0-13.6 Nm	5.7 DRIVE BELT, Idler Pulley: XR Models Only
Sprocket cover fastener, XR models large dia.	30-33 ft-lbs	40.7-44.8 Nm	5.7 DRIVE BELT, Installation

FASTENER	TORQUE VALUE		NOTES
Sprocket cover fastener, XR models large dia.	30-33 ft-lbs	40.7-44.8 Nm	5.16 TRANSMISSION SPROCKET, Installation
Sprocket cover fasteners, XL models	80-120 **in-lbs**	9.0-13.6 Nm	5.7 DRIVE BELT, Installation
Sprocket cover fasteners, XL models	80-120 **in-lbs**	9.0-13.6 Nm	5.16 TRANSMISSION SPROCKET, Installation
Sprocket cover fasteners, XR models small dia.	80-120 **in-lbs**	9.0-13.6 Nm	5.7 DRIVE BELT, Installation
Sprocket cover fasteners, XR models small dia.	80-120 **in-lbs**	9.0-13.6 Nm	5.16 TRANSMISSION SPROCKET, Installation
Transmission mainshaft nut	50-60 ft-lbs	67.8-81.3 Nm	5.5 PRIMARY DRIVE AND CLUTCH: XL MODELS, Installation
Transmission mainshaft nut	50-60 ft-lbs	67.8-81.3 Nm	5.6 PRIMARY DRIVE AND CLUTCH: XR MODELS, Installation
Transmission sprocket lockplate	90-110 **in-lbs**	10.2-12.4 Nm	5.16 TRANSMISSION SPROCKET, Installation
Transmission sprocket nut (initial torque)	50 ft-lbs	68 Nm	5.16 TRANSMISSION SPROCKET, Installation/Initial torque plus 30-40 degrees.

SPORTSTER SPECIFICATIONS

Table 5-1. Sprocket Teeth

DRIVE	ITEM	NUMBER OF TEETH					
		XL 883 MODELS		XL 1200 MODELS		XR 1200 MODELS	
		U.S. MODELS	WORLD MODELS	U.S. MODELS	WORLD MODELS	U.S./WORLD MODELS	JAPAN MODELS
Primary	Engine	34	34	38	38	34	38
	Clutch	57	57	57	57	57	57
Final	Transmission	28	28	29	30	28	28
	Rear wheel	68	68	68	68	68	68

Table 5-2. Overall Gear Ratios

GEAR	XL 883 MODELS	XL 1200 MODELS		XR 1200 MODELS	
	ALL MODELS	U.S. MODELS	WORLD MODELS	U.S./WORLD MODELS	JAPAN MODELS
1st	10.782	9.315	9.004	10.782	9.647
2nd	7.702	6.653	6.432	7.702	6.891
3rd	5.728	4.948	4.783	5.728	5.125
4th	4.748	4.102	3.965	4.748	4.248
5th	4.071	3.517	3.400	4.071	3.643

NOTE

Service wear limits are given as a guideline for measuring components that are not new. For measurement specifications not given under SERVICE WEAR LIMITS, see NEW COMPONENTS.

Table 5-3. Wet Clutch Multiple Disc Specifications

ITEM	NEW COMPONENTS		SERVICE WEAR LIMITS	
	IN	MM	IN	MM
CLUTCH PLATE THICKNESS				
Friction plate (fiber)	0.8666 ± 0.0031	2.200 ± 0.079	N/A	N/A
Steel plate	0.0629 ± 0.0020	1.598 ± 0.051	N/A	N/A
Clutch pack	N/A	N/A	0.6610 (minimum)	16.787 (minimum)
MAXIMUM ALLOWABLE WARPAGE				
Friction plate (fiber)	N/A	N/A	0.0059	0.150
Steel plate	N/A	N/A	0.0059	0.150

GENERAL

The primary chain adjuster mechanism maintains proper tension on the primary chain.

An opening between the primary drive and transmission compartments allows the same lubricant supply to lubricate moving parts in both areas. Since the primary chain runs in lubricant, little service will be required other than checking lubricant level and chain tension. If, through hard usage, the primary chain does become worn, it must be replaced. Remove and install the chain following the procedure under 5.5 PRIMARY DRIVE AND CLUTCH: XL MODELS.

REMOVAL

Primary Cover

⚠WARNING

To prevent accidental vehicle start-up, which could cause death or serious injury, disconnect battery cables (negative (-) cable first) before proceeding. (00307a)

1. Disconnect negative (-) battery cable from stud on engine crankcase behind starter motor assembly. See 1.17 BATTERY MAINTENANCE.
2. Open left side cover. See 2.19 LEFT SIDE COVER.
3. Remove positive (+) battery cable from battery positive (+) terminal. See 1.17 BATTERY MAINTENANCE.
4. Close left side cover.
5. Remove left side rider footrest and mounting bracket assembly.
   a. **Models equipped with mid-mount foot controls:** see 2.39 RIDER FOOT CONTROLS: XL MID-MOUNT CONTROLS or 2.41 RIDER FOOT CONTROLS: XR MODELS for removal procedure.
   b. **Models equipped with forward foot controls:** see 2.40 RIDER FOOT CONTROLS: XL FORWARD CONTROLS for removal procedure.
6. See Figure 5-1. Place a drain pan under the engine. Remove drain plug (4) and drain lubricant from primary drive housing.
7. Loosen lock nut (6). Turn chain adjuster screw (5) counterclockwise to relax primary chain tension.
8. Remove gear shifter lever and rubber washer from transmission shifter shaft.
9. See Figure 5-2. Slide rubber boot (1) on clutch cable adjuster (2) upward to expose adjuster mechanism. Loosen jam nut (3) from adjuster. Turn adjuster to shorten cable housing until there is a large amount of freeplay at clutch hand lever. See 1.13 CLUTCH, Adjustment.
10. See Figure 5-3. Remove six screws (1) and clutch inspection cover (2). Remove quad ring (7) from groove in primary cover (8). Discard quad ring.
11. Slide hex lockplate and attached spring (3) from flats of adjusting screw (9).
12. Turn adjusting screw clockwise to release ramp assembly (5) and coupling mechanism (6). As the adjusting screw is turned, ramp assembly moves forward. Remove nut (4) from end of adjusting screw.
13. Remove hook of ramp from cable coupling. Remove clutch cable end from slot in coupling. Remove coupling and ramp assembly.
14. Turn cable end fitting (14) counterclockwise to remove clutch cable lower section from primary cover. Remove and discard O-ring (12) from cable end fitting.
15. Remove sixteen screws with captive washers (11) securing primary cover to engine crankcase. Remove cover and gasket (10). Discard gasket.
16. See Figure 5-4. Remove and discard shifter shaft oil seal (4).
17. Clean all metal parts in a non-volatile cleaning solution or solvent.

⚠WARNING

Compressed air can pierce the skin and flying debris from compressed air could cause serious eye injury. Wear safety glasses when working with compressed air. Never use your hand to check for air leaks or to determine air flow rates. (00061a)

18. Blow parts dry with low pressure compressed air.

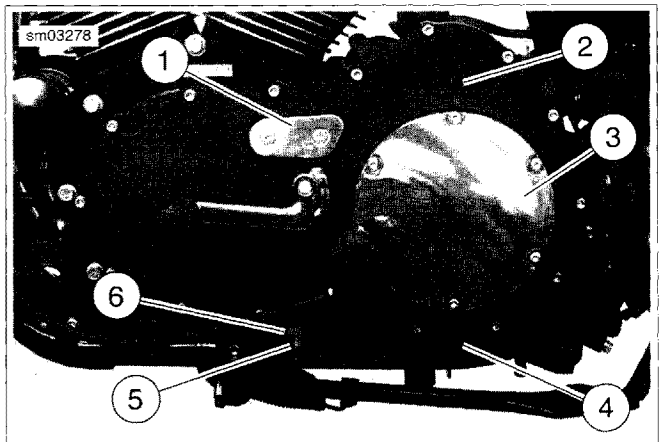

1. **Primary chain inspection cover**
2. **Primary cover**
3. **Clutch inspection cover**
4. **Drain plug**
5. **Primary chain adjuster screw**
6. **Lock nut**

Figure 5-1. Primary Cover: All Models (XL Model Shown)

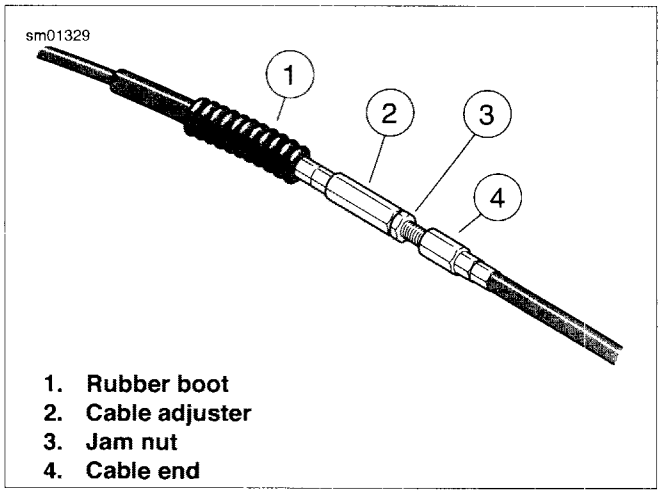

Figure 5-2. Clutch Cable Adjuster Mechanism

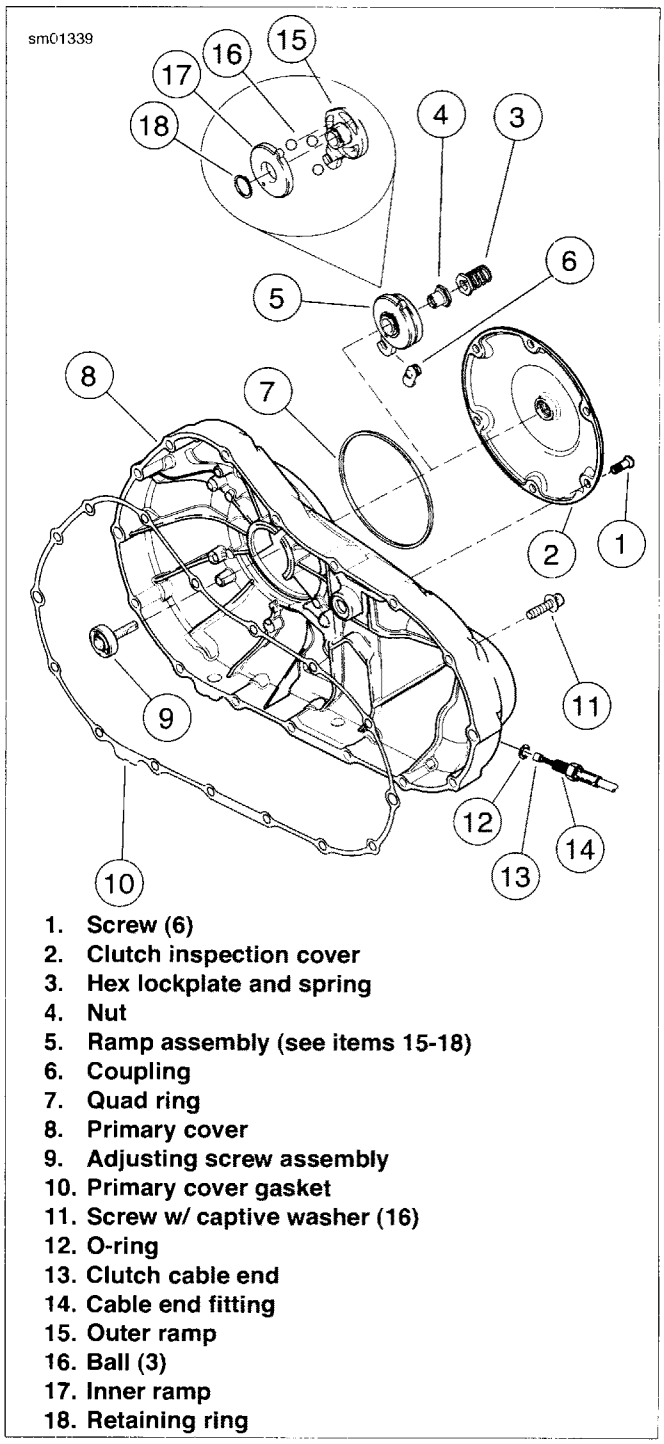

Figure 5-3. Clutch Release Mechanism and Primary Cover

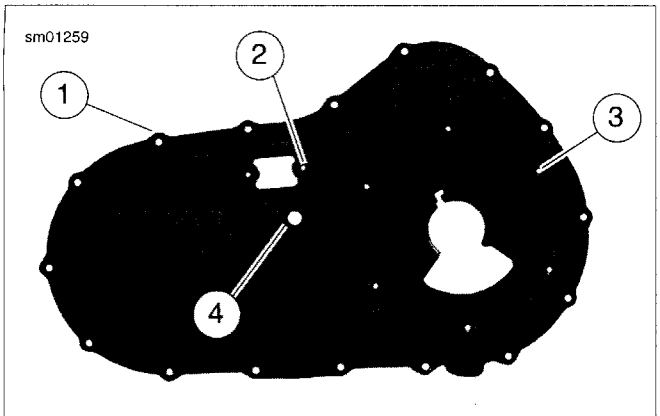

1. **Screw, 1/4-20 x 1 15/16 in. w/ captive washer (16)**
2. **Screw, 1/4-20 x 3/8 in. w/ O-ring (2)**
3. **Screw, 1/4-20 x 5/8 in. TORX w/ captive washer (6)**
4. **Shifter shaft oil seal**

Figure 5-4. Outer Primary Cover

Primary Chain Adjuster

See Figure 5-5. Remove lock nut (1) from adjuster screw (4). Turn adjuster screw out of threaded boss in primary cover (3).

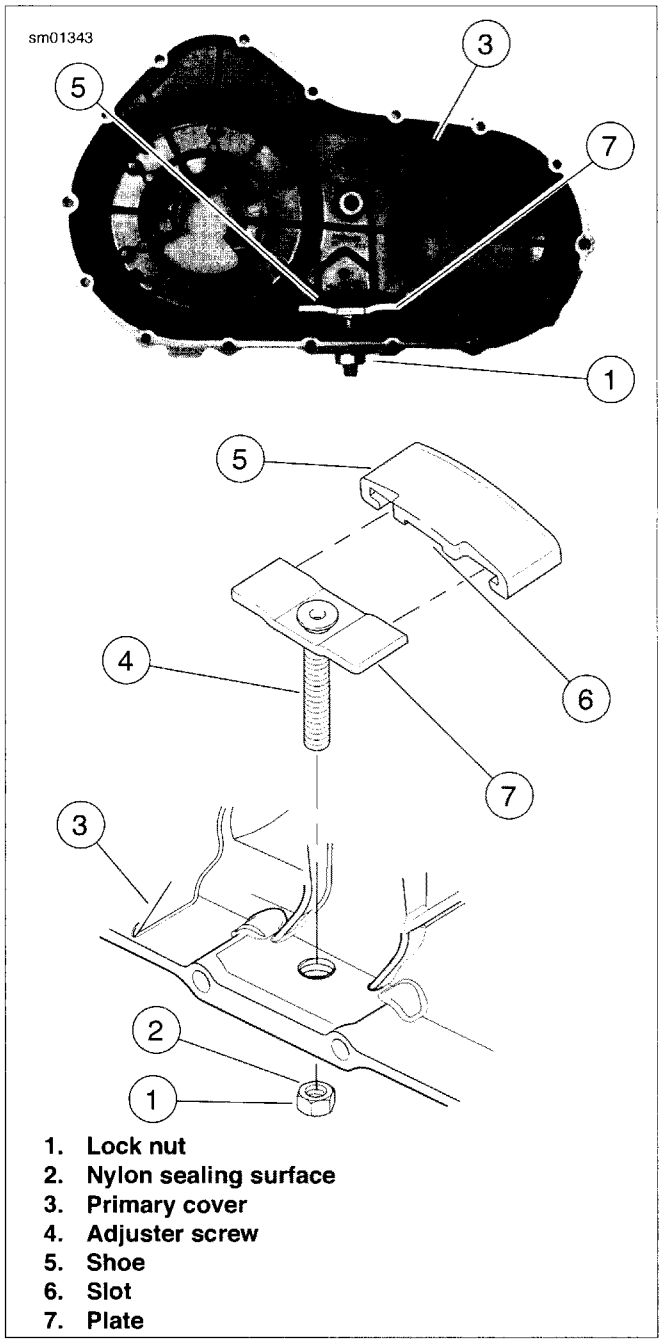

1. **Lock nut**
2. **Nylon sealing surface**
3. **Primary cover**
4. **Adjuster screw**
5. **Shoe**
6. **Slot**
7. **Plate**

Figure 5-5. Primary Chain Adjuster Assembly

INSTALLATION

Primary Chain Adjuster

1. See Figure 5-5. Inspect primary chain adjuster shoe (5). If badly worn or damaged, it must be replaced.
2. Position adjuster inside primary cover (3) with closed side of shoe against cover. Thread adjuster screw (4) all the way into tapped boss at bottom of primary cover.
3. At outside of cover, thread lock nut (1) onto adjuster screw with nylon sealing surface (2) toward cover. A 1/4-inch hex wrench may be inserted into end of adjuster screw to hold it while threading lock nut.

Primary Cover

1. See Figure 5-4. Install **new** shifter shaft oil seal (4).
2. See Figure 5-3. Install **new** gasket (10) on primary cover (8).
3. Apply 2-3 drops of LOCTITE THREADLOCKER 243 (blue) to threads of primary cover screws.
4. Install primary cover and gasket using sixteen screws with captive washers (11). Tighten to 100-120 **in-lbs** (11.3-13.5 Nm) in the sequence shown in Figure 5-6.
5. Remove foreign material from magnetic drain plug. Install plug and tighten to 14-30 ft-lbs (19.0-40.7 Nm).
6. Install **new** O-ring (12) over cable end fitting (14) of clutch cable lower section. Turn fitting clockwise to install into primary cover (8). Tighten fitting to 36-108 **in-lbs** (4.1-12.2 Nm).
7. Fit coupling (6) over cable end (13) with rounded side of coupling inboard and ramp connector button outboard. With retaining ring side of ramp assembly (5) facing inward, place hook of ramp around coupling button and rotate assembly counterclockwise until tang on inner ramp (17) fits in slot of primary cover (8).
8. Thread nut (4) on adjusting screw assembly (9) until slot of screw is accessible with a screwdriver. Fit nut hex into recess of outer ramp (15) and turn adjusting screw counterclockwise until resistance is felt. Back off adjusting screw 1/4 turn.
9. Slide lockplate and spring (3) onto flats of adjusting screw. If necessary, turn adjusting screw clockwise slightly so that lockplate slides onto flats while also fitting within recess of outer ramp.
10. Fill transmission to proper level with fresh lubricant. See 1.14 TRANSMISSION LUBRICANT.
11. Install **new** quad ring (7) in groove of primary cover. Verify that quad ring is fully seated in groove.
12. Install six screws (1) to secure clutch inspection cover (2) to primary cover. Tighten screws in a crosswise pattern to 84-108 **in-lbs** (9.5-12.2 Nm).
13. See Figure 5-2. Turn cable adjuster (2) clockwise away from jam nut (3) until slack is eliminated.
14. See Figure 5-7. Pull clutch cable ferrule away from clutch lever bracket to check free play. Turn cable adjuster as necessary to obtain 1/16-1/8 in. (1.6-3.2 mm) free play between end of cable ferrule and clutch lever bracket.
15. See Figure 5-2. Hold cable adjuster (2) with 1/2 inch wrench. Using 9/16 inch wrench, tighten jam nut (3) against cable adjuster. Cover cable adjuster mechanism with rubber boot (1).
16. Install left side rider footrest and mounting bracket assembly.
    a. **Models equipped with mid-mount foot controls:** see 2.39 RIDER FOOT CONTROLS: XL MID-MOUNT CONTROLS or 2.41 RIDER FOOT CONTROLS: XR MODELS for installation procedure.
    b. **Models equipped with forward foot controls:** see 2.40 RIDER FOOT CONTROLS: XL FORWARD CONTROLS for installation procedure.
17. Adjust primary chain tension. See 1.12 PRIMARY CHAIN. When tension is set correctly, tighten lock nut to 20-25 ft-lbs (27.1-33.9 Nm).
18. Install rubber washer and gear shift lever on shifter shaft. Secure with pinch screw and washer. Tighten to 16-20 ft-lbs (21.7-27.1 Nm).
19. Open left side cover. See 2.19 LEFT SIDE COVER.

⚠WARNING

Connect positive (+) battery cable first. If positive (+) cable should contact ground with negative (-) cable connected, the resulting sparks can cause a battery explosion, which could result in death or serious injury. (00068a)

20. Connect positive (+) battery cable to battery positive (+) terminal. See 1.17 BATTERY MAINTENANCE.
21. Close left side cover.
22. Connect negative (-) battery cable to stud on engine crankcase behind starter motor assembly. See 1.17 BATTERY MAINTENANCE.

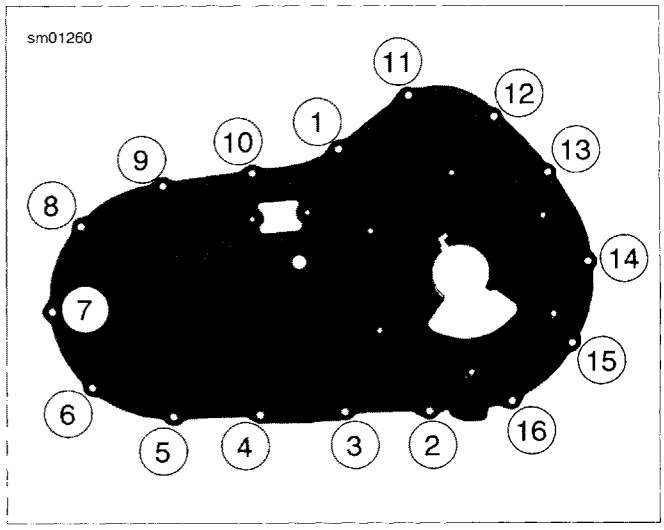

Figure 5-6. Outer Primary Cover Screw Tightening Sequence

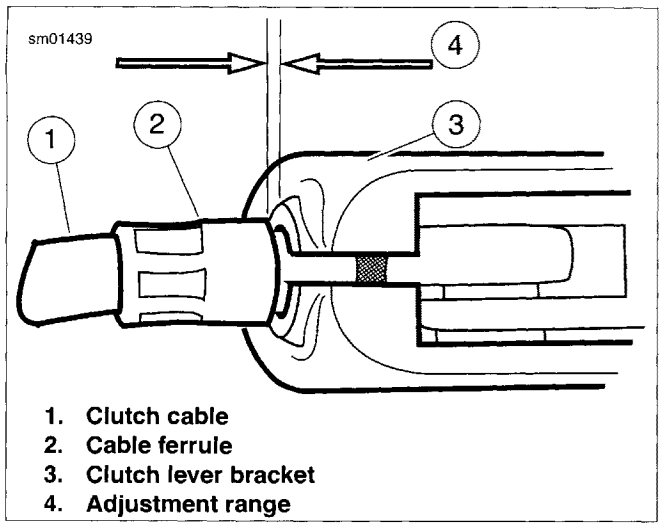

Figure 5-7. Clutch Freeplay: Adjust for 1/16-1/8 in. (1.6-3.2 mm) Gap Between Ferrule and Bracket

REMOVAL AND DISASSEMBLY

NOTE

For clutch adjustment procedure, see 1.13 CLUTCH.

⚠WARNING

To prevent accidental vehicle start-up, which could cause death or serious injury, remove main fuse before proceeding. (00251b)

1. Unplug main fuse. See 6.35 MAIN FUSE.
2. **Models equipped with mid-mount foot controls:** remove left side rider footrest and mounting bracket assembly. See 2.39 RIDER FOOT CONTROLS: XL MID-MOUNT CONTROLS or 2.41 RIDER FOOT CONTROLS: XR MODELS.
3. See Figure 5-8. Slide rubber boot (1) on clutch cable adjuster (2) upward to expose adjuster mechanism. Loosen jam nut (3) from adjuster. Turn adjuster to shorten cable housing until there is a large amount of freeplay at clutch hand lever. See 1.13 CLUTCH.
4. See Figure 5-9. Remove six screws (1) and clutch inspection cover (2). Remove and discard quad ring (10).
5. Slide spring (3) with attached hex lockplate (4) from flats of adjusting screw assembly (11).
6. Turn adjusting screw clockwise to release ramp and coupling mechanism (6, 7, 8, 9, 12). As the adjusting screw is turned, ramp assembly moves forward. Remove nut (5) from end of adjusting screw.
7. Remove hook of ramp from cable end coupling (12). Remove clutch cable end (15) from slot in coupling.
8. Remove and discard retaining ring (9) from ramp assembly to separate inner ramp (8) and outer ramp (6). Remove balls (7) from ramp sockets.

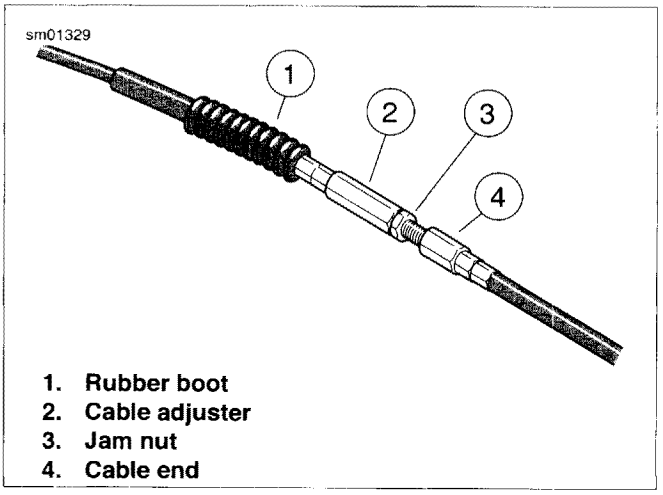

Figure 5-8. Clutch Cable Adjuster Mechanism

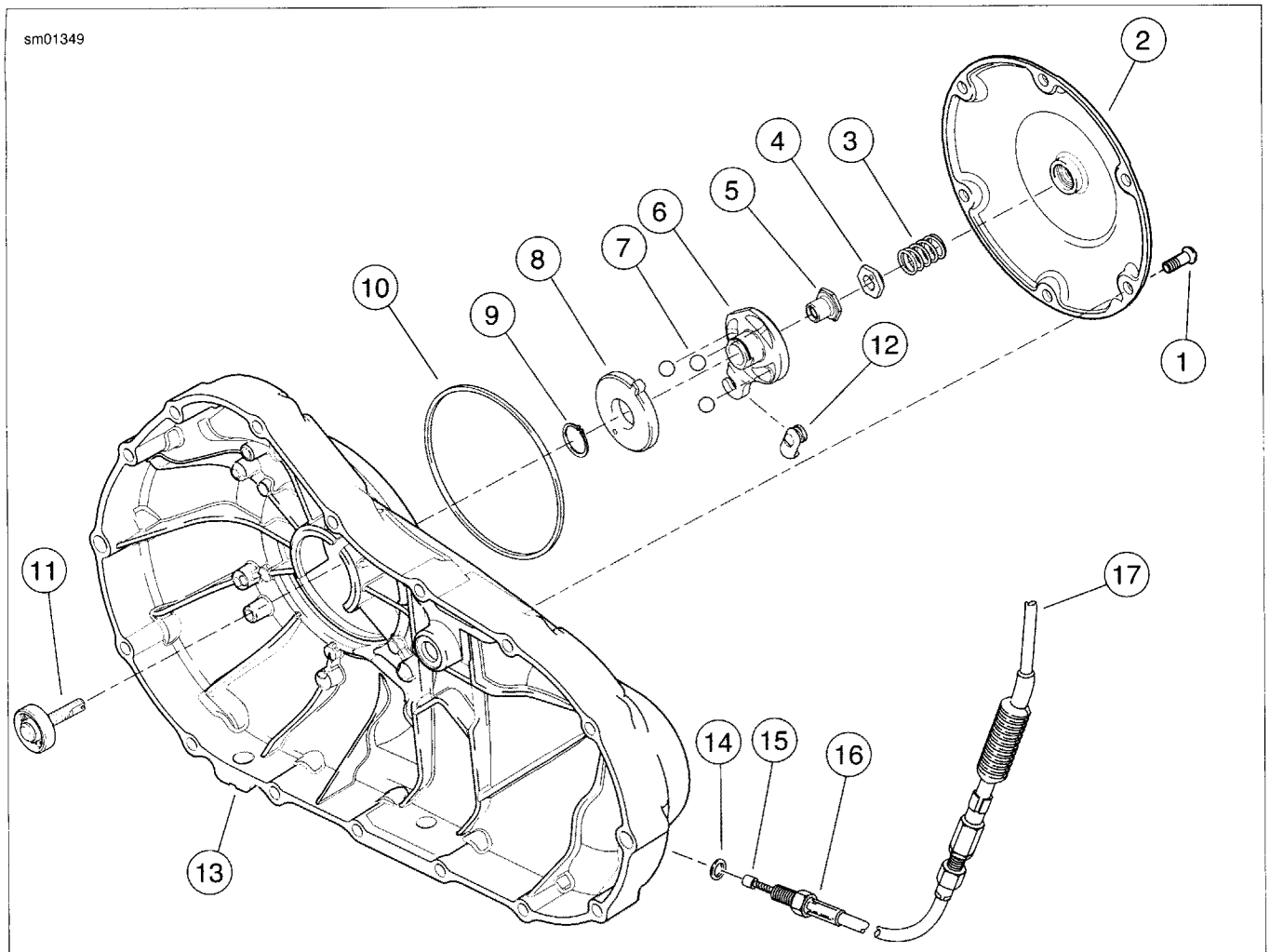

1. **Screw (6)**
2. **Clutch inspection cover**
3. **Spring**
4. **Hex lockplate**
5. **Nut**
6. **Outer ramp**
7. **Ball (3)**
8. **Inner ramp**
9. **Retaining ring**
10. **Quad ring**
11. **Clutch adjusting screw assembly**
12. **Coupling**
13. **Primary cover**
14. **O-ring**
15. **Clutch cable end**
16. **Cable end fitting**
17. **Clutch cable**

Figure 5-9. Clutch Release Mechanism

CLEANING, INSPECTION AND REPAIR

1. See Figure 5-9. Thoroughly clean all parts in cleaning solvent and dry with a clean, lint-free cloth.
2. Inspect three balls (7) of release ramp and coupling mechanism (6, 7, 8, 9, 12) and ball socket surfaces of inner ramp (8) and outer ramp (6) for wear, pitting, surface breakdown and other damage. Replace parts as necessary.
3. Check hub fit of inner and outer ramps. Replace ramps if excessively worn.
4. Check clutch cable assembly (17) for frayed or worn ends. Replace cable if damaged or worn. See 2.30 CLUTCH CONTROL.
5. Change or add transmission fluid if necessary. See 1.14 TRANSMISSION LUBRICANT.

ASSEMBLY AND INSTALLATION

1. See Figure 5-9. Assemble inner and outer ramps.
   a. Apply a light coat of multi-purpose grease to balls (7) and ramps (6, 8).
   b. Insert balls in sockets of outer ramp (6).
   c. Install inner ramp (8) on hub of outer ramp with tang on inner ramp 180 degrees from hook of outer ramp.
   d. Install **new** retaining ring (9) in groove of outer ramp hub.

2. Install ramp assembly.
   a. Fit coupling (12) over cable end (15) with the rounded side inboard, the ramp connector button outboard.
   b. With retaining ring side of ramp assembly facing inward, place hook of ramp around coupling button.
   c. Rotate assembly counterclockwise until tang on inner ramp fits in slot of primary cover.
3. Secure assembly in place.
   a. Thread nut (5) on adjusting screw assembly (11) until slot of screw is accessible with a screwdriver.
   b. Fit nut hex into recess of outer ramp and turn adjusting screw counterclockwise until resistance is felt. Back off adjusting screw 1/4 turn.
4. Slide spring (3) with hex lockplate (4) onto flats of adjusting screw. If necessary, turn adjusting screw clockwise slightly so that lockplate slides onto flats while also fitting within recess of outer ramp.
5. Install **new** quad ring (10). Verify that quad ring is fully seated in groove of primary cover (13). Install six screws (1) to secure clutch inspection cover (2) to primary cover. Tighten screws in a crosswise pattern to 84-108 **in-lbs** (9.5-12.2 Nm).
6. See Figure 5-8. Turn cable adjuster (2) clockwise away from jam nut (3) until slack is eliminated.
7. See Figure 5-10. Pull clutch cable ferrule away from clutch lever bracket to check free play. Turn cable adjuster as necessary to obtain 1/16-1/8 in. (1.6-3.2 mm) free play between end of cable ferrule and clutch lever bracket.
8. See Figure 5-8. Hold cable adjuster (2) with 1/2 inch wrench. Using 9/16 inch wrench, tighten jam nut (3) against cable adjuster. Cover cable adjuster mechanism with rubber boot (1).
9. **Models equipped with mid-mount foot controls:** install left side rider footrest and mounting bracket assembly. Tighten footrest bracket mounting screws to 45-50 ft-lbs (61-68 Nm). See 2.39 RIDER FOOT CONTROLS: XL MID-MOUNT CONTROLS or 2.41 RIDER FOOT CONTROLS: XR MODELS for installation procedure.
10. Install main fuse. See 6.35 MAIN FUSE.

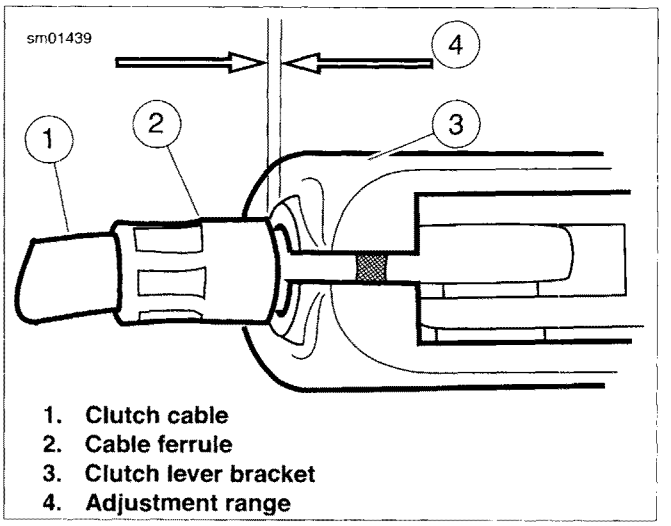

Figure 5-10. Clutch Freeplay: Adjust for 1/16-1/8 in. (1.6-3.2 mm) Gap Between Ferrule and Bracket

GENERAL

The purpose of the clutch is to smoothly engage and disengage the engine from the rear wheel for starting, stopping, and shifting gears.

See Figure 5-11. The clutch is a wet, multiple-disc unit with one spring plate (8), six steel plates (9), and eight fiber (friction) plates (10) stacked alternately in the clutch shell (2). The order of plate assembly, from inboard to outboard, is as follows:

F - St - F - St - F - St - F - Sp - F - St - F - St - F - St - F

(**F** = Friction plate, **St** = Steel plate, **Sp** = Spring plate)

Table 5-4. Clutch Troubleshooting

Symptom	CAUSE (CHECK IN FOLLOWING ORDER	REMEDY
Clutch slips	Incorrect clutch release adjustment	Check and adjust clutch release mechanism.
	Worn clutch plates	Check service wear limits. Replace plates.
Clutch drags	Incorrect clutch release adjustment	Check and adjust clutch release mechanism.
	Worn clutch release ramps or balls	Replace release ramps and/or balls.
	Warped clutch steel plates	Replace clutch steel plates.
	Blade worn or damaged clutch gear splines	Replace clutch gear or hub as required.
	Overfilled primary	Drain lubricant to correct level.

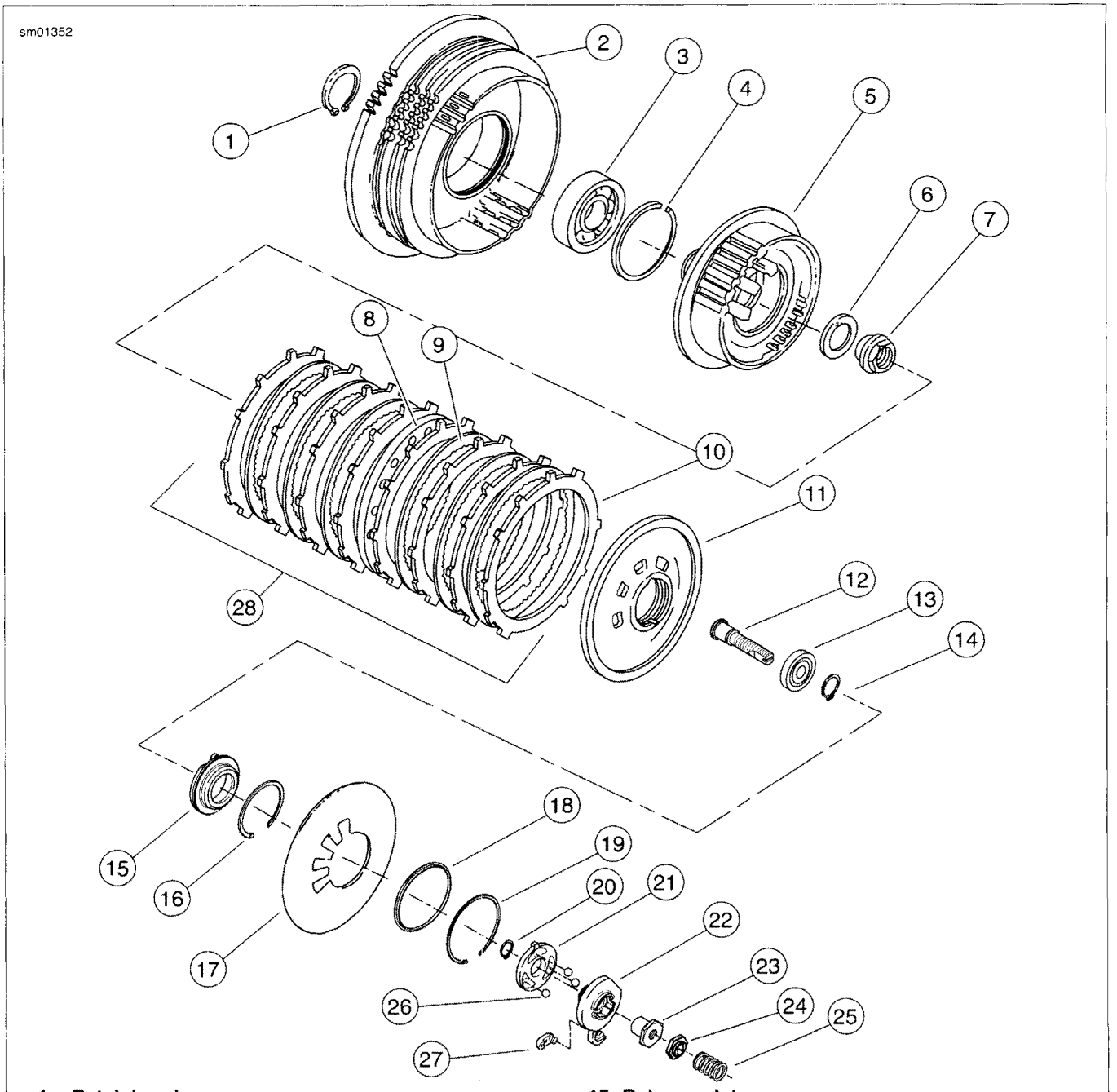

1. Retaining ring
2. Clutch shell and sprocket
3. Ball bearing
4. Retaining ring
5. Clutch hub
6. Spring washer
7. Mainshaft nut
8. Spring plate
9. Steel plate (6)
10. Friction plate, fiber (8)
11. Pressure plate
12. Adjusting screw
13. Bearing
14. Retaining ring
15. Release plate
16. Retaining ring
17. Diaphragm spring
18. Spring seat
19. Retaining ring
20. Retaining ring
21. Inner ramp
22. Outer ramp
23. Nut
24. Locking plate
25. Clutch adjustment spring
26. Ball (3)
27. Clutch cable coupling
28. Clutch pack (consists of items 8, 9, 10)

Figure 5-11. Clutch Assembly: XL Models

REMOVAL

PART NUMBER	TOOL NAME
HD-38362	SPROCKET LOCKING LINK (883 CC)
HD-46283	SPROCKET LOCKING LINK (1200 CC)

⚠WARNING

To prevent accidental vehicle start-up, which could cause death or serious injury, disconnect battery cables (negative (-) cable first) before proceeding. (00307a)

NOTE

See Figure 5-11. If replacement of clutch pack (28) is the only service work required, perform REMOVAL Steps 1 and 4 only, and then proceed to the NOTES under DISASSEMBLY.

1. Disconnect negative (-) battery cable from stud on engine crankcase behind starter motor assembly. See 1.17 BATTERY MAINTENANCE.
2. Open left side cover. See 2.19 LEFT SIDE COVER.
3. Remove positive (+) battery cable from battery positive (+) terminal. See 1.17 BATTERY MAINTENANCE.
4. Remove primary cover, as described under 5.3 PRIMARY CHAIN ADJUSTER. Discard primary cover gasket.

NOTES

- *See Figure 5-12. In the next step, you will be positioning the SPROCKET LOCKING LINK (1) on the engine and clutch sprockets. Make sure you do not position the sprocket locking link too close to the shifter shaft (2). If the sprocket locking link contacts the shifter shaft while you are exerting force to loosen the engine sprocket nut, the sprocket locking link may damage the shifter shaft and/or the engine crankcase.*
- *To determine the correct sprocket locking link for your application, refer to tool table.*

5. See Figure 5-12. Install SPROCKET LOCKING LINK (883 CC) (Part No. HD-38362) or SPROCKET LOCKING LINK (1200 CC) (Part No. HD-46283). Remove the engine sprocket nut. Do not remove engine sprocket at this time.
6. See Figure 5-11. Remove large retaining ring (16). Remove adjusting screw assembly (12, 13, 14 and 15) from pressure plate (11).

NOTE

Transmission mainshaft nut (7) has left-hand threads. Turn nut clockwise to loosen and remove from mainshaft.

7. Remove nut (7) and spring washer (6). Remove the clutch assembly, primary chain and engine sprocket as an assembly from the vehicle.
8. Inspect primary chain. If damaged or excessively worn, remove it from engine sprocket and clutch assembly; replace original primary chain with a **new** one.
9. Inspect stator and rotor. See 6.26 ALTERNATOR. Replace damaged parts as necessary.

NOTE

If replacement of primary chain is the only service work required, proceed directly to 5.5 PRIMARY DRIVE AND CLUTCH: XL MODELS, Installation. Skip Step 1 and begin with the NOTE preceding Step 2.

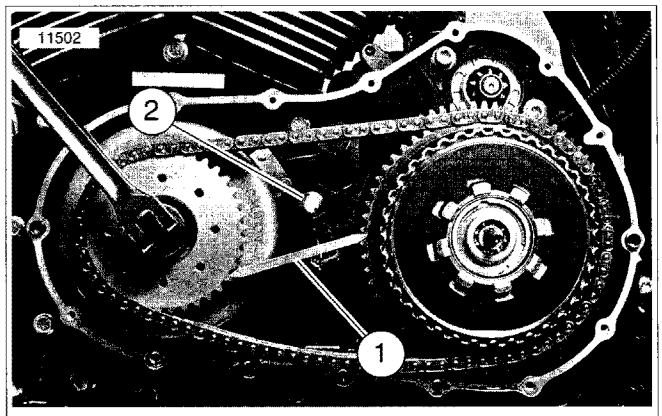

1. **Sprocket locking link**
2. **Shifter shaft**

Figure 5-12. Using Sprocket Locking Link (Part No. HD-46283 or HD-38362) to Loosen Engine Sprocket Nut

DISASSEMBLY

PART NUMBER	TOOL NAME
HD-38515-91	CLUTCH SPRING FORCING SCREW
HD-38515-A	SPRING COMPRESSING TOOL

NOTES

- *See Figure 5-11. If replacement of clutch pack (28) is the only service work required, perform DISASSEMBLY Steps 2 - 5 and 7 only, and then proceed to the NOTE under INSPECTION AND REPAIR.*
- ***Observe all WARNING and CAUTION statements which apply to the steps specified.***

1. See Figure 5-11. With clutch assembly removed from primary chaincase, install adjusting screw assembly (12, 13, 14 and 15) into pressure plate (11), noting that two tabs on perimeter of release plate (15) must be inserted into corresponding recesses in pressure plate. Secure the adjusting screw assembly with retaining ring (16).

⚠WARNING

Disassemble clutch using a spring compressing tool. The diaphragm spring is compressed and, if removed without proper tools can fly out, which could result in death or serious injury. (00292a)

2. Thread the CLUTCH SPRING FORCING SCREW (Part No. HD-38515-91) (1, Figure 5-13) onto the clutch adjusting screw (12, Figure 5-11). Place the bridge (2, Figure 5-13) of SPRING COMPRESSING TOOL (Part No. HD-38515-A) against diaphragm spring (17, Figure 5-11). Thread the tool handle (3, Figure 5-13) onto end of forcing screw.

NOTE

See Figure 5-11. Turn compressing tool handle only enough to remove retaining ring (19) and spring seat (18). Excessive compression of diaphragm spring could damage clutch pressure plate.

3. See Figure 5-11. With a wrench on the clutch spring forcing screw flats to prevent the forcing screw from turning, turn handle clockwise until tool relieves pressure on retaining ring (19) and spring seat (18).

4. Remove and discard retaining ring. Remove spring seat from the groove in clutch hub (5) prongs. Remove the assembly of diaphragm spring (17), pressure plate (11), adjusting screw components (12, 13, 14 and 15) and compressing tool.

5. Turn the compressing tool handle counterclockwise until the clutch spring forcing screw disconnects from the clutch adjusting screw. Remove spring seat and diaphragm spring from pressure plate assembly.

6. Remove retaining ring (16) and adjusting screw assembly from pressure plate. If necessary, disassemble adjusting screw assembly by removing retaining ring (14), and then separating the remaining adjusting screw components (12, 13, and 15).

7. Remove the clutch pack (28) from the clutch hub. The clutch pack consists of one spring plate (8), six steel plates (9), and eight friction (fiber) plates (10).

NOTE

See Figure 5-11. Due to the possible damage to the bearing (3), the clutch hub (5) and shell (2) assembly should not be disassembled unless the bearing, hub or shell require replacement. If the assembly is pressed apart, the bearing must be replaced.

8. If necessary, disassemble clutch shell and clutch hub as follows:
   a. Remove retaining ring (1) from inboard end of clutch hub (5).
   b. Using an arbor press, separate clutch hub from assembly of clutch shell (2), bearing (3), and retaining ring (4).
   c. Remove retaining ring (4) from groove in clutch shell.
   d. Press on the inboard side of bearing (3) outer race to remove bearing from clutch shell.

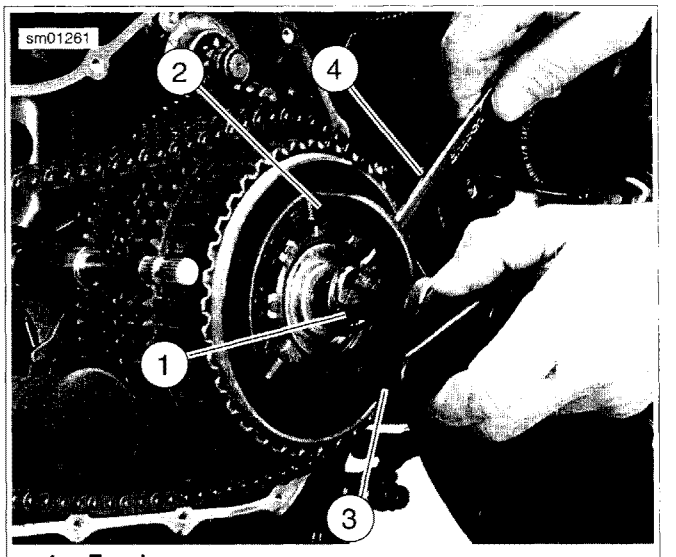

1. **Forcing screw**
2. **Bridge, Spring Compressing Tool**
3. **Handle**
4. **Open-end wrench**

Figure 5-13. Compressing Clutch Diaphragm Spring

INSPECTION AND REPAIR

NOTE

See Figure 5-11. If replacement of clutch pack (28) is the only service work required, perform all INSPECTION AND REPAIR steps (except Step 2f), and then proceed to the NOTES under ASSEMBLY.

⚠WARNING

Compressed air can pierce the skin and flying debris from compressed air could cause serious eye injury. Wear safety glasses when working with compressed air. Never use your hand to check for air leaks or to determine air flow rates. (00061a)

1. See Figure 5-11. Wash all parts, except the friction (driven) plates (10) and bearings (3 and 13), in a non-volatile cleaning solution or solvent. Blow parts dry with low pressure compressed air.

2. Examine the clutch components as follows:
   a. Inspect all clutch plates for wear and discoloration.
   b. Inspect all fiber plates (10) for worn lining surfaces or checked or chipped linings.
   c. Inspect each steel (drive) plate (9) for grooves.
   d. Place each steel plate on a flat surface. Using a feeler gauge, check for flatness in several places. Replace any plates that are damaged, or warped more than 0.006 in. (0.15 mm).
   e. See Figure 5-14. Wipe the lubricant from the eight friction plates and stack them on top of each other. Measure the thickness of the eight stacked friction plates with a dial caliper or micrometer. The minimum

thickness must be 0.661 in. (16.79 mm). If the thickness is less than specified, the friction plates and steel plates must be discarded, and a **new** set of both friction and steel plates must be installed.

f. See Figure 5-11. Inspect clutch shell ball bearing (3) for smoothness by rotating clutch shell while holding clutch hub. If bearing is rough or binds, it must be replaced.

g. See Figure 5-15. Check the primary chain sprocket (3) and the starter ring gear (4) on the clutch shell (1). If either sprocket or ring gear are badly worn or damaged, replace the clutch shell.

h. Check the slots (5, 6) that mate with the clutch plates on both clutch shell and clutch hub (2). If slots are worn or damaged, replace shell and/or hub.

i. See Figure 5-11. Check the diaphragm spring (17) for cracks or bent tabs. Install a **new** spring if either condition exists.

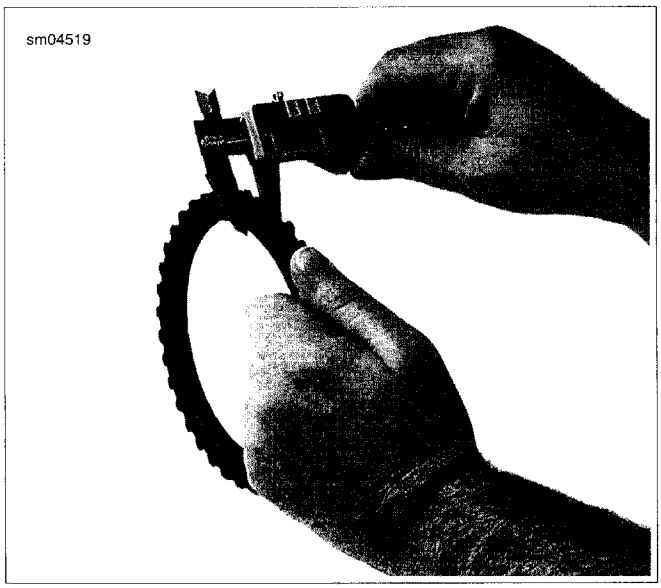

Figure 5-14. Measuring Clutch Friction Plates

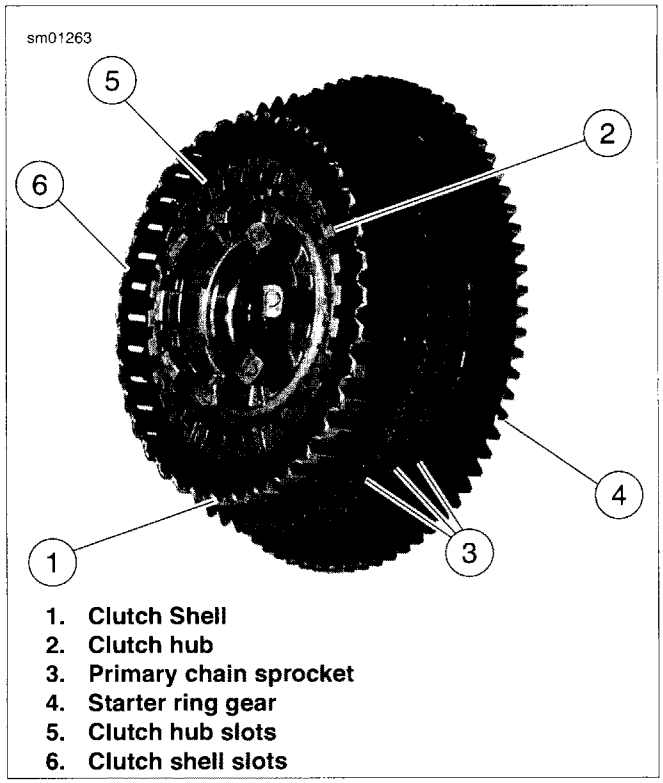

Figure 5-15. Checking Clutch Hub and Clutch Shell

ADJUSTING SCREW DISASSEMBLY/ASSEMBLY

1. See Figure 5-16. Remove adjusting screw assembly.
   a. Remove large retaining ring.
   b. Remove adjusting screw assembly from pressure plate.
2. If necessary, disassemble adjusting screw assembly.
   a. Remove and discard small retaining ring (6).
   b. Separate the adjusting screw (8) from the bearing (7) and release plate (5).
   c. Remove bearing (7) from release plate (5).
3. Replace components as required and reassemble adjusting screw assembly in reverse order.
4. Install adjusting screw assembly into pressure plate.
   a. See Figure 5-11. Align two tabs on perimeter of release plate with corresponding recesses (3) in pressure plate.
   b. Secure the adjusting screw assembly with **new** retaining ring.

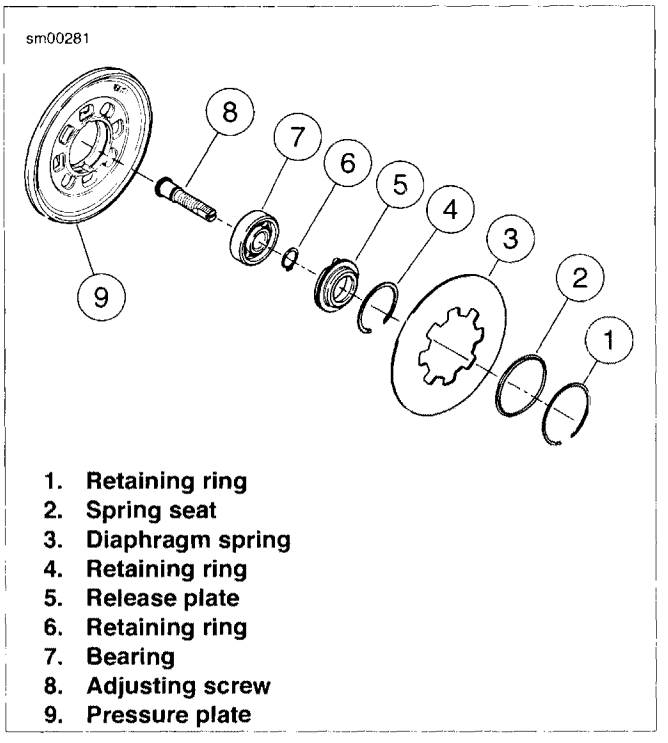

Figure 5-16. Adjusting Screw Assembly

ASSEMBLY

PART NUMBER	TOOL NAME
HD-38515-91	CLUTCH SPRING FORCING SCREW
HD-38515-A	SPRING COMPRESSING TOOL

NOTES

- *See Figure 5-11. If replacement of clutch pack (28) is the only service work required, perform all ASSEMBLY Steps except 2, 5 and 6, and then proceed to the NOTE under INSTALLATION.*
- ***Observe all WARNING and CAUTION statements which apply to the steps specified.***

1. Submerge and soak all friction and steel plates in GENUINE HARLEY-DAVIDSON FORMULA+ TRANSMISSION AND PRIMARY CHAINCASE LUBRICANT for at least five minutes.
2. See Figure 5-17. If the clutch hub (1) and clutch shell (4) was disassembled, press **new** ball bearing (3) into clutch shell and secure bearing with a **new** retaining ring (2). Press inboard end of clutch hub into clutch shell bearing and secure with a **new** retaining ring (5) on end of hub.
3. See Figure 5-11. The clutch pack (28) consists of one spring plate (8), six steel plates (9) and eight friction (fiber) plates (10). Install clutch pack into clutch shell in the following order:

   F - St - F - St - F - St - F - Sp - F - St - F - St - F - St - F

   (**F** = Friction plate, **St** = Steel plate, **Sp** = Spring plate)
4. Place pressure plate (11) onto clutch pack (28).
5. If disassembled, assemble bearing (13) and adjusting screw (12) in release plate (15); secure with **new** retaining ring (14).
6. Install adjusting screw assembly (12, 13, 14, 15) into pressure plate (11), noting that two tabs on perimeter of release plate (15) must be inserted into corresponding recesses in pressure plate. Secure adjusting screw assembly with **new** retaining ring (16).
7. Position diaphragm spring (17) with its concave side facing inboard (toward pressure plate), onto pressure plate assembly.
8. Position spring seat (18) with its flat, larger outer diameter side facing inboard (toward diaphragm spring).
9. Install a **new** retaining ring (19) onto convex (outboard) side of diaphragm spring.
10. See Figure 5-11 and Figure 5-13. Thread the CLUTCH SPRING FORCING SCREW (Part No. HD-38515-91) (1, Figure 5-13) onto the clutch adjusting screw (12, Figure 5-11). Place the bridge (2, Figure 5-13) of SPRING COMPRESSING TOOL (Part No. HD-38515-A) against diaphragm spring (17, Figure 5-11). Thread the tool handle (3, Figure 5-13) onto end of forcing screw. Do not tighten compressing tool against diaphragm spring at this time.
11. See Figure 5-18. Align square openings of pressure plate and diaphragm spring (1) so the assembly can be installed over prongs of clutch hub (2). Place assembly of spring seat (5), retaining ring (3), diaphragm spring, pressure plate, adjusting screw components (4) and compressing tool onto clutch hub and against clutch pack (28, Figure 5-11).

NOTE

See Figure 5-11. Turn compressing tool handle only enough to install spring seat (18) and retaining ring (19). Excessive compression of diaphragm spring (17) could damage clutch pressure plate (11).

12. See Figure 5-13. Place an open-end wrench (4) on the clutch spring forcing screw (1) flats to prevent the forcing screw from turning.
13. See Figure 5-11. Turn compressing tool handle clockwise until diaphragm spring (17) compresses just enough to install spring seat (18) and retaining ring (19) into the groove in clutch hub (5) prongs.
14. With retaining ring positioned against flange face (outboard side) of spring seat and fully seated in groove of clutch hub, carefully loosen and remove compressing tool.

NOTE

When the compressing tool is removed, the diaphragm spring will move outward forcing the spring seat up into the inside of the retaining ring. The spring seat provides an operating surface for the diaphragm spring at the same time preventing the retaining ring from coming out during operation.

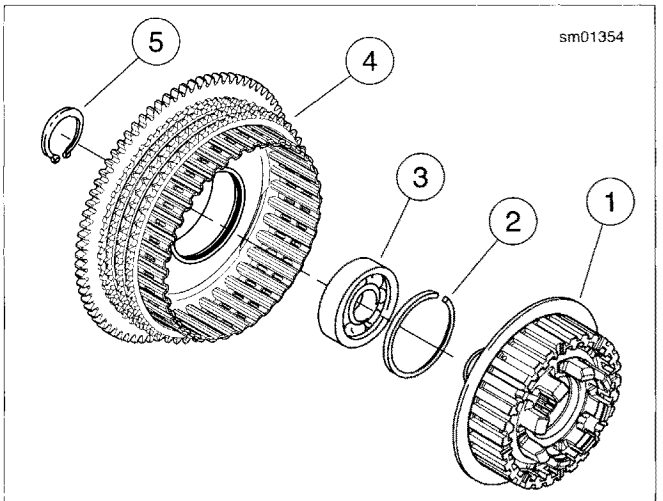

1. **Clutch hub**
2. **Retaining ring**
3. **Ball bearing**
4. **Clutch shell**
5. **Retaining ring**

Figure 5-17. Clutch Hub and Shell Assembly

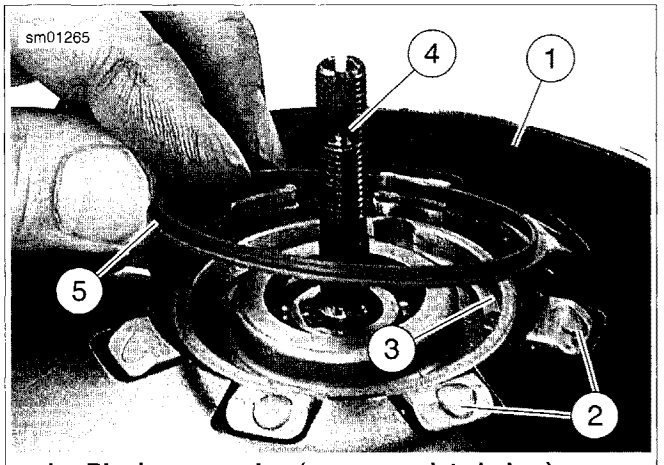

1. **Diaphragm spring (pressure plate below)**
2. **Prongs on clutch hub**
3. **Retaining ring**
4. **Adjusting screw assembly**
5. **Spring seat**

Figure 5-18. Spring Seat Installation

INSTALLATION

PART NUMBER	TOOL NAME
HD-38362	SPROCKET LOCKING LINK (883 CC)
HD-46283	PRIMARY DRIVE LOCKING TOOL (1200 CC)

NOTE

See Figure 5-11. If replacement of clutch pack (28) is the only service work required, perform INSTALLATION last step only.

1. See Figure 5-11. Remove retaining ring (16). Remove adjusting screw assembly (12, 13, 14, 15) from pressure plate (11). This allows installation of the transmission mainshaft nut and washer.

NOTE

Prior to installing engine sprocket nut and transmission mainshaft nut, thoroughly clean threads of engine sprocket shaft, engine sprocket nut, transmission mainshaft and mainshaft nut to remove any oil that might contaminate and interfere with locking agent.

2. Prior to installing engine sprocket nut and transmission mainshaft nut, thoroughly clean threads of engine sprocket shaft, engine sprocket nut, transmission mainshaft and mainshaft nut to remove any oil that might contaminate and interfere with locking agent.

NOTE

See Figure 5-19. In the next step, you will be positioning the SPROCKET LOCKING LINK (883 CC) (Part No. HD-38362) or PRIMARY DRIVE LOCKING TOOL (1200 CC) (Part No. HD-46283) (1) on the engine and clutch sprockets. Make sure you do not position the sprocket locking link too close to the shifter shaft (2). If the sprocket locking link contacts the shifter shaft while you are exerting force to tighten the engine sprocket nut, the sprocket locking link may damage the shifter shaft and/or the engine crankcase.

3. See Figure 5-19. Install SPROCKET LOCKING LINK (883 CC) (Part No. HD-38362) or PRIMARY DRIVE LOCKING TOOL (1200 CC) (Part No. HD-46283).
4. Apply two or three drops of LOCTITE Threadlocker 262 (red) onto threads of engine sprocket shaft.
5. Install engine sprocket nut. Tighten to 240-260 ft-lbs (326-353 Nm).

NOTE

See Figure 5-20. Washer (2) must be installed with the word "out" facing the transmission mainshaft nut (1). Incorrect assembly can result in clutch and/or transmission failure.

6. See Figure 5-20. Apply two or three drops of LOCTITE Threadlocker 262 (red) onto threads on end of transmission mainshaft. Install spring washer (2) and mainshaft nut (1) (left-hand threads) on transmission mainshaft. Tighten nut to 50-60 ft-lbs (67.8-81.3 Nm).
7. Remove SPROCKET LOCKING LINK.
8. See Figure 5-21. Install adjusting screw assembly (1) in pressure plate, noting that two tabs on perimeter of release plate must be inserted into corresponding recesses in pressure plate. Secure assembly with a **new** retaining ring (2).
9. Install primary cover using **new** gasket. See 5.3 PRIMARY CHAIN ADJUSTER.
10. Adjust primary chain and clutch. See 1.12 PRIMARY CHAIN and 1.13 CLUTCH.
11. Fill transmission with GENUINE HARLEY-DAVIDSON FORMULA+ TRANSMISSION AND PRIMARY CHAINCASE LUBRICANT. See 1.14 TRANSMISSION LUBRICANT.
12. Connect battery and close left side cover. See 1.17 BATTERY MAINTENANCE.

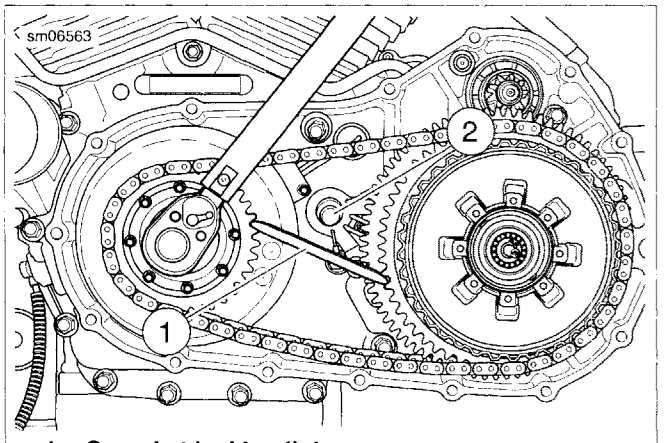

1. Sprocket locking link
2. Shifter shaft

Figure 5-19. Tighten Engine Sprocket Fastener (typical)

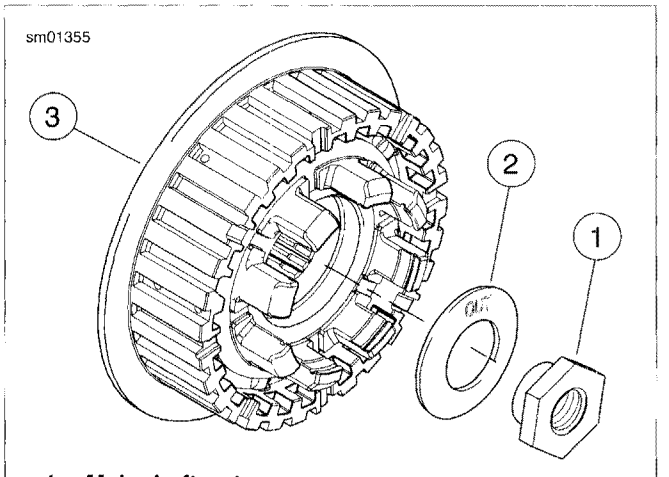

1. Mainshaft nut
2. Spring washer
3. Clutch hub

Figure 5-20. Mainshaft Nut and Washer

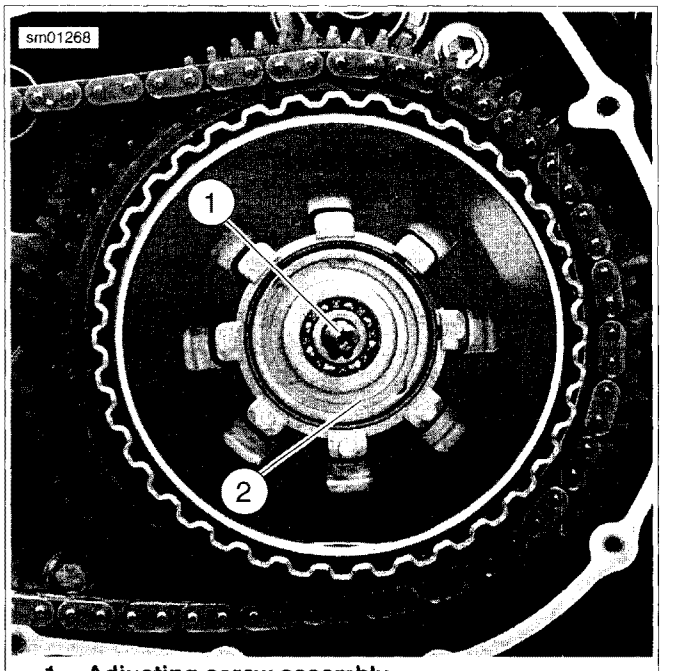

1. Adjusting screw assembly
2. Retaining ring

Figure 5-21. Clutch Adjusting Screw Assembly and Retaining Ring

GENERAL

The purpose of the clutch is to smoothly disengage and engage the engine from the rear wheel for starting, stopping and shifting gears.

See Figure 5-22. The clutch is a wet, multiple-disc clutch with steel plates and fiber (friction) plates stacked alternately in the clutch shell. The pack consists of seven fiber plates, seven steel plates, one narrow fiber plate, one damper spring and one damper spring seat. The fiber plates (clutch driving plates) are keyed to the clutch shell, which is driven by the engine through the primary chain. The steel plates (clutch driven plates) are keyed to the clutch hub, which drives the rear wheel through the transmission and secondary drive belt.

When the clutch is engaged (clutch lever released), the diaphragm spring applies strong force against the pressure plate. The pressure plate then presses the clutch plates together causing the plates to turn as a single unit. The result is that the rotational force of the clutch shell is transmitted through the clutch plates to the clutch hub. As long as the transmission is set in a forward gear, power from the engine will be transmitted to the rear wheel.

When the clutch is disengaged (clutch lever pulled to left handlebar grip), the pressure plate is pulled outward (by clutch cable action) against the diaphragm spring, thereby compressing the diaphragm spring. With the pressure plate retracted, strong inward force no longer squeezes the clutch plates together. The fiber plates are now free to rotate at a different relative speed than that of the steel plates (i.e. Slippage between the clutch plates occurs). The result is that the rotational force of the clutch shell is no longer fully transmitted through the "unlocked" clutch plates to the clutch hub. The engine is free to rotate at a different speed than the rear wheel.

Table 5-5. Clutch Troubleshooting

SYMPTOM	CHECK ORDER	CAUSE	REMEDY
Clutch slips	1	Incorrect clutch release adjustment.	Check and adjust clutch release mechanism.
	2	Worn clutch plates.	Check service wear limits. Replace plates.
Clutch drags	1	Incorrect clutch release adjustment.	Check and adjust clutch release mechanism.
	2	Worn clutch release ramps or balls.	Replace release ramps and/or balls.
	3	Warped clutch steel plates.	Replace clutch steel plates.
	4	Blade worn or damaged clutch gear splines.	Replace clutch gear or hub as required.
	5	Overfilled primary.	Drain lubricant to correct level.

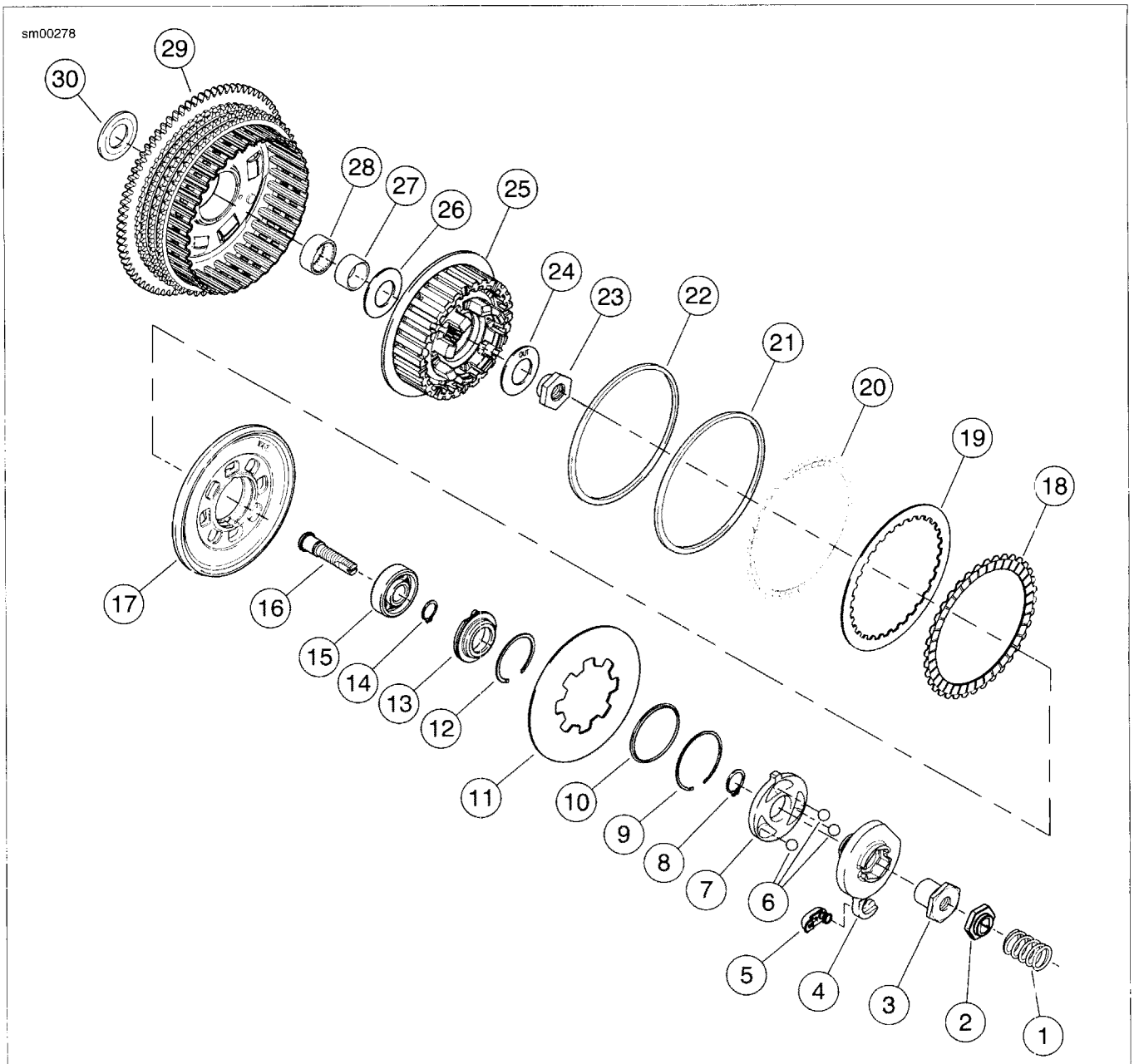

1. Spring
2. Lockplate
3. Nut
4. Outer ramp
5. Coupling
6. Ball (3)
7. Inner ramp
8. Retaining ring
9. Retaining ring
10. Spring seat
11. Diaphragm spring
12. Retaining ring
13. Release plate
14. Retaining ring
15. Bearing
16. Adjusting screw
17. Pressure plate
18. Friction plate, fiber (7)
19. Steel plate (7)
20. Friction plate, narrow, fiber
21. Damper spring
22. Damper spring seat
23. Mainshaft nut
24. Washer
25. Clutch hub
26. Inner thrust washer
27. Needle bearing inner race
28. Needle bearing
29. Clutch shell and sprocket
30. Outer thrust washer

Figure 5-22. Clutch Assembly: XR Models

REMOVAL

PART NUMBER	TOOL NAME
HD-38362	SPROCKET LOCKING LINK
HD-46283	SPROCKET LOCKING LINK (JAPAN MODELS)

⚠WARNING

To prevent accidental vehicle start-up, which could cause death or serious injury, disconnect battery cables (negative (-) cable first) before proceeding. (00307a)

1. Disconnect negative (-) battery cable from stud on engine crankcase behind starter motor assembly. See 1.17 BATTERY MAINTENANCE.
2. Open left side cover. See 2.19 LEFT SIDE COVER.
3. Remove positive (+) battery cable from battery positive (+) terminal. See 1.17 BATTERY MAINTENANCE.
4. Remove primary cover and discard primary cover gasket. See 5.3 PRIMARY CHAIN ADJUSTER.

NOTES

- *See Figure 5-23. Make sure not to position the sprocket locking link (1) too close to the shifter shaft (2). If the sprocket locking link contacts the shifter shaft while you are exerting force to loosen the engine sprocket bolt, damage to the shifter shaft and/or the engine crankcase may result.*
- *The engine sprocket bolt is a single-use fastener and must be replaced with a **new** bolt whenever it is removed.*
- *Japan models require SPROCKET LOCKING LINK (JAPAN MODELS) (Part No. HD-46283).*

5. See Figure 5-23. Install SPROCKET LOCKING LINK (Part No. HD-38362). Remove and discard the engine sprocket bolt. Do not remove engine sprocket at this time.
6. See Figure 5-22. Remove large retaining ring (12). Remove adjusting screw assembly (13, 14, 15 and 16) from pressure plate (17).

NOTE

Transmission mainshaft nut (23) has left-hand threads. Turn nut clockwise to loosen and remove from mainshaft.

7. Remove nut (23) and spring washer (24). Remove the clutch assembly, primary chain and engine sprocket from the vehicle as an assembly.
8. Inspect primary chain. If damaged or excessively worn, remove it from engine sprocket and clutch assembly and replace it with a **new** one.
9. Inspect stator and rotor. See 6.26 ALTERNATOR. Replace damaged parts as necessary.

NOTE

If replacement of primary chain is the only service work required, proceed directly to 5.6 PRIMARY DRIVE AND CLUTCH: XR MODELS, Installation. Skip Step 1 of that procedure and begin with the NOTE preceding Step 2.

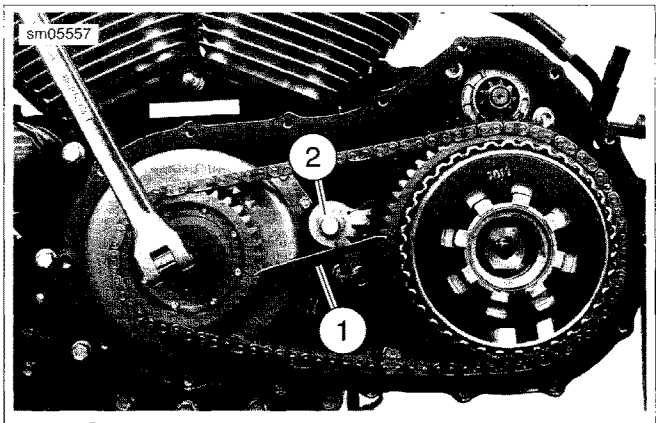

1. **Sprocket locking link**
2. **Shifter shaft**

Figure 5-23. Loosen Engine Sprocket Bolt

DISASSEMBLY

PART NUMBER	TOOL NAME
HD-38515-91	CLUTCH SPRING FORCING SCREW
HD-38515-A	SPRING COMPRESSING TOOL

1. See Figure 5-22. With clutch assembly removed from primary chaincase, install adjusting screw assembly (13, 14, 15 and 16) into pressure plate (17), noting that two tabs on perimeter of release plate (13) must be inserted into corresponding recesses in pressure plate. Secure the adjusting screw assembly with retaining ring (12).

⚠WARNING

Disassemble clutch using a spring compressing tool. The diaphragm spring is compressed and, if removed without proper tools can fly out, which could result in death or serious injury. (00292a)

2. See Figure 5-24. Thread the CLUTCH SPRING FORCING SCREW (Part No. HD-38515-91) onto the clutch adjusting screw. Place the bridge of SPRING COMPRESSING TOOL (Part No. HD-38515-A) against diaphragm spring. Thread the tool handle onto end of forcing screw.

NOTE

See Figure 5-22. Turn compressing tool handle only enough to remove retaining ring (9) and spring seat (10). Excessive compression of diaphragm spring could damage clutch pressure plate.

3. See Figure 5-22. With a wrench on the clutch spring forcing screw flats to prevent the forcing screw from turning, turn handle clockwise until tool relieves pressure on retaining ring (9) and spring seat (10).
4. Remove and discard retaining ring. Remove spring seat from the groove in clutch hub prongs. Remove the diaphragm spring (11), pressure plate (17), adjusting screw components (13, 14, 15 and 16) and compressing tool as an assembly.
5. Turn the compressing tool handle counterclockwise until the clutch spring forcing screw disconnects from the clutch adjusting screw. Remove spring seat and diaphragm spring from pressure plate assembly.

6. Remove retaining ring (12) and adjusting screw assembly from pressure plate. If necessary, disassemble adjusting screw assembly. See 5.6 PRIMARY DRIVE AND CLUTCH: XR MODELS, Adjusting Screw Disassembly/Assembly
7. Remove the clutch pack from the clutch hub. The clutch pack consists of seven friction (fiber) plates (18), seven steel plates (19), one narrow friction plate (20), one damper spring (21) and one seat (22).

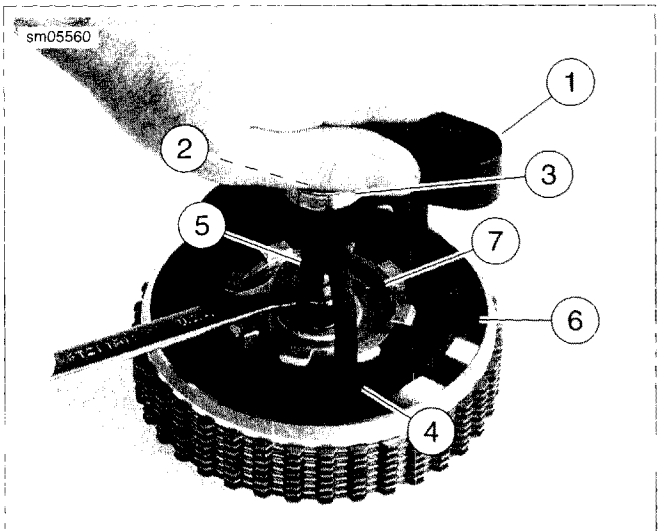

1. **Tool handle**
2. **Washer**
3. **Bearing**
4. **Bridge**
5. **Forcing screw**
6. **Diaphragm spring**
7. **Snap ring**

Figure 5-24. Compressing Diaphragm Spring: XR Models

CLUTCH PACK CLEANING AND INSPECTION

1. Separate the pack into the following components:
   a. Seven fiber plates.
   b. Seven steel plates.
   c. One narrow fiber plate.
   d. One damper spring.
   e. One damper spring seat.

⚠WARNING

Compressed air can pierce the skin and flying debris from compressed air could cause serious eye injury. Wear safety glasses when working with compressed air. Never use your hand to check for air leaks or to determine air flow rates. (00061a)

2. Wash all parts in cleaning solvent, except fiber (friction) plates and needle bearing in the clutch hub/shell. Blow dry with compressed air.
3. Examine the clutch components as follows:
   a. Check all clutch plates for wear and discoloration.
   b. Inspect each steel (drive) plate for grooves.
   c. Place each steel plate on a flat surface. Using a feeler gauge, check for flatness in several places. Replace any plates that are damaged or are warped more than 0.006 in. (0.15 mm).
4. Inspect the damper spring for cracks or distortion. Install a **new** spring if either condition exists.
5. See Figure 5-25. Check fiber plates for thickness.
   a. Wipe the lubricant from the eight fiber plates (7 regular and 1 narrow) and stack them on top of each other.
   b. Measure the thickness of the eight stacked fiber plates with a dial caliper or micrometer. The minimum thickness must be 0.661 in. (16.789 mm).
   c. If the thickness is less than specified, discard the fiber plates and steel plates. Install a new set of both friction and steel plates.
6. See Figure 5-26. Inspect primary chain sprocket (1) and the starter ring gear (2) on the clutch shell. If either sprocket or ring gear are badly worn or damaged, replace the clutch shell.
7. Inspect slots that mate with the clutch plates on both clutch shell (4) and hub (3). If slots are worn or damaged, replace shell and/or hub.

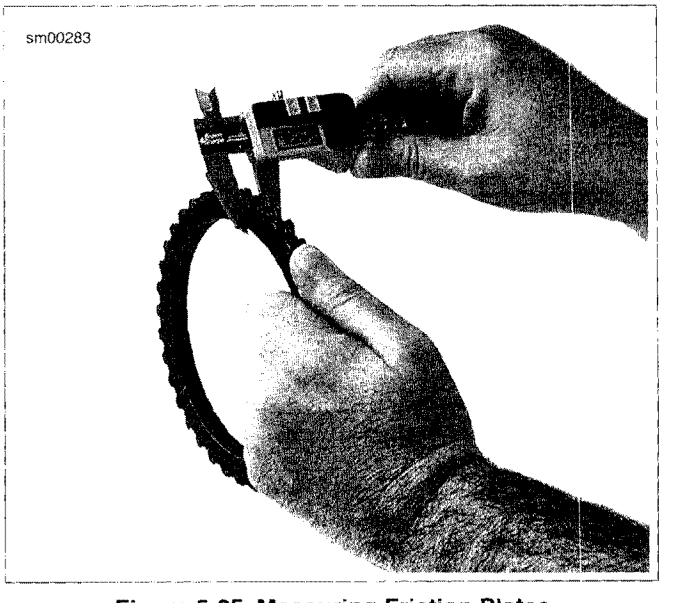

Figure 5-25. Measuring Friction Plates

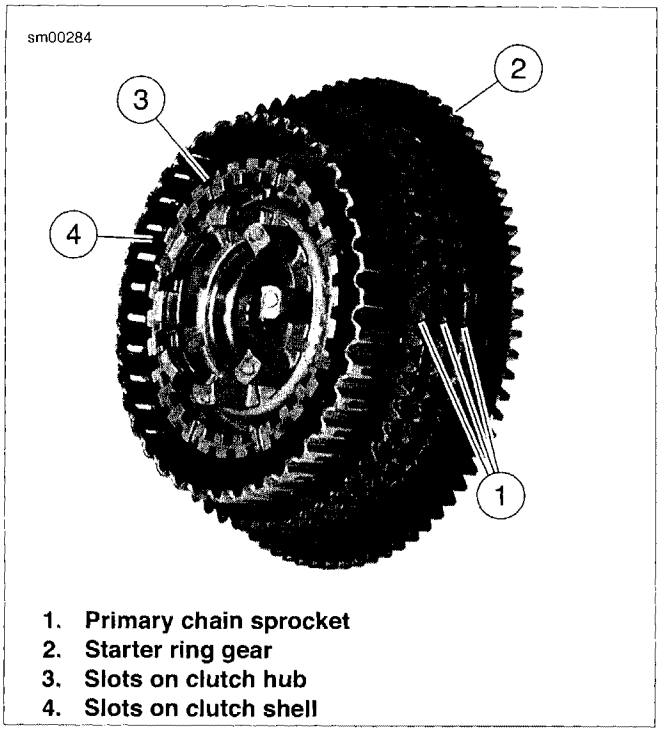

1. **Primary chain sprocket**
2. **Starter ring gear**
3. **Slots on clutch hub**
4. **Slots on clutch shell**

Figure 5-26. Checking Clutch Shell (Shell Removed from Primary Shaft)

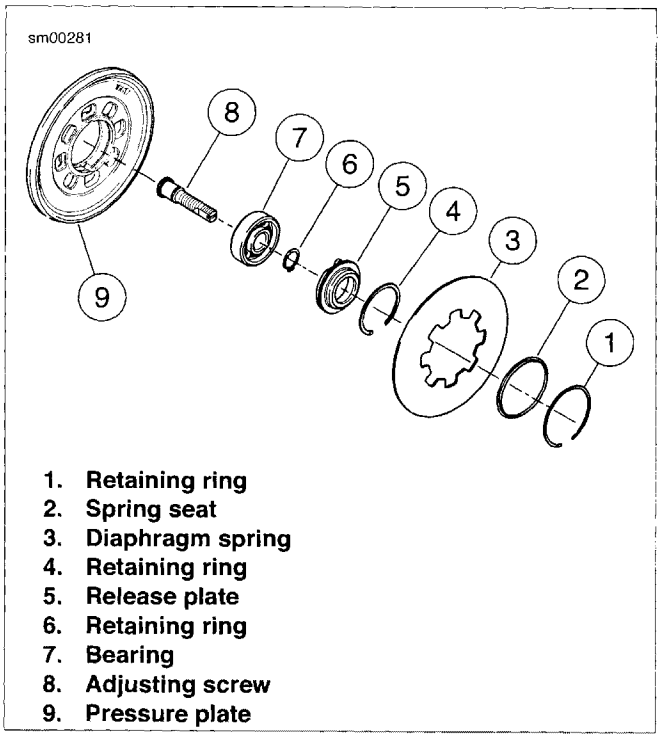

1. **Retaining ring**
2. **Spring seat**
3. **Diaphragm spring**
4. **Retaining ring**
5. **Release plate**
6. **Retaining ring**
7. **Bearing**
8. **Adjusting screw**
9. **Pressure plate**

Figure 5-27. Adjusting Screw Assembly

ADJUSTING SCREW DISASSEMBLY/ASSEMBLY

1. See Figure 5-27. Remove adjusting screw assembly.
   a. Remove large retaining ring (1).
   b. Remove adjusting screw assembly from pressure plate (9).
2. If necessary, disassemble adjusting screw assembly.
   a. Remove and discard small retaining ring (6).
   b. Separate the adjusting screw (8) from the bearing (7) and release plate (5).
   c. Remove bearing (7) from release plate (5).
3. Replace components as required and reassemble adjusting screw assembly in reverse order.
4. Install adjusting screw assembly into pressure plate.
   a. See Figure 5-41. Align two tabs on perimeter of release plate with corresponding recesses (3) in pressure plate.
   b. Secure the adjusting screw assembly with **new** retaining ring.

CLUTCH SHELL/HUB INSPECTION

1. Inspect engine sprocket for damage or excessive wear. Replace as required.
2. Disassemble adjusting screw assembly and inspect bearing, release plate, and adjusting screw. See 5.6 PRIMARY DRIVE AND CLUTCH: XR MODELS, Adjusting Screw Disassembly/Assembly.
3. Remove clutch hub from clutch shell. Inspect primary chain sprocket and the starter ring gear on the clutch shell.
4. Inspect slots that mate with the clutch plates on both clutch shell and hub.
5. See Figure 5-28. Inspect the clutch shell compensating spring set.

NOTE

It is possible for the compensating springs to float and move during inspection. This condition is normal.

6. See Figure 5-29. Inspect clutch shell needle bearing for smoothness. Rotate the clutch shell while holding the clutch hub. If bearing is rough or binds, it must be replaced. See 5.6 PRIMARY DRIVE AND CLUTCH: XR MODELS, Clutch Shell Bearing Replacement.
7. See Figure 5-30. Inspect clutch shell bearing inner race on the back side of the clutch hub for pitting and wear. If the inner race shows any signs of damage, the complete hub assembly must be replaced.
8. Replace damaged parts as necessary.

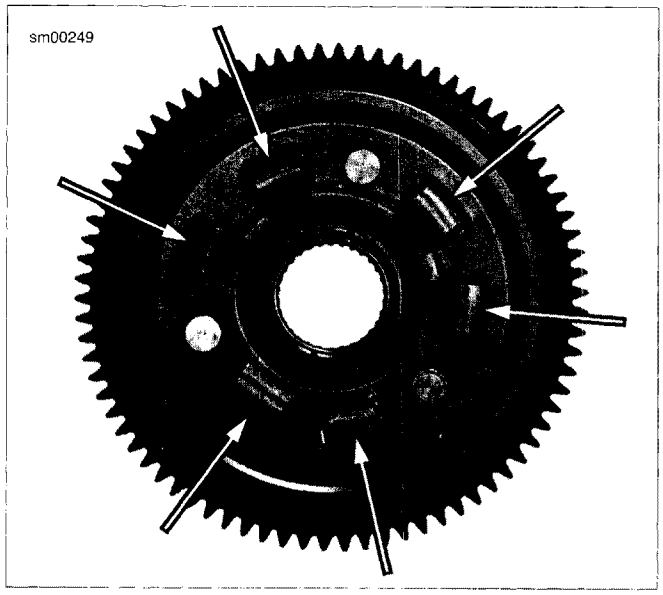

Figure 5-28. Compensating Spring Set

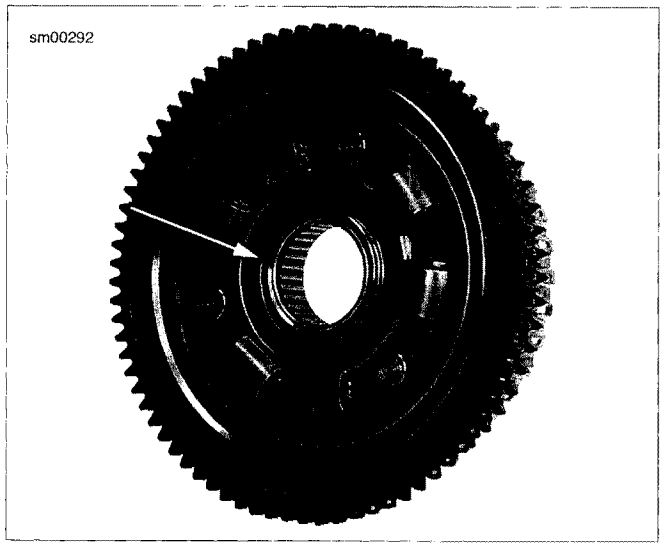

Figure 5-29. New Needle Bearing in Clutch Shell

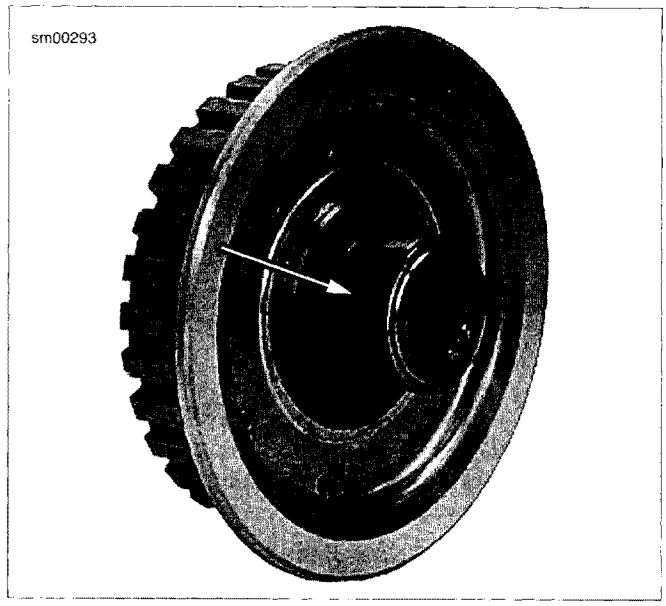

Figure 5-30. Clutch Hub Bearing Race

CLUTCH SHELL BEARING REPLACEMENT

PART NUMBER	TOOL NAME
B-45926	CLUTCH SHELL BEARING REMOVER/INSTALLER

NOTE

The clutch shell uses a caged needle bearing that corresponds to an inner race installed on the clutch hub.

1. See Figure 5-32. Place clutch shell on support blocks with sprocket side facing up.

NOTE

The CLUTCH SHELL BEARING REMOVER/INSTALLER (Part No. B-45926) is clearly marked for removal and installation purposes.

2. See Figure 5-32. Insert removal end of tool into bearing assembly and remove bearing from clutch shell.
3. See Figure 5-33. Remove bearing guide from end of CLUTCH SHELL BEARING REMOVER/INSTALLER (Part No. B-45926).
4. Place **new** needle bearing onto installer end of tool and insert the bearing guide to prevent the bearing from falling off during installation and to align bearing with clutch shell.
5. See Figure 5-34. Place clutch shell on support blocks with sprocket side facing up.
6. Press bearing into clutch shell until tool bottoms on the shell. This will be the correct installed height.

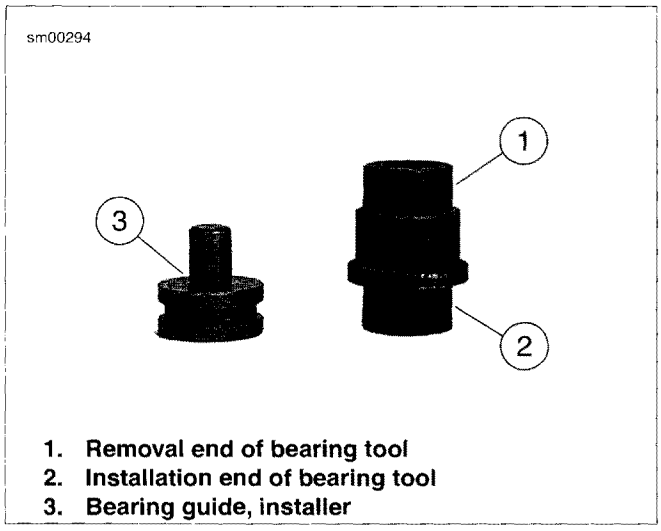

1. Removal end of bearing tool
2. Installation end of bearing tool
3. Bearing guide, installer

Figure 5-31. Clutch Shell Bearing Remover/Installer

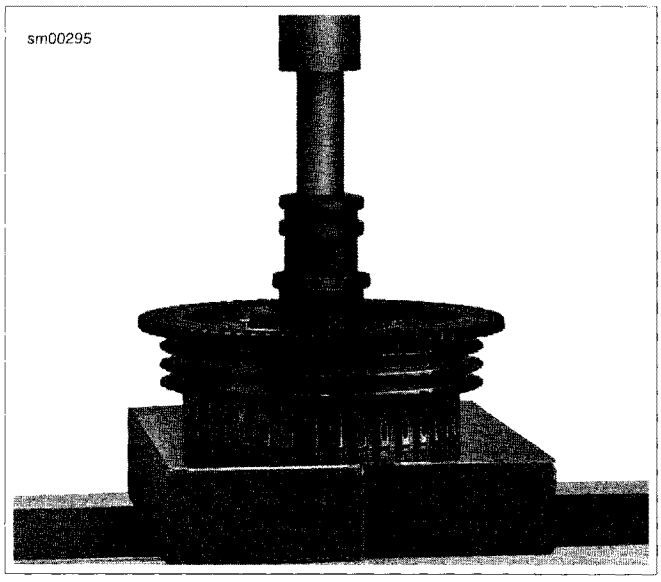

Figure 5-32. Removing Clutch Shell Needle Bearing

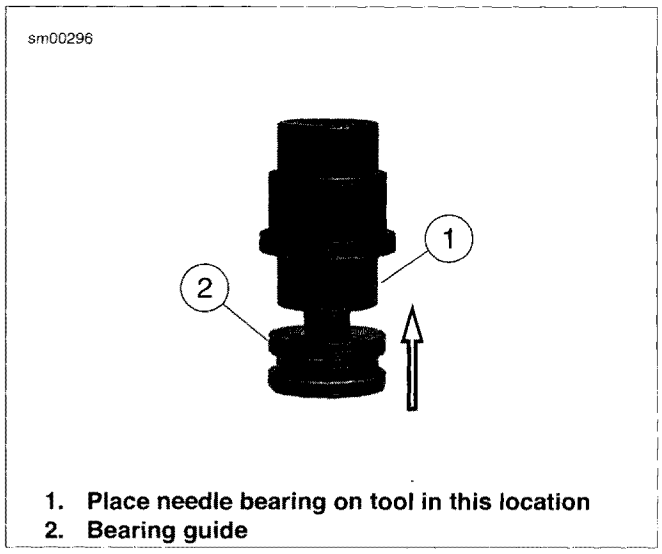

1. Place needle bearing on tool in this location
2. Bearing guide

Figure 5-33. Bearing Installer

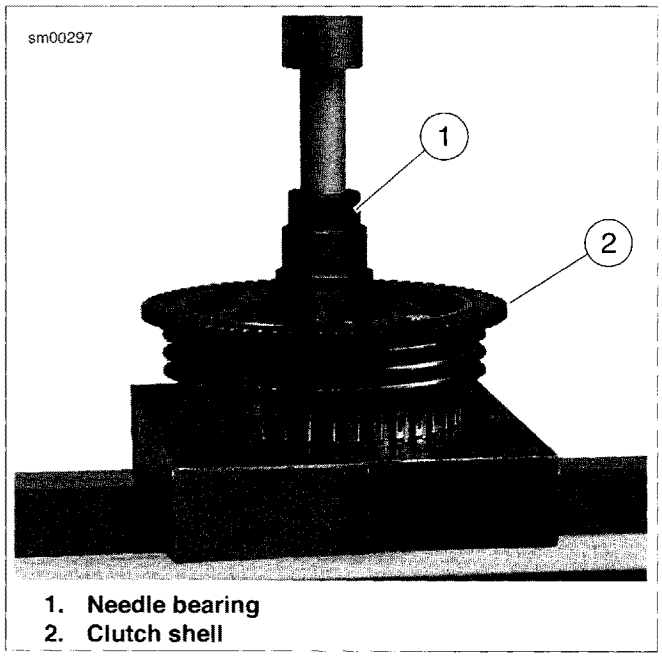

1. Needle bearing
2. Clutch shell

Figure 5-34. Installing Clutch Shell Needle Bearing

ASSEMBLY

PART NUMBER	TOOL NAME
HD-38515-A	SPRING COMPRESSING TOOL

1. Submerge and soak all friction and steel plates in GENUINE HARLEY-DAVIDSON FORMULA+ TRANSMISSION AND PRIMARY CHAINCASE LUBRICANT for at least five minutes.
2. See Figure 5-35. Install narrow friction plate on the clutch hub, engaging tabs on plate with slots in clutch shell.
3. See Figure 5-36. Install damper spring seat (5) on clutch hub so that it seats inboard of narrow friction plate (4).
4. Install damper spring (1) on clutch hub with the concave side up (facing opposite damper spring seat).

5. Install a steel plate and then a friction plate on the clutch hub. Install six remaining sets in the same manner, alternating between steel plates and friction plates.

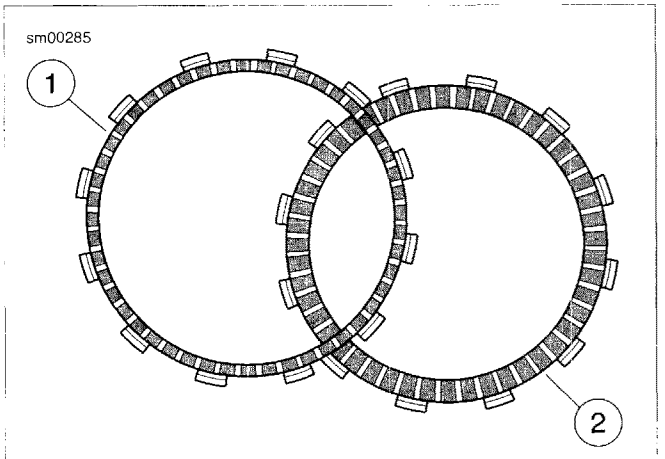

1. **Narrow plate**
2. **Regular plate**

Figure 5-35. Friction Plates

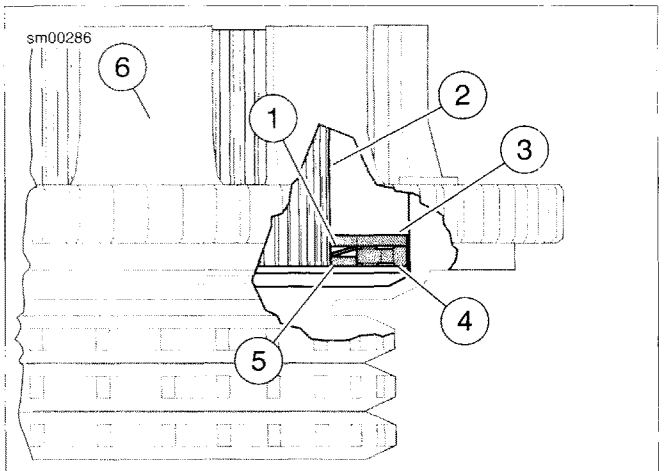

1. **Damper spring**
2. **Clutch hub**
3. **Steel plate**
4. **Narrow friction plate**
5. **Damper spring seat**
6. **Clutch shell**

Figure 5-36. Clutch Pack Stack-Up (Cut-Away View)

6. Place pressure plate, diaphragm spring, adjusting screw assembly with **new** retaining ring and spring seat onto clutch pack.

7. Compress diaphragm spring and install retaining ring:
   a. See Figure 5-37. Align square openings of pressure plate and diaphragm spring so that the assembly can be installed over prongs on clutch hub.
   b. Position spring seat with its larger outer diameter side toward diaphragm spring.

NOTE

See Figure 5-38. Turn compressing tool handle only the amount required to install spring seat and snap ring. Excessive compression of diaphragm spring could damage clutch pressure plate.

   c. See Figure 5-38. Install SPRING COMPRESSING TOOL (Part No. HD-38515-A) onto clutch hub against diaphragm spring.
   d. Place a wrench on the clutch spring forcing screw flats to prevent the forcing screw from turning.
   e. Turn compressing tool handle clockwise until diaphragm spring compresses just enough to install new retaining ring into the groove in clutch hub prongs.
   f. With retaining ring fully seated in groove of clutch hub, carefully loosen and remove compression tool.

NOTE

When the compressing tool is removed, the diaphragm spring will move outward forcing the spring seat up into the inside of the retaining ring. The spring seat provides an operating surface for the diaphragm spring at the same time preventing the retaining ring from coming out during operation.

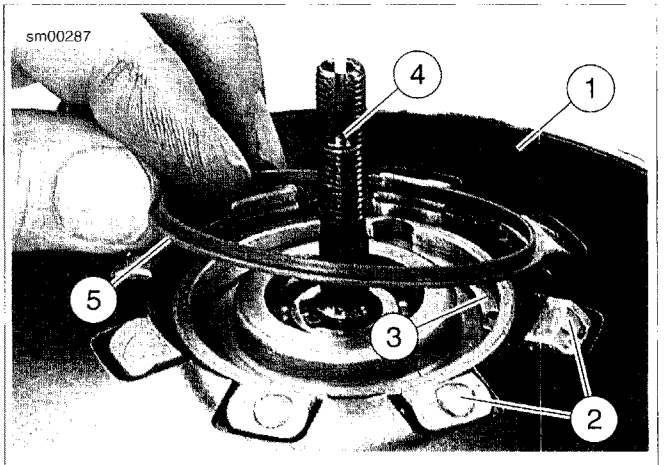

1. **Diaphragm spring (pressure plate below)**
2. **Prongs on clutch hub**
3. **Retaining ring**
4. **Adjusting screw assembly**
5. **Spring seat**

Figure 5-37. Spring Seat Installation

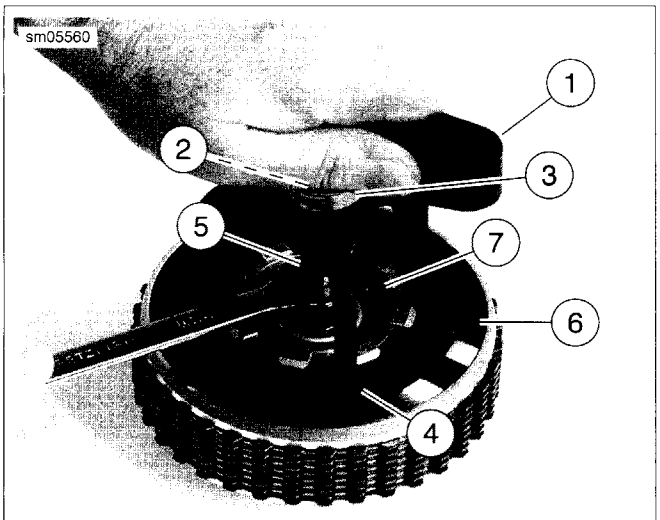

1. **Tool handle**
2. **Washer**
3. **Bearing**
4. **Bridge**
5. **Forcing screw**
6. **Diaphragm spring**
7. **Snap ring**

Figure 5-38. Compressing Diaphragm Spring: XR Models

INSTALLATION

PART NUMBER	TOOL NAME
HD-38362	SPROCKET LOCKING LINK
HD-46283	SPROCKET LOCKING LINK (JAPAN MODELS)

1. See Figure 5-22. Remove retaining ring (12). Remove adjusting screw assembly (13, 14, 15, 16) from pressure plate (17) to allow installation of the transmission mainshaft nut and washer.

NOTE

Prior to installing engine sprocket bolt and transmission mainshaft nut, thoroughly clean threads of engine sprocket shaft, transmission mainshaft and mainshaft nut to remove any oil that might contaminate and interfere with locking agent.

2. Thoroughly clean threads of engine sprocket shaft, transmission mainshaft and mainshaft nut to remove any oil.

NOTES

- *See Figure 5-39. Make sure not to position the sprocket locking link (1) too close to the shifter shaft (2). If the sprocket locking link contacts the shifter shaft while you are exerting force to tighten the engine sprocket bolt, damage to the shifter shaft and/or the engine crankcase may result.*
- *Japan models use SPROCKET LOCKING LINK (JAPAN MODELS) (Part No. HD-46283).*

3. See Figure 5-39. Install SPROCKET LOCKING LINK (Part No. HD-38362) (1).
4. Install **new** engine sprocket bolt. Tighten to 155-165 ft-lbs (210.0-224.0 Nm).

NOTE

See Figure 5-40. Washer (2) must be installed with the word "out" facing the transmission mainshaft nut (1). Incorrect assembly can result in clutch and/or transmission failure.

5. See Figure 5-40. Apply two or three drops of LOCTITE Threadlocker 262 (red) onto threads on end of transmission mainshaft. Install spring washer (2) and mainshaft nut (1) (left-hand threads) on transmission mainshaft. Tighten nut to 50-60 ft-lbs (67.8-81.3 Nm).
6. Remove SPROCKET LOCKING LINK.
7. See Figure 5-41. Install adjusting screw assembly in pressure plate, noting that two tabs on perimeter of release plate must be inserted into corresponding recesses in pressure plate. Secure assembly with a **new** retaining ring.
8. Install primary cover using **new** gasket. See 5.3 PRIMARY CHAIN ADJUSTER.
9. Adjust primary chain and clutch. See 1.12 PRIMARY CHAIN and 1.13 CLUTCH.
10. Fill transmission with GENUINE HARLEY-DAVIDSON FORMULA+ TRANSMISSION AND PRIMARY CHAINCASE LUBRICANT. See 1.14 TRANSMISSION LUBRICANT.
11. Connect battery and close left side cover. See 1.17 BATTERY MAINTENANCE.

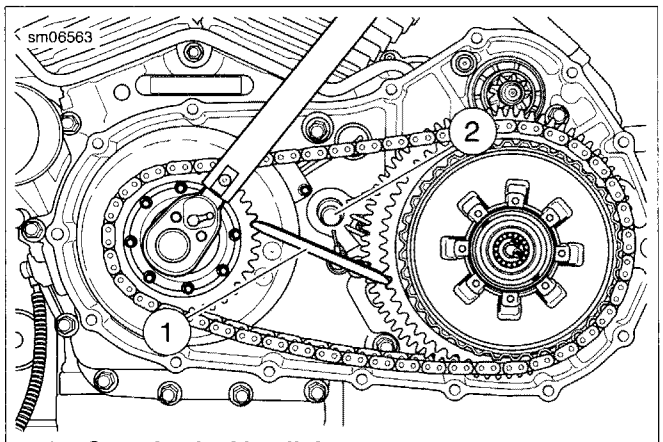

1. **Sprocket locking link**
2. **Shifter shaft**

Figure 5-39. Tighten Engine Sprocket Fastener

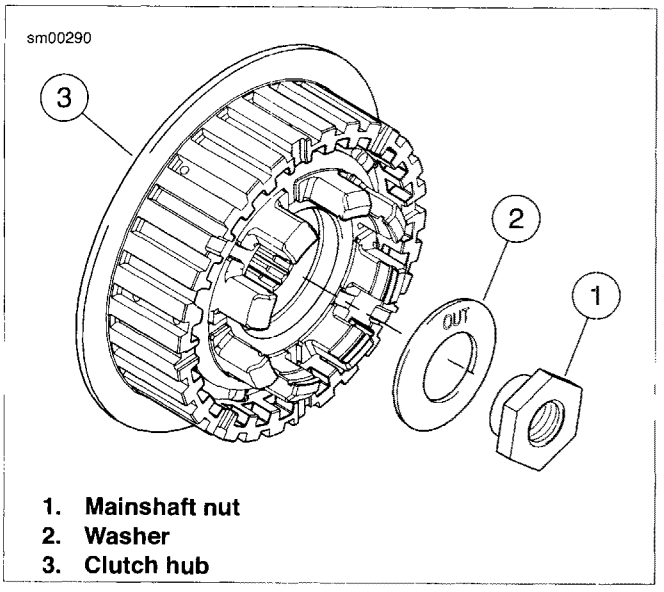

1. Mainshaft nut
2. Washer
3. Clutch hub

Figure 5-40. Mainshaft Nut and Washer

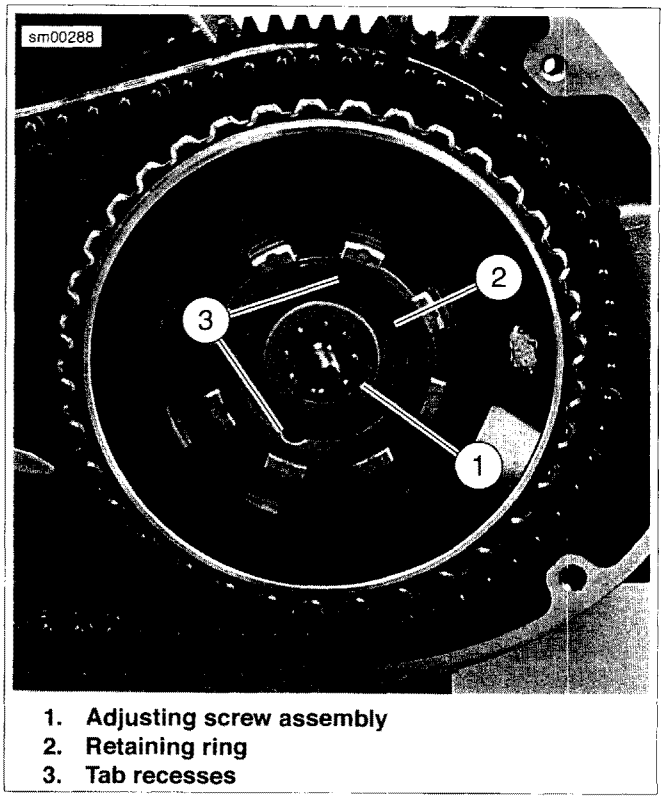

1. Adjusting screw assembly
2. Retaining ring
3. Tab recesses

Figure 5-41. Clutch Adjusting Screw Assembly and Retaining Ring

REMOVAL

XL Models

1. Remove both mufflers and rear exhaust pipe. See 4.14 EXHAUST SYSTEM: XL MODELS.
2. **Models equipped with mid-mount foot controls:** Remove right side rider footrest/brake pedal and mounting bracket assembly. See 2.39 RIDER FOOT CONTROLS: XL MID-MOUNT CONTROLS.
3. See Figure 5-42. Remove screw (6), washer (5) and exhaust pipe clamp bracket (4). Remove two screws (2, 3). Remove sprocket cover (1).
4. See Figure 5-43. Remove and discard e-clip (1) and loosen rear axle nut (4). Decrease belt tension by turning the axle adjuster nut (2) on each side of rear fork an equal number of turns counterclockwise.
5. See Figure 5-44. Remove right lower shock absorber screw (2), washer (3) and lock nut (1).

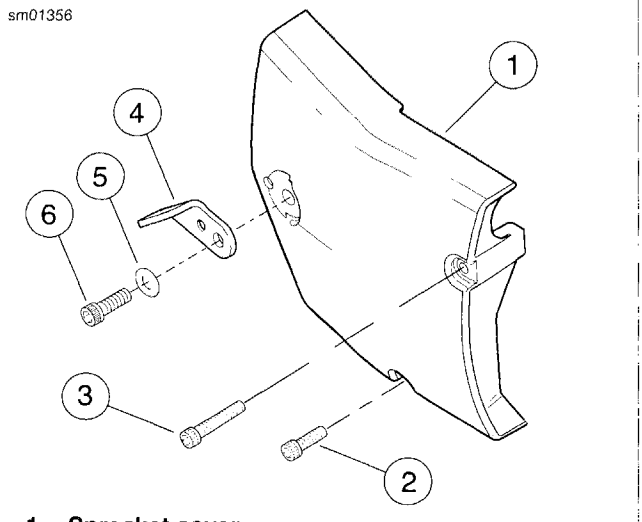

1. **Sprocket cover**
2. **Screw**
3. **Screw**
4. **Exhaust pipe clamp bracket**
5. **Washer**
6. **Screw**

Figure 5-42. Sprocket Cover: XL Models

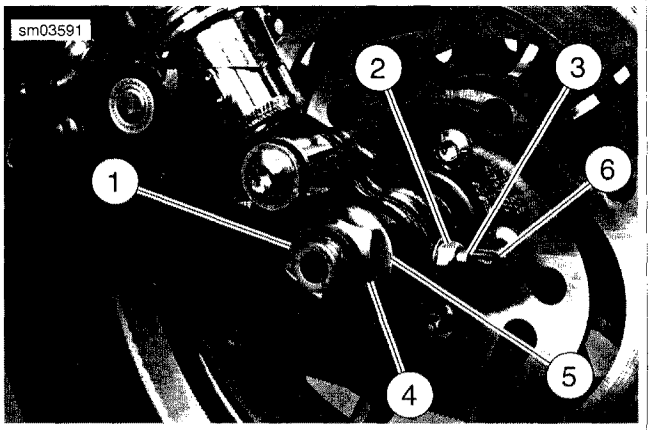

1. **E-clip**
2. **Axle adjuster nut (2)**
3. **Axle adjuster (2)**
4. **Axle nut**
5. **Washer**
6. **Protective cap (2)**

Figure 5-43. Drive Belt Adjustment (typical; XL model shown)

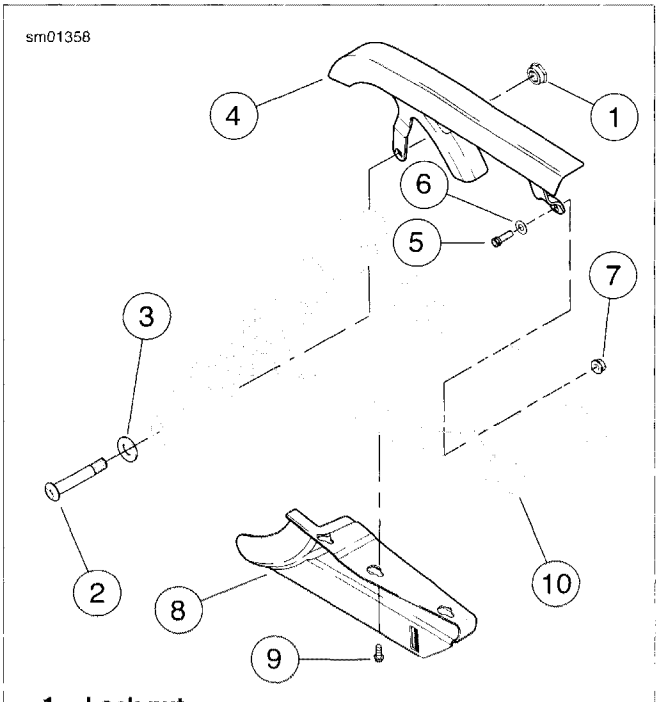

1. **Lock nut**
2. **Screw**
3. **Washer**
4. **Belt guard**
5. **Screw**
6. **Washer**
7. **Nut**
8. **Debris deflector**
9. **Screw with captive washer (3)**
10. **Rear fork**

Figure 5-44. Belt Guard/Debris Deflector: XL Models

6. Remove nut (7), screw (5) and washer (6) securing front of belt guard (4) to rear fork (10). Remove belt guard.

7. Loosen, but do not remove three screws with captive washers (9) securing debris deflector (8) to rear fork. Slide debris deflector forward until keyway slots in deflector clear screw heads. Remove debris deflector.

⚠WARNING

Never bend belt forward into a loop smaller than the drive sprocket diameter. Never bend belt into a reverse loop. Over bending can damage belt resulting in premature failure, which could cause loss of control and death or serious injury. (00339a)

8. Remove belt.

XR Models

1. Remove exhaust system. See 4.15 EXHAUST SYSTEM: XR MODELS.

2. See Figure 5-45. Remove screws (2, 3, 4). Remove sprocket cover (1).

3. See Figure 5-43. Remove and discard e-clip (1) and loosen rear axle nut (4). Decrease belt tension by turning the axle adjuster nut (2) on each side of rear fork an equal number of turns counterclockwise.

4. Remove right lower shock absorber screw, washer and lock nut. See 2.25 SHOCK ABSORBERS.

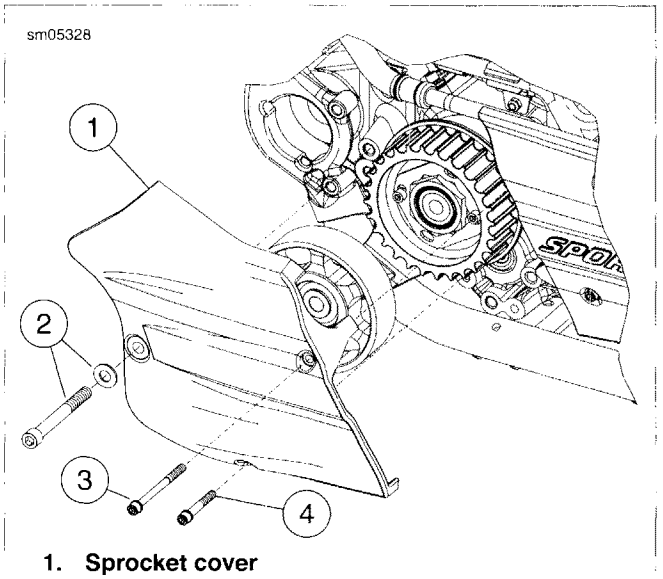

1. **Sprocket cover**
2. **Rear screw and washer**
3. **Front screw**
4. **Lower screw**

Figure 5-45. Sprocket Cover: XR Models

5. Remove belt guard and debris deflector. See 2.23 BELT GUARD AND DEBRIS DEFLECTOR.

⚠WARNING

Never bend belt forward into a loop smaller than the drive sprocket diameter. Never bend belt into a reverse loop. Over bending can damage belt resulting in premature failure, which could cause loss of control and death or serious injury. (00339a)

6. Remove belt.

INSTALLATION

XL Models

1. Install belt onto sprockets.

2. See Figure 5-44. Install belt guard (4). Install screw (5), washer (6) and nut (7) securing front of belt guard to rear fork (10). Tighten to 120-180 **in-lbs** (13.6-20.3 Nm).

3. Position debris deflector (8) in place on underside of rear fork (10).

4. Fit large end of keyway slots in deflector over screw heads and captive washers (9). Slide deflector rearward to lock screws in slots. Tighten screws to 36-60 **in-lbs** (4.1-6.8 Nm).

5. Install right lower shock absorber screw (2), washer (3) and lock nut (1). Tighten to 45-50 ft-lbs (61-68 Nm).

6. See Figure 5-42. Install sprocket cover (1). Secure with two screws (2, 3). Note that long screw goes in top hole, short screw in bottom hole. Do not tighten screws at this time.

7. Install exhaust pipe clamp bracket (4), washer (5) and screw (6).

8. Tighten fasteners:
   a. Exhaust pipe clamp bracket fastener 30-33 ft-lbs (40.7-44.8 Nm)
   b. Sprocket cover fasteners 80-120 **in-lbs** (9.0-13.6 Nm)

9. **Models equipped with mid-mount foot controls:** Install right side rider footrest/brake pedal and mounting bracket assembly. See 2.39 RIDER FOOT CONTROLS: XL MID-MOUNT CONTROLS.

10. Install rear exhaust pipe and both mufflers. See 4.14 EXHAUST SYSTEM: XL MODELS.

11. Adjust belt tension and rear wheel alignment. See 1.16 WHEEL ALIGNMENT.

12. See Figure 5-43. Tighten rear axle nut (4) to 95-105 ft-lbs (129-142 Nm). Install **new** e-clip (1).

XR Models

1. Install belt onto sprockets.

2. Install belt guard and debris deflector. See 2.23 BELT GUARD AND DEBRIS DEFLECTOR.

3. Install right lower shock absorber screw, washer and lock nut. Tighten to 45-50 ft-lbs (61-68 Nm). See 2.25 SHOCK ABSORBERS.

4. See Figure 5-45. Install sprocket cover (1). Note that longer screw goes in top hole, short screw in bottom hole.
   a. Tighten screw (2) to 30-33 ft-lbs (40.7-44.8 Nm)
   b. Tighten screws (3, 4) to 80-120 **in-lbs** (9.0-13.6 Nm).
5. Install exhaust system. See 4.15 EXHAUST SYSTEM: XR MODELS.
6. Adjust belt tension and rear wheel alignment. See 1.16 WHEEL ALIGNMENT.
7. See Figure 5-43. Tighten rear axle nut (4) to 95-105 ft-lbs (129-142 Nm). Install **new** e-clip (1).

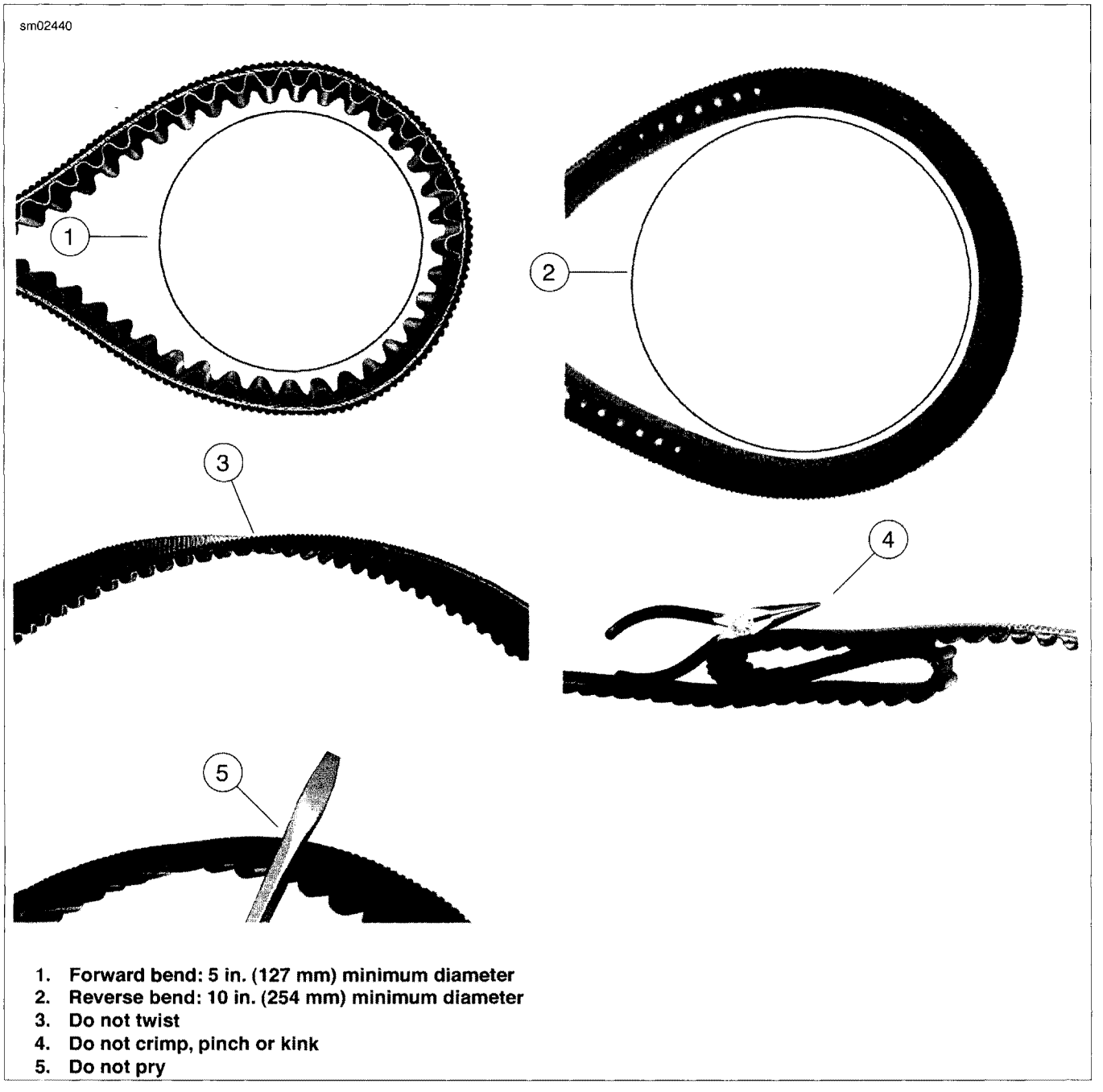

Figure 5-46. Proper Drive Belt Handling

IDLER PULLEY: XR MODELS ONLY

Removal

1. See Figure 5-47. Remove sprocket cover (1).

NOTE

It is not necessary to remove the drive belt completely.

2. Remove tension from drive belt and slide belt off drive sprocket (5). See 5.7 DRIVE BELT, Removal.

NOTE

If exhaust system interference prevents removal, loosen all exhaust system mount fasteners and flange nuts. Pull exhaust

system away from engine to allow room to remove idler assembly.

3. Remove nuts (3) and washers (4). Remove idler pulley and bracket assembly from vehicle.

4. Inspect idler pulley (7) by spinning and checking for bearing wear. See 1.15 DRIVE BELT AND SPROCKETS, Inspection.

NOTE

The idler pulley bearings can not be replaced separately.

5. If idler pulley needs replacement, remove fastener (8) and bushings (2). Discard idler pulley and replace with **new** idler pulley (7).

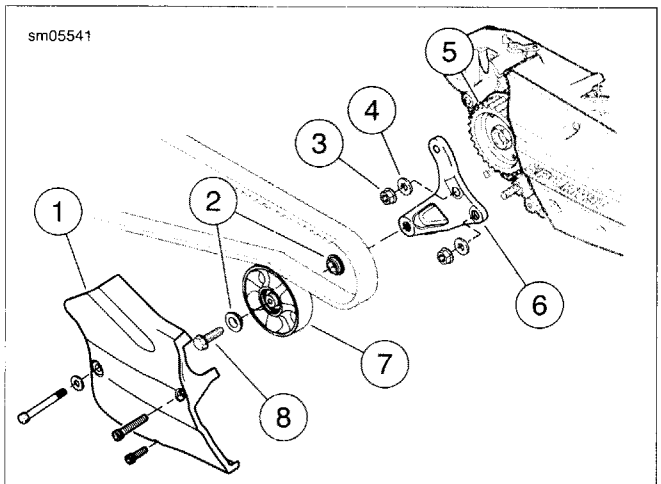

1. **Sprocket cover**
2. **Bushing (2)**
3. **Flanged nut (2)**
4. **Washer (2)**
5. **Drive sprocket**
6. **Idler pulley bracket**
7. **Idler pulley**
8. **Fastener**

Figure 5-47. Drive Belt Idler: XR Models

Installation

1. See Figure 5-47. Install **new** or existing idler pulley (7), if removed. Tighten fastener (8) to 70-80 ft-lbs (95-109 Nm).

2. Install idler pulley and bracket assembly. Install washers (4) and flanged nuts (3), and tighten to 33-35 ft-lbs (45-47 Nm).

3. Install drive belt and adjust belt tension and wheel alignment. See 1.16 WHEEL ALIGNMENT.

4. Install sprocket cover. Tighten rear (larger) screw to 30-33 ft-lbs (40.7-44.8 Nm).Tighten forward and lower (smaller) screws to 80-120 **in-lbs** (9.0-13.6 Nm).

5. If loosened, align and tighten exhaust system components. See 4.15 EXHAUST SYSTEM: XR MODELS

GENERAL

See Figure 5-48. The transmission is a five-speed constant-mesh type housed in an extension of the crankcase. The transmission permits the rider to vary the ratio of engine speed-to-rear driving wheel speed in order to meet the varying conditions of operation.

The transmission is foot-operated by the gear shifter lever, which transmits the force through a gear shifter shaft. The shifter shaft actuates a pawl and a shifter fork drum. The shifter fork drum moves shifter forks, which slide a series of shifter dogs on the mainshaft and countershaft, into and out of mesh with the other gears.

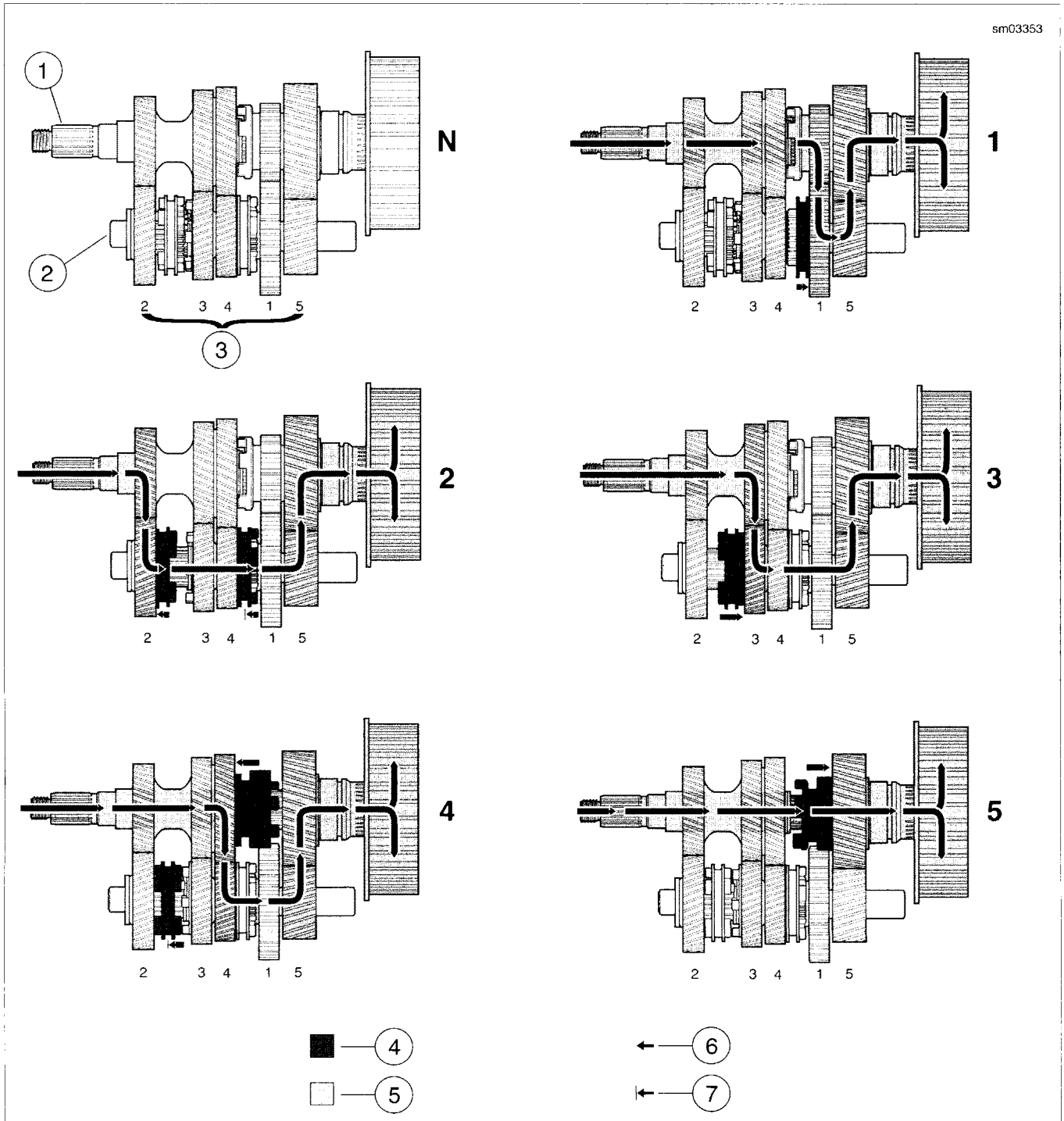

Figure 5-48. Transmission Power Flow

CASE DISASSEMBLY FOR TRANSMISSION REMOVAL

GENERAL

The rear compartment of the left and right crankcase halves form the transmission case. Servicing of transmission components requires removing the engine and disassembling (splitting) the crankcase.

ENGINE REMOVAL AND DISASSEMBLY

PART NUMBER	TOOL NAME
HD-42310-45	ENGINE SUPPORT CRADLE

1. Remove engine from chassis. See 3.12 REMOVING ENGINE FROM CHASSIS.
2. Support engine using ENGINE SUPPORT CRADLE (Part No. HD-42310-45) and the appropriate engine stand.
3. Disassemble top end. See 3.15 TOP END OVERHAUL: DISASSEMBLY.
4. Remove primary cover, clutch assembly, primary chain and engine sprocket. See 5.5 PRIMARY DRIVE AND CLUTCH: XL MODELS or 5.6 PRIMARY DRIVE AND CLUTCH: XR MODELS.
5. Disassemble gearcase. See 3.17 BOTTOM END OVERHAUL: DISASSEMBLY.
6. Remove transmission sprocket.
7. See Figure 5-49. Place transmission in 1st gear. Remove countershaft retaining screw (1).
8. Place transmission in neutral. See Figure 5-50. Unplug neutral switch connector [131] (2) by pulling connector straight off neutral switch (1). Remove neutral switch and flat washer.
9. See Figure 5-51. Verify shifter drum detent is visible in neutral switch hole indicating that transmission is in neutral.

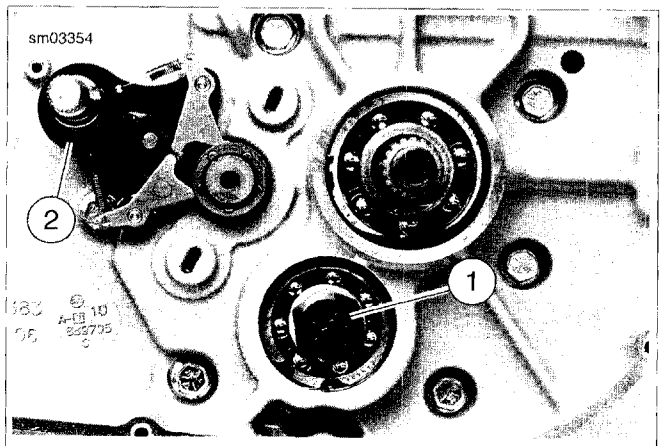

1. **Countershaft retaining screw**
2. **Shifter shaft assembly**

Figure 5-49. Countershaft Retaining Screw

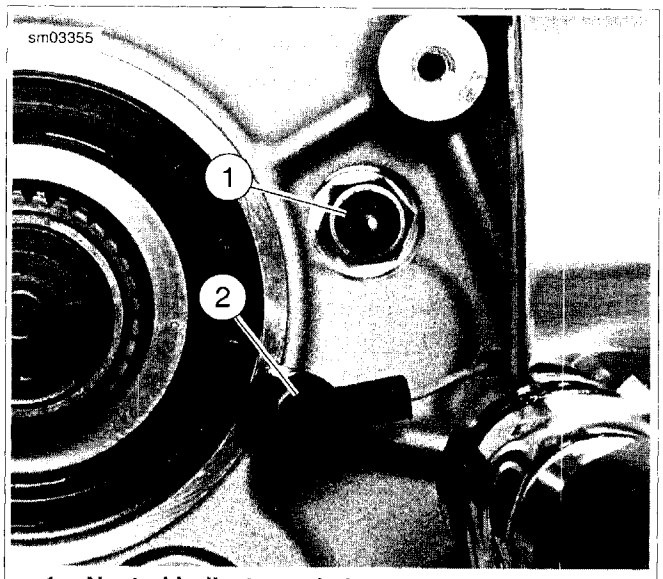

1. **Neutral indicator switch**
2. **Neutral switch connector**

Figure 5-50. Neutral Switch and Connector

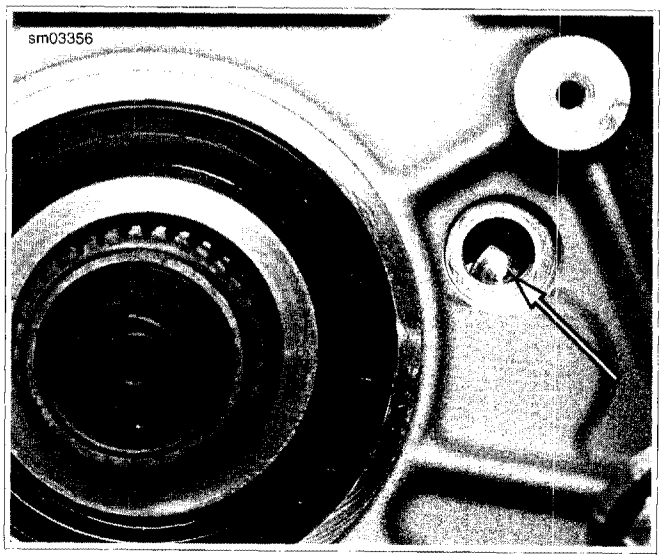

Figure 5-51. Shifter Drum Neutral Detent

10. See Figure 5-52 and Figure 5-53. Compress the ratchet arms (item 2, Figure 5-52) in order to clear the shifter drum, and remove shifter shaft assembly from left crankcase half.
11. Remove starter. See 6.13 STARTER.
12. See Figure 5-54. With transmission still in neutral, scribe a line on the end of the shifter drum at the 12 o'clock position for later reference.

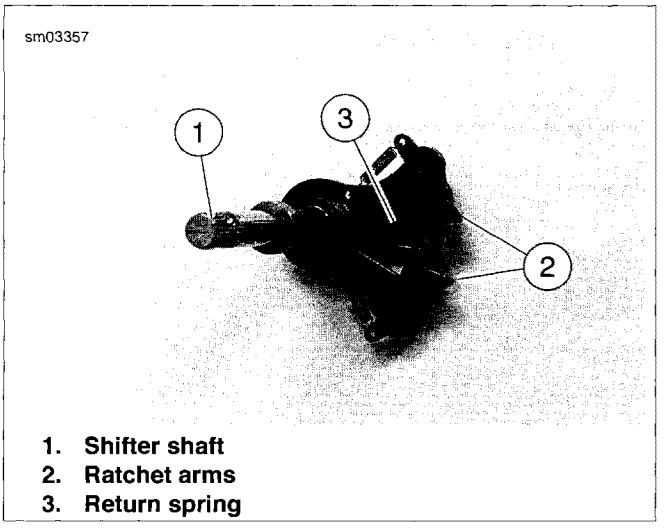

Figure 5-52. Shifter Shaft Assembly

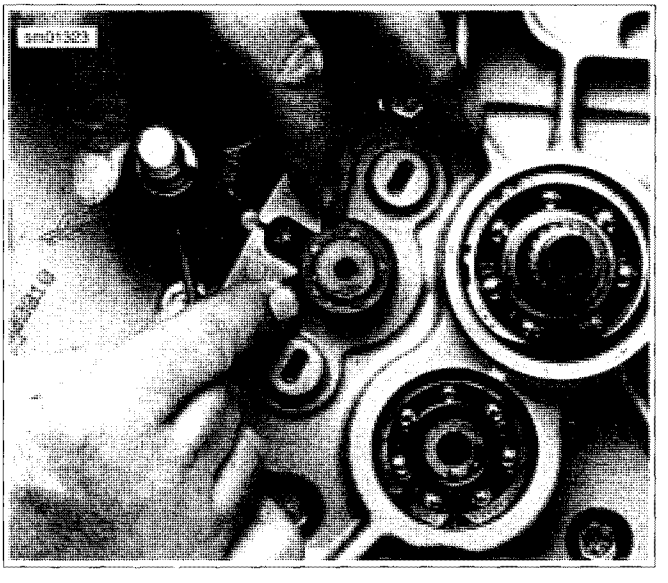

Figure 5-53. Removing Shifter Shaft Assembly

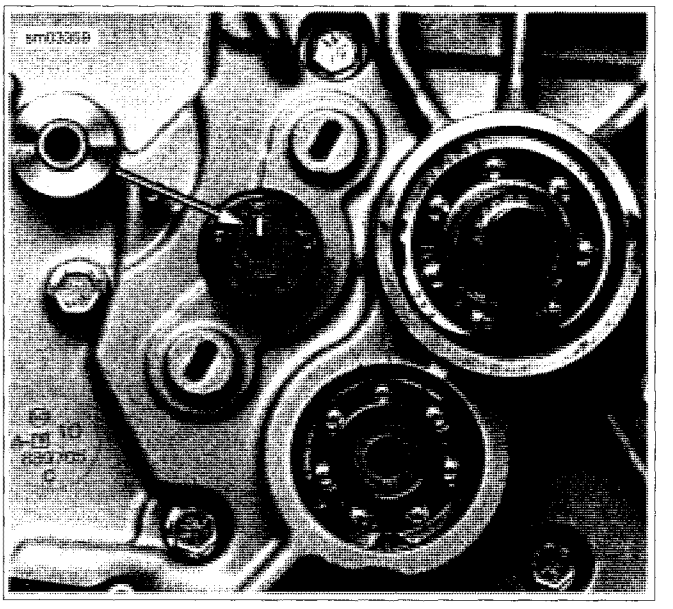

Figure 5-54. Scribed Line on Shifter Drum at 12 o'clock

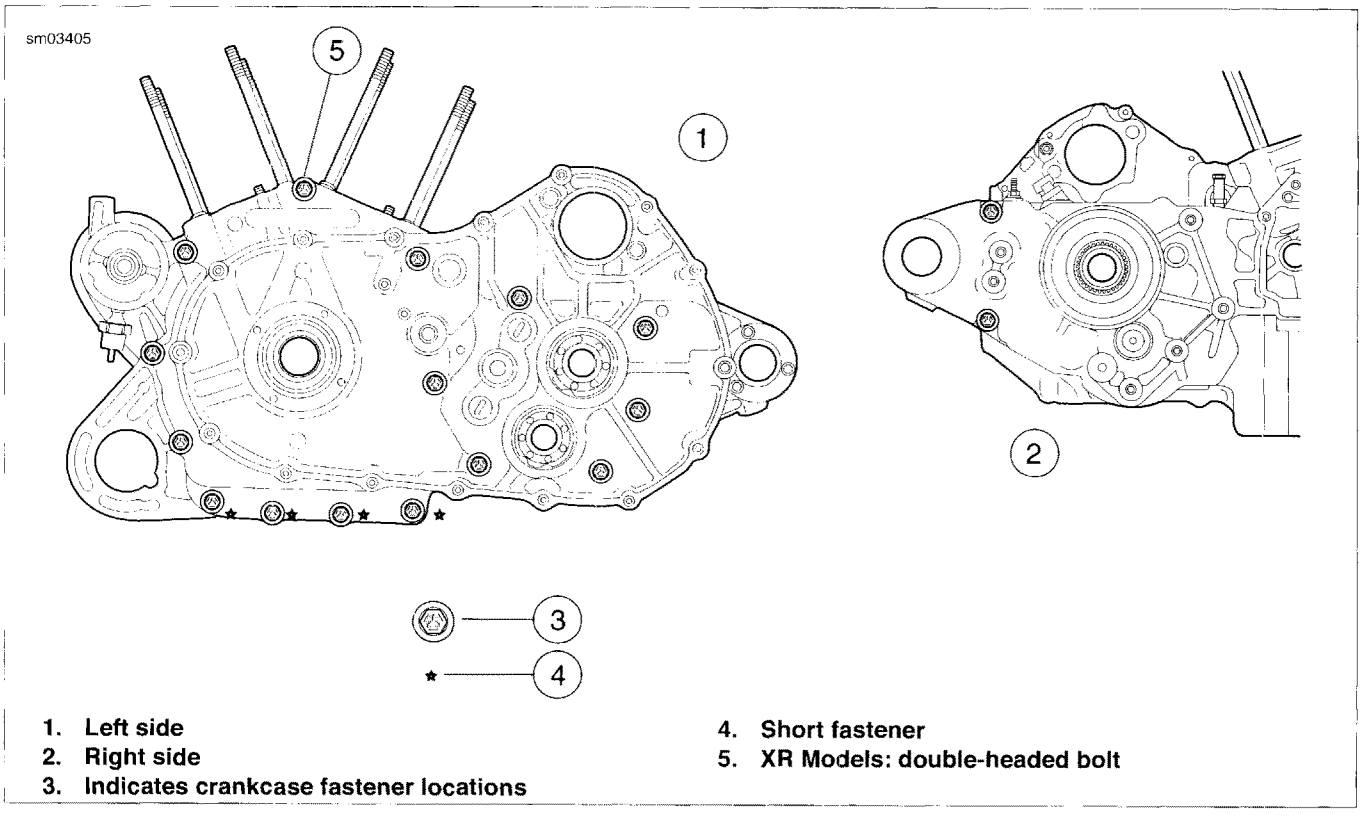

Figure 5-55. Crankcase Fasteners

NOTE

Crankcase assembly has 17 fasteners; 15 inserted from left side and two inserted from right side. Make certain all fasteners have been removed before attempting to separate crankcase halves.

13. See Figure 5-55. Remove 15 crankcase fasteners (11 long and four short) from left side of crankcase assembly. Remove two fasteners from right side of crankcase assembly.

14. Tap crankcase gently with rawhide mallet to loosen and separate the halves. See Figure 5-56. Remove left crankcase assembly with transmission.

NOTE

Flywheel assembly slides off left main bearing by hand. No tools are required for this operation.

15. See Figure 5-57. Remove flywheel assembly from right crankcase half.

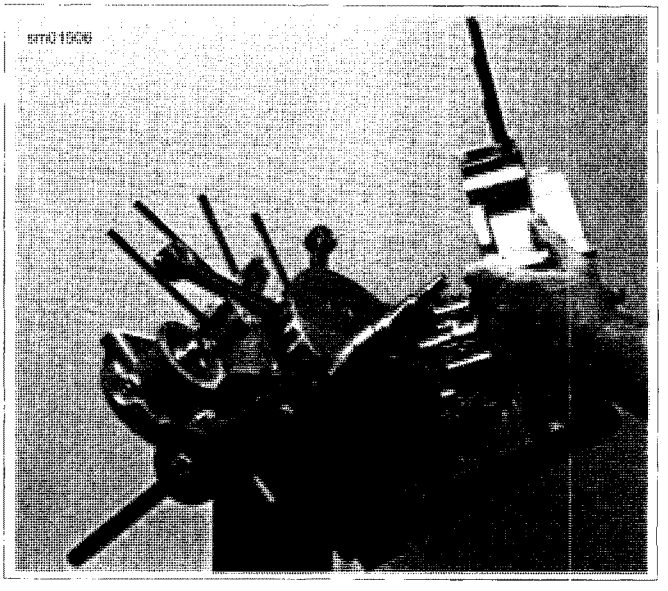

Figure 5-56. Separating Crankcase Halves

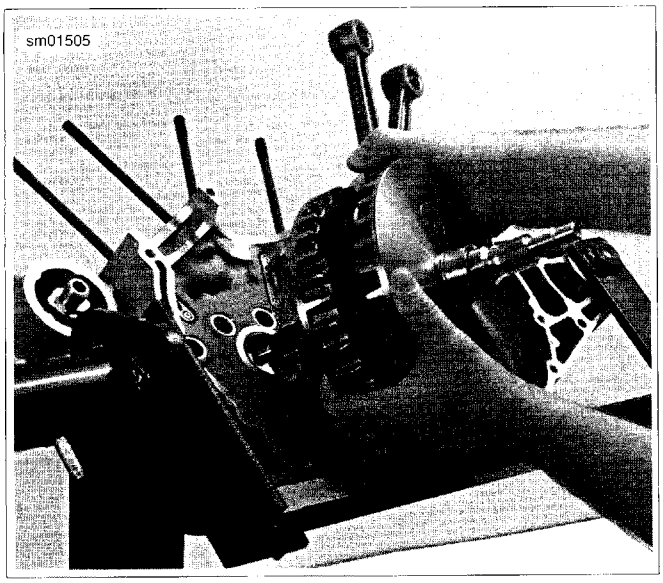

Figure 5-57. Removing Flywheel Assembly From Right Crankcase Half (typical, XL model shown)

16. See Figure 5-58. Remove screw (1), gear detent assembly (2) and detent spring (3) from inside transmission cavity of right crankcase.

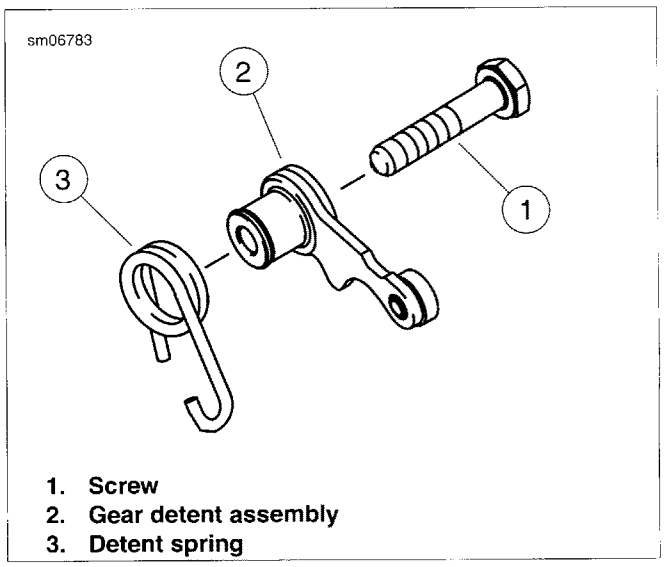

1. **Screw**
2. **Gear detent assembly**
3. **Detent spring**

Figure 5-58. Gear Detent Assembly

TRANSMISSION REMOVAL FROM LEFT CRANKCASE

PART NUMBER	TOOL NAME
B-43895-1	TRANSMISSION REMOVER

NOTE

See Figure 5-59. Shifter design allows for one common part number for both countershaft shifter forks. As the transmission runs, each shifter fork develops a certain wear pattern with its mating parts. For this reason, it is important that each shifter fork be reinstalled in its original location.

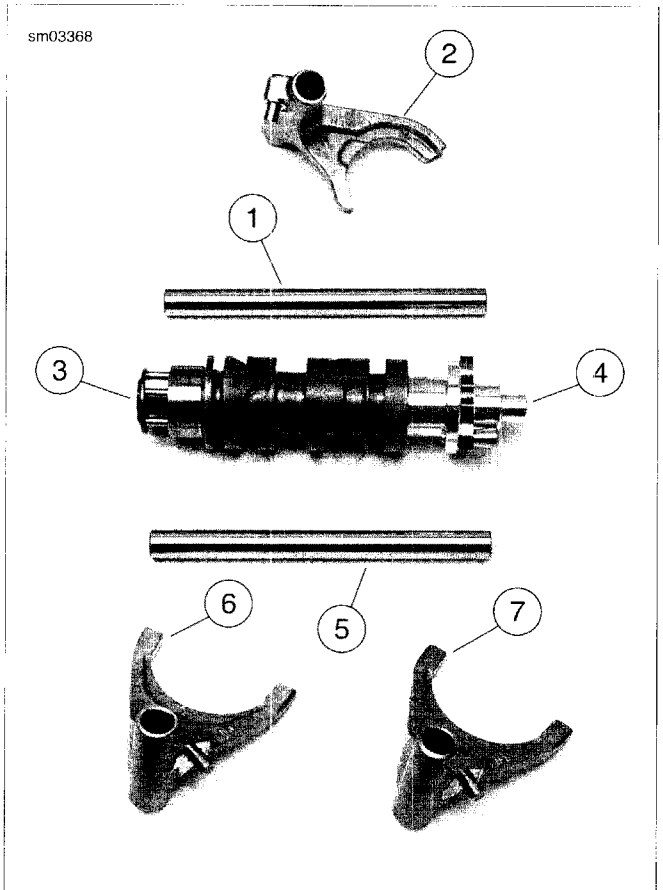

1. Mainshaft
2. Mainshaft shifter fork (4/5)
3. Drum (left side)
4. Drum (right side)
5. Countershaft
6. Countershaft shifter fork (2/3)
7. Countershaft shifter fork (1)

Figure 5-59. Shifter Forks, Drum and Shafts

1. See Figure 5-60. Remove shifter fork shafts by inserting a small flat punch in the slots and tapping on the end of each shaft until it falls free.

NOTE

Carefully tap on alternate sides of the shaft using the provided slots.

2. See Figure 5-61. Remove shifter drum (1) and shifter forks (2). Mark each shifter fork as it is removed, so it can be reinstalled in the same location.

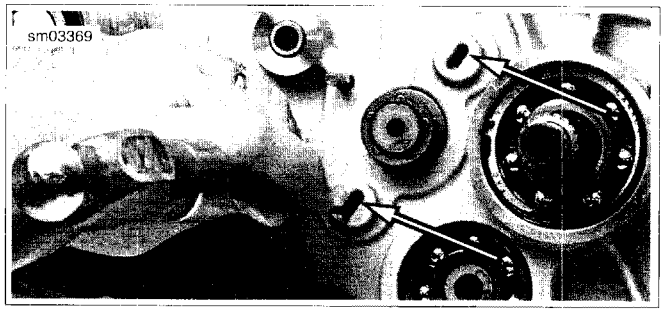

Figure 5-60. Slots For Removing Shifter Fork Shafts

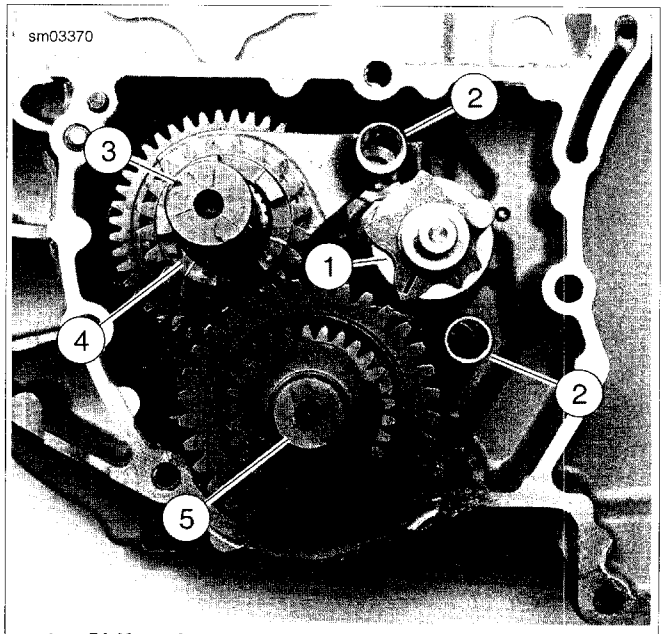

1. Shifter drum
2. Shifter fork (3)
3. Mainshaft
4. Mainshaft 2nd gear
5. Countershaft

Figure 5-61. Transmission Assembly

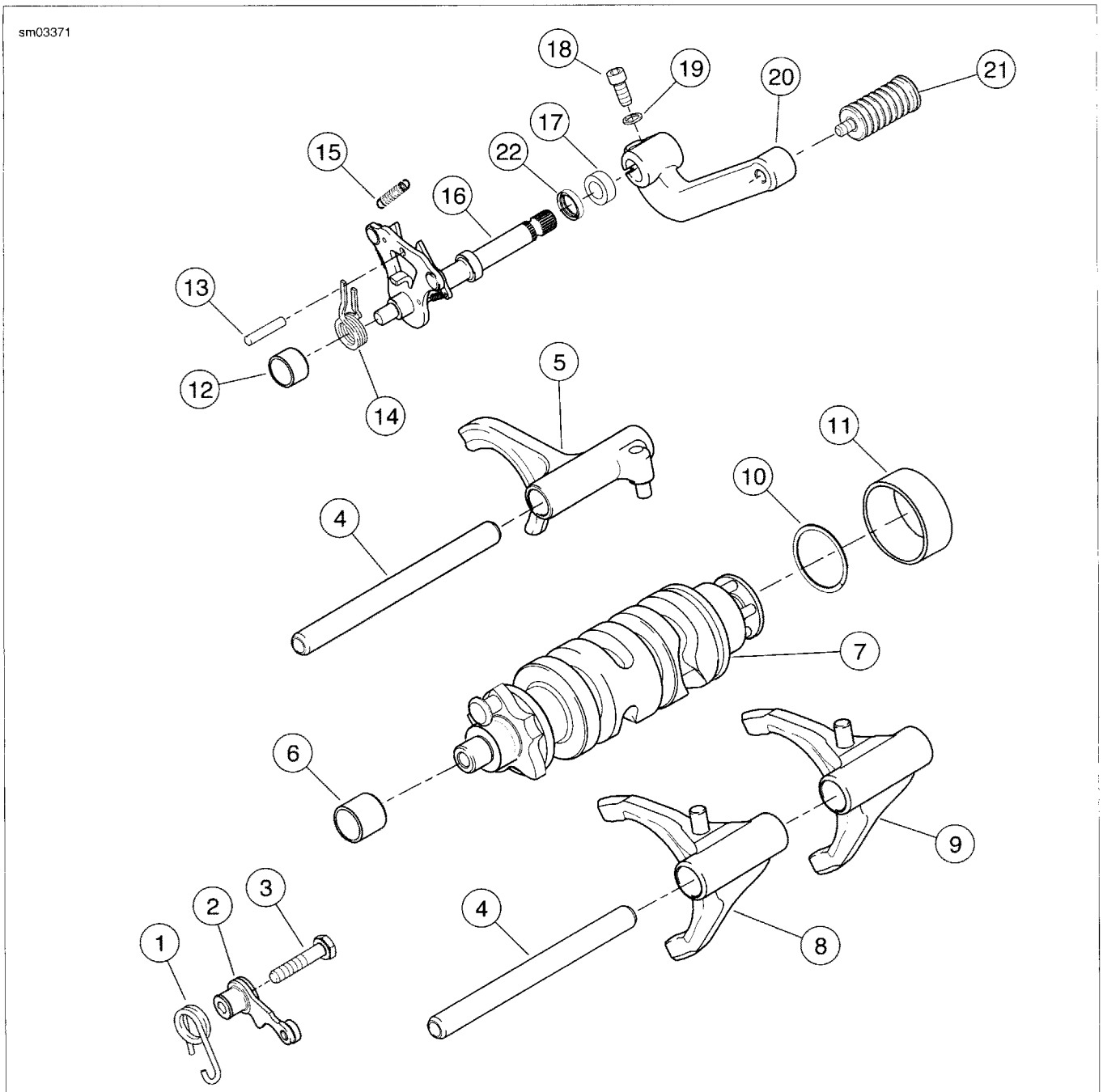

1. Detent spring
2. Detent spring sleeve assembly
3. Screw
4. Shifter fork shaft (2)
5. Shifter fork (4th/5th)
6. Right hand crankcase bushing
7. Shifter cam assembly
8. Shifter fork (1st)
9. Shifter fork (2nd/3rd)
10. Retaining ring
11. Bearing
12. Bushing
13. Shifter stop pin
14. Shifter return spring
15. Extension spring
16. Shifter lever assembly
17. Rubber washer
18. Screw
19. Washer
20. Foot shift lever
21. Shifter peg
22. Oil seal

Figure 5-62. Shifter Mechanism

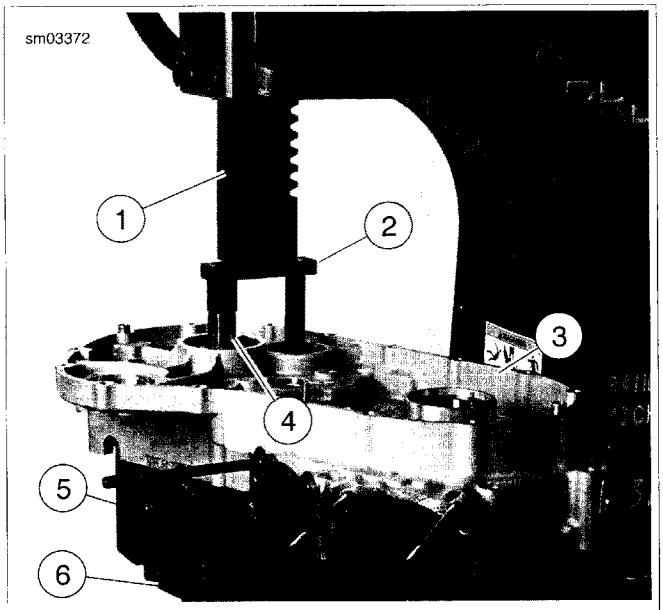

1. **Press ram**
2. **Transmission remover**
3. **Crankcase**
4. **Transmission assembly (countershaft visible)**
5. **Parallel support (2)**
6. **Press bed**

Figure 5-63. Pressing Transmission From Left Crankcase

⚠WARNING

Wear safety glasses or goggles when removing or installing retaining rings. Retaining rings can slip from the pliers and could be propelled with enough force to cause serious eye injury. (00312a)

3. See Figure 5-63. Remove left crankcase half and transmission assembly (4) from engine stand.
   a. Place crankcase half (3) and transmission assembly (4) on arbor press (1) and support transmission assembly on parallel supports (5).
   b. Press transmission assembly using TRANSMISSION REMOVER (Part No. B-43895-1) (2) to remove transmission assembly from crankcase half.
   c. Remove crankcase from press.

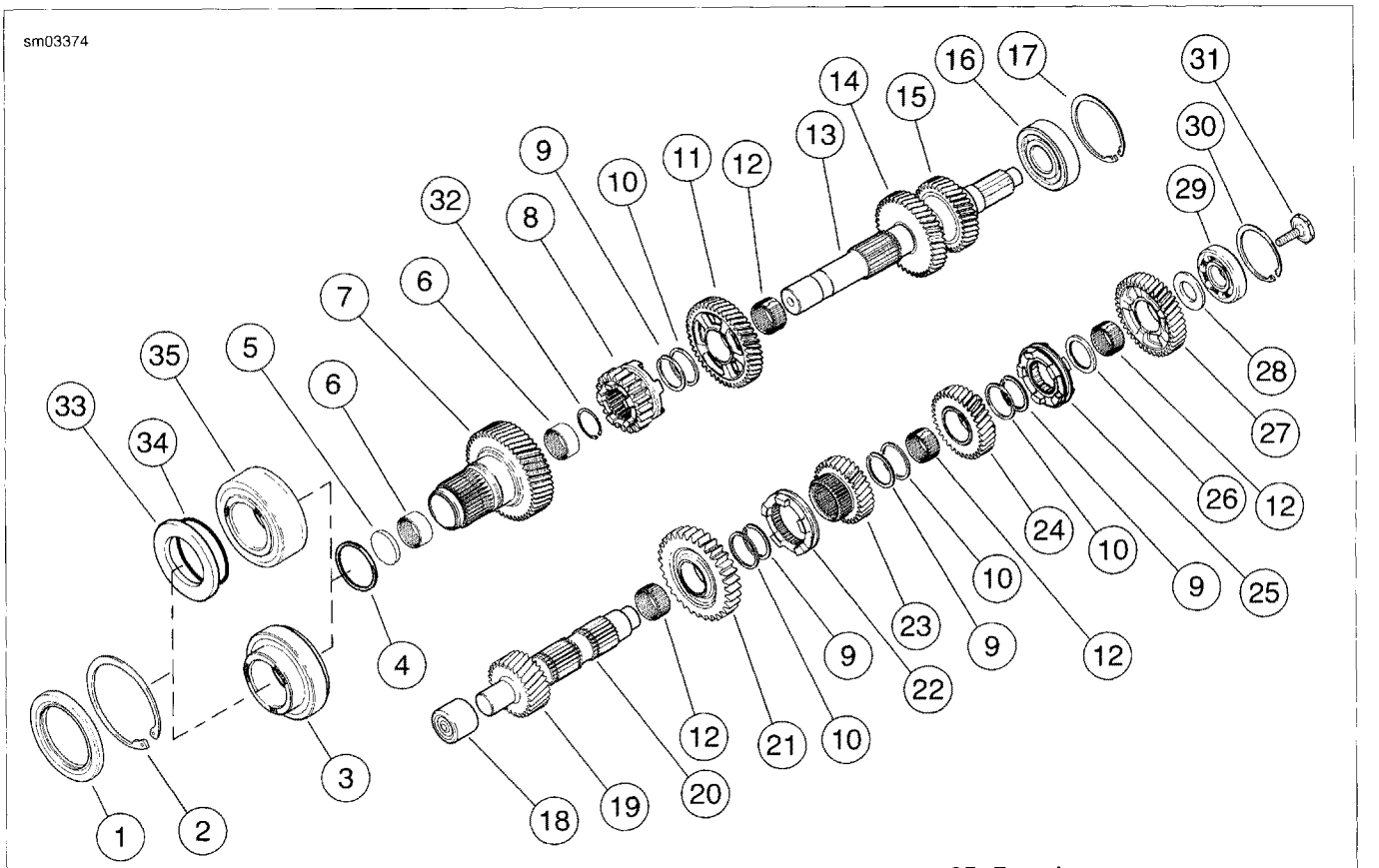

1. Oil seal
2. Retaining ring
3. Ball bearing (XL models)
4. O-ring
5. Oil seal
6. Needle bearing (2)
7. Mainshaft 5th gear
8. Mainshaft 1st gear
9. Retaining ring (4)
10. Thrust washer (4)
11. Mainshaft 4th gear
12. Split bearing (4)
13. Mainshaft
14. Mainshaft 3rd gear (integral to shaft)
15. Mainshaft 2nd gear (integral to shaft)
16. Mainshaft bearing
17. Retaining ring
18. Closed end bearing
19. Countershaft 5th gear (integral to shaft)
20. Countershaft
21. Countershaft 1st gear
22. Dog ring
23. Countershaft 4th gear
24. Countershaft 3rd gear
25. Dog ring
26. Thrust washer
27. Countershaft 2nd gear
28. Spacer
29. Countershaft bearing
30. Retaining ring
31. Countershaft retaining screw
32. Retaining ring
33. Spacer (XR models)
34. O-ring (XR models)
35. Double roller bearing (XR models)

Figure 5-64. Transmission Assembly

MAINSHAFT/COUNTERSHAFT

NOTES

- *As the transmission runs, each part develops a certain wear pattern and a kind of "set" with its mating parts. For this reason, it is important that each component be reinstalled in its original location and facing its original direction.*
- *See Figure 5-65. As each component is removed, place it on a clean surface in the exact order of removal.*

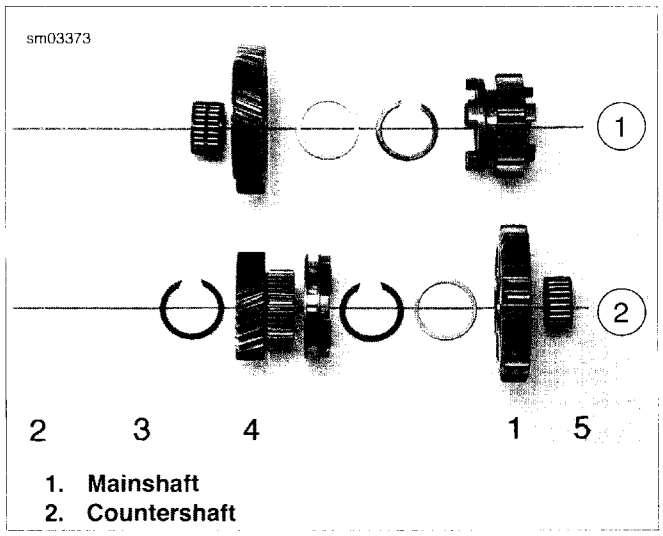

1. Mainshaft
2. Countershaft

Figure 5-65. Transmission Parts Identification

MAINSHAFT DISASSEMBLY

PART NUMBER	TOOL NAME
J-5586-A	TRANSMISSION SHAFT RETAINING RING PLIERS

NOTES

- *Mainshaft 2nd and 3rd gears are integral to the shaft.*
- *Mainshaft 1st gear is directional. Mark gear when removed for correct installation.*
- *Once the transmission assembly has been pressed out of the left crankcase half, the mainshaft and countershaft assemblies can be serviced separately.*
- *All thrust washers are one common part number. This transmission requires no shimming.*

⚠WARNING

Wear safety glasses or goggles when removing or installing retaining rings. Retaining rings can slip from the pliers and could be propelled with enough force to cause serious eye injury. (00312a)

NOTE

Use correct retaining ring pliers and correct tips. Verify that tips are not excessively worn or damaged.

1. See Figure 5-66. Remove 1st gear (1).
2. Use TRANSMISSION SHAFT RETAINING RING PLIERS (Part No. J-5586-A) to expand and remove retaining ring (2). Discard retaining ring.
3. Slide thrust washer (3) off end of mainshaft.
4. Remove 4th gear (4) and split bearing (5). Discard bearing.

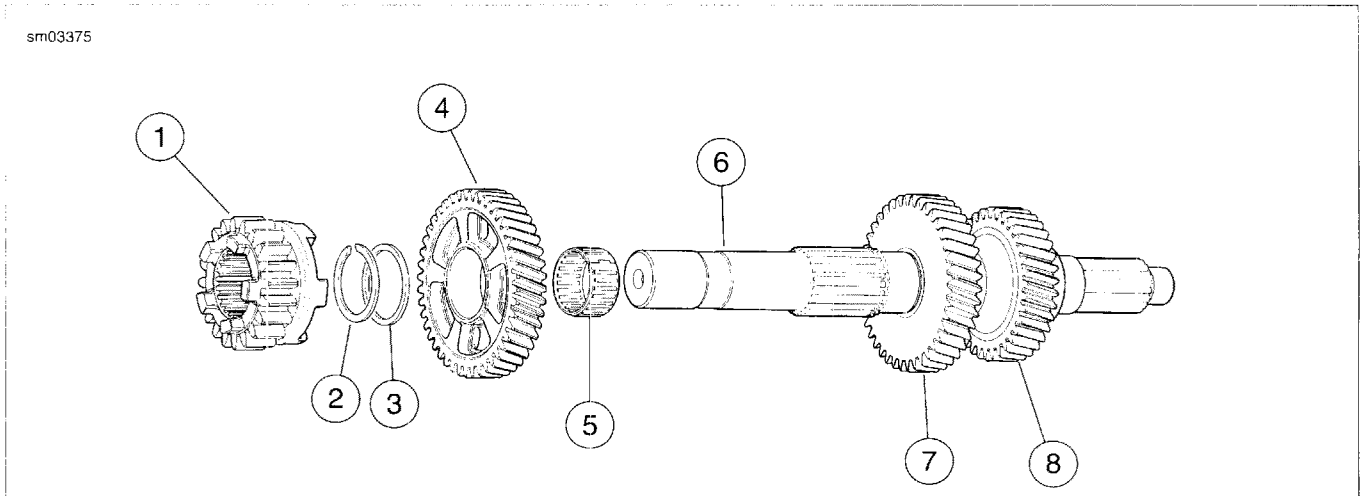

1. Mainshaft 1st gear
2. Retaining ring
3. Thrust washer
4. Mainshaft 4th gear
5. Split bearing
6. Mainshaft
7. Mainshaft 3rd gear (integral to shaft)
8. Mainshaft 2nd gear (integral to shaft)

Figure 5-66. Transmission Mainshaft Assembly Once Removed from Left Crankcase/Disassembly

Cleaning and Inspection

⚠WARNING

Compressed air can pierce the skin and flying debris from compressed air could cause serious eye injury. Wear safety glasses when working with compressed air. Never use your hand to check for air leaks or to determine air flow rates. (00061a)

1. Clean all parts in cleaning solvent and blow dry with compressed air.
2. Check gear teeth for damage. If gears are pitted, scored, rounded, cracked or chipped, they should be replaced.
3. Inspect the engaging dogs on the gears. Replace the gears if dogs are rounded, cracked, battered, chipped or dimpled.

COUNTERSHAFT DISASSEMBLY

PART NUMBER	TOOL NAME
J-5586-A	RETAINING RING PLIERS

NOTES

- *Countershaft 5th gear is integral to the shaft.*
- *Once the transmission assembly has been pressed out of the left crankcase half, the mainshaft and countershaft assemblies can be serviced separately.*
- *All thrust washers are one common part number. This transmission requires no shimming.*
- *Use correct retaining ring pliers with correct tips. Verify that tips are not excessively worn or damaged.*

⚠WARNING

Wear safety glasses or goggles when removing or installing retaining rings. Retaining rings can slip from the pliers and could be propelled with enough force to cause serious eye injury. (00312a)

1. See Figure 5-67. Remove spacer (19) and 2nd gear (18) from the end of the of the countershaft (2). Remove and discard split bearing (17).
2. Remove spacer (16).

NOTE

When removing the dog ring (15), it is important to mark the direction of the ring on the shaft as parts establish wear patterns.

3. Remove dog ring (15).
4. Using RETAINING RING PLIERS (Part No. J-5586-A), expand and remove retaining ring (14). Discard retaining ring.
5. Remove thrust washer (13), 3rd gear (12), and split bearing (11). Discard bearing.
6. Remove thrust washer (10).
7. Expand, remove and discard retaining ring (9).
8. Remove 4th gear (8) and dog ring (7).
9. Expand, remove and discard retaining ring (6).
10. Remove thrust washer (5), 1st gear (4) and split bearing (3). Discard bearing.

Cleaning and Inspection

⚠WARNING

Compressed air can pierce the skin and flying debris from compressed air could cause serious eye injury. Wear safety glasses when working with compressed air. Never use your hand to check for air leaks or to determine air flow rates. (00061a)

1. Clean all parts (except bearings) in cleaning solvent and blow dry with compressed air.
2. Check gear teeth for damage. If gears are pitted, scored, rounded, cracked or chipped, they should be replaced.
3. Inspect the engaging dogs on the gears. Replace the gears if dogs are rounded, cracked, battered, chipped or dimpled.

sm03376

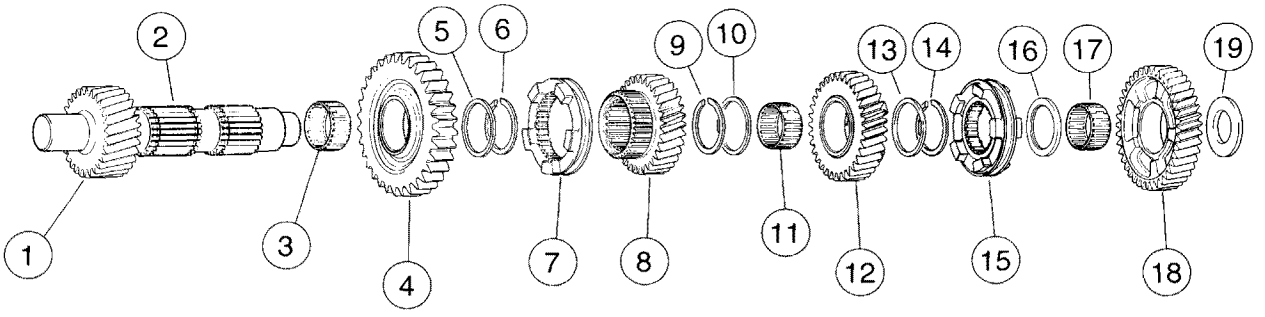

1. Countershaft 5th gear (integral to shaft)
2. Countershaft
3. Split bearing
4. Countershaft 1st gear
5. Thrust washer
6. Retaining ring
7. Dog ring
8. Countershaft 4th gear
9. Retaining ring
10. Thrust washer
11. Split bearing
12. Countershaft 3rd gear
13. Thrust washer
14. Retaining ring
15. Dog ring
16. Spacer
17. Split bearing
18. Countershaft 2nd gear
19. Spacer

Figure 5-67. Transmission Countershaft Assembly Once Removed from Left Crankcase/Disassembly

MAINSHAFT ASSEMBLY

PART NUMBER	TOOL NAME
J-5586-A	RETAINING RING PLIERS

⚠WARNING

Wear safety glasses or goggles when removing or installing retaining rings. Retaining rings can slip from the pliers and could be propelled with enough force to cause serious eye injury. (00312a)

NOTES

- *Use correct retaining ring pliers and correct tips. Verify that tips are not excessively worn or damaged.*
- *During assembly, the split bearings and the internal bores of the gears must be lubricated with Harley-Davidson FORMULA+ TRANSMISSION AND PRIMARY CHAIN-CASE LUBRICANT prior to assembly. Leaving these parts dry could accelerate wear at start-up.*

1. See Figure 5-68. Install **new** split bearing (5) in 4th gear position on mainshaft.
2. Install 4th gear (4) and thrust washer (3).
3. Using RETAINING RING PLIERS (Part No. J-5586-A), expand and install new retaining ring (2).
4. Install 1st gear (1).

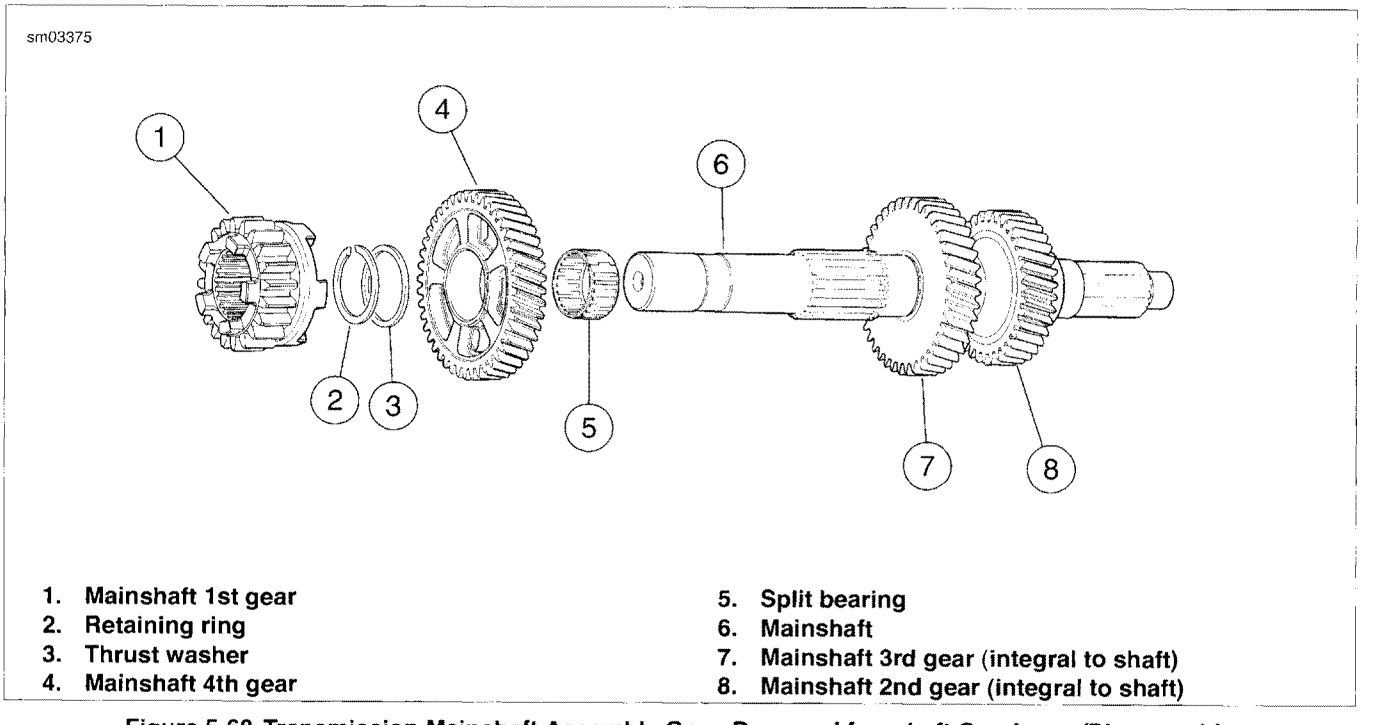

1. **Mainshaft 1st gear**
2. **Retaining ring**
3. **Thrust washer**
4. **Mainshaft 4th gear**
5. **Split bearing**
6. **Mainshaft**
7. **Mainshaft 3rd gear (integral to shaft)**
8. **Mainshaft 2nd gear (integral to shaft)**

Figure 5-68. Transmission Mainshaft Assembly Once Removed from Left Crankcase/Disassembly

COUNTERSHAFT ASSEMBLY

PART NUMBER	TOOL NAME
J-5586-A	RETAINING RING PLIERS

⚠WARNING

Wear safety glasses or goggles when removing or installing retaining rings. Retaining rings can slip from the pliers and could be propelled with enough force to cause serious eye injury. (00312a)

NOTES

- *Use correct retaining ring pliers and correct tips. Verify that tips are not excessively worn or damaged.*
- *During assembly, the split bearings and the internal bores of the gears must be lubricated with Harley-Davidson FORMULA+ TRANSMISSION AND PRIMARY CHAIN-CASE LUBRICANT prior to assembly. Leaving these parts dry could accelerate wear at start-up.*

1. See Figure 5-69. Install **new** split bearing (3) in 1st gear position on mainshaft.
2. Install 1st gear (4) and thrust washer (5).
3. Using RETAINING RING PLIERS (Part No. J-5586-A), expand and install **new** retaining ring (6).

4. Install dog ring (7) onto 4th gear (8). Now install dog ring and gear assembly onto countershaft.
5. Expand and install **new** retaining ring (9).
6. Install thrust washer (10).
7. Install **new** split bearing (11) in 3rd gear position on mainshaft.
8. Install 3rd gear (12) and thrust washer (13).
9. Expand and install **new** retaining ring (14).
10. Install dog ring (15). Make sure to install with dog ring facing same direction as when it was removed.
11. Install spacer (16).
12. Install **new** split bearing (17) in 2nd gear position on shaft.
13. Install 2nd gear (18) and spacer (19).

NOTE

At this point both mainshaft and countershaft sub-assemblies are ready to be pressed into the left crankcase half.

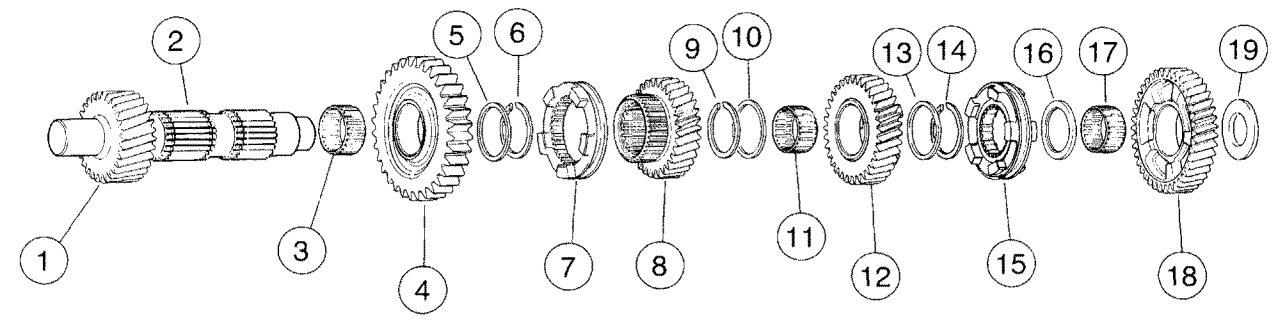

1. **Countershaft 5th gear (integral to shaft)**
2. **Countershaft**
3. **Split bearing**
4. **Countershaft 1st gear**
5. **Thrust washer**
6. **Retaining ring**
7. **Dog ring**
8. **Countershaft 4th gear**
9. **Retaining ring**
10. **Thrust washer**
11. **Split bearing**
12. **Countershaft 3rd gear**
13. **Thrust washer**
14. **Retaining ring**
15. **Dog ring**
16. **Spacer**
17. **Split bearing**
18. **Countershaft 2nd gear**
19. **Spacer**

Figure 5-69. Transmission Countershaft Assembly Once Removed from Left Crankcase/Disassembly

GENERAL

NOTE

See Figure 5-70. When removing the main drive gear (2), the gear is pressed out against the resistance of the ball bearing (7 or 14) inner race. Without any support at the inner race, the bearing is destroyed. Whenever the main drive gear is removed the main drive gear bearing must also be replaced.

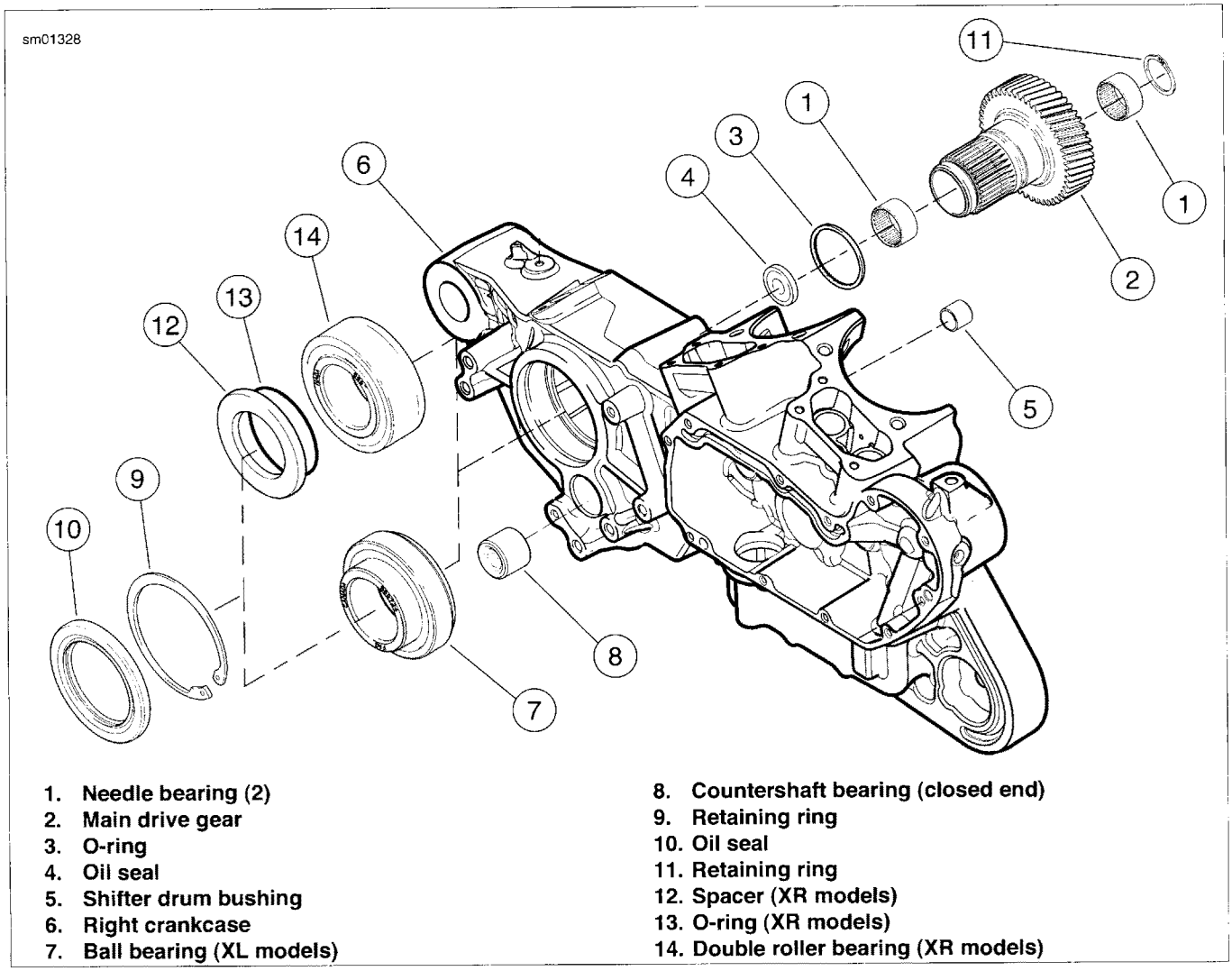

1. Needle bearing (2)
2. Main drive gear
3. O-ring
4. Oil seal
5. Shifter drum bushing
6. Right crankcase
7. Ball bearing (XL models)
8. Countershaft bearing (closed end)
9. Retaining ring
10. Oil seal
11. Retaining ring
12. Spacer (XR models)
13. O-ring (XR models)
14. Double roller bearing (XR models)

Figure 5-70. Main Drive Gear and Bearing Assembly

REMOVAL

PART NUMBER	TOOL NAME
B-45847	CROSS PLATE
HD-35316-11	RECEIVER CUP
HD-35316-13	BEARING DRIVER
HD-35316-4A	8 IN. BOLT
HD-35316-7	WASHER
HD-35316-9	BEARING DRIVER
HD-35316-D	MAIN DRIVE GEAR REMOVER AND INSTALLER SET

Main Drive Gear

1. Split crankcases. See 5.9 CASE DISASSEMBLY FOR TRANSMISSION REMOVAL.
2. See Figure 5-71. From inside right crankcase, tap out seal (3) at end of main drive gear (1). Discard seal.
3. Obtain MAIN DRIVE GEAR REMOVER AND INSTALLER SET (Part No. HD-35316-D). See Figure 5-72. Position CROSS PLATE (Part No. B-45847) (1) on right crankcase as shown. Position cross plate so that roll pins (2) fit into crankcase mating screw holes and bolt hole (3) in cross plate is centered over main drive gear (4).

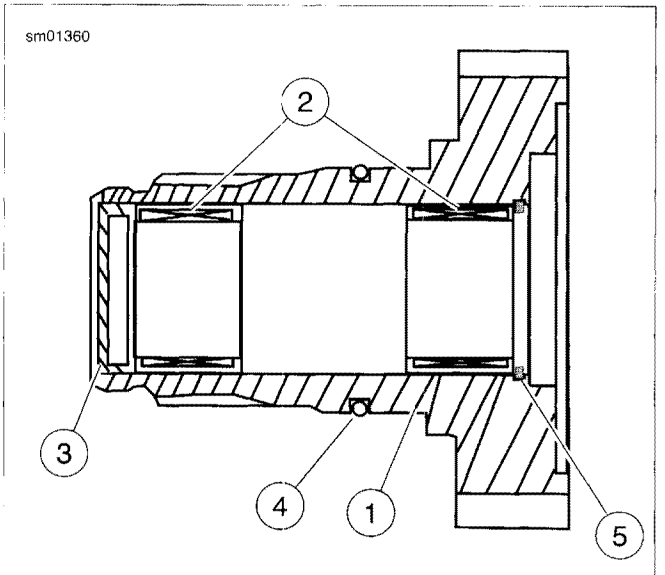

1. **Main drive gear**
2. **Needle bearing (2)**
3. **Seal**
4. **O-ring**
5. **Retaining ring**

Figure 5-71. Main Drive Gear Assembly (typical)

4. See Figure 5-73. Insert 8 IN. BOLT (Part No. HD-35316-4A) (2) through cross plate (1) and main drive gear (3).
5. At outside of case, place WASHER (Part No. HD-35316-7) (4), NICE BEARING (5), FLAT WASHER (6) and NUT (7) over end of bolt. Tighten nut until main drive gear is free.

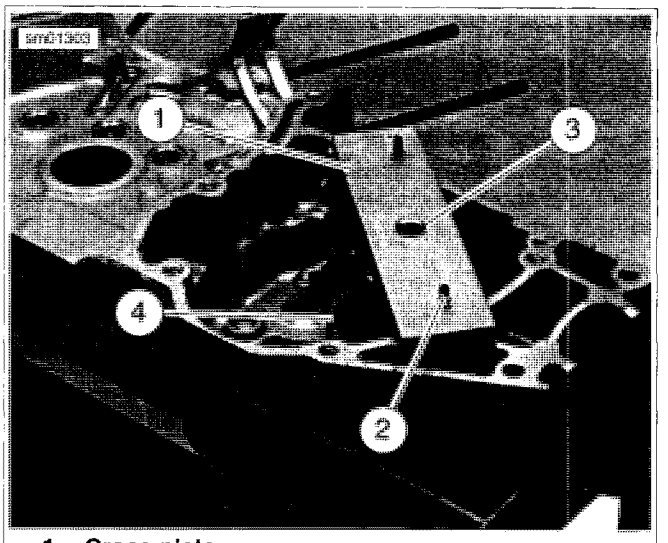

1. **Cross plate**
2. **Roll pin (2)**
3. **Bolt hole**
4. **Main drive gear**

Figure 5-72. Positioning Cross Plate (typical)

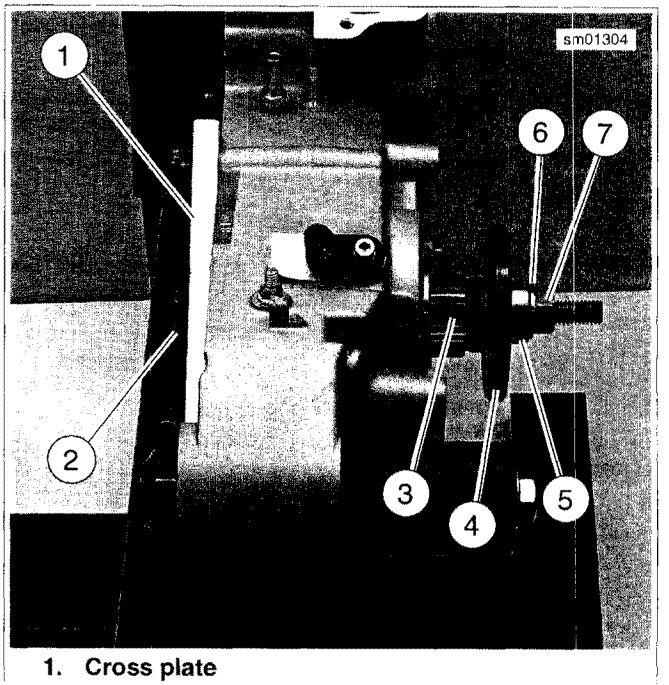

1. **Cross plate**
2. **8 in. bolt**
3. **Main drive gear**
4. **Washer**
5. **Nice bearing**
6. **Washer**
7. **Nut**

Figure 5-73. Removing Main Drive Gear (typical)

Main Drive Gear Ball Bearing

⚠WARNING

Wear safety glasses or goggles when removing or installing retaining rings. Retaining rings can slip from the pliers and could be propelled with enough force to cause serious eye injury. (00312a)

NOTE

Use correct retaining ring pliers and correct tips. Verify that tips are not excessively worn or damaged.

1. See Figure 5-70. Remove and discard oil seal (10). Remove and discard main drive gear bearing retaining ring (9).
2. **XR Models:** remove spacer (12) and O-ring (13).
3. See Figure 5-74. Install driver components: From inside crankcase, position bearing driver (2) over main drive gear bearing.
   a. **XL Models:**BEARING DRIVER (Part No. HD-35316-9).
   b. **XR Models:**BEARING DRIVER (Part No. HD-35316-13).
4. Insert 8 IN. BOLT (Part No. HD-35316-4A) (1) through bearing driver and bearing.
5. At outside of case, slide RECEIVER CUP (Part No. HD-35316-11) (3) onto bolt and over bearing. Install NICE BEARING (4), FLAT WASHER (5) and NUT (6) over end of bolt.

NOTE

Support bearing remover assembly as you remove bearing in the following step. Entire assembly will fall out of crankcase when bearing comes free.

6. Tighten nut until main drive gear ball bearing is free.
7. Discard main drive gear ball bearing.

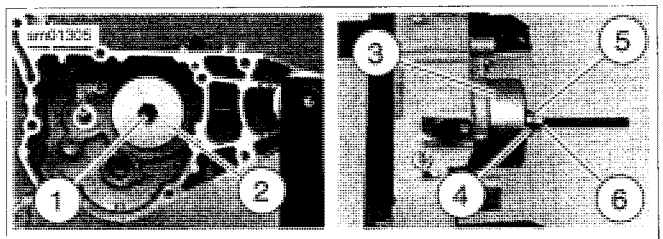

1. **8 in. bolt**
2. **Bearing driver**
3. **Receiver cup**
4. **Nice bearing**
5. **Flat washer**
6. **Nut**

Figure 5-74. Removing Main Drive Gear Bearing (typical, XL model shown)

DISASSEMBLY

PART NUMBER	TOOL NAME
HD-95637-46B	BEARING RACE PULLER

1. See Figure 5-70. Remove retaining ring (11) from inboard end of main drive gear (2). Discard retaining ring.
2. See Figure 5-71. Drive out needle bearings (2) from inside bore of main drive gear (1) using appropriate bearing and bushing puller. Discard needle bearings. Do not reuse bearings after removal from drive gear bore.
3. Remove and discard O-ring (4).

NOTE

When the main drive gear is removed, a portion of the bearing inner race remains attached to the main drive gear. This inner race must be removed before the main drive gear can be re-installed.

4. See Figure 5-75. Attach BEARING RACE PULLER (Part No. HD-95637-46B) (3) to inner race (2) on main drive gear (1).
5. Place main drive gear with bearing race puller assembly onto press bed as shown in the photo.

NOTE

Provide a soft surface to catch the main drive gear when it falls free in the next step.

6. Press main drive gear out of inner bearing race. Discard inner bearing race.

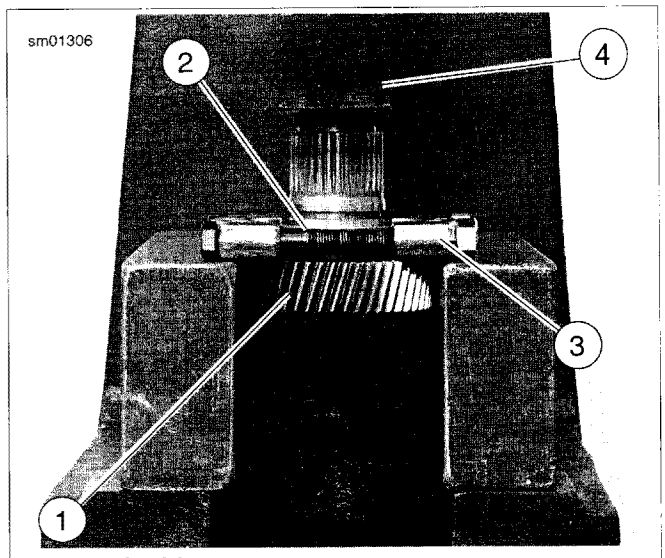

1. **Main drive gear**
2. **Inner bearing race (not visible in this photo)**
3. **Bearing race puller**
4. **Press ram**

Figure 5-75. Removing Inner Bearing Race From Main Drive Gear (typical)

ASSEMBLY

PART NUMBER	TOOL NAME
HD-47855	INNER/OUTER MAIN DRIVE GEAR NEEDLE BEARING INSTALLATION TOOL: XL MODELS
HD-48643	INNER/OUTER MAIN DRIVE GEAR NEEDLE BEARING INSTALLATION TOOL: XR MODELS

NOTE

The correct installed bearing depth is reached when the installation tool bottoms on the gear.

1. See Figure 5-76 or Figure 5-77. Place main drive gear (4) on press bed with gear end facing up.
2. Place needle bearing (3) squarely into end of drive gear with lettered side of bearing facing up. Always press on lettered side of bearing to install. Insert the appropriate installation tool (2) with end stamped "INNER" facing needle bearing.
   a. **XL Models: Use** INNER/OUTER MAIN DRIVE GEAR NEEDLE BEARING INSTALLATION TOOL: XL MODELS (Part No. HD-47855)
   b. **XR Models: Use** INNER/OUTER MAIN DRIVE GEAR NEEDLE BEARING INSTALLATION TOOL: XR MODELS (Part No. HD-48643)
3. Press in the inner bearing until the installation tool bottoms on the main drive gear.

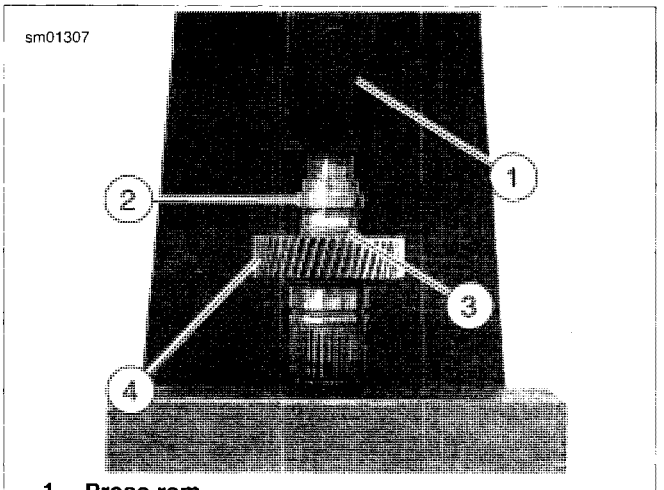

1. **Press ram**
2. **Needle bearing installation tool**
3. **Needle bearing**
4. **Main drive gear**

Figure 5-76. Pressing Inner Needle Bearing Assembly into Main Drive Gear: XL Models

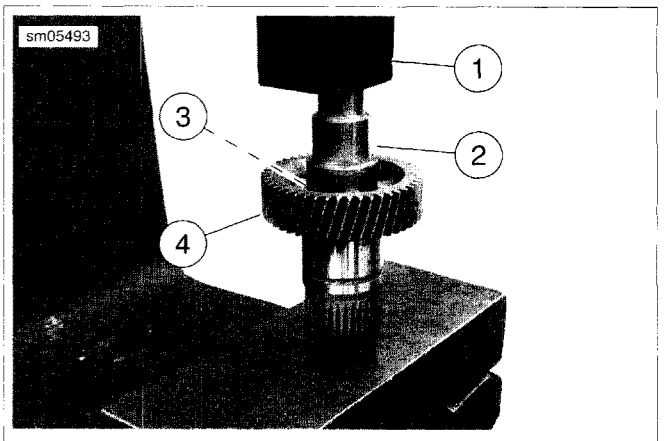

1. **Press ram**
2. **Needle bearing installation tool**
3. **Needle bearing (not visible)**
4. **Main drive gear**

Figure 5-77. Pressing Inner Needle Bearing Assembly into Main Drive Gear: XR Models

4. See Figure 5-78 or Figure 5-79. Place main drive gear (4) on press bed with gear end facing down.
5. Place needle bearing (3) squarely into end of drive gear with lettered side of bearing facing up. Always press on lettered side of bearing to install. Insert installation tool (2) with end stamped "OUTER" facing needle bearing.
6. Press in the outer needle bearing until the installation tool bottoms on the main drive gear.
7. See Figure 5-70. Install **new** retaining ring (11) in inboard end of main drive gear (2).

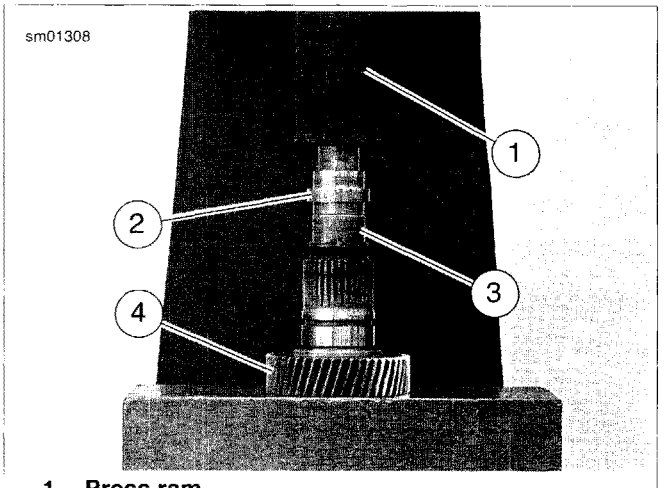

1. **Press ram**
2. **Needle bearing installation tool**
3. **Needle bearing**
4. **Main drive gear**

Figure 5-78. Pressing Outer Needle Bearing Assembly into Main Drive Gear: XL Models

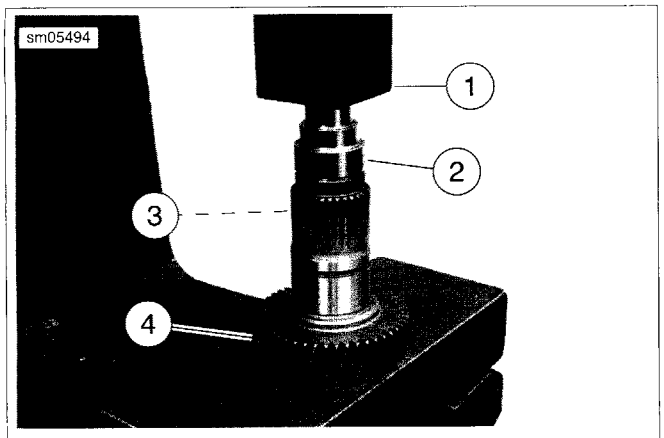

1. **Press ram**
2. **Needle bearing installation tool**
3. **Needle bearing (not visible)**
4. **Main drive gear**

Figure 5-79. Pressing Outer Needle Bearing Assembly into Main Drive Gear: XR Models

INSTALLATION

PART NUMBER	TOOL NAME
B-45847	CROSS PLATE
HD-35316-12	INSTALLER CUP
HD-35316-13	BEARING DRIVER
HD-35316-4A	8 IN. BOLT
HD-35316-7	WASHER
HD-35316-8	BEARING DRIVER
HD-35316-C	MAIN DRIVE GEAR REMOVER AND INSTALLER SET
HD-47856	MAIN DRIVE GEAR SEAL INSTALLER KIT
HD-47856-1	INSTALLER
HD-47856-2	PILOT
HD-47856-4	ADAPTER
HD-47856-5	LARGE NUT

Main Drive Gear Bearing: XL Models

1. See Figure 5-80. Place CROSS PLATE (Part No. B-45847) (1) on right crankcase as shown. Position cross plate so that roll pins (2) fit into crankcase mating screw holes and bolt hole (3) in cross plate is centered over crankcase bearing bore (4).
2. See Figure 5-81. Insert 8 IN. BOLT (Part No. HD-35316-4A) (2) through cross plate (1) and main drive gear bearing bore.
3. Place main drive gear bearing (3), BEARING DRIVER (Part No. HD-35316-8) (4), NICE BEARING (5), FLAT WASHER (6) and NUT (7) over end of bolt.

NOTE

Do not continue to tighten nut after bearing bottoms against lip in crankcase bearing bore. Tightening nut too much can break lip in bearing bore casting.

4. Tighten nut until main drive gear bearing bottoms against lip cast into crankcase bearing bore.
5. Remove main drive gear bearing installer tool.

⚠WARNING

Wear safety glasses or goggles when removing or installing retaining rings. Retaining rings can slip from the pliers and could be propelled with enough force to cause serious eye injury. (00312a)

NOTE

Use correct retaining ring pliers and correct tips. Verify that tips are not excessively worn or damaged.

6. See Figure 5-84. At outside of case install **new** beveled retaining ring (9) in groove inside bearing bore with beveled side facing outside of case.
7. Lubricate main drive gear bearing with GENUINE HARLEY-DAVIDSON FORMULA+ TRANSMISSION AND PRIMARY CHAINCASE LUBRICANT.

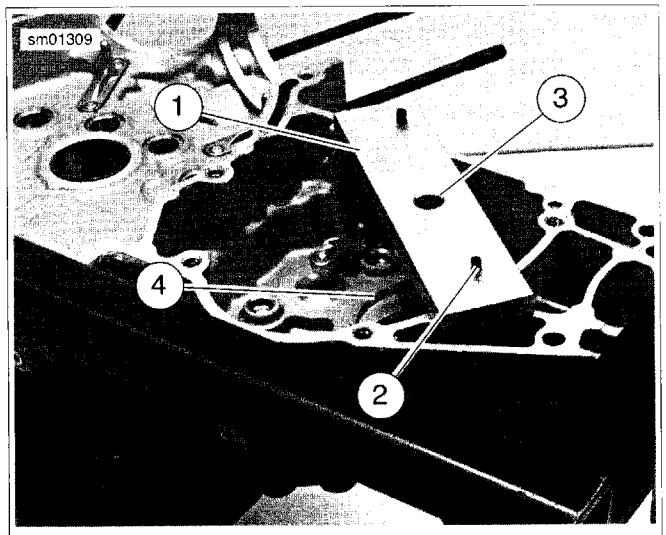

1. **Cross plate**
2. **Roll pin (2)**
3. **Bolt hole**
4. **Crankcase bearing bore**

Figure 5-80. Positioning Cross Plate: XL Models

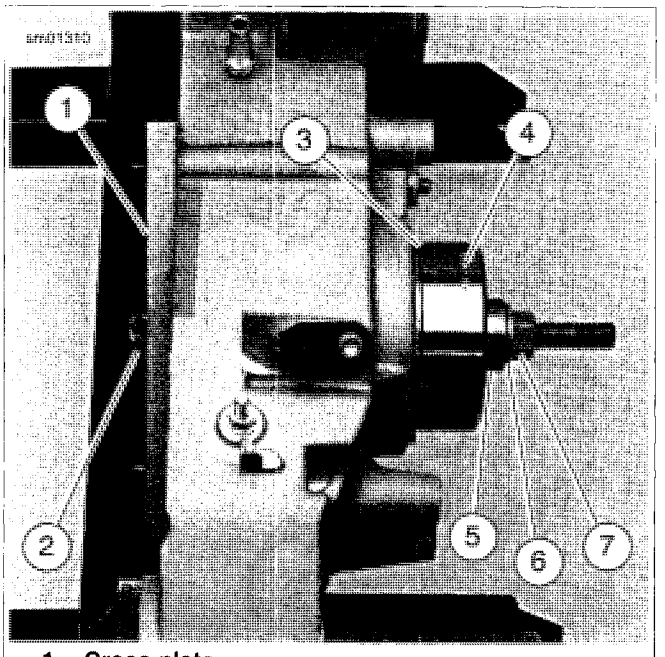

1. Cross plate
2. 8 in. bolt
3. Main drive gear bearing
4. Bearing driver
5. Nice bearing
6. Flat washer
7. Nut

Figure 5-81. Installing Main Drive Gear Bearing: XL Models

Main Drive Gear Bearing: XR Models

NOTE

Due to the design of the bearing, BEARING DRIVER (Part No. HD-35316-13) and an arbor press must be used to press the main drive gear bearing on all XR models.

1. See Figure 5-82. From the outside of the case, position the main drive gear bearing (3) and bearing driver (2) over bearing bore in crankcase.
2. Press on main drive gear bearing driver until driver bottoms against lip cast into crankcase bearing bore.

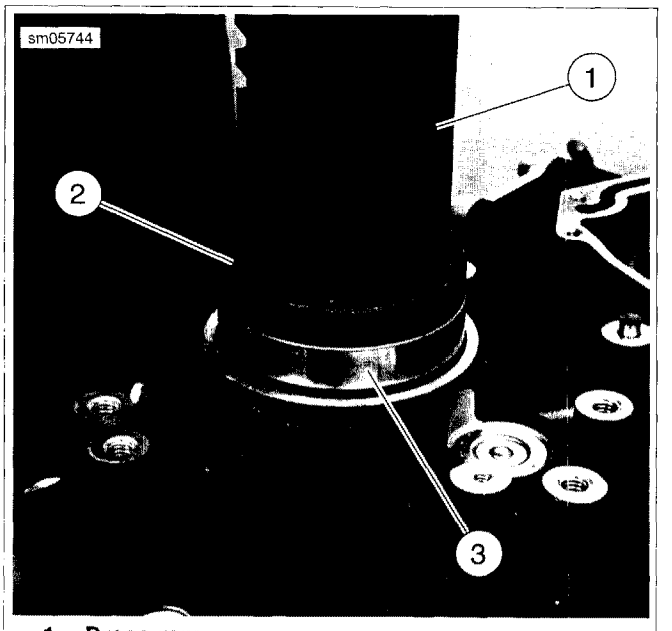

1. Press ram
2. Bearing driver
3. Main drive gear bearing

Figure 5-82. Installing Main Drive Gear Bearing: XR Models

Main Drive Gear

1. See Figure 5-83. Lubricate both main drive gear needle bearing assemblies with HARLEY-DAVIDSON SPECIAL PURPOSE GREASE.
2. See Figure 5-84. Install **new** O-ring (3) into groove in main drive gear (2). Lubricate O-ring with GENUINE HARLEY-DAVIDSON FORMULA+ TRANSMISSION AND PRIMARY CHAINCASE LUBRICANT

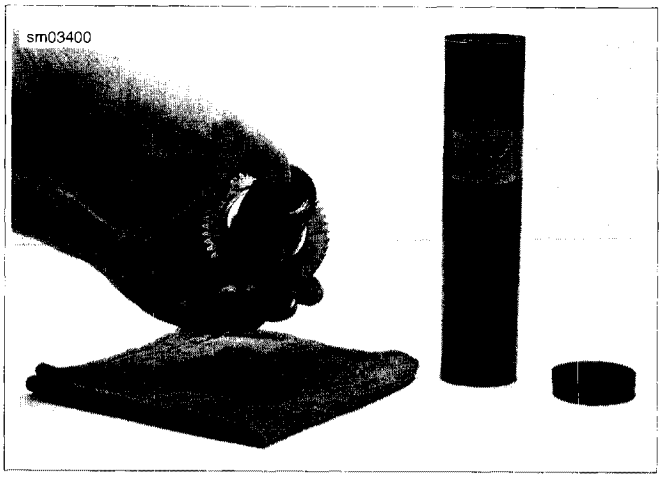

Figure 5-83. Lubricating Main Drive Gear Needle Bearing

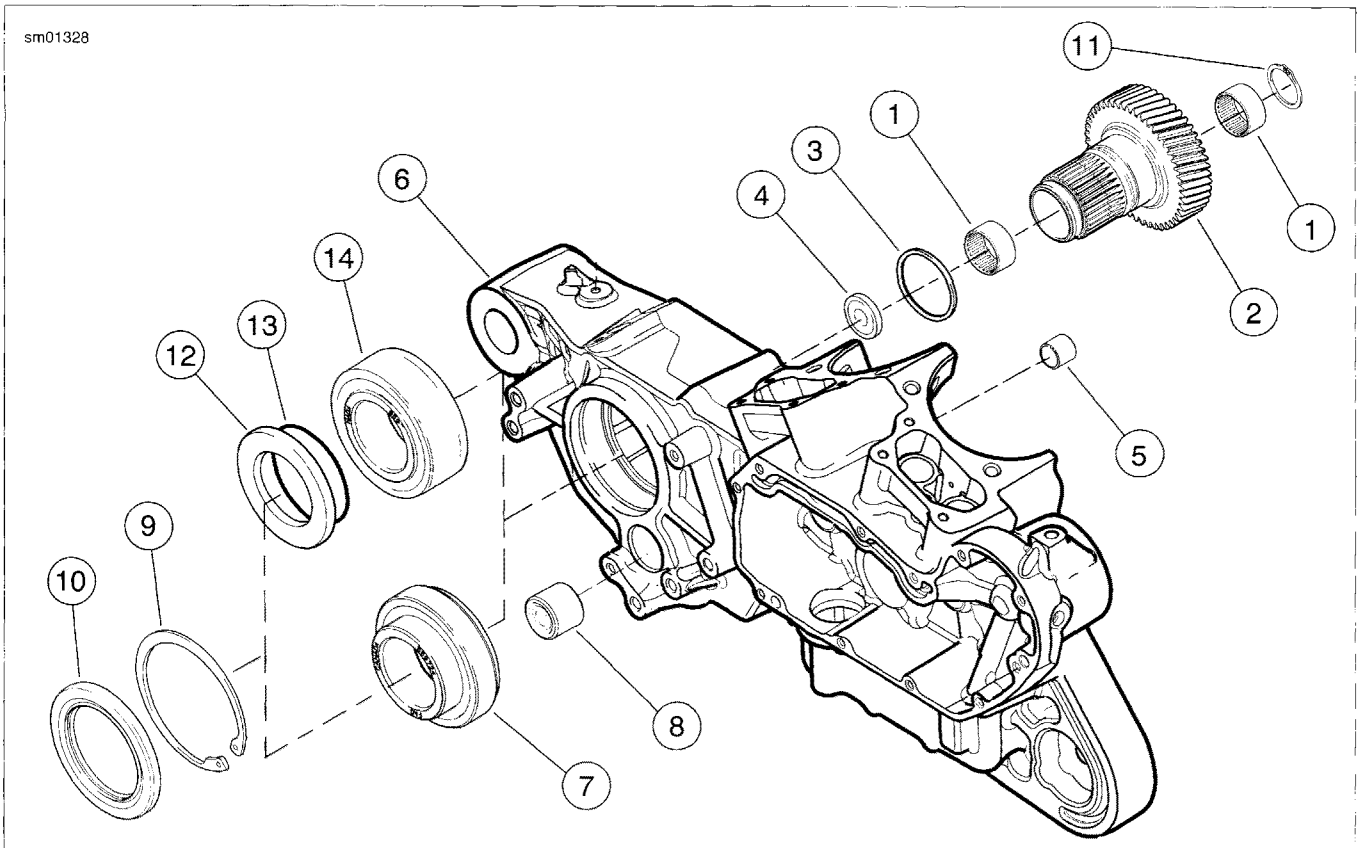

1. Needle bearing (2)
2. Main drive gear
3. O-ring
4. Oil seal
5. Shifter drum bushing
6. Right crankcase
7. Ball bearing (XL models)
8. Countershaft bearing (closed end)
9. Retaining ring
10. Oil seal
11. Retaining ring
12. Spacer (XR models)
13. O-ring (XR models)
14. Double roller bearing (XR models)

Figure 5-84. Main Drive Gear and Bearing Assembly

3. See Figure 5-85. Insert 8 IN. BOLT (Part No. HD-35316-4A) (1) through WASHER (Part No. HD-35316-7) (2) and main drive gear (3). From inside of case insert bolt with washer and main drive gear through inner race of main drive gear bearing.
4. At outside of case, place INSTALLER CUP (Part No. HD-35316-12) (4), NICE BEARING (5), FLAT WASHER (6) and NUT (7) over end of bolt. Tighten nut until main drive gear bottoms against main drive gear bearing.
5. Remove MAIN DRIVE GEAR REMOVER AND INSTALLER SET (Part No. HD-35316-C) set.
6. See Figure 5-84. Tap in **new** oil seal (4) at threaded end of main drive gear to a depth of 0.060-0.030 in. (1.524-0.762 mm).

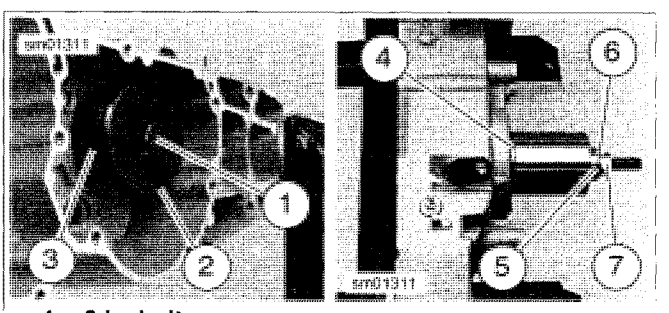

1. 8 in. bolt
2. Washer
3. Main drive gear
4. Installer cup
5. Nice bearing
6. Flat washer
7. Nut

Figure 5-85. Installing Main Drive Gear (typical)

Main Drive Gear Seal

1. **XR Models:** See Figure 5-84. Install spacer (12) and **new** O-ring (13) onto main drive gear.
2. Obtain MAIN DRIVE GEAR SEAL INSTALLER KIT (Part No. HD-47856).
3. See Figure 5-86. From outside of crankcase, install PILOT (Part No. HD-47856-2) over end of main drive gear bearing inner race.
4. Coat lips of **new** main drive gear seal with GENUINE HARLEY-DAVIDSON FORMULA+ TRANSMISSION AND PRIMARY CHAINCASE LUBRICANT.
5. See Figure 5-87. Place seal over pilot and position seal squarely in end of crankcase bore.

NOTE

ADAPTER (Part No. HD-47856-4) and main drive gear have left-hand threads.

6. See Figure 5-88. Thread ADAPTER (Part No. HD-47856-4) onto end of main drive gear several turns. Do NOT tighten on drive gear. Doing so could make it difficult to remove adapter after seal has been installed.

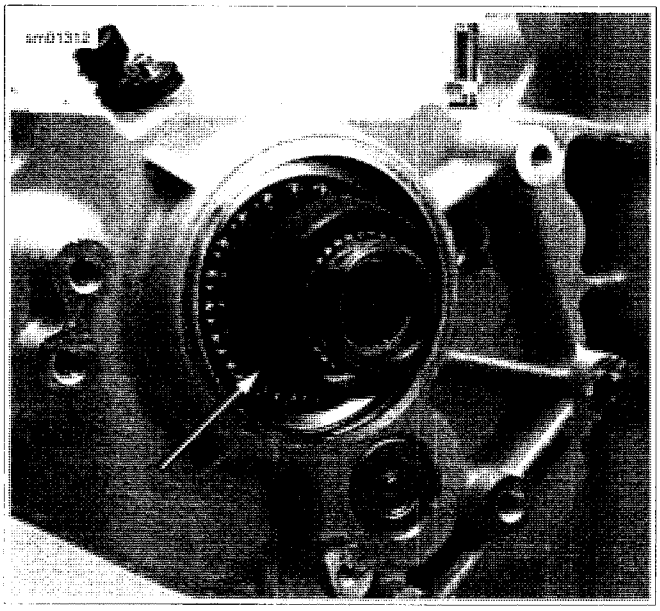

Figure 5-86. Install Pilot (typical, XL model shown)

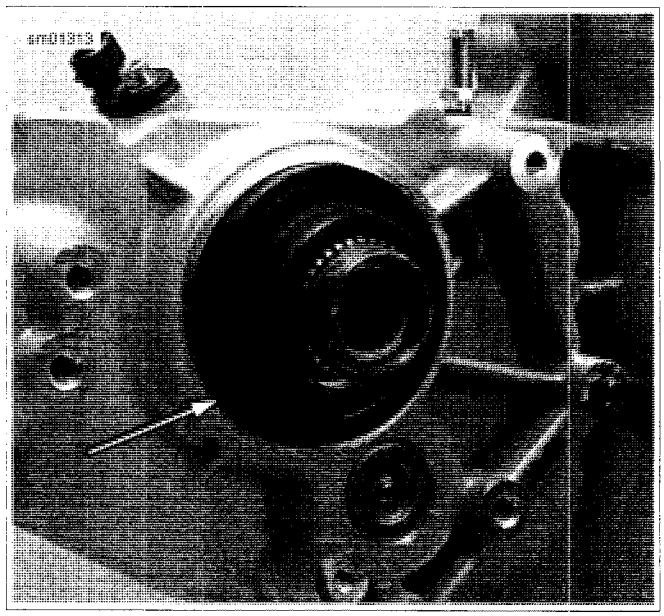

Figure 5-87. Install Main Drive Gear Seal (typical, XL model shown)

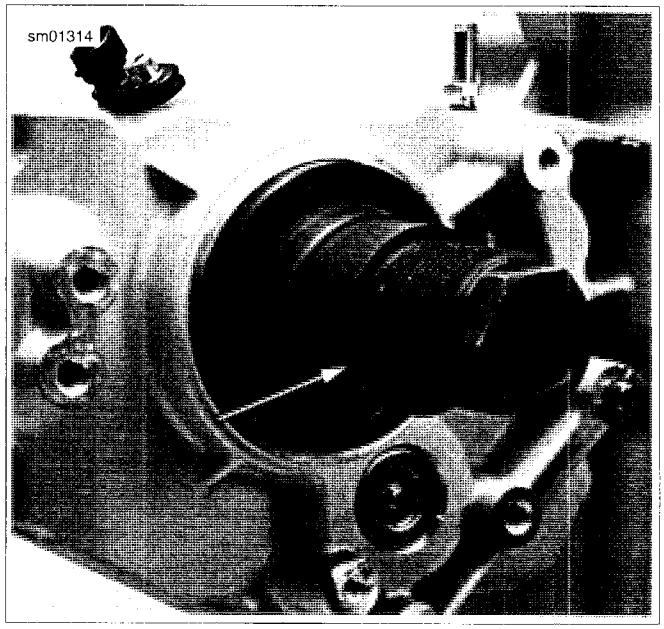

Figure 5-88. Install Adapter (typical, XL model shown)

7. See Figure 5-89. Slide INSTALLER (Part No. HD-47856-1) over adapter until cupped end of installer is flat against seal.
8. See Figure 5-90. Thread LARGE NUT (Part No. HD-47856-5) onto end of adapter, until it tightens against installer.
9. See Figure 5-91. Place crow's foot wrench (1) with 1/2 inch drive breaker bar (2) on large nut. Place an adjustable wrench (3) on flats of hex head cast into end of adapter.
10. Holding adjustable wrench, tighten large nut with crow's foot wrench until outer face of seal is flush with outer edge of crankcase bore.

NOTE

It is acceptable to recess seal to about 0.030 in. (0.762 mm) below outer edge of bore. Seal will be controlled by tool.

11. Remove nut, installer, adapter and pilot.

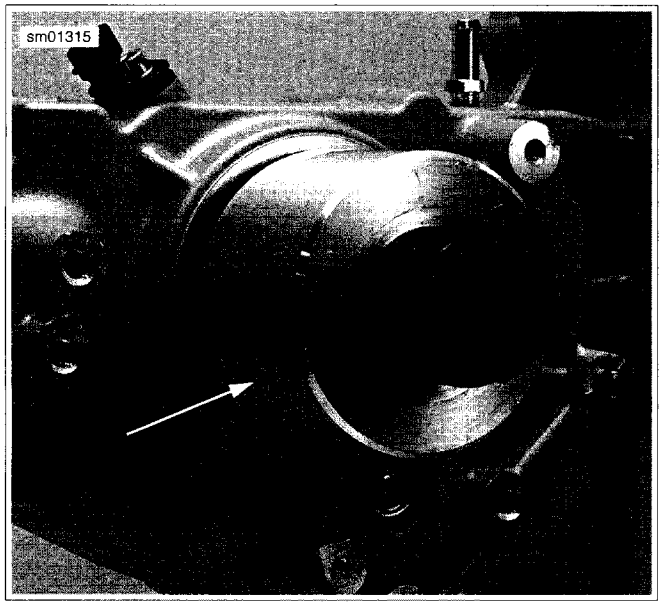

Figure 5-89. Place Installer over Adapter (typical, XL model shown)

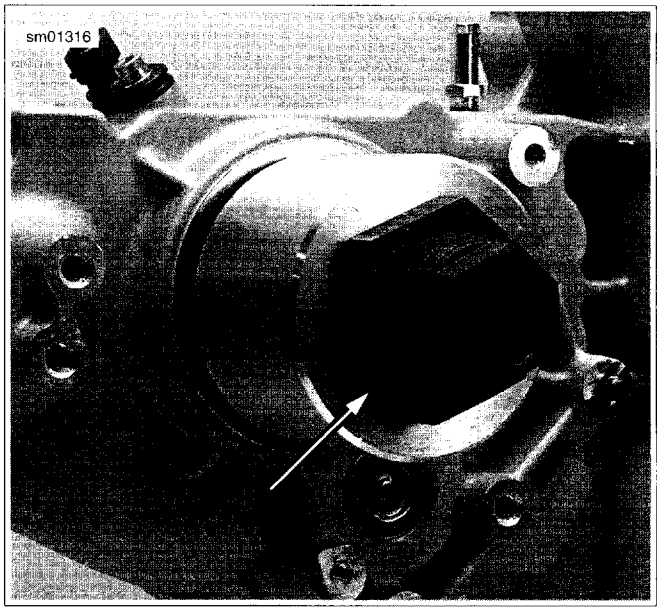

Figure 5-90. Install Nut (typical, XL model shown)

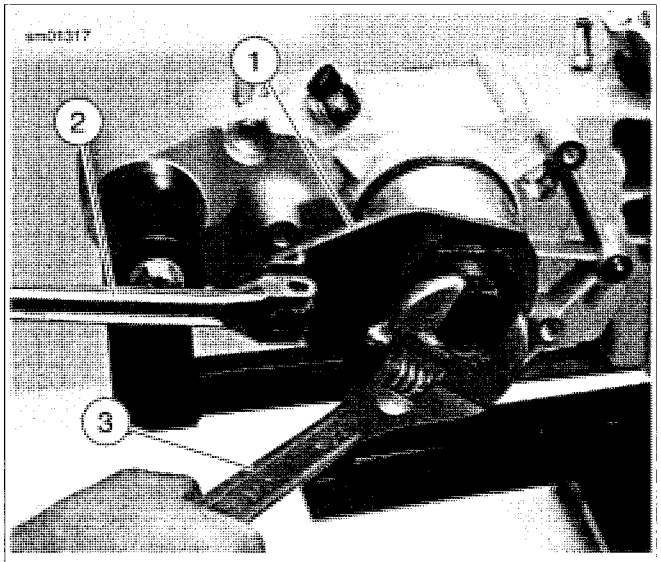

1. Crowfoot wrench
2. 1/2 inch breaker bar
3. Adjustable wrench

Figure 5-91. Press Seal Into Crankcase (typical, XL model shown)

REMOVAL

PART NUMBER	TOOL NAME
HD-95760-69A	BUSHING AND BEARING PULLER
HD-95765-69A	1/2 IN. COLLET

Split crankcases. See 5.9 CASE DISASSEMBLY FOR TRANSMISSION REMOVAL.

Countershaft Needle Bearing

See Figure 5-84. From inside transmission case use appropriate bearing driver/puller to remove countershaft bearing (8) from crankcase bore.

Shifter Drum Bushing

1. The shifter drum bushing (5) is a press fit in the right crankcase half. Inspect the bushing against the corresponding end of the shifter drum for proper fit and wear.
2. If bushing is to be replaced, use BUSHING AND BEARING PULLER (Part No. HD-95760-69A) with 1/2 IN. COLLET (Part No. HD-95765-69A) to remove bushing from crankcase bore.

INSTALLATION

PART NUMBER	TOOL NAME
A-157C	SNAP-ON BUSHING DRIVER SET

Countershaft Needle Bearing

1. Find a suitable bearing driver 1-1/4 in. in diameter.
2. See Figure 5-84. From the outside of the case place the countershaft bearing (8) open end first next to the bearing bore. Hold the driver squarely against the closed end of the bearing and tap the bearing into place. The bearing is properly positioned when it is driven flush or 0.030 in. (0.762 mm) below the outside surface of the case.
3. Lubricate bearing with GENUINE HARLEY-DAVIDSON FORMULA+ TRANSMISSION AND PRIMARY CHAINCASE LUBRICANT.

Shifter Drum Bushing

1. See Figure 5-84. Using SNAP-ON BUSHING DRIVER SET (Part No. A-157C) with a 1/2 in. adapter (Part No. A157-8), install **new** bushing (5).
2. Lubricate bushing with GENUINE HARLEY-DAVIDSON FORMULA+ TRANSMISSION AND PRIMARY CHAINCASE LUBRICANT.

REMOVAL

PART NUMBER	TOOL NAME
PR-36	SNAP-ON SNAP RING PLIERS

Mainshaft and Countershaft Bearings

1. Split crankcases. See 5.9 CASE DISASSEMBLY FOR TRANSMISSION REMOVAL.
2. Disassemble transmission. See 5.10 TRANSMISSION REMOVAL AND DISASSEMBLY.
   a. Remove shifter forks and drum.
   b. Remove countershaft and mainshaft.
3. Inspect the mainshaft and countershaft ball bearings for pitting, scoring, discoloration or other damage.
4. See Figure 5-93. If bearing replacement is required, remove retaining rings (1, 2) using SNAP-ON SNAP RING PLIERS (Part No. PR-36). Press out bearings (3, 4) from the inside of the crankcase.

Shifter Drum Bushing

Inspect the shifter drum bushing for pitting, scoring, discoloration or excessive wear. If bushing requires replacement press bushing out of crankcase from primary side toward inside of case.

INSTALLATION

Mainshaft and Countershaft Bearings

1. Place crankcase on press with inside surface of crankcase downward.
2. Lay bearing squarely over bore with printed side of bearing upward. Place a pressing tool (slightly smaller than outside diameter of bearing) against outer race. Press bearing into bore until bearing bottoms against shoulder.
3. Install **new** retaining ring with beveled side facing away from bearing.

Shift Drum Bushing

1. Place crankcase on press with outside surface of crankcase downward.
2. See Figure 5-92. Lay bushing squarely over bore. Using a pressing tool larger than diameter of bushing, press bushing into bore until bushing contacts shoulder in left crankcase half. If using a pressing tool larger than diameter of bushing, the pressing tool will bottom against crankcase when bushing is flush with top surface.

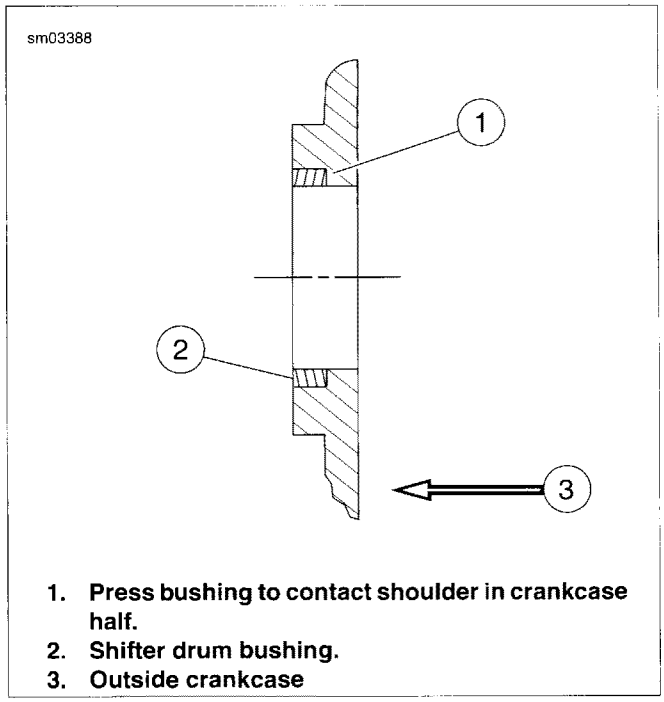

1. **Press bushing to contact shoulder in crankcase half.**
2. **Shifter drum bushing.**
3. **Outside crankcase**

Figure 5-92. Shifter Drum Bushing Assembly

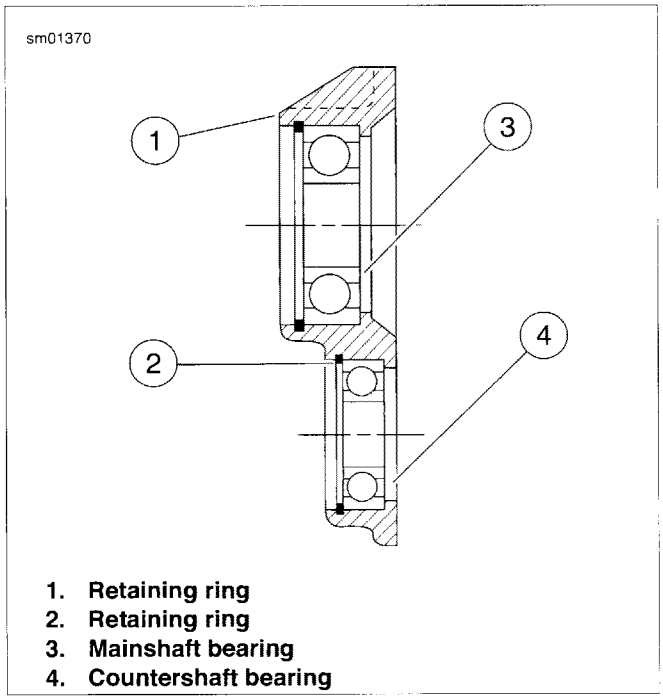

1. **Retaining ring**
2. **Retaining ring**
3. **Mainshaft bearing**
4. **Countershaft bearing**

Figure 5-93. Ball Bearing Assembly

GENERAL

NOTE

Before reinstalling transmission and reassembling crankcase halves, perform any necessary engine overhaul procedures. See 3.11 BOTTOM END SERVICE and 3.10 TOP END SERVICE.

After reassembling transmission, verify that all parts have been properly installed. See Figure 5-64.

- 3.11 BOTTOM END SERVICE
- 3.10 TOP END SERVICE
- 5.13 TRANSMISSION RIGHT CASE BEARINGS
- 5.14 TRANSMISSION LEFT CASE BEARINGS

INSTALLATION

PART NUMBER	TOOL NAME
B-43985	TRANSMISSION REMOVAL AND INSTALLATION TOOL
B-43985-4	COUNTERSHAFT GUIDE
HD-46285	TRANSMISSION ASSEMBLY FIXTURE

1. See Figure 5-94. Assemble detent spring (3) onto gear detent assembly (2). Install detent assembly with spring into place in transmission cavity of right crankcase. Secure with screw (1). Tighten to 90-110 **in-lbs** (10.2-12.4 Nm).
2. See Figure 5-95. Place transmission assembly (2) onto TRANSMISSION ASSEMBLY FIXTURE (Part No. HD-46285) (3) on press bed. Use support block(s) (4) if necessary.
3. Obtain TRANSMISSION REMOVAL AND INSTALLATION TOOL (Part No. B-43985) kit.
4. Screw COUNTERSHAFT GUIDE (Part No. B-43985-4) (1) into end of countershaft.

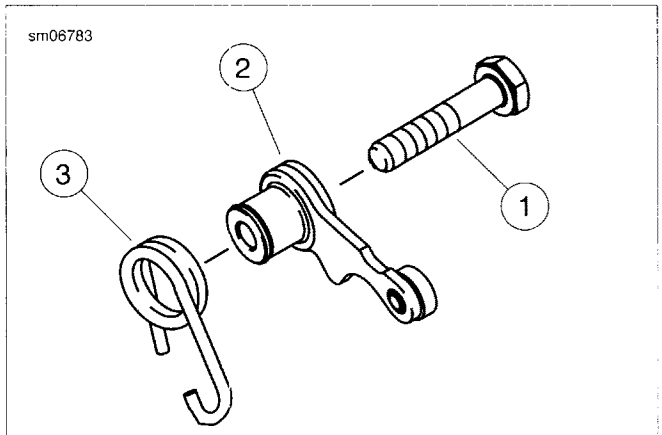

1. **Screw**
2. **Gear detent assembly**
3. **Detent spring**

Figure 5-94. Gear Detent Assembly

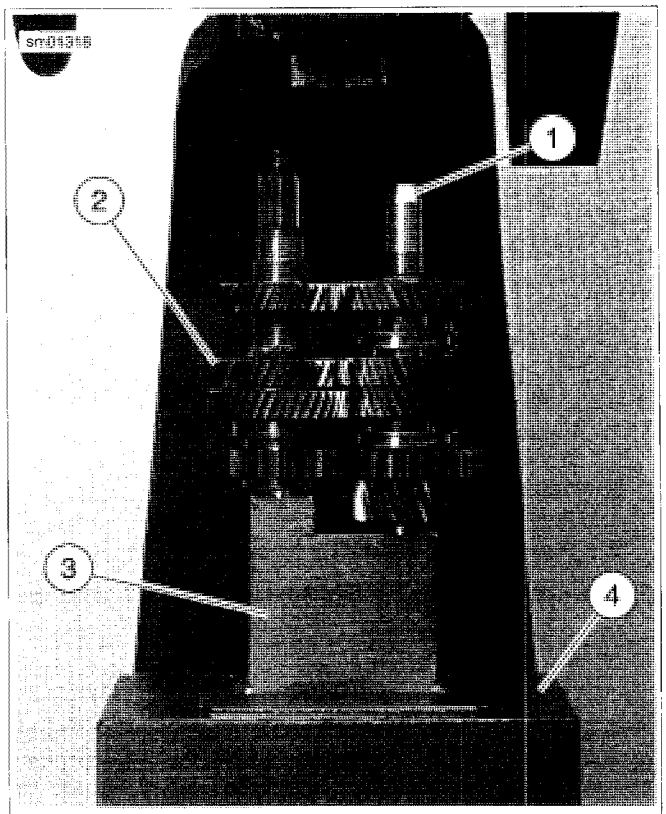

1. **Countershaft guide**
2. **Transmission assembly**
3. **Transmission assembly fixture**
4. **Support block(s)**

Figure 5-95. Transmission Assembly on Fixture

5. See Figure 5-96. Install left crankcase (3) over transmission assembly (4).
6. Place TRANSMISSION INSTALLER (2) over mainshaft and countershaft bearings in crankcase.
7. Position crankcase and transmission assemblies on press so that transmission installer is under press ram (1).

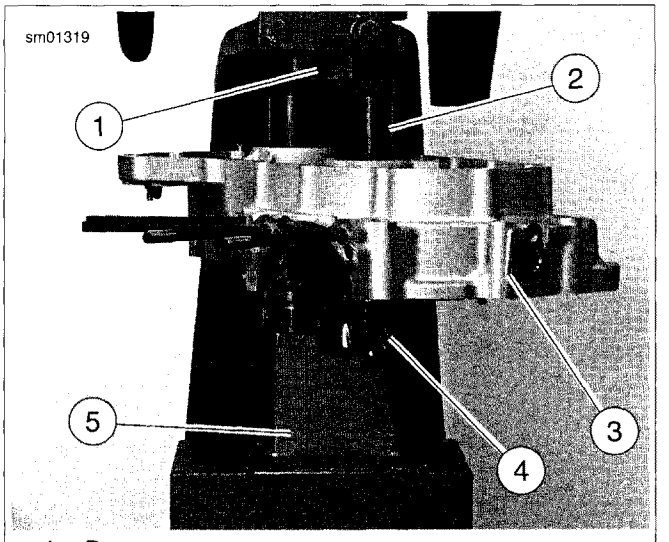

1. **Press ram**
2. **Transmission installer**
3. **Crankcase**
4. **Transmission assembly**
5. **Transmission assembly fixture**

Figure 5-96. Pressing Transmission into Left Crankcase

NOTE

Make sure crankcase does not begin to tilt when pressed onto transmission assembly. It may be necessary to place press ram on transmission installer closer to mainshaft to keep the crankcase level.

8. Press crankcase onto transmission assembly until shafts bottom out on bearings.
9. Remove left crankcase with transmission assembly from press.

NOTE

When removing crankcase and transmission assembly from fixture, make sure mainshaft 1st gear does not fall off shaft. Gear could be damaged if it strikes a hard surface.

SHIFTER FORKS AND DRUM ASSEMBLY

NOTES

- *See Figure 5-97. Shifter design allows for one common part number for both countershaft shifter forks. As the transmission runs, each shifter fork develops a certain wear pattern with its mating parts. For this reason, it is important that each shifter fork be reinstalled in its original location.*
- *Always lubricate the shaft bore in each shifter fork with GENUINE HARLEY-DAVIDSON FORMULA+ TRANSMISSION AND PRIMARY CHAINCASE LUBRICANT (Part No. 99851-05) before assembly.*

1. Place 2nd/3rd gear shifter fork onto dog ring between countershaft 2nd and 3rd gears.
2. Install shifter drum into left case half with previously scribed line at 12 o'clock position. This will place shifter drum in neutral position.

NOTE

See Figure 5-98. Install shifter fork shafts in the left case half by lightly tapping on the end of the shaft with a brass or hard plastic hammer until shaft is seated in bore.

3. Place 1st gear shifter fork onto dog ring between countershaft 1st and 4th gear gears. Install shifter fork shaft through two installed shifter forks and into left crankcase half.
4. Install 4th/5th gear shifter fork onto sliding gear with dogs located on mainshaft. Install remaining shifter fork shaft through last installed shifter fork and into left crankcase half.

NOTE

See Figure 5-98. Install shifter fork shafts in the left case half by lightly tapping on the end with a brass hammer until seated in bore.

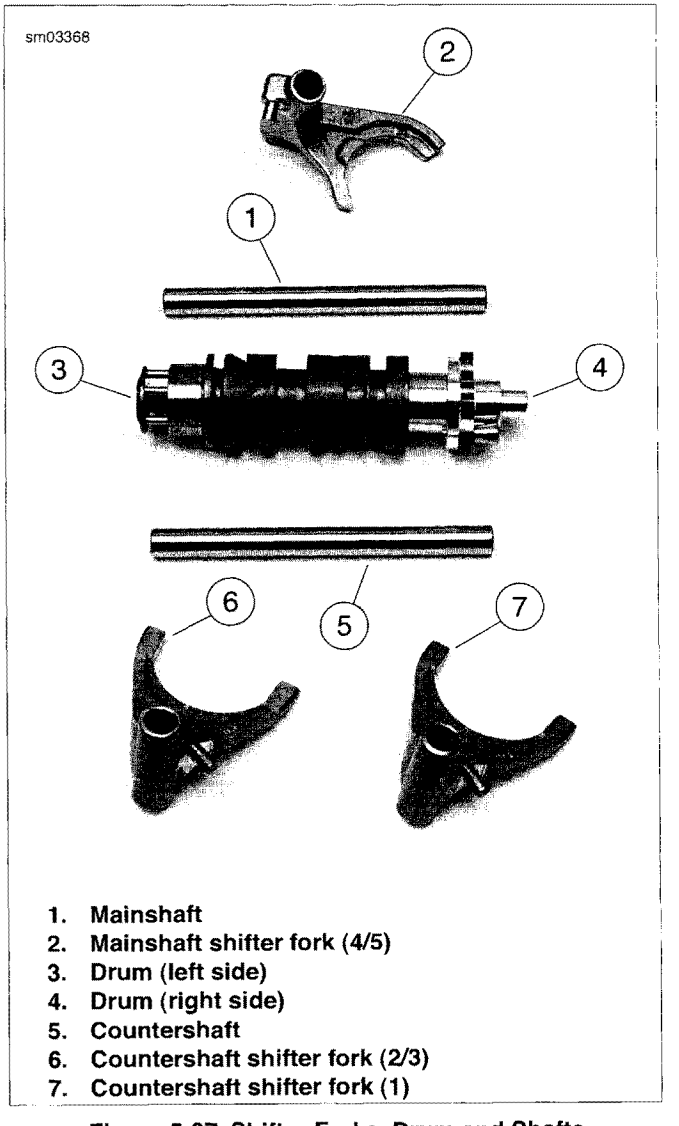

1. **Mainshaft**
2. **Mainshaft shifter fork (4/5)**
3. **Drum (left side)**
4. **Drum (right side)**
5. **Countershaft**
6. **Countershaft shifter fork (2/3)**
7. **Countershaft shifter fork (1)**

Figure 5-97. Shifter Forks, Drum and Shafts

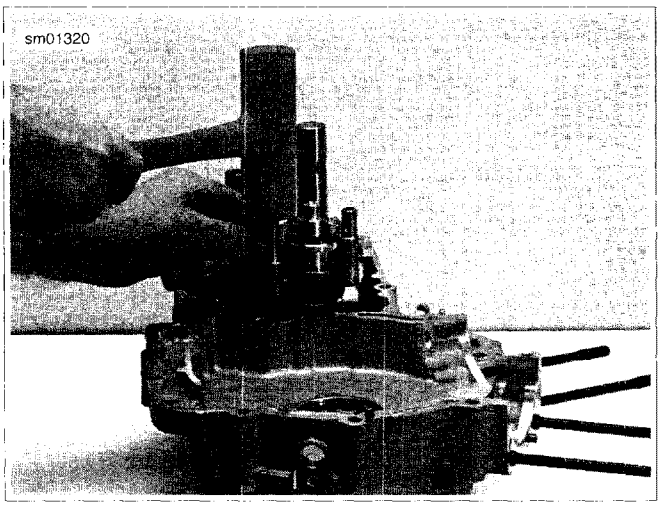

Figure 5-98. Installing Shifter Fork Shafts

ASSEMBLING CRANKCASES

PART NUMBER	TOOL NAME
B-45520	GEAR DETENT ASSEMBLY AID
HD-42326-A	CRANKSHAFT GUIDE TOOL

NOTE

See Figure 5-99. The GEAR DETENT ASSEMBLY AID (Part No. B-45520) is used to move the gear detent lever clear of the shifter drum for assembly purposes.

1. See Figure 5-99. Retract detent assembly in right case half and thread GEAR DETENT ASSEMBLY AID into neutral switch hole until it has bottomed in right case half.
2. See Figure 5-100. Install flywheel assembly into right crankcase half.

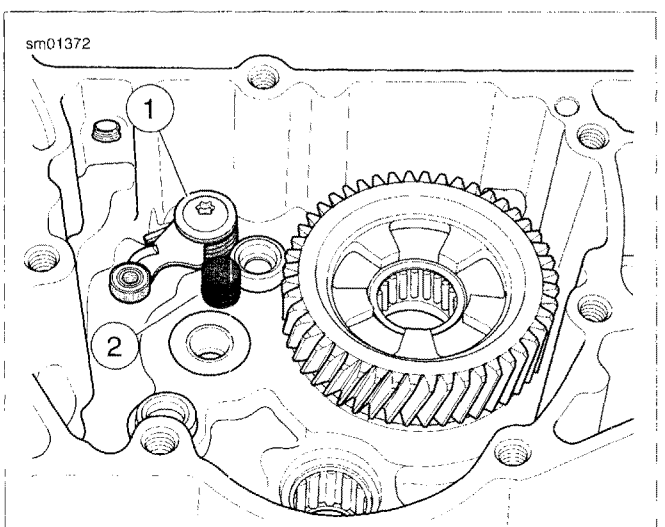

1. **Detent assembly**
2. **Detent assembly aid**

Figure 5-99. Using Gear Detent Assembly Aid (Part No. B-45520)

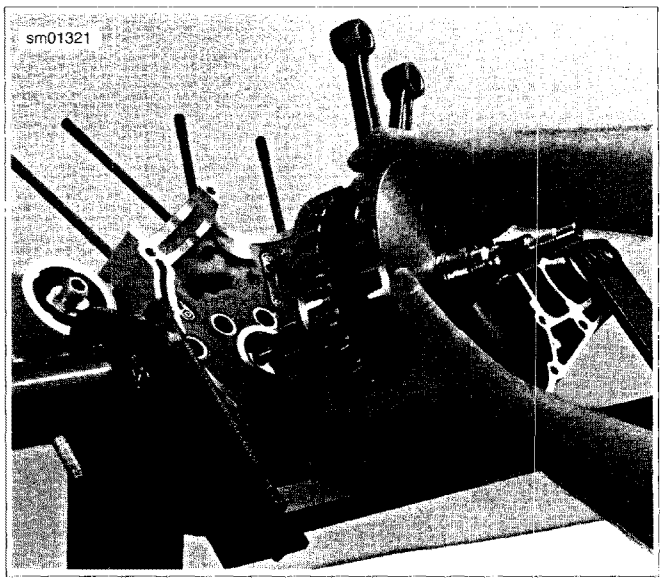

Figure 5-100. Installing Flywheel Assembly In Right Crankcase

⚠CAUTION

Do not rotate right crankcase half in engine stand such that flywheel sprocket shaft is facing down. The flywheel assembly can fall out, resulting in parts damage or moderate injury. (00553b)

NOTE

Transmission must be in first gear when assembling crankcases. If transmission is in neutral, shifter drum detent will contact gear detent assembly aid when crankcases are assembled, possibly resulting in damage to shifter drum assembly and/or crankcase.

3. Place transmission in 1st gear.
4. See Figure 5-101. Assemble crankcase halves together.
   a. Slide CRANKSHAFT GUIDE TOOL (Part No. HD-42326-A) onto flywheel sprocket shaft.
   b. Apply a thin coat of GRAY HIGH-PERFORMANCE SEALANT (Part No. 99650-02) to crankcase joint faces.
   c. Lubricate main drive gear inner bearings with GENUINE HARLEY-DAVIDSON FORMULA+ TRANSMISSION AND PRIMARY CHAINCASE LUBRICANT.
   d. Carefully fit crankcases together.
   e. See Figure 5-102. Apply several drops of LOCTITE 262 (red) to last few threads of each crankcase fastener and install fasteners in crankcase (insert eleven long and four short from left side, two long from right side), in locations shown.
   f. Tighten fasteners to 15-19 ft-lbs (20.3-25.8 Nm) in the sequence shown in Figure 5-102.
5. Remove GEAR DETENT ASSEMBLY AID and install neutral indicator switch and flat washer. Tighten to 120-180 **in-lbs** (13.6-20.3 Nm).

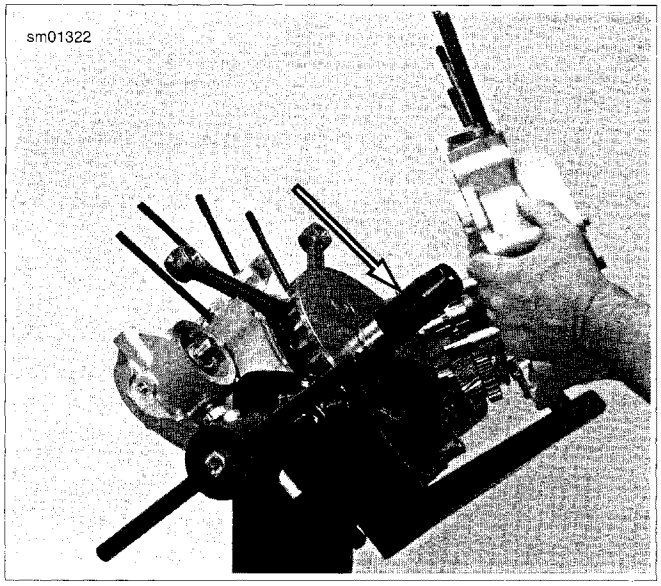

Figure 5-101. Assembling Crankcases With Crankshaft Guide Tool (Part No. HD-42326-A)

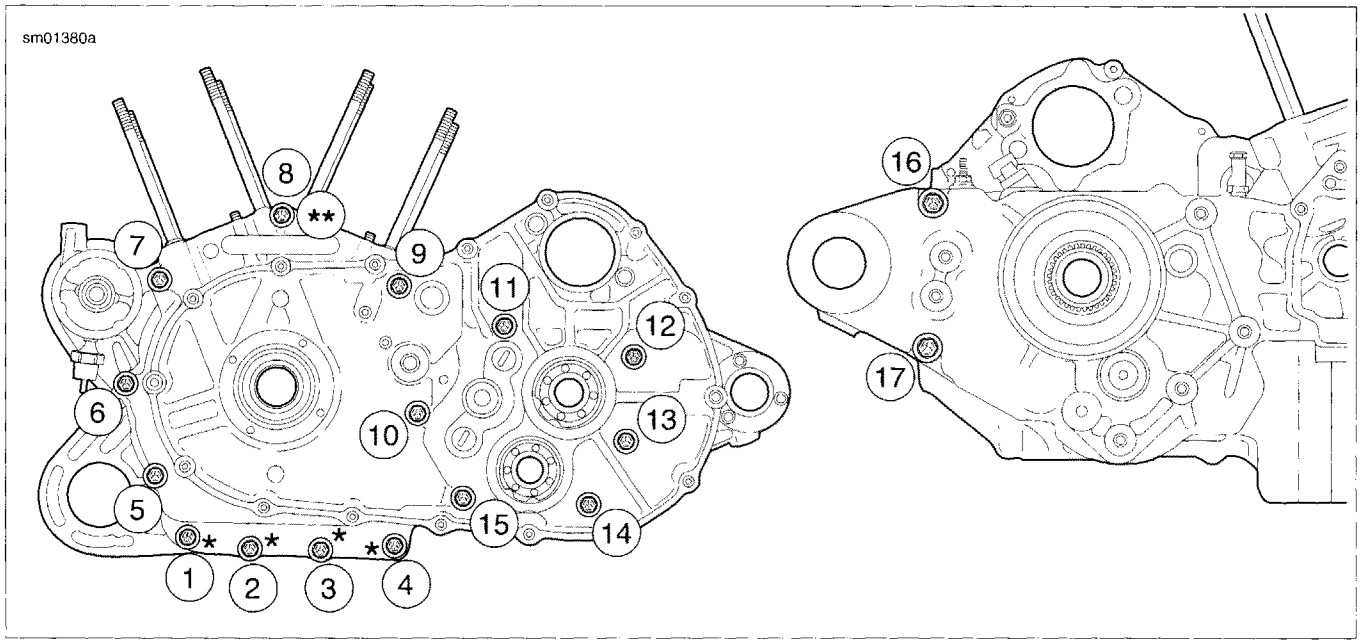

Figure 5-102. Crankcase Fastener Torque Sequence (* - Short Fasteners; ** - Double-ended Bolt: XR Models)

SHIFTER SHAFT INSTALLATION

1. See Figure 5-103. Correctly install shifter return spring onto the reverse side of the shifter shaft assembly before placing shaft in left crankcase half.

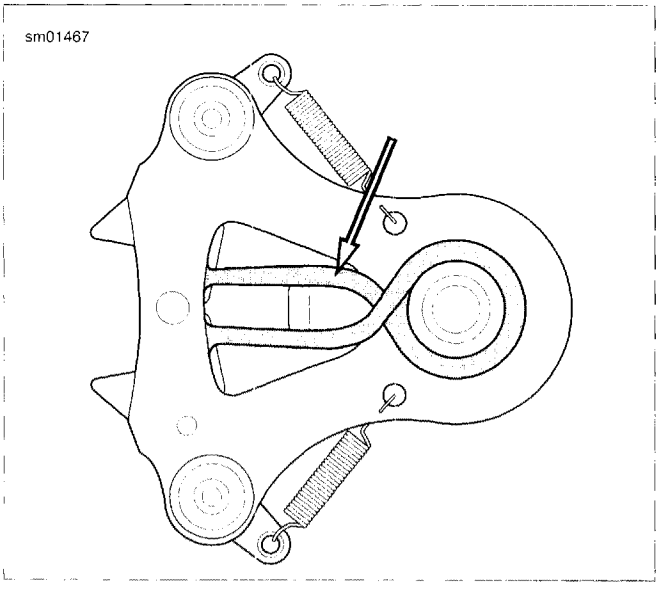

Figure 5-103. Shifter Shaft Return Spring (Correctly Installed)

NOTE

See Figure 5-105. The shifter shaft return spring can be installed incorrectly and then assembled in the left crankcase half. Failure to install the spring properly will result in improper shifting.

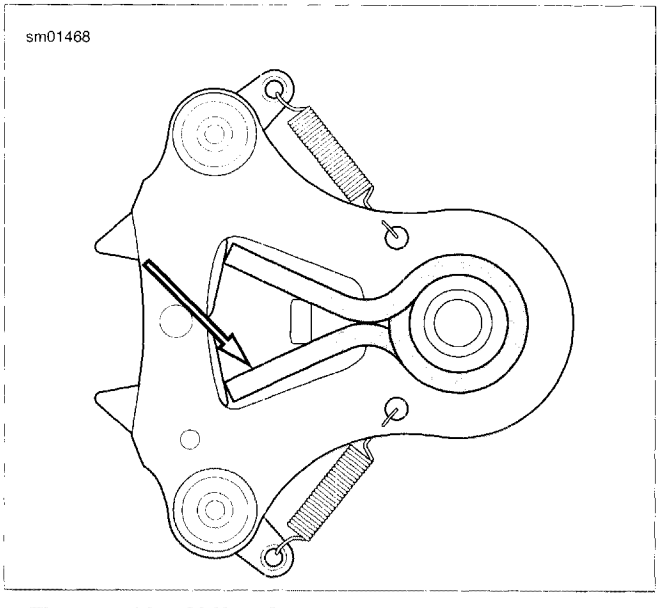

Figure 5-104. Shifter Shaft Return Spring (Incorrectly Installed)

2. See Figure 5-105. Depress ratchet arms and insert shaft assembly into the bushing in the left case half and release. Ratchet arms should now be inside the end plate of the shifter drum contacting the shifter drum pins.

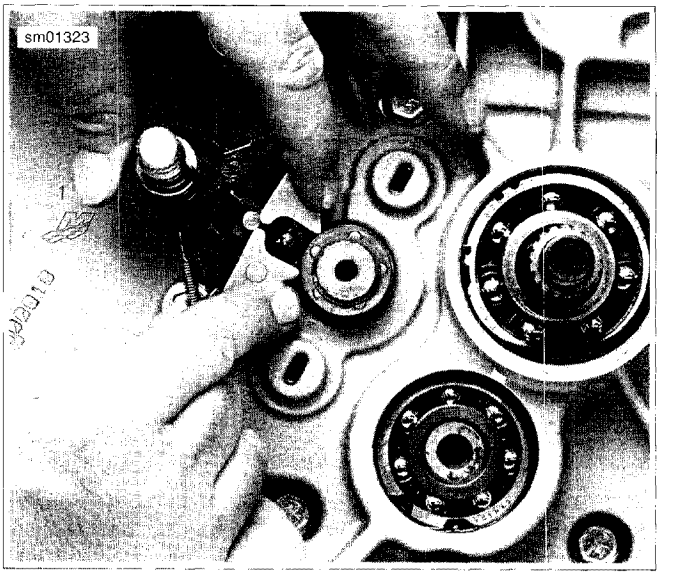

Figure 5-105. Installing Shifter Shaft Assembly

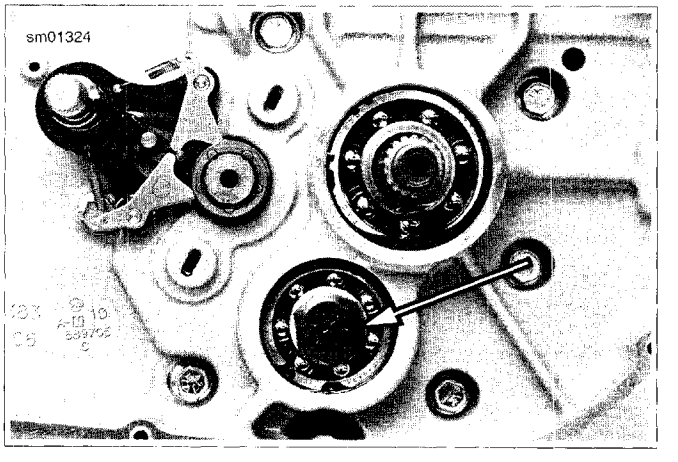

Figure 5-106. Countershaft Retaining Screw

3. See Figure 5-106. Apply several drops of LOCTITE 262 (red) to last few threads of countershaft retaining screw. Thread screw into end of shaft.
4. Place transmission in gear and tighten screw to 33-37 ft-lbs (44.8-50.2 Nm).
5. Install transmission sprocket. See 5.16 TRANSMISSION SPROCKET.
6. Continue assembling engine. See appropriate sections of 3.18 BOTTOM END OVERHAUL: ASSEMBLY and 3.16 TOP END OVERHAUL: ASSEMBLY.
7. Install primary chain and engine sprocket, clutch assembly, and primary cover. See 5.5 PRIMARY DRIVE AND CLUTCH: XL MODELS or 5.6 PRIMARY DRIVE AND CLUTCH: XR MODELS.
8. Install engine in chassis. See 3.13 INSTALLING ENGINE IN CHASSIS.

REMOVAL

PART NUMBER	TOOL NAME
HD-42310-45	ENGINE CRADLE
HD-46282-1A	SPROCKET HOLDING TOOL ADAPTER
HD-46282-A	TRANSMISSION SPROCKET HOLDING TOOL SET
HD-46288	MAINSHAFT LOCK NUT WRENCH

⚠WARNING

To prevent accidental vehicle start-up, which could cause death or serious injury, remove main fuse before proceeding. (00251b)

Preparation

1. Unplug main fuse. See 6.35 MAIN FUSE.
2. Shift transmission into neutral.

XL Models

1. Remove rear muffler and rear exhaust pipe. See 4.14 EXHAUST SYSTEM: XL MODELS.
2. See Figure 5-107. Remove screw (6), washer (5) and exhaust pipe clamp bracket (4). Remove two screws (2, 3) and remove sprocket cover (1).
3. Remove belt guard. See 2.23 BELT GUARD AND DEBRIS DEFLECTOR.
4. Remove rear drive belt from transmission sprocket. Pull belt back out of the way. Do not bend belt too tightly or twist belt. See 5.7 DRIVE BELT.
5. See Figure 5-108. Remove screw and washer (6) from exhaust interconnect bracket.

XR Models

1. Remove exhaust system. See 4.15 EXHAUST SYSTEM: XR MODELS.
2. Remove three screws securing sprocket cover to engine crankcase. Remove sprocket cover.
3. Remove belt guard. See 2.23 BELT GUARD AND DEBRIS DEFLECTOR.
4. Remove two screws securing rear brake master cylinder assembly, rider footrest and mounting bracket to vehicle's frame. Carefully pull assembly back out of the way and secure to frame with cable strap or bungee cord. Be careful not to kink or bend metal portion of brake line.
5. Remove rear drive belt from transmission sprocket. Pull belt back out of the way. Do not bend belt too tightly or twist belt. See 5.7 DRIVE BELT.

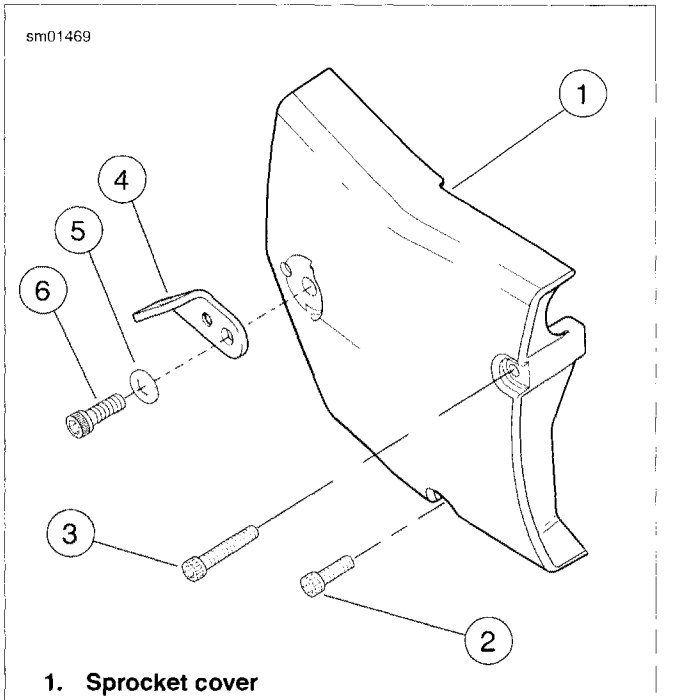

1. **Sprocket cover**
2. **Screw**
3. **Screw**
4. **Exhaust pipe clamp bracket**
5. **Washer**
6. **Screw**

Figure 5-107. Sprocket Cover: XL Models

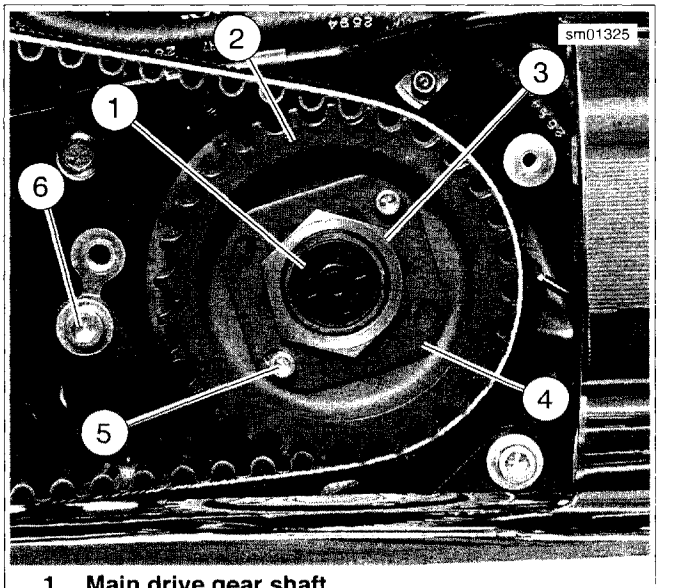

1. **Main drive gear shaft**
2. **Transmission sprocket**
3. **Transmission sprocket nut**
4. **Lockplate**
5. **Screw (2)**
6. **Screw and washer**

Figure 5-108. Transmission Sprocket Assembly: All Models (XL Model Shown)

All Models

1. See Figure 5-108. Remove two screws (5) and sprocket lockplate (4).

NOTES

- *See Figure 5-110. On XR models and XL models without passenger footrests, install SPROCKET HOLDING TOOL ADAPTER (Part No. HD-46282-1A) into bottom footrest bracket hole in frame. Place handle of tool underneath adapter.*
- *If the engine has been removed from the motorcycle and is mounted in the ENGINE CRADLE (Part No. HD-42310-45), the rear crankcase support also serves as a tool stop for the sprocket holding tool.*

2. See Figure 5-109. Use TRANSMISSION SPROCKET HOLDING TOOL SET (Part No. HD-46282-A) (1), MAINSHAFT LOCK NUT WRENCH (Part No. HD-46288) (2), and a breaker bar (3) to remove transmission sprocket nut. Place handle of sprocket holding tool under bottom of footrest bracket. Turn nut **clockwise** to loosen and remove it.

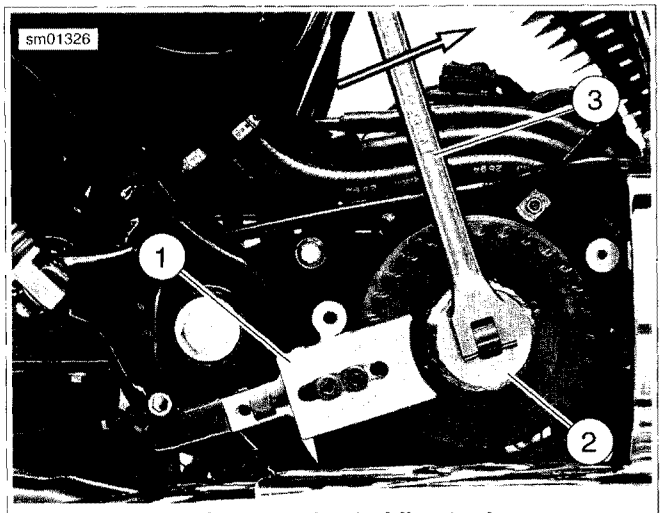

1. **Transmission sprocket holding tool**
2. **Mainshaft lock nut wrench**
3. **Breaker bar**

Figure 5-109. Removing Transmission Lock Nut: All Models (XL Model with Passenger Footrests Shown)

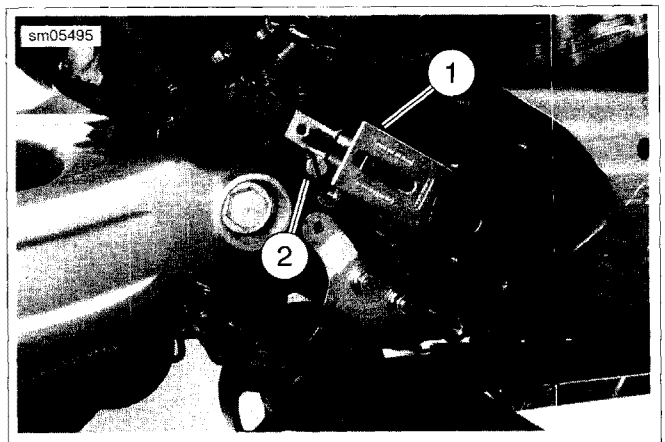

1. **Transmission sprocket holding tool**
2. **Sprocket holding tool adapter**

Figure 5-110. Sprocket Holding Tool and Adapter (Shown in Installation Position on XR Model)

INSTALLATION

PART NUMBER	TOOL NAME
HD-46282	TRANSMISSION SPROCKET HOLDING TOOL
HD-46282-1A	SPROCKET HOLDING TOOL ADAPTER
HD-46288	MAINSHAFT LOCK NUT WRENCH

Preparation

1. See Figure 5-108. Install transmission sprocket (2) onto main drive gear shaft (1).

NOTE

See Figure 5-110. On XR models, and XL models without passenger footrests, screw SPROCKET HOLDING TOOL ADAPTER (Part No. HD-46282-1A) into top footrest bracket hole in frame. Place handle of tool on top of adapter.

2. Shift transmission into neutral. Apply a few drops of LOCTITE THREADLOCKER 262 (red) to the **left-hand threads** of transmission sprocket nut (3). Apply a thin film of clean Harley-Davidson 20W-50 engine oil to the back face of the sprocket nut. Turn the nut **counterclockwise** to install it onto main drive gear shaft.
   a. See Figure 5-111. Use TRANSMISSION SPROCKET HOLDING TOOL (Part No. HD-46282) (1), MAINSHAFT LOCK NUT WRENCH (Part No. HD-46288) (2), and a torque wrench (3). Place handle of sprocket holding tool on top of footrest bracket. Tighten nut to 50 ft-lbs (68 Nm) initial torque, ONLY.
   b. See Figure 5-112. Scribe a line on the transmission sprocket nut and continue the line on the transmission sprocket as shown.
   c. Tighten the transmission sprocket nut an additional 30-40 degrees.

NOTE

The lockplate has four screw holes and can be turned to either side, so you should be able to find a position without having to additionally tighten the nut. If you cannot align the screw holes properly, the nut may be additionally

TIGHTENED until the screw holes line up, but do not exceed 45 degrees. Never LOOSEN nut to align the screw holes.

d. See Figure 5-108. Install lockplate (4) over nut (3) so that two of lockplate's four drilled holes (diagonally opposite) align with sprocket's (2) two tapped holes.

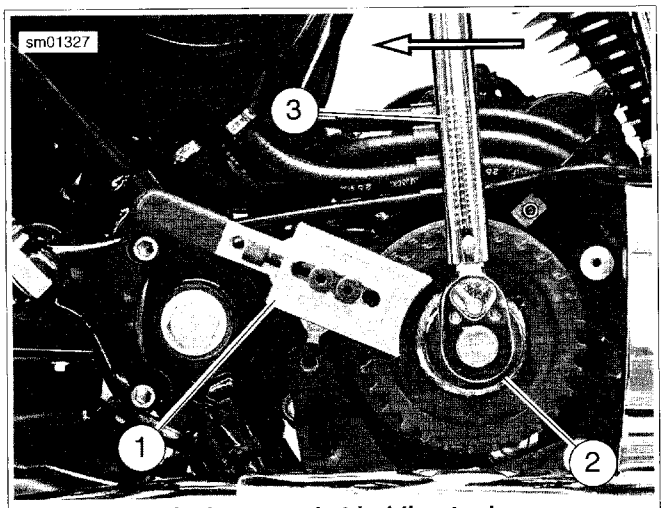

1. **Transmission sprocket holding tool**
2. **Mainshaft lock nut wrench**
3. **Torque wrench**

Figure 5-111. Tightening Transmission Lock nut: All Models (XL Model with Passenger Footrests Shown)

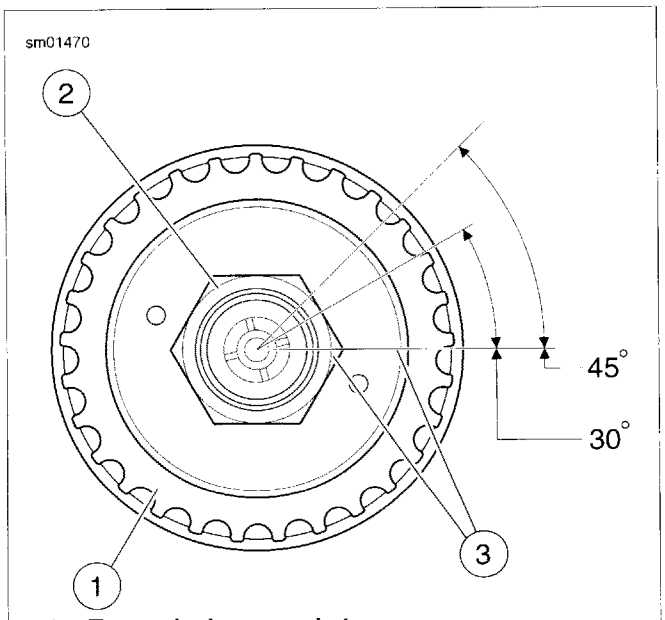

1. **Transmission sprocket**
2. **Sprocket nut**
3. **Line scribed on nut and sprocket**

Figure 5-112. Transmission Sprocket Nut Final Tightening Procedure

NOTE

To maximize the lockplate's security, you must install BOTH screws to secure the lockplate.

3. Install socket head screws through two of the four holes in lockplate, then into two corresponding tapped holes in sprocket.
4. Tighten socket head screws (5) to 90-110 **in-lbs** (10.2-12.4 Nm).
5. **XR models and XL models without passenger footrests:** remove SPROCKET HOLDING TOOL ADAPTER (Part No. HD-46282-1A).

XL Models

1. See Figure 5-108. Install screw and washer (6) to secure muffler interconnect bracket to engine crankcase. Tighten to 30-33 ft-lbs (40.7-44.8 Nm).
2. Install rear drive belt onto transmission sprocket. See 5.7 DRIVE BELT.
3. Adjust rear belt deflection and rear wheel alignment. See 1.16 WHEEL ALIGNMENT.
4. Install belt guard. See 2.23 BELT GUARD AND DEBRIS DEFLECTOR.
5. See Figure 5-107. Install sprocket cover (1). Secure with two screws (2, 3). Note that long screw goes in top hole, short screw in bottom hole. Do not tighten screws at this time.
6. Install exhaust pipe clamp bracket (4), washer (5) and screw (6). Tighten to 30-33 ft-lbs (40.7-44.8 Nm). Now tighten screws (2, 3) to 80-120 **in-lbs** (9.0-13.6 Nm).
7. Install rear exhaust pipe and rear muffler. See 4.14 EXHAUST SYSTEM: XL MODELS.

XR Models

1. Install rear drive belt onto transmission sprocket. See 5.7 DRIVE BELT.
2. Adjust rear belt deflection and rear wheel alignment. See 1.16 WHEEL ALIGNMENT.
3. Attach rear brake master cylinder, rider footrest and mounting bracket assembly to frame with two screws. Tighten to 45-50 ft-lbs (61-68 Nm).
4. Install belt guard. See 2.23 BELT GUARD AND DEBRIS DEFLECTOR.
5. Install sprocket cover. Secure with three screws. Note that of the two smaller diameter fasteners securing cover, longer fastener goes in top hole, shorter fastener in bottom hole. Larger diameter fastener goes in rear hole. Tighten rear (larger dia.) fastener to 30-33 ft-lbs (40.7-44.8 Nm).Tighten forward and lower (smaller) screws to 80-120 **in-lbs** (9.0-13.6 Nm).
6. Install exhaust system. See 4.15 EXHAUST SYSTEM: XR MODELS.

All Models

Install main fuse. See 6.35 MAIN FUSE.

SUBJECT	PAGE NO.
6.1 FASTENER TORQUE VALUES	6-1
6.2 SPECIFICATIONS: ELECTRICAL	6-4
6.3 VOLTAGE REGULATOR	6-5
6.4 FUSES AND RELAYS	6-9
6.5 MAIN FUSE HOLDER	6-10
6.6 SPEEDOMETER: XL SINGLE GAUGE MODELS EXCEPT XL 883C/XL 1200C	6-11
6.7 SPEEDOMETER: XL 883C/XL 1200C	6-13
6.8 SPEEDOMETER AND TACHOMETER: XR MODELS	6-15
6.9 ELECTRONIC CONTROL MODULE (ECM)	6-18
6.10 TURN SIGNAL AND SECURITY MODULE (TSM/TSSM/HFSM)	6-20
6.11 BATTERY CABLES	6-22
6.12 BATTERY TRAY	6-24
6.13 STARTER	6-26
6.14 STARTER SOLENOID	6-30
6.15 IGNITION AND LIGHT SWITCH	6-33
6.16 SPARK PLUG CABLES	6-35
6.17 IGNITION COIL	6-38
6.18 HEADLAMP	6-41
6.19 INDICATOR LAMP MODULE	6-44
6.20 TAIL LAMP: ALL MODELS EXCEPT XL 883N/XL 1200N	6-47
6.21 TURN SIGNALS	6-50
6.22 LICENSE PLATE LAMP MODULE: XL 883N/XL 1200N	6-57
6.23 REAR LIGHTING CONVERTER MODULE: XL 883N/XL 1200N (DOMESTIC ONLY)	6-62
6.24 REAR STOP LAMP SWITCH	6-64
6.25 CRANK POSITION SENSOR (CKP)	6-65
6.26 ALTERNATOR	6-66
6.27 VEHICLE SPEED SENSOR (VSS)	6-69
6.28 NEUTRAL INDICATOR SWITCH	6-70
6.29 MAIN WIRING HARNESS	6-72
6.30 ELECTRICAL CADDIES	6-77
6.31 JIFFY STAND SWITCH: INTERNATIONAL MODELS	6-83
6.32 OPTIONAL SECURITY SIREN	6-85
6.33 OIL PRESSURE SWITCH	6-88
6.34 HORN	6-90
6.35 MAIN FUSE	6-92
6.36 HANDLEBAR SWITCH ASSEMBLIES	6-93
6.37 RIGHT HANDLEBAR SWITCHES	6-95
6.38 LEFT HANDLEBAR SWITCHES	6-101
6.39 TSSM/HFSM MAINTENANCE	6-105
6.40 PERSONAL IDENTIFICATION NUMBER (PIN)	6-107
6.41 H-DSSS ACTUATION	6-109
6.42 TSM/HFSM: PASSWORD LEARN	6-110

FASTENER TORQUE VALUES IN THIS CHAPTER

The table below lists torque values for all fasteners presented in this chapter.

FASTENER	TORQUE VALUE		NOTES
Alternator rotor-to-sprocket screw	120-140 **in-lbs**	13.6-15.8 Nm	6.26 ALTERNATOR, Assembly and Installation
Alternator stator mounting screw	30-40 **in-lbs**	3.4-4.5 Nm	6.26 ALTERNATOR, Assembly and Installation
Ball head studs (front turn signals)	96-144 **in-lbs**	10.8-16.3 Nm	6.21 TURN SIGNALS, Front Housing Replacement
Battery negative cable-to-crankcase nut	55-75 **in-lbs**	6.2-8.5 Nm	6.11 BATTERY CABLES, Installation
Battery negative terminal screw	60-70 **in-lbs**	6.8-7.9 Nm	6.11 BATTERY CABLES, Installation
Battery positive terminal screw	60-70 **in-lbs**	6.8-7.9 Nm	6.11 BATTERY CABLES, Installation
Battery strap screw	36-60 **in-lbs**	4.1-6.8 Nm	6.11 BATTERY CABLES, Installation
Battery tray mounting fasteners	96-156 **in-lbs**	10.9-17.6 Nm	6.12 BATTERY TRAY, Installation
Brake (rear) lamp switch screw	72-120 **in-lbs**	8.1-13.6 Nm	6.12 BATTERY TRAY, Installation
Brake hose clamp-to-battery tray screw	30-40 **in-lbs**	3.4-4.5 Nm	6.12 BATTERY TRAY, Installation
Brake rear master cylinder reservoir mounting screw	20-25 **in-lbs**	2.3-2.8 Nm	6.12 BATTERY TRAY, Installation
Brake rear master cylinder reservoir mounting screw	20-25 **in-lbs**	2.3-2.8 Nm	6.24 REAR STOP LAMP SWITCH, Replacement
Coil mounting bracket screw	35-45 **in-lbs**	4.0-5.1 Nm	6.17 IGNITION COIL, Installation
Coil mounting screw	24-72 **in-lbs**	2.7-8.1 Nm	6.17 IGNITION COIL, Installation
Coil mounting screw	24-72 **in-lbs**	2.7-8.1 Nm	6.17 IGNITION COIL, Installation
Crank position sensor (CKP) screw	80-100 **in-lbs**	9.0-11.3 Nm	6.25 CRANK POSITION SENSOR (CKP), Installation
ECM caddy fastener	72-96 **in-lbs**	8.1-10.8 Nm	6.12 BATTERY TRAY, Installation
ECM caddy fastener	72-96 **in-lbs**	8.1-10.8 Nm	6.23 REAR LIGHTING CONVERTER MODULE: XL 883N/XL 1200N (DOMESTIC ONLY), Installation
ECM caddy fastener	72-96 **in-lbs**	8.1-10.8 Nm	6.29 MAIN WIRING HARNESS, Installation
ECM fasteners: XR models	18-22 **in-lbs**	2.0-2.5 Nm	6.9 ELECTRONIC CONTROL MODULE (ECM), Installation
Electronic Control Module (ECM) cover fastener	30-60 **in-lbs**	3.4-6.8 Nm	6.9 ELECTRONIC CONTROL MODULE (ECM), Installation
Fender support screw with washer	132-216 **in-lbs**	14.9-24.4 Nm	6.22 LICENSE PLATE LAMP MODULE: XL 883N/XL 1200N, Installation (HDI Only)
Handlebar clamp screw	12-18 ft-lbs	16.3-24.4 Nm	6.19 INDICATOR LAMP MODULE, Replacement: XL 1200L/XL 883N and XL 1200N/XL 1200L/XL883N/XL 1200N
Handlebar clamp screw	12-18 ft-lbs	16.3-24.4 Nm	6.19 INDICATOR LAMP MODULE, Replacement: XL 1200L/XL 883N and XL 1200N/XL 1200L/XL883N/XL 1200N
Handlebar clamp screws	108-132 **in-lbs**	12.2-14.9 Nm	6.37 RIGHT HANDLEBAR SWITCHES, Installation
Handlebar clamp screws	108-132 **in-lbs**	12.2-14.9 Nm	6.38 LEFT HANDLEBAR SWITCHES, Installation
Handlebar riser clamp screw	12-18 ft-lbs	16.3 -24.4 Nm	6.19 INDICATOR LAMP MODULE, Replacement: XL 883C and XL 1200C/XL 883C/XL1200C
Handlebar riser clamp screw	12-18 ft-lbs	16.3 -24.4 Nm	6.19 INDICATOR LAMP MODULE, Replacement: XL 883C and XL 1200C/XL 883C/XL1200C

FASTENER	TORQUE VALUE		NOTES
Handlebar riser cover screw	8-12 **in-lbs**	0.9-1.4 Nm	6.19 INDICATOR LAMP MODULE, Replacement: XL 883C and XL 1200C/XL 883C/XL1200C
Handlebar switch housing screws	35-45 **in-lbs**	4.0-5.1 Nm	6.37 RIGHT HANDLEBAR SWITCHES, Installation
Handlebar switch housing screws	35-45 **in-lbs**	4.0-5.1 Nm	6.38 LEFT HANDLEBAR SWITCHES, Installation
Handlebar upper clamp screw	12-18 ft-lbs	16.3-24.4 Nm	6.19 INDICATOR LAMP MODULE, Replacement: All Other Models/all except XL 883C/XL 1200C/XL 1200L/XL 1200N
Horn, front mounted, mounting screw	72-108 **in-lbs**	8.1-12.2 Nm	6.34 HORN, Replacement: Models with Front Mounted Horn
Horn, side mounted, acorn nut	60-180 **in-lbs**	6.8-20.4 Nm	6.34 HORN, Replacement: Models with Side Mounted Horn
Horn, side mounted, stud nut	80-100 **in-lbs**	9.0-11.3 Nm	6.34 HORN, Replacement: Models with Side Mounted Horn
Ignition/light switch mounting screw	35-45 **in-lbs**	4.0-5.1 Nm	6.15 IGNITION AND LIGHT SWITCH, Installation
Ignition switch bracket screw	35-45 **in-lbs**	4.0-5.1 Nm	6.30 ELECTRICAL CADDIES, Wire Harness Caddy: XL Models
Ignition switch bracket screw	35-45 **in-lbs**	4.0-5.1 Nm	6.30 ELECTRICAL CADDIES, Wire Harness Caddy: XR Models
Jiffy stand switch screw	96-120 **in-lbs**	10.9-13.6 Nm	6.31 JIFFY STAND SWITCH: INTERNATIONAL MODELS, Installation
License plate lamp housing screw	14-16 **in-lbs**	1.2-1.3 Nm	6.22 LICENSE PLATE LAMP MODULE: XL 883N/XL 1200N, Installation (HDI Only)
Long post jam nut	65-80 **in-lbs**	7.3-9.0 Nm	6.14 STARTER SOLENOID, Solenoid Contacts
Lower shock absorber screw	45-50 ft-lbs	61-68 Nm	6.21 TURN SIGNALS, Rear Housing Replacement
Lower shock absorber screw	45-50 ft-lbs	61-68 Nm	6.22 LICENSE PLATE LAMP MODULE: XL 883N/XL 1200N, Installation (Domestic Only)
Lower shock absorber screw	45-50 ft-lbs	61-68 Nm	6.22 LICENSE PLATE LAMP MODULE: XL 883N/XL 1200N, Installation (HDI Only)
Neutral indicator switch	120-180 **in-lbs**	13.6-20.3 Nm	6.28 NEUTRAL INDICATOR SWITCH, Replacement
Oil pressure switch	50-70 **in-lbs**	5.6-7.9 Nm	6.33 OIL PRESSURE SWITCH, Installation
Oil pressure switch adapter: XR 1200 only	108-158 **in-lbs**	12.2-17.9 Nm	6.33 OIL PRESSURE SWITCH, Installation
Positive battery cable-to-starter post lock nut	60-85 **in-lbs**	6.8-9.6 Nm	6.11 BATTERY CABLES, Installation
Rear fender brace screw	20-25 **in-lbs**	2.3-2.8 Nm	6.22 LICENSE PLATE LAMP MODULE: XL 883N/XL 1200N, Installation (HDI Only)
Rear lighting converter module bracket fasteners	36-60 **in-lbs**	4.1-6.8 Nm	6.23 REAR LIGHTING CONVERTER MODULE: XL 883N/XL 1200N (DOMESTIC ONLY), Installation
Rear turn signal housing screws: XR models	30-40 **in-lbs**	3.4-4.5 Nm	6.21 TURN SIGNALS, Rear Housing Replacement
Rear turn signal housing-to-stalk	96-156 **in-lbs**	10.9-17.6 Nm	6.21 TURN SIGNALS, Rear Housing Replacement
Riser cover screw	8-12 **in-lbs**	0.9-1.4 Nm	6.7 SPEEDOMETER: XL 883C/XL 1200C, Installation/XL 883C/XL 1200C only
Riser cover screw	8-12 **in-lbs**	0.9-1.4 Nm	6.21 TURN SIGNALS, Front Housing Replacement
Riser cover screw	8-12 **in-lbs**	0.9-1.4 Nm	6.36 HANDLEBAR SWITCH ASSEMBLIES, Connectors/XL 883C/XL 1200C only
Solenoid ring terminal nut	70-90 **in-lbs**	7.9-10.2 Nm	6.13 STARTER, Field Coil Assembly
Speedometer and tachometer mounting screw	12-18 **in-lbs**	1.4-2.0 Nm	6.8 SPEEDOMETER AND TACHOMETER: XR MODELS, Trip Odometer Reset Switch Replacement/XL 883C/XL 1200C only

FASTENER	TORQUE VALUE		NOTES
Speedometer and tachometer mounting screw	12-18 **in-lbs**	1.4-2.0 Nm	6.8 SPEEDOMETER AND TACHOMETER: XR MODELS, Tachometer Installation/XL 883C/XL 1200C only
Speedometer and Tachometer mounting screw	12-18 **in-lbs**	1.4-2.0 Nm	6.8 SPEEDOMETER AND TACHOMETER: XR MODELS, Speedometer Installation/XL 883C/XL 1200C only
Speedometer mounting screw	12-18 **in-lbs**	1.4-2.0 Nm	6.7 SPEEDOMETER: XL 883C/XL 1200C, Installation/XL 883C/XL 1200C only
Starter end cover screw	90-110 **in-lbs**	10.2-12.4 Nm	6.13 STARTER, Field Coil Assembly
Starter motor oil line clamp fastener	16-21 **in-lbs**	1.8-2.4 Nm	6.13 STARTER, Installation
Starter mounting bolt	13-20 ft-lbs	17.6-27.1 Nm	6.13 STARTER, Installation
Starter positive terminal nut	60-85 **in-lbs**	6.8-9.6 Nm	6.13 STARTER, Installation
Starter thru bolts	39-65 **in-lbs**	4.4-7.3 Nm	6.13 STARTER, Field Coil Assembly
Stator harness retainer screw	56 **in-lbs**	6.3 Nm	6.26 ALTERNATOR, Assembly and Installation/Screw must be flush with plate. Do not exceed torque specification.
Stoplight switch to tee nut	132-168 **in-lbs**	14.9-18.9 Nm	6.24 REAR STOP LAMP SWITCH, Replacement
Strut cover screw	132-216 **in-lbs**	14.9-24.4 Nm	6.21 TURN SIGNALS, Rear Housing Replacement
Tail lamp base mounting screw: XL models only	45-48 **in-lbs**	5.1-5.4 Nm	6.20 TAIL LAMP: ALL MODELS EXCEPT XL 883N/XL 1200N, Base Replacement
Tail lamp base mounting screw: XR models only	36-60 **in-lbs**	4.1-6.8 Nm	6.20 TAIL LAMP: ALL MODELS EXCEPT XL 883N/XL 1200N, Base Replacement
Tail lamp lens screw	20-24 **in-lbs**	2.3-2.7 Nm	6.20 TAIL LAMP: ALL MODELS EXCEPT XL 883N/XL 1200N, Bulb Replacement
Tail lamp lens screw	20-24 **in-lbs**	2.3-2.7 Nm	6.20 TAIL LAMP: ALL MODELS EXCEPT XL 883N/XL 1200N, Base Replacement
Turn signal (front) clamp screw	96-120 **in-lbs**	10.9-13.6 Nm	6.21 TURN SIGNALS, Front Housing Replacement
Turn signal stalk nut	132-216 **in-lbs**	14.9-24.4 Nm	6.21 TURN SIGNALS, Rear Housing Replacement
Vehicle speed sensor (VSS) screw	80-100 **in-lbs**	9.0-11.3 Nm	6.27 VEHICLE SPEED SENSOR (VSS), Installation
Voltage regulator mounting screw	36-60 **in-lbs**	4.1-6.8 Nm	6.3 VOLTAGE REGULATOR, Installation: XL Models
Voltage regulator mounting screw	36-60 **in-lbs**	4.1-6.8 Nm	6.3 VOLTAGE REGULATOR, Installation: XR Models

SPECIFICATIONS: 2009 SPORTSTER MODELS

Table 6-1. Electrical: XL Models

COMPONENT	SPECIFICATION	
Ignition timing	not adjustable	
Battery	12 volt, 12 amp-hr, sealed and maintenance free	
Charging system	Single-phase, 30-amp system (357W @ 13.5V, 2000 rpm, 405W max power @ 13.5V)	
Spark plug type	6R12	
Spark plug size	12 mm	
Spark plug gap	0.038-0.043 in.	0.97-1.09 mm
Spark plug torque	12-18 ft-lbs	16.3-24.4 Nm

Table 6-2. Electrical: XR Models

COMPONENT	SPECIFICATION	
Ignition timing	not adjustable	
Battery	12 volt, 12 amp-hr, sealed and maintenance free	
Charging system	Single-phase, 30-amp system (357W @ 13.5V, 2000 rpm, 405W max power @ 13.5V)	
Spark plug type	10R12X	
Spark plug size	12 mm	
Spark plug gap	0.032-0.038 in.	0.81-0.97 mm
Spark plug torque	12-18 ft-lbs	16.3-24.4 Nm

Table 6-3. Ignition Coil Resistance

RESISTANCE	PRIMARY	SECONDARY
All Models	0.3-0.7 Ohms	1500-2400 Ohms

Table 6-4. Alternator

ITEM	SPECIFICATION
AC voltage output	20-28 VAC per 1000 engine RPM
Stator coil resistance	0.1-0.3 Ohms

Table 6-5. Voltage Regulator

ITEM	SPECIFICATION
Voltage output @ 75 °F	14.3-14.7 VDC
Current @ 3600 rpm	32 A

Table 6-6. Battery

MODEL	SPECIFICATION
All	12 volt, 12 Ampere hours

Table 6-7. Fuses

ITEM	AMP RATING
Main fuse	30
Battery	15
Ignition	15
Lights	15
Accessories	15
Electronic Control Module (ECM)	15

Table 6-8. Starter Specifications

STARTER DATA	
Free speed	3000 RPM (min.) @ 11.5 V
Free current	90 amp (max.) @ 11.5 V
Cranking current	200 amp (max.) @ 68°F
Stall torque	8.0 ft-lbs (10.8 Nm) @ 2.4 V

Table 6-9. Starter Service Wear Limits

ITEM	IN.	MM.
Brush length (minimum)	0.443	11.0
Commutator runout	0.016	0.41
Commutator diameter (minimum)	1.141	28.98
Commutator mica depth (minimum)	0.008	0.203

GENERAL

See Figure 6-1. The voltage regulator is located between the frame downtubes at the front of the motorcycle. When installing connectors (3, 4) after service, make sure to engage external latches (5) to prevent connectors from separating during vehicle operation.

NOTE

The voltage regulator cannot be repaired. Replace the unit if it fails.

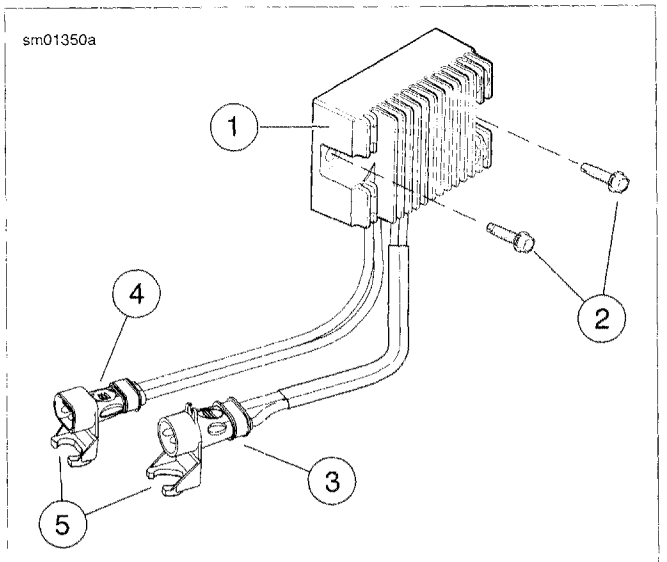

1. **Voltage regulator**
2. **Screw (2)**
3. **Stator pin connector [47A]**
4. **DC output pin connector [77A]**
5. **External latch**

Figure 6-1. Voltage Regulator

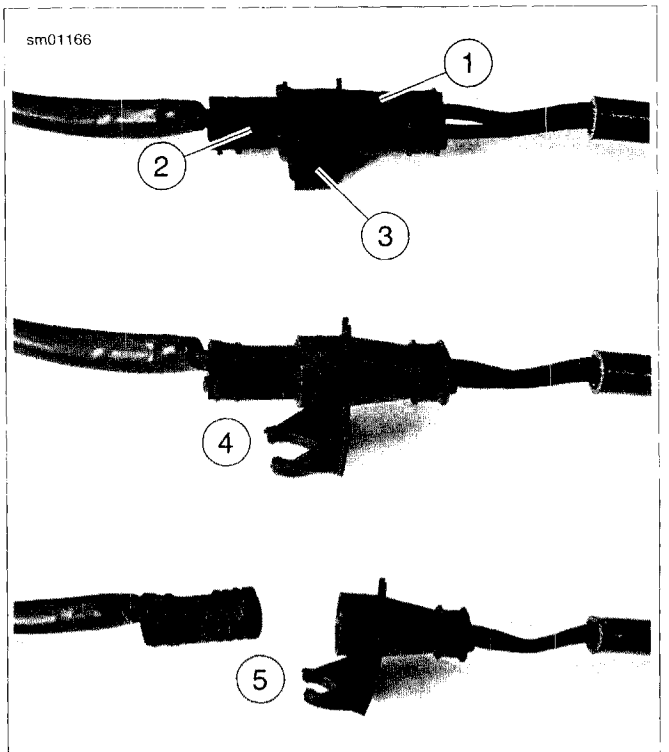

1. **Pin connector [47A] (voltage regulator side)**
2. **Socket connector [47B] (stator side)**
3. **External latch**
4. **Open latch**
5. **Separate socket connector from pin connector**

Figure 6-2. Separating Connector Halves (Stator Connector Shown)

REMOVAL: XL MODELS

⚠WARNING

To prevent accidental vehicle start-up, which could cause death or serious injury, remove main fuse before proceeding. (00251b)

1. Unplug main fuse. See 6.35 MAIN FUSE.

NOTE

When unplugging the voltage regulator connectors, pull apart each connector by firmly grasping both connector halves. Do not pull on leads or damage to the wires and/or terminals may result.

2. See Figure 6-2. Unplug stator connector [47]. Lift external latch (3) on pin housing and separate connector halves (5).
3. Lift external latch on DC output connector [77] pin housing and separate connector halves.
4. See Figure 6-4. Remove screws (2) from locations at top and bottom of voltage regulator. Remove regulator from vehicle, carefully threading harnesses through opening in regulator mounting bracket.

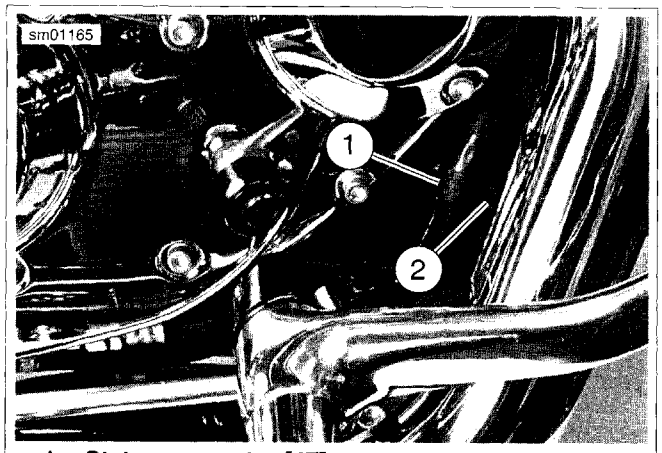

1. **Stator connector [47]**
2. **Locking latch**

Figure 6-3. Stator Connector [47] Location

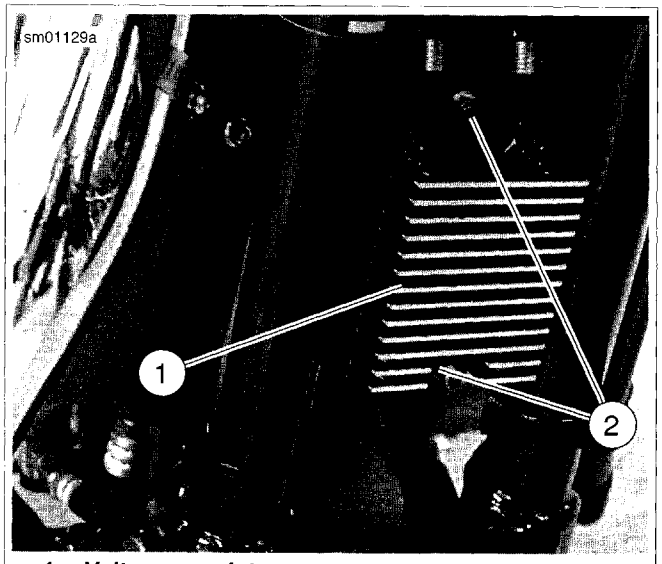

1. **Voltage regulator**
2. **Mounting screw (2)**

Figure 6-4. Voltage Regulator Location

INSTALLATION: XL MODELS

1. Position voltage regulator close to mounting bracket. Orient regulator so cooling fins face forward and wiring harnesses exit regulator body toward right side of vehicle.
2. Route stator harness down along between right frame downtube and body of voltage regulator. Route stator harness connector [47A] toward right side of vehicle.
3. Mount voltage regulator on mounting bracket between frame downtubes and secure with mounting screws at two locations. Tighten to 36-60 **in-lbs** (4.1-6.8 Nm).
4. See Figure 6-3. Plug stator connector [47A] (1) into socket connector [47B]. Fold external locking latch (2) over and lock in place.
5. In the same fashion, plug voltage regulator DC output connector [77A] into socket [77B]. Fold external latch over and lock in place.
6. Plug in main fuse. See 6.35 MAIN FUSE.
7. Test charging system. See the electrical diagnostic manual.

REMOVAL: XR MODELS

⚠WARNING

To prevent accidental vehicle start-up, which could cause death or serious injury, remove main fuse before proceeding. (00251b)

1. Unplug main fuse. See 6.35 MAIN FUSE.

NOTE

When unplugging the voltage regulator connectors, pull apart each connector by firmly grasping both connector halves. Do not pull on leads or damage to the wires and/or terminals may result.

2. See Figure 6-5. Unplug stator connector (4). Carefully pull barbed cable strap (3) from frame.
3. See Figure 6-6. Cut cable strap (1). Lift external latch on connector and separate connector halves.
4. See Figure 6-7. Remove screws (1) from locations at top and bottom of voltage regulator (2). Remove regulator from vehicle, carefully threading harnesses through opening in regulator mounting bracket.

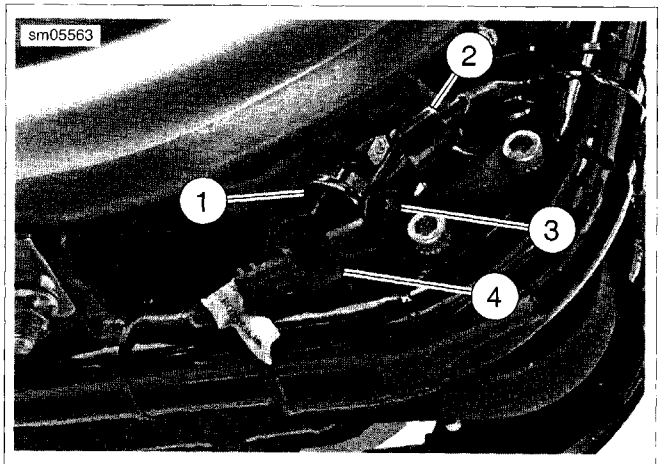

1. **Oil pressure switch**
2. **J-clip**
3. **Barbed cable strap**
4. **Stator connector**

Figure 6-5. Oil Pressure Switch (Right Side View XR 1200)

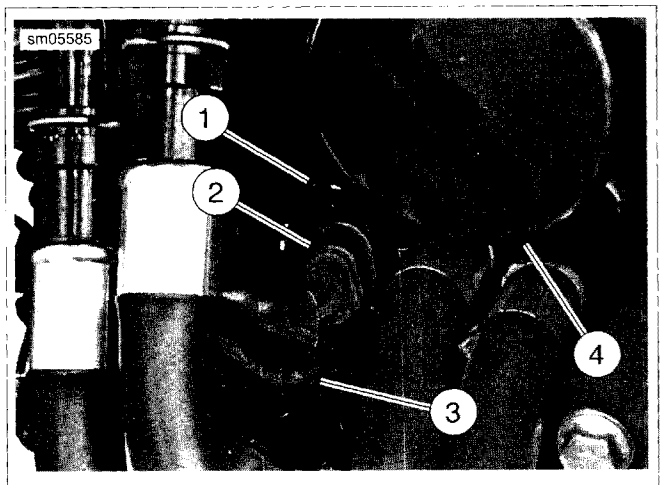

1. **Cable strap**
2. **DC output conector**
3. **Oil pressure switch, neutral switch harness**
4. **Oil filter**

Figure 6-6. DC Output Connector: XR Models

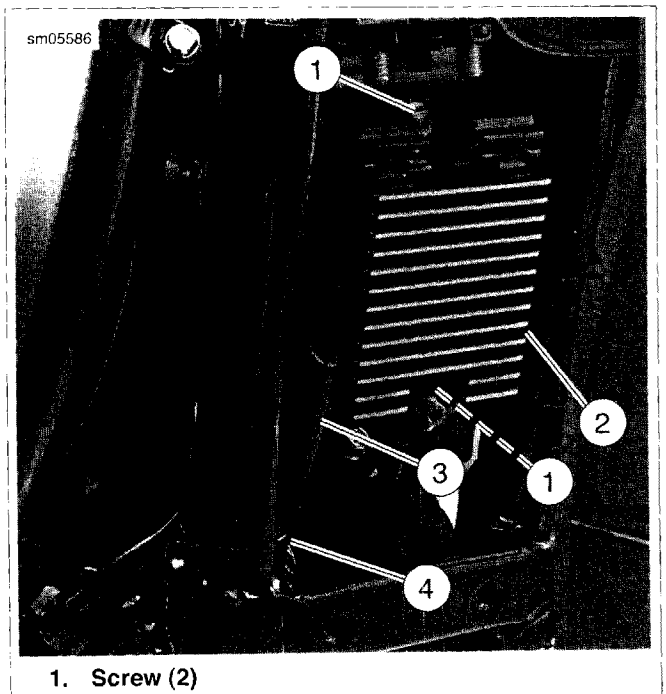

1. **Screw (2)**
2. **Voltage regulator**
3. **Stator wiring**
4. **Cable strap**

Figure 6-7. Stator Wire Routing: XR Models

INSTALLATION: XR MODELS

1. See Figure 6-8. Position voltage regulator close to mounting bracket (1). Orient regulator so cooling fins face forward and wiring harnesses exit regulator body toward right side of vehicle.
2. Thread DC output wires below mounting bracket . Route DC output connector (2) toward left side of vehicle.
3. Route stator wires (4) down along between right frame downtube and body of voltage regulator. Route stator harness connector [46A] toward right side of vehicle.

NOTE

When installing voltage regulator, make sure wires do not get pinched between bracket and regulator.

4. Mount voltage regulator on mounting bracket and secure with mounting screws. Tighten to 36-60 **in-lbs** (4.1-6.8 Nm).
5. See Figure 6-9. Connect stator connector (1) and fold external latch over and lock in place. Secure stator connector to bracket with barbed cable strap (3).
6. Secure stator wires to right frame down tube with cable strap (2).
7. See Figure 6-10. Connect voltage regulator DC output connector. Fold external latch over and lock in place.
8. Secure DC output connector (2) along with oil pressure switch, neutral switch harness (3) to voltage regulator bracket with cable strap (1).
9. Plug in main fuse. See 6.35 MAIN FUSE.
10. Test charging system. See the electrical diagnostic manual.

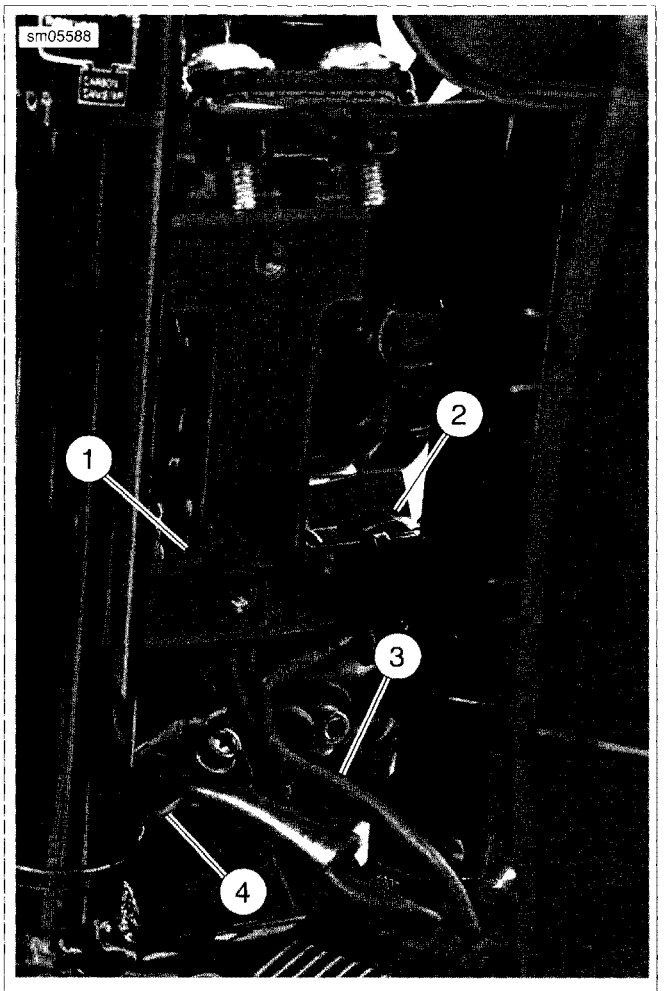

1. Voltage regulator mounting bracket
2. DC output connector
3. DC output wires
4. Stator wires

Figure 6-8. Voltage Regulator Wire Routing: XR Models

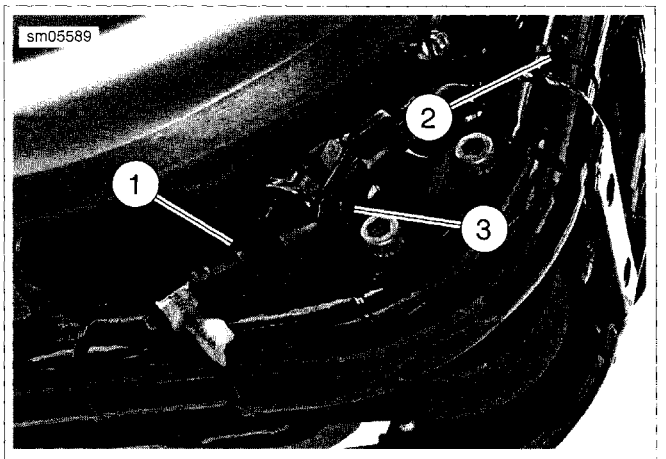

1. Stator connector
2. Cable strap
3. Barbed cable strap

Figure 6-9. Stator Connector: XR Models

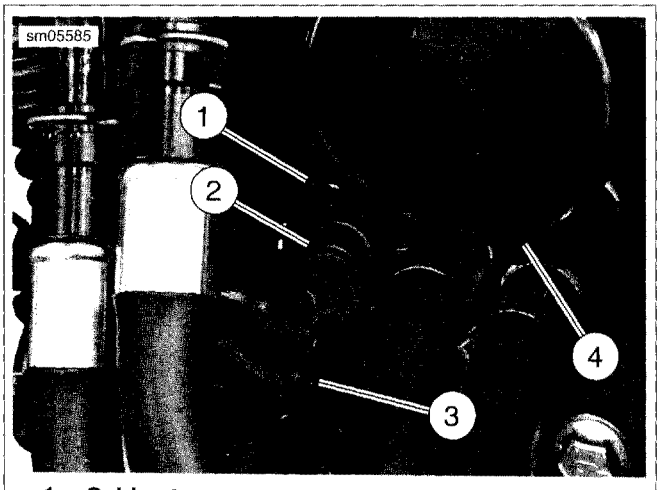

1. Cable strap
2. DC output conector
3. Oil pressure switch, neutral switch harness
4. Oil filter

Figure 6-10. DC Output Connector: XR Models

GENERAL

The starter relay allows a relatively small amount of current flowing through the starter button to control the large current flow required to activate the starter solenoid.

See Figure 6-11. The electrical system relay/fuse block is located in front of the battery under the left side cover. The relays and fuses are mounted in the relay/fuse block. All fuses are rated at 15 amperes.

REPLACING FUSES

1. Open left side cover. See 2.19 LEFT SIDE COVER.
2. See Figure 6-11. Pull suspect fuse (3-7) from slots in relay/fuse block and inspect for blown condition or other damage.
3. Replace as necessary:
   a. Insert **new** fuse in appropriate location by lining up spade terminals on fuse with sockets in relay/fuse block.
   b. Press fuse firmly into sockets.
4. Close left side cover.
5. Turn ignition switch ON and verify proper operation of circuit protected by replacement fuse.

REPLACING RELAYS

1. Open left side cover. See 2.19 LEFT SIDE COVER.
2. See Figure 6-11. To unplug old relay (1 or 2), grasp body of relay and with a gentle rocking motion, pull straight out from relay/fuse block.
3. To install **new** relay, line up spade terminals of relay with sockets in relay/fuse block and push relay firmly into sockets.
4. Close left side cover.
5. Turn ignition switch ON and start vehicle to verify proper operation of relay circuits.

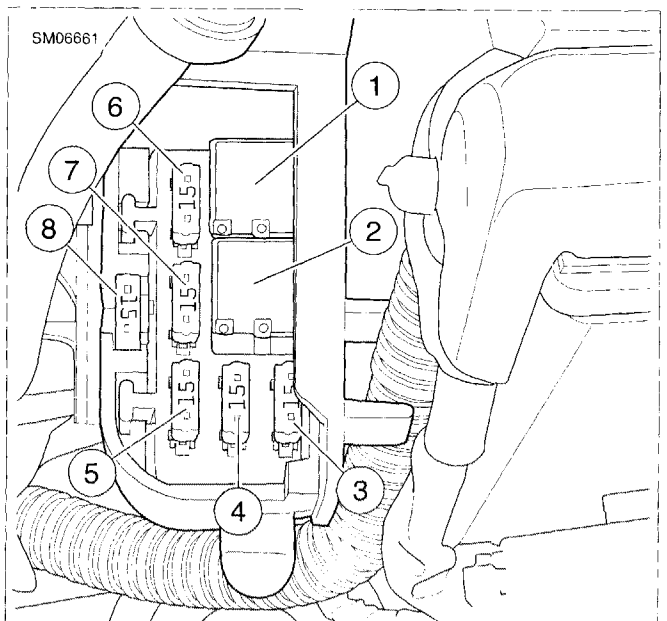

1. **System relay**
2. **Starter relay**
3. **Ignition fuse**
4. **Lights fuse**
5. **Accessory fuse**
6. **ECM fuse**
7. **Battery fuse**
8. **Spare fuse**

Figure 6-11. Relay/Fuse Block (Typical)

GENERAL

The main fuse holder is attached to the battery strap behind the left side cover.

REPLACEMENT

⚠WARNING

To prevent accidental vehicle start-up, which could cause death or serious injury, disconnect negative (-) battery cable before proceeding. (00048a)

1. Remove negative battery cable from engine crankcase. See 1.17 BATTERY MAINTENANCE.
2. Unplug main fuse. See 6.35 MAIN FUSE.
3. Disassemble main fuse holder and remove cable terminals. Replace components as necessary and reassemble. See A.4 DELPHI MAIN FUSE HOUSING for disassembly/assembly instructions.
4. Install negative battery cable on engine crankcase. See 1.17 BATTERY MAINTENANCE.
5. Plug in main fuse.
6. Turn ignition switch ON and verify proper operation of vehicle's electrical system.

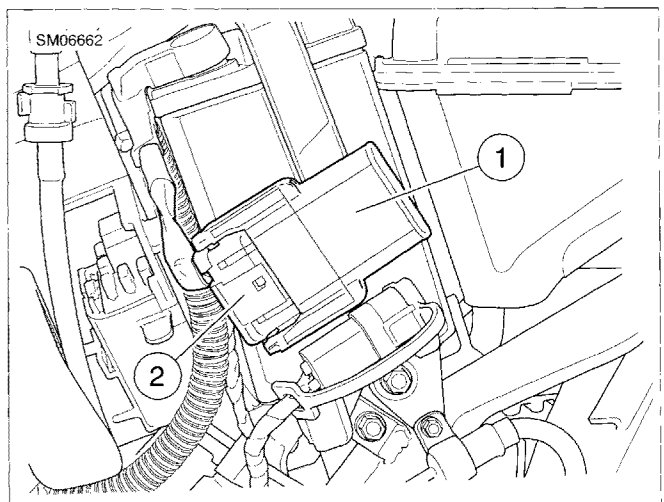

1. **Main fuse cover**
2. **Main fuse holder**

Figure 6-12. Main Fuse and Holder

SPEEDOMETER: XL SINGLE GAUGE MODELS EXCEPT XL 883C/XL 1200C 6.6

REMOVAL

NOTE

The speedometer has a backlight bulb that cannot be replaced. If the bulb fails, replace the entire unit.

⚠WARNING

To prevent accidental vehicle start-up, which could cause death or serious injury, remove main fuse before proceeding. (00251b)

1. Unplug main fuse. See 6.35 MAIN FUSE.
2. See Figure 6-13. Remove reset switch boot (9) from trip odometer reset switch (8) on speedometer housing back plate (5).
3. Remove two screws (7) and back plate.
4. Unplug speedometer socket connector [39B] (10) from back of speedometer.
5. Gently push out speedometer (1) and front gasket (2).
6. Inspect front (2) and back (4) gaskets, speedometer connector [39] and wiring, trip odometer reset switch and wiring and reset switch boot. Repair or replace as required.

INSTALLATION

PART NUMBER	TOOL NAME
HD-45929	CRIMPING TOOL

1. If replacing trip odometer switch:
   a. Push trip reset socket terminals out the front of the speedometer socket connector half [39B]. See A.15 PACKARD MICRO-64 CONNECTORS.
   b. Cut off socket terminals and pull faulty switch wires out of connector.
   c. Push wires of a replacement switch through speedometer connector (sockets 8, 11) and crimp new socket terminals using CRIMPING TOOL (Part No. HD-45929), on replacement switch wiring.
   d. Draw terminal back into connector until terminal seats.
2. See Figure 6-13. Install front gasket (2) on speedometer (1).
3. Threading speedometer harness and connector [39B] through back gasket (4), install matching tabs of gasket to locating keys in instrument housing/bracket (3).

NOTE

If necessary, lubricate rubber gaskets with alcohol or glass cleaner.

4. Orient face upright and press speedometer into instrument housing/bracket. Wiring must past between locating keys and gasket and through cutout in speedometer back.
5. Plug speedometer socket connector [39] (10) into back of speedometer.
6. Push trip odometer reset switch (8) through back plate (5) and thread on reset switch boot (9).
7. Hold back plate in place with reset switch in rectangular boss in back of speedometer (1) and vent hole (6) at bottom. Secure with screws and tighten.
8. Plug in main fuse.

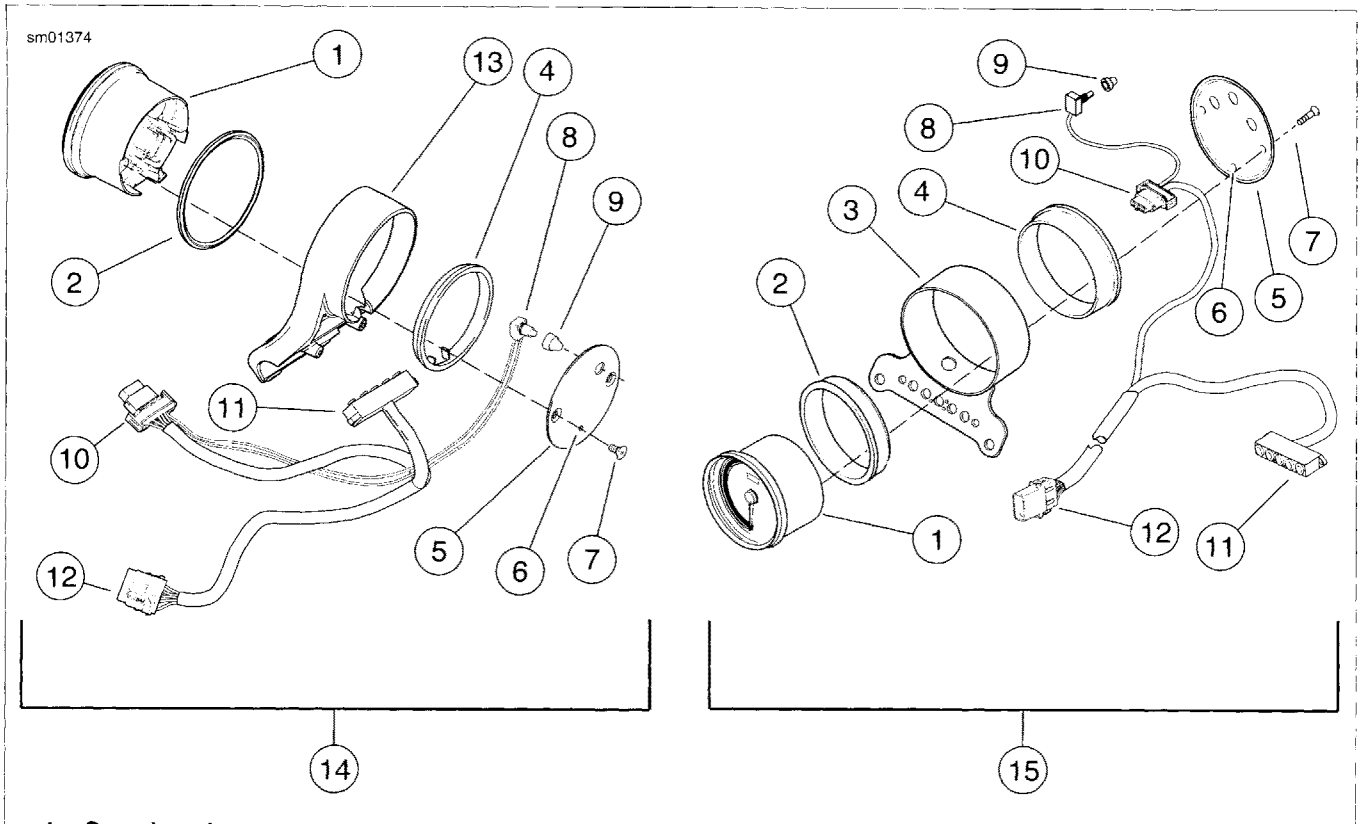

1. Speedometer
2. Front gasket
3. Instrument housing/bracket
4. Back gasket
5. Back plate
6. Vent hole
7. Screw (2)
8. Trip odometer reset switch
9. Reset switch boot
10. Speedometer harness connector [39B]
11. Indicator lamp module
12. Instrument harness connector [20A]
13. Speedometer housing/handlebar clamp
14. XL 883N/XL 1200L/XL 1200N
15. All other single gauge XL models except XL 883C/XL 1200C

Figure 6-13. Speedometer Components: XL Single Gauge Models Except XL 883C/XL 1200C

REMOVAL

NOTE

The speedometer has a backlight bulb that cannot be replaced. If the bulb fails, replace the entire unit.

⚠WARNING

To prevent accidental vehicle start-up, which could cause death or serious injury, remove main fuse before proceeding. (00251b)

1. Unplug main fuse. See 6.35 MAIN FUSE.
2. Protect fuel tank with a clean, soft cover.
3. See Figure 6-15. Remove two screws (8) and riser cover (9) from back of handlebar riser (4). See 2.31 HANDLEBARS.

NOTE

It is not necessary to remove the trip odometer reset switch boot from the back of the speedometer housing in order to remove the speedometer.

4. Remove two screws (5) holding speedometer (1) to speedometer housing/handlebar clamp (3).
5. Using small diameter rod or Allen wrench, gently press through bottom condensation/vent hole in speedometer housing/handlebar clamp to push speedometer from housing.
6. Holding speedometer to prevent damage, depress tabs to separate connector [39B] (7) from speedometer. Remove speedometer.
7. Inspect gasket, speedometer connector [39] and wiring, trip odometer reset switch and wiring, and trip reset boot. Repair or replace as required.

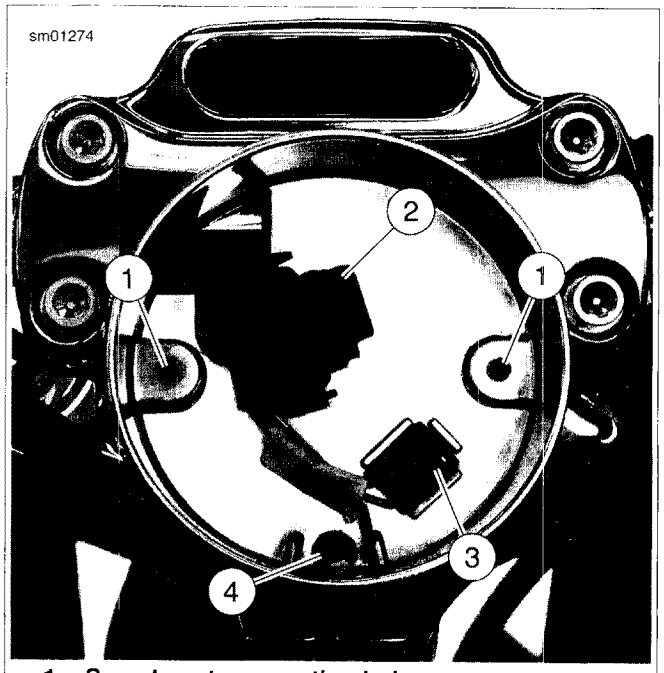

1. **Speedometer mounting hole**
2. **Speedometer connector [39]**
3. **Trip odometer reset switch in square boss**
4. **Condensation/vent hole**

Figure 6-14. Speedometer Housing/Handlebar Clamp (XL883C/XL 1200C)

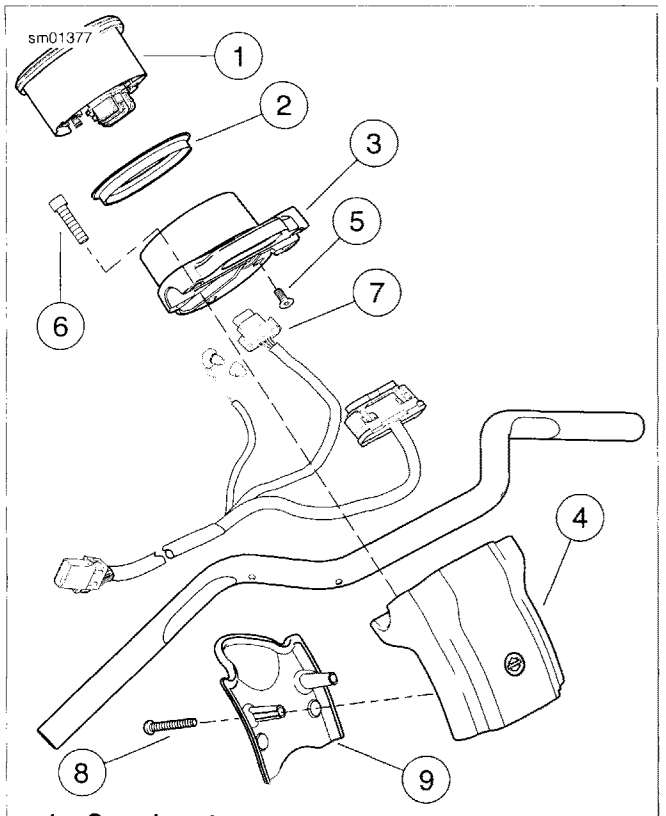

1. **Speedometer**
2. **Gasket**
3. **Speedometer housing/handlebar clamp**
4. **Handlebar riser**
5. **Screw (2)**
6. **Screw (4)**
7. **Speedometer harness connector [39B]**
8. **Screw (2)**
9. **Riser cover**

Figure 6-15. Speedometer Components (XL 883C/XL 1200C)

INSTALLATION

PART NUMBER	TOOL NAME
HD-45929	CRIMPING TOOL

1. If replacing the trip odometer switch:
   a. Push the trip reset socket terminals out the front of the speedometer socket connector half [39B]. See A.15 PACKARD MICRO-64 CONNECTORS.
   b. Cut off the socket terminals and pull the faulty switch out of the connector.
   c. Push the wires of a replacement switch through the speedometer connector (sockets 8, 11) and crimp new socket terminals using CRIMPING TOOL (Part No. HD-45929), on replacement switch wiring.
   d. Draw the terminal back into the connector until the terminal seats.
2. See Figure 6-15. If removed, install gasket (2) in speedometer housing/handlebar clamp (3).

NOTE

Make certain that speedometer harness and trip odometer switch harness are positioned underneath the handlebar, and indicator lamp module harness feeds over the top of the handlebar.

3. If removed, push trip odometer reset switch through speedometer housing/handlebar clamp and into tab square in base of speedometer housing/handlebar clamp and thread on the trip reset boot.
4. Hold speedometer (1) in place and mate speedometer connector [39] halves.

NOTE

If necessary, lubricate gasket with alcohol or glass cleaner.

5. Press speedometer into speedometer housing/handlebar clamp and secure with screws (5). Tighten screws to 12-18 **in-lbs** (1.4-2.0 Nm).
6. Install riser cover (9) and secure with two screws (8). Make certain that handlebar control harnesses are not pinched between handlebar riser and riser cover. Tighten screws to 8-12 **in-lbs** (0.9-1.4 Nm).
7. Plug in main fuse. See 6.35 MAIN FUSE.

SPEEDOMETER REMOVAL

⚠WARNING

To prevent accidental vehicle start-up, which could cause death or serious injury, remove main fuse before proceeding. (00251b)

NOTE

The speedometer and tachometer have backlight bulbs that cannot be replaced. If the bulb fails, replace the entire unit.

1. Unplug main fuse. See 6.35 MAIN FUSE.
2. See Figure 6-16. Remove reset switch boot (11).
3. Remove screws (6) and back cover (5).
4. Disconnect speedometer connector (8).
5. Push out the speedometer (2) with seal (3).
6. Inspect seal (3), speedometer connector (8), and wiring. Repair or replace as required.

SPEEDOMETER INSTALLATION

1. See Figure 6-16. Install seal (3) on speedometer (2).
2. Orient face upright and press speedometer (2) into instrument housing/bracket (4).
3. Install speedometer connector (8).
4. Attach trip odometer reset switch (10) into squared boss on back cover (5) and secure with reset switch boot (11).
5. Place back cover over speedometer and tachometer while positioning harness to avoid damage. Rotate speedometer and tachometer as needed to align mounting holes and install screws (6). Tighten screws to 12-18 **in-lbs** (1.4-2.0 Nm).
6. Plug in main fuse. See 6.35 MAIN FUSE.

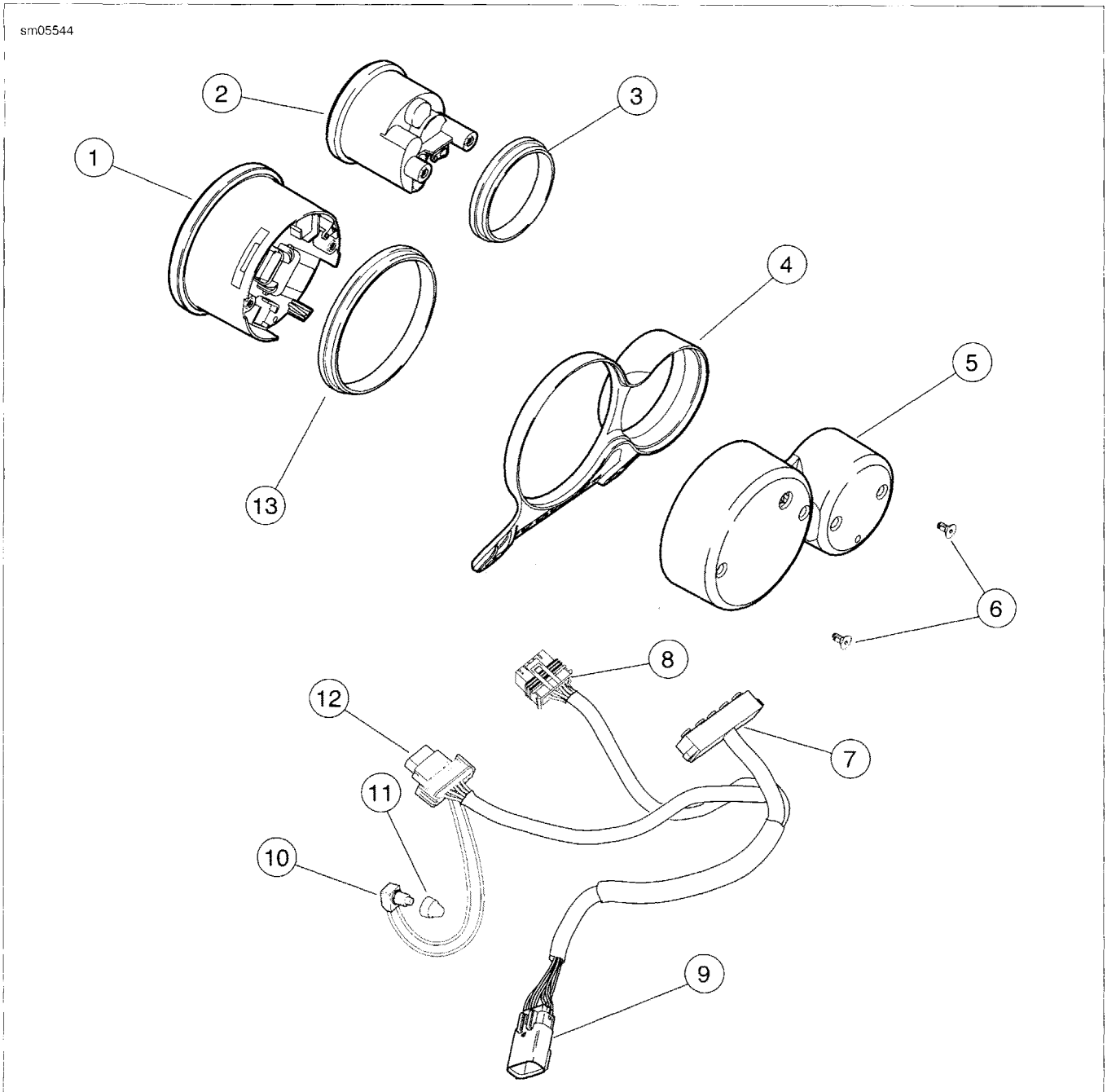

1. Tachometer
2. Speedometer
3. Speedometer seal
4. Instrument housing/bracket
5. Back cover
6. Screw (4)
7. Indicator lamp module
8. Speedometer connector
9. Instrument harness connector
10. Trip odometer reset switch
11. Reset switch boot
12. Tachometer connector
13. Tachometer seal

Figure 6-16. Speedometer and Tachometer: XR 1200

TRIP ODOMETER RESET SWITCH REPLACEMENT

PART NUMBER	TOOL NAME
HD-45929	CRIMPING TOOL

NOTE

The speedometer and tachometer have backlight bulbs that cannot be replaced. If the bulb fails, replace the entire unit.

⚠WARNING

To prevent accidental vehicle start-up, which could cause death or serious injury, remove main fuse before proceeding. (00251b)

1. Unplug main fuse. See 6.35 MAIN FUSE.
2. See Figure 6-16. Remove reset switch boot (11) from back cover (5).
3. Remove screws (6) and back cover (5).
4. Remove tachometer connector (12).
5. Follow instructions to push the trip reset socket terminals out the front of the tachometer connector. See A.15 PACKARD MICRO-64 CONNECTORS.
6. Cut off the socket terminals and pull the faulty switch out of the connector.
7. Push the wires of a replacement switch through the tachometer connector (sockets 8, 11) and crimp **new** socket terminals using CRIMPING TOOL (Part No. HD-45929), on replacement switch wiring.
8. Draw the terminals back into the connector until the terminal seats.
9. Install tachometer connector (12).
10. Position reset switch in squared boss on back cover (5) and secure with **new** reset switch boot (11).
11. Place back cover over speedometer and tachometer while positioning harness to avoid damage. Rotate speedometer and tachometer as needed to align mounting holes and install screws (6). Tighten screws to 12-18 **in-lbs** (1.4-2.0 Nm).
12. Plug in main fuse. See 6.35 MAIN FUSE.

TACHOMETER REMOVAL

NOTE

The speedometer and tachometer have backlight bulbs that cannot be replaced. If the bulb fails, replace the entire unit.

⚠WARNING

To prevent accidental vehicle start-up, which could cause death or serious injury, remove main fuse before proceeding. (00251b)

1. Unplug main fuse. See 6.35 MAIN FUSE.
2. See Figure 6-16. Remove reset switch boot (11) from back cover (5).
3. Remove screws (6) and back cover (5).
4. Open latches on each side of tachometer connector (12) and separate connector halves.
5. Push out the tachometer with seal (13).
6. Inspect seal, tachometer connector, trip odometer reset switch, reset switch boot, and wiring. Repair or replace as required.

TACHOMETER INSTALLATION

1. If replacing the trip odometer reset switch, see 6.8 SPEEDOMETER AND TACHOMETER: XR MODELS, Trip Odometer Reset Switch Replacement.
2. See Figure 6-16. Install seal (13) on tachometer (1).
3. Orient face upright and press tachometer (1) into instrument housing/bracket (4).
4. Attach tachometer connector (12) to tachometer.
5. Attach trip odometer reset switch (10) into squared boss on back cover (5) and secure with reset switch boot (11).
6. Place back cover over speedometer and tachometer while positioning harness to avoid damage. Rotate speedometer and tachometer as needed to align mounting holes and install screws (6). Tighten screws to 12-18 **in-lbs** (1.4-2.0 Nm).
7. Plug in main fuse. See 6.35 MAIN FUSE.

GENERAL

See Figure 6-18. The Electronic Control Module (ECM) receives data from sensors such as the crank position (CKP) sensor and the temperature manifold absolute pressure (TMAP) sensor. The ECM uses this data to time the firing of the spark from the ignition coil as well as providing other engine management functions. On XL models the ECM is mounted in front of the battery in a caddy. On XR models the ECM is mounted in a bracket on the rear fender under the seat.

NOTE

The ECM cannot be repaired. Replace the unit if it fails.

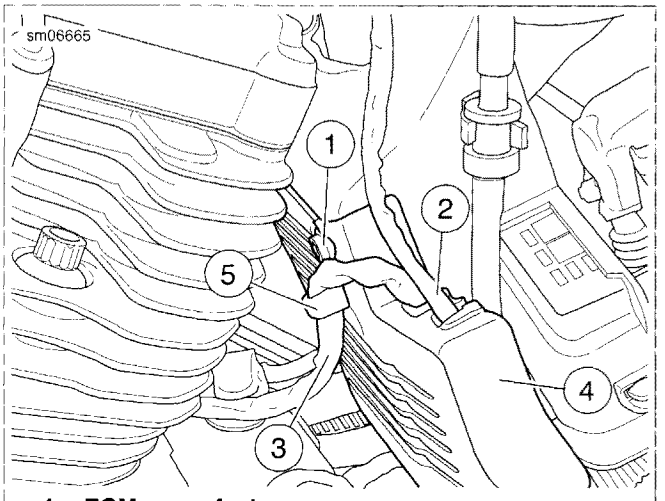

1. ECM cover fastener
2. Fuel pump wiring
3. Rear oxygen sensor (O2) wiring
4. ECM cover
5. Rear O2 sensor wiring clip

Figure 6-17. ECM Cover: XL Models

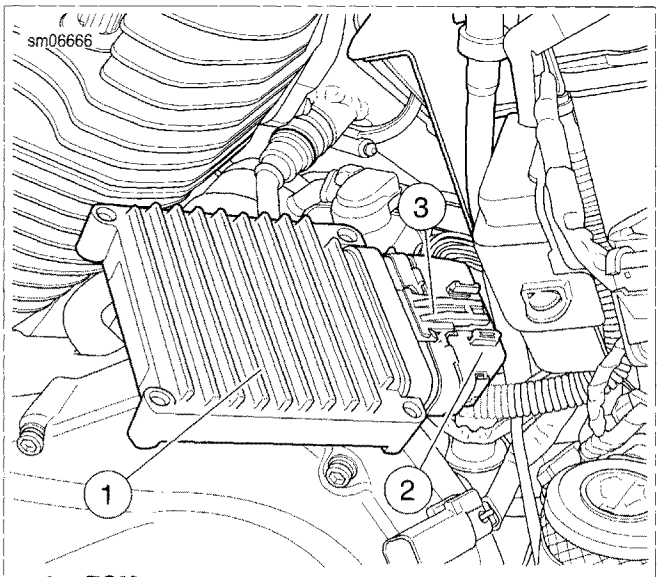

1. ECM
2. ECM connector
3. ECM connector latch

Figure 6-18. Electronic Control Module (ECM): XL Models

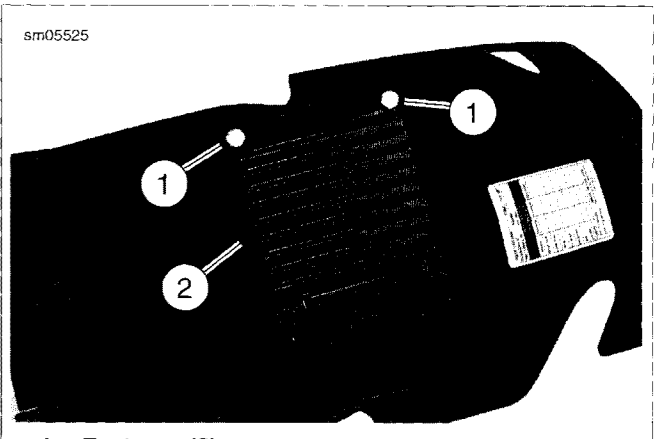

1. Fastener (2)
2. Electronic Control Module

Figure 6-19. Electronic Control Module (ECM): XR Models

REMOVAL

XL Models

⚠WARNING

To prevent accidental vehicle start-up, which could cause death or serious injury, remove main fuse before proceeding. (00251b)

1. Unplug main fuse. See 6.35 MAIN FUSE.
2. See Figure 6-17.Remove fuel pump wiring (2) from ECM cover (4). Disconnect fuel pump connector [141].

3. Remove rear oxygen sensor (O2) wiring (3) from rear O2 sensor wiring clip (5) and ECM cover. Disconnect rear O2 connector [85].
4. Remove ECM cover fastener (1).
5. Slide ECM cover out from left side of vehicle.
6. Depress clip holding ECM to caddy and remove ECM.
7. See Figure 6-18. Depress connector latch (3) and unplug ECM wiring harness connector (2) [78B] from ECM (1).

XR Models

⚠WARNING

To prevent accidental vehicle start-up, which could cause death or serious injury, remove main fuse before proceeding. (00251b)

1. Unplug main fuse. See 6.35 MAIN FUSE.
2. Remove rear fender. See 2.35 REAR FENDER: XR MODELS.
3. See Figure 6-19. Remove fasteners (1) and ECM (2).

INSTALLATION

XL Models

1. See Figure 6-18.Plug ECM wiring harness connector [78B] (2) into ECM. Gently press connector until latch (3) clicks in place.
2. Install ECM into caddy. Press ECM into caddy until it is held by clip.
3. See Figure 6-17.Slide ECM cover (4) into position from left side of vehicle.
4. Install ECM cover fastener (1). Tighten to 30-60 **in-lbs** (3.4-6.8 Nm).
5. Connect rear oxygen sensor (O2) connector [85]. Install O2 sensor wiring (3) into ECM cover and clip (5)
6. Connect fuel pump connector [141]. Install fuel pump wiring (2) into ECM cover (4).
7. Plug in main fuse.

NOTE

Perform ECM reprogramming and password learn procedure.

8. Perform password learn procedure. See 6.42 TSM/HFSM: PASSWORD LEARN.

XR Models

1. See Figure 6-19. Install ECM (2) and fasteners (1).
2. Tighten fasteners to 18-22 **in-lbs** (2.0-2.5 Nm).
3. Install rear fender. See 2.35 REAR FENDER: XR MODELS.
4. Plug in main fuse.

NOTE

Perform ECM reprogramming and password learn procedure.

5. Perform password learn procedure. See 6.42 TSM/HFSM: PASSWORD LEARN.

⚠WARNING

After installing seat, pull upward on seat to be sure it is locked in position. While riding, a loose seat can shift causing loss of control, which could result in death or serious injury. (00070b)

6. Install seat.

TURN SIGNAL AND SECURITY MODULE (TSM/TSSM/HFSM) 6.10

GENERAL

See Figure 6-20. The Turn Signal Module (TSM) has two major functions:

- Control turn signals.
- Serve as bank angle sensor.

The optional factory-installed security system provides the same functionality as the TSM, but also includes security and immobilization functions.

Two security system modules are available: The Turn Signal Security Module (TSSM) for Japan/Korea markets, and the Hands Free Security Module (HFSM) for all other markets.

See the electrical diagnostic manual for complete details of the TSM/TSSM/HFSM features and functions.

NOTE

The TSM/TSSM/HFSM cannot be repaired. Replace the unit if it fails.

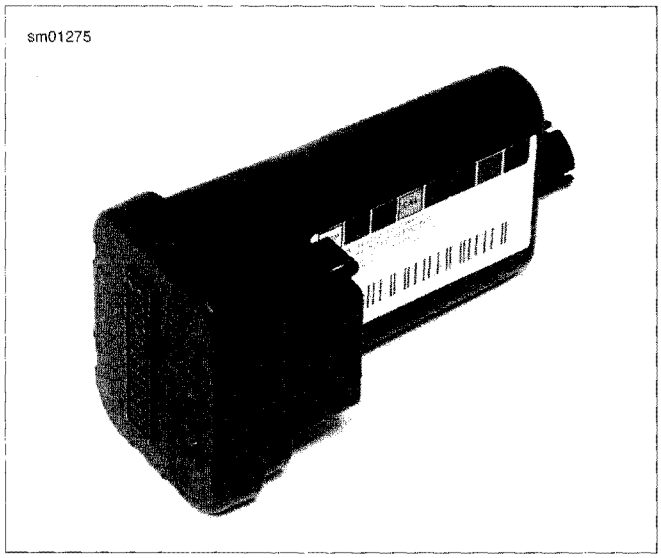

Figure 6-20. TSM/TSSM/HFSM (TSM Shown)

TESTING

For diagnostic information, see the electrical diagnostic manual.

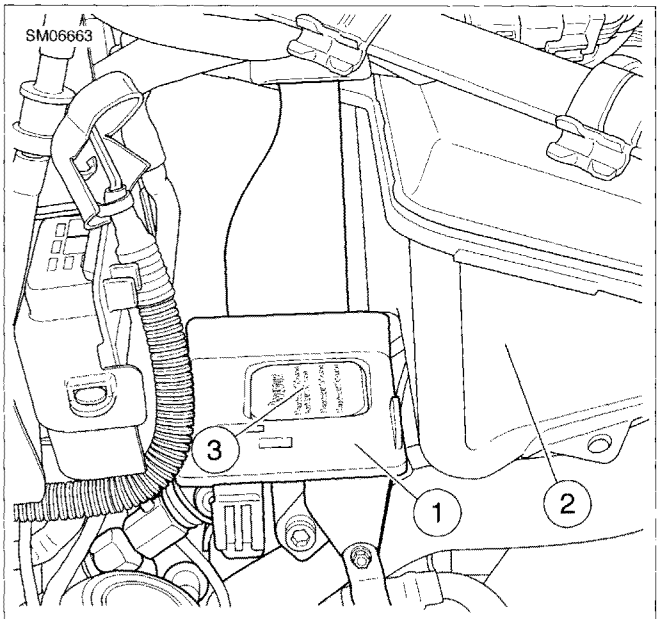

1. **Battery tray**
2. **Oil tank**
3. **TSM/TSSM/HFSM**

Figure 6-21. TSM/TSSM/HFSM Location: All Models (XL Shown)

REMOVAL

NOTE

See Figure 6-21. The TSM/TSSM/HFSM (3) is located in a cavity in the bottom of the battery tray (1).

1. Remove left side cover. See 2.19 LEFT SIDE COVER.
2. Remove battery. See 1.17 BATTERY MAINTENANCE.
3. Unplug wiring harness connectors: 4-pin connector [208] (HFSM only) has one latch. Unplug this connector first. Then unplug 12-pin connector [30B].
4. See Figure 6-22. Reach under the battery tray (1) and push upward on TSM/TSSM/HFSM (3) to lift it out of its cavity (2).
5. Remove TSM/TSSM/HFSM from vehicle.

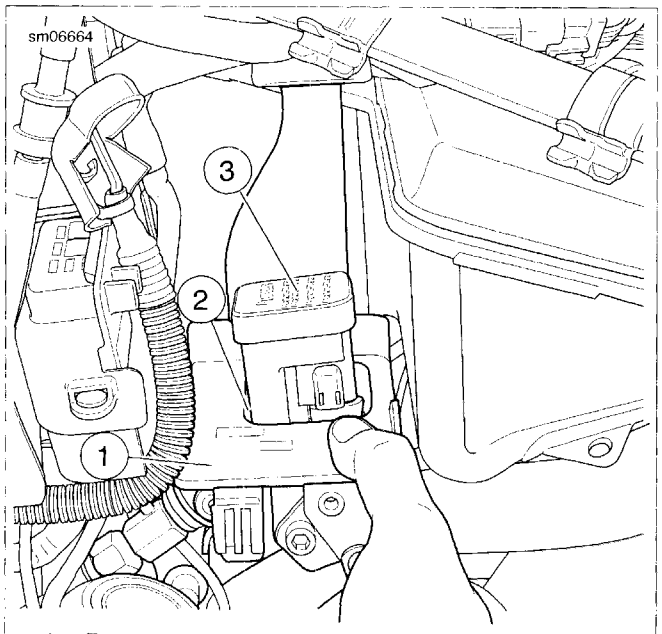

1. **Battery tray**
2. **Cavity**
3. **TSM/TSSM/HFSM**

Figure 6-22. TSM/TSSM/HFSM Connectors: All Models (XL Shown)

INSTALLATION

1. See Figure 6-22. Pull wiring harness connector [208] (HFSM only) and connector [30B] up through cavity (2) in bottom of battery tray (1).
2. Position TSM/TSSM/HFSM (3) over cavity with connector(s) facing oil tank.
3. Lower TSM/TSSM/HFSM into cavity. See Figure 6-21. Make sure top of TSM/TSSM/HFSM is flush with bottom of battery tray.
4. Plug 4-pin [208] (HFSM only) and 12-pin [30B] wiring harness connectors into TSM/TSSM/HFSM.
5. Install battery. Do not install left side cover at this time. See 1.17 BATTERY MAINTENANCE.
6. Perform TSM/TSSM/HFSM password learn and setup procedure. See 6.42 TSM/HFSM: PASSWORD LEARN for procedure.
7. Install left side cover. See 2.19 LEFT SIDE COVER.

REMOVAL

1. See Figure 6-23. Remove main fuse and holder (1) from battery strap (4) by grasping cover and sliding it toward the rear of the motorcycle.
2. Remove data link connector [91A] (6) from battery strap by grasping cover and sliding it toward the rear of the motorcycle.
3. Remove battery strap screw (5). Unhook battery strap from battery tray mount on top of battery and remove strap.

⚠WARNING

Prevent accidental vehicle start-up, which could cause death or serious injury. First disconnect negative (-) battery cable at engine and then positive (+) cable from battery. (00280b)

4. Disconnect negative (-) battery cable from crankcase. Disconnect positive (+) battery cables from battery. See 1.17 BATTERY MAINTENANCE.
5. Inspect main fuse wiring harness and holder. See 6.5 MAIN FUSE HOLDER, Replacement.
6. Note routing of negative (-) battery cable around frame downtube.

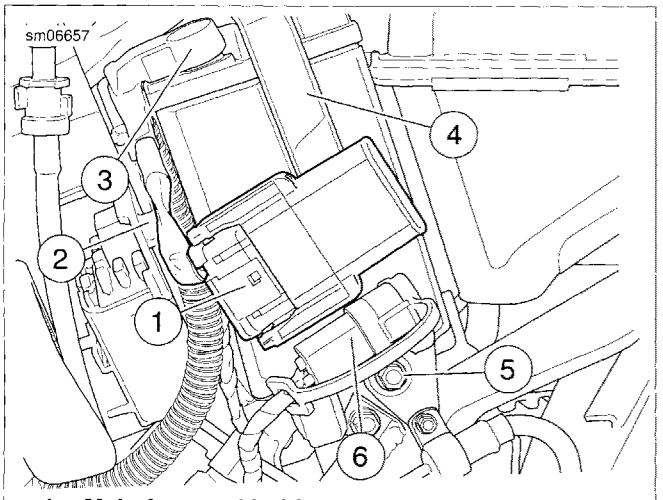

1. **Main fuse and holder**
2. **Positive (+) battery cable holder**
3. **Positive (+) battery terminal (under protective rubber boot)**
4. **Battery strap**
5. **Screw**
6. **Data link connector**

Figure 6-23. Main Fuse and Battery Location: All Models

7. Inspect positive (+) and negative (-) cables for cuts, fraying or other damage. See 1.17 BATTERY MAINTENANCE.
8. See Figure 6-24. As required, pull back rubber cap (3) and using a 12 mm wrench, remove nut with captive lock washer (5) and positive (+) battery cable (2) from starter post (4).

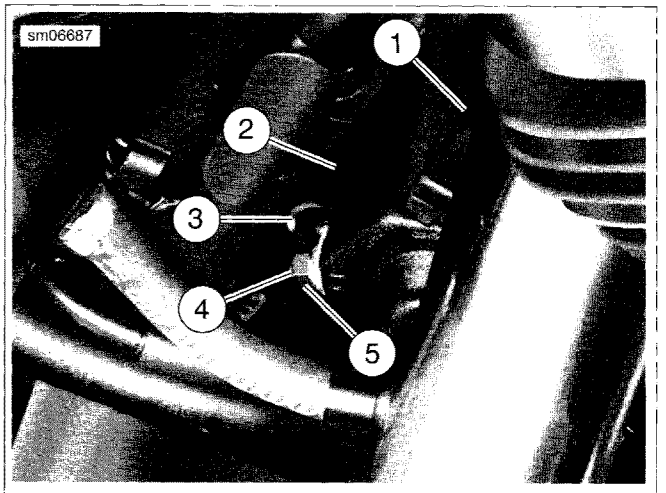

1. **Starter assembly**
2. **Positive (+) battery cable**
3. **Rubber cap**
4. **Starter post**
5. **Nut with captive lock washer**

Figure 6-24. Positive (+) Cable Starter Post Connection: All Models (XL Shown, Right Side View - Rubber Cap Pulled Back)

INSTALLATION

1. Apply a light coat of petroleum jelly or corrosion retardant material to the negative (-) battery terminal.
2. Slide battery in battery tray. Connect negative battery cable to battery. Tighten fastener to 60-70 **in-lbs** (6.8-7.9 Nm).

⚠WARNING

Connect positive (+) battery cable first. If positive (+) cable should contact ground with negative (-) cable connected, the resulting sparks can cause a battery explosion, which could result in death or serious injury. (00068a)

3. See Figure 6-23. With negative (-) battery cable disconnected from ground on crankcase, thread fastener through main fuse cable first, then through positive (+) battery cable, and into positive (+) battery terminal (3). Tighten to 60-70 **in-lbs** (6.8-7.9 Nm).
4. Apply a light coat of petroleum jelly or corrosion retardant material to the positive (+) battery terminal. Place protective rubber boot over terminal.
5. Hook top of battery strap (4) to battery tray mount on top of battery. Install screw (5) and tighten to 36-60 **in-lbs** (4.1-6.8 Nm).
6. Place positive (+) battery cable into holder on ECM caddy.
7. Hook main fuse and holder (1) to pin on battery strap and slide forward until it snaps into place.
8. Hook data link connector [91A] (6) to pin on battery strap and slide forward until it snaps into place.

9. See Figure 6-24. Install positive (+) battery cable (2) and nut with captive lock washer (5) on starter post (4). Using a 12 mm wrench, tighten lock nut to 60-85 **in-lbs** (6.8-9.6 Nm).
10. Push rubber cap (3) over starter post.
11. Place negative battery cable connector onto stud on crankcase boss behind starter motor assembly. Thread nut onto crankcase ground stud behind starter motor.
12. See Figure 6-24. Press negative battery cable connector against cable stop on crankcase. Using a swivel socket, tighten nut to 55-75 **in-lbs** (6.2-8.5 Nm).

⚠WARNING

After installing seat, pull upward on seat to be sure it is locked in position. While riding, a loose seat can shift causing loss of control, which could result in death or serious injury. (00070b)

13. Install seat.

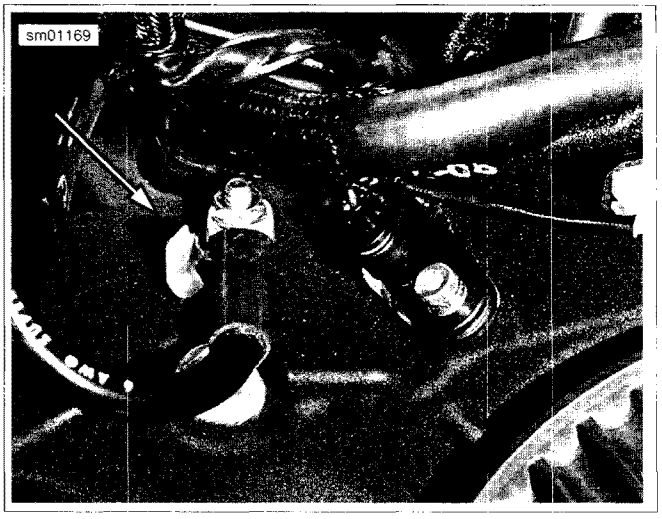

Figure 6-25. Negative Battery Cable Stop on Crankcase (Typical)

GENERAL

See Figure 6-26. The battery tray is located behind the vehicle's left side cover. The battery tray supports the battery, TSM/TSSM/HFSM, and rear brake lamp switch assembly (XL models only).

REMOVAL

1. Remove left side cover. See 2.19 LEFT SIDE COVER.

⚠WARNING

Prevent accidental vehicle start-up, which could cause death or serious injury. First disconnect negative (-) battery cable at engine and then positive (+) cable from battery. (00280b)

2. Disconnect battery cables, negative cable first, and remove battery. See 1.17 BATTERY MAINTENANCE.
3. Unplug and remove TSM/TSSM/HFSM. See 6.10 TURN SIGNAL AND SECURITY MODULE (TSM/TSSM/HFSM).
4. **XL models only:** see Figure 6-26. Reposition rear brake lamp switch as follows:
   a. Remove rear brake master cylinder reservoir cover by grasping cover and gently pull straight out from reservoir. Unbolt reservoir and secure out of the way with an elastic tiedown cord, mechanic's wire or cable strap. See 2.14 REAR BRAKE MASTER CYLINDER RESERVOIR.
   b. Remove brake line clamp fastener (5) from battery tray (4).
   c. Remove TORX fastener (3) securing rear brake lamp switch assembly (2) to battery tray. Gently pull brake lamp switch assembly back out of the way. Do not bend or stress metal brake lines.
   d. Remove ECM caddy fastener (1).

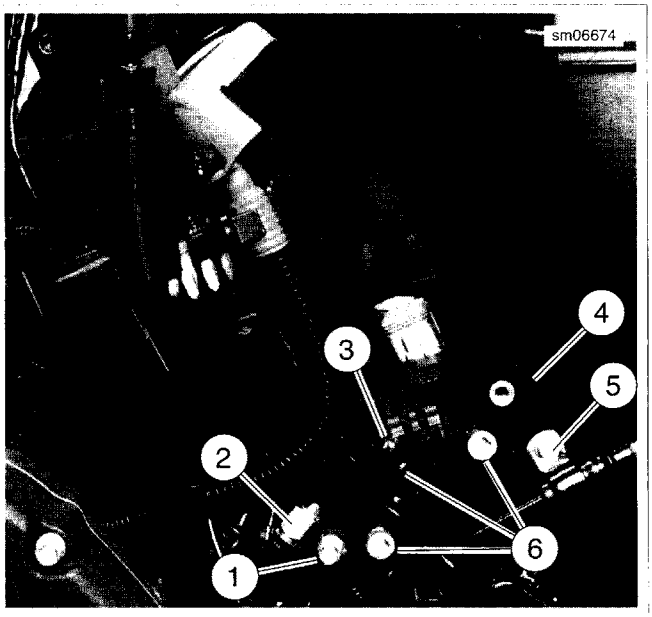

1. **ECM caddy fastener**
2. **Rear brake lamp switch assembly**
3. **TORX fastener**
4. **Battery tray**
5. **Brake line clamp fastener**
6. **Battery tray fastener**

Figure 6-26. Battery Tray Assembly

5. See Figure 6-27. Remove three fasteners (3) securing battery tray to mounting tabs on frame.
6. See Figure 6-27. Lift up battery tray slightly so that mounting tabs will clear mounts on frame. As you lift up on tray, pull down gently on end of battery strap support (2) to clear frame and wiring harnesses above battery tray.
7. Remove negative battery cable and vent line from battery tray retaining clips.
8. Slide battery tray out and remove from left side of vehicle.

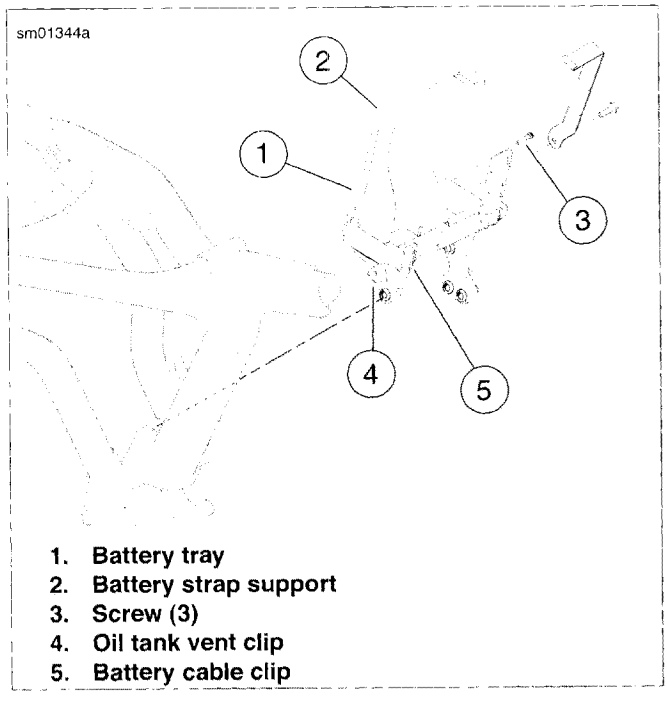

Figure 6-27. Battery Tray

INSTALLATION

1. See Figure 6-26. Make sure the TSM/TSSM/HFSM connector [30B], the antenna connector [208B] (HFSM only) and the rear brake lamp switch assembly (2) are out of the way.
2. See Figure 6-27. Slide battery tray (1) into place. Make sure battery tray mounting tabs are positioned behind (to the right of) frame mounts.
3. Secure the negative battery cable and the oil tank vent line to the battery tray retaining clips (5, 4).
4. Install three screws (3) to secure battery tray to frame. Do not tighten screws until all three have been started. Then tighten screws to 96-156 **in-lbs** (10.9-17.6 Nm).
5. **XL models only:** see Figure 6-26. Position rear brake lamp switch as follows:
   a. Install rear brake lamp switch (4). Secure with TORX screw (3). Tighten to 72-120 **in-lbs** (8.1-13.6 Nm).
   b. Secure brake hose clamp (5) to battery tray with screw. Tighten to 30-40 **in-lbs** (3.4-4.5 Nm).
   c. Install ECM caddy fastener (1). Tighten to 72-96 **in-lbs** (8.1-10.8 Nm).
   d. Install rear brake master cylinder reservoir. Secure using screw with captive washer. Tighten to 20-25 **in-lbs** (2.3-2.8 Nm). Install reservoir cover. See 2.14 REAR BRAKE MASTER CYLINDER RESERVOIR.
6. Install TSM/TSSM/HFSM into cavity in bottom of battery tray. See 6.10 TURN SIGNAL AND SECURITY MODULE (TSM/TSSM/HFSM).

⚠WARNING

Connect positive (+) battery cable first. If positive (+) cable should contact ground with negative (-) cable connected, the resulting sparks can cause a battery explosion, which could result in death or serious injury. (00068a)

7. Install battery. Connect battery cables, positive (+) cable first. See 1.17 BATTERY MAINTENANCE.
8. Install left side cover. See 2.19 LEFT SIDE COVER.

GENERAL

The starter is made up of a field coil assembly, solenoid assembly and drive assembly. The repair instructions contained in this section are divided into three major service areas accordingly.

NOTE

For troubleshooting and diagnostic information, see the electrical diagnostic manual for this motorcycle.

Wiring Diagrams

The starting circuit wiring diagram contains information about wiring configuration. For additional information, see the electrical diagnostic manual for this motorcycle.

Paint Touch-Up

On painted starters, paint is applied to the starter after assembly. Many of the procedures in this section involve disassembly of several painted joints. When servicing the starter, paint damage or flaking may occur in the area of these joints. Any damaged paint should be touched up after assembly prior to installation using the appropriate touch up paint. Follow the directions provided with the paint. Paint flaking does not require the starter to be replaced.

REMOVAL

⚠WARNING

Prevent accidental vehicle start-up, which could cause death or serious injury. First disconnect negative (-) battery cable at engine and then positive (+) cable from battery. (00280b)

1. Remove negative (-) battery cable from stud on engine crankcase boss behind starter motor assembly. See 1.17 BATTERY MAINTENANCE.
2. Open left side cover. See 2.19 LEFT SIDE COVER.
3. Remove positive (+) battery cable from battery positive (+) terminal. See 1.17 BATTERY MAINTENANCE.
4. Close left side cover.
5. Drain transmission lubricant and remove primary cover. See 5.3 PRIMARY CHAIN ADJUSTER.
6. Remove rear muffler and exhaust pipe. See 4.14 EXHAUST SYSTEM: XL MODELS or 4.15 EXHAUST SYSTEM: XR MODELS.
7. Remove positive (+) battery lead and solenoid wire from starter.

NOTE

A ball hex driver may be required to gain access to the starter mounting bolts.

8. See Figure 6-28. Remove the two starter mounting bolts and washers.
9. **XL Models:** Remove fastener securing oil line retaining clamp to starter.
10. Remove starter and gasket from right side of motorcycle.

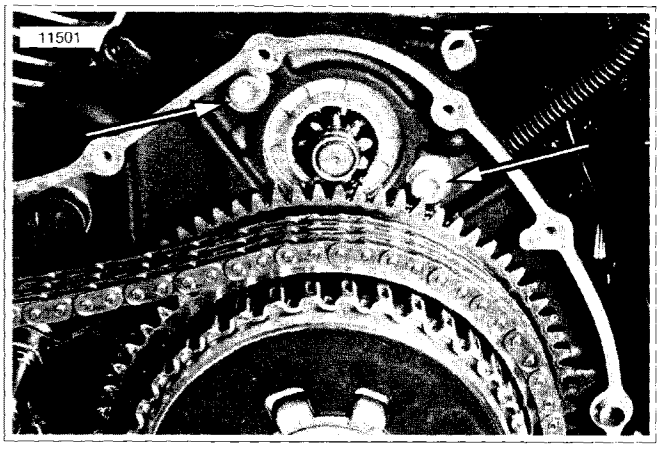

Figure 6-28. Starter Mounting Bolts

FIELD COIL ASSEMBLY

Disassembly

1. Remove screw to release end cover, if equipped.
2. Remove two nuts to release end cover bracket from thru bolts, if equipped.
3. Pull up rubber boot and remove hex nut with captive lockwasher to release field wire ring terminal from post on solenoid housing.
4. Loosen two thru bolts to release field coil from solenoid housing.
5. Pull field coil with end cap from solenoid housing.
6. Remove armature from field coil. Separating end cap and field coil flanges will facilitate removal.
7. Placing field coil on wooden block to prevent damage, use impact driver to remove two screws with captive washers from end cap. Discard screws.
8. Remove end cap from field coil.
9. Locate the two brushes attached to the field coil winding. Pushing on inboard side of one brush, grasp free end of brush spring on outboard side with the hooked end of a suitable pick. Raise end of brush spring only as far as necessary to free brush from brush holder. Repeat step to release second brush and then remove brush holder from field coil.

Inspection

1. For testing procedures, see the electrical diagnostic manual.
2. Inspect two O-rings in field coil bore for cuts, tears or signs of deterioration.
3. Place armature in lathe or truing stand and check runout of commutator. Commutators with more than 0.015 in. (0.38 mm) of runout should be replaced or machined on a lathe. Commutators should be replaced when diameter is less than 1.141 in. (29.98 mm).

4. Check depth of mica on commutator. If undercut is less than 0.008 in. (0.20 mm), use an undercutting machine to undercut the mica to 1/32 in. (0.79 mm) deep. The slots should then be cleaned to remove any dirt or copper dust.

NOTES

- *See Figure 6-29. If an undercutting machine is not available, undercutting can be done satisfactorily using a thin hacksaw blade. After undercutting, lightly sand the armature with crocus cloth to remove any burrs.*
- *Do not use sandpaper or emery cloth on commutator. The abrasive grit may remain on commutator segments and could cause excessive brush wear.*

5. Inspect armature roller bearings. Bearings must rotate freely without drag or sticking. Replace the bearings if pitted or grooved.
6. Replace brush springs if bent or distorted.

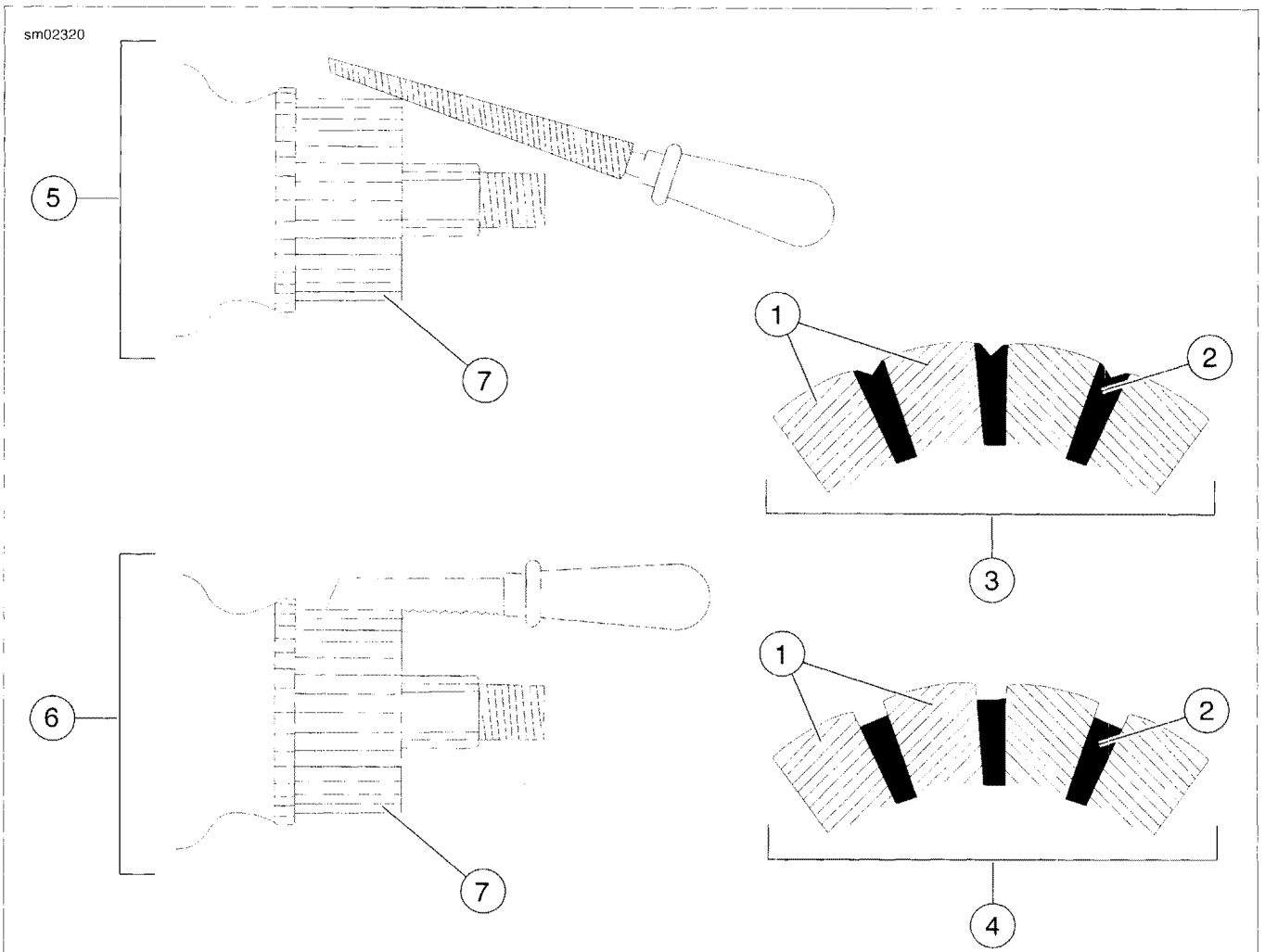

1. **Segments**
2. **Mica**
3. **Incorrect (Mica must not be left with a thin edge next to segments)**
4. **Correct (Mica must be cut away clean between segments)**
5. **Starting groove in mica with 3 cornered file**
6. **Undercutting mica with piece of hacksaw blade**
7. **Commutator**

Figure 6-29. Undercutting Mica Separators

Assembly

1. Attach brush holder to field coil. Locate the two brushes attached to the field coil winding. Catch free end of brush spring with the hooked end of a suitable pick. Raise end of brush spring only as far as necessary to install brush into brush holder. Repeat step to install second brush.
2. Retract all four brushes for armature installation. For good results, obtain four paper clips. Bend free end of each paper clip outward approximately 90 degrees. Then, pushing on inboard side of brush, insert straight end of paper clip between outboard side of brush and inboard side of brush spring. Properly installed, the paper clip contacts the framework of the brush holder to keep spring

pressure off the brush. Repeat step on remaining three brushes as shown in Figure 6-30.

3. Install armature in solenoid housing so that larger bearing on splined end seats in counterbore. Lubricate armature bearings with high temperature grease, such as LUBRI-PLATE 110, before installation.
4. Mate field coil and solenoid housings. For proper assembly, a nub on the field coil housing flange must engage the slot on solenoid housing flange closest to the short (field wire) post on the solenoid housing.
5. Carefully place brush holder over armature. If additional clearance is needed, use a small flat blade screwdriver to gently push back the brushes slightly.
6. When the brush holder is centered over the armature, remove four paper clips to release brush springs. Verify that ends of brush springs make proper contact with brush sides.
7. Install end cap aligning holes in cap with those in brush holder. Start two **new** screws with captive washers. Tighten screws until snug.
8. Install thru bolts to fasten field coil to solenoid housing. Tighten thru bolts to 39-65 **in-lbs** (4.4-7.3 Nm).
9. Attach field wire ring terminal to short post on solenoid housing and install hex nut with captive lockwasher. Tighten hex nut to 70-90 **in-lbs** (7.9-10.2 Nm). Cover field wire ring terminal with rubber boot.
10. Install end cover bracket onto threaded end of thru bolts, if equipped. For proper orientation, be sure that the longest end of the bracket (before the bend) is on the field wire side. Install two nuts and tighten until snug.
11. Install screw to fasten end cover to end cover bracket, if equipped. Tighten screw to 90-110 **in-lbs** (10.2-12.4 Nm).

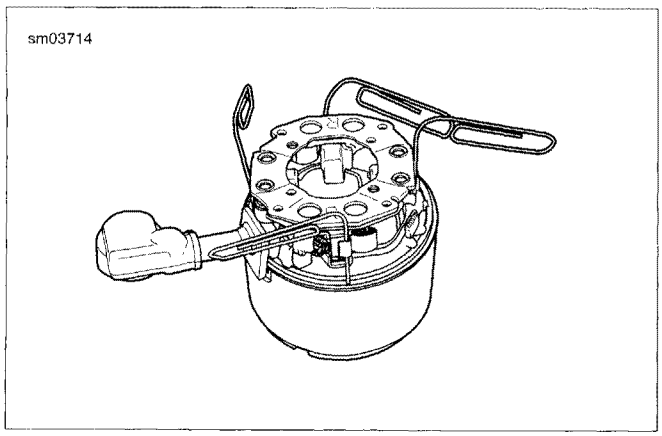

Figure 6-30. Install Paper Clips to Hold Brush Springs

DRIVE ASSEMBLY

Disassembly

1. Remove field coil. See 6.13 STARTER, Field Coil Assembly.
2. Pull field coil with end cap from solenoid housing. Hold end cap to field coil to avoid pulling armature out of brush holder. If armature is pulled from brush holder, further disassembly is required.
3. Using a 9 mm socket, remove two hex screws with Phillips recess to release drive housing from solenoid housing.
4. Use a rubber mallet to separate drive and solenoid housings, if necessary.
5. Remove idler gear from bearing cage in drive housing. Remove bearing cage with five steel cylinders from shaft in drive housing.
6. Push on end of drive shaft to remove starter clutch assembly from drive housing.
7. Compressing internal springs, remove snap ring from groove at end of drive shaft.
8. Remove cup, pinion gear, short spring and spring seat from splined end of drive shaft.
9. Push on splined end of drive shaft to remove from starter clutch bore.
10. Remove long spring from drive shaft. Remove steel ball from drive shaft bore.
11. Remove return spring from solenoid plunger shaft.

Inspection

1. Inspect two O-rings in drive housing bore for cuts, tears or signs of deterioration.
2. Replace springs if kinked, elongated or distorted.
3. Inspect pinion gear and drive shaft gear. Replace if pitted, scored, rounded, cracked, chipped or worn.
4. Inspect roller bearings. Bearings must rotate freely without drag or sticking. Replace the bearings if pitted or grooved.
5. Inspect the steel ball for wear, pitting, surface breakdown or other damage.
6. Replace snap ring if bent or distorted.

Assembly

1. Install long spring onto drive shaft. Install steel ball in drive shaft bore. Insert splined end of drive shaft into starter clutch bore (gear side).
2. Insert a deepwell socket into starter clutch bore and stand assembly upright on work bench with the socket side down.
3. Push down on starter clutch, so that installed socket pushes against the drive shaft gear to compress the spring. Holding assembly with spring compressed, install spring seat, short spring, pinion gear and cup on splined end of drive shaft. Be sure that the collar on the pinion gear and the concave side of the cup both face the splined end of the drive shaft.
4. While pushing down to simultaneously compress both the long and short springs installed, install snap ring in groove at splined end of drive shaft. Verify that snap ring is fully seated in the groove and that it resides in concave portion of cup when spring tension is released.
5. Remove deepwell socket from starter clutch bore.

6. Install bearing cage with five steel cylinders onto shaft in drive housing. Be sure that all five steel cylinders are installed in grooves of bearing cage. Install idler gear over bearing cage. Lubricate parts with high temperature grease, such as LUBRIPLATE 110, during assembly.
7. Install starter clutch assembly in drive housing seating the larger bearing in the counterbore. Lubricate bearings with LUBRIPLATE 110 before installation.
8. Apply a light film of LUBRIPLATE 110 to solenoid plunger shaft. Install return spring on solenoid plunger shaft.
9. Mate the solenoid and drive housings and install two hex screws using a 9 mm socket. Alternately tighten hex screws until snug.
10. Lubricate armature bearing with LUBRIPLATE 110. Seating armature bearing in counterbore, mate field coil and solenoid housings. For proper assembly, a nub on the field coil housing flange must engage the slot on solenoid housing flange closest to the short (field wire) post on the solenoid housing.
11. Install field coil. See 6.13 STARTER, Field Coil Assembly.

INSTALLATION

1. Install starter and starter gasket from right side of motorcycle.
2. See Figure 6-28. Install two starter mounting bolts and washers. Tighten to 13-20 ft-lbs (17.6-27.1 Nm).
3. Install oil line clamp to starter motor. Tighten fastener to 16-21 **in-lbs** (1.8-2.4 Nm).
4. Install positive (+) battery cable and solenoid wire to solenoid stud. Tighten nut to 60-85 **in-lbs** (6.8-9.6 Nm). Place rubber boot securely over terminal.
5. Install primary cover. See 5.3 PRIMARY CHAIN ADJUSTER.
6. Fill primary chaincase / transmission with proper lubricant; see 1.14 TRANSMISSION LUBRICANT for details.
7. Install rear exhaust pipe and muffler. See 4.15 EXHAUST SYSTEM: XR MODELS or 4.15 EXHAUST SYSTEM: XR MODELS.

⚠WARNING

Connect positive (+) battery cable first. If positive (+) cable should contact ground with negative (-) cable connected, the resulting sparks can cause a battery explosion, which could result in death or serious injury. (00068a)

8. Open left side cover. See 2.19 LEFT SIDE COVER.
9. Connect positive (+) battery cable to battery positive (+) terminal. See 1.17 BATTERY MAINTENANCE. Close left side cover.
10. Connect negative (-) battery cable to stud on engine crankcase behind starter motor assembly. See 1.17 BATTERY MAINTENANCE.

SOLENOID ASSEMBLY

Disassembly

1. Remove field coil. See 6.13 STARTER, Field Coil Assembly.
2. Pull field coil with end cap from solenoid housing. Hold end cap to field coil to avoid pulling armature out of brush holder. If armature is pulled from brush holder, further disassembly is required.
3. Remove two hex screws (metric) to release solenoid housing from drive housing.
4. Use a rubber mallet to separate solenoid and drive housings, if necessary.
5. Remove return spring from solenoid plunger shaft.

Assembly

1. Install return spring on solenoid plunger shaft.
2. Mate the solenoid and drive housings and install two hex screws (metric). Tighten hex screws until snug.
3. Lubricate armature bearing with LUBRIPLATE 110. Seating armature bearing in counterbore, mate field coil and solenoid housings. For proper assembly, a nub on the field coil housing flange must engage the slot on solenoid housing flange closest to the short (field wire) post on the solenoid housing.
4. Install field coil. See 6.13 STARTER, Field Coil Assembly.

SOLENOID PLUNGER

Disassembly

1. Remove three hex screws to release solenoid cover.
2. Remove rubber gasket from solenoid cover flange.
3. Remove plunger and return spring.

Assembly

1. Apply a light film of LUBRIPLATE 110 to plunger shaft and install return spring. Install plunger in solenoid.
2. Install **new** rubber gasket on solenoid cover flange.
3. Install three hex screws to secure solenoid cover. Alternately tighten hex screws until snug.

SOLENOID CONTACTS

Disassembly

1. Remove three hex screws to release solenoid cover.
2. Remove rubber gasket from solenoid cover flange.
3. Remove plunger and return spring.
4. Obtain Solenoid Contact Repair Kit.
5. Disassemble short post (field coil):
   a. See Figure 6-31. Remove hex nut from post, if still installed. Remove jam nut, wave washer, round bushing and O-ring from post.
   b. On inside of solenoid housing, remove post bolt, hold-in terminal, contact plate and square bushing.
6. Disassemble long post (battery):
   a. Remove hex nut from post, if still installed. Remove jam nut, wave washer, round bushing and O-ring from post.
   b. On inside of solenoid housing, remove post bolt, contact plate, square bushing and paper insulator washer.

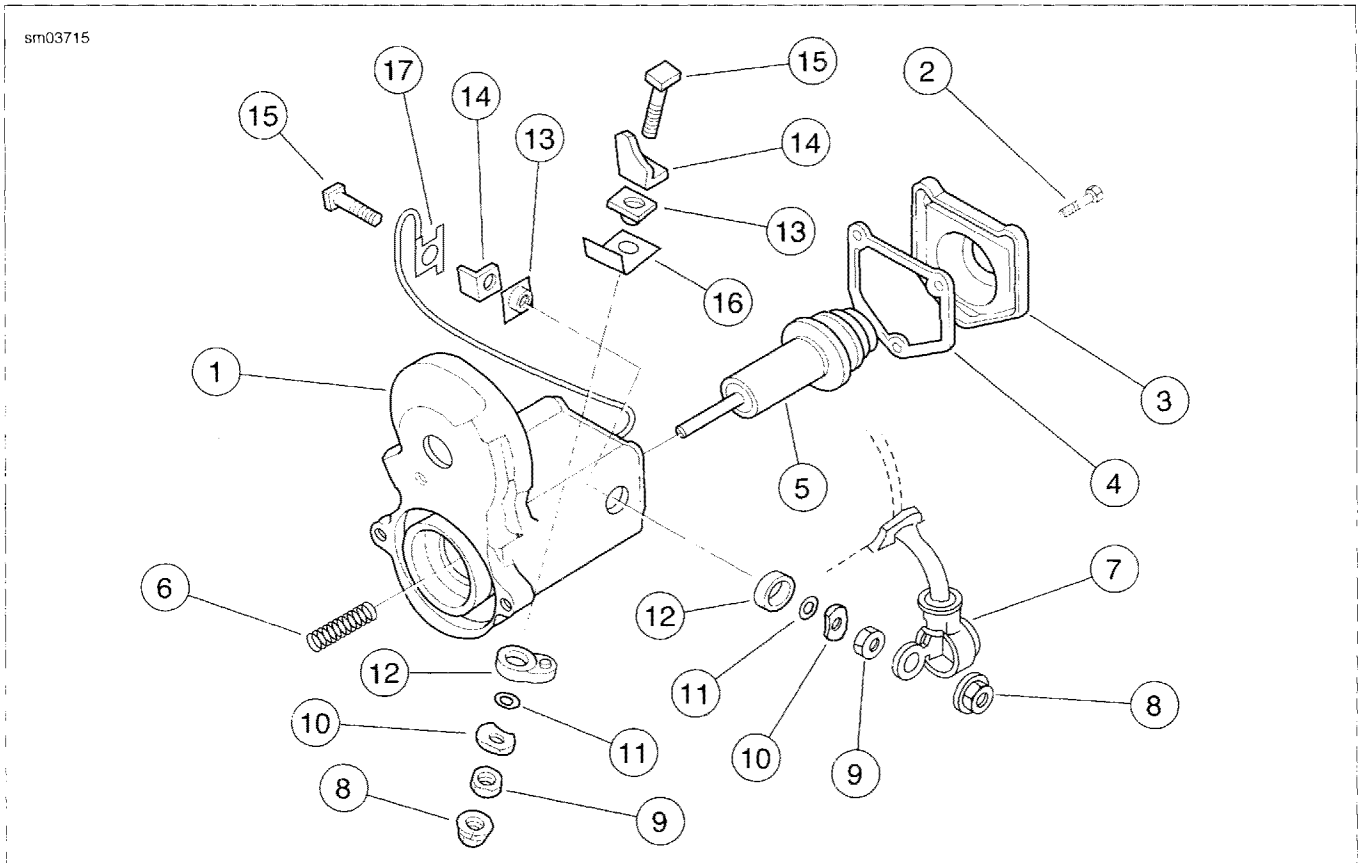

1. **Solenoid**
2. **Hex screw**
3. **Solenoid cover**
4. **Rubber gasket**
5. **Plunger**
6. **Return spring**
7. **Rubber boot**
8. **Hex nut**
9. **Jam nut**
10. **Wave washer**
11. **O-ring**
12. **Round bushing**
13. **Square bushing**
14. **Contact plate**
15. **Post bolt**
16. **Paper insulator washer**
17. **Hold-in terminal**

Figure 6-31. Solenoid Assembly

Assembly

1. Assemble short post (field coil):
   a. From inside solenoid housing, insert sleeve on square bushing into hole in solenoid housing.
   b. With the foot inboard against solenoid winding, align hole in contact plate with hole in square bushing.
   c. Slide short post bolt through holes in hold-in terminal, contact plate, square bushing and solenoid housing.
   d. At outside of solenoid housing, install round bushing, O-ring and wave washer onto end of post. Install jam nut, but do not tighten.
2. Assemble long post (battery):
   a. On inside of solenoid housing, align hole in paper insulator washer with hole in solenoid housing. Insert sleeve on square bushing into holes.
   b. With the foot inboard against solenoid winding, align hole in contact plate with hole in square bushing.
   c. Slide long post bolt through holes in contact plate, square bushing, paper insulator washer and solenoid housing.
   d. At outside of solenoid housing, install round bushing, O-ring and wave washer onto end of post. Verify that index pin on round bushing engages blind hole in solenoid housing. Install jam nut, but do not tighten.
3. Apply a light film of LUBRIPLATE 110 to plunger shaft and install return spring. Install plunger in solenoid.

4. While depressing plunger, alternately tighten jam nuts to 65-80 **in-lbs** (7.3-9.0 Nm). Verify that contact plates have not rotated out of alignment with plunger.
5. Install **new** rubber gasket on solenoid cover flange.
6. Install three hex screws to secure solenoid cover. Alternately tighten hex screws until snug.

GENERAL

See Figure 6-32. A combination ignition and light switch is located on the right side of the frame in front of the fuel tank.

The motorcycle key unlocks the ignition/light switch. The rider rotates the key to select one of three positions. Refer to Table 6-10.

NOTE

The ignition/light switch cannot be repaired. Replace the unit if it fails.

To lock the switch, the key is removed in either OFF or ACC.

To leave the 4-way flashers and the tail lamp on and lock the switch, the rider can remove the key in ACC. In ACC, the instrument (icon) lamps, 4-way flashers (front and rear directional), horn and brake lamp are on or can be activated. On HDI motorcycles the position lamp and taillight are on.

⚠WARNING

The automatic-on headlamp feature provides increased visibility of the rider to other motorists. Be sure headlamp is on at all times. Poor visibility of rider to other motorists can result in death or serious injury. (00030b)

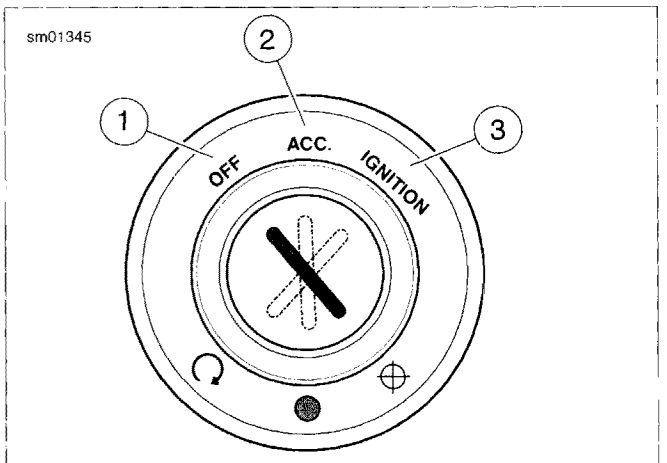

1. **Ignition OFF**
2. **Accessory (ACC) ON**
3. **Ignition ON**

Figure 6-32. Ignition/Light Switch

Table 6-10. Ignition/Headlamp Switch Positions: Sportster Models

LOCATION AND OPERATION	SWITCH POSITION	FUNCTION
Switch is on right side of steering neck. Push in and turn key to operate.	OFF	Ignition and lamps are off. Key may be removed.
	ACC*	Instrument lamps are on. Brake lamp and horn can be activated. Key may be removed except for international models.
	IGNITION*	Ignition and lamps are on.
*International models have an additional function - position lamp and tail lamp are also on.		

REMOVAL

⚠WARNING

To prevent spray of fuel, purge system of high-pressure fuel before supply line is disconnected. Gasoline is extremely flammable and highly explosive, which could result in death or serious injury. (00275a)

1. Purge the fuel supply hose of high pressure gasoline. Disconnect fuel supply hose from fuel pump module. See 4.5 FUEL TANK: XL MODELS or 4.6 FUEL TANK: XR MODELS.

⚠WARNING

To prevent accidental vehicle start-up, which could cause death or serious injury, remove main fuse before proceeding. (00251b)

2. Unplug main fuse. See 6.35 MAIN FUSE.
3. See Figure 6-33. Remove ignition switch face nut (5).
4. Remove seat.
5. Remove fuel tank. See 4.5 FUEL TANK: XL MODELS or 4.6 FUEL TANK: XR MODELS.
6. Remove mounting screw (7). Remove switch cover (3). Remove switch (2) from switch cover (3).
7. Cut and discard cable strap securing switch harness to wire harness caddy. Cut switch wires 3.0 in. (76.2 mm) from switch. Remove harness covering.

INSTALLATION

PART NUMBER	TOOL NAME
HD-39969	ULTRA TORCH UT-100

1. Slide replacement conduit on harness wires.

⚠WARNING

Be sure to follow manufacturer's instructions when using the UltraTorch UT-100 or any other radiant heating device. Failure to follow manufacturer's instructions can cause a fire, which could result in death or serious injury. (00335a)

2. Observing color codes, install butt connectors to harness wires. Complete butt splice to **new** ignition switch. Seal butt splice connectors using ULTRA TORCH UT-100 (Part No. HD-39969) or other radiant heating device. See A.16 SEALED SPLICE CONNECTORS for more detailed information.
3. Slide conduit over butt splice connectors.
4. See Figure 6-33. Insert ignition switch into hole of switch cover. The word "TOP" stamped on the switch body should face upward toward the lettering on the switch position decal. Loosely install face nut (5).
5. Install and tighten mounting screw (7) to 35-45 **in-lbs** (4.0-5.1 Nm).
6. Tighten face nut (5) to secure switch (2) within cover (3).
7. Using **new** cable strap (6), secure ignition switch harness to wire harness caddy.
8. Install fuel tank. See 4.5 FUEL TANK: XL MODELS or 4.4 AIR BOX: XR MODELS.

⚠WARNING

After installing seat, pull upward on seat to be sure it is locked in position. While riding, a loose seat can shift causing loss of control, which could result in death or serious injury. (00070b)

9. Install seat.
10. Plug in main fuse.

⚠WARNING

Be sure that all lights and switches operate properly before operating motorcycle. Low visibility of rider can result in death or serious injury. (00316a)

11. Check ignition/light switch for proper operation.

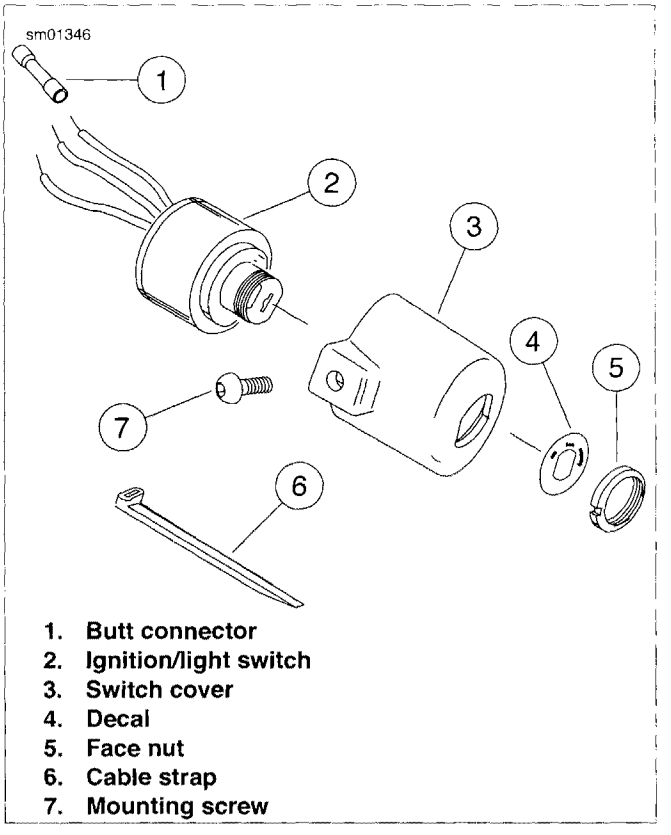

1. **Butt connector**
2. **Ignition/light switch**
3. **Switch cover**
4. **Decal**
5. **Face nut**
6. **Cable strap**
7. **Mounting screw**

Figure 6-33. Ignition/Light Switch Assembly

GENERAL

Resistor-type high-tension spark plug cables have a carbon-impregnated fabric core (instead of solid wire) for radio noise suppression and improved reliability of electronic components. Use the exact replacement cable for best results.

REMOVAL

⚠WARNING

To prevent spray of fuel, purge system of high-pressure fuel before supply line is disconnected. Gasoline is extremely flammable and highly explosive, which could result in death or serious injury. (00275a)

1. Purge the fuel supply hose of high-pressure gasoline. Disconnect fuel supply hose from fuel pump module. See 4.5 FUEL TANK: XL MODELS or 4.6 FUEL TANK: XR MODELS.

⚠WARNING

To prevent accidental vehicle start-up, which could cause death or serious injury, remove main fuse before proceeding. (00251b)

2. Unplug main fuse. See 6.35 MAIN FUSE.
3. Remove seat. See 2.37 SEAT: XL MODELS or 2.38 SEAT: XR MODELS.
4. Remove fuel tank. See 4.5 FUEL TANK: XL MODELS or 4.6 FUEL TANK: XR MODELS.
5. **XL models only:** See Figure 6-34. Remove screw (1) securing left wire harness caddy (2) to right wire harness caddy. See 6.30 ELECTRICAL CADDIES. Carefully disengage left wire harness caddy and pull away from frame backbone.

NOTE

When disconnecting each spark plug cable from its spark plug terminal, always grasp and pull on the rubber boot at the end of the cable assembly (as close as possible to the spark plug terminal). Do not pull on the cable portion itself. Pulling on the cable will damage the cable's carbon core.

6. See Figure 6-35 or Figure 6-36. Pull front spark plug boot and cable (2) from left side ignition coil (1) tower.

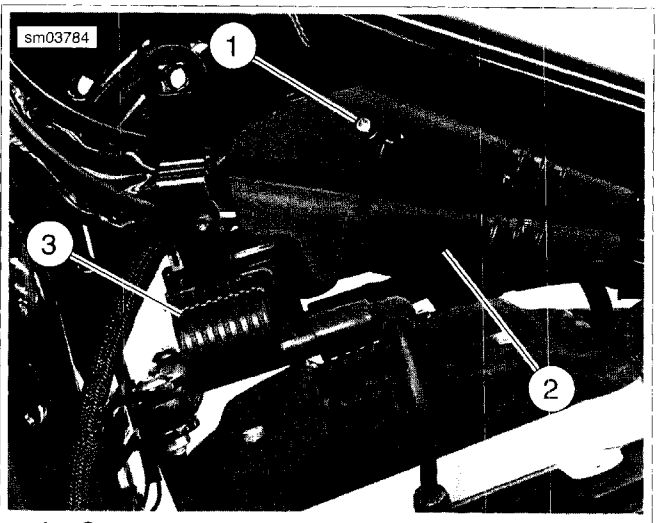

1. Screw
2. Left wire harness caddy
3. Ignition coil

Figure 6-34. Ignition Coil and Left Wire Harness Caddy (XL Models Only)

7. Pull rear spark plug boot (3) and cable from right side ignition coil tower.
8. Unplug spark plug boot and cable assemblies from front and rear spark plugs.
9. **XL models only:** Disengage rear spark plug cable from notch in right wire harness caddy (5) and remove cable from vehicle.
10. **XR models only:** See Figure 6-36. Disengage rear spark plug cable from wire harness caddy (5) and remove cable from vehicle.

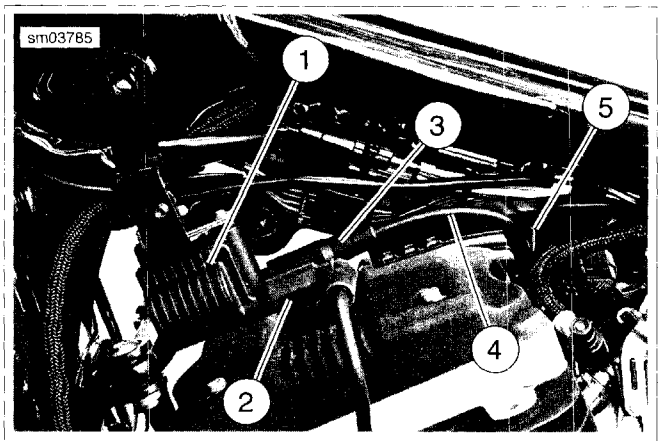

1. Ignition coil
2. Front spark plug cable boot
3. Rear spark plug cable boot
4. Rear spark plug cable
5. Notch in right wire harness caddy

Figure 6-35. Spark Plug Cable Routing (XL Models Only)

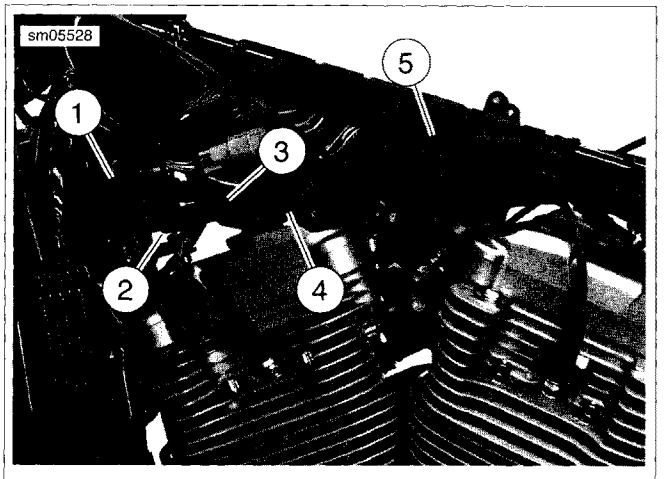

1. **Ignition coil**
2. **Front spark plug cable boot**
3. **Rear spark plug cable boot**
4. **Rear spark plug cable**
5. **Harness caddy**

Figure 6-36. Spark Plug Cable Routing (XR Models Shown)

11. **XL models only:** See Figure 6-37. Remove rear spark plug cable (2) from curved trough on wire harness caddy (1). Cut cable strap (4). Feed spark plug cable out from between frame and engine and remove cable from vehicle. Remove cable strap from mounting boss on caddy latch clip (5). Discard cable strap.

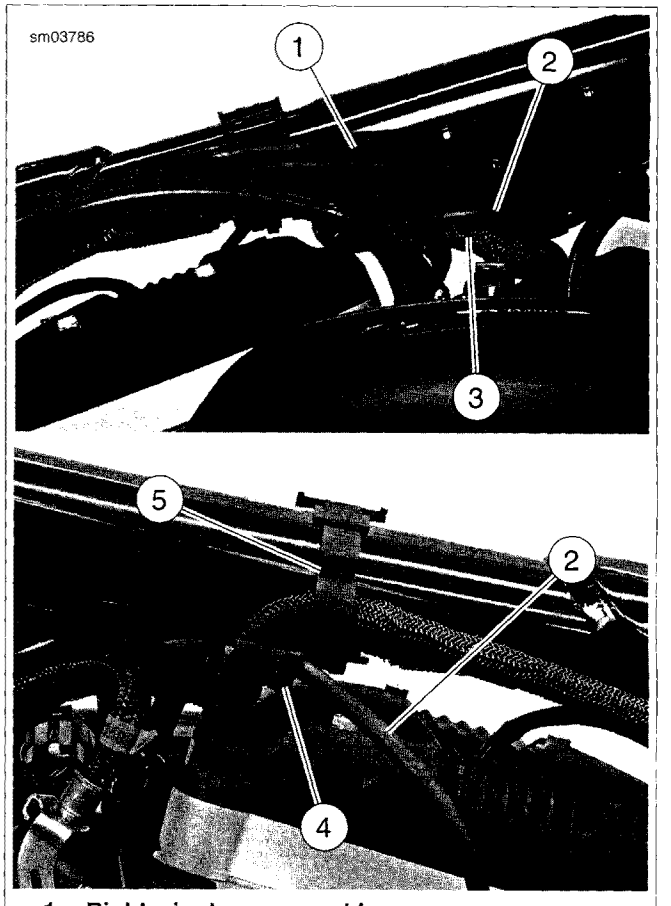

1. **Right wire harness caddy**
2. **Rear spark plug cable**
3. **Engine sub-harness**
4. **Cable strap**
5. **Caddy latch clip**

Figure 6-37. Rear Spark Plug Cable Routing (XL Models Only)

INSTALLATION

1. See Figure 6-35 or Figure 6-36. Plug rear spark plug cable boot (3) into right side ignition coil (1) tower.
2. **XL models only:** Route cable between wire harness caddies, and down through notch (5) in right caddy, toward right side of engine.
3. **XR models only:** Route rear spark plug cable through harness caddy (5) as shown.
4. **XL models only:** See Figure 6-37. Route rear spark plug cable (2) in trough in right wire harness caddy (1), over top of engine sub-harness (3) and back toward left side of engine.
5. **XL models only:** See Figure 6-38. Install **new** barbed cable strap (3) onto spark plug cable (1), 7.0-7.25 in. (178-184 mm) from tip of spark plug cable boot (2), orienting cable strap so that spark plug cable is above mounting boss on caddy latch clip when barbed prong on cable strap is inserted in hole in boss. Press cable strap barbed prong firmly into hole in caddy latch clip mounting boss.
6. Plug rear spark plug cable and boot onto rear spark plug until it clicks.

7. See Figure 6-35 or Figure 6-36. Plug front spark plug cable and boot (2) into left side ignition coil (1) tower. Plug other end of cable onto front spark plug until it clicks.

NOTE

Make sure rear spark plug cable is routed properly and cannot chafe against frame, fuel tank or rear cylinder head.

8. **XL models only:** See Figure 6-34. Mate left wire harness caddy (2) to right wire harness caddy. Secure with screw (1) and tighten. See 6.30 ELECTRICAL CADDIES.

9. Install fuel tank. See 4.5 FUEL TANK: XL MODELS or 4.6 FUEL TANK: XR MODELS.

⚠WARNING

After installing seat, pull upward on seat to be sure it is locked in position. While riding, a loose seat can shift causing loss of control, which could result in death or serious injury. (00070b)

10. Install seat. See 2.37 SEAT: XL MODELS or 2.38 SEAT: XR MODELS.

11. Plug in main fuse. See 6.35 MAIN FUSE.

12. Start vehicle and verify proper ignition function.

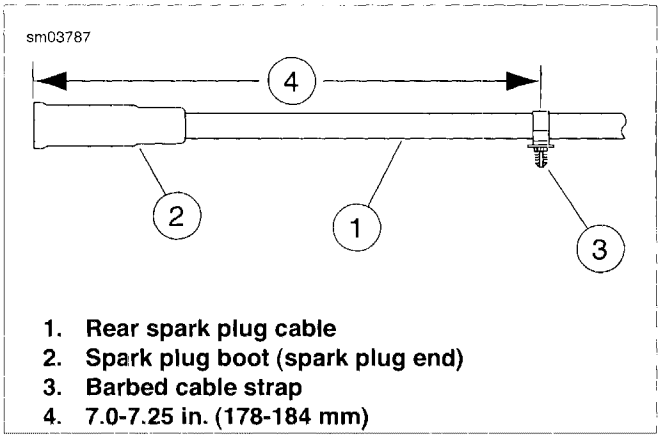

Figure 6-38. Rear Spark Plug Cable and Cable Strap (XL Models Only)

GENERAL

The ignition coil is attached to a mounting bracket secured by the front fuel tank mounting bolt. The unit is divided into separate front and rear coils that fire the spark plugs one cylinder at a time.

The ignition coil is mounted on the left half of a two-piece bracket assembly. The right half of the bracket assembly secures the ignition switch and right wire harness caddy to the vehicle. The two bracket halves are secured together with a screw.

NOTE

The ignition coil cannot be repaired. Replace the unit if it fails.

TROUBLESHOOTING

See the electrical diagnostic manual for complete troubleshooting information.

REMOVAL

⚠WARNING

To prevent spray of fuel, purge system of high-pressure fuel before supply line is disconnected. Gasoline is extremely flammable and highly explosive, which could result in death or serious injury. (00275a)

1. Purge the fuel supply hose of high pressure gasoline. Disconnect fuel supply hose from fuel pump module on bottom left side of fuel tank. See 4.5 FUEL TANK: XL MODELS or 4.6 FUEL TANK: XR MODELS.

⚠WARNING

To prevent accidental vehicle start-up, which could cause death or serious injury, remove main fuse before proceeding. (00251b)

2. Unplug main fuse. See 6.35 MAIN FUSE.
3. Remove seat. 2.37 SEAT: XL MODELS or 2.38 SEAT: XR MODELS.
4. Remove fuel tank. See 4.5 FUEL TANK: XL MODELS or 4.6 FUEL TANK: XR MODELS.
5. **XL Models Only:** See Figure 6-39. Remove screw (1) securing left wire harness caddy (2) to right wire harness caddy. See 6.30 ELECTRICAL CADDIES. Carefully disengage left wire harness caddy and pull away from frame backbone.

NOTE

When disconnecting each spark plug cable from its spark plug terminal, always grasp and pull on the rubber boot at the end of the cable assembly (as close as possible to the spark plug terminal). Do not pull on the cable portion itself. Pulling on the cable will damage the cable's carbon core.

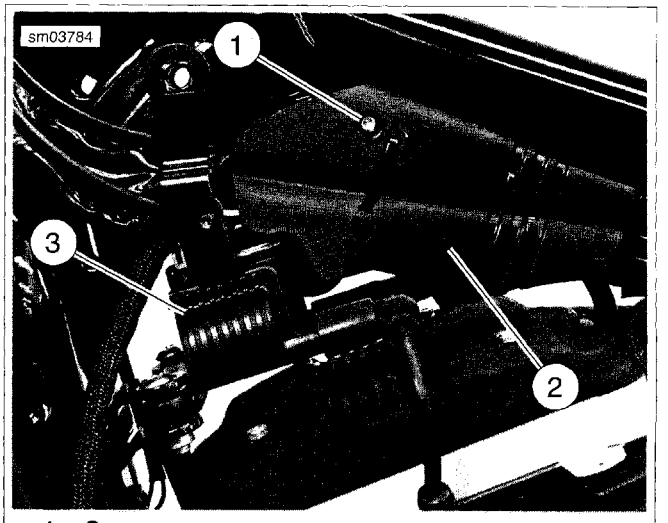

1. **Screw**
2. **Left wire harness caddy**
3. **Ignition coil**

Figure 6-39. Ignition Coil and Left Wire Harness Caddy (XL Models Only)

6. See Figure 6-40 or Figure 6-41. Unplug coil harness connector [83B] (2) from ignition coil (1).
7. Pull front spark plug boot and cable (3) from left ignition coil tower.
8. Pull rear spark plug boot and cable (4) from right ignition coil tower.
9. Remove screw (5) securing coil bracket (6). Remove coil and bracket from vehicle.
10. See Figure 6-42 or Figure 6-43. Remove two screws (4) to separate ignition coil (1) from mounting bracket (2) and plate (3).

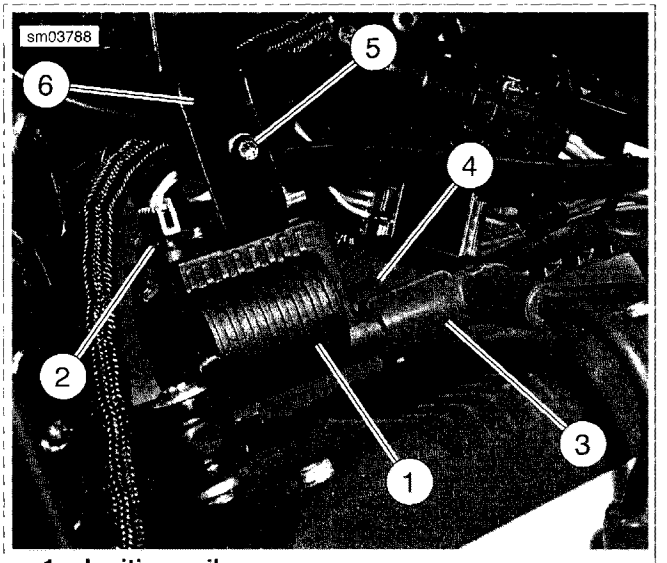

1. Ignition coil
2. Coil harness connector [83B]
3. Front spark plug boot and cable
4. Rear spark plug boot and cable
5. Screw
6. Mounting bracket

Figure 6-40. Ignition Coil Mounting and Connections: XL Models Only

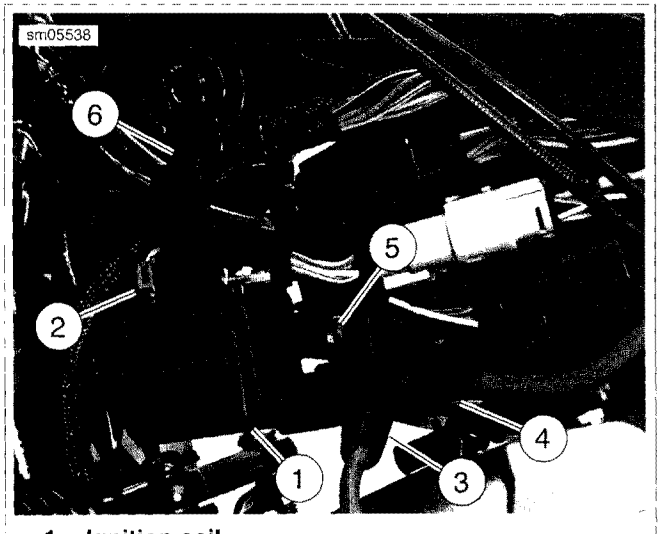

1. Ignition coil
2. Coil harness connector [83B]
3. Front spark plug boot and cable
4. Rear spark plug boot and cable
5. Screw
6. Mounting bracket

Figure 6-41. Ignition Coil Mounting and Connections: XR Models Only

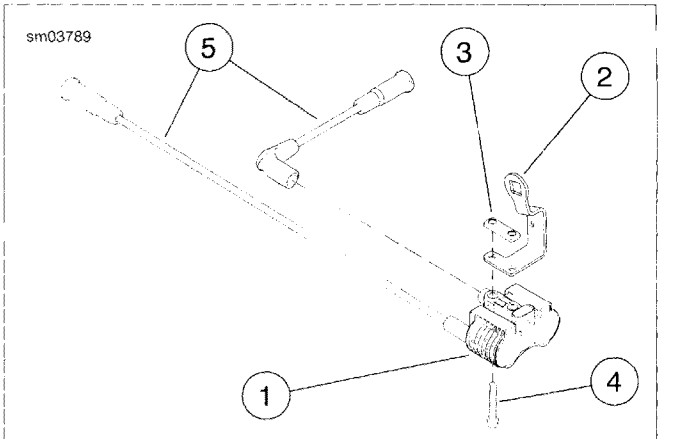

1. Ignition coil
2. Mounting bracket
3. Plate
4. Screw (2)
5. Spark plug cables (2)

Figure 6-42. Ignition Coil Mounting: XL Models Only

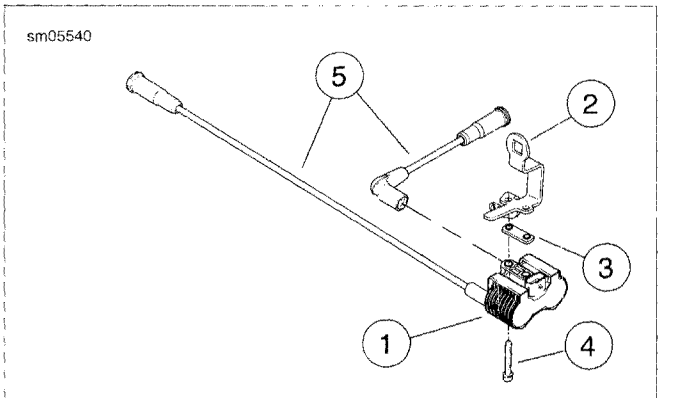

1. Ignition coil
2. Mounting bracket
3. Plate
4. Screw (2)
5. Spark plug cables (2)

Figure 6-43. Ignition coil Mounting: XR Models Only

INSTALLATION

1. **XL Models Only:** see Figure 6-42. Position **new** ignition coil (1) on underside of mounting bracket (2). Fasten coil to mounting bracket with two screws (4) and nut plate (3). Tighten screws to 24-72 **in-lbs** (2.7-8.1 Nm).
2. **XR Models Only:** see Figure 6-43. Position plate (3) over **new** ignition coil (1). Place screws (4) through coil and plate and secure to mounting bracket (2). Tighten screws to 24-72 **in-lbs** (2.7-8.1 Nm).
3. See Figure 6-40 or Figure 6-41. Slide coil (1) with mounting bracket (6) into position. Make sure all wiring harnesses from front end of vehicle are positioned between coil bracket upright and vehicle frame. Secure bracket with screw (5) and tighten to 35-45 **in-lbs** (4.0-5.1 Nm).

4. Plug spark plug cables into ignition coil towers; front spark plug cable (3) to left side of coil, rear spark plug cable (4) to right side of coil.

5. **XL Models Only:** see Figure 6-39. Mate left wire harness caddy (2) to right wire harness caddy. Secure with screw (1) and tighten. See 6.30 ELECTRICAL CADDIES.

6. Install fuel tank. See 4.5 FUEL TANK: XL MODELS or 4.6 FUEL TANK: XR MODELS.

⚠WARNING

After installing seat, pull upward on seat to be sure it is locked in position. While riding, a loose seat can shift causing loss of control, which could result in death or serious injury. (00070b)

7. Install seat. See 2.37 SEAT: XL MODELS or 2.38 SEAT: XR MODELS.

8. Plug in main fuse. See 6.35 MAIN FUSE.

REPLACEMENT: XL 883C/XL 1200C

NOTE

The headlamp is a replaceable bulb (element) type. Replace with the specified H4 halogen bulb, only.

⚠WARNING

To prevent accidental vehicle start-up, which could cause death or serious injury, remove main fuse before proceeding. (00251b)

1. Unplug main fuse. See 6.35 MAIN FUSE.
2. Remove screw and chrome molding ring.
3. See Figure 6-44. Hold headlamp reflector/lens (3) and compress release tabs (6) on sides of headlamp connector [38] (2). Pull connector from spade terminals.
4. Remove headlamp reflector/lens and metal adapter ring (1).
5. Pull rubber boot (5) from rubber finger gasket (4) on back of reflector/lens.
6. See Figure 6-45. Press ends of retaining clip (3) to unhook from notched retaining post (4).
7. Pivot retaining clip back and remove bulb (5).

⚠WARNING

To prevent accidental vehicle start-up, which could cause death or serious injury, remove main fuse before proceeding. (00251b)

8. Fit replacement bulb (5).

NOTE

The tab opposite the center spade connector of bulb (5) fits the top notch (2) in the reflector which points to the top of the reflector/lens (6).

9. Pivot the retaining clip (3) over the bulb and press the ends into the retaining post (4).
10. If necessary, remove and fit a replacement rubber finger gasket (1).

NOTE

The smaller single notch of the rubber finger gasket (1) will fit over the top notch (2) of the reflector/lens (6).

11. If replacing the small position lamp in the side of the reflector/lens on HDI XL 883C/XL 1200C models:
    a. Pull the spade connectors from the bulb holder.
    b. Pull the bulb holder from the reflector/lens.
    c. Quarter turn the bulb to remove and replace.
    d. Replace the bulb holder and mate connectors.
12. See Figure 6-46. Install rubber boot with word TOP (1) over top notch.
13. Press center ring (2) down flush with base of bulb (3) and press air out of boot to seal bore of boot to bulb and boot flange to rubber finger gasket.

NOTE

Air will re-enter the rubber boot and raise the center ring above bottom of bulb.

14. See Figure 6-47. Fit the adapter ring (11) to the reflector/lens (4) and fit the adapter ring to the headlamp shell.

NOTES

- *The two notches on the circumference of the adapter ring will fit the two bulges on rim of headlamp shell.*
- *A single tab on the circumference of the reflector will fit the notch on the inside of the adapter ring.*
- *The four fingers of the rubber finger gasket are installed between the adapter ring and the reflector/lens.*

15. Mate the headlamp connector (12) to the spade connector on the bulb (7).
16. Press the reflector/lens assembly into the headlamp shell matching the two notches on the moulding ring to the bulges on the headlamp shell.
17. Rotate the moulding clockwise to lock the moulding ring down on the reflector/lens. Install the moulding ring screw (1) and tighten.
18. Plug in main fuse. See 6.35 MAIN FUSE.
19. After final assembly, align headlamp as described in 1.28 HEADLAMP ALIGNMENT.

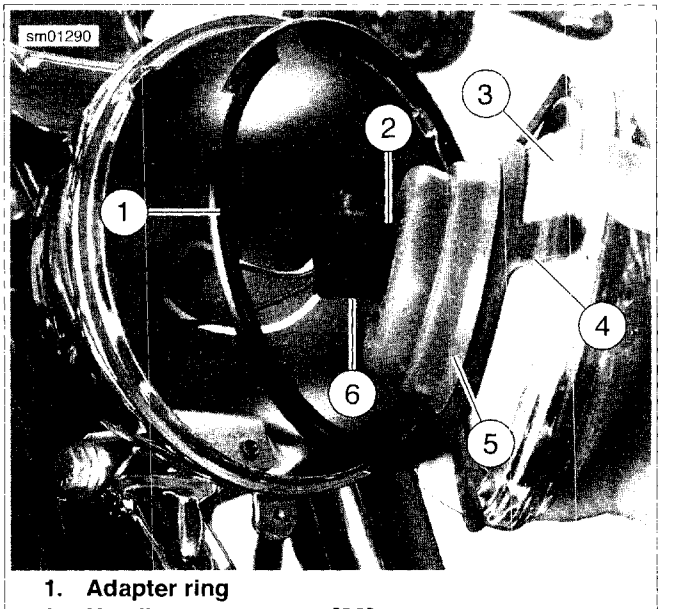

1. **Adapter ring**
2. **Headlamp connector [38]**
3. **Reflector/lens**
4. **Rubber finger gasket**
5. **Rubber boot**
6. **Connector release tab**

Figure 6-44. Remove Headlamp

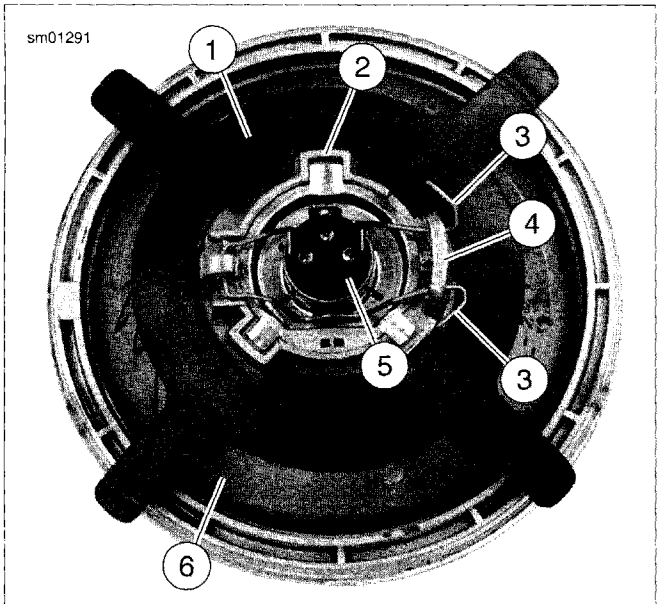

1. Rubber finger gasket
2. Top notch
3. Retaining clip
4. Retaining post
5. Bulb
6. Reflector/lens

Figure 6-45. Headlamp Assembly

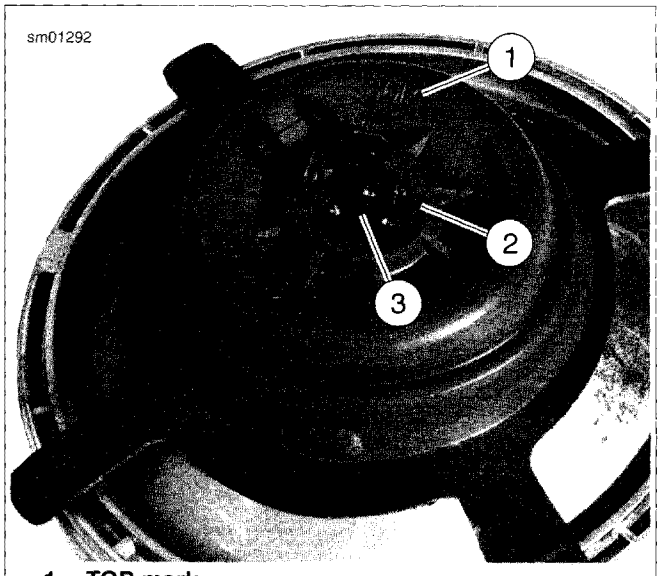

1. TOP mark
2. Center ring
3. Bulb (element)

Figure 6-46. Headlamp Boot (TOP Mark)

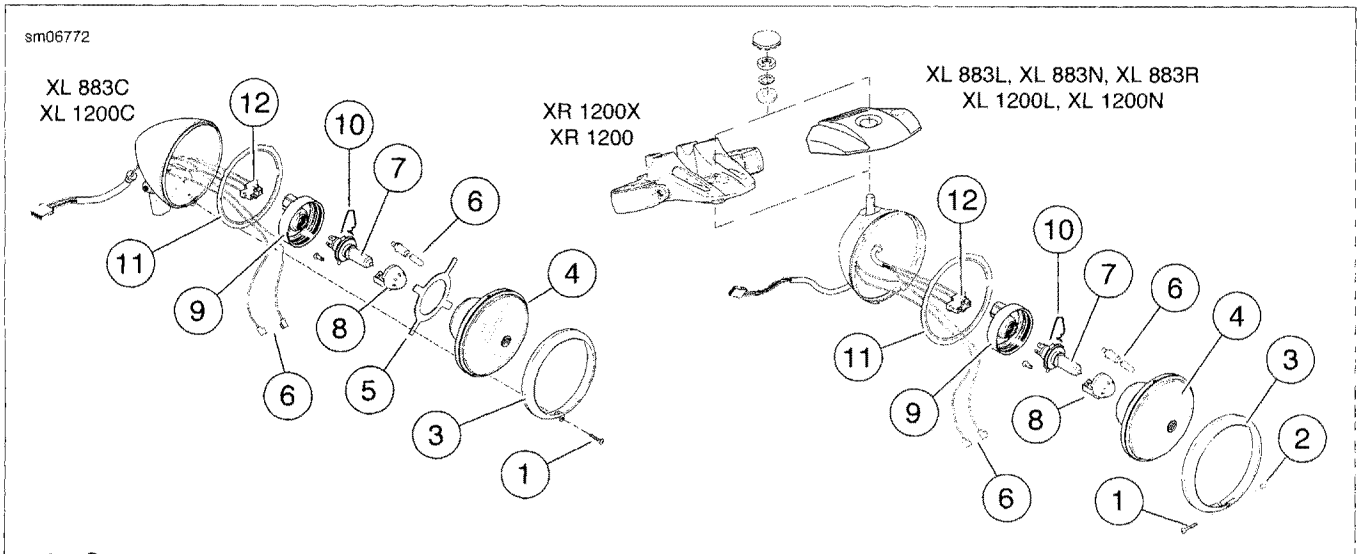

1. Screw
2. Nut
3. Trim ring
4. Lens
5. Rubber finger gasket
6. Position lamp (HDI models only)
7. Bulb
8. Bulb shield
9. Rubber boot
10. Wire clip
11. Adapter ring
12. Connector

Figure 6-47. Headlamp Assemblies

REPLACEMENT: ALL MODELS EXCEPT XL 883C/XL 1200C

NOTE

The headlamp is a replaceable bulb (element) type. Replace with the specified H4 halogen bulb, only.

⚠WARNING

To prevent accidental vehicle start-up, which could cause death or serious injury, remove main fuse before proceeding. (00251b)

1. Unplug main fuse.
2. See Figure 6-47. Remove screw (1) and chrome outer molding ring (3).
3. Hold headlamp reflector/lens (4) and compress release tabs on sides of bulb connector (12) to pull connector from spade terminals.
4. Pull rubber boot (9) from back of reflector/lens.
5. Press ends of retaining clip (10) to unhook from notched retaining tabs and pivot retaining clip back.
6. Remove bulb (7).

⚠WARNING

To prevent accidental vehicle start-up, which could cause death or serious injury, remove main fuse before proceeding. (00251b)

7. Fit replacement bulb.

NOTE

The tab opposite the center spade connector of bulb fits the top notch in the reflector which points to the top of the reflector/lens.

8. Pivot the retaining clip over the bulb and press the ends into the retaining post.
9. Install rubber boot with word TOP over top notch. Press center ring down flush with base of bulb.
10. If replacing the small position lamp in the side of the reflector/lens on HDI models:
    a. Pull the spade connectors from the bulb holder.
    b. Pull the bulb holder from the reflector/lens.
    c. Quarter turn the bulb to remove and replace.
    d. Replace the bulb holder and mate connectors.
11. Mate the bulb connector to the bulb.
12. Fit the adapter ring and the reflector/lens to the headlamp shell.
13. Install the moulding ring screw and nut.
14. Plug in main fuse. See 6.35 MAIN FUSE.
15. After final assembly, align headlamp as described in 1.28 HEADLAMP ALIGNMENT.

GENERAL

The indicator lamps are LEDs housed in a self-contained, non-repairable module. If one indicator lamp fails, the entire module and instrument harness must be replaced.

PRELIMINARY DISASSEMBLY: ALL MODELS

⚠WARNING

To prevent spray of fuel, purge system of high-pressure fuel before supply line is disconnected. Gasoline is extremely flammable and highly explosive, which could result in death or serious injury. (00275a)

1. Position vehicle upright. Purge the fuel supply hose of high pressure gasoline. Disconnect fuel supply hose from fuel pump module. See 4.5 FUEL TANK: XL MODELS or 4.6 FUEL TANK: XR MODELS.

⚠WARNING

To prevent accidental vehicle start-up, which could cause death or serious injury, remove main fuse before proceeding. (00251b)

2. Unplug main fuse. See 6.35 MAIN FUSE.
3. Remove seat.
4. Remove fuel tank. See 4.5 FUEL TANK: XL MODELS or 4.6 FUEL TANK: XR MODELS.
5. See 6.30 ELECTRICAL CADDIES:
   a. **XL models only:** remove screw securing left wire harness caddy to right wire harness caddy.
   b. Locate instruments connector [20] on right wire harness caddy for XL models and on left side of caddy for XR models. Unplug connector [20A].
6. Make a note of the location of all cable straps securing instrument harness to vehicle. Cut cable straps to free instrument harness.

REPLACEMENT: XL 1200L/XL 883N AND XL 1200N

1. Cover headlamp bracket with a clean soft cloth to protect surface.
2. See Figure 6-48. Holding speedometer housing/handlebar clamp (3), remove four screws securing housing/clamp assembly to handlebar risers.
3. Remove two screws (6) to separate indicator lamp module (4) from speedometer housing/handlebar clamp, trim plate (1) and lens (2).

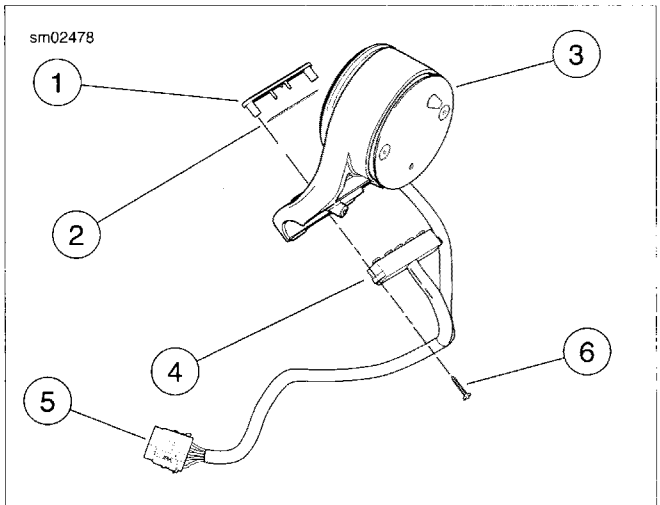

1. **Trim plate**
2. **Lens**
3. **Speedometer housing/handlebar clamp**
4. **Indicator lamp module**
5. **Instrument harness connector [20A]**
6. **Screw (2)**

Figure 6-48. Indicator Lamps: XL 1200L/XL 883N/XL 1200N

4. See 6.6 SPEEDOMETER: XL SINGLE GAUGE MODELS EXCEPT XL 883C/XL 1200C:
   a. Remove back plate from speedometer. Unplug harness connector [39B] from back of speedometer.
   b. Remove trip odometer reset button boot and remove trip odometer reset button from back plate.
5. Remove instrument harness from vehicle.
6. Place **new** instrument harness in position.
7. See 6.6 SPEEDOMETER: XL SINGLE GAUGE MODELS EXCEPT XL 883C/XL 1200C:
   a. Plug harness connector [39B] into back of speedometer.
   b. Install trip odometer reset button into speedometer back plate and thread on button boot finger-tight.
   c. Install back plate onto speedometer and secure with two screws.
8. See Figure 6-48. Assemble trim plate (1), lens (2) and indicator lamp module (4) onto speedometer housing/handlebar clamp (3). Secure with two screws (6).
9. Install housing/clamp assembly onto handlebar risers and secure with four screws:
   a. Tighten front screws first, to 12-18 ft-lbs (16.3-24.4 Nm).
   b. Tighten rear screws to 12-18 ft-lbs (16.3-24.4 Nm).
10. Proceed to 6.19 INDICATOR LAMP MODULE, Reassembling Vehicle: All Models.

REPLACEMENT: XL 883C AND XL 1200C

1. See Figure 6-49. Remove two screws (1) and riser cover (2) from behind handlebar riser (3).
2. Remove four screws (4) securing speedometer housing/handlebar clamp (5) to handlebar riser.
3. Carefully bend back four latches (8) on indicator lamp bezel (6) and remove indicator lamp module (7).
4. See 6.7 SPEEDOMETER: XL 883C/XL 1200C.
   a. Remove two screws securing speedometer to speedometer housing/handlebar clamp. Carefully pull speedometer out of housing.
   b. Unplug harness connector [39B] from rear of speedometer.
   c. Remove trip odometer reset button boot and remove trip odometer reset button from back of speedometer housing/handlebar clamp.

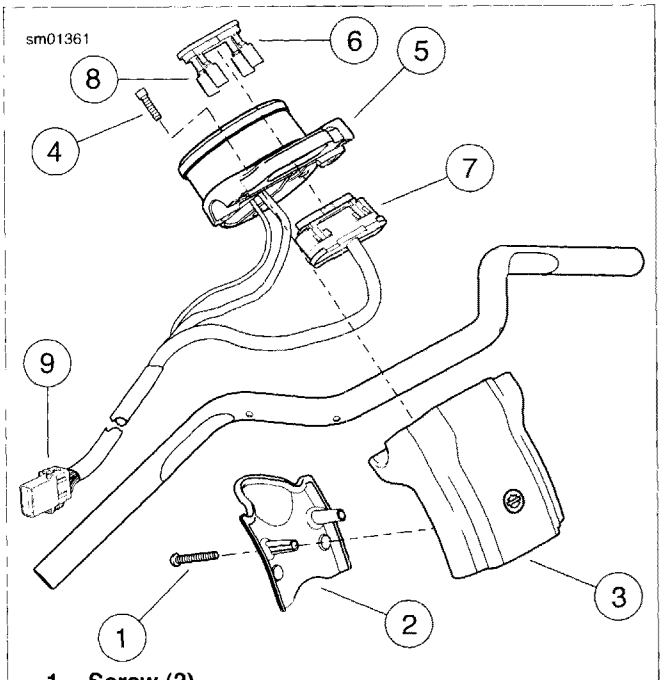

1. **Screw (2)**
2. **Riser cover**
3. **Handlebar riser**
4. **Screw (4)**
5. **Speedometer housing/handlebar clamp**
6. **Indicator lamp bezel with lens**
7. **Indicator lamp module**
8. **Latch (4)**
9. **Instrument harness connector [20A]**

Figure 6-49. Indicator Lamps: XL 883C/XL 1200C

5. Carefully pull harness with connector [39B] and trip odometer reset button from back of speedometer housing/handlebar clamp.
6. Pull instrument harness with connector [20A] up through upper fork bracket and remove harness from vehicle.
7. Place **new** instrument harness in position.
8. Carefully feed connector [20A] end down through upper fork bracket and along left side of frame steering head.

NOTE

Make certain that speedometer harness and trip odometer switch harness are positioned underneath the handlebar, and indicator lamp module harness feeds over the top of the handlebar.

9. Carefully feed end of harness with connector [39B] and trip odometer reset button through back of speedometer housing/handlebar clamp.
10. See 6.7 SPEEDOMETER: XL 883C/XL 1200C:
    a. Install trip odometer reset button into speedometer housing/handlebar clamp and secure with button boot.
    b. Plug harness connector [39B] into back of speedometer.
    c. Carefully slide speedometer into speedometer housing/handlebar clamp. Secure with two screws.
11. See Figure 6-49. Install indicator lamp module (7) into back of speedometer housing/handlebar clamp (5). Secure with four latches (8) on indicator lamp bezel (6).
12. Install speedometer housing/handlebar clamp onto handlebar riser (3) and secure with four screws (4):
    a. Adjust handlebars to desired position.
    b. Tighten front screws first, to 12-18 ft-lbs (16.3 -24.4 Nm).
    c. Tighten rear screws to 12-18 ft-lbs (16.3 -24.4 Nm).
13. Install riser cover (2) behind handlebar riser and secure with two screws (1). Make certain that handlebar control harnesses are not pinched between handlebar riser and riser cover. Tighten screws to 8-12 **in-lbs** (0.9-1.4 Nm).
14. Proceed to 6.19 INDICATOR LAMP MODULE, Reassembling Vehicle: All Models

REPLACEMENT: ALL OTHER MODELS

1. Cover headlamp bracket with a clean soft cloth to protect surface.
2. See Figure 6-50. Holding instrument bracket (3), remove two screws with lock washers securing instrument bracket to handlebar risers.
3. Remove two screws (6) to separate indicator lamp module (4) from instrument bracket, trim plate (1) and lens (2).

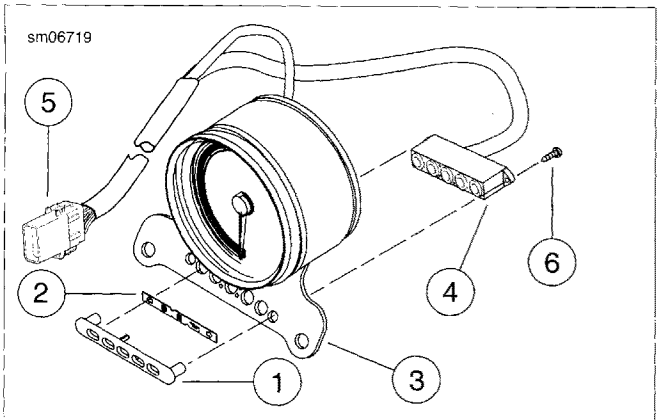

1. **Trim plate**
2. **Lens**
3. **Instrument bracket**
4. **Indicator lamp module**
5. **Instrument harness connector [20A]**
6. **Screw (2)**

Figure 6-50. Indicator Lamps: All Single Gauge Models Except XL 883C/XL 1200C/XL 1200L/XL 1200N

4. See 6.6 SPEEDOMETER: XL SINGLE GAUGE MODELS EXCEPT XL 883C/XL 1200C or 6.8 SPEEDOMETER AND TACHOMETER: XR MODELS:
   a. Remove back plate from speedometer. Unplug harness connector [39B] from back of speedometer.
   b. Remove trip odometer reset button boot and remove trip odometer reset button from back plate.
   c. **XR models only:** remove back plate from tachometer. Unplug harness connector [108B] from back of tachometer.
5. Remove instrument harness from vehicle.
6. Place **new** instrument harness in position.
7. See 6.6 SPEEDOMETER: XL SINGLE GAUGE MODELS EXCEPT XL 883C/XL 1200C or 6.8 SPEEDOMETER AND TACHOMETER: XR MODELS:
   a. Plug harness connector [39B] into back of speedometer.
   b. Install trip odometer reset button into speedometer back plate and thread on button boot finger-tight.
   c. Install back plate onto speedometer and secure with two screws.
   d. **XR models only:** plug harness connector [108B] into back of tachometer. Install back plate onto tachometer and secure with two screws.
8. See Figure 6-50. Assemble trim plate (1), lens (2) and indicator lamp module (4) onto instrument bracket (3). Secure with two screws (6).
9. Install instrument bracket onto handlebar risers. Tighten screws to 12-18 ft-lbs (16.3-24.4 Nm).
10. Proceed to 6.19 INDICATOR LAMP MODULE, Reassembling Vehicle: All Models.

REASSEMBLING VEHICLE: ALL MODELS

1. **XL models only:** see 6.30 ELECTRICAL CADDIES:
   a. Feed instrument harness between coil bracket uprights, back to right wire harness caddy.
   b. Plug instrument harness pin connector [20A] into socket connector [20B] in right wire harness caddy.
   c. Mate right and left wire harness caddies. Secure with screw and tighten.
2. **XR models only:** see 6.30 ELECTRICAL CADDIES:
   a. Feed instrument harness along left side of frame next to left and right hand control harnesses and inside of coil bracket upright.
   b. Plug instrument harness pin connector [20A] into socket connector [20B] in right wire harness caddy.
3. Secure instrument harness to vehicle with cable straps in locations previously noted.
4. Install fuel tank. See 4.5 FUEL TANK: XL MODELS or 4.6 FUEL TANK: XR MODELS.
5. Plug in main fuse. See 6.35 MAIN FUSE.

⚠WARNING

After installing seat, pull upward on seat to be sure it is locked in position. While riding, a loose seat can shift causing loss of control, which could result in death or serious injury. (00070b)

6. Install seat.

TAIL LAMP: ALL MODELS EXCEPT XL 883N/XL 1200N 6.20

GENERAL

This section describes the replacement of the tail lamp bulb as well as replacement of the entire tail lamp housing assembly on all models except XL 883N and XL 1200N. For XL 883N and XL 1200N models, see 6.21 TURN SIGNALS.

NOTE

XL 883N and XL 1200N models configured for the Canadian market are equipped with this type of tail lamp.

BULB REPLACEMENT

NOTE

Sportsters are equipped with a tail lamp incorporating a rear lighting harness and circuit board to simplify replacement.

1. Make certain ignition switch is turned OFF.
2. See Figure 6-51. Remove two screws and lens (4) from base (3).
3. Press the locking tab and remove 4-Pin multilock connector from circuit board.
4. Turn socket assembly (1) one-quarter turn counterclockwise to release assembly from lens. Remove (pull) assembly from lens. Remove bulb from socket.
5. Coat base of **new** bulb with ELECTRICAL CONTACT LUBRICANT (Part No. 99861-02). Install (push) **new** bulb into socket.
6. Install (push) bulb assembly into lens. Turn assembly one-quarter turn clockwise to lock in place.
7. Connect 4-Pin multilock connector to circuit board.
8. Install lens to base with two screws. Tighten screws to 20-24 **in-lbs** (2.3-2.7 Nm)
9. Turn ignition on and test for proper tail lamp operation.

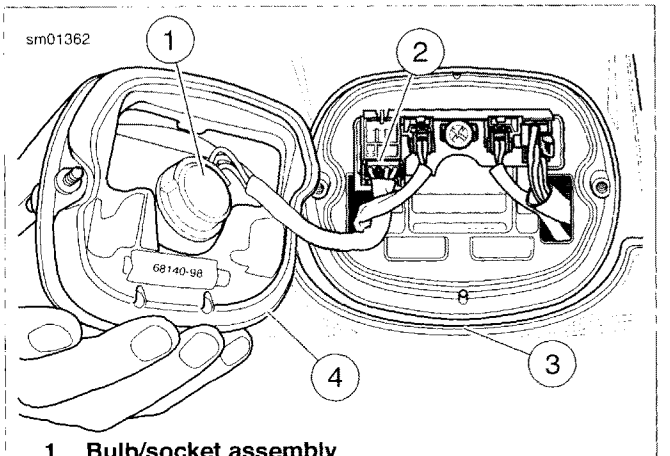

1. **Bulb/socket assembly**
2. **4-pin multilock connector**
3. **Base**
4. **Lens**

Figure 6-51. Tail Lamp (Typical, XL Models Shown)

BASE REPLACEMENT

PART NUMBER	TOOL NAME
HD-39621-28	PIN TERMINAL REMOVER

Use of the PIN TERMINAL REMOVER (Part No. HD-39621-28) is recommended for this procedure. See A.1 AMP MULTI-LOCK CONNECTORS.

⚠WARNING

To prevent accidental vehicle start-up, which could cause death or serious injury, remove main fuse before proceeding. (00251b)

1. Unplug main fuse. See 6.35 MAIN FUSE.
2. See Figure 6-51. Remove two screws and lens (4) from base (3).
3. Depress locking tab and remove 4-Pin multilock connector from circuit board.
4. See Figure 6-52. Using a terminal pick, depress locking tabs and remove two 2-Pin turn signal connectors and 6-Pin Power In connector from circuit board.
5. **XL models only:** remove base as follows:
   a. Remove screw, pin housing and circuit board from base.
   b. Remove base from rear fender.
6. **XR models only:** see Figure 6-55. Remove base as follows:
   a. Remove pin housing and circuit board from base.
   b. Remove screws (1, 2) and remove base from frame.
   c. If replacing base, remove turn signals from base. See 6.21 TURN SIGNALS.
7. **XL models only:** install base as follows:
   a. Install base on rear fender.
   b. Install screw, pin housing and circuit board to base. Tighten screw to 45-48 **in-lbs** (5.1-5.4 Nm).
8. **XR models only:** see Figure 6-55. Install base as follows:
   a. Install base to frame with screws (1, 2). Tighten screw to 36-60 **in-lbs** (4.1-6.8 Nm).
   b. Set pin housing and circuit board onto base.
9. See Figure 6-54. Install connectors to circuit board.
10. Install lens to base with two screws. Tighten screws to 20-24 **in-lbs** (2.3-2.7 Nm)
11. Plug in main fuse. See 6.35 MAIN FUSE.
12. Turn ignition on and test for proper tail lamp and turn signal operation.

NOTE
Cavity numbers are on the back side of secondary locks on connector housings.

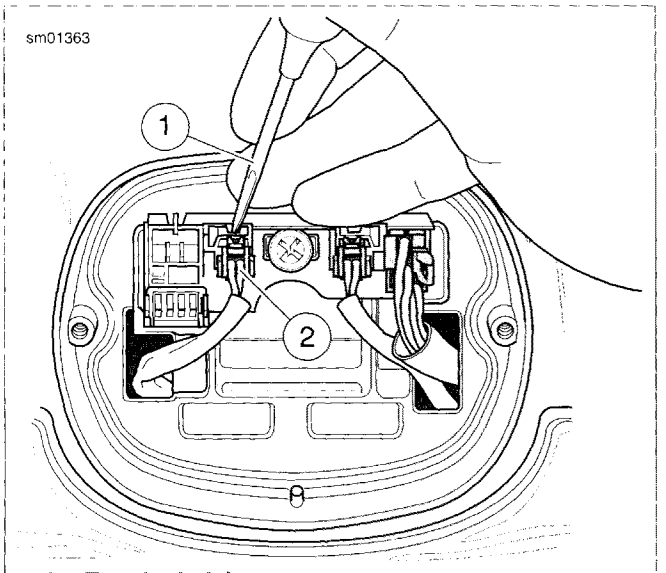

1. Terminal pick
2. 2-pin connector

Figure 6-52. Removing 2-Pin Connectors (Typical, XL Models Shown)

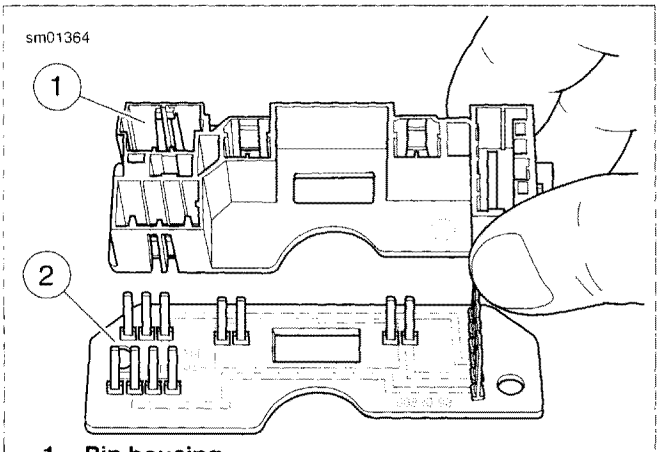

1. Pin housing
2. Circuit board

Figure 6-53. Pin Housing and Circuit Board

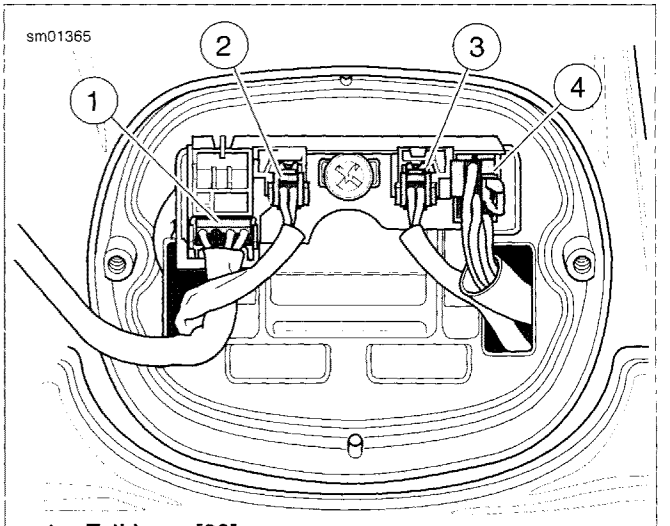

1. Tail lamp [93]
2. Left turn signal [19]
3. Right turn signal [18]
4. Power in [94]

Figure 6-54. Tail Lamp Base Connectors (Typical, XL Models Shown)

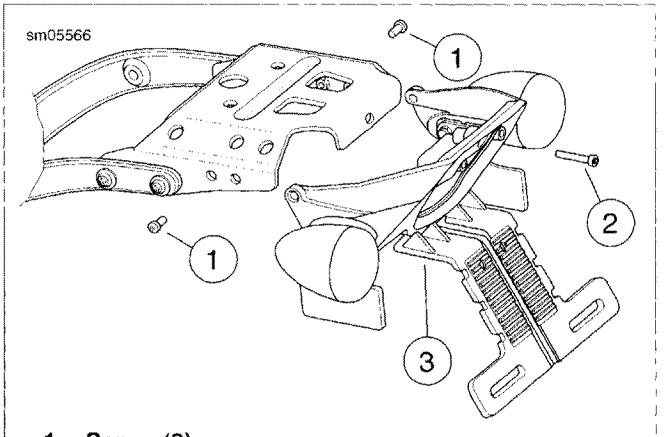

1. Screw (2)
2. Screw
3. Base

Figure 6-55. Tail Lamp Base: XR 1200 Only

Table 6-11. Connector Specifications

FUNCTION	TYPE	NUMBER	WIRE COLOR	CAVITY
Right turn signal	2-pin Mulitlock	18	V	1
			BK	2
Left turn signal	2-pin Multilock	19	V	1
			BK	2
Tail lamp	4-pin Mulitlock	93	BE	1
			BE*	2
			R/Y	3
			BK	4

Table 6-11. Connector Specifications

FUNCTION	TYPE	NUMBER	WIRE COLOR	CAVITY
Power	6-pin Multilock	94	O/W	1
			BN	2
			BE	3
			R/Y	4
			V	5
			BK	6
* HDI only. OPEN on DOM.				

GENERAL

This section describes the replacement of turn signal bulbs, as well as the replacement of the entire turn signal housing assembly.

The rear turn signals on the XL 883N and XL 1200N models also serve as tail lamps and brake lamps. The rear turn signal/brake lamp functions are provided by an electronic converter module. See 6.23 REAR LIGHTING CONVERTER MODULE: XL 883N/XL 1200N (DOMESTIC ONLY) for replacement of this module.

BULB REPLACEMENT

NOTES

- *The HDI XL 883N and XL 1200N models are equipped with LED rear turn signal/brake lamp/tail lamp assemblies and do not require an electronic converter module. The LED assemblies are sealed units and cannot be disassembled. The entire rear turn signal housing assembly must be replaced. See 6.21 TURN SIGNALS, Rear Housing Replacement.*
- *The Domestic XL 883N and XL 1200N models are equipped with dual filament rear turn signal bulbs to provide rear turn signal, brake lamp and tail lamp functions.*
- *All other models are equipped with single filament rear turn signal bulbs.*

1. Insert coin in notch of front or rear turn signal lens cap. Carefully twist coin until lens cap pops out of turn signal housing.
2. Replace bulb.
   a. Coat base of bulb with ELECTRICAL CONTACT LUBRICANT (Part No. 99861-02).
   b. Push bulb and turn counterclockwise.
   c. Pull bulb from socket when tab on bulb clears opening on socket.
   d. Push **new** bulb in and turn clockwise to lock in place.
3. Snap lens cap back into housing.

FRONT HOUSING REPLACEMENT

⚠WARNING

To prevent spray of fuel, purge system of high-pressure fuel before supply line is disconnected. Gasoline is extremely flammable and highly explosive, which could result in death or serious injury. (00275a)

1. Purge the fuel supply hose of high pressure gasoline. Disconnect fuel supply hose from fuel pump module. See 4.5 FUEL TANK: XL MODELS or 4.6 FUEL TANK: XR MODELS.

⚠WARNING

To prevent accidental vehicle start-up, which could cause death or serious injury, remove main fuse before proceeding. (00251b)

2. Unplug main fuse. See 6.35 MAIN FUSE.
3. Remove fuel tank. See 4.5 FUEL TANK: XL MODELS or 4.6 FUEL TANK: XR MODELS.
4. Separate left and right wire harness caddies. See 6.29 MAIN WIRING HARNESS.
5. On XL 883C/XL 1200C models, remove riser cover from the back of the handlebar riser. See 2.31 HANDLEBARS.
6. See Figure 6-56. Locate turn signal connector [31] (4) mounted on right wire harness caddy (2). Press latch (5) and separate connector halves.
7. Remove the corresponding socket terminals from connector [31B]. See A.1 AMP MULTILOCK CONNECTORS.
8. See Figure 6-57. Using a 4 mm Allen wrench, loosen the Allen screw in the front of the hand lever bracket to release the turn signal housing ball end stud.
9. Pull the wire conduit through the coil bracket, the fork clamp and handlebar clips.
10. See Figure 6-58. Inspect the ball head stud (1) and replace as required. Tighten **new** ball head studs to 96-144 **in-lbs** (10.8-16.3 Nm).
11. Lay old turn signal housing and wires next to **new** and cut **new** wires to length.
12. Trim sheath back approximately 2.5 in. (63.5 mm) and crimp **new** socket terminals onto wires.
13. On XL 883C/XL 1200C models, route wires through handlebar clips, between fork clamp and decorative cover and then through coil bracket.
14. On all models except XL 883C/XL 1200C, route wires through handlebar clips, between fork clamp and head lamp bracket and then through coil bracket.
15. See Figure 6-58. Install housing ball end stud (1) into the lever bracket and aim to front. Using a 4 mm Allen wrench, tighten clamp screw to 96-120 **in-lbs** (10.9-13.6 Nm).
16. Insert socket terminals into turn signal connector. Refer to Table 6-12.
17. Mate connector [31] halves. Reassemble left and right wire harness caddies. See 6.29 MAIN WIRING HARNESS.
18. Install fuel tank. See 4.5 FUEL TANK: XL MODELS or 4.6 FUEL TANK: XR MODELS.
19. On XL 883C/XL 1200C models, install riser cover. Make certain that handlebar control harnesses are not pinched between handlebar riser and riser cover. Tighten screws to 8-12 **in-lbs** (0.9-1.4 Nm).
20. Plug in main fuse. See 6.35 MAIN FUSE.

⚠WARNING

Be sure that all lights and switches operate properly before operating motorcycle. Low visibility of rider can result in death or serious injury. (00316a)

21. Turn ignition switch ON and verify correct turn signal operation.

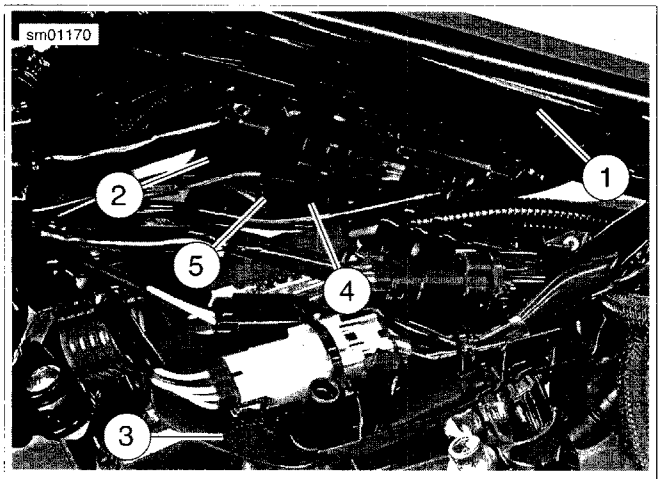

1. Frame backbone
2. Right wire harness caddy
3. Left wire harness caddy
4. Turn signal connector [31]
5. Connector latch

Figure 6-56. Turn Signal Connector [31]

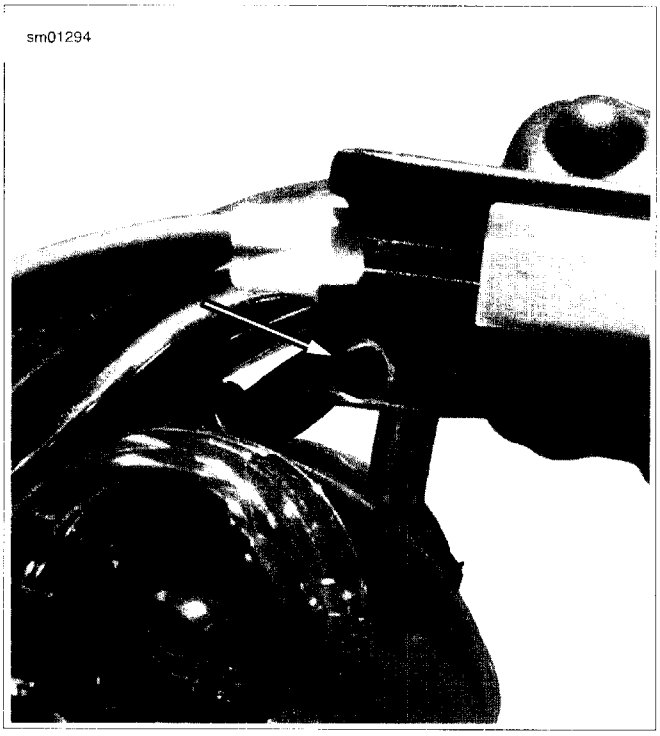

Figure 6-57. Turn Signal Ball Stud Allen Screw

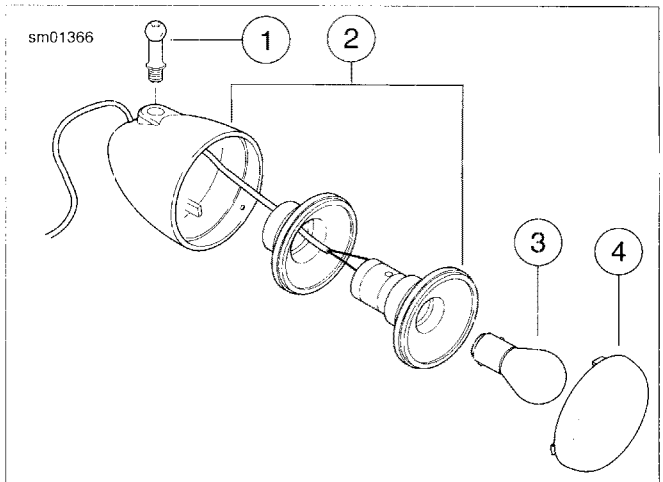

1. Ball end stud
2. Turn signal assembly
3. Bulb
4. Lens

Figure 6-58. Front Turn Signal Components

Table 6-12. Front Turn Signal Connector [31] Wire Colors

HAND	WIRE COLOR	CAVITY
Right turn signal	BK	1
	BN	2
	BE (DOM only)	3
Left turn signal	BE (DOM only)	4
	V	5
	BK	6

REAR HOUSING REPLACEMENT

Preliminary Vehicle Disassembly: All Models

⚠WARNING

To prevent accidental vehicle start-up, which could cause death or serious injury, remove main fuse before proceeding. (00251b)

1. Unplug main fuse. See 6.35 MAIN FUSE.
2. **All but XR 1200:** remove seat.

Disconnect Wiring: All Models Except XL 883N/XL 1200N

1. See Figure 6-59. Remove two screws (2) and tail lamp lens (3) from tail lamp base (4).
2. See Figure 6-60. Remove left and right turn signal connectors (1, 2). Pull turn signal wiring harnesses through harness access holes in tail lamp base (3).
3. **All but XR 1200:** see Figure 6-61. Disengage turn signal wiring harnesses from wire retention brackets (1).
4. Proceed directly to Remove and Disassemble Turn Signal Assembly: All But XR 1200 or Remove and Disassemble Turn Signal Assembly: XR 1200.

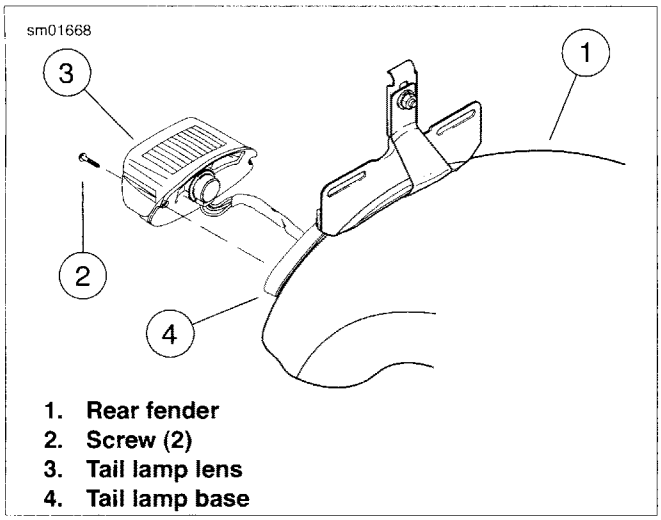

1. Rear fender
2. Screw (2)
3. Tail lamp lens
4. Tail lamp base

Figure 6-59. Removing/Installing Tail Lamp Lens, Typical: All Models Except XL 883N/XL 1200N

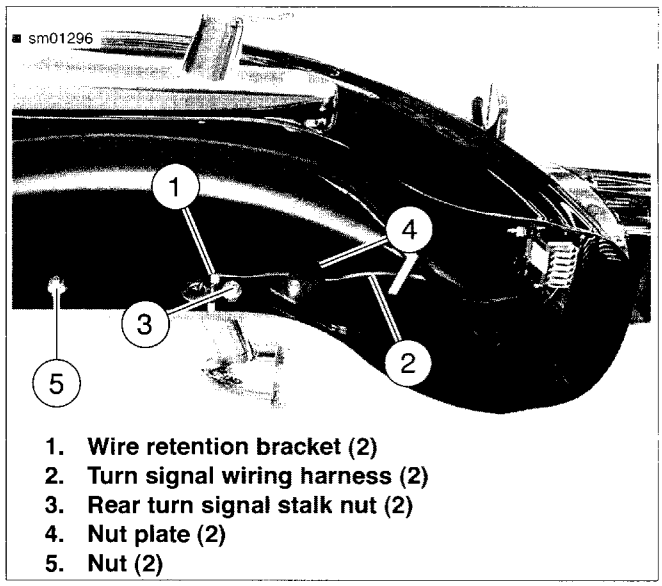

1. Wire retention bracket (2)
2. Turn signal wiring harness (2)
3. Rear turn signal stalk nut (2)
4. Nut plate (2)
5. Nut (2)

Figure 6-61. Turn Signal Wire Routing: All Models Except XL 883N/XL 1200N and XR 1200

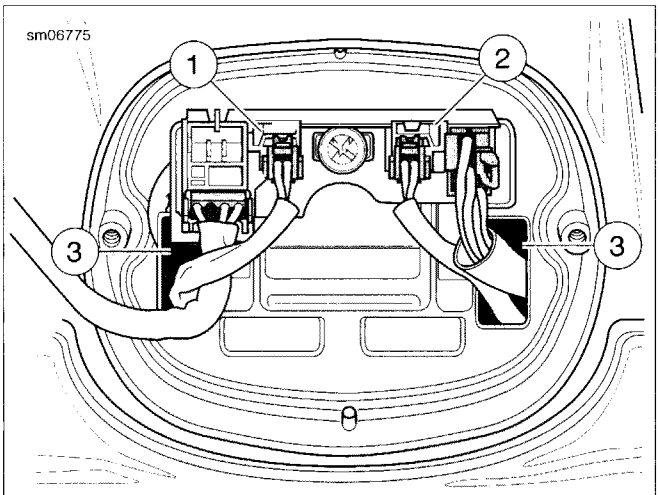

1. Left turn signal connector [19]
2. Right turn signal connector [18]
3. Wiring harness access hole (2)

Figure 6-60. Turn Signal Connectors, Typical: All Models Except XL 883NXL 1200N

Disconnect Wiring: XL 883N/XL 1200N

1. Position vehicle upright on a suitable lift. Use a FAT JACK (Part No. HD-45968) or similar lifting device underneath frame to raise rear end of motorcycle high enough to permit the removal of the lower shock absorber mounting screws.
2. Remove lower shock absorber mounting screw and nut on each side of vehicle. See 2.25 SHOCK ABSORBERS. Continue to raise vehicle enough to access wiring on underside of rear fender.
3. See Figure 6-62. Unplug rear lighting harness connectors [18], [19] (1, 2).
4. See Figure 6-63. Remove left rear lighting harness (3) from harness bracket (1). Repeat this step for right rear lighting harness.
5. Remove lighting harness from lower bracket harness clips (2). Repeat this step for right rear lighting harness.
6. See Figure 6-64. Pull both rear lighting harnesses (2, 3) through feed-through holes (4, 5) in rear fender.
7. Proceed directly to Remove and Disassemble Turn Signal Assembly: All Models.

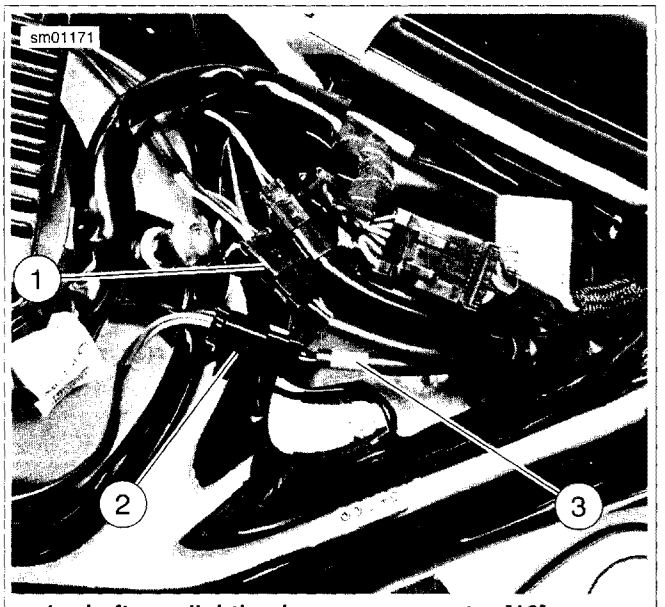

1. Left rear lighting harness connector [19]
2. Right rear lighting harness connector [18]
3. Brown band

Figure 6-62. Rear Lighting Harness Connectors: XL 883N/XL 1200N

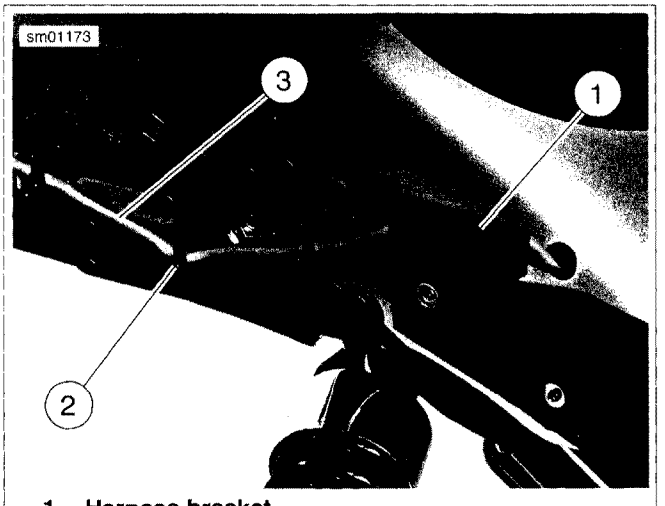

1. Harness bracket
2. Lower bracket harness clip (3)
3. Left rear lighting harness

Figure 6-63. Rear Lighting Harness Removal/Installation: XL 883N/XL 1200N (Typical)

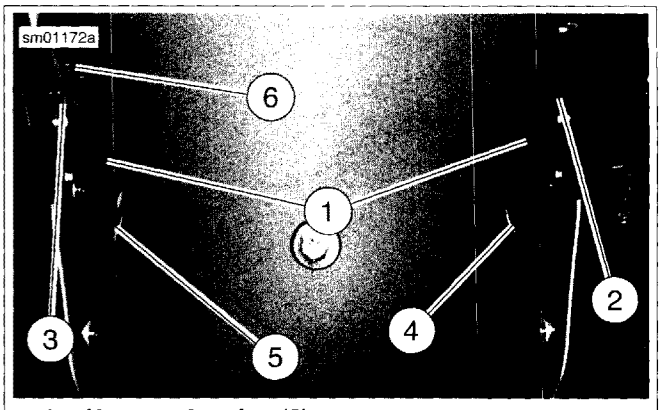

1. Harness bracket (2)
2. Right rear lighting harness
3. Left rear lighting harness
4. Right feed-through hole
5. Left feed-through hole
6. License plate lamp harness

Figure 6-64. Lighting Harnesses and Harness Brackets (View from Inside Rear Fender): XL 883N/XL 1200N

Remove and Disassemble Turn Signal Assembly: All But XR 1200

1. See Figure 6-65. Remove screws (3, 4), washers (5), nuts (7) and nut plate (8). Remove rear fender strut covers (1) with attached turn signal assemblies (2) from rear fender struts. Carefully feed turn signal harnesses through holes in fender and fender struts as you remove the strut cover and turn signal assembly.
2. Remove socket terminals from left and right turn signal connectors [18B], [19B]. See A.1 AMP MULTILOCK CONNECTORS.
3. See Figure 6-66. Unscrew and remove turn signal stalk (5) and fender strut cover from each turn signal assembly. Mount (4) will separate from turn signal housing (3).
4. Lay old turn signal housing and wires next to **new** and cut **new** wires to length. Trim sheath back approximately 2.5 in. (63.5 mm). Crimp **new** terminals onto wires.

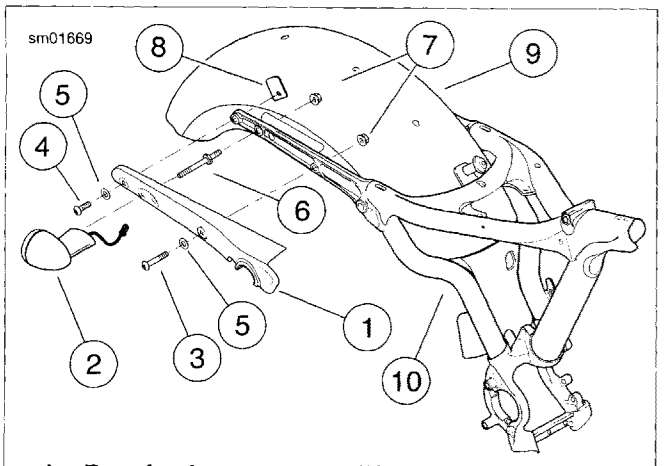

1. **Rear fender strut cover (2)**
2. **Rear turn signal assembly (2)**
3. **Screw (2)**
4. **Screw (2)**
5. **Washer (4)**
6. **Turn signal stalk (2)**
7. **Nut (4)**
8. **Nut plate (2)**
9. **Rear fender**
10. **Frame**

Figure 6-65. Rear Fender Mounting Components: Typical

Reassemble and Install Turn Signal Assembly: All But XR 1200

1. See Figure 6-66. Install each turn signal housing (3) and mount (4) to rear fender strut cover (item 1, Figure 6-65) with turn signal stalk (5). Tighten to 96-156 **in-lbs** (10.9-17.6 Nm).
2. Press wiring harness terminal sockets into left and right connector housings [19B], [18B].
   a. **All models except XL 883N/XL 1200N:** Refer to Table 6-13.
   b. **XL 883N/XL 1200N (Domestic):** Refer to Table 6-14.
   c. **XL 883N/XL 1200N (HDI):** Refer to Table 6-15.
3. Install rear fender strut covers over fender struts. Push turn signal wiring harness through appropriate hole in strut and fender.
4. See Figure 6-65. Thread nut (7) onto turn signal stalk (6) from inside fender. Finger-tighten nut only at this time.
5. Secure fender to each fender strut with screw (3), washer (5) and nut (7) in forward mounting hole. Install screw (4), washer and nut plate (8) in aft mounting hole. Finger-tighten screws only at this time.

Table 6-13. Rear Turn Signal Connector Wire Colors: All Models Except XL 883N/XL 1200N

ITEM	WIRE COLOR	CAVITY
Left turn signal [19] (white)	V	1
	BK	2
Right turn signal [18] (black)	V	1
	BK	2

Table 6-14. Rear Lighting Connector Wire Colors: XL 883N/XL 1200N (Domestic)

ITEM	WIRE COLOR	CAVITY
Left turn signal/ brake/tail lamp [19]	BK	1
	V	2
	BE	3
Right turn signal/ brake/tail lamp [18] (brown band on harness)	BK	1
	V	2
	BE	3

Table 6-15. Rear Lighting Connector Wire Colors: XL 883N/XL 1200N (HDI)

ITEM	WIRE COLOR	CAVITY
Left turn signal/ brake/tail lamp [19]	BK	1
	GN	2
	W	3
	R	4
Right turn signal/ brake/tail lamp [18] (brown band on harness)	BK	1
	GN	2
	W	3
	R	4

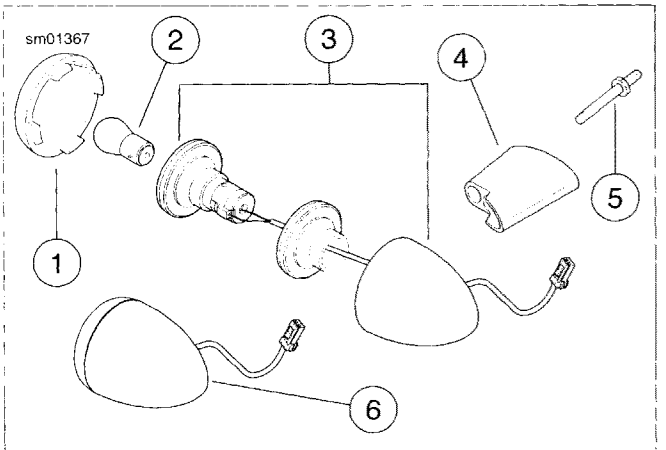

1. **Lens**
2. **Bulb (element)**
3. **Rear turn signal housing**
4. **Mount**
5. **Turn signal stalk**
6. **Rear turn signal housing (sealed unit: HDI XL 1200N Only)**

Figure 6-66. Rear Turn Signal Components

NOTE

XL 883N/XL 1200N (Domestic): *see Figure 6-67. Make certain that tab (3) on nut plate (2) fits into slot (4) in fender brace (1) when securing nut plate with rearmost fender mounting screw (5).*

6. Now tighten mounting screws in the following sequence:
   a. Tighten turn signal stalk nuts to 132-216 **in-lbs** (14.9-24.4 Nm).
   b. Tighten strut cover screws to 132-216 **in-lbs** (14.9-24.4 Nm).

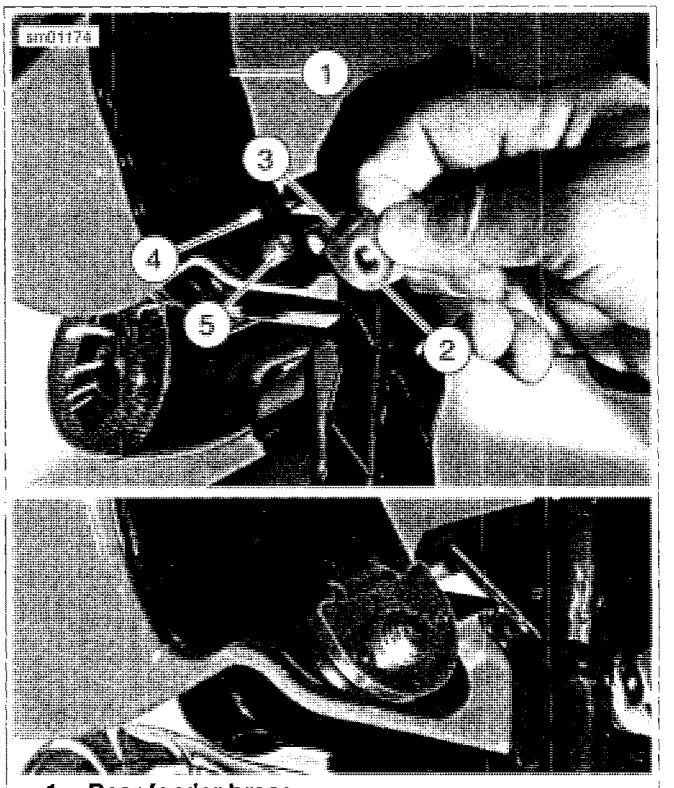

1. **Rear fender brace**
2. **Nut plate (2)**
3. **Tab**
4. **Slot**
5. **Mounting screw (2)**

Figure 6-67. Rear Fender Nut Plate: XL 883N/XL 1200N (Domestic Only)

Remove and Disassemble Turn Signal Assembly: XR 1200

1. Remove socket terminals from left and right turn signal connectors. See A.1 AMP MULTILOCK CONNECTORS.
2. See Figure 6-68. Remove screws ((6), plate (4), reflector (3) and turn signal housing (2).
3. Lay old turn signal housing and wires next to **new** and cut **new** wires to length. Trim sheath back approximately 2.5 in. (63.5 mm). Crimp **new** terminals onto wires.

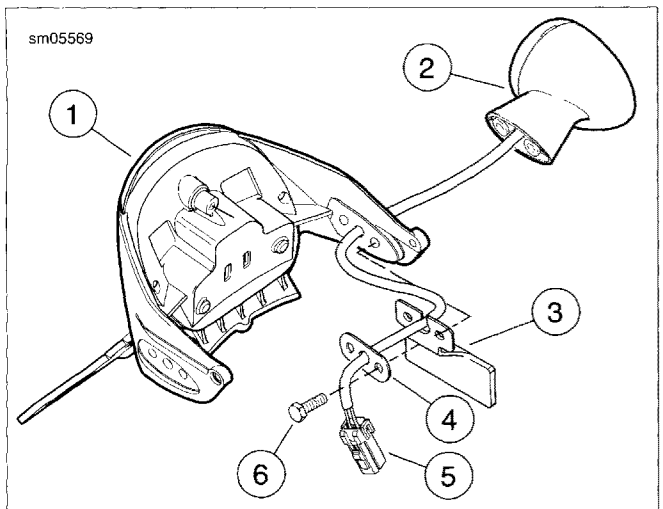

1. **Tail light base**
2. **Left turn signal**
3. **Reflector**
4. **Plate**
5. **Connector**
6. **Screw (2)**

Figure 6-68. Turn Signal Housing Removal: XR 1200

Reassemble and Install Turn Signal Assembly: XR 1200

1. See Figure 6-68. Install turn signal housing (2), reflector (3), and plate (4) with screws (6). Tighten screws to 30-40 **in-lbs** (3.4-4.5 Nm).
2. Press wiring harness terminal sockets into left and right connector housings [18B], [19B]. Refer to Table 6-13.

Connect Wiring: All Models Except XL 883N/XL 1200N

1. **All but XR 1200:** See Figure 6-61. Engage turn signal wiring harness (2) in wire retention bracket (1) on each side of rear fender.
2. See Figure 6-60. Push left and right turn signal wiring harnesses through corresponding harness access holes (3) in tail lamp base.
3. Plug left turn signal connector [18] (1) and right connector [19] (2) into left and right sockets located on rear lighting circuit board in tail lamp base.
4. See Figure 6-59. Attach tail lamp lens (3) to tail lamp base (4) with two screws (2).
5. Proceed directly to Final Assembly: All Models.

Connect Wiring: XL 883N/XL 1200N

1. See Figure 6-64. Insert each rear lighting harness (2, 3) through feed-through holes (4, 5) in rear fender.
2. See Figure 6-63. Install left rear lighting harness (3) into lower bracket harness clips (2). Repeat this step for right rear lighting harness.
3. Install left rear lighting harness into harness bracket (1). Repeat this step for right rear lighting harness.
4. See Figure 6-62. Plug in both rear lighting harness connectors [18], [19] (1, 2). Note that right rear lighting harness connector mates with connector with brown band (3) on harness.
5. Install lower shock absorber screw and nut on each side of vehicle. Tighten to 45-50 ft-lbs (61-68 Nm). See 2.25 SHOCK ABSORBERS.
6. Remove vehicle from lift.
7. Proceed directly to Final Assembly: All Models.

Final Assembly: All Models

1. Install main fuse. See 6.35 MAIN FUSE.

⚠WARNING

Be sure headlamp, tail and stop lamp and turn signals are operating properly before riding. Poor visibility of rider to other motorists can result in death or serious injury. (00478b)

2. Turn ignition/light switch ON and check rear lighting.
   a. Make sure tail lamp is lit. **XL 883N/XL 1200N:** make sure both tail lamps are lit.
   b. Press turn signal switches and make sure all turn signals are operating properly.
   c. Operate front or rear brake and make sure brake lamp illuminates. **XL 883N/XL 1200N:** make sure both brake lamps illuminate.

⚠WARNING

After installing seat, pull upward on seat to be sure it is locked in position. While riding, a loose seat can shift causing loss of control, which could result in death or serious injury. (00070b)

3. Install seat, if removed.

LICENSE PLATE LAMP MODULE: XL 883N/XL 1200N 6.22

GENERAL

Unlike all other XL models, the XL 883N and XL 1200N models are equipped with a convertible side-mount license plate bracket that incorporates a separate license plate lamp module. The module contains two LEDs which are not individually replaceable. If they fail, replace the lamp module.

NOTE

This feature may not be available in all markets.

REMOVAL (DOMESTIC ONLY)

⚠WARNING

To prevent accidental vehicle start-up, which could cause death or serious injury, remove main fuse before proceeding. (00251b)

1. Unplug main fuse. See 6.35 MAIN FUSE.
2. Position vehicle upright on a suitable lift. Use a FAT JACK (Part No. HD-45968) or similar lifting device underneath frame to raise rear end of motorcycle high enough to permit the removal of the lower shock absorber mounting screws.
3. Remove lower shock absorber mounting screw and nut on each side of vehicle. See 2.25 SHOCK ABSORBERS. Continue to raise vehicle enough to access wiring on underside of rear fender.
4. Remove seat.
5. See Figure 6-69. Unplug license plate lamp connector [40].
6. See Figure 6-70. Carefully pull license plate lamp harness (6) through feed-through hole (5) on left side of fender.
7. Remove license plate lamp harness from fender harness clip (1) on left side of fender.
8. See Figure 6-71. Remove license plate lamp harness (3) from upper license plate bracket harness clips (1) and harness channel (2).
9. Remove two screws (4) and license plate lamp module (5) from license plate bracket.

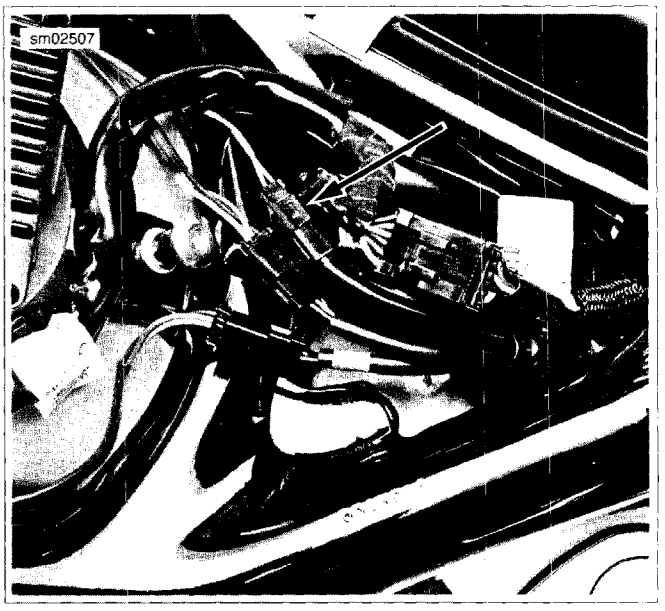

Figure 6-69. License Plate Lamp Connector [40]

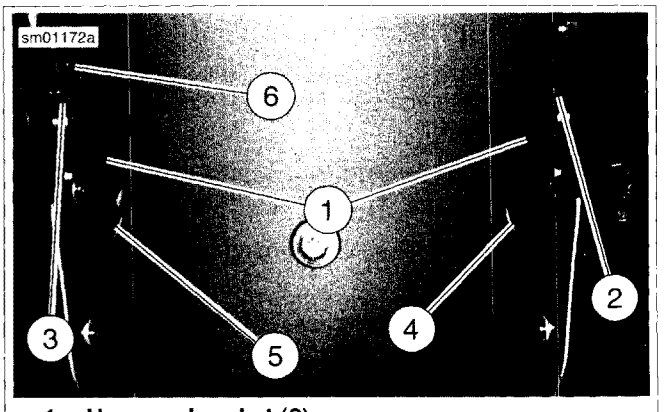

1. **Harness bracket (2)**
2. **Right rear lighting harness**
3. **Left rear lighting harness**
4. **Right feed-through hole**
5. **Left feed-through hole**
6. **License plate lamp harness**

Figure 6-70. Lighting Harnesses and Harness Brackets (View from Inside Rear Fender): XL 883N/XL 1200N

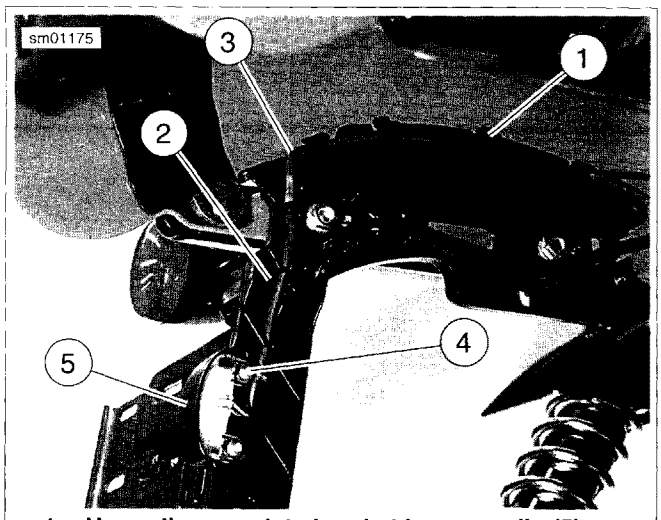

1. **Upper license plate bracket harness clip (5)**
2. **Harness channel**
3. **License plate lamp harness**
4. **Screw (2)**
5. **License plate lamp module**

Figure 6-71. Removing/Installing License Plate Lamp Module: XL 883N/XL 1200N

INSTALLATION (DOMESTIC ONLY)

1. See Figure 6-71. Install **new** license plate lamp module (5) into convertible side mount license plate bracket. Secure with two screws (4).
2. Feed license plate lamp harness (3) up through harness channel (2). Insert harness into upper license plate bracket harness clips (1).
3. See Figure 6-70. Insert license plate lamp harness (6) into fender harness clip (1) on left side of fender.
4. Feed harness through feed-through hole (5) on left side of rear fender.
5. See Figure 6-69. Plug in license plate lamp connector [40].

⚠WARNING

After installing seat, pull upward on seat to be sure it is locked in position. While riding, a loose seat can shift causing loss of control, which could result in death or serious injury. (00070b)

6. Install seat.
7. Install lower shock absorber screw and nut on each side of vehicle. Tighten to 45-50 ft-lbs (61-68 Nm). See 2.25 SHOCK ABSORBERS.
8. Plug in main fuse. See 6.35 MAIN FUSE.
9. Remove vehicle from lift.

⚠WARNING

Be sure headlamp, tail and stop lamp and turn signals are operating properly before riding. Poor visibility of rider to other motorists can result in death or serious injury. (00478b)

10. Turn ignition switch ON. Verify that license plate lamp module is operating properly. Turn ignition switch OFF.

REMOVAL (HDI ONLY)

See Figure 6-72. The XL 883N and XL 1200N models built for international markets incorporate a center-mounted license plate holder and lamp assembly.

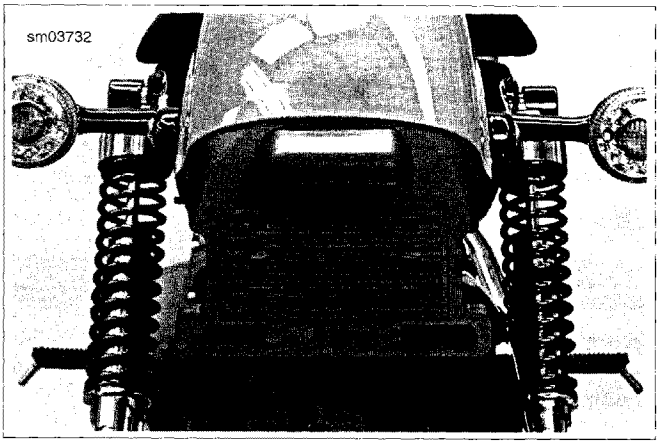

Figure 6-72. License Plate Holder and Lamp Assembly: XL 883N/XL 1200N (HDI)

1. Position vehicle upright on a suitable lift. Unplug main fuse. See 6.35 MAIN FUSE
2. Remove seat. See 2.37 SEAT: XL MODELS.
3. Use a FAT JACK (Part No. HD-45968) or similar lifting device underneath frame to raise rear end of motorcycle high enough to permit the removal of the lower shock absorber mounting screws.
4. Remove lower shock absorber mounting screw and nut on each side of vehicle. See 2.25 SHOCK ABSORBERS. Continue to raise vehicle enough to access wiring on underside of rear fender.
5. See Figure 6-73. Unplug license plate lamp harness connector [40] (2).
6. See Figure 6-74. Remove license plate lamp harness (3) from harness bracket (1) and three harness clips (2). Feed harness and connector in through hole in rear fender.
7. See Figure 6-75. Remove two fender support screws with washers (4). Remove screw with washer (5) securing rear fender to fender brace (2). Remove fender brace and license plate holder assembly (1) from vehicle.

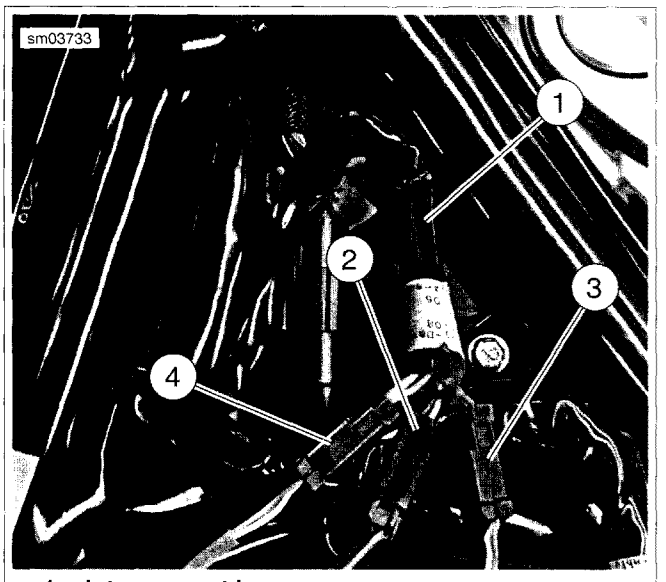

1. Interconnect harness
2. License plate lamp harness connector [40]
3. Right turn signal/brake/tail lamp harness connector [18]
4. Left turn signal/brake/tail lamp harness connector [19]

Figure 6-73. Rear Lighting Interconnect Harness: XL 883N/XL 1200N (HDI)

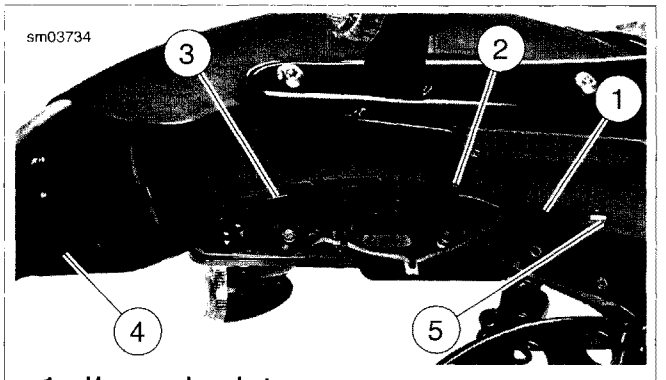

1. Harness bracket
2. Harness clip (3)
3. License plate lamp harness
4. License plate holder
5. Feedthrough hole

Figure 6-74. License Plate Holder and Lamp Harness Mounting: XL 883N/XL 1200N (HDI)

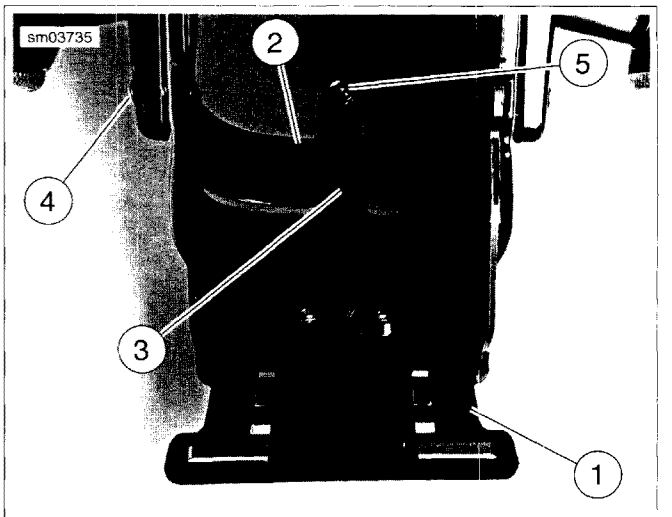

1. License plate holder
2. Rear fender brace
3. Tab
4. Fender support screw with washer (2)
5. Screw with washer

Figure 6-75. License Plate Holder: XL 883N/XL 1200N (HDI)

8. See Figure 6-76. Remove two screws with washers (2) securing license plate lamp housing to license plate holder (1). See Figure 6-77. Separate lamp housing (3) and gasket (2) from license plate holder (1).

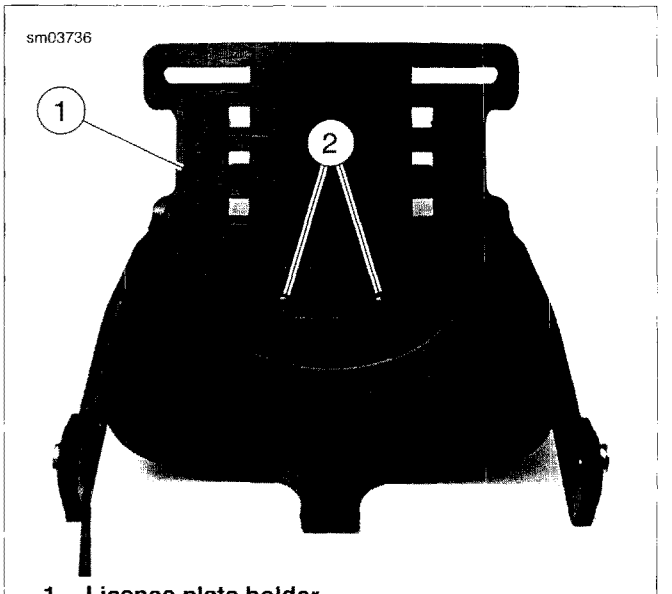

1. License plate holder
2. Screw with washer (2)

Figure 6-76. License Plate Holder and Lamp Mounting Screws: XL 883N/XL 1200N (HDI)

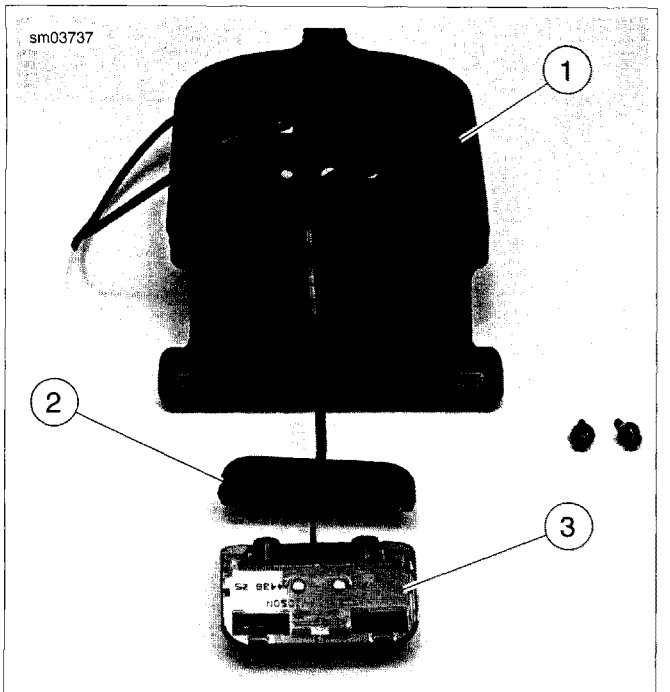

1. License plate holder
2. Gasket
3. Lamp housing

Figure 6-77. Lamp Housing Separated from License Plate Holder: XL 883N/XL 1200N (HDI)

9. See Figure 6-78. Insert the tip of a small flat bladed screwdriver (3) into each slot (2) in lamp housing. Gently tilt screwdriver handle outward (away from lamp housing) just enough to disengage housing from cover. Separate housing from cover and slide housing away from tabs (4) in cover.

10. See Figure 6-79. If replacing a light bulb (2), gently pull bulb straight out of socket assembly (3). Push **new** light bulb into socket.

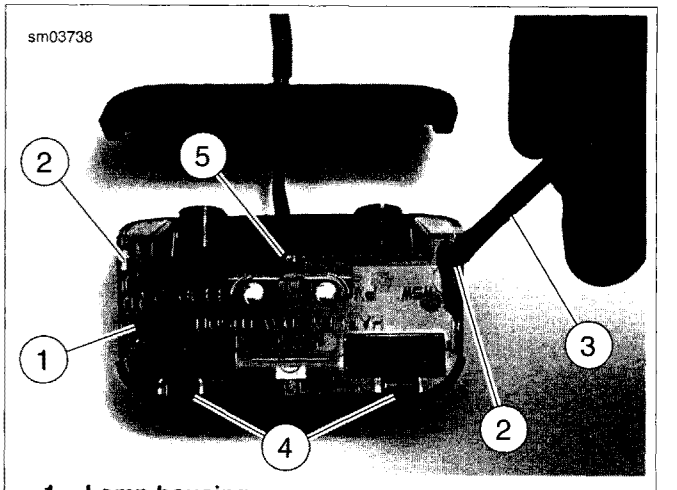

1. Lamp housing
2. Slot (2)
3. Screwdriver
4. Tab (2)
5. Feedthru slots for harness wires

Figure 6-78. Removing License Plate Lamp Housing Cover: XL 883N/XL 1200N (HDI)

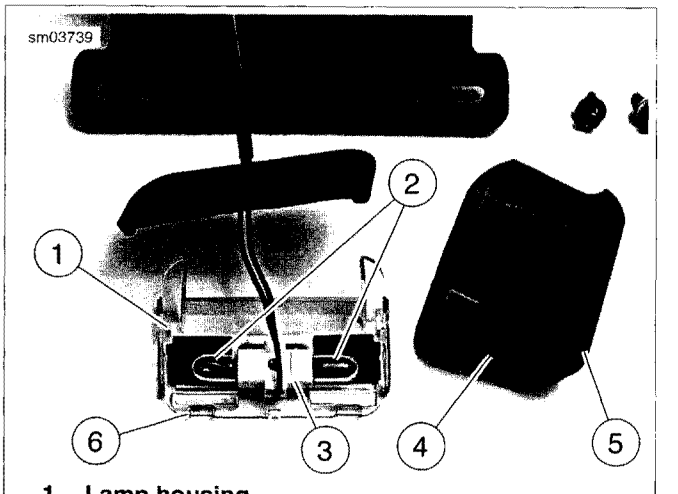

1. Lamp housing
2. Light bulb (2)
3. Socket assembly
4. Housing cover
5. Tab (2)
6. Slot (2)

Figure 6-79. Replacing License Plate Light Bulbs: XL 883N/XL 1200N (HDI)

INSTALLATION (HDI ONLY)

1. If reusing license plate lamp housing, see Figure 6-79. Carefully fit housing cover (4) onto lamp housing (1), sliding tabs on cover (5) into slots (6) in housing. Make sure harness wires fit into feedthrough slots in housing. Gently snap cover onto housing, being careful not to pinch wires.

2. See Figure 6-77. Fit gasket (2) onto lamp housing (3).

3. See Figure 6-76. Install lamp housing onto license plate holder (1) with lamp housing cover facing upward. Secure with two screws (2). Tighten to 14-16 **in-lbs** (1.2-1.3 Nm).
4. See Figure 6-75. Fit tab (3) on license plate holder (1) into slot in rear fender brace (2). Install assembly onto vehicle. Install screw with washer (5) through fender and into fender brace. Tighten only finger-tight at this time.
5. Install two screws with washers (4) through fender struts, fender, fender brace and into threaded inserts in license plate holder. See Figure 6-80. Make sure license plate holder threaded inserts (3) fit into holes (4) in fender brace (2). Tighten to 132-216 **in-lbs** (14.9-24.4 Nm).
6. Now tighten screw securing fender to center of fender brace to 20-25 **in-lbs** (2.3-2.8 Nm).
7. See Figure 6-74. Install license plate lamp harness (3) into three clips (2) in fender bracket. Feed harness and connector through feedthrough hole (5) in fender. Press harness into harness bracket (1).
8. See Figure 6-73. Plug license plate lamp harness connector [40B] into interconnect harness connector [40B] (2).
9. Install lower shock absorber screw and nut on each side of vehicle. Tighten to 45-50 ft-lbs (61-68 Nm). See 2.25 SHOCK ABSORBERS.

⚠WARNING

After installing seat, pull upward on seat to be sure it is locked in position. While riding, a loose seat can shift causing loss of control, which could result in death or serious injury. (00070b)

10. Install seat. See 2.37 SEAT: XL MODELS.
11. Plug in main fuse. See 6.35 MAIN FUSE.

⚠WARNING

Be sure that all lights and switches operate properly before operating motorcycle. Low visibility of rider can result in death or serious injury. (00316a)

12. Turn ignition switch to IGNITION and check license plate lamp to make sure both bulbs are lit. Turn ignition switch OFF.

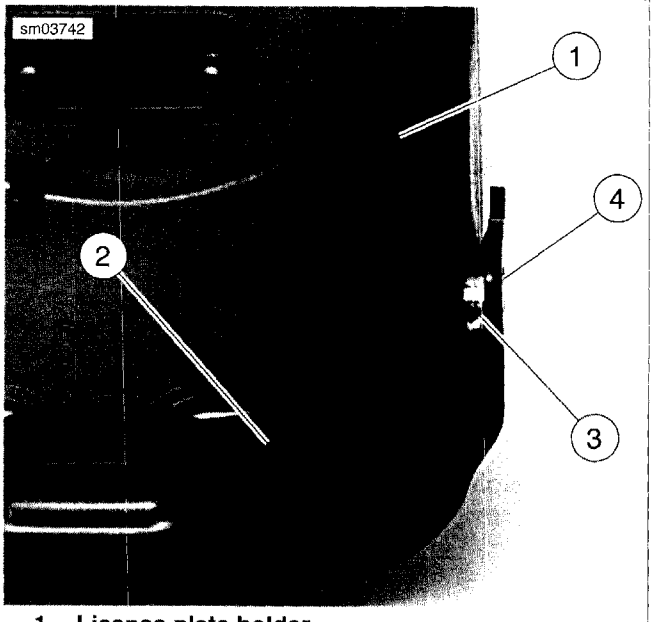

1. **License plate holder**
2. **Rear fender brace**
3. **Threaded insert**
4. **Hole**

Figure 6-80. License Plate Holder and Rear Fender Brace: XL 883N/XL 1200N (HDI)

REAR LIGHTING CONVERTER MODULE: XL 883N/XL 1200N (DOMESTIC ONLY) 6.23

GENERAL

NOTE

HDI XL 883N and XL 1200N models are equipped with a sealed LED tail lamp, brake lamp and turn signal assembly in each rear turn signal housing. Instead of a rear lighting converter module, this model is equipped with an interconnect harness between main harness rear lighting connector [7B] and the turn signal [18] and [19] and license plate lamp [40] harness connectors.

The domestic XL 883N/XL 1200N rear turn signal lamps also serve as tail lamps and brake lamps. Dual filament bulbs provide these features; one filament provides the tail lamp function while the other filament provides the dual function of turn signal and brake lamp.

See Figure 6-81. In order for a single filament to function both as turn signal and brake lamp, a converter module is required. The converter module is incorporated into an interconnect harness that connects the main wiring harness to the rear lighting harnesses.

The converter module is located in front of the battery, under the frame "Y" section.

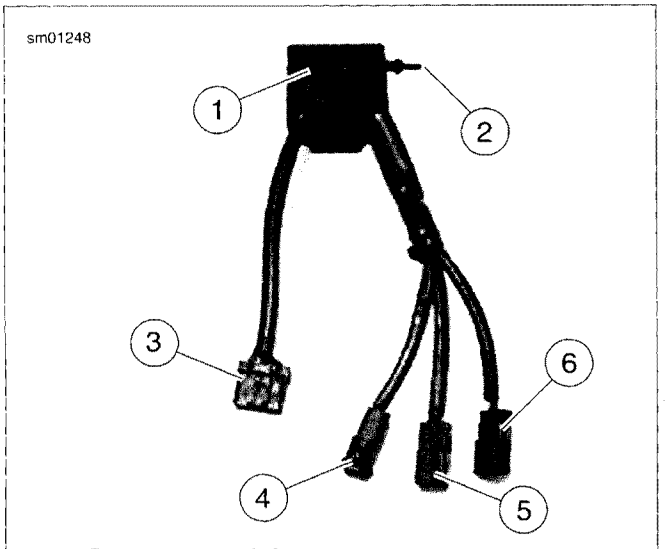

1. **Converter module**
2. **Rubber mounting tab**
3. **Main harness connector [7]**
4. **License plate lamp connector [40]**
5. **Right turn signal connector [18]**
6. **Left turn signal connector [19]**

Figure 6-81. Converter and Interconnect Harness

REMOVAL

1. Remove seat.
2. Open left side cover. See 2.19 LEFT SIDE COVER.

⚠WARNING

Prevent accidental vehicle start-up, which could cause death or serious injury. First disconnect negative (-) battery cable at engine and then positive (+) cable from battery. (00280b)

3. Remove battery. See 1.17 BATTERY MAINTENANCE.
4. See Figure 6-82. Unplug the following harness connectors:
   a. Antenna [209] (1)
   b. Right rear lighting harness [18] (2)
   c. Left rear lighting harness [19] (3)
   d. License plate lamp harness [40] (4)
   e. Main wiring harness [7] (5)
   f. Engine harness connector [145] (6)
5. See Figure 6-83. Remove ECM caddy fastener.
6. See Figure 6-84. Remove bracket fasteners (2).
7. Remove bracket (3) with converter module (7) assembly.
8. Remove cable strap securing temperature sensor wire to oil tank mounting bracket.
9. Remove rubber mounting tab (5) from mounting tab hole (4) to release module from bracket.

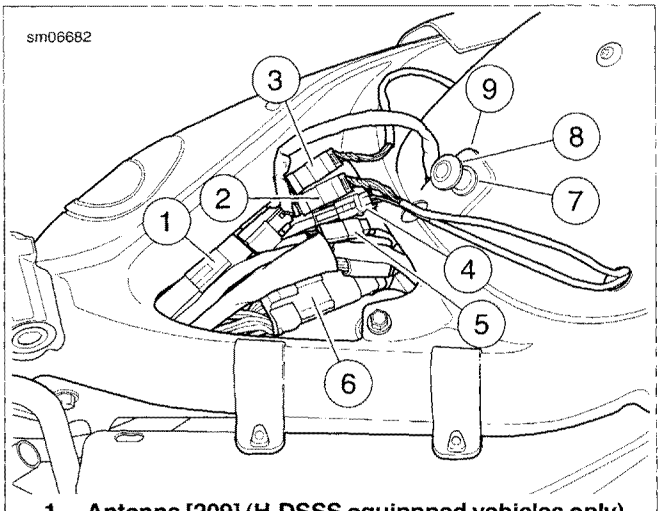

1. **Antenna [209] (H-DSSS equippped vehicles only)**
2. **Right rear lighting harness connector [18]**
3. **Left rear lighting harness connector [19]**
4. **License plate lamp harness [40]**
5. **Main wiring harness connector [7]**
6. **Engine harness connector [145]**
7. **Flat washer**
8. **Seat post**
9. **Frame crossmember tab**

Figure 6-82. Rear Lighting Harness Connectors: XL 883N/XL 1200N

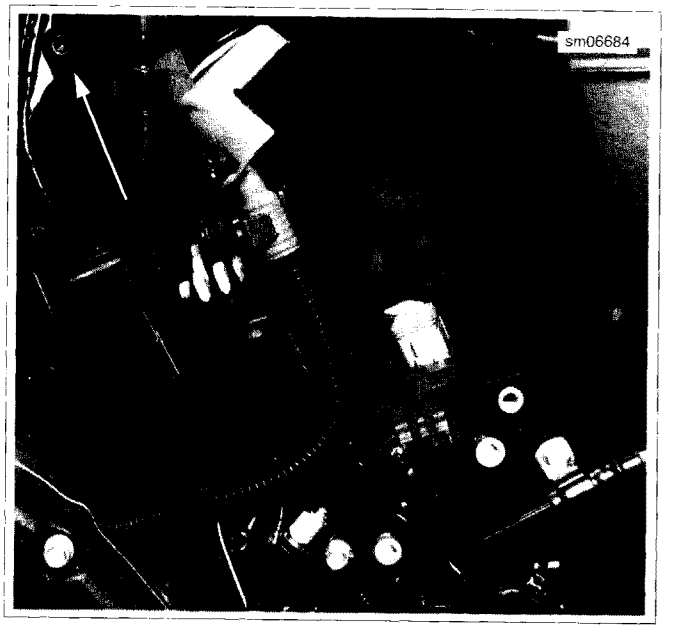

Figure 6-83. ECM Caddy Fastener

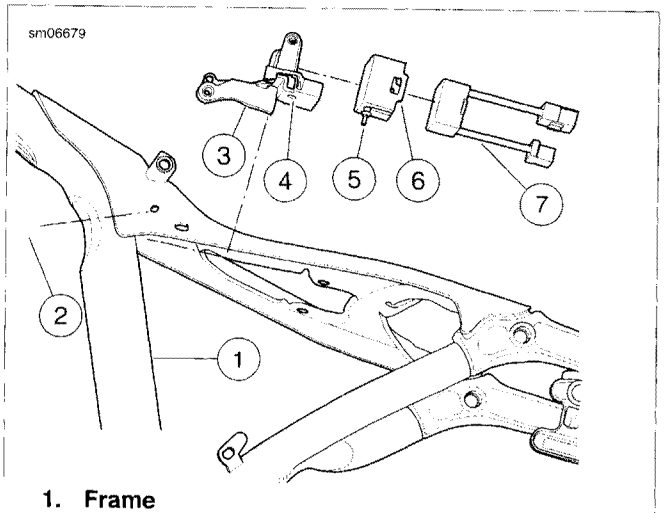

1. **Frame**
2. **Bracket fastener (3)**
3. **Bracket**
4. **Mounting tab hole**
5. **Rubber mounting tab**
6. **Module holder**
7. **Module**

Figure 6-84. Converter Module

INSTALLATION

1. Feed converter module/interconnect harness connectors up through battery compartment, forward of battery strap bracket.
2. See Figure 6-84. Install module (7) and module holder (5) into bracket (3) by pulling rubber mounting tab (5) into mounting tab hole (4).
3. Position bracket up inside frame, under "Y" section.
4. Install but do not tighten bracket fasteners (2).
5. See Figure 6-83. Install ECM caddy fastener. Tighten to 72-96 **in-lbs** (8.1-10.8 Nm).
6. Tighten bracket fasteners to 36-60 **in-lbs** (4.1-6.8 Nm).
7. Secure temperature sensor wire to oil tank mounting bracket with a cable strap.
8. See Figure 6-82. Plug in the following harness connectors:
   a. Antenna [209] (1)
   b. Right rear lighting harness [18] (2)
   c. Left rear lighting harness [19] (3)
   d. License plate lamp harness [40] (4)
   e. Main wiring harness [7] (5)
   f. Engine harness connector [145] (6)
9. Install battery and connect battery cables. See 1.17 BATTERY MAINTENANCE.

⚠WARNING

Be sure headlamp, tail and stop lamp and turn signals are operating properly before riding. Poor visibility of rider to other motorists can result in death or serious injury. (00478b)

10. Close left side cover. See 2.19 LEFT SIDE COVER.
11. Turn ignition switch ON and test rear lighting functions. Make sure tail lamps, brake lamps and turn signals operate properly. Make sure license plate lamp is illuminated. Turn ignition switch OFF.

⚠WARNING

After installing seat, pull upward on seat to be sure it is locked in position. While riding, a loose seat can shift causing loss of control, which could result in death or serious injury. (00070b)

12. Install seat.

GENERAL

XL models only: See Figure 6-85. The rear stop lamp switch (3) is located behind the rear brake master cylinder reservoir under the left side cover. The rear stop lamp switch is threaded into a tee nut in the rear brake line.

XR models only: The rear stop lamp switch is located underneath the motorcycle near the rear brake master cylinder reservoir. The rear stop lamp switch is threaded into a tee nut in the rear brake line.

The stop lamp switch is an open type switch which closes with hydraulic pressure. When the pressure in the line reaches a preset level, the rear stop lamp switch is tripped and the rear stop lamp illuminates.

NOTE

The rear stop lamp switch cannot be repaired. Replace the unit if it fails.

REPLACEMENT

⚠WARNING

To prevent accidental vehicle start-up, which could cause death or serious injury, remove main fuse before proceeding. (00251b)

1. Remove left side cover. See 2.19 LEFT SIDE COVER. Remove main fuse. See 6.35 MAIN FUSE.
2. **XL models only:** move rear brake master cylinder reservoir out of the way:
   a. Remove the rear brake master cylinder reservoir cover; grasp cover and pull straight away from reservoir.
   b. Remove reservoir mounting screw and secure reservoir upright out of the way. See 2.14 REAR BRAKE MASTER CYLINDER RESERVOIR.
3. See Figure 6-85 or Figure 6-86. Pull terminal sockets from spade connections (4) on stop lamp switch.
4. Remove stop lamp switch (3) from tee nut (2).
5. Thread **new** stoplight switch (3) to tee nut (2) on brake line. Tighten switch to 132-168 **in-lbs** (14.9-18.9 Nm).
6. Install terminal sockets on switch spade connections (4).
7. **XL models only:** Install rear brake master cylinder reservoir:
   a. Replace the reservoir mounting screw. Tighten to 20-25 **in-lbs** (2.3-2.8 Nm).
   b. Replace the plastic guard around the reservoir.
8. Install main fuse. Install left side cover.

⚠WARNING

After repairing the brake system, test brakes at low speed. If brakes are not operating properly, testing at high speeds can cause loss of control, which could result in death or serious injury. (00289a)

9. Refill master cylinder and bleed brakes. See 1.8 BLEEDING HYDRAULIC BRAKE SYSTEM. Test operation of rear brake.

⚠WARNING

After repairing the brake system, test brakes at low speed. If brakes are not operating properly, testing at high speeds can cause loss of control, which could result in death or serious injury. (00289a)

10. Test operation of brake lamp with the rear brake applied and the ignition/light switch turned ON.

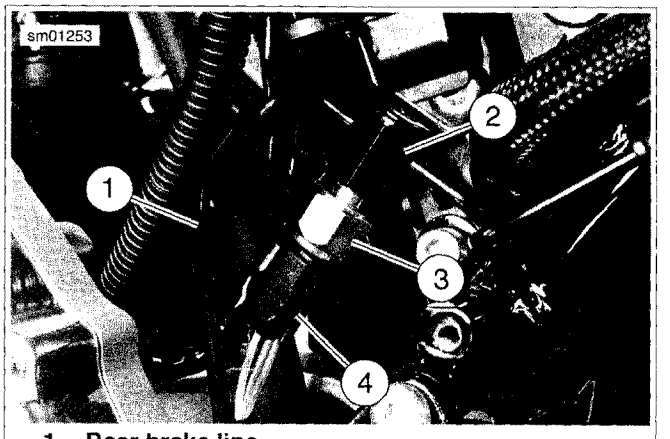

1. **Rear brake line**
2. **Tee nut**
3. **Rear stop lamp switch**
4. **Spade connector terminal socket (2) [121]**

Figure 6-85. Rear Stop Lamp Switch: XL Models Only

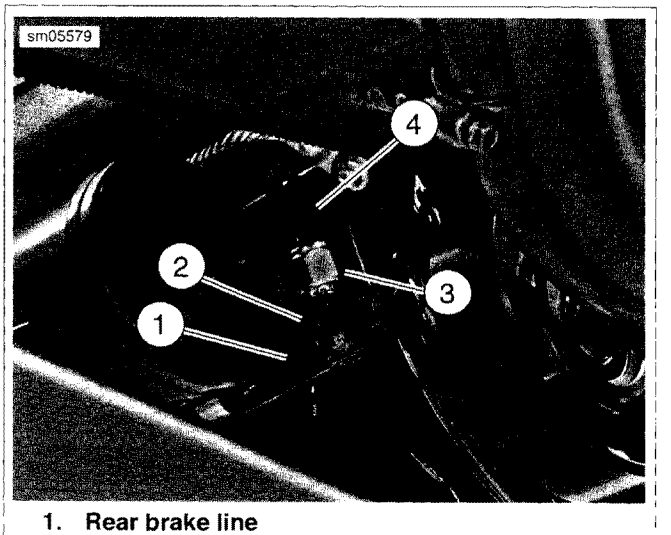

1. **Rear brake line**
2. **Tee nut**
3. **Rear stop lamp switch**
4. **Spade connector terminal socket (2) [121]**

Figure 6-86. Rear Stop Lamp Switch: XR Models Only

GENERAL

The crank position (CKP) sensor is a variable reluctance (VR) sensor that generates an AC signal by sensing the passing of the 30 teeth cast into the engine's left side flywheel. Two consecutive teeth are missing in the flywheel to establish a reference point. The CKP sensor sends a signal to the Electronic Control Module (ECM). This signal is used to reference engine position (TDC) and engine speed. The CKP sensor is located near the lower front left corner of the engine crankcase.

NOTE

The crank position sensor cannot be repaired. Replace the unit if it fails.

REMOVAL

⚠WARNING

To prevent accidental vehicle start-up, which could cause death or serious injury, remove main fuse before proceeding. (00251b)

1. Unplug main fuse. See 6.35 MAIN FUSE.
2. See Figure 6-87. Disconnect CKP sensor harness connector [79A] from wiring harness connector [79B] (4), located along left frame downtube.
3. Remove CKP wire harness from j-clip (3).
4. Remove screw (2). Carefully remove CKP sensor (1) and O-ring from engine crankcase.

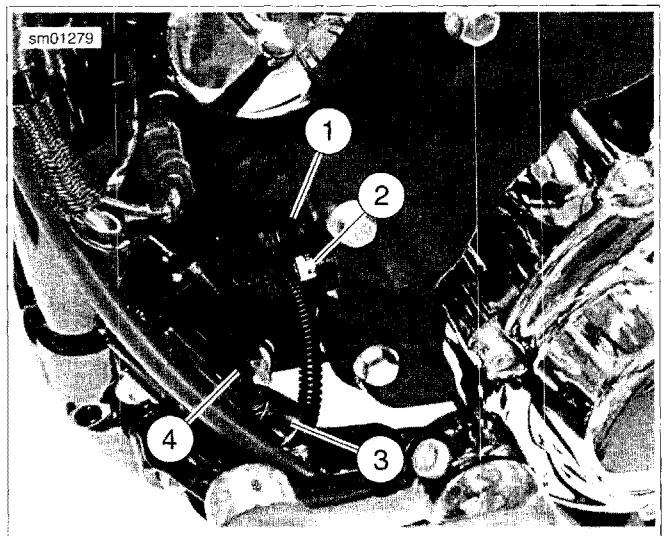

1. **Crank position (CKP) sensor**
2. **Screw**
3. **Wire harness j-clip**
4. **CKP sensor harness connector [79] (under protective rubber boot)**

Figure 6-87. Crank Position (CKP) Sensor (Typical, XL Model Shown)

INSTALLATION

NOTE

The CKP sensor O-ring has a blue teflon coating that provides lubrication during installation. It is not necessary to coat the O-ring with engine oil or other lubricant to install it.

1. See Figure 6-87. Carefully install CKP sensor (1) and O-ring into engine crankcase with screw (2). Tighten to 80-100 **in-lbs** (9.0-11.3 Nm).
2. Route CKP sensor wiring harness through j-clip (3).
3. Attach CKP sensor harness connector [79A] to wiring harness connector [79B] (4).
4. Plug in main fuse. See 6.35 MAIN FUSE.
5. Start engine and verify operation.

REMOVAL AND DISASSEMBLY

1. Open left side cover. See 2.19 LEFT SIDE COVER.

⚠WARNING

Prevent accidental vehicle start-up, which could cause death or serious injury. First disconnect negative (-) battery cable at engine and then positive (+) cable from battery. (00280b)

2. Disconnect negative battery cable from crankcase. Disconnect positive (+) battery cables from battery. See 1.17 BATTERY MAINTENANCE. Close left side cover.
3. Remove primary cover. See 5.3 PRIMARY CHAIN ADJUSTER.
4. Remove clutch assembly, primary chain and engine sprocket/rotor assembly as a unit. See 5.5 PRIMARY DRIVE AND CLUTCH: XL MODELS or 5.6 PRIMARY DRIVE AND CLUTCH: XR MODELS.
5. Remove/disassemble rotor and/or stator, as required. Refer to the following procedures.

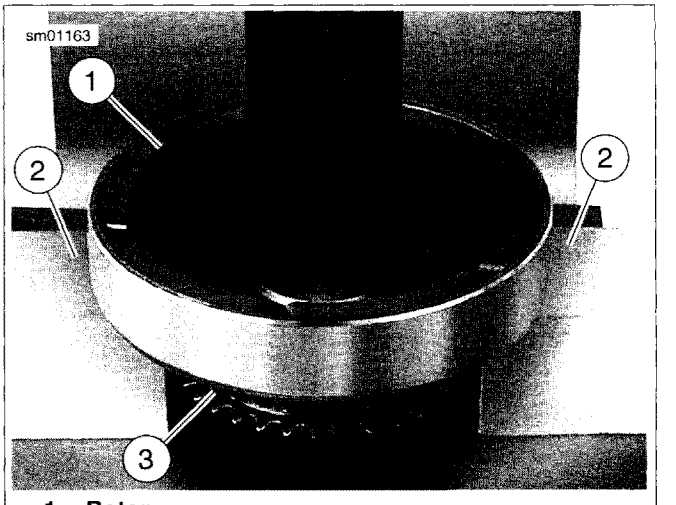

1. Rotor
2. Blocking
3. Sprocket

Figure 6-88. Removing Rotor from Sprocket (XL Models Only)

Rotor

NOTE

This procedure applies only to XL models. XR rotor assembly is not serviceable. If damaged, the entire rotor assembly must be replaced.

1. Remove bolts securing alternator rotor to engine sprocket.
2. See Figure 6-88. Position blocking (2) under rotor (1). Press sprocket (3) free of rotor.

NOTE

Resistance to sprocket/rotor disassembly is due in part to the magnetic force of the permanent rotor magnets.

Stator

1. See Figure 6-89. Open external latch (4) and unplug stator harness (2) connector [46B] from voltage regulator harness (3) connector [46A] (1). See 6.3 VOLTAGE REGULATOR for procedure.
2. Make note of cable strap positions and remove cable straps from stator harness.
3. Withdraw stator harness from opening between right crankcase half and gear case cover.
4. See Figure 6-90. Using a T-27 TORX driver, remove and discard screws (3) securing stator to left crankcase half.
5. Remove two screws (9) and harness retainer (8).
6. Remove stator harness grommet (10) from left crankcase half.
7. Withdraw stator harness from grommet hole in left crankcase half. Remove stator.

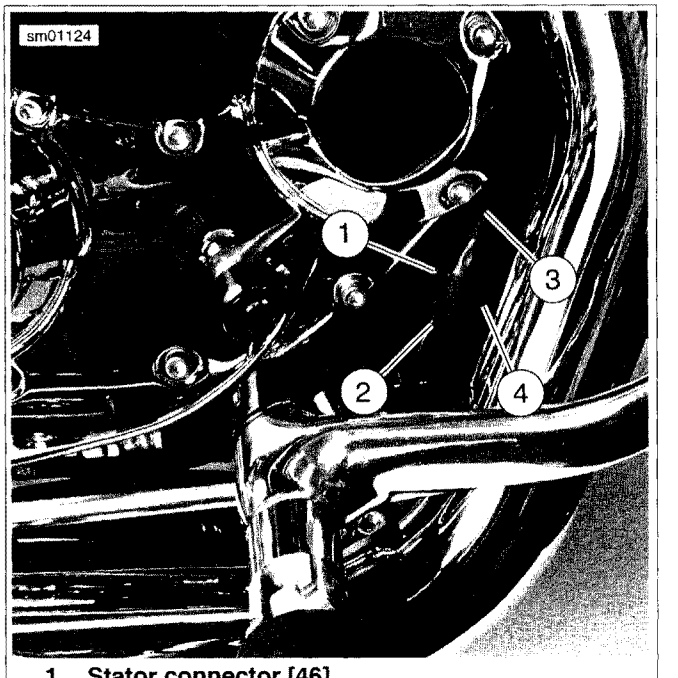

1. Stator connector [46]
2. Stator harness
3. Voltage regulator harness
4. External latch

Figure 6-89. Stator Connector Location (Typical, XL Models Shown)

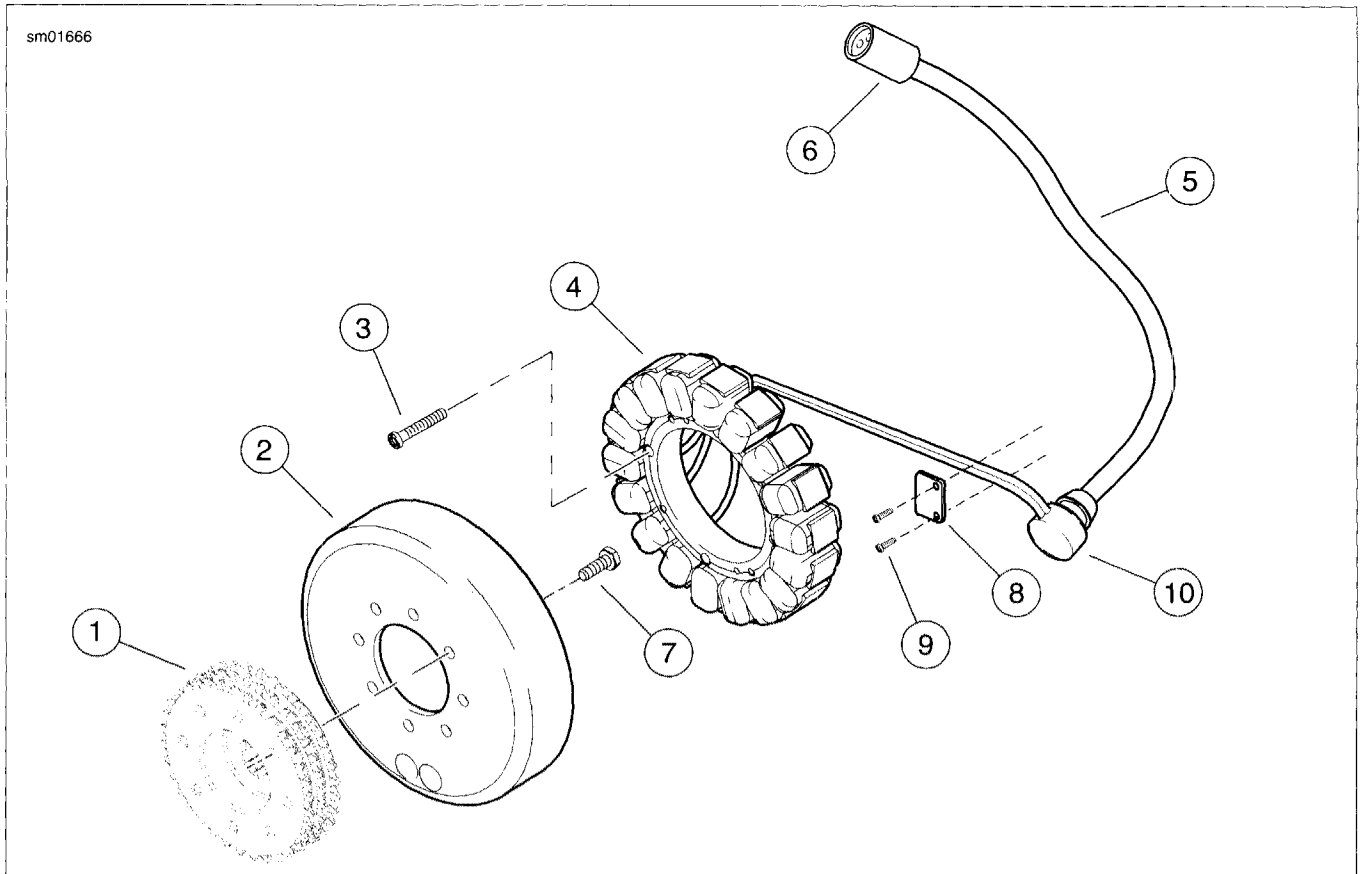

1. **Motor sprocket**
2. **Rotor**
3. **Screw (4)**
4. **Stator**
5. **Stator wiring harness**
6. **Connector [46B]**
7. **Bolt (8)**
8. **Stator harness retainer**
9. **Screw (2)**
10. **Stator harness grommet**

Figure 6-90. Alternator Components

CLEANING AND INSPECTION

1. Clean rotor with a petroleum-base solvent. Remove all foreign material from rotor magnets. Replace rotor if rotor magnets are cracked or loose.
2. Clean stator by wiping with a clean cloth.
3. Examine stator leads for cracked or damaged insulation.

NOTE

The rotor and stator can be replaced individually if either is damaged.

ASSEMBLY AND INSTALLATION

Depending on whether the rotor, the stator, or both the rotor and stator were removed, perform the applicable procedures which follow:

Stator

1. See Figure 6-90. Feed stator wiring harness (5) with attached grommet (10) into open grommet hole in left crankcase half.
2. Apply a light coating of clean engine oil or chaincase lubricant to grommet. Press grommet into hole in left crankcase half.
3. Position stator (4) on left crankcase half. Secure stator using **new** TORX screws. Use TORX driver to tighten screws to 30-40 **in-lbs** (3.4-4.5 Nm).
4. Position stator harness retainer (8) over harness and onto engine crankcase with mounting holes facing aft. Secure with two screws (9). Make sure harness is not pinched. Tighten screws to 56 **in-lbs** (6.3 Nm) (maximum). Do not exceed torque specification.
5. Route stator wiring harness across top of crankcase halves to right side of engine. Route stator harness downward

through opening between right crankcase half and gear-case cover.

6. Route stator harness forward and then upward along inboard side of right frame downtube.
7. See Figure 6-89. Connect stator harness (2) to voltage regulator harness (3) at connector [46] (1) and lock external latch (4) in place. See 6.3 VOLTAGE REGULATOR for procedure.
8. Secure stator harness and neutral switch with cable straps as noted from stator removal.

Rotor

NOTE

This procedure applies only to XL models. XR rotor assembly is not serviceable. If damaged, the entire rotor assembly must be replaced.

1. See Figure 6-91. Position rotor (1) on sprocket (2). Align holes in sprocket with holes in rotor. Apply a drop of LOCTITE THREADLOCKER 243 (blue) to threads of each mounting bolt. Insert mounting bolts through rotor and start bolts into tapped holes in sprocket.
2. Position a section of pipe (3) with an inside diameter larger than the sprocket mounting hub over center of rotor.
3. Press rotor onto sprocket. Tighten screws to 120-140 **in-lbs** (13.6-15.8 Nm).

Final Assembly

1. Install clutch assembly, primary chain and engine sprocket/rotor assembly as a unit. See 5.5 PRIMARY DRIVE AND CLUTCH: XL MODELS or 5.6 PRIMARY DRIVE AND CLUTCH: XR MODELS.
2. Install primary cover, left footrest assembly and gear shift lever. See 5.3 PRIMARY CHAIN ADJUSTER.
3. Open left side cover. See 2.19 LEFT SIDE COVER.

⚠WARNING

Connect positive (+) battery cable first. If positive (+) cable should contact ground with negative (-) cable connected, the resulting sparks can cause a battery explosion, which could result in death or serious injury. (00068a)

4. Connect battery cables, positive (+) cable first. See 1.17 BATTERY MAINTENANCE. Close left side cover.
5. Test charging system. See electrical diagnostic manual.

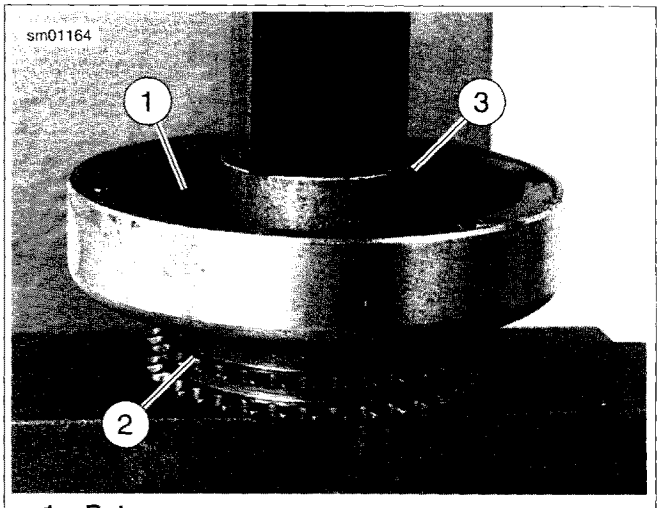

1. **Rotor**
2. **Sprocket**
3. **Pipe section**

Figure 6-91. Pressing Rotor onto Sprocket (XL Models Only)

GENERAL

The vehicle speed sensor (VSS) is powered and monitored by the Electronic Control Module (ECM). The ECM processes the vehicle speed signal and transmits this signal to the turn signal module/turn signal security module (TSM/TSSM) and speedometer through serial data.

NOTE

The vehicle speed sensor cannot be repaired. Replace the unit if it fails.

REMOVAL

⚠WARNING

To prevent accidental vehicle start-up, which could cause death or serious injury, remove main fuse before proceeding. (00251b)

1. Unplug main fuse. See 6.35 MAIN FUSE.
2. See Figure 6-92. Disconnect VSS harness connector [65A] (1) from VSS (3) mounted on rear of engine case below starter motor assembly.
3. Remove screw (2). Carefully remove VSS and O-ring from engine crankcase.

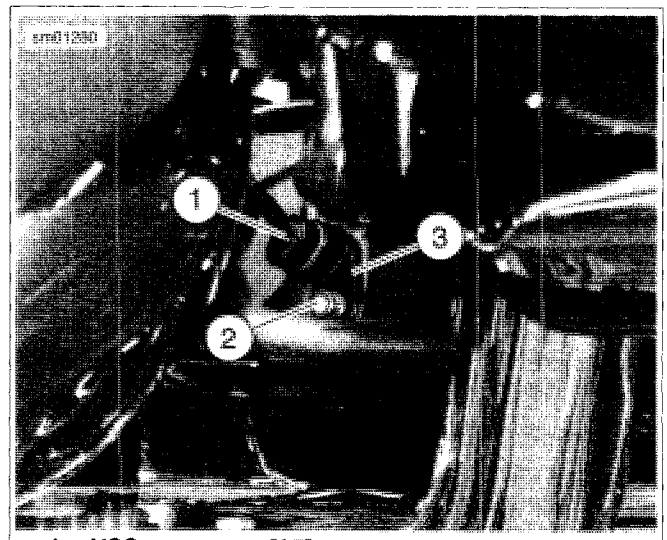

1. **VSS connector [65]**
2. **Screw**
3. **Vehicle speed sensor (VSS)**

Figure 6-92. Vehicle Speed Sensor: All Models (XL Shown)

INSTALLATION

NOTE

*The **new** VSS O-ring has a teflon coating that provides lubrication during installation. It is not necessary to coat the O-ring with engine oil or other lubricant to install it.*

1. See Figure 6-92. Carefully install VSS (3) and O-ring into engine crankcase with screw (2). Tighten to 80-100 **in-lbs** (9.0-11.3 Nm).
2. Attach VSS harness connector [65A] (1) to VSS.
3. Plug in main fuse. See 6.35 MAIN FUSE.
4. Start engine and test ride motorcycle to verify proper operation.

GENERAL

See Figure 6-93. The neutral indicator switch (1) is threaded into the right crankcase half (3) immediately forward of the main drive gear (4). A short jumper wire assembly (2) connects the switch to the harness connector [136] under the engine crankcase.

A pin on the shifter drum contacts the neutral indicator switch plunger, completing the neutral indicator circuit.

A motorcycle whose neutral indicator lamp does not light can be tested to determine if the problem can be found:

- In a burned out indicator lamp, the wire harness to the instruments or in the main wire harness.
- In the neutral indicator switch and its jumper wire.

If switch requires replacement, the rear muffler and rear exhaust pipe must be removed to remove the transmission sprocket cover. The drive belt and transmission sprocket must also be removed; there is not enough clearance to allow the removal of the switch without first removing the transmission sprocket.

NOTE

The neutral indicator switch cannot be repaired. Replace the switch if it fails.

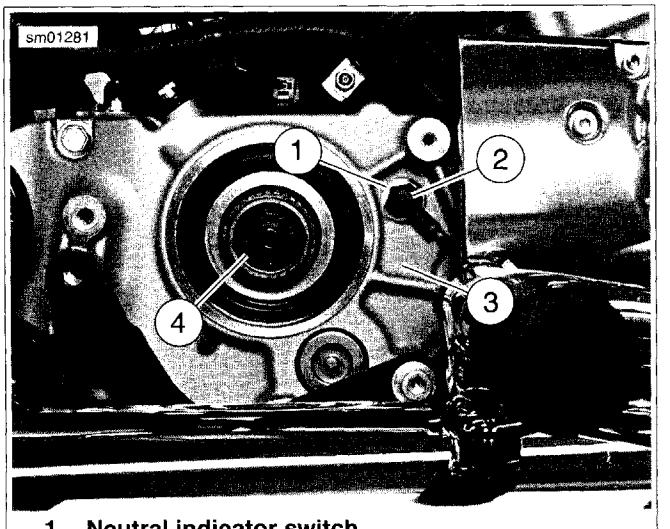

1. **Neutral indicator switch**
2. **Jumper wire connector [136]**
3. **Right crankcase half**
4. **Main drive gear**

Figure 6-93. Neutral Indicator Switch Location: All Models (XL Shown)

REPLACEMENT

⚠WARNING

To prevent accidental vehicle start-up, which could cause death or serious injury, remove main fuse before proceeding. (00251b)

1. Unplug main fuse. See 6.35 MAIN FUSE.
2. **XL models:** remove rear muffler and exhaust pipe. See 4.14 EXHAUST SYSTEM: XL MODELS. **XR models:** remove exhaust system. See 4.15 EXHAUST SYSTEM: XR MODELS.
3. Remove sprocket cover and rear drive belt from transmission sprocket. See 5.7 DRIVE BELT.
4. Remove transmission sprocket. See 5.16 TRANSMISSION SPROCKET.
5. See Figure 6-94. Unplug jumper wire connector (2) from neutral indicator switch (1). Remove switch with washer from right crankcase half (3).
6. Note routing of neutral switch jumper wire down between crankcase and rear of gearcase cover.
7. If necessary in order to unplug neutral switch jumper wire from neutral switch harness connector [136], cut cable strap securing neutral switch harness and stator harness to bottom right frame tube under oil pump.
8. Install **new** neutral indicator switch with washer and tighten to 120-180 **in-lbs** (13.6-20.3 Nm).
9. Plug **new** neutral switch jumper wire into neutral indicator switch [131]. Route jumper wire in same way that old jumper was routed.
10. Plug jumper wire pin connector [136A] into harness socket connector [136B]. Secure neutral switch harness and stator harness with cable strap to bottom right frame tube under oil pump.
11. Install transmission sprocket. See 5.16 TRANSMISSION SPROCKET.
12. Install secondary drive belt and sprocket cover. See 5.7 DRIVE BELT.
13. Adjust drive belt tension and rear wheel alignment. See 1.16 WHEEL ALIGNMENT.
14. **XL models:** install rear muffler and exhaust pipe. See 4.14 EXHAUST SYSTEM: XL MODELS. **XR models:** install exhaust system. See 4.15 EXHAUST SYSTEM: XR MODELS.
15. Plug in main fuse. See 6.35 MAIN FUSE.
16. Turn ignition switch on and check the operation of the neutral indicator lamp.

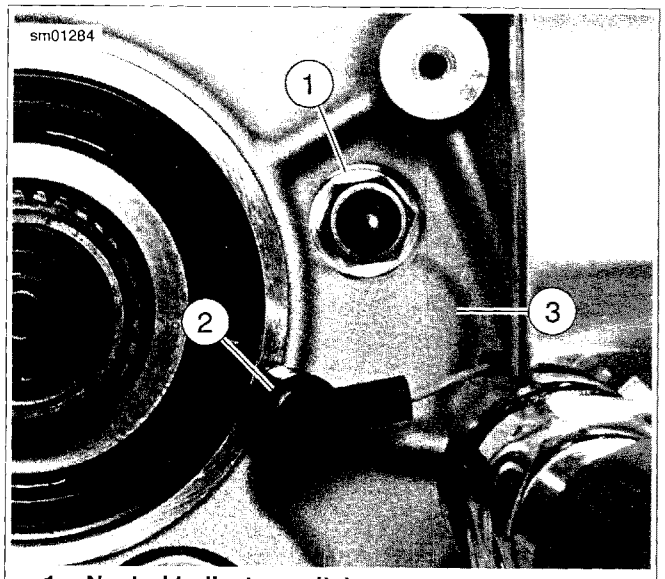

1. Neutral indicator switch
2. Jumper wire connector [131]
3. Right crankcase half

Figure 6-94. Neutral Indicator Switch: All Models (XL Shown)

GENERAL

The main wiring harness supplies power to all electrical systems on the vehicle. It is an electrical conduit, passing signals from sensors and switches, as well transferring data between the ECM, TSM/TSSM/HFSM and speedometer.

Various wiring sub-harnesses, such as the engine sub-harness, handlebar control harnesses, instruments harness and rear lighting harness are connected to the main wiring harness. These sub-harnesses are discussed elsewhere in this manual.

See B.2 WIRING DIAGRAMS of this manual for wiring schematics. See the electrical diagnostic manual for testing and troubleshooting information.

REMOVAL

⚠WARNING

To prevent spray of fuel, purge system of high-pressure fuel before supply line is disconnected. Gasoline is extremely flammable and highly explosive, which could result in death or serious injury. (00275a)

1. Purge the fuel supply hose of high pressure gasoline. Disconnect fuel supply hose from fuel pump module. See 4.5 FUEL TANK: XL MODELS or 4.6 FUEL TANK: XR MODELS.
2. Remove seat. 2.37 SEAT: XL MODELS or 2.38 SEAT: XR MODELS.
3. Remove left side cover. See 2.19 LEFT SIDE COVER.

⚠WARNING

Prevent accidental vehicle start-up, which could cause death or serious injury. First disconnect negative (-) battery cable at engine and then positive (+) cable from battery. (00280b)

4. Disconnect battery cables, negative cable first, and remove battery. See 1.17 BATTERY MAINTENANCE.
5. **On XR Models only:** Remove air cleaner. 1.23 AIR CLEANER: XR MODELS.
6. Remove fuel tank. See 4.5 FUEL TANK: XL MODELS or 4.6 FUEL TANK: XR MODELS.
7. Remove wire harness caddy. See 6.30 ELECTRICAL CADDIES.
8. See Figure 6-95. On XL models, cut cable strap (2) securing ET sensor to harness.

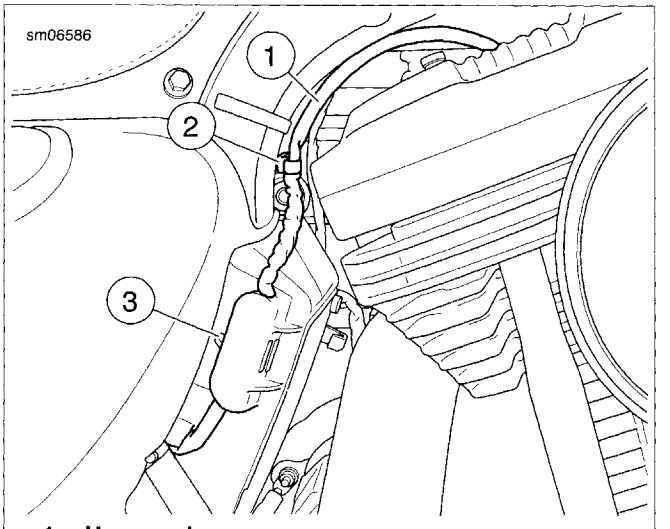

1. **Harness loop**
2. **Barbed cable strap**
3. **Engine Temperature Sensor Connector Location**

Figure 6-95. Engine Temperature Sensor Harness: XL Models

9. Unplug the following harness connectors from the main harness:
   a. Oil pressure switch [120B],
   b. Voltage regulator DC output [77B],
   c. Crank Position (CKP) sensor [79B],
   d. Front oxygen (O2) sensor [138B],
   e. Rear oxygen (O2) sensor [137B],
   f. Neutral switch jumper [136B],
   g. Engine temperature (ET) sensor [90B],
   h. Fuel pump [141A],
   i. Ignition coil [83B],
   j. Horn [122B],
   k. Sidestand [133] (if equipped),
   l. ECM [78B],
   m. Harness ground wire at engine crankcase [GND1],
   n. Rear stop lamp switch [121B],
   o. Vehicle speed sensor (VSS) [65B],
   p. Green starter motor wire [128B].
   q. **Vehicles with optional security siren:** Unplug security siren connector [142B].
10. **XL models with front mounted horn:** Remove horn wire harness from clip attached to right front frame downtube.
11. Locate engine sub-harness connector [145A] and rear lighting sub-harness connector [7A] on top of oil tank. Unplug both sub-harnesses from main harness.

12. Pull P&A battery harness/connector [160B] and fuel sender resistor assembly/connector [200] out from recess in top left rear corner of oil tank, under frame.
13. Remove TSM/TSSM/HFSM. See 6.10 TURN SIGNAL AND SECURITY MODULE (TSM/TSSM/HFSM):
    a. Reach under battery tray and push TSM/TSSM/HFSM up from cavity in bottom of tray.
    b. Unplug harness connector [30B].
    c. **H-DSSS equipped models:** unplug antenna connector [208B].
14. Remove wiring harness from two frame clips on front left frame downtube.
15. Remove vapor valve hose from clip on wiring harness. See 4.20 EVAPORATIVE EMISSIONS CONTROL (CA MODELS).
16. Remove battery tray. See 6.12 BATTERY TRAY.
17. See Figure 6-96. Remove the ECM caddy ..

    XL Models: Remove both fasteners.
18. Pull harness away from rear frame downtube.
19. Remove main wiring harness from left side of vehicle, carefully sliding wire harness caddies between rear cylinder and frame as harness is removed.

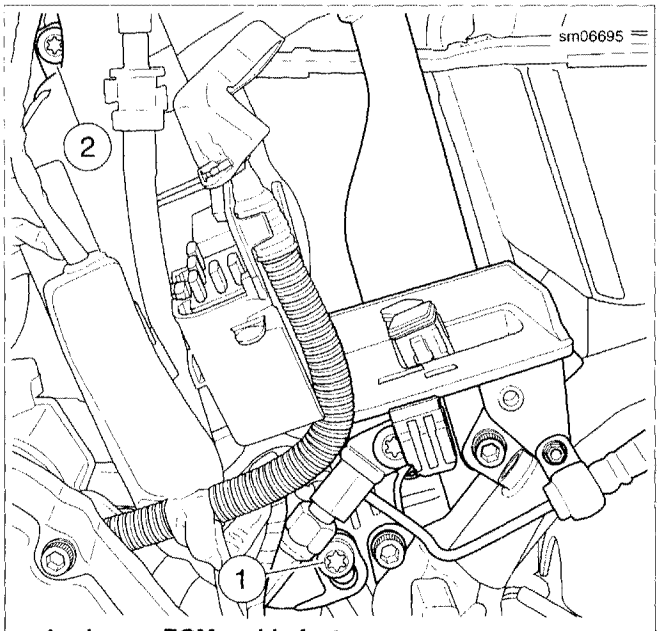

1. **Lower ECM caddy fastener**
2. **Upper ECM caddy fastener**

Figure 6-96. ECM Caddy Fasteners

INSTALLATION

See Figure 6-97 or Figure 6-98. The main wiring harness can be divided up into four "bundles", originating at the ECM caddy (XL models) or H-bracket (XR models) (1). These bundles are:

Lower left bundle (2) including:

- Rear stop lamp switch wires [121B],
- Crankcase ground [GND1],
- Fuel pump connector [141A],
- Siren connector [142B],
- TSM/TSSM/HFSM connector [30B],
- Main fuse holder [5],
- Data link connector [91A],
- Rear oxygen (O2) sensor connector [137B].

Lower right bundle (3) including:

- Vehicle speed sensor (VSS) connector [65B],
- Green starter motor wire [128B].
- Engine Temperature (ET) sensor connector [90B],

Upper left bundle (4) including:

- ECM connector [78B],
- Engine sub-harness connector [145A],
- P&A battery connector [160B],
- Rear lighting sub-harness connector [7A],
- Fuel sender resistor assembly/connector [200].

Upper right bundle (5) including:

- Hand control connectors [22B], [24B],
- Headlamp connector [38A],
- Front turn signal connector [31A],
- Instruments connector [20B],
- Horn wires [122B],
- Ignition/light switch [33],
- Coil connector [83B],
- Neutral switch connector [136B],
- Oil pressure switch connector [120B],
- Crank position (CKP) sensor connector [79B],
- Front oxygen (O2) sensor connector [138B],
- Voltage regulator DC output connector [77B].

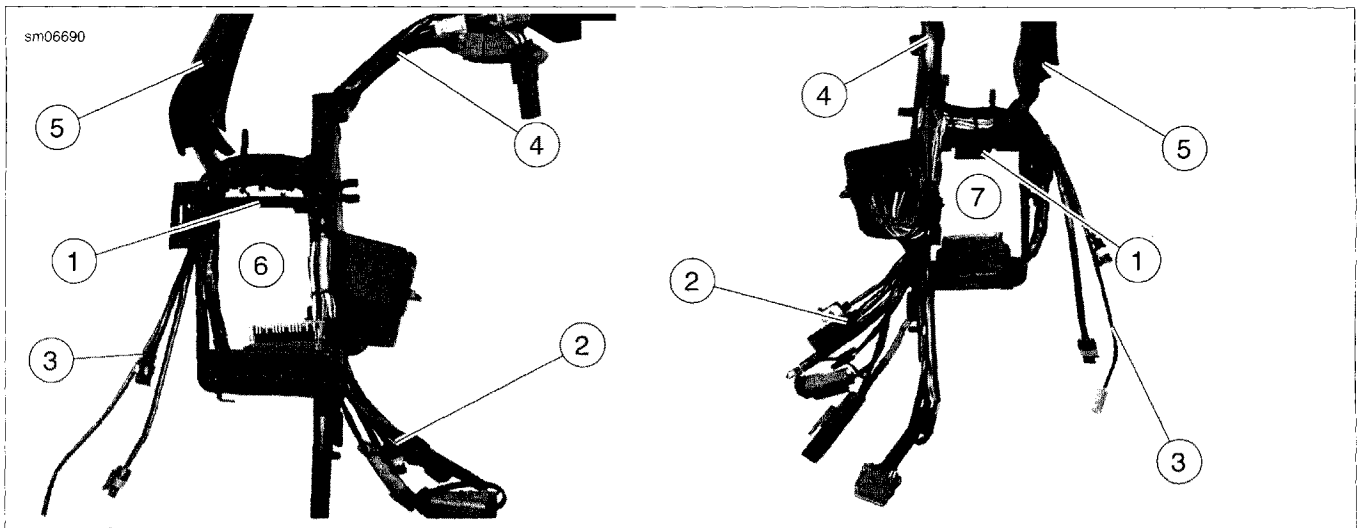

1. ECM caddy
2. Lower left bundle
3. Lower right bundle
4. Upper rear bundle
5. Upper front bundle
6. Front view
7. Rear view

Figure 6-97. Main Wiring Harness: XL Models

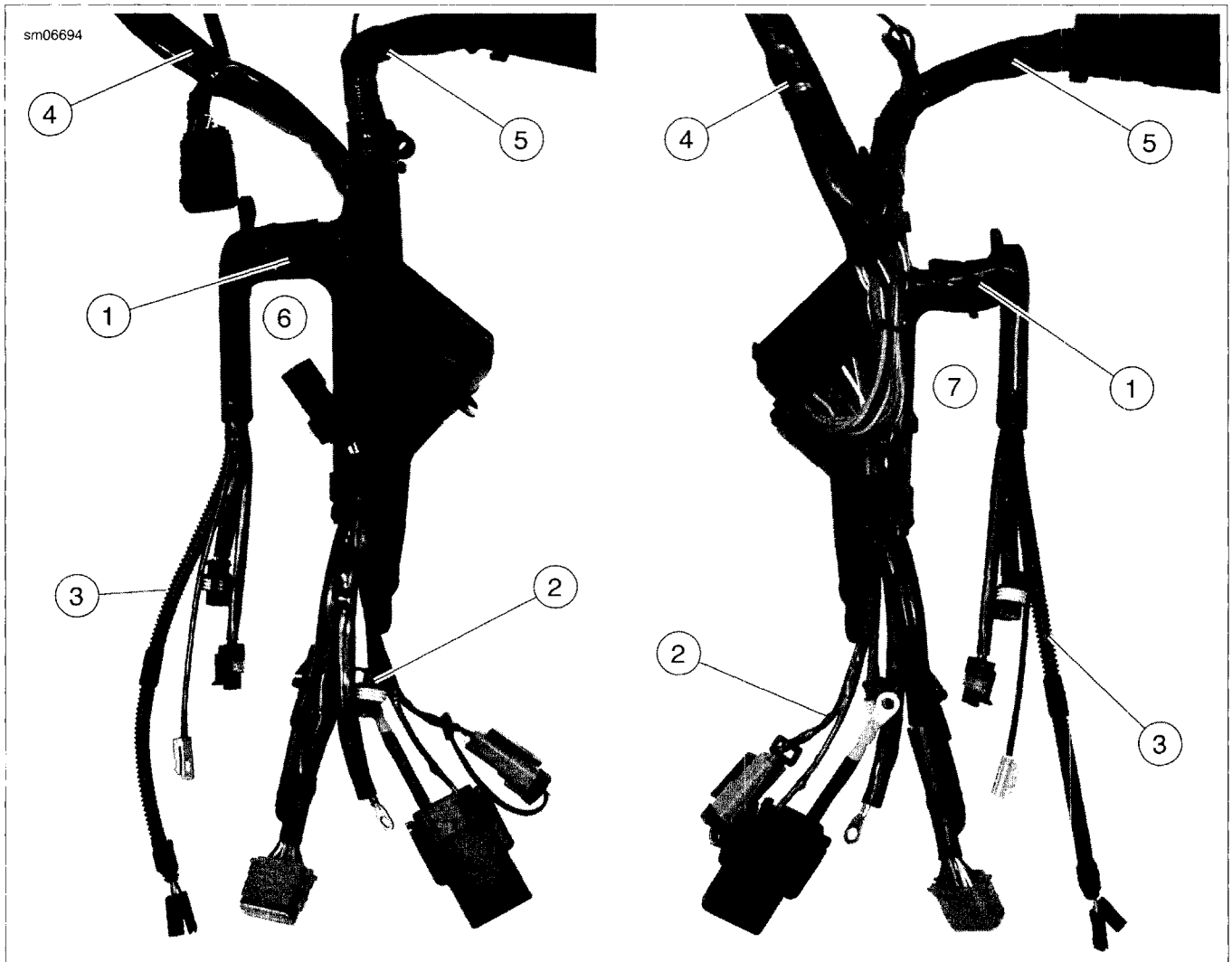

1. **H-bracket**
2. **Lower left bundle**
3. **Lower right bundle**
4. **Upper rear bundle**
5. **Upper front bundle**
6. **Front view**
7. **Rear view**

Figure 6-98. Main Wiring Harness: XR Models

1. See Figure 6-97 or Figure 6-98. Loosely position **new** main wiring harness on vehicle. From left side of vehicle, slide ECM caddy (XL models) or H-bracket (XR models) (1) into position on rear frame downtube, guiding each wire bundle toward its respective area on the vehicle. Make sure lower right bundle (3) and upper front bundle (XL models only) (5) with wire harness caddies feed out toward right side of vehicle.
2. **On XL models only:** Install ECM caddy. Be sure hook on ECM caddy engages tab on oil tank bracket. Tighten ECM caddy fasteners to 72-96 **in-lbs** (8.1-10.8 Nm). See 6.9 ELECTRONIC CONTROL MODULE (ECM).
3. **On XR models only:** Press H-bracket onto rear frame downtube until it snaps in place.
4. Feed upper rear bundle (4) up over top of oil tank. Make sure engine sub-harness also feeds up into that area.
5. Feed upper front bundle along frame backbone toward front of vehicle.
6. Feed TSM/TSSM/HFSM harness connector into position under battery tray location.

NOTE

The TSM/TSSM/HFSM harness connector MUST be in position before the battery tray is installed. Make sure the harness feeds over the top of the oil tank return hose.

7. Install battery tray. See 6.12 BATTERY TRAY. Make sure battery tray interlocks with ECM caddy (XL models) or H-bracket (XR models) on left side. Make sure to re-attach rear brake hose fasteners and rear brake master cylinder reservoir.
8. Plug connector [30B] into TSM/TSSM/HFSM. **H-DSSS equipped models:** plug in antenna connector [208B].

9. Lower TSM/TSSM/HFSM into place in bottom of battery tray.

10. Snap vapor valve into clip on left side of ECM caddy (XL models) or H-bracket (XR models). See 4.20 EVAPORATIVE EMISSIONS CONTROL (CA MODELS).

11. Slide P&A battery harness and connector [160B] and fuel sender resistor assembly/connector [200] into recess in top left rear corner of oil tank, under frame.

12. Plug rear lighting connector [7B] into main harness connector [7A].

13. Plug engine sub-harness connector [145B] into main harness connector [145A].

14. Slide left wire harness caddy between front cylinder head and frame, from right side of vehicle toward left side.

15. Make sure harness (part of upper right bundle) containing neutral switch connector [136B], CKP sensor connector [79B], oil pressure switch connector [120B], front O2 sensor connector [138B] and voltage regulator DC output connector [77B] runs down front left frame downtube.

16. **XL models with front mounted horn:** Install horn wire harness in clip attached to rear of right front frame downtube.

17. Install wire harness caddy. See 6.30 ELECTRICAL CADDIES.

18. Plug in the following harness connectors:
    a. Oil pressure switch [120B],
    b. Voltage regulator DC output [77B],
    c. Crank Position (CKP) sensor [79B],
    d. Front oxygen (O2) sensor [138B],
    e. Rear oxygen (O2) sensor [137B],
    f. Neutral switch jumper [136B],
    g. Engine temperature (ET) sensor [90B],
    h. Fuel pump [141A],
    i. Ignition coil [83B],
    j. Horn [122B],
    k. ECM [78B],
    l. Harness ground wire at engine crankcase [GND1],
    m. Rear stop lamp switch [121B],
    n. Vehicle speed sensor (VSS) [65B],
    o. Green starter motor wire [128B].
    p. **Vehicles with optional security siren:** Plug in security siren connector [142B],
    q. Jiffy stand, if equipped.

19. **XL models only:** Secure clutch cable and wiring harness running down left frame downtube with two frame clips. Make sure lower frame clip also captures front O2 sensor harness and frame clip is positioned as close to bottom of upper voltage regulator bracket as possible.

20. **XR models only:** Secure wiring harness running down left frame downtube onto both oil cooler bracket clips.

21. Secure ET sensor harness to oil tank mounting bracket with a barbed cable strap. Make sure there is a loop in the harness between the ET sensor and the rear cylinder head to avoid damaging harness during vehicle operation.

22. Install fuel tank. See Figure 6-99. Make sure fuel pump harness rests in harness clip (5) on wire harness caddy latch clip (2). See 4.5 FUEL TANK: XL MODELS or 4.6 FUEL TANK: XR MODELS.

⚠WARNING

Connect positive (+) battery cable first. If positive (+) cable should contact ground with negative (-) cable connected, the resulting sparks can cause a battery explosion, which could result in death or serious injury. (00068a)

23. Install battery and connect battery cables, positive (+) cable first. See 1.17 BATTERY MAINTENANCE.

24. Install left side cover. See 2.19 LEFT SIDE COVER.

⚠WARNING

After installing seat, pull upward on seat to be sure it is locked in position. While riding, a loose seat can shift causing loss of control, which could result in death or serious injury. (00070b)

25. Install seat. See 2.37 SEAT: XL MODELS or 2.38 SEAT: XR MODELS.

26. Start vehicle and test operation of all electrical functions: headlamp, tail lamp(s), turn signals, brake lamp(s), indicator lamps, instruments, horn and handlebar controls.

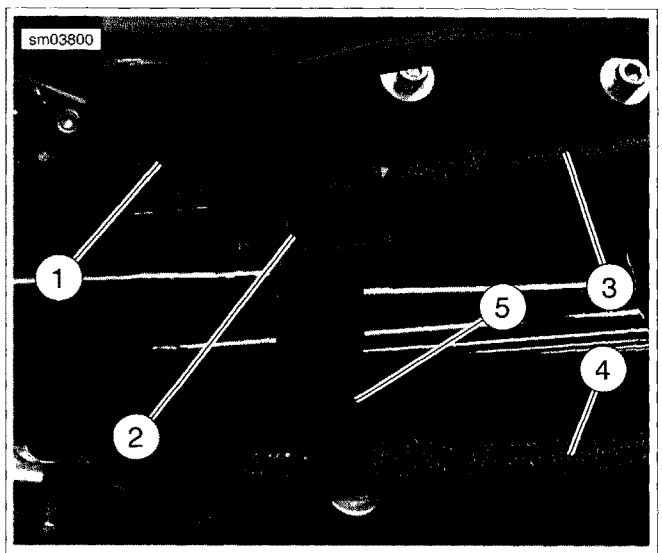

1. **Right wire harness caddy**
2. **Wire harness caddy latch clip**
3. **Main harness**
4. **Engine sub-harness**
5. **Fuel pump harness clip**

Figure 6-99. Right Wire Harness Caddy Latch Clip (Typical, XL Models Shown)

GENERAL

The wire harness caddy consists of a matched pair of caddies located under the fuel tank. This assembly supports handlebar control harness connectors [22] and [24], instruments connector [20], headlamp connector [38] and front turn signals connector [31]. This caddy assembly also supports the rear spark plug cable, main harness, engine sub-harness and throttle cables.

WIRE HARNESS CADDY: XL MODELS

See Figure 6-100. The wire harness caddy assembly (1, 2) is secured to the ignition switch bracket (3) with two push-in fasteners (6, 7), and to the frame with mounting tabs hooked onto a bracket under the frame backbone tube. The left and right wire harness caddies are locked together with three tabs (see Figure 6-101) and secured with a screw (item 12, Figure 6-100).

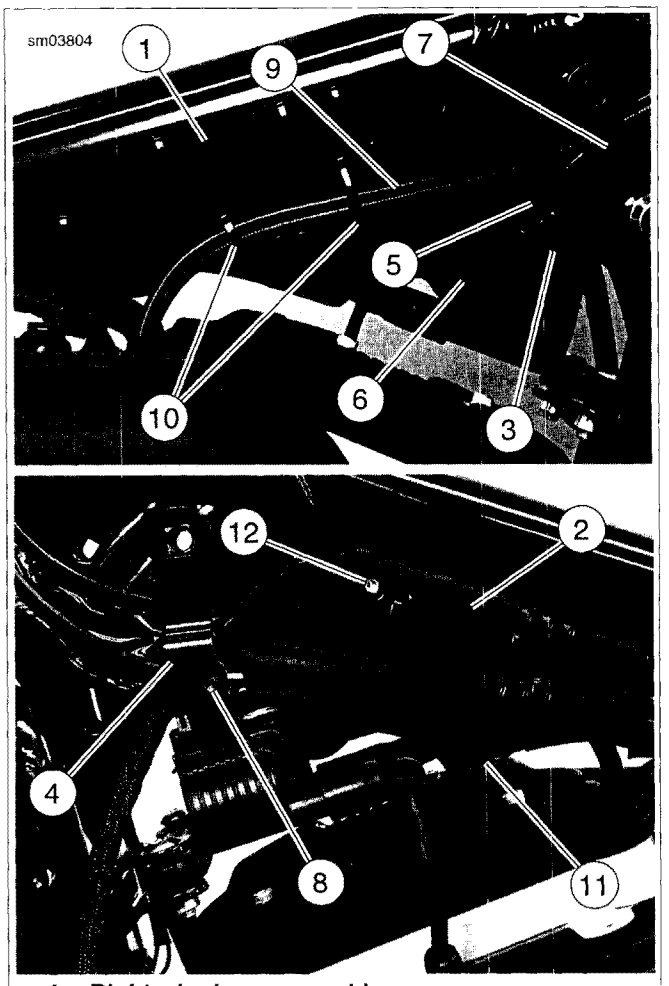

1. Right wire harness caddy
2. Left wire harness caddy
3. Ignition switch bracket
4. Coil bracket
5. Screw w/lockwasher (lockwasher between bracket and switch housing)
6. Push-in fastener, large
7. Push-in fastener, small
8. Screw
9. Throttle cable (2)
10. Cable strap (2)
11. Tab (3) (engage left and right caddies)
12. Screw

Figure 6-100. Wire Harness Caddy Assembly

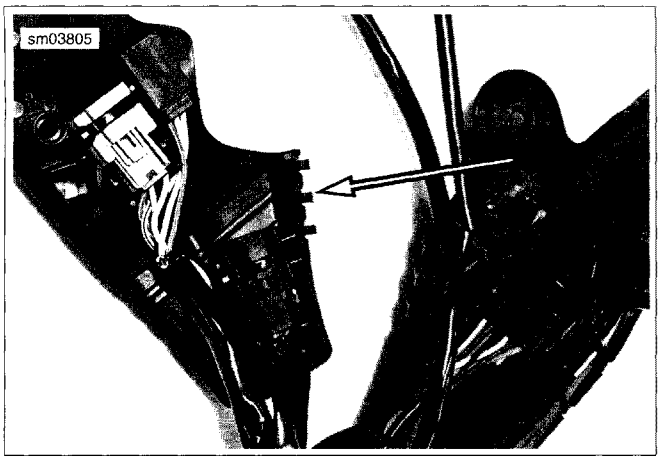

Figure 6-101. Wire Harness Caddy: Locking Tabs

Removal

⚠WARNING

To prevent spray of fuel, purge system of high-pressure fuel before supply line is disconnected. Gasoline is extremely flammable and highly explosive, which could result in death or serious injury. (00275a)

1. Purge the fuel supply hose of high pressure gasoline. Disconnect fuel supply hose from fuel pump module. See 4.5 FUEL TANK: XL MODELS.

⚠WARNING

To prevent accidental vehicle start-up, which could cause death or serious injury, remove main fuse before proceeding. (00251b)

2. Unplug main fuse. See 6.35 MAIN FUSE.
3. Remove seat.
4. Remove fuel tank. See 4.5 FUEL TANK: XL MODELS.
5. Separate ignition coil connector [83B].
6. See Figure 6-100. Remove screw (8) and disengage coil bracket (4) from mounting boss on frame.
7. See Figure 6-102. Unhook caddy latch clip (2) from right wire harness caddy (1).

NOTE

It is not necessary to remove rear spark plug cable from wire harness caddy latch clip, unless latch clip is being replaced.

8. If necessary, cut cable strap securing rear spark plug cable to caddy latch clip.
9. Remove engine sub-harness from loop in caddy latch clip.
10. See Figure 6-100. Remove screw (12) and carefully disengage left wire harness caddy (2) from right wire harness caddy (1).
11. Cut two cable straps (10) securing throttle cables (9) to right wire harness caddy.
12. Disengage rear spark plug cable from trough in right wire harness caddy. Cut barbed cable strap securing engine sub-harness to right wire harness caddy.
13. **CA models:** Cut barbed cable strap securing EVAP canister purge hose to rear of right wire harness caddy and cut the barbed cable strap through the bridge caddy.
14. See Figure 6-100. Remove and discard push-in fasteners (6, 7). Unhook right wire harness caddy from frame backbone bracket. Lower ignition switch bracket (3) from mounting bosses on frame to free right wire harness caddy.

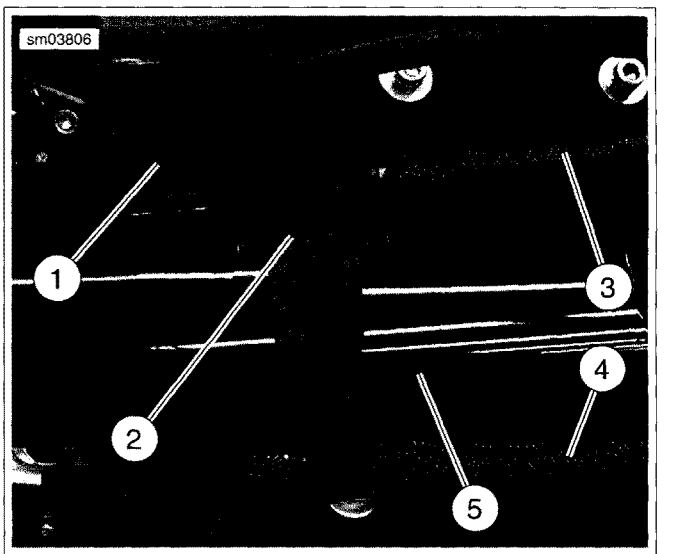

1. **Right wire harness caddy**
2. **Caddy latch clip**
3. **Main harness**
4. **Engine sub-harness**
5. **Frame backbone**

Figure 6-102. Right Wire Harness Caddy Latch Clip

15. See Figure 6-103. Unplug the following connectors:
    a. Headlamp connector [38B] (4).
    b. Left hand control connector (gray) [24B] (3).
    c. Right hand control connector (black) [22B] (5).
    d. Front turn signal connector [31B] (6).
    e. Instruments connector [20A] (7).
16. Make a note of the location of all cable straps securing harnesses and harness connectors to left and right wire harness caddies. Cut cable straps and remove harnesses and connectors from caddies. Remove wire harness caddies from vehicle.

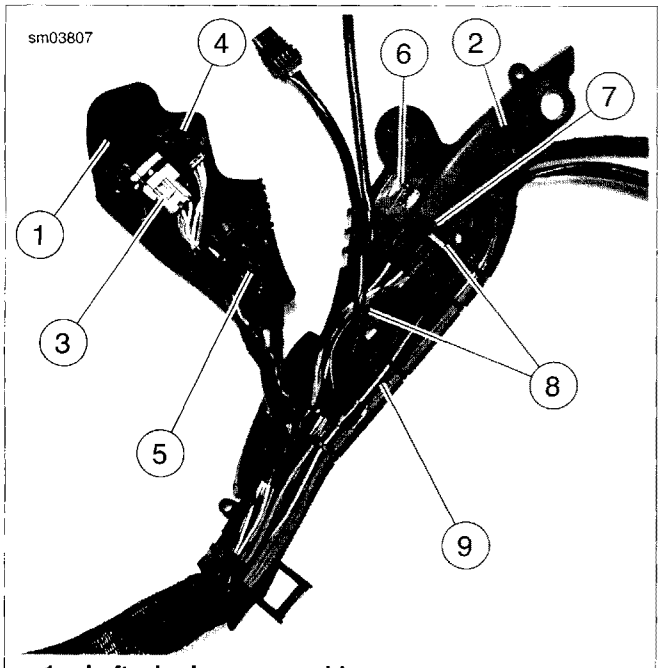

1. **Left wire harness caddy**
2. **Right wire harness caddy**
3. **Left handlebar control connector [24A]**
4. **Headlamp connector [38A]**
5. **Right handlebar control connector [22A]**
6. **Front turn signals connector [31A]**
7. **Instruments connector [20B]**
8. **Two cable straps securing throttle cables**
9. **Portion of main wiring harness**

Figure 6-103. Wire Harness Caddies (Removed from Vehicle for Clarity)

Installation

1. See Figure 6-103. Fit portion of main wiring harness (9) and ignition switch harness along top of right wire harness caddy (2) and secure with cable straps, as shown in the figure.
2. Mount front turn signals connector [31A] (6) onto mounting tab on right wire harness caddy.
3. See Figure 6-100. Place throttle cables (9) in groove in right wire harness caddy (1).
4. See Figure 6-103. Place instruments connector [20B] (7) into right wire harness caddy (2). Secure connector and throttle cables with a cable strap (8). Secure throttle cables and harnesses (as shown in the figure) with a second cable strap.
5. Mount handlebar control connectors [22A], [24A] (5, 3) to left wire harness caddy (1) with cable straps. Mount headlamp connector [38A] (4) onto tab on left wire harness caddy.
6. See Figure 6-100. Hook right wire harness caddy (1) into bracket on frame backbone. Secure front of caddy onto ignition switch bracket mounting boss on right side of frame. Raise ignition switch bracket (3) up into position and mount it onto boss on frame.

NOTE

Make sure ignition switch bracket upright is outboard of right wire harness caddy and throttle cables on right side of frame.

7. Secure right wire harness caddy to ignition switch bracket with **new** push-in fasteners (6, 7).
8. See Figure 6-102. Install caddy latch clip (2) onto right wire harness caddy (1). Make sure engine sub-harness (4) is routed in loop in caddy latch clip.
9. See Figure 6-104. Raise coil bracket (5) up into position and mount it on boss on left side of frame. Secure coil bracket to ignition switch bracket with screw (6). Tighten to 35-45 **in-lbs** (4.0-5.1 Nm).
10. Plug in ignition coil connector [83B].

NOTE

Make sure coil bracket upright is outboard of all wire harnesses leading to front of vehicle on left side of frame.

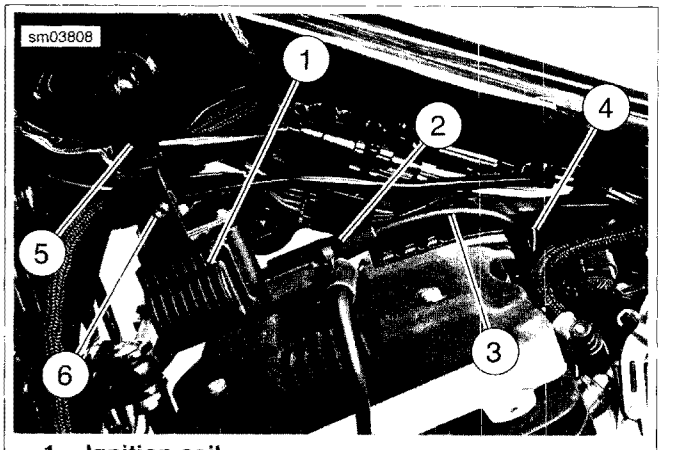

1. **Ignition coil**
2. **Rear spark plug cable boot**
3. **Rear spark plug cable**
4. **Notch in right wire harness caddy**
5. **Coil bracket**
6. **Screw**

Figure 6-104. Rear Spark Plug Cable Routing

11. Route rear spark plug cable (3) from ignition coil (1) tower down through notch (4) in right wire harness caddy.
12. Route rear spark plug cable in right wire harness caddy trough.
13. Route engine sub-harness around trough in right wire harness caddy. Secure sub-harness to caddy trough with a cable strap. Run strap through hole in boss that originally secured engine sub-harness.
14. **California models:** Secure EVAP canister purge hose to rear of right wire harness caddy with two barbed cable straps.

15. Plug in the following connectors:
    a. Instruments connector [20A] (7).
    b. Front turn signal connector [31B (6)].
    c. Right hand control connector (black) [22B] (5).
    d. Left hand control connector (gray) [24B] (3).
    e. Headlamp connector [38B] (4).
16. See Figure 6-100. Mate left wire harness caddy (2) to right wire harness caddy (1). Secure with screw (12) and tighten.
17. See Figure 6-105. If barbed cable strap (3) securing rear spark plug cable (1) to caddy latch clip was cut, install **new** barbed cable strap 7.0-7.25 in. (178-184 mm) from tip of spark plug cable boot (2), orienting cable strap so that spark plug cable is above mounting boss on caddy latch clip when barbed prong on cable strap is inserted in hole in boss. Press cable strap barbed prong firmly into hole in caddy latch clip mounting boss.

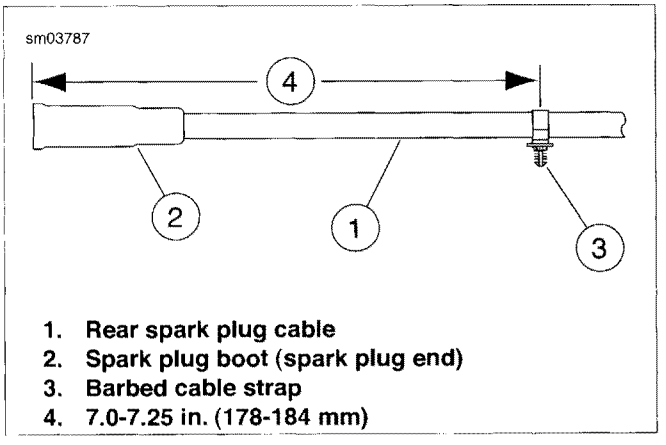

Figure 6-105. Rear Spark Plug Cable and Cable Strap (XL Models Only)

18. Make sure rear spark plug cable is plugged onto rear spark plug.
19. Install fuel tank. See 4.5 FUEL TANK: XL MODELS.

⚠WARNING

After installing seat, pull upward on seat to be sure it is locked in position. While riding, a loose seat can shift causing loss of control, which could result in death or serious injury. (00070b)

20. Install seat.
21. Plug in main fuse. See 6.35 MAIN FUSE.

⚠WARNING

Be sure headlamp, tail and stop lamp and turn signals are operating properly before riding. Poor visibility of rider to other motorists can result in death or serious injury. (00478b)

22. Start vehicle and test the operation of headlamp, turn signals, brake lamp(s), indicator lamps, instruments and handlebar controls.

WIRE HARNESS CADDY: XR MODELS

Removal

⚠WARNING

To prevent spray of fuel, purge system of high-pressure fuel before supply line is disconnected. Gasoline is extremely flammable and highly explosive, which could result in death or serious injury. (00275a)

1. Purge the fuel supply hose of high pressure gasoline. Disconnect fuel supply hose from fuel pump module. See 4.6 FUEL TANK: XR MODELS.

⚠WARNING

To prevent accidental vehicle start-up, which could cause death or serious injury, remove main fuse before proceeding. (00251b)

2. Unplug main fuse. See 6.35 MAIN FUSE.
3. Remove seat.
4. Remove fuel tank. See 4.6 FUEL TANK: XR MODELS.
5. Remove airbox. See 4.4 AIR BOX: XR MODELS.
6. See Figure 6-106. Remove screw (3), connector (1) and disengage coil bracket (2) from mounting boss on frame.
7. Remove rear spark plug wire (4) from caddy. Support coil away from engine and caddy.
8. Separate push-in fastener (5) from caddy.
9. See Figure 6-107. Unhook caddy latch clip (1) from right side of frame.
10. See Figure 6-108. Detach connector (2) from right side of caddy.
11. Cut two cable straps (1) from right side of caddy.
12. See Figure 6-106. Remove cover (6) from caddy.
13. See Figure 6-109. Cut remaining five cable straps from left side of caddy.
14. Pull caddy away from frame and move ignition switch away from caddy. Support ignition switch away from engine.
15. Pull connectors from left side of caddy and remove caddy from motorcycle.

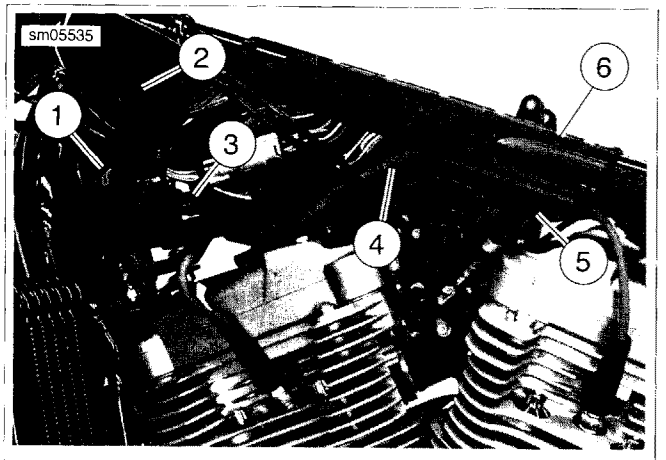

1. Coil connector
2. Coil bracket
3. Screw
4. Rear spark plug wire
5. Push-in fastener
6. Cover

Figure 6-106. XR Caddy Removal

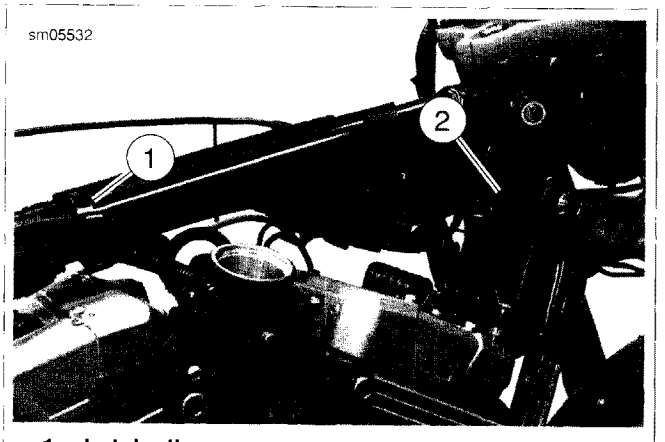

1. Latch clip
2. Ignition switch bracket

Figure 6-107. Caddy Latch Clip

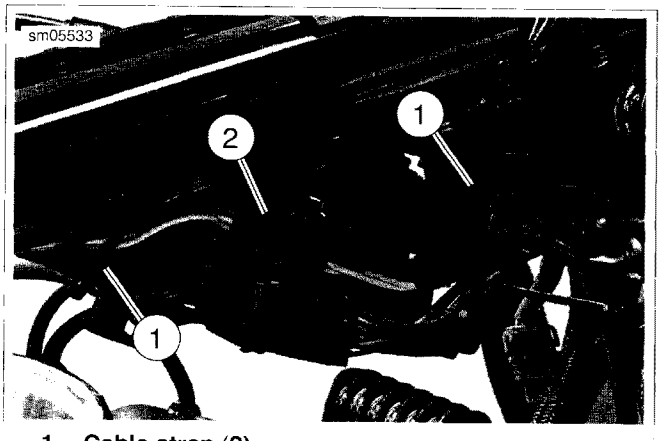

1. Cable strap (2)
2. Connector

Figure 6-108. Right Side Connectors

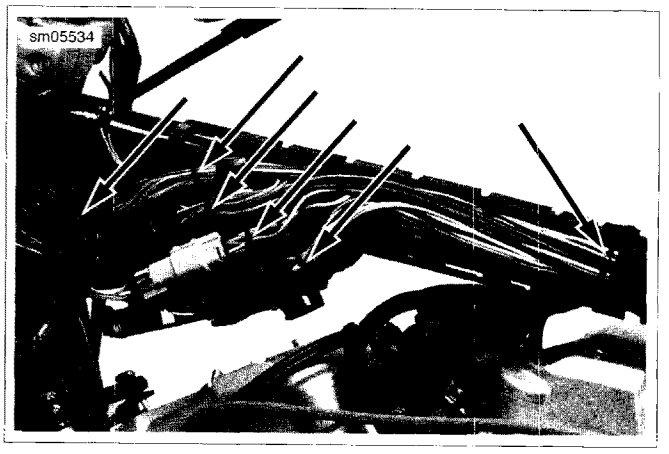

Figure 6-109. Cable Strap Locations

Installation

1. See Figure 6-109. Place caddy in position next to motorcycle frame, Attach ignition switch bracket into position on caddy and place caddy on motorcycle frame.
2. Install connectors on left side of caddy.
3. Install five cable straps to secure connector wires in position on left side of caddy.
4. See Figure 6-108. Attach connector (2) to right side of caddy.
5. Install two cable straps (1) as shown on right side of caddy. Make sure wires on left side of caddy are also secured with the rearward cable strap.
6. See Figure 6-107. Make sure harness and purge hose (California models) are attached to caddy latch clip (1). Install latch clip on right side of frame.
7. See Figure 6-106. Install cover (6) on caddy.
8. Install push-in fastener (5).
9. See Figure 6-106. Slip lower end of coil bracket (2) into caddy slot. make sure coil bracket is flush with end of ignition switch bracket and attach top end of coil bracket to mounting boss on frame.
10. Install connector (1) and then screw (3). Tighten screw (3) to 35-45 **in-lbs** (4.0-5.1 Nm).
11. Install rear spark plug wire (4) on caddy.
12. Install airbox. See 4.4 AIR BOX: XR MODELS.
13. Install fuel tank. See 4.6 FUEL TANK: XR MODELS.

⚠WARNING

After installing seat, pull upward on seat to be sure it is locked in position. While riding, a loose seat can shift causing loss of control, which could result in death or serious injury. (00070b)

14. Install seat.
15. Plug in main fuse. See 6.35 MAIN FUSE.

⚠WARNING

Be sure that all lights and switches operate properly before operating motorcycle. Low visibility of rider can result in death or serious injury. (00316a)

⚠WARNING

Be sure headlamp, tail and stop lamp and turn signals are operating properly before riding. Poor visibility of rider to other motorists can result in death or serious injury. (00478b)

16. Start vehicle and test the operation of headlamp, turn signals, brake lamp(s), indicator lamps, instruments and handlebar controls.

JIFFY STAND SWITCH: INTERNATIONAL MODELS 6.31

GENERAL

See Figure 6-110. International models are equipped with a jiffy stand interlock feature. If the rider attempts to start the engine or pushes the starter button while the transmission is in gear and the jiffy stand is down, the jiffy stand interlock system will not permit the engine to run. The message "SidE StAnd" will scroll across the odometer to indicate this to the rider. Raising the jiffy stand (or putting the transmission in neutral) will permit the engine to run and clear the message.

If the jiffy stand falls out of the fully retracted position while riding at speeds greater than 10 mph (15 km/h), the jiffy stand interlock system will maintain engine operation and alert the rider about this by illuminating the indicators (flash twice) and scroll the message "SidE StAnd" across the odometer. The message will remain until the system detects the jiffy stand in the fully retracted position again. The rider may continue to operate the vehicle while in this mode. The rider may clear the text messages at any time by pressing the trip switch once while the vehicle is powered up.

⚠WARNING

The jiffy stand locks when placed in the full forward (down) position with vehicle weight on it. If the jiffy stand is not in the full forward (down) position with vehicle weight on it, the vehicle can fall over which could result in death or serious injury. (00006a)

⚠WARNING

Always park motorcycle on a level, firm surface. An unbalanced motorcycle can fall over, which could result in death or serious injury. (00039a)

⚠WARNING

Be sure jiffy stand is fully retracted before riding. If jiffy stand is not fully retracted, it can contact the road surface causing a loss of vehicle control, which could result in death or serious injury. (00007a)

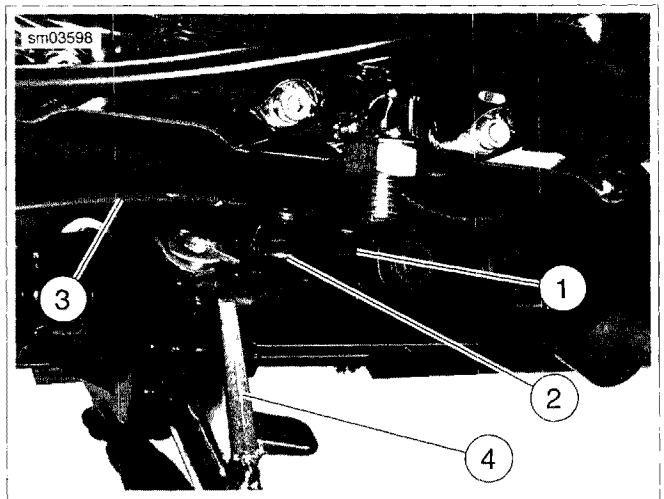

1. **Jiffy stand switch**
2. **Screw**
3. **Jiffy stand switch harness**
4. **Jiffy stand**

Figure 6-110. Jiffy Stand Switch

REMOVAL

1. Position vehicle upright on a suitable lift.
2. See Figure 6-111. Unplug jiffy stand switch harness connector [133] (2), located next to left front frame downtube.
3. See Figure 6-112. Cut cable strap (2) securing jiffy stand switch harness (1) to frame under left side of engine.
4. See Figure 6-110. Remove screw (2). Remove jiffy stand switch (1) and harness from vehicle.

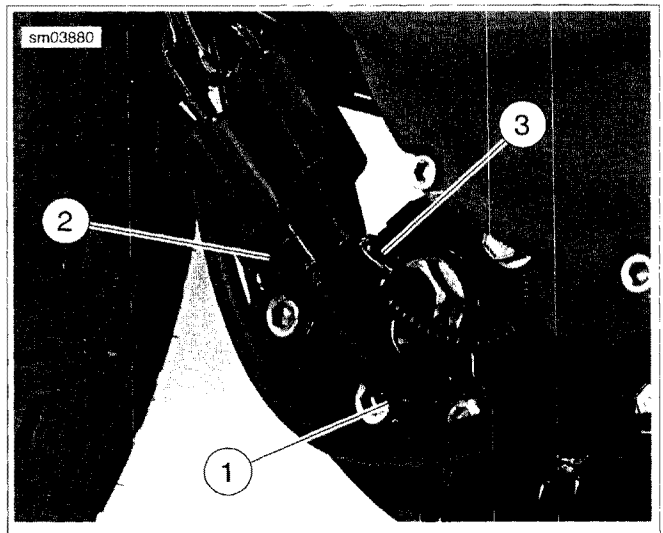

1. **Jiffy stand switch harness**
2. **Jiffy stand switch harness connector [133]**
3. **J-clip**

Figure 6-111. Jiffy Stand Switch Harness Connector

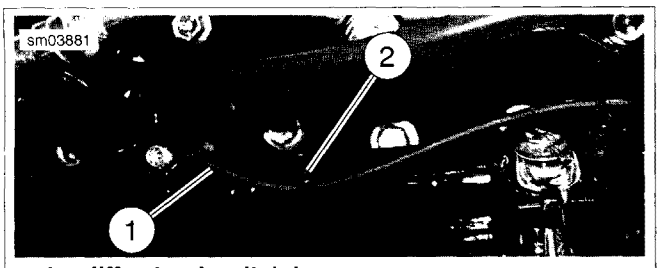

1. **Jiffy stand switch harness**
2. **Cable strap**

Figure 6-112. Jiffy Stand Switch Harness Routing

INSTALLATION

1. See Figure 6-110. Install jiffy stand switch (1), attach with screw (2), finger-tight.

NOTE

See Figure 6-113. Make sure jiffy stand switch (1) is correctly aligned with switch mounting tab (2) on jiffy stand bracket (3). If switch is not properly aligned with mounting tab when screw is tightened, switch or mounting tab may be damaged.

2. See Figure 6-113. With switch (1) properly aligned with switch mounting tab (2) on jiffy stand bracket (3), tighten screw to 96-120 **in-lbs** (10.9-13.6 Nm).

3. See Figure 6-112. Route jiffy stand switch harness (1) forward along frame under left side of engine. Secure harness to frame with **new** cable strap (2), making sure harness is routed on outboard side of frame as shown in the figure.

4. See Figure 6-111. Plug jiffy stand switch harness connector [133A] (2) into main harness connector [133B].

NOTE

See Figure 6-111. Do not route jiffy stand switch harness (1) through j-clip (3). This puts undue stress on harness wires. Harness could chafe against j-clip, possibly causing harness to fail.

5. Test **new** jiffy stand switch:
   a. Disengage clutch and place vehicle in gear.
   b. Turn ignition switch ON. With jiffy stand down and clutch disengaged, attempt to start vehicle. Engine should not start. The message "SidE StAnd" should scroll across the odometer display.
   c. Retract jiffy stand. With clutch disengaged and transmission in gear, attempt to start vehicle. Engine should start and run. The "SidE StAnd" message should clear from the odometer display.
   d. Shift transmission into neutral. Turn ignition switch OFF.

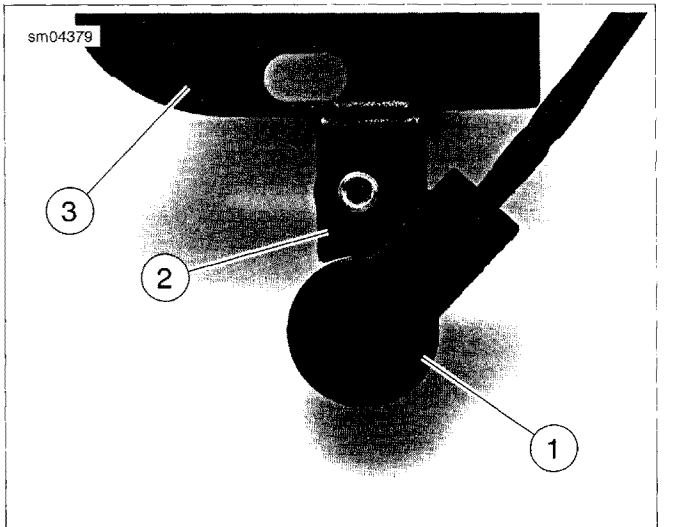

1. **Jiffy stand switch**
2. **Switch mounting tab**
3. **Jiffy stand bracket**

Figure 6-113. Mounting Jiffy Stand Switch: Top View (Assembly Removed from Vehicle for Clarity)

GENERAL

See Figure 6-114. The security siren (1) is a self-contained unit with its own replaceable power supply (9-volt battery). The unit is mounted on a bracket attached to the rear brake master cylinder (3) mounting bracket under the rear fork pivot point.

The siren's internal 9-volt battery is rechargeable and does not need to be replaced on a regular basis. Battery life under normal conditions is approximately three to six years.

NOTE

The internal siren battery may not charge if the vehicle's battery is less than 12.5 volts.

REMOVAL

1. See Figure 6-114. Disarm security system. While system is disarmed, unplug siren harness connector [142B] (2) from siren assembly (1).
2. See Figure 6-115. Gently pry up on two tabs (2) while pulling siren housing (1) toward the left side of the motorcycle. This will disengage siren mounting bosses (3) from mounting bracket. Allow siren assembly to drop down and remove from vehicle.

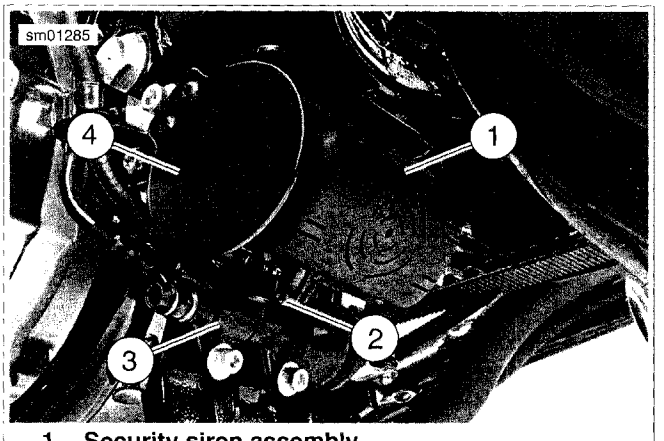

1. **Security siren assembly**
2. **Siren harness connector [142B]**
3. **Rear brake master cylinder**
4. **Guard**

Figure 6-114. Security Siren

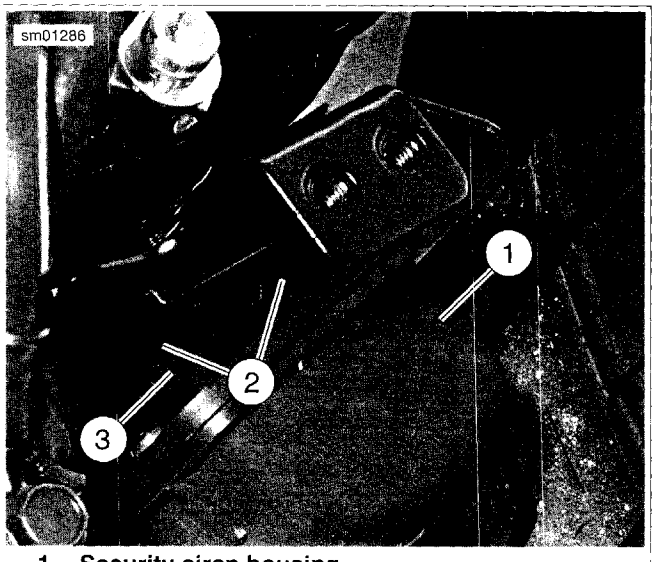

1. **Security siren housing**
2. **Tab (2)**
3. **Siren housing mounting boss (2)**

Figure 6-115. Security Siren Mount (Guard Removed for Clarity)

DISASSEMBLY

1. See Figure 6-116. Remove three screws (4) and bottom cover (1) from top cover (2) of security siren assembly.
2. See Figure 6-117. Remove security siren (1) from top cover (3).

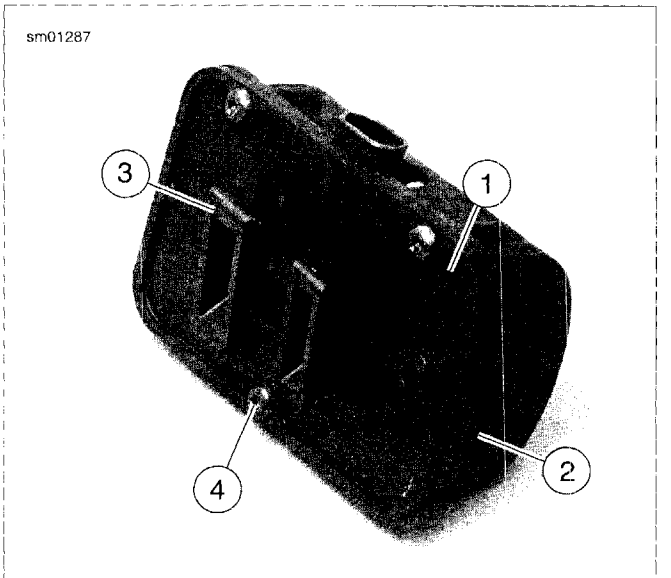

1. **Bottom cover**
2. **Top cover**
3. **Mounting boss (2)**
4. **Screw (3)**

Figure 6-116. Security Siren Housing

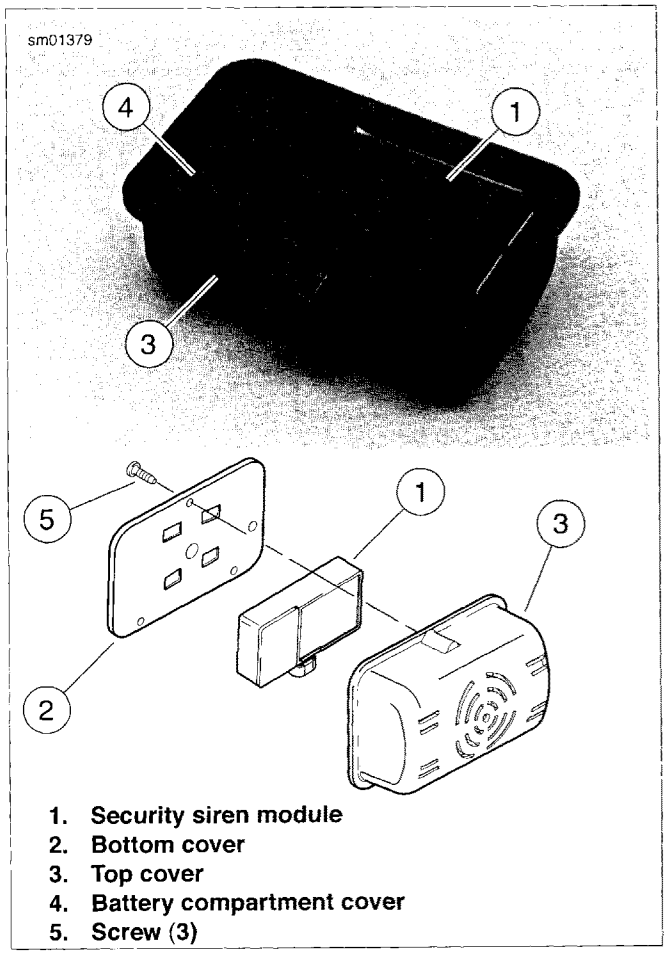

1. **Security siren module**
2. **Bottom cover**
3. **Top cover**
4. **Battery compartment cover**
5. **Screw (3)**

Figure 6-117. Security Siren Assembly

BATTERY REPLACEMENT

Schedule

The siren's internal 9 volt battery is rechargeable and does not need to be replaced on a regular basis. Battery life under normal conditions is approximately three to six years.

NOTES

- *See Figure 6-118 and Figure 6-119. Early style siren will work with both TSSM and HFSM. Late style siren will only work with HFSM.*
- *The internal siren battery may not charge if the vehicle's battery is less than 12.5 volts.*

Battery Replacement: Early Style Siren

1. Disarm system and remove siren.
2. See Figure 6-118. Remove battery cover.
   a. Place the siren module on a flat and sturdy table with the potted section (area with epoxy covering circuit board) facing up and towards you.
   b. Position a knife blade at a 45 degree angle to the long side of the siren case. Insert the knife blade between the siren case and battery cover at one of the two accessible corners of the battery cover. Keep the blade slightly higher towards the battery cover as this helps keep the blade away from the battery seal.
   c. Slowly twist the blade towards the battery cover and the cover will pop off.

NOTES

- *For protection against corrosion, battery terminals and battery clip are covered with a special grease. Do not wipe away this substance. Apply all available existing grease to terminals on new battery.*
- *Only a 9 volt nickel metal hydride battery should be used in the siren.*

3. Replace battery by removing old battery from polarized battery clip. Install a **new** 9 volt nickel metal hydride battery.
4. Reinstall battery cover.
   a. Carefully replace the rubber seal.
   b. Align battery cover with case placing round corners on cover away from connector [142A]. Snap cover into place.
5. Install siren and check operation. If siren is working properly, it will respond with two chirps after receiving the arm command.

Battery Replacement: Late Style Siren

1. Disarm system and remove siren.
2. See Figure 6-119. With a small screwdriver or pick, push the catches (1) in through the two slots (2) in the end of the siren to release the battery cover (3).

NOTES

- *For protection against corrosion, battery terminals and battery clip are covered with a special grease. Do not wipe away this substance. Apply all available existing grease to terminals on new battery.*
- *Only a 9 volt nickel metal hydride battery should be used in the siren.*

3. Replace battery (4) by removing old battery from polarized battery clip.
4. Recharge and re-install or install a **new** 9 volt nickel metal hydride battery.
5. Reinstall battery cover (3).
   a. Carefully replace the rubber seal (5) on the cover.
   b. Align battery cover with case placing round corners on cover away from connector [142A] (6).
   c. Snap cover into place.

6. Install siren and check operation. If siren is working properly, it will respond with two chirps after receiving the arm command.

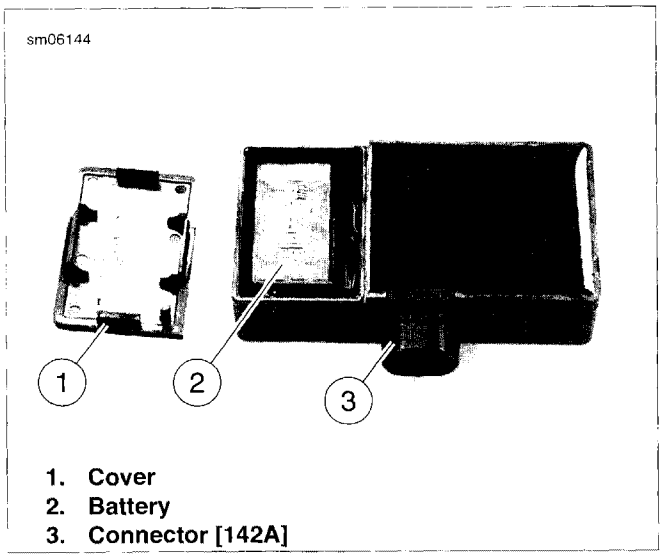

Figure 6-118. Siren Battery Compartment (Early Style Siren)

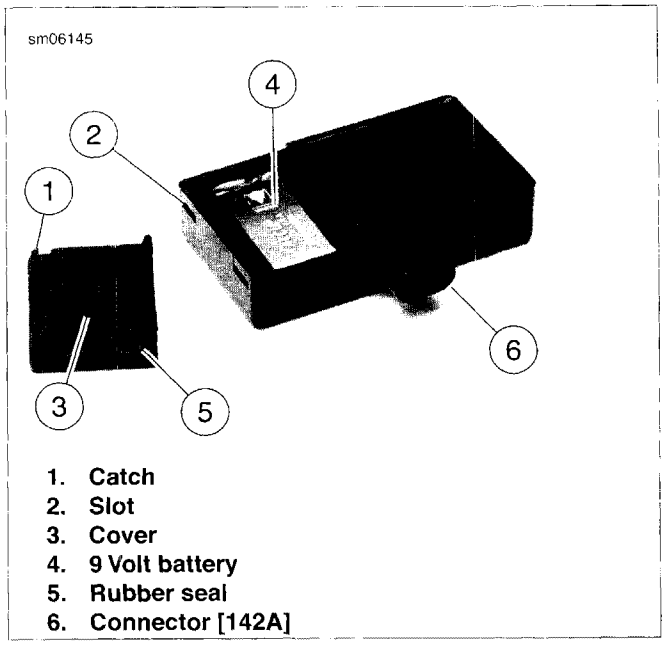

Figure 6-119. Siren Battery Compartment (Late Style Siren)

ASSEMBLY

1. See Figure 6-117. Place security siren module (1) inside top cover (3) with siren connector [142A] positioned in cutout in cover and siren battery compartment cover (4) visible.
2. See Figure 6-116. Place bottom cover (1) on top cover (2) and secure with three screws (4).

INSTALLATION

1. See Figure 6-115. Position siren (1) in mounting bracket so that mounting bosses (3) align with mounting clips in bracket and connector socket [142A] faces rear master cylinder.
2. Slide siren housing toward the right side of the vehicle until tabs (2) lock siren in place.
3. See Figure 6-114. Plug harness connector [142B] (2) into siren connector socket [142A].
4. Check siren operation. If siren is working properly, it will respond with two chirps after receiving the arm command.

GENERAL

The oil pressure signal lamp switch is a pressure-actuated diaphragm-type switch. When oil is not circulating through the system or when oil pressure is abnormally low, spring tension holds the switch contacts closed, thereby completing the signal lamp circuit and causing the indicator lamp to illuminate.

See Figure 6-120. The oil pressure switch is located under the oil filter mount at the front of the engine crankcase.

NOTE

The oil pressure switch cannot be repaired. Replace the unit if it fails.

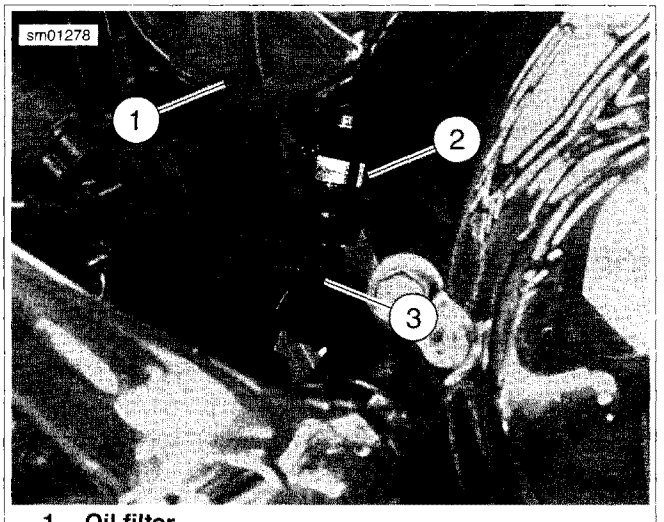

1. **Oil filter**
2. **Oil pressure switch**
3. **Oil pressure switch connector [120]**

Figure 6-120. Oil Pressure Indicator Lamp Switch (Left Side View XL 1200C)

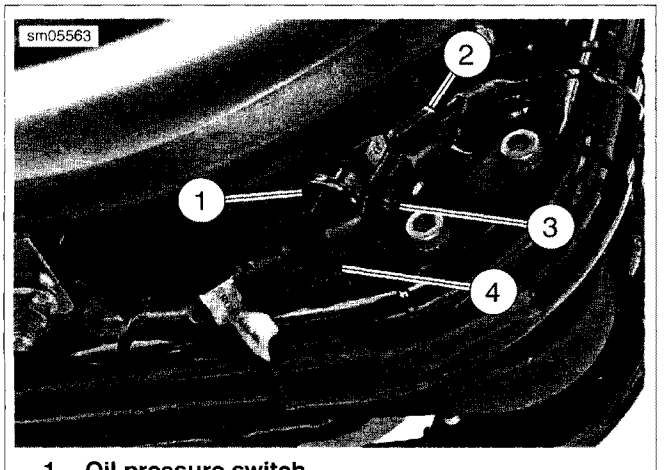

1. **Oil pressure switch**
2. **J-clip**
3. **Barbed cable strap**
4. **Stator connector**

Figure 6-121. Oil Pressure Switch (Right Side View XR 1200)

REMOVAL

PART NUMBER	TOOL NAME
HD-41675	OIL PRESSURE SENDING UNIT WRENCH

⚠WARNING

To prevent accidental vehicle start-up, which could cause death or serious injury, remove main fuse before proceeding. (00251b)

1. Unplug main fuse. See 6.35 MAIN FUSE.
2. See Figure 6-120. Remove wiring harness connector [120] (3) by pulling elbow connector straight down from stud on oil pressure switch (2).
3. **XR models only:** see Figure 6-121. Disconnect voltage regulator stator connector (4). Reposition neutral switch wire and voltage regulator stator wire as needed.
4. Place a container under vehicle to catch any oil that may leak out when oil pressure switch is removed.

NOTE

XR models only: *hold oil pressure switch adapter with a wrench to prevent the adapter from being removed while removing the oil pressure switch.*

5. Using OIL PRESSURE SENDING UNIT WRENCH (Part No. HD-41675), remove oil pressure switch.

INSTALLATION

PART NUMBER	TOOL NAME
HD-41675	OIL PRESSURE SENDING UNIT WRENCH

1. **XR models only:** if, during removal, oil pressure switch adapter came out with oil pressure switch, install adapter in the following way:
   a. Separate oil pressure switch from adapter.
   b. Remove old O-ring and install a **new** O-ring.
   c. Install adapter and tighten to 108-158 **in-lbs** (12.2-17.9 Nm).

NOTE

Perform following step only if original oil pressure switch is being re-installed. ***New*** *switches have a sealant contact patch on the mounting threads. If* ***new*** *switch is being installed, begin with step 2.*

2. Coat threads of oil pressure switch with LOCTITE 565 HIGH PERFORMANCE PIPE SEALANT with TEFLON.
3. See Figure 6-120. Install oil pressure switch (2). Using OIL PRESSURE SENDING UNIT WRENCH (Part No. HD-41675), tighten switch to 50-70 **in-lbs** (5.6-7.9 Nm).

4. **XR models only:** see Figure 6-121.
   a. Reposition neutral switch wire and stator wire (4).
   b. Secure stator connector to bracket with barbed cable strap (3) and make sure neutral switch wire and oil pressure switch wires are secured in J-clip (2).
   c. Mate halves of stator connector and secure with lock.

NOTE

Oil pressure switch connector [120] must always face away from vehicle.

5. Attach wiring harness connector [120] (3) to oil pressure switch. Make sure connector points away from motorcycle.
6. Plug in main fuse. See 6.35 MAIN FUSE.

NOTE

If an appreciable amount of oil leaked out when oil pressure switch was removed, it will have to be replaced with fresh oil.

7. Check oil level in oil tank. See 1.6 ENGINE OIL AND FILTER. Top off oil level if necessary.
8. Start engine and test oil pressure switch for proper operation. Check oil pressure switch for leaks.

TROUBLESHOOTING

If the horn does not sound or sounds weak, check for the following:

- Discharged battery. To charge battery, see 1.17 BATTERY MAINTENANCE.
- Loose, frayed or damaged wiring to horn terminal.

If battery is charged and wiring appears to be in good condition, perform a VOLTAGE TEST for the following:

- Inoperative horn switch.
- Open circuit to horn.
- Open ground to frame.
- Inoperative horn.

VOLTAGE TEST

1. Remove terminal clips from horn spade connectors.
2. Connect voltmeter leads, positive (+) to wire terminal and negative (-) to ground.
3. Turn ignition switch ON and press horn switch.
4. If battery voltage is not present, check for the following:
   a. Horn switch is inoperative. Replace switch. See 6.38 LEFT HANDLEBAR SWITCHES.
   b. Wiring to horn is open. Repair wiring.
5. If battery voltage is present, check for the following:
   a. Ground is open between mounting hardware or ground wire. Repair wiring.
   b. Horn is inoperative. Replace horn. See 6.34 HORN, Replacement: Models with Front Mounted Horn or 6.34 HORN, Replacement: Models with Side Mounted Horn.

REPLACEMENT: MODELS WITH FRONT MOUNTED HORN

1. See Figure 6-122. Remove terminal clips from horn spade connectors (1, 3).
2. Remove screws (4) and lock washers (6) from horn bracket (2) and remove horn assembly (5).
3. Install horn assembly with screws and washers into horn bracket. Tighten screws to 72-108 **in-lbs** (8.1-12.2 Nm).
4. Install the yellow wire with black tracer to the left spade connector (3) and the black wire to the right spade connector (1).

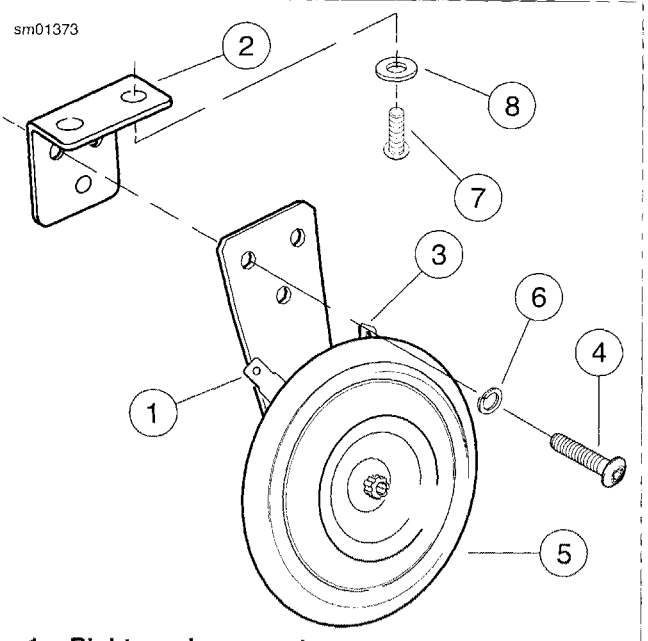

1. **Right spade connector**
2. **Horn bracket**
3. **Left spade connector**
4. **Screw (3)**
5. **Horn assembly**
6. **Lock washer (3)**
7. **Screw (2)**
8. **Washer (2)**

Figure 6-122. Horn Components (Models with Front Mounted Horn)

REPLACEMENT: MODELS WITH SIDE MOUNTED HORN

1. See Figure 6-123. Remove terminal clips from horn spade connections on back of horn (12).
2. Remove acorn nut (3) and lock washer (4) to free horn assembly from rubber mount (6) stud.
3. Remove wire conduit from clamp (9) at back of support bracket (5).
4. Remove nut (10) from circular recess at back of chrome cover and bracket (2) and remove horn (12) from cover and bracket.
5. Slide horn (12) into chrome cover and bracket (2) pushing stud at back of horn assembly through hole in horn support bracket (5). Apply two drops of LOCTITE THREADLOCKER 272 (red) to threads of nut (10). Install nut (10) on horn stud and tighten to 80-100 **in-lbs** (9.0-11.3 Nm).
6. Attach the yellow wire with black tracer to front terminal and the black wire to rear terminal. Push wire conduit into clamp (9) at back of horn bracket (5).
7. Install support bracket (5) on rubber mount (6) stud with lock washer (4) and acorn nut (3). Tighten acorn nut (3) to 60-180 **in-lbs** (6.8-20.4 Nm).

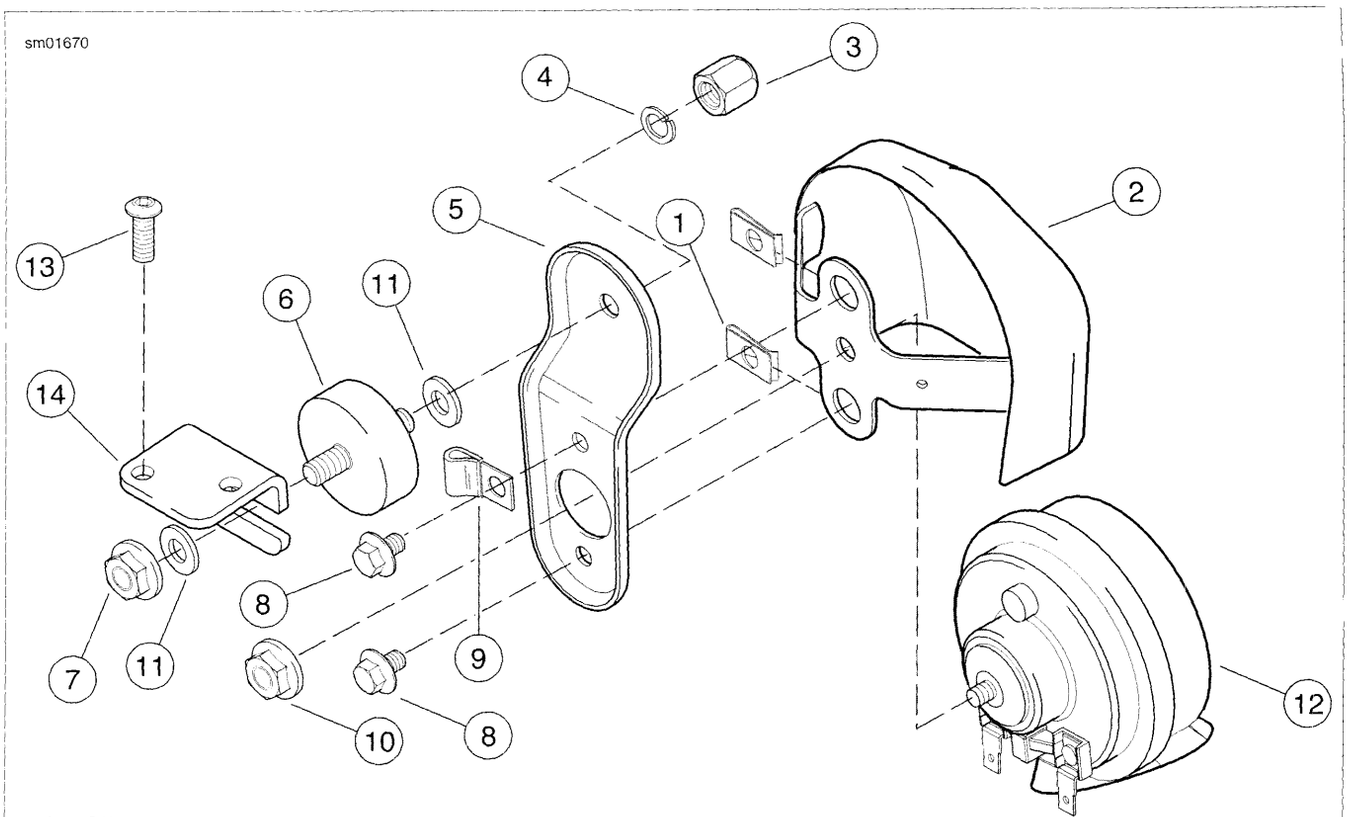

1. Clip nut (2)
2. Cover and bracket
3. Acorn nut
4. Lock washer
5. Support bracket
6. Rubber mount
7. Lock nut
8. Screw (2)
9. Clamp
10. Nut
11. Washer (2)
12. Horn
13. Screw (2)
14. Mounting bracket

Figure 6-123. Horn Components (Models with Side Mounted Horn)

GENERAL

Fuses prevent the electrical overload of a circuit. A fuse closes a circuit as long as current (amperage) flowing through the fuse does not exceed the ampere rating of the fuse. If the circuit current exceeds the fuse ampere rating, the fuse opens and the current flow is interrupted.

See Figure 6-124. The main fuse is located in a holder [5] (1) mounted on the battery strap (2) under the left side cover. The main fuse is rated at 30 Amperes.

REMOVAL

1. Open left side cover. See 2.19 LEFT SIDE COVER.
2. See Figure 6-124. Squeeze cover release latches (4) together and pull fuse holder [5] (1) from protective cover (3).
3. See Figure 6-125. Grasp fuse holder (2) and pull main fuse (1) straight out.
4. If you are performing other procedures before re-installing the main fuse, close the left side cover.

INSTALLATION

1. Open left side cover. See 2.19 LEFT SIDE COVER.
2. See Figure 6-125. Install main fuse (1) by lining up spade terminals on fuse with sockets in fuse holder [5] (2). Press fuse firmly into holder.
3. See Figure 6-124. While holding protective cover (3) in place, push fuse holder [5] (1) into cover until cover release latches (4) snap into place.
4. Close left side cover.

⚠WARNING

Be sure that all lights and switches operate properly before operating motorcycle. Low visibility of rider can result in death or serious injury. (00316a)

5. Turn ignition switch ON and verify proper operation of electrical system.

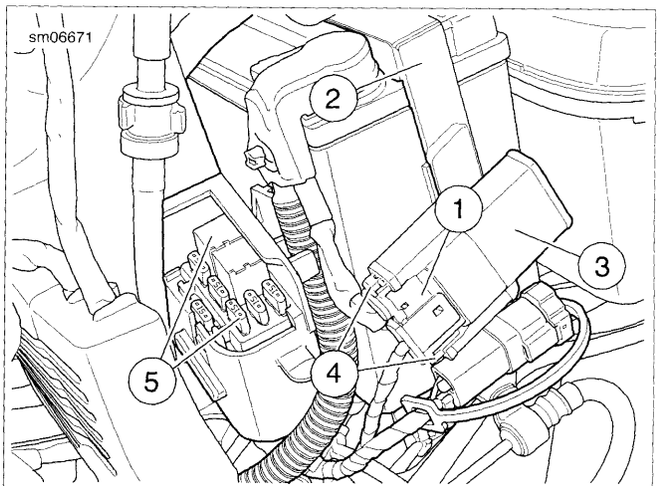

1. **Main fuse holder [5]**
2. **Battery strap**
3. **Protective cover**
4. **Cover release catches**
5. **Relay and fuse blocks**

Figure 6-124. 30 Amp Main Fuse Location: All Models (XL Model Shown)

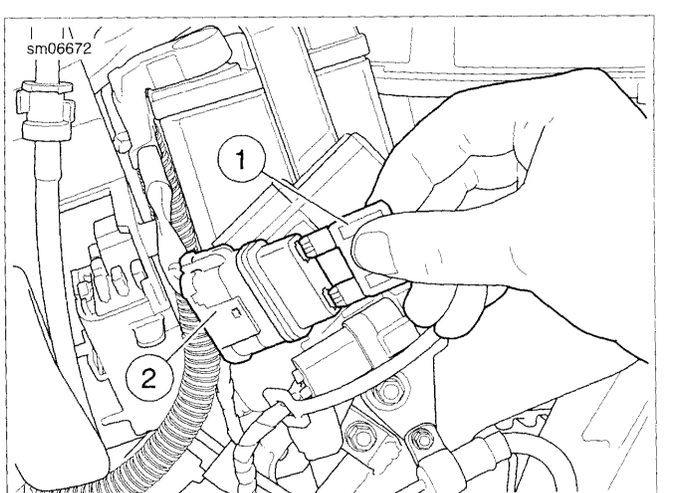

1. **Main fuse**
2. **Fuse holder [5]**

Figure 6-125. Removing/Installing Main Fuse: All Models (XL Model Shown)

REPAIR PROCEDURES

PART NUMBER	TOOL NAME
HD-25070	ROBINAIR HEAT GUN
HD-39969	ULTRA TORCH UT-100
HD-41183	HEAT SHIELD ATTACHMENT

See 6.37 RIGHT HANDLEBAR SWITCHES and 6.38 LEFT HANDLEBAR SWITCHES. The removal and installation steps listed apply when replacing the entire switch assembly, switch housing or handlebars.

The information below is useful when repairing handlebar switch assemblies.

1. To better access wires and avoid damaging conduit with radiant heating device, push conduit back and secure with extra 7.0 in. (177.8 mm) cable strap in kit.
2. Strip 0.5 in (12.7 mm) of insulation off switch wires. Twist stripped ends of switch wires until all strands are tightly coiled.
3. Cut dual wall heat-shrink tubing, supplied in repair kit into 1.0 in. (25.4 mm) segments. Slide tubing over each wire of **new** switch assembly.
4. Splice existing and **new** switch wires, matching wire colors. Solder the spliced connections. For best results, do one wire at a time.
5. Center the heat-shrink tubing over the soldered splices.

⚠WARNING

Be sure to follow manufacturer's instructions when using the UltraTorch UT-100 or any other radiant heating device. Failure to follow manufacturer's instructions can cause a fire, which could result in death or serious injury. (00335a)

- Avoid directing heat toward any fuel system component. Extreme heat can cause fuel ignition/explosion resulting in death or serious injury.
- Avoid directing heat toward any electrical system component other than the connectors on which heat shrink work is being performed.
- Always keep hands away from tool tip area and heat shrink attachment.

6. See Figure 6-126. Using the ULTRA TORCH UT-100 (Part No. HD-39969) or ROBINAIR HEAT GUN (Part No. HD-25070) with HEAT SHIELD ATTACHMENT (Part No. HD-41183) or other suitable radiant heating device, uniformly heat the heat-shrink tubing to insulate and seal the soldered connections. Apply heat just until the meltable sealant exudes out both ends of tubing and it assumes a smooth cylindrical appearance.
7. Inspect the melted sealant for solder beads. Excess solder or heat may force some solder out with the melted sealant. Use a small needle nose pliers to remove any solder found. Briefly heat the connection to reseal the tubing if solder beads were removed. Use less solder or reduce heating time or intensity when doing subsequent splices.

⚠WARNING

Be sure that all lights and switches operate properly before operating motorcycle. Low visibility of rider can result in death or serious injury. (00316a)

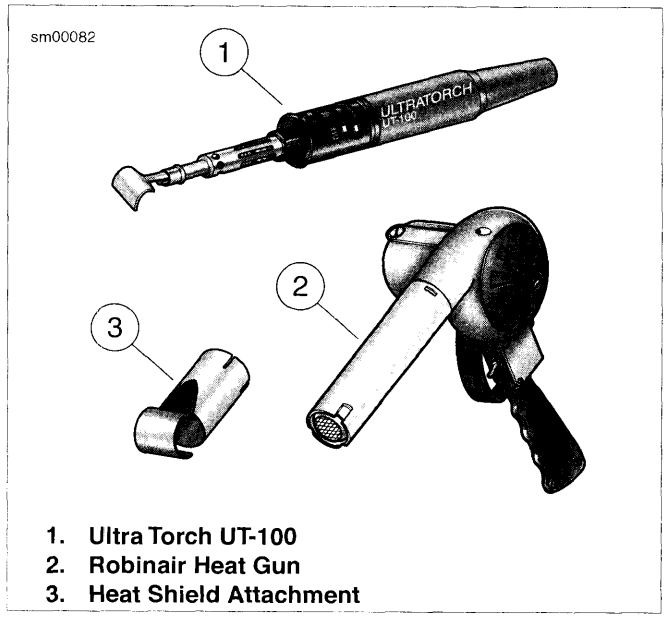

1. **Ultra Torch UT-100**
2. **Robinair Heat Gun**
3. **Heat Shield Attachment**

Figure 6-126. Radiant Heating Devices

CONNECTORS

⚠WARNING

To prevent spray of fuel, purge system of high-pressure fuel before supply line is disconnected. Gasoline is extremely flammable and highly explosive, which could result in death or serious injury. (00275a)

1. Purge the fuel supply hose of high pressure gasoline. Disconnect fuel supply hose from fuel pump module. See 4.5 FUEL TANK: XL MODELS or 4.6 FUEL TANK: XR MODELS.

⚠WARNING

To prevent accidental vehicle start-up, which could cause death or serious injury, remove main fuse before proceeding. (00251b)

2. Unplug main fuse. See 6.35 MAIN FUSE.
3. Remove fuel tank. See 4.5 FUEL TANK: XL MODELS or 4.6 FUEL TANK: XR MODELS.
4. Separate left and right wire harness caddies. See 6.30 ELECTRICAL CADDIES.
5. On XL 883C/XL 1200C models, remove riser cover from the back of the handlebar riser. See 2.31 HANDLEBARS.

6. See Figure 6-127 or Figure 6-128. Locate right handlebar connector [22] (4, 5) mounted on left wire harness caddy (2). Press latch (3) and separate connector halves.
7. In the same manner, locate left handlebar connector [24] (6), press latch and separate connector halves.
8. To remove socket or pin halves for routing or to service Molex electrical connectors, see A.9 MOLEX CONNECTORS.
9. Mate right handlebar connector [22] halves. Mate left handlebar connector [24] halves.
10. Reassemble left and right wire harness caddies. See 6.30 ELECTRICAL CADDIES.
11. Replace fuel tank. See 4.5 FUEL TANK: XL MODELS or 4.6 FUEL TANK: XR MODELS.
12. On XL 883C/XL 1200C models, replace riser cover. Make certain that handlebar control harnesses are not pinched between handlebar riser and riser cover. Tighten screws to 8-12 **in-lbs** (0.9-1.4 Nm).
13. Plug in main fuse. See 6.35 MAIN FUSE.

⚠WARNING

Be sure that all lights and switches operate properly before operating motorcycle. Low visibility of rider can result in death or serious injury. (00316a)

14. Turn ignition switch ON and verify correct operation of handlebar switches.

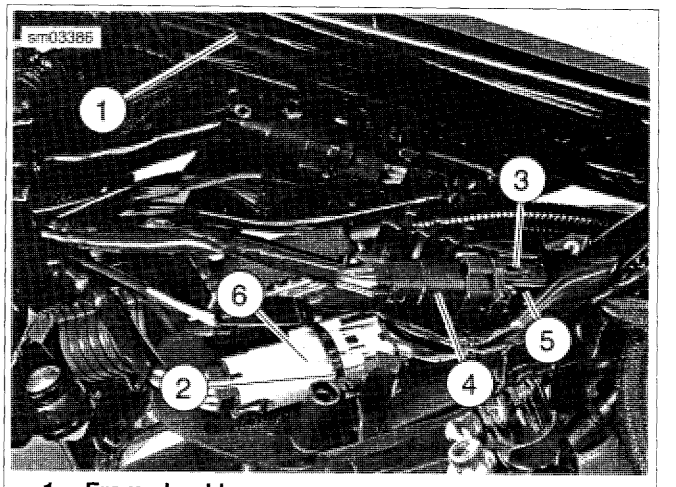

1. **Frame backbone**
2. **Left wire harness caddy**
3. **Connector latch**
4. **Right handlebar pin connector [22A]**
5. **Right handlebar socket connector [22B]**
6. **Left handlebar control connector [24]**

Figure 6-127. Handlebar Connectors (XL Models Only)

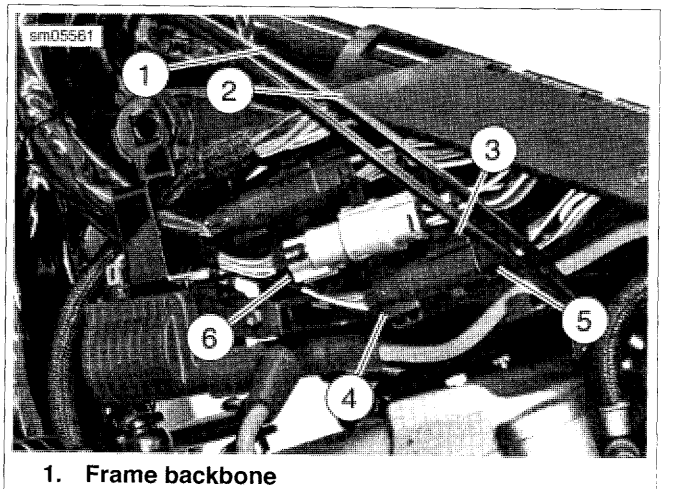

1. **Frame backbone**
2. **Left wire harness caddy**
3. **Connector latch**
4. **Right handlebar pin connector [22A]**
5. **Right handlebar socket connector [22B]**
6. **Left handlebar control connector [24]**

Figure 6-128. Handlebar Connectors (XR 1200 Models Only)

REMOVAL

NOTE

The removal and installation steps listed apply when replacing the entire switch assembly, switch housing or handlebars.

WARNING

To prevent accidental vehicle start-up, which could cause death or serious injury, remove main fuse before proceeding. (00251b)

1. Remove main fuse. See 6.35 MAIN FUSE.

NOTE

Do not remove the switch housing assembly without first placing a 5/32 in. (4 mm) thick cardboard insert between the brake lever and lever bracket. Removing the assembly without the insert in place may result in damage to the rubber boot and plunger of the front stoplight switch.

2. See Figure 6-129. Place the cardboard insert between the brake lever and lever bracket.
3. Using a T27 TORX drive head, remove the two screws with flat washers securing the handlebar clamp to the master cylinder housing. Remove the brake lever/master cylinder assembly and clamp from the handlebar.
4. Using a T25 TORX drive head, remove the upper and lower switch housing screws.
5. Remove the friction shoe from the end of the tension adjuster screw.

NOTE

The friction screw is a loose fit and may fall out or become dislodged if the lower switch housing is turned upside down or shaken.

6. Remove the brass ferrules from the notches on the inboard side of the throttle control grip. Remove the ferrules from the cable end fittings.
7. Remove the throttle control grip from the end of the handlebar.
8. Pull the crimped inserts at the end of the throttle and idle control cable housings from the lower switch housing. For best results, use a rocking motion while pulling. Place a drop of light oil on the retaining rings, if necessary. Remove the cables from the switch housing.

Figure 6-129. Install Cardboard Insert

DISASSEMBLY

CAUTION

Do not remove or install the master cylinder assembly without first positioning a 5/32-inch (4 mm) thick insert between the brake lever and lever bracket. Removing or installing the master cylinder assembly without the insert in place may result in damage to the rubber boot and plunger on the front stoplight switch. (00324a)

1. Place the cardboard insert between the brake lever and lever bracket.
2. Using a T25 TORX drive head, remove the upper and lower switch housing screws.
3. If replacing lower housing switches, perform steps 4 through 7 before continuing to repair section. If replacing upper housing switches, proceed directly to repair section.
4. See Figure 6-138. Using a T27 TORX drive head, loosen the upper screw (1) securing the handlebar switch clamp to the master cylinder housing. Remove the lower clamp screw with flat washer (2).
5. Remove the brass ferrules from the notches on the inboard side of the throttle control grip. Remove the ferrules from the cable end fittings.
6. Remove the friction shoe from the end of the tension adjuster screw.

NOTE

The friction shoe is a loose fit and may fall out or become dislodged if the lower switch housing is turned upside down or shaken.

7. Remove the throttle control grip from the end of the handlebar.

SWITCH REPAIR/REPLACEMENT

Switch and Lead Replacement

After cutting off the connector terminals, the leads of faulty switches can be pulled through the conduit. Replacement switch leads can be routed through the conduit and terminated at the connector. If necessary, only the switches can be replaced.

Switch Only Replacement: Upper Housing

NOTE

Replace the engine stop and engine start switches as a single assembly even if only one switch is determined to be faulty.

1. See Figure 6-130. From inside the switch housing, remove the screw with lockwasher (4) to release the bracket (5). Remove the bracket and switch assembly from the housing.
2. Move cable conduit (3) from beneath wing of bracket. Cut wires 0.25 in. (6.4 mm) from old switches (1, 2). Discard old switch and bracket assembly.
3. Slide conduit forward over cut ends of switch wires and cut off 0.5 in. (12.7 mm) of conduit (3) material. Push conduit back to access switch wires.
4. See Figure 6-131. Separate **new** engine stop switch (2) and engine start switch (1) wires into two bundles.
5. See 6.36 HANDLEBAR SWITCH ASSEMBLIES for information on splicing and general repair practices.
6. Loop switch wires so that spliced lengths are positioned as shown in Figure 6-131. Route wires downstream of splices beneath wing on engine stop switch side of bracket as shown in Figure 6-130.
7. See Figure 6-131. Install a **new** 7.0 in. (177.8 mm) cable strap (5) beneath wing on engine start switch side (1) of bracket and capture wire splices (4).
8. Place switch assembly into upper housing aligning hole in bracket with threaded hole in boss. Be sure that bracket is fully seated. The step at the edge of the boss captures the bottom edge of the bracket, while tabs on each side of the bracket fit in slots cast into the housing.
9. See Figure 6-130. Install screw and lockwasher (4) to secure bracket (5) inside housing. Verify that wing on engine stop switch (2) side of bracket captures edge of conduit (3) as shown.
10. Securely tighten cable strap to draw splices to bracket. Remove any excess cable strap material.
11. Continue with 6.37 RIGHT HANDLEBAR SWITCHES, Assembly.

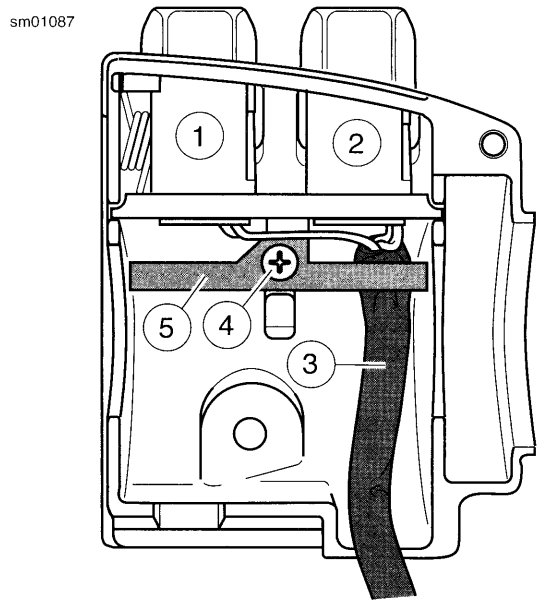

1. **Start switch**
2. **Stop switch**
3. **Conduit**
4. **Screw with lockwasher**
5. **Bracket**

Figure 6-130. Upper Housing Without Splices

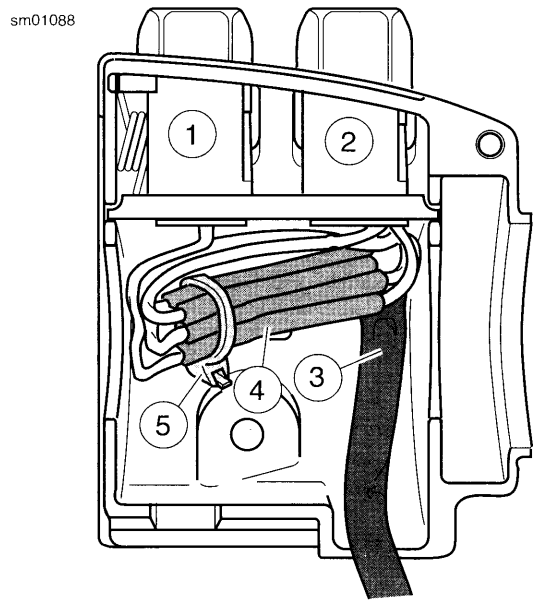

1. **Start switch**
2. **Stop switch**
3. **Conduit**
4. **Splices**
5. **Cable strap**

Figure 6-131. Upper Housing With Splices

Switch Only Replacement: Lower Housing

1. From inside the switch housing, carefully cut cable strap to free conduit from the turn signal switch bracket.

2. Remove the screw with lockwasher to release the turn signal switch bracket. Remove the bracket and switch assembly from the housing.
3. Continue with TURN-RIGHT SIGNAL SWITCH or FRONT STOPLIGHT SWITCH procedures which follow.

Turn-Right Signal Switch Only

1. Perform steps in LOWER HOUSING REPAIR.
2. Cut wire 1.5 in. (38.1 mm) from old switch. Discard old switch assembly.
3. See 6.36 HANDLEBAR SWITCH ASSEMBLIES for information on splicing and general repair practices.
4. Continue with 6.37 RIGHT HANDLEBAR SWITCHES, Assembly.

Front Stoplight Switch Only

1. Perform steps in LOWER HOUSING REPAIR.
2. Carefully remove the wedge between the switch and switch housing, if present. To remove the switch from the housing, press the plunger and slowly rotate switch upward while rocking slightly.
3. Cut wires 1.0 in. (25.4 mm) from old switch. Discard old switch.
4. See 6.36 HANDLEBAR SWITCH ASSEMBLIES for information on splicing and general repair practices.
5. Carefully press plunger against inside wall of switch housing. With thumb over plunger bore, move switch into the installed position in the switch housing cavity. When plunger is positioned against thumb, slowly rotate switch downward while rocking slightly. Release the plunger only after switch is properly positioned in the cavity.
6. Verify that the plunger is square in the bore and that the boot is not compressed, collapsed or torn. If necessary, gently work the plunger in and out until boot is fully extended.
7. See Figure 6-132. Push down on switch (1) so that it bottoms against housing and wires (3) run in groove at base of cavity. With the concave side facing outward, insert wedge (2) between switch and outboard side of switch housing.
8. Push wedge down until it also bottoms against housing. Verify that the plunger is still square in the bore and then place a drop of RTV Silicone Sealant on upper corner of wedge.
9. Continue with 6.37 RIGHT HANDLEBAR SWITCHES, Assembly.

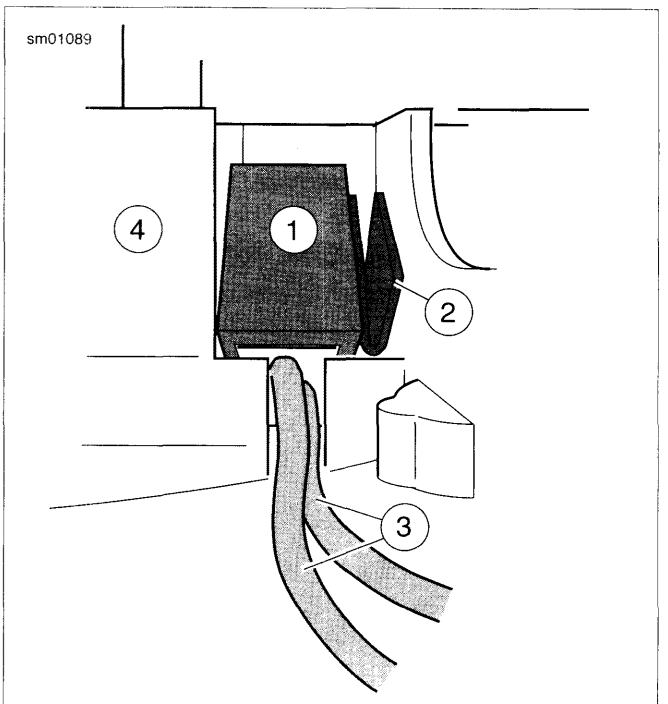

1. **Stoplight switch**
2. **Wedge**
3. **Switch wires**
4. **Lower switch housing**

Figure 6-132. Install Stoplight Switch

ASSEMBLY

1. See Figure 6-133. Insert tapered end of **new** 7.0 in. (177.8 mm) cable strap (1) into round hole in turn signal switch bracket (2) and then feed back through using the adjacent hole. Reserve the oblong hole for the bracket screw.

NOTE

Be sure that all splices are positioned above the turn signal switch bracket.

2. Place the turn signal switch assembly into the housing, aligning the oblong hole in the bracket with the threaded hole in the boss. Be sure that the bracket is fully seated. Tabs on each side of bracket are captured in slots cast into switch housing.
3. Start screw with lockwasher to secure bracket inside housing.

CAUTION

If routed incorrectly, wires can be pinched by casting or handlebar resulting in switch failure. (00542b)

4. Loop switch wires so that spliced lengths are positioned across bracket.
5. Capturing conduit about 0.25 in. (6.4 mm) from end, securely tighten cable strap to draw conduit to bracket. Remove any excess cable strap material.
6. Install second 7.0 in. (177.8 mm) cable strap capturing conduit and wire splices. Securely tighten cable strap to draw splices to conduit. Remove any excess cable strap material.

7. Tighten screw to secure bracket inside housing.
8. Route wire bundle to upper switch housing by gently pressing conduit into channel next to angular arm of bracket. Secure bundle to arm using third cable strap. Cut any excess cable strap material. If necessary, bend angular arm of bracket downward to firmly secure front stoplight switch in position.
9. See 6.37 RIGHT HANDLEBAR SWITCHES, Installation.
   a. If lower housing switches were replaced, perform the entire procedure.
   b. If upper housing switches were replaced, begin with step 11.

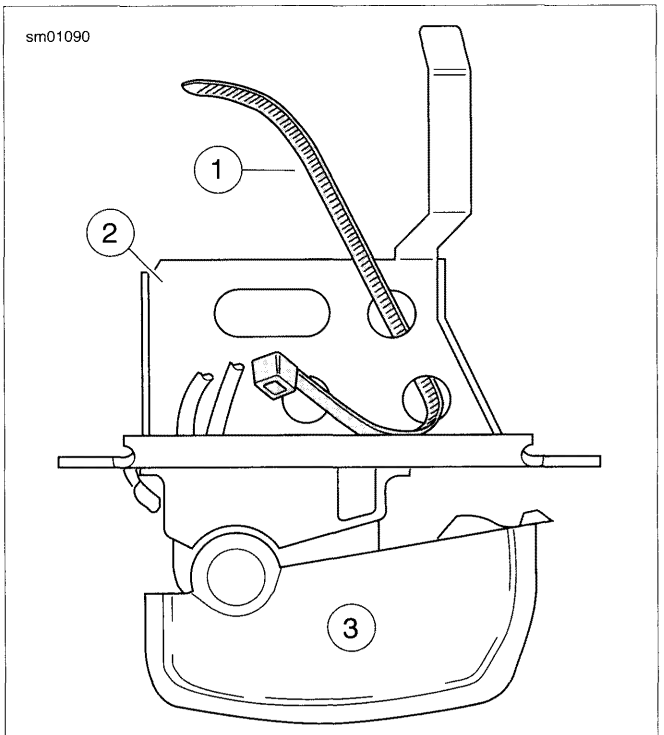

1. **Cable strap**
2. **Bracket**
3. **Right turn signal switch**

Figure 6-133. Insert Cable Strap in Switch Bracket

INSTALLATION

1. See Figure 6-134. Push the throttle and idle control cables into the lower switch housing until they snap in place. Note the different diameter inserts crimped into the end of the throttle and idle cable housings.
   a. Push the silver insert (2) of throttle cable housing into the hole in front of tension adjuster screw (3).
   b. Push the gold insert (1) of idle cable housing into the hole at the rear of tension adjuster screw (3).

NOTE

To aid assembly, place a drop of light oil on the retaining rings of the crimped inserts. Always replace the retaining rings if damaged or distorted.

2. See Figure 6-135. Route the cable (2) to the upper switch housing as shown.
3. Slide the throttle control grip over the end of the right handlebar until it bottoms against the closed end. Rotate the grip so that the ferrule notches are at the top. To prevent binding, pull the grip back about 1/8 in. (3.2 mm).
4. With the concave side facing upward, install the friction shoe so that the pin hole is over the point of the adjuster screw.

NOTE

The friction shoe is a loose fit and may fall out or become dislodged if the lower switch housing is turned upside down or shaken.

5. See Figure 6-136. Position lower switch housing beneath the throttle control grip. Install the brass ferrules (4) onto the cable so that the end fittings seat in the ferrule recess. Seat the ferrules in their respective notches (3) on the throttle control grip. Verify that the cables are captured in the grooves (2) molded into the grip.
6. Position the upper switch housing over the handlebar and lower switch housing.
7. Verify that the wire harness conduit runs in the depression at the bottom of the handlebar. Be sure that the upper switch housing harness will not be pinched under the handlebar when the switch housing screws are tightened.
8. Start the upper and lower switch housing screws, but do not tighten.

CAUTION

Do not remove or install the master cylinder assembly without first positioning a 5/32-inch (4 mm) thick insert between the brake lever and lever bracket. Removing or installing the master cylinder assembly without the insert in place may result in damage to the rubber boot and plunger on the front stoplight switch. (00324a)

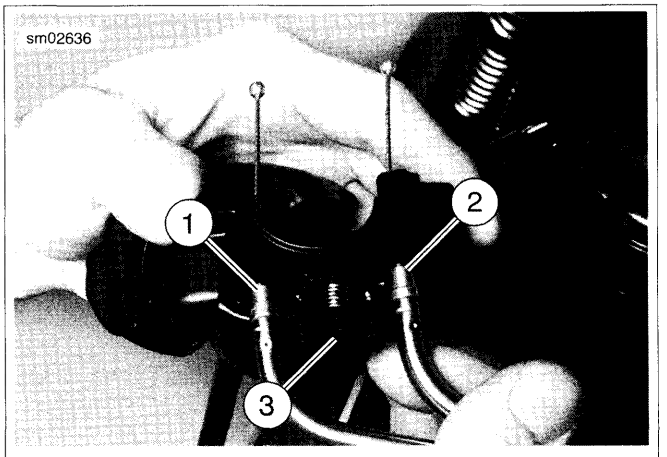

1. **Idle cable insert (gold insert, rear hole)**
2. **Throttle cable insert (silver insert, front hole)**
3. **Tension adjuster screw**

Figure 6-134. Right Lower Switch Housing

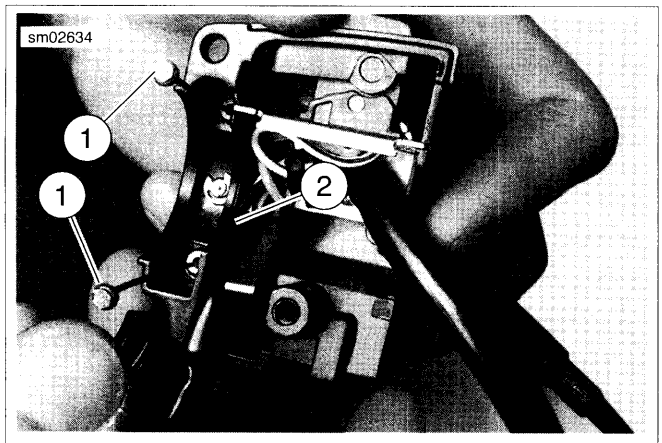

1. **End fittings**
2. **Upper switch housing cable**

Figure 6-135. Route Cable to Upper Switch Housing

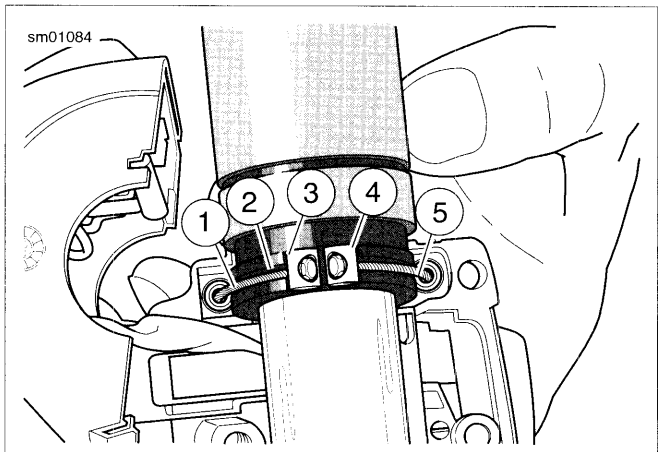

1. **Throttle cable (silver insert, front hole)**
2. **Groove in throttle grip**
3. **Notch**
4. **Brass ferrule**
5. **Idle cable (gold insert, rear hole)**

Figure 6-136. Throttle Cable Attachment

9. See Figure 6-137. Position the brake lever/master cylinder assembly inboard of the switch housing assembly, engaging the tab (2) on the lower switch housing in the groove (3) at the top of the brake lever bracket.

10. Align the holes in the handlebar switch clamp with those in the master cylinder housing and start the two screws (with flat washers). Position for rider comfort. Beginning with the top screw, tighten to specification using a T27 TORX drive head. Refer to Table 6-16.

11. Using a T25 TORX drive head, tighten lower and upper switch housing screws to specification. Refer to Table 6-16.

NOTE

Always tighten the lower switch housing screw first so that any gap between the upper and lower housings is at the front of the switch.

Table 6-16. Handlebar Switch Assembly Fasteners

FASTENER	TORQUE
Handlebar clamp screws	108-132 **in-lbs** (12.2-14.9 Nm)
Switch housing screws	35-45 **in-lbs** (4.0-5.1 Nm)

12. Remove the cardboard insert between the brake lever and lever bracket.

13. Adjust throttle cables. See 2.29 THROTTLE CABLES: ALL MODELS

14. Install main fuse. See 6.35 MAIN FUSE.

⚠WARNING

Be sure that all lights and switches operate properly before operating motorcycle. Low visibility of rider can result in death or serious injury. (00316a)

15. Test the switches for proper operation.

16. Secure wire harness to handlebar as necessary.

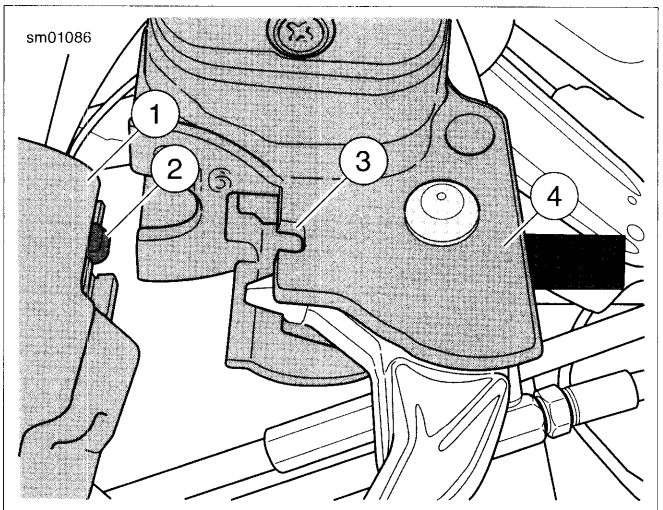

1. **Switch housing assembly**
2. **Tab**
3. **Groove**
4. **Brake lever bracket**

Figure 6-137. Switch Housing Alignment (typical)

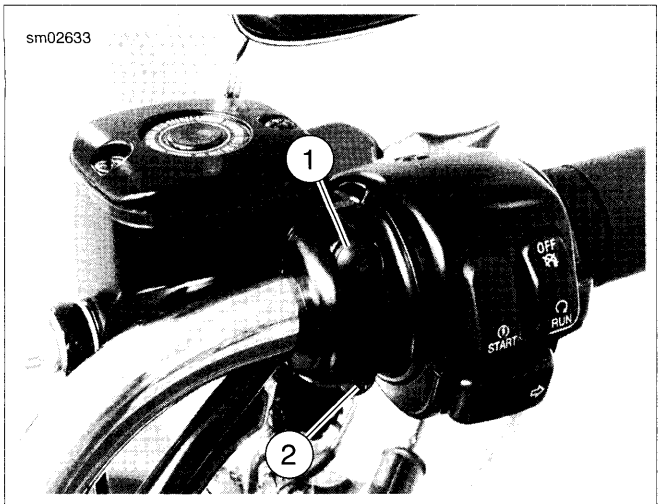

1. Upper screw
2. Lower screw and flat washer

Figure 6-138. Handlebar Switch Clamp Screws

REMOVAL

NOTE

The removal and installation steps listed apply when replacing the entire switch assembly, switch housing or handlebars.

⚠WARNING

To prevent accidental vehicle start-up, which could cause death or serious injury, remove main fuse before proceeding. (00251b)

1. Remove main fuse. See 6.35 MAIN FUSE.
2. Using a T25 TORX drive head, loosen but do not remove the upper and lower switch housing screws.
3. Using a T27 TORX drive head, remove the two screws with flat washers securing the handlebar clamp to the clutch lever bracket. Remove the clutch hand lever assembly and clamp from the handlebar.
4. Remove the upper and lower switch housing screws.
5. Remove the grip sleeve from the end of the handlebar if damaged.

DISASSEMBLY

1. Using a T25 TORX drive head, remove the upper and lower switch housing screws.
2. If replacing lower housing switches, perform next step before continuing to repair section. If replacing upper housing switches, proceed directly to repair section.
3. Using a T27 TORX drive head, loosen the upper screw securing the handlebar clamp to the clutch lever bracket. Remove the lower clamp screw with flat washer.

SWITCH REPAIR/REPLACEMENT

Switch and Lead Replacement

After cutting off the connector terminals, the leads of faulty switches can be pulled through the conduit. Replacement switch leads can be routed through the conduit and terminated at the connector. If necessary, only the switches can be replaced.

Switch Only Replacement: Upper Housing

NOTES

Replace the horn switch and high/low beam switch as a single assembly even if only one switch is determined to be faulty.

1. See Figure 6-139. From inside the switch housing, remove the screw with lockwasher (4) to release the bracket (5). Remove bracket and switch assembly from the housing.
2. Move cable conduit (3) from beneath wing of bracket. Cut wires 0.25 in. (6.4 mm) from old switches (1, 2). Discard old switch and bracket assembly.
3. Slide conduit forward over cut ends of switch wires and cut off 0.5 in. (12.7 mm) of conduit (3) material. Push conduit back to access switch wires.
4. Separate the **new** horn switch (1) and high/low beam switch (2) wires into two bundles.
5. See 6.36 HANDLEBAR SWITCH ASSEMBLIES for information on splicing and general repair practices.
6. Loop switch wires so that spliced lengths are positioned as shown in Figure 6-140. Route wires downstream of splices beneath wing on high/low beam switch side of bracket as shown in Figure 6-139.
7. See Figure 6-140. Install a **new** 7.0 in. (177.8 mm) cable strap (5) beneath wing on horn switch side (1) of bracket and capture wire splices (4).
8. Place switch assembly into upper housing aligning hole in bracket with threaded hole in boss. Be sure that bracket is fully seated. The step at the edge of the boss captures the bottom edge of the bracket, while tabs on each side of the bracket fit in slots cast into the housing.
9. See Figure 6-139. Install screw and lockwasher (4) to secure bracket (5) inside housing. Verify that wing on high/low switch (2) side of bracket captures edge of conduit (3) as shown.
10. Securely tighten cable strap to draw splices to bracket. Remove any excess cable strap material.
11. Continue with 6.38 LEFT HANDLEBAR SWITCHES, Assembly.

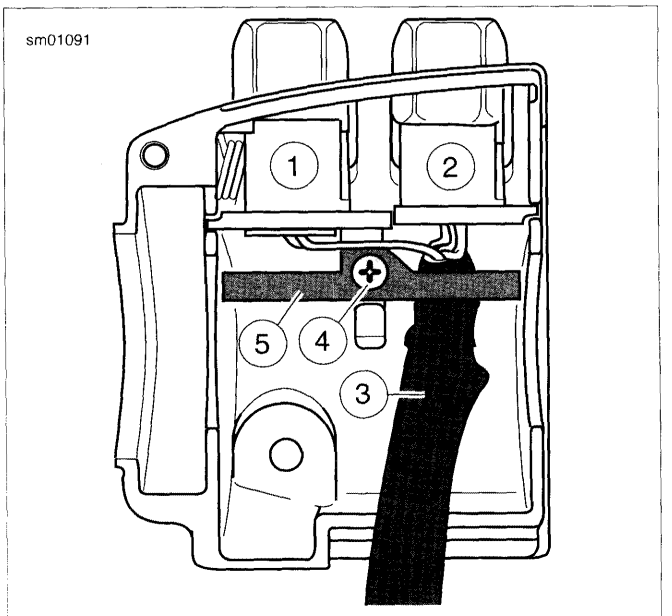

1. **Horn switch**
2. **High/low beam switch**
3. **Conduit**
4. **Screw with lockwasher**
5. **Bracket**

Figure 6-139. Upper Housing Without Splices

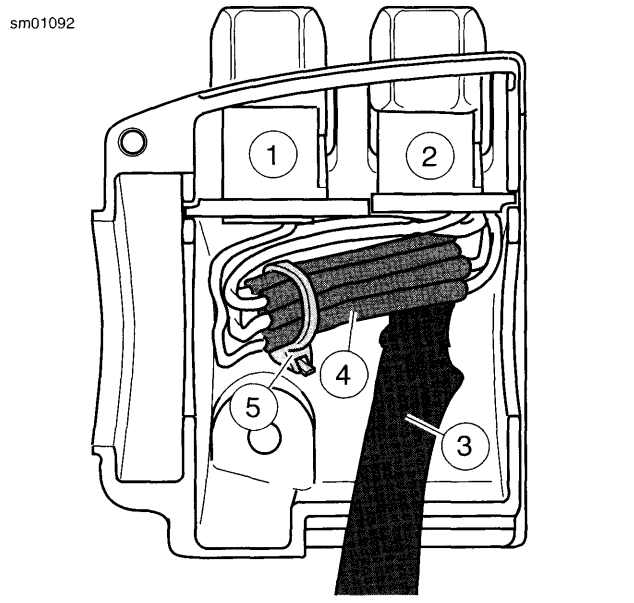

1. **Horn switch**
2. **High/low beam switch**
3. **Conduit**
4. **Splices**
5. **Cable strap**

Figure 6-140. Upper Housing With Splices

Switch Only Replacement: Lower Housing

1. From inside the switch housing, carefully cut cable strap to free conduit from the turn signal switch bracket.
2. Remove screw with lockwasher to release the turn signal switch bracket. Remove the bracket and switch assembly from the housing.
3. Continue with TURN-LEFT SIGNAL SWITCH or CLUTCH INTERLOCK SWITCH procedures.

Turn-Left Signal Switch Only

1. Perform steps in LOWER HOUSING REPAIR.
2. Cut wires 1.5 in. (38.1 mm) from old turn signal switch. Discard switch assembly.
3. See 6.36 HANDLEBAR SWITCH ASSEMBLIES for information on splicing and general repair practices.
4. Continue with 6.38 LEFT HANDLEBAR SWITCHES, Assembly.

Clutch Interlock Switch Only

1. Perform steps in LOWER HOUSING REPAIR.
2. See Figure 6-141. Cut wires 0.25 in. (6.4 mm) from old switch. Discard switch assembly.
3. See 6.36 HANDLEBAR SWITCH ASSEMBLIES for information on splicing and general repair practices.
4. Continue with 6.38 LEFT HANDLEBAR SWITCHES, Assembly.

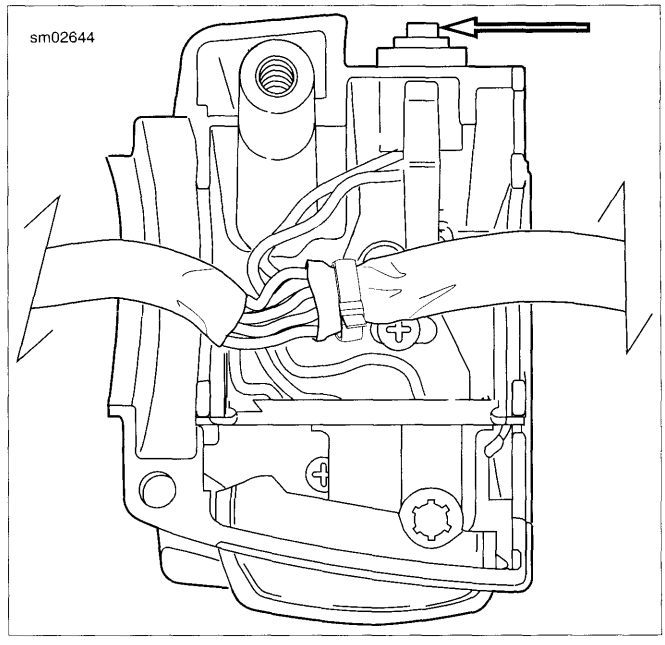

Figure 6-141. Clutch Interlock Switch

ASSEMBLY

1. See Figure 6-142. Insert tapered end of **new** 7.0 in. (177.8 mm) cable strap (1) into round hole in turn signal switch bracket (2) and then feed back through using the adjacent hole. Reserve the oblong hole for the bracket screw.

NOTE

Be sure that all splices are positioned above the turn signal switch bracket.

2. Place the turn signal switch assembly (3) into the housing, aligning the oblong hole in the bracket with the threaded hole in the boss. Be sure that the bracket is fully seated. Tabs on each side of bracket are captured in slots cast into switch housing.
3. Start screw with lockwasher to secure bracket inside housing.

CAUTION

If routed incorrectly, wires can be pinched by casting or handlebar resulting in switch failure. (00542b)

4. Loop switch wires so that spliced lengths are positioned across bracket.
5. Capturing conduit about 0.25 in. (6.4 mm) from end, securely tighten cable strap to draw conduit to bracket. Remove any excess cable strap material.
6. Tighten screw to secure bracket inside housing.
7. Route wire bundle to upper switch housing below and then forward of the main wire harness, positioning conduit in channel next to angular arm of bracket. Secure bundle to arm using **new** cable strap. Cut any excess cable strap material.

8. See 6.38 LEFT HANDLEBAR SWITCHES, Installation.
   a. If lower housing switches were replaced, perform the whole procedure.
   b. If upper housing switches were replaced, begin with step 7.
9. Verify the operation of the clutch interlock switch. See the electrical diagnostics manual.

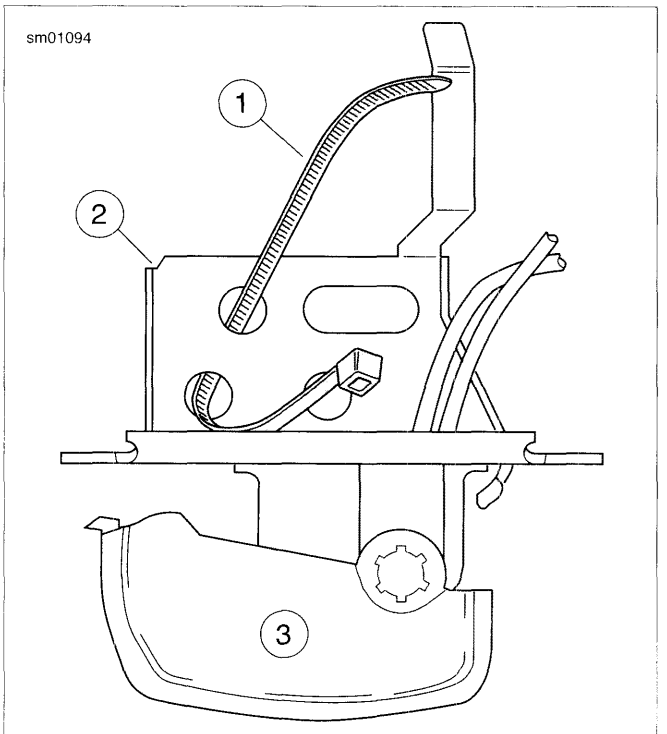

1. **Cable strap**
2. **Bracket**
3. **Left turn signal switch**

Figure 6-142. Insert Cable Strap in Switch Bracket

INSTALLATION

1. If the grip sleeve was removed, thoroughly clean handlebar to remove all adhesive residue. Pour adhesive into new grip. Roll grip to evenly distribute adhesive on inside surfaces. Install grip on handlebar with a twisting motion.
2. See Figure 6-143. Install upper and lower switch housings on handlebar. Be sure that ribs (2) on outboard side of switch housings fit in grooves (3) molded into grip.
3. Verify that the wire harness conduit runs in the groove at the bottom of the handlebar. Be sure that the upper switch housing harness will not be pinched under the handlebar when the switch housing screws are tightened.
4. Start the upper and lower switch housing screws, but do not tighten.
5. See Figure 6-144. Position the clutch hand lever assembly inboard of the switch housing assembly, engaging the tab (3) on the lower switch housing in the groove (2) at the bottom of the clutch lever bracket.
6. Align the holes in the handlebar switch clamp with those in the clutch lever bracket and start the two screws (with flat washers). Position for rider comfort. Beginning with the top screw, tighten screws to specification with a T27 TORX drive head. Refer to Table 6-17.
7. Using a T25 TORX drive head, tighten lower and upper switch housing screws to specification. Refer to Table 6-17.

NOTE

Always tighten the lower switch housing screw first so that any gap between the upper and lower housings is at the front of the switch.

Table 6-17. Handlebar Switch Assembly Fasteners

FASTENER	TORQUE
Handlebar clamp screws	108-132 **in-lbs** (12.2-14.9 Nm)
Switch housing screws	35-45 **in-lbs** (4.0-5.1 Nm)

8. Install main fuse. See 6.35 MAIN FUSE.

⚠WARNING

Be sure that all lights and switches operate properly before operating motorcycle. Low visibility of rider can result in death or serious injury. (00316a)

9. Test the switches for proper operation.
10. Secure wire harness to handlebar as necessary.

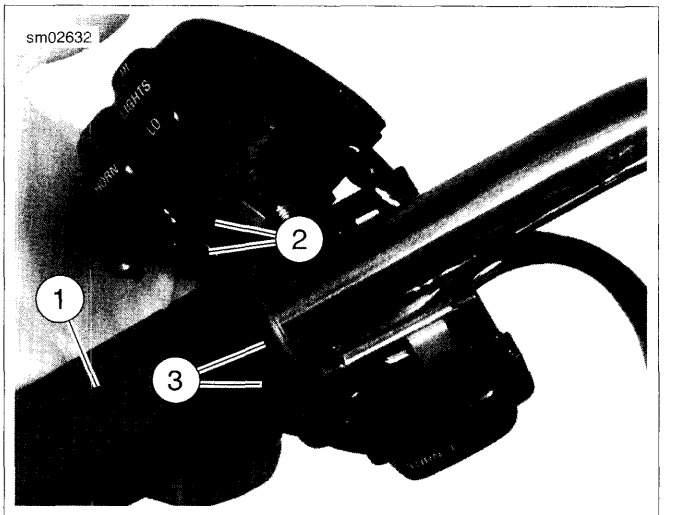

1. **Grip sleeve**
2. **Ribs**
3. **Grooves**

Figure 6-143. Left Handlebar Switch Housings

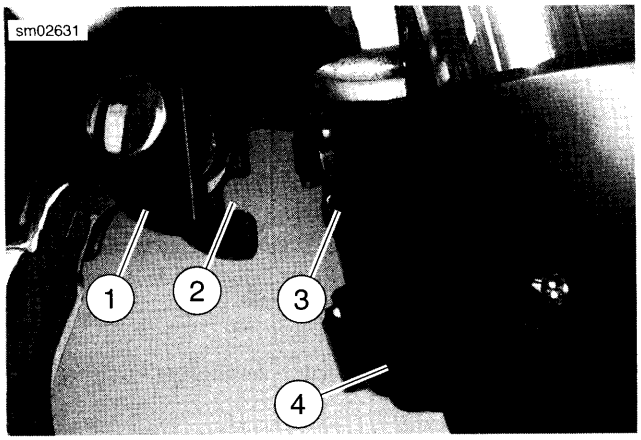

1. Clutch lever bracket
2. Groove
3. Tab
4. Switch housing assembly

Figure 6-144. Clutch Lever Bracket

GENERAL

The TSSM and HFSM use batteries in the fob and siren. These are the only parts requiring periodic maintenance.

FOB BATTERY

Schedule

Replace the fob battery every two years.

Battery Replacement

1. Open the fob case.
   a. **TSSM:** See Figure 6-145. Place a thin blade between the two halves of the case.
   b. **HFSM:** See Figure 6-146. Place a thin blade in the thumbnail slot (1) between the two halves of the case.
   c. Slowly twist the blade.
2. Replace the battery.
   a. Remove the original battery.
   b. Install a **new** battery with the positive (+) side down. Use a Panasonic® 2032 or equivalent.
3. Close the case.
   a. **TSSM:** See Figure 6-145. Align case and circuit board (3) as shown.
   b. **HFSM:** See Figure 6-146. With O-ring (3) in place, align case halves.
   c. Snap case halves together.
4. **TSSM:** While standing next to the motorcycle, press and hold the fob button for 10-15 seconds until the security system responds with two turn signal flashes/siren chirps.

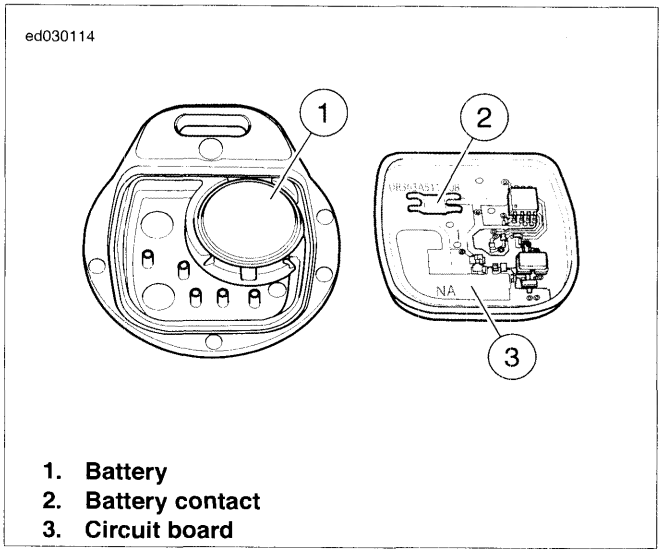

1. **Battery**
2. **Battery contact**
3. **Circuit board**

Figure 6-145. Open Fob: TSSM

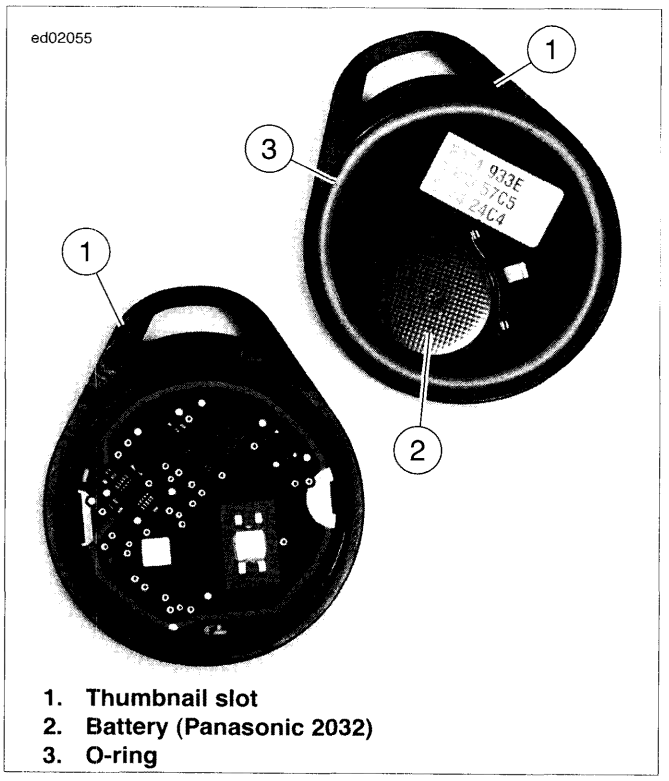

1. **Thumbnail slot**
2. **Battery (Panasonic 2032)**
3. **O-ring**

Figure 6-146. Open Fob: HFSM

SMART SIREN (IF INSTALLED)

Schedule

The siren's internal 9 volt battery is rechargeable and does not need to be replaced on a regular basis. Battery life under normal conditions is approximately three to six years.

NOTES

- *See Figure 6-147 and Figure 6-148. Early style siren works with both TSSM and HFSM. Late style siren only works with HFSM.*
- *The internal siren battery may not charge if the motorcycle's battery is less than 12.5 Volts.*

Battery Replacement: Early Style Siren

1. Disarm system and remove siren.
2. See Figure 6-147. Remove battery cover.
   a. Place the siren module on a flat, sturdy table with the potted section (area with epoxy covering circuit board) facing up and towards you.
   b. Position a knife blade at a 45 degree angle to the long side of the siren case. Insert the knife blade between the siren case and battery cover at one of the two accessible corners of the battery cover. Keep the blade slightly higher towards the battery cover as this helps keep the blade away from the battery seal.
   c. Slowly twist the blade towards the battery cover and the cover will pop off.

NOTES

- *For protection against corrosion, battery terminals and battery clip are covered with a special grease. Do not wipe away this substance. Apply all available existing grease to terminals on **new** battery.*
- *Only a 9 Volt nickel metal hydride battery should be used in the siren.*

3. Replace battery by removing old battery from polarized battery clip. Install a **new** 9 Volt nickel metal hydride battery.
4. Install battery cover.
   a. Carefully replace the rubber seal.
   b. Align battery cover with case placing round corners on cover away from connector [142A]. Snap cover into place.
5. Install siren and check operation. If siren is working properly, it responds with two chirps after receiving the arm command.

Battery Replacement: Late Style Siren

1. Disarm system and remove siren.
2. See Figure 6-148. With a small screwdriver or pick, push the catches (1) in through the two slots (2) in the end of the siren to release the battery cover (3).

NOTES

- *For protection against corrosion, battery terminals and battery clip are covered with a special grease. Do not wipe away this substance. Apply all available existing grease to terminals on **new** battery.*
- *Only a 9 Volt nickel metal hydride battery should be used in the siren.*

3. Replace battery (4) by removing old battery from polarized battery clip.
4. Recharge and install or install a **new** 9 Volt nickel metal hydride battery.
5. Install battery cover (3).
   a. Carefully replace the rubber seal (5) on the cover.
   b. Align battery cover with case placing round corners on cover away from connector [142A] (6).
   c. Snap cover into place.
6. Install siren and check operation. If siren is working properly, it responds with two chirps after receiving the arm command.

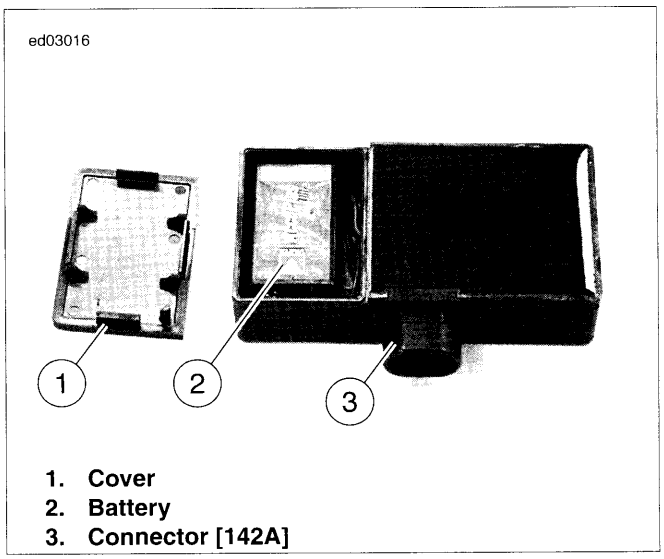

1. **Cover**
2. **Battery**
3. **Connector [142A]**

Figure 6-147. Battery Compartment (Early Style Siren)

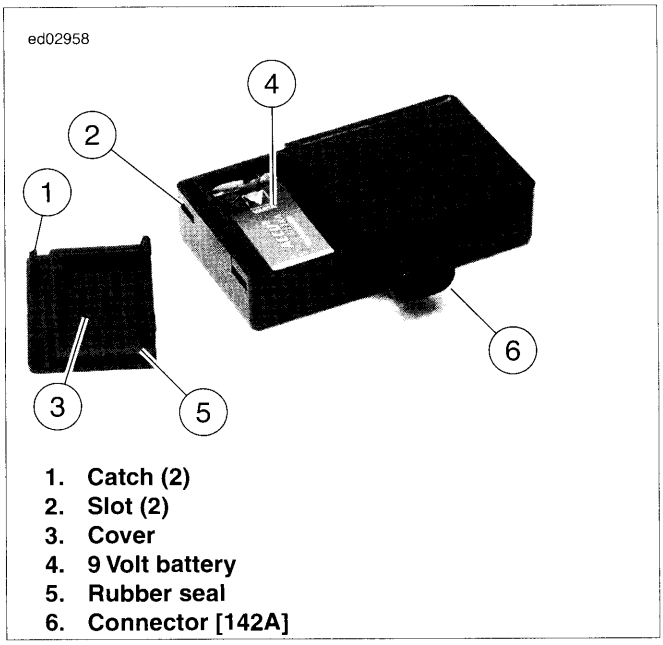

1. **Catch (2)**
2. **Slot (2)**
3. **Cover**
4. **9 Volt battery**
5. **Rubber seal**
6. **Connector [142A]**

Figure 6-148. Battery Compartment (Late Style Siren)

GENERAL

The PIN consists of five digits. Each digit can be any number from 1 through 9. There can be no zeros (0) in the PIN. Use the PIN to disarm the security system in case the fob becomes unavailable.

INITIAL PIN ENTRY

To enter a PIN on a motorcycle with no PIN previously installed during HFSM actuation, refer to Table 6-18.

Table 6-18. Entering an Initial PIN: HFSM, TSSM

STEP	ACTION	CONFIRMATION
1	Select a five-digit (1 through 9) initial PIN and record in the Owner's Manual and on the wallet card.	
2	With an assigned fob present, set engine stop switch to **OFF.**	
3	Cycle ignition switch **IGNITION**-OFF-**IGNITION**-OFF-**IGNITION.**	
4	Press **left** turn signal button twice.	Turn signals flash three times.
5	Press **right** turn signal button once.	Five dashes appear in the odometer window. The first dash flashes.
6	Enter first digit (a) of initial PIN by pressing **left** turn signal button until desired digit is displayed in odometer.	
7	Press **right** turn signal button once.	The digit (a) replaces the dash in the odometer. The second dash flashes.
8	Enter second digit (b) of initial PIN by pressing **left** turn signal button until desired digit is displayed in odometer.	
9	Press **right** turn signal button once.	The digit (b) replaces the dash in the odometer. The third dash flashes.
10	Enter third digit (c) of initial PIN by pressing **left** turn signal button until desired digit is displayed in odometer.	
11	Press **right** turn signal button once.	The digit (c) replaces the dash in the odometer. The fourth dash flashes.
12	Enter fourth digit (d) of initial PIN by pressing **left** turn signal button until desired digit is displayed in odometer.	
13	Press **right** turn signal button once.	The digit (d) replaces the dash in the odometer. The fifth dash flashes.
14	Enter fifth digit (e) of initial PIN by pressing **left** turn signal button until desired digit is displayed in odometer.	
15	Press **right** turn signal button once.	The digit (e) replaces the dash in the odometer. The first digit flashes.
16	Turn the ignition switch to **OFF.**	

CHANGING THE PIN

To change a PIN, refer to Table 6-19. The rider can change the PIN at any time.

Modifying an Existing Pin

If a PIN was previously entered, the odometer will display the equivalent digit. Each additional press of the left turn switch will increment the digit.

Examples:

- To advance from 5 to 6, press and release the left turn switch 1 time.
- To advance from 8 to 2, press and release the left turn switch 3 times (9-1-2).

Table 6-19. Changing the PIN: HFSM

STEP	ACTION	CONFIRMATION	NOTES
1	Select a five-digit (1 through 9) PIN and record in the Owner's Manual and on the wallet card.		
2	With fobs present, cycle ignition switch IGNITION-OFF-IGNITION-OFF-IGNITION.		
3	Press **left** turn signal button twice.	Turn signals flash 3 times.	
4	Press **right** turn signal button once.	Current PIN will appear in odometer. The first digit will flash.	
5	Enter first digit (a) of new PIN by pressing **left** turn signal button until desired digit is displayed in odometer.		
6	Press **right** turn signal button once.	The new digit replaces the current in the odometer. The second digit flashes.	
7	Enter second digit (b) of new PIN by pressing **left** turn signal button until desired digit is displayed in odometer.		
8	Press **right** turn signal button once.	The new digit replaces the current in the odometer. The third digit flashes.	
9	Enter third digit (c) of new PIN by pressing **left** turn signal button until desired digit is displayed in odometer.		
10	Press **right** turn signal button once.	The new digit replaces the dash in the odometer. The fourth digit flashes.	
11	Enter fourth digit (d) of new PIN by pressing **left** turn signal button until desired digit is displayed in odometer.		
12	Press **right** turn signal button once.	The new digit replaces the current in the odometer. The fifth digit flashes.	
13	Enter fifth digit (e) of new PIN by pressing **left** turn signal button until desired digit is displayed in odometer.		
14	Press **right** turn signal button once.	The new digit replaces the current in the odometer. The first digit flashes.	
15	Turn the ignition switch to **OFF.**		Turning ignition switch to OFF stores PIN.

GENERAL

Setting up a vehicle TSM/HFSM depends on whether the vehicle has a TSM or the optional HFSM security system installed.

SIDECAR CONFIGURATION

⚠WARNING

Only Touring Harley-Davidson Motorcycles are suitable for sidecar use. Consult a Harley-Davidson dealer. Use of motorcycles other than Touring models with sidecars could result in death or serious injury. (00040a)

All motorcycles ship with the H-DSSS set for use **without** a sidecar installed. If a motorcycle is equipped with a TSM, no further actuation is required.

ACTUATION

Actuation consists of assigning two fobs to the system, and entering an initial PIN. The PIN can be changed by the rider at any time.

1. Configure HFSM motorcycles by assigning **both** fobs to the vehicle.
2. Configure HFSM motorcycles by entering a PIN picked by the owner. The personal code allows the owner to operate the system if the fob is lost or inoperable. Record the PIN in the Owner's Manual and instruct the customer to carry a copy (use the wallet card found in the Owner's Manual). See 6.40 PERSONAL IDENTIFICATION NUMBER (PIN).

Once the system has been activated, it will always "arm" within 5 seconds of turning the ignition switch to **OFF** and no motorcycle motion.

FOB ASSIGNMENT

PART NUMBER	TOOL NAME
HD-48650	DIGITAL TECHNICIAN II

Use DIGITAL TECHNICIAN II (Part No. HD-48650) to assign both fobs to the H-DSSS. Follow the menu prompts in the DIGITAL TECHNICIAN II (Part No. HD-48650) display and scan the fob serial number with the bar code reader, or key-in the number from the keyboard. See a Harley-Davidson dealer.

NOTE

Each fob has a unique serial number. The label should be removed from the fob and attached to a blank NOTES page in the Owner's Manual for reference.

POWER DISRUPTION AND CONFIGURING

PART NUMBER	TOOL NAME
HD-42682	BREAKOUT BOX

The HFSM will not enter PIN entry mode on the first attempt after battery voltage has been removed from terminal 1. This will occur after any of the following:

- Battery disconnect or power drain.
- Battery fuse removal.
- Connecting BREAKOUT BOX (Part No. HD-42682) to HFSM connector.

Therefore, after all battery reconnects, the configuration sequence must be modified as follows:

1. Set Engine Stop Switch to **OFF**, cycle ignition switch **IGNITION-OFF-IGNITION-OFF-IGNITION** and press left turn signal switch **twice**.
2. Repeat steps listed above.
3. Continue with PIN entry sequence listed.

GENERAL

If the ECM or TSM/HFSM is faulty, replace the unit. See 6.9 ELECTRONIC CONTROL MODULE (ECM) or 6.10 TURN SIGNAL AND SECURITY MODULE (TSM/TSSM/HFSM). Then, to determine if password learn is necessary, refer to Table 6-20.

Table 6-20. Password Learn

DEVICE REPLACED	IS PASSWORD LEARN NECESSARY?
ECM	Yes
TSM	No *
TSM/HFSM	Yes
* If a TSM has been replaced by a HFSM, or a HFSM has been replaced by a TSM, password learn is necessary.	

PASSWORD LEARNING

PART NUMBER	TOOL NAME
HD-48650	DIGITAL TECHNICIAN II

To perform password learning procedure, refer to Table 6-21. When finished, continue with all instructions under 6.41 H-DSSS ACTUATION.

TSM/HFSM: Always perform all appropriate instructions under 6.41 H-DSSS ACTUATION after TSM/HFSM replacement or removal.

TSM/TSSM (Japan/Korea markets): Always perform all appropriate instructions under VEHICLE DELIVERY in the electrical diagnostic manual after TSM/TSSM replacement or removal.

NOTES

- ***HFSM:*** *Fob assignment must be performed at an authorized Harley-Davidson dealer using DIGITAL TECHNICIAN II (Part No. HD-48650).*
- ***TSSM:*** *Do not forget to enter a Personal Identification Number (PIN) for TSSM vehicles. If a code is not assigned and the key fob is lost or damaged while the vehicle is armed, the TSSM must be replaced.*

Table 6-21. Setting TSM/TSSM/HFSM and ECM Password

NO.	ACTION	CONFIRMATION	NOTES
	Ignition must be turned off for at least 15 seconds.	With Ignition Switch turned off, Check Engine lamp and Security lamp will be off.	
1	Install **new** TSM/TSSM/HFSM or ECM.		
2	Set Engine Stop Switch to **RUN.**		
3	Turn Ignition Switch **ON.**	Verify Check Engine lamp and Security lamp illuminate and then turn off.	TSM/HFSM enables start relay.
4	Attempt normal start one time.	Engine starts and stalls. Check Engine lamp illuminates and stays on.	Password has not been learned. ECM sets DTC P1009.
5	Wait ten seconds. Security lamp will illuminate and stay on.	Security lamp illuminates.	ECM enters Password Learning mode for ten minutes. Do not cycle Ignition Switch or interrupt vehicle power or Password Learn will be unsuccessful.
6	Wait until Security lamp turns off.		This takes ten minutes.
7	Quickly (within two seconds) turn Ignition Switch OFF-**ON.**		ECM must not be allowed to shutdown.
8	Wait until Security lamp turns off.		This takes ten minutes.
9	Quickly (within two seconds) turn Ignition Switch OFF-**ON.**		ECM must not be allowed to shutdown.
10	Wait until Security lamp turns off.		This takes ten minutes.
11	Quickly (within two seconds) turn Ignition Switch OFF-**ON.**		ECM must not be allowed to shutdown.

Table 6-21. Setting TSM/TSSM/HFSM and ECM Password

NO.	ACTION	CONFIRMATION	NOTES
12	Turn Ignition Switch **OFF**. Wait 15 seconds before turning Ignition Switch on. Turn Ignition Switch **ON** and start engine to confirm successful Password Learn procedure. Clear DTCs.		
13	**TSM/HFSM:** Perform all steps under 6.41 H-DSSS ACTUATION. **TSM/TSSM (Japan/Korea markets):** Perform all steps under VEHICLE DELIVERY in electrical diagnostic manual.		

NOTES

SUBJECT **PAGE NO.**
A.1 AMP MULTILOCK CONNECTORS....A-1
A.2 AUTOFUSE ELECTRICAL CONNECTORS....A-5
A.3 DELPHI CONNECTORS....A-6
A.4 DELPHI MAIN FUSE HOUSING....A-8
A.5 DEUTSCH ELECTRICAL CONNECTORS....A-10
A.6 DEUTSCH STANDARD TERMINAL REPAIR....A-14
A.7 DEUTSCH SOLID BARREL MINI TERMINAL REPAIR....A-15
A.8 DEUTSCH MINI TERMINAL REPAIR....A-17
A.9 MOLEX CONNECTORS....A-18
A.10 PACKARD 150 METRI-PACK CONNECTORS....A-22
A.11 PACKARD 480 METRI-PACK CONNECTORS....A-24
A.12 PACKARD 630 METRI-PACK CONNECTORS....A-25
A.13 PACKARD METRI-PACK TERMINALS....A-26
A.14 PACKARD ECM CONNECTOR....A-28
A.15 PACKARD MICRO-64 CONNECTORS....A-30
A.16 SEALED SPLICE CONNECTORS....A-33

AMP MULTILOCK CONNECTOR REPAIR

PART NUMBER	TOOL NAME
HD-41609	AMP MULTILOCK CRIMPER
SNAP-ON TT600-3	SNAP-ON PICK

General

AMP Multilock connectors are found between wire harnesses and component wiring and may be either floating or anchored to the frame with attachment clips.

See Figure A-1. Attachment clips (1) on the pin housings are fitted to T-studs on the motorcycle frame. The T-studs identify OE connector locations. To maintain serviceability, always return connectors to OE locations after service.

Obtain the necessary tools to repair the connector and terminals.

NOTE

For terminal crimping use the AMP MULTILOCK CRIMPER (Part No. HD-41609).

Separating Pin and Socket Housings

1. If necessary, slide connector attachment clip T-stud to the large end of the opening.
2. See Figure A-1. Depress the release button (2) on the socket terminal side of the connector and pull the socket housing (3) out of the pin housing (4).

Mating Pin and Socket Housings

1. Hold the housings to match wire color to wire color.
2. Insert the socket housing into the pin housing until it snaps in place.
3. If OE location is a T-stud, fit large opening end of attachment clip over T-stud and slide connector to engage T-stud to small end of opening.

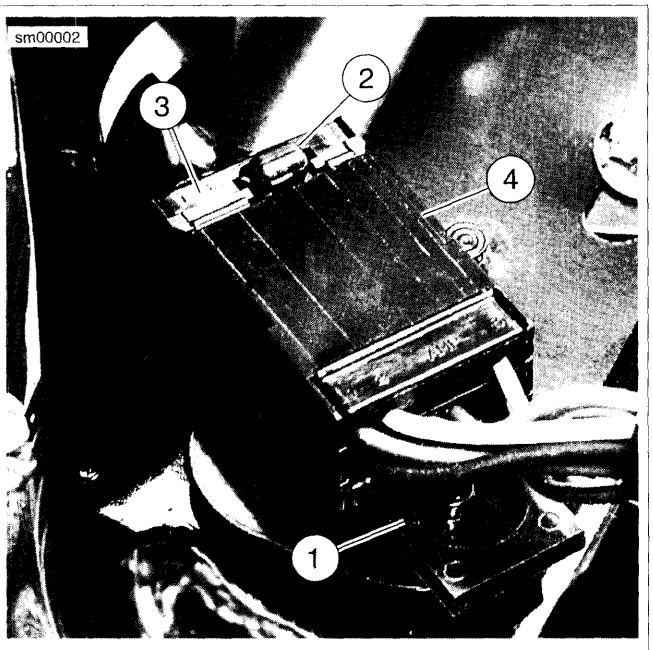

1. **Attachment clip**
2. **Release button**
3. **Socket housing**
4. **Pin housing**

Figure A-1. AMP Multilock Connector

Removing Terminals from Housing

1. See Figure A-2. Bend back the latch (1) to free one end of secondary lock (2) then repeat on the opposite end. Hinge the secondary lock outward.
2. Look in the terminal side of the connector (opposite the secondary lock) and note the cavity next to each terminal.
3. Insert a pick or pin into the terminal cavity until it stops.

NOTE

If socket/pin terminal tool is not available, a push pin/safety pin or a SNAP-ON PICK (Part No. SNAP-ON TT600-3) may be used.

4. Press the tang in the housing to release the terminal.
   a. **Socket:** Lift the socket tang (8) up.
   b. **Pin:** Press the pin tang (7) down.

NOTE

A "click" is heard if the tang is released.

5. Gently tug on wire to pull wire and terminal from cavity.

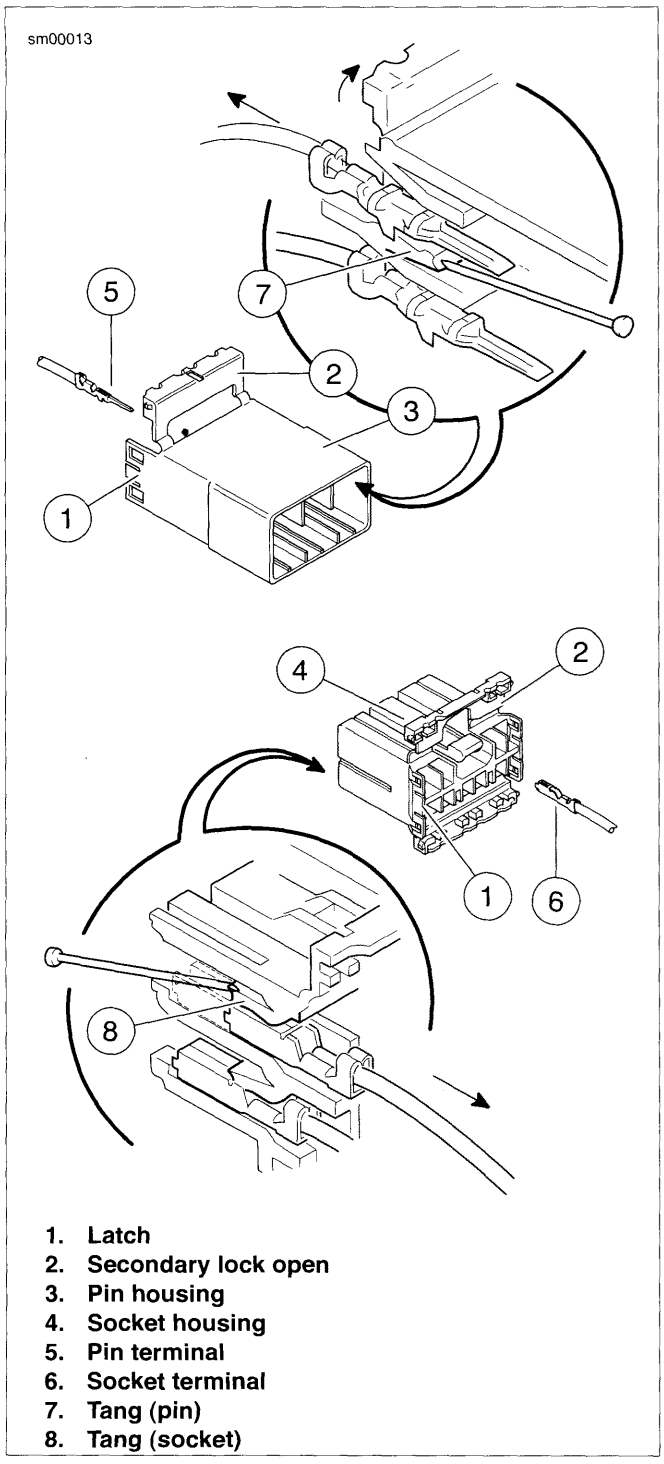

Figure A-2. AMP Multilock Connector: Socket and Pin Housings

Inserting Terminals into Housing

NOTE

See Figure A-3. Cavity numbers are stamped into the secondary locks of both the socket and pin housings. Match the wire color to the cavity number found on the wiring diagram.

1. Hold the terminal so the catch faces the tang in the chamber. Insert the terminal into its numbered cavity until it snaps in place.

NOTES

- *Up and down can be determined by the position of the release button, the button is the top of the connector.*
- *On the pin side of the connector, tangs are positioned at the bottom of each cavity, so the slot in the pin terminal (on the side opposite the crimp tails) must face downward.*
- *On the socket side, tangs are at the top of each cavity, so the socket terminal slot (on the same side as the crimp tails) must face upward.*

2. Gently tug on wire end to verify that the terminal is locked in place.
3. Rotate the hinged secondary lock inward until tabs fully engage latches on both sides of connector.

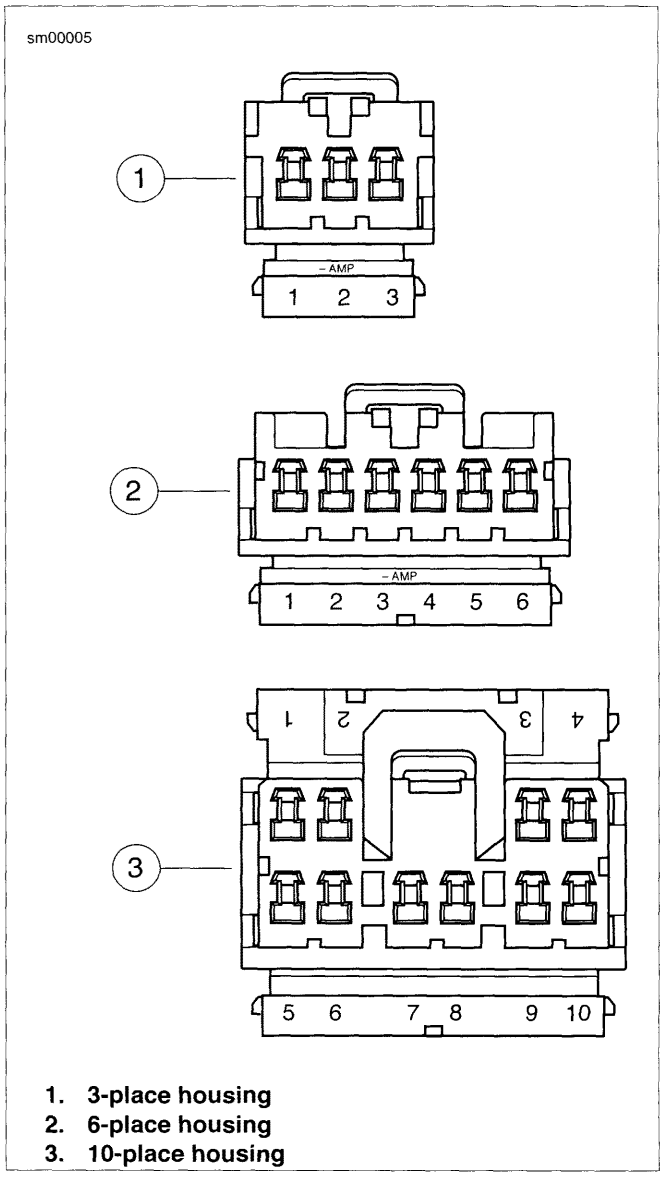

Figure A-3. AMP Multilock Connector: Cavity Numbers on Secondary Locks (Socket Housings Shown)

Preparing Wire Leads for Crimping

1. Strip 5/32 in. (4.0 mm) of insulation from the wire lead.

2. See Figure A-2 and Figure A-5. Select the pin/socket terminals from the parts catalog and identify the insulation crimp tails (1) and the wire crimp tails (2) and the groove for the crimp tool locking bar (3).

3. Identify the wire lead gauge and the corresponding crimper tool and nesting die. Refer to Table A-1.

Table A-1. AMP Multilock Connector: Crimp Tool Wire Gauge/Nest

WIRE GAUGE	NEST
20	Front
16	Middle
18	Rear

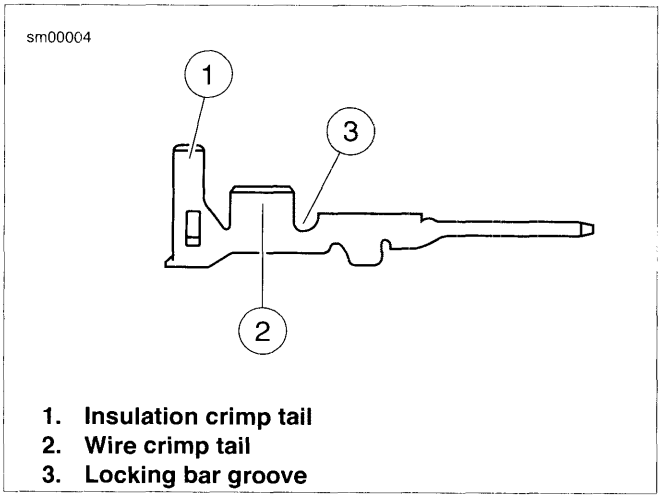

Figure A-4. AMP Multilock Connector: Pin Terminal

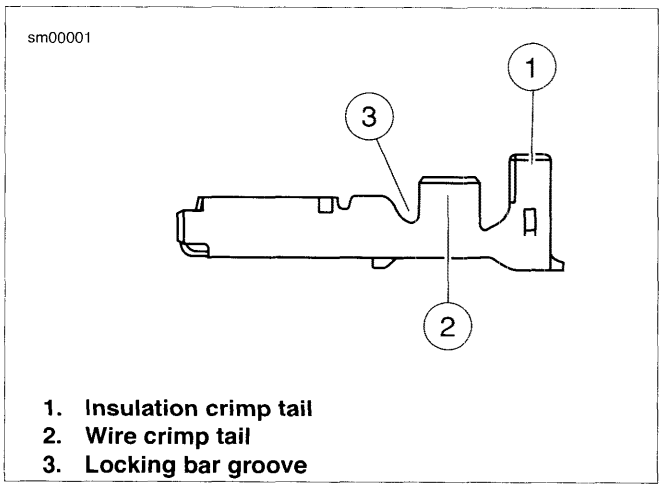

Figure A-5. AMP Multilock Connector: Socket Terminal

Crimping Terminals to Leads

NOTE

Crimping with an Amp Multilock tool is a one step operation. One squeeze crimps both the wire core and the insulation tails.

1. See Figure A-6. Squeeze the handles to cycle the AMP MULTILOCK CRIMPER (Part No. HD-41609) to the fully open position (1).

2. Raise locking bar by pushing up on bottom flange (2).

NOTE

See Figure A-2 and Figure A-5. Hold the terminal with the insulation crimp tail (1) facing up. The tool will hold the terminal by the locking bar groove (3) and crimp the wire crimp tail (2) around the bare wire of the stripped lead and the insulation crimp tail around the insulation.

3. See Figure A-6. With the insulation crimp tail facing upward, insert terminal (pin or socket) (3) through the locking bar, so that the closed side of the terminal rests on the nest of the crimp tool.

4. Release locking bar to lock position of contact (4). When correctly positioned, the locking bar fits snugly in the space at the front of the core crimp tails.

5. Insert stripped end of lead (5) until ends make contact with locking bar.

6. Verify that wire is positioned so that wire crimp tails squeeze bare wire strands, while insulation crimp tails fold over the wire lead insulation.

7. Squeeze handle of crimp tool until tightly closed. Tool automatically opens when the crimping sequence is complete.

8. Raise up locking bar (7) and remove crimped terminal.

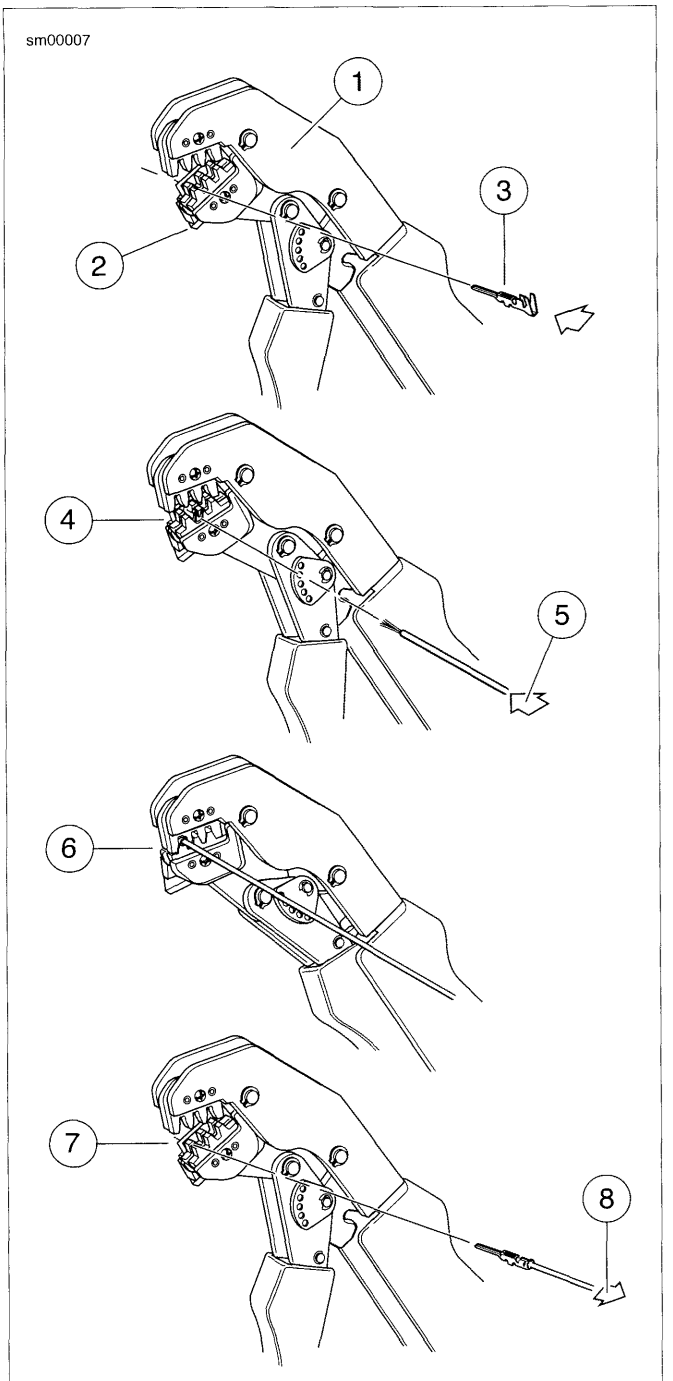

1. Open position
2. Locking bar flange
3. Insert contact
4. Release locking bar
5. Insert lead
6. Squeeze
7. Raise locking bar
8. Remove crimped terminal

Figure A-6. AMP Multilock Connector: Terminal Crimping Procedure

Inspecting Crimped Terminals

See Figure A-7. Inspect the wire core crimp (2) and insulation crimp (1). Distortion should be minimal.

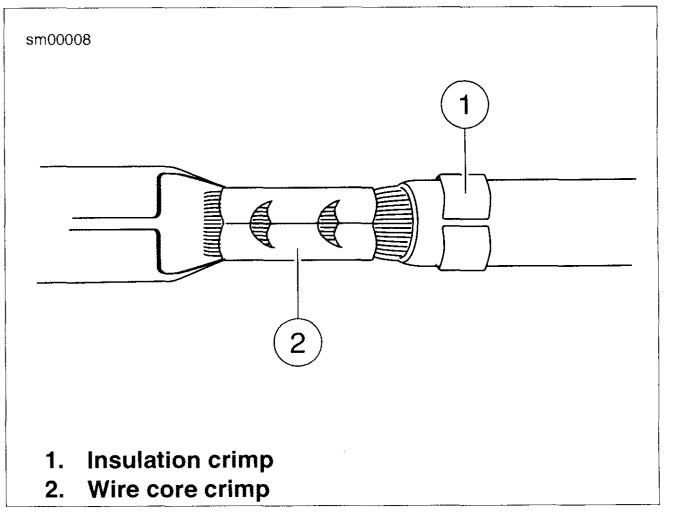

1. Insulation crimp
2. Wire core crimp

Figure A-7. AMP Multilock Connector: Terminal Crimp

AUTOFUSE CONNECTOR REPAIR

PART NUMBER	TOOL NAME
GA500A	SNAP-ON TERMINAL PICK

General

Autofuse electrical connector terminals are found in ignition switches and some fuse blocks.

Disassembly

1. Obtain SNAP-ON TERMINAL PICK (Part No. GA500A).
2. See Figure A-8 or Figure A-9. Insert smallest pair of pins into chamber on mating end of socket housing to depress tangs on each side of terminal simultaneously.
3. Gently pull on wire to remove terminal from wire end of socket housing.
4. If necessary, crimp **new** terminals on wires.

Assembly

1. Using a thin flat blade, like that on a hobby knife, carefully bend tang on each side of terminal outward away from terminal body.
2. With the open side of the terminal facing rib on wire end of socket housing, insert terminal into chamber until it locks in place.

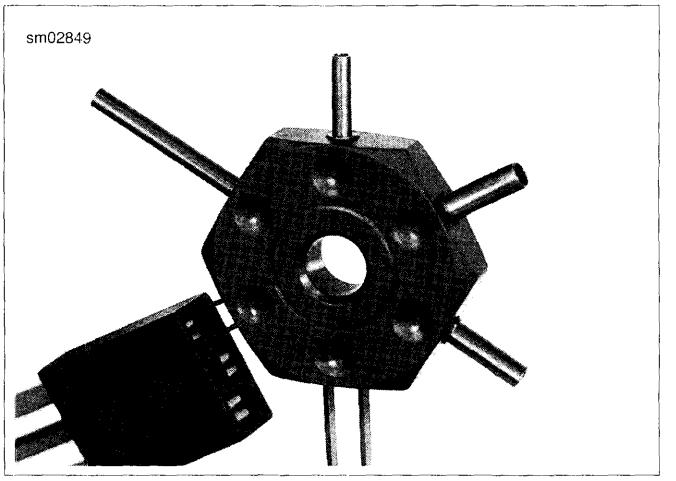

Figure A-8. Removing Autofuse Terminal from Ignition Switch

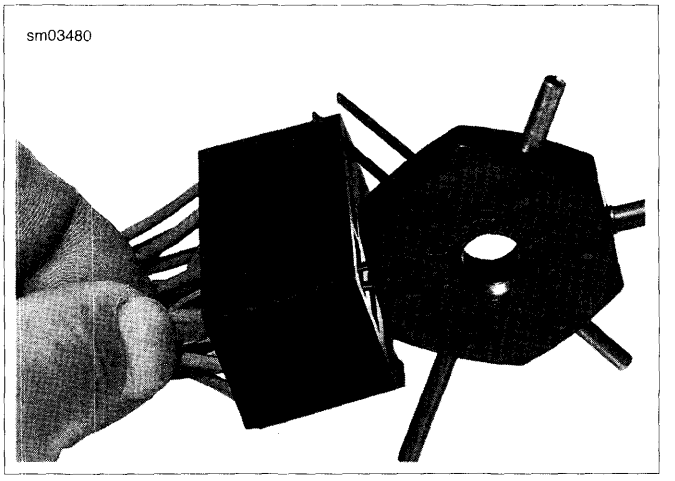

Figure A-9. Removing Autofuse Terminal from Fuse Block

DELPHI CONNECTOR REPAIR

General

Delphi connectors are embossed with the brand name, Delphi, on the housing latch.

Separating Pin and Socket Housings

See Figure A-10. Bend back the external latch(es) slightly and separate pin and socket halves of connector.

Mating Pin and Socket Housings

Push pin and socket halves of connector together until external latch(es) engage.

Removing Socket Terminals

NOTE

Although the parts of the different Delphi connectors vary in appearance, the instructions which follow will work for all.

1. See Figure A-11. If present, free one side of wire lock (1) from ear on wire end of socket housing, then release the other side. Release wires from channels in wire lock and remove from socket housing.
2. Use a fingernail to pry colored terminal lock (2) loose and then remove from mating end of socket housing.
3. Using a thin flat blade, like the unsharpened edge of a hobby knife, gently pry tang (3) outward away from terminal, and then tug on wire to back terminal out wire end of chamber. Do not pull on wire until tang is released or terminal will be difficult to remove.

Installing Socket Terminals

NOTE

For wire location purposes, alpha or numeric characters are stamped into the wire end of each socket housing.

1. Gently push tang on socket housing inward toward chamber. With the open side of the terminal facing the tang, push terminal into chamber at wire end of socket housing.
2. Gently tug on wire to verify that terminal is locked and will not back out of chamber. If necessary, use fingernail to push tang into engagement with terminal.
3. Install colored terminal lock onto mating end of socket housing.
4. If present, seat wires in separate channels of wire lock and then push channels **inside** chambers at wire end of socket housing. Fully installed, slot on each side of wire lock engages ear on socket housing.

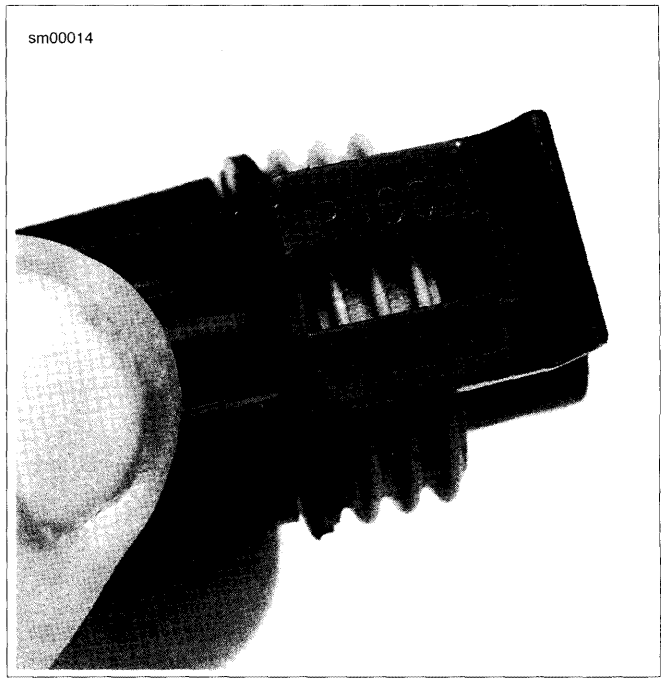

Figure A-10. Delphi Connector: Socket Housing Latch

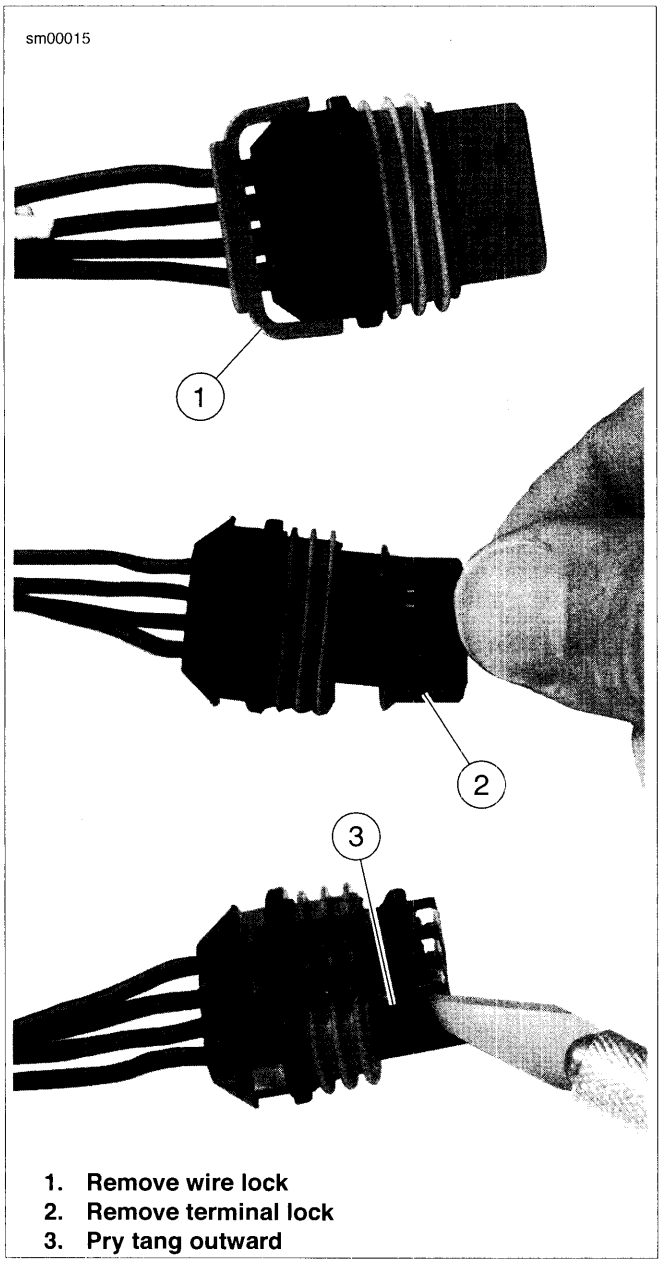

Figure A-11. Delphi Connector: Removing Socket Terminals

DELPHI MAIN FUSE HOUSING REPAIR

General

A Delphi Main fuse connector completes the circuit through the main fuse.

Removing Main Fuse

1. See Figure A-12. Depress latches on main fuse cover (1) and then slide cover off of connector (2).
2. Holding the connector (fuse holder), pull the main fuse out of the connector.

Installing Main Fuse

1. Insert the blade terminals of the main fuse into the sockets of the connector and press the main fuse into the connector.
2. Slide the cover over the fuse until the cover clicks into place.

NOTE

If removed from an OE attachment such as a grooved fuse block cover, engage cover and slide into place.

Removing Socket Terminals

1. Disconnect battery. See 1.17 BATTERY MAINTENANCE.
2. See Figure A-13. Disengage slots (1) on secondary lock (2) from tabs (3) and remove secondary lock.
3. Insert flat blade of pick or small screwdriver into opening (4) until it stops.
4. Tug on cable to pull socket from connector housing. Pivot the pick toward the terminal body to release the latch if necessary.
5. Repeat to remove remaining socket terminal.

Installing Socket Terminals

1. See Figure A-14. Carefully bend tang outward away from the terminal body.
2. Properly orient terminal to the cavity in the housing and push terminal into connector housing until it clicks in place. Verify that socket will not back out of chamber.
3. Push rubber seal into connector housing.
4. Repeat to install remaining socket terminal.
5. Install secondary lock onto connector housing. be sure slots engage tabs on sides of connector housing.
6. Connect battery cables. See 1.17 BATTERY MAINTENANCE.

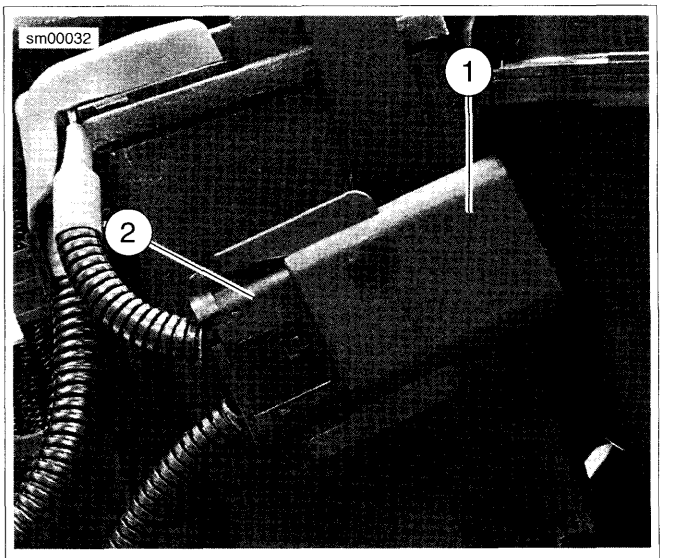

1. **Main fuse cover**
2. **Delphi main fuse housing**

Figure A-12. Delphi Connector Housing: Main Fuse

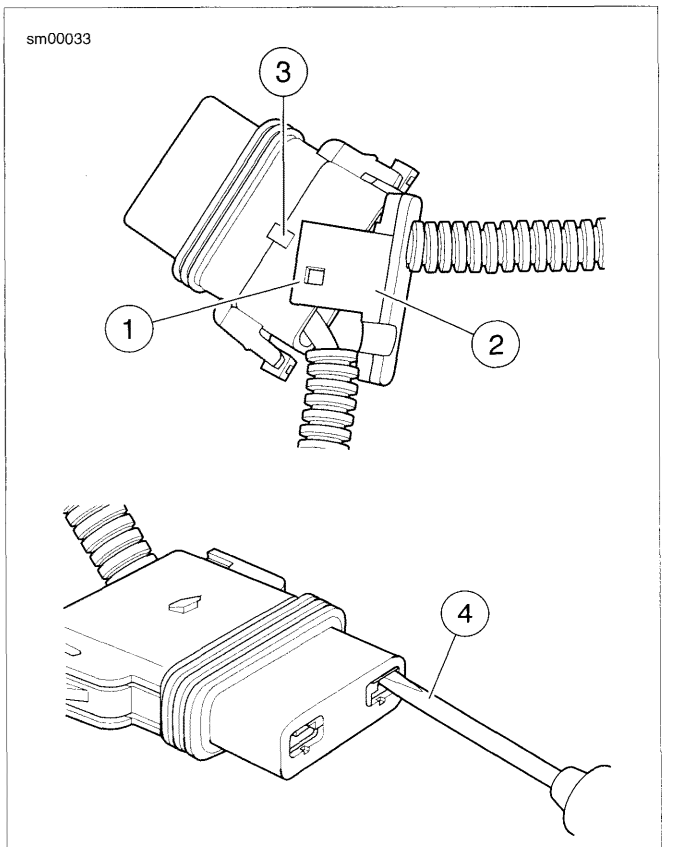

1. **Secondary lock slot**
2. **Secondary lock**
3. **Tab**
4. **Insert flat blade into opening**

Figure A-13. Delphi Main Fuse Housing: Remove Socket Terminals

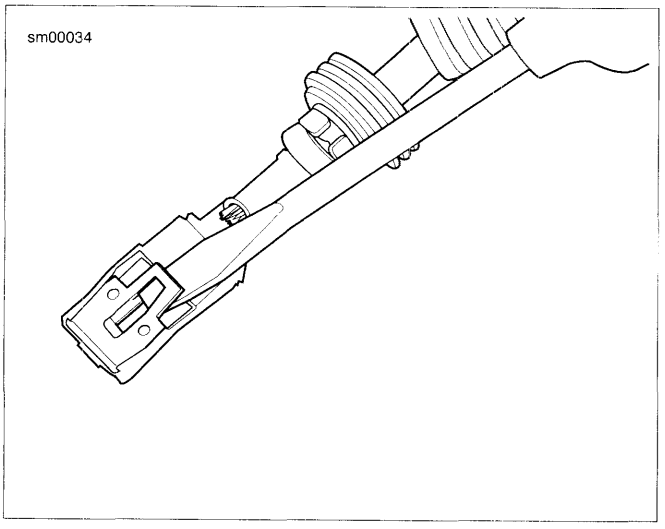

Figure A-14. Delphi Main Fuse Housing: Bend Tang

DEUTSCH CONNECTOR REPAIR

PART NUMBER	TOOL NAME
HD-41475	DEUTSCH CONNECTOR SERVICE KIT
HD-41475-100	FLAT BLADE L-HOOK

General

Deutsch connectors are colored coded for location purposes. Those connectors associated with **left** side accessories, such as the front and rear **left** turn signals, are **gray**. All other connectors, including those associated with right side accessories, are **black**.

NOTE

A DEUTSCH CONNECTOR SERVICE KIT (Part No. HD-41475) contains a selection of wire seals, internal seals, seal plugs, secondary locking wedges, attachment clips and socket/pin terminals. Also included is a compartmented storage box, carrying case and a FLAT BLADE L-HOOK (Part No. HD-41475-100) is used for the removal of all types of locking wedges.

Separating Pin and Socket Housings

See Figure A-15. To separate the connector halves, depress the external latch(es) (1) on the socket housing (2) while rocking the pin (3) and socket housings.

NOTES

- *Generally, the socket housing is found on the accessory side, while the pin housing is plumbed to the wiring harness.*
- *Two-, three-, four- and six-place Deutsch connectors have one latch on the connector.*
- *Eight- and twelve-place connectors have a latch on each side. Simultaneously press both latches to separate the connector.*

Mating Pin and Socket Housings

1. Align the connectors to match the wire lead colors.
   a. **For One External Latch:** Two-, three-, four- and six-place Deutsch connectors have one external latch on the socket half of the connector. To fit the halves of the connector together, the latch on the socket side must be aligned with the latch cover on the pin side.
   b. **For Two External Latches:** (8-place and 12-place) Align the tabs on the socket housing with the grooves on the pin housing.
2. Insert socket housing into pin housing until it snaps or clicks into place.

   For Two External Latches: (8-place and 12-place) If latches do not click (latch), press on one side of the connector until that latch engages, then press on the opposite side to engage the other latch.
3. If necessary, fit the attachment clip to the pin housing.
4. Place large end of slot on attachment clip over T-stud on frame. Push assembly forward to engage small end of slot.

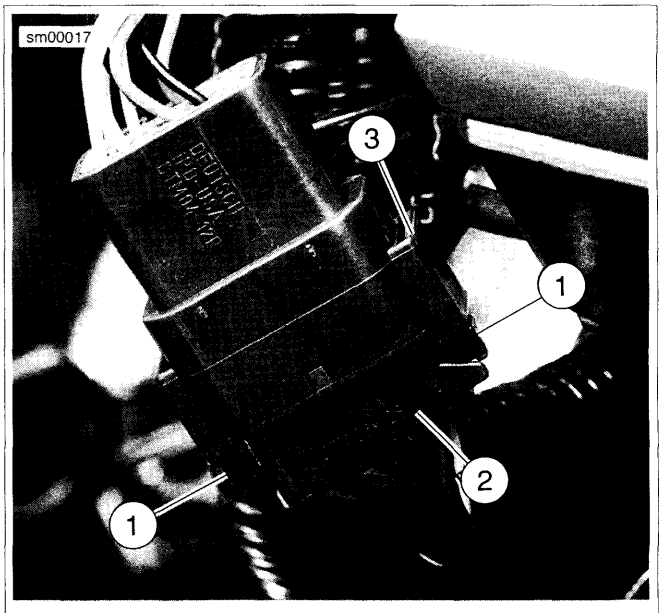

1. **External latch**
2. **Socket housing**
3. **Pin housing**

Figure A-15. Deutsch Connector

Removing Socket Terminals

1. See Figure A-16. Insert a small screwdriver between the socket housing and locking wedge in-line with the groove (in-line with the pin holes if the groove is absent). Turn the screwdriver 90 degrees to pop the wedge up and remove the secondary locking wedge.
2. See Figure A-19. Use a pick or small screwdriver to depress terminal latches inside socket housing and back out sockets through holes in rear wire seal.

NOTE

*If wire leads require **new** terminals, see the instructions for crimping terminals.*

Installing Socket Terminals

1. Match wire lead color to connector cavity.
2. See Figure A-18. Fit rear wire seal (1) into back of socket housing (2), if removed.
3. Grasp wire lead (3) approximately 1.0 in. (25.4 mm) behind the socket terminal. Gently push socket through hole in wire seal into its chambers until it "clicks" in place.
4. A tug on the wire will confirm that it is properly locked in place.

NOTE

Seal plugs (6) are installed through the wire seals of unused chambers. If removed, seal plugs must be replaced to seal the connector.

5. Install internal seal (4) on lip of socket housing, if removed.
6. Insert tapered end of secondary locking wedge (5) into socket housing and press down until it snaps in place. The wedge fits into the center groove within the socket housing and holds the terminal latches tightly closed.

NOTES

- *See Figure A-17. While rectangular wedges do not require a special orientation, the conical secondary locking wedge of the 3-place connector must be installed with the arrow (1) pointing toward the external latch.*
- *If the secondary locking wedge does not slide into the installed position easily, verify that all terminals are fully installed in the socket housing. The lock indicates when terminals are not properly installed by not entering its fully installed position.*

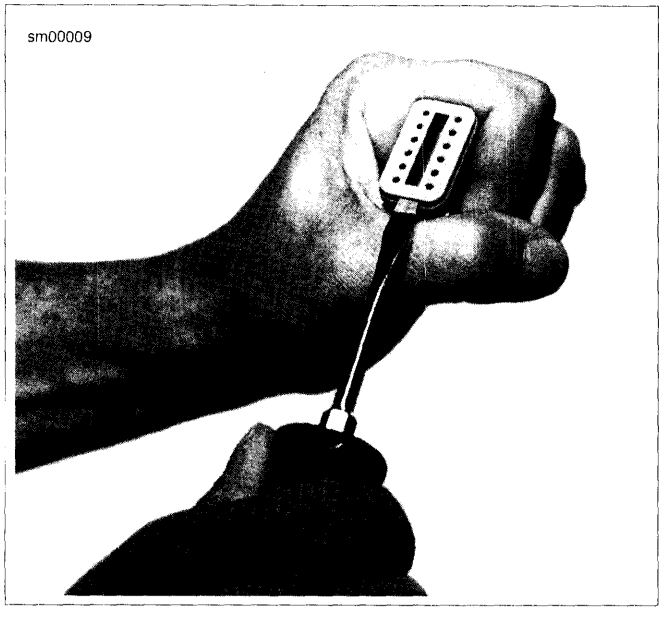

Figure A-16. Deutsch Connector: Remove Secondary Locking Wedge

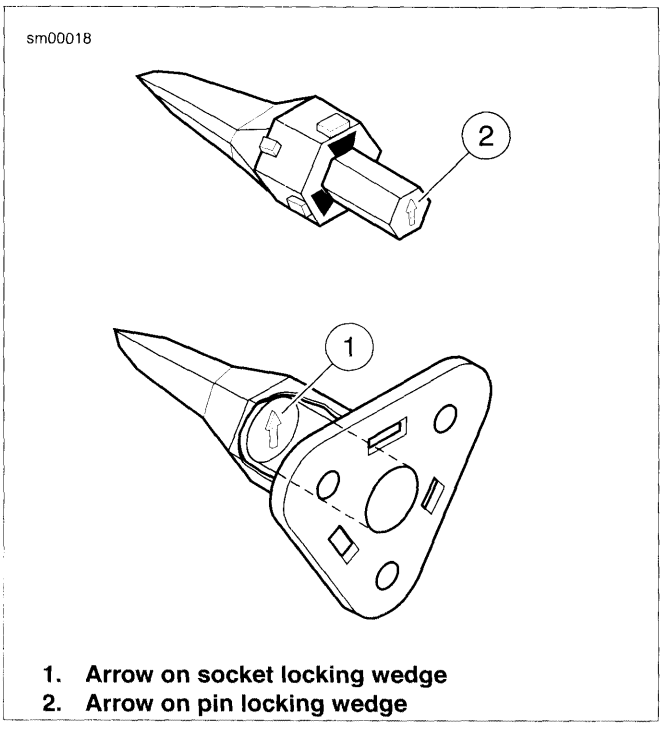

Figure A-17. Deutsch Connector: 3-Place Locking Wedges

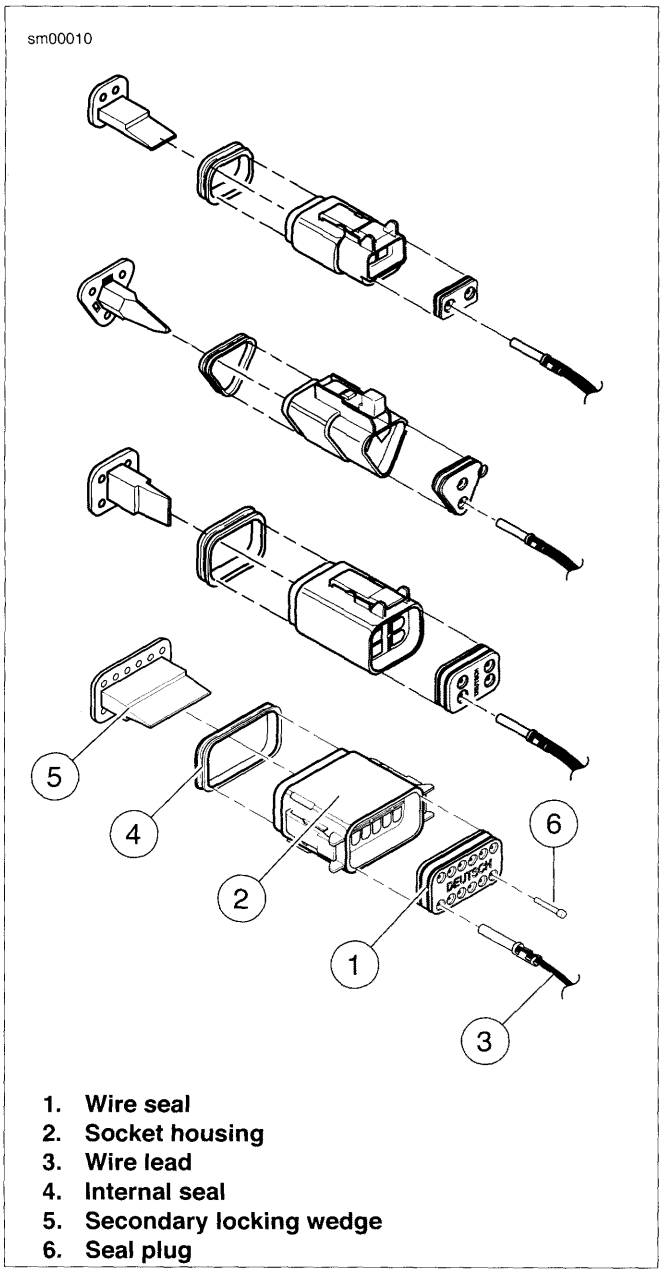

1. **Wire seal**
2. **Socket housing**
3. **Wire lead**
4. **Internal seal**
5. **Secondary locking wedge**
6. **Seal plug**

Figure A-18. Deutsch Connector: 2, 3, 4 and 12-Place Socket Housings

Removing Pin Terminals

1. Use the hooked end of a stiff piece of mechanics wire, a needle nose pliers or the FLAT BLADE L-HOOK (Part No. HD-41475-100) to remove the secondary locking wedge.
2. Gently depress terminal latches inside pin housing and back out pins through holes in wire seal.

NOTES

- *If wire leads require **new** terminals, see the instructions for crimping terminals.*
- *If it should become necessary to replace a pin or socket housing, please note that the 8-place and 12-place gray and black connectors are not interchangeable. Since location of the alignment tabs differ between the black and gray connectors, plugs or receptacles must be replaced by those of the same color.*
- *When replacing both socket and pin housings, then the black may be substituted for the gray, and vice versa. The socket and pin housings of all other connectors are interchangeable, that is, the black may be mated with the gray, since the alignment tabs are absent and the orientation of the external latch is the same.*

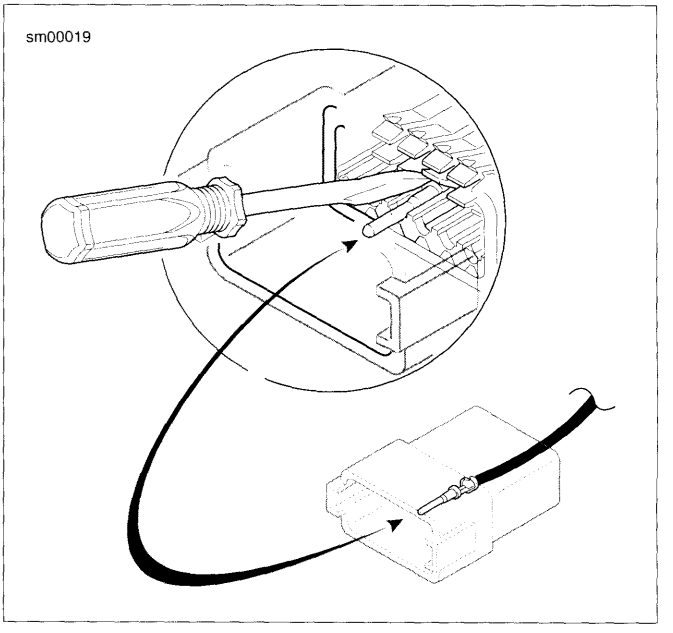

Figure A-19. Deutsch Connector: Depress Terminal Latch and Back Out Pin

Installing Pin Terminals

1. See Figure A-20. Fit wire seal (1) into back of pin housing (2).
2. Grasp wire lead approximately 1.0 in. (25.4 mm) behind the pin terminal (3). Gently push pin through holes in wire seal into its respective numbered chamber until it "clicks" in place.

NOTE

A tug on the wire lead will confirm that a pin is locked in place.

3. Insert tapered end of secondary locking wedge (4) into pin housing and press down until it snaps in place.

NOTES

- *The wedge fits in the center groove of the pin housing and holds the terminal latches tightly closed.*
- *See Figure A-17. While rectangular wedges do not require a special orientation, the conical secondary locking wedge of the 3-place connector must be installed with the arrow (2) pointing toward the external latch.*
- *If the secondary locking wedge does not slide into the installed position easily, verify that all terminals are fully installed in the pin housing. The lock indicates when terminals are not properly installed by not entering its fully installed position.*

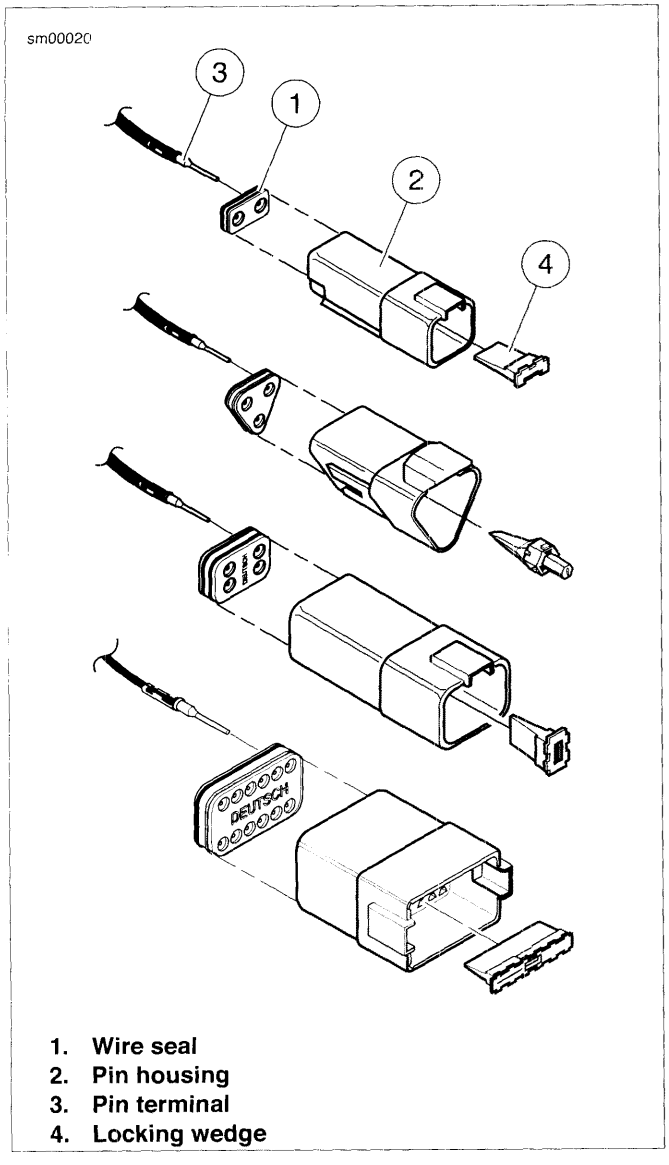

1. **Wire seal**
2. **Pin housing**
3. **Pin terminal**
4. **Locking wedge**

Figure A-20. Deutsch Connector: 2, 3, 4 and 12-Place Pin Housings

Crimping Terminals

Identify which of the types of Deutsch terminals are used with the connector and follow the corresponding crimping instructions. Refer to Table A-2.

Table A-2. Deutsch Connector: Terminal Crimping Instructions

TYPE	CRIMPING INSTRUCTIONS
Standard (with crimp tails)	A.6 DEUTSCH STANDARD TERMINAL REPAIR
Mini Terminal (solid barrel)	A.7 DEUTSCH SOLID BARREL MINI TERMINAL REPAIR
Mini Terminal (with crimp tails)	A.8 DEUTSCH MINI TERMINAL REPAIR

DEUTSCH STANDARD TERMINAL CRIMPS

PART NUMBER	TOOL NAME
HD-39965-A	DEUTSCH TERMINAL CRIMP TOOL

Preparing Wire Leads for Crimping

1. Use a shop gauge to determine gauge of wire lead.
2. Strip lead removing 5/32 in. (4.0 mm) of insulation.

Crimping Terminal to Lead

1. See Figure A-21. Squeeze the handles of the DEUTSCH TERMINAL CRIMP TOOL (Part No. HD-39965-A) to open the jaws. Push the locking bar (1) up.
2. Insert (2) terminal (socket/pin) through hole of the locking bar, so that the rounded side of the contact barrel rests in the nest (concave split level area) with the crimp tails facing upward. To match the wire gauge to the crimp tool die, refer to Table A-3.
3. Release locking bar to lock terminal in die.

NOTE

If the crimp tails are slightly out of vertical alignment, the crimp tool automatically rotates the terminal so that the tails face straight upward. When positioned, the locking bar fits snugly in the space between the contact band and the core crimp tails.

4. Insert stripped wire core between crimp tails until ends make contact with locking bar. Verify that wire is positioned so that short pair of crimp tails squeeze bare wire strands, while long pair folds over the insulation.
5. Squeeze handle of crimp tool until tightly closed. Tool automatically opens after the terminal is crimped.
6. Raise locking bar up and remove wire lead and terminal.

Inspecting Crimps

Inspect the wire core and insulation crimps. Distortion should be minimal.

Table A-3. Deutsch Standard Terminal Crimp: Wire Gauge To Die

WIRE GAUGE (AWG)	CRIMP TOOL DIE
20	Front
16-18	Middle

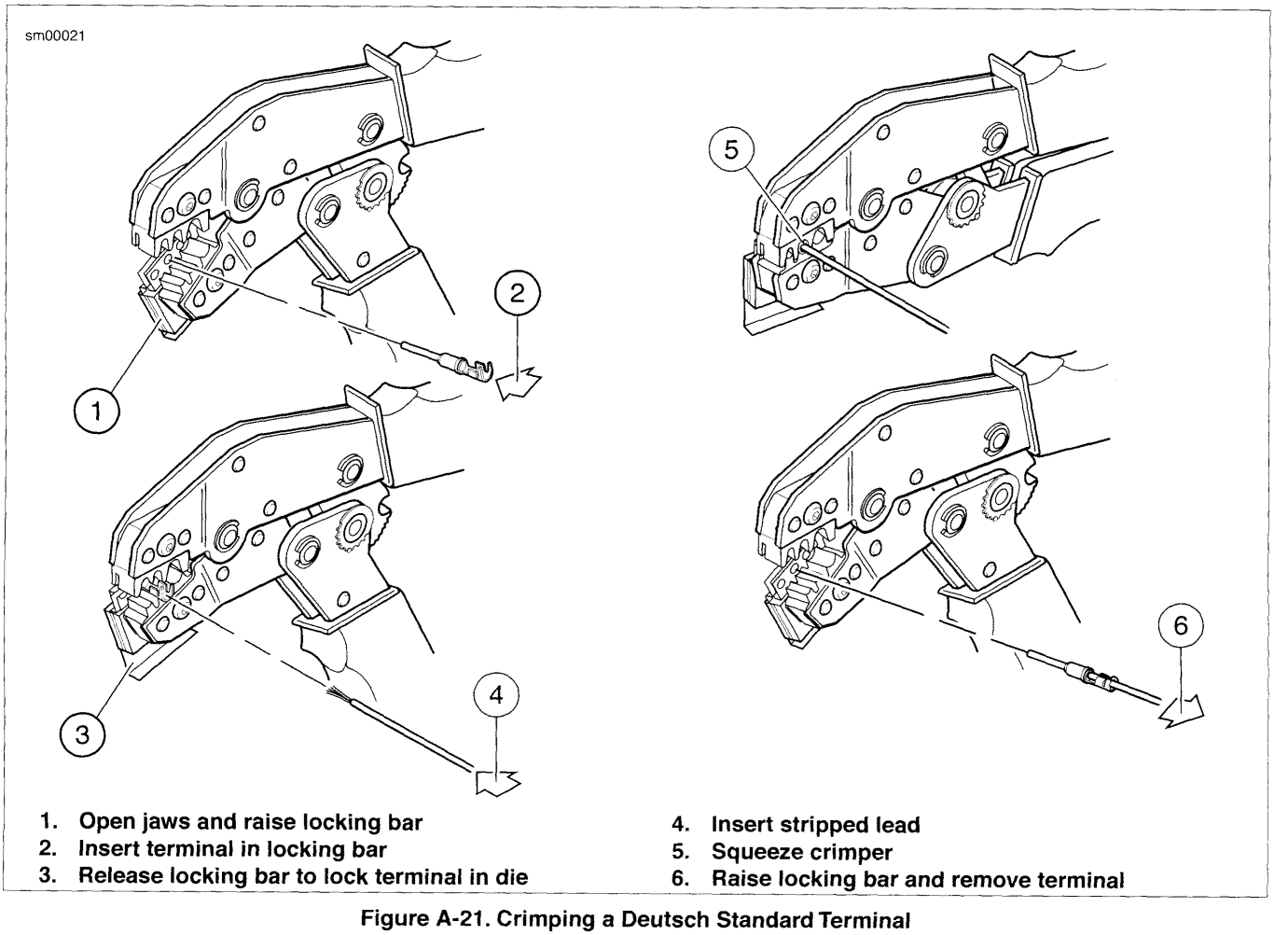

1. **Open jaws and raise locking bar**
2. **Insert terminal in locking bar**
3. **Release locking bar to lock terminal in die**
4. **Insert stripped lead**
5. **Squeeze crimper**
6. **Raise locking bar and remove terminal**

Figure A-21. Crimping a Deutsch Standard Terminal

DEUTSCH SOLID BARREL TERMINAL CRIMPS

PART NUMBER	TOOL NAME
HD-42879	ELECTRICAL CRIMPER TOOL

Preparing Wire Leads For Crimping

For size 20, 16 and 12 contacts, wire ranges 26-12 AWG.

Strip wire lead removing 1/4 in. (6.4 mm) of insulation.

Adjusting Crimper Tool

1. See Figure A-22. Squeeze the ELECTRICAL CRIMPER TOOL (Part No. HD-42879) handles to cycle the crimp tool to open.
2. Remove locking pin (1) from selector knob (2).
3. Raise selector knob and rotate until selected wire size stamped on wheel is aligned with "SEL. NO." arrow (3).
4. Loosen knurled locknut (4) and turn adjusting screw (5) clockwise (in) until it stops.

Crimping a Barrel Contact To Wire Lead

1. See Figure A-23. Turn tool over and drop contact barrel (1) into indentor cover (2) hole with the wire end out.
2. Turn adjusting screw counterclockwise (out) until contact is flush with bottom of depression in indentor cover. Tighten knurled locknut.
3. Slowly squeeze handles of crimp tool until contact is centered between the four indentor points (3).
4. Insert bare wire core strands of stripped wire lead (4) into contact barrel. Squeeze handle of crimp tool until tightly closed. Tool automatically opens when the crimping sequence is complete.
5. Remove wire lead with crimped contact from indentor.

NOTE

Tool must be readjusted when changing contact size/type.

6. Install pin to lock selector knob.

Inspecting Crimps

Inspect the crimp. All core wire strands are to be crimped in the barrel.

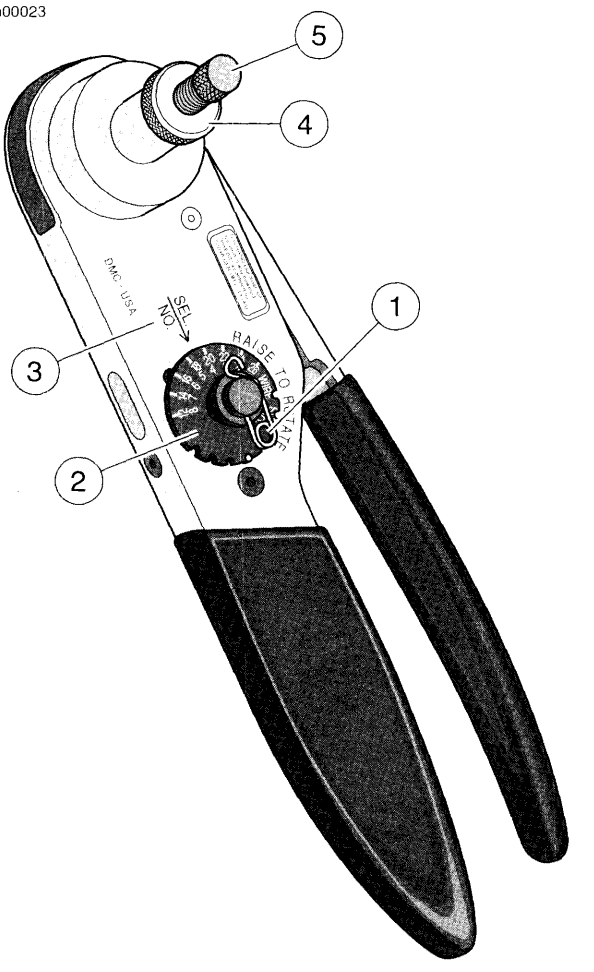

1. **Locking pin**
2. **Selector knob**
3. **SEL. NO. arrow**
4. **Knurled locknut**
5. **Adjusting screw**

Figure A-22. Electrical Crimper Tool (HD-42879)

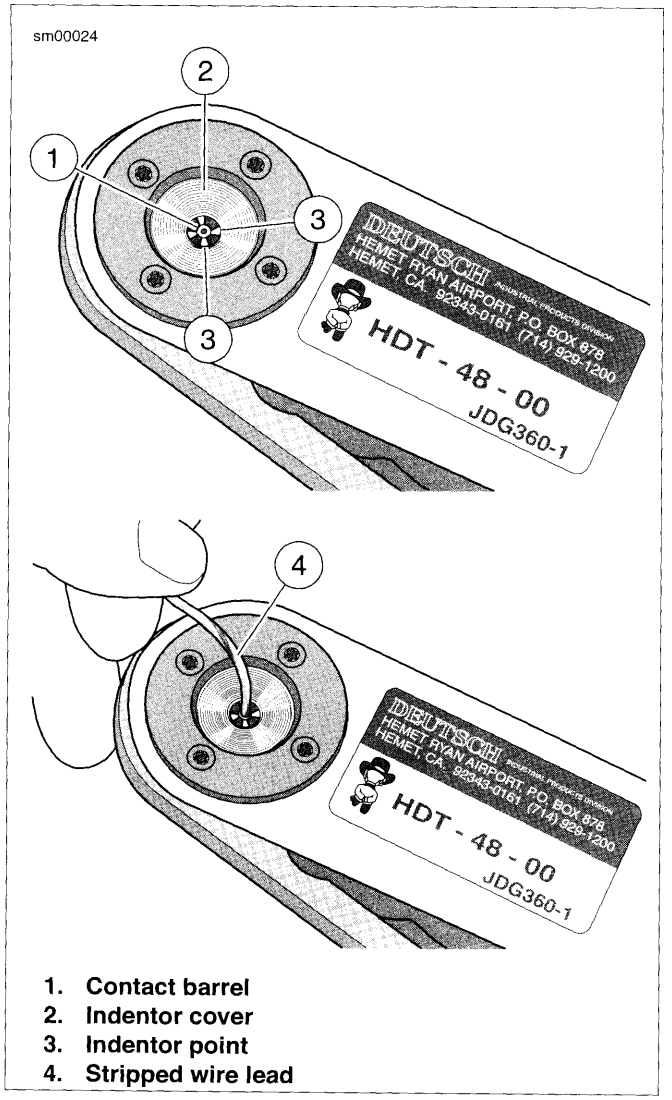

1. Contact barrel
2. Indentor cover
3. Indentor point
4. Stripped wire lead

Figure A-23. Deutsch Solid Barrel

DEUTSCH MINI TERMINAL CRIMPS

PART NUMBER	TOOL NAME
HD-38125-7	PACKARD TERMINAL CRIMPER

Preparing Wire Leads for Crimping

Strip wire lead removing 5/32 in. (4.0 mm) of insulation.

Crimping a Mini Terminal to Wire Lead

1. See Figure A-24. Compress the handles of PACKARD TERMINAL CRIMPER (Part No. HD-38125-7) until the ratchet (2) automatically opens.

NOTE

Always perform core crimp before insulation crimp.

2. Position the core crimp on die E (1) of the crimper. Be sure the core crimp tails are facing the forming jaws.
3. Gently apply pressure to handles of tool until crimpers just secure the core crimp tails.
4. Insert stripped wire core stands between crimp tails. Position wire so that short pair of crimp tails squeeze bare wire strands, while long pair squeeze over the insulation.
5. Squeeze handle of crimper until tightly closed. Tool automatically opens when the crimping sequence is complete.

NOTE

If the crimper does not open, it can be opened by squeezing the ratchet trigger (2).

6. Position the insulation crimp on nest C of the crimper. Be sure the insulation crimp tails are facing the forming jaws.
7. Squeeze handle of crimp tool until tightly closed. Tool automatically opens when the crimping sequence is complete.

Inspecting Crimps

Inspect the core and insulation crimps. Distortion should be minimal.

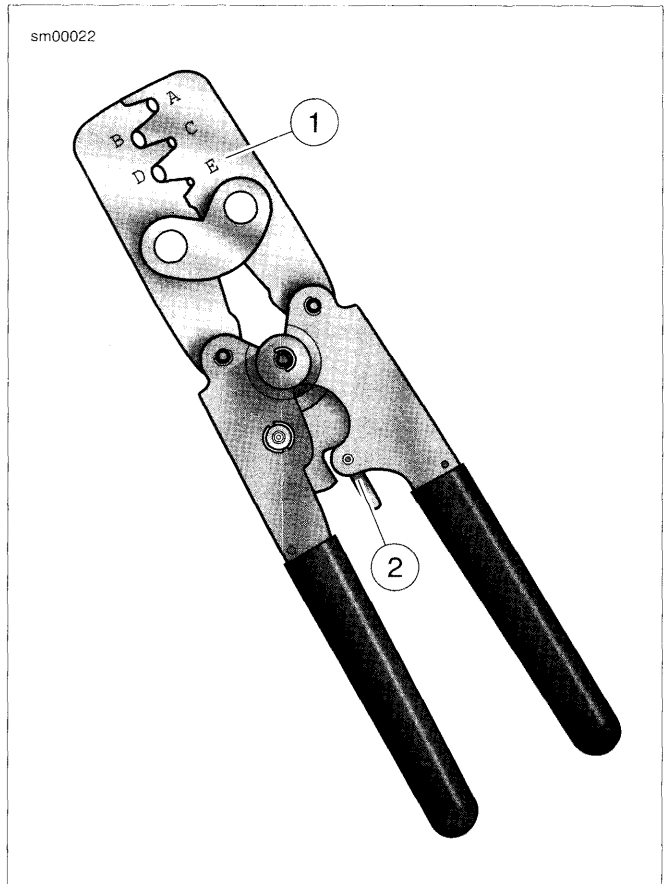

1. **E die**
2. **Crimper ratchet trigger**

Figure A-24. Packard Terminal Crimper (HD-38125-7)

MOLEX CONNECTOR REPAIR

PART NUMBER	TOOL NAME
HD-48114	MOLEX ELECTRICAL CONNECTOR TERMINAL REMOVER

Separating Pin and Socket Housings

See Figure A-25. Depress the latch while pulling the pin and socket housings apart.

Mating Pin and Socket Housings

1. Orient the latch on the pin housing to the latch pocket on the socket housing so the rails on the outside of the pin housings lines up with the tunnels on the socket housing.
2. Press the housings together until the latch clicks.

Removing Terminals

1. Pull the secondary lock up, approximately 3/16 in. (4.8 mm), until it stops.
   a. **Socket Housing:** See Figure A-26. Use a small screwdriver in the pry slot. The slot next to the external latch provides a pivot point.
   b. **Pin Housing:** See Figure A-27. Use needle nose pliers to engage the D-holes in the center of the secondary lock.

NOTE

Do not remove the secondary lock from the connector housing.

2. See Figure A-28. Insert MOLEX ELECTRICAL CONNECTOR TERMINAL REMOVER (Part No. HD-48114) into the pin hole next to the terminal until the tool bottoms.
   a. **Socket Housing:** The pin holes are inside the terminal openings.
   b. **Pin Housing:** The pin holes are outside the pins.
3. Pressing the terminal remover to the bottom of the pin hole, gently pull on the wire to remove wire terminal from its cavity.

Installing Terminals

1. See Figure A-29. From the wiring diagram, match the wire color to its numbered terminal cavity.

NOTE

Cavity numbers (1) are stamped on the housing at the ends of the cavity rows. The cavity number can be determined by counting the cavities up or down along the row from each stamped number.

2. Orient the terminal so that the tang (2) opposite the open crimp engages the slot (3) in the cavity.
3. Push the terminal into the cavity.
4. Gently tug on wire to verify that the terminal is captured by the secondary lock.
5. With all terminals installed, push the secondary lock into the socket housing to lock the wire terminals into the housing.

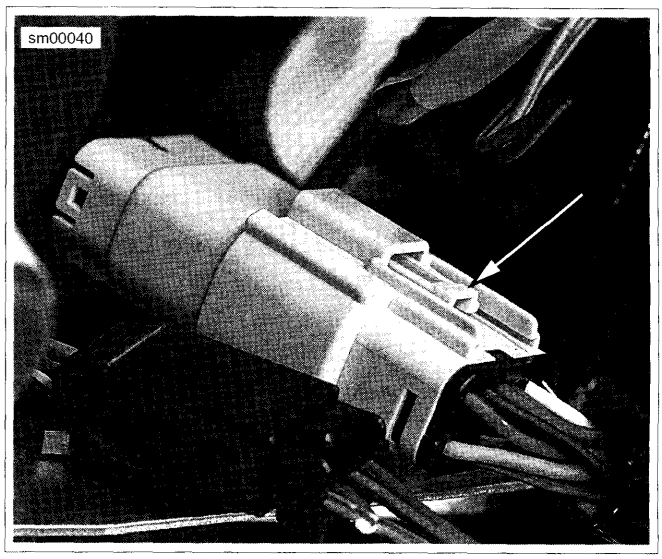

Figure A-25. Molex Connector: Latch

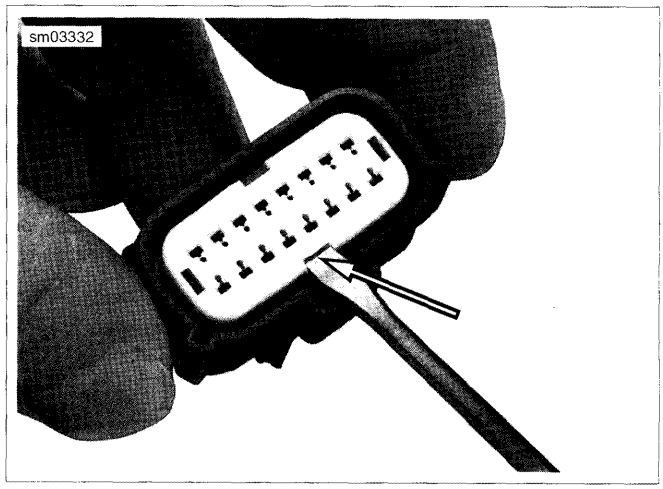

Figure A-26. Secondary Lock Pry Slot (Socket Housing)

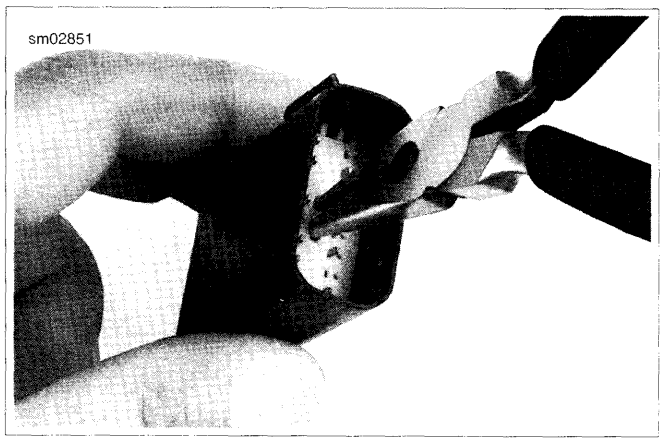

Figure A-27. Pull Up Secondary Lock (Pin Housing)

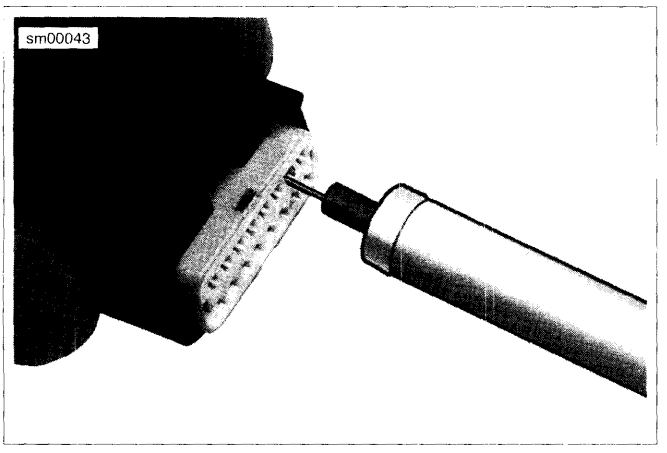

Figure A-28. Molex Connector: Terminal Remover (HD-48114)

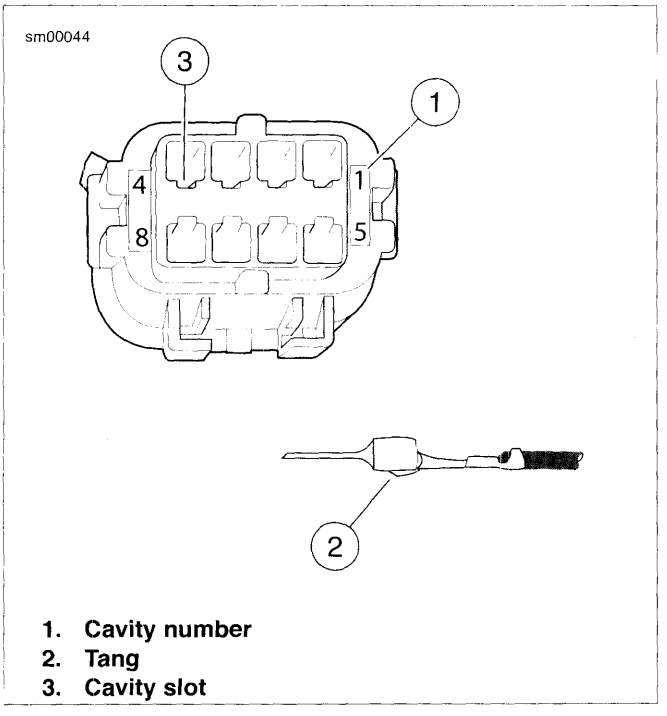

Figure A-29. Molex Connector: Pin Cavities and Wire Terminal

CRIMP TERMINAL TO LEAD

PART NUMBER	TOOL NAME
HD-48119	ELECTRICAL CRIMP TOOL

Prepare Lead

1. Cut the damaged terminal close to the back of the terminal to leave as much wire length as possible.
2. Strip approximately 3/16 in. (4.70-5.60 mm) of insulation from the end of the wire lead.

NOTE

The strip length is the same for both pin and socket terminals and for wire gauges from 22 to 14.

Prepare Tool

1. Identify the punch/die in the jaws of the ELECTRICAL CRIMP TOOL (Part No. HD-48119) for the wire gauge. Refer to Table A-4.
2. Squeeze and release the handles to open the tool.

NOTE

The crimp tool automatically opens when the handles are released.

3. See Figure A-30. Hold fully open tool at approximately 45 degrees.

NOTE

Do NOT tighten the locknut holding the locator bars. The bars must float to accommodate the different terminal gauges.

Table A-4. Crimp Tool Wire Gauge Punch/Die

AWG (WIRE GAUGE)	PUNCH/DIE
22	Left
18-20	Middle
14-16*	Right
* Crimp 16 AWG **pin** terminals in the 18-20 middle die.	

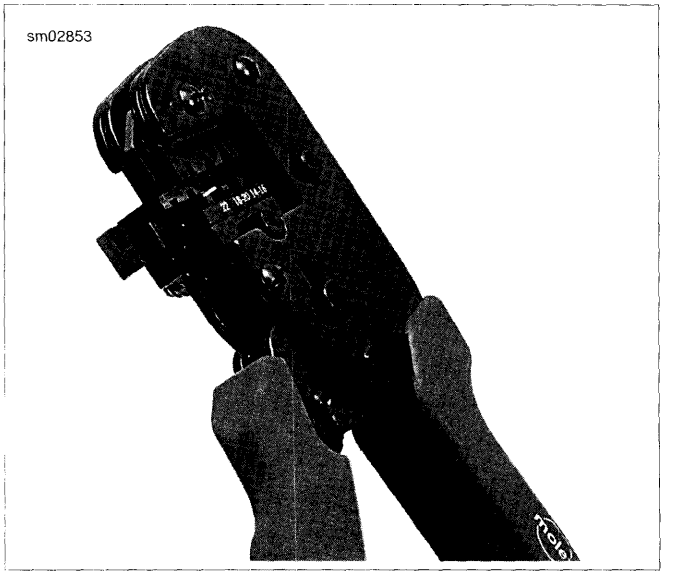

Figure A-30. Open Electrical Crimp Tool (HD-48119) at 45 Degrees

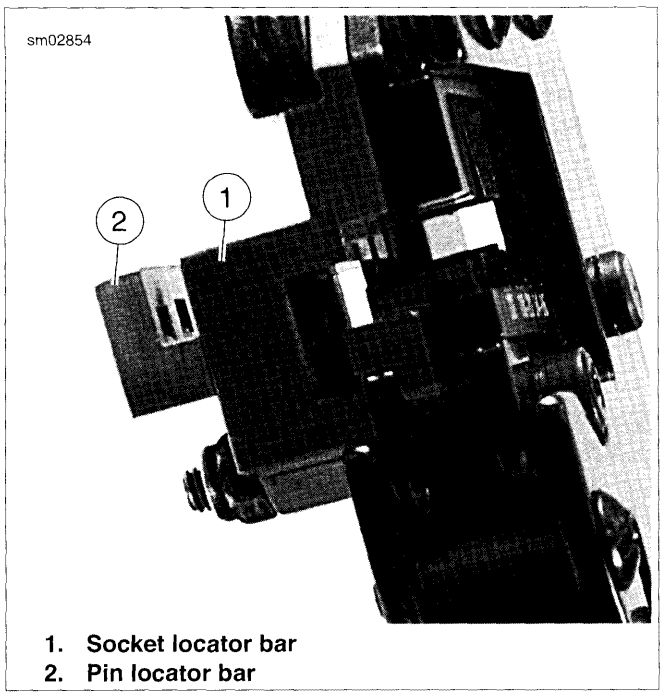

1. **Socket locator bar**
2. **Pin locator bar**

Figure A-31. Terminal Locator Bars

Position Terminal in the Punch/Die

1. See Figure A-32. With the crimp tails up, place the terminal through the punch/die into the square opening in the socket locator bar.
   a. **Socket Terminal:** See Figure A-31. A socket terminal stops against the back face of the socket locator bar (1).
   b. **Pin Terminal:** See Figure A-33. The tip of a pin terminal passes through the socket locator bar and stops in the notch in the face of the pin locator bar.
2. See Figure A-34. Ratchet the handles together until the crimp tails are held in vertical alignment between the punch and the die.

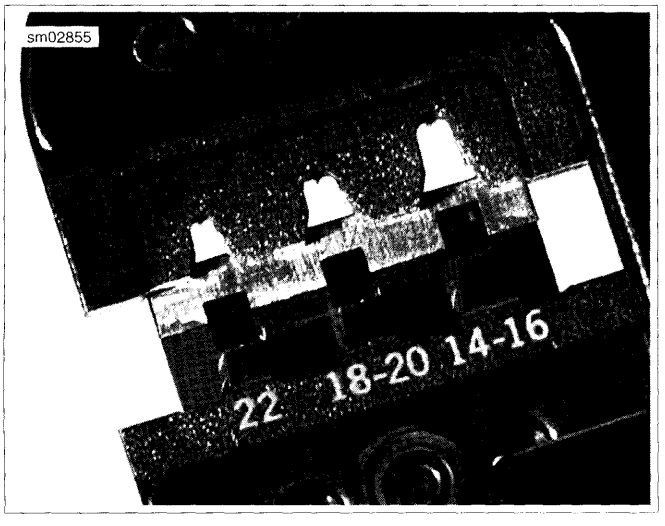

Figure A-32. Square Openings in Socket Locator Bar

Insert Stripped Lead

See Figure A-35. Insert the stripped end (wire core) between the crimp tails at an up angle until the wire core touches the face of the socket locator bar above the square opening.

NOTES

- *The insulation must extend through the insulation crimp tails.*
- *Insert the wire with little or no pressure. Pressing on the lead will bend the wire core.*

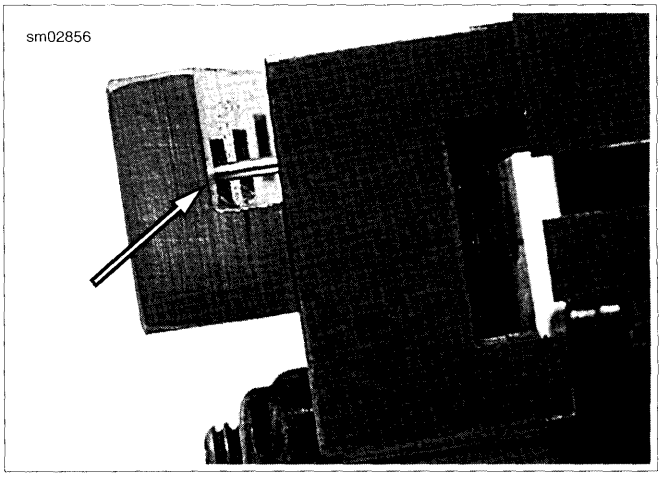

Figure A-33. Pin Terminal against Pin Locator Bar

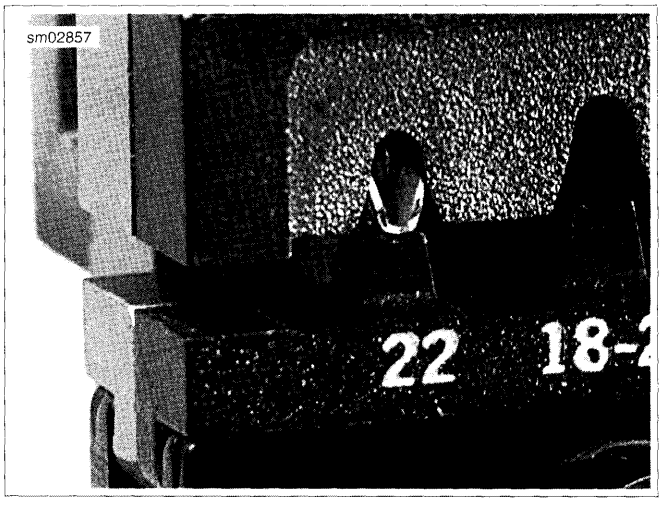

Figure A-34. Crimp Tails in Vertical Alignment between Punch and Die

Crimp Terminal to Lead

1. Holding the wire lead in position touching the locator face at an angle, quickly and smoothly squeeze the crimp tool closed.
2. Final squeeze the handles to open the tool and release the terminal.

NOTE

*A stuck or jammed tool can be opened by pressing the ratchet release lever found between the handles. Do **not** force the handles open or closed.*

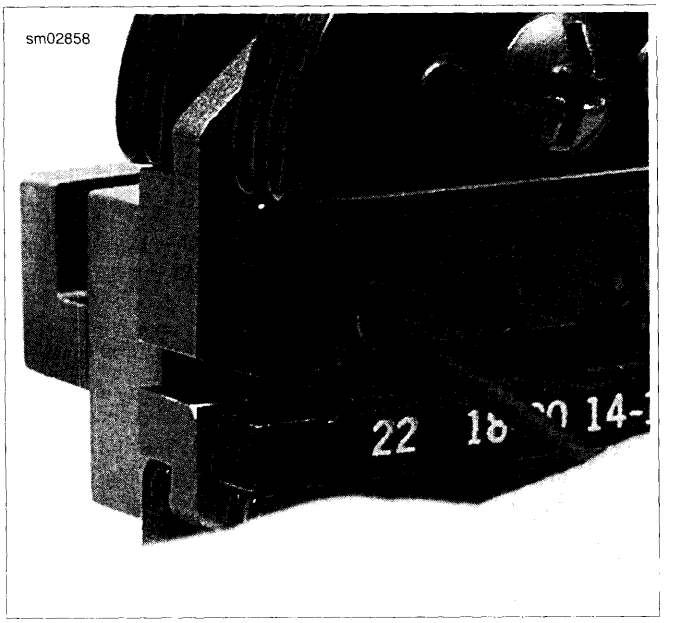

Figure A-35. Stripped Lead at Up Angle

Inspect Crimp

1. **Inspect Crimp:** Inspect the core and insulation crimp.
   a. See Figure A-36. The core tails should be creased into the wire strands at the core crimp (1).
   b. Strands (2) of wire should be visible beyond the core crimp but not forward into the terminal shell.
   c. The insulation tails should be folded into the insulation (3) without piercing or cutting the insulation.
   d. Distortion should be minimal.
2. **Test Crimp:** Hold the terminal and pull the lead.

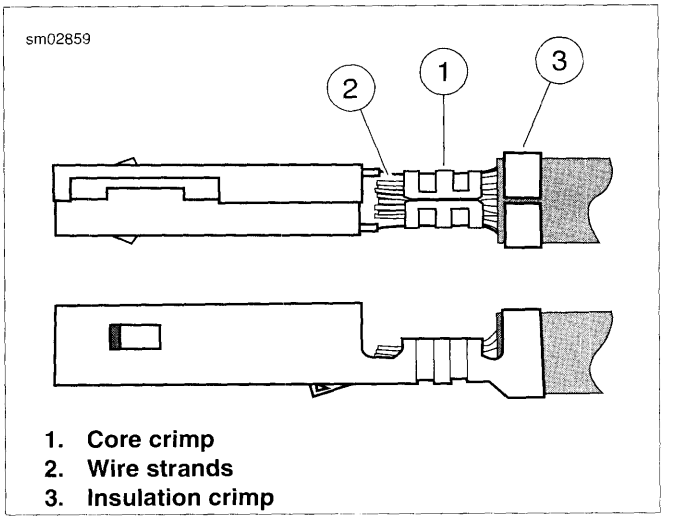

1. **Core crimp**
2. **Wire strands**
3. **Insulation crimp**

Figure A-36. Terminal Crimp

150 METRI-PACK CONNECTOR REPAIR

General

Metri-Pack connectors are embossed with the initials (P.E.D.).

There are two types of connectors in this series:

- Pull-to-Seat
- Push-to-Seat

Separating Pin and Socket Housings

Bend back the external latch slightly and separate the pin and socket halves of the connector.

Mating Pin and Socket Housings

Align the wire colors and push the pin and socket halves of the connector together.

Removing Socket Terminal

1. See Figure A-37 for pull-to-seat connector or Figure A-38 for push to seat connector. Remove wire lock (1) from wire end of socket housing on push-to-seat type connectors.

NOTE

For best results, free one side of wire lock first and then release the other side.

2. Find the locking tang in the mating end of the connector.

NOTE

The tangs are always positioned in the middle of the chamber and are on the same side as the external latch.

3. Gently insert a safety pin into the chamber about 1/8 in. (3.2 mm).
   a. **For pull-to-seat:** Stay between the terminal and the chamber wall and pivot the end of the pin toward the terminal body.
   b. **For push-to-seat:** There is a small opening for the pin.
4. When a click is heard, remove the pin and repeat the procedure.

NOTE

The click is the sound of the tang returning to the locked position as it slips from the point of the pin.

5. Pick at the tang until the clicking stops and the pin seems to slide in deeper than it had previously. This is an indication that the tang has been depressed.

NOTE

On those terminals that have been extracted on multiple occasions, the click may not be heard, but pivot the pin as if the click was heard at least 3 times.

6. Remove the pin.
   a. **For pull-to-seat:** Push on the lead to extract the terminal from the mating end of the connector.
   b. **For push-to-seat:** Pull on the lead to draw the terminal out the wire end.

Inserting Socket Terminal

NOTE

For wire location purposes, alpha characters are stamped into the socket housings.

1. See Figure A-37 for pull-to-seat connector or Figure A-38 for push to seat connector. Using a thin flat blade, like that on a hobby knife, carefully bend the tang outward away from the terminal body.
2. Gently pull or push on the lead to install the terminal back into the chamber. A click is heard when the terminal is properly seated.
3. Gently pull or push on the lead to verify that the terminal is locked in place.

   For push-to-seat: See Figure A-38. Seat wires in separate channels of wire lock and then push channels **inside** chambers at wire end of socket housing. Fully installed, slot on each side of wire lock engages ear on socket housing.

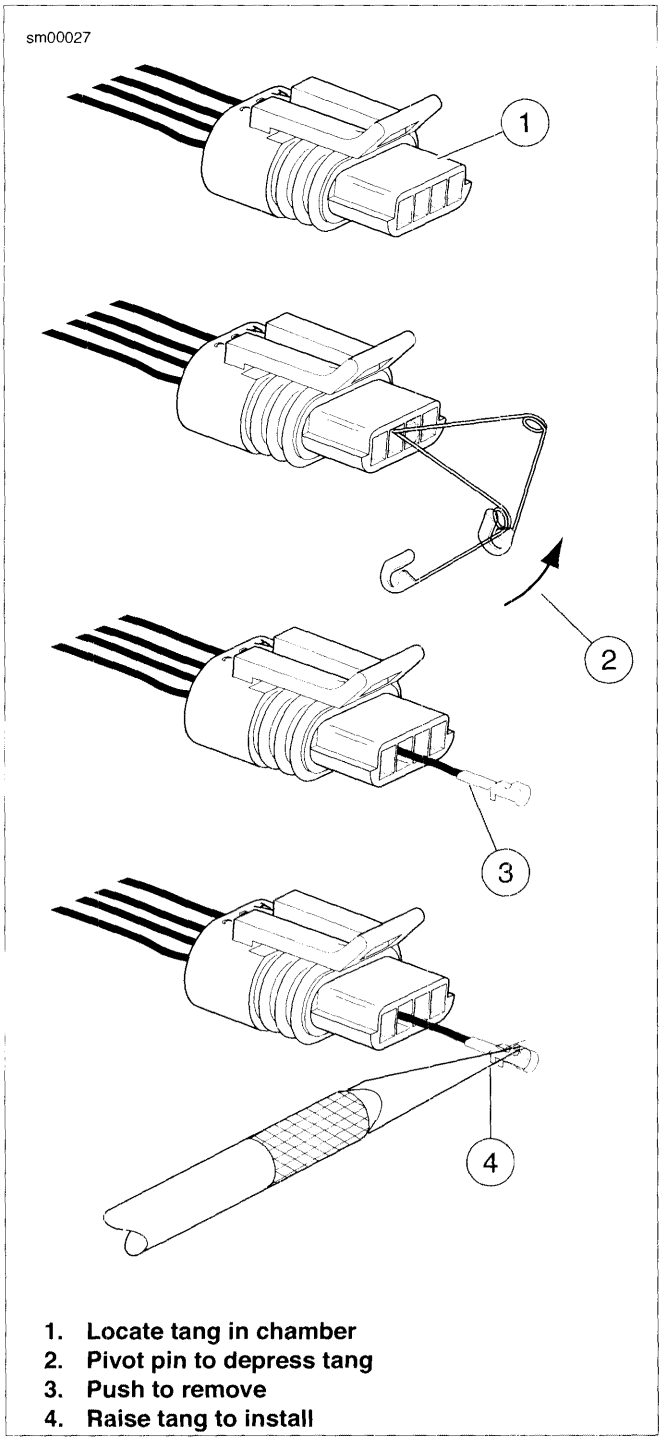

Figure A-37. 150 Metri-Pack Connector: Pull-to-Seat

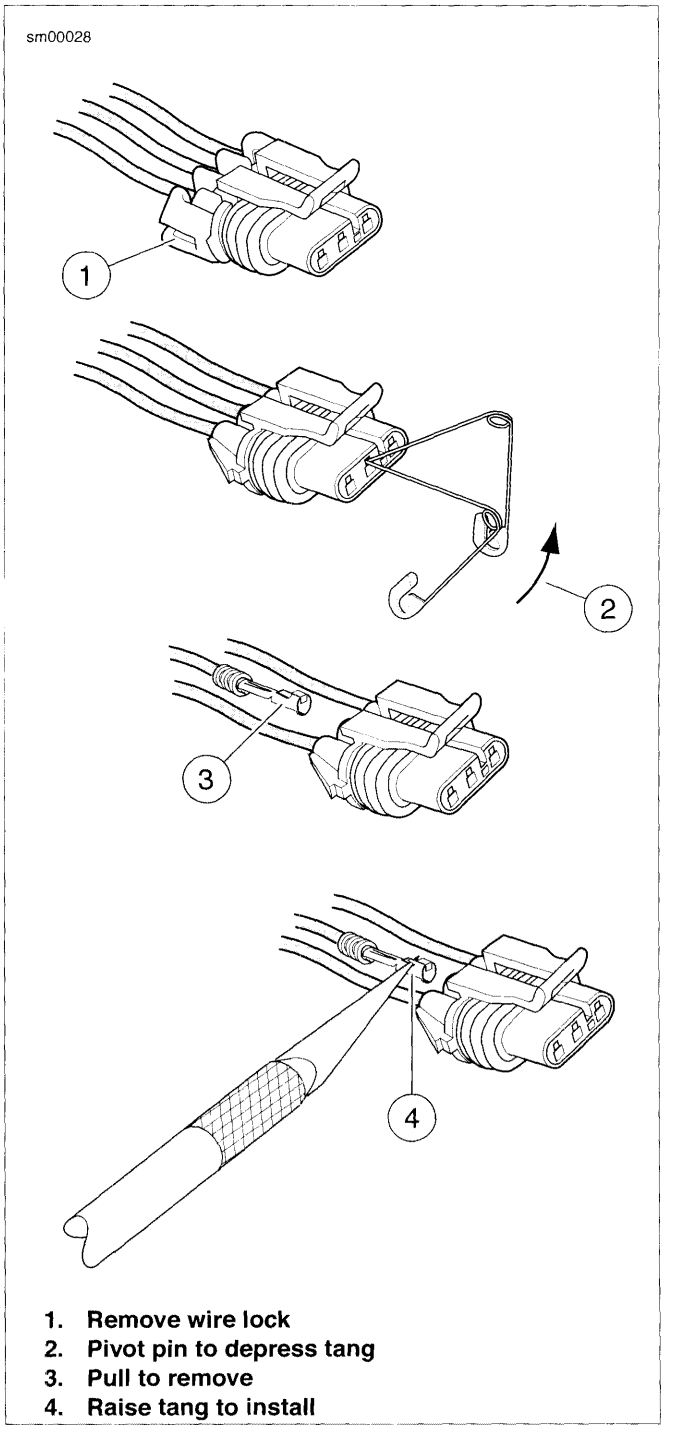

Figure A-38. 150 Metri-Pack Connector: Push-to-Seat

480 METRI-PACK CONNECTOR REPAIR

General

A 480 Metri-Pack (P.E.D.) connector is frequently used for the B+ (battery voltage) connector to power P&A accessories.

Referred to as Packard connectors, Metri-Pack connectors are embossed with the initials P.E.D.

See Figure A-39. An AFL housing (5) is used on many ignition/light switches. The secondary lock (4) must be opened before removing the terminal from the housing.

Separating Pin and Socket Housings

NOTE

Cut any cable strap anchoring the wire conduits of the pin (accessory connector housing) and the socket (B+) housing.

See Figure A-39. Using small flat blade screwdriver, press button (1) on pin housing (red wire) side of the connector and pull apart the pin and socket housings.

Mating Pin and Socket Housings

Orient the latch on the socket housing to the button catch on the pin housing and press the housings together.

Removing Socket Terminals

1. See Figure A-39. Bend back the latch (2) slightly and free one side of secondary lock, then repeat to release the opposite side. Rotate the secondary lock outward on hinge to access terminal in chamber of connector housing.
2. On the mating end of the connector, note the tang in the square shaped opening centered next to the terminal. Gently insert the point of a stick pin or large safety pin into the opening (3) between the tang and the chamber wall until it stops.
3. Pivot the end of the pin toward the terminal body to press the tang.
4. Remove the pin and then pull terminal out of the wire end of connector housing.
5. If necessary, crimp **new** terminals on wires. See A.13 PACKARD METRI-PACK TERMINALS.

Installing Socket Terminals

1. Carefully bend the tang outward away from the terminal body.
2. With the tang on the same side as the square shaped opening in the mating end of the connector housing, feed terminal into wire end of connector housing until it "clicks" in place.
3. Verify that terminal will not back out of the chamber. A slight tug on the cable will confirm that it is locked.
4. Rotate the hinged secondary lock inward until latches fully engage tabs on both sides of connector housing.

NOTE

*If removed, install **new** anchored cable strap in O.E. location. Tighten cable strap to capture conduit of both accessory connector and B+ connector approximately 1.0 in. (25.4 mm) from housings.*

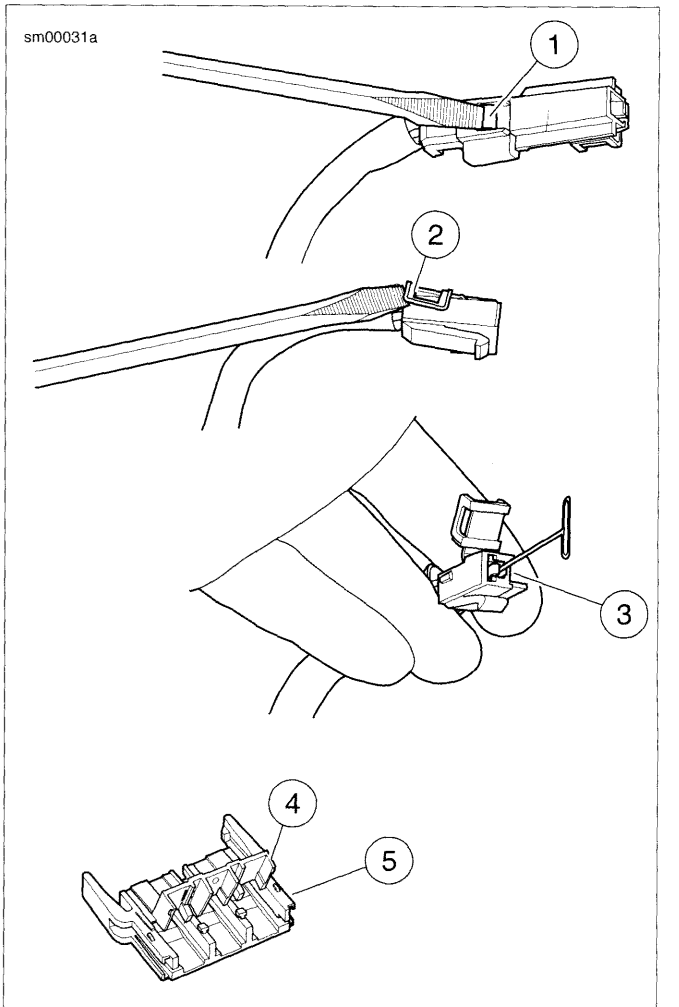

1. **Button on pin housing**
2. **Secondary lock latch**
3. **Opening between tang and chamber wall**
4. **Secondary Lock (shown open)**
5. **AFL housing**

Figure A-39. 480 Metri-Pack Connector: Remove Socket Terminal

630 METRI-PACK CONNECTOR REPAIR

PART NUMBER	TOOL NAME
SNAP-ON TT600-3	SNAP-ON PICK

General

Referred to as Packard connectors, Metri-Pack 630 series connectors are embossed with the initials P.E.D.

Separating Pin and Socket Housings

NOTE

If necessary, remove connector from barbed anchor or other retaining device.

Bend back the external latch slightly and separate pin and socket halves of the connector.

Mating Pin and Socket Housings

Orient the latch to the catch and push the pin and socket halves of the connector together until the latch "clicks".

NOTE

If removed, install connector on barbed anchor or other OE retaining device.

Removing Socket Terminal

1. Bend back the latch slightly and free one side of the secondary lock. Repeat the step to unlatch the other side.
2. Rotate the secondary lock outward on hinge to view the terminals in the chambers of the connector housing. The locking tang is on the side opposite the crimp tails and engages a rib in the chamber wall to lock the terminal in place.
3. Moving to the mating end of the connector, take note of the small opening on the chamber wall side of each terminal.
4. Insert SNAP-ON PICK (Part No. SNAP-ON TT600-3) into opening until it stops. Pivot the end of the pick toward the terminal to depress the locking tang.
5. Remove the pick and gently tug on the wire to pull the terminal from the wire end of the connector. Repeat steps if the terminal is still locked in place.
6. If necessary, crimp **new** terminals on wires. Refer to A.13 PACKARD METRI-PACK TERMINALS.

Installing Socket Terminal

NOTE

Refer to the wiring diagrams to match wire lead colors to alpha characters molded into the secondary locks of each connector housing.

1. Using a thin flat blade, like that of a hobby knife, carefully bend the tang outward away from the terminal body.
2. With the tang facing the chamber wall, push the lead into the chamber at the wire end of the connector. A click is heard when the terminal is properly seated.
3. Gently tug on the wire end to verify that the terminal is locked in place and will not back out of the chamber.
4. Rotate the hinged secondary lock inward until tabs fully engage latches on both sides of connector.

METRI-PACK TERMINAL CRIMPS

PART NUMBER	TOOL NAME
HD-38125-6	PACKARD TERMINAL CRIMP TOOL
HD-38125-7	PACKARD TERMINAL CRIMPER
HD-38125-8	PACKARD CRIMPING TOOL

Matching Terminal To Crimper

Metri-Pack connectors embossed with the initials P.E.D. require Packard crimp tools to crimp terminals to wire leads.

Terminals are crimped twice to a wire lead, once over the wire core and a second time over the insulation/seal.

See Figure A-40. A completed crimp may require two different crimping dies found on PACKARD TERMINAL CRIMP TOOL (Part No. HD-38125-6) and/or PACKARD TERMINAL CRIMPER (Part No. HD-38125-7). The terminal (pin or socket) and the wire lead gauge will determine the core crimp die and the insulator/seal die.

NOTE

The PACKARD CRIMPING TOOL (Part No. HD-38125-8) will also crimp sealed splice connectors in wire gauge sizes 18-20, 14-16 and 10-12.

Preparing Wire Lead

Use a wire striper to strip off the insulation and expose 5/32 in. (4.0 mm) of wire core.

Crimping Wire Core

NOTE

Metri-Pack terminal crimps require two steps. Always perform ***Crimping Wire Core*** *before* ***Crimping Insulation/Seal****.*

1. Squeeze and release handles until ratchet automatically opens.
2. Identify the corresponding sized nest for the core crimp.
3. Position the core crimp in the die. Be Sure the core crimp tails are facing the forming jaws.
4. Gently squeeze the handles until crimpers just secure the core crimp tails.
5. Insert stripped wire between crimp tails. Verify that wire is positioned so that short pair of crimp tails squeeze core wire strands, while long pair is positioned over the insulation or seal material.
6. Squeeze handles tightly closed. Release grip and the tool will automatically open.

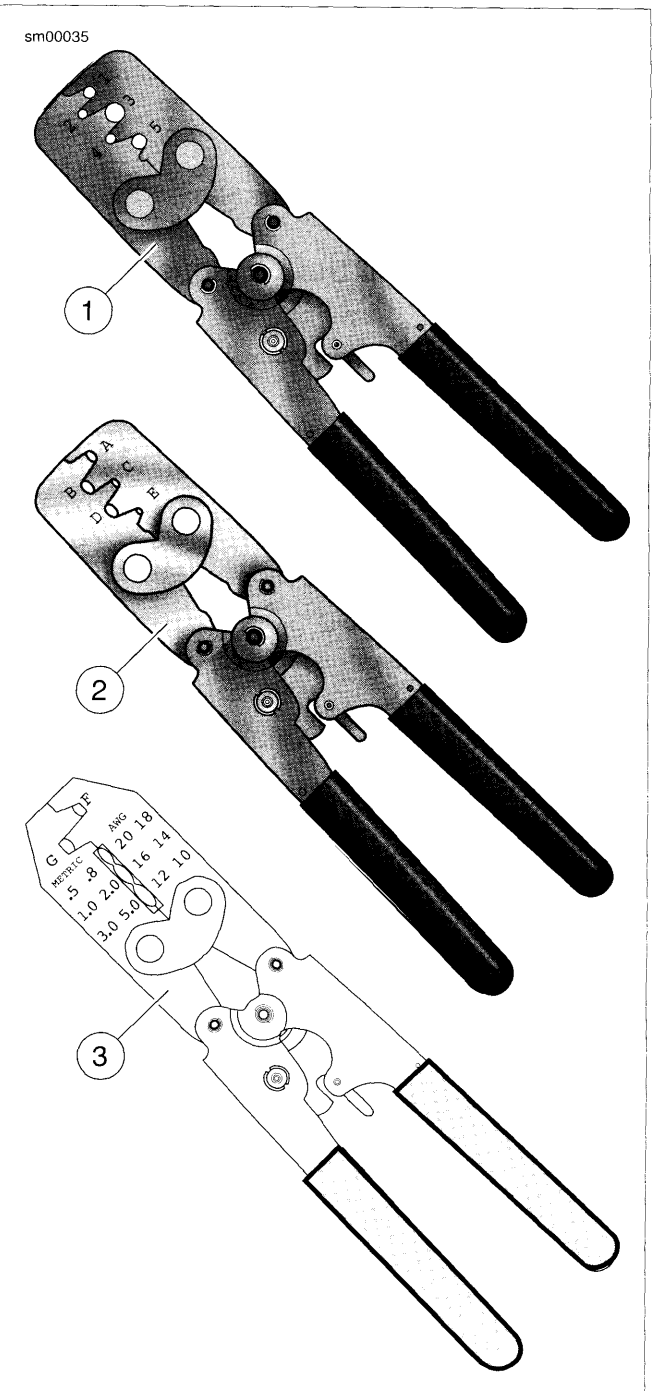

1. **HD-38125-6 sealed terminals**
2. **HD-38125-7 non-sealed terminals**
3. **HD-38125-8 non-sealed terminals**

Figure A-40. Metri-Pack Terminal Crimp Tools

Crimping Insulation/Seal

NOTE

Always perform ***Crimping Wire Core*** *before* ***Crimping Insulation/Seal****.*

1. See Figure A-41. Identify the correct die for the insulation/seal crimp (2).

2. Position the insulation/seal crimp in the nest. Be sure the insulation/seal crimp tails are facing the forming jaws.
3. Squeeze handle of crimp tool until tightly closed. Tool automatically opens when the crimp is complete.

Inspecting Crimps

1. See Figure A-41. Inspect the wire core crimp (1). The tails should be folded in on the wire core without any distortion or excess wire strands.
2. Inspect the insulation (2) or seal (3) crimp. The tails of the terminal should be wrapped around the insulation without distortion.

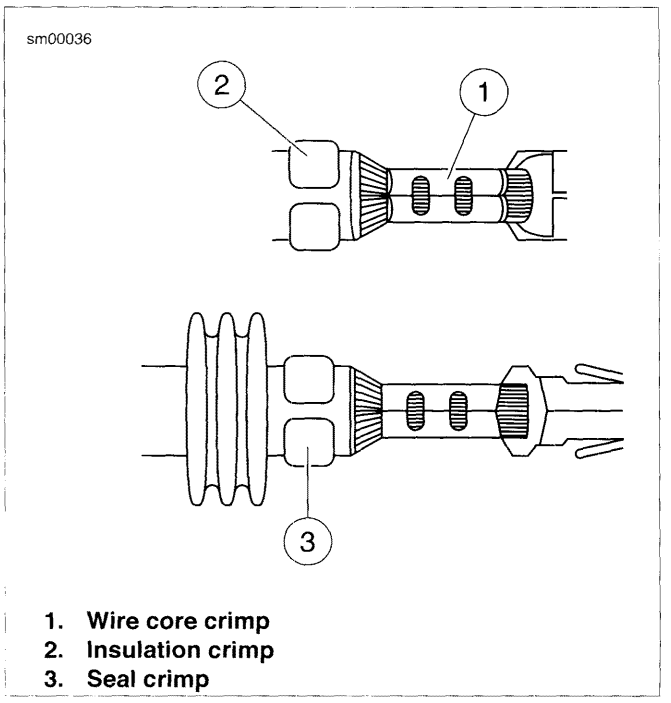

Figure A-41. Metri-Pack Connector: Inspect Core and Insulation/Seal Crimps

PACKARD 100W CONNECTOR REPAIR

General

A Packard 100W connector connects the electronic control module (ECM) to the main harness.

NOTE

For vehicles with 73-pin connectors, see A.15 PACKARD MICRO-64 CONNECTORS and A.13 PACKARD METRI-PACK TERMINALS.

Separating Socket Housing From ECM

See Figure A-42. While pressing the connector into the ECM, press the thumb lever (1) against the connector until the latch (2) pops out of the catch (3) on the ECM.

Mating Socket Housing To ECM

Push the connector into the ECM until the latch is captured by the catch on the ECM.

Removing Socket Terminal

1. See Figure A-43. Gently press latch (1) on each side of the clear plastic secondary lock (2) and remove. For best results, release one side at a time.
2. Carefully cut cable strap (3) to free strain relief collar (4) from conduit (5).
3. See Figure A-44. Using a thin blade, gently pry at seam at back of socket housing to release three plastic pins (1) from slots in housing. Separate and spread halves of socket housing.
4. Push on wire lead to free terminal from chamber.

Installing Socket Terminal

1. From inside socket housing, gently pull on wire to draw terminal into chamber.
2. Exercising caution to avoid pinching wires, press halves of socket housing together until three plastic pins fully engage slots in housing.
3. Install **new** cable strap in groove of strain relief collar capturing cable conduit.
4. With the two ribs on the secondary lock on the same side as the external latch, install over terminals until latches lock in place.

Crimping Terminals

If necessary, crimp new terminals on wire leads. See A.13 PACKARD METRI-PACK TERMINALS.

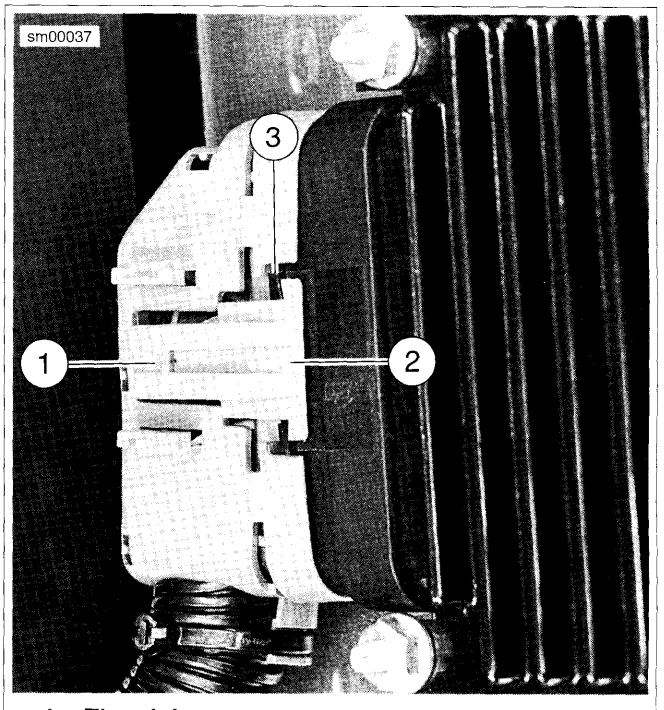

1. **Thumb lever**
2. **Latch**
3. **Catch (ECM)**

Figure A-42. Packard 100W to ECM (Typical)

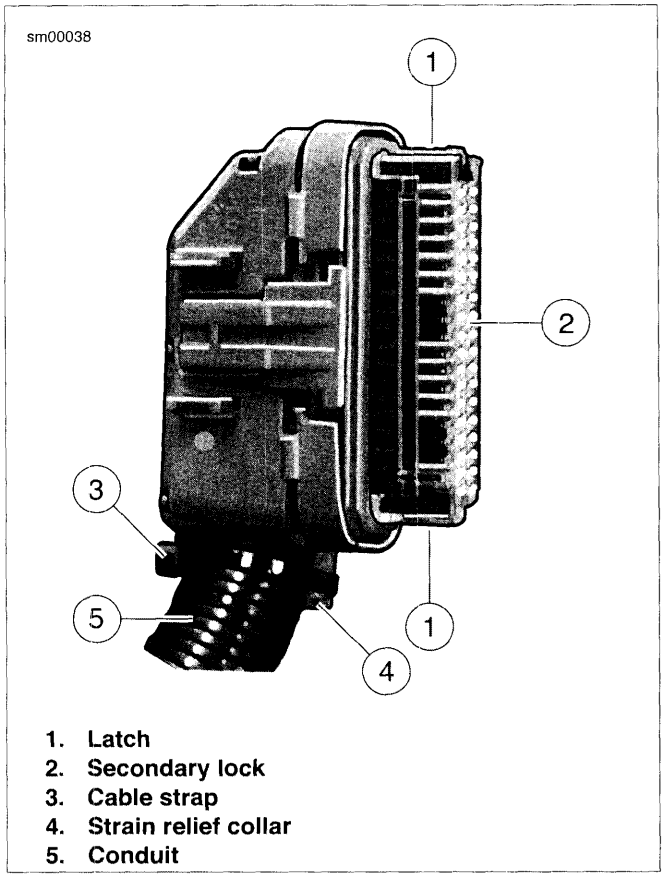

1. Latch
2. Secondary lock
3. Cable strap
4. Strain relief collar
5. Conduit

Figure A-43. Packard 100W Connector

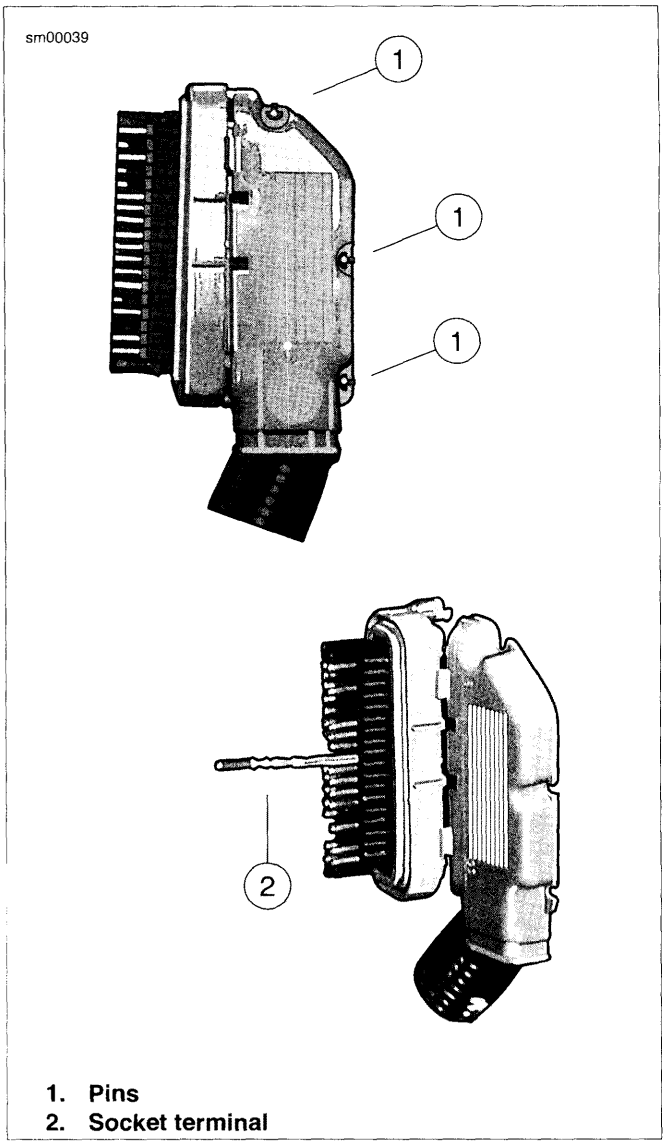

1. Pins
2. Socket terminal

Figure A-44. Packard 100W Connector: Separate Halves of Socket Housing

PACKARD MICRO-64 CONNECTOR REPAIR

PART NUMBER	TOOL NAME
HD-45928	PACKARD MICRO-64 TERMINAL REMOVER
HD-45929	PACKARD MICRO-64 TERMINAL CRIMPER

General

Packard Micro-64 connectors are frequently found on speedometers, tachometers and the ECM of Touring Models. For pin 73 of these ECMs, see A.10 PACKARD 150 METRI-PACK CONNECTORS.

Separating Pin and Socket Housings

Bend back the external latches slightly and separate the pin and socket housings.

Mating Pin and Socket Housings

Orient the wire lead colors and push the pin and socket housings of the connector together until the latches click.

Removing Terminal

1. See Figure A-47. Locate the head of the secondary lock (1) on one side of the connector housing.
2. Insert the blade of a small screwdriver between the center ear of the lock and the connector housing and gently pry out lock. When partially removed, pull lock from connector housing.
3. Locate pin hole (2) between terminals on mating end of connector.
4. See Figure A-48. Obtain the PACKARD MICRO-64 TERMINAL REMOVER (Part No. HD-45928).
5. See Figure A-46. Push the adjacent terminals all the way into the connector housing and then insert tool into hole until it bottoms.
6. Leaving the tool installed, gently tug on wires to pull either one or both terminals from wire end of connector. Remove tool.

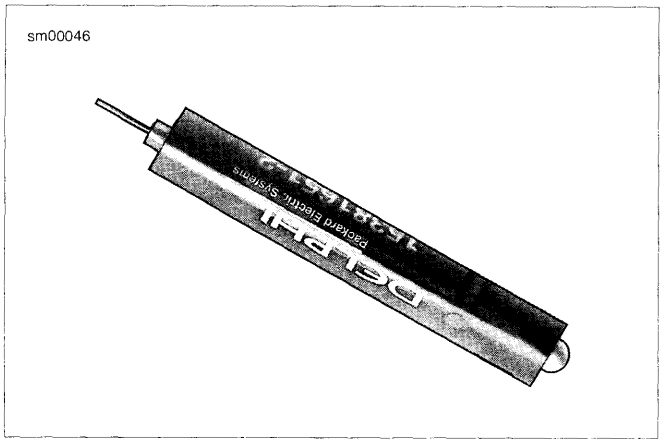

Figure A-45. Packard Micro 64 Terminal Remover (HD-45928)

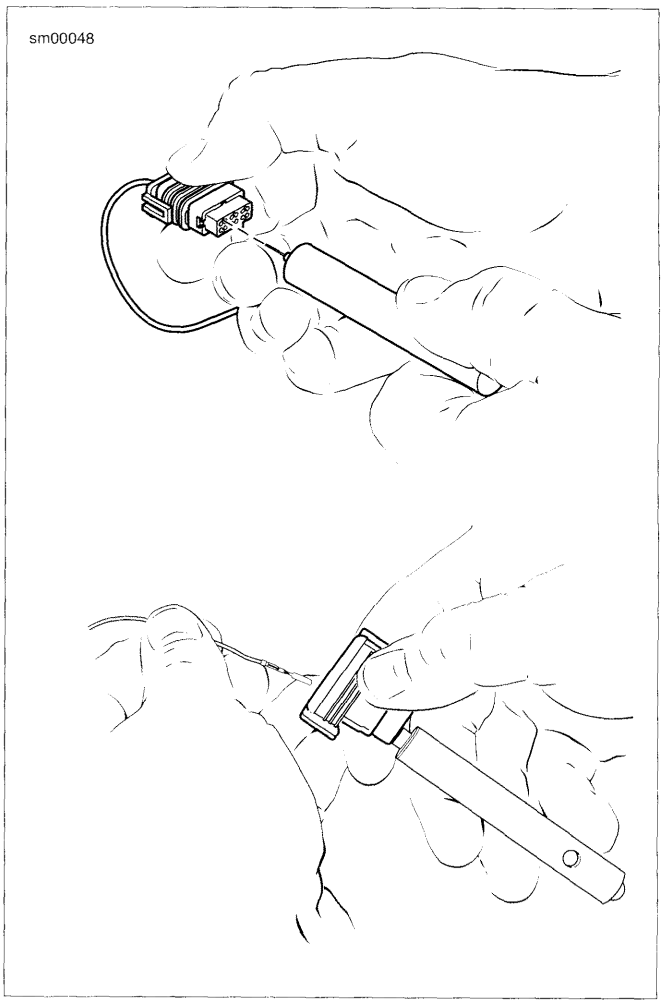

Figure A-46. Packard Micro 64 Connector: Insert Tool and Remove Terminal

Installing Terminal

1. Insert terminal into its respective numbered chamber on wire end of connector. No special orientation of the terminal is necessary.

NOTE

See Figure A-47. For wire location purposes, the corners of the socket housing are stamped (3) with the numbers 1, 6, 7 and 12, representing terminals 1-6 on one side, and 7-12 on the other.

2. Bottom the terminal in the chamber and then gently tug on the wire to verify that it is locked in place.

NOTE

Once the terminal is removed it may not lock in place when first installed. Until the lock engages, move the terminal back and forth slightly while wiggling the lead.

3. Since the terminal remover tool releases two terminals simultaneously, repeat step 2 on the adjacent terminal even if it was not pulled from the connector housing.

4. With the center ear on the head of the secondary lockpin facing the mating end of the connector, push secondary lock in until head is flush with the connector housing.

Preparing Wire Leads for Crimping

Strip lead removing 1/8 in. (3.0 mm) of insulation.

Crimping Terminals

1. Inspect **new** socket terminal for bent or deformed contact and crimp tails. Replace as necessary.
2. See Figure A-49. Squeeze the handles of the PACKARD MICRO-64 TERMINAL CRIMPER (Part No. HD-45929) to cycle the tool to the fully open position (1).
3. Raise locking bar and barrel holder by pushing up on bottom tab with index finger (2).
4. With the crimp tails facing upward, insert terminal through locking bar into front hole in barrel holder (20-22 gauge wire) (3).
5. Release locking bar to lock position of contact. When correctly positioned, the locking bar fits snugly in the space at the front of the core crimp tails and the closed side of the terminal rests on the outer nest of the crimp tool.
6. Insert wires between crimp tails until ends make contact with locking bar. Verify that wire is positioned so that wide pair of crimp tails squeeze bare wire strands, while the narrow pair folds over the insulation material.
7. Squeeze handle of crimp tool until tightly closed (4). Tool automatically opens when the crimping sequence is complete.
8. Raise locking bar and barrel holder to remove contact.

Inspecting Crimps

Inspect the quality of the core and insulation crimps. Distortion should be minimal.

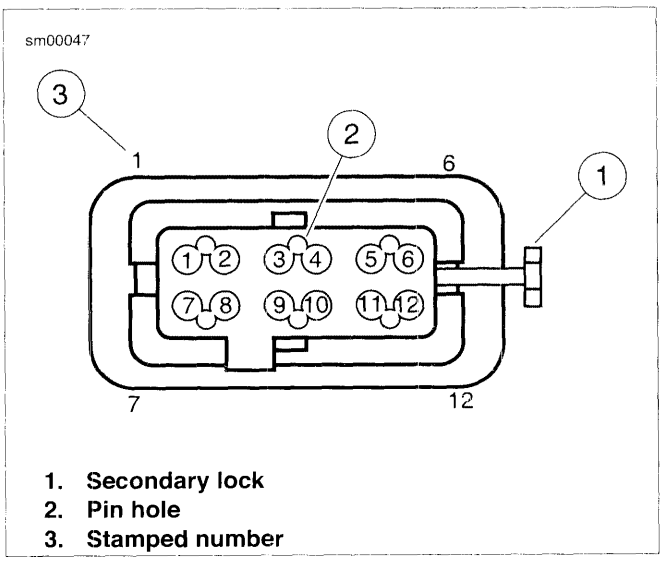

1. **Secondary lock**
2. **Pin hole**
3. **Stamped number**

Figure A-47. Packard Micro 64 Connector: Housing

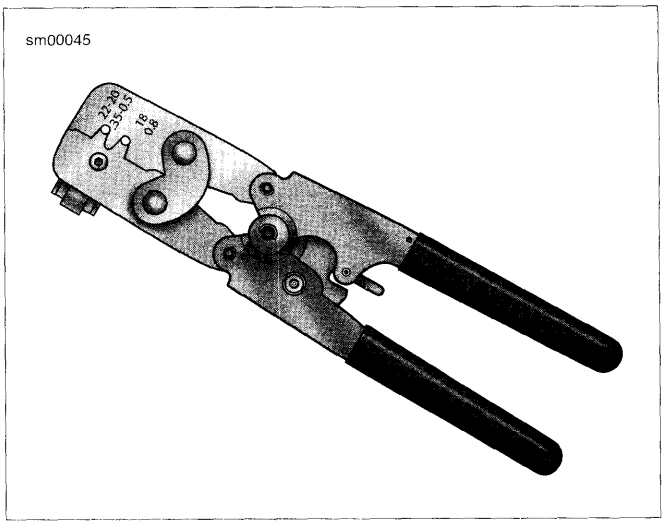

Figure A-48. Packard Micro 64 Terminal Crimper (HD-45929)

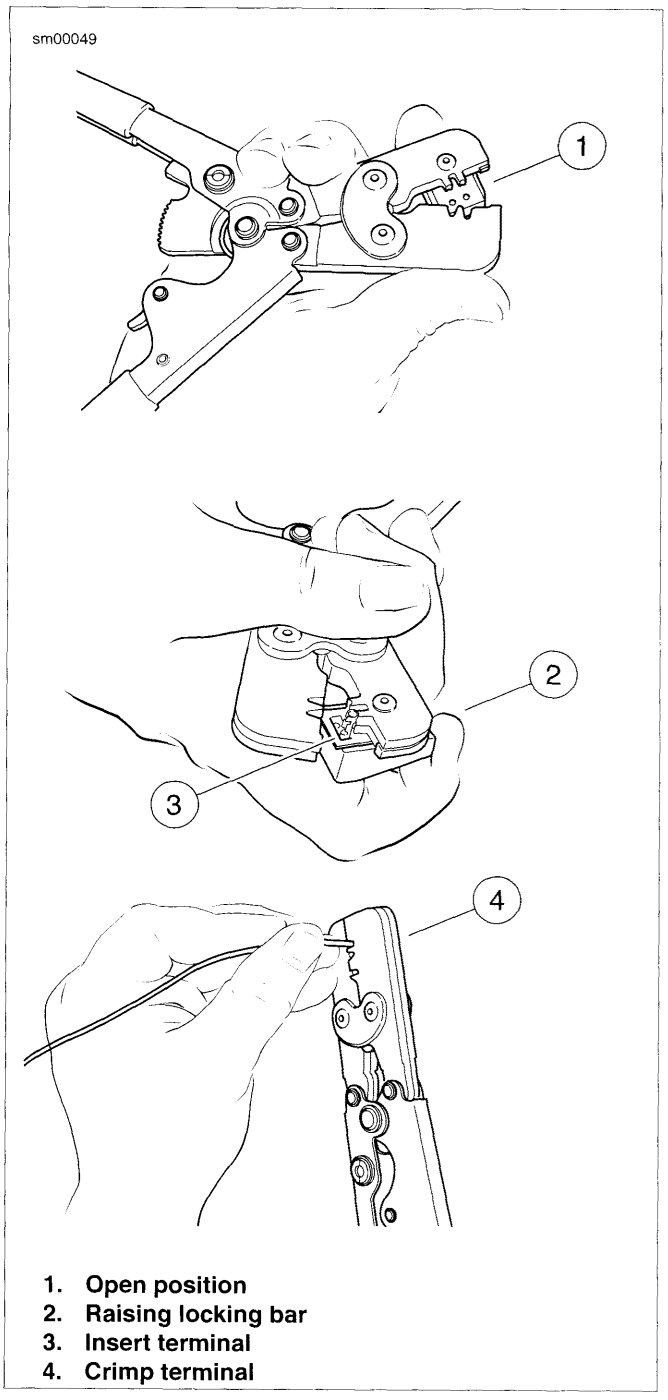

Figure A-49. Packard Micro 64 Connector: Terminal in Crimper

SEALED SPLICE CONNECTOR REPAIR

PART NUMBER	TOOL NAME
HD-25070	ROBINAIR HEAT GUN
HD-38125-8	PACKARD CRIMPING TOOL
HD-39969	ULTRA TORCH UT-100
HD-41183	HEAT SHIELD ATTACHMENT

General

Splice connectors and several OE ring terminal connectors use heat shrink covering to seal the connection.

Preparing Wire Leads

NOTE

If adjacent wires are to be spliced, stagger the splices so that the sealed splice connectors will not touch each other but are located at different positions along the length of the wires.

1. Using a shop gauge, identify the gauge of the wire.
2. Match the wire gauge to a sealed splice connector by color and part number. Refer to Table A-5.
3. Using a wire stripper, cut and strip a length of insulation off the wire ends. Refer to Table A-5 for the strip length.

Table A-5. Sealed Splice Connectors

WIRE GAUGE	COLOR	PART NO.	STRIP LENGTH
18-20 (0.5-0.8 mm)	Red	70585-93	3/8 in. (9.5 mm)
14-16 (1.0-2.0 mm)	Blue	70586-93	3/8 in. (9.5 mm)
10-12 (3.0-5.0 mm)	Yellow	70587-93	3/8 in. (9.5 mm)

NOTE

If any copper wire strands are cut off of the wire core, trim the end and strip the wire again in a larger gauge stripper.

Splicing Wire Leads

NOTE

See Figure A-51. The connector is crimped twice - one side and then the other.

1. See Figure A-50. Open the PACKARD CRIMPING TOOL (Part No. HD-38125-8) ratchet by squeezing the handles closed.
2. Match the connector color to the wire gauge crimp die in the jaws and insert one end of the sealed connector.
3. Gently squeeze the handles until the connector is held in the jaws.
4. See Figure A-51. Feed the stripped end of a wire into the connector until the wire stops inside the metal insert (1).
5. Squeeze the handles tightly closed to crimp the lead in the insert (2). The tool automatically opens when the crimping is complete.
6. Slide the connector to the other half of the metal insert. Insert the stripped wire lead (1) until it stops, and crimp the lead in the insert (2).

⚠WARNING

Be sure to follow manufacturer's instructions when using the UltraTorch UT-100 or any other radiant heating device. Failure to follow manufacturer's instructions can cause a fire, which could result in death or serious injury. (00335a)

- Avoid directing heat toward any fuel system component. Extreme heat can cause fuel ignition/explosion resulting in death or serious injury.
- Avoid directing heat toward any electrical system component other than the connectors on which heat shrink work is being performed.
- Always keep hands away from tool tip area and heat shrink attachment.

7. Use an ULTRA TORCH UT-100 (Part No. HD-39969), or a ROBINAIR HEAT GUN (Part No. HD-25070) with a HEAT SHIELD ATTACHMENT (Part No. HD-41183), to heat the connector from the center of the crimp (3) out to each end.

NOTE

It is acceptable for the splice to rest against the heat shrink tool attachment.

Inspecting Seals

See Figure A-51. Allow the splice to cool and inspect the seal. The insulation should appear smooth and cylindrical. Melted sealant will have extruded out the ends (4) of the insulation.

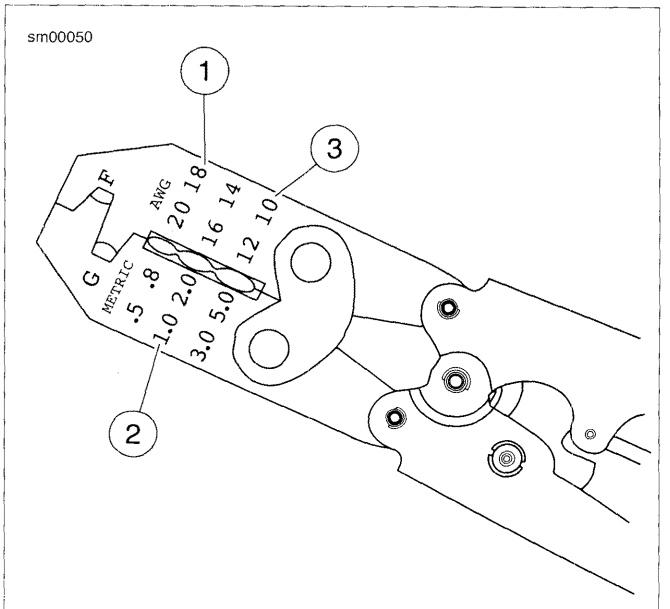

1. **Red connector die**
2. **Blue connector die**
3. **Yellow connector die**

Figure A-50. Packard Crimping Tool (HD-38125-8)

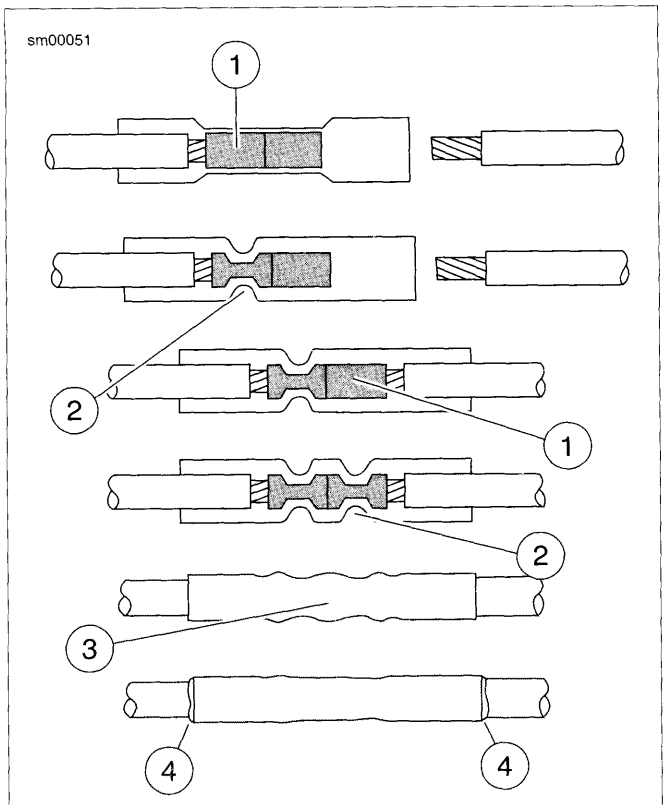

1. Wire lead in metal insert
2. Crimp metal insert
3. Center of crimp
4. Melted sealant

Figure A-51. Sealed Splice Connector

SUBJECT **PAGE NO.**
B.1 CONNECTORS....B-1
B.2 WIRING DIAGRAMS....B-3

CONNECTOR LOCATIONS

Function/Location

On the vehicle, a connector can be identified by its function and location. Refer to Table B-1.

Place and Color

The place (number of wire cavities of a connector housing) and color of the connector can also aid identification.

Connector Number

On wiring diagrams and in service/repair instructions, connectors are identified by a number in brackets.

Repair Instructions

The repair instructions in Appendix A are by connector type. Refer to Table B-1.

Table B-1. Sportster Connector Locations

NO.	DESCRIPTION	TYPE	TERMINAL PROBE COLOR	LOCATION
[5]	Main fuse	2-place Metri-Pack (BK)	Red	Behind left side cover
[7]	Tail lamp harness to main harness	6-place Multilock (BK)	Gray	Below seat
[18]	Right rear turn signal	2-place Multilock (BK) (single stop lamp) 4-place Multilock (BK) (dual stop lamp)	Gray	Inside tail lamp lens (single stop lamp) Under the seat (dual stop lamp)
[19]	Left rear turn signal	2-place Multilock (BK) (single stop lamp) 4-place Multilock (BK) (dual stop lamp)	Gray	Inside tail lamp lens (single stop lamp) Under the seat (dual stop lamp)
[20]	Instruments	12-place Molex (BK)	Gray	Under fuel tank
[22]	Right hand controls	6-place Molex (BK)	Gray	Under fuel tank
[24]	Left hand controls	8-place Molex (GY)	Gray	Under fuel tank
[30]	TSM/TSSM/HFSM	12-place Deutsch (GY)	Breakout Box	Under battery
[31]	Front turn signals	6-place Molex (BK)	Gray	Under fuel tank
[38]	Headlamp	4-place Multilock (BK)	Gray	Under fuel tank
[39]	Speedometer (XL)	12-Packard Micro-64 (BK)	Breakout Box	Back of speedometer
[39]	Speedometer (XR)	5-place Packard (BK)	Gray	Back of speedometer
[40]	License plate lamp	2-place Multilock (BK)	Gray	Under seat
[47]	Voltage regulator to stator	3-place Dekko (BK)		Right side, under gear case cover
[61]	Fuse block	Spade terminals (BK)	Gray	Behind left side cover
[65]	VSS	3-place Delphi (BK)	Gray	Behind starter
[77]	Voltage regulator	2-place Dekko (BK)		Left side frame, in front of oil filter
[78]	ECM (XL)	36-place Delphi (GY)	Breakout Box	Behind rear cylinder
[78]	ECM (XR)	36-place Delphi (GY)	Breakout Box	Under seat
[79]	CKP sensor	2-place Deutsch (BK)	Brown	Left side frame under oil filter
[80]	TMAP sensor	4-place MTA (BK)	Gray	Top of intake manifold
[83]	Ignition coil	4-place Delphi (BK)	Gray	Under fuel tank
[84]	Front fuel injector	2-place Delphi (BK)	Purple	Top of induction manifold
[85]	Rear fuel injector	2-place Delphi (BK)	Purple	Top of induction manifold
[87]	IAC	4-place Delphi (BK)	Gray	Top of induction manifold
[88]	TPS	3-place Delphi (BK)	Gray	Behind air cleaner mounting plate
[90]	ET sensor	2-place Delphi (BK)	Gray	Right side in front of oil tank
[91]	DLC	4-place Deutsch (GY)	Black	Under left side cover
[93]	Tail/stop lamp	4-place Multilock (BK)	Gray	Inside tail lamp lens

Table B-1. Sportster Connector Locations

NO.	DESCRIPTION	TYPE	TERMINAL PROBE COLOR	LOCATION
[94]	Rear turn signal lamp	6-place Multilock (BK)	Gray	Inside tail lamp lens
[95]	Purge solenoid valve	2-place Delphi (R)	Gray	Left side under swing arm
[108]	Tachometer	12-place Packard Micro-64 (GY)	Breakout Box	Back of tachometer
[120]	Oil pressure switch	Post terminal (BK)		Under oil filter mount
[121]	Rear stop lamp switch	Spade terminals (BK)	Red	Left side under battery
[122]	Horn	Spade terminals (BK)	Red	Between front frame tubes: Except XL 1200C Left side of engine between cylinders: XL1200C only
[128]	Starter solenoid	1-place spade terminal (W)	Gray	Right side bottom of starter
[131]	Neutral switch	Post terminals (BK)	Black	Top of transmission
[133]	JSS (HDI)	3-place Molex (BK)	Gray	Left side frame down tube
[136]	Neutral switch jumper	1-place bullet (BK)		Right side frame, beneath gearcase cover
[137]	Rear O2 sensor	2-place AMP (BK)	Gray	On left side ECM caddy: XL models On left side H-bracket: XR models
[138]	Front O2 sensor	2-place AMP (BK)	Gray	Left side frame in front of oil filter
[141]	Fuel pump and low fuel switch	4-place Molex (BK)	Gray	On left side of ECM caddy: XL models On left side of H-bracket: XR models
[142]	Security siren	3-place Delphi (BK)	Gray	Under frame
[145]	Engine sensor harness	16-place Molex (BK)	Gray	Under seat
[160]	P&A battery	1-place Delphi (GY)	Purple	Under seat
[178]	Active intake solenoid	2-place Molex (BK)	Gray	Right side behind air box: XR models only
[200]	Fuel sender resistor assembly	3-place Molex (BK)	Gray	Under seat
[208]	HFSM antenna harness	4-place Deutsch (GY)	Black	Under battery
[209]	HFSM antenna	2-place Molex (BK)	Gray	Under seat
[210]	Fuel Tank Ground: XR only	1-place molded (BK)		Under fuel tank cover
[Battery ground]	Battery ground	Ring terminal (BK)		Top of transmission case
[GND 1]	Harness ground	Ring terminal (BK)		Left side behind starter

WIRING DIAGRAM INFORMATION

Wire Color Codes

Wire traces on wiring diagrams are labeled with alpha codes. Refer to Table B-2.

For Solid Color Wires: See Figure B-1. The alpha code identifies wire color.

For Striped Wires: The code is written with a slash (/) between the solid color code and the stripe code. For example, a trace labeled GN/Y is a green wire with a yellow stripe.

Wiring Diagram Symbols

See Figure B-1. On wiring diagrams and in service/repair instructions, connectors are identified by a number in brackets. The letter inside the brackets identifies whether the housing is a socket or pin housing.

A=Pin: The letter A after a connector number and the pin symbol identifies a pin housing.

B=Socket: The letter B after a connector number and the socket symbol identifies a socket housing.

Other symbols found on the wiring diagrams include the symbol for a diode, a symbol for a wire-to-wire connection, a symbol verifying that no connection between two wire traces exists, symbols for actual and virtual splices, and a symbol identifying two wires that are twisted together.

Actual splices are splices where two wires are connected together at a specific location along a wire. Virtual splices are splices shown connected anywhere along a wire, usually used in a wiring or schematic diagram for clarity.

Grounds are classified as either clean or dirty grounds. Clean grounds are normally used for sensors or modules. These grounds usually do not have electric motors or coils or anything that may cause electrical interference on the ground circuit. The dirty grounds are used for components that are not as sensitive to electrical interference.

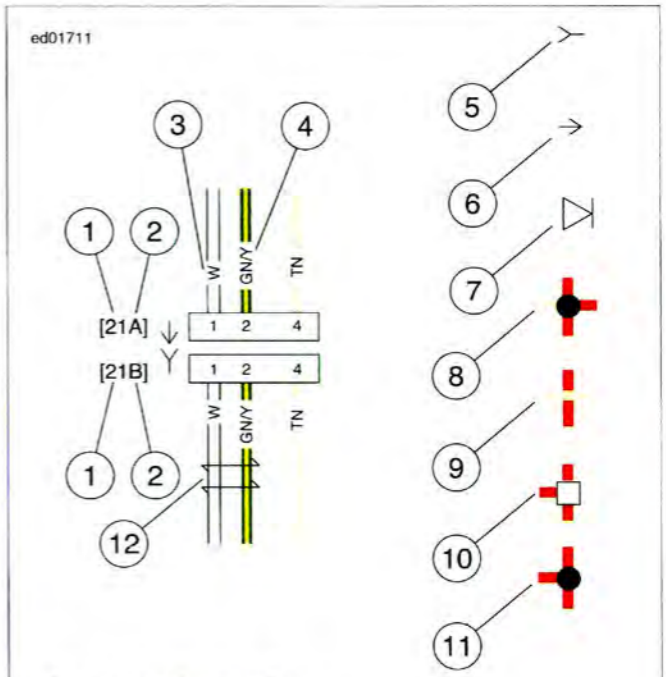

1. **Connector number**
2. **Terminal code (A=pin, B=socket)**
3. **Solid wire color**
4. **Striped wire color**
5. **Socket symbol**
6. **Pin symbol**
7. **Diode**
8. **Connection**
9. **No connection**
10. **Actual splice**
11. **Virtual splice**
12. **Twisted pair**

Figure B-1. Connector/Wiring Diagram Symbols

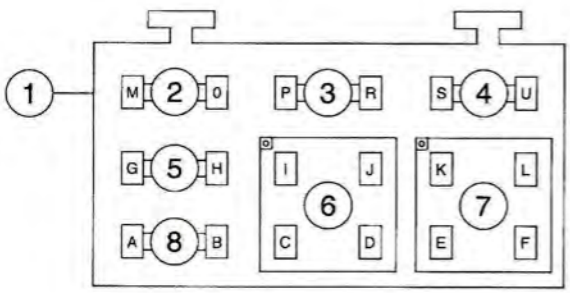

1. **[61B] Fuse block top view (located under left side cover)**
2. **ACCY fuse**
3. **Battery fuse**
4. **ECM fuse**
5. **Lights fuse**
6. **Start relay**
7. **System relay**
8. **Ignition fuse**

Figure B-2. Fuse Block and Socket Terminals

Table B-2. Wire Color Codes

ALPHA CODE	WIRE COLOR
BE	Blue
BK	Black
BN	Brown
GN	Green
GY	Gray
LGN	Light Green
O	Orange
PK	Pink
R	Red
TN	Tan
V	Violet
W	White
Y	Yellow

Refer to the table below for wiring diagram information.

Wiring Diagram List

DIAGRAM	LOCATION
Battery Power	Figure B-3
Ignition Power	Figure B-4
Accessory Power	Figure B-5
Chassis Grounds	Figure B-6
Main Harness: 2010 Sportster	Figure B-7
Engine Management: 2010 Sportster	Figure B-8
Starting and Charging Circuit: 2010 Sportster	Figure B-9
Lighting (1 of 2): 2010 Sportster	Figure B-10
Lighting (2 of 2): 2010 Sportster	Figure B-11
Instrument, Indicator Lamps, and Hand Controls: 2010 Sportster	Figure B-12
Security Circuit: 2010 Sportster	Figure B-13

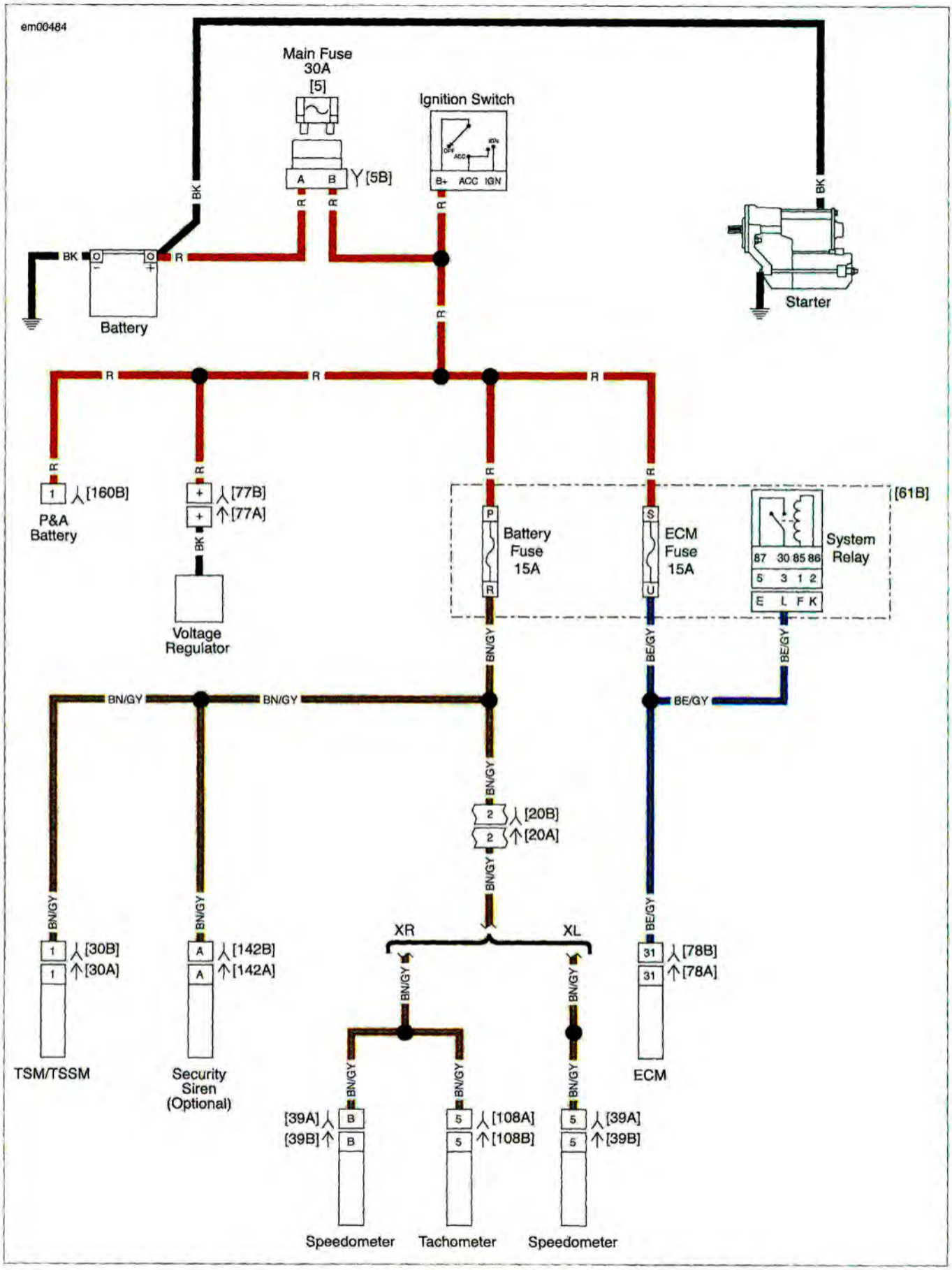

Figure B-3. Battery Power

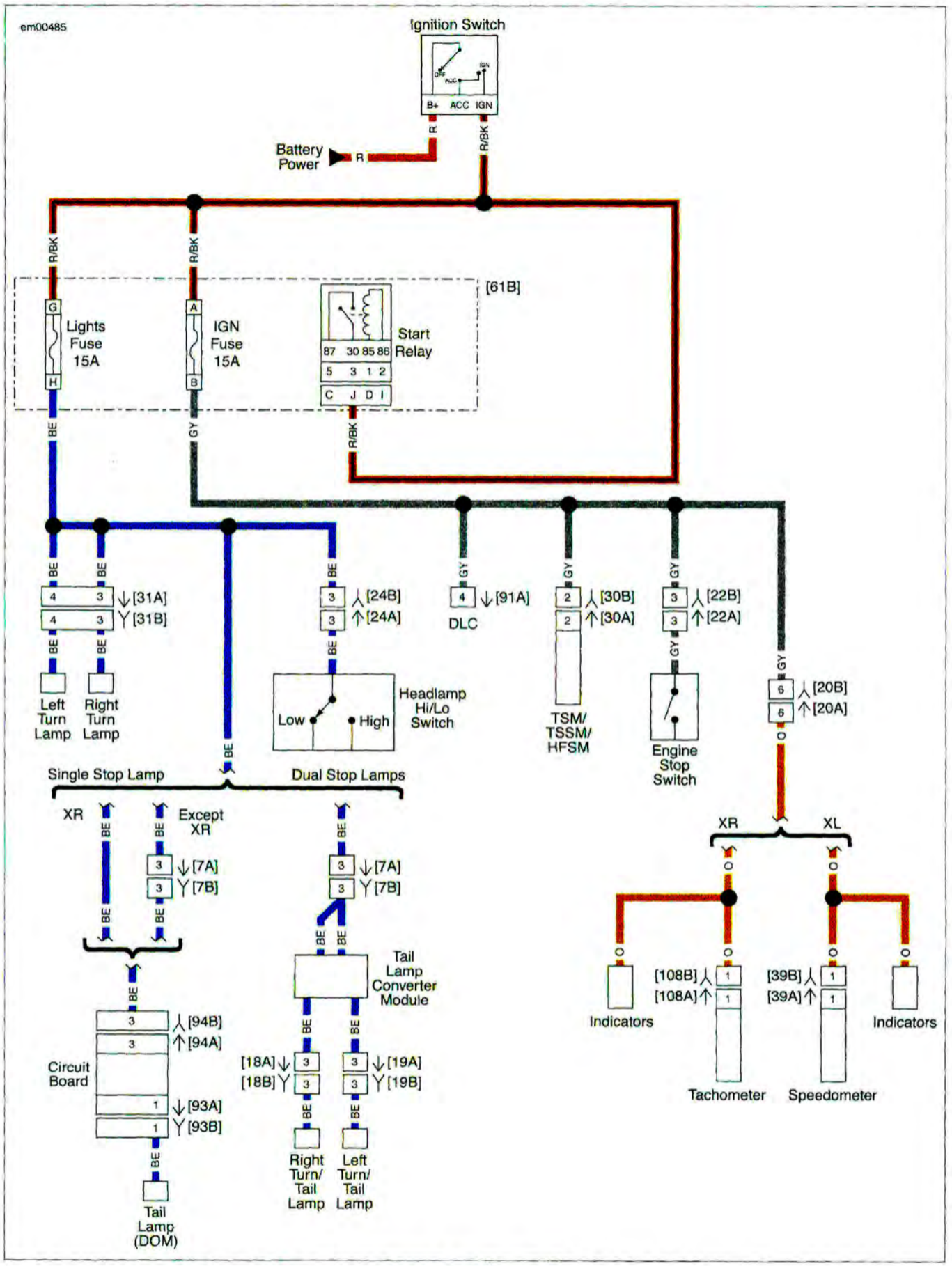

Figure B-4. Ignition Power

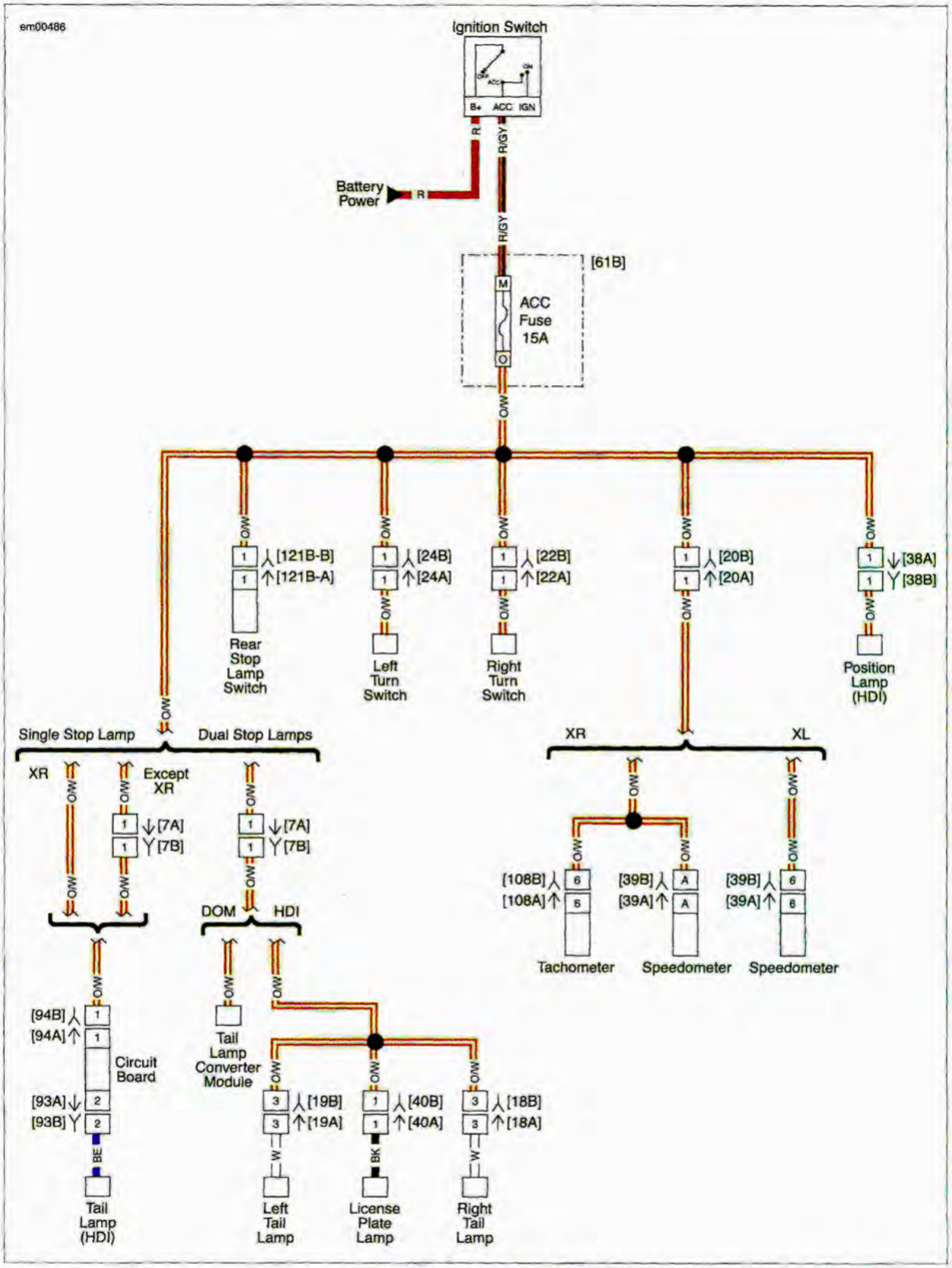

Figure B-5. Accessory Power

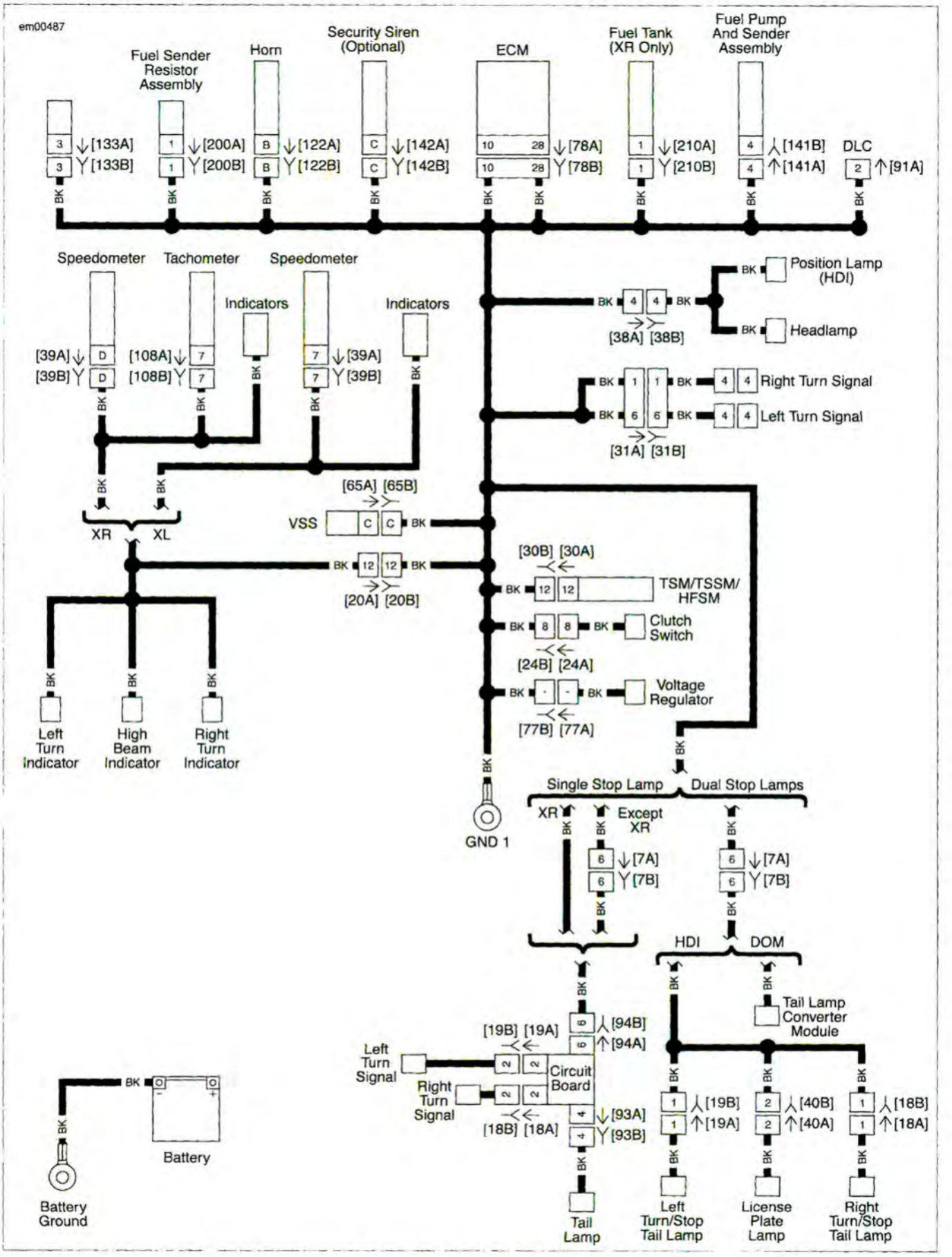

Figure B-6. Chassis Grounds

Figure B-7.
Main Harness: 2010 Sportster

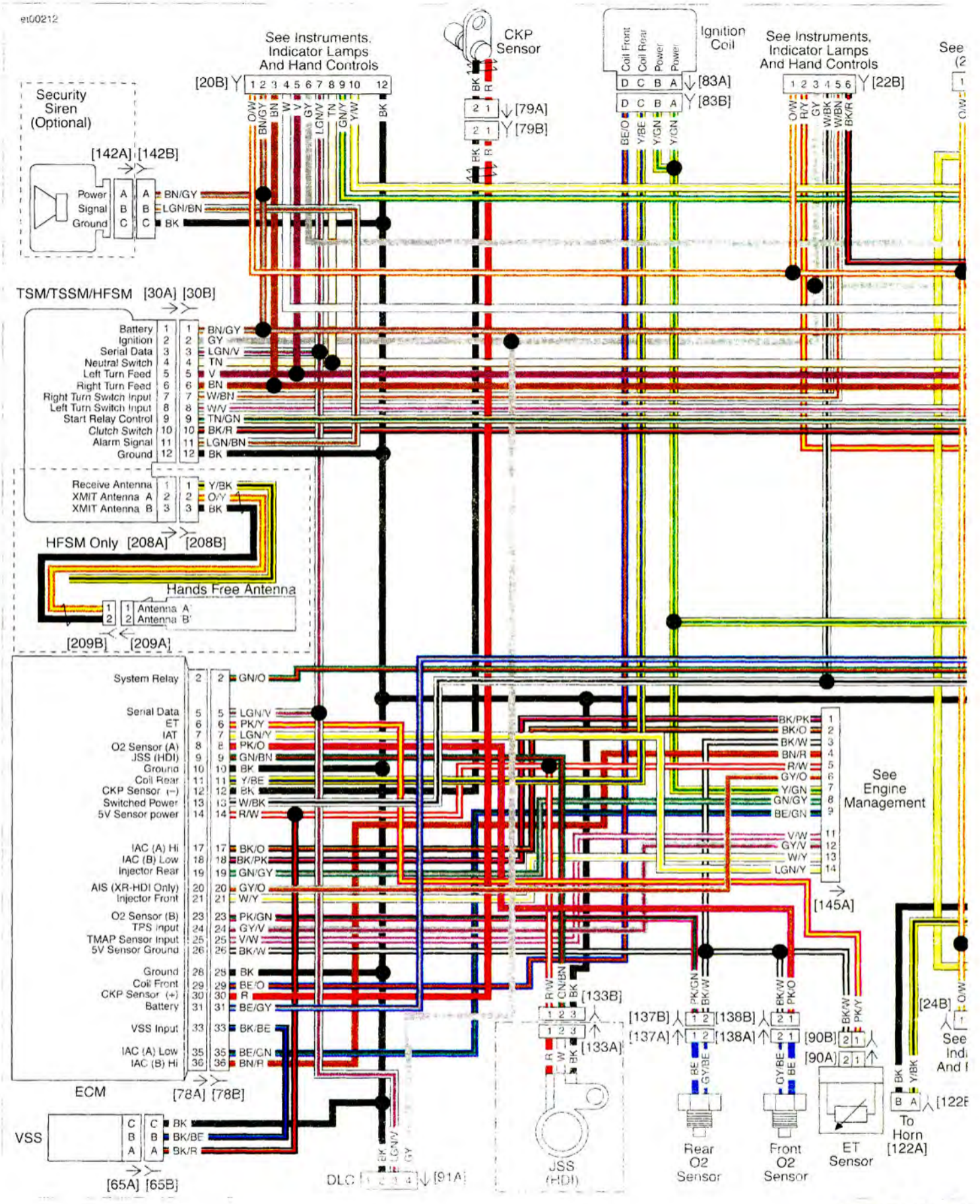

Figure B-7. Main H

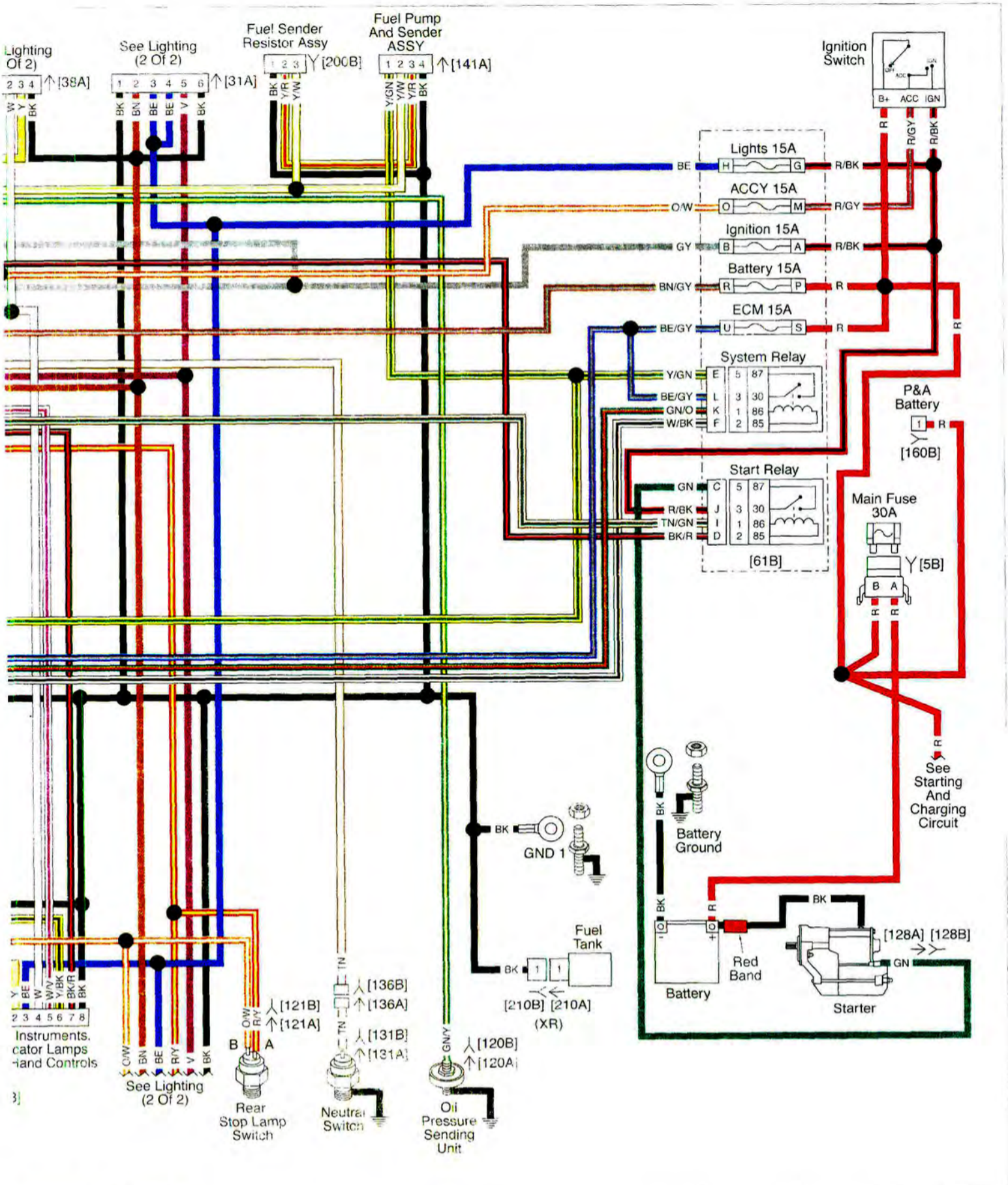

Harness: 2010 Sportster

Figure B-7.
Main Harness: 2010 Sportster

Figure B-8.
Engine Management: 2010 Sportster

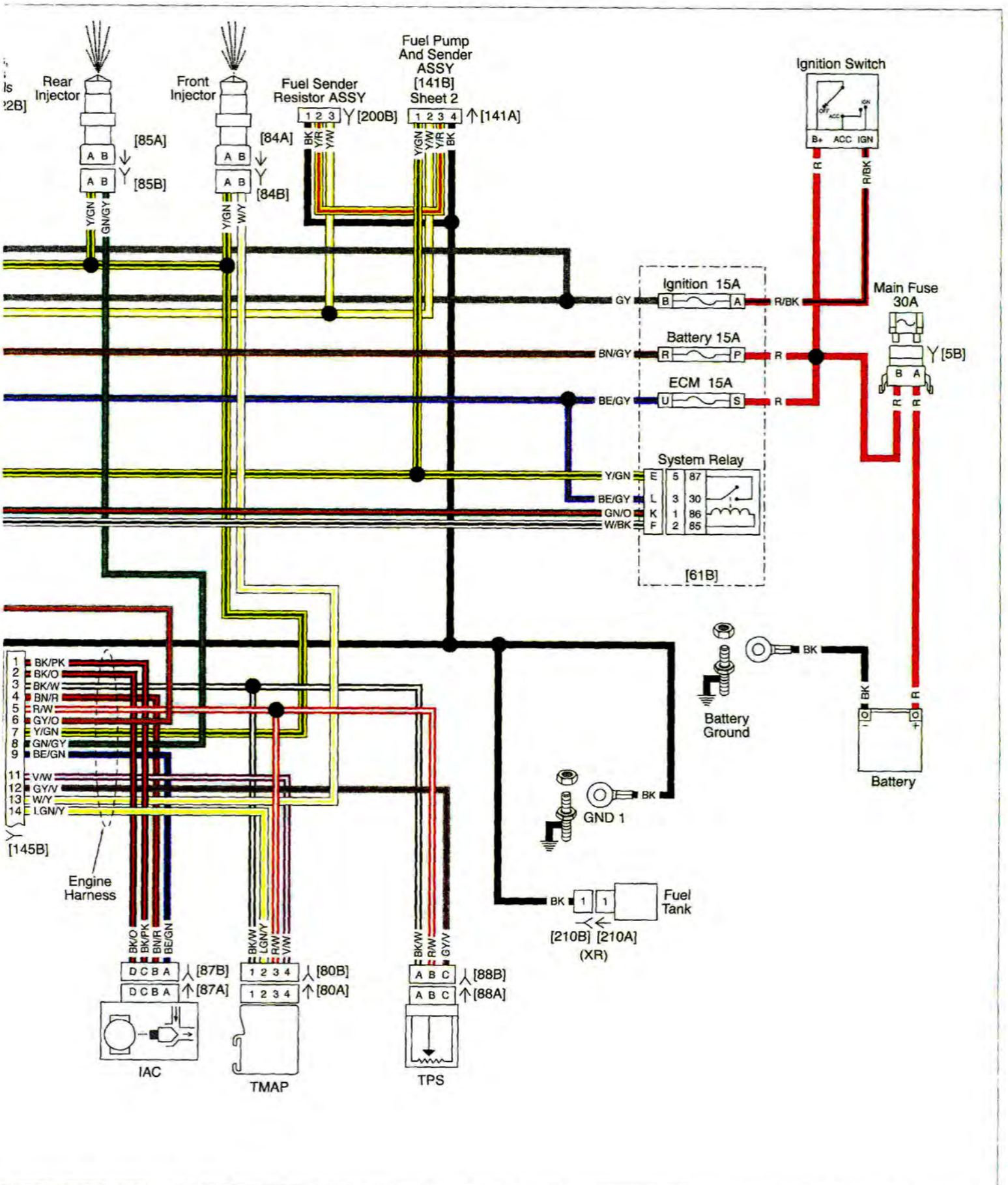
Rear Injector
Front Injector
Fuel Sender Resistor ASSY
Fuel Pump And Sender ASSY [141B] Sheet 2
Ignition Switch
B+ ACC IGN
Ignition 15A
Battery 15A
ECM 15A
Main Fuse 30A
System Relay
[61B]
[5B]
Battery Ground
Battery
GND 1
Fuel Tank
[210B] [210A]
(XR)
Engine Harness
[145B]
IAC
TMAP
TPS

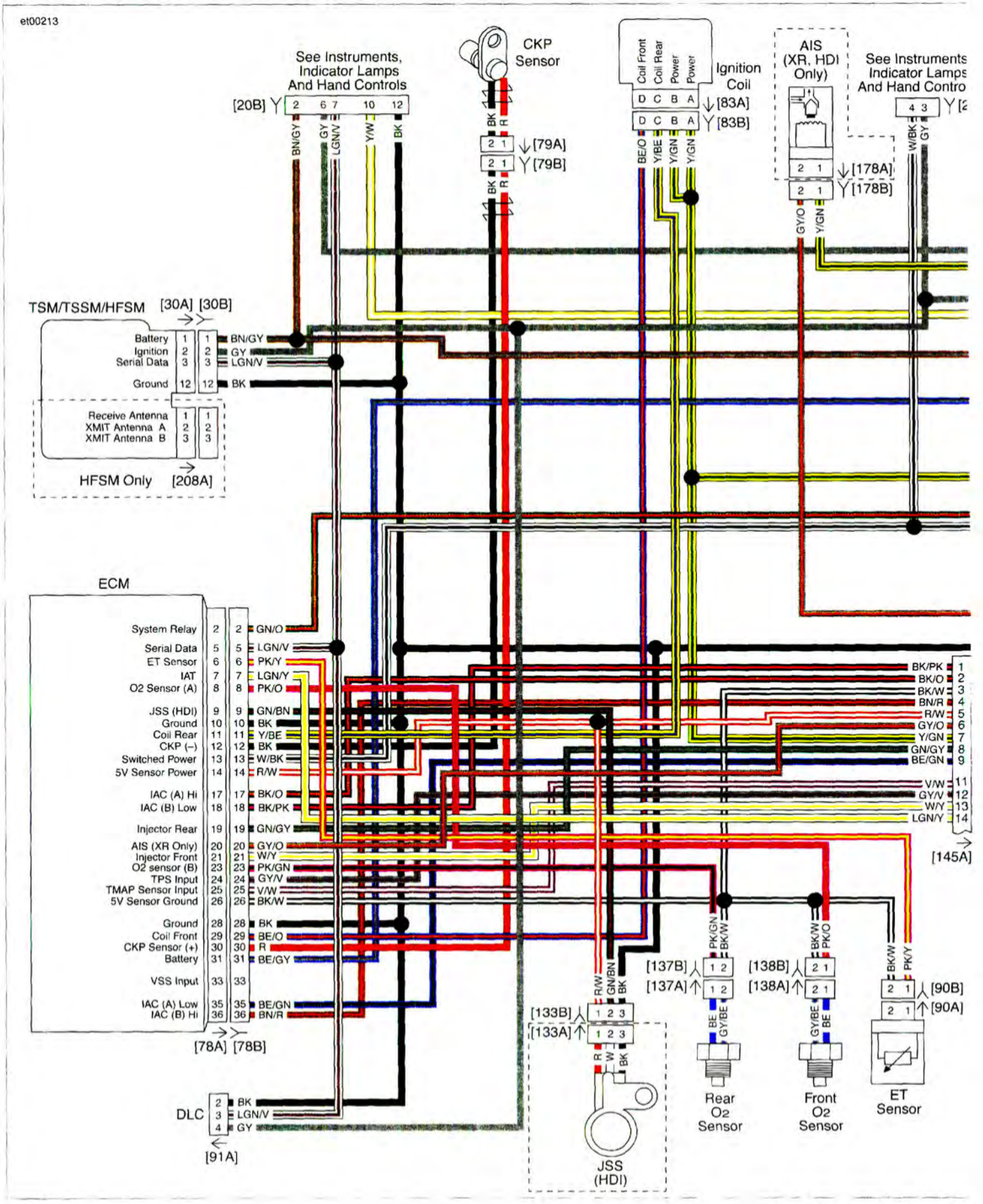

Figure B-8. Engine Ma

Figure B-8.
Engine Management: 2010 Sportster

Figure B-9.
Starting and Charging Circuit: 2010 Sportster

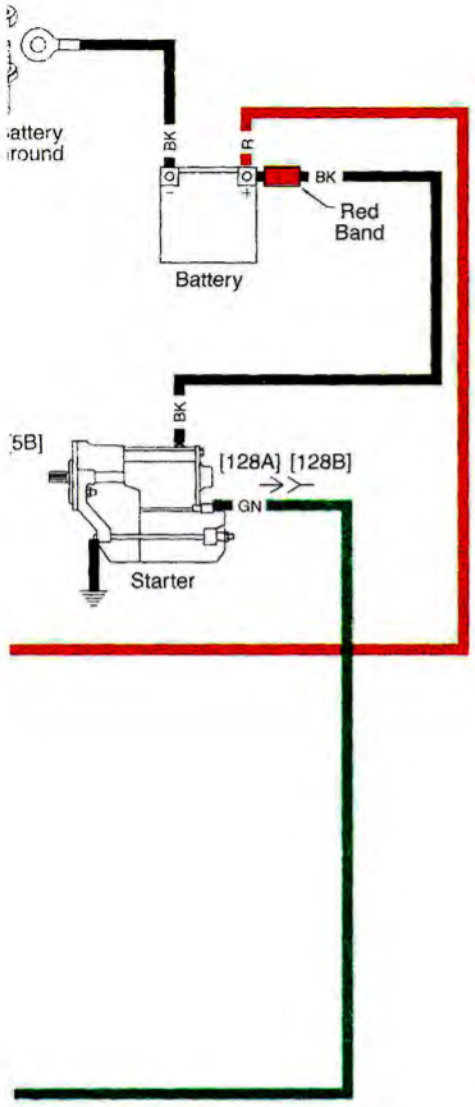

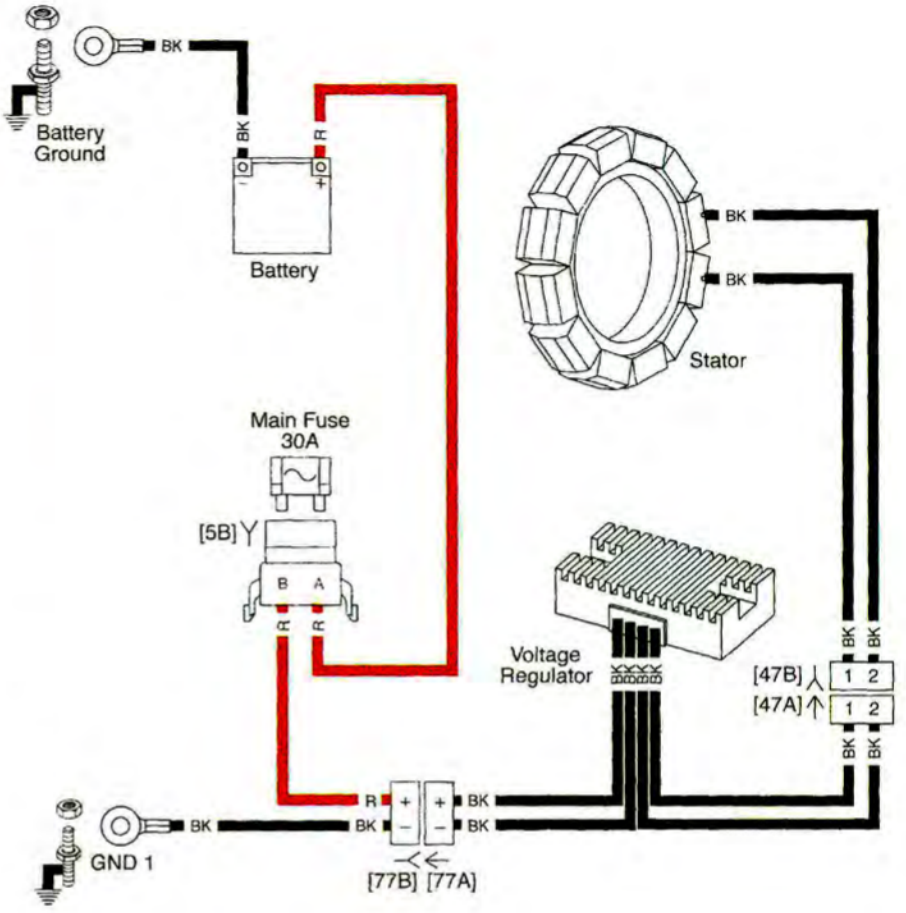

Charging

Charging Circuit: 2010 Sportster

et00215

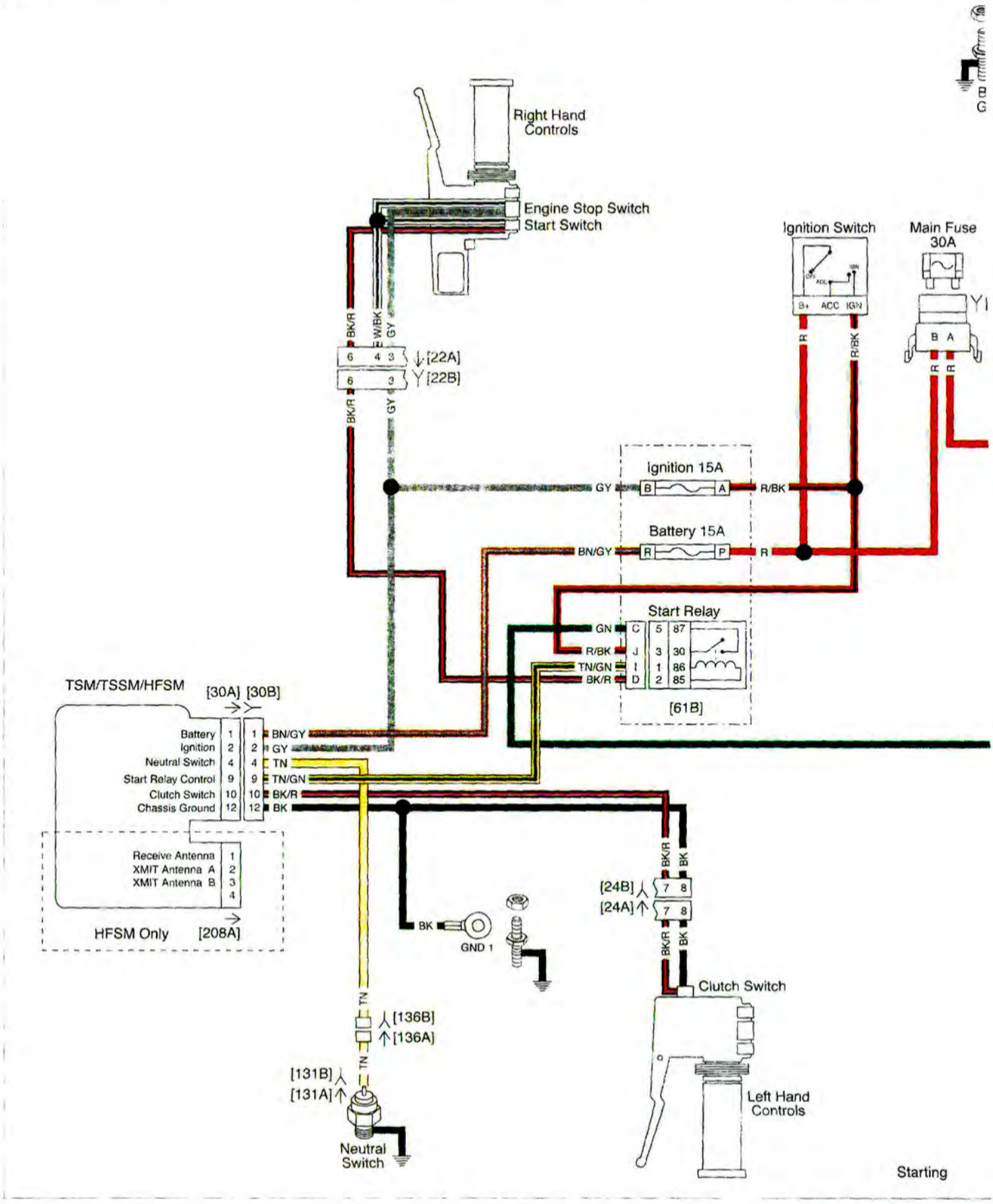

Figure B-9. Starting and C

Figure B-9.
Starting and Charging Circuit: 2010 Sportster

Figure B-10.
Lighting (1 of 2): 2010 Sportster

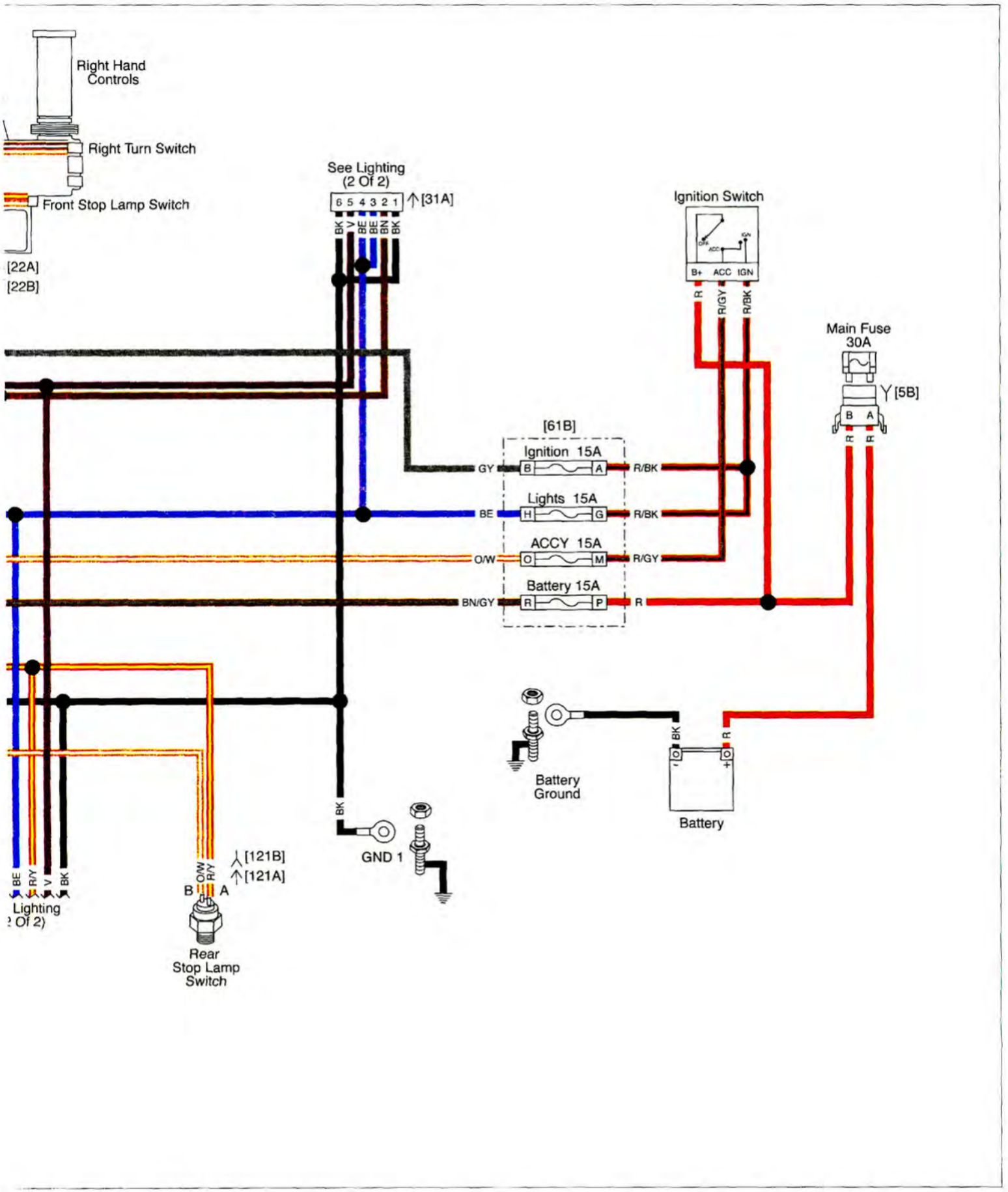

g (1 of 2): 2010 Sportster

et00210

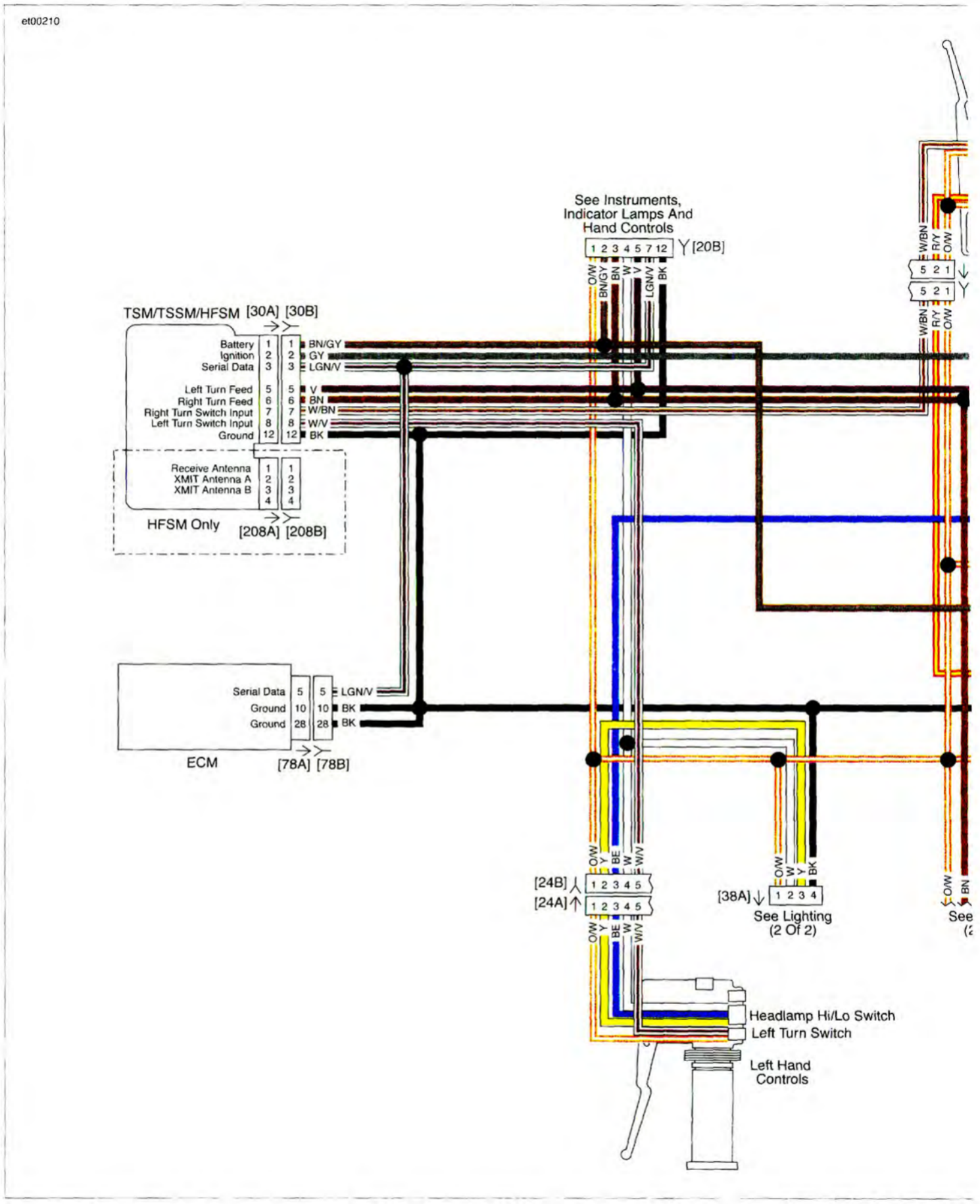

Figure B-10. Lightin

Figure B-10.
Lighting (1 of 2): 2010 Sportster

Figure B-11.
Lighting (2 of 2): 2010 Sportster

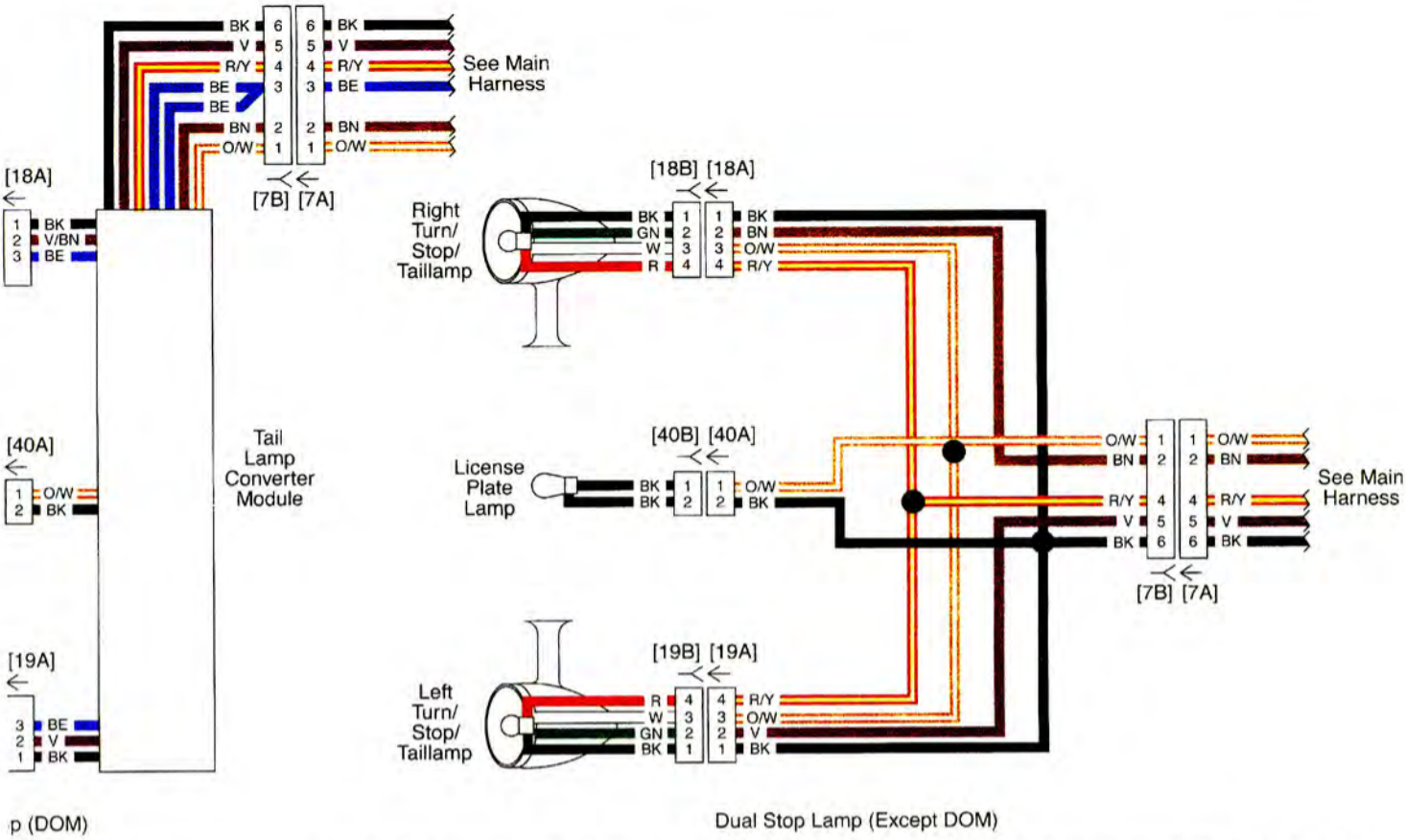

p (DOM)

Dual Stop Lamp (Except DOM)

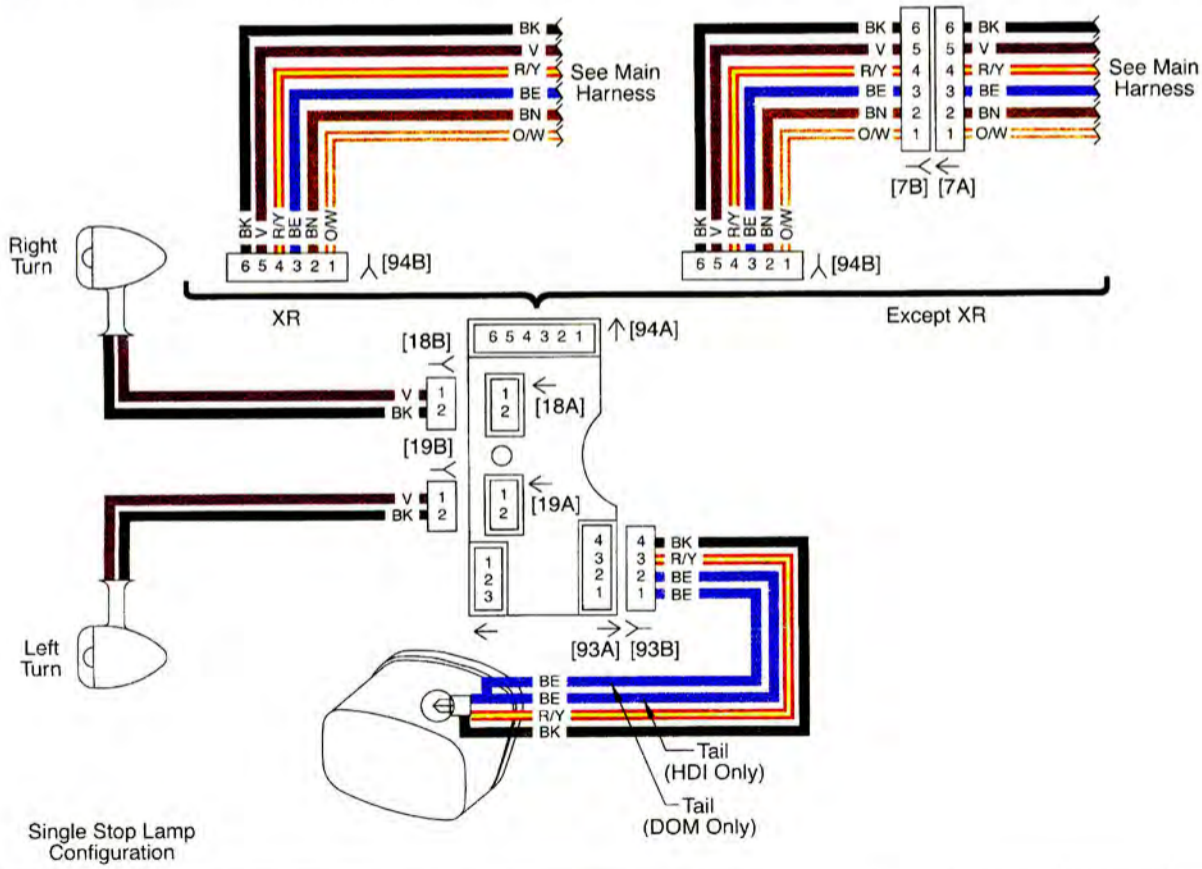

Single Stop Lamp Configuration

g (2 of 2): 2010 Sportster

et00211

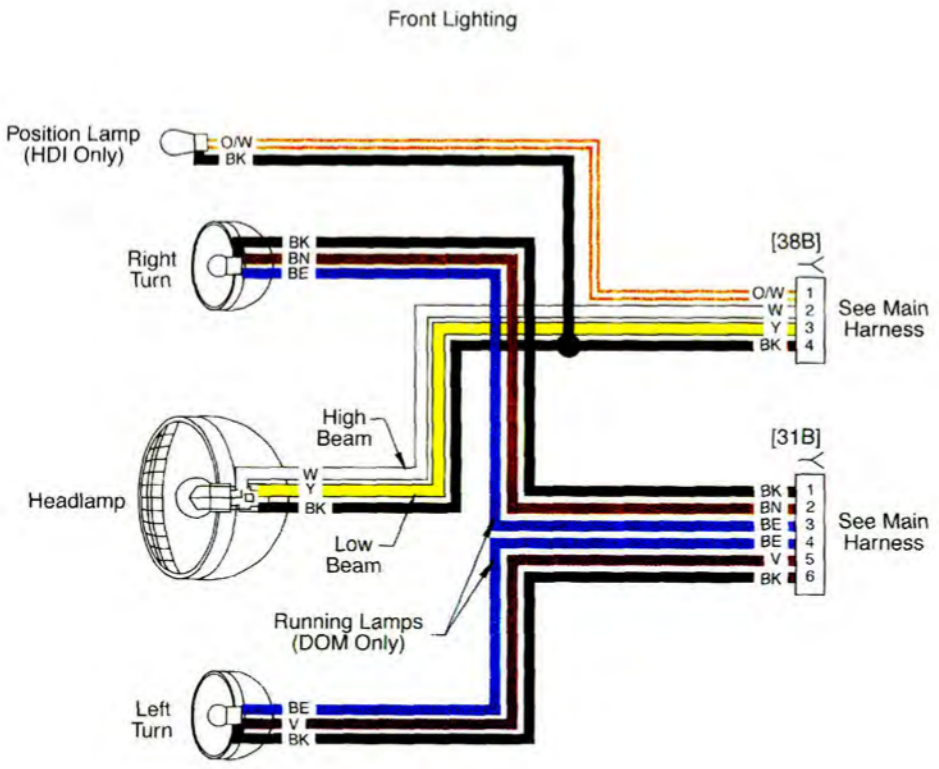

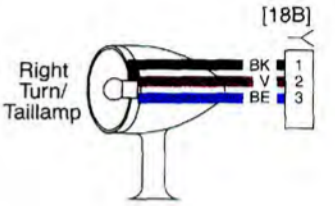

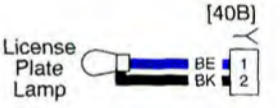

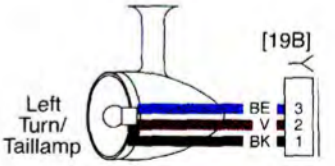

Dual Stop Lam

Figure B-11. Lightin

Figure B-11.
Lighting (2 of 2): 2010 Sportster

Figure B-12.
Instrument, Indicator Lamps, and Hand Controls: 2010 Sportster

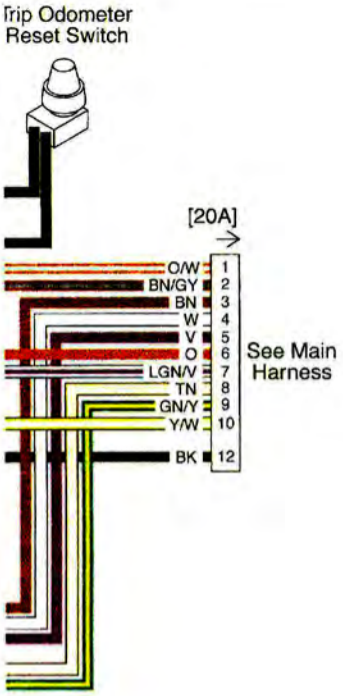
Trip Odometer
Reset Switch
[20A]
O/W 1
BN/GY 2
BN 3
W 4
V 5
O 6
LGN/V 7
TN 8
GN/Y 9
Y/W 10
BK 12
See Main
Harness

XR

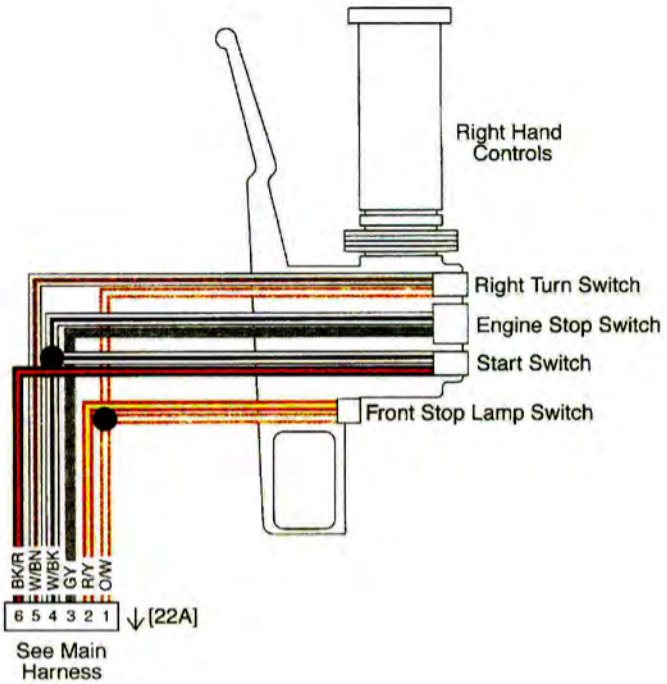
Right Hand
Controls
Right Turn Switch
Engine Stop Switch
Start Switch
Front Stop Lamp Switch
BK/R
W/BN
W/BK
GY
R/Y
O/W
6 5 4 3 2 1
[22A]
See Main
Harness

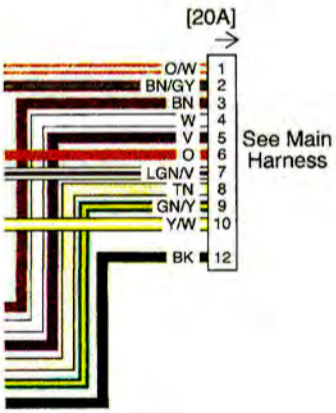
[20A]
O/W 1
BN/GY 2
BN 3
W 4
V 5
O 6
LGN/V 7
TN 8
GN/Y 9
Y/W 10
BK 12
See Main
Harness

XL

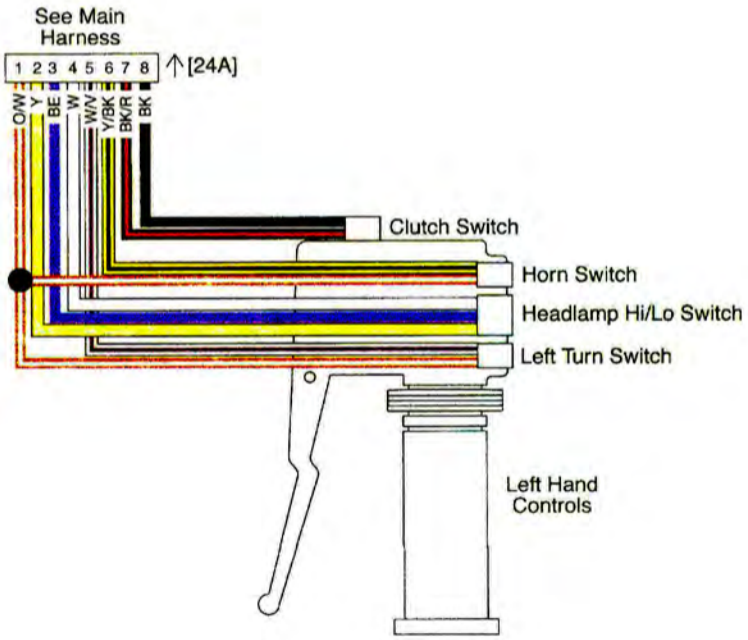
See Main
Harness
1 2 3 4 5 6 7 8
[24A]
O/W
Y
BE
W
W/V
Y/BK
BK/R
BK
Clutch Switch
Horn Switch
Headlamp Hi/Lo Switch
Left Turn Switch
Left Hand
Controls

et00216

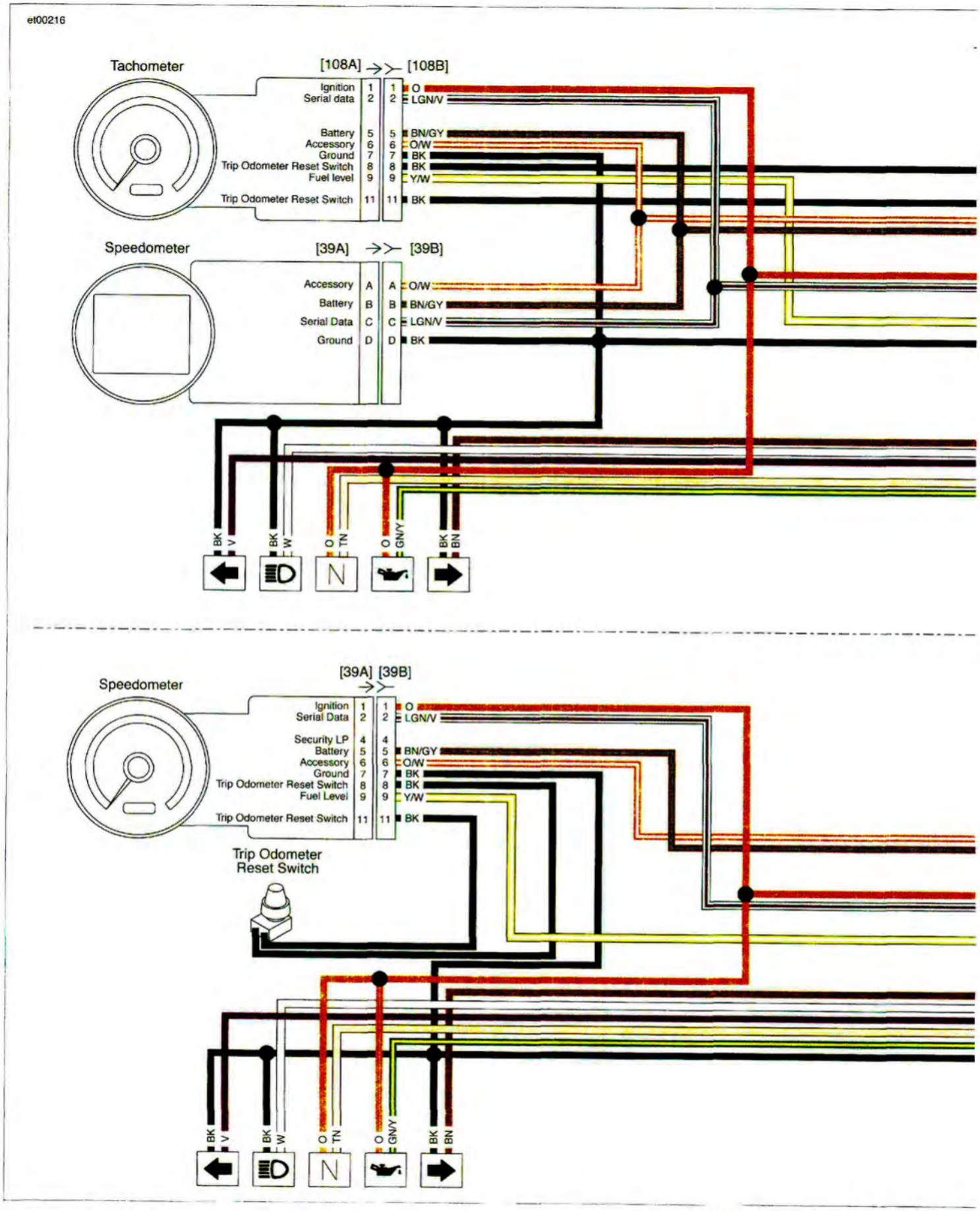

Figure B-12. Instrument, Indicator La

Figure B-12.
Instrument, Indicator Lamps, and Hand Controls: 2010 Sportster

Figure B-13.
Security Circuit: 2010 Sportster

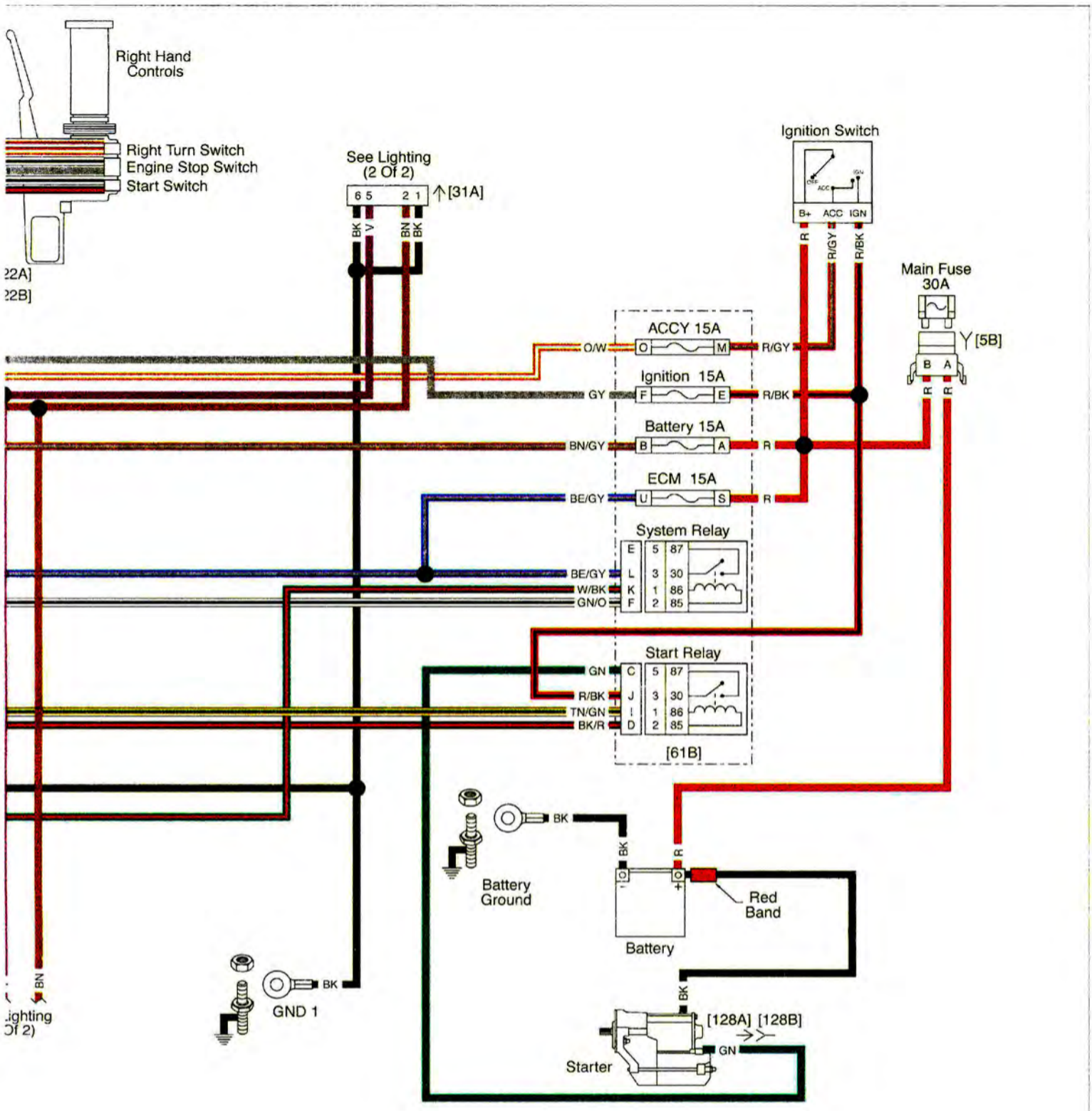

y Circuit: 2010 Sportster

et00214

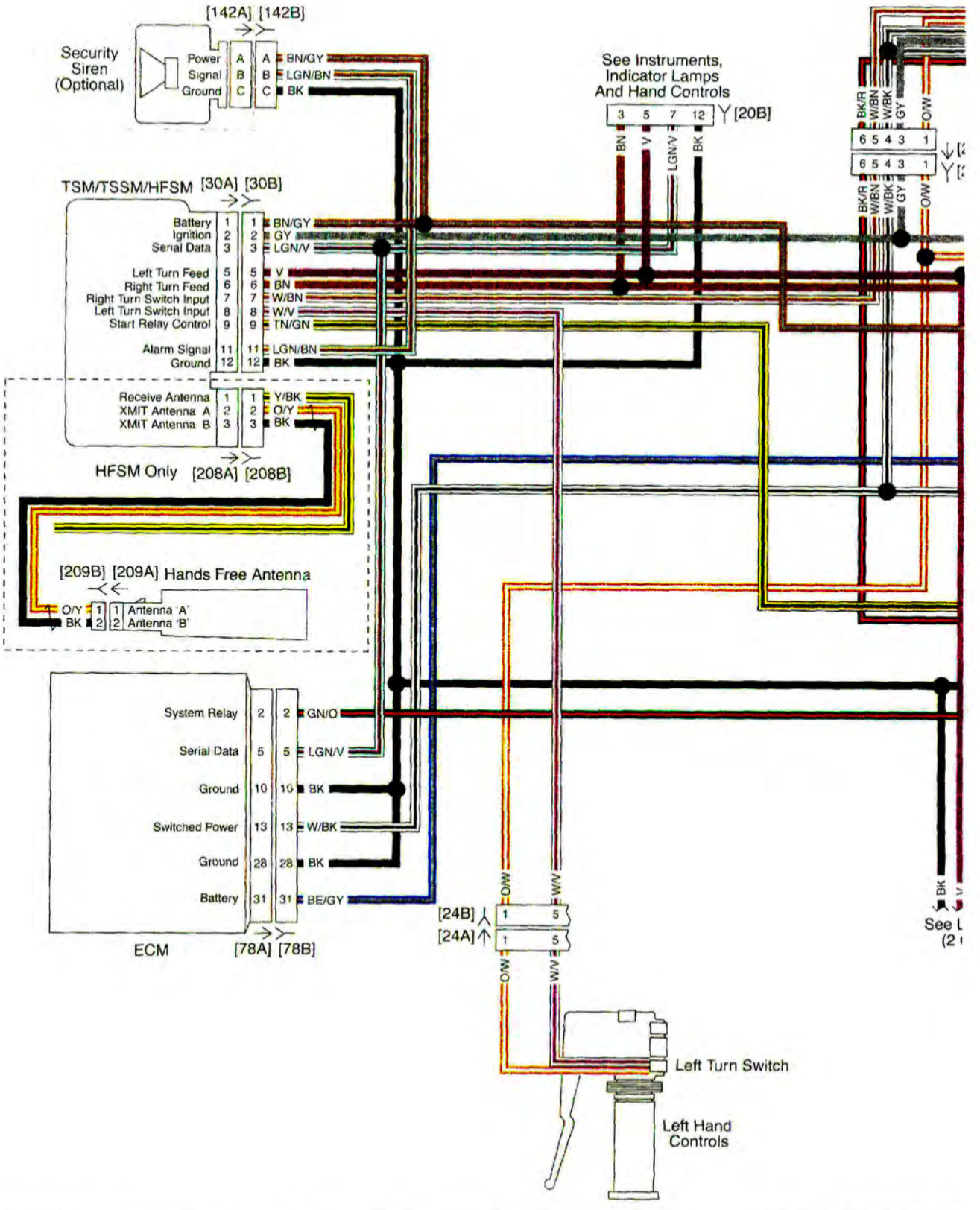

Figure B-13. Securit

Figure B-13.
Security Circuit: 2010 Sportster

SUBJECT **PAGE NO.**
C.1 METRIC CONVERSION....C-1
C.2 FLUID CONVERSIONS....C-2
C.3 TORQUE CONVERSIONS....C-3

CONVERSION TABLE

Table C-1. Metric Conversions

MILLIMETERS to INCHES (MM x 0.03937 = IN)								INCHES to MILLIMETERS (IN x 25.40 = MM)							
mm	in	mm	in	mm	in	mm	in	in	mm	in	mm	in	mm	in	mm
.1	.0039	25	.9842	58	2.283	91	3.582	.001	.025	.6	15.240	1-15/16	49.21	3-5/16	84.14
.2	.0078	26	1.024	59	2.323	92	3.622	.002	.051	5/8	15.875	2	50.80	3-3/8	85.72
.3	.0118	27	1.063	60	2.362	93	3.661	.003	.076	11/16	17.462	2-1/16	52.39	3.4	86.36
.4	.0157	28	1.102	61	2.401	94	3.701	.004	.102	.7	17.780	2.1	53.34	3-7/16	87.31
.5	.0197	29	1.142	62	2.441	95	3.740	.005	.127	3/4	19.050	2-1/8	53.97	3-1/2	88.90
.6	.0236	30	1.181	63	2.480	96	3.779	.006	.152	.8	20.320	2-3/16	55.56	3-9/16	90.49
.7	.0275	31	1.220	64	2.519	97	3.819	.007	.178	13/16	20.638	2.2	55.88	3.6	91.44
.8	.0315	32	1.260	65	2.559	98	3.858	.008	.203	7/8	22.225	2-1/4	57.15	3-5/8	92.07
.9	.0354	33	1.299	66	2.598	99	3.897	.009	.229	.9	22.860	2.3	58.42	3-11/16	93.66
1	.0394	34	1.338	67	2.638	100	3.937	.010	.254	15/16	23.812	2-5/16	58.74	3.7	93.98
2	.0787	35	1.378	68	2.677	101	3.976	1/64	.397	1	25.40	2-3/8	60.32	3-3/4	95.25
3	.1181	36	1.417	69	2.716	102	4.016	.020	.508	1-1/16	26.99	2.4	60.96	3.8	96.52
4	.1575	37	1.456	70	2.756	103	4.055	.030	.762	1.1	27.94	2-7/16	61.91	3-13/16	96.84
5	.1968	38	1.496	71	2.795	104	4.094	1/32	.794	1-1/8	28.57	2-1/2	63.50	3-7/8	98.42
6	.2362	39	1.535	72	2.834	105	4.134	.040	1.016	1-3/16	30.16	2-9/16	65.09	3.9	99.06
7	.2756	40	1.575	73	2.874	106	4.173	.050	1.270	1.2	30.48	2.6	66.04	3-15/16	100.01
8	.3149	41	1.614	74	2.913	107	4.212	.060	1.524	1-1/4	31.75	2-5/8	66.67	4	101.6
9	.3543	42	1.653	75	2.953	108	4.252	1/16	1.588	1.3	33.02	2-11/16	68.26	4-1/16	102.19
10	.3937	43	1.693	76	2.992	109	4.291	.070	1.778	1-5/16	33.34	2.7	68.58	4.1	104.14
11	.4331	44	1.732	77	3.031	110	4.331	.080	2.032	1-3/8	34.92	2-3/4	69.85	4-1/8	104.77
12	.4724	45	1.772	78	3.071	111	4.370	.090	2.286	1.4	35.56	2.8	71.12	4-3/16	106.36
13	.5118	46	1.811	79	3.110	112	4.409	.1	2.540	1-7/16	36.51	2-13/16	71.44	4.2	106.68
14	.5512	47	1.850	80	3.149	113	4.449	1/8	3.175	1-1/2	38.10	2-7/8	73.02	4-1/4	107.95
15	.5905	48	1.890	81	3.189	114	4.488	3/16	4.762	1-9/16	39.69	2.9	73.66	4.3	109.22
16	.6299	49	1.929	82	3.228	115	4.527	.2	5.080	1.6	40.64	2-15/16	74.61	4-5/16	109.54
17	.6693	50	1.968	83	3.268	116	4.567	1/4	6.350	1-5/8	41.27	3	76.20	4-3/8	111.12
18	.7086	51	2.008	84	3.307	117	4.606	.3	7.620	1-11/16	42.86	3-1/16	77.79	4.4	111.76
19	.7480	52	2.047	85	3.346	118	4.645	5/16	7.938	1.7	43.18	3.1	78.74	4-7/16	112.71
20	.7874	53	2.086	86	3.386	119	4.685	3/8	9.525	1-3/4	44.45	3-1/8	79.37	4-1/2	114.30
21	.8268	54	2.126	87	3.425	120	4.724	.4	10.160	1.8	45.72	3-3/16	80.96	4-9/16	115.89
22	.8661	55	2.165	88	3.464	121	4.764	7/16	11.112	1-13/16	46.04	3.2	81.28	4.6	116.84
23	.9055	56	2.205	89	3.504	122	4.803	1/2	12.700	1-7/8	47.62	3-1/4	82.55	4-5/8	117.47
24	.9449	57	2.244	90	3.543	123	4.842	9/16	14.288	1.9	48.26	3.3	83.82	4-11/16	119.06

UNITED STATES SYSTEM

Unless otherwise specified, all fluid volume measurements in this Service Manual are expressed in United States (U.S.) units-of-measure. See below:

- 1 pint (U.S.) = 16 fluid ounces (U.S.)
- 1 quart (U.S.) = 2 pints (U.S.) = 32 fl. oz. (U.S.)
- 1 gallon (U.S.) = 4 quarts (U.S.) = 128 fl. oz. (U.S.)

METRIC SYSTEM

Fluid volume measurements in this Service Manual include the metric system equivalents. In the metric system, 1 liter (L) = 1,000 milliliters (mL). Should you need to convert from U.S. units-of-measure to metric units-of-measure (or vice versa), refer to the following:

- fluid ounces (U.S.) x 29.574 = milliliters
- pints (U.S.) x 0.473 = liters
- quarts (U.S.) x 0.946 = liters
- gallons (U.S.) x 3.785 = liters
- milliliters x 0.0338 = fluid ounces (U.S.)
- liters x 2.114 = pints (U.S.)
- liters x 1.057 = quarts (U.S.)
- liters x 0.264 = gallons (U.S.)

BRITISH IMPERIAL SYSTEM

Fluid volume measurements in this Service Manual do not include the British Imperial (Imp.) system equivalents. The following conversions exist in the British Imperial system:

- 1 pint (Imp.) = 20 fluid ounces (Imp.)
- 1 quart (Imp.) = 2 pints (Imp.)
- 1 gallon (Imp.) = 4 quarts (Imp.)

Although the same unit-of-measure terminology as the U.S. system is used in the British Imperial (Imp.) system, the actual volume of each British Imperial unit-of-measure differs from its U.S. counterpart. The U.S. fluid ounce is larger than the British Imperial fluid ounce. However, the U.S. pint, quart, and gallon are smaller than the British Imperial pint, quart, and gallon, respectively. Should you need to convert from U.S. units to British Imperial units (or vice versa), refer to the following:

- fluid ounces (U.S.) x 1.042 = fluid ounces (Imp.)
- pints (U.S.) x 0.833 = pints (Imp.)
- quarts (U.S.) x 0.833 = quarts (Imp.)
- gallons (U.S.) x 0.833 = gallons (Imp.)
- fluid ounces (Imp.) x 0.960 = fluid ounces (U.S.)
- pints (Imp.) x 1.201 = pints (U.S.)
- quarts (Imp.) x 1.201 = quarts (U.S.)
- gallons (Imp.) x 1.201 = gallons (U.S.)

UNITED STATES SYSTEM

The U.S. units of torque, foot pounds and inch pounds, are used in this service manual. To convert units, use the following equations:

- foot pounds (ft-lbs) X 12.00000 = inch pounds (**in-lbs**).
- inch pounds (**in-lbs**) X 0.08333 = foot pounds (ft-lbs).

METRIC SYSTEM

All metric torque specifications are written in Newton-meters (Nm). To convert metric to United States units and United States to metric, use the following equations:

- Newton meters (Nm) X 0.737563 = foot pounds (ft-lbs).
- Newton meters (Nm) X 8.85085 = inch pounds (**in-lbs).**
- foot pounds (ft-lbs) X 1.35582 = Newton meters (Nm).
- inch pounds (**in-lbs**) X 0.112985 = Newton meters (Nm).

NOTES

SUBJECT **PAGE NO.**
D.1 COMPENSATING SPROCKET.....D-1

APPENDIX D COMPENSATING SPROCKET

GENERAL

Sportster models sold in the Japanese market are equipped with a rear wheel compensating sprocket.

Periodic inspection of the compensator components is recommended. This should be done any time the rear wheel is removed.

REMOVAL AND DISASSEMBLY

1. Remove rear wheel. See 2.4 WHEELS.
2. See Figure D-1. Remove final drive sprocket assembly (2) and spacer (6).
3. Pull sprocket isolators (5) from compensator bowl (7).

NOTE

Only remove compensator bowl (7) from rear wheel (8) if necessary. Bolts (3) are one-time usage only. If removed, they must be discarded and replaced with ***new*** *bolts.*

4. If necessary, remove bolts with captive washers (3) and compensator bowl from rear wheel (8). Discard bolts.

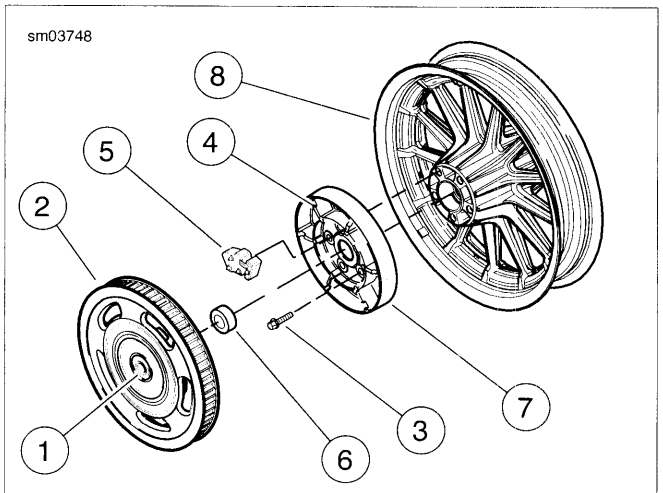

1. **Sprocket bearing (part of final drive sprocket assembly)**
2. **Final drive sprocket assembly**
3. **Bolt with captive washer (5)**
4. **Compensator bowl casting lip**
5. **Sprocket isolator (5)**
6. **Spacer**
7. **Compensator bowl**
8. **Rear wheel**

Figure D-1. Compensating Sprocket

CLEANING, INSPECTION AND REPAIR

1. See Figure D-1. Wipe inside of compensator bowl (7) and final drive sprocket (2) with a clean, damp cloth.
2. Inspect sprocket bearing (1). If bearing surface is rough or if bearing was leaking grease, replace bearing. See D.1 COMPENSATING SPROCKET, Sprocket Bearing Replacement.
3. Inspect sprocket isolators (5) for damage, deterioration, missing chunks or excessive debris beyond normal wear marks. Replace if necessary.

SPROCKET BEARING REPLACEMENT

PART NUMBER	TOOL NAME
HD-48921	REAR WHEEL COMPENSATOR SPROCKET BEARING REMOVER/INSTALLER

Removal

1. Remove rear wheel. See 2.4 WHEELS, Rear Wheel.
2. Pull sprocket from bowl.
3. See Figure D-2. Obtain the REAR WHEEL COMPENSATOR SPROCKET BEARING REMOVER/INSTALLER (Part No. HD-48921).

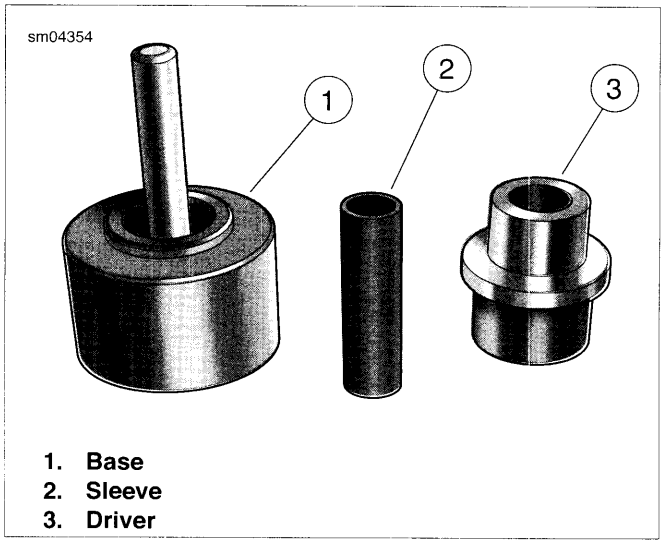

1. **Base**
2. **Sleeve**
3. **Driver**

Figure D-2. Rear Wheel Compensator Sprocket Bearing Remover/Installer (Part No. HD-48921)

4. See Figure D-3. Place parallel press blocks on deck of arbor press. Leave gap between press blocks to accommodate base pin in next step.
5. Position base (1) on press blocks with the large OD topside.
6. Slide sleeve (2) over base pin.
7. See Figure D-4. With the inboard side facing up, slide sprocket (1) over sleeve until it rests on base.
8. Slide small OD of driver (2) over sleeve until contact is made with inner race of bearing.
9. Center driver under ram and apply pressure until bearing drops into base. Disassemble tool and discard bearing.

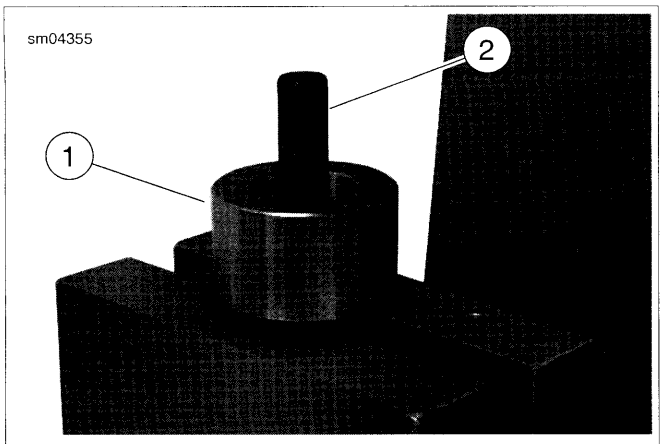

1. Base
2. Sleeve

Figure D-3. Position Tool for Bearing Removal

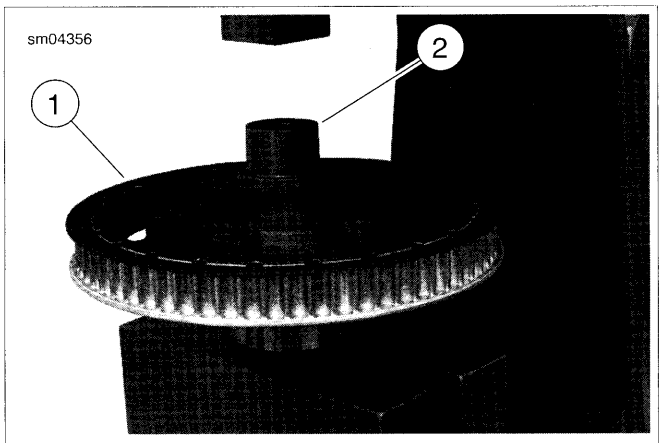

1. Sprocket (inboard side up)
2. Driver

Figure D-4. Remove Compensator Sprocket Bearing

Installation

1. See Figure D-2. Obtain the REAR WHEEL COMPENSATOR SPROCKET BEARING REMOVER/INSTALLER (Part No. HD-48921).
2. See Figure D-5. Position base (1) on deck of arbor press with the small OD topside.
3. Slide sleeve (2) over base pin.
4. Verify that sprocket bearing bore is clean and dry.
5. See Figure D-6. With the outboard side facing up, slide sprocket (1) over sleeve until it rests on base.
6. Slide bearing (2) over sleeve.
7. Slide large OD of driver (3) over sleeve until contact is made with outer race of bearing.
8. Center driver under ram and apply pressure until bearing makes firm contact with counterbore in sprocket.
9. Turn sprocket over and verify that bearing is fully seated.

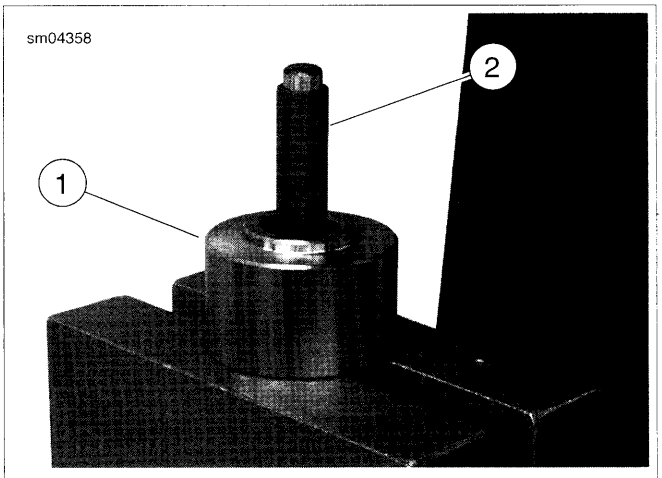

1. Base
2. Sleeve

Figure D-5. Position Tool for Bearing Installation

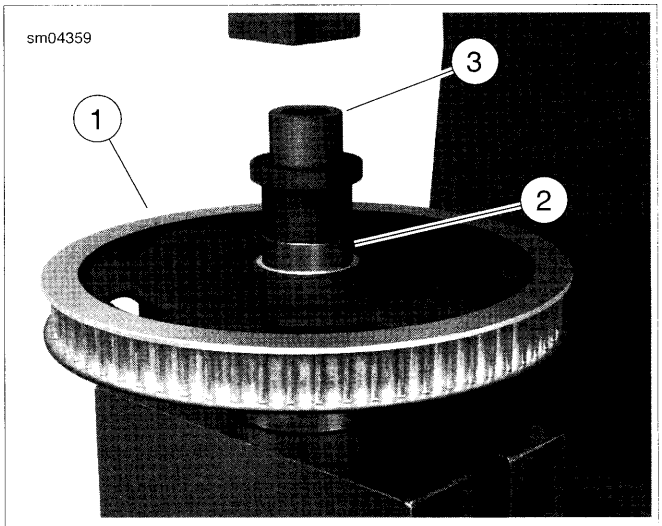

1. Sprocket (outboard side up)
2. Bearing outer race
3. Driver

Figure D-6. Install Compensator Sprocket Bearing

ASSEMBLY AND INSTALLATION

NOTES

- *See Figure D-1. Only remove compensator bowl (7) from rear wheel (8) if necessary. Bolts (3) are one-time usage only. If removed, they must be discarded and replaced with* ***new*** *bolts.*
- ***New*** *compensator bowl bolts are equipped with a LOCTITE patch on the threads. Do not apply any additional LOCTITE.*

1. See Figure D-1. If compensator bowl (7) was removed, install bowl onto rear wheel with **new** bolts with captive washers (3). Tighten bolts as follows:
   a. Tighten bolts in a star pattern (every other bolt) to 60 ft-lbs (81.3 Nm).
   b. Loosen screws 1/2 turn.
   c. Retighten all five screws in the same star pattern to 80 ft-lbs (108.5 Nm).

NOTE

Do not lubricate inside of compensator bowl (7), sprocket (2) or sprocket isolators (5) with any type of oil based lubricant. Use ONLY soapy water or window cleaner on isolators to facilitate their installation. Do not install isolators dry.

2. See Figure D-7. Lubricate isolators (1) with soapy water or window cleaner. Install isolators (1) into compensator bowl (2).

NOTE

Inner spacer can be identified by a radial groove machined into its surface. Inner spacer is also thicker than outer spacer. Make sure to install the correct spacer between compensator bowl and sprocket.

3. See Figure D-1. Install spacer (6) by placing on bowl casting lip (4).

NOTE

Use extreme caution to make sure that spacer does not fall out when assembling sprocket onto compensator bowl. If spacer is not present when rear axle is tightened, compensator sprocket and bearing will be damaged.

4. Install sprocket (2) onto compensator bowl (7).
5. Install rear wheel. See 2.4 WHEELS.

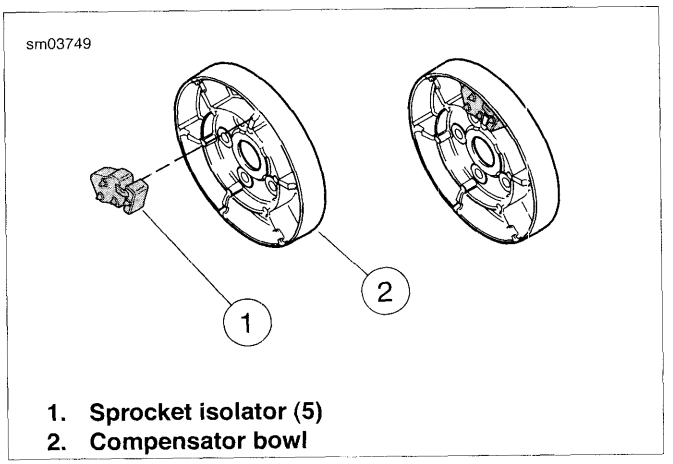

1. **Sprocket isolator (5)**
2. **Compensator bowl**

Figure D-7. Installing Sprocket Isolators

NOTES

SUBJECT **PAGE NO.**
E.1 GLOSSARY.....E-1

APPENDIX E GLOSSARY

ACRONYMS AND ABBREVIATIONS

Table E-1. Acronyms and Abbreviations

ACRONYM OR ABBREVIATION	DESCRIPTION
A	Amperes
ABS	Anti-lock braking system
Ah	Ampere-hour
AC	Alternating current
ACC	Accessory position on ignition switch
ACR	Automatic compression release
AIS	Active Intake Solenoid
AGM	Absorbed glass mat (battery)
AWG	American wire gauge
B+	Battery voltage
bar	Bar
BAS	Bank angle sensor
BTDC	Before top dead center
°C	Celsius (Centigrade)
CA	California
CAL	Calibration
CAN	Controller area network
cc	Cubic centimeters
cm	Centimeters
cm^3	Cubic centimeters
CCA	Cold cranking amps
CKP	Crankshaft position
crn	Centimeter
CCW	Counterclockwise
CW	Clockwise
DC	Direct current
DLC	Data link connector
DOM	Domestic
DTC	Diagnostic trouble code
DOT	Department of Transportation
DVOM	Digital volt ohm meter
ECM	Electronic control module
ECT	Engine coolant temperature
ECU	electronic control unit
EEPROM	Electrically erasable programmable read only memory
EFI	Electronic fuel injection
ET	Engine temperature
EVAP	Evaporative emissions control system
°F	Fahrenheit
FPS	Fuel pressure sensor
ft	Foot

Table E-1. Acronyms and Abbreviations

ACRONYM OR ABBREVIATION	DESCRIPTION
ft-lbs	Foot pounds
fl oz	Fluid ounce
g	Gram
gal	Gallon
GAWR	Gross axle weight rating
GPS	Global positioning system
GND	Ground (electrical)
GVWR	Gross vehicle weight rating
HCU	Hydraulic control unit
HDI	Harley-Davidson International
H-DSSS	Harley-Davidson smart security system
HFSM	Hands-free security module
Hg	Mercury
H02S	Heated oxygen sensor
hp	Horsepower
hr	Hour
IAC	Idle air control
IAT	Intake air temperature
IC	Instrument cluster
ID	Inside diameter
IGN	Ignition light/key switch position
in	Inch
in^3	Cubic inch
INJ PW	Injector pulse width
in-lbs	Inch pounds
JSS	Jiffy stand sensor
kg	Kilogram
km	Kilometer
kPa	Kilopascal
km/h	Kilometers per hour
kW	Kilowatt
L	Liter
lb	Pounds
LCD	Liquid crystal display
LED	Light emitting diode
mA	Milliampere
MAP	Manifold absolute pressure
max	Maximum
mi	Mile
min	Minimum
mL	Milliliter
mm	Millimeter
mph	Miles per hour
ms	millisecond

Table E-1. Acronyms and Abbreviations

ACRONYM OR ABBREVIATION	DESCRIPTION
Nm	Newton-meter
NiMH	Nickel metal hydride
N/A	Not applicable
O2	Oxygen
OD	Outside diameter
OEM	Original equipment manufacturer
oz	Ounce
P&A	Parts and Accessories
Part No.	Part number
PIN	Personal identification number
psi	Pounds per square inch
PWM signal	Pulse width modulated signal
qt	Quart
RCM	Reverse control module
RES	Reserve mark on fuel supply valve
RPM	Revolutions per minute
s	seconds
SCFH	Cubic feet per hour at standard conditions
TCA	Throttle control actuator
TDC	Top dead center
TGS	Twist grip sensor
TMAP	Intake air temperature/manifold absolute pressure
TPS	Throttle position sensor
TSM	Turn signal module
TSSM	Turn signal/security module
V	Volt
VAC	Volts of alternating current
VDC	Volts of direct current
VIN	Vehicle identification number
VSS	Vehicle speed sensor
W	Watt
WSS	Wheel speed sensor

NOTES

Tools Used in This Manual

PART NUMBER	TOOL NAME	NOTES
94681-80	SPOKE NIPPLE WRENCH	2.8 CHECKING AND TRUING WHEELS, Truing Wheels
98716-87A	STORAGE COVER	1.30 STORAGE, Placing in Storage
98960-97	SILVER GRADE ANTI-SEIZE	2.36 JIFFY STAND, Cleaning and Lubrication
99863-01A	GLOBAL BATTERY CHARGER	1.17 BATTERY MAINTENANCE, Storage
A-157C	SNAP-ON BUSHING DRIVER SET	5.13 TRANSMISSION RIGHT CASE BEARINGS, Installation
B-35758-52A	CUTTER PILOT	3.21 CYLINDER HEAD, Refacing Valve Seats
B-42571	FORK SEAL DRIVER	2.21 FRONT FORK: XR MODELS, Assembly: XR 1200
B-42571	FORK SEAL DRIVER	2.21 FRONT FORK: XR MODELS, Assembly: XR 1200
B-42571	FORK SEAL DRIVER AND DUST BOOT INSTALLER	2.21 FRONT FORK: XR MODELS, Assembly: XR 1200X
B-43895-1	TRANSMISSION REMOVER	5.10 TRANSMISSION REMOVAL AND DISASSEMBLY, Transmission Removal From Left Crankcase
B-43985	TRANSMISSION REMOVAL AND INSTALLATION TOOL	5.15 TRANSMISSION INSTALLATION, Installation
B-43985-4	COUNTERSHAFT GUIDE	5.15 TRANSMISSION INSTALLATION, Installation
B-45520	GEAR DETENT ASSEMBLY AID	3.18 BOTTOM END OVERHAUL: ASSEMBLY, Crankcase
B-45520	GEAR DETENT ASSEMBLY AID	5.15 TRANSMISSION INSTALLATION, Assembling Crankcases
B-45523	VALVE GUIDE REAMER	3.21 CYLINDER HEAD, Replacing Valve Guides
B-45524	VALVE GUIDE REMOVER/INSTALLER	3.21 CYLINDER HEAD, Replacing Valve Guides
B-45525	VALVE GUIDE HONE	3.21 CYLINDER HEAD, Cleaning and Inspection
B-45525	VALVE GUIDE HONE	3.21 CYLINDER HEAD, Replacing Valve Guides
B-45655	CRANKCASE BEARING REMOVER/INSTALLER	3.18 BOTTOM END OVERHAUL: ASSEMBLY, Crankcase
B-45655, HD-42720-2, HD-46663	CRANKCASE BEARING REMOVER/INSTALLER WITH ADAPTER	3.23 CRANKCASE, Disassembly
B-45676-A	SPROCKET SHAFT SEAL/SPACER INSTALLER	3.18 BOTTOM END OVERHAUL: ASSEMBLY, Crankcase
B-45847	CROSS PLATE	5.12 MAIN DRIVE GEAR AND BEARING, Removal
B-45847	CROSS PLATE	5.12 MAIN DRIVE GEAR AND BEARING, Installation
B-45926	CLUTCH SHELL BEARING REMOVER/INSTALLER	5.6 PRIMARY DRIVE AND CLUTCH: XR MODELS, Clutch Shell Bearing Replacement
B-59000B	OIL LEVEL GAUGE	2.21 FRONT FORK: XR MODELS, Assembly: XR 1200X
C2050.1AM	SPANNER WRENCH	1.20 SHOCK ABSORBER ADJUSTMENT, Shock Absorber Suspension Adjustment: XR 1200X
GA500A	SNAP-ON TERMINAL PICK	A.2 AUTOFUSE ELECTRICAL CONNECTORS, Autofuse Connector Repair
HD-25070	HEAT GUN	4.9 INDUCTION MODULE: XL MODELS, Disassembly
HD-25070	ROBINAIR HEAT GUN	6.36 HANDLEBAR SWITCH ASSEMBLIES, Repair Procedures
HD-25070	ROBINAIR HEAT GUN	A.16 SEALED SPLICE CONNECTORS, Sealed Splice Connector Repair
HD-33223-1	CYLINDER COMPRESSION GAUGE	3.7 TROUBLESHOOTING, Compression Test
HD-33416	UNIVERSAL DRIVER HANDLE	2.22 FORK STEM AND BRACKET ASSEMBLY, Cleaning, Inspection and Repair
HD-33446-86	TORQUE PLATE BOLTS	3.22 CYLINDER AND PISTON, Cleaning, Inspection and Repair

Tools Used in This Manual

PART NUMBER	TOOL NAME	NOTES
HD-33446-B	CYLINDER TORQUE PLATES	3.22 CYLINDER AND PISTON, Cleaning, Inspection and Repair
HD-34623-C	PISTON PIN LOCK RING REMOVER/INSTALLER	3.15 TOP END OVERHAUL: DISASSEMBLY, Cylinder and Piston
HD-34623-C	PISTON PIN LOCK RING REMOVER/INSTALLER	3.16 TOP END OVERHAUL: ASSEMBLY, Piston and Cylinder
HD-34736-B	VALVE SPRING COMPRESSOR	3.21 CYLINDER HEAD, Disassembly
HD-34736-B	VALVE SPRING COMPRESSOR	3.21 CYLINDER HEAD, Assembly
HD-34751	VALVE GUIDE CLEANING BRUSH	3.21 CYLINDER HEAD, Cleaning and Inspection
HD-34751	VALVE GUIDE CLEANING BRUSH	3.21 CYLINDER HEAD, Replacing Valve Guides
HD-34751	VALVE GUIDE CLEANING BRUSH	3.21 CYLINDER HEAD, Refacing Valve Seats
HD-34902-7	END CAP	3.23 CRANKCASE, Fitting Pinion Bearings
HD-34902-7	END CAP	3.23 CRANKCASE, Fitting Pinion Bearings
HD-35102	WRIST PIN BUSHING HONE	3.22 CYLINDER AND PISTON, Connecting Rod Bushings
HD-35316-11	RECEIVER CUP	5.12 MAIN DRIVE GEAR AND BEARING, Removal
HD-35316-12	INSTALLER CUP	5.12 MAIN DRIVE GEAR AND BEARING, Installation
HD-35316-13	BEARING DRIVER	5.12 MAIN DRIVE GEAR AND BEARING, Removal
HD-35316-13	BEARING DRIVER	5.12 MAIN DRIVE GEAR AND BEARING, Installation
HD-35316-4A	8 IN. BOLT	5.12 MAIN DRIVE GEAR AND BEARING, Removal
HD-35316-4A	8 IN. BOLT	5.12 MAIN DRIVE GEAR AND BEARING, Removal
HD-35316-4A	8 IN. BOLT	5.12 MAIN DRIVE GEAR AND BEARING, Installation
HD-35316-4A	8 IN. BOLT	5.12 MAIN DRIVE GEAR AND BEARING, Installation
HD-35316-7	WASHER	5.12 MAIN DRIVE GEAR AND BEARING, Removal
HD-35316-7	WASHER	5.12 MAIN DRIVE GEAR AND BEARING, Installation
HD-35316-8	BEARING DRIVER	5.12 MAIN DRIVE GEAR AND BEARING, Installation
HD-35316-9	BEARING DRIVER	5.12 MAIN DRIVE GEAR AND BEARING, Removal
HD-35316-C	MAIN DRIVE GEAR REMOVER AND INSTALLER SET	5.12 MAIN DRIVE GEAR AND BEARING, Installation
HD-35316-D	MAIN DRIVE GEAR REMOVER AND INSTALLER SET	5.12 MAIN DRIVE GEAR AND BEARING, Removal
HD-35381A	BELT TENSION GAUGE	1.15 DRIVE BELT AND SPROCKETS, Checking Drive Belt Deflection
HD-35457	BLACK LIGHT LEAK DETECTOR	1.31 TROUBLESHOOTING, Lubrication System
HD-35667-A	CYLINDER LEAKDOWN TESTER	3.7 TROUBLESHOOTING, Cylinder Leakage Test
HD-35758-C	NEWAY VALVE SEAT CUTTER SET	3.21 CYLINDER HEAD, Refacing Valve Seats
HD-36583	FORK SEAL AND BUSHING INSTALLATION TOOL	2.20 FRONT FORK: XL MODELS, Assembly
HD-38125-6	PACKARD TERMINAL CRIMP TOOL	A.13 PACKARD METRI-PACK TERMINALS, Metri-Pack Terminal Crimps
HD-38125-7	PACKARD TERMINAL CRIMPER	A.8 DEUTSCH MINI TERMINAL REPAIR, Deutsch Mini Terminal Crimps
HD-38125-7	PACKARD TERMINAL CRIMPER	A.13 PACKARD METRI-PACK TERMINALS, Metri-Pack Terminal Crimps

Tools Used in This Manual

PART NUMBER	TOOL NAME	NOTES
HD-38125-8	PACKARD CRIMPING TOOL	A.13 PACKARD METRI-PACK TERMINALS, Metri-Pack Terminal Crimps
HD-38125-8	PACKARD CRIMPING TOOL	A.16 SEALED SPLICE CONNECTORS, Sealed Splice Connector Repair
HD-38362	SPROCKET LOCKING LINK (883 CC)	5.5 PRIMARY DRIVE AND CLUTCH: XL MODELS, Removal
HD-38362	SPROCKET LOCKING LINK (883 CC)	5.5 PRIMARY DRIVE AND CLUTCH: XL MODELS, Installation
HD-38362	SPROCKET LOCKING LINK (883 CC)	5.5 PRIMARY DRIVE AND CLUTCH: XL MODELS, Installation
HD-38362	SPROCKET LOCKING LINK	5.6 PRIMARY DRIVE AND CLUTCH: XR MODELS, Removal
HD-38362	SPROCKET LOCKING LINK	5.6 PRIMARY DRIVE AND CLUTCH: XR MODELS, Installation
HD-38515-91	CLUTCH SPRING FORCING SCREW	5.5 PRIMARY DRIVE AND CLUTCH: XL MODELS, Disassembly
HD-38515-91	CLUTCH SPRING FORCING SCREW	5.5 PRIMARY DRIVE AND CLUTCH: XL MODELS, Assembly
HD-38515-91	CLUTCH SPRING FORCING SCREW	5.6 PRIMARY DRIVE AND CLUTCH: XR MODELS, Disassembly
HD-38515-A	SPRING COMPRESSING TOOL	5.5 PRIMARY DRIVE AND CLUTCH: XL MODELS, Disassembly
HD-38515-A	SPRING COMPRESSING TOOL	5.5 PRIMARY DRIVE AND CLUTCH: XL MODELS, Assembly
HD-38515-A	SPRING COMPRESSING TOOL	5.6 PRIMARY DRIVE AND CLUTCH: XR MODELS, Disassembly
HD-38515-A	SPRING COMPRESSING TOOL	5.6 PRIMARY DRIVE AND CLUTCH: XR MODELS, Assembly
HD-38871	CAMSHAFT BUSHING REAMER PILOT	3.20 GEARCASE COVER AND CAM GEARS, Bushing Reaming: XL Only
HD-39301-A	STEERING HEAD BEARING RACE REMOVAL TOOL	2.22 FORK STEM AND BRACKET ASSEMBLY, Cleaning, Inspection and Repair
HD-39302	STEERING HEAD BEARING RACE INSTALLATION TOOL	2.22 FORK STEM AND BRACKET ASSEMBLY, Assembly and Installation
HD-39621-28	PIN TERMINAL REMOVER	6.20 TAIL LAMP: ALL MODELS EXCEPT XL 883N/XL 1200N, Base Replacement
HD-39782-A	CYLINDER HEAD SUPPORT STAND	3.21 CYLINDER HEAD, Replacing Valve Guides
HD-39786	CYLINDER HEAD HOLDING FIXTURE	3.21 CYLINDER HEAD, Replacing Valve Guides
HD-39786	CYLINDER HEAD HOLDING FIXTURE	3.21 CYLINDER HEAD, Refacing Valve Seats
HD-39847	REAMER T-HANDLE	3.21 CYLINDER HEAD, Replacing Valve Guides
HD-39964	REAMER LUBRICANT	3.21 CYLINDER HEAD, Replacing Valve Guides
HD-39964	REAMER LUBRICANT	3.22 CYLINDER AND PISTON, Connecting Rod Bushings
HD-39965-A	DEUTSCH TERMINAL CRIMP TOOL	A.6 DEUTSCH STANDARD TERMINAL REPAIR, Deutsch Standard Terminal Crimps
HD-39969	ULTRA TORCH UT-100	6.15 IGNITION AND LIGHT SWITCH, Installation
HD-39969	ULTRA TORCH UT-100	6.36 HANDLEBAR SWITCH ASSEMBLIES, Repair Procedures

Tools Used in This Manual

PART NUMBER	TOOL NAME	NOTES
HD-39969	ULTRA TORCH UT-100	A.16 SEALED SPLICE CONNECTORS, Sealed Splice Connector Repair
HD-41177	FORK HOLDING TOOL	2.21 FRONT FORK: XR MODELS, Disassembly: XR 1200
HD-41177	FORK TUBE HOLDER	2.21 FRONT FORK: XR MODELS, Disassembly: XR 1200
HD-41177	FORK HOLDING TOOL	2.21 FRONT FORK: XR MODELS, Disassembly: XR 1200
HD-41177	FORK HOLDING TOOL	2.21 FRONT FORK: XR MODELS, Assembly: XR 1200
HD-41177	FORK HOLDING TOOL	2.21 FRONT FORK: XR MODELS, Assembly: XR 1200
HD-41177	FORK HOLDING TOOL	2.21 FRONT FORK: XR MODELS, Assembly: XR 1200
HD-41177	FORK HOLDING TOOL	2.21 FRONT FORK: XR MODELS, Assembly: XR 1200X
HD-41182	FUEL PRESSURE GAUGE	4.18 FUEL PRESSURE TEST, Testing
HD-41183	HEAT SHIELD ATTACHMENT	6.36 HANDLEBAR SWITCH ASSEMBLIES, Repair Procedures
HD-41183	HEAT SHIELD ATTACHMENT	A.16 SEALED SPLICE CONNECTORS, Sealed Splice Connector Repair
HD-41417	PROPANE ENRICHMENT KIT	4.19 INTAKE LEAK TEST, Leak Tester
HD-41475	DEUTSCH CONNECTOR SERVICE KIT	A.5 DEUTSCH ELECTRICAL CONNECTORS, Deutsch Connector Repair
HD-41475-100	FLAT BLADE L-HOOK	A.5 DEUTSCH ELECTRICAL CONNECTORS, Deutsch Connector Repair
HD-41609	AMP MULTILOCK CRIMPER	A.1 AMP MULTILOCK CONNECTORS, AMP Multilock Connector Repair
HD-41609	AMP MULTILOCK CRIMPER	A.1 AMP MULTILOCK CONNECTORS, AMP Multilock Connector Repair
HD-41675	OIL PRESSURE SENDING UNIT WRENCH	6.33 OIL PRESSURE SWITCH, Removal
HD-42310-45	ENGINE SUPPORT CRADLE	5.9 CASE DISASSEMBLY FOR TRANSMISSION REMOVAL, Engine Removal and Disassembly
HD-42310-45	ENGINE CRADLE	5.16 TRANSMISSION SPROCKET, Removal
HD-42311 OR HD-44067-A	HARLEY-DAVIDSON OIL FILTER WRENCH	1.6 ENGINE OIL AND FILTER, Changing Oil and Filter
HD-42320-A	PISTON PIN REMOVER	3.15 TOP END OVERHAUL: DISASSEMBLY, Cylinder and Piston
HD-42322	PISTON SUPPORT PLATE	3.15 TOP END OVERHAUL: DISASSEMBLY, Cylinder and Piston
HD-42322	PISTON SUPPORT PLATE	3.16 TOP END OVERHAUL: ASSEMBLY, Piston and Cylinder
HD-42326-A	CRANKSHAFT GUIDE TOOL	5.15 TRANSMISSION INSTALLATION, Assembling Crankcases
HD-42326-B	CRANKSHAFT GUIDE TOOL	3.18 BOTTOM END OVERHAUL: ASSEMBLY, Crankcase
HD-42579-6	SPROCKET SHAFT ADAPTER	3.18 BOTTOM END OVERHAUL: ASSEMBLY, Crankcase
HD-42579-A	SPROCKET SHAFT BEARING/SEAL INSTALLATION TOOL	3.18 BOTTOM END OVERHAUL: ASSEMBLY, Crankcase
HD-42682	BREAKOUT BOX	6.41 H-DSSS ACTUATION, Power Disruption and Configuring

Tools Used in This Manual

PART NUMBER	TOOL NAME	NOTES
HD-42720-2	CRANKCASE BEARING REMOVER/INSTALLER BASE	3.18 BOTTOM END OVERHAUL: ASSEMBLY, Crankcase
HD-42879	ELECTRICAL CRIMPER TOOL	A.7 DEUTSCH SOLID BARREL MINI TERMINAL REPAIR, Deutsch Solid Barrel Terminal Crimps
HD-43984	CRANKSHAFT LOCKING TOOL	3.18 BOTTOM END OVERHAUL: ASSEMBLY, Cam Gears and Gearcase Cover: XL Models
HD-44060-C	WHEEL BEARING INSTALLER/REMOVER	2.4 WHEELS, Sealed Wheel Bearings
HD-44061	FUEL PRESSURE GAUGE ADAPTER	4.18 FUEL PRESSURE TEST, Testing
HD-45928	PACKARD MICRO-64 TERMINAL REMOVER	A.15 PACKARD MICRO-64 CONNECTORS, Packard Micro-64 Connector Repair
HD-45929	CRIMPING TOOL	6.6 SPEEDOMETER: XL SINGLE GAUGE MODELS EXCEPT XL 883C/XL 1200C, Installation
HD-45929	PACKARD MICRO-64 TERMINAL CRIMPER	A.15 PACKARD MICRO-64 CONNECTORS, Packard Micro-64 Connector Repair
HD-45966	FRONT FORK COMPRESSOR	2.21 FRONT FORK: XR MODELS, Disassembly: XR 1200
HD-45966	FRONT FORK COMPRESSOR	2.21 FRONT FORK: XR MODELS, Disassembly: XR 1200
HD-45966	FRONT FORK COMPRESSOR	2.21 FRONT FORK: XR MODELS, Assembly: XR 1200
HD-45967	SHOP DOLLY	2.28 REAR ENGINE MOUNT/ISOLATOR, Removal
HD-45967	SHOP DOLLY	3.12 REMOVING ENGINE FROM CHASSIS, Procedure: XL Models
HD-45967	SHOP DOLLY	3.12 REMOVING ENGINE FROM CHASSIS, Procedure: XR Models
HD-45967	SHOP DOLLY	3.13 INSTALLING ENGINE IN CHASSIS, Procedure: XL Models
HD-45967	SHOP DOLLY	3.13 INSTALLING ENGINE IN CHASSIS, Procedure: XR Models
HD-45968	FAT JACK	2.4 WHEELS, Rear Wheel
HD-45968	FAT JACK	2.27 FRONT ENGINE MOUNT/ISOLATOR, Removal
HD-45968	FAT JACK	2.28 REAR ENGINE MOUNT/ISOLATOR, Installation
HD-45968	FAT JACK	3.12 REMOVING ENGINE FROM CHASSIS, Procedure: XL Models
HD-45968	FAT JACK	3.12 REMOVING ENGINE FROM CHASSIS, Procedure: XR Models
HD-45968	FAT JACK	3.13 INSTALLING ENGINE IN CHASSIS, Procedure: XL Models
HD-45968	FAT JACK	3.13 INSTALLING ENGINE IN CHASSIS, Procedure: XR Models
HD-46281	BEARING REMOVER/INSTALLER TOOL	2.24 REAR FORK, Disassembly
HD-46282	TRANSMISSION SPROCKET HOLDING TOOL	5.16 TRANSMISSION SPROCKET, Installation
HD-46282-1A	SPROCKET HOLDING TOOL ADAPTER	5.16 TRANSMISSION SPROCKET, Removal
HD-46282-1A	SPROCKET HOLDING TOOL ADAPTER	5.16 TRANSMISSION SPROCKET, Installation
HD-46282-1A	SPROCKET HOLDING TOOL ADAPTER	5.16 TRANSMISSION SPROCKET, Installation
HD-46282-A	TRANSMISSION SPROCKET HOLDING TOOL SET	5.16 TRANSMISSION SPROCKET, Removal

Tools Used in This Manual

PART NUMBER	TOOL NAME	NOTES
HD-46283	SPROCKET LOCKING LINK (1200 CC)	5.5 PRIMARY DRIVE AND CLUTCH: XL MODELS, Removal
HD-46283	PRIMARY DRIVE LOCKING TOOL (1200 CC)	5.5 PRIMARY DRIVE AND CLUTCH: XL MODELS, Installation
HD-46283	PRIMARY DRIVE LOCKING TOOL (1200 CC)	5.5 PRIMARY DRIVE AND CLUTCH: XL MODELS, Installation
HD-46283	SPROCKET LOCKING LINK (JAPAN MODELS)	5.6 PRIMARY DRIVE AND CLUTCH: XR MODELS, Installation
HD-46284	ENGINE HOOK	3.12 REMOVING ENGINE FROM CHASSIS, Procedure: XL Models
HD-46284	ENGINE HOOK	3.12 REMOVING ENGINE FROM CHASSIS, Procedure: XR Models
HD-46284	ENGINE HOOK	3.13 INSTALLING ENGINE IN CHASSIS, Procedure: XR Models
HD-46285	TRANSMISSION ASSEMBLY FIXTURE	5.15 TRANSMISSION INSTALLATION, Installation
HD-46287	LAPPING TOOL ADAPTER	3.23 CRANKCASE, Lapping Engine Main Bearing Races
HD-46288	MAINSHAFT LOCK NUT WRENCH	5.16 TRANSMISSION SPROCKET, Removal
HD-46288	MAINSHAFT LOCK NUT WRENCH	5.16 TRANSMISSION SPROCKET, Installation
HD-46503	OIL LINE REMOVER, 1/2 IN.	3.14 PRECISION COOLING SYSTEM: XR MODELS, General
HD-46503	OIL LINE REMOVER, 1/2 IN.	3.14 PRECISION COOLING SYSTEM: XR MODELS, Oil Pump Lines
HD-47114	CONSOLE ALIGNMENT RING	4.5 FUEL TANK: XL MODELS, Console Replacement
HD-47852	INNER FORK NUT REMOVER/INSTALLER	2.21 FRONT FORK: XR MODELS, Disassembly: XR 1200
HD-47852	INNER FORK NUT REMOVER/INSTALLER	2.21 FRONT FORK: XR MODELS, Assembly: XR 1200
HD-47855	INNER/OUTER MAIN DRIVE GEAR NEEDLE BEARING INSTALLATION TOOL: XL MODELS	5.12 MAIN DRIVE GEAR AND BEARING, Assembly
HD-47856	MAIN DRIVE GEAR SEAL INSTALLER KIT	5.12 MAIN DRIVE GEAR AND BEARING, Installation
HD-47856-1	INSTALLER	5.12 MAIN DRIVE GEAR AND BEARING, Installation
HD-47856-2	PILOT	5.12 MAIN DRIVE GEAR AND BEARING, Installation
HD-47856-4	ADAPTER	5.12 MAIN DRIVE GEAR AND BEARING, Installation
HD-47856-5	LARGE NUT	5.12 MAIN DRIVE GEAR AND BEARING, Installation
HD-48114	MOLEX ELECTRICAL CONNECTOR TERMINAL REMOVER	A.9 MOLEX CONNECTORS, Molex Connector Repair
HD-48116-A	TEMPERATURE SENSOR SOCKET	4.8 ENGINE TEMPERATURE (ET) SENSOR, Removal
HD-48119	ELECTRICAL CRIMP TOOL	A.9 MOLEX CONNECTORS, Crimp Terminal to Lead
HD-48262	OXYGEN SENSOR SOCKET	4.13 OXYGEN SENSOR, Removal
HD-48287	TRIPLE TREE WEDGE TOOL	2.21 FRONT FORK: XR MODELS, Removal
HD-48287	TRIPLE TREE WEDGE TOOL	2.21 FRONT FORK: XR MODELS, Installation
HD-48386	OIL PRESSURE SENDING UNIT WRENCH	3.4 OIL PRESSURE, Checking Oil Pressure
HD-48643	INNER/OUTER MAIN DRIVE GEAR NEEDLE BEARING INSTALLATION TOOL: XR MODELS	5.12 MAIN DRIVE GEAR AND BEARING, Assembly

Tools Used in This Manual

PART NUMBER	TOOL NAME	NOTES
HD-48645	SPANNER WRENCH	1.20 SHOCK ABSORBER ADJUSTMENT, Shock Absorber Preload Adjustment: Sportster Models Except XR 1200X
HD-48647	OXYGEN SENSOR SOCKET	4.13 OXYGEN SENSOR, Removal
HD-48650	DIGITAL TECHNICIAN II	4.18 FUEL PRESSURE TEST, General
HD-48650	DIGITAL TECHNICIAN II	6.41 H-DSSS ACTUATION, Fob Assignment
HD-48650	DIGITAL TECHNICIAN II	6.42 TSM/HFSM: PASSWORD LEARN, Password Learning
HD-48856	AXLE ALIGNMENT PLUG SET	1.16 WHEEL ALIGNMENT, Wheel Alignment
HD-48921	REAR WHEEL COMPENSATOR SPROCKET BEARING REMOVER/INSTALLER	D.1 COMPENSATING SPROCKET, Sprocket Bearing Replacement
HD-48985	SPOKE TORQUE WRENCH	1.11 TIRES AND WHEELS, Wheel Spokes
HD-48985	SPOKE TORQUE WRENCH	2.8 CHECKING AND TRUING WHEELS, Truing Wheels
HD-49096	OIL LINE REMOVER, 3/8 IN.	3.14 PRECISION COOLING SYSTEM: XR MODELS, General
HD-50083	ROD CASE GUIDE SOCKET	2.21 FRONT FORK: XR MODELS, Disassembly: XR 1200X
HD-50083	ROD CASE GUIDE SOCKET	2.21 FRONT FORK: XR MODELS, Assembly: XR 1200X
HD-50084	FORK CAP WRENCH	2.21 FRONT FORK: XR MODELS, Disassembly: XR 1200X
HD-50084	FORK CAP WRENCH	2.21 FRONT FORK: XR MODELS, Assembly: XR 1200X
HD-59000B	OIL LEVEL GAUGE	2.21 FRONT FORK: XR MODELS, Assembly: XR 1200
HD-59000B	OIL LEVEL GAUGE	2.21 FRONT FORK: XR MODELS, Assembly: XR 1200
HD-59000-B	OIL LEVEL GAUGE	2.20 FRONT FORK: XL MODELS, Assembly
HD-94681-80	SPOKE NIPPLE WRENCH	1.11 TIRES AND WHEELS, Wheel Spokes
HD-94681-80	SPOKE NIPPLE WRENCH	1.11 TIRES AND WHEELS, Wheel Spokes
HD-94681-80	SPOKE WRENCH	2.8 CHECKING AND TRUING WHEELS, Setting Rim Offset
HD-94800-26A	CONNECTING ROD BUSHING REAMER	3.22 CYLINDER AND PISTON, Connecting Rod Bushings
HD-94803-67	REAR INTAKE CAM GEAR BUSHING REAMER	3.20 GEARCASE COVER AND CAM GEARS, Bushing Reaming: XL Only
HD-94804-57	ROCKER ARM BUSHING REAMER	3.21 CYLINDER HEAD, Replacing Rocker Arm Bushings
HD-94812-1	PINION SHAFT BUSHING REAMER	3.20 GEARCASE COVER AND CAM GEARS, Bushing Reaming: XL Only
HD-94812-87	PINION SHAFT BUSHING REAMER	3.20 GEARCASE COVER AND CAM GEARS, Bushing Reaming: XL Only
HD-94820-75A	SPANNER WRENCH	1.20 SHOCK ABSORBER ADJUSTMENT, Shock Absorber Preload Adjustment: Sportster Models Except XR 1200X
HD-95637-46B	BEARING RACE PULLER	5.12 MAIN DRIVE GEAR AND BEARING, Disassembly
HD-95760-69A	BUSHING AND BEARING PULLER	3.20 GEARCASE COVER AND CAM GEARS, Bushing Inspection and Removal: XL Only
HD-95760-69A	BUSHING AND BEARING PULLER	5.13 TRANSMISSION RIGHT CASE BEARINGS, Removal

Tools Used in This Manual

PART NUMBER	TOOL NAME	NOTES
HD-95765-69A	1/2 IN. COLLET	5.13 TRANSMISSION RIGHT CASE BEARINGS, Removal
HD-95952-33C	CONNECTING ROD CLAMPING TOOL	3.22 CYLINDER AND PISTON, Connecting Rod Bushings
HD-95970-32D	CONNECTING ROD BUSHING REMOVER/INSTALLER	3.22 CYLINDER AND PISTON, Connecting Rod Bushings
HD-96333-51E	PISTON RING COMPRESSOR	3.16 TOP END OVERHAUL: ASSEMBLY, Piston and Cylinder
HD-96710-40C	CRANKCASE MAIN BEARING LAPPING TOOL	3.23 CRANKCASE, Lapping Engine Main Bearing Races
HD-96718-87	CRANKCASE MAIN BEARING LAP	3.23 CRANKCASE, Lapping Engine Main Bearing Races
HD-96796-47	VALVE SPRING TESTER	3.21 CYLINDER HEAD, Cleaning and Inspection
HD-96921-125	OIL PRESSURE GAUGE ADAPTER	3.4 OIL PRESSURE, Checking Oil Pressure
HD-96921-52D	OIL PRESSURE TEST GAUGE KIT	3.4 OIL PRESSURE, Checking Oil Pressure
HD-96925-58	OIL PRESSURE GAUGE ADAPTER	3.4 OIL PRESSURE, Checking Oil Pressure
HD-99500-80	WHEEL TRUING AND BALANCING STAND	2.8 CHECKING AND TRUING WHEELS, Checking Wheel Runout
HD-99500-80	WHEEL TRUING STAND	2.8 CHECKING AND TRUING WHEELS, Truing Wheels
HD-99500-80	WHEEL TRUING STAND	2.8 CHECKING AND TRUING WHEELS, Truing Wheels
J-21686-12	FORCING SCREW	3.23 CRANKCASE, Fitting Pinion Bearings
J-21686-12	FORCING SCREW	3.23 CRANKCASE, Fitting Pinion Bearings
J-5586-A	TRANSMISSION SHAFT RETAINING RING PLIERS	3.18 BOTTOM END OVERHAUL: ASSEMBLY, Crankcase
J-5586-A	TRANSMISSION SHAFT RETAINING RING PLIERS	3.23 CRANKCASE, Disassembly
J-5586-A	TRANSMISSION SHAFT RETAINING RING PLIERS	5.10 TRANSMISSION REMOVAL AND DISASSEMBLY, Mainshaft Disassembly
J-7830-5	BRIDGE	3.23 CRANKCASE, Fitting Pinion Bearings
J-7830-5	BRIDGE	3.23 CRANKCASE, Fitting Pinion Bearings
PFSX916	SNAP-ON WRENCH	4.14 EXHAUST SYSTEM: XL MODELS, General
PR-36	SNAP-ON SNAP RING PLIERS	5.14 TRANSMISSION LEFT CASE BEARINGS, Removal
SNAP-ON TOOLS STOCK NO. CJ950	BEARING SEPARATOR	3.23 CRANKCASE, Fitting Pinion Bearings
SNAP-ON TOOLS STOCK NO. CJ950	BEARING SEPARATOR	3.23 CRANKCASE, Fitting Pinion Bearings
SNAP-ON TT600-3	SNAP-ON PICK	A.1 AMP MULTILOCK CONNECTORS, AMP Multilock Connector Repair
SNAP-ON TT600-3	SNAP-ON PICK	A.12 PACKARD 630 METRI-PACK CONNECTORS, 630 Metri-Pack Connector Repair

2010 Harley-Davidson Sportster Models Service Manual

FASTENER	TORQUE VALUE		NOTES
Air cleaner breather screw	84-120 **in-lbs**	9.5-13.6 Nm	4.3 AIR CLEANER: XL MODELS, Installation
Air cleaner cover screw	36-60 **in-lbs**	4.1-6.8 Nm	1.5 MAINTENANCE SCHEDULE, General
Air cleaner cover screw	36-60 **in-lbs**	4.1-6.8 Nm	1.22 AIR CLEANER: XL MODELS, Installation
Air cleaner cover screw	36-60 **in-lbs**	4.1-6.8 Nm	4.3 AIR CLEANER: XL MODELS, Installation
Air filter element screw	40-60 **in-lbs**	4.5-6.8 Nm	1.5 MAINTENANCE SCHEDULE, General
Air filter element screw	40-60 **in-lbs**	4.5-6.8 Nm	1.22 AIR CLEANER: XL MODELS, Installation
Air filter screw	40-60 **in-lbs**	4.5-6.8 Nm	4.3 AIR CLEANER: XL MODELS, Installation
Alternator rotor-to-sprocket screw	120-140 **in-lbs**	13.6-15.8 Nm	6.26 ALTERNATOR, Assembly and Installation
Alternator stator mounting screw	30-40 **in-lbs**	3.4-4.5 Nm	6.26 ALTERNATOR, Assembly and Installation
Anti-rotation device mounting screw	80-110 **in-lbs**	9.0-12.4 Nm	3.18 BOTTOM END OVERHAUL: ASSEMBLY, Tappets
Axle (front) pinch screw: XL Models	21-27 ft-lbs	28.5-36.6 Nm	2.4 WHEELS, Front Wheel
Axle (front) pinch screw: XL Models	21-27 ft-lbs	28.5-36.6 Nm	2.10 FRONT BRAKE CALIPER: XL MODELS, Installation
Axle (front) pinch screw: XR Models	41-48 ft-lbs	55.6-65.1 Nm	2.4 WHEELS, Front Wheel
Axle (front) pinch screw: XR Models	41-48 ft-lbs	55.6-65.1 Nm	2.11 FRONT BRAKE CALIPER: XR MODELS, Installation
Axle nut, front	60-65 ft-lbs	81-88 Nm	2.4 WHEELS, General
Axle nut, front	60-65 ft-lbs	81-88 Nm	2.4 WHEELS, Front Wheel
Axle nut, front	60-65 ft-lbs	81-88 Nm	2.10 FRONT BRAKE CALIPER: XL MODELS, Installation
Axle nut, front	60-65 ft-lbs	81-88 Nm	2.11 FRONT BRAKE CALIPER: XR MODELS, Installation
Axle nut, rear	95-105 ft-lbs	129-142 Nm	1.15 DRIVE BELT AND SPROCKETS, Belt Deflection Adjustment
Axle nut, rear	95-105 ft-lbs	129-142 Nm	1.16 WHEEL ALIGNMENT, Wheel Alignment
Axle nut, rear	95-105 ft-lbs	129-142 Nm	2.4 WHEELS, General
Axle nut, rear	95-105 ft-lbs	129-142 Nm	2.4 WHEELS, Rear Wheel
Axle nut, rear	95-105 ft-lbs	129-142 Nm	3.13 INSTALLING ENGINE IN CHASSIS, Procedure: XL Models
Axle nut, rear	95-105 ft-lbs	129-142 Nm	3.13 INSTALLING ENGINE IN CHASSIS, Procedure: XR Models
Axle nut, rear	95-105 ft-lbs	129-142 Nm	5.7 DRIVE BELT, Installation
Axle nut, rear	95-105 ft-lbs	129-142 Nm	5.7 DRIVE BELT, Installation
Ball head studs (front turn signals)	96-144 **in-lbs**	10.8-16.3 Nm	6.21 TURN SIGNALS, Front Housing Replacement
Battery cable connector nut	55-75 **in-lbs**	6.2-8.5 Nm	1.17 BATTERY MAINTENANCE, Battery Installation and Connection
Battery negative cable-to-crankcase nut	55-75 **in-lbs**	6.2-8.5 Nm	6.11 BATTERY CABLES, Installation
Battery negative terminal screw	60-70 **in-lbs**	6.8-7.9 Nm	1.5 MAINTENANCE SCHEDULE, General
Battery negative terminal screw	60-70 **in-lbs**	6.8-7.9 Nm	1.17 BATTERY MAINTENANCE, Battery Installation and Connection
Battery negative terminal screw	60-70 **in-lbs**	6.8-7.9 Nm	6.11 BATTERY CABLES, Installation
Battery positive terminal screw	60-70 **in-lbs**	6.8-7.9 Nm	1.17 BATTERY MAINTENANCE, Battery Installation and Connection
Battery positive terminal screw	60-70 **in-lbs**	6.8-7.9 Nm	6.11 BATTERY CABLES, Installation
Battery strap screw	36-60 **in-lbs**	4.1-6.8 Nm	1.17 BATTERY MAINTENANCE, Battery Installation and Connection
Battery strap screw	36-60 **in-lbs**	4.1-6.8 Nm	6.11 BATTERY CABLES, Installation

2010 Harley-Davidson Sportster Models Service Manual

FASTENER	TORQUE VALUE		NOTES
Battery tray mounting fasteners	96-156 **in-lbs**	10.9-17.6 Nm	6.12 BATTERY TRAY, Installation
Belt guard screw, front	120-180 **in-lbs**	13.6-20.3 Nm	5.7 DRIVE BELT, Installation
Belt guard screw, front: XL Models	120-180 **in-lbs**	13.6-20.4 Nm	2.23 BELT GUARD AND DEBRIS DEFLECTOR, Belt Guard: XL Models
Belt guard screw, front: XR Models	72-96 **in-lbs**	8.1-10.8 Nm	2.23 BELT GUARD AND DEBRIS DEFLECTOR, Belt Guard: XR Models
Bleeder valve	35-61 **in-lbs**	4.0-6.9 Nm	1.8 BLEEDING HYDRAULIC BRAKE SYSTEM, Bleeding Front Brake: All Models
Bleeder valve	35-61 **in-lbs**	4.0-6.9 Nm	1.8 BLEEDING HYDRAULIC BRAKE SYSTEM, Bleeding Rear Brake: All Models
Bolt pin: XL Models	15-18 ft-lbs	19.6-24.5 Nm	2.15 REAR BRAKE CALIPER: XL MODELS, Installation
Brake (rear) disc screw	30-45 ft-lbs	40.7-61.1 Nm	2.4 WHEELS, Rear Wheel
Brake (rear) hose clamp-to-frame screw	30-40 **in-lbs**	3.4-4.5 Nm	3.13 INSTALLING ENGINE IN CHASSIS, Procedure: XL Models
Brake (rear) lamp switch screw	72-120 **in-lbs**	8.1-13.6 Nm	6.12 BATTERY TRAY, Installation
Brake (rear) line/switch tee bracket screw: XL Models	72-120 **in-lbs**	8.14-13.6 Nm	2.17 BRAKE LINES, Rear Brake Line: XL Models
Brake (rear) line/switch tee bracket screw: XL Models	17-22 **in-lbs**	1.9-2.5 Nm	2.17 BRAKE LINES, Rear Brake Line: XR Models
Brake bridge bolt, front caliper	12-18 ft-lbs	16.9-24.5 Nm	2.11 FRONT BRAKE CALIPER: XR MODELS, Assembly
Brake caliper bleeder valve	35-61 **in-lbs**	4.0-6.9 Nm	2.9 FRONT BRAKE MASTER CYLINDER, Installation
Brake caliper bleeder valve	35-61 **in-lbs**	4.0-6.9 Nm	2.10 FRONT BRAKE CALIPER: XL MODELS, Assembly
Brake caliper bleeder valve	35-61 **in-lbs**	4.0-6.9 Nm	2.11 FRONT BRAKE CALIPER: XR MODELS, Assembly
Brake caliper bleeder valve	35-61 **in-lbs**	4.0-6.9 Nm	2.17 BRAKE LINES, Front Brake Line: All Models
Brake caliper bleeder valve	35-61 **in-lbs**	4.0-6.9 Nm	2.17 BRAKE LINES, Rear Brake Line: XL Models
Brake caliper bleeder valve	35-61 **in-lbs**	4.0-6.9 Nm	2.17 BRAKE LINES, Rear Brake Line: XR Models
Brake disc mounting screw, front	16-24 ft-lbs	21.7-32.6 Nm	2.4 WHEELS, Front Wheel/Cast front wheel
Brake disc mounting screw, front	16-24 ft-lbs	21.7-32.6 Nm	2.4 WHEELS, Front Wheel/Cast front wheel
Brake disc mounting screw, front	16-24 ft-lbs	21.7-32.6 Nm	2.4 WHEELS, Front Wheel/Laced front wheel
Brake front caliper mounting bolt	28-38 ft-lbs	38.0-51.6 Nm	2.10 FRONT BRAKE CALIPER: XL MODELS, Installation
Brake front caliper mounting bolt	28-38 ft-lbs	38.0-51.6 Nm	2.11 FRONT BRAKE CALIPER: XR MODELS, Installation
Brake front cover master cylinder reservoir cover screw	9-17 **in-lbs**	1.0-2.0 Nm	2.9 FRONT BRAKE MASTER CYLINDER, Installation
Brake front master cylinder clamp screw	108-132 **in-lbs**	12.2-14.9 Nm	2.9 FRONT BRAKE MASTER CYLINDER, Installation
Brake front master cylinder reservoir cover screw	9-17 **in-lbs**	1.0-2.0 Nm	2.10 FRONT BRAKE CALIPER: XL MODELS, Installation
Brake hose clamp-to-battery tray screw	30-40 **in-lbs**	3.4-4.5 Nm	2.17 BRAKE LINES, Rear Brake Line: XL Models
Brake hose clamp-to-battery tray screw	30-40 **in-lbs**	3.4-4.5 Nm	6.12 BATTERY TRAY, Installation

2010 Harley-Davidson Sportster Models Service Manual

FASTENER	TORQUE VALUE		NOTES
Brake hose clamp-to-rear fork screw	30-40 **in-lbs**	3.4-4.5 Nm	1.15 DRIVE BELT AND SPROCKETS, Belt Deflection Adjustment
Brake hose clamp-to-rear fork screw	30-40 **in-lbs**	3.4-4.5 Nm	2.17 BRAKE LINES, Rear Brake Line: XL Models
Brake lamp switch, rear: XL Models	132-168 **in-lbs**	14.9-18.9 Nm	2.17 BRAKE LINES, Rear Brake Line: XL Models
Brake lamp switch, rear: XR Models	132-168 **in-lbs**	14.9-18.9 Nm	2.17 BRAKE LINES, Rear Brake Line: XR Models
Brake line banjo bolt	20-25 ft-lbs	27.1-33.9 Nm	2.9 FRONT BRAKE MASTER CYLINDER, Installation
Brake line banjo bolt	20-25 ft-lbs	27.1-33.9 Nm	2.10 FRONT BRAKE CALIPER: XL MODELS, Installation
Brake line banjo bolt	20-25 ft-lbs	27.1-33.9 Nm	2.11 FRONT BRAKE CALIPER: XR MODELS, Installation
Brake line banjo bolt	20-25 ft-lbs	27.1-33.9 Nm	2.15 REAR BRAKE CALIPER: XL MODELS, Installation
Brake line banjo bolt	20-25 ft-lbs	27.1-33.9 Nm	2.16 REAR BRAKE CALIPER: XR MODELS, Installation
Brake line banjo bolt	20-25 ft-lbs	27.1-33.9 Nm	2.17 BRAKE LINES, Front Brake Line: All Models
Brake line banjo bolt	20-25 ft-lbs	27.1-33.9 Nm	2.17 BRAKE LINES, Front Brake Line: All Models
Brake line banjo bolt	20-25 ft-lbs	27.1-33.9 Nm	2.17 BRAKE LINES, Rear Brake Line: XL Models
Brake line banjo bolt	20-25 ft-lbs	27.1-33.9 Nm	2.17 BRAKE LINES, Rear Brake Line: XR Models
Brake line-to-front fork bracket clamp screw	45-65 **in-lbs**	5.1-7.4 Nm	2.17 BRAKE LINES, Front Brake Line: All Models
Brake line-to-front fork lower bracket clamp screw	120-168 **in-lbs**	13.6-19.0 Nm	2.17 BRAKE LINES, Front Brake Line: All Models
Brake pad pin	131-173 **in-lbs**	14.8-19.6 Nm	1.9 BRAKE PADS AND DISCS: XL MODELS, Brake Pad Replacement: Rear
Brake pad pin	131-173 **in-lbs**	14.8-19.6 Nm	1.10 BRAKE PADS AND DISCS: XR MODELS, Brake Pad Replacement: Rear
Brake pad pin, front caliper: XL Models	132-168 **in-lbs**	14.7-19.6 Nm	2.11 FRONT BRAKE CALIPER: XR MODELS, Assembly
Brake pad pin: XL Models	131-173 **in-lbs**	14.8-19.6 Nm	2.10 FRONT BRAKE CALIPER: XL MODELS, Installing Brake Pads in Caliper
Brake pad pin: XL Models	131-173 **in-lbs**	14.8-19.6 Nm	2.15 REAR BRAKE CALIPER: XL MODELS, Installation
Brake pad pin plug	18-25 **in-lbs**	2.0-2.9 Nm	1.9 BRAKE PADS AND DISCS: XL MODELS, Brake Pad Replacement: Front
Brake pad pin plug	18-25 **in-lbs**	2.0-2.9 Nm	1.9 BRAKE PADS AND DISCS: XL MODELS, Brake Pad Replacement: Rear
Brake pad pin plug	18-25 **in-lbs**	2.0-2.9 Nm	1.10 BRAKE PADS AND DISCS: XR MODELS, Brake Pad Replacement: Rear
Brake pad pin plug	18-25 **in-lbs**	2.0-2.9 Nm	2.10 FRONT BRAKE CALIPER: XL MODELS, Installing Brake Pads in Caliper
Brake pad pin plug	18-25 **in-lbs**	2.0-2.9 Nm	2.15 REAR BRAKE CALIPER: XL MODELS, Installation
Brake pad pins, front caliper	131-173 **in-lbs**	14.8-19.6 Nm	1.10 BRAKE PADS AND DISCS: XR MODELS, Brake Pad Replacement: Front

FASTENER	TORQUE VALUE		NOTES
Brake pedal clevis screw	13-17 ft-lbs	17.6-23.0 Nm	2.39 RIDER FOOT CONTROLS: XL MID-MOUNT CONTROLS, Right Footrest and Rear Brake Pedal Assembly
Brake pedal clevis screw	13-17 ft-lbs	17.6-23.0 Nm	2.40 RIDER FOOT CONTROLS: XL FORWARD CONTROLS, Right Footrest and Rear Brake Pedal Assembly
Brake rear master cylinder banjo bolt; XL models	20-25 ft-lbs	27.1-33.9 Nm	2.12 REAR BRAKE MASTER CYLINDER: XL MODELS, Installation
Brake rear master cylinder banjo bolt; XR models	20-25 ft-lbs	27.1-33.9 Nm	2.13 REAR BRAKE MASTER CYLINDER: XR MODELS, Installation
Brake rear master cylinder mounting bracket screw; XL models	17-22 ft-lbs	23.1-29.9 Nm	2.12 REAR BRAKE MASTER CYLINDER: XL MODELS, Installation
Brake rear master cylinder mounting bracket screw; XL models	17-22 ft-lbs	23.1-29.9 Nm	2.12 REAR BRAKE MASTER CYLINDER: XL MODELS, Installation
Brake rear master cylinder mounting screw; XL models	17-22 ft-lbs	23.1-29.9 Nm	2.12 REAR BRAKE MASTER CYLINDER: XL MODELS, Installation
Brake rear master cylinder mounting screw; XR models	72-96 **in-lbs**	8.1-10.9 Nm	2.13 REAR BRAKE MASTER CYLINDER: XR MODELS, Installation
Brake rear master cylinder pushrod nut; XR models	130-173 **in-lbs**	14.7-19.6 Nm	2.13 REAR BRAKE MASTER CYLINDER: XR MODELS, Assembly
Brake rear master cylinder pushrod shoulder nut	130-173 **in-lbs**	14.7-19.6 Nm	2.12 REAR BRAKE MASTER CYLINDER: XL MODELS, Assembly
Brake rear master cylinder reservoir mounting screw	20-25 **in-lbs**	2.3-2.8 Nm	3.13 INSTALLING ENGINE IN CHASSIS, Procedure: XL Models
Brake rear master cylinder reservoir mounting screw	20-25 **in-lbs**	2.3-2.8 Nm	6.12 BATTERY TRAY, Installation
Brake rear master cylinder reservoir mounting screw	20-25 **in-lbs**	2.3-2.8 Nm	6.24 REAR STOP LAMP SWITCH, Replacement
Brake rear master cylinder reservoir mounting screw; XR models	36-60 **in-lbs**	4.1-6.8 Nm	2.14 REAR BRAKE MASTER CYLINDER RESERVOIR, Installation: XR Models
Brake rear master cylinder reservoir mounting screw: XL Models	20-25 **in-lbs**	2.3-2.8 Nm	2.14 REAR BRAKE MASTER CYLINDER RESERVOIR, Installation: XL Models
Brake rear master cylinder reservoir mounting screw: XL Models	20-25 **in-lbs**	2.3-2.8 Nm	2.24 REAR FORK, Installation
Brake rod-to-bell crank screw	120-180 **in-lbs**	13.6-20.4 Nm	2.39 RIDER FOOT CONTROLS: XL MID-MOUNT CONTROLS, Right Footrest and Rear Brake Pedal Assembly
Brake rod-to-bell crank screw	120-180 **in-lbs**	13.6-20.4 Nm	2.40 RIDER FOOT CONTROLS: XL FORWARD CONTROLS, Right Footrest and Rear Brake Pedal Assembly
Brake rod-to-bell crank screw	120-180 **in-lbs**	13.6-20.4 Nm	4.14 EXHAUST SYSTEM: XL MODELS, Installation
Brake rod-to-brake pedal screw	120-180 **in-lbs**	13.6-20.4 Nm	2.39 RIDER FOOT CONTROLS: XL MID-MOUNT CONTROLS, Right Footrest and Rear Brake Pedal Assembly
Brake rod-to-brake pedal screw	120-180 **in-lbs**	13.6-20.4 Nm	2.40 RIDER FOOT CONTROLS: XL FORWARD CONTROLS, Right Footrest and Rear Brake Pedal Assembly

2010 Harley-Davidson Sportster Models Service Manual

FASTENER	TORQUE VALUE		NOTES
Breather screw	35-55 **in-lbs**	4.0-6.2 Nm	3.16 TOP END OVERHAUL: ASSEMBLY, Rocker Covers
Caliper pad pin	131-173 **in-lbs**	14.8-19.6 Nm	1.9 BRAKE PADS AND DISCS: XL MODELS, Brake Pad Replacement: Front
Caliper to mouting bracket, XL Models	87-130 **in-lbs**	9.8-14.7 Nm	2.15 REAR BRAKE CALIPER: XL MODELS, Installation
Captive screw	9-17 **in-lbs**	1.0-2.0 Nm	1.8 BLEEDING HYDRAULIC BRAKE SYSTEM, Bleeding Front Brake: All Models
Captive screw	9-17 **in-lbs**	1.0-2.0 Nm	1.9 BRAKE PADS AND DISCS: XL MODELS, Brake Pad Replacement: Front
Chain tensioner nut	20-25 ft-lbs	27.1-33.9 Nm	1.5 MAINTENANCE SCHEDULE, General
Clutch cable end fitting	36-108 **in-lbs**	4.1-12.2 Nm	2.30 CLUTCH CONTROL, Assembly and Installation
Clutch cable end fitting	36-108 **in-lbs**	4.1-12.2 Nm	5.3 PRIMARY CHAIN ADJUSTER, Installation
Clutch cable jam nut	10 ft-lbs	13.6 Nm	1.13 CLUTCH, Adjustment
Clutch inspection cover screw	84-108 **in-lbs**	9.5-12.2 Nm	1.5 MAINTENANCE SCHEDULE, General
Clutch inspection cover screw	84-108 **in-lbs**	9.5-12.2 Nm	1.13 CLUTCH, Adjustment
Clutch inspection cover screw	84-108 **in-lbs**	9.5-12.2 Nm	1.14 TRANSMISSION LUBRICANT, Transmission Lubrication
Clutch inspection cover screw	84-120 **in-lbs**	9.5-13.6 Nm	2.30 CLUTCH CONTROL, Assembly and Installation
Clutch inspection cover screw	84-108 **in-lbs**	9.5-12.2 Nm	5.3 PRIMARY CHAIN ADJUSTER, Installation
Clutch inspection cover screw	84-108 **in-lbs**	9.5-12.2 Nm	5.4 CLUTCH RELEASE MECHANISM, Assembly and Installation
Clutch lever anti-rattle spring screw	8-13 **in-lbs**	0.9-1.5 Nm	2.30 CLUTCH CONTROL, Assembly and Installation
Clutch lever handlebar clamp screw	108-132 **in-lbs**	12.2-14.9 Nm	2.30 CLUTCH CONTROL, Assembly and Installation
Clutch lever handlebar clamp screw	108-132 **in-lbs**	12.2-14.9 Nm	2.31 HANDLEBARS, Installation
Coil mounting bracket screw	35-45 **in-lbs**	4.0-5.1 Nm	6.17 IGNITION COIL, Installation
Coil mounting screw	24-72 **in-lbs**	2.7-8.1 Nm	6.17 IGNITION COIL, Installation
Coil mounting screw	24-72 **in-lbs**	2.7-8.1 Nm	6.17 IGNITION COIL, Installation
Countershaft retaining screw	33-37 ft-lbs	44.8-50.2 Nm	5.15 TRANSMISSION INSTALLATION, Shifter Shaft Installation
Crankcase fastener	15-19 ft-lbs	20.3-25.8 Nm	3.18 BOTTOM END OVERHAUL: ASSEMBLY, Crankcase
Crankcase fastener	15-19 ft-lbs	20.3-25.8 Nm	5.15 TRANSMISSION INSTALLATION, Assembling Crankcases
Crank position sensor (CKP) screw	80-100 **in-lbs**	9.0-11.3 Nm	6.25 CRANK POSITION SENSOR (CKP), Installation
Cylinder head bolts	96-120 **in-lbs**	11-14 Nm	3.16 TOP END OVERHAUL: ASSEMBLY, Cylinder Head/See procedure
Cylinder head bolts	13-15 ft-lbs	18-20 Nm	3.16 TOP END OVERHAUL: ASSEMBLY, Cylinder Head/See procedure
Cylinder head bolts	96-120 **in-lbs**	11-14 Nm	3.16 TOP END OVERHAUL: ASSEMBLY, Cylinder Head/See procedure

2010 Harley-Davidson Sportster Models Service Manual

FASTENER	TORQUE VALUE		NOTES
Cylinder head bolts	13-15 ft-lbs	18-20 Nm	3.16 TOP END OVERHAUL: ASSEMBLY, Cylinder Head/See procedure
Cylinder head bracket screw	17-24 ft-lbs	23.1-32.6 Nm	3.13 INSTALLING ENGINE IN CHASSIS, Procedure: XL Models
Cylinder head bracket screw	17-24 ft-lbs	23.1-32.6 Nm	3.16 TOP END OVERHAUL: ASSEMBLY, Assembling Motorcycle After Top End Repair
Cylinder head bracket screw	17-24 ft-lbs	23.1-32.6 Nm	4.9 INDUCTION MODULE: XL MODELS, Installation
Cylinder head bracket screw	17-24 ft-lbs	23.1-32.6 Nm	4.16 FUEL INJECTORS, Installation
Cylinder head exhaust port nut	96-120 **in-lbs**	10.9-13.6 Nm	2.9 FRONT BRAKE MASTER CYLINDER, Installation
Cylinder head exhaust port nut	96-120 **in-lbs**	10.9-13.6 Nm	4.14 EXHAUST SYSTEM: XL MODELS, Installation
Cylinder head oil feed flare fitting, Precision Cooling	22-26 ft-lbs	29.8-35.3 Nm	3.14 PRECISION COOLING SYSTEM: XR MODELS, Cylinder Head Oil Feed Assembly
Cylinder head oil feed flare fitting, Precision Cooling	22-26 ft-lbs	29.8-35.3 Nm	4.10 INDUCTION MODULE: XR MODELS, Installation
Cylinder head oil feed line flare nut, Precision Cooling	13-17 ft-lbs	17.6-23.0 Nm	3.14 PRECISION COOLING SYSTEM: XR MODELS, Cylinder Head Oil Feed Assembly
Cylinder head oil feed line flare nut, Precision Cooling	13-17 ft-lbs	17.6-23.0 Nm	4.10 INDUCTION MODULE: XR MODELS, Installation
Cylinder stud	120-240 **in-lbs**	13.6-27.1 Nm	3.18 BOTTOM END OVERHAUL: ASSEMBLY, Crankcase
Debris deflector screw (XL)	36-60 **in-lbs**	4.1-6.8 Nm	2.23 BELT GUARD AND DEBRIS DEFLECTOR, Debris Deflector: XL Models
Debris deflector screw (XR)	72-96 **in-lbs**	8.1-10.8 Nm	2.23 BELT GUARD AND DEBRIS DEFLECTOR, Debris Deflector: XR Models
ECM caddy fastener	72-96 **in-lbs**	8.1-10.8 Nm	6.12 BATTERY TRAY, Installation
ECM caddy fastener	72-96 **in-lbs**	8.1-10.8 Nm	6.23 REAR LIGHTING CONVERTER MODULE: XL 883N/XL 1200N (DOMESTIC ONLY), Installation
ECM caddy fastener	72-96 **in-lbs**	8.1-10.8 Nm	6.29 MAIN WIRING HARNESS, Installation
ECM fasteners: XR models	18-22 **in-lbs**	2.0-2.5 Nm	6.9 ELECTRONIC CONTROL MODULE (ECM), Installation
Electronic Control Module (ECM) cover fastener	30-60 **in-lbs**	3.4-6.8 Nm	6.9 ELECTRONIC CONTROL MODULE (ECM), Installation
Engine mount bolt, front	95-105 ft-lbs	129-142 Nm	2.27 FRONT ENGINE MOUNT/ISOLATOR, Installation
Engine sprocket bolt: XR Models	155-165 ft-lbs	210.0-224.0 Nm	5.6 PRIMARY DRIVE AND CLUTCH: XR MODELS, Installation
Engine sprocket nut	240-260 ft-lbs	326-353 Nm	5.5 PRIMARY DRIVE AND CLUTCH: XL MODELS, Installation
Engine temperature sensor	120-168 **in-lbs**	13.6-19.0 Nm	4.8 ENGINE TEMPERATURE (ET) SENSOR, Installation
EVAP canister clip mounting screw	36-60 **in-lbs**	4.1-6.8 Nm	4.20 EVAPORATIVE EMISSIONS CONTROL (CA MODELS), Charcoal Canister

2010 Harley-Davidson Sportster Models Service Manual

FASTENER	TORQUE VALUE		NOTES
EVAP canister guard screw	35-45 **in-lbs**	4.0-5.1 Nm	4.20 EVAPORATIVE EMISSIONS CONTROL (CA MODELS), Charcoal Canister
EVAP canister mounting bracket screw	17-22 ft-lbs	23.1-29.9 Nm	4.20 EVAPORATIVE EMISSIONS CONTROL (CA MODELS), Charcoal Canister
EVAP canister mounting bracket screw	17-22 ft-lbs	23.1-29.9 Nm	4.20 EVAPORATIVE EMISSIONS CONTROL (CA MODELS), Charcoal Canister
Exhaust flange nut	96-120 **in-lbs**	10.8-13.6 Nm	4.15 EXHAUST SYSTEM: XR MODELS, Installation/SPECIAL SEQUENCE TO TIGHTEN
Exhaust flange nut	96-120 **in-lbs**	10.8-13.6 Nm	4.15 EXHAUST SYSTEM: XR MODELS, Installation/SPECIAL SEQUENCE TO TIGHTEN
Exhaust flange nut	96-120 **in-lbs**	10.8-13.6 Nm	4.15 EXHAUST SYSTEM: XR MODELS, Installation/SPECIAL SEQUENCE TO TIGHTEN
Exhaust flange nut: XR Models	96-120 **in-lbs**	10.8-13.6 Nm	4.15 EXHAUST SYSTEM: XR MODELS, Installation/SPECIAL SEQUENCE TO TIGHTEN
Exhaust pipe clamp (rear) nut	20-30 ft-lbs	27.1-40.7 Nm	4.14 EXHAUST SYSTEM: XL MODELS, Installation
Exhaust pipe clamp bracket fastener, XL models	30-33 ft-lbs	40.7-44.8 Nm	5.7 DRIVE BELT, Installation
Exhaust pipe clamp bracket fasteners, XL models	30-33 ft-lbs	40.7-44.8 Nm	5.16 TRANSMISSION SPROCKET, Installation
Exhaust pipe clamp bracket screw	30-33 ft-lbs	40.7-44.8 Nm	2.28 REAR ENGINE MOUNT/ISOLATOR, Installation
Exhaust pipe clamp bracket screw	30-33 ft-lbs	40.7-44.8 Nm	3.13 INSTALLING ENGINE IN CHASSIS, Procedure: XL Models
Exhaust pipe clamp bracket screw	30-33 ft-lbs	40.7-44.8 Nm	4.14 EXHAUST SYSTEM: XL MODELS, Installation
Fender (front) mounting screw	96-156 **in-lbs**	10.9-17.6 Nm	2.20 FRONT FORK: XL MODELS, Installation
Fender (rear) mounting screw	132-216 **in-lbs**	14.9-24.4 Nm	2.33 REAR FENDER: ALL XL MODELS EXCEPT XL 883N/XL 1200N, Installation
Fender support screw with washer	132-216 **in-lbs**	14.9-24.4 Nm	6.22 LICENSE PLATE LAMP MODULE: XL 883N/XL 1200N, Installation (HDI Only)
Filler housing screws	40-45 **in-lbs**	4.5-5.1 Nm	4.6 FUEL TANK: XR MODELS, Assemble Fuel Tank
Footrest bracket fastener	45-50 ft-lbs	61.0-67.8 Nm	3.13 INSTALLING ENGINE IN CHASSIS, Procedure: XR Models
Footrest bracket fastener: XR models	45-50 ft-lbs	61.0-67.8 Nm	2.41 RIDER FOOT CONTROLS: XR MODELS, Left Footrest and Shift Lever Assembly
Footrest bracket fastener: XR Models	45-50 ft-lbs	61-68 Nm	2.42 PASSENGER FOOTRESTS, XR Models
Footrest clevis fastener: XR models	13-17 ft-lbs	17.6-23.0 Nm	2.41 RIDER FOOT CONTROLS: XR MODELS, Right Footrest and Rear Brake Pedal Assembly
Footrest clevis fastener: XR models	13-17 ft-lbs	17.6-23.0 Nm	2.41 RIDER FOOT CONTROLS: XR MODELS, Left Footrest and Shift Lever Assembly
Footrest mount fastener	45-50 ft-lbs	61.0-67.8 Nm	3.13 INSTALLING ENGINE IN CHASSIS, Procedure: XR Models
Footrest mount fastener: XR models	45-50 ft-lbs	61.0-67.8 Nm	1.13 CLUTCH, Adjustment
Footrest wear peg	72-108 **in-lbs**	8.1-12.2 Nm	2.41 RIDER FOOT CONTROLS: XR MODELS, Right Footrest and Rear Brake Pedal Assembly

FASTENER	TORQUE VALUE		NOTES
Footrest wear peg	72-108 **in-lbs**	8.1-12.2 Nm	2.41 RIDER FOOT CONTROLS: XR MODELS, Left Footrest and Shift Lever Assembly
Fork cap to outer tube: XR 1200	21-29 ft-lbs	29-39 Nm	2.21 FRONT FORK: XR MODELS, Assembly: XR 1200
Fork cap to outer tube: XR 1200	21-29 ft-lbs	29-39 Nm	2.21 FRONT FORK: XR MODELS, Assembly: XR 1200
Fork cap to outer tube: XR 1200	21-29 ft-lbs	29-39 Nm	2.21 FRONT FORK: XR MODELS, Assembly: XR 1200X
Fork cap to retainer nut: XR 1200	12.5-16.25 **ft-lbs**	17-22 Nm	2.21 FRONT FORK: XR MODELS, Assembly: XR 1200
Fork cap to retainer nut: XR 1200	13-16 ft-lbs	17-22 Nm	2.21 FRONT FORK: XR MODELS, Assembly: XR 1200
Fork cartridge fastener	132-216 **in-lbs**	14.9-24.4 Nm	2.21 FRONT FORK: XR MODELS, Assembly: XR 1200
Fork piston rod hex nut: XR 1200X	18.4-22.1 ft-lbs	25-30 Nm	2.21 FRONT FORK: XR MODELS, Assembly: XR 1200X
Fork slider tube cap	22-58 ft-lbs	29.9-78.7 Nm	2.20 FRONT FORK: XL MODELS, Assembly
Fork slider tube cap, XL models	22-58 ft-lbs	29.9-78.7 Nm	2.20 FRONT FORK: XL MODELS, Changing Fork Oil: XL Models
Fork slider tube fastener	132-216 **in-lbs**	14.9-24.4 Nm	2.20 FRONT FORK: XL MODELS, Assembly
Fork stem bolt, final	72-96 **in-lbs**	8.1-10.9 Nm	2.22 FORK STEM AND BRACKET ASSEMBLY, Assembly and Installation
Fork stem bolt, initial	23-27 ft-lbs	31.2-36.6 Nm	2.22 FORK STEM AND BRACKET ASSEMBLY, Assembly and Installation
Fork stem pinch screw	30-35 ft-lbs	40.7-47.5 Nm	1.19 STEERING HEAD BEARINGS, Adjustment
Fork stem pinch screw	30-35 ft-lbs	40.7-47.5 Nm	2.22 FORK STEM AND BRACKET ASSEMBLY, Assembly and Installation
Forward and lower sprocket cover screws: XR models	80-120 **in-lbs**	9.0-13.6 Nm	2.28 REAR ENGINE MOUNT/ISOLATOR, Installation
Front cylinder oil line retainer nut	84-108 **in-lbs**	9.5-12.2 Nm	3.14 PRECISION COOLING SYSTEM: XR MODELS, Cylinder Head Oil Return Lines
Front engine mount bolt	95-105 ft-lbs	129-142 Nm	3.13 INSTALLING ENGINE IN CHASSIS, Procedure: XL Models
Front engine mount bolt	95-105 ft-lbs	129 -142 Nm	3.13 INSTALLING ENGINE IN CHASSIS, Procedure: XR Models
Front fender (XL) mounting screw	96-156 **in-lbs**	10.9-17.6 Nm	2.32 FRONT FENDER, XL Models
Front fender (XR) mounting screw	15-19 ft-lbs	20.4-25.8 Nm	2.32 FRONT FENDER, XR Models
Front fender bracket (XR) screw	36-60 **in-lbs**	4.1-6.8 Nm	2.32 FRONT FENDER, XR Models
Front fork bracket pinch screw	30-35 ft-lbs	40.7-47.5 Nm	2.20 FRONT FORK: XL MODELS, Installation
Front fork bracket pinch screw	30-35 ft-lbs	40.7-47.5 Nm	2.21 FRONT FORK: XR MODELS, Installation
Front fork lower bracket pinch screw	30-35 ft-lbs	40.7-47.5 Nm	1.19 STEERING HEAD BEARINGS, Adjustment
Front fork oil drain screw, XL models	13-17 **in-lbs**	1.5-2.0 Nm	2.20 FRONT FORK: XL MODELS, Changing Fork Oil: XL Models
Front fork slider tube cap	22-58 ft-lbs	29.9-78.7 Nm	2.20 FRONT FORK: XL MODELS, Installation
Front master cylinder cover screw	9-17 **in-lbs**	1.0-2.0 Nm	1.10 BRAKE PADS AND DISCS: XR MODELS, Brake Pad Replacement: Front

2010 Harley-Davidson Sportster Models Service Manual

FASTENER	TORQUE VALUE		NOTES
Front master cylinder cover screw	9-17 **in-lbs**	1.0-2.0 Nm	2.11 FRONT BRAKE CALIPER: XR MODELS, Installation
Front master cylinder reservoir cover screw	9-17 **in-lbs**	1.0-2.0 Nm	1.5 MAINTENANCE SCHEDULE, General
Front muffler mount-to-frame fastener	45-50 ft-lbs	61.0-67.8 Nm	4.15 EXHAUST SYSTEM: XR MODELS, Installation
Fuel hose retaining bracket screw	60 **in-lbs**	6.8 Nm	4.16 FUEL INJECTORS, Installation
Fuel pump/sender harness grounding screw	19-36 **in-lbs**	2.1-4.1 Nm	4.17 FUEL PUMP, Assembly
Fuel pump bracket mounting screw	19-36 **in-lbs**	2.1-4.1 Nm	4.17 FUEL PUMP, Assembly
Fuel pump module mounting screw	40-45 **in-lbs**	4.5-5.1 Nm	1.5 MAINTENANCE SCHEDULE, General
Fuel pump module mounting screw	40-45 **in-lbs**	4.5-5.1 Nm	1.26 FUEL SUPPLY FILTER, Installation
Fuel pump module mounting screw	40-45 **in-lbs**	4.5-5.1 Nm	4.17 FUEL PUMP, Installation
Fuel tank cover fastener	24-30 **in-lbs**	2.7-3.4 Nm	4.6 FUEL TANK: XR MODELS, Installing Fuel Tank
Fuel tank front fastener	15-20 ft-lbs	20.3-27.1 Nm	4.6 FUEL TANK: XR MODELS, Installing Fuel Tank
Fuel tank mounting screw	15-20 ft-lbs	20.4-27.1 Nm	3.13 INSTALLING ENGINE IN CHASSIS, Procedure: XL Models
Fuel tank mounting screw	15-20 ft-lbs	20.4-27.1 Nm	3.13 INSTALLING ENGINE IN CHASSIS, Procedure: XR Models
Fuel tank mounting screw	15-20 ft-lbs	20.4-27.1 Nm	3.16 TOP END OVERHAUL: ASSEMBLY, Assembling Motorcycle After Top End Repair
Fuel tank mounting screw	15-20 ft-lbs	20.4-27.1 Nm	4.5 FUEL TANK: XL MODELS, Installing Fuel Tank
Fuel tank mounting screw	15-20 ft-lbs	20.4-27.1 Nm	4.9 INDUCTION MODULE: XL MODELS, Installation
Fuel tank mounting screw	15-20 ft-lbs	20.4-27.1 Nm	4.16 FUEL INJECTORS, Installation
Fuel tank rear fastener	15-20 ft-lbs	20.3-27.1 Nm	4.6 FUEL TANK: XR MODELS, Installing Fuel Tank
Gearcase/oil pump housing cover fastener	80-110 **in-lbs**	9.0-12.4 Nm	3.25 OIL PUMP: XR MODELS, Assembly
Gearcase and oil pump cover fastener	80-110 **in-lbs**	9.0-12.4 Nm	3.18 BOTTOM END OVERHAUL: ASSEMBLY, Cam Gears and Gearcase Cover: XR Models
Gearcase cover fastener: XR models	80-110 **in-lbs**	9.0-12.4 Nm	3.18 BOTTOM END OVERHAUL: ASSEMBLY, Cam Gears and Gearcase Cover: XR Models
Gearcase cover screw	80-110 **in-lbs**	9.0-12.4 Nm	3.18 BOTTOM END OVERHAUL: ASSEMBLY, Cam Gears and Gearcase Cover: XL Models
Gearcase housing plug	108-156 **in-lbs**	12.2-17.6 Nm	3.25 OIL PUMP: XR MODELS, Assembly
Gear detent assembly screw	90-110 **in-lbs**	10.2-12.4 Nm	5.15 TRANSMISSION INSTALLATION, Installation
Gear shift lever pinch screw	16-20 ft-lbs	21.7-27.1 Nm	2.39 RIDER FOOT CONTROLS: XL MID-MOUNT CONTROLS, Left Footrest and Shift Lever Assembly
Gear shift lever pinch screw	16-20 ft-lbs	21.7-27.1 Nm	2.40 RIDER FOOT CONTROLS: XL FORWARD CONTROLS, Left Footrest and Shift Lever Assembly

FASTENER	TORQUE VALUE		NOTES
Gear shift lever pinch screw	16-20 ft-lbs	21.7-27.1 Nm	5.3 PRIMARY CHAIN ADJUSTER, Installation
Handlebar clamp screw	12-18 ft-lbs	16.3-24.4 Nm	1.5 MAINTENANCE SCHEDULE, General
Handlebar clamp screw	12-18 ft-lbs	16.3-24.4 Nm	6.19 INDICATOR LAMP MODULE, Replacement: XL 1200L/XL 883N and XL 1200N/XL 1200L/XL883N/XL 1200N
Handlebar clamp screw	12-18 ft-lbs	16.3-24.4 Nm	6.19 INDICATOR LAMP MODULE, Replacement: XL 1200L/XL 883N and XL 1200N/XL 1200L/XL883N/XL 1200N
Handlebar clamp screws	108-132 **in-lbs**	12.2-14.9 Nm	6.37 RIGHT HANDLEBAR SWITCHES, Installation
Handlebar clamp screws	108-132 **in-lbs**	12.2-14.9 Nm	6.38 LEFT HANDLEBAR SWITCHES, Installation
Handlebar riser clamp screw	12-18 ft-lbs	16.3 -24.4 Nm	6.19 INDICATOR LAMP MODULE, Replacement: XL 883C and XL 1200C/XL 883C/XL1200C
Handlebar riser clamp screw	12-18 ft-lbs	16.3 -24.4 Nm	6.19 INDICATOR LAMP MODULE, Replacement: XL 883C and XL 1200C/XL 883C/XL1200C
Handlebar riser cover screw	8-12 **in-lbs**	0.9-1.4 Nm	6.19 INDICATOR LAMP MODULE, Replacement: XL 883C and XL 1200C/XL 883C/XL1200C
Handlebar riser cover screw (XL 883C/XL 1200C)	8-12 **in-lbs**	0.9-1.4 Nm	2.31 HANDLEBARS, Installation
Handlebar riser mounting bolt (XL 883C/XL 1200C)	30-40 ft-lbs	40.7-54.3 Nm	2.31 HANDLEBARS, Installation
Handlebar switch housing screw	35-45 **in-lbs**	4.0-5.1 Nm	1.5 MAINTENANCE SCHEDULE, General
Handlebar switch housing screw	35-45 **in-lbs**	4.0-5.1 Nm	1.25 THROTTLE CONTROL, Cable Inspection and Lubrication
Handlebar switch housing screw	35-45 **in-lbs**	4.0-5.1 Nm	2.29 THROTTLE CABLES: ALL MODELS, Assembly and Installation
Handlebar switch housing screw	35-45 **in-lbs**	4.0-5.1 Nm	2.30 CLUTCH CONTROL, Assembly and Installation
Handlebar switch housing screw	35-45 **in-lbs**	4.0-5.1 Nm	2.31 HANDLEBARS, Installation
Handlebar switch housing screw	35-45 **in-lbs**	4.0-5.1 Nm	2.31 HANDLEBARS, Installation
Handlebar switch housing screws	35-45 **in-lbs**	4.0-5.1 Nm	6.37 RIGHT HANDLEBAR SWITCHES, Installation
Handlebar switch housing screws	35-45 **in-lbs**	4.0-5.1 Nm	6.38 LEFT HANDLEBAR SWITCHES, Installation
Handlebar upper clamp/speedometer housing screw (XL 883C/XL 1200C)	12-18 ft-lbs	16.3-24.4 Nm	2.31 HANDLEBARS, Installation
Handlebar upper clamp/speedometer housing screw (XL 883C/XL 1200C)	12-18 ft-lbs	16.3-24.4 Nm	2.31 HANDLEBARS, Installation
Handlebar upper clamp screw	12-18 ft-lbs	16.3-24.4 Nm	6.19 INDICATOR LAMP MODULE, Replacement: All Other Models/all except XL 883C/XL 1200C/XL 1200L/XL 1200N
Headlamp Allen head capscrew	30-35 ft-lbs	40.7-47.5 Nm	1.28 HEADLAMP ALIGNMENT, Headlamp Adjustment: Sportster Models
Headlamp clamp nut	120-240 **in-lbs**	14-27 Nm	1.28 HEADLAMP ALIGNMENT, Headlamp Adjustment: Sportster Models
High pressure feed hose fitting (to crankcase)	60-90 **in-lbs**	6.8-10.2 Nm	3.24 OIL PUMP: XL MODELS, Installation
High pressure feed hose fitting nut	85-105 **in-lbs**	9.6-11.8 Nm	3.24 OIL PUMP: XL MODELS, Installation

2010 Harley-Davidson Sportster Models Service Manual

FASTENER	TORQUE VALUE		NOTES
Horn, front mounted, mounting screw	72-108 **in-lbs**	8.1-12.2 Nm	6.34 HORN, Replacement: Models with Front Mounted Horn
Horn, side mounted, acorn nut	60-180 **in-lbs**	6.8-20.4 Nm	6.34 HORN, Replacement: Models with Side Mounted Horn
Horn, side mounted, stud nut	80-100 **in-lbs**	9.0-11.3 Nm	6.34 HORN, Replacement: Models with Side Mounted Horn
Hub plate mounting screw	16-24 ft-lbs	21.7-32.6 Nm	2.4 WHEELS, Front Wheel/Cast front wheel
IAC mounting screw	60 **in-lbs**	6.8 Nm	4.9 INDUCTION MODULE: XL MODELS, Assembly
IAC mounting screw	60 **in-lbs**	6.8 Nm	4.10 INDUCTION MODULE: XR MODELS, Assembly
IAC mounting screw	60 **in-lbs**	6.8 Nm	4.11 IDLE AIR CONTROL (IAC), Installation: XL Models
IAC mounting screw (XR models)	60 **in-lbs**	6.8 Nm	4.11 IDLE AIR CONTROL (IAC), Installation: XR Models
Idler pulley bracket flanged nut: XR models	33-35 ft-lbs	45-47 Nm	5.7 DRIVE BELT, Idler Pulley: XR Models Only
Idler pulley fastener: XR models	70-80 ft-lbs	95-109 Nm	5.7 DRIVE BELT, Idler Pulley: XR Models Only
Ignition/light switch mounting screw	35-45 **in-lbs**	4.0-5.1 Nm	6.15 IGNITION AND LIGHT SWITCH, Installation
Ignition switch bracket screw	35-45 **in-lbs**	4.0-5.1 Nm	6.30 ELECTRICAL CADDIES, Wire Harness Caddy: XL Models
Ignition switch bracket screw	35-45 **in-lbs**	4.0-5.1 Nm	6.30 ELECTRICAL CADDIES, Wire Harness Caddy: XR Models
Ignition switch mounting screw	34-45 **in-lbs**	4.0-5.1 Nm	3.13 INSTALLING ENGINE IN CHASSIS, Procedure: XL Models
Ignition switch mounting screw	34-45 **in-lbs**	4.0-5.1 Nm	3.13 INSTALLING ENGINE IN CHASSIS, Procedure: XR Models
Induction module cable bracket screw	60 **in-lbs**	6.8 Nm	4.9 INDUCTION MODULE: XL MODELS, Assembly
Induction module cover-to-cylinder head fastener	20-24 ft-lbs	27.1-32.5 Nm	3.13 INSTALLING ENGINE IN CHASSIS, Procedure: XR Models
Induction module cover-to-cylinder head fastener	20-24 ft-lbs	27.1-32.5 Nm	4.10 INDUCTION MODULE: XR MODELS, Installation
Induction module cover-to-cylinder head fastener	20-24 ft-lbs	27.1-32.5 Nm	4.12 TEMPERATURE MANIFOLD ABSOLUTE PRESSURE (TMAP) SENSOR, Installation: XR Models
Induction module cover-to-induction module fastener	84-108 **in-lbs**	9.5-12.2 Nm	3.13 INSTALLING ENGINE IN CHASSIS, Procedure: XR Models
Induction module cover-to-induction module fastener	84-108 **in-lbs**	9.5-12.2 Nm	4.10 INDUCTION MODULE: XR MODELS, Installation
Induction module cover-to-induction module fastener	84-108 **in-lbs**	9.5-12.2 Nm	4.12 TEMPERATURE MANIFOLD ABSOLUTE PRESSURE (TMAP) SENSOR, Installation: XR Models
Induction module cover-to-wire form fastener	84-108 **in-lbs**	9.5-12.2 Nm	3.13 INSTALLING ENGINE IN CHASSIS, Procedure: XR Models
Induction module cover-to-wire form fastener	84-108 **in-lbs**	9.5-12.2 Nm	4.10 INDUCTION MODULE: XR MODELS, Installation

2010 Harley-Davidson Sportster Models Service Manual

FASTENER	TORQUE VALUE		NOTES
Induction module cover-to-wire form fastener	84-108 **in-lbs**	9.5-12.2 Nm	4.12 TEMPERATURE MANIFOLD ABSOLUTE PRESSURE (TMAP) SENSOR, Installation: XR Models
Induction module mounting bracket screw	80-110 **in-lbs**	9.0-12.4 Nm	4.9 INDUCTION MODULE: XL MODELS, Installation
Induction module-to-intake manifold screw	35 **in-lbs**	4.0 Nm	4.9 INDUCTION MODULE: XL MODELS, Assembly
Inner fender screw: XR models	72-120 **in-lbs**	8.1-13.6 Nm	2.35 REAR FENDER: XR MODELS, Installation
Inner fork nut, right: XR 1200	69-83 ft-lbs	93-113 Nm	2.21 FRONT FORK: XR MODELS, Assembly: XR 1200/Hand tighten. Then tighten to torque.
Inner rocker cover bolt, large	18-22 ft-lbs	24.4-29.8 Nm	3.16 TOP END OVERHAUL: ASSEMBLY, Rocker Covers
Inner rocker cover bolt, small	135-155 **in-lbs**	15.3-17.5 Nm	3.16 TOP END OVERHAUL: ASSEMBLY, Rocker Covers
Inner rocker cover screw	135-155 **in-lbs**	15.3-17.5 Nm	3.16 TOP END OVERHAUL: ASSEMBLY, Rocker Covers
Intake manifold mounting screw	96-120 **in-lbs**	10.9-13.6 Nm	4.9 INDUCTION MODULE: XL MODELS, Installation
Intake manifold mounting screw	96-120 **in-lbs**	10.9-13.6 Nm	4.10 INDUCTION MODULE: XR MODELS, Installation
Interconnect bracket-to-frame fastener	30-33 ft-lbs	40.7-44.7 Nm	4.15 EXHAUST SYSTEM: XR MODELS, Installation
Isolator (front) mounting bracket screw	25-35 ft-lbs	33.9-47.5 Nm	2.27 FRONT ENGINE MOUNT/ISOLATOR, Installation
Isolator (front) mounting bracket screw	25-35 ft-lbs	33.9-47.5 Nm	2.28 REAR ENGINE MOUNT/ISOLATOR, Installation
Isolator mount screw, front	25-35 ft-lbs	33.9-47.5 Nm	3.13 INSTALLING ENGINE IN CHASSIS, Procedure: XL Models
Isolator mount screw, front	25-35 ft-lbs	33.9-47.5 Nm	3.13 INSTALLING ENGINE IN CHASSIS, Procedure: XR Models
Isolator mount screw, rear	25-35 ft-lbs	33.9-47.5 Nm	3.13 INSTALLING ENGINE IN CHASSIS, Procedure: XL Models
Isolator mount screw, rear	25-35 ft-lbs	33.9-47.5 Nm	3.13 INSTALLING ENGINE IN CHASSIS, Procedure: XR Models
Jiffy stand switch screw	96-120 **in-lbs**	10.9-13.6 Nm	6.31 JIFFY STAND SWITCH: INTERNATIONAL MODELS, Installation
License plate bracket mounting screw	20-25 **in-lbs**	2.3-2.8 Nm	2.33 REAR FENDER: ALL XL MODELS EXCEPT XL 883N/XL 1200N, Installation
License plate lamp housing screw	14-16 **in-lbs**	1.2-1.3 Nm	6.22 LICENSE PLATE LAMP MODULE: XL 883N/XL 1200N, Installation (HDI Only)
Long post jam nut	65-80 **in-lbs**	7.3-9.0 Nm	6.14 STARTER SOLENOID, Solenoid Contacts
Lower exhaust clamp nut: XR Models	30-33 ft-lbs	40.7-44.7 Nm	4.15 EXHAUST SYSTEM: XR MODELS, Installation
Lower fork bracket pinch screw	30-35 ft-lbs	40.7-47.5 Nm	2.22 FORK STEM AND BRACKET ASSEMBLY, Assembly and Installation
Lower front retainer plate fastener	45-50 ft-lbs	61.0-67.8 Nm	3.13 INSTALLING ENGINE IN CHASSIS, Procedure: XR Models

FASTENER	TORQUE VALUE		NOTES
Lower handlebar clamp bolts	30-40 ft-lbs	40.7-54.3 Nm	2.31 HANDLEBARS, Installation
Lower shock absorber fastener	45-50 ft-lbs	61.0-67.8 Nm	2.16 REAR BRAKE CALIPER: XR MODELS, Installation
Lower shock absorber fastener	45-50 ft-lbs	61.0-67.8 Nm	3.13 INSTALLING ENGINE IN CHASSIS, Procedure: XR Models
Lower shock absorber screw	45-50 ft-lbs	61-68 Nm	5.7 DRIVE BELT, Installation
Lower shock absorber screw	45-50 ft-lbs	61-68 Nm	5.7 DRIVE BELT, Installation
Lower shock absorber screw	45-50 ft-lbs	61-68 Nm	6.21 TURN SIGNALS, Rear Housing Replacement
Lower shock absorber screw	45-50 ft-lbs	61-68 Nm	6.22 LICENSE PLATE LAMP MODULE: XL 883N/XL 1200N, Installation (Domestic Only)
Lower shock absorber screw	45-50 ft-lbs	61-68 Nm	6.22 LICENSE PLATE LAMP MODULE: XL 883N/XL 1200N, Installation (HDI Only)
Master cylinder screw	17-22 ft-lbs	23.0-29.8 Nm	4.20 EVAPORATIVE EMISSIONS CONTROL (CA MODELS), Charcoal Canister
Mirror stem lock nut	96-144 **in-lbs**	10.9-16.3 Nm	2.9 FRONT BRAKE MASTER CYLINDER, Installation
Mirror stem lock nut	96-144 **in-lbs**	10.9-16.3 Nm	2.30 CLUTCH CONTROL, Assembly and Installation
Muffler bracket-to-footrest bracket screw (XR)	15-19 ft-lbs	20.4-25.8 Nm	2.42 PASSENGER FOOTRESTS, XR Models
Muffler interconnect bracket mounting screw	30-33 ft-lbs	40.7-44.8 Nm	4.14 EXHAUST SYSTEM: XL MODELS, Installation
Muffler interconnect bracket mounting screw	30-33 ft-lbs	40.7-44.8 Nm	5.16 TRANSMISSION SPROCKET, Installation
Muffler-to-front muffler mount fastener: XR Models	120-180 **in-lbs**	16.9-20.3 Nm	4.15 EXHAUST SYSTEM: XR MODELS, Installation
Muffler-to-interconnect bracket screw	15-19 ft-lbs	20.4-25.8 Nm	4.14 EXHAUST SYSTEM: XL MODELS, Installation
Muffler-to-muffler bolt: XR Models	120-180 **in-lbs**	16.9-20.3 Nm	4.15 EXHAUST SYSTEM: XR MODELS, Installation
Muffler torca clamp nut	38-43 ft-lbs	51.6-58.4 Nm	4.14 EXHAUST SYSTEM: XL MODELS, Installation
Muffler-to-rear muffler mount fastener	120-180 **in-lbs**	16.9-20.3 Nm	4.15 EXHAUST SYSTEM: XR MODELS, Installation
Neutral indicator switch	120-180 **in-lbs**	13.6-20.3 Nm	5.15 TRANSMISSION INSTALLATION, Assembling Crankcases
Neutral indicator switch	120-180 **in-lbs**	13.6-20.3 Nm	6.28 NEUTRAL INDICATOR SWITCH, Replacement
O2 sensor	29-44 ft-lbs	39.3-59.7 Nm	4.14 EXHAUST SYSTEM: XL MODELS, Installation
Oil cooler fastener	36-60 **in-lbs**	4.1-6.8 Nm	3.13 INSTALLING ENGINE IN CHASSIS, Procedure: XR Models/Apply Loctite Threadlocker 243 (blue)
Oil cooler fastener	36-60 **in-lbs**	4.1-6.8 Nm	3.14 PRECISION COOLING SYSTEM: XR MODELS, Oil Cooler/Apply Loctite Threadlocker 243 (blue)
Oil deflector plate screw	25-35 **in-lbs**	2.8-3.9 Nm	3.18 BOTTOM END OVERHAUL: ASSEMBLY, Crankcase
Oil filter adapter	96-144 **in-lbs**	10.9-16.3 Nm	3.26 OIL FILTER MOUNT, Assembly

FASTENER	TORQUE VALUE		NOTES
Oil pressure indicator switch	50-70 **in-lbs**	5.6-7.9 Nm	3.26 OIL FILTER MOUNT, Assembly
Oil pressure switch	50-70 **in-lbs**	5.6-7.9 Nm	6.33 OIL PRESSURE SWITCH, Installation
Oil pressure switch adapter: XR 1200 only	108-158 **in-lbs**	12.2-17.9 Nm	6.33 OIL PRESSURE SWITCH, Installation
Oil pump cover screws	70-80 **in-lbs**	7.9-9.0 Nm	3.24 OIL PUMP: XL MODELS, Assembly
Oil pump feed fitting	100-120 **in-lbs**	11.3-13.6 Nm	3.24 OIL PUMP: XL MODELS, Installation
Oil pump rotor cover screw: XR models	80-110 **in-lbs**	9.0-12.4 Nm	3.18 BOTTOM END OVERHAUL: ASSEMBLY, Cam Gears and Gearcase Cover: XR Models
Oil pump rotor cover screw: XR models	80-110 **in-lbs**	9.0-12.4 Nm	3.25 OIL PUMP: XR MODELS, Assembly
Oil pump-to-crankcase screw	125-150 **in-lbs**	14.1-16.9 Nm	3.24 OIL PUMP: XL MODELS, Installation
Oil tank mounting screw	36-60 **in-lbs**	4.1-6.8 Nm	3.27 OIL TANK, Installation
Outer rocker cover screw	120-168 **in-lbs**	13.5-19.0 Nm	3.16 TOP END OVERHAUL: ASSEMBLY, Rocker Covers
Oxygen sensor	29-44 ft-lbs	39.3-59.7 Nm	4.13 OXYGEN SENSOR, Installation
Passenger footrest support bracket screw	45-50 ft-lbs	61-68 Nm	2.24 REAR FORK, Installation
Passenger footrest support bracket screw	45-50 ft-lbs	61-68 Nm	2.42 PASSENGER FOOTRESTS, XL Models
Passenger footrest support bracket screw	45-50 ft-lbs	61-68 Nm	3.13 INSTALLING ENGINE IN CHASSIS, Procedure: XL Models
Passenger pillion retainer post screw: XR models	36-60 **in-lbs**	4.1-6.8 Nm	2.35 REAR FENDER: XR MODELS, Installation
Pinion shaft locking nut	19-21 ft-lbs	26-29 Nm	3.18 BOTTOM END OVERHAUL: ASSEMBLY, Cam Gears and Gearcase Cover: XL Models/ plus an additional 15-19 degrees of rotation
Pinion shaft locking nut	19-21 ft-lbs	26-29 Nm	3.18 BOTTOM END OVERHAUL: ASSEMBLY, Cam Gears and Gearcase Cover: XR Models/ plus an additional 15-19 degrees of rotation
Piston oil jet screw	25-35 **in-lbs**	2.8-4.0 Nm	3.18 BOTTOM END OVERHAUL: ASSEMBLY, Crankcase
Positive battery cable-to-starter post lock nut	60-85 **in-lbs**	6.8-9.6 Nm	6.11 BATTERY CABLES, Installation
Precision cooling check valve housing fastener	84-108 **in-lbs**	9.5-12.2 Nm	3.14 PRECISION COOLING SYSTEM: XR MODELS, Cylinder Head Oil Feed Assembly
Precision cooling check valve housing fastener	84-108 **in-lbs**	9.5-12.2 Nm	3.18 BOTTOM END OVERHAUL: ASSEMBLY, Cam Gears and Gearcase Cover: XR Models
Precision cooling check valve plug fitting	15-21 ft-lbs	20.3-28.5 Nm	3.14 PRECISION COOLING SYSTEM: XR MODELS, Cylinder Head Oil Feed Assembly
Primary chain adjuster lock nut	20-25 ft-lbs	27.1-33.9 Nm	5.3 PRIMARY CHAIN ADJUSTER, Installation
Primary chaincase drain plug	14-30 ft-lbs	19.0-40.7 Nm	1.5 MAINTENANCE SCHEDULE, General
Primary chaincase drain plug	14-30 ft-lbs	19.0-40.7 Nm	1.14 TRANSMISSION LUBRICANT, Transmission Lubrication/Apply LOCTITE 565 PST THREAD SEALER (Part No. 99818-97)

2010 Harley-Davidson Sportster Models Service Manual

FASTENER	TORQUE VALUE		NOTES
Primary chain inspection cover	84-120 **in-lbs**	9.5-13.6 Nm	1.12 PRIMARY CHAIN, Adjustment
Primary chain inspection cover screw	84-120 **in-lbs**	9.5-13.6 Nm	1.5 MAINTENANCE SCHEDULE, General
Primary chain lock nut	20-25 ft-lbs	27.1-33.9 Nm	1.12 PRIMARY CHAIN, Adjustment
Primary cover screw	100-120 **in-lbs**	11.3-13.5 Nm	5.3 PRIMARY CHAIN ADJUSTER, Installation
Primary drain plug	14-30 ft-lbs	19.0-40.7 Nm	5.3 PRIMARY CHAIN ADJUSTER, Installation
Push rod retainer screw	80-110 **in-lbs**	9.0-12.4 Nm	3.16 TOP END OVERHAUL: ASSEMBLY, Push Rods, Covers, and Retainers
Quick connect fitting	108-156 **in-lbs**	12.2-17.6 Nm	3.14 PRECISION COOLING SYSTEM: XR MODELS, Oil Pump Lines
Quick connect fitting, cylinder head return oil	108-156 **in-lbs**	12.2-17.6 Nm	3.14 PRECISION COOLING SYSTEM: XR MODELS, Cylinder Head Oil Return Lines
Rear caliper mounting bolt	14-18 ft-lbs	19.6-24.5 Nm	2.16 REAR BRAKE CALIPER: XR MODELS, Installation
Rear caliper pin bolt	14-18 ft-lbs	19.6-24.5 Nm	2.16 REAR BRAKE CALIPER: XR MODELS, Installation
Rear fender brace screw	20-25 **in-lbs**	2.3-2.8 Nm	2.34 REAR FENDER AND LICENSE PLATE BRACKET: XL 883N/XL 1200N, Assembly and Installation
Rear fender brace screw	20-25 **in-lbs**	2.3-2.8 Nm	6.22 LICENSE PLATE LAMP MODULE: XL 883N/XL 1200N, Installation (HDI Only)
Rear fender support screw	132-216 **in-lbs**	14.9-24.4 Nm	2.34 REAR FENDER AND LICENSE PLATE BRACKET: XL 883N/XL 1200N, Assembly and Installation
Rear fork pivot/engine mount bolt	60-70 ft-lbs	81.4-95.0 Nm	2.24 REAR FORK, Installation
Rear fork pivot/engine mount bolt	60-70 ft-lbs	81.4-95.0 Nm	2.28 REAR ENGINE MOUNT/ISOLATOR, Installation
Rear fork pivot/engine mount bolt	60-70 ft-lbs	81.4-95.0 Nm	3.13 INSTALLING ENGINE IN CHASSIS, Procedure: XL Models
Rear fork pivot/engine mount bolt	60-70 ft-lbs	81.4-95.0 Nm	3.13 INSTALLING ENGINE IN CHASSIS, Procedure: XR Models
Rear lighting converter module bracket fasteners	36-60 **in-lbs**	4.1-6.8 Nm	6.23 REAR LIGHTING CONVERTER MODULE: XL 883N/XL 1200N (DOMESTIC ONLY), Installation
Rear muffler mount-to-frame fastener	15-20 ft-lbs	20.3-27.1 Nm	4.15 EXHAUST SYSTEM: XR MODELS, Installation
Rear rigid oil line retainer screw	84-108 **in-lbs**	9.5-12.2 Nm	3.14 PRECISION COOLING SYSTEM: XR MODELS, Cylinder Head Oil Return Lines
Rear rigid oil line retainer screw	84-108 **in-lbs**	9.5-12.2 Nm	3.14 PRECISION COOLING SYSTEM: XR MODELS, Oil Pump Lines
Rear sprocket cover screw: XR models	30-33 ft-lbs	40.7-44.7 Nm	2.28 REAR ENGINE MOUNT/ISOLATOR, Installation
Rear stop light switch bracket screw	72-120 **in-lbs**	8.1-13.6 Nm	3.13 INSTALLING ENGINE IN CHASSIS, Procedure: XL Models
Rear turn signal housing screws: XR models	30-40 **in-lbs**	3.4-4.5 Nm	6.21 TURN SIGNALS, Rear Housing Replacement
Rear turn signal housing-to-stalk	96-156 **in-lbs**	10.9-17.6 Nm	6.21 TURN SIGNALS, Rear Housing Replacement

FASTENER	TORQUE VALUE		NOTES
Rear turn signal stalk nut	132-216 **in-lbs**	14.9-24.4 Nm	2.34 REAR FENDER AND LICENSE PLATE BRACKET: XL 883N/XL 1200N, Assembly and Installation
Return oil manifold screw	84-108 **in-lbs**	9.5-12.2 Nm	3.14 PRECISION COOLING SYSTEM: XR MODELS, Return Oil Manifold
Rider footrest bracket mounting screw	45-50 ft-lbs	61-68 Nm	2.30 CLUTCH CONTROL, Assembly and Installation
Rider footrest support bracket mounting screw	45-50 ft-lbs	61-68 Nm	1.13 CLUTCH, Adjustment
Rider footrest support bracket mounting screw	45-50 ft-lbs	61-68 Nm	2.39 RIDER FOOT CONTROLS: XL MID-MOUNT CONTROLS, Right Footrest and Rear Brake Pedal Assembly
Rider footrest support bracket mounting screw	45-50 ft-lbs	61-68 Nm	2.39 RIDER FOOT CONTROLS: XL MID-MOUNT CONTROLS, Left Footrest and Shift Lever Assembly
Rider footrest support bracket mounting screw	45-50 ft-lbs	61-68 Nm	2.40 RIDER FOOT CONTROLS: XL FORWARD CONTROLS, Right Footrest and Rear Brake Pedal Assembly
Rider footrest support bracket mounting screw	45-50 ft-lbs	61-68 Nm	2.40 RIDER FOOT CONTROLS: XL FORWARD CONTROLS, Left Footrest and Shift Lever Assembly
Rider footrest support bracket mounting screw	45-50 ft-lbs	61-68 Nm	5.4 CLUTCH RELEASE MECHANISM, Assembly and Installation
Rider footrest support mounting bracket	45-50 ft-lbs	61-68 Nm	5.16 TRANSMISSION SPROCKET, Installation
Riser cover screw	8-12 **in-lbs**	0.9-1.4 Nm	6.7 SPEEDOMETER: XL 883C/XL 1200C, Installation/XL 883C/XL 1200C only
Riser cover screw	8-12 **in-lbs**	0.9-1.4 Nm	6.21 TURN SIGNALS, Front Housing Replacement
Riser cover screw	8-12 **in-lbs**	0.9-1.4 Nm	6.36 HANDLEBAR SWITCH ASSEMBLIES, Connectors/XL 883C/XL 1200C only
Rod guide case to inner tube: XR 1200X	66 ft-lbs	90 Nm	2.21 FRONT FORK: XR MODELS, Assembly: XR 1200X
Seat post mounting screw	96-156 **in-lbs**	10.9-17.6 Nm	2.34 REAR FENDER AND LICENSE PLATE BRACKET: XL 883N/XL 1200N, Assembly and Installation
Seat post screw	96-156 **in-lbs**	10.9-17.6 Nm	2.33 REAR FENDER: ALL XL MODELS EXCEPT XL 883N/XL 1200N, Installation
Secondary drive belt deflector screws	36-60 **in-lbs**	4.1-6.8 Nm	5.7 DRIVE BELT, Installation
Shifter peg: XR models	96-144 **in-lbs**	10.9-16.3 Nm	2.41 RIDER FOOT CONTROLS: XR MODELS, Left Footrest and Shift Lever Assembly
Shifter peg screw	96-144 **in-lbs**	10.9-16.3 Nm	2.39 RIDER FOOT CONTROLS: XL MID-MOUNT CONTROLS, Left Footrest and Shift Lever Assembly
Shifter peg screw	96-144 **in-lbs**	10.9-16.3 Nm	2.40 RIDER FOOT CONTROLS: XL FORWARD CONTROLS, Left Footrest and Shift Lever Assembly
Shifter rod lock nuts	84-132 **in-lbs**	9.5-14.9 Nm	2.40 RIDER FOOT CONTROLS: XL FORWARD CONTROLS, Adjusting Shift Pedal

2010 Harley-Davidson Sportster Models Service Manual

FASTENER	TORQUE VALUE		NOTES
Shifter rod-to-shift lever screw	120-180 **in-lbs**	13.6-20.4 Nm	2.40 RIDER FOOT CONTROLS: XL FORWARD CONTROLS, Left Footrest and Shift Lever Assembly
Shifter rod-to-shift lever screw	120-180 **in-lbs**	13.6-20.4 Nm	2.40 RIDER FOOT CONTROLS: XL FORWARD CONTROLS, Left Footrest and Shift Lever Assembly
Shifter rod-to-shift lever screw	120-180 **in-lbs**	13.6-20.4 Nm	2.40 RIDER FOOT CONTROLS: XL FORWARD CONTROLS, Adjusting Shift Pedal
Shift linkage fastener	120-180 **in-lbs**	13.6-20.3 Nm	2.41 RIDER FOOT CONTROLS: XR MODELS, Left Footrest and Shift Lever Assembly
Shift linkage pivot bolt	10-15 ft-lbs	13.6-20.3 Nm	1.13 CLUTCH, Adjustment
Shift linkage pivot bolt	10-15 ft-lbs	13.6-20.3 Nm	3.13 INSTALLING ENGINE IN CHASSIS, Procedure: XR Models
Shift pedal clevis screw	13-17 ft-lbs	17.6-23.0 Nm	2.40 RIDER FOOT CONTROLS: XL FORWARD CONTROLS, Left Footrest and Shift Lever Assembly
Shift rod jamnuts	84-132 **in-lbs**	9.5-14.9 Nm	2.41 RIDER FOOT CONTROLS: XR MODELS, Adjusting Shift Pedal
Shift rod screw (XR)	120-180 **in-lbs**	13.6-20.4 Nm	2.41 RIDER FOOT CONTROLS: XR MODELS, Adjusting Shift Pedal
Shock absorber mounting screw	45-50 ft-lbs	61-68 Nm	2.4 WHEELS, Rear Wheel
Shock absorber mounting screw	45-50 ft-lbs	61-68 Nm	2.23 BELT GUARD AND DEBRIS DEFLECTOR, Belt Guard: XL Models
Shock absorber mounting screw	45-50 ft-lbs	61-68 Nm	2.25 SHOCK ABSORBERS, Installation
Shock absorber mounting screw	45-50 ft-lbs	61-68 Nm	2.25 SHOCK ABSORBERS, Installation
Single caliper cast front wheel hub plate screw	16-24 ft-lbs	21.7-32.6 Nm	2.4 WHEELS, Sealed Wheel Bearings
Siren/canister bracket; rear brake line fastener	17-22 ft-lbs	23.0-29.8 Nm	3.13 INSTALLING ENGINE IN CHASSIS, Procedure: XR Models
Solenoid ring terminal nut	70-90 **in-lbs**	7.9-10.2 Nm	6.13 STARTER, Field Coil Assembly
Spark plug	12-18 ft-lbs	16.3-24.4 Nm	1.18 SPARK PLUGS, Inspection
Spark plug (XL)	12-18 ft-lbs	16.3-24.4 Nm	1.5 MAINTENANCE SCHEDULE, General
Spark plug (XL)	12-18 ft-lbs	16.3-24.4 Nm	1.5 MAINTENANCE SCHEDULE, General
Speedometer and tachometer mounting screw	12-18 **in-lbs**	1.4-2.0 Nm	6.8 SPEEDOMETER AND TACHOMETER: XR MODELS, Trip Odometer Reset Switch Replacement/XL 883C/XL 1200C only
Speedometer and tachometer mounting screw	12-18 **in-lbs**	1.4-2.0 Nm	6.8 SPEEDOMETER AND TACHOMETER: XR MODELS, Tachometer Installation/XL 883C/XL 1200C only
Speedometer and Tachometer mounting screw	12-18 **in-lbs**	1.4-2.0 Nm	6.8 SPEEDOMETER AND TACHOMETER: XR MODELS, Speedometer Installation/XL 883C/XL 1200C only
Speedometer mounting screw	12-18 **in-lbs**	1.4-2.0 Nm	6.7 SPEEDOMETER: XL 883C/XL 1200C, Installation/XL 883C/XL 1200C only
Spoke nipple	55 **in-lbs**	6.2 Nm	1.5 MAINTENANCE SCHEDULE, General
Spoke nipple	55 **in-lbs**	6.2 Nm	1.11 TIRES AND WHEELS, Wheel Spokes

FASTENER	TORQUE VALUE		NOTES
Spoke nipple	55 **in-lbs**	6.2 Nm	2.8 CHECKING AND TRUING WHEELS, Truing Wheels
Sprocket (rear) mounting screw - FINAL torque	80 ft-lbs	108.0 Nm	2.4 WHEELS, Rear Wheel
Sprocket (rear) mounting screw - INITIAL torque	60 ft-lbs	81.3 Nm	2.4 WHEELS, Rear Wheel
Sprocket compensator bowl bolt - FINAL torque	80 ft-lbs	108.5 Nm	D.1 COMPENSATING SPROCKET, Assembly and Installation/Tighten in a star pattern
Sprocket compensator bowl bolt - INITIAL torque	60 ft-lbs	81.3 Nm	D.1 COMPENSATING SPROCKET, Assembly and Installation/Tighten in a star pattern
Sprocket cover fastener, large: XR models	30-33 ft-lbs	40.7-44.8 Nm	3.13 INSTALLING ENGINE IN CHASSIS, Procedure: XR Models
Sprocket cover fastener, large: XR models	30-33 ft-lbs	40.7-44.8 Nm	5.7 DRIVE BELT, Idler Pulley: XR Models Only
Sprocket cover fastener, small: XR models	80-120 **in-lbs**	9.0-13.6 Nm	3.13 INSTALLING ENGINE IN CHASSIS, Procedure: XR Models
Sprocket cover fastener, small: XR models	80-120 **in-lbs**	9.0-13.6 Nm	5.7 DRIVE BELT, Idler Pulley: XR Models Only
Sprocket cover fastener, XR models large dia.	30-33 ft-lbs	40.7-44.8 Nm	5.7 DRIVE BELT, Installation
Sprocket cover fastener, XR models large dia.	30-33 ft-lbs	40.7-44.8 Nm	5.16 TRANSMISSION SPROCKET, Installation
Sprocket cover fasteners, XL models	80-120 **in-lbs**	9.0-13.6 Nm	5.7 DRIVE BELT, Installation
Sprocket cover fasteners, XL models	80-120 **in-lbs**	9.0-13.6 Nm	5.16 TRANSMISSION SPROCKET, Installation
Sprocket cover fasteners, XR models small dia.	80-120 **in-lbs**	9.0-13.6 Nm	5.7 DRIVE BELT, Installation
Sprocket cover fasteners, XR models small dia.	80-120 **in-lbs**	9.0-13.6 Nm	5.16 TRANSMISSION SPROCKET, Installation
Sprocket cover screw	80-120 **in-lbs**	9.0-13.6 Nm	3.13 INSTALLING ENGINE IN CHASSIS, Procedure: XL Models
Sprocket cover screw: XL models	80-120 **in-lbs**	9.0-13.6 Nm	2.28 REAR ENGINE MOUNT/ISOLATOR, Installation
Sprocket cover screw: XL models	80-120 **in-lbs**	9.0-13.6 Nm	2.28 REAR ENGINE MOUNT/ISOLATOR, Installation
Sprocket cover screw: XL models	80-120 **in-lbs**	9.0-13.6 Nm	4.14 EXHAUST SYSTEM: XL MODELS, Installation
Stabilizer link (lower front) frame bracket mounting screw	25-35 ft-lbs	33.9-47.5 Nm	2.26 STABILIZER LINKS, Lower Front Stabilizer Link
Stabilizer link (lower front) frame bracket mounting screw	25-35 ft-lbs	33.9-47.5 Nm	2.28 REAR ENGINE MOUNT/ISOLATOR, Installation
Stabilizer link (lower front) frame bracket mounting screw	25-35 ft-lbs	33.9-47.5 Nm	3.13 INSTALLING ENGINE IN CHASSIS, Procedure: XL Models
Stabilizer link (lower front) frame bracket mounting screw	25-35 ft-lbs	33.9-47.5 Nm	3.13 INSTALLING ENGINE IN CHASSIS, Procedure: XR Models
Stabilizer link (lower front) frame bracket mounting screw	25-35 ft-lbs	33.9-47.5 Nm	3.16 TOP END OVERHAUL: ASSEMBLY, Assembling Motorcycle After Top End Repair

FASTENER	TORQUE VALUE		NOTES
Stabilizer link (upper front) engine bracket mounting screw	55-65 ft-lbs	74.6-88.2 Nm	2.26 STABILIZER LINKS, Upper Front Stabilizer Link
Stabilizer link (upper front) frame bracket mounting screw	25-35 ft-lbs	33.9-47.5 Nm	2.26 STABILIZER LINKS, Upper Front Stabilizer Link
Stabilizer link (upper front) frame bracket mounting screw	25-35 ft-lbs	33.9-47.5 Nm	2.27 FRONT ENGINE MOUNT/ISOLATOR, Installation
Stabilizer link (upper front) frame bracket mounting screw	25-35 ft-lbs	33.9-47.5 Nm	2.28 REAR ENGINE MOUNT/ISOLATOR, Installation
Stabilizer link (upper front) frame bracket mounting screw	25-35 ft-lbs	33.9-47.5 Nm	3.13 INSTALLING ENGINE IN CHASSIS, Procedure: XL Models
Stabilizer link (upper front) frame bracket mounting screw	25-35 ft-lbs	33.9-47.5 Nm	3.13 INSTALLING ENGINE IN CHASSIS, Procedure: XR Models
Stabilizer link (upper front) frame bracket mounting screw	25-35 ft-lbs	33.9-47.5 Nm	3.16 TOP END OVERHAUL: ASSEMBLY, Assembling Motorcycle After Top End Repair
Stabilizer link bracket to front head screws and lock washers	55-65 ft-lbs	74.6-88.2 Nm	3.21 CYLINDER HEAD, Assembly
Stabilizer link screw	25-35 ft-lbs	33.9-47.5 Nm	2.26 STABILIZER LINKS, Upper Front Stabilizer Link
Stabilizer link screw	25-35 ft-lbs	33.9-47.5 Nm	2.26 STABILIZER LINKS, Lower Front Stabilizer Link
Stabilizer link screw	25-35 ft-lbs	33.9-47.5 Nm	2.26 STABILIZER LINKS, Rear Stabilizer Link
Stabilizer link screw	25-35 ft-lbs	33.9-47.5 Nm	2.27 FRONT ENGINE MOUNT/ISOLATOR, Installation
Stabilizer link screw	25-35 ft-lbs	33.9-47.5 Nm	2.27 FRONT ENGINE MOUNT/ISOLATOR, Installation
Stabilizer link screw	25-35 ft-lbs	33.9-47.5 Nm	2.28 REAR ENGINE MOUNT/ISOLATOR, Installation
Stabilizer link screw	25-35 ft-lbs	33.9-47.5 Nm	3.13 INSTALLING ENGINE IN CHASSIS, Procedure: XL Models
Stabilizer link screw	25-35 ft-lbs	33.9-47.5 Nm	3.13 INSTALLING ENGINE IN CHASSIS, Procedure: XL Models
Stabilizer link screw	25-35 ft-lbs	33.9-47.5 Nm	3.13 INSTALLING ENGINE IN CHASSIS, Procedure: XL Models
Stabilizer link screw	25-35 ft-lbs	33.9-47.5 Nm	3.13 INSTALLING ENGINE IN CHASSIS, Procedure: XR Models
Stabilizer link screw	25-35 ft-lbs	33.9-47.5 Nm	3.13 INSTALLING ENGINE IN CHASSIS, Procedure: XR Models
Stabilizer link screw	25-35 ft-lbs	33.9-47.5 Nm	3.13 INSTALLING ENGINE IN CHASSIS, Procedure: XR Models
Starter end cover screw	90-110 **in-lbs**	10.2-12.4 Nm	6.13 STARTER, Field Coil Assembly
Starter motor oil line clamp fastener	16-21 **in-lbs**	1.8-2.4 Nm	6.13 STARTER, Installation
Starter mounting bolt	13-20 ft-lbs	17.6-27.1 Nm	6.13 STARTER, Installation
Starter positive terminal nut	60-85 **in-lbs**	6.8-9.6 Nm	6.13 STARTER, Installation
Starter thru bolts	39-65 **in-lbs**	4.4-7.3 Nm	6.13 STARTER, Field Coil Assembly

FASTENER	TORQUE VALUE		NOTES
Stator harness retainer screw	56 **in-lbs**	6.3 Nm	6.26 ALTERNATOR, Assembly and Installation/Screw must be flush with plate. Do not exceed torque specification.
Stoplight switch to tee nut	132-168 **in-lbs**	14.9-18.9 Nm	6.24 REAR STOP LAMP SWITCH, Replacement
Strut cover screw	132-216 **in-lbs**	14.9-24.4 Nm	6.21 TURN SIGNALS, Rear Housing Replacement
Tail lamp base mounting screw	45-48 **in-lbs**	5.1-5.4 Nm	2.33 REAR FENDER: ALL XL MODELS EXCEPT XL 883N/XL 1200N, Installation
Tail lamp base mounting screw: XL models only	45-48 **in-lbs**	5.1-5.4 Nm	6.20 TAIL LAMP: ALL MODELS EXCEPT XL 883N/XL 1200N, Base Replacement
Tail lamp base mounting screw: XR models only	36-60 **in-lbs**	4.1-6.8 Nm	6.20 TAIL LAMP: ALL MODELS EXCEPT XL 883N/XL 1200N, Base Replacement
Tail lamp lens screw	20-24 **in-lbs**	2.3-2.7 Nm	6.20 TAIL LAMP: ALL MODELS EXCEPT XL 883N/XL 1200N, Bulb Replacement
Tail lamp lens screw	20-24 **in-lbs**	2.3-2.7 Nm	6.20 TAIL LAMP: ALL MODELS EXCEPT XL 883N/XL 1200N, Base Replacement
Tail section bolts: XR models	72-120 **in-lbs**	8.1-13.6 Nm	2.35 REAR FENDER: XR MODELS, Installation
Throttle cable bracket screw: XR models	60 **in-lbs**	6.8 Nm	4.10 INDUCTION MODULE: XR MODELS, Assembly
TMAP sensor screw	80 **in-lbs**	9.0 Nm	4.12 TEMPERATURE MANIFOLD ABSOLUTE PRESSURE (TMAP) SENSOR, Installation: XR Models
TP sensor mounting screw (XR models)	29 **in-lbs**	3.3 Nm	4.7 THROTTLE POSITION (TP) SENSOR, Installation: XR Models
TP sensor screw	35 **in-lbs**	4.0 Nm	4.7 THROTTLE POSITION (TP) SENSOR, Installation: XL Models
TP sensor screw	35 **in-lbs**	4.0 Nm	4.12 TEMPERATURE MANIFOLD ABSOLUTE PRESSURE (TMAP) SENSOR, Installation: XL Models
Transmission mainshaft nut	50-60 ft-lbs	67.8-81.3 Nm	5.5 PRIMARY DRIVE AND CLUTCH: XL MODELS, Installation
Transmission mainshaft nut	50-60 ft-lbs	67.8-81.3 Nm	5.6 PRIMARY DRIVE AND CLUTCH: XR MODELS, Installation
Transmission sprocket lockplate	90-110 **in-lbs**	10.2-12.4 Nm	5.16 TRANSMISSION SPROCKET, Installation
Transmission sprocket nut (initial torque)	50 ft-lbs	68 Nm	5.16 TRANSMISSION SPROCKET, Installation/Initial torque plus 30-40 degrees.
Turn signal (front) clamp screw	96-120 **in-lbs**	10.9-13.6 Nm	2.30 CLUTCH CONTROL, Assembly and Installation
Turn signal (front) clamp screw	96-120 **in-lbs**	10.9-13.6 Nm	6.21 TURN SIGNALS, Front Housing Replacement
Turn signal (rear) stalk nut	132-216 **in-lbs**	14.9-24.4 Nm	2.33 REAR FENDER: ALL XL MODELS EXCEPT XL 883N/XL 1200N, Installation
Turn signal stalk nut	132-216 **in-lbs**	14.9-24.4 Nm	6.21 TURN SIGNALS, Rear Housing Replacement
Upper handlebar clamp screw, front	12-18 ft-lbs	16.3-24.4 Nm	2.31 HANDLEBARS, Installation
Upper handlebar clamp screw, front: XR 1200	12-18 ft-lbs	16.3-24.4 Nm	2.31 HANDLEBARS, Installation
Upper handlebar clamp screw, rear	12-18 ft-lbs	16.3-24.4 Nm	2.31 HANDLEBARS, Installation
Upper handlebar clamp screw, rear: XR 1200	12-18 ft-lbs	16.3-24.4 Nm	2.31 HANDLEBARS, Installation

2010 Harley-Davidson Sportster Models Service Manual

FASTENER	TORQUE VALUE		NOTES
Valve stem nut	12-15 **in-lbs**	1.4-1.7 Nm	2.18 TIRES, Installation
Vehicle speed sensor (VSS) screw	80-100 **in-lbs**	9.0-11.3 Nm	6.27 VEHICLE SPEED SENSOR (VSS), Installation
Vertical headlamp adjustment bolt	30-35 ft-lbs	40.7-47.5 Nm	1.28 HEADLAMP ALIGNMENT, Headlamp Adjustment: Sportster Models
Voltage regulator mounting screw	36-60 **in-lbs**	4.1-6.8 Nm	6.3 VOLTAGE REGULATOR, Installation: XL Models
Voltage regulator mounting screw	36-60 **in-lbs**	4.1-6.8 Nm	6.3 VOLTAGE REGULATOR, Installation: XR Models

NOTES

1

150 Metri-Pack Connector
Repair. A-22

4

480 Metri-Pack Connector
Repair. A-24

6

630 Metri-Pack Connector
Repair. A-25

A

AIRBOX: XR MODELS
Installation. 4-7
Removal. 4-7
Air Cleaner
Cleaning, Inspection and Repair. 4-5
Air Cleaner: XL Models
Cleaning, Inspection and Repair. 1-65
General. 1-65
Installation. 1-66
Removal. 1-65
Air Cleaner: XR Models
Cleaning, Inspection and Repair. 1-68
General. 1-67
Installation. 1-68
Removal. 1-67
Air Cleaner (XL Models)
Installation. 4-6
Removal. 4-5
Alternator
Assembly and Installation. 6-67
Cleaning and Inspection. 6-67
Removal and Disassembly. 6-66
AMP Multilock Connector
Repair. A-1
Appendix C: Compensating Sprocket
Assembly and Installation. D-2
General. D-1
Removal and Disassembly. D-1
Appendix D: Compensating Sprocket
Cleaning, Inspection and Repair. D-1
Sprocket Bearing Replacement. D-1
Assembly and Installation
Rotor. 6-68
Stator. 6-67
Autofuse Electrical Connector. A-5
Assembly. A-5
Disassembly. A-5

B

Bank Angle Sensor (BAS). 6-20
Battery
Disconnection and Removal. 1-53
Installation and Connection. 1-55
Maintenance. 1-52
Battery Cables
Installation. 6-22
Removal. 6-22
Battery Maintenance
Charging Battery. 1-54
Cleaning and Inspection. 1-54
Storage. 1-56
Voltmeter Test. 1-54
Battery Tray. 6-24
Installation. 6-25
Removal. 6-24
Belt Guard and Debris Deflector
Belt Guard: XL Models. 2-129
Belt Guard: XR Models. 2-129
Debris Deflector: XL Models. 2-129
Debris Deflector: XR Models. 2-129
Bleeding Hydraulic Brake System. 1-20
Bleeding Front Brake: All Models. 1-20
Bleeding Rear Brake: All Models. 1-22
Bottom End Overhaul: Assembly
Cam Gears and Gearcase Cover: XR Models. 3-87
Bottom End Overhaul: Disassembly
Crankcase. 3-76
Gearcase Cover/Oil Pump Housing and Cam Gears: XR Models. 3-75
Gearcase Cover and Cam Gears: XL Models. 3-74
General. 3-74
Oil Pump: XL Models. 3-74
Tappets. 3-74
Bottom End Overhaul (Assembly)
Cam Gears and Gearcase Cover: XL Models. 3-84
Cam Gears and Gearcase Cover: XL Models. 3-87
Crankcase. 3-79
Tappets. 3-90
Top End of Engine. 3-91
Bottom End Service
Engine in Chassis. 3-32
Engine Removed From Chassis. 3-33
Brake Lines
Front Brake Line: All Models. 2-91
Rear Brake Line: XL Models. 2-94
Rear Brake Line: XR Models. 2-95
Brake Pads and Discs
Brake Pad Replacement (Front): XR Models. 1-31
Brake Pad Replacement (Rear): XR Models. 1-33
Inspection: XL Models. 1-24
Inspection: XR Models. 1-31
Replacement (Front): XL Models. 1-25
Replacement (Rear): XL Models. 1-27
Brakes
General. 1-18
Inspection. 1-18
Troubleshooting. 1-19
Bulb Chart. 1-9
Bulb Requirements
Bulb Chart. 1-9

C

Cable and Chassis Lubrication. 1-64
Foot Shift Lever and Rear Brake Pedal. 1-64
General. 1-64
Jiffy Stand. 1-64
Steering Head Bearings. 1-64
Cam Gears
Cleaning, Inspection and Identification. 3-93
Case Disassembly for Transmission Removal
Engine Removal and Disassembly. 5-35
Checking Wheel Runout. 2-35
Lateral Runout. 2-35
Radial Runout. 2-35
Cleaning
Bearings. 1-5
Cleaning Process. 1-5
Part Protection. 1-5
Rust or Corrosion Removal. 1-5
Cleaning, Inspection and Repair
Boring and Honing Cylinder. 3-115
Checking Gasket Surface. 3-113

Fitting Piston Rings. 3-115
Measuring Cylinder Bore. 3-113
Measuring Piston to Cylinder Fit. 3-114
Clutch
Adjusting Screw Disassembly/Assembly. 5-16
Adjusting Screw Disassembly/Assembly. 5-24
Adjustment. 1-41
General. 5-20
Clutch Adjusting Screw. 5-16
Clutch Adjusting Screw. 5-24
Clutch Control
Assembly and Installation. 2-149
Removal and Disassembly: Clutch Cable. 2-147
Removal and Disassembly: Clutch Hand Control. . 2-148
Removal and Disassembly: Clutch Lever and Clutch Cable. 2-148
Clutch Interlock Switch
Replacement. 6-102
Clutch Release Mechanism
Assembly and Installation. 5-10
Cleaning, Inspection and Repair. 5-10
Removal and Disassembly. 5-9
Clutch Shell
Bearing Replacement. 5-25
Compression Damping Adjustment
Front Fork (XR 1200X). 2-125
Shock Absorber (XR 1200X). 1-63
Connecting Rod Bushings
Honing Upper Connecting Rod Bushings. 3-119
Installing Upper Connecting Rod Bushings. 3-118
Reaming Upper Connecting Rod Bushings. 3-119
Removing Upper Connecting Rod Bushings. 3-117
Repair. 3-120
Connectors
Connector Number. B-1
Description. B-1
Function. B-1
Location Table. B-1
Repair Instruction. B-1
Conversions
Fluid. C-2
Length. C-1
Torque. C-3
Countershaft
Assembly. 5-46
Disassembly. 5-44
Crankcase. 3-121
Assembling Halves. 3-128
Disassembly. 3-121
Fitting Pinion Bearings. 3-123
Lapping Engine Main Bearing Races. 3-127
Removal. 3-121
Removing Cylinder Base Studs. 3-78
Removing Piston Oil Jets. 3-78
Crankcase Breathing System
XL Models. 3-15
XR Models. 3-16
Crank Position Sensor (CKP). 6-65
Installation. 6-65
Removal. 6-65
Critical Fasteners
Inspection. 1-76
Cylinder and Piston
Assembly and Installation. 3-120
Cleaning, Inspection and Repair. 3-113
Connecting Rod Bushings. 3-117
Removal and Disassembly. 3-113
Cylinder Head
Assembly. 3-110
Cleaning and Inspection: Heads. 3-101
Cleaning and Inspection: Push Rods. 3-103
Cleaning and Inspection: Rocker Arm Assemblies. . 3-101
Cleaning and Inspection: Spark Plug Threads. . . . 3-103
Cleaning and Inspection: Valve Guides. 3-103
Cleaning and Inspection: Valves. 3-102
Cleaning and Inspection: Valve Seats. 3-102
Cleaning and Inspection: Valve Springs. 3-103
Disassembly. 3-99
Installation. 3-112
Refacing Valve Seats. 3-108
Refacing Valve Seats: Replacement. 3-110
Removal. 3-99
Replacing Rocker Arm Bushings. 3-103
Replacing Valve Guides. 3-104
Cylinder Heads
Disassembling Push Rods and Covers. 3-60
Disassembling Rocker Covers. 3-55
Removing Cylinder Head. 3-57

D

Delphi Connector
Repair. A-6
Deutsch Connector
Crimping Mini Terminals. A-17
Crimping Solid Barrel Terminals. A-15
Crimping Standard Terminals. A-14
Repair. A-10
Drive Belt
Deflection. 1-47
Drive Belt and Sprockets. 1-45
Belt Deflection Adjustment. 1-48
Cleaning. 1-45
Inspection. 1-45
Drive Belt System
Idler Pulley. 1-45

E

Electrical Caddies
General. 6-77
Wire Harness Caddy. 6-77
Wire Harness Caddy:XR Models. 6-80
Electronic Control Module (ECM). 6-18
Electronic Control Module (ECM): XL Models
Removal. 6-18
Engine. 3-11
Engine Lubrication System
Oil Flow: XL Models. 3-23
Oil Flow: XR Models. 3-23
Oil Pump. 3-20
Engine Mounts and Stabilizer Links
Inspection. 1-73
Engine Oil
Grades. 1-7
Temperature Recommendations. 1-7
Winter Lubrication. 1-8

Engine Oil and Filter
Changing. 1-15
Checking and Adding Oil. 1-14
Engine Temperature (ET) Sensor
General. 4-24
Installation. 4-25
Removal. 4-24
Evaporative Emissions Control: CA Models
Charcoal Canister Installation. 4-67
Charcoal Canister Removal. 4-66
General. 4-65
Hose Routing. 4-68
Vapor Valve. 4-67
Exhaust System
Exhaust System Leak Check. 1-70
Exhaust System: XL Models
General. 4-47
Installation. 4-49
Removal. 4-48
Exhaust System: XR Models
General. 4-51
Installation. 4-52
Removal. 4-51

F

Fluid Conversions. C-2
FOB Assignment. 6-109
FOB Battery
Battery Replacement. 6-105
Schedule. 6-105
Fork Lock
Installation. 2-184
Removal. 2-184
Fork Oil Level
Specifications. 2-124
Fork Stem and Bracket Assembly
Assembly and Installation. 2-128
Cleaning, Inspection and Repair. 2-127
Removal and Disassembly. 2-127
Front Brake Caliper
Assembly. 2-53
Assembly. 2-60
Cleaning, Inspection and Repair. 2-52
Disassembly. 2-50
Installation. 2-55
Installing Brake Pads in Caliper. 2-54
Lubricating Pins and Boots. 2-53
Removal. 2-49
Front Brake Caliper: XR Models
Assembly. 2-60
Cleaning, Inspection and Repair. 2-59
Disassembly. 2-58
Installation. 2-61
Removal. 2-57
Front Brake Line: All Models
Installation. 2-93
Removal. 2-91
Front Brake Master Cylinder
Assembly. 2-44
Cleaning, Inspection and Repair. 2-44
Disassembly. 2-42
General. 2-40
Inspection. 2-40
Installation. 2-45
Removal. 2-40
Front Engine Mount/Isolator
Installation. 2-139
Removal. 2-138
Front Fender
XL Models. 2-157
XR Models. 2-157
Front Fork
Compression Damping Adjustment (XR 1200X). . 2-125
Preload Adjustment (XR 1200X). 2-125
Rebound Damping Adjustment (XR 1200X). 2-125
Suspension Adjustment (XR 1200X). 2-125
Front Fork: XL Models. 2-104
Assembly. 2-107
Cleaning, Inspection and Repair. 2-107
Disassembly. 2-104
Fork Oil. 2-108
Fork Oil Amounts. 2-104
Fork Oil Change. 2-104
Fork Oil Level. 2-109
Installation. 2-109
Removal. 2-104
Front Fork: XR1200
Fork Oil Level, right. 2-120
Front Fork: XR 1200
Assembly. 2-117
Disassembly. 2-110
Fork Oil Level, left. 2-118
Installation. 2-124
Removal. 2-110
Front Fork: XR1200X
Spring Service Length. 2-124
Front Fork: XR 1200X
Assembly. 2-121
Cleaning and Inspection. 2-116
Cleaning and Inspection. 2-116
Disassembly. 2-114
Fork Oil Level. 2-124
Installation. 2-124
Removal. 2-110
Front Fork: XR Models
General. 2-110
Fuel and Oil
Gasoline Blends. 1-7
Fuel Injectors
General. 4-53
Installation. 4-54
Removal. 4-53
Fuel Pressure Test
General. 4-61
Testing. 4-61
Fuel Pump
Assembly. 4-58
Disassembly. 4-57
General. 4-56
Installation. 4-59
Removal. 4-56
Fuel Supply Filter. 1-72
Installation. 1-72
Removal. 1-72
Fuel Tank
Cleaning and Inspection. 4-10

Console Replacement. 4-12
Installation. 4-10
Removal. 4-9
Fuel Tank: XR Models
Assemble. 4-18
Cleaning and Inspection. 4-17
Disassemble. 4-17
General. 4-15
Installing Fuel Tank. 4-18
Purging and Disconnecting Fuel Supply Hose. 4-15
Reconnecting Fuel Hose and Filling Fuel Tank. . . . 4-19
Removing Fuel Tank. 4-15
Fuel Tank (XL Models). 4-8
Purging and Disconnecting Fuel Supply Hose. 4-9
Reconnecting Fuel Hose and Filling Fuel Tank. . . . 4-11
Vapor Valve. 4-11

G

Gasoline
Octane Ratings. 1-7
Type. 1-7
Gearcase Cover and Cam Gears
Assembly and Installation. 3-98
Bushing Installation: XL Models. 3-95
Bushing Reaming. 3-96
Bushing Replacement: XL Models. 3-94
General. 3-93
Removal and Disassembly. 3-93
Glossary
Acronyms and Abbreviations. E-1

H

Handlebars
Installation. 2-154
Removal. 2-151
Handlebar Switches
Connectors. 6-93
Left. 6-101
Repair Procedures. 6-93
Right. 6-95
Hands-Free Fob Battery. 6-105
HD-SSS
Configuration. 6-109
Tag Actuation. 6-109
Headlamp
Replacement (All models except XL 883C/XL 1200C). 6-42
Replacement (XL 883C/XL 1200C). 6-41
Headlamp Alignment
Check. 1-74
Headlamp Adjustment. 1-74
Horn
Replacement (Models with Front Mounted Horn). . . 6-90
Replacement (Models with Side Mounted Horn). . . 6-90
Troubleshooting. 6-90
Voltage Test. 6-90
How To Use This Section
Bottom End Repair. 3-29
Top End Repair. 3-29
Typical Symptoms. 3-29

I

Idle Air Control (IAC)
General. 4-37
Installation: XL Models. 4-38
Installation: XR Models. 4-40
Removal: XL Models. 4-38
Removal: XR Models. 4-39
Idler Pulley
Inspection. 1-45
Ignition/Light Switch. 6-33
Installation. 6-33
Removal. 6-33
Ignition Coil. 6-38
Installation. 6-39
Removal. 6-38
Troubleshooting. 6-38
Indicator Lamp Module. 6-44
Preliminary Disassembly (All Models). 6-44
Reassembling Vehicle (All models). 6-46
Replacement: All Other Models. 6-45
Replacement: XL 1200L/XL 883N and XL 1200N. . 6-44
Replacement (XL 883C/XL 1200C). 6-45
Induction Module
Installation. 4-30
Induction Module: XR Models
Assembly. 4-35
Disassembly. 4-34
General. 4-33
Installation. 4-35
Removal. 4-33
Induction Module (XL Models). 4-26
Assembly. 4-30
Disassembly. 4-29
Removal. 4-26
Installation
Countershaft Needle Bearing. 5-57
Exhaust Pipes and Mufflers. 4-49
Muffler Interconnect Bracket. 4-49
Shifter Drum Bushing. 5-57
Installing Engine in Chassis. 3-43
XL Models. 3-43
XR Models. 3-45
Intake Leak Test
General. 4-63
Leak Tester: Parts List. 4-63
Leak Tester: Tester Adjustment. 4-63
Leak Tester: Tester Assembly. 4-63
Procedure. 4-63

J

Jiffy Stand. 2-168
Cleaning and Lubrication. 2-168
Installation. 2-169
Interlock. 2-168
Removal. 2-168
Jiffy Stand Switch: International Models
General. 6-83
Installation. 6-84
Removal. 6-83

L

Left Handlebar Switch
- Assembly . . . 6-102
- Disassembly . . . 6-101
- Installation . . . 6-103
- Removal . . . 6-101
- Switch Repair/Replacement . . . 6-101

Left Side Cover
- Closing Left Side Cover . . . 2-102
- General . . . 2-101
- Installing Left Side Cover . . . 2-102
- Opening Left Side Cover . . . 2-101
- Removing Left Side Cover . . . 2-102

License Plate Lamp Module: XL 883N/XL 1200N
- General . . . 6-57
- Installation (Domestic Only) . . . 6-58
- Installation (HDI Only) . . . 6-60
- Removal (Domestic Only) . . . 6-57
- Removal (HDI Only) . . . 6-58

Loctite . . . i-II

M

Main Drive Gear and Bearing
- Assembly . . . 5-51
- Disassembly . . . 5-50
- General . . . 5-48
- Installation: Bearing . . . 5-52
- Installation: Main Drive Gear . . . 5-53
- Installation: Main Drive Gear Seal . . . 5-55
- Removal: Ball Bearing . . . 5-50
- Removal: Main Drive Gear . . . 5-49

Main Fuse
- Installation . . . 6-92
- Removal . . . 6-92

Main-Fuse
- General . . . 6-92

Main Fuse Holder . . . 6-10
- Replacement . . . 6-10

Main Fuse Housing
- Repair . . . A-8

Mainshaft
- Assembly . . . 5-46
- Disassembly . . . 5-43

Mainshaft and Countershaft Bearings
- Installation . . . 5-58

Maintenance
- Idler Pulley . . . 1-45

Maintenance Schedule
- General . . . 1-10

Main Wiring Harness
- General . . . 6-72
- Installation . . . 6-73
- Removal . . . 6-72

Metric System . . . C-2

Metri-Pack Terminals
- Crimping . . . A-26

Molex Connector
- Repair . . . A-18
- Terminal Crimps . . . A-19

N

Neutral Indicator Switch . . . 6-70
- Replacement . . . 6-70

O

Octane Rating . . . 1-7

Odometer Reset Switch,
- Replacement: XR Models . . . 6-17

Oil Filter Mount . . . 3-136
- Assembly . . . 3-136
- Cleaning and Inspection . . . 3-136
- Disassembly . . . 3-136

Oil Pressure
- Checking Oil Pressure . . . 3-13
- Indicator Lamp . . . 3-12

Oil Pressure Switch . . . 6-88
- Installation . . . 6-88
- Removal . . . 6-88

Oil Pump . . . 3-129

Oil Pump . . . 3-132
- Assembly . . . 3-130
- Cleaning and Inspection . . . 3-130
- Cleaning and Inspection . . . 3-134
- Disassembly . . . 3-130
- Disassembly: XR Models . . . 3-133
- Installation . . . 3-130
- Removal . . . 3-130

Oil Pump: XR Models
- Assembly . . . 3-135

Oil Tank
- Installation . . . 3-140
- Oil Hose Routing: XL Models . . . 3-137
- Oil Hose Routing: XR Models . . . 3-137
- Removal . . . 3-139

Optional Security Siren
- Battery Replacement . . . 6-86

Oxygen Sensors
- General . . . 4-45
- Installation . . . 4-46
- Removal . . . 4-45

P

Packard 100W Connector
- Repair . . . A-28

Packard Micro-64 Connector
- Repair . . . A-30

Passenger Footrests . . . 2-182
- XL Models . . . 2-182
- XR Models . . . 2-182

Personal Identification Number (PIN)
- Tag Changing . . . 6-107
- Tag Entry . . . 6-107

Precision Cooling System
- Cylinder Head Oil Feed . . . 3-50
- Cylinder Head Oil Return Lines . . . 3-49
- General Information . . . 3-48
- Oil Cooler . . . 3-52
- Oil Pump Lines . . . 3-51
- Return Oil Manifold . . . 3-48

Preload Adjustment
- Front Fork (XR 1200X) . . . 2-125
- Shock Absorber (Except XR 1200X) . . . 1-62
- Shock Absorber (XR 1200X) . . . 1-62

Primary Chain
- Adjustment . . . 1-40

Inspection. 1-39
Primary Chain Adjuster
General. 5-4
Installation: Primary Chain Adjuster. 5-6
Installation: Primary Cover. 5-7
Removal: Primary Chain Adjuster. 5-6
Removal: Primary Cover. 5-4
Primary Drive/Clutch
Assembly. 5-17
Disassembly. 5-14
General. 5-12
Inspection and Repair. 5-15
Installation. 5-18
Removal. 5-14
Primary Drive/Clutch: XR Models
Clutch Pack Cleaning and Inspection. 5-23
Clutch Shell/Hub Inspection. 5-24
Removal. 5-22

R

Rear Brake Caliper
Assembly. 2-82
Cleaning, Inspection and Repair. 2-81
Disassembly. 2-80
Installation. 2-83
Lubricating Rear Caliper Bolt Pins and Boots. 2-81
Removal. 2-78
Rear Brake Caliper: XR Models
Assembly. 2-88
Cleaning, Inspection and Repair. 2-88
Disassembly. 2-86
Installation. 2-89
Removal. 2-85
Rear Brake Line: XL Models
Installation. 2-94
Removal. 2-94
Rear Brake Line: XR Models
Installation. 2-96
Removal. 2-95
Rear Brake Master Cylinder. 2-62
Cleaning, Inspection and Repair. 2-66
Cleaning, Inspection and Repair. 2-72
General. 2-70
Inspection. 2-62
Inspection. 2-70
Rear Brake Master Cylinder: XL Models
Assembly. 2-67
Disassembly. 2-65
Installation. 2-69
Removal. 2-62
Rear Brake Master Cylinder: XR Models
Assembly. 2-72
Disassembly. 2-71
Installation. 2-73
Removal. 2-70
Rear Brake Master Cylinder Reservoir
General. 2-75
Installation: XL Models. 2-76
Installation: XR Models. 2-77
Removal: XL Models. 2-75
Removal: XR Models. 2-76
Rear Engine Mount/Isolator
Installation. 2-142
Removal. 2-140
Rear Fender: All Models Except XL 883N/XL 1200N
General. 2-158
Installation. 2-160
Removal. 2-158
Rear Fender: XR Models
Installation. 2-167
Removal. 2-167
Rear Fender and License Plate Bracket: XL 1200N
Assembly and Installation. 2-164
Rear Fender and License Plate Bracket: XL 883/XL 1200N
Removal and Disassembly. 2-162
Rear Fender and License Plate Bracket: XL 883N/XL 1200N
General. 2-162
Rear Fork
Assembly. 2-132
Cleaning and Inspection. 2-132
Disassembly. 2-131
General. 2-131
Installation. 2-132
Removal. 2-131
Rear Lighting Converter Module: XL 883N/XL 1200N (Domestic Only)
General. 6-62
Installation. 6-63
Removal. 6-62
Rear Shock
Disposal. 2-135
Rear Stop Lamp Switch. 6-64
Replacement. 6-64
Rebound Damping Adjustment
Front Fork (XR 1200X). 2-125
Shock Absorber (XR 1200X). 1-62
Removal
Countershaft Needle Bearing. 5-57
Muffler Interconnect Bracket. 4-48
Mufflers and Exhaust Pipes. 4-48
Shifter Drum Bushing. 5-57
Removal and Disassembly
Rotor. 6-66
Stator. 6-66
Removing Engine from Chassis. 3-34
XL Models. 3-34
XR Models. 3-38
Repair and Replacement Procedures
Bearings. 1-4
Bushings. 1-4
Exhaust System Leakage. 1-5
Gaskets. 1-4
Gears. 1-5
Hardware and Threaded Parts. 1-4
Lip Type Seals. 1-4
O-Rings (Preformed Packings). 1-4
Part Replacement. 1-5
Shafts. 1-5
Threadlocking Agents. 1-4
Wiring, Hoses and Lines. 1-4
Replacing Valve Guides
Installation. 3-106
Removal. 3-104
Rider Foot Controls: XR Models
Adjusting Shift Pedal. 2-181
Left Footrest and Shift Lever Assembly. 2-180

Right Footrest and Rear Brake Pedal Assembly. . 2-180
Rider Foot Controls (Models Equipped with Mid-Mount Controls)
Left Footrest and Shift Lever Assembly. 2-174
Right Footrest and Rear Brake Pedal Assembly. . 2-174
Rider Foot Controls (XL Models Equipped with Forward Controls)
Adjusting Shift Pedal. 2-179
Left Footrest and Shift Lever Assembly. 2-177
Right Footrest and Rear Brake Pedal Assembly. . 2-176
Right Handlebar Switch
Assembly. 6-97
Disassembly. 6-95
Installation. 6-98
Removal. 6-95
Switch Repair/Replacement. 6-96
Rotor
Removal and Disassembly. 6-66

S

Safe Operating Maintenance. 1-3
Sealed Splice. A-33
Seat
General. 2-170
Installation. 2-170
Installation (XR Models). 2-172
Pillion (XR Models). 2-172
Removal. 2-170
Removal (XR Models). 2-172
Secondary Drive Belt
Installation: XL Models. 5-31
Installation: XR Models. 5-31
Removal: XL Models. 5-30
Removal: XR Models. 5-31
Security Siren, Optional. 6-85
Assembly. 6-87
Disassembly. 6-85
Installation. 6-87
Removal. 6-85
Service Bulletins. . . . . i-I
Service Preparation. . . . . i-I
Servicing a New Motorcycle. 1-3
Shift Drum Bushing
Installation. 5-58
Shifter Forks and Drum
Assembly. 5-60
Shock Absorber
Compression Damping Adjustment (XR 1200X). . . 1-63
Preload Adjustment (Except XR 1200X). 1-62
Preload Adjustment (XR 1200X). 1-62
Rebound Damping Adjustment (XR 1200X). 1-62
Suspension Adjustment (XR 1200X). 1-62
Shock Absorbers. 2-134
Cleaning and Inspection. 2-134
Installation. 2-134
Removal. 2-134
Shop Practices. 1-3
Checking Torques. 1-4
Cleaning. 1-3
Disassembly and Assembly. 1-4
Magnetic Parts Trays. 1-4
Removing Parts. 1-3
Safety. 1-3
Sidecar Configuration. 6-109
Siren Battery. 6-105
Spark Plug Cables. 6-35
Inspection. 1-58
Installation. 6-36
Removal. 6-35
Spark Plugs. 1-58
Inspection. 1-58
Specifications
2009 Sportster Models. 6-4
2009 Sportster Specifications. 5-3
Fork Oil Level. 2-124
Sportster Models. 4-4
Sportster Specifications. 2-9
Speedometer
Installation. 6-11
Removal. 6-11
Speedometer: XL883C/XL 1200C
Installation. 6-14
Removal. 6-13
Speedometer and Tachometer: XR Models
Odometer Replacement. 6-17
Speedometer Installation. 6-15
Speedometer Removal. 6-15
Tachometer Installation. 6-17
Tachometer Removal. 6-17
Sportster Specifications
Chassis Specifications. 2-9
Tire Specifications. 2-11
Sprocket Bearing Replacement
Installation. D-2
Removal. D-1
SPX Kent-Moore. . . . . i-II
Stabilizer Links. 2-136
Lower Front Stabilizer Link: Installation. 2-136
Lower Front Stabilizer Link: Removal. 2-136
Rear Stabilizer Link: Installation. 2-137
Rear Stabilizer Link: Removal. 2-137
Upper Front Stabilizer Link: Installation. 2-136
Upper Front Stabilizer Link: Removal. 2-136
Starter
Drive Assembly. 6-28
Field Coil Assembly. 6-26
General. 6-26
Installation. 6-29
Removal. 6-26
Starter Solenoid Repair. 6-30
Stator
Removal and Disassembly. 6-66
Steering Head Bearings
Adjustment. 1-60
Lubrication. 1-60
Stoplight Switch
Replacement. 6-97
Storage
General. 1-78
Placing In Storage. 1-78
Removal. 1-78
Suspension
Adjustment (Except XR 1200X). 1-62
Adjustment (XR 1200X). 1-62
Adjustment (XR 1200X). 2-125
General (XR 1200X). 2-125

System Fuses and Relays. 6-9
Replacing Fuses. 6-9
Replacing Relays. 6-9

T

Tail Lamp: All Models except XL 1200N
Base Replacement. 6-47
Bulb Replacement. 6-47
Tail Lamp: All Models except XL 883N/XL 1200N
General. 6-47
Temperature Manifold Absolute Pressure (TMAP) Sensor
General. 4-41
Installation: XL Models. 4-42
Installation: XR Models. 4-43
Removal: XL Models. 4-41
Removal: XR Models. 4-43
Throttle Cables
Assembly and Installation. 2-145
Removal and Disassembly. 2-143
Throttle Cables: XL Models
Cleaning, Inspection and Repair. 2-144
Throttle Control
Cable Adjustment. 1-71
Cable Inspection and Lubrication. 1-71
Throttle Position (TP) Sensor
Installation: XR Models. 4-22
Removal: XR Models. 4-22
Throttle Position Sensor
General. 4-20
Installation: XL Models. 4-21
Removal: XL Models. 4-20
Tire Replacement
Inspection. 1-36
When To Replace. 1-36
Tires
Checking Runout. 2-99
Cleaning, Inspection and Repair. 2-97
General. 2-97
Installation. 2-98
Removal. 2-97
Wear Bar Indicators. 1-36
Wheel Balancing. 2-100
Tires and Wheels
Tires. 1-36
Wheel Bearings. 1-37
Wheel Spokes. 1-37
Tool Safety
Air Tools. 1-5
Hammers. 1-5
Pliers/Cutters/Pry bars. 1-5
Punches/Chisels. 1-6
Ratchets and Handles. 1-6
Screwdrivers. 1-6
Sockets. 1-6
Storage Units. 1-6
Wrenches. 1-5
Top End Overhaul: Assembly
Assembling Motorcycle. 3-72
Cylinder Head. 3-66
General. 3-63
Piston and Cylinder. 3-63
Push Rods, Covers, and Retainers. 3-64
Rocker Covers. 3-69
Top End Overhaul: Disassembly
Cylinder and Piston. 3-61
Cylinder Heads. 3-55
General. 3-54
Stripping Motorcycle for Top End Repair. 3-54
Top End Service
Engine in Chassis. 3-30
Engine Removed from Chassis. 3-31
Torque Conversion. C-3
Trademarks
Harley-Davidson. . . . . i-II
Referenced Products. . . . . i-II
Transmission
Assembly, countershaft. 5-46
Assembly, mainshaft. 5-46
Cleaning and Inspection, countershaft. 5-44
Cleaning and Inspection, mainshaft. 5-44
Disassembly, countershaft. 5-44
Disassembly, mainshaft. 5-43
Disassembly, mainshaft/countershaft. 5-43
General. 5-34
Removal, left crankcase. 5-39
Transmission Case Bearings
Installation, left. 5-58
Transmission Installation
Assembling Crankcases. 5-61
General. 5-59
Installation. 5-59
Shifter Shaft Installation. 5-62
Transmission Left Case Bearings
Removal: Mainshaft and Countershaft Bearings. . . 5-58
Removal: Shifter Drum Bushing. 5-58
Transmission Lubrication
Changing Lubricant. 1-44
Check Lubricant Level. 1-43
Transmission Right Case Bearings
Installation. 5-57
Removal. 5-57
Transmission Sprocket
Removal. 5-64
Troubleshooting
Adjustment and Testing. 3-19
Brakes. 1-82
Compression Test. 3-18
Cylinder Leakage Test. 3-18
Diagnosing Smoking Engine or High Oil
Consumption. 3-19
Diagnosing Valve Train Noise. 3-18
Electrical System. 1-82
Engine. 1-80
Handling. 1-82
Lubrication System. 1-81
Transmission. 1-82
Truing Laced Wheels
Lateral Truing. 2-36
Radial Truing. 2-37
TSM/HFSM: Password Learn. 6-110
TSSM/HFSM: PASSWORD LEARN
PASSWORD LEARNING. 6-110
TSSM/HFSM Maintenance
Battery Replacement (FOB). 6-105
Siren. 6-105

TSSM/HFSM MAINTENANCE
FOB Battery. 6-105
Turn Signal/Security Module. 6-20
Installation. 6-21
Removal. 6-20
Testing. 6-20
Turn Signals
Bulb Replacement. 6-50
Front Housing Replacement. 6-50
General. 6-50
Rear Housing Replacement. 6-51
Turn Signal Switch Replacement
Left. 6-97
Right. 6-102

V

V.I.N.
Vehicle Identification Number. 2-12
Valve Tappets
Cleaning and Inspection. 3-92
General. 3-92
Installation. 3-92
Removal. 3-92
Vapor Valve
Installation. 4-67
Removal. 4-67
Vehicle Identification Number
Abbreviated. 2-12
Vehicle Identification Number (V.I.N.). 2-12
Vehicle Speed Sensor. 6-69
Installation. 6-69
Removal. 6-69
Voltage Regulator
General. 6-5
Installation: XL Models. 6-6
Installation: XR Models. 6-7
Removal: XL Models. 6-5
Removal: XR Models. 6-6

W

Wheel Alignment
Wheel Alignment. 1-50
Wheel lacing
Angle flange hub. 2-29
Straight flange hub, dual hole circle. 2-33
Straight flange hub, single hole circle. 2-31
Wheels
Front Wheel. 2-15
General. 2-14
Rear. 2-21
Sealed Bearings. 2-25
Troubleshooting. 2-14
Winter Lubrication. 1-8
Wiring Diagram List. B-5
Wiring Diagram Symbols. B-3

X

XR Models
Installation. 2-182
Removal. 2-182