

DYNA® MODELS

2016 HARLEY-DAVIDSON® SERVICE MANUAL

99481-16

2016 Harley-Davidson Dyna Models Service Manual

©2015 H-D.
ALL RIGHTS RESERVED
99481-16

Printed in the U.S.A.

VISIT THE HARLEY-DAVIDSON WEB SITE
http://www.harley-davidson.com

CMI - 2M - 08/15

READER COMMENTS

Cut Here

The Harley-Davidson Service Communications Department maintains a continuous effort to improve the quality and usefulness of its publications. To do this effectively, we need user feedback - your critical evaluation of this manual.

Please comment on the completeness, accuracy, organization, usability, and readability of this manual.

Please list the page, item, and part number(s) of any errors you find in this manual.

Please tell us how we can improve this manual.

Occupation:

Name: Dealership:

Street: Department:

City: State: Zip:

Cut Here

2016 Harley-Davidson Dyna Models Service Manual (99481-16)

Please clip out and mail to:
Service Communications Department
Harley-Davidson Motor Company
P.O. Box 653
Milwaukee, WI USA 53201

ABOUT THIS MANUAL

GENERAL

⚠WARNING

The rider's safety depends upon proper motorcycle service and maintenance. If a procedure in this manual is not within your capabilities or you do not have the correct tools, have a Harley-Davidson dealer perform the procedure. Improper service or maintenance could result in death or serious injury. (00627b)

This service manual has been prepared with the following purposes in mind:

- To acquaint the user with the construction of the Harley-Davidson product and assist in the performance of basic maintenance and repair.
- To introduce the professional Harley-Davidson technician to the latest field-tested and factory-approved major repair methods.

We sincerely believe that this service manual will make your association with Harley-Davidson products more pleasant and profitable.

HOW TO USE YOUR MANUAL

Refer to the table below for the content layout of this manual.

NO.	CHAPTER
1	Maintenance
2	Chassis
3	Engine
4	Fuel System
5	Drive
6	Transmission
7	Electrical
A	Appendix A Wiring
B	Appendix B Reference

Use the TABLE OF CONTENTS (which follows this FOREWORD) and the INDEX (at the back of this manual) to quickly locate subjects. Chapters and topics in this manual are sequentially numbered for easy navigation.

For example, a cross-reference shown as **2.2 SPECIFICATIONS** refers to chapter 2 CHASSIS, heading 2.2 SPECIFICATIONS.

For quick and easy reference, all pages contain a chapter number followed by a page number. For example, **page 3-5** refers to page 5 in Chapter 3.

A number of acronyms and abbreviations are used in this document. See the B.4 GLOSSARY for a list of acronyms, abbreviations and definitions.

PREPARATION FOR SERVICE

PART NUMBER	TOOL NAME
HD-48650	DIGITAL TECHNICIAN II

⚠WARNING

Stop the engine when refueling or servicing the fuel system. Do not smoke or allow open flame or sparks near gasoline. Gasoline is extremely flammable and highly explosive, which could result in death or serious injury. (00002a)

Good preparation is very important for efficient service work. Start each job with a clean work area. This will allow the repair to proceed as smoothly as possible. It will also reduce the incidence of misplaced tools and parts.

Clean a motorcycle that is excessively dirty before work starts. Cleaning will occasionally uncover sources of trouble. Gather any tools, instruments and any parts needed for the job before work begins. Interrupting a job to locate tools or parts is a distraction and causes needless delay.

NOTES

- *To avoid unnecessary disassembly, carefully read all related service information before repair work begins.*
- *In figure legends, the number which follows the name of a part indicates the quantity necessary for one complete assembly.*
- *When servicing a vehicle equipped with the Harley-Davidson Smart Security System (H-DSSS), first disarm the system. Keep the fob close to the vehicle or use DIGITAL TECHNICIAN II (Part No. HD-48650) to disable the system. Activate the system after service is completed.*

SERVICE BULLETINS

In addition to the information presented in this manual, Harley-Davidson Motor Company will periodically issue service bulletins to Harley-Davidson dealers. Service bulletins cover interim engineering changes and supplementary information. Consult the service bulletins to keep your product knowledge current and complete.

USE GENUINE REPLACEMENT PARTS

⚠WARNING

Harley-Davidson parts and accessories are designed for Harley-Davidson motorcycles. Using non-Harley-Davidson parts or accessories can adversely affect performance, stability or handling, which could result in death or serious injury. (00001b)

To achieve satisfactory and lasting repairs, carefully follow the service manual instructions and use only genuine Harley-Davidson replacement parts. Behind the emblem bearing the words GENUINE HARLEY-DAVIDSON stand more than 100 years of design, research, manufacturing, testing and inspecting experience. This is your assurance that the parts you are using will fit right, operate properly and last longer.

WARNINGS AND CAUTIONS

Statements in this manual preceded by the following words are of special significance.

⚠WARNING

WARNING indicates a potentially hazardous situation which, if not avoided, could result in death or serious injury. (00119a)

⚠CAUTION

CAUTION indicates a potentially hazardous situation which, if not avoided, may result in minor or moderate injury. (00139a)

NOTICE

NOTICE indicates a potentially hazardous situation which, if not avoided, may result in property damage. (00140b)

NOTE

Refers to important information. It is recommended that you take special notice of these items.

Proper service and repair are important for the safe, reliable operation of all mechanical products. The service procedures recommended and described in this manual are effective methods for performing service operations.

⚠WARNING

Always wear proper eye protection when using hammers, arbor or hydraulic presses, gear pullers, spring compressors, slide hammers and similar tools. Flying parts could result in death or serious injury. (00496b)

Some of these service operations require the use of tools specially designed for the purpose. These special tools should be used when and as recommended. It is important to note that some warnings against the use of specific service methods, which could damage the motorcycle or render it unsafe, are stated in this manual. However, remember that these warnings are not all-inclusive. Inadequate safety precautions could result in death or serious injury.

Since Harley-Davidson could not possibly know, evaluate or advise the service trade of all possible ways in which service might be performed, or of the possible hazardous consequences of each method, we have not undertaken any such broad evaluation. Accordingly, anyone who uses a service procedure or tool which is not recommended by Harley-Davidson must first thoroughly satisfy himself that neither his nor the operator's safety will be jeopardized as a result. Failure to do so could result in death or serious injury.

PRODUCT REFERENCES

⚠WARNING

Read and follow warnings and directions on all products. Failure to follow warnings and directions can result in death or serious injury. (00470b)

When reference is made in this manual to a specific brand name product, tool or instrument, an equivalent product, tool or instrument may be substituted.

Special Tools

All tools mentioned in this manual with a part number beginning with "HD", "J" or "B" must be ordered through your local Harley-Davidson dealer. Special tools may only be purchased, serviced or warrantied through a Harley-Davidson dealer.

LOCTITE Sealing and Threadlocking Products

Some procedures in this manual call for the use of LOCTITE products. If you have any questions regarding LOCTITE product usage or retailer/wholesaler locations, contact Loctite Corp. at www.loctite.com.

PRODUCT REGISTERED MARKS

Apple, Alcantara S.p.A., Allen, Amp Multilock, Bluetooth, Brembo, City Navigator, Delphi, Deutsch, Dunlop, Dynojet, Fluke, G.E. Versilube, Garmin, Gunk, Hydroseal, Hylomar, iPhone, iPod, Kevlar, Lexan, Loctite, Lubriplate, Keps, K&N, Magnaflux, Marson Thread-Setter Tool Kit, MAXI fuse, Molex, Michelin, MPZ, Mulitilock, nano, NGK, Novus, Packard, Pirelli, Permatex, Philips, PJ1, Pozidriv, Road Tech, Robinair, S100, Sems, SiriusXM, Snap-on, Teflon, Threadlocker, Torca, Torco, TORX, Tufoil, Tyco, Ultratorch, Velcro, X-Acto, XM Satellite Radio, and zūmo are among the trademarks of their respective owners.

H-D U.S.A., LLC TRADEMARK INFORMATION

Bar & Shield, Boom!, Cross Bones, Cruise Drive, CVO, Digital Tech, Digital Technician, Digital Technician II, Dyna, Electra Glide, Evolution, Fat Bob, Fat Boy, Forty-Eight, Glaze, Gloss, H-D, H-Dnet.com, Harley, Harley-Davidson, HD, Heritage Softail, Iron 883, Low Rider, Night Rod, Nightster, Night Train, Profile, Reflex, Revolution, Road Glide, Road King, Road Tech, Rocker, Screamin' Eagle, Seventy-Two, Softail, Sportster, Street Glide, Street Rod, Sun Ray, Sunwash, Super Glide, SuperLow, Supersmart, Switchback, SYN3, TechLink, TechLink II, Tour-Pak, Tri Glide, Twin Cam 88, Twin Cam 88B, Twin Cam 96, Twin Cam 96B, Twin Cam 103, Twin Cam 103B, Twin Cam 110, Twin Cam 110B, Twin-Cooled, Ultra Classic, V-Rod, VRSC and Harley-Davidson Genuine Motor Parts and Genuine Motor Accessories are among the trademarks of H-D U.S.A., LLC.

CONTENTS

All photographs, illustrations and procedures may not necessarily depict the most current model or component, but are based on the latest production information available at the time of publication.

Since product improvement is our continual goal, Harley-Davidson reserves the right to change specifications, equipment or designs at any time without notice and without incurring obligation.

NOTES

MAINTENANCE

1.1 FASTENER TORQUE VALUES

Fastener Torque Values in this Chapter....1-1

1.2 GENERAL

Servicing a New Motorcycle....1-3
Safe Operating Maintenance....1-3
Disposal and Recycling....1-3
Shop Practices....1-3
- Repair Notes....1-3
- Safety....1-3
- Removing Parts....1-3
- Cleaning....1-3
- Disassembly and Assembly....1-4
- Checking Torques on Fasteners....1-4
- Magnetic Parts Trays....1-4

Repair and Replacement Procedures....1-4
- Hardware and Threaded Parts....1-4
- Threadlocking Agents....1-4
- Wiring, Hoses and Lines....1-4
- Instruments and Gauges....1-4
- Bearings....1-4
- Bushings....1-4
- Gaskets....1-4
- Lip-Type Seals....1-4
- O-Rings....1-5
- Gears....1-5
- Shafts....1-5
- Part Replacement....1-5

Cleaning....1-5
- Protecting Rubber Parts....1-5
- Cleaning Process....1-5
- Rust or Corrosion Removal....1-5
- Bearings....1-5

Tool Safety....1-5
- Air Tools....1-5
- Wrenches....1-5
- Pliers/Cutters/Pry Bars....1-6
- Hammers....1-6
- Punches/Chisels....1-6
- Screwdrivers....1-6
- Ratchets and Handles....1-6
- Sockets....1-6
- Storage Units....1-6

1.3 FUEL AND OIL

Fuel....1-7
Gasoline Blends....1-7
Engine Lubrication....1-7
Winter Lubrication....1-8

1.4 MAINTENANCE SCHEDULE

General....1-9

1.5 ENGINE OIL AND FILTER

Check Engine Oil Level....1-14
- Oil Level Cold Check....1-14
- Oil Level Hot Check....1-14

Changing Oil and Oil Filter....1-14

1.6 AIR CLEANER AND EXHAUST SYSTEM

Removal, All But HO103....1-16
Installation, All But HO103....1-17
Removal, HO103....1-17
Installation, HO103....1-18
Check Exhaust System Leakage....1-18
- Exhaust System Leakage....1-18

1.7 TIRES AND WHEELS

Tires....1-19
Tire Replacement....1-19
- Dunlop....1-20
- Michelin....1-20

Wheel Bearings....1-21
Wheel Spokes....1-21
- Identify Wheel Spoke Groups....1-21
- Adjust Wheel Spokes....1-21

1.8 PRIMARY CHAINCASE LUBRICANT

General....1-23
Change Primary Chaincase Lubricant....1-23

1.9 TRANSMISSION LUBRICANT

Check Transmission Lubricant....1-25
Change Transmission Lubricant....1-25

1.10 CLUTCH

Adjustment....1-27

1.11 DRIVE BELT AND SPROCKETS

General....1-29
Cleaning....1-29
Inspection....1-29
- Sprockets....1-29
- Drive Belt....1-29

Check Drive Belt Deflection....1-30
Adjusting Belt Deflection....1-31

1.12 THROTTLE CABLES

Cable Inspection and Lubrication....1-33
Cable Adjustment....1-33
- Operation....1-33
- Adjustment....1-33

1.13 CABLE AND CHASSIS LUBRICATION

General....1-35
Cables and Hand Levers....1-35
Jiffy Stand....1-35

1.14 BRAKES

Fluid Inspection....1-36
Rear Pedal Height....1-36
Inspect Brake Lines....1-36

1.15 BRAKE PADS AND DISCS

Inspection....1-38
- Brake Pads....1-38
- Brake Disc....1-38

Brake Pad Replacement....1-39
- Rear Brake Caliper....1-39
- Front Brake Caliper....1-39

1.16 SPARK PLUGS

Inspection....1-41

1.17 STEERING HEAD BEARINGS

Adjustment....1-42
- Bearing Adjustment (Measurement)....1-42
- Bearing Adjustment (Fall-Away)....1-42

TABLE OF CONTENTS

Lubrication....1-43

1.18 BATTERY MAINTENANCE

General....1-44
Cleaning and Inspection....1-45
Voltage Test....1-45
Charging Battery....1-45
Safety Precautions....1-45
Using a Battery Charger....1-45
Disconnection and Removal....1-46
Storage....1-47
Installation and Connection....1-47

1.19 ENGINE MOUNTS

Inspection....1-48

1.20 HEADLAMP ALIGNMENT

Headlamp Alignment....1-49
Headlamp Adjustment: All BUT FLD and FXDL....1-49
Headlamp Adjustment: FLD....1-50
Headlamp Adjustment: FXDL....1-50

1.21 SUSPENSION ADJUSTMENTS

Shock Absorber Preload Adjustment....1-51

1.22 STORAGE

General....1-52
Placing in Storage....1-52
Removal from Storage....1-52

1.23 TROUBLESHOOTING

General....1-53
Engine....1-53
Starter Motor Does Not Operate or Does Not Turn Engine Over....1-53
Engine Turns Over But Does Not Start....1-53
Starts Hard....1-53
Starts But Runs Irregularly or Misses....1-53
Spark Plug Fouls Repeatedly....1-53
Pre-Ignition or Detonation (Knocks or Pings)....1-53
Overheating....1-54
Valve Train Noise....1-54
Excessive Vibration....1-54
Check Engine Light Illuminates During Operation....1-54
Lubrication System....1-54
Oil Does Not Return To Oil Pan....1-54
Engine Uses Too Much Oil Or Smokes Excessively....1-54
Engine Leaks Oil From Cases, Pushrods, Hoses, Etc....1-54
Low Oil Pressure....1-54
High Oil Pressure....1-54
Electrical System....1-54
Alternator Does Not Charge....1-54
Alternator Charge Rate Is Below Normal....1-54
Speedometer Operates Erratically....1-55
Transmission....1-55
Shifts Hard....1-55
Jumps Out Of Gear....1-55
Clutch Slips....1-55
Clutch Drags Or Does Not Release....1-55
Clutch Chatters....1-55
Handling....1-55
Irregularities....1-55
Brakes....1-55
Brake Does Not Hold Normally....1-55

CHASSIS

2.1 FASTENER TORQUE VALUES

Fastener Torque Values in this Chapter....2-1

2.2 SPECIFICATIONS

Specifications....2-6
Chassis Specifications....2-6
Tire Specifications....2-7

2.3 VEHICLE IDENTIFICATION NUMBER (VIN)

Vehicle Identification Number....2-9

2.4 FRONT WHEEL

Removal....2-11
Disassembly....2-11
Cast Wheel....2-11
Cast Wheel, Dual Brakes....2-11
Laced Wheel....2-11
Cleaning and Inspection....2-15
Assembly....2-16
Cast Wheel....2-16
Laced Wheel....2-16
Installation....2-16

2.5 REAR WHEEL

Removal....2-18
Disassembly....2-18
Cleaning and Inspection....2-19
Assembly....2-20
Installation....2-20

2.6 SEALED WHEEL BEARINGS

Inspect....2-22
Removal....2-22
Installation....2-24

2.7 WHEEL LACING

Wheel Lacing: Angle Flange Hub....2-26
Wheel Lacing: Straight Flange Hub, Single Hole Circle....2-27
Wheel Lacing: Straight Flange Hub, Dual Hole Circle....2-29

2.8 CHECKING AND TRUING WHEELS

General....2-31
Checking Wheel Runout....2-31
Checking Radial Runout....2-31
Checking Lateral Runout....2-31
Laced Wheel Rim Offset....2-32
True Laced Wheels....2-35
Adjust Radial Runout....2-35
Adjust Lateral Runout....2-35

2.9 VEHICLE ALIGNMENT

Inspection....2-37

2.10 FRONT BRAKE MASTER CYLINDER

General....2-39
Removal and Disassembly....2-39
Cleaning and Inspection....2-41
Assembly and Installation....2-41

2.11 FRONT BRAKE CALIPER

Removal....2-43
Disassembly....2-43
Cleaning, Inspection and Repair....2-45
Assembly....2-46
Installation....2-47

2.12 REAR BRAKE MASTER CYLINDER

Removal....2-49
Disassembly....2-51
Cleaning and Inspection....2-52
Assembly....2-52
Installation....2-52

2.13 REAR BRAKE CALIPER

Removal....2-54
Disassembly....2-54
Cleaning, Inspection and Repair....2-56
Assembly....2-56
Installation....2-57

2.14 BRAKE LINES

Front Master Cylinder to Front Caliper Line Assembly....2-58
Removal....2-58
Installation....2-58
ABS Module to Front Manifold Brake Lines....2-58
Removal....2-58
Installation....2-60
Rear Master Cylinder to ABS Module....2-61
Removal....2-61
Installation....2-61
ABS Module to Rear Brake Caliper....2-63
Removal....2-63
Installation....2-63

2.15 ABS MODULE (EHCU)

General....2-65
Electro Hydraulic Control Unit (EHCU)....2-65
Removal....2-65
Installation....2-67

2.16 BLEEDING BRAKES

General....2-68
Procedure....2-68

2.17 TIRES

General....2-70
Remove....2-70
Clean, Inspect and Repair....2-70
Installation....2-71
Tube Type Tires....2-71
Tubeless Tires....2-71
Check Tire Runout....2-72
Lateral Runout....2-72
Radial Runout....2-72
Balance Wheel....2-72
Static vs Dynamic....2-72
Weights....2-73

2.18 FRONT FORK

Check For Oil Leak....2-74
Fork Oil Seals....2-74
Check Oil Leak....2-74
Removal....2-74
Disassembly: All But FLD Left Side....2-74
Disassembly: Cartridge Fork (FLD, Left Side)....2-77
Cleaning and Inspection....2-79
Assembly: All But FLD Left Side....2-80
Assembly: Cartridge Fork (FLD, Left Side)....2-81
Installation....2-83

2.19 STEERING HEAD

Removal: All But FLD....2-85
Removal: FLD....2-85
Inspection....2-86
Disassembly....2-86
Steering Head Bearing Race Removal....2-86
Assembly....2-86
Installation: All but FLD....2-86
Installation: FLD....2-87

2.20 BELT GUARD AND DEBRIS DEFLECTOR

Belt Guard Removal....2-89
Belt Guard Installation....2-89
Debris Deflector Removal....2-89
Debris Deflector Installation....2-89

2.21 THROTTLE CONTROL

Removal/Disassembly....2-91
Cleaning and Inspection....2-91
Assembly/Installation....2-91
Throttle Cable Routing....2-92

2.22 REAR SHOCK ABSORBERS

General....2-93
Removal....2-93
Inspection....2-93
Installation....2-93

2.23 REAR FORK

Removal....2-94
Disassembly....2-94
Cleaning and Inspection....2-95
Assembly....2-95
Installation....2-95

2.24 CLUTCH CONTROL

Removal....2-96
Installation....2-96

2.25 HANDLEBAR: FLD

Removal....2-97
Installation....2-97
Left Hand Grip....2-98
Removal....2-98

Installation....2-98

2.26 HANDLEBAR: FXDB, FXDBC, FXDBP, FXDF AND FXDWG

Removal....2-99
FXDB, FXDBC, FXDBP....2-99
FXDF and FXDWG....2-100
Installation....2-101

2.27 HANDLEBAR: FXDL

Removal....2-104
Installation....2-104
Handlebar and Riser Adjustment....2-106

2.28 FRONT FENDER

Removal....2-107
Installation....2-107

2.29 REAR FENDER

General....2-108
Removal....2-108
Tail Lamp/Turn Signal Harness Routing....2-108
Installation....2-108
FXDL....2-111
Removal....2-111
Installation....2-111
FXDB, FXDBC, FXDBP....2-111
Removal....2-111
Installation....2-111
FXDWG....2-112
Removal....2-112
Sissy Bar....2-113
Installation....2-113
FLD....2-114
Removal....2-114
Disassembly....2-114
Assembly....2-114
Installation....2-114
FXDF....2-115
Removal....2-115
Installation....2-115

2.30 SEAT

Removal....2-117
Seat and Seat Strap: All But FXDWG....2-117
Seat and Seat Strap: FXDWG....2-117
Installation....2-118
Seat and Seat Strap: All But FXDWG....2-118
Seat and Seat Strap: FXDWG....2-118
Lumbar Pad: FXDL....2-119
Removal....2-119
Installation....2-119

2.31 FOOTBOARDS AND FOOTRESTS

Rider Footboards....2-120
Removal....2-120
Disassembly....2-120
Assembly....2-120
Installation....2-120
Rider Footrests: Mid Controls....2-121
Removal....2-121
Installation....2-121
Rider Footrests: Forward Controls....2-122
Removal....2-122
Installation....2-122
Passenger Footrests: All But FXDB....2-122
Removal....2-122
Installation....2-122

2.32 HEADLAMP NACELLE: FLD

Upper and Lower Nacelle....2-124
Removal....2-124
Installation....2-124

2.33 WINDSHIELD: FLD

Windshield....2-125
Removal....2-125
Installation....2-125
Windshield Window....2-125
Removal....2-125
Installation....2-127

2.34 SADDLEBAGS: FLD

Saddlebag....2-128
Removal....2-128
Installation....2-128
Disassembly....2-128
Assembly....2-129
Saddlebag Lid....2-130
Seal....2-130
Disassembly....2-131
Assembly....2-131

2.35 JIFFY STAND

Cleaning....2-133
Jiffy Stand Sensor: HDI Models....2-135
Removal....2-135
Installation....2-135

2.36 FORK LOCK

Removal....2-137
Installation....2-137

2.37 ENGINE MOUNTS

Removal....2-139
Front Isolator....2-139
Rear Isolator....2-139
Installation....2-139
Front Isolator....2-139
Rear Isolator....2-139

2.38 SAREE GUARD: INDIA MODELS

Replacement....2-141
Removal....2-141
Installation....2-141

2.39 MEDALLIONS, BADGES AND TANK EMBLEMS

Removal....2-142
Installation....2-142

ENGINE

3.1 FASTENER TORQUE VALUES

Fastener Torque Values in this Chapter....3-1

3.2 SPECIFICATIONS

Specifications....3-3

3.3 SERVICE WEAR LIMITS

General....3-5

3.4 ENGINE OIL FLOW

Oil Feed....3-7
Top End....3-7
Bottom End....3-9
Oil Return....3-11

3.5 OIL PUMP OPERATION

General....3-12
Operation....3-12

3.6 BREATHER OPERATION

General....3-14

3.7 OIL PRESSURE

Oil Pressure Indicator Lamp....3-15
Checking Oil Pressure....3-15

3.8 TROUBLESHOOTING

Diagnosing Valve Train Noise....3-17
Compression Test....3-17
Cylinder Leakdown Test....3-18
Diagnosing Smoking Engine or High Oil Consumption....3-18
- Check Before Cylinder Head Removal:....3-18
- Check After Cylinder Head Removal:....3-18

3.9 HOW TO USE THIS SECTION

Top End Repair....3-19
Bottom End Repair....3-19
Typical Symptoms....3-19

3.10 TOP END SERVICE

Engine in Chassis....3-20
Engine Removed from Chassis....3-21

3.11 CAM COMPARTMENT SERVICE

Replace Camshaft....3-22
Engine Removed From Chassis....3-23

3.12 STRIPPING MOTORCYCLE FOR SERVICE

Procedure....3-24
- Cam Compartment Service Only....3-24
- Complete Top End Service....3-24

3.13 ASSEMBLING MOTORCYCLE AFTER SERVICE

Procedure....3-25
- After Complete Top End Service....3-25
- After Cam Compartment Service Only....3-25

3.14 REMOVING ENGINE FROM CHASSIS

Procedure....3-26

3.15 INSTALLING ENGINE IN CHASSIS

Procedure....3-27

3.16 TOP END OVERHAUL: DISASSEMBLY

General....3-29
Rocker Covers....3-29
Rocker Arm Support Plate....3-29
Pushrods, Lifters and Covers....3-31
Cylinder Head....3-31
Cylinder....3-32
Piston....3-33

3.17 BREATHER ASSEMBLY

Disassembly....3-35
Cleaning and Inspection....3-35
Assembly....3-35

3.18 ROCKER ARM SUPPORT PLATE

Disassembly....3-36
Cleaning, Inspection and Repair....3-36
- Inspection....3-36
- Rocker Shaft Fit....3-36
- Rocker Arm Shaft to Bushing....3-37
- Replace Rocker Arm Bushings....3-37

Assembly....3-38

3.19 PUSHRODS, LIFTERS AND COVERS

Disassembly....3-39
Cleaning and General Inspection....3-39
Inspect Lifters....3-40
Assemble....3-40

3.20 CYLINDER HEAD

Determining Service....3-42
Disassembly....3-42
Cleaning....3-43
Inspection....3-43
- Cylinder Head....3-43
- Valve Guides....3-44
- Valves....3-44
- Valve Springs....3-44
- Tapered Keepers....3-44
- Valve Seats....3-44

Valve Guide Replacement....3-44
- Removal....3-44
- Installation....3-45

Valve and Seat Refacing....3-48
Assembly....3-50

3.21 CYLINDER

Cleaning....3-52
Inspection....3-52
Deglazing Cylinder....3-54
Boring and Honing Cylinder....3-54

3.22 PISTON

Disassembly....3-56
Piston Rings....3-56
Cleaning....3-56
Inspection....3-56
Assembly....3-58
Checking Piston Ring Gap....3-58
Installing Piston Rings....3-58

3.23 TOP END OVERHAUL: ASSEMBLY

General....3-60
Piston....3-60
Cylinder....3-61
Cylinder Head....3-63
Pushrods, Lifters and Covers....3-66
Rocker Arm Support Plate....3-67
Breather and Rocker Cover....3-68

3.24 CAM COMPARTMENT AND COMPONENTS

Cam Support Plate and Cover Removal....3-70
Prepare Engine....3-70
Cam Chain and Sprockets Removal....3-70
Cam Support Plate Removal....3-71
Cam Support Plate Cleaning and Inspection....3-72
Oil Pressure Relief Valve....3-72
Cam Support Plate....3-72
Camshafts....3-72
Removal....3-72
Installation....3-73
Oil Pressure Relief Valve....3-74
Removal....3-74
Inspection....3-75
Installation....3-75
Cam Needle Bearings....3-75
Removal....3-75
Installation....3-77
Cam Support Plate and Cover Installation....3-78

3.25 OIL PUMP

Removal....3-83
Cleaning and Inspection....3-83
Installation....3-84

3.26 CRANKCASE DISASSEMBLY AND REPAIR

Crankcase Disassembly....3-85
Cleaning and Inspection....3-85
Right Crankcase Half....3-86
Main Bearing Removal....3-86
Main Bearing Installation....3-86
Piston Jets Removal....3-87
Piston Jets Installation....3-87
Left Crankcase Half....3-87
Main Bearing Removal....3-87
Main Bearing Installation....3-88
Sprocket Shaft Bearing Inner Race....3-89
Removal....3-89
Installation....3-90
Cylinder Studs....3-92
Removal....3-92
Installation....3-92
Pipe Plug and Oil Fittings....3-92
Removal....3-92
Installation....3-92

3.27 FLYWHEEL AND CONNECTING RODS

Symptoms....3-93
Overview....3-93
No Oil Pressure....3-93
Vibration....3-93
Inspection....3-93
Measuring Crankshaft Runout....3-93
Crankshaft Installed....3-93
Crankshaft Removed....3-94

3.28 CRANKCASE ASSEMBLY

Crankcase Assembly....3-95

3.29 OIL PAN

Removal....3-97
Installation....3-97

FUEL SYSTEM

4.1 FASTENER TORQUE VALUES

Fastener Torque Values in this Chapter....4-1

4.2 SPECIFICATIONS: FUEL SYSTEM

Specifications....4-4

4.3 AIR CLEANER ASSEMBLY

Removal, All But HO103....4-5
Installation, All But HO103....4-6
Removal, HO103....4-6
Installation, HO103....4-7
Backplate Assembly: HDI Models....4-8

4.4 FUEL TANK

General....4-9
Removal....4-9
Cleaning and Inspection....4-10
Installation....4-11
Vapor Valve....4-11

4.5 THROTTLE POSITION SENSOR (TPS)

General....4-12
Removal....4-12
Installation....4-12

4.6 INTAKE AIR TEMPERATURE SENSOR (IAT)

General....4-13
Removal....4-13
Installation....4-13

4.7 ENGINE TEMPERATURE SENSOR (ET)

General....4-14
Removal....4-14
Installation....4-15

4.8 INDUCTION MODULE

Removal....4-16
Installation....4-17

4.9 IDLE AIR CONTROL (IAC)

General....4-18
Removal....4-18
Installation....4-18

4.10 MANIFOLD ABSOLUTE PRESSURE SENSOR (MAP)

General....4-19
Removal....4-19
Installation....4-19

4.11 OXYGEN SENSOR

General....4-20
Removal....4-20
Installation....4-20

4.12 FUEL INJECTORS

General....4-21
Removal....4-21
Installation....4-21

4.13 FUEL PUMP

General....4-23
Removal....4-23
Disassembly and Assembly....4-25
- Fuel Filter....4-25
- Regulator....4-25
- Inlet Sock....4-26
- Fuel Pump....4-27

Installation....4-27

4.14 FUEL PRESSURE TEST

General....4-30
Testing....4-30

4.15 EXHAUST SYSTEM

Removal: FXDB, FXDBC and FXDBP....4-32
Disassembly: FXDB, FXDBC and FXDBP....4-33
Assembly: FXDB, FXDBC and FXDBP....4-34
Installation: FXDB, FXDBC and FXDBP....4-34
Removal: FXDF and FXDWG....4-35
Installation: FXDF and FXDWG....4-38
Removal: FLD....4-39
Installation: FLD....4-41
Removal: FXDL....4-41
Installation: FXDL....4-43

4.16 INTAKE LEAK TEST

General....4-44
Leak Tester....4-44
- Parts List....4-44
- Assemble Tester....4-44
- Adjust Tester....4-44

Procedure....4-44

4.17 EVAPORATIVE EMISSIONS CONTROL

General....4-46
Charcoal Canister....4-48
- Removal....4-48
- Installation....4-48

DRIVE

5.1 FASTENER TORQUE VALUES

Fastener Torque Values in this Chapter....5-1

5.2 SPECIFICATIONS: DRIVE

Specifications....5-2

5.3 PRIMARY CHAINCASE COVER

General....5-3
Removal....5-3
Installation....5-3

5.4 DRIVE COMPONENTS

Removal....5-5
Installation....5-7

5.5 PRIMARY CHAINCASE HOUSING

Removal....5-10
Inspection....5-10
Mainshaft Bearing and Seal....5-10
- Removal....5-10
- Installation....5-10

Mainshaft Bearing Inner Race....5-11
- Removal....5-11
- Installation....5-11

Shifter Shaft Bushing....5-12
Installation....5-12

5.6 CLUTCH

Removal and Installation....5-14
Clutch Pack Only....5-14
- Partial Disassembly....5-14
- Cleaning And Inspection....5-14
- Assembly....5-15

Clutch Pack and Bearing....5-16
- Complete Disassembly....5-16
- Assembly....5-17

5.7 TRANSMISSION SPROCKET

Removal....5-18
Cleaning and Inspection....5-19
Installation....5-19

5.8 DRIVE BELT

Removal....5-21
Installation....5-21

TRANSMISSION

6.1 FASTENER TORQUE VALUES

Fastener Torque Values in this Chapter....6-1

6.2 SPECIFICATIONS: TRANSMISSION

Specifications....6-2
Service Wear Limits....6-2

6.3 TRANSMISSION

Power Flow....6-4
Neutral....6-4
First Gear....6-4
Second Gear....6-4
Third Gear....6-4
Fourth Gear....6-4
Fifth Gear....6-4
Sixth Gear....6-4

6.4 SHIFTER LINKAGE

Shifter Rod Adjustment....6-6
Forward Control Shifter Adjustment....6-6
Mid-Control Shifter Adjustment....6-6

6.5 CLUTCH RELEASE COVER

Removal and Disassembly....6-7
Cleaning and Inspection....6-7
Assembly and Installation....6-8

6.6 TRANSMISSION ASSEMBLY

Removal....6-9
Disassembly....6-10
Shifter Cam/Shifter Forks....6-10
Mainshaft....6-12
Countershaft....6-14
Removing Bearing Housing Bearings....6-15
Cleaning and Inspection....6-16
Assembly....6-16
Installing Bearing Housing Bearings....6-16
Countershaft....6-16
Mainshaft....6-17
Shifter Cam/Shifter Forks....6-17
Installation....6-19

6.7 MAIN DRIVE GEAR AND BEARING

Removal....6-22
Cleaning and Inspection....6-23
Needle Bearing Replacement....6-24
Installation....6-25
Installing Main Drive Gear Bearing....6-25
Installing Main Drive Gear....6-26
Installing Main Drive Gear Large Seal....6-26

6.8 TRANSMISSION CASE

Removal....6-29
Installation....6-29
Disassembly....6-30
Shifter Arm Assembly....6-30
Cleaning and Inspection....6-30
Assembly....6-31
Countershaft Needle Bearing Replacement....6-31
Shifter Pawl Lever Assembly....6-31

ELECTRICAL

7.1 FASTENER TORQUE VALUES

Fastener Torque Values in this Chapter....7-1

7.2 SPECIFICATIONS: ELECTRICAL

Specifications....7-4

7.3 ELECTRICAL CADDY

Removal....7-5
Installation....7-7

7.4 ELECTRONIC CONTROL MODULE (ECM)

General....7-8
Replacement....7-8
Removal....7-8
Installation....7-8

7.5 BODY CONTROL MODULE (BCM)

General....7-9
Removal....7-9
Installation....7-10

7.6 SECURITY SIREN

Removal....7-11
Installation....7-11

7.7 SPARK PLUG CABLES

Inspect Spark Plug Cables....7-12
Removal....7-12
Installation....7-12

7.8 FUSES

General....7-13
Replacement....7-13

7.9 IGNITION SWITCH

Removal....7-14
All but FXDL....7-14
FXDL....7-15
Installation....7-16
All but FXDL....7-16
FXDL....7-16

7.10 BATTERY TRAY AND BATTERY CABLES

Battery Tray....7-17
Removal....7-17
Installation....7-17
Battery Cables....7-18
Routing....7-18

7.11 STARTER

General....7-20
Removal....7-20
Drive Assembly....7-20
Disassembly....7-20
Inspection....7-21
Assembly....7-21

Solenoid....7-21
Remove Cover and Plunger....7-21
Short Post Contact: Starter....7-22
Long Post Contact: Battery Positive....7-22
Install Plunger and Cover....7-23
Installation....7-23

7.12 HEADLAMP

General....7-24
Bulb Removal: All But FLD....7-24
Single Bulb Headlamp....7-24
Dual Bulb Headlamp....7-25
Bulb Installation: All But FLD....7-26
Headlamp Assembly: All But FLD and FXDL....7-26
Removal....7-26
Installation....7-26
Headlamp Assembly: FXDL....7-26
Removal....7-26
Installation....7-26
Headlamp Visor: FXDL....7-27
Removal....7-27
Installation....7-27
Headlamp: FLD....7-28
Removal....7-28
Bulb Replacement....7-29
Installation....7-30

7.13 TAIL LAMP

General....7-31
Tail Lamp Bulb Replacement: FLD and FXDL....7-31
Base Replacement: FLD and FXDL....7-31
Base Replacement: FXDWG/HDI and Canada....7-33
Tail Lamp Replacement: FXDF....7-34
Tail Lamp Removal....7-34
Tail Lamp Installation....7-34
License Plate Lamp Replacement....7-34

7.14 TURN SIGNALS

Turn Signal Bulb Replacement: Bullet Style....7-36
Front Lamp Housing Replacement: All But FLD....7-36
Rear Lamp Housing Replacement: All But FLD....7-38
Front Turn Signal Lamps: FLD....7-40
Removal....7-40
Installation....7-40
Rear Turn Signal Lamps and Bracket: FLD....7-41
Removal....7-41
Installation....7-41
Rear Turn Signal Reflector/Isolator Repair: FLD....7-41
Removal....7-41
Installation....7-41

7.15 CRANK POSITION SENSOR (CKP)

General....7-43
Removal....7-43
Installation....7-43

7.16 AUTOMATIC COMPRESSION RELEASE (ACR)

General....7-44
Removal....7-44
Installation....7-44

7.17 VOLTAGE REGULATOR

Removal....7-46
Installation....7-46

7.18 ALTERNATOR

Removal....7-47
Cleaning and Inspection....7-47
Installation....7-47

7.19 FUEL GAUGE

General....7-49
Removal....7-49

7.20 FUEL GAUGE SENDER

Removal....7-50
Installation....7-51

7.21 INSTRUMENTS: FXDF AND FLD

Speedometer....7-53
Removal....7-53
Installation....7-53

7.22 INSTRUMENTS: FXDB, FXDBC, FXDBP AND FXDWG

Removal....7-54
Installation....7-54

7.23 INSTRUMENTS: FXDL

Removal....7-56
Installation....7-56

7.24 VEHICLE SPEED SENSOR (VSS)

General....7-57
Removal....7-57
Installation....7-57

7.25 WHEEL SPEED SENSORS

Front Wheel Speed Sensor (WSS)....7-58
Removal....7-58
Installation....7-58
Rear Wheel Speed Sensor (WSS)....7-59
Removal....7-59
Installation....7-60

7.26 INDICATOR LAMPS

Removal....7-62
FLD....7-62
FXDB, FXDBC, FXDBP, FXDWG and FXDF....7-62
Installation....7-63
FLD....7-63
FXDB, FXDBC, FXDBP, FXDWG and FXDF....7-63

7.27 NEUTRAL SWITCH

General....7-64
Removal....7-64
Installation....7-64

7.28 OIL PRESSURE SWITCH

General....7-65

Removal....7-65
Installation....7-65

7.29 REAR STOPLAMP SWITCH

General....7-66
Removal....7-66
Installation....7-66

7.30 HORN

Inspection....7-67
Replacement: All But FXDL....7-67
Replacement: FXDL....7-68

7.31 ACTIVE EXHAUST: HDI

General....7-69
Removal....7-69
Repair....7-69
Installation....7-69

7.32 MAIN WIRING HARNESS

General....7-71
Removal....7-71
Installation....7-73

7.33 HANDLEBAR CONTROL MODULES

General....7-77
Repair Procedures....7-77

7.34 LEFT HANDLEBAR CONTROL MODULE

Removal....7-78
Clutch Switch Replacement....7-78
Installation....7-78

7.35 RIGHT HANDLEBAR CONTROL MODULE

Removal....7-80
Front Brake Switch Replacement....7-81
Installation....7-81

7.36 H-DSSS MAINTENANCE

Fob Battery....7-83
- Battery Replacement Schedule....7-83
- Battery Replacement....7-83

Smart Siren (If Installed)....7-83
- Battery Replacement Schedule....7-83
- Battery Replacement....7-83

7.37 PERSONAL IDENTIFICATION NUMBER (PIN)

General....7-84
Changing The PIN....7-84
- Modifying an Existing PIN....7-84

7.38 H-DSSS ACTUATION

Sidecar Configuration....7-86
Activation....7-86
Fob Assignment....7-86

APPENDIX A WIRING

A.1 CONNECTORS

Connector Locations....A-1
- Function/Location....A-1
- Place and Color....A-1
- Connector Number....A-1
- Repair Instructions....A-1

A.2 WIRING DIAGRAMS

Wiring Diagram Information....A-4
- Wire Color Codes....A-4
- Wiring Diagram Symbols....A-4

2016 Dyna Wiring Diagrams....A-6

APPENDIX B REFERENCE

B.1 LENGTH CONVERSION

Conversion Table....B-1

B.2 FLUID CONVERSION

United States System....B-2
Metric System....B-2
British Imperial System....B-2

B.3 TORQUE CONVERSION

United States System....B-3
Metric System....B-3

B.4 GLOSSARY

Acronyms and Abbreviations....B-4

REFERENCE MATERIAL

TOOLS....I

TORQUE VALUES....VII

INDEX....XXI

SUBJECT PAGE NO.

1.1 FASTENER TORQUE VALUES 1-1
1.2 GENERAL 1-3
1.3 FUEL AND OIL 1-7
1.4 MAINTENANCE SCHEDULE 1-9
1.5 ENGINE OIL AND FILTER 1-14
1.6 AIR CLEANER AND EXHAUST SYSTEM 1-16
1.7 TIRES AND WHEELS 1-19
1.8 PRIMARY CHAINCASE LUBRICANT 1-23
1.9 TRANSMISSION LUBRICANT 1-25
1.10 CLUTCH 1-27
1.11 DRIVE BELT AND SPROCKETS 1-29
1.12 THROTTLE CABLES 1-33
1.13 CABLE AND CHASSIS LUBRICATION 1-35
1.14 BRAKES 1-36
1.15 BRAKE PADS AND DISCS 1-38
1.16 SPARK PLUGS 1-41
1.17 STEERING HEAD BEARINGS 1-42
1.18 BATTERY MAINTENANCE 1-44
1.19 ENGINE MOUNTS 1-48
1.20 HEADLAMP ALIGNMENT 1-49
1.21 SUSPENSION ADJUSTMENTS 1-51
1.22 STORAGE 1-52
1.23 TROUBLESHOOTING 1-53

FASTENER TORQUE VALUES 1.1

FASTENER TORQUE VALUES IN THIS CHAPTER

The table below lists torque values for all fasteners presented in this chapter.

FASTENER	TORQUE VALUE		NOTES
Air cleaner cover bracket screw	40-60 **in-lbs**	4.5-6.8 Nm	1.6 AIR CLEANER AND EXHAUST SYSTEM, Installation, All But HO103
Air cleaner cover screw	36-60 **in-lbs**	4.1-6.8 Nm	1.6 AIR CLEANER AND EXHAUST SYSTEM, Installation, All But HO103/Apply LOCTITE 243 MEDIUM STRENGTH THREAD-LOCKER AND SEALANT (blue).
Air cleaner cover screw	36-60 **in-lbs**	4.1-6.8 Nm	1.6 AIR CLEANER AND EXHAUST SYSTEM, Installation, HO103/Apply a drop of LOCTITE 243 MEDIUM STRENGTH THREAD-LOCKER AND SEALANT (blue).
Axle adjuster	120-144 **in-lbs**	13.6-16.3 Nm	1.11 DRIVE BELT AND SPROCKETS, Adjusting Belt Deflection/Tighten after axle is tightened.
Axle nut, rear	95-105 ft-lbs	128.8-142.4 Nm	1.11 DRIVE BELT AND SPROCKETS, Adjusting Belt Deflection
Battery terminal screw	60-70 **in-lbs**	6.8-7.9 Nm	1.18 BATTERY MAINTENANCE, Installation and Connection
Battery terminal screw	60-70 **in-lbs**	6.8-7.9 Nm	1.18 BATTERY MAINTENANCE, Installation and Connection
Brake line clamp screw: FXDL	45-65 **in-lbs**	5.1-7.3 Nm	1.17 STEERING HEAD BEARINGS, Adjustment
Brake manifold fastener	36-48 **in-lbs**	4.0-5.4 Nm	1.17 STEERING HEAD BEARINGS, Adjustment
Brake pad pin/bridge bolt, front caliper	15-16 ft-lbs	20.3-22.6 Nm	1.15 BRAKE PADS AND DISCS, Brake Pad Replacement
Caliper, front, mounting bolt	28-38 ft-lbs	38.0-51.5 Nm	1.15 BRAKE PADS AND DISCS, Brake Pad Replacement
Clutch adjuster screw jamnut	72-120 **in-lbs**	8.1-13.6 Nm	1.10 CLUTCH, Adjustment
Clutch cable adjustment jamnut	120 **in-lbs**	13.6 Nm	1.10 CLUTCH, Adjustment
Clutch inspection cover screws	84-108 **in-lbs**	9.5-12.2 Nm	1.8 PRIMARY CHAINCASE LUBRICANT, Change Primary Chaincase Lubricant/Torque sequence
Clutch inspection cover screws	84-108 **in-lbs**	9.5-12.2 Nm	1.10 CLUTCH, Adjustment
Cover insert screw	27-32 **in-lbs**	3.1-3.6 Nm	1.6 AIR CLEANER AND EXHAUST SYSTEM, Installation, HO103
Engine oil drain plug	14-21 ft-lbs	19.0-28.5 Nm	1.5 ENGINE OIL AND FILTER, Changing Oil and Oil Filter
Filter element screw	55-60 **in-lbs**	5.2-6.8 Nm	1.6 AIR CLEANER AND EXHAUST SYSTEM, Installation, HO103/Apply LOCTITE 243 MEDIUM STRENGTH THREADLOCKER AND SEALANT (blue).
Fork clamp pinch bolts: lower	30-35 ft-lbs	40.7-47.5 Nm	1.17 STEERING HEAD BEARINGS, Adjustment
Fork clamp stem nut	70-80 ft-lbs	95-108.5 Nm	1.17 STEERING HEAD BEARINGS, Adjustment
Front caliper mounting bolt	28-38 ft-lbs	38.0-51.5 Nm	1.15 BRAKE PADS AND DISCS, Brake Pad Replacement
Headlamp clamp nut: FXDL	120-240 **in-lbs**	14-27 Nm	1.20 HEADLAMP ALIGNMENT, Headlamp Adjustment: FXDL
Headlamp horizontal adjusting bolt	25-30 ft-lbs	33.9-40.7 Nm	1.20 HEADLAMP ALIGNMENT, Headlamp Adjustment: All BUT FLD and FXDL

FASTENER	TORQUE VALUE		NOTES
Headlamp vertical adjusting nut	25-30 ft-lbs	33.9-40.7 Nm	1.20 HEADLAMP ALIGNMENT, Headlamp Adjustment: All BUT FLD and FXDL
Master cylinder reservoir cover screws: front cover	6-8 **in-lbs**	0.7-0.9 Nm	1.15 BRAKE PADS AND DISCS, Brake Pad Replacement
Master cylinder reservoir cover screws: rear cover, including ABS	6-8 **in-lbs**	0.7-0.9 Nm	1.15 BRAKE PADS AND DISCS, Brake Pad Replacement
Nacelle bolts, upper	84-120 **in-lbs**	9.5-13.5 Nm	1.17 STEERING HEAD BEARINGS, Adjustment
Pad pin, rear caliper	80-120 **in-lbs**	9.0-13.5 Nm	1.15 BRAKE PADS AND DISCS, Brake Pad Replacement
Primary chaincase drain plug	14-21 ft-lbs	19.0-28.5 Nm	1.8 PRIMARY CHAINCASE LUBRICANT, Change Primary Chaincase Lubricant
Rear caliper fasteners	16-20 ft-lbs	21.7-27.1 Nm	1.15 BRAKE PADS AND DISCS, Brake Pad Replacement
Spark plug	12-18 ft-lbs	16.3-24.4 Nm	1.16 SPARK PLUGS, Inspection
Spoke nipple	55 **in-lbs**	6.2 Nm	1.7 TIRES AND WHEELS, Wheel Spokes
Switch housing screw	35-45 **in-lbs**	4.0-5.1 Nm	1.12 THROTTLE CABLES, Cable Inspection and Lubrication
Transmission drain plug	14-21 ft-lbs	19.0-28.5 Nm	1.9 TRANSMISSION LUBRICANT, Change Transmission Lubricant
Transmission filler plug/dipstick	25-75 **in-lbs**	2.8-8.5 Nm	1.9 TRANSMISSION LUBRICANT, Check Transmission Lubricant
Transmission filler plug/dipstick	25-75 **in-lbs**	2.8-8.5 Nm	1.9 TRANSMISSION LUBRICANT, Change Transmission Lubricant

SERVICING A NEW MOTORCYCLE

⚠WARNING

Perform the service and maintenance operations as indicated in the regular service interval table. Lack of regular maintenance at the recommended intervals can affect the safe operation of your motorcycle, which could result in death or serious injury. (00010a)

Perform necessary set-up tasks before customer delivery. See applicable model year predelivery and set-up instructions.

The performance of new motorcycle initial service is required to keep warranty in force and to verify proper emissions systems operation. See 1.4 MAINTENANCE SCHEDULE.

SAFE OPERATING MAINTENANCE

NOTES

- *Do not attempt to tighten engine head bolts or engine damage may result.*
- *During the initial break-in period, use only GENUINE HARLEY-DAVIDSON H-D 360 MOTORCYCLE OIL 20W50. Failure to use the recommended oil results in improper break-in of the engine cylinders and piston rings.*

Inspect motorcycle regularly for more maintenance needs. Routinely check components between regular maintenance intervals. Always inspect motorcycle after periods of storage before riding.

Check:

1. Tires for correct pressure, excessive wear or any signs of tire damage.
2. Drive belt tension and condition.
3. Brakes, steering and throttle for responsiveness.
4. Brake fluid level and condition. Hydraulic lines and fittings for leaks.
5. Check brake pads and discs for wear.
6. Cables for fraying, crimping and free operation.
7. Engine oil and transmission fluid levels.
8. Headlamp, auxiliary/fog lamp, tail lamp, stop lamp, horn and turn signal operation.

DISPOSAL AND RECYCLING

Help protect our environment! Many communities maintain facilities for recycling used fluids, plastics and metals. Dispose of or recycle used oil, lubricants, fuel, coolant, brake fluid and batteries in accordance with local regulations. Many Harley-Davidson parts and accessories are made of plastics and metals which can also be recycled.

SHOP PRACTICES

Repair Notes

General maintenance practices are given in this section.

NOTES

- *Repair = Disassembly/Assembly.*
- *Replacement = Substitute a **new** part for existing component.*

All special tools and torque values are noted at the point of use.

All required parts or materials can be found in the parts catalog.

Safety

Safety is always the most important consideration when performing any job.

- Always have a complete understanding of the task.
- Use common sense.
- Use the proper tools.
- Protect yourself and bystanders with approved eye protection.

Do not just do the job, do the job safely.

Removing Parts

Always consider the weight of a part when lifting. Use a hoist whenever necessary. Do not lift heavy parts by hand. If a hoist and adjustable lifting beam or sling are needed to remove some parts, verify that:

- The lengths of multiple chains or cables from the hoist to the part are equal and parallel.
- Slings, chains and cables are positioned directly over the center of the part.
- No obstructions interfere with the lifting operation.
- Parts are not left suspended.

⚠WARNING

Be sure to check capacity rating and condition of hoists, slings, chains and cables before use. Exceeding capacity ratings or using lifting devices that are in poor condition can lead to an accident, which could result in death or serious injury. (00466c)

Always use blocking or proper stands to support the part that has been hoisted. If a part cannot be removed, verify that all bolts and attaching hardware have been removed. Verify that no parts are in the way of the part being removed.

When removing hoses, wiring or tubes, always tag each part to verify proper installation.

Cleaning

Always clean around lines or covers before they are removed. Plug, tape or cap holes and openings to keep out dirt, dust and debris. Clean and inspect all parts as they are removed. Verify that all holes and passages are clean and open. After cleaning, cover all parts with clean lint-free cloth, paper or other material. Verify that the part is clean when installed.

Thoroughly clean all parts to be reused before assembly. Clean parts promote better component operation and longer life. Seals, filters and covers used in this vehicle keep out

extraneous dirt and dust. Keep these items in good condition to guarantee satisfactory operation.

When instructed to clean fastener threads or threaded holes, always:

- Clean all threadlocking material from fastener threads and threaded holes.
- Use a wire brush to clean fastener threads.
- Use a thread chaser or other suitable tool to clean threaded holes.
- Use PJ1 cleaner or equivalent to remove all traces of oil and contaminants from threads.
- Clear all threaded holes with low pressure compressed air.

Always verify cleanliness of blind holes before assembly. Tightening a screw with dirt, water or oil in the hole can cause castings to crack or break.

Disassembly and Assembly

Always assemble or disassemble one part at a time. Do not work on two assemblies simultaneously. Make all necessary adjustments. Inspect your work when finished to verify that everything is done.

Operate the vehicle to perform any final check or adjustments. If all is correct, the vehicle is ready to go back to the customer.

Checking Torques on Fasteners

Check torque using a torque wrench set to the minimum specification for that fastener. If the fastener does not rotate, the fastener torque has been maintained. If the fastener rotates, remove it to determine if it has a threadlocking agent.

If it has a threadlocking agent, clean all material from the threaded hole. Replace the fastener with a **new** one or clean the original fastener threads and apply the appropriate threadlocking product. Install and tighten the fastener to specification.

If the fastener does not use a threadlocking agent, install and tighten it to specification.

Magnetic Parts Trays

Magnetic parts trays are common in the service facility. They are convenient and can keep parts from becoming lost during a repair procedure. However, hardened steel parts can become magnetized when held in magnetic parts trays.

Metal fragments from normal wear are usually trapped in the oil filter or by the magnetic drain plug. Magnetized parts in the engine can retain these fragments, potentially causing accelerated engine wear and damage.

Never place parts from inside the vehicle's powertrain on a magnetic parts tray.

REPAIR AND REPLACEMENT PROCEDURES

Hardware and Threaded Parts

Install thread repair inserts when threaded holes in castings are stripped, damaged or not capable of withstanding specified torque.

Replace bolts, nuts, studs, washers, spacers and small common hardware if missing or damaged. Clean up or repair minor thread damage with a suitable tap or die.

Replace all damaged or missing lubrication fittings.

Use LOCTITE 565 THREAD SEALANT on pipe fitting threads.

Threadlocking Agents

Always follow specific service manual procedures when working with fasteners containing preapplied threadlocking agents when fastener replacement is recommended. When reusing fasteners containing threadlocking agents, thoroughly clean all fasteners and threaded holes. Always use the recommended threadlocking agent for the specific procedure.

Wiring, Hoses and Lines

Replace hoses, clamps, electrical wiring, electrical switches or fuel lines if they do not meet specifications.

Instruments and Gauges

Replace damaged or defective instruments and gauges.

Bearings

Always use the proper tools and fixtures when servicing bearings.

Anti-friction bearings must be handled in a special way. To keep out dirt and abrasives, cover the bearings as soon as they are removed from the package.

When bearings are installed against shoulders, always verify that the chamfered side of the bearing faces the shoulder. Lubricate bearings and all metal contact surfaces before pressing into place. Only apply pressure on the part of the bearing that makes direct contact with the mating part. Install bearings with numbered side facing out.

Only remove bearings if necessary. Removal usually damages bearings requiring replacement with **new** parts.

Bushings

Do not remove a bushing unless damaged, excessively worn or loose in its bore. Press out bushings requiring replacement.

When pressing or driving bushings, always apply pressure in line with the bushing bore. Use a bearing/bushing driver or a bar with a smooth, flat end. Never use a hammer to drive bushings.

Verify that all oil holes are properly aligned during installation.

Gaskets

Always discard gaskets after removal. Replace with **new** gaskets. Never use the same gasket twice. Verify that gasket holes match up with holes in the mating part. Be aware that sections of a gasket may be used to seal passages.

Lip-Type Seals

Lip seals are used to seal oil or grease and are usually installed with the sealing lip facing the contained lubricant. Seal orientation, however, may vary under different applications.

Do not remove seals unless necessary. Only remove seals to gain access to other parts or if seal damage or wear dictates replacement.

Leaking oil or grease usually means that a seal is damaged. Replace leaking seals to prevent overheated bearings.

Always discard seals after removal. Do not use the same seal twice.

O-Rings

Always discard O-rings after removal. Since many O-rings are similar in size and appearance, always use **new** O-rings, keeping them packaged until use to avoid confusion. To prevent leaks, lubricate the O-rings before installation with the same type of lubricant as that being sealed. Verify that all gasket, O-ring and seal mating surfaces are thoroughly clean before installation.

Gears

Always check gears for damaged or worn teeth.

Remove burrs and rough spots with a honing stone or crocus cloth before installation.

Lubricate mating surfaces before pressing gears on shafts.

Shafts

If a shaft does not come out easily, check that all nuts, bolts or retaining rings have been removed. Check to see if other parts are in the way before using force to remove.

Shafts fitted to tapered splines should be very tight. If shafts are not tight, disassemble and inspect tapered splines. Discard parts that are worn. Verify that tapered splines are clean, dry and free of burrs before putting them in place. Press mating parts together tightly.

Clean all rust from the machined surfaces of **new** parts.

Part Replacement

⚠WARNING

Harley-Davidson parts and accessories are designed for Harley-Davidson motorcycles. Using non-Harley-Davidson parts or accessories can adversely affect performance, stability or handling, which could result in death or serious injury. (00001b)

Always install **new** genuine Harley-Davidson parts and accessories. This provides best service life and maintain compliance with noise and emissions regulations.

Installing non-Harley-Davidson, off-road or competition parts can void warranty or result in an unsafe vehicle.

CLEANING

Protecting Rubber Parts

Before cleaning, protect rubber parts (such as hoses, boots and electrical insulation) from cleaning solutions. Use a grease-proof barrier material. Remove the rubber part if it cannot be properly protected.

Cleaning Process

Any cleaning method may be used as long as it does not result in parts damage. Thorough cleaning is necessary for proper parts inspection. Strip rusted paint areas to bare metal before priming and repainting.

Never use cleaners containing chlorine or ammonia on plastic parts. Chlorine causes parts to become distorted and brittle resulting in cracks. Ammonia causes cloudiness and brittleness in windshields and non-painted parts to form a white haze.

Rust or Corrosion Removal

Remove rust and corrosion with a wire brush, abrasive cloth, sand blasting, vapor blasting or rust remover. Use buffing crocus cloth on highly polished parts that are rusted.

Bearings

Wash bearings in a non-flammable petroleum cleaning solution. Never use a solution that contains chlorine. Knock out packed lubricant by tapping the bearing against a wooden block. Wash bearings again.

⚠WARNING

Using compressed air to "spin dry" bearings can cause bearing to fly apart, which could result in death or serious injury. (00505b)

Cover bearings with a clean shop towel and allow to air dry. Do not spin bearings while they are drying. Never use compressed air to dry bearings.

When dry, coat bearings with clean oil. Wrap bearings in clean paper.

TOOL SAFETY

Air Tools

- Always use approved eye protection equipment when performing any task using air-operated tools.
- On all power tools, use only recommended accessories with proper capacity ratings.
- Do not exceed air pressure ratings of any power tools.
- Placed bits against work surface before air hammers are operated.
- Disconnect the air supply line to an air hammer before attaching a bit.
- Never point an air tool at yourself or another person.
- Protect yourself and bystanders with approved eye protection.

Wrenches

- Never use an extension on a wrench handle.
- If possible, always pull on a wrench handle and adjust your stance to prevent a fall if something suddenly releases.
- Always keep the wrench squarely installed on the fastener.
- Never use a hammer on any wrench other than a STRIKING FACE wrench.
- Discard any wrench with damaged or battered points.
- Never use a pipe wrench to bend, raise or lift a pipe.

Pliers/Cutters/Pry Bars

- Plastic- or vinyl-covered pliers handles are not intended to act as insulation. Do not use them on live electrical circuits.
- Do not use pliers or cutters for cutting hardened wire unless they were designed for that purpose.
- Always cut at right angles.
- Do not use any pry bar as a chisel, punch or hammer.

Hammers

- Never strike a hammer against a hardened object, such as another hammer.
- Always grasp a hammer handle firmly, close to the end.
- Strike the object with the full face of the hammer.
- Never work with a hammer which has a loose head or cracked handle.
- Discard hammer if face is chipped or mushroomed.
- Wear approved eye protection when using striking tools.
- Protect yourself and bystanders with approved eye protection.

Punches/Chisels

- Never use a punch or chisel with a chipped or mushroomed end. Dress mushroomed chisels and punches with a grinder.
- Hold a chisel or a punch with a tool holder if possible.
- When using a chisel on a small piece, clamp the piece firmly in a vise and chip toward the stationary jaw.
- Always wear approved eye protection when using these tools.
- Protect yourself and bystanders with approved eye protection.

Screwdrivers

- Do not use a screwdriver for prying, punching, chiseling, scoring or scraping.
- Use the right type of screwdriver for the job. Match the tip of a screwdriver to the fastener.
- Do not interchange POZIDRIV, PHILLIPS or REED AND PRINCE screwdrivers.
- Screwdriver handles are not intended to act as insulation. Do not use them on live electrical circuits.
- Do not use a screwdriver with rounded edges because it will slip. Redress with a grinder.

Ratchets and Handles

- Periodically clean and lubricate ratchet mechanisms with a light grade oil. Do not replace parts individually. Rebuild ratchets with the entire contents of service kit.
- Never hammer on a ratchet or put a pipe extension on a ratchet handle for added leverage.
- Always support the ratchet head when using socket extensions. Do not put your hand on the head or you may interfere with the action of its reversing mechanism.
- When breaking a fastener loose, apply a small amount of pressure as a test to make sure that the ratchet's gear wheel is engaged with the pawl.

Sockets

- Never use hand sockets on power or impact wrenches. Select only impact sockets for use with air or electric impact wrenches.
- Select the right size socket for the job.
- Always keep the wrench or socket squarely on the fastener.
- Replace sockets showing cracks or wear.
- Keep sockets clean.
- Always use approved eye protection when using power or impact sockets.

Storage Units

- Do not open more than one loaded drawer at a time. Close each drawer before opening another to prevent the cabinet from unexpectedly tipping over.
- Close lids and lock drawers and doors before moving storage units.
- Do not pull on a tool cabinet. Always push tool cabinets in front of you.
- Set the brakes on the locking casters after the cabinet has been rolled into position.

FUEL

Always use a good quality unleaded gasoline. Octane ratings are usually found on the pump. Refer to Table 1-1.

⚠WARNING

Avoid spills. Slowly remove filler cap. Do not fill above bottom of filler neck insert, leaving air space for fuel expansion. Secure filler cap after refueling. Gasoline is extremely flammable and highly explosive, which could result in death or serious injury. (00028a)

⚠WARNING

Use care when refueling. Pressurized air in fuel tank can force gasoline to escape through filler tube. Gasoline is extremely flammable and highly explosive, which could result in death or serious injury. (00029a)

Modern service station pumps dispense a high flow of gasoline into a motorcycle fuel tank. This can cause air entrapment and pressurization.

Table 1-1. Octane Rating

SPECIFICATION	RATING
Pump Octane (R+M)/2	91 (95 RON)

GASOLINE BLENDS

Your motorcycle was designed to get the best performance and efficiency using unleaded gasoline. Most gasoline is blended with alcohol and/or ether to create oxygenated blends. The type and amount of alcohol or ether added to the fuel is important.

NOTICE

Do not use gasoline that contains methanol. Doing so can result in fuel system component failure, engine damage and/or equipment malfunction. (00148a)

- Gasoline/METHYL TERTIARY BUTYL ETHER (MTBE) blends are a mixture of gasoline and as much as 15 percent MTBE. Gasoline/MTBE blends use in your motorcycle is approved.
- ETHANOL fuel is a mixture of ethanol (grain alcohol) and unleaded gasoline and can have an impact on fuel mileage. Fuels with an ethanol content of up to 10 percent may be used in your motorcycle without affecting vehicle performance. U.S. EPA regulations currently indicate that fuels with 15 percent ethanol (E15) are restricted from use in motorcycles at the time of this publication. Some motorcycles are calibrated to operate with higher ethanol concentrations to meet the fuel standards in certain countries.
- REFORMULATED OR OXYGENATED GASOLINES (RFG) describes gasoline blends that are specifically designed to burn cleaner than other types of gasoline. This results in fewer tailpipe emissions. They are also formulated to evaporate less when filling the tank. Reformulated gasolines use additives to oxygenate the gas. Your motorcycle will run normally using this type of fuel. Harley-Davidson recommends using it whenever possible as an aid to cleaner air in our environment.
- Do not use racing fuel or fuel containing methanol. Use of these fuels will damage the fuel system.
- Using fuel additives other than those approved for use by Harley-Davidson may damage the engine, fuel system and other components.

Some gasoline blends might adversely affect starting, driveability or fuel efficiency. If any of these problems are experienced, try a different brand of gasoline or gasoline with a higher octane blend.

ENGINE LUBRICATION

⚠CAUTION

Prolonged or repeated contact with used motor oil may be harmful to skin and could cause skin cancer. Promptly wash affected areas with soap and water. (00358b)

⚠CAUTION

If engine oil is swallowed, do not induce vomiting. Contact a physician immediately. In case of contact with eyes, immediately flush with water. Contact a physician if irritation persists. (00357d)

NOTICE

Do not switch lubricant brands indiscriminately because some lubricants interact chemically when mixed. Use of inferior lubricants can damage the engine. (00184a)

Engine oil is a major factor in the performance and service life of the engine. Use the proper grade of oil for the lowest temperature expected before the next oil change. Refer to Table 1-2.

This motorcycle was originally equipped with GENUINE HARLEY-DAVIDSON H-D 360 MOTORCYCLE OIL 20W50. H-D 360 is the preferred oil under normal operating conditions. If operation under extreme cold or heat are expected, refer to Table 1-2 for alternative choices.

If H-D 360 is not available, add oil certified for diesel engines. Acceptable designations include: CH-4, CI-4 and CJ-4. The preferred viscosities, in descending order are: 20W50, 15W40 and 10W40.

At the first opportunity, see an authorized dealer to change back to 100 percent Harley-Davidson oil.

Table 1-2. Recommended Engine Oils

TYPE	VISCOSITY	RATING	LOWEST AMBIENT TEMPERATURE	COLD-WEATHER STARTS BELOW 50 °F (10 °C)
Screamin' Eagle SYN3 Full Synthetic Motorcycle Lubricant	SAE 20W50	HD 360	Above 30 °F (-1 °C)	Excellent
Genuine Harley-Davidson H-D 360 Motorcycle Oil	SAE 20W50	HD 360	Above 40 °F (4 °C)	Good
Genuine Harley-Davidson H-D 360 Motorcycle Oil	SAE 50	HD 360	Above 60 °F (16 °C)	Poor
Genuine Harley-Davidson H-D 360 Motorcycle Oil	SAE 60	HD 360	Above 80 °F (27 °C)	Poor
Genuine Harley-Davidson H-D 360 Motorcycle Oil	SAE 10W40	HD 360	Below 40 °F (4 °C)	Excellent

WINTER LUBRICATION

Change engine oil often in colder climates. If motorcycle is frequently used for trips less than 15 mi (24 km), in ambient temperatures below 60 °F (16 °C), reduce oil change intervals to 1500 mi (2400 km).

NOTE

Lower ambient temperatures require more frequent oil changes.

Water vapor is a normal by-product of combustion. During cold-weather operation, some water vapor condenses to liquid form on the cool surfaces inside the engine. In freezing weather this water becomes slush or ice. If the engine is not warmed to operating temperature, accumulated slush or ice blocks the oil lines and causes engine damage. Over time, water will accumulate, mix with the engine oil and form a sludge that is harmful to the engine.

If the engine is allowed to warm to normal operating temperature, most of the water evaporates and exits through the crankcase breather.

MAINTENANCE SCHEDULE 1.4

GENERAL

At each regular service interval, perform the required maintenance. Refer to Table 1-3.

Use the quick reference maintenance chart for torque values, lubricants or cross references to maintenance procedures. Refer to Table 1-4.

Use the lubricants, greases and sealants table to identify maintenance supplies. Refer to Table 1-5.

Table 1-3. Regular Service Intervals: 2016 Harley-Davidson Dyna Models

ITEM SERVICED	1000 mi 1600 km	5000 mi 8000 km	10000 mi 16000 km	15000 mi 24000 km	20000 mi 32000 km	25000 mi 40000 km	30000 mi 48000 km	35000 mi 56000 km	40000 mi 64000 km	45000 mi 72000 km	50000 mi 80000 km	NOTES
Check operation of electrical equipment and switches	X	X	X	X	X	X	X	X	X	X	X	
Check front tire pressure, inspect tread	X	X	X	X	X	X	X	X	X	X	X	1
Check torque of front wheel spokes (if equipped)	X	X			X			X			X	2, 3, 4
Inspect front brake fluid sight glass	X	X	X	X	X	X	X	X	X	X	X	5
Check torque on front brake reservoir cover screw	X		X		X		X		X		X	1, 2, 6
Adjust steering head bearings	X		X		X		X		X		X	2
Lubricate steering head bearings							X					2, 7
Check torque on front fork lower bracket pinch bolts	X		X		X		X		X		X	1, 2, 6
Check torque on front fork: upper bracket pinch bolts	X		X		X		X		X		X	1, 2, 6
Inspect windshield bushings (if applicable)			X		X		X		X		X	
Check, adjust and lubricate throttle controls	X	X	X	X	X	X	X	X	X	X	X	2
Check upper and lower switch housing screw torque	X		X		X		X		X		X	1, 2, 6
Check clutch lever handlebar clamp screw torque	X		X		X		X		X		X	1, 2, 6
Check master cylinder handlebar clamp screw torque	X		X		X		X		X		X	1, 2, 6
Inspect air cleaner, service as required		X	X	X	X	X	X	X	X	X	X	4, 5
Replace engine oil and filter	X	X	X	X	X	X	X	X	X	X	X	1, 4
Replace primary chaincase lubricant	X		X		X		X		X		X	4
Replace transmission lubricant	X				X				X			4
Inspect brake system for leaks, contact or abrasion	X	X	X	X	X	X	X	X	X	X	X	2, 5
Inspect fuel lines and fittings for leaks, contact or abrasion	X	X	X	X	X	X	X	X	X	X	X	1, 2
Inspect engine mounts and stabilizer links	X		X		X		X		X		X	2
Inspect rear brake fluid sight glass	X	X	X	X	X	X	X	X	X	X	X	5
Check rear brake reservoir cover screw torque	X		X		X		X		X		X	1, 2, 6
Inspect brake pads and discs for wear	X	X	X	X	X	X	X	X	X	X	X	
Check front axle pinch bolt torque: FLD (right side)	X		X		X		X		X		X	1, 2, 6
Check Front axle cap fastener torque: all but FLD	X		X		X		X		X		X	1, 2, 6
Check front axle nut torque	X		X		X		X		X		X	1, 2, 6

Table 1-3. Regular Service Intervals: 2016 Harley-Davidson Dyna Models

ITEM SERVICED	1000 mi 1600 km	5000 mi 8000 km	10000 mi 16000 km	15000 mi 24000 km	20000 mi 32000 km	25000 mi 40000 km	30000 mi 48000 km	35000 mi 56000 km	40000 mi 64000 km	45000 mi 72000 km	50000 mi 80000 km	NOTES
Check brake master cylinder and caliper banjo bolt torque	X		X		X		X		X		X	1, 2, 6
Check ABS module (EHCU) banjo bolt torque	X		X		X		X		X		X	1, 2, 6
Check torque of ABS brake line flare nuts under lower fork bracket	X		X		X		X		X		X	1, 2, 6
Inspect and lubricate jiffy stand	X	X	X	X	X	X	X	X	X	X	X	2, 4
Check clutch adjustment	X	X	X	X	X	X	X	X	X	X	X	2, 4
Check, adjust and lubricate brake and clutch controls	X	X	X	X	X	X	X	X	X	X	X	
Check rear wheel spokes torque (if equipped)	X	X			X			X			X	2, 3, 4
Check rear tire pressure, inspect tread	X	X	X	X	X	X	X	X	X	X	X	1
Inspect and lubricate rear fork bearings							X					2, 7
Inspect drive belt and sprockets, adjust belt	X	X	X	X	X	X	X	X	X	X	X	2
Check rear axle nut torque	X		X		X		X		X		X	1, 2, 6
Inspect exhaust system for leaks, cracks, and loose or missing fasteners or exhaust shields	X	X	X	X	X	X	X	X	X	X	X	1, 4
Check rear exhaust bracket bolt torque at transmission	X		X		X		X		X		X	1, 2, 6
Check rear exhaust bracket locknut torque at transmission	X		X		X		X		X		X	1, 2, 6
Check battery, terminal torque, and clean connections annually.												1
Replace spark plugs every two years or every 30,000 mi (48,000 km), whichever comes first.												
Rebuild front fork											X	2, 8
Replace fuel filter element every 100,000 mi (160,000 km).												2, 4
Road test to verify component and system functions	X	X	X	X	X	X	X	X	X	X	X	

NOTES:

1. Perform annually or at specified intervals, whichever comes first.
2. Should be performed by an authorized Harley-Davidson dealer, unless you have the proper tools, service data and are mechanically qualified.
3. Perform spoke tension check at the 1000 mi (1600 km), 5000 mi (8000 km), 20,000 mi (32,000 km) services and every 15,000 mi (24,000 km) interval thereafter. Not all vehicles are equipped with spoke wheels. Consult appropriate topic in service manual.
4. Perform maintenance more frequently in severe riding conditions (such as extreme temperatures, dusty environments, mountainous or rough roads, long storage conditions, short runs, heavy stop/go traffic or poor fuel quality).
5. Replace DOT 4 brake fluid and flush system every two years.
6. For torque instructions, see Shop Practices in the service manual.
7. Disassemble, lubricate and inspect every 30,000 mi (48,000 km).
8. Disassemble, inspect, rebuild forks and replace fork oil every 50,000 mi (80,000 km).

NOTE

Whenever a vehicle is in for maintenance:

- *Always check for and complete open recalls and product programs.*
- *Always verify that the latest calibration is installed.*

Table 1-4. Quick Reference Maintenance and Torque Chart

ITEM SERVICED	SPECIFICATION	DATA
Air cleaner	Air cleaner cover bracket screw torque	40-60 **in-lbs** (4.5-6.8 Nm)
	Air cleaner cover screw torque	36-60 **in-lbs** (4.1-6.8 Nm)
	ADHESIVE for air cleaner cover screw	LOCTITE 243 MEDIUM STRENGTH THREAD-LOCKER AND SEALANT (blue)
Axle nut	Torque (front)	62-67 ft-lbs (84.1-90.9 Nm)
	Front axle pinch bolt (FLD)	18-22 ft-lbs (24.4-29.9 Nm)
	Front axle cap fasteners (All but FLD)	132-180 **in-lbs** (14.9-20.3 Nm)
	Axle nut torque (rear)	95-105 ft-lbs (128.8-142.4 Nm)
Battery	Battery terminal torque	60-70 **in-lbs** (6.8-7.9 Nm)
Brake fluid reservoir level (Inspect sight glass. If fluid is low, remove reservoir cover and re-inspect.) Visual inspection on FLD is acceptable.	Type	DOT 4 hydraulic brake fluid
	Proper fluid level	Front:1/8-3/8 in (3.2-9.5 mm) below gasket surface Rear: 1/4-1/2 in (6.4-12.7 mm)
	Master cylinder cover screw torque: front	6-8 **in-lbs** (0.7-0.9 Nm)
	Master cylinder cover screw torque: rear	6-8 **in-lbs** (0.7-0.9 Nm)
	Handlebar clamp screw torque	60-80 **in-lbs** (6.8-9.0 Nm)
	Master cylinder and caliper banjo bolt torque	17-22 ft-lbs (23.1-29.9 Nm)
	ABS ECHU banjo bolt torque	14-18 ft-lbs (18.9-24.4 Nm)
	ABS brake line flare nut torque	120-144 **in-lbs** (13.6-16.3 Nm
Brake pads and discs	Minimum brake pad thickness	0.04 in (1.02 mm)
	Minimum brake disc thickness	See stamp on side of disc
Clutch adjustment	Free play at adjuster screw	1/2-1 turn
	Adjuster screw locknut torque	72-120 **in-lbs** (8.1-13.6 Nm)
	Free play at hand lever	1/16-1/8 in (1.6-3.2 mm)
	Clutch inspection cover torque	84-108 **in-lbs** (9.5-12.2 Nm)
	Handlebar clamp screw torque	60-80 **in-lbs** (6.8-9.0 Nm)
Clutch and throttle cables	LUBRICANT	HARLEY LUBE
	Hand control module housing screw torque	35-45 **in-lbs** (4.0-5.1 Nm)
Drive belt	Upward measurement force applied at midpoint of bottom of belt strand	10 lb. (4.5 kg)
	With motorcycle resting on jiffy stand without rider or luggage	1/4-5/16 in (6.4-7.9 mm)
Engine idle speed	Idle speed	950-1050 RPM
Engine oil and filter	Drain plug torque	14-21 ft-lbs (19.0-28.5 Nm)
	Oil capacity **	3 qt (2.4 L)
	Filter	Hand-tighten 1/2-3/4 turn after gasket contact
Front fork	Lower bracket pinch bolts	30-35 ft-lbs (40.7-47.5 Nm)
	Upper bracket pinch bolts	30-35 ft-lbs (40.7-47.5 Nm)
Front fork oil	Amount	See 2.18 FRONT FORK.
	Type	TYPE 'E' HYDRAULIC FORK OIL
Primary chain lubricant	Lubricant capacity	32 oz. (0.95 L)
	Primary chaincase drain plug torque	14-21 ft-lbs (19.0-28.5 Nm)
Spark plugs	Type	HD-6R12
	Gap	0.038-0.043 in (0.97-1.09 mm)
	Torque	12-18 ft-lbs (16.3-24.4 Nm)

Table 1-4. Quick Reference Maintenance and Torque Chart

ITEM SERVICED	SPECIFICATION	DATA
Tire condition and pressure	Pressure with or without passenger All except FXDF, FLD and FXDWG	Front: 30 psi (207 kPa) Rear: 40 psi (276 kPa)
	Pressure with or without passenger FXDWG	Front: 38 psi (262 kPa) Rear: 40 psi (276 kPa)
	Pressure with or without passenger FXDF, FLD	Front: 36 psi (248 kPa) Rear: 40 psi (276 kPa)
	Wear	Replace tire if 1/32 in (0.8 mm) or less of tread pattern remains
Transmission lubricant	Lubricant level	Dipstick between ADD and FULL marks with motorcycle on jiffy stand and dipstick screwed in until O-ring contacts case.
	Lubricant type and capacity *	FORMULA+ TRANSMISSION AND PRIMARY CHAIN LUBRICATION or SYN3 20W50 OIL Maximum 32 oz (0.95 L)
	Transmission drain plug torque	14-21 ft-lbs (19.0-28.5 Nm)
	Dipstick torque	25-75 **in-lbs** (2.8-8.5 Nm)
Wheel spokes	Spoke nipple torque	55 **in-lbs** (6.2 Nm)

* Capacity is approximate. When changing lubricant, initially add 28 oz (0.83 L). Check and fill as necessary.
** Capacity is approximate. When changing oil, initially add less than specified. Check and fill as necessary.

Table 1-5. Lubricants, Greases, Sealants

ITEM	PART NUMBER	PACKAGE
3M 847 Adhesive	021200-19718 *	5 oz tube
3M General Purpose Adhesive Remover		15 oz aerosol
Anti-Seize Lubricant	98960-97	1 oz squeeze tube
CCI #20 Brake Grease	42830-05	squeeze packet (included in master cylinder rebuild kit)
DOT 4 Brake Fluid	99953-99A	12 oz bottle
Dow Corning Moly 44 Grease	94674-99	2 cc packet
Electrical Contact Lubricant	11300004	1 oz squeeze tube
Formula+ Transmission and Primary Chaincase Lubricant	99851-05	1 qt bottle
G40M Brake Grease	42820-04	squeeze packet
Genuine Harley-Davidson Extended Life Antifreeze and Coolant	99822-02	1 gal container
Genuine Harley-Davidson H-D 360 20W50 Motorcycle Oil	99816-2050/00QT	1 qt bottle
Harley-Davidson Adhesive (Griplock)	99839-95	10 g tube
Harley-Davidson High Performance Sealant - Gray	99650-02	1.9 oz squeeze tube
Harley-Davidson Leather Dressing	98261-91V	6 oz can
Harley-Davidson Seal Grease	11300005	1 oz tube
Harley Lube	94968-09	1/4 oz needle dispenser
Hylomar Gasket and Thread Sealant	99653-85	3.0 oz tube
Loctite 222 Low Strength Threadlocker and Sealant (purple)	99811-97	6 mL tube

Table 1-5. Lubricants, Greases, Sealants

ITEM	PART NUMBER	PACKAGE
Loctite 243 Medium Strength Threadlocker and Sealant (blue)	99642-97	6 mL tube
	11100005	50 mL bottle
Loctite 246 Medium Strength/High Temperature Threadlocker (blue)		
Loctite 262 High Strength Threadlocker and Sealant (red)	94759-99	6 mL tube
Loctite 271 High Strength Threadlocker and Sealant (red)		6 mL tube
	11100006	50 mL bottle
Loctite 411 Prism Instant Adhesive		
Loctite 420 Super Bonder Adhesive		
Loctite 565 Thread Sealant	99818-97	6 mL tube
Loctite 770 Prism Primer		
Loctite 7649 Cleaner/Primer	98968-99	1.75 oz bottle
Screamin' Eagle Assembly Lube	11300002	4 oz tube
Screamin' Eagle SYN3 Full Synthetic Motorcycle Lubricant 20W50	99824-03/00QT	1 qt bottle
Special Purpose Grease	99857-97A	14 oz cartridge
Type "E" Hydraulic Fork Oil	62600026	16 oz bottle
Wheel Bearing Grease	99855-89	1 lb can
	99856-92	14 oz cartridge
* Not a Harley-Davidson part number		

CHECK ENGINE OIL LEVEL

⚠CAUTION

Prolonged or repeated contact with used motor oil may be harmful to skin and could cause skin cancer. Promptly wash affected areas with soap and water. (00358b)

NOTICE

Do not overfill oil. Doing so can result in oil carryover to the air cleaner leading to equipment damage and/or equipment malfunction. (00190b)

NOTES

- *Oil level can be checked with motorcycle upright or on jiffy stand. Both marks are on the same side of the dipstick. Carefully read dipstick when checking oil level.*
- *Check engine oil level at each complete fuel refill.*

Oil Level Cold Check

1. Place vehicle on level ground resting on the jiffy stand.
2. See Figure 1-1. Remove filler plug/dipstick. Wipe off the dipstick. Insert the dipstick and tighten into the fill spout.

NOTE

Oil level on a cold engine should never be above the midway point.

3. See Figure 1-2. Remove filler plug/dipstick and check oil level. The correct oil level is midway (2) between the ADD QT (1) and FULL HOT (3) marks on the dipstick.

NOTE

If oil level is at or below the ADD QT mark, add only enough oil to bring the level midway (2) between the ADD QT and FULL HOT marks. Never bring the level to the FULL HOT mark on a cold engine.

Oil Level Hot Check

NOTICE

Do not allow hot oil level to fall below Add/Fill mark on dipstick. Doing so can result in equipment damage and/or equipment malfunction. (00189a)

NOTE

Perform engine oil level hot check only with engine oil at normal operating temperature.

1. Ride motorcycle until engine oil reaches at least 200 °F (93 °C) or higher.
2. Allow engine to idle for 1-2 minutes. Turn off engine.
3. See Figure 1-1. Remove filler plug/dipstick. Wipe off the dipstick. Insert the dipstick and tighten into the fill spout.
4. See Figure 1-2. Remove filler plug/dipstick and check oil level. Oil level must register between the ADD QT (1) and FULL HOT (3) marks. If oil level is at or below the ADD QT mark, add only enough oil to bring the level to the FULL HOT mark. Do not overfill.

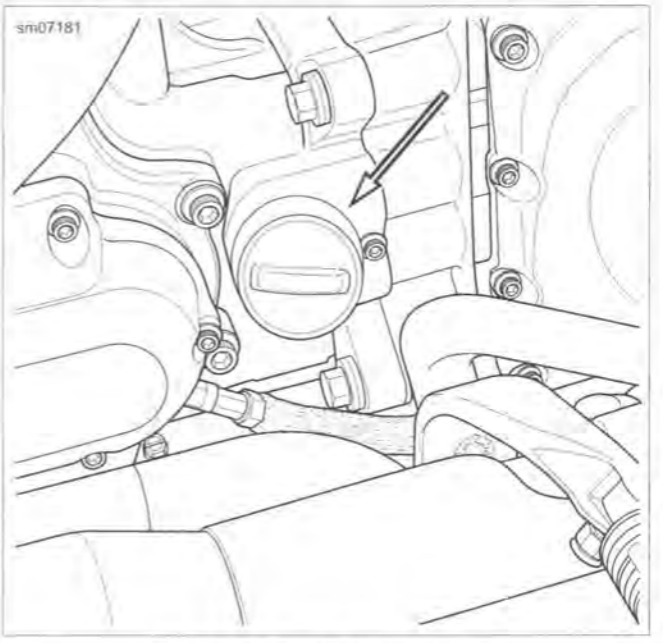

Figure 1-1. Filler Plug/Dipstick

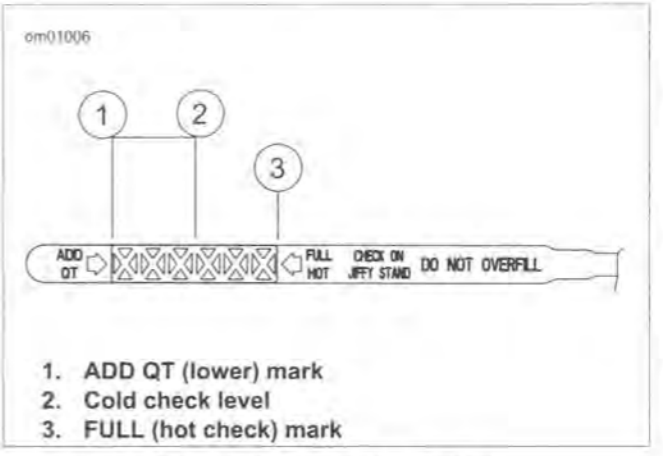

1. **ADD QT (lower) mark**
2. **Cold check level**
3. **FULL (hot check) mark**

Figure 1-2. Engine Oil Dipstick

CHANGING OIL AND OIL FILTER

PART NUMBER	TOOL NAME
HD-42311	OIL FILTER WRENCH
HD-44067A	OIL FILTER WRENCH

FASTENER	TORQUE VALUE	
Engine oil drain plug	14-21 ft-lbs	19.0-28.5 Nm

Change engine oil at the first 1000 mi (1600 km) for a **new** engine. After the initial service, change oil at regular intervals in normal service at warm or moderate temperatures. Refer to Table 1-3.

Change oil at more frequent intervals in cold weather or severe operating conditions. See 1.3 FUEL AND OIL, Winter Lubrication.

Twin Cam equipped vehicles require the premium oil filter, available in chrome (Part No. 63798-99A) or black (Part No. 63731-99A).

⚠WARNING

Be sure that no lubricants or fluids get on tires, wheels or brakes when changing fluid. Traction can be adversely affected, which could result in loss of control of the motorcycle and death or serious injury. (00047d)

NOTICE

Do not switch lubricant brands indiscriminately because some lubricants interact chemically when mixed. Use of inferior lubricants can damage the engine. (00184a)

1. Run motorcycle until engine is at normal operating temperature. Turn off engine.
2. Remove filler plug/dipstick.

NOTE

Replace drain plug O-ring if damaged.

3. See Figure 1-3. Remove the oil drain plug (2) and O-ring. Allow oil to drain completely.

NOTICE

Use Harley-Davidson oil filter wrench for filter removal. This tool can prevent damage to crankshaft position sensor and/or sensor cable. (00192b)

4. Remove the oil filter using OIL FILTER WRENCH (Part No. HD-42311) or OIL FILTER WRENCH (Part No. HD-44067A) and hand tools. Do not use with air tools.
5. Clean the oil filter mount flange.
6. See Figure 1-4. Install **new** oil filter.
   a. Lubricate gasket with a thin film of clean engine oil.
   b. Install **new** oil filter.
   c. Hand-tighten oil filter one-half to three-quarters of a turn after gasket first contacts filter mounting surface. Do NOT use oil filter wrench for installation.
7. Install engine oil drain plug and O-ring. Tighten to 14-21 ft-lbs (19.0-28.5 Nm).

NOTE

Use the proper grade of oil for the lowest temperature expected before the next oil change. Refer to Table 1-2 for recommended oil.

8. Add an initial volume of engine oil. Refer to Table 1-6.

Table 1-6. Initial Oil Fill

ITEM	QUANTITY	
	qt	L
Engine initial oil fill	2.5	2.4

9. Verify proper oil level. See 1.5 ENGINE OIL AND FILTER, Check Engine Oil Level.
   a. Perform engine oil level **cold check**.
   b. Start engine and carefully check for oil leaks around drain plug and oil filter.
   c. Perform engine oil level **hot check**.

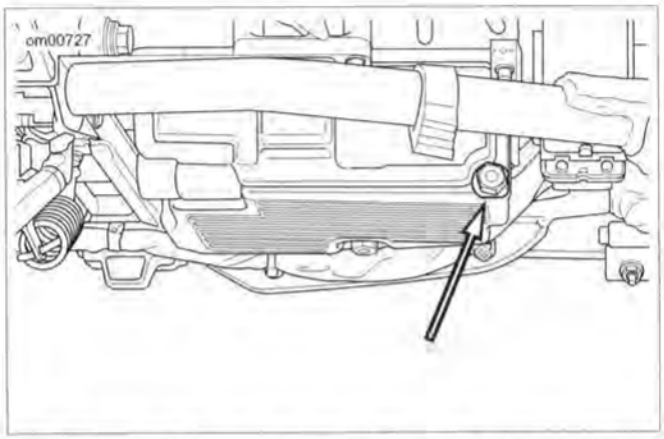

Figure 1-3. Engine Oil Drain Plug (left side under transmission)

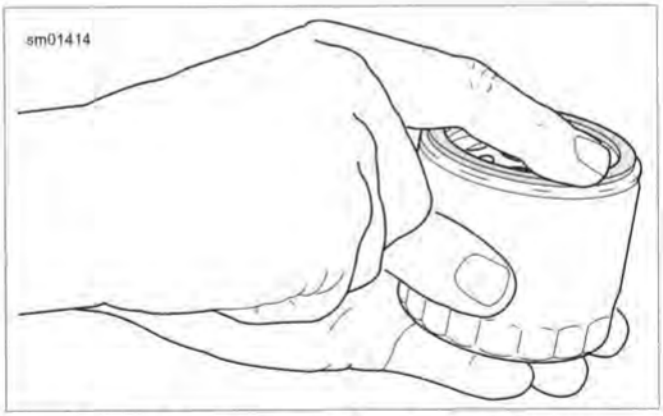

Figure 1-4. Lubricating New Oil Filter Gasket

REMOVAL, ALL BUT HO103

1. See Figure 1-5. Remove cover screw (1) and air cleaner cover (2).
2. Gently pull both breather tubes (6) from the filter element (7).
3. Slide speed nut (12, all but FXDB) to the left to allow access to third screw. Remove three screws (4), bracket (5) and filter element.
4. Replace the filter element if damaged or if filter media cannot be adequately cleaned.
5. Gently pull the breather tubes from the breather bolts on the backplate.

⚠WARNING

Do not use gasoline or solvents to clean filter element. Flammable cleaning agents can cause an intake system fire, which could result in death or serious injury. (00101a)

⚠WARNING

Compressed air can pierce the skin and flying debris from compressed air could cause serious eye injury. Wear safety glasses when working with compressed air. Never use your hand to check for air leaks or to determine air flow rates. (00061a)

6. Clean filter element.
   a. Wash the paper/wire mesh air filter element and breather tubes in lukewarm water with a mild detergent. Do not strike filter element on a hard surface to dislodge dirt.
   b. Allow filter to either air dry or, from the inside, dry with low-pressure compressed air. Do NOT use air cleaner filter oil on the Harley-Davidson paper/wire mesh air filter element.
   c. Hold the filter element up to a strong light source. If light is uniformly visible through the element, it is sufficiently clean.
7. Inspect seal ring on cover for cracks or tears. Verify that cover seals tightly to backplate. Replace as required.
8. Inspect breather tubes for damage. Replace if necessary.

NOTES

- *The breather tubes direct crankcase vapors into the air filter element. By providing effective recirculation of crankcase vapor, the tubes serve to eliminate the pollutants normally discharged from the crankcase.*
- *Air cleaner mounting without installation of the breather tubes allows venting of crankcase vapors into the atmosphere. This vapor venting violates emissions regulations.*

9. Wipe inside of air cleaner cover and backplate with damp cloth to remove dust.
10. **California models only:** Make sure trap door swings freely.

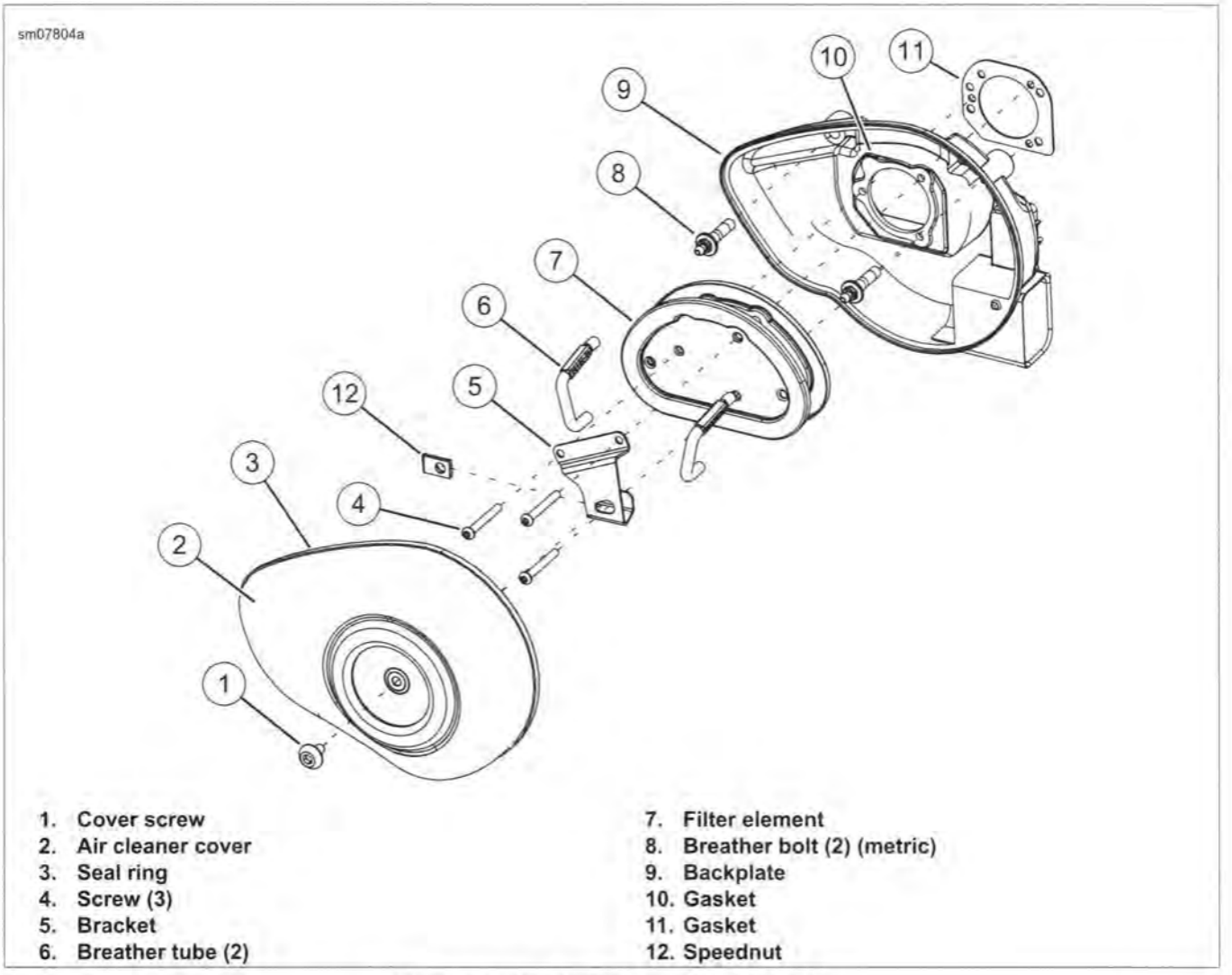

1. **Cover screw**
2. **Air cleaner cover**
3. **Seal ring**
4. **Screw (3)**
5. **Bracket**
6. **Breather tube (2)**
7. **Filter element**
8. **Breather bolt (2) (metric)**
9. **Backplate**
10. **Gasket**
11. **Gasket**
12. **Speednut**

Figure 1-5. Air Cleaner Assembly (typical)

INSTALLATION, ALL BUT HO103

FASTENER	TORQUE VALUE	
Air cleaner cover bracket screw	40-60 **in-lbs**	4.5-6.8 Nm
Air cleaner cover screw	36-60 **in-lbs**	4.1-6.8 Nm

1. See Figure 1-6. Position **new** gasket on filter element. Make sure that gasket holes are aligned with screw holes.
2. See Figure 1-5. Attach breather tubes (6) to breather screws (8) on backplate.
3. Install filter element (7) and bracket (5) using three screws (4). Tighten to 40-60 **in-lbs** (4.5-6.8 Nm). Slide speed nut (12, all but FXDB) to the right and into place.
4. Insert breather tubes into holes in filter element.
5. Install air cleaner cover (2).
   a. Apply a drop of LOCTITE 243 MEDIUM STRENGTH THREADLOCKER AND SEALANT (blue) to threads of cover screw (1).
   b. Install cover screw. Tighten to 36-60 **in-lbs** (4.1-6.8 Nm).



Figure 1-6. Element Gasket

REMOVAL, HO103

1. See Figure 1-7. Remove insert screws (1) and cover insert (2).
2. Remove cover screw (3) and air cleaner cover (4).
3. Remove screws (5) and filter element (6) from adapter plate (7).

⚠WARNING

Do not use gasoline or solvents to clean filter element. Flammable cleaning agents can cause an intake system fire, which could result in death or serious injury. (00101a)

4. Inspect filter element. See 1.6 AIR CLEANER AND EXHAUST SYSTEM, Removal, All But HO103. Replace if damaged or if filter media cannot be adequately cleaned.

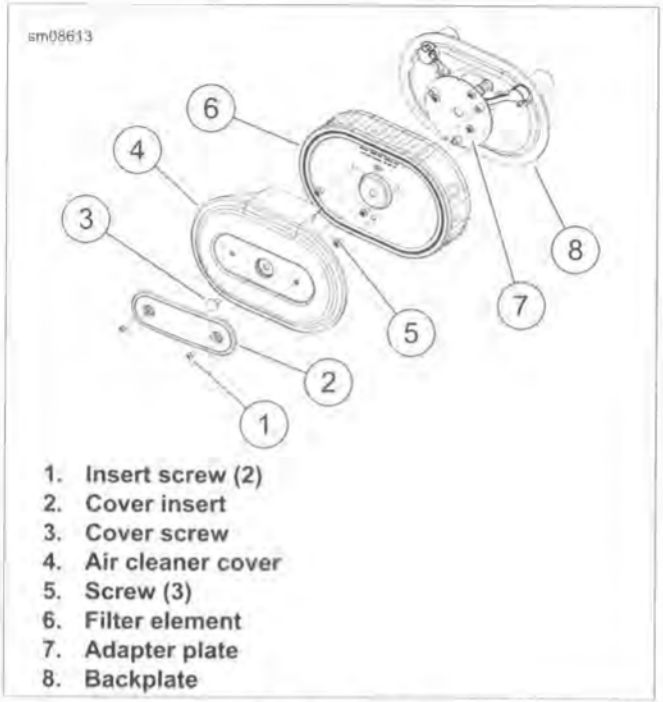

1. **Insert screw (2)**
2. **Cover insert**
3. **Cover screw**
4. **Air cleaner cover**
5. **Screw (3)**
6. **Filter element**
7. **Adapter plate**
8. **Backplate**

Figure 1-7. Air Filter, HO103

INSTALLATION, HO103

FASTENER	TORQUE VALUE	
Filter element screw	55-60 **in-lbs**	5.2-6.8 Nm
Air cleaner cover screw	36-60 **in-lbs**	4.1-6.8 Nm
Cover insert screw	27-32 **in-lbs**	3.1-3.6 Nm

1. See Figure 1-7.
2. Install filter element (6) onto adapter plate (7).
3. Apply LOCTITE 243 MEDIUM STRENGTH THREADLOCKER AND SEALANT (blue) to screws (5). Install screws. Tighten to 55-60 **in-lbs** (5.2-6.8 Nm).
4. Install air cleaner cover (4).
   a. Apply a drop of LOCTITE 243 MEDIUM STRENGTH THREADLOCKER AND SEALANT (blue) to threads of cover screw (3).
   b. Install cover screw. Tighten to 36-60 **in-lbs** (4.1-6.8 Nm).
5. Install cover insert (2) and insert screws (1). Tighten to 27-32 **in-lbs** (3.1-3.6 Nm).

CHECK EXHAUST SYSTEM LEAKAGE

Check exhaust system for leaks at every scheduled service interval.

1. Check entire exhaust system for loose or missing fasteners and damaged pipe clamps or brackets. Check exhaust system for obvious signs of leakage such as carbon tracks at pipe joints.
2. Check for loose or damaged exhaust shields. Replace or repair as necessary.
3. Start engine, cover muffler ends with clean, dry shop towels and listen for audible signs of exhaust leakage.
4. Correct any leaks detected.

Exhaust System Leakage

If an exhaust system leak is evident at a muffler or header pipe connection, disassemble and clean all mating surfaces. See 4.15 EXHAUST SYSTEM.

- Replace any damaged components.
- If leak continues, disassemble and apply Permatex Ultra Copper, LOCTITE 5920 FLANGE SEALANT or equivalent.
- Assemble components. Wipe off any excess sealant.
- Follow sealant product instructions. Allow adequate curing time before operating vehicle.

TIRES

⚠WARNING

Match tires, tubes, rim strips or seals, air valves and caps to the correct wheel. Contact a Harley-Davidson dealer. Mismatching can lead to tire damage, allow tire slippage on the wheel or cause tire failure, which could result in death or serious injury. (00023c)

NOTES

- *Tubeless tires are used on all Harley-Davidson cast and disc wheels.*
- *Tire sizes are molded on the tire sidewall. Inner tube sizes are printed on the tube.*
- ***New** tires should be stored on a horizontal tire rack. Avoid stacking **new** tires in a vertical stack. The weight of the stack compresses the tires and closes down the beads.*

ABS equipped motorcycles must always use properly inflated tires and wheels that are the same as the original equipment. The ABS system monitors rotational speed of the wheels through individual wheel speed sensors to determine the application of ABS.

Different diameter wheels or tires can:

- *Alter the rotational speed which can upset the calibration of the ABS.*
- *Adversely affect its ability to detect and prevent lockups.*

Operating with inflation pressure other than those specified in Table 1-7 can reduce ABS performance.

Check tire pressure and tread:

- As part of the pre-ride inspection.
- At every scheduled service interval.

1. Inspect each tire for punctures, cuts and breaks.
2. Inspect each tire for wear. Replace tires before they reach the tread wear indicator bars.

⚠WARNING

Be sure tires are properly inflated, balanced, undamaged, and have adequate tread. Inspect your tires regularly and see a Harley-Davidson dealer for replacements. Riding with excessively worn, unbalanced, improperly inflated, overloaded or damaged tires can lead to tire failure and adversely affect stability and handling, which could result in death or serious injury. (00014b)

NOTE

Missing indicator wear bars represent less than 1/32 in (0.8 mm) tread pattern depth remaining.

3. Check tire pressures when tires are cold. Compare results to Table 1-7.

NOTE

Harley-Davidson does not perform any testing with only nitrogen in tires. Harley-Davidson neither recommends nor discourages the use of pure nitrogen to inflate tires.

Table 1-7. Specified Tires

MODEL	MOUNT	SIZE	SPECIFIED TIRE	PRESSURE (COLD)	
		in		psi	kPa
FXDB, FXDBC, FXDBP, FXDL	Front	19	Michelin Scorcher "31" 100/90B19	30	206
	Rear	17	Michelin Scorcher "31" 160/70B17	40	276
FXDF	Front	16	Dunlop D427F 130/90B16	36	248
	Rear	16	Dunlop D427 180/70B16	40	276
FXDWG	Front	21	Michelin Scorcher "31" 80/90-21	38	262
	Rear	17	Michelin Scorcher "31" 180/60B17	40	276
FLD	Front	18	Dunlop D402F 130/70B18	36	248
	Rear	17	Dunlop D401 160/70B17	40	276

TIRE REPLACEMENT

⚠WARNING

Use only Harley-Davidson specified tires. See a Harley-Davidson dealer. Using non-specified tires can adversely affect stability, handling or braking, which could result in death or serious injury. (00024b)

⚠WARNING

Replace tire immediately with a Harley-Davidson specified tire when wear bars become visible or only 1/32 in (0.8 mm) tread depth remains. Riding with a worn tire could result in death or serious injury. (00090c)

Harley-Davidson tires have wear bars that run horizontally across the tread. When a tire is worn to the point that the wear

bars are visible, or 1/32 in (0.8 mm) tread depth remains, the tire can:

- Be more easily damaged leading to tire failure.
- Provide reduced traction.
- Adversely affect stability and handling.

Dunlop

See Figure 1-8. Arrows on tire sidewalls pinpoint location of wear bar indicators.

See Figure 1-9. Tread wear indicator bars appear on Dunlop tire tread surfaces when 1/32 in (0.8 mm) or less tire tread remains. Always replace tires before the tread wear indicator bars appear.

Michelin

See Figure 1-10. Michelin Man on Michelin tire tread side (next to sidewall) pinpoints location of wear bar indicators. Always replace tires before the tread wear indicator bars appear.

See Figure 1-11. Tread wear indicator bars appear on Michelin tire tread surfaces when 1/32 in (0.8 mm) or less tire tread remains.

New tires are needed if:

- Tire wear indicator bars become visible on the tread surfaces.
- Tire cords or fabric become visible through cracked sidewalls, snags or deep cuts.
- A bump, bulge or split in the tire is found.
- Puncture, cut or other damage to the tire that cannot be repaired.

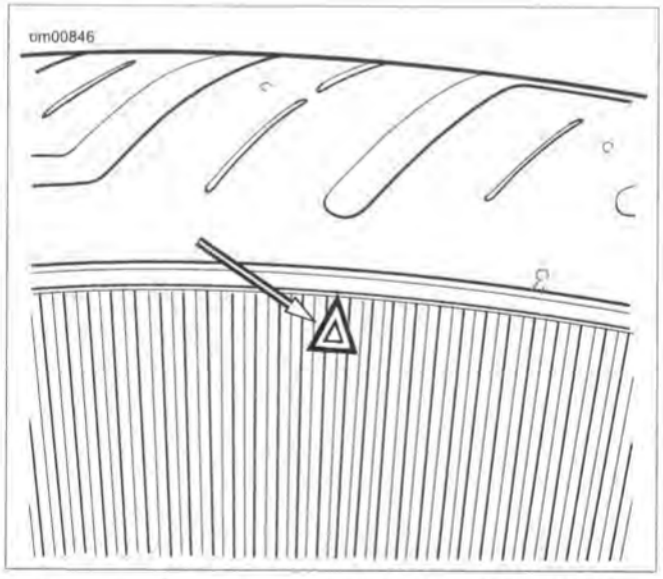

Figure 1-8. Dunlop Sidewall Tread Wear Indicator Bar Locator



Figure 1-9. Dunlop Tire Wear Bar Appearance

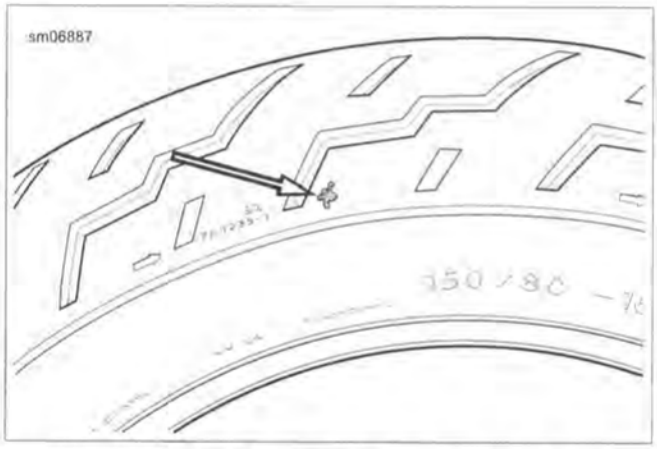

Figure 1-10. Tread Wear Indicator: Michelin Tires

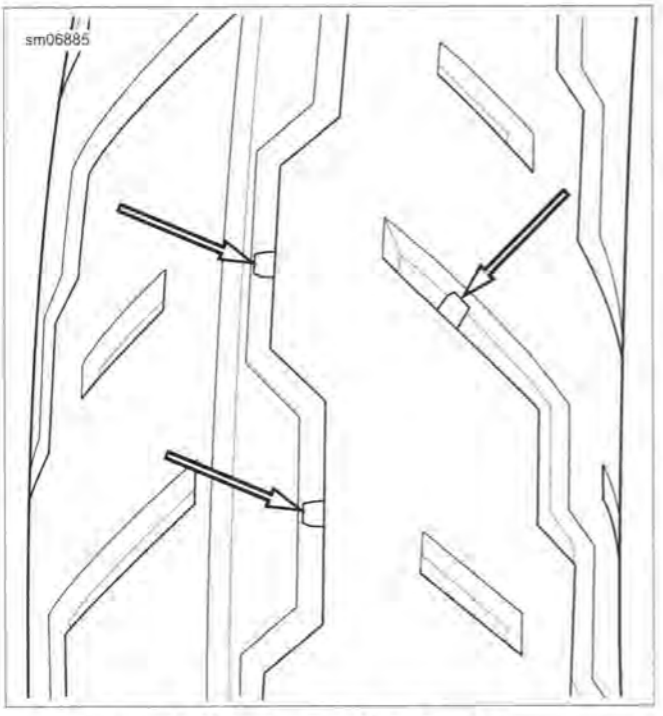

Figure 1-11. Michelin Tire Wear Bar Appearance

WHEEL BEARINGS

NOTE

Replace bearings in sets only. See 2.6 SEALED WHEEL BEARINGS.

1. Replace when bearings exceed end play service wear limit of 0.002 in (0.051 mm).
2. Inspect any time the wheels are removed.
   a. Inspect the play of the wheel bearings by hand while they are in the wheel.
   b. Rotate the inner bearing race and check for abnormal noise.
   c. Make sure that bearing rotates smoothly.
3. Check wheel bearings and axle spacers for wear and corrosion. Excessive play or roughness indicates worn bearings.

WHEEL SPOKES

PART NUMBER	TOOL NAME
HD-48985	SPOKE TORQUE WRENCH
HD-94681-80	SPOKE NIPPLE WRENCH

FASTENER	TORQUE VALUE	
Spoke nipple	55 **in-lbs**	6.2 Nm

⚠WARNING

Spokes that are too tight can draw nipples through the rim or distort hub flanges. Spokes that are too loose can continue to loosen when put in service. Either condition can adversely affect stability and handling, which could result in death or serious injury. (00286a)

⚠WARNING

Do not over-tighten spoke nipples. Protruding spoke nipples can damage rim seal, resulting in rapid tire deflation, which could cause death or serious injury. (00611c)

NOTICE

When lifting a motorcycle using a jack, be sure jack contacts both lower frame tubes where down tubes and lower frame tubes converge. Never lift by jacking on cross-members, oil pan, mounting brackets, components or housings. Failure to comply can cause serious damage resulting in the need to perform major repair work. (00586d)

Identify Wheel Spoke Groups

NOTE

Spokes are grouped in sets of four.

1. Raise the wheel.
2. See Figure 1-12. Starting at the valve stem, identify the first group of four spokes (1-4).
3. Using a different color for each spoke in the group, draw an alignment mark across the spoke nipple and onto the rim.
4. Continue around the wheel marking the rest of the spokes the same as they were marked in the previous steps.

Adjust Wheel Spokes

NOTES

- *Do not tighten spoke more than one-quarter turn past alignment mark. If more tension is needed, label spoke and check after completing rest of wheel.*
- *Do not use the spoke torque wrench to loosen spokes. Use SPOKE NIPPLE WRENCH (Part No. HD-94681-80) to loosen spokes.*

1. See Figure 1-12. Starting with the first group of spokes, loosen spoke (1) one-quarter turn using SPOKE NIPPLE WRENCH (Part No. HD-94681-80).
2. Using SPOKE TORQUE WRENCH (Part No. HD-48985) tighten spoke (1) to the value listed in Table 1-8.
   a. While tightening, if the torque wrench clicks before the alignment marks align, continue to turn the spoke nipple until the marks align.
   b. If the marks align and torque specification has not been reached, tighten the spoke nipple until the correct torque is achieved. Do not turn spoke nipple more than one-quarter turn past alignment mark.
3. Repeat previous two steps for spoke (4) in the same group.
4. Continue around the wheel checking spokes 1 and 4 until all groups are done.
5. Repeat procedure for spokes (2, 3) in each group.

NOTE

When checking any spokes that were labeled, make sure to use the original alignment mark.

6. Check spokes, if any, that were labeled as not reaching the proper torque value after tightening one-quarter turn past alignment mark.
   a. Loosen spoke one-quarter turn past original alignment mark using SPOKE NIPPLE WRENCH (Part No. HD-94681-80).
   b. While tightening, if the torque wrench clicks before the alignment marks align, continue to turn the spoke nipple until the marks align.
   c. If the marks align and torque specification has not been reached, tighten the spoke nipple until the correct torque is achieved. Do not turn spoke nipple more than one-quarter turn past alignment mark.
7. True the wheel. See 2.8 CHECKING AND TRUING WHEELS.

Table 1-8. Spoke Nipple Torque Specification

RIM TYPE	MINIMUM TORQUE
All	55 **in-lbs** (6.2 Nm)

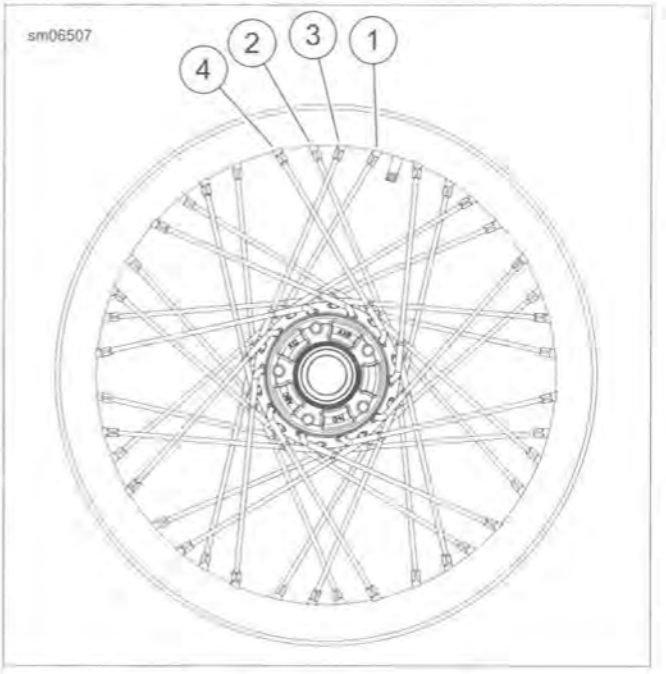

Figure 1-12. Tightening Laced Wheels (typical)

GENERAL

All models have an automatic chain tensioner. For primary chain service procedures, see 5.4 DRIVE COMPONENTS.

CHANGE PRIMARY CHAINCASE LUBRICANT

FASTENER	TORQUE VALUE	
Primary chaincase drain plug	14-21 ft-lbs	19.0-28.5 Nm
Clutch inspection cover screws	84-108 **in-lbs**	9.5-12.2 Nm

1. Run motorcycle until engine is at normal operating temperature. Turn off engine.

⚠WARNING

Be sure that no lubricants or fluids get on tires, wheels or brakes when changing fluid. Traction can be adversely affected, which could result in loss of control of the motorcycle and death or serious injury. (00047d)

2. Secure motorcycle upright (not leaning on jiffy stand) on a level surface.
3. See Figure 1-13. Drain primary chaincase.
4. Clean drain plug magnet. If plug has excessive debris, inspect the condition of chaincase components.
5. Install **new** O-ring on drain plug.
6. Install drain plug. Tighten to 14-21 ft-lbs (19.0-28.5 Nm).

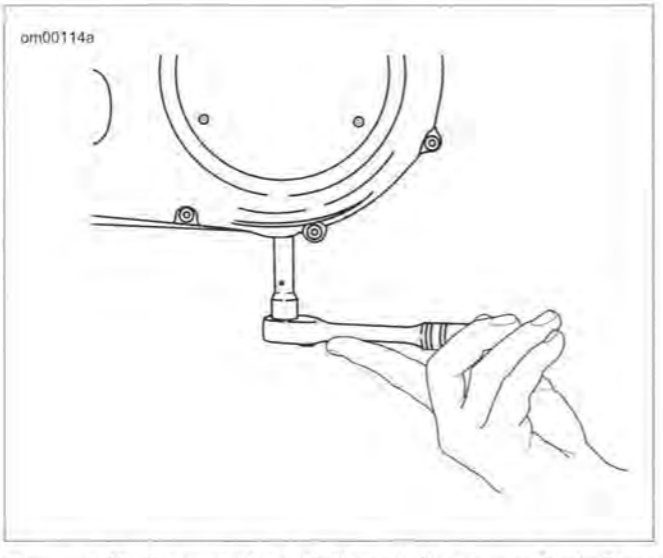

Figure 1-13. Removal/Installation of Chaincase Drain Plug

7. See Figure 1-14. Remove screws with washers (3) and clutch inspection cover (2).
8. Remove seal (1). Wipe oil from groove in chaincase cover and mounting surface.

NOTICE

Do not overfill the primary chaincase with lubricant. Overfilling can cause rough clutch engagement, incomplete disengagement, clutch drag and/or difficulty in finding neutral at engine idle. (00199b)

9. Pour specified amount of FORMULA+ TRANSMISSION AND PRIMARY CHAINCASE LUBRICANT through clutch inspection cover opening. Refer to Table 1-9.

Table 1-9. Primary Chaincase Lubricant Refill Capacity

CONDITION	CAPACITY	
	fl oz	L
Wet	34	1.0
Dry *	38	1.1
* Quantity after complete disassembly.		

10. Install clutch inspection cover and **new** seal:
    a. Thoroughly wipe all lubricant from cover mounting surface and groove in chaincase cover.
    b. See Figure 1-14. Position **new** seal (1) in groove in clutch inspection cover (2). Press each of the nubs on seal into the groove.
    c. Secure clutch inspection cover (2) with screws with captive washers (3).
    d. See Figure 1-15. Tighten in sequence shown to 84-108 **in-lbs** (9.5-12.2 Nm).

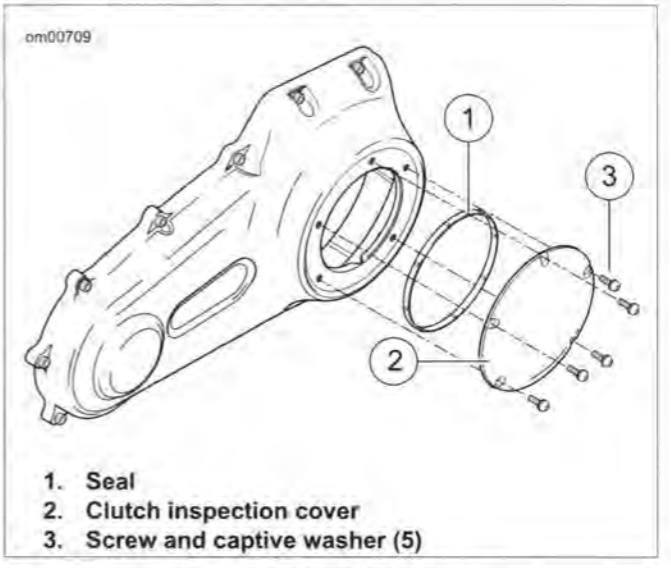

1. **Seal**
2. **Clutch inspection cover**
3. **Screw and captive washer (5)**

Figure 1-14. Clutch Cover

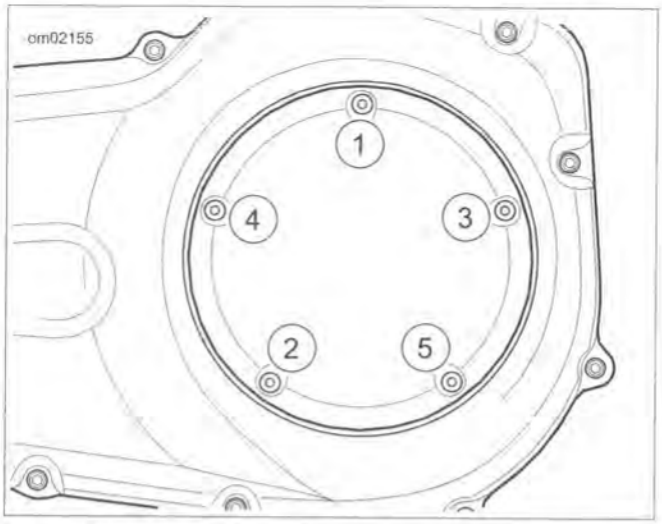

Figure 1-15. Clutch Cover Torque Sequence

CHECK TRANSMISSION LUBRICANT

FASTENER	TORQUE VALUE	
Transmission filler plug/dipstick	25-75 **in-lbs**	2.8-8.5 Nm

NOTE

Check transmission fluid with the motorcycle at ambient temperature.

1. Park motorcycle on a level surface on jiffy stand.
2. See Figure 1-16. Remove transmission filler plug/dipstick. Wipe dipstick clean.
3. Install filler plug/dipstick until O-ring contacts the case. Do not tighten.
4. See Figure 1-17. Remove filler plug/dipstick. Check lubricant level on dipstick.

NOTICE

Mixing mineral-based lubricants with SYN-3 in the transmission can damage the transmission. (00452b)

5. Proper oil level is between the Add (A) (1) and Full (F) (2) marks. Add only enough lubricant to bring level to between the A mark and the F marks. Refer to Table 1-10.
6. Install filler plug/dipstick. Tighten to 25-75 **in-lbs** (2.8-8.5 Nm).

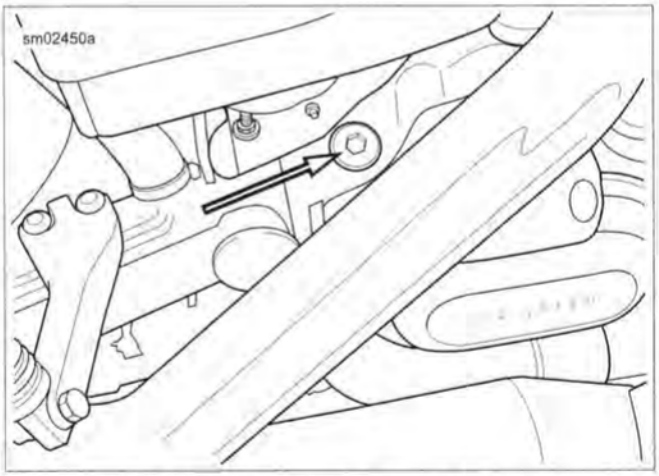

Figure 1-16. Transmission Dipstick Location

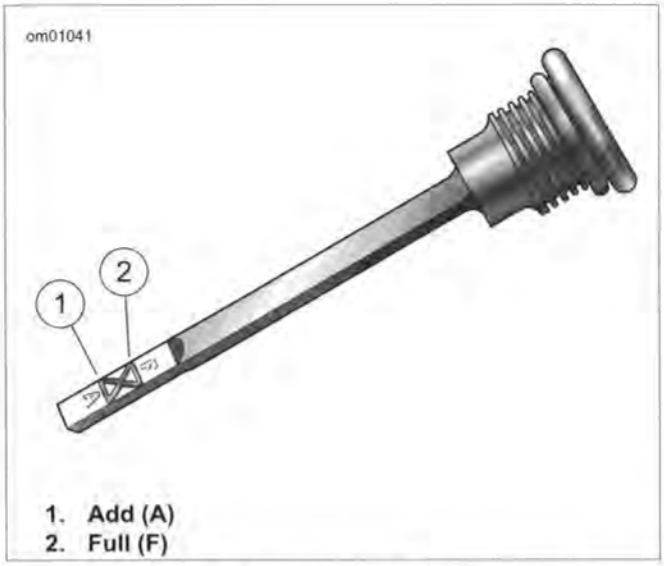

1. **Add (A)**
2. **Full (F)**

Figure 1-17. Transmission Lubricant Level

Table 1-10. Recommended Transmission Lubricants

LUBRICANT	QUANTITY *	
	fl oz	L
FORMULA+ TRANSMISSION AND PRIMARY CHAINCASE LUBRICANT	28	0.83
SCREAMIN' EAGLE SYN3 FULL SYNTHETIC MOTORCYCLE LUBRICANT 20W50	28	0.83
* Fill quantity for a transmission lubricant change.		

CHANGE TRANSMISSION LUBRICANT

FASTENER	TORQUE VALUE	
Transmission drain plug	14-21 ft-lbs	19.0-28.5 Nm
Transmission filler plug/dipstick	25-75 **in-lbs**	2.8-8.5 Nm

1. See Figure 1-16. Remove transmission filler plug/dipstick.

⚠WARNING

Be sure that no lubricants or fluids get on tires, wheels or brakes when changing fluid. Traction can be adversely affected, which could result in loss of control of the motorcycle and death or serious injury. (00047d)

2. See Figure 1-18. Remove transmission drain plug. Drain transmission.
3. Clean and inspect drain plug and O-ring.

NOTICE

Do not over-tighten filler or drain plug. Doing so could result in a lubricant leak. (00200b)

4. Install drain plug with O-ring. Tighten to 14-21 ft-lbs (19.0-28.5 Nm). Do not over-tighten.

5. Fill the transmission with 28 oz (0.83 L) of recommended Harley-Davidson lubricant. Refer to Table 1-10.
6. Check lubricant level. Add enough lubricant to bring the level between the add (A) and full (F) marks. See 1.9 TRANSMISSION LUBRICANT, Check Transmission Lubricant.
7. Install filler plug/dipstick. Tighten to 25-75 **in-lbs** (2.8-8.5 Nm).

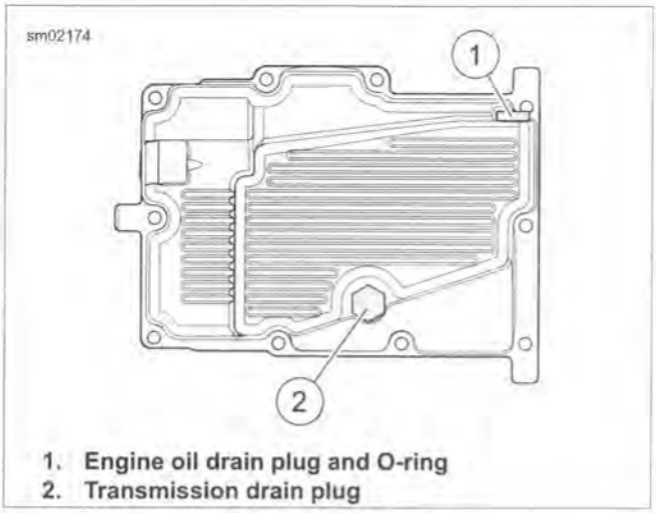

1. **Engine oil drain plug and O-ring**
2. **Transmission drain plug**

Figure 1-18. Oil Pan

ADJUSTMENT

FASTENER	TORQUE VALUE	
Clutch adjuster screw jamnut	72-120 **in-lbs**	8.1-13.6 Nm
Clutch cable adjustment jamnut	120 **in-lbs**	13.6 Nm
Clutch inspection cover screws	84-108 **in-lbs**	9.5-12.2 Nm

NOTE

Perform the clutch adjustment with the motorcycle at room temperature. Clearance at the adjuster screw increases as the powertrain temperature increases. If adjustment is made with powertrain hot, clearance at pushrod bearing could be insufficient with powertrain cold. Clutch slippage could occur.

1. Remove main fuse.
2. Stand motorcycle upright (not leaning on jiffy stand) on a level surface.
3. Remove clutch inspection cover from primary chaincase cover.
4. Remove and discard seal ring from clutch inspection cover.
5. See Figure 1-19. Add free play to cable.
   a. Slide rubber boot (1) off cable adjuster.
   b. Loosen jamnut (3) and back away from cable adjuster.
   c. Turn adjuster (2) to introduce a large amount of free play at hand lever.
6. See Figure 1-20. Loosen jamnut (1) on clutch adjuster screw. Turn adjuster screw (2) inward (clockwise) until lightly seated.
7. Back out adjuster screw one-half to one full turn. While holding adjuster screw, tighten jamnut to 72-120 **in-lbs** (8.1-13.6 Nm).
8. Squeeze clutch lever to maximum limit three times to set release mechanism.
9. See Figure 1-19. Check free play.
   a. Turn cable adjuster (2) until slack is eliminated at hand lever.
   b. See Figure 1-21. Pull clutch cable ferrule (2) away from clutch lever bracket to check free play. Turn cable adjuster to obtain free play (4). Refer to table Table 1-11.
10. See Figure 1-19. Hold adjuster and tighten jamnut to 120 **in-lbs** (13.6 Nm). Cover cable adjuster mechanism with rubber boot.

Table 1-11. Clutch Cable Free Play

ITEM	DIMENSION
Free play dimension	1/16-1/8 in (1.6-3.2 mm)

11. Swab all lubricant from seal ring groove in chaincase cover. Press **new** seal ring into groove with nubs contacting ring groove walls.
12. See Figure 1-15. Secure clutch inspection cover. Tighten in sequence shown to 84-108 **in-lbs** (9.5-12.2 Nm).

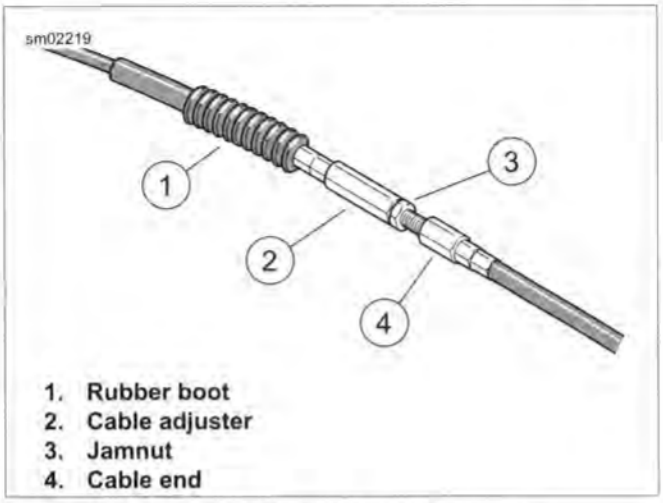

1. **Rubber boot**
2. **Cable adjuster**
3. **Jamnut**
4. **Cable end**

Figure 1-19. Clutch Cable Adjuster

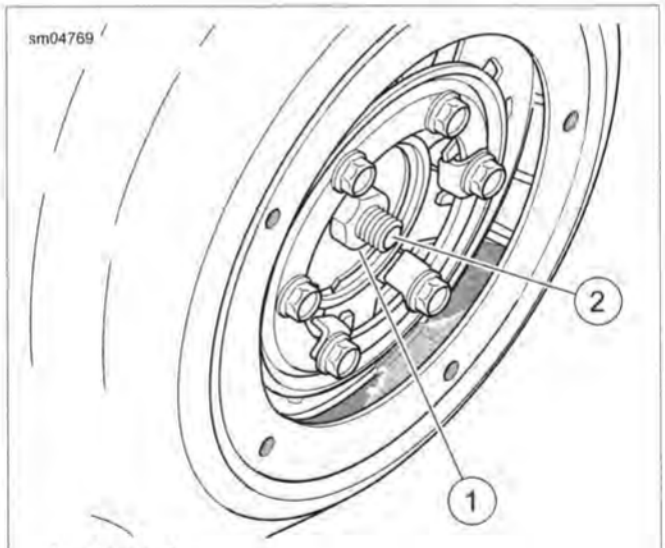

1. **Jamnut**
2. **Clutch adjuster screw**

Figure 1-20. Clutch Adjuster Screw

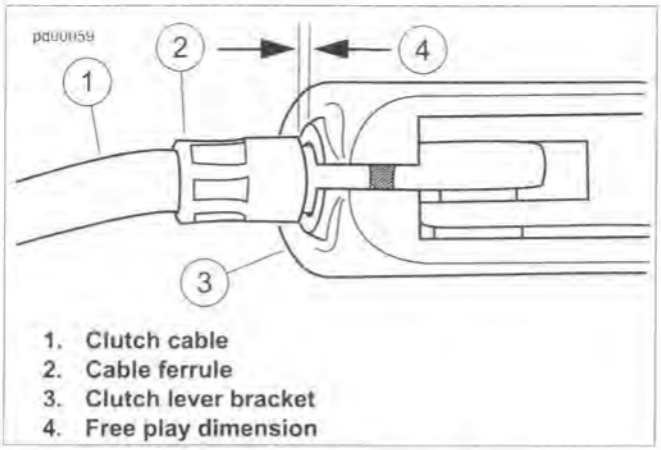

1. Clutch cable
2. Cable ferrule
3. Clutch lever bracket
4. Free play dimension

Figure 1-21. Clutch Cable Free Play

GENERAL

⚠WARNING

Never bend belt forward into a loop smaller than the drive sprocket diameter. Never bend belt into a reverse loop. Over bending can damage belt resulting in premature failure, which could cause loss of control and death or serious injury. (00339a)

In the case of stone damage to belt, inspect the sprockets for damage and replace as required. If replacing belt, always replace both transmission and rear sprockets.

CLEANING

Keep dirt, grease, oil, and debris off the drive belt and sprockets. Clean the belt with a rag slightly dampened with a light cleaning agent.

INSPECTION

Sprockets

1. See Figure 1-22. Inspect each tooth (1) of rear sprocket for:
   a. Major tooth damage
   b. Large chrome chips with sharp edges
   c. Gouges caused by hard objects
   d. Excessive loss of chrome plating (see next step)
2. Check for worn chrome plating. Drag a sharp object across the bottom of a groove (2) using medium pressure.
   a. If sharp object slides across groove without digging in or leaving a visible mark, chrome plating is still good.
   b. If sharp object digs in and leaves a visible mark, it is cutting the bare aluminum. The chrome plating is worn.
3. Replace rear sprocket if major tooth damage or loss of chrome exists.

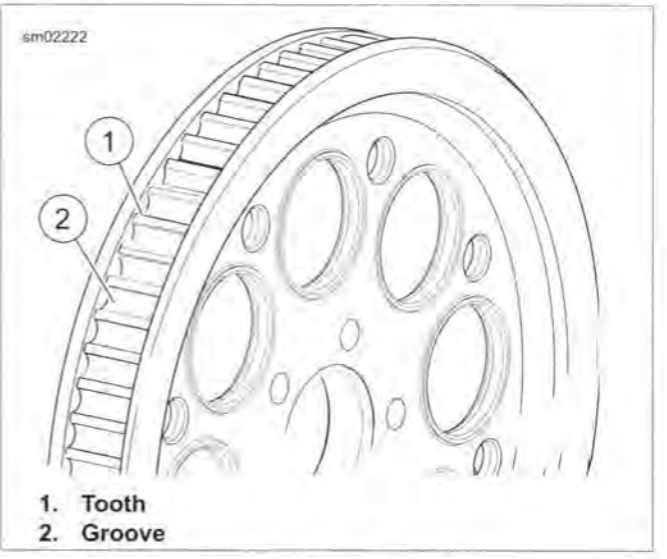

1. Tooth
2. Groove

Figure 1-22. Rear Sprocket

Drive Belt

See Figure 1-23. Inspect drive belt for:

- Cuts or unusual wear patterns
- Outside bevel wear (8). Some beveling is common, but it indicates that sprockets are misaligned
- Outside ribbed surface for signs of stone damage (7). If cracks or other damage exists near edge of belt, replace belt immediately. Damage to center of belt eventually requires belt replacement. However, when cracks extend to edge of belt, failure is imminent
- Inside (toothed portion) of belt for exposed tensile cords (normally covered by nylon layer and polyethylene layer). Replace belt and transmission sprocket
- Signs of puncture or cracking at the base of the belt teeth. Replace belt if either condition exists
- Replace belt if conditions 2, 3, 6 or 7 (on edge of belt) exist

NOTE

Condition 1 may develop into 2 or 3 over time.

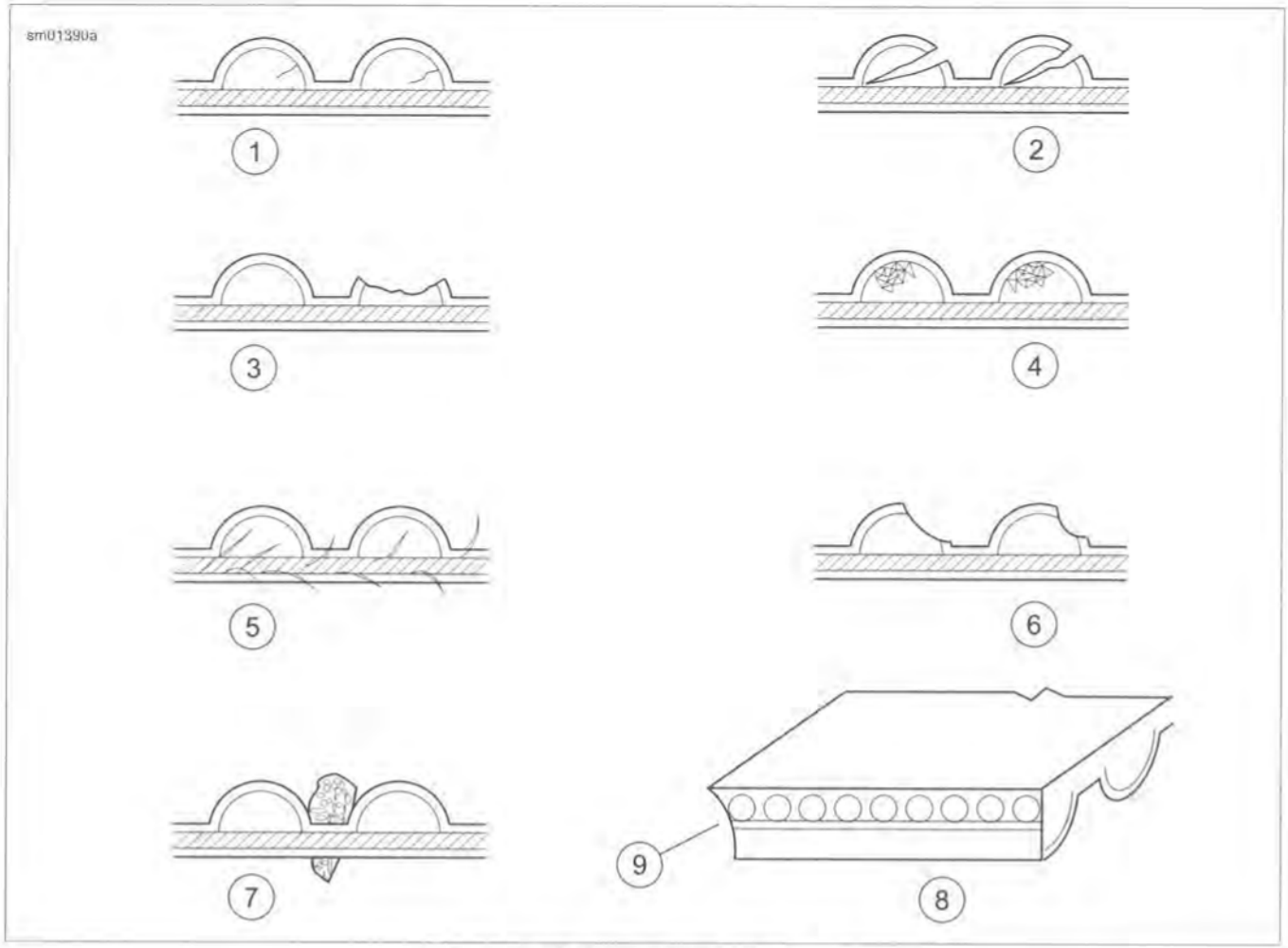

Figure 1-23. Drive Belt Wear Patterns

Table 1-12. Drive Belt Wear Analysis

PATTERN	CONDITION	REQUIRED ACTION
1	Internal tooth cracks (hairline)	OK to run, but monitor condition.
2	External tooth cracks	Replace belt.
3	Missing teeth	Replace belt.
4	Chipping (not serious)	OK to run, but monitor condition.
5	Fuzzy edge cord	OK to run, but monitor condition.
6	Hook wear	Replace belt and sprocket.
7	Stone damage	Replace belt if damage is on the edge.
8	Bevel wear (outboard edge only: see item 9)	OK to run, but monitor condition.

CHECK DRIVE BELT DEFLECTION

PART NUMBER	TOOL NAME
HD-35381-A	BELT TENSION GAUGE

NOTE

Always use BELT TENSION GAUGE (Part No. HD-35381-A) to measure belt deflection. Failure to use tension gauge may cause under-tensioned belts. Loose belts can fail due to "ratcheting" (jumping a tooth) which causes tensile cord crimping and breakage.

Check deflection:

- As part of pre-ride inspection.
- At every scheduled service interval.
- With transmission in neutral.
- With motorcycle at ambient temperature.
- With motorcycle upright or on jiffy stand with rear wheel on the ground.
- With the vehicle unladen: no rider, no luggage and saddlebags, if equipped, empty.

⚠WARNING

To prevent accidental vehicle start-up, which could cause death or serious injury, remove main fuse before proceeding. (00251b)

1. Disarm security system. Remove main fuse. See 7.8 FUSES, Replacement.
2. See Figure 1-24. Measure belt deflection using H-D BELT TENSION GAUGE (Part No. HD-35381-A):
   a. Slide O-ring (4) to 0 lb (0 kg) mark (3).
   b. **Models equipped with belt deflection window:** Fit belt cradle (2) against bottom of drive belt in line with belt deflection window.
   c. **All other models:** Fit belt cradle (2) against bottom of drive belt halfway between drive pulleys.
   d. Press upward on knob (6) until O-ring slides down to 10 lb (4.5 kg) mark (5) and hold steady.
3. Measure belt deflection:
   a. **Models equipped with belt deflection window:** See Figure 1-26. Measure belt deflection as viewed through belt deflection viewing window while holding gauge steady. Each deflection graduation is approximately 1/16 in (1.59 mm).
   b. **All other models:** See Figure 1-25. Measure amount of deflection (4) while holding gauge steady.
4. Compare with specifications. Adjust as necessary. Refer to Table 1-13.
5. Install main fuse.

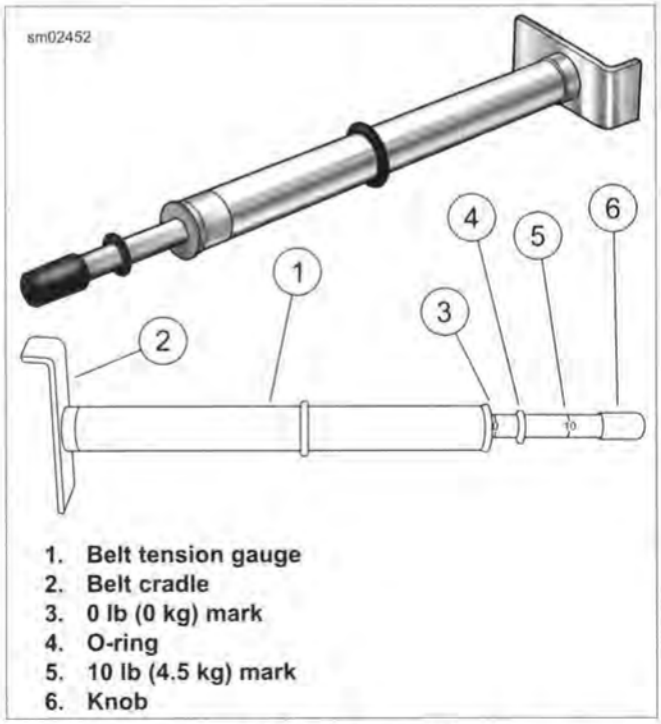

1. **Belt tension gauge**
2. **Belt cradle**
3. **0 lb (0 kg) mark**
4. **O-ring**
5. **10 lb (4.5 kg) mark**
6. **Knob**

Figure 1-24. Belt Tension Gauge

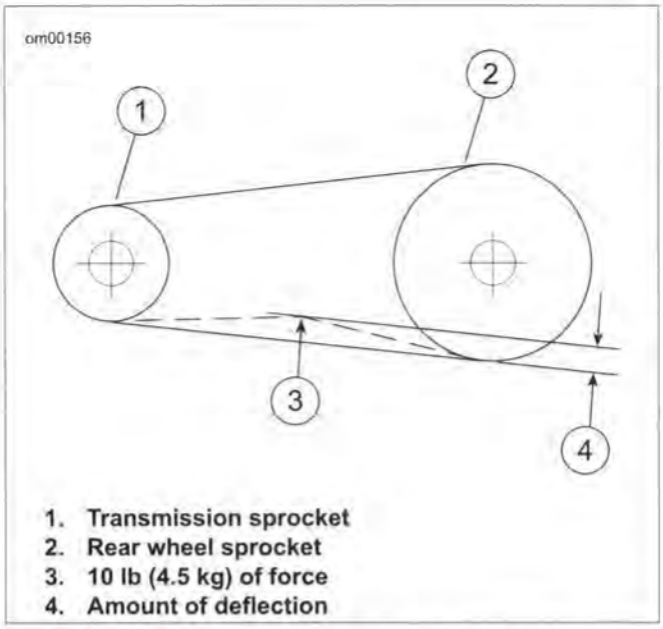

1. **Transmission sprocket**
2. **Rear wheel sprocket**
3. **10 lb (4.5 kg) of force**
4. **Amount of deflection**

Figure 1-25. Checking Belt Deflection

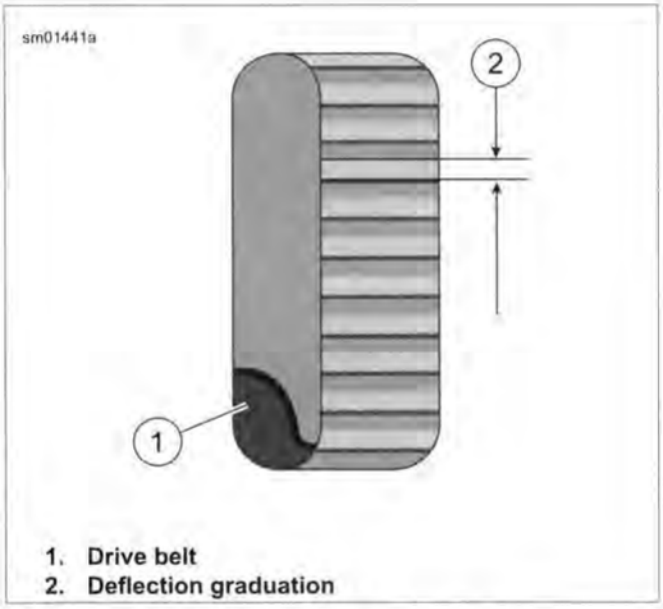

1. **Drive belt**
2. **Deflection graduation**

Figure 1-26. Belt Deflection Window

Table 1-13. Belt Deflection

MODELS	in	mm
All models	1/4-5/16	6.4-7.9

ADJUSTING BELT DEFLECTION

FASTENER	TORQUE VALUE	
Axle nut, rear	95-105 ft-lbs	128.8-142.4 Nm
Axle adjuster	120-144 **in-lbs**	13.6-16.3 Nm

1. See Figure 1-27. Remove retaining ring (3) and loosen axle nut (2).

2. Adjust belt tension by turning the axle adjusters (1) an equal number of turns to keep the wheel aligned until the specification in Table 1-13 is achieved.
3. Install retaining ring (3).
4. Tighten axle nut (2) to 95-105 ft-lbs (128.8-142.4 Nm).
5. Tighten axle adjusters to 120-144 **in-lbs** (13.6-16.3 Nm).
6. Verify rear wheel alignment. See 2.9 VEHICLE ALIGNMENT.

⚠WARNING

Check wheel bearing end play after tightening axle nut to specified torque. Excessive end play can adversely affect stability and handling and can cause loss of control, which could result in death or serious injury. (00285b)

7. Check wheel bearing end play. See 2.6 SEALED WHEEL BEARINGS.

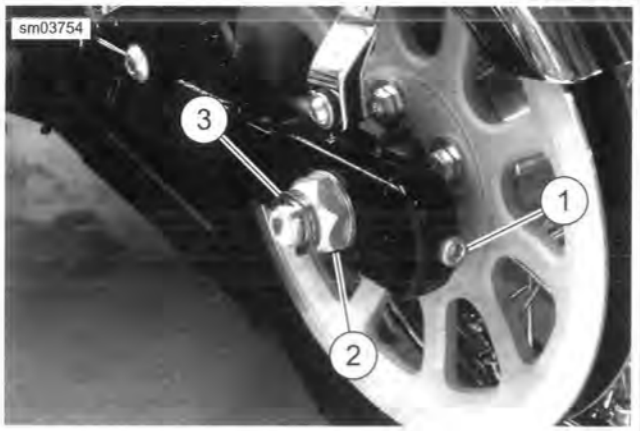

1. **Axle adjuster**
2. **Axle nut**
3. **Retaining ring**

Figure 1-27. Axle Adjusters (Left Side Shown)

CABLE INSPECTION AND LUBRICATION

FASTENER	TORQUE VALUE	
Switch housing screw	35-45 **in-lbs**	4.0-5.1 Nm

1. Release throttle cable tension. See 1.12 THROTTLE CABLES, Cable Adjustment.
2. See Figure 1-28. Remove screws (1) to separate upper switch housing from the lower housing.
3. Unhook ferrules and cables from throttle grip. Remove throttle sleeve.
4. Inspect each cable. Replace cable assembly if cable is frayed or kinked.
5. Inspect cable outer sheath from throttle grip to induction module. Replace as necessary.
6. Apply a light coating of graphite to handlebar and inside surface of housings. Replace throttle grip.
7. Pour two drops of HARLEY LUBE into cable housings.
8. Install switch housing. Tighten to 35-45 **in-lbs** (4.0-5.1 Nm).
9. Adjust throttle cables.

CABLE ADJUSTMENT

Operation

⚠WARNING

Before starting engine, be sure throttle control will snap back to idle position when released. A throttle control that prevents engine from automatically returning to idle can lead to loss of control, which could result in death or serious injury. (00390a)

⚠WARNING

Do not tighten throttle friction adjustment screw to the point where the engine will not return to idle automatically. Over-tightening can lead to loss of vehicle control, which could result in death or serious injury. (00031b)

1. See Figure 1-28. Loosen friction screw (3).
2. Roll on and release throttle grip (2). If throttle does not return to closed (idle), inspect and adjust throttle cables.
3. With engine idling, turn handlebar stop to stop. If engine speed changes, adjust throttle cables.

Adjustment

1. See Figure 1-28. Loosen friction screw (3).
2. Slide rubber boots off cable adjusters (6).
3. Loosen jamnuts (7).
4. Turn cable adjusters to shorten cable housings to minimum length.
5. Point front wheel straight ahead. With engine OFF, roll throttle grip (2) fully open. Hold in position.
6. Gently turn cable adjuster (6) on throttle cable (4) counter-clockwise until throttle cam (8) touches throttle cam stop (10). Release throttle grip. Tighten jamnut on throttle cable adjuster.
7. Turn handlebar full right lock. Turn cable adjuster (6) on idle cable (5) to lengthen sleeve until end of cable housing touches spring (9) within cable guide (11).

NOTE

The throttle control must operate freely when front wheel is turned to right and left fork stops.

8. Check adjustment. Twist and release throttle grip two or three times. If throttle does not return to idle, turn idle adjuster to shorten sleeve until correct. Tighten jamnuts.
9. Slide rubber boots over cable adjusters.

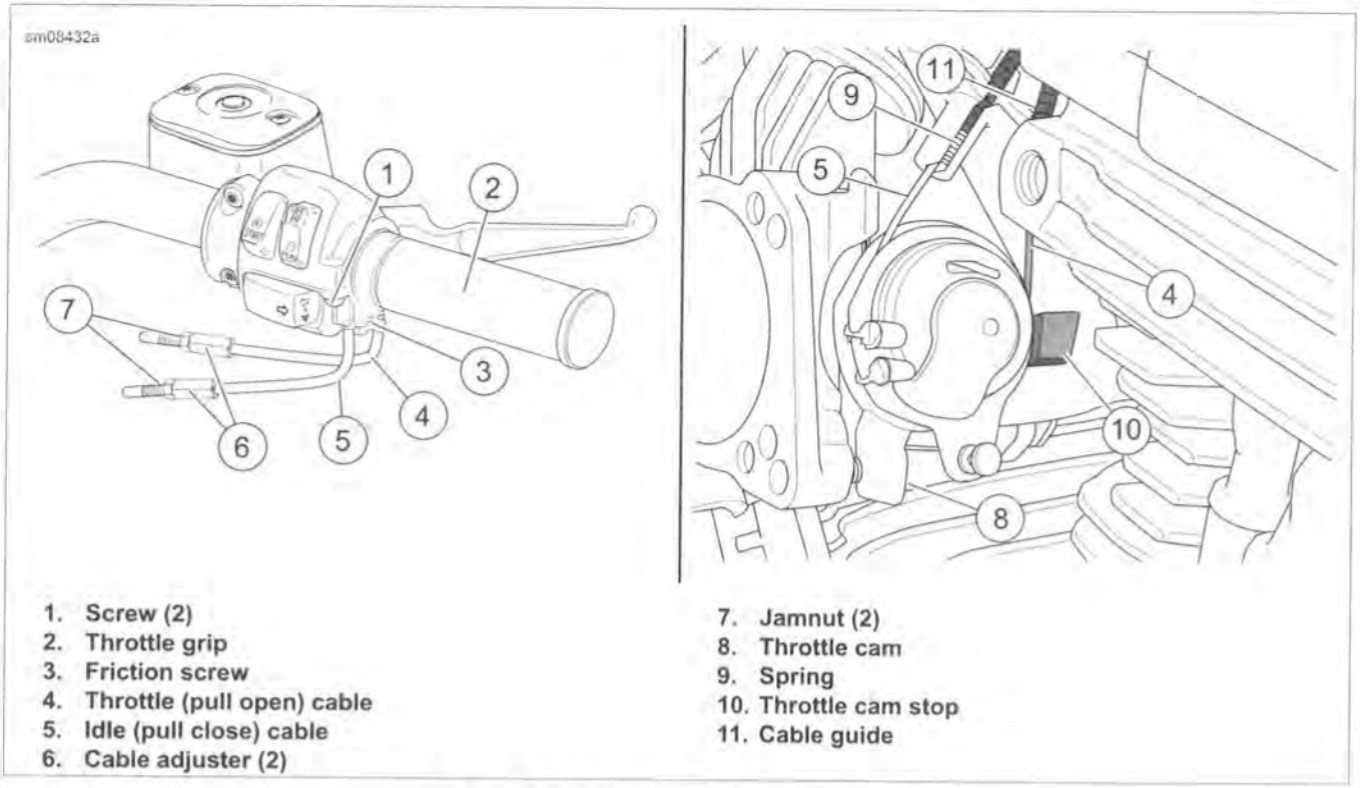

1. Screw (2)
2. Throttle grip
3. Friction screw
4. Throttle (pull open) cable
5. Idle (pull close) cable
6. Cable adjuster (2)
7. Jamnut (2)
8. Throttle cam
9. Spring
10. Throttle cam stop
11. Cable guide

Figure 1-28. Throttle Cable Adjustment

CABLE AND CHASSIS LUBRICATION 1.13

GENERAL

Inspect and lubricate the following items according to 1.4 MAINTENANCE SCHEDULE.

- Front brake hand lever
- Clutch hand lever
- Throttle control cables
- Throttle control grip sleeve
- Clutch cable
- Steering head bearings
- Jiffy stand

If operating on muddy or dusty roads, clean and lubricate at shorter intervals.

CABLES AND HAND LEVERS

For throttle cables, see 1.12 THROTTLE CABLES.

Use HARLEY® LUBE for clutch lever and cable.

Use G40M BRAKE GREASE on front brake lever pin pivot hole and on the end of piston that contacts brake lever.

JIFFY STAND

Clean and lubricate the jiffy stand. For more information, see 2.35 JIFFY STAND.

FLUID INSPECTION

NOTES

- ***Front brake:*** *Position motorcycle and handlebar so the master cylinder reservoir is level.*
- ***Rear brake:*** *Position motorcycle so the master cylinder reservoir is level.*
- *All ABS equipped models except FLD have a remote brake fluid reservoir. Always inspect remote reservoir when present for proper fluid level.*

1. See Figure 1-29. View reservoir sight glass and verify fluid presence. Sight glass should appear dark if fluid is present.
2. If sight glass is not dark, check brake system for fluid leaks. Check that brake pads are properly installed and not worn beyond service wear limits. Perform any necessary repairs. See 1.15 BRAKE PADS AND DISCS.
3. Remove master cylinder reservoir cover (front or rear as appropriate) and verify fluid level. If necessary, add DOT 4 BRAKE FLUID to reservoir. Replace cover. See 2.16 BLEEDING BRAKES.
4. Front brake hand lever and rear brake foot pedal must have a firm feel when applied. If not, bleed system using only DOT 4 BRAKE FLUID. See 2.16 BLEEDING BRAKES.

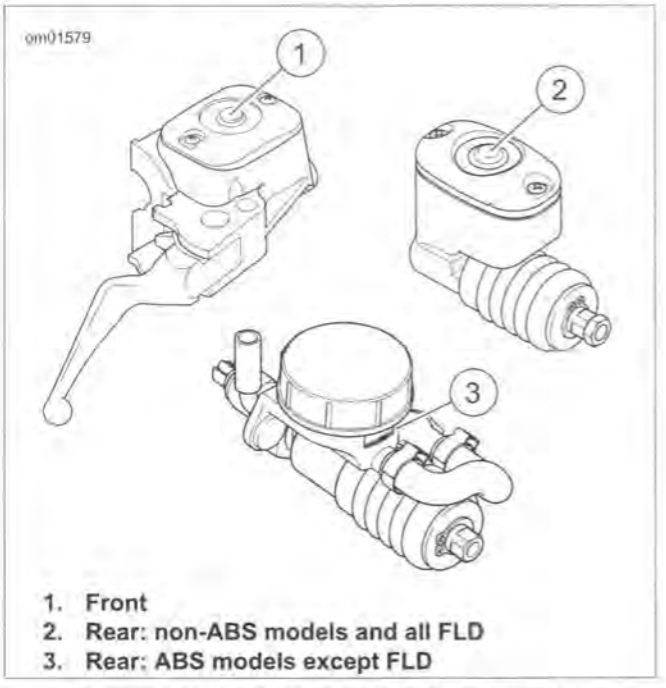

1. **Front**
2. **Rear: non-ABS models and all FLD**
3. **Rear: ABS models except FLD**

Figure 1-29. Brake Fluid Sight Glass/Window

REAR PEDAL HEIGHT

The rear brake pedal does not normally require adjustment. If minor pedal height adjustment is desired:

1. See Figure 1-30. Brake rod (5) is threaded into pushrod (3) in rear brake master cylinder (1), and locked in place with jamnut (4). Loosen jamnut.

⚠WARNING

When adjusting brake control rod, never allow more than nine threads to be exposed between control rod and jam nut. If more than nine threads are exposed, brake rod can come apart resulting in loss of rear brake, which could cause death or serious injury. (00306c)

2. Hold pushrod flats and turn the pushrod in the direction which corrects pedal height. When correct pedal height is obtained, tighten jamnut.
3. Verify that water drain hole in rubber boot (2) faces downward.

NOTE

Brake pedal free play is built into master cylinder and no adjustment is required. When pedal is pushed down with hand, a small amount of free play must be felt.

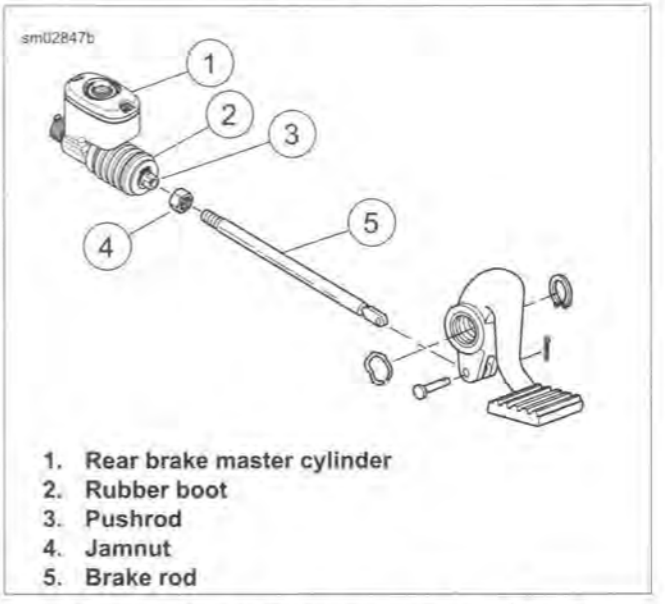

1. **Rear brake master cylinder**
2. **Rubber boot**
3. **Pushrod**
4. **Jamnut**
5. **Brake rod**

Figure 1-30. Rear Brake Pedal Height (Typical)

INSPECT BRAKE LINES

Inspect brake lines for leaks, contact or abrasion. Refer to Table 1-14.

Table 1-14. Brake Line Inspection

LINE TYPE	INSPECTION	REMEDY
Steel lines	No marks	Okay/Monitor
	Slight mark in paint or plating*	
	Copper colored-paint/plating worn off*	
	Silver colored base material-no noticeable feel of wear*	
	Silver colored base material-noticeable feel of wear*	Replace
	Brake fluid leak or other damage	
Flexible lines	No marks	Okay/Monitor
	Slight dent in protective cover or flattening of ribs*	
	Worn through protective cover or to bottom of ribs	Replace
	Brake fluid leak or other damage	
Protective cover (steel, rubber, plastic or braided)	No marks	Okay/Monitor
	Slight dent in covering*	
	Slight dent or flattening of plastic covering*	
	Worn or cut-through covering-exposed brake line material	Replace
	Brake fluid leak or other damage	
* If there is line contact, reposition the line. If base material is visible, prevent corrosion with touch-up paint.		

INSPECTION

Check brake pads and discs:

- At every scheduled service interval
- Whenever components are removed during service procedures

Brake Pads

⚠WARNING

Always replace brake pads in complete sets for correct and safe brake operation. Improper brake operation could result in death or serious injury. (00111a)

⚠CAUTION

Direct contact of D.O.T. 4 brake fluid with eyes can cause irritation. Avoid eye contact. In case of eye contact flush with large amounts of water and get medical attention. Swallowing large amounts of D.O.T. 4 brake fluid can cause digestive discomfort. If swallowed, obtain medical attention. Use in well ventilated area. KEEP OUT OF REACH OF CHILDREN. (00240a)

NOTICE

D.O.T. 4 brake fluid will damage painted and body panel surfaces it comes in contact with. Always use caution and protect surfaces from spills whenever brake work is performed. Failure to comply can result in cosmetic damage. (00239b)

See Figure 1-31. Replace brake pads (3) if brake pad friction material on either the front or rear caliper is worn to 0.04 in (1.02 mm) or less above the backing plate (4). Always replace both pads in a caliper as a set. See 1.15 BRAKE PADS AND DISCS, Brake Pad Replacement.

When checking the brake pads and discs, inspect the brake hoses for correct routing and any signs of damage.

Brake Disc

- Minimum acceptable thickness is stamped on side of disc.
- Maximum brake disc lateral runout and warpage is 0.008 in (0.2 mm) when measured near the outside diameter.

Replace disc if warped, badly scored or worn beyond service limit. See 2.4 FRONT WHEEL or 2.5 REAR WHEEL.

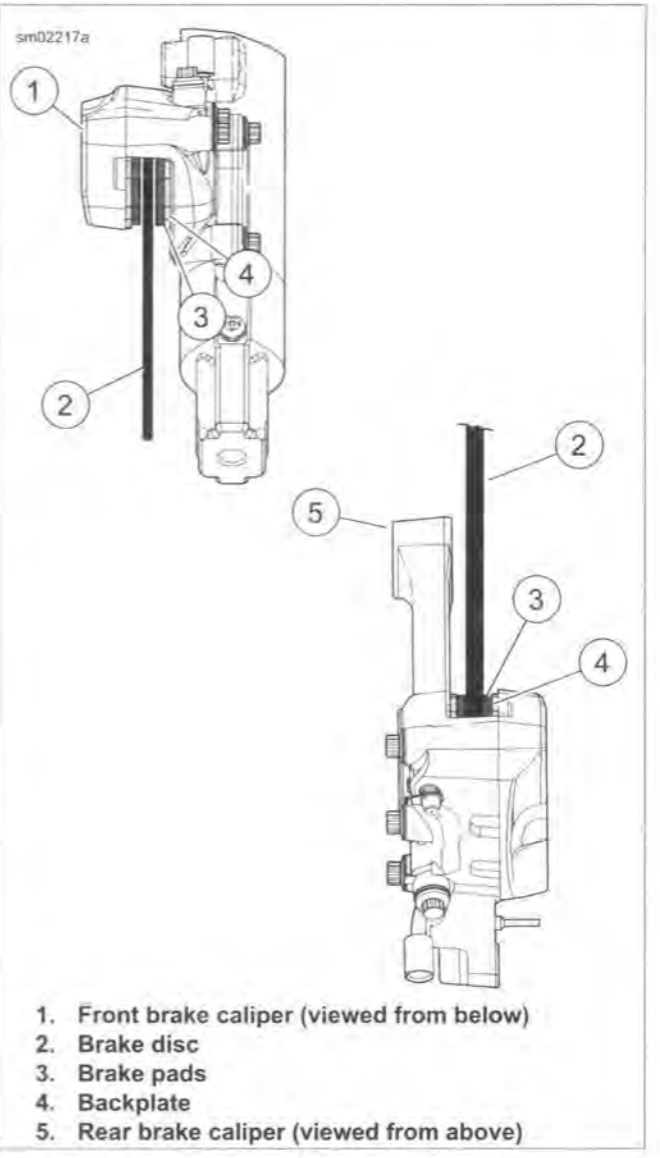

1. **Front brake caliper (viewed from below)**
2. **Brake disc**
3. **Brake pads**
4. **Backplate**
5. **Rear brake caliper (viewed from above)**

Figure 1-31. Brake Pad Inspection

BRAKE PAD REPLACEMENT

FASTENER	TORQUE VALUE	
Pad pin, rear caliper	80-120 **in-lbs**	9.0-13.5 Nm
Rear caliper fasteners	16-20 ft-lbs	21.7-27.1 Nm
Master cylinder reservoir cover screws: rear cover, including ABS	6-8 **in-lbs**	0.7-0.9 Nm
Front caliper mounting bolt	28-38 ft-lbs	38.0-51.5 Nm
Caliper, front, mounting bolt	28-38 ft-lbs	38.0-51.5 Nm
Brake pad pin/bridge bolt, front caliper	15-16 ft-lbs	20.3-22.6 Nm
Master cylinder reservoir cover screws: front cover	6-8 **in-lbs**	0.7-0.9 Nm

Rear Brake Caliper

1. **FLD models:** Remove right saddlebag.
2. **ABS models:** Remove cable strap securing wheel speed sensor cable to rear brake hose at caliper.
3. See Figure 1-32. Loosen, but do not remove pad pin (metric) (6).
4. Remove mounting bolt (4) and slider pin (3). Pull rear caliper away from brake disc.
5. Remove pad pin and brake pads.

NOTE

Loosening the reservoir cap allows air to escape and help prevent contamination. It also helps prevent fluid from squirting out of the reservoir if the pistons are retracted too quickly.

6. Loosen rear master cylinder reservoir cap.

NOTE

As pistons are pushed back into the caliper, fluid level may overflow reservoir. Remove fluid from reservoir if necessary.

7. Using the old brake pad and a C-clamp, retract the pistons fully into the caliper.

⚠WARNING

Always replace brake pads in complete sets for correct and safe brake operation. Improper brake operation could result in death or serious injury. (00111a)

8. Inspect pad pin for grooving and wear. Measure pin diameter in an unworn area and then in the area of any grooving or wear. If wear is more than 0.015 in (0.38 mm), replace pin.
9. Inspect torque clip. Replace if worn or damaged.
10. Inspect anti-rattle spring. Replace if worn or damaged.
11. Install **new** brake pads and pad pin. Tab must engage clip in caliper housing. Tighten pad pin to 80-120 **in-lbs** (9.0-13.5 Nm).
12. Install caliper. Install mounting bolt (4) and slider pin (3). Tighten to 16-20 ft-lbs (21.7-27.1 Nm).
13. **ABS models:** Secure wheel speed sensor cable to rear brake hose with a cable strap near the caliper.

⚠WARNING

After servicing brakes and before moving motorcycle, pump brakes to build brake system pressure. Insufficient pressure can adversely affect brake performance, which could result in death or serious injury. (00279a)

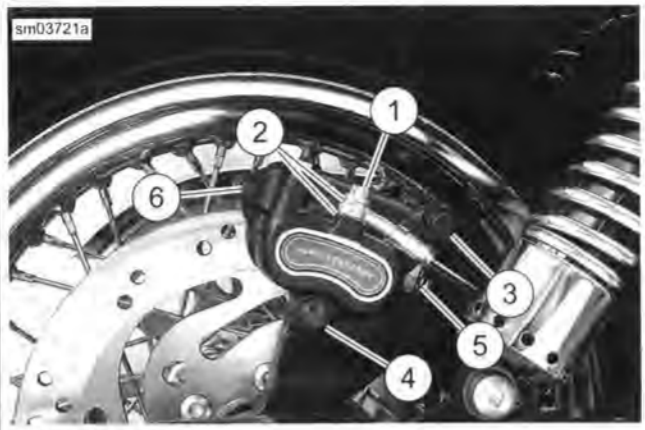

1. **Banjo bolt**
2. **Steel/rubber washer (2)**
3. **Slider pin**
4. **Mounting bolt**
5. **Tab slot**
6. **Pad pin**

Figure 1-32. Rear Caliper

14. Pump brakes to move pistons out until brake pads contact rotor.
15. Check fluid level in brake master cylinder reservoir. Fill to proper level if necessary using DOT 4 BRAKE FLUID. Install master cylinder reservoir cap. Tighten reservoir cap screws to 6-8 **in-lbs** (0.7-0.9 Nm).
16. **FLD models:** Install right saddlebag.

⚠WARNING

After repairing the brake system, test brakes at low speed. If brakes are not operating properly, testing at high speeds can cause loss of control, which could result in death or serious injury. (00289a)

17. Test brakes.
    a. Turn ignition switch ON. Apply brakes to check proper lamp operation.
    b. Test ride motorcycle. Repeat the bleeding procedure if brakes feel spongy. See 2.16 BLEEDING BRAKES.

NOTE

*Avoid making hard stops for the first 100 miles (160 km). This allows the **new** pads to become conditioned to the brake discs.*

Front Brake Caliper

1. Remove the front master cylinder reservoir cap.
2. See Figure 1-33. Loosen, but do not remove pad pin/bridge bolt (3) (metric).
3. Remove both caliper mounting bolts (1, 2) (metric). Detach caliper from front forks and brake disc.

NOTE

Fluid level rises as pistons are pushed into the caliper. Fluid level may rise above the recommended 1/8-3/8 in (3.2-9.5 mm) below the gasket surface. Remove fluid from reservoir if necessary.

4. Pry the pads back to force all four caliper pistons into their bores.

NOTE

The brake pads have tabs that are clipped onto the pad springs. Disengage the tabs from the pad springs as you remove the pads.

5. With the pistons retracted, remove the pad pin/bridge bolt. Remove brake pads.
6. Inspect pad pin/bridge bolt for grooving and wear. Measure pin diameter in an unworn area and then in the area of any grooving or wear. If wear is more than 0.015 in (0.38 mm), replace the pad pin/bridge bolt.

⚠WARNING

Always replace brake pads in complete sets for correct and safe brake operation. Improper brake operation could result in death or serious injury. (00111a)

NOTES

- *See Figure 1-34. Verify the pad spring tabs (1) on brake pad engage the pad springs in the pistons.*
- *If the directional tab (2) does not face down when caliper is installed, brake noise can develop.*

7. Install **new** pads into caliper. The directional tab (2) must face down when caliper is installed.
8. Loosely install the center pad pin/bridge bolt.
9. Attach caliper to front fork.
   a. See Figure 1-33. Place caliper over brake disc with bleeder screw facing upward.
   b. Loosely install long mounting bolt (1) (metric) into upper hole on fork leg.
   c. Install short mounting bolt (2) (metric) into lower hole on fork leg. Tighten to 28-38 ft-lbs (38.0-51.5 Nm).
   d. Final tighten the top mounting bolt to 28-38 ft-lbs (38.0-51.5 Nm).
   e. Final tighten center pad pin/bridge bolt (3) to 15-16 ft-lbs (20.3-22.6 Nm).
10. Pump brakes to move pistons out until brake pads contact rotor. Verify piston location against pads. If the front wheel is off the ground, rotate wheel to check for excessive brake pad drag.
11. Check fluid level in brake master cylinder reservoir. Fill to proper level if necessary using DOT 4 BRAKE FLUID. Install master cylinder reservoir cap. Tighten reservoir cap screws to 6-8 **in-lbs** (0.7-0.9 Nm).

⚠WARNING

After repairing the brake system, test brakes at low speed. If brakes are not operating properly, testing at high speeds can cause loss of control, which could result in death or serious injury. (00289a)

12. Test brakes.
    a. Turn ignition switch ON. Apply brakes to check proper lamp operation.
    b. Test ride motorcycle. Repeat the bleeding procedure if brakes feel spongy. See 2.16 BLEEDING BRAKES.

NOTE

*Avoid making hard stops for the first 100 miles (160 km). This allows the **new** pads to become conditioned to the brake discs.*

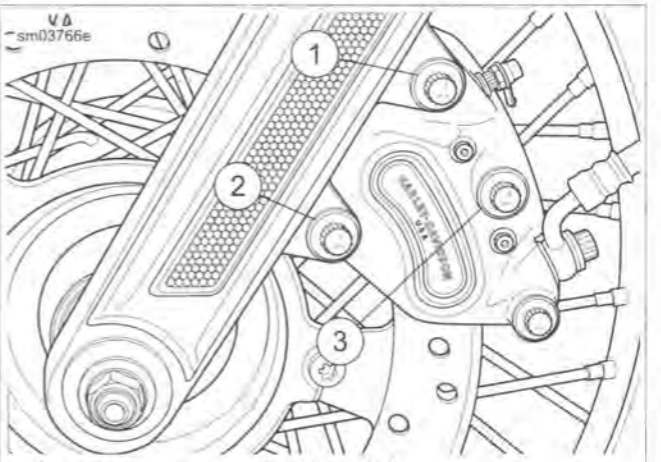

1. **Long mounting bolt (metric)**
2. **Short mounting bolt (metric)**
3. **Pad pin/bridge bolt (metric)**

Figure 1-33. Front Brake Caliper (Left Side Shown)

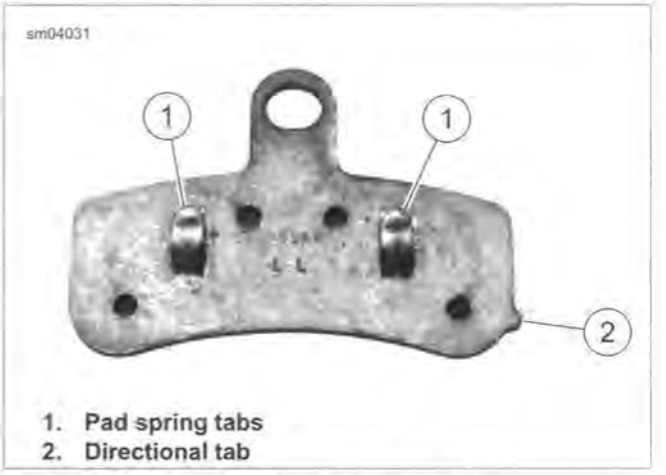

1. **Pad spring tabs**
2. **Directional tab**

Figure 1-34. Front Brake Pad

INSPECTION

FASTENER	TORQUE VALUE	
Spark plug	12-18 ft-lbs	16.3-24.4 Nm

⚠WARNING

Disconnecting spark plug cable with engine running can result in electric shock and death or serious injury. (00464b)

NOTE

Allow the engine to cool before servicing.

1. Disconnect spark plug cables.
2. Remove spark plugs. If a plug has eroded electrodes, heavy deposits or a cracked insulator, discard it.
3. See Figure 1-35. Compare your observations of the plug deposits with the descriptions provided.
   a. A wet, black and shiny deposit on plug base, electrodes and ceramic insulator tip indicates an oil fouled plug. Worn pistons, worn piston rings, worn valves, worn valve guides, worn valve seals, a weak battery or a faulty ignition system can cause this condition.
   b. A dry, fluffy or sooty black deposit indicates an air-fuel mixture that is too rich.
   c. A light brown, glassy deposit indicates an overheated plug. Cracks in the insulator or erosion of the electrodes can accompany this condition. An air-fuel mixture that is too lean, a hot-running engine, valves not seating or improper ignition timing cause this condition. The glassy deposit on the spark plug is a conductor when hot and may cause high-speed misfiring. A plug with eroded electrodes, heavy deposits or a cracked insulator must be replaced.
   d. A plug with a white, yellow, tan or rusty brown powdery deposit indicates balanced combustion. Clean off spark plug deposits at regular intervals.

⚠WARNING

Compressed air can pierce the skin and flying debris from compressed air could cause serious eye injury. Wear safety glasses when working with compressed air. Never use your hand to check for air leaks or to determine air flow rates. (00061a)

4. If the plugs require cleaning between tune-ups:
   a. Degrease firing end of spark plug using ELECTRICAL CONTACT CLEANER. Dry plug with compressed air.
   b. Use a thin file to flatten spark plug electrodes. A spark plug with sharp edges on its electrodes requires 25-40% less firing voltage than one with rounded edges.
   c. If the plugs cannot be cleaned, replace with **new** spark plugs.
5. Check electrode gap with a wire-type feeler gauge. Bend the outside of the electrode so only a slight drag is felt when passing the gauge between electrodes. Proper gap measurement is 0.038-0.043 in (0.97-1.09 mm).
6. Check condition of threads on cylinder head and plug. If necessary to remove deposits, apply penetrating oil and clean out with a thread chaser.
7. Apply ANTI-SEIZE LUBRICANT to the spark plug threads. Install spark plug. Tighten to 12-18 ft-lbs (16.3-24.4 Nm).
8. Connect spark plug cables. Rear cylinder plug cable attaches to top coil terminal. Verify that cables are securely connected to coil and spark plugs.



Figure 1-35. Typical Spark Plug Deposits

ADJUSTMENT

PART NUMBER	TOOL NAME
HD-41494	HUBCAP REMOVER AND INSTALLER
HD-50651	FORK NUT SOCKET

FASTENER	TORQUE VALUE	
Fork clamp stem nut	70-80 ft-lbs	95-108.5 Nm
Fork clamp pinch bolts: lower	30-35 ft-lbs	40.7-47.5 Nm
Brake line clamp screw: FXDL	45-65 **in-lbs**	5.1-7.3 Nm
Nacelle bolts, upper	84-120 **in-lbs**	9.5-13.5 Nm
Brake manifold fastener	36-48 **in-lbs**	4.0-5.4 Nm

Bearing Adjustment (Measurement)

1. Support motorcycle in an upright position so the front fork is suspended and the vehicle is level.
2. Remove all accessory weight, such as a windshield, that can influence the way the front fork swings.
3. Disconnect the clutch cable from the handlebar.
4. **FLD models:** Loosen, but do not remove the two fasteners at the rear of the upper headlight nacelle. Loosening the fasteners allows the upper nacelle to float.
5. **All except FXDL models:** Remove throttle cable anchor.
6. **ABS models:**
   a. Remove fastener securing the brake line manifold to the lower fork bracket.
   b. Remove brake line and/or ABS sensor wire from the anchor securing them to frame. Anchor is on right side behind the steering head.
   c. **FXDL models:** Remove the fastener retaining the brake line from the visor assembly.
7. **FXDL models:**
   a. Remove the throttle cable from the retainer attached to the visor assembly.
   b. Remove the clutch cable from the retainer attached to the visor assembly.

NOTE

On FXDL models, tape on a wide piece of cardboard parallel to the front fender tip.

8. Place a suitable marking material, such as masking tape, over the fender tip.
9. **FXDL models:**
   a. Mark position of risers and handlebars.
   b. Adjust risers to the full forward position.
10. Install a pointer so the base is stationary on the floor and the pointer indicates the center of the fender. The front fork should be straight ahead, however the balance point may be slightly off center.
11. Check steering head bearing fall-away.
    a. Tap the fender on one side until the front fork begins to fall-away by itself. Label this point on the marking material.
    b. Repeat the previous step in the other direction.
    c. Measure distance between marks.
    d. Refer to Table 1-15
    e. Adjust bearings (fall-away) if outside of service range.

Bearing Adjustment (Fall-Away)

1. See Figure 1-36. Using HUBCAP REMOVER AND INSTALLER (Part No. HD-41494), Remove stem cap (3).
2. Using FORK NUT SOCKET (Part No. HD-50651) loosen stem nut (5).
3. Loosen lower fork clamp pinch bolts.

Table 1-15. Fall-Away

MODEL	SPECIFICATION
All but FXDL	3.0-4.5 in (76.2-114.3 mm)
FXDL	6.0-8.0 in (152.4-203.2 mm)

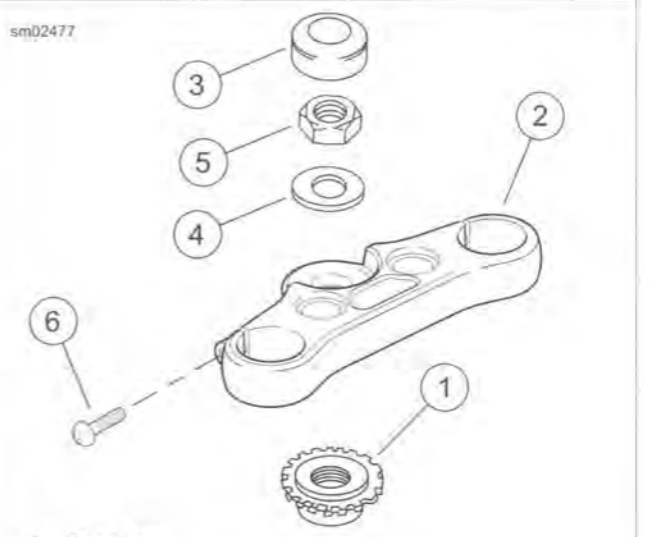

1. **Star nut**
2. **Upper fork clamp**
3. **Stem cap**
4. **Hardened flat washer**
5. **Stem nut**
6. **Pinch bolt (2)**

Figure 1-36. Steering Head Components

4. Tighten or loosen the star nut (1) until the measurement is within limits.
   a. If the distance exceeds the specifications in Table 1-15, turn the adjuster nut counterclockwise to loosen.
   b. If the distance is less than the specifications in Table 1-15, turn the adjuster nut clockwise to tighten.

5. Install stem nut. Tighten to 70-80 ft-lbs (95-108.5 Nm).
6. Check fall-away. If it is within the specifications in Table 1-15, tighten lower fork clamp pinch bolts to 30-35 ft-lbs (40.7-47.5 Nm).
7. Repeat procedure to determine if fall-away is within specifications.
8. **FXDL models:**
   a. Install the throttle cable into the retainer on the visor assembly.
   b. Install the clutch cable into the retainer on the visor assembly.
   c. Install the brake line clamp to the visor. Tighten screw to 45-65 **in-lbs** (5.1-7.3 Nm)
9. **FLD models:** Tighten the upper nacelle bolts to 84-120 **in-lbs** (9.5-13.5 Nm).
10. Install **new** anchors in right side of main frame for throttle cables.
11. **ABS models:** Install brake lines. Attach brake line manifold onto lower fork clamp. Tighten fastener to 36-48 **in-lbs** (4.0-5.4 Nm).
12. Install and adjust clutch cable.
13. **FXDL models:** Adjust risers to original position.

⚠WARNING

When any hydraulic brake component, line or connection is loosened or replaced on an ABS motorcycle, Digital Technician II must be used during the brake bleeding procedure to verify all air is removed from the system. Failure to properly bleed the brake system could adversely affect braking, which could result in death or serious injury. (00585c)

⚠WARNING

Brakes are a critical safety component. Contact a Harley-Davidson dealer for brake repair or replacement. Improperly serviced brakes can adversely affect brake performance, which could result in death or serious injury. (00054a)

14. Test ride.

LUBRICATION

Use Special Purpose Grease every 30,000 mile (48,280 km) service interval. For steering head bearing lubrication, see 2.19 STEERING HEAD.

GENERAL

⚠WARNING

Batteries contain sulfuric acid, which could cause severe burns to eyes and skin. Wear a protective face shield, rubberized gloves and protective clothing when working with batteries. KEEP BATTERIES AWAY FROM CHILDREN. (00063a)

⚠WARNING

Never remove warning label attached to top of battery. Failure to read and understand all precautions contained in warning, could result in death or serious injury. (00064a)

⚠WARNING

Batteries, battery posts, terminals and related accessories contain lead and lead compounds, and other chemicals known to the State of California to cause cancer, and birth defects or other reproductive harm. Wash hands after handling. (00019e)

NOTICE

Keep battery clean and lightly coat terminals with petroleum jelly to prevent corrosion. Failure to do so could result in damage to battery terminals. (00217a)

AGM batteries are permanently sealed, maintenance-free, valve-regulated, lead/calcium and sulfuric acid batteries. The batteries are shipped pre-charged and ready to be put into service. Do not attempt to open these batteries for any reason.

NOTE

For charging information, see 1.18 BATTERY MAINTENANCE, Charging Battery. See the electrical diagnostic manual for information about testing and troubleshooting this part.

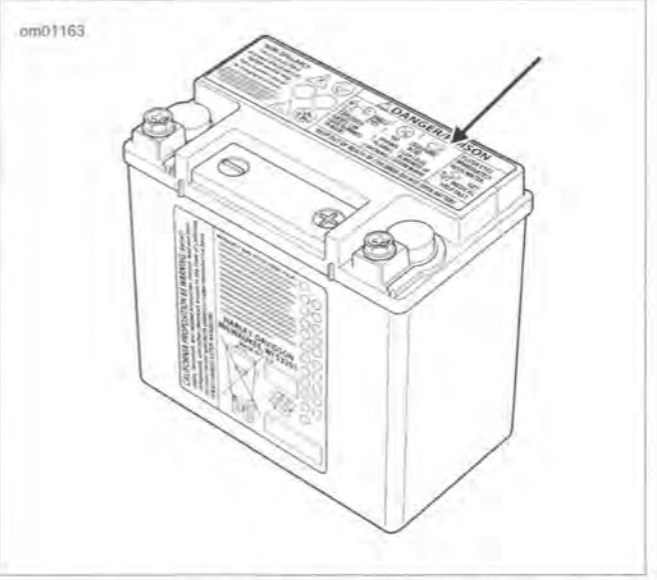

Figure 1-37. Battery Warning Label



1. Contents are corrosive
2. Wear safety glasses
3. Contents are explosive
4. Keep flames away
5. Read instructions
6. Keep away from children

Figure 1-38. Battery Warning Label

Table 1-16. Antidotes for Battery Acid

CONTACT	TREATMENT
External	Flush with water.
Internal	Drink large quantities of milk or water, followed by milk of magnesia, vegetable oil or beaten eggs. Get immediate medical attention.
Eyes	Flush with water. Get immediate medical attention.

CLEANING AND INSPECTION

NOTE

Battery top must be clean and dry. Dirt and electrolyte on top of the battery causes battery to self-discharge.

1. Clean battery top with a solution of baking soda (sodium bicarbonate) and water (5 teaspoons baking soda per quart or liter of water).
2. When the solution stops bubbling, rinse off the battery with clean water.
3. Clean cable connectors and battery terminals using a wire brush or sandpaper. Remove any oxidation.
4. Inspect the battery screws, and cables for breakage, loose connections and corrosion.
5. Check the battery terminals for melting or damage caused by over-tightening.
6. Inspect the battery for discoloration, raised top or a warped or distorted case. This might indicate that the battery has been frozen, overheated or overcharged.
7. Inspect the battery case for cracks or leaks.

VOLTAGE TEST

⚠WARNING

Batteries contain sulfuric acid, which could cause severe burns to eyes and skin. Wear a protective face shield, rubberized gloves and protective clothing when working with batteries. KEEP BATTERIES AWAY FROM CHILDREN. (00063a)

⚠WARNING

Never remove warning label attached to top of battery. Failure to read and understand all precautions contained in warning, could result in death or serious injury. (00064a)

The voltage test provides a general indicator of battery condition. Check the voltage of the battery to verify that it is fully charged.

1. If the open circuit (disconnected) voltage reading is below 12.6 V:
   a. Charge the battery.
   b. Check the voltage after the battery has set for at least one hour.
2. If the voltage reading is 12.7 V or above:
   a. Perform a battery diagnostic test. See the electrical diagnostic manual for the load test procedure.
   b. Refer to Table 1-17.

Table 1-17. Voltage Test For Battery Charge Conditions

VOLTAGE (VDC)	STATE OF CHARGE
12.7 VDC	100%
12.6 VDC	75%
12.3 VDC	50%
12.0 VDC	25%
11.8 VDC	0%

CHARGING BATTERY

Safety Precautions

An automatic, constant monitoring battery charger/tender with a charging rate of 5 amps maximum at no more than 14.6 volts is recommended. The use of constant current chargers (including trickle chargers) to charge sealed AGM batteries is not recommended.

Any overcharge causes dry-out and premature battery failure. Always review charger instructions before charging a battery. In addition to the manufacturer's instructions, follow these general safety precautions:

- Always wear eye, face and hand protection.
- Always charge batteries in a well-ventilated area.
- Turn off the charger before connecting or disconnecting the leads to the battery to avoid dangerous sparks.
- Never try to charge a visibly damaged or frozen battery.
- Connect the charger leads to the battery. Red positive lead to the positive terminal. Black negative lead to the negative terminal. If the battery is still in the vehicle, connect the negative lead to the chassis ground. Verify that the ignition and all electrical accessories are turned off.
- Verify that charger leads to battery are not separated, frayed or loose.
- If the battery temperature exceeds 110 °F (43 °C) during charging, discontinue charger. Allow the battery to cool.

Using a Battery Charger

Charge the battery if:

- Vehicle lights appear dim.
- Electric starter sounds weak.
- Battery has not been used for an extended period.

⚠WARNING

Explosive hydrogen gas, which escapes during charging, could cause death or serious injury. Charge battery in a well-ventilated area. Keep open flames, electrical sparks and smoking materials away from battery at all times. KEEP BATTERIES AWAY FROM CHILDREN. (00065a)

NOTICE

If battery releases an excessive amount of gas during charging, decrease the charging rate. Overheating can result in plate distortion, internal shorting, drying out or damage. (00413b)

1. Check charge state with voltmeter test. If battery voltage is less than 12.7 volts, see the next step.

⚠WARNING

Unplug or turn OFF battery charger before connecting charger cables to battery. Connecting cables with charger ON can cause a spark and battery explosion, which could result in death or serious injury. (00066a)

NOTICE

Do not reverse the charger connections described in the following steps or the charging system of the motorcycle could be damaged. (00214a)

NOTES

- *Most constant monitoring battery chargers are completely automatic. They can be left connected to both AC power and to the battery that is being charged. When leaving this type of charger connected for extended periods of time, periodically check the battery to check if it is unusually warm. This is an indication that the battery may have a weak cell or internal short. Read the manufacturer's instructions for the charger.*
- *Do not use battery chargers that produce excessively high voltage designed for flooded batteries or excessively high current designed for much larger batteries. Charging should be limited to 5 amps maximum at no more than 14.6 volts.*

2. Connect red battery charger lead to the positive terminal and black battery charger lead to the negative terminal of the battery.

NOTE

If the battery is still in the vehicle, connect the negative lead to the chassis ground. Be sure that the ignition and all electrical accessories are turned off.

3. Step away from the battery and turn on the charger.

⚠WARNING

Unplug or turn OFF battery charger before disconnecting charger cables from battery. Disconnecting clamps with charger ON can cause a spark and battery explosion, which could result in death or serious injury. (00067a)

4. After the battery is fully charged, turn the charger OFF. Disconnect the black battery charger lead from the negative terminal of the battery.
5. Disconnect the red battery charger lead from the positive terminal of the battery.
6. Mark the charging date on the battery.
7. Perform a battery diagnostic test to determine the condition of the battery. See the electrical diagnostic manual.
8. If charging a battery because voltmeter test reading was below 12.6 V, perform voltmeter test. See the electrical diagnostic manual.

DISCONNECTION AND REMOVAL

NOTE

To verify proper installation, record battery cable routing and locations before removal.

1. Remove seat.

⚠WARNING

Disconnect negative (-) battery cable first. If positive (+) cable should contact ground with negative (-) cable connected, the resulting sparks can cause a battery explosion, which could result in death or serious injury. (00049a)

2. See Figure 1-39. Remove lower fastener (1).
3. Pivot cover (2) outward then lift to disengage slots on cover from projections on battery tray (3).
4. Remove battery negative cable from negative battery terminal (4).
5. Remove battery positive cable from positive battery terminal (5).
6. Remove battery strap (6).
7. Remove battery from tray.

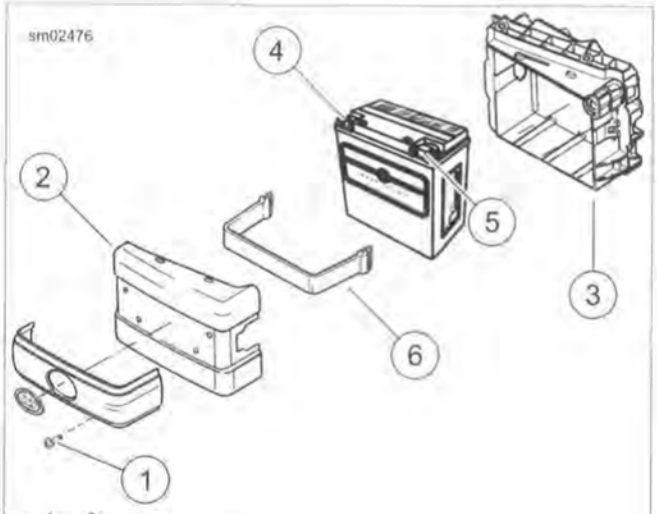

1. **Screw**
2. **Cover**
3. **Battery tray**
4. **Negative battery terminal**
5. **Positive battery terminal**
6. **Battery strap**

Figure 1-39. Battery Assembly

STORAGE

⚠WARNING

Batteries contain sulfuric acid, which could cause severe burns to eyes and skin. Wear a protective face shield, rubberized gloves and protective clothing when working with batteries. KEEP BATTERIES AWAY FROM CHILDREN. (00063a)

If the motorcycle is stored with the security system armed, connect an automatic, constant monitoring battery charger/tender to maintain battery charge. Refer to the Harley-Davidson Parts and Accessories catalog.

If the motorcycle is stored with the battery installed, without a Harley-Davidson constant monitoring battery charger/tender, and with the security system **not** armed, remove main fuse.

If the motorcycle will not be operated for several weeks, such as during the winter season, remove the battery from the motorcycle and fully charge.

See Figure 1-40. A battery that is removed from the vehicle is affected by self-discharge. A battery that is stored in the vehicle is affected by self-discharge and, more significantly, by parasitic loads. A parasitic load is caused by things like diode leakage or maintaining computer memory with the vehicle turned off.

Batteries self-discharge at a faster rate at higher ambient temperatures. To reduce the self-discharge rate, store battery in a cool, dry place.

Charge the battery every two weeks if stored in the vehicle. Charge the battery once per month if stored out of the vehicle.

NOTE

Use a Harley-Davidson constant monitoring battery charger/tender to maintain battery charge for extended periods of time without risk of overcharging or boiling.

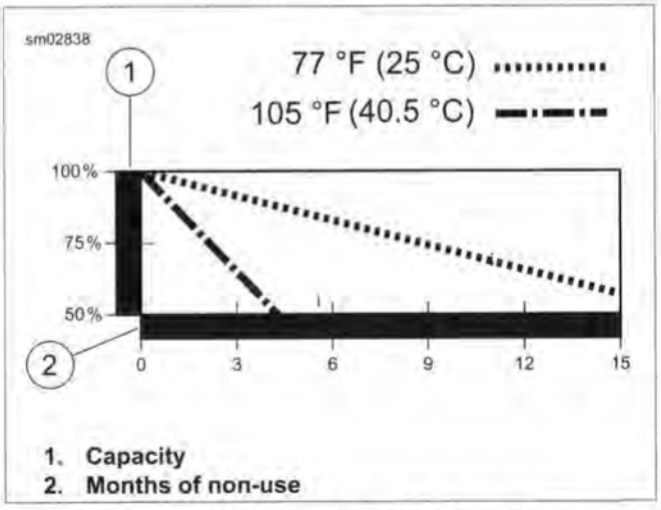

1. **Capacity**
2. **Months of non-use**

Figure 1-40. Battery Self-Discharge Rate

INSTALLATION AND CONNECTION

FASTENER	TORQUE VALUE	
Battery terminal screw	60-70 **in-lbs**	6.8-7.9 Nm
Battery terminal screw	60-70 **in-lbs**	6.8-7.9 Nm

⚠WARNING

Connect positive (+) battery cable first. If positive (+) cable should contact ground with negative (-) cable connected, the resulting sparks can cause a battery explosion, which could result in death or serious injury. (00068a)

NOTICE

Do not over-tighten bolts on battery terminals. Use recommended torque values. Over-tightening battery terminal bolts could result in damage to battery terminals. (00216a)

NOTE

Check that battery is fully charged before installation.

1. See Figure 1-39. With battery terminals facing outward, place battery in battery tray. Install battery strap.
2. Insert fastener through battery positive cable terminal and into threaded hole of battery positive (+) terminal (5). Tighten fastener to 60-70 **in-lbs** (6.8-7.9 Nm). Place battery terminal cover over positive battery terminal.
3. Insert fastener through battery negative cable terminal into threaded hole of battery negative (-) terminal (4). Tighten fastener to 60-70 **in-lbs** (6.8-7.9 Nm).
4. Apply a light coat of petroleum jelly or corrosion retardant material to battery terminals.
5. Place slots on battery cover (2) on projections on battery tray (3). Install screw (1) to secure cover.

⚠WARNING

After installing seat, pull upward on seat to be sure it is locked in position. While riding, a loose seat can shift causing loss of control, which could result in death or serious injury. (00070b)

6. Install seat.

INSPECTION

1. See Figure 1-41. Check for cracks or tears in the isolator rubber.
2. Check stabilizer links for wear.
3. Check that all engine mount bolts are tight.
4. Check that all engine mount rivets are not damaged.
5. Check that the mounts are supporting the weight of the motor.
6. Check that a minimum of 0.030 in (0.76 mm) clearance exists between engine bracket (1) and engine isolator (2).

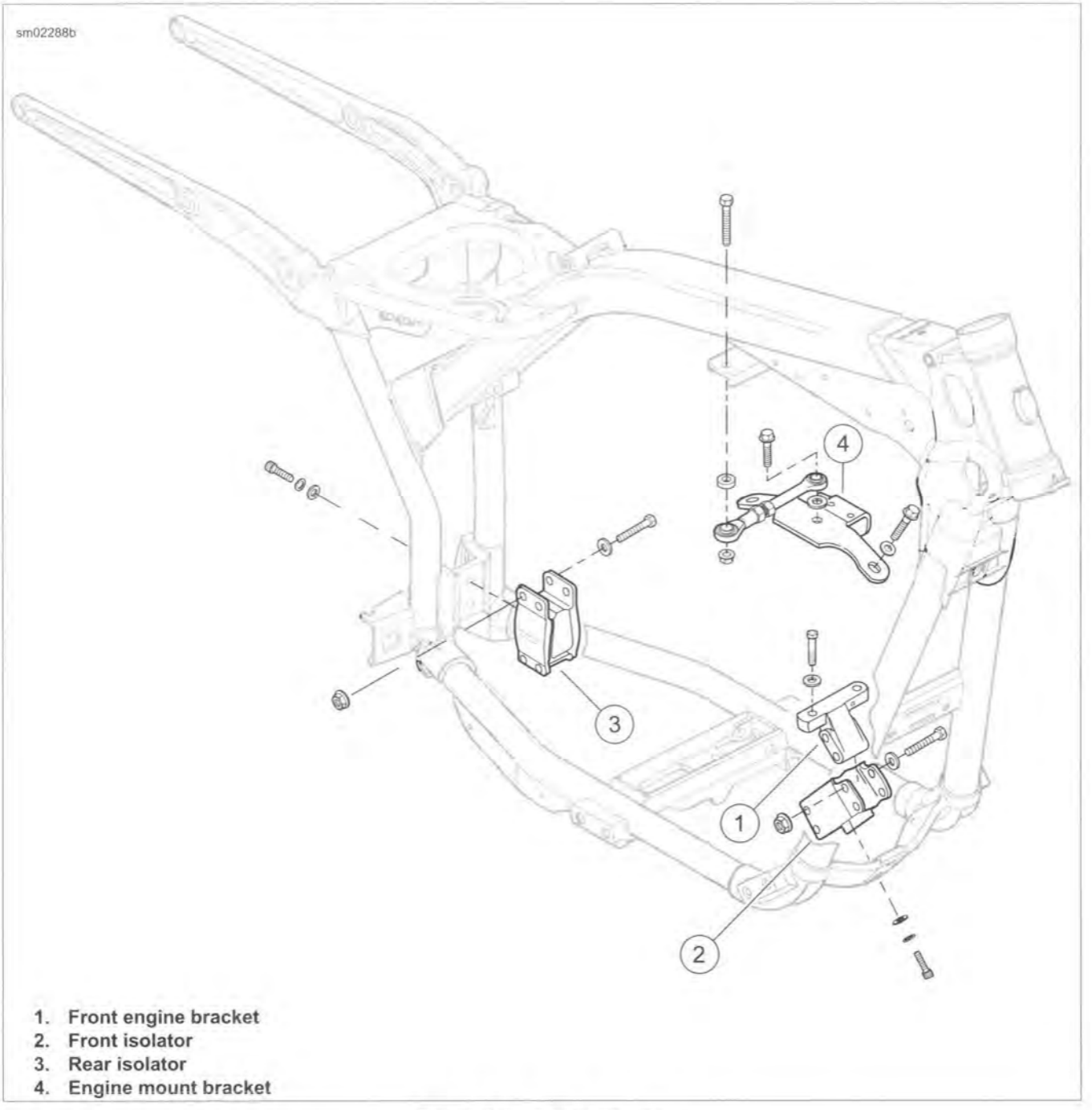

1. **Front engine bracket**
2. **Front isolator**
3. **Rear isolator**
4. **Engine mount bracket**

Figure 1-41. Engine Mounts

HEADLAMP ALIGNMENT

1. Check tire pressure.
2. Fill fuel tank or add an equal amount of ballast.
3. Adjust rear shocks for the rider and intended load.

NOTE

Choose a wall in minimum light.

4. See Figure 1-42. Park the motorcycle on a perpendicular line (1) with the front axle 25 ft (7.6 m) (3) from a wall.
5. Draw a vertical line (2) on the wall.

NOTE

Adjust the headlamps of motorcycles with multiple beam headlamps to converge into one pattern.

6. With the motorcycle loaded, point the front wheel straight forward at wall. Measure the distance (4) from the floor to the center of the high beam bulb.
7. Draw a horizontal line (5) through the vertical line on the wall. Place line 2.1 in (53.3 mm) lower than the measured bulb centerline.

NOTE

The headlamp is aligned when the light beam hot spot is located over the intersection of the lines.

8. With the high beam activated, verify headlamp alignment. Adjust as necessary.

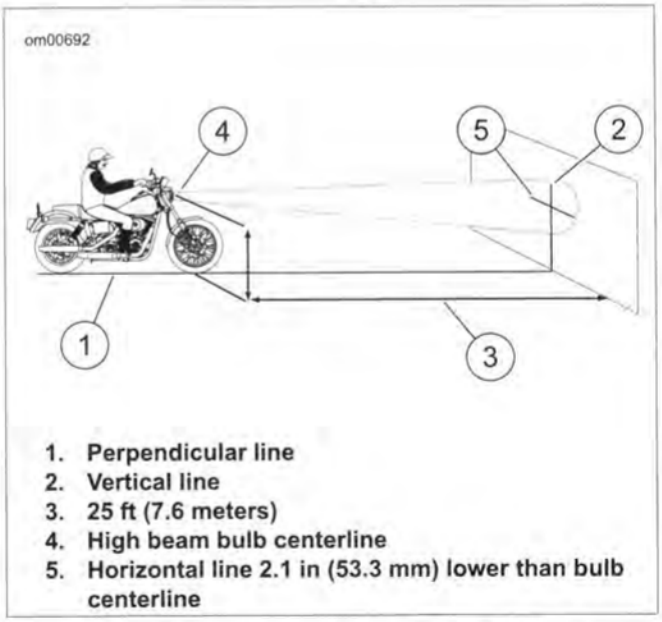

1. **Perpendicular line**
2. **Vertical line**
3. **25 ft (7.6 meters)**
4. **High beam bulb centerline**
5. **Horizontal line 2.1 in (53.3 mm) lower than bulb centerline**

Figure 1-42. Checking Headlamp Alignment

HEADLAMP ADJUSTMENT: ALL BUT FLD AND FXDL

FASTENER	TORQUE VALUE	
Headlamp horizontal adjusting bolt	25-30 ft-lbs	33.9-40.7 Nm
Headlamp vertical adjusting nut	25-30 ft-lbs	33.9-40.7 Nm

1. See Figure 1-43 or Figure 1-44. Loosen horizontal adjusting bolt (2) to adjust headlamp beam side to side. Tighten bolt to 25-30 ft-lbs (33.9-40.7 Nm).
2. Loosen vertical adjusting nut (1) to adjust headlamp beam up or down. Tighten nut to 25-30 ft-lbs (33.9-40.7 Nm).



1. **Vertical adjusting nut**
2. **Horizontal adjusting bolt**

Figure 1-43. Headlamp Adjustments: Single Bulb



1. **Vertical adjusting nut**
2. **Horizontal adjusting bolt**

Figure 1-44. Headlamp Adjustments: Dual Bulb

HEADLAMP ADJUSTMENT: FLD

NOTE

Headlamp adjustment can be performed without removing the headlamp trim ring.

1. See Figure 1-45. Using adjuster slots in trim ring, insert Phillips screwdriver between headlamp trim ring and rubber gasket.
   a. **Horizontal:** Turn the horizontal adjuster (1) to adjust light beam left and right.
   b. **Vertical:** Turn the vertical adjuster (2) to adjust light beam up and down.
2. Adjust the light beam until it is centered as shown in Figure 1-42.

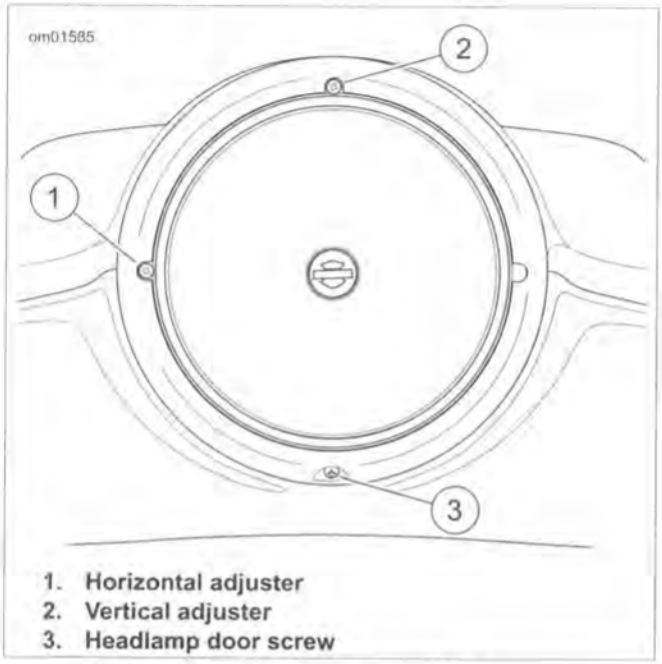

1. **Horizontal adjuster**
2. **Vertical adjuster**
3. **Headlamp door screw**

Figure 1-45. Headlamp: FLD

HEADLAMP ADJUSTMENT: FXDL

FASTENER	TORQUE VALUE	
Headlamp clamp nut: FXDL	120-240 **in-lbs**	14-27 Nm

1. See Figure 1-47. Remove snap plug (1) on top of visor (2).
   a. See Figure 1-46. Insert a small screwdriver through hole (1) on left side under visor (2)
   b. Push up on plug to remove.
2. See Figure 1-47. Loosen headlamp clamp nut (3).
3. Adjust headlamp vertically to aim it at horizontal line. At same time, adjust headlamp horizontally to aim beam straight ahead.
4. Tighten headlamp clamp nut to 120-240 **in-lbs** (14-27 Nm) after lamp is properly positioned.
5. Install snap plug (1) in headlamp visor (2).

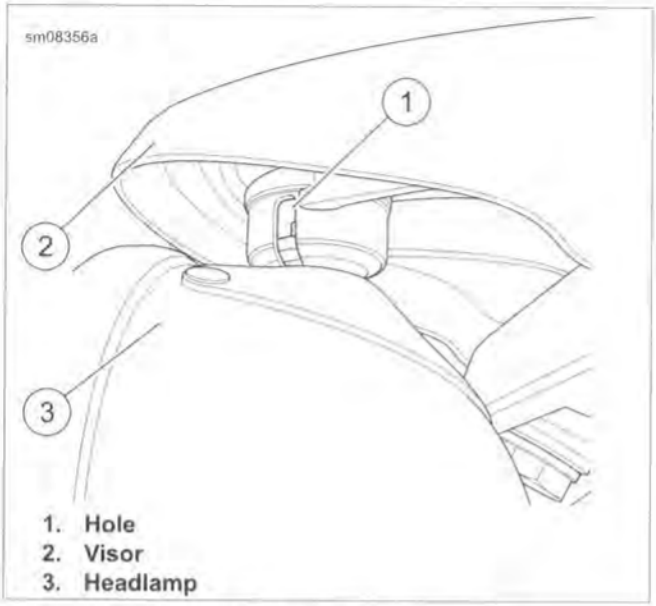

1. **Hole**
2. **Visor**
3. **Headlamp**

Figure 1-46. Headlamp Visor: FXDL

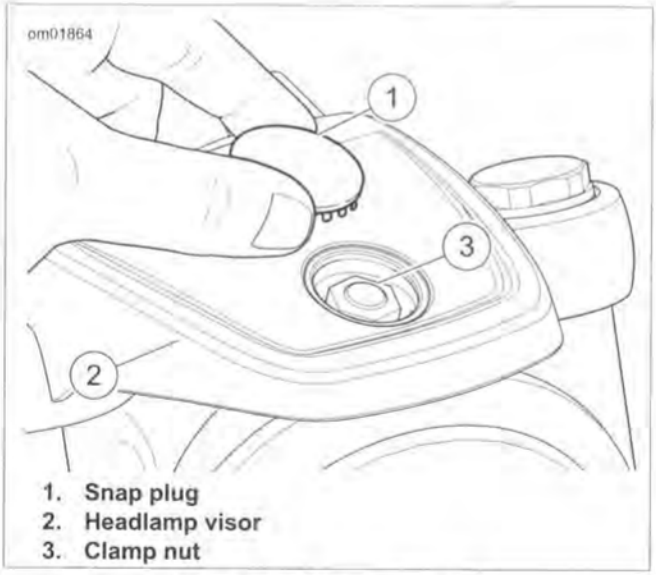

1. **Snap plug**
2. **Headlamp visor**
3. **Clamp nut**

Figure 1-47. Headlamp: FXDL

SHOCK ABSORBER PRELOAD ADJUSTMENT

PART NUMBER	TOOL NAME
94448-82B	SHOCK ADJUSTMENT SPANNER
HD-94700-52C	SHOCK ADJUSTMENT SPANNER

Adjust the shock absorber spring preload for the total load. Increase preload for heavy loads. Reduce preload for lighter loads.

⚠WARNING

Adjust both shock absorbers equally. Improper adjustment can adversely affect stability and handling, which could result in death or serious injury. (00036b)

NOTICE

Do not turn the shock absorber adjustment collar clockwise beyond adjustment setting 5. Doing so may result in equipment damage. (00166b)

NOTE

Some models have a cover over the preload cam. Insert the teeth on the shock adjustment spanner into the holes in the cover.

See Figure 1-48. Using SHOCK ADJUSTMENT SPANNER (Part No. 94448-82B) or SHOCK ADJUSTMENT SPANNER (Part No. HD-94700-52C), turn the preload cam counterclockwise until it stops. Counting one at the stop position, turn the spanner clockwise and count each position to specification. Refer to Table 1-18 (FLD) or Table 1-19 (other models).

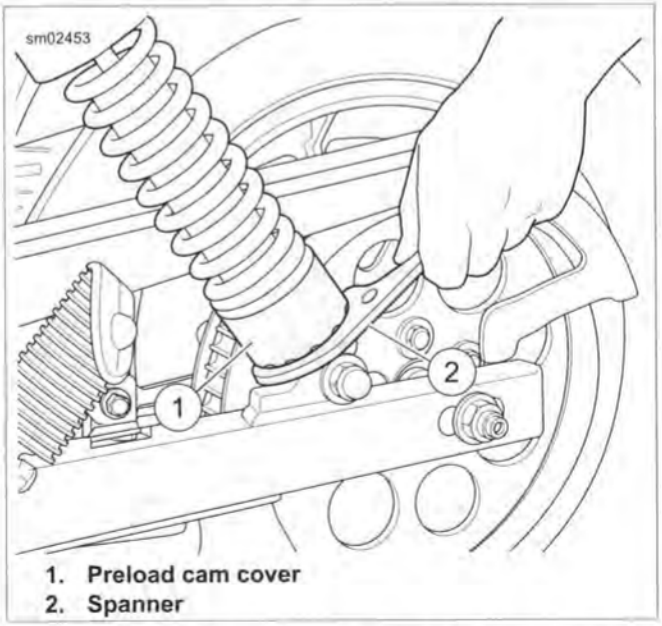

1. **Preload cam cover**
2. **Spanner**

Figure 1-48. Shock Absorber Preload Adjustment

Table 1-18. Recommended Shock Preload: FLD

LOAD[1]	POSITION[2]
Less than 190 lb (86 kg)	1
190-240 lb (86-109 kg)	2
240-290 lb (109-132 kg)	3
290-340 lb (132-154 kg)	4
340 lb (154 kg) to maximum added weight allowed. Refer to Table 2-3.	5

1. **Passenger/Cargo:** For every 35 lb (16 kg) of cargo or passenger weight, increase preload one position. Do not exceed the maximum added weight allowed.
2. See Figure 1-49.

Table 1-19. Recommended Shock Preload: Dyna Models Except FLD

LOAD[1]	POSITION[2]	
	FXDF, FXDL	FXDWG, FXDB, FXDBC, FXDBP
Less than 135 lb (60 kg)	1	1
135-165 lb (60-75 kg)	1	2
165-195 lb (75-89 kg)	2	3
195-225 lb (89-102 kg)	3	4
225-255 lb (102-116 kg)	4	5
255 lb (116 kg) to maximum added weight allowed. Refer to Table 2-3.	5	5

1. Add the weight of the rider, passenger, riding gear, accessories and cargo.
2. See Figure 1-49.

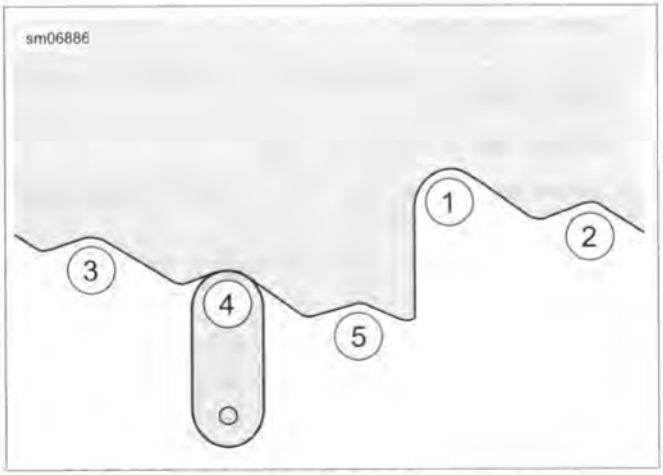

Figure 1-49. Shock Preload Cam Positions

GENERAL

Always prepare motorcycle for extended storage following service manual procedures. This will help protect parts against corrosion, preserve the battery and prevent buildup of gum and varnish in the fuel system.

PLACING IN STORAGE

⚠WARNING

Do not store motorcycle with gasoline in tank within the home or garage where open flames, pilot lights, sparks or electric motors are present. Gasoline is extremely flammable and highly explosive, which could result in death or serious injury. (00003a)

⚠WARNING

Avoid spills. Slowly remove filler cap. Do not fill above bottom of filler neck insert, leaving air space for fuel expansion. Secure filler cap after refueling. Gasoline is extremely flammable and highly explosive, which could result in death or serious injury. (00028a)

⚠WARNING

Use care when refueling. Pressurized air in fuel tank can force gasoline to escape through filler tube. Gasoline is extremely flammable and highly explosive, which could result in death or serious injury. (00029a)

1. Prepare the fuel system by filling fuel tank and adding a gasoline stabilizer. Use one of the commercially available gasoline stabilizers following the manufacturer's instructions.
2. Run motorcycle until engine is at normal operating temperature. Stop the engine and change the engine oil and filter.
3. Remove the spark plugs, inject a few squirts of engine oil into each cylinder and crank the engine 5-6 revolutions. Install spark plugs.
4. Inspect drive belt deflection. See 1.11 DRIVE BELT AND SPROCKETS.
5. Inspect drive belt and sprockets.
6. Inspect air cleaner filter. See 1.6 AIR CLEANER AND EXHAUST SYSTEM.
7. Lubricate controls. See 1.13 CABLE AND CHASSIS LUBRICATION.
8. Inspect operation of all electrical equipment and switches.
9. Check tire inflation and inspect tires for wear and/or damage. If the motorcycle will be stored for an extended period of time, securely support the motorcycle under the frame so that all weight is off the tires. See 1.7 TIRES AND WHEELS.
10. Wash painted and chrome-plated surfaces. Apply a light film of oil to exposed unpainted surfaces.

⚠WARNING

Unplug or turn OFF battery charger before connecting charger cables to battery. Connecting cables with charger ON can cause a spark and battery explosion, which could result in death or serious injury. (00066a)

⚠WARNING

Explosive hydrogen gas, which escapes during charging, could cause death or serious injury. Charge battery in a well-ventilated area. Keep open flames, electrical sparks and smoking materials away from battery at all times. KEEP BATTERIES AWAY FROM CHILDREN. (00065a)

11. Remove the battery from the vehicle. Charge the battery until the correct voltage is obtained. Charge the battery every other month if it is stored at temperatures below 60 °F (16 °C). Charge battery once a month if it is stored at temperatures above 60 °F (16 °C). See 1.18 BATTERY MAINTENANCE.

⚠WARNING

Unplug or turn OFF battery charger before disconnecting charger cables from battery. Disconnecting clamps with charger ON can cause a spark and battery explosion, which could result in death or serious injury. (00067a)

12. If the motorcycle is to be covered, use a material that will breathe, such as a Harley-Davidson storage cover or light canvas. Plastic materials that do not breathe promote the formation of condensation which leads to corrosion.

REMOVAL FROM STORAGE

⚠WARNING

The clutch failing to disengage can cause loss of control, which could result in death or serious injury. Prior to starting after extended periods of storage, place transmission in gear and push vehicle back and forth several times to assure proper clutch disengagement. (00075a)

1. Charge and install the battery.
2. Remove and inspect the spark plugs. Replace if necessary.
3. Clean the air cleaner element.
4. If fuel tank was drained, fill fuel tank with fresh gasoline.
5. Start the engine and run until it reaches normal operating temperature.
6. Check engine oil level. Check the transmission lubricant level. Fill to proper levels with correct fluids, if required.
7. Perform all of the checks in the PRE-RIDING CHECKLIST in the owner's manual.

GENERAL

⚠WARNING

The Troubleshooting section of this manual is a guide to diagnose problems. Read the appropriate sections of this manual before performing any work. Improper repair and/or maintenance could result in death or serious injury. (00528b)

Use the symptoms listed for general troubleshooting. More than one condition may be present at a time. Check all possible items to keep motorcycle in good operating condition.

NOTE

See the electrical diagnostic manual for additional information.

ENGINE

Starter Motor Does Not Operate or Does Not Turn Engine Over

1. Ignition switch not in ON position.
2. Engine run switch in OFF position.
3. Discharged battery, loose or corroded connections (solenoid chatters).
4. Starter control circuit, relay or solenoid faulty.
5. Electric starter shaft pinion gear not engaging or overrunning clutch, slipping.
6. TSM/TSSM/HFSM bank angle sensor (BAS) tripped and ignition switch not cycled OFF then ON.

Engine Turns Over But Does Not Start

1. Fuel tank empty.
2. Fouled spark plugs.
3. Discharged battery, loose or damaged battery terminal connections.
4. Engine lubricant too heavy (winter operation).

NOTE

For cold-weather starts, always disengage clutch.

5. Spark plug cables in bad condition and shorting, cable connections loose or cables connected to incorrect cylinders.
6. Damaged wire or loose wire connection at ignition coil, battery or ECM connector.
7. Ignition timing incorrect due to faulty coil, ECM or sensor (MAP, CKP and/or TSM/TSSM/HFSM).

Starts Hard

1. Spark plugs in bad condition or have improper gap or are partially fouled.
2. Spark plug cables in bad condition.
3. Battery nearly discharged.
4. Loose wire connection at one of the battery terminals, coil or ECM connector.
5. Water or dirt in fuel system.
6. Intake air leak.
7. Fuel tank vent hose and vapor valve plugged.
8. Engine lubricant too heavy (winter operation).

NOTE

For cold-weather starts, always disengage clutch.

9. Ignition not functioning properly (possible sensor failure).
10. Faulty ignition coil.
11. Valves sticking.

Starts But Runs Irregularly or Misses

1. Spark plugs in bad condition or partially fouled.
2. Spark plug cables in bad condition and leaking.
3. Spark plug gap too close or too wide.
4. Faulty ignition coil, ECM or sensor.
5. Battery nearly discharged.
6. Damaged wire or loose wire connection at ignition coil, battery or ECM connector.
7. Intermittent short circuit due to damaged wire insulation.
8. Water or dirt in fuel system.
9. Fuel tank vent system plugged.
10. Air leak at intake manifold or air cleaner.
11. Loose or dirty ECM connector.
12. Faulty MAP, CKP or O2 sensor(s).
13. Incorrect valve timing.
14. Weak or damaged valve springs.
15. Damaged intake or exhaust valve.

Spark Plug Fouls Repeatedly

1. Fuel mixture too rich.
2. Incorrect spark plug for the kind of service.
3. Piston rings badly worn or damaged.
4. Valve guides or seals badly worn.

Pre-Ignition or Detonation (Knocks or Pings)

1. Fuel octane rating too low.
2. Faulty spark plugs.
3. Incorrect spark plug for the kind of service.
4. Excessive carbon deposit on piston head or in combustion chamber.
5. Ignition timing advanced due to faulty MAP and/or CKP sensor(s).

Overheating

1. Insufficient oil supply or oil not circulating.
2. Insufficient air flow over engine.
3. Heavy carbon deposit.
4. Ignition timing retarded due to faulty MAP and/or CKP sensor(s).
5. Leaking valve.

Valve Train Noise

1. Low oil pressure caused by oil feed pump not functioning properly or oil passages obstructed.
2. Faulty hydraulic lifters.
3. Bent pushrod(s).
4. Incorrect pushrod length.
5. Rocker arm binding on shaft.
6. Valve sticking in guide.
7. Chain tensioner or shoe worn.

Excessive Vibration

1. Insufficient front engine mount clearance to engine bracket minimum 0.030 in (0.762 mm) clearance.
2. Wheels and/or tires worn or damaged.
3. Engine/transmission/rear wheel not aligned properly.
4. Primary chain badly worn or links tight as a result of insufficient lubrication or not being properly aligned.
5. Engine to transmission mounting bolts loose.
6. Ignition timing advanced due to faulty MAP and/or CKP sensor inputs/poorly tuned engine.
7. Internal engine problem.
8. damaged frame.

Check Engine Light Illuminates During Operation

Fault detected. For diagnostic information see the electrical diagnostic manual.

LUBRICATION SYSTEM

Oil Does Not Return To Oil Pan

1. Oil pan empty.
2. Oil pump not functioning.
3. Restricted oil lines or fittings.
4. Restricted oil filter.
5. Oil pump misaligned or in poor condition.
6. O-ring damaged or missing from oil pump/crankcase junction (also results in poor engine performance).

Engine Uses Too Much Oil Or Smokes Excessively

1. Oil pan overfilled.
2. Restricted oil return line to pan.
3. Restricted breather operation.
4. Restricted oil filter.
5. Oil pump misaligned or in poor condition.
6. Piston rings badly worn or broken.
7. Valve guides or seals worn.
8. O-ring damaged or missing from oil pump/crankcase junction (also results in poor engine performance).
9. Plugged crankcase scavenge port.

Engine Leaks Oil From Cases, Pushrods, Hoses, Etc.

1. Loose parts.
2. Imperfect seal at gaskets, pushrod cover, washers, etc.
3. Restricted breather hose to air cleaner.
4. Restricted oil filter.
5. Oil pan overfilled.
6. Lower rocker housing gasket installed incorrectly (upside down).
7. Restricted oil return line to tank.

Low Oil Pressure

1. Oil pan underfilled.
2. Faulty low oil pressure switch.
3. Oil pump O-ring damaged or missing.
4. Bypass valve stuck in open position.
5. Ball missing or leaking in cam support plate.

High Oil Pressure

1. Oil pan overfilled.
2. Bypass valve stuck in closed position.

ELECTRICAL SYSTEM

NOTE

For diagnostic information see the electrical diagnostic manual.

Alternator Does Not Charge

1. Voltage regulator module not grounded.
2. Engine ground wire loose or damaged.
3. Faulty voltage regulator module.
4. Loose or damaged wires in charging circuit.
5. Faulty stator and/or rotor.

Alternator Charge Rate Is Below Normal

1. Weak or damaged battery.
2. Loose connections.
3. Faulty voltage regulator module.
4. Faulty stator and/or rotor.

Speedometer Operates Erratically

1. Contaminated vehicle speed sensor (remove sensor and clean off metal particles).
2. Loose connections.

TRANSMISSION

Shifts Hard

1. Primary chaincase overfilled with lubricant.
2. Clutch not fully disengaging.
3. Transmission lubricant too heavy (winter operation).
4. Shifter return spring (inside transmission) bent or broken.
5. Bent shifter rod.
6. Shifter forks (inside transmission) sprung.
7. Corners worn off shifter clutch dog rings (inside transmission).

Jumps Out Of Gear

1. Shifter rod improperly adjusted.
2. Shifter drum (inside transmission) improperly adjusted or damaged/worn.
3. Shifter engaging parts (inside transmission) badly worn and rounded.
4. Shifter forks bent.
5. Damaged gears.

Clutch Slips

1. Clutch controls improperly adjusted.
2. Insufficient clutch spring tension.
3. Worn friction discs.

Clutch Drags Or Does Not Release

1. Lubricant level too high in primary chaincase.
2. Clutch controls improperly adjusted.
3. Primary chain badly misaligned or too tight.
4. Insufficient clutch spring tension.
5. Clutch discs warped.

Clutch Chatters

Friction discs or steel discs worn or warped

HANDLING

Irregularities

1. Improperly loaded motorcycle. Non-standard equipment on the front end such as heavy radio receivers, extra lighting equipment or luggage tends to cause unstable handling.
2. Damaged tire(s) or improper front-rear tire combination.
3. Irregular or peaked front tire tread wear.
4. Incorrect tire pressure.
5. Shock absorber not functioning normally.
6. Loose wheel axle nuts. Tighten to recommended torque specification.
7. Excessive wheel hub bearing play.
8. Rear wheel out of alignment with frame and front wheel.
9. Steering head bearings improperly adjusted. Correct adjustment and replace pitted or worn bearings and races.
10. Loose spokes (laced wheel vehicles only).
11. Tire and wheel unbalanced.
12. Rims and tires out-of-round or eccentric with hub.
13. Rims and tires out-of-true sideways.
14. Rear fork pivot.
15. Incorrect, non-specified tire(s) mounted on front or rear wheel.

BRAKES

Brake Does Not Hold Normally

1. Brake fluid reservoir low, system leaking or pads worn.
2. Brake system contains air bubbles.
3. Master cylinder/caliper piston seals worn or parts damaged.
4. Brake pads contaminated with grease or oil.
5. Brake pads badly worn.
6. Brake disc badly worn or warped.
7. Brake drags - insufficient brake pedal or hand lever free play, caliper piston worn or damaged, or excessive brake fluid in reservoir.
8. Brake fades due to heat build up - brake pads dragging or excessive braking.
9. Brake fluid leak when under pressure.

NOTES

SUBJECT PAGE NO.

2.1 FASTENER TORQUE VALUES 2-1
2.2 SPECIFICATIONS 2-6
2.3 VEHICLE IDENTIFICATION NUMBER (VIN) 2-9
2.4 FRONT WHEEL 2-11
2.5 REAR WHEEL 2-18
2.6 SEALED WHEEL BEARINGS 2-22
2.7 WHEEL LACING 2-26
2.8 CHECKING AND TRUING WHEELS 2-31
2.9 VEHICLE ALIGNMENT 2-37
2.10 FRONT BRAKE MASTER CYLINDER 2-39
2.11 FRONT BRAKE CALIPER 2-43
2.12 REAR BRAKE MASTER CYLINDER 2-49
2.13 REAR BRAKE CALIPER 2-54
2.14 BRAKE LINES 2-58
2.15 ABS MODULE (EHCU) 2-65
2.16 BLEEDING BRAKES 2-68
2.17 TIRES 2-70
2.18 FRONT FORK 2-74
2.19 STEERING HEAD 2-85
2.20 BELT GUARD AND DEBRIS DEFLECTOR 2-89
2.21 THROTTLE CONTROL 2-91
2.22 REAR SHOCK ABSORBERS 2-93
2.23 REAR FORK 2-94
2.24 CLUTCH CONTROL 2-96
2.25 HANDLEBAR: FLD 2-97
2.26 HANDLEBAR: FXDB, FXDBC, FXDBP, FXDBF AND FXDWG 2-99
2.27 HANDLEBAR: FXDL 2-104
2.28 FRONT FENDER 2-107
2.29 REAR FENDER 2-108
2.30 SEAT 2-117
2.31 FOOTBOARDS AND FOOTRESTS 2-120
2.32 HEADLAMP NACELLE: FLD 2-124
2.33 WINSHIELD: FLD 2-125
2.34 SADDLEBAGS: FLD 2-128
2.35 JIFFY STAND 2-133
2.36 FORK LOCK 2-137
2.37 ENGINE MOUNTS 2-139
2.38 SAREE GUARD: INDIA MODELS 2-141
2.39 MEDAILLONS, BADGES AND TANK EMBLEMS 2-142

NOTES

FASTENER TORQUE VALUES IN THIS CHAPTER

The table below lists torque values for all fasteners presented in this chapter.

FASTENER	TORQUE VALUE		NOTES
ABS brake line flare nuts	120-144 **in-lbs**	13.6-16.3 Nm	2.14 BRAKE LINES, Front Master Cylinder to Front Caliper Line Assembly
ABS brake line flare nuts	120-144 **in-lbs**	13.6-16.3 Nm	2.14 BRAKE LINES, ABS Module to Front Manifold Brake Lines
ABS module to bracket fastener	50-70 **in-lbs**	5.6-7.9 Nm	2.15 ABS MODULE (EHCU), Electro Hydraulic Control Unit (EHCU)
ABS module to frame fastener	90-114 **in-lbs**	10.2-12.8 Nm	2.15 ABS MODULE (EHCU), Electro Hydraulic Control Unit (EHCU)
Axle cap fastener, front: all but FLD	132-180 **in-lbs**	14.9-20.3 Nm	2.4 FRONT WHEEL, Installation
Axle cap fastener, rear: all but FLD	132-180 **in-lbs**	14.9-20.3 Nm	2.4 FRONT WHEEL, Installation
Axle nut, front	70-75 ft-lbs	95.0-101.6 Nm	2.4 FRONT WHEEL, Installation
Axle pinch bolt, front: FLD	18-22 ft-lbs	24.4-29.9 Nm	2.4 FRONT WHEEL, Installation
Banjo bolt to ABS module	14-18 ft-lbs	18.9-24.4 Nm	2.14 BRAKE LINES, ABS Module to Front Manifold Brake Lines
Banjo bolt to ABS module	14-18 ft-lbs	18.9-24.4 Nm	2.14 BRAKE LINES, Rear Master Cylinder to ABS Module
Banjo bolt to ABS module	14-18 ft-lbs	18.9-24.4 Nm	2.14 BRAKE LINES, ABS Module to Rear Brake Caliper
Banjo bolt to ABS module	14-18 ft-lbs	18.9-24.4 Nm	2.15 ABS MODULE (EHCU), Electro Hydraulic Control Unit (EHCU)
Banjo bolt to front caliper	17-22 ft-lbs	23.0-29.8 Nm	2.14 BRAKE LINES, Front Master Cylinder to Front Caliper Line Assembly
Banjo bolt to front master cylinder	17-22 ft-lbs	23.0-29.8 Nm	2.10 FRONT BRAKE MASTER CYLINDER, Assembly and Installation
Banjo bolt to front master cylinder	17-22 ft-lbs	23.0-29.8 Nm	2.14 BRAKE LINES, Front Master Cylinder to Front Caliper Line Assembly
Banjo bolt to rear caliper	17-22 ft-lbs	23.0-29.8 Nm	2.14 BRAKE LINES, ABS Module to Rear Brake Caliper
Banjo bolt to rear master cylinder	17-22 ft-lbs	23.0-29.8 Nm	2.12 REAR BRAKE MASTER CYLINDER, Installation
Battery terminal screw	60-70 **in-lbs**	6.8-7.9 Nm	2.25 HANDLEBAR: FLD, Installation
Bottom brake caliper mounting bolt, front	28-38 ft-lbs	38.0-51.5 Nm	2.4 FRONT WHEEL, Installation
Bracket, saddlebag theft prevention: FLD	24-36 **in-lbs**	2.7-4.1 Nm	2.34 SADDLEBAGS: FLD, Saddlebag
Brake bridge bolt/pad pin, front caliper	15-16 ft-lbs	20.3-22.6 Nm	2.11 FRONT BRAKE CALIPER, Assembly
Brake caliper bleeder screw	80-100 **in-lbs**	9.0-11.3 Nm	2.11 FRONT BRAKE CALIPER, Assembly
Brake caliper bleeder screw	80-100 **in-lbs**	9.0-11.3 Nm	2.13 REAR BRAKE CALIPER, Assembly
Brake caliper bleeder valve	80-100 **in-lbs**	9.0-11.3 Nm	2.16 BLEEDING BRAKES, Procedure
Brake caliper bridge bolt, front	28-38 ft-lbs	38.0-51.5 Nm	2.11 FRONT BRAKE CALIPER, Assembly
Brake caliper mounting bolt, rear	120-168 **in-lbs**	13.6-18.9 Nm	2.13 REAR BRAKE CALIPER, Installation
Brake disc screws, rear	30-45 ft-lbs	40.7-61.0 Nm	2.5 REAR WHEEL, Assembly
Brake disc screws: front wheel	16-24 ft-lbs	21.7-32.5 Nm	2.4 FRONT WHEEL, Assembly
Brake disc screws: front wheel	16-24 ft-lbs	21.7-32.5 Nm	2.4 FRONT WHEEL, Assembly
Brake disc screws: front wheel	16-24 ft-lbs	21.7-32.5 Nm	2.4 FRONT WHEEL, Assembly

FASTENER	TORQUE VALUE		NOTES
Brake disc screws: front wheel	16-24 ft-lbs	21.7-32.5 Nm	2.4 FRONT WHEEL, Assembly
Brake line guard screw: FXDF	45-65 **in-lbs**	5.1-7.3 Nm	2.15 ABS MODULE (EHCU), General
Brake manifold to lower fork: FLD	36-48 **in-lbs**	4.0-5.4 Nm	2.19 STEERING HEAD, Installation: FLD
Brake pad pin, rear caliper	80-120 **in-lbs**	9.0-13.6 Nm	2.13 REAR BRAKE CALIPER, Assembly
Brake switch/banjo bolt to rear master cylinder	17-22 ft-lbs	23.0-29.8 Nm	2.14 BRAKE LINES, Rear Master Cylinder to ABS Module
Cartridge screw: FLD (left side)	10.8-18.0 ft-lbs	14.7-24.5 Nm	2.18 FRONT FORK, Assembly: Cartridge Fork (FLD, Left Side)
Control module housing screw	35-45 **in-lbs**	4.0-5.1 Nm	2.25 HANDLEBAR: FLD, Installation
Control module housing screw	35-45 **in-lbs**	4.0-5.1 Nm	2.25 HANDLEBAR: FLD, Installation
Debris deflector screws	40-60 **in-lbs**	4.5-6.8 Nm	2.5 REAR WHEEL, Installation
Debris deflector screws	40-60 **in-lbs**	4.5-6.8 Nm	2.20 BELT GUARD AND DEBRIS DEFLECTOR, Debris Deflector Installation
Engine mount flange nut	22-27 ft-lbs	29.9-36.6 Nm	2.37 ENGINE MOUNTS, Installation
Footrest mounting screws and nuts	84-108 **in-lbs**	9.5-12.2 Nm	2.31 FOOTBOARDS AND FOOTRESTS, Rider Footrests: Mid Controls
Footrest mounting screws and nuts	84-108 **in-lbs**	9.5-12.2 Nm	2.31 FOOTBOARDS AND FOOTRESTS, Rider Footrests: Forward Controls
Footrest support mounting screws	30-40 ft-lbs	40.7-54.2 Nm	2.31 FOOTBOARDS AND FOOTRESTS, Rider Footrests: Mid Controls
Footrest support mounting screws	30-40 ft-lbs	40.7-54.2 Nm	2.31 FOOTBOARDS AND FOOTRESTS, Rider Footrests: Mid Controls
Footrest support mounting screws	32-37 ft-lbs	43.4-50.2 Nm	2.31 FOOTBOARDS AND FOOTRESTS, Rider Footrests: Forward Controls
Footrest support mounting screws	32-37 ft-lbs	43.4-50.2 Nm	2.31 FOOTBOARDS AND FOOTRESTS, Rider Footrests: Forward Controls
Fork stem nut: FLD	70-80 ft-lbs	94.9-108.4 Nm	2.19 STEERING HEAD, Installation: FLD
Fork tube cap: FLD (left side)	22-59 ft-lbs	30-80 Nm	2.18 FRONT FORK, Assembly: Cartridge Fork (FLD, Left Side)
Fork tube caps	22-59 ft-lbs	30-80 Nm	2.18 FRONT FORK, Assembly: All But FLD Left Side
Front and rear isolator mounting bolts to frame	22-27 ft-lbs	29.9-36.6 Nm	2.9 VEHICLE ALIGNMENT, Inspection
Front belt guard fastener	120-180 **in-lbs**	13.6-20.3 Nm	2.20 BELT GUARD AND DEBRIS DEFLECTOR, Belt Guard Installation
Front brake caliper lower mounting bolt	28-38 ft-lbs	38.0-51.5 Nm	2.11 FRONT BRAKE CALIPER, Installation
Front brake caliper upper mounting bolt	28-38 ft-lbs	38.0-51.5 Nm	2.11 FRONT BRAKE CALIPER, Installation
Front brake line manifold fastener	36-48 **in-lbs**	4.1-5.4 Nm	2.14 BRAKE LINES, Front Master Cylinder to Front Caliper Line Assembly
Front caliper banjo bolt	17-22 ft-lbs	23.1-29.9 Nm	2.11 FRONT BRAKE CALIPER, Installation
Front engine bracket bolts to engine	25-32 ft-lbs	34.0-43.3 Nm	2.37 ENGINE MOUNTS, Installation
Front fender nuts: all	15-21 ft-lbs	20.3-28.5 Nm	2.28 FRONT FENDER, Installation
Front fork seat pipe screw	30-37 ft-lbs	40-50 Nm	2.18 FRONT FORK, Assembly: All But FLD Left Side
Front isolator mounting bolts to frame	22-27 ft-lbs	29.9-36.6 Nm	2.37 ENGINE MOUNTS, Installation
Front isolator mounting bolts to front engine bracket	22-27 ft-lbs	29.9-36.6 Nm	2.37 ENGINE MOUNTS, Installation
Front isolator mounting bolts to front engine bracket	18-22 ft-lbs	24.4-29.9 Nm	2.9 VEHICLE ALIGNMENT, Inspection
Front master cylinder reservoir cover screws	6-8 **in-lbs**	0.7-0.9 Nm	2.16 BLEEDING BRAKES, Procedure

FASTENER	TORQUE VALUE		NOTES
Hand control module housing screws	35-45 **in-lbs**	4.0-5.1 Nm	2.10 FRONT BRAKE MASTER CYLINDER, Assembly and Installation
Hand control module screws	35-45 **in-lbs**	4.0-5.1 Nm	2.21 THROTTLE CONTROL, Assembly/Installation
Handlebar clamp fastener: FXDL	12-16 ft-lbs	16.3-21.7 Nm	2.27 HANDLEBAR: FXDL, Installation
Handlebar master cylinder clamp screws	60-80 **in-lbs**	6.8-9.0 Nm	2.10 FRONT BRAKE MASTER CYLINDER, Assembly and Installation
Handlebar riser bolts: FLD	30-40 ft-lbs	40.7-54.2 Nm	2.19 STEERING HEAD, Installation: FLD
Handlebar riser bolts: FLD	30-40 ft-lbs	40.7-54.2 Nm	2.32 HEADLAMP NACELLE: FLD, Upper and Lower Nacelle
Handlebar riser clamp screws	12-16 ft-lbs	16.3-21.7 Nm	2.27 HANDLEBAR: FXDL, Handlebar and Riser Adjustment
Handlebar riser fastener: FLD	30-40 ft-lbs	40.7-54.2 Nm	2.25 HANDLEBAR: FLD, Installation
Handlebar riser fastener: FXDB, FXDBC, FXDBP final tightening	30-40 ft-lbs	40.7-54.2 Nm	2.26 HANDLEBAR: FXDB, FXDBC, FXDBP, FXDF AND FXDWG, Installation
Handlebar riser fastener: FXDF, FXDWG, final tightening	30-40 ft-lbs	40.7-54.2 Nm	2.26 HANDLEBAR: FXDB, FXDBC, FXDBP, FXDF AND FXDWG, Installation
Headlight to nacelle: FLD	7-10 **in-lbs**	0.8-1.1 Nm	2.19 STEERING HEAD, Installation: FLD
Headlight to nacelle: FLD	7-10 **in-lbs**	0.8-1.1 Nm	2.32 HEADLAMP NACELLE: FLD, Upper and Lower Nacelle
Jiffy stand sensor screw	96-144 **in-lbs**	10.8-16.3 Nm	2.35 JIFFY STAND, Jiffy Stand Sensor: HDI Models
Lower nacelle fasteners: FLD	84-120 **in-lbs**	9.5-13.5 Nm	2.19 STEERING HEAD, Installation: FLD
Lower nacelle fasteners: FLD	84-120 **in-lbs**	9.5-13.5 Nm	2.32 HEADLAMP NACELLE: FLD, Upper and Lower Nacelle
Lumbar nameplate mounting screw: FXDL	48-60 **in-lbs**	5.4-6.8 Nm	2.30 SEAT, Lumbar Pad: FXDL
Lumbar pad mounting screw: FXDL	48-60 **in-lbs**	5.4-6.8 Nm	2.30 SEAT, Lumbar Pad: FXDL
Master cylinder mounting nut, rear	30-40 ft-lbs	40.7-54.2 Nm	2.12 REAR BRAKE MASTER CYLINDER, Installation
Master cylinder reservoir cover screws: front cover	6-8 **in-lbs**	0.68-0.90 Nm	2.10 FRONT BRAKE MASTER CYLINDER, Assembly and Installation
Master cylinder reservoir cover screws: front cover	6-8 **in-lbs**	0.7-0.9 Nm	2.11 FRONT BRAKE CALIPER, Installation
Master cylinder reservoir rear cover screws: FLD (ABS and non-ABS) and all other non-ABS models	6-8 **in-lbs**	0.68-0.90 Nm	2.12 REAR BRAKE MASTER CYLINDER, Installation
Negative battery fastener: all	60-70 **in-lbs**	6.8-7.9 Nm	2.26 HANDLEBAR: FXDB, FXDBC, FXDBP, FXDF AND FXDWG, Installation
Nut, fork tube cap: FLD (left side)	13.0-16.6 ft-lbs	17.5-22.5 Nm	2.18 FRONT FORK, Assembly: Cartridge Fork (FLD, Left Side)
Passenger footrest screw and nut	84-108 **in-lbs**	9.5-12.2 Nm	2.31 FOOTBOARDS AND FOOTRESTS, Passenger Footrests: All But FXDB
Passenger footrest support mounting screw	25-35 ft-lbs	33.9-47.4 Nm	2.31 FOOTBOARDS AND FOOTRESTS, Passenger Footrests: All But FXDB
Pinch bolts	30-35 ft-lbs	40.7-47.5 Nm	2.18 FRONT FORK, Installation
Pivot shaft nut	70-77 ft-lbs	95.0-104.5 Nm	2.23 REAR FORK, Installation
Rear axle nut	95-105 ft-lbs	128.8-142.4 Nm	2.5 REAR WHEEL, Installation
Rear belt guard fastener	120-180 **in-lbs**	13.6-20.3 Nm	2.20 BELT GUARD AND DEBRIS DEFLECTOR, Belt Guard Installation
Rear caliper banjo bolt	17-22 ft-lbs	23.1-29.9 Nm	2.13 REAR BRAKE CALIPER, Installation
Rear fender cover front screw: all	12-18 ft-lbs	16.3-24.4 Nm	2.38 SAREE GUARD: INDIA MODELS, Replacement

FASTENER	TORQUE VALUE		NOTES
Rear fender cover rear screw: all	12-18 ft-lbs	16.3-24.4 Nm	2.38 SAREE GUARD: INDIA MODELS, Replacement
Rear fender screw: FLD	30-37 ft-lbs	40.7-50.2 Nm	2.29 REAR FENDER, FLD/Apply LOCTITE 243 MEDIUM STRENGTH THREADLOCKER AND SEALANT (blue).
Rear fender screw: FXDB, FXDBC, FXDBP	12-18 ft-lbs	16.3-24.4 Nm	2.29 REAR FENDER, FXDB, FXDBC, FXDBP
Rear fender screw: FXDF	12-18 ft-lbs	16.3-24.4 Nm	2.29 REAR FENDER, FXDF
Rear fender screw: FXDL	12-18 ft-lbs	16.3-24.4 Nm	2.29 REAR FENDER, FXDL
Rear fender screw: FXDWG	12-18 ft-lbs	16.3-24.4 Nm	2.29 REAR FENDER, FXDWG
Rear fork brake hose J-clip	40-60 **in-lbs**	4.5-6.8 Nm	2.14 BRAKE LINES, ABS Module to Rear Brake Caliper
Rear fork brake hose J-clip	40-60 **in-lbs**	4.5-6.8 Nm	2.23 REAR FORK, Assembly
Rear isolator mounting bolts to transmission case	22-27 ft-lbs	29.9-36.6 Nm	2.9 VEHICLE ALIGNMENT, Inspection
Rear isolator to frame bolts	22-27 ft-lbs	29.9-36.6 Nm	2.37 ENGINE MOUNTS, Installation
Rear master cylinder reservoir cover screws, non-ABS models	6-8 **in-lbs**	0.7-0.9 Nm	2.16 BLEEDING BRAKES, Procedure
Rear mount license plate bracket screws: FXDWG	30-40 **in-lbs**	3.4-4.5 Nm	2.29 REAR FENDER, FXDWG
Rear shock, lower screws: all	30-40 ft-lbs	40.7-54.2 Nm	2.38 SAREE GUARD: INDIA MODELS, Replacement
Rear sprocket screws-final torque	67-73 ft-lbs	90.9-99.0 Nm	2.5 REAR WHEEL, Assembly
Rear sprocket screws-initial torque	50 ft-lbs	67.8 Nm	2.5 REAR WHEEL, Assembly
Rider footboard bracket screws	32-37 ft-lbs	43-50 Nm	2.31 FOOTBOARDS AND FOOTRESTS, Rider Footboards
Rider footboard pivot bolt nut	60-80 **in-lbs**	6.8-9.0 Nm	2.31 FOOTBOARDS AND FOOTRESTS, Rider Footboards
Saddlebag inner/outer support screws: FLD	96-120 **in-lbs**	10.8-13.6 Nm	2.34 SADDLEBAGS: FLD, Saddlebag
Saddlebag latch attaching screws: FLD	14-20 **in-lbs**	1.6-2.3 Nm	2.34 SADDLEBAGS: FLD, Saddlebag
Saddlebag latch faceplate nut: FLD	7-17 **in-lbs**	0.8-1.9 Nm	2.34 SADDLEBAGS: FLD, Saddlebag Lid
Saddlebag latch faceplate screws: FLD	14-20 **in-lbs**	1.6-2.3 Nm	2.34 SADDLEBAGS: FLD, Saddlebag Lid
Saddlebag latch pivot screw: FLD	96-120 **in-lbs**	10.8-13.6 Nm	2.34 SADDLEBAGS: FLD, Saddlebag
Saddlebag latch screws: FLD	14-20 **in-lbs**	1.6-2.3 Nm	2.34 SADDLEBAGS: FLD, Saddlebag Lid
Saddlebag lock screws: FLD	30-40 **in-lbs**	3.4-4.5 Nm	2.34 SADDLEBAGS: FLD, Saddlebag Lid
Saddlebag lower mount screws: FLD	96-120 **in-lbs**	10.8-13.6 Nm	2.34 SADDLEBAGS: FLD, Saddlebag
Saddlebag lower mount spool: FLD	15-20 ft-lbs	20.3-27.1 Nm	2.29 REAR FENDER, FLD/Apply LOCTITE 243 MEDIUM STRENGTH THREADLOCKER AND SEALANT (blue).
Seat rear fastener: all	20-40 **in-lbs**	2.3-4.5 Nm	2.30 SEAT, Installation
Seat rear fastener: all	20-40 **in-lbs**	2.3-4.5 Nm	2.30 SEAT, Installation
Seat shoulder bolt: FXDWG	80-90 **in-lbs**	9.0-10.2 Nm	2.30 SEAT, Installation
Seat strap nut: FLD	60-90 **in-lbs**	6.8-10.2 Nm	2.29 REAR FENDER, FLD
Seat strap nut: FXDWG	60-90 **in-lbs**	6.8-10.2 Nm	2.30 SEAT, Installation
Shift rod fastener with acorn nut	96-144 **in-lbs**	10.8-16.2 Nm	2.31 FOOTBOARDS AND FOOTRESTS, Rider Footboards
Shock mounting fastener, lower	30-40 ft-lbs	40.7-54.2 Nm	2.5 REAR WHEEL, Installation/LOCTITE 243 MEDIUM STRENGTH THREADLOCKER AND SEALANT (blue)

FASTENER	TORQUE VALUE		NOTES
Shock mounting fastener, lower	30-40 ft-lbs	40.7-54.2 Nm	2.22 REAR SHOCK ABSORBERS, Installation/LOCTITE 243 MEDIUM STRENGTH THREADLOCKER AND SEALANT (blue)
Shock mounting fastener, upper	30-40 ft-lbs	40.7-54.2 Nm	2.5 REAR WHEEL, Installation/LOCTITE 243 MEDIUM STRENGTH THREADLOCKER AND SEALANT (blue)
Shock mounting fastener, upper	30-40 ft-lbs	40.7-54.2 Nm	2.22 REAR SHOCK ABSORBERS, Installation/LOCTITE 243 MEDIUM STRENGTH THREADLOCKER AND SEALANT (blue)
Shock mounting stud nut, inner	75-85 ft-lbs	101.7-115.2 Nm	2.22 REAR SHOCK ABSORBERS, Installation
Side mount license plate bracket screws: FXDWG	84-180 **in-lbs**	9.5-20.3 Nm	2.29 REAR FENDER, FXDWG
Slider cover fasteners: FLD	84-120 **in-lbs**	9.5-13.5 Nm	2.32 HEADLAMP NACELLE: FLD, Upper and Lower Nacelle
Spoke nipple	55 **in-lbs**	6.2 Nm	2.8 CHECKING AND TRUING WHEELS, True Laced Wheels
Tether assembly screws: FLD	8-12 **in-lbs**	0.9-1.4 Nm	2.34 SADDLEBAGS: FLD, Saddlebag Lid
Top brake caliper mounting bolt, front	28-38 ft-lbs	38.0-51.5 Nm	2.4 FRONT WHEEL, Installation
Upper and lower pinch bolts: FLD	30-35 ft-lbs	40.7-47.5 Nm	2.19 STEERING HEAD, Installation: FLD
Upper handlebar clamp fastener, front: all	12-16 ft-lbs	16.3-21.7 Nm	2.25 HANDLEBAR: FLD, Installation
Upper handlebar clamp fastener, rear: all	12-16 ft-lbs	16.3-21.7 Nm	2.25 HANDLEBAR: FLD, Installation
Upper handlebar clamp fastener: FXDB, FXDBC, FXDBP, FXDF, FXDWG, final tightening	12-16 ft-lbs	16.3-21.7 Nm	2.26 HANDLEBAR: FXDB, FXDBC, FXDBP, FXDF AND FXDWG, Installation
Upper handlebar clamp fastener: FXDB, FXDBC, FXDBP, initial tightening	12-16 ft-lbs	16.3-21.7 Nm	2.26 HANDLEBAR: FXDB, FXDBC, FXDBP, FXDF AND FXDWG, Installation
Upper handlebar clamp fastener: FXDB, FXDBC, FXDBP final tightening	12-16 ft-lbs	16.3-21.7 Nm	2.26 HANDLEBAR: FXDB, FXDBC, FXDBP, FXDF AND FXDWG, Installation
Upper nacelle fasteners: FLD	84-120 **in-lbs**	9.5-13.5 Nm	2.19 STEERING HEAD, Installation: FLD
Upper nacelle fasteners: FLD	84-120 **in-lbs**	9.5-13.5 Nm	2.32 HEADLAMP NACELLE: FLD, Upper and Lower Nacelle
Valve stem nut	12-15 **in-lbs**	1.4-1.7 Nm	2.17 TIRES, Installation
Valve stem nut, tube type	3-7 **in-lbs**	0.3-0.8 Nm	2.17 TIRES, Installation
Windshield docking hardware: FLD	84-120 **in-lbs**	9.5-13.5 Nm	2.19 STEERING HEAD, Installation: FLD
Windshield docking hardware: FLD	84-120 **in-lbs**	9.5-13.5 Nm	2.32 HEADLAMP NACELLE: FLD, Upper and Lower Nacelle
Windshield window screws: FLD	20-25 **in-lbs**	2.3-2.8 Nm	2.33 WINDSHIELD: FLD, Windshield Window

SPECIFICATIONS

Chassis Specifications

Table 2-1. Dimensions

ITEM	FXDB, FXDBC*, FXDBP*		FXDF		FXDWG		FLD		FXDL	
	in	mm	in	mm	in	mm	in	mm	in	mm
Length	94.3	2395	94.5	2400	96.3	2445	92.9	2360	92.3	2345
Overall width	36	915	35.0	890	35.2	895	36.6	930	35.6	905
Overall height	48.8	1240	44.7	1135	44.7	1135	54.5	1385	46.6	1185
Wheelbase	64.2	1630	63.8	1620	67.5	1715	62.8	1595	64.2	1630
Road clearance	4.7	120	4.9	125	3.9	100	4.3	110	4.1	105
Seat height**	25.5	648	26.1	663	25.5	648	26.1	663	25.4	660

*Specifications may vary for factory customized vehicles.
**With 180 lb (81.6 kg) rider on seat.

Table 2-2. Capacities

ITEM	FXDB, FXDBC, FXDBP, FLD, FXDWG, FXDL		FXDF	
	U.S.	METRIC	U.S.	METRIC
Fuel tank (total)	4.7 gal	17.8 L	5.0 gal	18.9 L
Oil tank with filter	3.0 qt	2.8 L	3.0 qt	2.8 L
Transmission (approximate)	1.0 qt	0.95 L	1.0 qt	0.95 L
Primary chaincase (approximate)	1.0 qt	0.95 L	1.0 qt	0.95 L
Low fuel warning light on	0.9 gal	3.4 L	0.9 gal	3.4 L

Table 2-3. Weight

ITEM	FXDB, FXDBC*, FXDBP*		FXDF		FXDWG		FLD		FXDL	
	lb	kg	lb	kg	lb	kg	lb	kg	lb	kg
Running weight**	670	304	706	320	683	310	718	326	666	302
Maximum added weight allowed***	415	188	379	172	402	182	452	205	419	190
GVWR	1085	492	1085	492	1085	492	1170	530	1085	492
GAWR front	390	177	390	177	390	177	455	206	390	177
GAWR rear	695	315	695	315	695	315	794	360	695	315

*Specifications may vary for factory customized vehicles.
**The total weight as delivered with all oil/fluids and approximately 90% of fuel.
***The total weight of accessories, cargo, riding gear, passenger and rider must not exceed this weight.

⚠WARNING

Do not exceed the motorcycle's Gross Vehicle Weight Rating (GVWR) or Gross Axle Weight Rating (GAWR). Exceeding these weight ratings can lead to component failure and adversely affect stability, handling and performance, which could result in death or serious injury. (00016f)

- GVWR is the sum of the weight of the motorcycle, accessories, and the maximum weight of the rider, passenger and cargo that can be safely carried.
- GAWR is the maximum amount of weight that can be safely carried on each axle.
- The GVWR and GAWR are shown on the information plate, located on the frame down tube.

NOTES

- *The maximum additional weight allowed on the motorcycle equals the Gross Vehicle Weight Rating (GVWR) minus the running weight. For example, a motorcycle with GVWR of 1200 lbs (544 kg) having a running weight of 800 lbs (363 kg), would allow a maximum of an additional 400 lbs (181 kg) combined weight of the rider, passenger, riding gear, cargo and installed accessories.*
- *For important information regarding tire data and tire inflation, see 1.7 TIRES AND WHEELS.*

Tire Specifications

⚠WARNING

Use only Harley-Davidson specified tires. See a Harley-Davidson dealer. Using non-specified tires can adversely affect stability, handling or braking, which could result in death or serious injury. (00024b)

NOTES

- *ABS equipped motorcycles must always use tires and wheels that are the same as the original equipment. ABS monitors rotational speed of the wheels through individual wheel speed sensors to determine the application of ABS. Changing to different diameter wheels or different size tires can alter the rotational speed. This will upset the system calibration and have an adverse effect on its ability to detect and prevent lockups.*
- *Operating with inflation pressure other than those specified in Table 2-7 can reduce ABS performance.*

Tire sizes are molded on the sidewall. Refer to the tire fitment tables below. Rim size and contour are cast or stamped into the exterior surface of the rim.

Example: T19 x 2.15 MT DOT. "T" indicates that the rim conforms to Tire and Rim Association standards. The "19" is the normal diameter of the rim in inches, measured at the bead seat diameter. The "2.15" is the width of the bead seat measured in inches. "MT" designates the rim contour. "DOT" means that the rim meets Department of Transportation Federal Motor Vehicle Safety Standards.

Table 2-4. Tire Fitment-Tubeless Cast Wheels

WHEEL SIZE & POSITION	RIM SIZE & CONTOUR	RIM VALVE HOLE DIA.	TIRE SIZE
16 in - Front	E16 x 3.00 MT	0.327 in	Dunlop D427F 130/90B16 67H
18 in - Front	T18 x 3.5 MT	0.45 in	Dunlop D402F 130/70B18
19 in - Front	T19 x 2.5 MT	0.327 in	Michelin Scorcher "31" 100/90-19
16 in - Rear	T16 x 5.0 MT	0.333 in	Dunlop D427 180/70B16 77H
17 in - Rear	T17 x 4.5 MT	0.327 in	Michelin Scorcher "31" 160/70-17
17 in - Rear	T17 x 4.5 MT	0.327 in	Dunlop D401 160/70B17

Table 2-5. Tire Fitment-Tube Type Steel-Laced Wheels

WHEEL SIZE & POSITION	RIM SIZE & CONTOUR	TUBE SIZE CENTER VALVE TUBE	TIRE SIZE
19 in - Front	T19 x 2.50 TLA	MJ/MM90-19 or 100/90-19	Michelin Scorcher "31" 100/90-19
21 in - Front	T21 x 2.15 TLA	MH90-21 80/90-21	Michelin Scorcher "31" 80/90-21

Table 2-5. Tire Fitment-Tube Type Steel-Laced Wheels

WHEEL SIZE & POSITION	RIM SIZE & CONTOUR	TUBE SIZE CENTER VALVE TUBE	TIRE SIZE
17 in - Rear (all but FXDWG)	T17 x 4.5 MT	150-160/70-17 or 160/70-17	Michelin Scorcher "31" 160/70-17
17 in - Rear (FXDWG)	T17 x 4.5 MT	180/60B17	Michelin Scorcher "31" 180/60-17

Table 2-6. Tire Fitment - Tube Type Chrome Aluminum Profile Laced Wheels

WHEEL SIZE & POSITION	RIM SIZE & CONTOUR	TUBE SIZE CENTER VALVE TUBE	TIRE SIZE
19 in - Front	T19 x 2.50 MT	MJ/MM90-19 or 100/90-19	Michelin Scorcher "31" 100/90-19
17 in - Rear	T17 x 4.5 MT	150-160/70-17	Michelin Scorcher "31" 160/70-17

Table 2-7. Specified Tires

MODEL	MOUNT	SIZE	SPECIFIED TIRE	PRESSURE (COLD)	
		in		psi	kPa
FXDB, FXDBC, FXDBP, FXDL	Front	19	Michelin Scorcher "31" 100/90B19	30	206
	Rear	17	Michelin Scorcher "31" 160/70B17	40	276
FXDF	Front	16	Dunlop D427F 130/90B16	36	248
	Rear	16	Dunlop D427 180/70B16	40	276
FXDWG	Front	21	Michelin Scorcher "31" 80/90-21	38	262
	Rear	17	Michelin Scorcher "31" 180/60B17	40	276
FLD	Front	18	Dunlop D402F 130/70B18	36	248
	Rear	17	Dunlop D401 160/70B17	40	276

VEHICLE IDENTIFICATION NUMBER

See Figure 2-1. The full 17 digit serial or Vehicle Identification Number (VIN) is stamped on the steering head. In some destinations, a printed VIN label is also affixed to the right front frame downtube.

An abbreviated VIN is stamped on the left side crankcase at the base of the rear cylinder.

NOTE

Always give the full 17-digit Vehicle Identification Number when ordering parts or making any inquiry about your motorcycle.

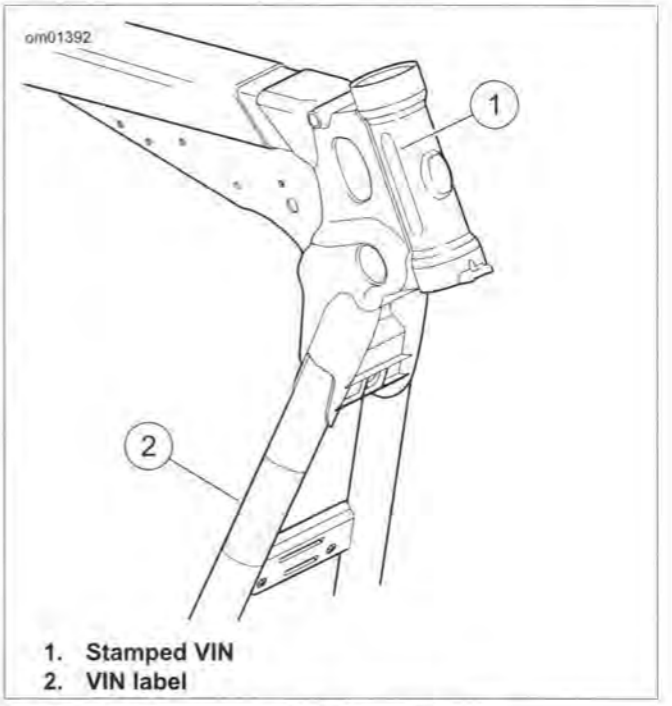

1. **Stamped VIN**
2. **VIN label**

Figure 2-1. VIN Locations

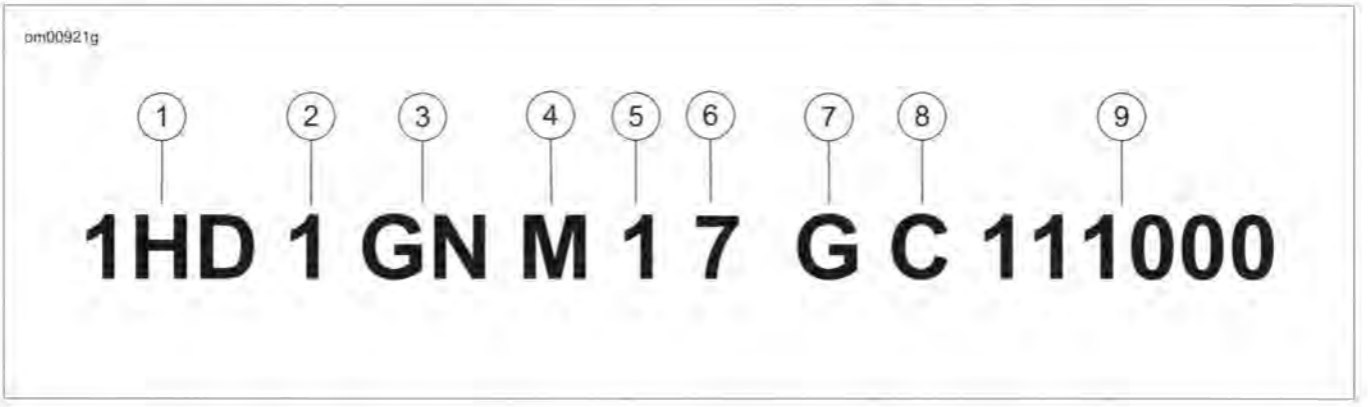

Figure 2-2. Typical Harley-Davidson VIN: 2016 Dyna Models

Table 2-8. Harley-Davidson VIN Breakdown: 2016 Dyna Models

POSITION	DESCRIPTION	POSSIBLE VALUES
1	World manufacturer identifier	1HD=Originally manufactured in the United States 5HD=Originally manufactured in the United States for sale outside of the United States 932=Originally manufactured in Brazil MEG=Originally manufactured in India
2	Motorcycle type	1=Heavyweight motorcycle (901 cm^3 or larger)
3	Model	See VIN model table
4	Engine type	4=Twin Cam 96™, 1585 cm^3 air-cooled, fuel-injected M=Twin Cam 103™, 1690 cm^3 air-cooled, fuel-injected

Table 2-8. Harley-Davidson VIN Breakdown: 2016 Dyna Models

POSITION	DESCRIPTION	POSSIBLE VALUES	
5	Calibration/configuration, introduction	**Normal Introduction** 1=Domestic (DOM) 3=California (CAL) A=Canada (CAN) C=HDI E=Japan (JPN) G=Australia (AUS) J=Brazil (BRZ) L=Asia Pacific (APC) N=India (IND)	**Mid-year or Special Introduction** 2, 4=Domestic (DOM) 5, 6=California (CAL) B=Canada (CAN) D=HDI F=Japan (JPN) H=Australia (AUS) K=Brazil (BRZ) M=Asia Pacific (APC) P=India (IND)
6	VIN check digit	Can be 0-9 or X	
7	Model year	G=2016	
8	Assembly plant	C=Kansas City, MO U.S.A. D=H-D Brazil-Manaus, Brazil (CKD) N=Haryana India (Bawal District Rewari)	
9	Sequential number	Varies	

Table 2-9. VIN Model Codes: 2016 Dyna Models

CODE	MODEL	CODE	MODEL
GN	FXDL Dyna® Low Rider®	GZ	FLD Dyna® Switchback™
GP	FXDWG Dyna® Wide Glide®	VA	FXDBP Dyna® Street Bob® (factory custom)
GX	FXDB Dyna® Street Bob®	VD	FXDBC Dyna® Street Bob® Limited
GY	FXDF Dyna® Fat Bob®		

REMOVAL

1. Raise the front end of the motorcycle.
2. Inspect wheel bearing end play. Service bearings if necessary. See 2.6 SEALED WHEEL BEARINGS.
3. See Figure 2-3. Remove mounting bolts (1, 2). Remove brake caliper. Support caliper using a rubber bungee cord.

NOTE

Do not operate front brake lever with the front wheel removed or the caliper piston can be forced out of piston bore. Reseating the piston requires disassembly of the caliper.

4. Remove axle nut and washer (3).
5. See Figure 2-4 or Figure 2-5. Loosen the slider cap screws and washers (2) or pinch bolt (2). Pull the axle (1) free.
6. Remove wheel from forks.

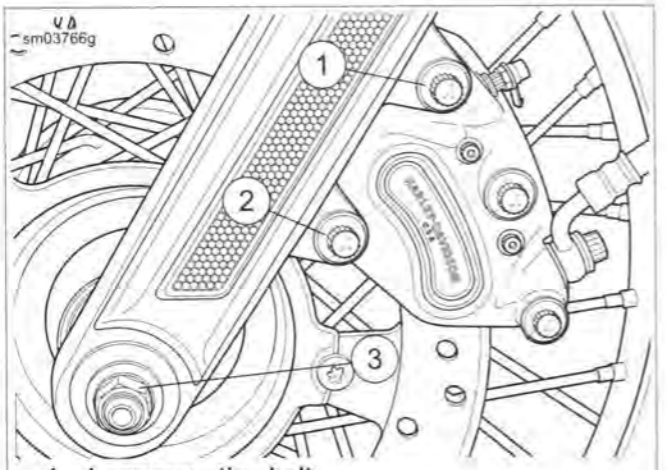

1. **Long mounting bolt**
2. **Short mounting bolt**
3. **Axle nut and washer**

Figure 2-3. Front Caliper and Axle Mounting (Left Side)

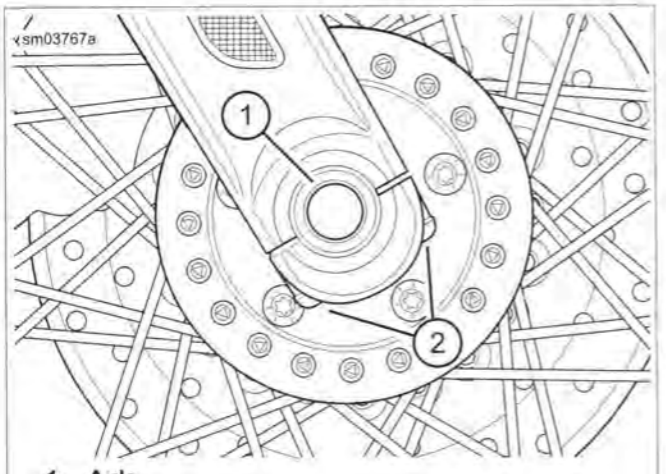

1. **Axle**
2. **Slider cap screws and washers**

Figure 2-4. Front Wheel Mounting: All but FLD (Right Side)

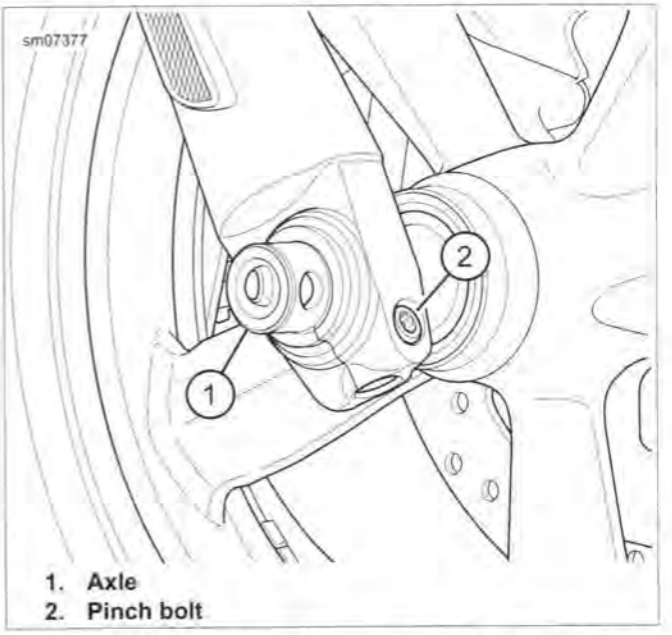

1. **Axle**
2. **Pinch bolt**

Figure 2-5. Front Wheel Mounting: FLD (Right Side)

DISASSEMBLY

NOTES

- *To service tire or valve stem assembly, see 2.17 TIRES.*
- *If motorcycle has ABS brakes, see 2.15 ABS MODULE (EHCU).*
- *Cast wheels do not use hub caps no matter the model.*

Cast Wheel

1. See Figure 2-6. Remove right spacer (2) and left spacer (10) or wheel speed sensor (13).
2. If necessary, remove brake disc (6). On left side of wheel, remove five screws (15) to detach brake disc (6). Discard screws.

Cast Wheel, Dual Brakes

1. See Figure 2-7. Remove right spacer (2) and left spacer (10) or wheel speed sensor (13).
2. If necessary, remove brake discs. Remove five screws (15) to detach each brake disc. Discard screws.

Laced Wheel

1. See Figure 2-8. Remove right bearing spacer (2) and left bearing spacer (10) or wheel speed sensor (13). If necessary, remove brake disc(s).
2. See Figure 2-9. On left side of wheel, remove five screws (15) to detach brake disc (6). Discard screws.

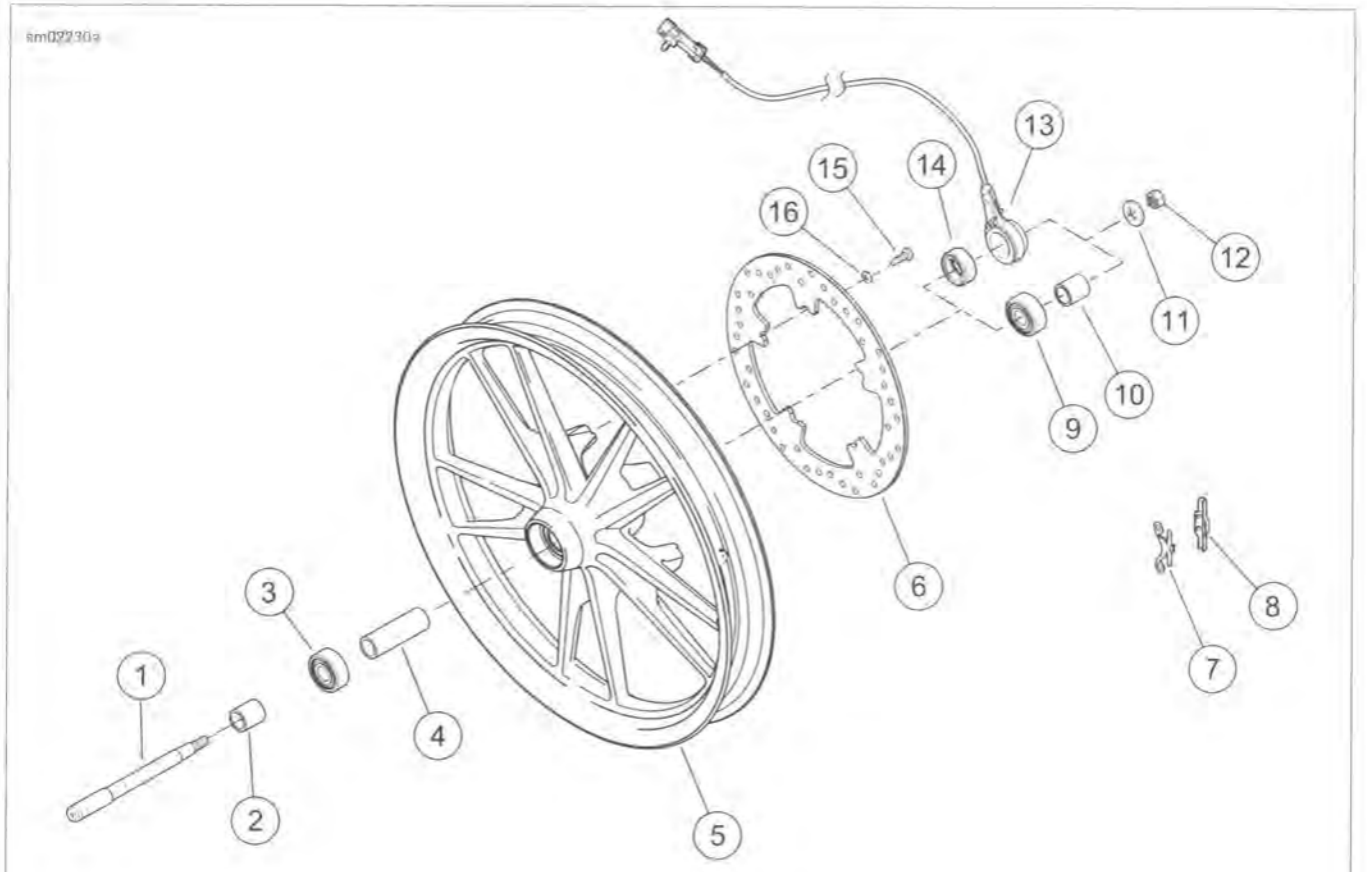

1. Axle
2. Right bearing spacer
3. Right bearing
4. Sleeve
5. Cast wheel
6. Brake disc
7. Clip bracket (ABS)
8. Cable clip (ABS)
9. Left bearing (non-ABS)
10. Left bearing spacer (non-ABS)
11. Washer
12. Axle nut
13. Wheel speed sensor (ABS)
14. Encoder bearing (ABS)
15. Screw (5)
16. Washer (5)

Figure 2-6. Cast Front Wheel

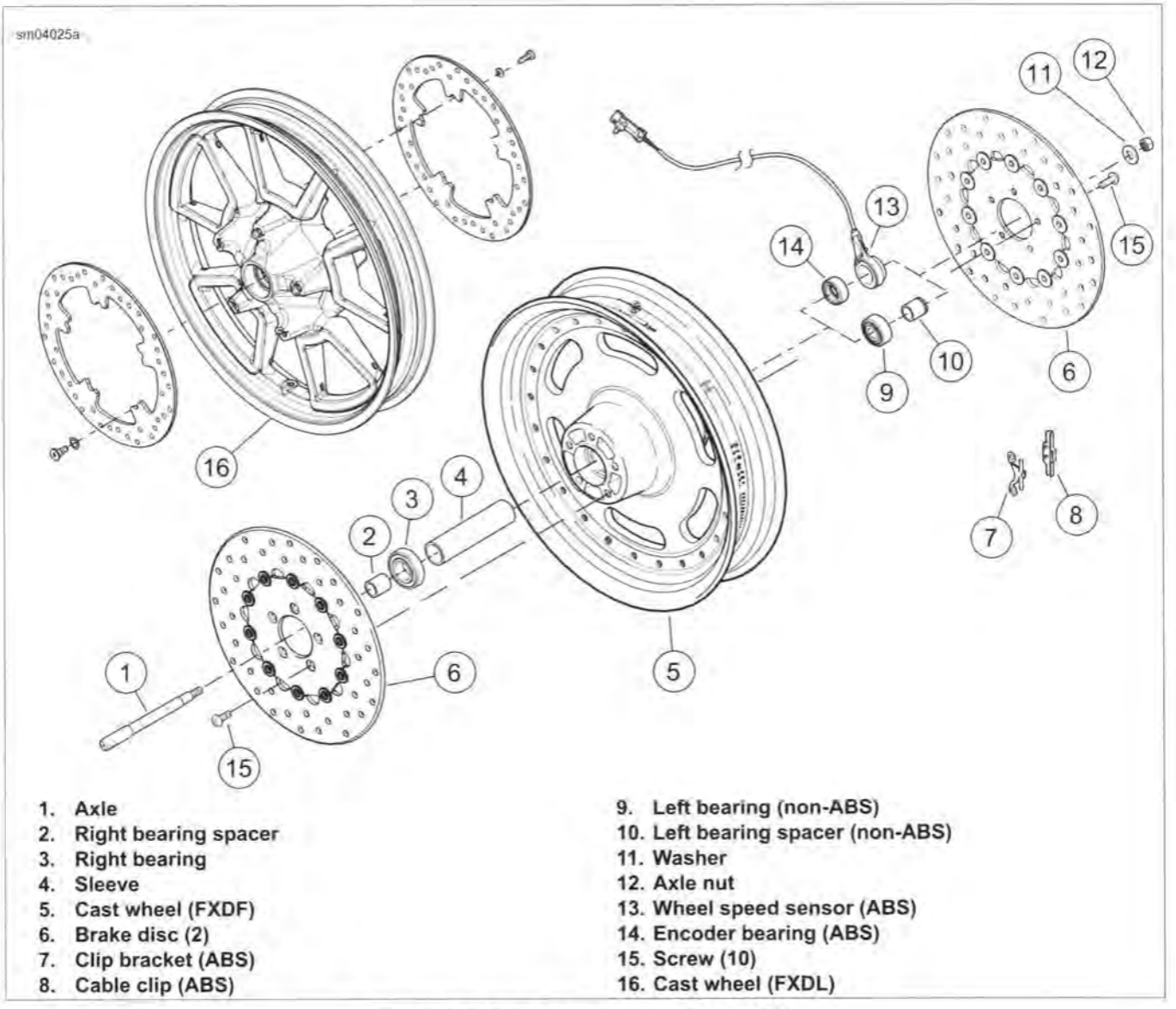

1. Axle
2. Right bearing spacer
3. Right bearing
4. Sleeve
5. Cast wheel (FXDF)
6. Brake disc (2)
7. Clip bracket (ABS)
8. Cable clip (ABS)
9. Left bearing (non-ABS)
10. Left bearing spacer (non-ABS)
11. Washer
12. Axle nut
13. Wheel speed sensor (ABS)
14. Encoder bearing (ABS)
15. Screw (10)
16. Cast wheel (FXDL)

Figure 2-7. Cast Front Wheel (FXDF, FXDL)

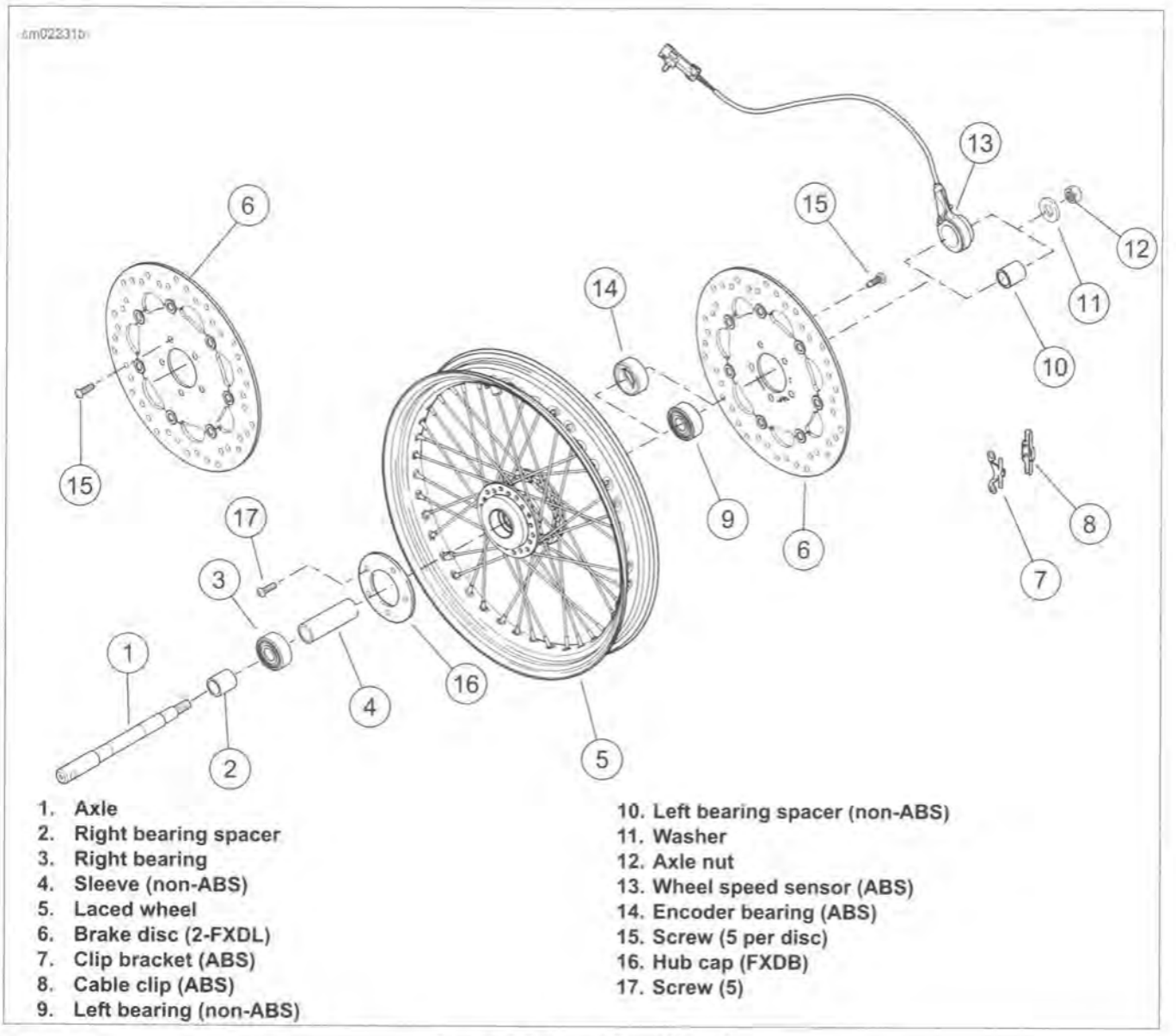

1. Axle
2. Right bearing spacer
3. Right bearing
4. Sleeve (non-ABS)
5. Laced wheel
6. Brake disc (2-FXDL)
7. Clip bracket (ABS)
8. Cable clip (ABS)
9. Left bearing (non-ABS)
10. Left bearing spacer (non-ABS)
11. Washer
12. Axle nut
13. Wheel speed sensor (ABS)
14. Encoder bearing (ABS)
15. Screw (5 per disc)
16. Hub cap (FXDB)
17. Screw (5)

Figure 2-8. Laced Front Wheel

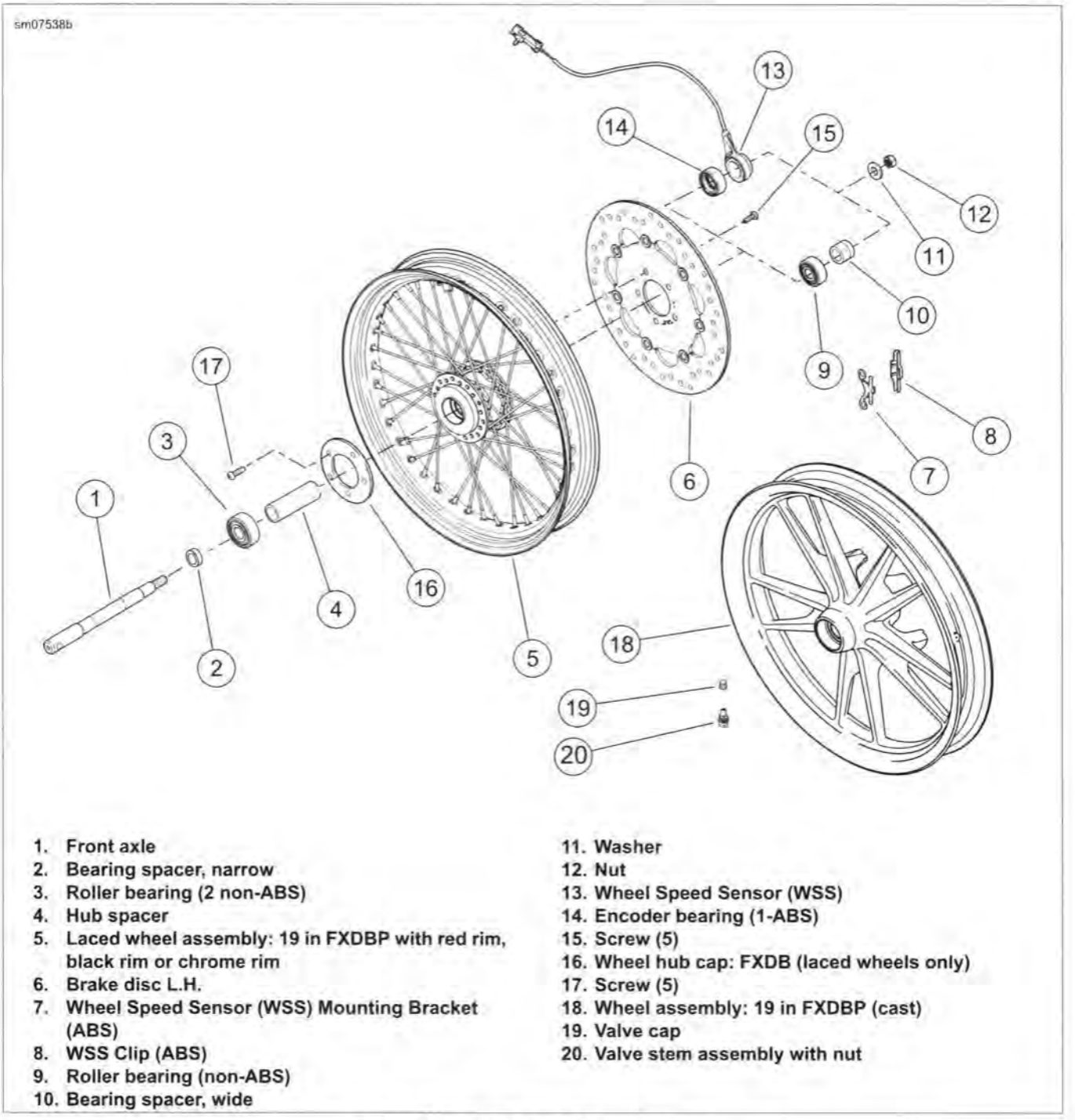

1. Front axle
2. Bearing spacer, narrow
3. Roller bearing (2 non-ABS)
4. Hub spacer
5. Laced wheel assembly: 19 in FXDBP with red rim, black rim or chrome rim
6. Brake disc L.H.
7. Wheel Speed Sensor (WSS) Mounting Bracket (ABS)
8. WSS Clip (ABS)
9. Roller bearing (non-ABS)
10. Bearing spacer, wide
11. Washer
12. Nut
13. Wheel Speed Sensor (WSS)
14. Encoder bearing (1-ABS)
15. Screw (5)
16. Wheel hub cap: FXDB (laced wheels only)
17. Screw (5)
18. Wheel assembly: 19 in FXDBP (cast)
19. Valve cap
20. Valve stem assembly with nut

Figure 2-9. FXDBP Front Wheel Options

CLEANING AND INSPECTION

1. Inspect all parts for damage or excessive wear.
2. Inspect brake disc and pads. See 1.15 BRAKE PADS AND DISCS.

ASSEMBLY

FASTENER	TORQUE VALUE	
Brake disc screws: front wheel	16-24 ft-lbs	21.7-32.5 Nm
Brake disc screws: front wheel	16-24 ft-lbs	21.7-32.5 Nm
Brake disc screws: front wheel	16-24 ft-lbs	21.7-32.5 Nm
Brake disc screws: front wheel	16-24 ft-lbs	21.7-32.5 Nm

⚠WARNING

Be sure that brake fluid or other lubricants do not contact brake pads or discs. Such contact can adversely affect braking ability, which could cause loss of control, resulting in death or serious injury. (00290a)

Cast Wheel

1. See Figure 2-6. If necessary, install brake disc (6). Verify that brake disc is clean.
2. On left side of wheel, install five **new** screws (15) and washers (16) to attach brake disc (6). Tighten to 16-24 ft-lbs (21.7-32.5 Nm).
3. **FXDF and FXDL:** Install second disc on right side of wheel. Tighten to 16-24 ft-lbs (21.7-32.5 Nm).
4. Install right bearing spacer (2) and wheel speed sensor (13) or left bearing spacer (10) with largest chamfered end facing away from wheel.
5. Verify that wheel and tire are true. See 2.8 CHECKING AND TRUING WHEELS.

Laced Wheel

1. If hub and rim were disassembled, see 2.7 WHEEL LACING.
2. See Figure 2-8. If necessary, install brake disc (6). Verify that brake disc is clean.
3. On left side of wheel, install **new** screws (15) to attach brake disc (6). Tighten to 16-24 ft-lbs (21.7-32.5 Nm).
4. **FXDL:** Install second disc on right side of wheel. Tighten to 16-24 ft-lbs (21.7-32.5 Nm).
5. Install right bearing spacer (2) and wheel speed sensor (13) or left bearing spacer (10) with largest chamfered end facing away from wheel.
6. Verify that wheel and tire are true. See 2.8 CHECKING AND TRUING WHEELS.

INSTALLATION

FASTENER	TORQUE VALUE	
Axle nut, front	70-75 ft-lbs	95.0-101.6 Nm
Axle cap fastener, rear: all but FLD	132-180 **in-lbs**	14.9-20.3 Nm
Axle cap fastener, front: all but FLD	132-180 **in-lbs**	14.9-20.3 Nm
Axle pinch bolt, front: FLD	18-22 ft-lbs	24.4-29.9 Nm
Bottom brake caliper mounting bolt, front	28-38 ft-lbs	38.0-51.5 Nm
Top brake caliper mounting bolt, front	28-38 ft-lbs	38.0-51.5 Nm

1. Apply a light coat of ANTI-SEIZE LUBRICANT to axle, bearing bores and spacer sleeve bore.

NOTE

***ABS models:** the WSS is on the left side of the vehicle.*

2. See Figure 2-10. Place wheel into front fork. Install axle. Verify that axle spacers (1) on right and left side are properly installed.
3. See Figure 2-11. Install slider cap with cast-in spacer (1) toward the rear of the vehicle on all models except FLD. Leave fasteners loose.
4. **ABS models:** See Figure 2-13. Rotate front wheel speed sensor counterclockwise until index pin contacts shoulder on left fork slider.
5. Install the washer, lockwasher and axle nut. While holding axle stationary with a steel rod or screwdriver inserted through hole on right end of axle, tighten axle nut to 70-75 ft-lbs (95.0-101.6 Nm).

NOTE

If the axle cap fasteners are properly tightened, there will be no gap at the rear of the axle cap.

6. Secure axle to front fork in the following manner:
   a. **All but FLD:** See Figure 2-11. Tighten rear axle cap fastener (2) to 132-180 **in-lbs** (14.9-20.3 Nm). Then tighten front axle cap fastener (3) to 132-180 **in-lbs** (14.9-20.3 Nm).
   b. **FLD:** See Figure 2-12. Tighten front axle pinch bolt to 18-22 ft-lbs (24.4-29.9 Nm).

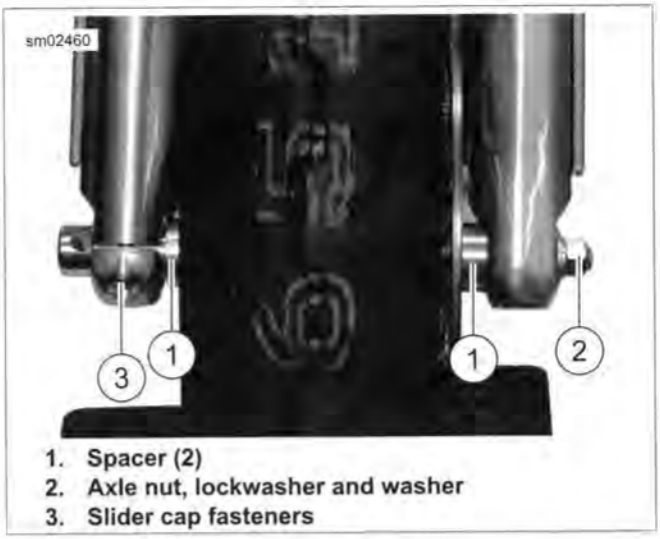

1. **Spacer (2)**
2. **Axle nut, lockwasher and washer**
3. **Slider cap fasteners**

Figure 2-10. Front Axle Assembly

7. See Figure 2-3. Install the brake caliper to the fork leg.
   a. Loosely install long mounting bolt (1) (metric) into top hole on fork leg.
   b. Install short mounting bolt (2) (metric) into bottom hole on fork leg. Tighten bottom mounting bolt to 28-38 ft-lbs (38.0-51.5 Nm).
   c. Final tighten the top mounting bolt to 28-38 ft-lbs (38.0-51.5 Nm).
8. **Dual caliper vehicles:** Repeat steps for the opposite side.

⚠WARNING

Whenever a wheel is installed and before moving the motorcycle, pump brakes to build brake system pressure. Insufficient pressure can adversely affect brake performance, which could result in death or serious injury. (00284a)

9. Pump brakes to move pistons out until brake pads contact rotor. Verify piston location against pads.

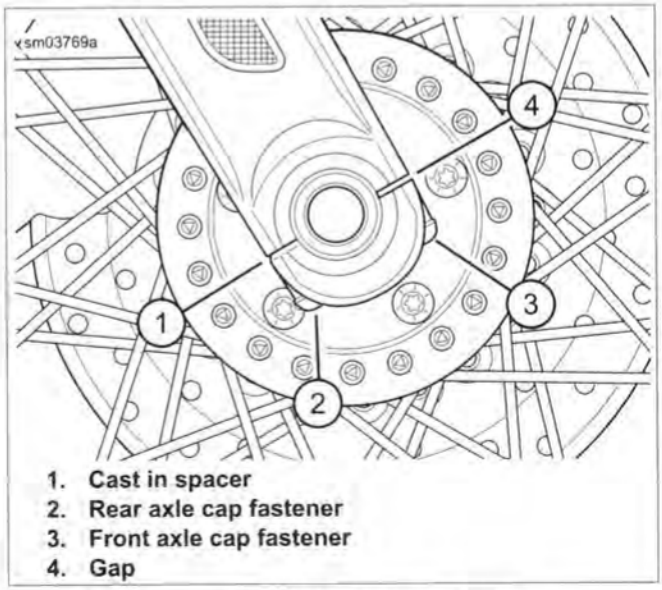

1. **Cast in spacer**
2. **Rear axle cap fastener**
3. **Front axle cap fastener**
4. **Gap**

Figure 2-11. Axle Cap Installation

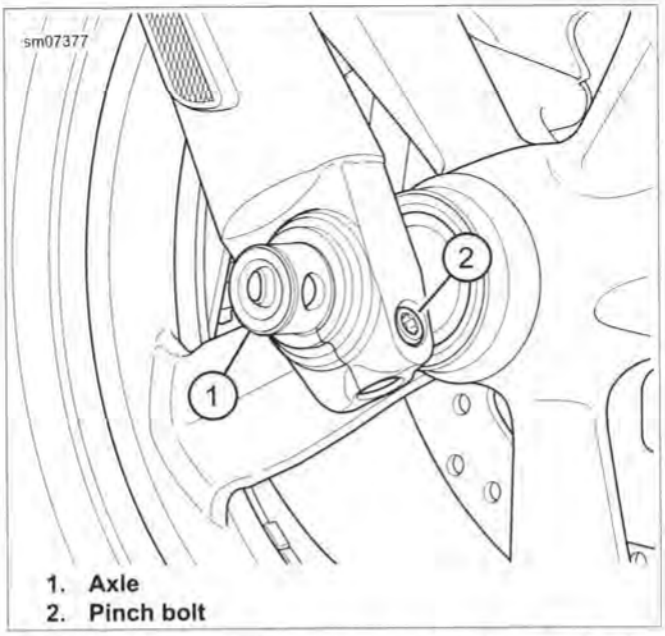

1. **Axle**
2. **Pinch bolt**

Figure 2-12. Front Wheel Mounting: FLD (Right Side)



Figure 2-13. Front Wheel Speed Sensor Index Pin (ABS Models)

REMOVAL

NOTE

***Do not** remove sprocket or brake disc unless they are damaged and must be replaced.*

1. Raise the rear of the motorcycle.
2. Remove three screws to detach the debris deflector from rear fork. See 2.20 BELT GUARD AND DEBRIS DEFLECTOR.
3. Inspect wheel bearing end play and service bearings if necessary. See 2.6 SEALED WHEEL BEARINGS.
4. See Figure 2-14. Remove retaining ring (3), axle nut (2), and washer from left side of axle.
5. Loosen adjuster on each side several turns to remove belt tension.
6. See Figure 2-15. Loosen, but do not remove, left and right upper mounting nuts (1).
7. Remove left and right lower shock mounting screws (2).
8. Raise rear fork and reposition shocks to clear rear fork mounts. (Rear fork must be raised to allow axle to clear muffler when removed.)
9. Remove belt guard. See 2.20 BELT GUARD AND DEBRIS DEFLECTOR.

NOTE

Caliper to rear wheel clearance is minimal. To prevent damage to surfaces, be careful when removing caliper from rear fork.

10. Remove caliper assembly from caliper mount. Support caliper with an elastic cord. See 2.13 REAR BRAKE CALIPER.
11. Remove axle from wheel.
12. Move wheel forward and remove belt.
13. Pull wheel and belt sprocket from rear fork.

NOTE

Do not operate rear brake pedal with the rear wheel removed or the caliper piston can be forced out of piston bores. Reseating the piston requires disassembly of the caliper.

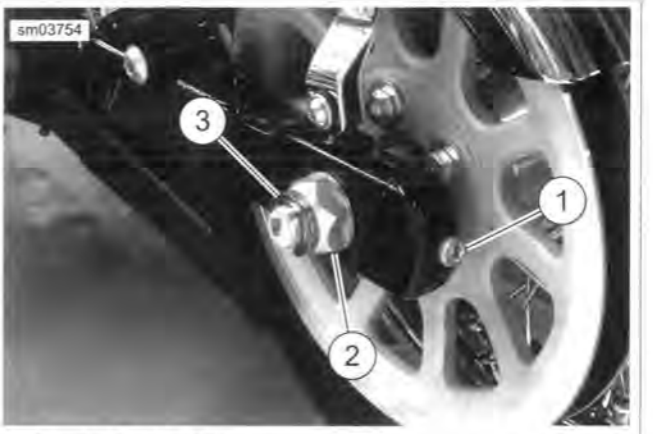

1. **Axle adjuster**
2. **Axle nut**
3. **Retaining ring**

Figure 2-14. Axle Adjusters (Left Side Shown)

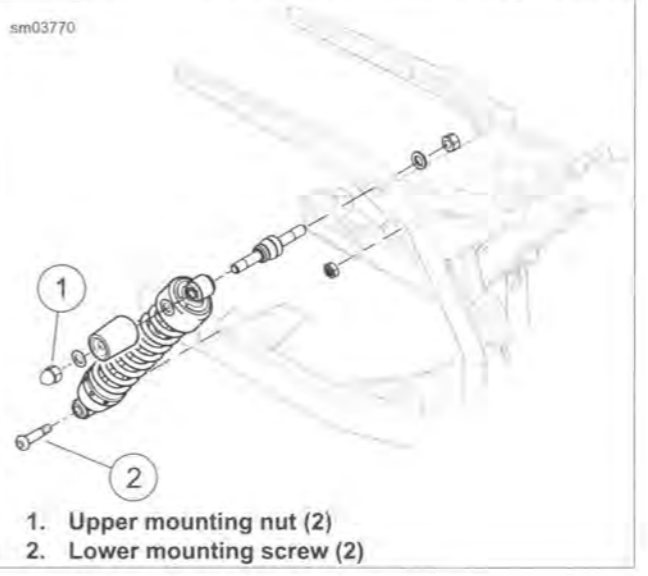

1. **Upper mounting nut (2)**
2. **Lower mounting screw (2)**

Figure 2-15. Rear Shock Mount

DISASSEMBLY

NOTE

Except for the sprocket cover, component parts for cast and laced rear wheels are identical.

1. See Figure 2-16. Remove right bearing spacer (2) and left bearing spacer (10) or wheel speed sensor (17).
2. If necessary, remove brake disc and/or rear sprocket.
   a. On left side of wheel, remove five screws (14) and washers (15) to detach rear sprocket (9). Discard screws.
   b. On right side of wheel, remove five screws (3) to remove rear brake disc (4). Discard screws.

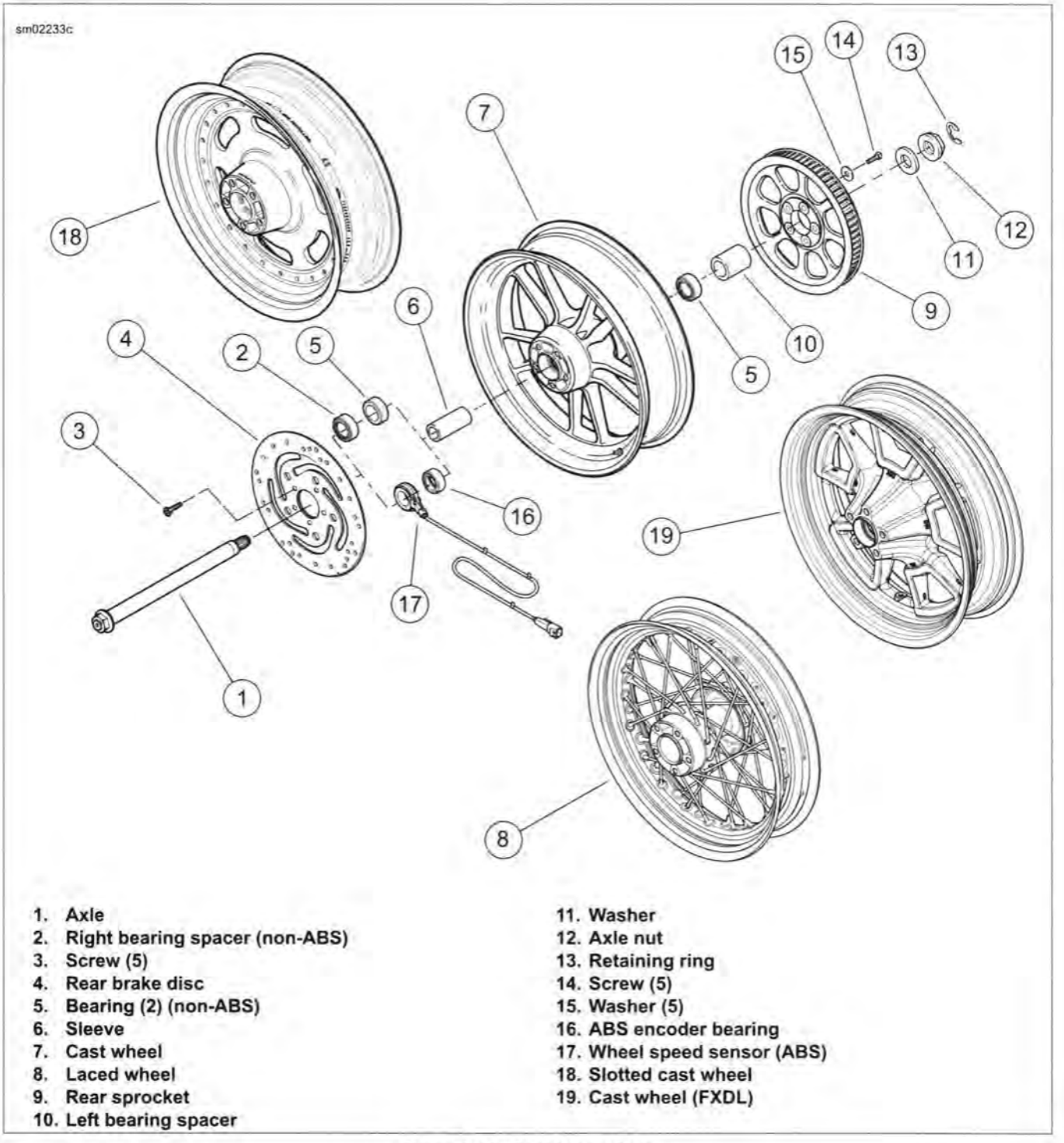

1. **Axle**
2. **Right bearing spacer (non-ABS)**
3. **Screw (5)**
4. **Rear brake disc**
5. **Bearing (2) (non-ABS)**
6. **Sleeve**
7. **Cast wheel**
8. **Laced wheel**
9. **Rear sprocket**
10. **Left bearing spacer**
11. **Washer**
12. **Axle nut**
13. **Retaining ring**
14. **Screw (5)**
15. **Washer (5)**
16. **ABS encoder bearing**
17. **Wheel speed sensor (ABS)**
18. **Slotted cast wheel**
19. **Cast wheel (FXDL)**

Figure 2-16. Rear Wheel/Hub

CLEANING AND INSPECTION

1. Inspect all parts for damage or excessive wear.
2. Inspect brake disc and pads. See 1.15 BRAKE PADS AND DISCS.
3. Inspect drive belt and sprocket. See 1.11 DRIVE BELT AND SPROCKETS.

ASSEMBLY

FASTENER	TORQUE VALUE	
Brake disc screws, rear	30-45 ft-lbs	40.7-61.0 Nm
Rear sprocket screws-initial torque	50 ft-lbs	67.8 Nm
Rear sprocket screws-final torque	67-73 ft-lbs	90.9-99.0 Nm

NOTICE

Do not re-use sprocket mounting screws. Re-using sprocket mounting screws can result in torque loss and damage to the sprocket and/or belt assembly. (00480b)

1. If hub and rim were disassembled, see 2.7 WHEEL LACING.
2. See Figure 2-16. Using **new** screws (3), install rear brake disc (4) on wheel, if removed.
3. Tighten screws to 30-45 ft-lbs (40.7-61.0 Nm).
4. Using **new** screws (14) and washers (15), install rear sprocket (9), if removed.
5. Tighten screws to 50 ft-lbs (67.8 Nm). Then loosen screws 180 degrees.
6. Final tighten screws to 67-73 ft-lbs (90.9-99.0 Nm).
7. Check that wheel and tire are true. see 2.8 CHECKING AND TRUING WHEELS.

INSTALLATION

FASTENER	TORQUE VALUE	
Shock mounting fastener, upper	30-40 ft-lbs	40.7-54.2 Nm
Shock mounting fastener, lower	30-40 ft-lbs	40.7-54.2 Nm
Rear axle nut	95-105 ft-lbs	128.8-142.4 Nm
Debris deflector screws	40-60 **in-lbs**	4.5-6.8 Nm

1. Apply a light coat of ANTI-SEIZE LUBRICANT to axle, bearing bores and spacer sleeve bore.
2. Roll wheel into rear fork and position brake caliper mount between wheel and fork. Verify that notch in caliper mount is engaged with tab on fork.
3. Pull drive belt over sprockets. Make sure that brake disc is centered between brake pads.

NOTE

***ABS models:** See 2.15 ABS MODULE (EHCU) and Figure 2-17 for proper wheel speed sensor orientation.*

4. Install axle:
   a. From right side, carefully insert axle through right rear fork, spacer (non-ABS) or wheel speed sensor (ABS), and rear caliper bracket.
   b. Continue sliding axle through wheel hub sleeve, rear sprocket, left spacer and left rear fork.

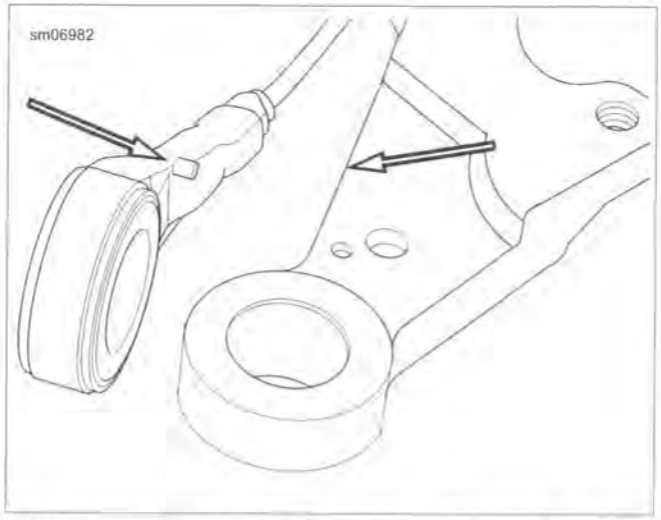

Figure 2-17. Rear Wheel Speed Sensor Index Pin (ABS Models)

NOTE

Caliper to rear wheel clearance is minimal. To prevent damage to surfaces, be careful when installing caliper.

5. Install caliper assembly to rear fork. See 2.13 REAR BRAKE CALIPER.
6. Install brake pads and retaining pin. See 1.15 BRAKE PADS AND DISCS.
7. See Figure 2-15. Attach rear shocks.
   a. Apply two or three drops of LOCTITE 243 MEDIUM STRENGTH THREADLOCKER AND SEALANT (blue) to threads of lower shock mounting screws (2).
   b. Lift rear fork. Install both shock absorbers with lower shock mounting screws (2).
   c. Tighten upper shock nuts to 30-40 ft-lbs (40.7-54.2 Nm).
   d. Tighten lower shock fasteners to 30-40 ft-lbs (40.7-54.2 Nm).

⚠WARNING

Check wheel bearing end play after tightening axle nut to specified torque. Excessive end play can adversely affect stability and handling and can cause loss of control, which could result in death or serious injury. (00285b)

⚠WARNING

Do not exceed specified torque when tightening axle nut. Exceeding torque can cause wheel bearings to seize during vehicle operation, which could result in death or serious injury. (00408e)

8. See Figure 2-14. Install washer and axle nut (2) on left side of axle.
   a. Tighten axle nut to 95-105 ft-lbs (128.8-142.4 Nm).
   b. Install retaining ring (3).

9. Install debris deflector using three screws. Tighten to 40-60 **in-lbs** (4.5-6.8 Nm). Install belt guard. See 2.20 BELT GUARD AND DEBRIS DEFLECTOR.

⚠WARNING

Whenever a wheel is installed and before moving the motorcycle, pump brakes to build brake system pressure. Insufficient pressure can adversely affect brake performance, which could result in death or serious injury. (00284a)

10. Pump brakes to move pistons out until brake pads contact rotor. Verify piston location against pads.
11. Verify correct axle alignment. See 2.9 VEHICLE ALIGNMENT.
12. Adjust drive belt deflection. See 1.11 DRIVE BELT AND SPROCKETS.

INSPECT

NOTICE

When lifting a motorcycle using a jack, be sure jack contacts both lower frame tubes where down tubes and lower frame tubes converge. Never lift by jacking on cross-members, oil pan, mounting brackets, components or housings. Failure to comply can cause serious damage resulting in the need to perform major repair work. (00586d)

1. Raise the wheel.
2. Turn the wheel through several rotations.

NOTES

- *Keep wheel speed sensor and ABS encoder bearing away from magnetic fields.*
- *When checking end play, pull or push on the wheel not the brake disc. Pulling or pushing brake disc can distort disc causing a false end play reading.*

3. Check end play:
   a. See Figure 2-18. Mount a magnetic base dial indicator to the brake disc. Set the indicator contact point on the end of the axle.
   b. Firmly push the wheel to one side. Zero the dial indicator gauge.
   c. Firmly pull the wheel back. Note the reading of the dial indicator.
   d. Repeat the procedure to verify the reading.
   e. Replace the bearings if end play exceeds 0.002 in (0.051 mm) or if there is drag, rough rotation or abnormal noise.

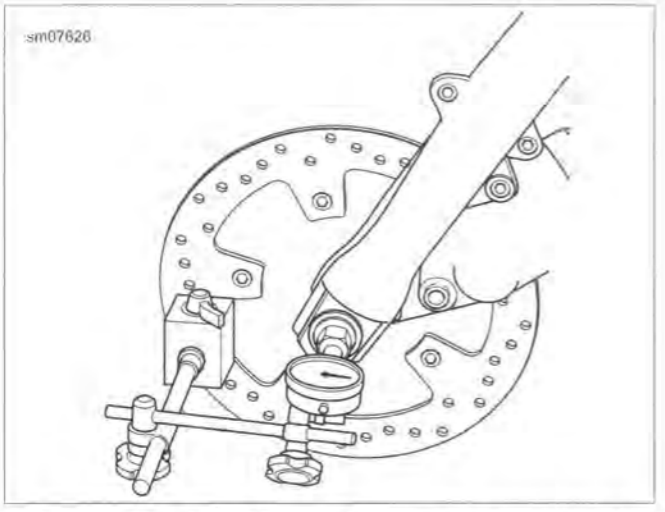

Figure 2-18. Wheel Bearing Inspection (Front Wheel Shown)

REMOVAL

PART NUMBER	TOOL NAME
HD-44060-10A	COLLET
HD-44060-11A	COLLET
HD-44060C	WHEEL BEARING REMOVER/INSTALLER

1. Remove wheel. See 2.4 FRONT WHEEL or 2.5 REAR WHEEL.
2. On models with single front brake disc, remove hub plate from wheel on opposite side of front brake disc.
3. If servicing rear wheel, remove the sprocket.

NOTES

- *On front wheel, remove the primary brake disc side (left) bearing first.*
- *See Figure 2-19. Some wheel hubs may not provide adequate support for the puller bridge. In these cases center a used brake disc over the hub to support the puller bridge while removing the bearings.*

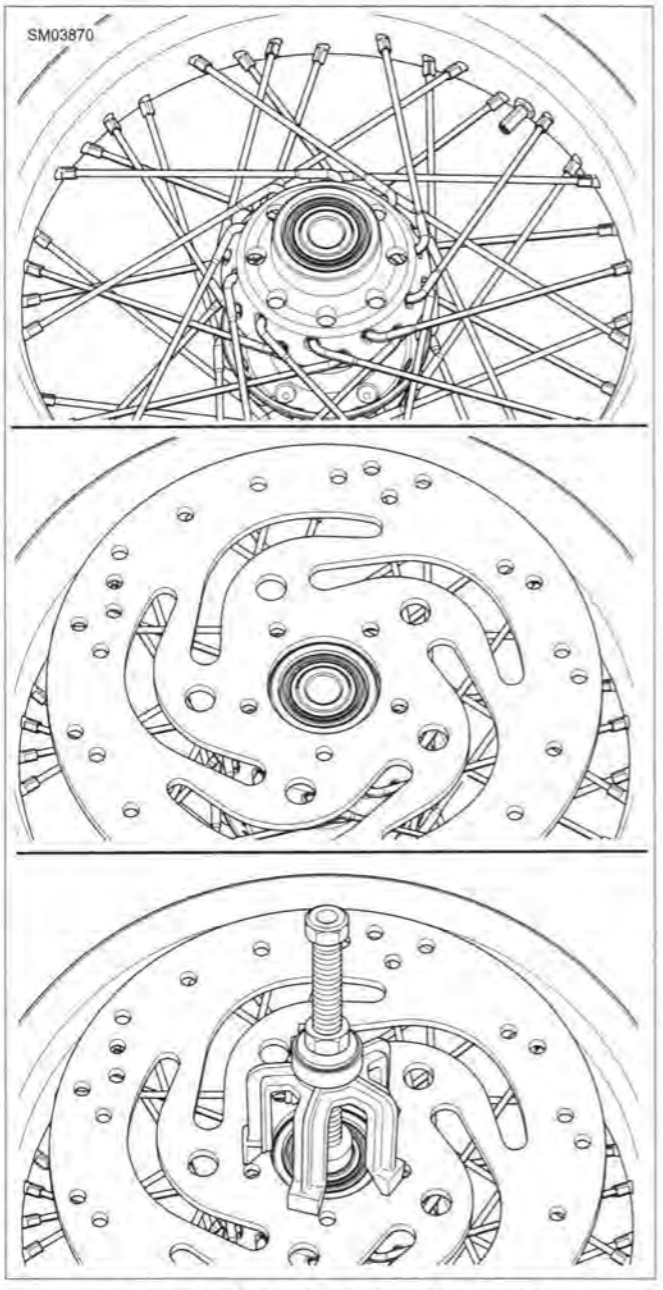

Figure 2-19. Brake Disk as Puller Aid

4. See Figure 2-20. Sparingly apply graphite lubricant to threads of forcing screw (1) of WHEEL BEARING REMOVER/INSTALLER (Part No. HD-44060C).
5. Install nut (2), washer (3) and bearing (4) on forcing screw. Insert assembly through hole in bridge (5).

NOTE

Standard and ABS bearings require different collets. Choose the appropriate one to remove the bearing.

- ***Non-ABS models:*** *Use COLLET (Part No. HD-44060-10A).*
- ***ABS models:*** *Use COLLET (Part No. HD-44060-11A).*

6. Place steel ball inside collet. Install collet at end of forcing screw.

NOTE

See Figure 2-21. If the brake disc does not mount to the wheel hub, similar to the rear wheel, the hub may not provide adequate support for the puller bridge. In this case, place a spare brake disc having the small center hole over the end of the hub to support the puller bridge.

7. Insert collet into bearing. Hold forcing screw (1) and turn hex on collet (6) until lip makes firm contact with inside edge of bearing.
8. See Figure 2-22. Turn hex nut (2) until bearing is free. Discard bearing.
9. Remove spacer sleeve from hub.
10. Repeat steps to remove remaining bearing from opposite side of wheel.

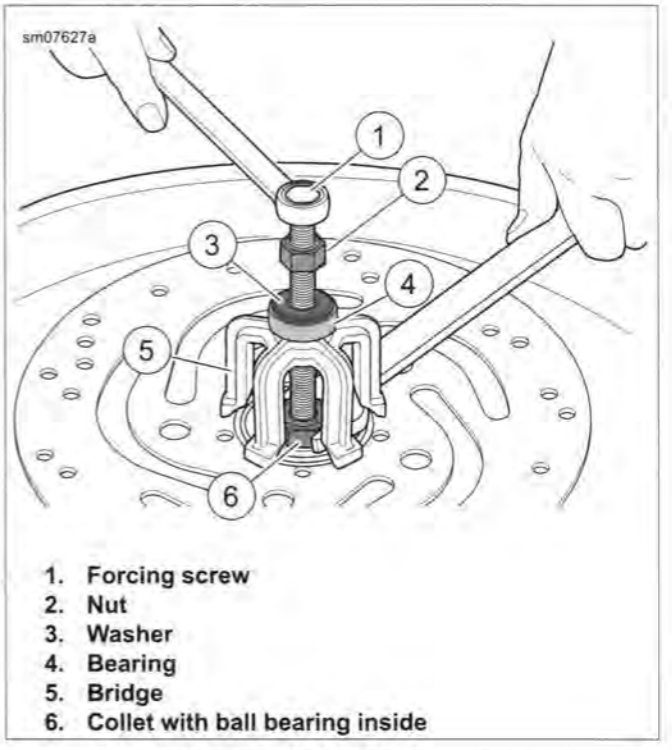

1. **Forcing screw**
2. **Nut**
3. **Washer**
4. **Bearing**
5. **Bridge**
6. **Collet with ball bearing inside**

Figure 2-20. Wheel Bearing Removal Tool

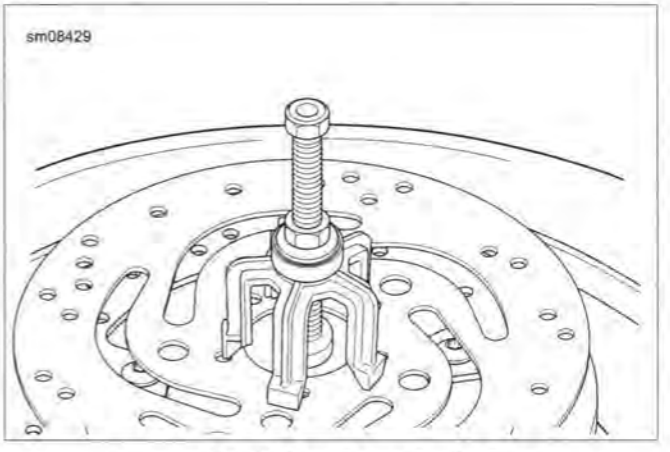

Figure 2-21. Using Scrap Brake Disc

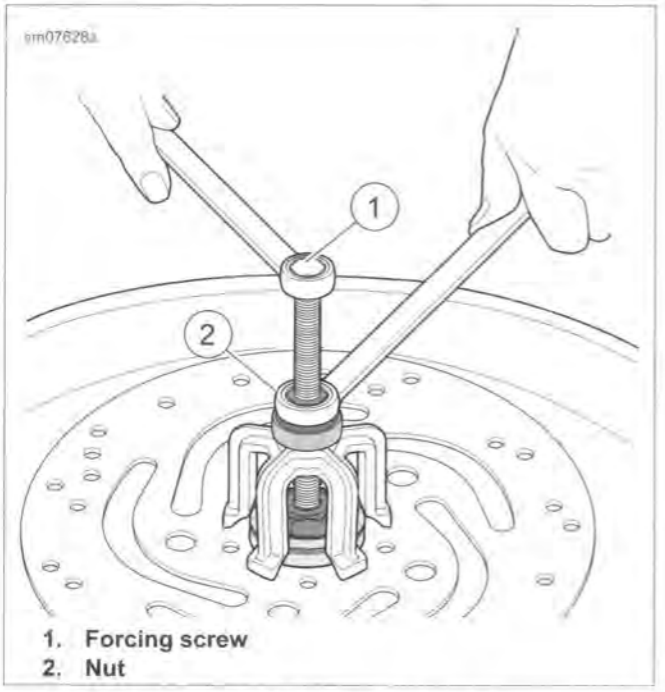

1. **Forcing screw**
2. **Nut**

Figure 2-22. Removing Bearing

INSTALLATION

PART NUMBER	TOOL NAME
HD-44060-8	1 INCH INSTALLER
HD-44060C	WHEEL BEARING REMOVER/INSTALLER

NOTES

- *Keep ABS encoder bearings away from magnetic fields (such as magnetic parts trays, magnetic base dial indicators, alternator rotors) or damage occurs.*
- *Always replace both bearings as a complete set.*

1. See Figure 2-23. Sparingly apply graphite lubricant to threads of threaded rod (1) of WHEEL BEARING REMOVER/INSTALLER (Part No. HD-44060C).

NOTES

- *Primary side is the brake rotor side of the wheel. For dual disc front wheels, the primary side is the left side of the wheel.*
- *Install first bearing on primary brake disc side of hub, which is identified by having one or two grooves cut into the disc mounting surface.*
- *Install ABS bearing on the primary brake disc side of the wheel.*

2. Install support plate (2) onto rod (1) and slide rod through hub from the side opposite the primary brake side.

NOTE

Bearing orientation is important.

3. See Figure 2-24. Place the bearing on the rod.
   a. Standard bearing with the lettered side against installer (5).
   b. ABS bearing with red side inward and tan side against installer (5).
4. Place 1 INCH INSTALLER (Part No. HD-44060-8) (5), bearing (4), flat washer (3) and nut (2) onto rod.
5. Turn nut (2) until bearing is fully seated.
6. Install spacer sleeve in hub.
7. Reverse tool then install opposite side bearing until bearing contacts spacer sleeve.
8. If rear wheel was serviced, install the sprocket.
9. On models with single front brake disc, install hub plate to wheel on opposite side of front brake disc.
10. Install wheel. See 2.4 FRONT WHEEL or 2.5 REAR WHEEL.

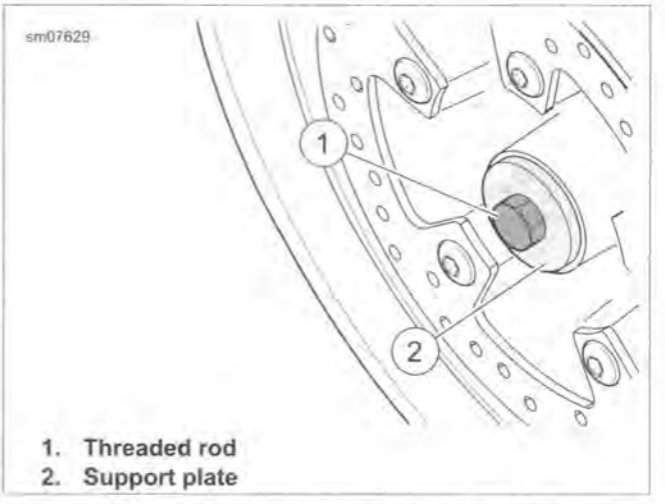

1. **Threaded rod**
2. **Support plate**

Figure 2-23. Assembling Installation Tool

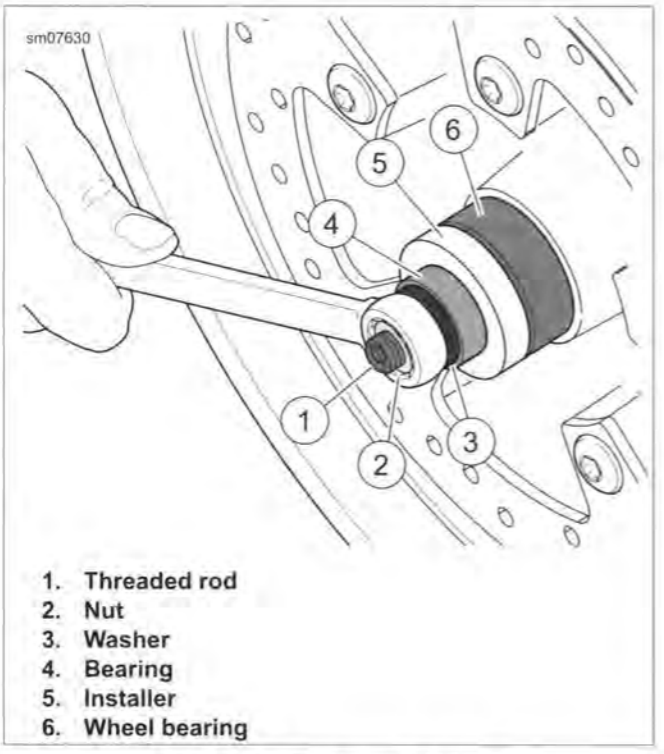

1. Threaded rod
2. Nut
3. Washer
4. Bearing
5. Installer
6. Wheel bearing

Figure 2-24. Installing Bearings

WHEEL LACING: ANGLE FLANGE HUB

NOTES

- *See Figure 2-25. The following procedure is valid for wheels that use an angle flange hub regardless of rim style or diameter.*
- *Disc mounting surface for primary brake side of hub has one or two grooves.*

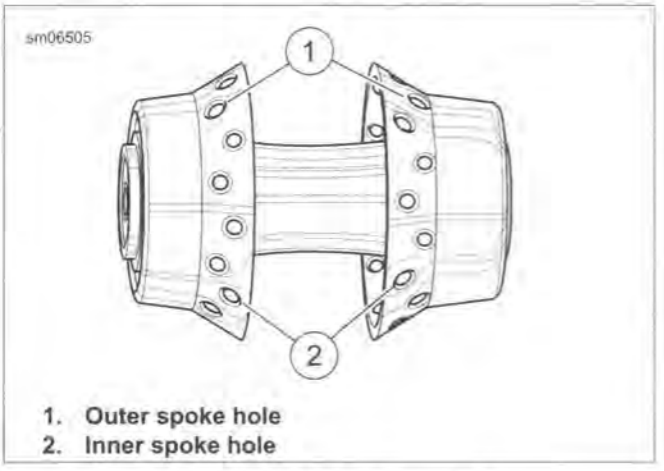

1. **Outer spoke hole**
2. **Inner spoke hole**

Figure 2-25. Angle Flange Hub

1. Place hub on workbench:
   a. **Front:** primary brake side up.
   b. **Rear:** brake side down.
2. Install all spokes in the lower flange.
3. See Figure 2-26. Flip hub over. Gather all outer spokes and hold upright with a rubber band. Repeat with the inner spokes using a second rubber band.
4. Install spokes in remaining flange.
5. Rotate the lower flange spokes as far as they go:
   a. Outer spokes clockwise.
   b. Inner spokes counterclockwise.
6. Center the rim over the hub and spokes assembly and support on wooden blocks approximately 1.5 in (38.1 mm) thick.
   a. If valve is not located in the center of the rim, place valve hole facing up.
   b. If the valve is located in the center of the rim, it can be placed either side up.

NOTE

Install nipples until approximately 1/8 in (3.2 mm) of spoke thread shows.

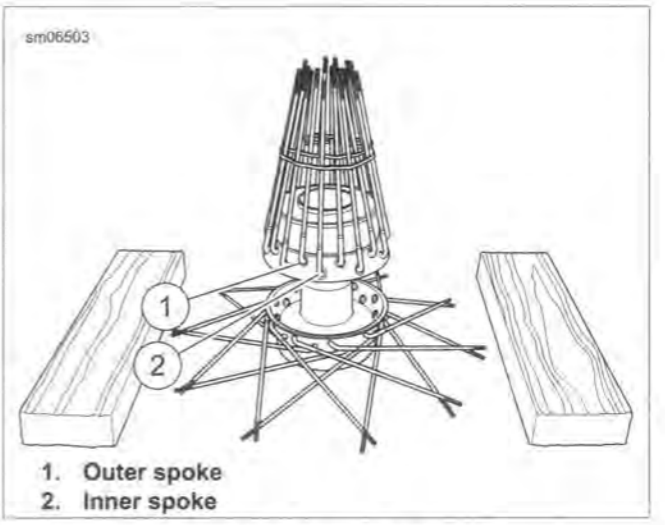

1. **Outer spoke**
2. **Inner spoke**

Figure 2-26. Spokes Gathered

7. Install lower flange outer spokes and loosely install spoke nipples:
   a. **Rim with side valve hole:** See Figure 2-27. Start at the valve stem hole (1).
   b. **Rim with center valve hole:** See Figure 2-28. Start at the first hole counterclockwise (1) from valve stem hole.
8. Install remaining outer spokes in every fourth hole.
9. Install lower flange inner spokes and loosely install spoke nipples:
   a. Starting at the second hole counterclockwise (2) from first spoke installed, install inner spoke.
   b. Install remaining inner spokes in every fourth hole.
10. Carefully release upper flange inner spokes and fan out around rim, rotating them clockwise.
11. Starting at the first hole counterclockwise (3) from first spoke installed, install inner spoke. Install remaining inner spokes in every fourth hole.
12. Carefully release upper flange outer spokes and fan out around rim, rotating them counterclockwise.
13. Install outer spokes in remaining holes (4).
14. Verify that spoke heads are seated. See 2.8 CHECKING AND TRUING WHEELS.
   a. Evenly hand-tighten spoke nipples until snug.
   b. Only tighten until slack is removed.
   c. Proper torque is applied when the wheel is trued.
   d. Adjust offset and true the wheel.

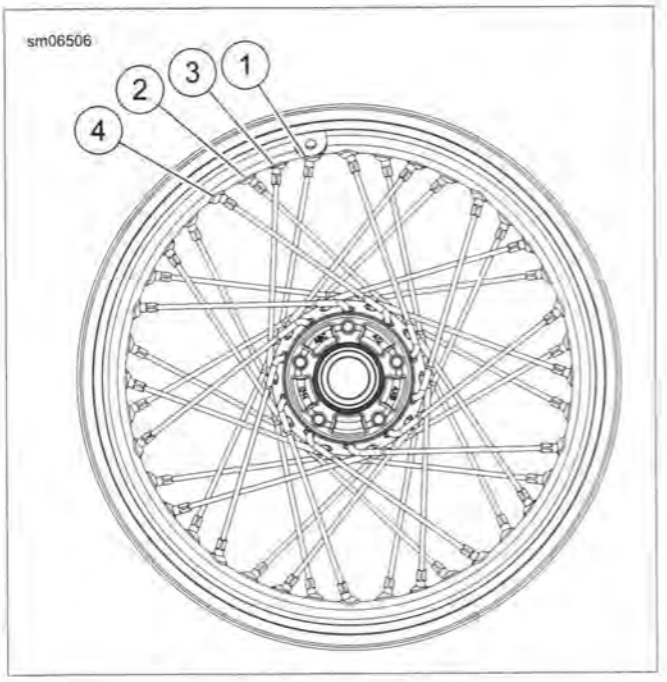

Figure 2-27. Side Valve Rim

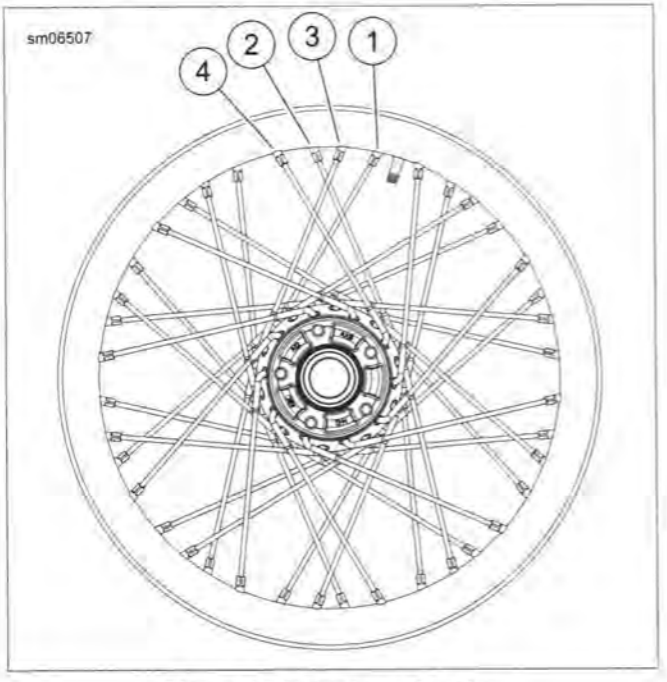

Figure 2-28. Center Valve Rim

WHEEL LACING: STRAIGHT FLANGE HUB, SINGLE HOLE CIRCLE

NOTES

- *See Figure 2-30. This procedure is valid for laced wheels that use a straight flange, single spoke hole circle hub regardless of rim style or diameter.*
- *The primary brake side of the hub has one or two grooves cut into the disc mounting surface.*

1. See Figure 2-34. Divide spokes into inner and outer groups.
   a. Inner spokes (2) have long heads.
   b. Outer spokes (1) have short heads.
2. Lubricate all spoke threads and nipple shoulders with tire mounting lubricant.
3. See Figure 2-30. Place hub on bench with the primary brake disc side up. Insert one outer spoke (1) (short head) into any bottom flange hole and swing it clockwise. Insert an inner spoke (2) (long head) in the next hole counterclockwise from the outer spoke. Swing the inner spoke counterclockwise over the outer spoke.
4. Find the hole (3) in the upper flange directly above the two spokes and insert a long head inner spoke. Insert all remaining spokes in the upper flange, alternating the inner and outer spokes.
5. Flip the hub (primary brake side down) and install remaining spokes, again alternating inner and outer spokes.
6. See Figure 2-31. Group all spokes on the upper flange into two bundles of equal numbers and secure each group with throttle grips.

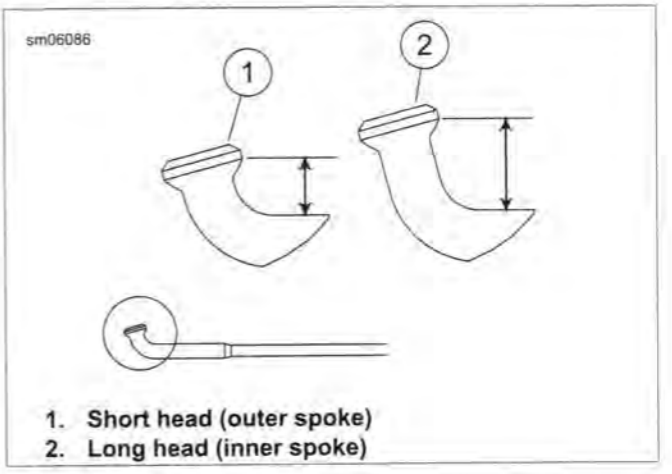

1. **Short head (outer spoke)**
2. **Long head (inner spoke)**

Figure 2-29. Spoke Heads

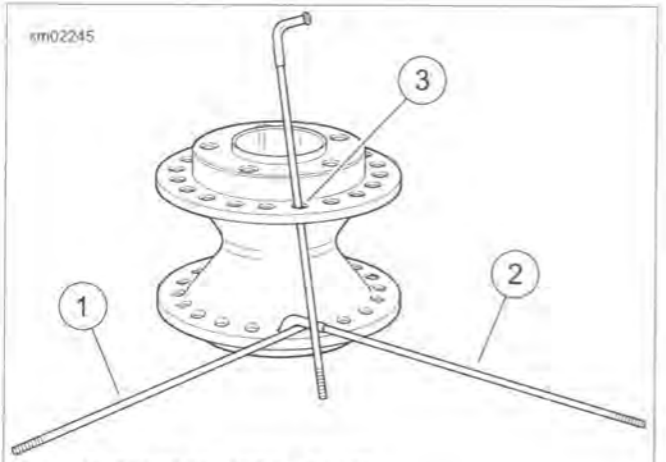

1. **Outer spoke (short head)**
2. **Inner spoke (long head)**
3. **Hole directly above two spokes**

Figure 2-30. Lacing Single Row Wheel Hub

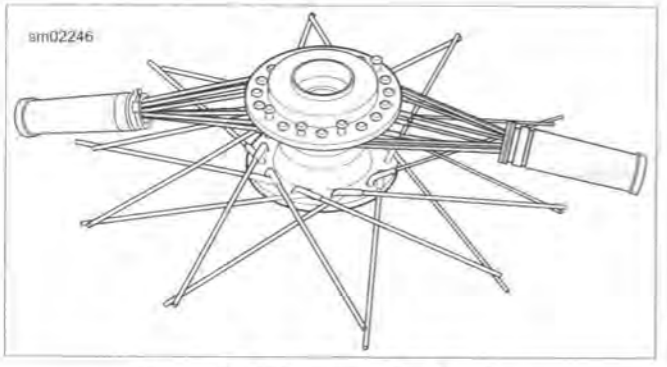

Figure 2-31. Bundling Top Spokes

7. Angle all lower flange spokes as far as they will go without overlapping a LIKE spoke (inner must not cross inner; outer must not cross outer):
   a. Outer spokes (short head) clockwise.
   b. Inner spokes (long head) counterclockwise. All inner spokes lay over outer spokes.
8. Support the rim on wooden blocks approximately 0.75 in (19 mm) thick.
9. Place the hub and spoke assembly into the rim and centered in the rim.

NOTE

Install nipples until approximately 1/8 in (3.2 mm) of spoke thread shows.

10. See Figure 2-32. Beginning with the 2nd hole counterclockwise (1) from valve stem hole, install lower flange outer spokes (short head) in every 4th hole. Loosely install spoke nipples.

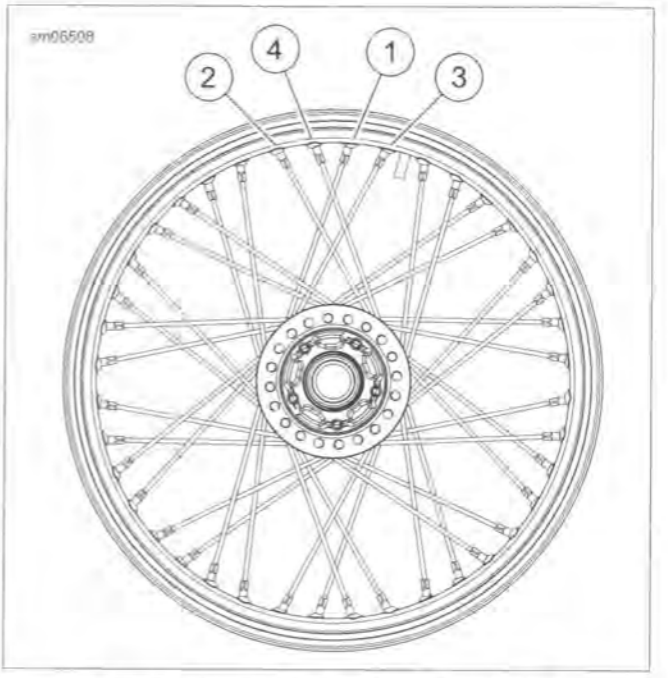

Figure 2-32. Flat Flange Hub, Single Row

11. Beginning with 4th hole counterclockwise (2) from valve stem hole, install lower flange inner spokes (long head) in every 4th hole. Loosely install spoke nipples. Each inner spoke will cross four outer spokes.
12. See Figure 2-33. Carefully release each top bundle and fan the spokes around the rim edge.

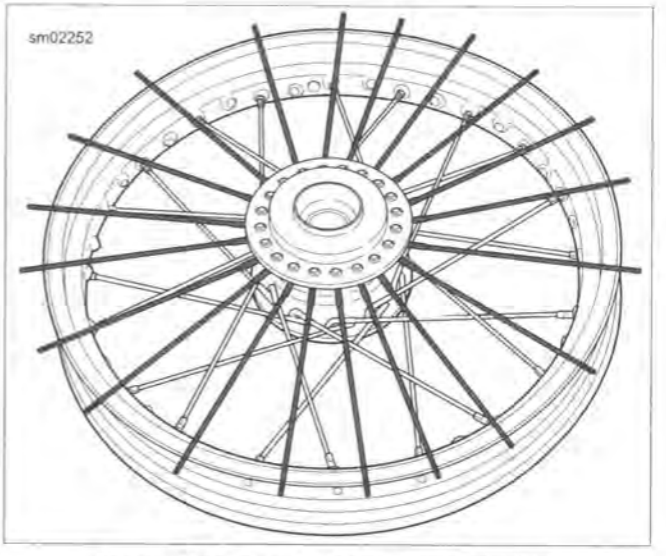

Figure 2-33. Fanning Top Flange Spokes

13. Rotate all the upper flange inner spokes (long head) clockwise, one at a time, leaving the outer spokes (short head) resting on the rim.

NOTE

Be sure outer spokes do not fall under the inner spoke and become trapped.

14. See Figure 2-32. Beginning with the first hole counterclockwise (3) from valve stem hole, install upper flange inner spokes (long head) in every 4th hole.

15. Rotate outer spokes (short head) counterclockwise and install in the remaining holes (4) in the rim.
16. Verify spoke heads are seated. See 2.8 CHECKING AND TRUING WHEELS.
    a. Evenly hand-tighten spoke nipples until snug.
    b. Only tighten until slack is removed.
    c. Proper torque will be applied when the wheel is trued.
    d. Adjust offset and true the wheel.

WHEEL LACING: STRAIGHT FLANGE HUB, DUAL HOLE CIRCLE

NOTES

- *See Figure 2-35. This procedure is valid for 40-spoke wheels that use a straight flange, dual spoke hole circle hub regardless of rim style or diameter.*
- *The primary brake side of the hub has one or two grooves cut into the disc mounting surface.*

1. See Figure 2-34. Divide spokes into inner and outer groups.
    a. Inner spokes (2) have long heads.
    b. Outer spokes (1) have short heads.
2. Lubricate all spoke threads and nipple shoulders with tire mounting lubricant.
3. Place hub on bench with the primary brake disc side up.
4. Install first two spokes:
    a. See Figure 2-35. Insert one outer spoke (short head) into any upper flange outer hole. Swing it counterclockwise.
    b. Insert an inner spoke (long head) in the next hole counterclockwise from the outer spoke.
    c. Swing the inner spoke clockwise under the outer spoke.
5. Insert all remaining spokes in the upper flange, alternating the inner and outer spokes.
6. Flip the wheel hub (primary brake side down) and install remaining spokes in the same manner, again alternating inner and outer spokes.
7. See Figure 2-36. Group all spokes on the upper flange into two bundles of ten. Secure each group with throttle grips.

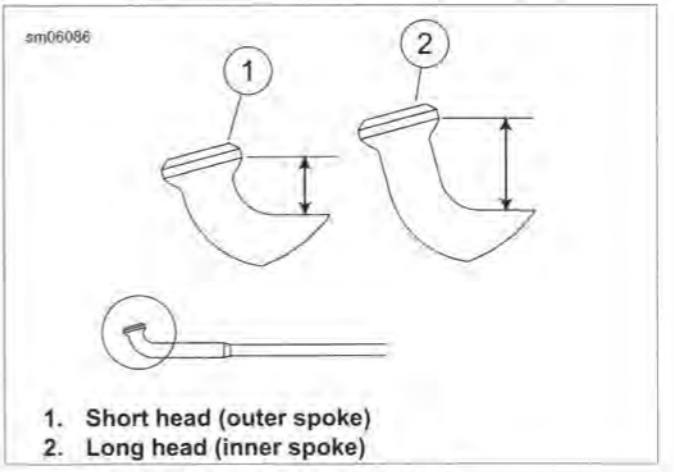

1. Short head (outer spoke)
2. Long head (inner spoke)

Figure 2-34. Spoke Heads

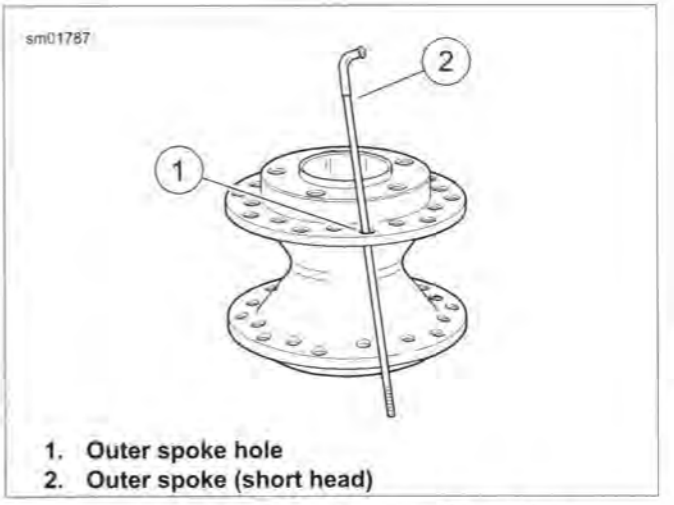

1. Outer spoke hole
2. Outer spoke (short head)

Figure 2-35. Lacing Dual Row Wheel Hub

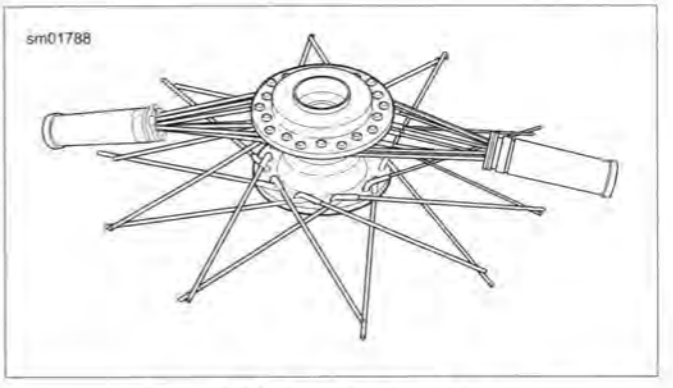

Figure 2-36. Bundling Top Spokes

8. Angle all lower flange spokes as far as they will go without overlapping a LIKE spoke (inner must not cross inner; outer must not cross outer):
    a. Outer spokes (short head) clockwise.
    b. Inner spokes (long head) counterclockwise. All inner spokes lay over outer spokes.
9. Support the rim on wooden blocks approximately 0.75 in (19 mm) thick.

10. Place the hub and spoke assembly into the rim and centered in the rim.

NOTE

Install nipples until approximately 1/8 in (3.2 mm) of spoke thread shows.

11. See Figure 2-37. Beginning with the 1st hole counterclockwise (1) from valve stem hole, install lower flange outer spokes (short head) in every 4th hole. Loosely install spoke nipples.

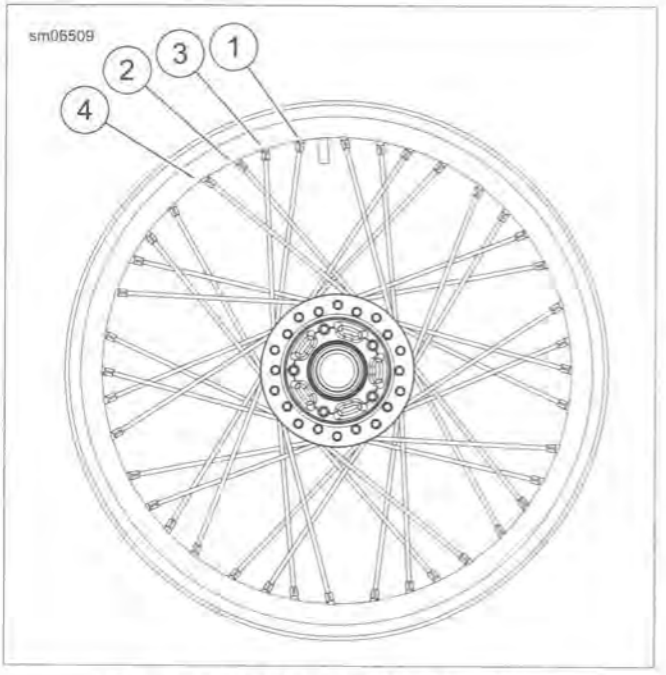

Figure 2-37. Flat Flange Hub, Dual Row

12. Beginning with 3rd hole counterclockwise (2) from valve stem hole, install lower flange inner spokes (long head) in every 4th hole. Loosely install spoke nipples. Each inner spoke will cross four outer spokes.

13. See Figure 2-38. Carefully release each top bundle and fan the spokes around the rim edge.

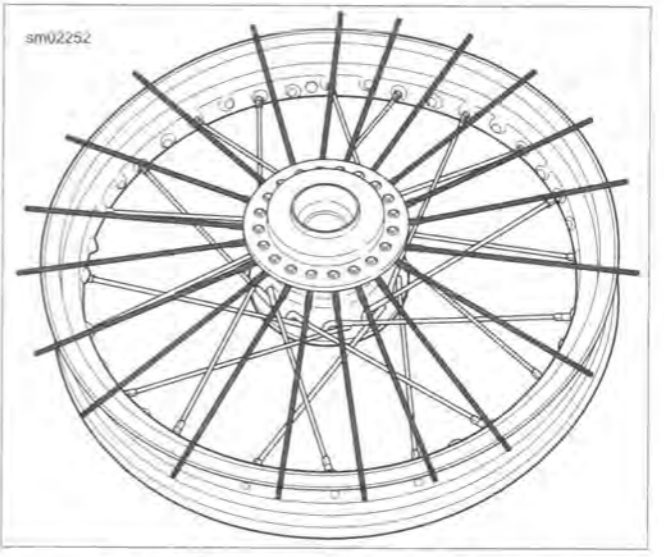

Figure 2-38. Fanning Top Flange Spokes

14. Rotate all the upper flange inner spokes (long head) clockwise, one at a time, leaving the outer spokes (short head) resting on the rim.

NOTE

Be sure outer spokes do not fall under the inner spoke and become trapped.

15. See Figure 2-37. Beginning with the 2nd hole counterclockwise (3) from valve stem hole, install upper flange inner spokes (long head) in every 4th hole.

16. Rotate outer spokes (short head) counterclockwise. Install in the remaining holes (4) in the rim.

17. Verify spoke heads are seated. See 2.8 CHECKING AND TRUING WHEELS.
    a. Evenly hand-tighten spoke nipples until snug.
    b. Only tighten until slack is removed.
    c. Proper torque will be applied when the wheel is trued.
    d. Adjust offset and true the wheel.

GENERAL

Check wheels for lateral and radial runout before installing a **new** tire or tube. Checking cast or laced wheels is performed using the same procedure.

Laced wheels having excess runout can be trued. Cast wheels must be replaced. Never attempt to straighten cast wheels.

Always check condition of the wheel bearings before checking or adjusting wheel runout. See 1.7 TIRES AND WHEELS, Wheel Bearings.

CHECKING WHEEL RUNOUT

PART NUMBER	TOOL NAME
HD-99500-80	WHEEL TRUING AND BALANCING STAND

Check wheels for both radial runout and lateral runout. If either measurement is not within specification:

- **Cast wheel:** Replace the wheel.
- **Laced wheel:** Adjust spokes to true the wheel. See steps in this section.

Checking Radial Runout

1. See Figure 2-39. Mount wheel in WHEEL TRUING AND BALANCING STAND (Part No. HD-99500-80).
2. Adjust gauge rod or dial indicator to the rim's tire bead safety hump.
3. Rotate wheel and measure distance at several locations. Runout must not exceed 0.030 in (0.76 mm).

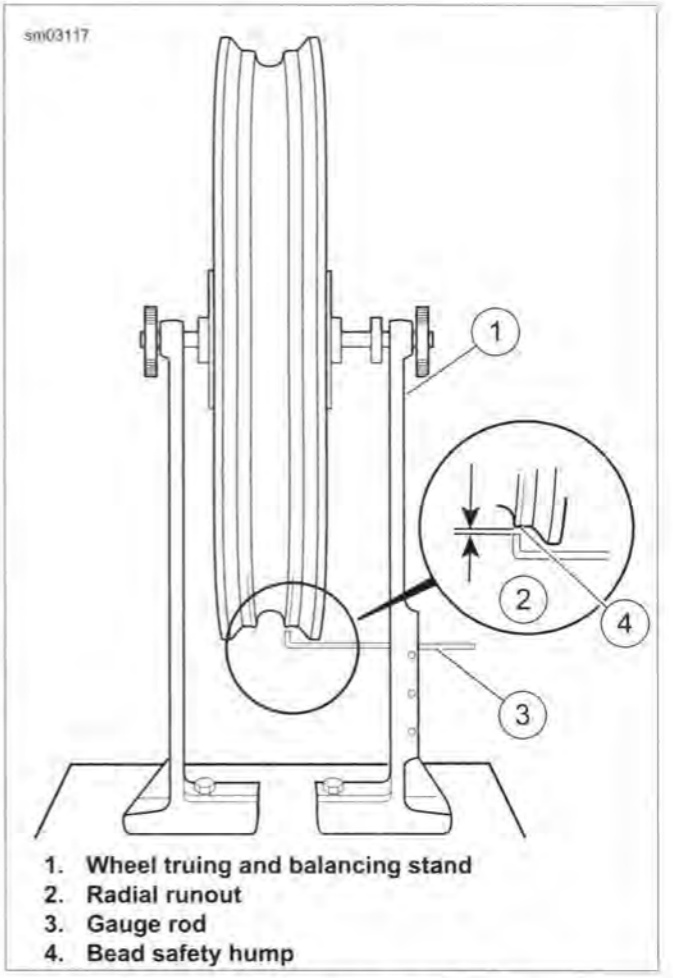

1. **Wheel truing and balancing stand**
2. **Radial runout**
3. **Gauge rod**
4. **Bead safety hump**

Figure 2-39. Checking Radial Runout

Checking Lateral Runout

1. See Figure 2-40. Mount wheel in WHEEL TRUING AND BALANCING STAND (Part No. HD-99500-80).

NOTE

Dial indicators are more accurate than gauge rods.

2. Place a gauge rod near, or dial indicator on the rim bead flange.
3. Measure distance at several locations. Lateral runout must not exceed 0.030 in (0.76 mm).

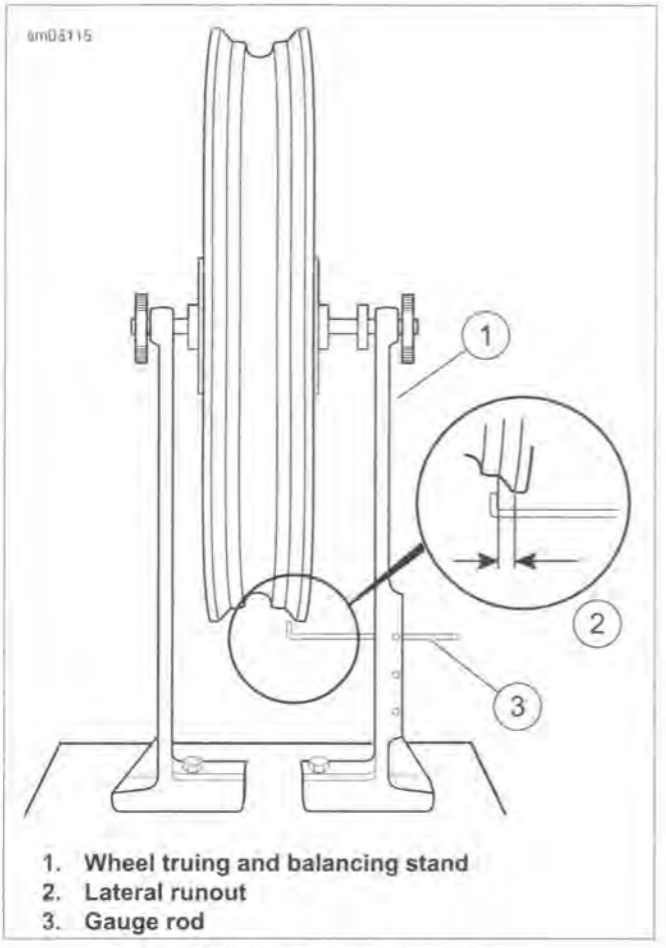

1. **Wheel truing and balancing stand**
2. **Lateral runout**
3. **Gauge rod**

Figure 2-40. Checking Lateral Runout

LACED WHEEL RIM OFFSET

PART NUMBER	TOOL NAME
HD-94681-80	SPOKE NIPPLE WRENCH
HD-99500-80	WHEEL TRUING STAND

1. See Figure 2-41. Prepare rim.
   a. Place a piece of tape to mark the center of each group of four spokes as shown.
   b. Mark groups directly opposite one another and approximately 90 degrees apart.
   c. Use different colors of tape or number each group.

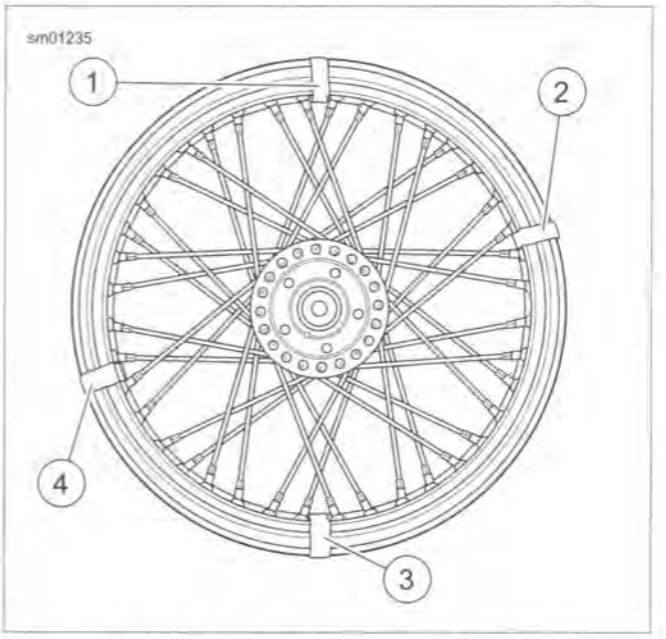

Figure 2-41. Marking Spoke Groups

2. See Figure 2-42. Mount wheel in WHEEL TRUING STAND (Part No. HD-99500-80) so hub turns freely on its bearings.

NOTE

Disc mounting surface for primary brake side of hub has one or two grooves.

3. Measure offset.
   a. Lay a straightedge across the primary brake disc mounting surface and one of the marked spoke groups.
   b. See Figure 2-43. Measure the distance from the straightedge to the location shown to determine distance A.
   c. Compare to dimensions in Table 2-10.

NOTES

- *Always loosen the appropriate spokes before tightening the other two. Reversing this procedure causes the rim to become out-of-round.*

  *For example: If the **right** side is **less** than specification, **loosen** the two spokes on the hub **right** side. Then **tighten** the two spokes attached to the hub **left** side.*
- *Tighten or loosen spokes one flat at a time and recheck measurement.*
- *Always work on groups that are opposite each other to maintain radial runout.*

4. If the dimension is not correct, adjust the four spokes using SPOKE NIPPLE WRENCH (Part No. HD-94681-80). Turn all four spokes an equal number of turns until offset is at specification.
5. Repeat the previous step for all groups on the wheel.
6. Check wheel runout. See 2.8 CHECKING AND TRUING WHEELS, True Laced Wheels.

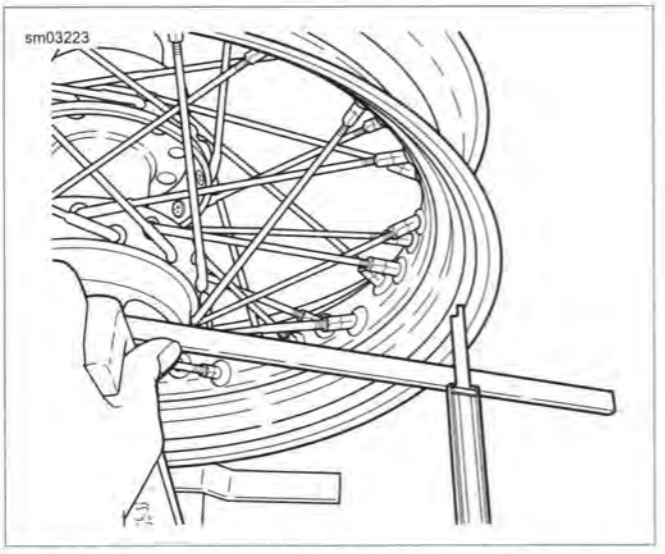

Figure 2-42. Checking Wheel Hub Offset Dimension (Typical)

Table 2-10. Laced Wheel Hub Offset Dimensions

LACED WHEEL TYPE	WHEEL SIZE	OFFSET (A)	
		IN	MM
Steel	17"	0.615-0.645	15.62-16.38
	19"	1.135-1.165	28.83-29.59
	21"	1.525-1.555	38.74-39.50
Chrome aluminum profile	17"	0.385-0.415	9.78-10.54
	19"	0.885-0.915	22.48-23.24
	21"	1.555-1.585	39.48-40.26

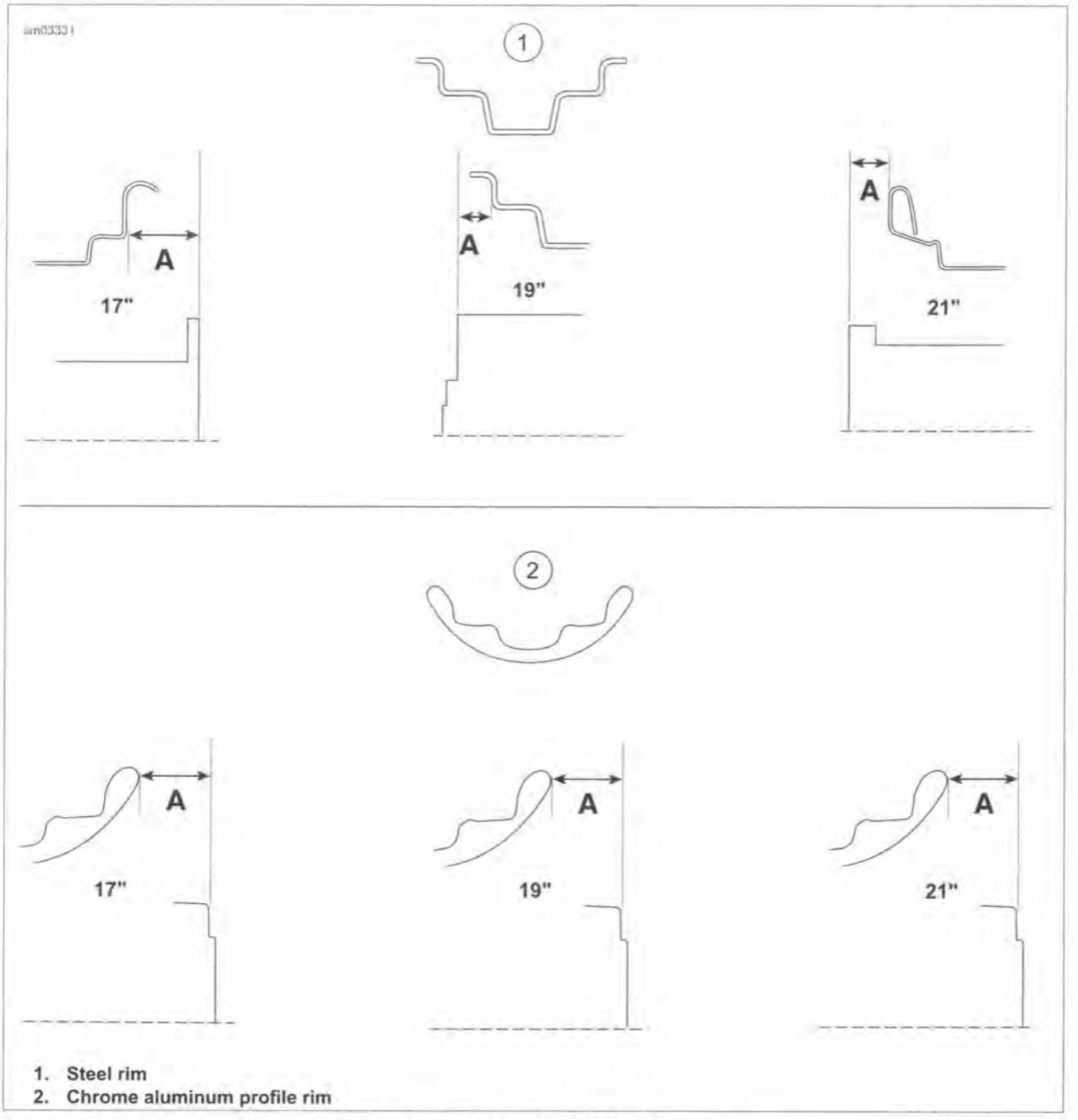

1. Steel rim
2. Chrome aluminum profile rim

Figure 2-43. Laced Wheel Hub Offset Dimensions

TRUE LACED WHEELS

PART NUMBER	TOOL NAME
HD-48985	SPOKE TORQUE WRENCH
HD-94681-80	SPOKE NIPPLE WRENCH
HD-99500-80	WHEEL TRUING AND BALANCING STAND

FASTENER	TORQUE VALUE	
Spoke nipple	55 **in-lbs**	6.2 Nm

NOTES

- *Dial indicators are more accurate than gauge rods.*
- *Perform radial truing before lateral truing.*

Adjust Radial Runout

1. See Figure 2-44. Mount wheel in WHEEL TRUING AND BALANCING STAND (Part No. HD-99500-80).
2. Adjust the gauge rod (3) near to the tire bead safety hump (4). If using a dial indicator, place the tip on the safety bead hump.
3. **Straight flange hub:** Seat each spoke head in the hub flange using a flat nose punch and mallet.

NOTES

- *Always loosen the appropriate spokes before tightening the other two. Reversing this procedure causes the rim to become out of round.*
- *Tighten or loosen spoke. Then recheck measurement. Small changes in the spokes can make large changes in the runout.*
- *Always work on groups that are opposite each other to maintain radial runout.*

4. Spin the rim slowly. Check radial runout (2). The rim must be true within 0.030 in (0.76 mm).
   a. Use SPOKE NIPPLE WRENCH (Part No. HD-94681-80).
   b. If the rim contacts the gauge on or near a marked group of spokes, loosen the spokes in the group on the opposite side of the rim. Then tighten the spokes in the group where the rim makes contact an equal number of turns.
   c. If the rim contacts the gauge between two marked groups, loosen the spokes in both groups on the opposite side of the rim. Then tighten the spoke groups on the side of the rim that makes contact an equal number of turns.
5. When the wheel is true, start at the valve stem hole and tighten any loose spoke nipples one turn at a time until they are snug.
6. Working alternately across the wheel, use SPOKE TORQUE WRENCH (Part No. HD-48985) evenly tighten all spokes to specification listed in Table 2-11.
7. **Straight flange hub:** Verify that each spoke head is seated in the hub flange using a flat nose punch and mallet.
8. Verify that radial runout is still within specification.
9. Proceed to lateral runout.

⚠WARNING

Spokes that are too tight can draw nipples through the rim or distort hub flanges. Spokes that are too loose can continue to loosen when put in service. Either condition can adversely affect stability and handling, which could result in death or serious injury. (00286a)

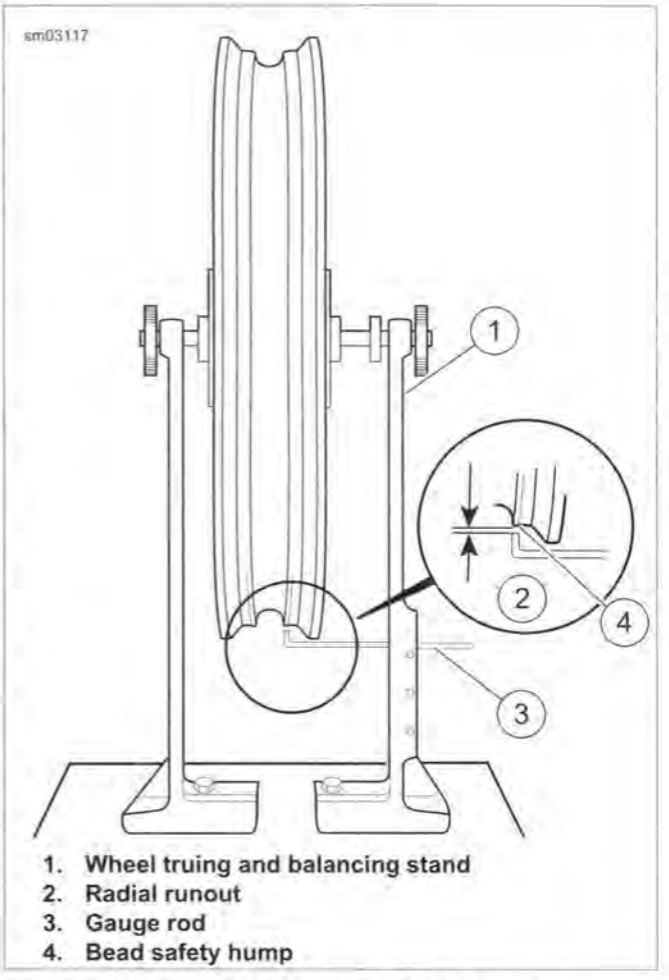

1. **Wheel truing and balancing stand**
2. **Radial runout**
3. **Gauge rod**
4. **Bead safety hump**

Figure 2-44. Checking Radial Runout

Table 2-11. Spoke Nipple Torque Specification

RIM TYPE	MINIMUM TORQUE
All	55 **in-lbs** (6.2 Nm)

Adjust Lateral Runout

NOTE

Dial indicators are more accurate than gauge rods.

1. See Figure 2-45. Adjust the gauge rod (3) near to the rim bead flange. If using a dial indicator, place the tip against the bead flange.
2. Rotate the rim slowly to check lateral runout (2). If runout exceeds 0.030 in (0.76 mm), adjust spokes:

NOTES

- *Always loosen the appropriate spokes before tightening the other two. Reversing this procedure causes the rim to become out of round.*
- *Tighten or loosen spoke. Then recheck measurement. Small changes in the spokes can make large changes in the runout.*
- *Always work on groups that are opposite each other to maintain radial runout.*

3. Working in groups of four, loosen two spokes on the tight side and tighten the two spokes on the loose side.
4. Repeat with each group until wheel is within specification.
5. Verify that all spoke nipples are tightened to the specification. Refer to Table 2-11.
6. File or grind off ends of spokes that protrude through the nipples to prevent puncturing tube or rim seal.

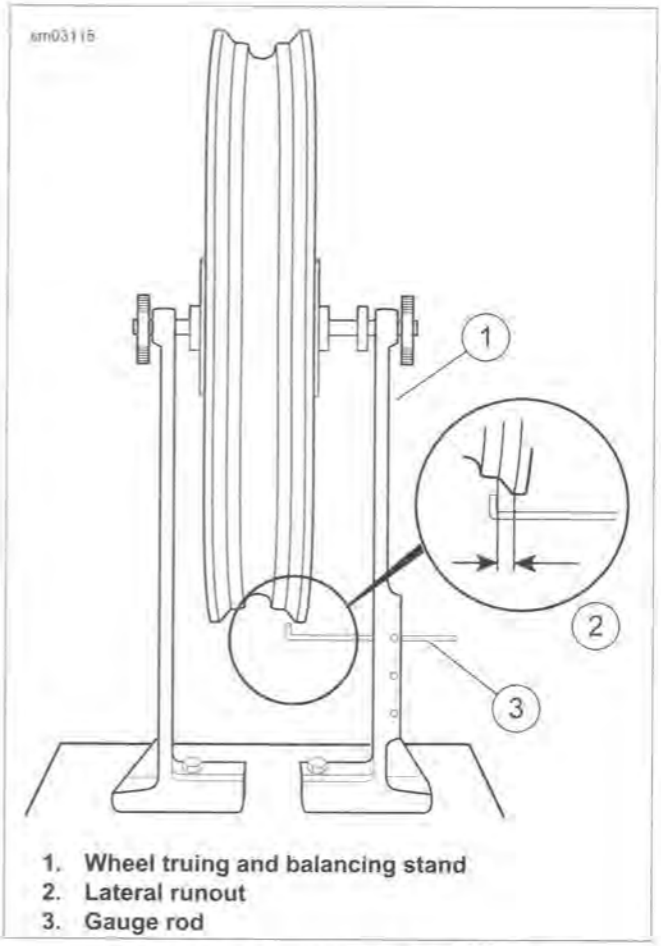

1. **Wheel truing and balancing stand**
2. **Lateral runout**
3. **Gauge rod**

Figure 2-45. Checking Lateral Runout

INSPECTION

PART NUMBER	TOOL NAME
HD-48856-A	AXLE ALIGNMENT PLUG SET

FASTENER	TORQUE VALUE	
Front isolator mounting bolts to front engine bracket	18-22 ft-lbs	24.4-29.9 Nm
Rear isolator mounting bolts to transmission case	22-27 ft-lbs	29.9-36.6 Nm
Front and rear isolator mounting bolts to frame	22-27 ft-lbs	29.9-36.6 Nm

⚠WARNING

Only a Harley-Davidson dealer should perform vehicle alignment. Improper alignment can adversely affect stability and handling, which could result in death or serious injury. (00060a)

⚠WARNING

Check vehicle alignment according to following procedures. Incorrect alignment can adversely affect stability and handling, which could result in death or serious injury. (00287a)

1. Verify that wheels are true. See 2.8 CHECKING AND TRUING WHEELS.
2. Check steering head bearing adjustment. Adjust if necessary. See 1.17 STEERING HEAD BEARINGS.
3. Create an alignment tool. See Figure 2-48. To verify accurate measurements, obtain a piece of 1/8 in (3.2 mm) aluminum welding rod 12.25 in (311 mm) long.
   a. Grind one end down to a blunt point.
   b. With a pliers, bend the rod 90 degrees as shown.
   c. Place a snug fitting O-ring or cable strap on the rod to act as a slide measurement indicator.
4. Raise the rear of the motorcycle.
5. See Figure 2-46. Using AXLE ALIGNMENT PLUG SET (Part No. HD-48856-A), insert axle alignment plugs (1, 2) into left and right ends of rear axle.
6. See Figure 2-47. Measure the wheel alignment. With the blunt point of the alignment tool inserted in the rear fork pilot hole:
   a. Slide the O-ring along the tool until it is aligned with the center of the alignment plug as shown.
   b. Measure and record distance from end of tool to O-ring.
   c. Repeat steps for the opposite side.

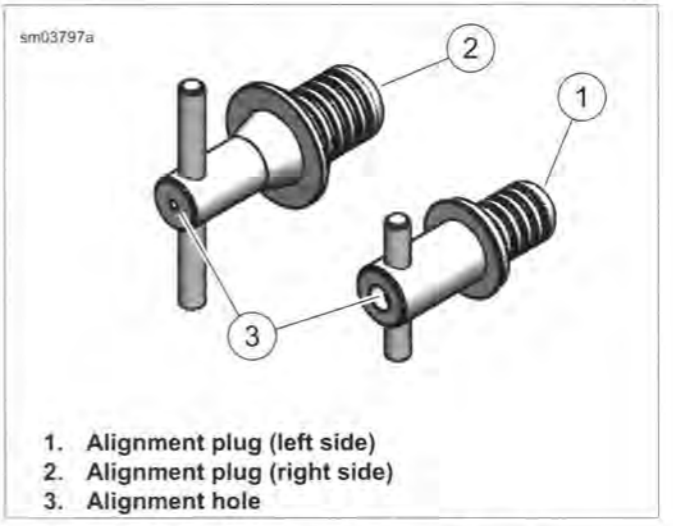

1. **Alignment plug (left side)**
2. **Alignment plug (right side)**
3. **Alignment hole**

Figure 2-46. Axle Alignment Plugs

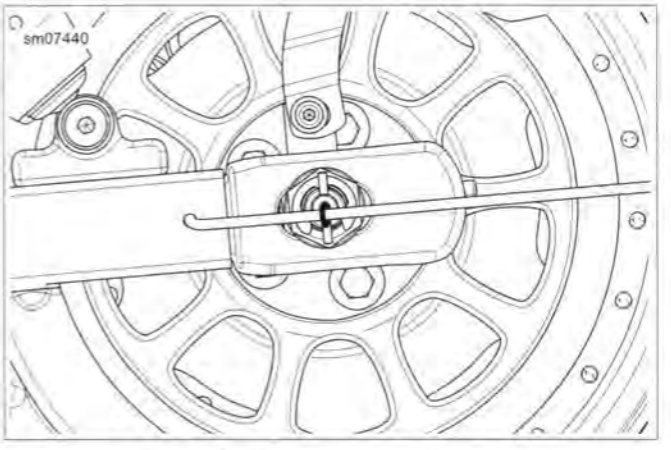

Figure 2-47. Measuring Alignment

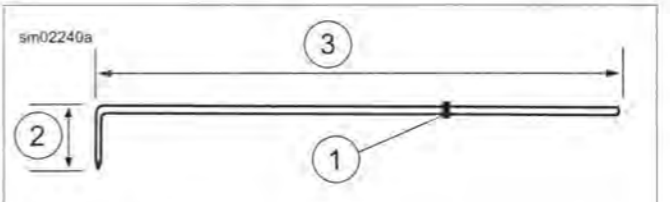

1. **O-ring**
2. **2.25 in (57 mm)**
3. **12.25 in (311 mm)**

Figure 2-48. Alignment Tool

7. See Figure 2-49. Left and right measurements must be equal within 1/32 in (0.8 mm). Use axle adjusters to adjust within specifications.
8. See Figure 2-50. Remove the bolt (2) which attaches the top stabilizer link (1) to the engine mounting bracket.
9. Position front wheel so brake disc is vertical using an inclinometer. If possible, use a digital inclinometer for the best accuracy.

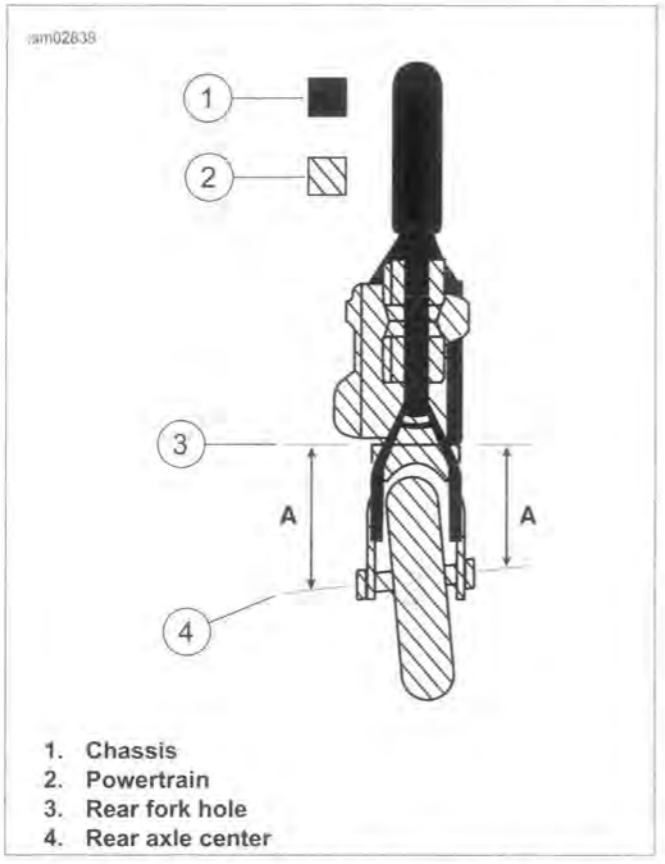

1. **Chassis**
2. **Powertrain**
3. **Rear fork hole**
4. **Rear axle center**

Figure 2-49. Adjust Axle Adjusters until A Equals A

NOTES

- *Place motorcycle upright and level with exhaust system installed before proceeding.*
- *Only adjust stabilizer link on end with threads showing. Adjusting or loosening other end tears the isolator.*
- *Minimum clearance between the fuel tank tunnel and the head of the left stabilizer link mounting bolt is 0.250 in (6.4 mm).*

10. Loosen jamnut (3) on stabilizer link. Adjust the stabilizer so the bolt removed in previous step can be reinstalled without pushing the engine to the right or left. Tighten jamnut.
11. Check the rear brake disc with the inclinometer to verify that it is parallel to the front brake disc.
12. Rear brake disc must be parallel to font brake disc. If necessary, adjust the top stabilizer link until the rear brake is parallel to within 1 degree of the front brake disc.
13. If front and rear brake discs cannot be adjusted to within 1 degree, inspect the frame, front fork and rear fork for damage.

⚠WARNING

To prevent damage to fuel tank and possible fire or explosion, which could cause death or serious injury, maintain clearance specified in service manual between fuel tank and head of left stabilizing link mounting bolt. (00262a)

14. Do not adjust top stabilizer link more than five full turns to bring the brake discs into specification. If stabilizer link requires more than five turns for proper adjustment, inspect the frame, front fork and rear fork for damage.
15. Tighten the stabilizer jamnut (3).

NOTE

Maximum range for stabilizer link adjustment is five full turns. If necessary, use the following steps to adjust for excessive vibration.

16. Verify transmission is in NEUTRAL.
17. Loosen, but do not remove, ALL the mounting bolts on the engine isolators.
18. Start the engine. Let the engine run for approximately 5 seconds. This procedure will center the mounts on the frame and power train assembly.
19. Tighten isolator mounting bolts in sequence:
    a. Tighten front isolator mounting bolts to front engine bracket to 18-22 ft-lbs (24.4-29.9 Nm).
    b. Tighten rear isolator mounting bolts to transmission case to 22-27 ft-lbs (29.9-36.6 Nm).
    c. Tighten front and rear isolator mounting bolts to frame to 22-27 ft-lbs (29.9-36.6 Nm).

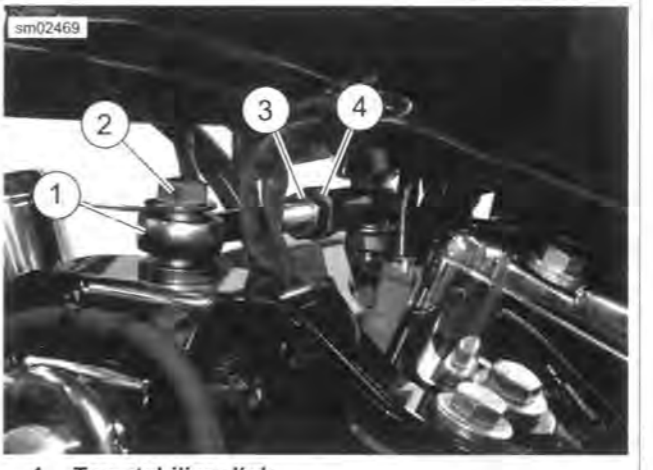

1. **Top stabilizer link**
2. **Bolt**
3. **Jamnut**
4. **Adjusting stud (nut)**

Figure 2-50. Top Stabilizer

GENERAL

⚠WARNING

Do not use parts from single caliper repair kits (9/16 inch bore) on dual caliper models. Likewise, do not use parts from dual caliper repair kits (11/16 inch bore) on single caliper models. Using incorrect parts can cause brake failure, which could result in death or serious injury. (00278a)

⚠CAUTION

Direct contact of D.O.T. 4 brake fluid with eyes can cause irritation. Avoid eye contact. In case of eye contact flush with large amounts of water and get medical attention. Swallowing large amounts of D.O.T. 4 brake fluid can cause digestive discomfort. If swallowed, obtain medical attention. Use in well ventilated area. KEEP OUT OF REACH OF CHILDREN. (00240a)

NOTICE

D.O.T. 4 brake fluid will damage painted and body panel surfaces it comes in contact with. Always use caution and protect surfaces from spills whenever brake work is performed. Failure to comply can result in cosmetic damage. (00239b)

NOTICE

Do not allow dirt or debris to enter the master cylinder reservoir. Dirt or debris in the reservoir can cause improper operation and equipment damage. (00205c)

See Figure 2-51. Master cylinders designed for single disc (one caliper) operation have a 9/16 in (14.3 mm) bore. The bore size is stamped on the master cylinder assembly inboard of the handlebar clamp bracket.

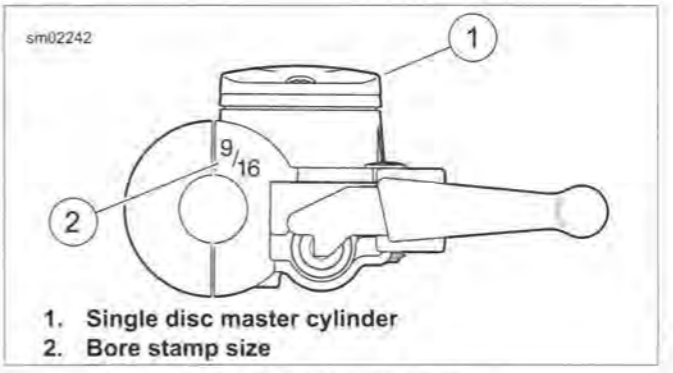

1. **Single disc master cylinder**
2. **Bore stamp size**

Figure 2-51. Bore Size

REMOVAL AND DISASSEMBLY

1. Drain brake fluid.
   a. Open bleeder screw cap on front brake caliper.
   b. Install end of a length of clear plastic tubing over caliper bleeder screw. Place free end of tubing in a suitable container.
   c. Open bleeder screw approximately one-half turn.
   d. Pump brake hand lever to drain brake fluid.
   e. Close bleeder screw.

NOTICE

Avoid leakage. Be sure gaskets, banjo bolt(s), brake line and master cylinder bore are clean and undamaged before assembly. (00322a)

2. Remove bolt and two steel/rubber washers to disconnect fitting of hydraulic brake line from master cylinder. Discard washers.

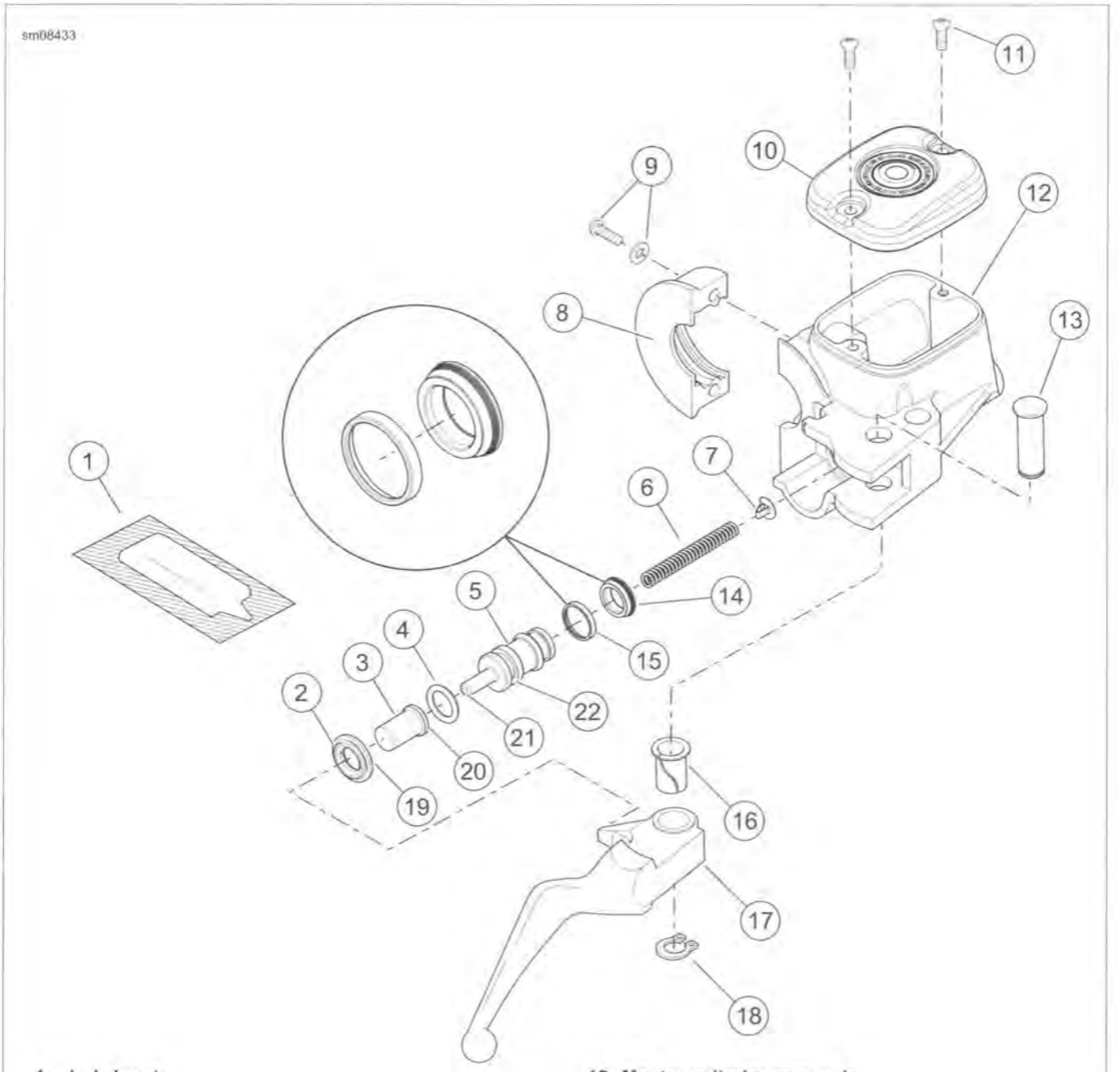

1. Lubricant
2. Wiper
3. Piston cap
4. O-ring
5. Piston
6. Spring
7. Retainer
8. Handlebar clamp
9. TORX screw and washer (2)
10. Cover
11. Screw (2)
12. Master cylinder reservoir
13. Pivot pin
14. Primary cup
15. Back-up ring
16. Bushing
17. Brake hand lever
18. Retaining ring
19. Flat side
20. Shoulder
21. Pin
22. O-ring groove

Figure 2-52. Front Brake Master Cylinder

3. See Figure 2-52. Loosen both switch housing clamp screws.
4. Remove the two screws with flat washers (9) to detach the handlebar clamp (8) from the master cylinder reservoir (12).
5. Remove master cylinder.
6. Remove retaining ring (18) from pivot pin groove at bottom of master cylinder bracket.
7. Remove pivot pin (13) and brake hand lever (17).
8. Carefully remove wiper (2) with pick or similar tool.
9. Remove piston cap (3).

10. Remove piston (5) with O-ring (4), back-up ring (15) and primary cup (14).
11. Remove spring (6) and retainer (7).
12. Remove both screws (11) and cover (10).

CLEANING AND INSPECTION

⚠WARNING

Use denatured alcohol to clean brake system components. Do not use mineral-based solvents (such as gasoline or paint thinner), which will deteriorate rubber parts even after assembly. Deterioration of these components can cause brake failure, which could result in death or serious injury. (00291a)

⚠WARNING

Compressed air can pierce the skin and flying debris from compressed air could cause serious eye injury. Wear safety glasses when working with compressed air. Never use your hand to check for air leaks or to determine air flow rates. (00061a)

1. Clean all parts with denatured alcohol or DOT 4 BRAKE FLUID.
   a. Wipe parts dry with a clean, lint-free cloth.
   b. Clear drilled passages and bore with clean compressed air.

NOTE

Do not use a wire or similar instrument to clean drilled passages in bottom of reservoir.

2. Inspect parts for wear or damage. Replace parts if necessary.
3. Inspect the piston bore in the master cylinder housing for scoring, pitting or corrosion. Replace as necessary.
4. Carefully inspect the outlet port that mates with the brake line fitting. As a critical sealing surface, replace the master cylinder assembly if any damage is noted.
5. Carefully inspect the cover gasket for damage. Replace as necessary.

ASSEMBLY AND INSTALLATION

FASTENER	TORQUE VALUE	
Handlebar master cylinder clamp screws	60-80 **in-lbs**	6.8-9.0 Nm
Hand control module housing screws	35-45 **in-lbs**	4.0-5.1 Nm
Banjo bolt to front master cylinder	17-22 ft-lbs	23.0-29.8 Nm
Master cylinder reservoir cover screws: front cover	6-8 **in-lbs**	0.68-0.90 Nm

NOTE

*Always reassemble the master cylinder using **new** parts from the correct repair kit.*

1. See Figure 2-52. Fit O-ring (4) into O-ring groove (22) on outboard side of piston (5) (pin side).
2. Install back-up ring (15) on inboard side of piston so that flat side faces pin (21).

NOTE

Make sure outer diameter (OD) of primary cup fits into tapered side of back-up ring.

3. Fit primary cup (14) over lip on inboard side of piston, so that smaller (OD) fits into tapered side of back-up ring.
4. Coat piston bore of master cylinder reservoir with lubricant (1) supplied in the service parts kit. Also apply the lubricant to OD of installed O-ring, back-up ring and primary cup.
5. Install retainer (7) on end of spring (6).
6. Insert spring and retainer into piston bore, so that it seats against counterbore (recess) at bottom.
7. Slide piston over spring.
8. Fit wiper (2) over piston cap (3) so that flat side of wiper contacts cap shoulder.
9. Fit piston cap over pin (21).
10. Press down on wiper until it contacts the counterbore. Larger OD of wiper must be seated in groove on outlet side of piston bore.
11. Install the cover (10). Secure with two screws, but do not tighten now.
12. Align hole in brake hand lever (17) with hole in master cylinder bracket. From the top of the assembly, slide pivot pin (13) through bracket and hand lever.

⚠WARNING

Wear safety glasses or goggles when removing or installing retaining rings. Retaining rings can slip from the pliers and could be propelled with enough force to cause serious eye injury. (00312a)

13. Install **new** retaining ring (18) in pivot pin groove. Verify that retaining ring is completely seated in groove.
14. See Figure 2-53. Position the brake lever/master cylinder assembly inboard of the module housing assembly. Engage the tab (2) on the module housing assembly (1) in the groove (3) at the top of the brake lever bracket (4).
15. See Figure 2-52. Align the holes in the handlebar clamp (8) with holes in the master cylinder housing (12). Start the two screws (with flat washers). Position hand lever (17) and controls for rider comfort. Beginning with the top screw, tighten the screws to 60-80 **in-lbs** (6.8-9.0 Nm).

NOTE

Always tighten the lower module housing screw first. Make sure any gap between the upper and lower housings is at the front of the housing.

16. Tighten module housing screws to 35-45 **in-lbs** (4.0-5.1 Nm).

NOTICE

Avoid leakage. Be sure gaskets, banjo bolt(s), brake line and caliper bore are clean and undamaged before assembly. (00321a)

17. Attach brake line to master cylinder reservoir with banjo bolt and **new** sealing washers. Tighten banjo bolt to 17-22 ft-lbs (23.0-29.8 Nm).

⚠WARNING

Clean reservoir filler cap or cover before removing. Use only DOT 4 brake fluid from a sealed container. Contaminated fluid can adversely affect braking or clutch disengagement, which could result in death or serious injury. (00504d)

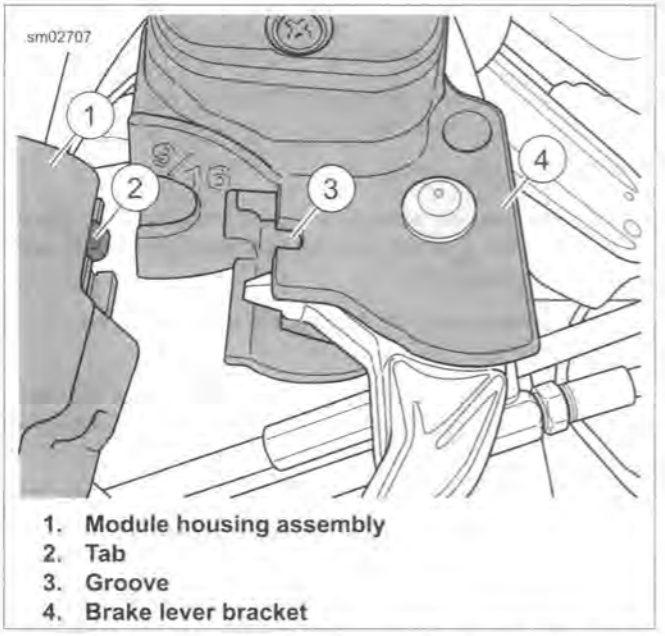

1. **Module housing assembly**
2. **Tab**
3. **Groove**
4. **Brake lever bracket**

Figure 2-53. Attach Master Cylinder to Right Handlebar Switches

NOTE

The shelf life of an unopened bottle of DOT 4 brake fluid is one year. Discard any opened and uncontaminated bottle after one week.

18. Remove cover from master cylinder reservoir. Stand up motorcycle so master cylinder is level. Add brake fluid to master cylinder reservoir until fluid level is 1/8-3/8 in (3.2-9.5 mm) from the top.

⚠WARNING

When any hydraulic brake component, line or connection is loosened or replaced on an ABS motorcycle, Digital Technician II must be used during the brake bleeding procedure to verify all air is removed from the system. Failure to properly bleed the brake system could adversely affect braking, which could result in death or serious injury. (00585c)

⚠WARNING

A plugged or covered relief port can cause brake drag or lock-up, which could lead to loss of control, resulting in death or serious injury. (00288a)

NOTE

Use only DOT 4 BRAKE FLUID from a sealed container.

19. Bleed front brake system. See 2.16 BLEEDING BRAKES.
20. Verify proper operation of the master cylinder relief port by actuating the brake pedal or lever. Actuate the brake hand lever. A slight spurt of fluid will break the fluid surface in the reservoir if internal components are working properly.
21. See Figure 2-54. Add brake fluid to the master cylinder reservoir until the fluid level is between the ledges on the fill level boss.
22. Install the master cylinder reservoir cover and gasket. Tighten to 6-8 **in-lbs** (0.68-0.90 Nm).
23. Turn ignition switch ON. Press the front brake hand lever. Check operation of brake lamp.

⚠WARNING

After repairing the brake system, test brakes at low speed. If brakes are not operating properly, testing at high speeds can cause loss of control, which could result in death or serious injury. (00289a)

24. Test ride motorcycle. Repeat the bleeding procedure if brakes feel spongy.

NOTE

The sight glass allows a visual check of the brake fluid level without having to remove the master cylinder reservoir cover. Sight glass appears dark if fluid is present.

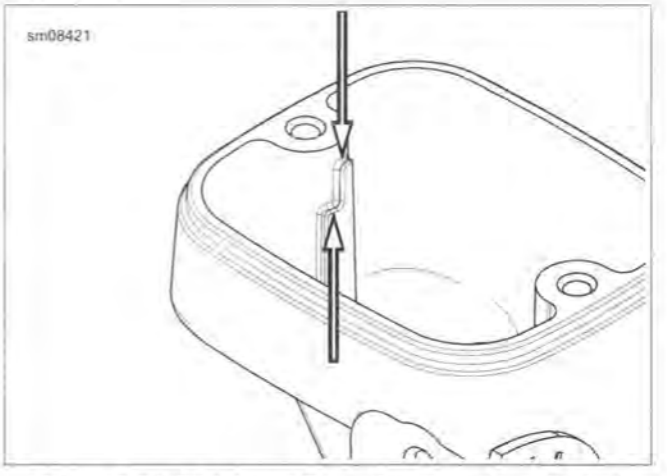

Figure 2-54. FILL Level Boss (front master cylinder)

REMOVAL

⚠CAUTION

Direct contact of D.O.T. 4 brake fluid with eyes can cause irritation. Avoid eye contact. In case of eye contact flush with large amounts of water and get medical attention. Swallowing large amounts of D.O.T. 4 brake fluid can cause digestive discomfort. If swallowed, obtain medical attention. Use in well ventilated area. KEEP OUT OF REACH OF CHILDREN. (00240a)

NOTICE

Avoid leakage. Be sure gaskets, banjo bolt(s), brake line and caliper bore are clean and undamaged before assembly. (00321a)

NOTICE

D.O.T. 4 brake fluid will damage painted and body panel surfaces it comes in contact with. Always use caution and protect surfaces from spills whenever brake work is performed. Failure to comply can result in cosmetic damage. (00239b)

NOTE

If only replacing brake pads, see 1.15 BRAKE PADS AND DISCS.

1. See Figure 2-55. Remove the banjo bolt (1) and both steel/rubber washers (2) to detach brake line (3) from caliper. Discard washers.
2. Remove the upper and lower mounting bolts (4, 5, metric). Lift caliper upward to remove from brake disc.

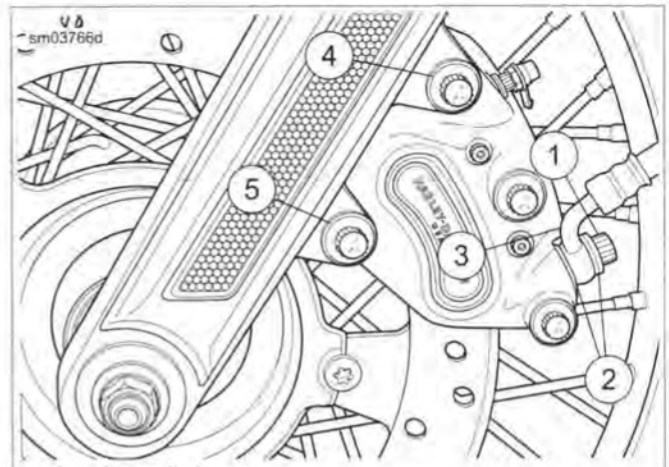

1. **Banjo bolt**
2. **Steel/rubber washer (2)**
3. **Brake line**
4. **Upper mounting bolt (long)**
5. **Lower mounting bolt (short)**

Figure 2-55. Front Caliper

DISASSEMBLY

PART NUMBER	TOOL NAME
HD-48649	FRONT BRAKE CALIPER PISTON REMOVER

1. See Figure 2-56. Remove bridge bolt/pad pin (12) (metric), brake pads (7) and bridge bolt (11) (metric) to separate caliper housings (1, 8).

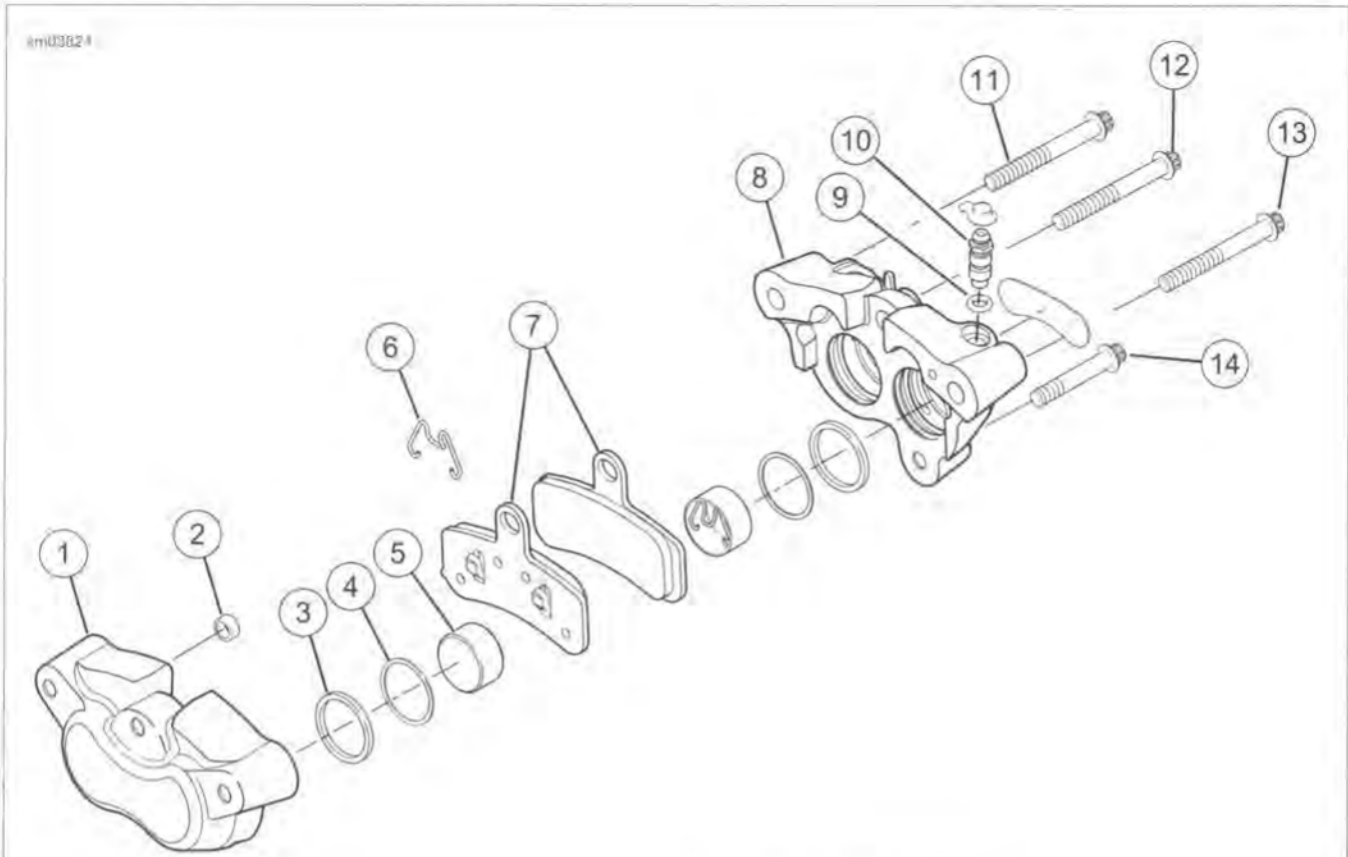

1. **Inner caliper housing**
2. **Crossover seal**
3. **Square seal (4)**
4. **Wiper (4)**
5. **Piston (4)**
6. **Anti-rattle spring (4)**
7. **Brake pads (2)**
8. **Outer caliper housing**
9. **O-ring**
10. **Bleeder screw**
11. **Bridge bolt**
12. **Bridge bolt/pad pin**
13. **Upper mounting bolt (long)**
14. **Lower mounting bolt (short)**

Figure 2-56. Front Brake Caliper

2. If necessary, remove bleeder screw (10).

⚠WARNING

Compressed air can pierce the skin and flying debris from compressed air could cause serious eye injury. Wear safety glasses when working with compressed air. Never use your hand to check for air leaks or to determine air flow rates. (00061a)

3. See Figure 2-57 and Figure 2-58. Remove pistons.
   a. Place FRONT BRAKE CALIPER PISTON REMOVER (Part No. HD-48649) (3) between caliper housings.

   NOTE

   Verify the hole in tool (1) aligns with the cross-over hole in caliper housing (2) in the caliper housings.

   b. Insert two bridge bolts (2) (metric) and tighten securely.
   c. If the bleeder screw was removed, install finger-tight.
   d. Apply low pressure compressed air to banjo bolt hole (1) to remove pistons from caliper bores. Listen for all four pistons to "pop" against the tool.
   e. Remove bridge bolts. Remove tool.
4. Wiggle pistons from caliper bores to remove.
5. If necessary, remove pad springs from each piston.

NOTICE

Avoid leakage. Prevent damage to piston or piston bore. Use non-metallic tools when servicing components. (00529d)

6. See Figure 2-59. Remove and discard cross-over seal (1) from inside caliper housing.
7. Using a wooden toothpick (2), remove a wiper (3) and square seal (4) from each caliper bore. Discard all removed parts.

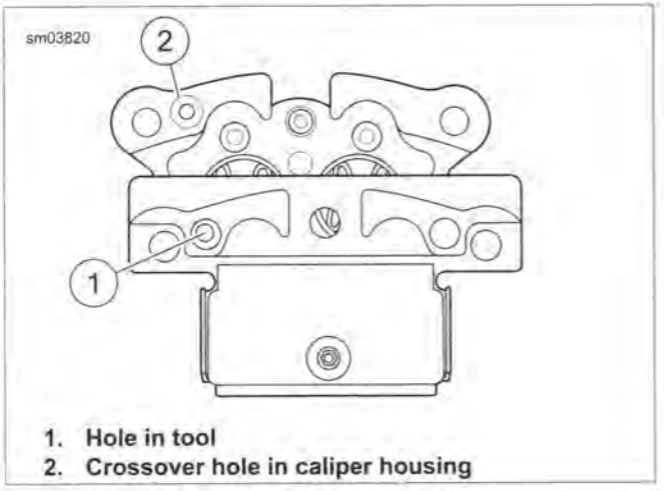

1. Hole in tool
2. Crossover hole in caliper housing

Figure 2-57. Installing Tool

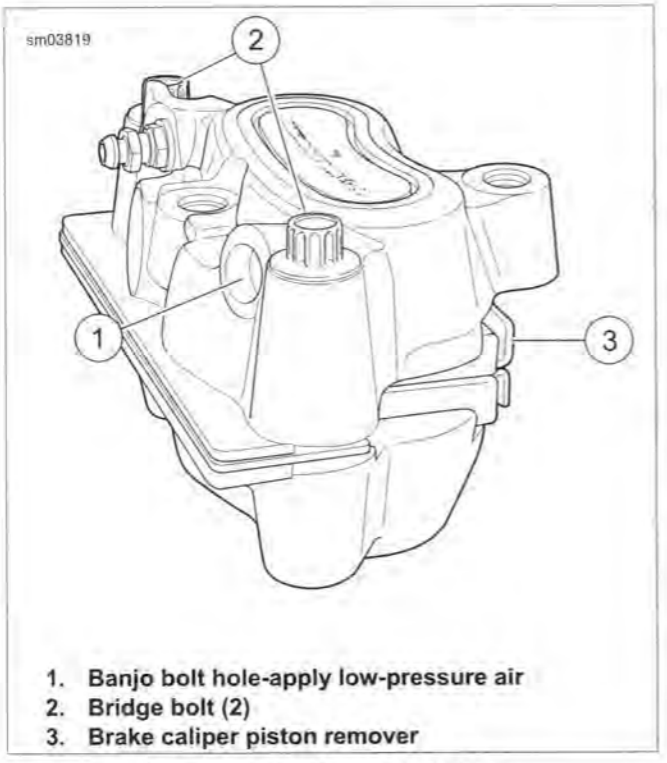

1. Banjo bolt hole-apply low-pressure air
2. Bridge bolt (2)
3. Brake caliper piston remover

Figure 2-58. Removing Pistons

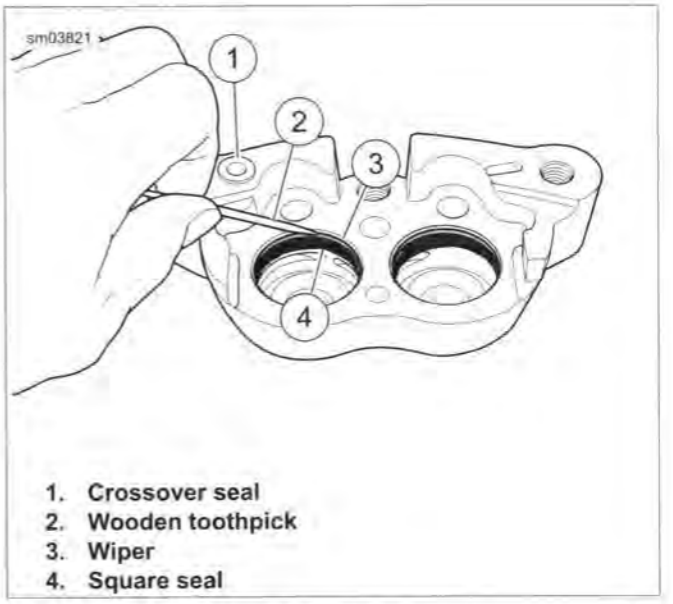

1. Crossover seal
2. Wooden toothpick
3. Wiper
4. Square seal

Figure 2-59. Wipers and Seals

CLEANING, INSPECTION AND REPAIR

⚠WARNING

Use denatured alcohol to clean brake system components. Do not use mineral-based solvents (such as gasoline or paint thinner), which will deteriorate rubber parts even after assembly. Deterioration of these components can cause brake failure, which could result in death or serious injury. (00291a)

⚠WARNING

Compressed air can pierce the skin and flying debris from compressed air could cause serious eye injury. Wear safety glasses when working with compressed air. Never use your hand to check for air leaks or to determine air flow rates. (00061a)

1. Clean all parts with denatured alcohol or DOT 4 BRAKE FLUID. Do not contaminate with mineral oil or other solvents.
2. Wipe parts dry with a clean, lint-free cloth.
3. Clear drilled passages and bore with clean compressed air. Do not use a wire or similar instrument to clean drilled passages.
4. Carefully inspect all components. Replace any parts that appear damaged, worn, or corroded.
   a. Check pistons for pitting, scratches or corrosion on face and also on ground surfaces.
   b. Inspect caliper piston bore. Do not hone bore. If bore shows pitting or corrosion, replace caliper.
   c. Inspect pad pin for grooving and wear. Measure the pad pin diameter in an unworn area and then in the area of any grooving or wear. If wear exceeds 0.015 in (0.38 mm), replace both pins.
   d. Always replace wipers, square seals and cross-over seal after disassembly.

5. If decal on outside housing is removed, scrape remaining adhesive from surface with a razor blade.
6. Inspect brake pads and brake disc. See 1.15 BRAKE PADS AND DISCS.

ASSEMBLY

FASTENER	TORQUE VALUE	
Brake caliper bleeder screw	80-100 **in-lbs**	9.0-11.3 Nm
Brake caliper bridge bolt, front	28-38 ft-lbs	38.0-51.5 Nm
Brake bridge bolt/pad pin, front caliper	15-16 ft-lbs	20.3-22.6 Nm

NOTE

Do not use DOT 4 BRAKE FLUID for lubrication. Use of DOT 4 BRAKE FLUID will result in increased lever travel.

1. Lubricate the following parts before assembly using a light coat of G.E. VERSILUBE #G322 L SILICONE GREASE (marked "Piston Lube") from the service parts kit. All other surfaces must be dry for assembly.
   a. Lubricate nose radius and outside diameter of piston. Apply lube to inside of caliper piston bores.
   b. Apply lube to inside diameter of seals and wipers.

NOTICE

Avoid leakage. Prevent damage to piston or piston bore. Use non-metallic tools when servicing components. (00529d)

2. See Figure 2-56. Install a **new** square seal (3) and a **new** wiper (4) into each piston bore. Use a wooden toothpick to aid installation, if needed.
3. See Figure 2-60. Install pad spring (2) in each piston. Verify that spring is securely installed in the groove in the piston.
4. Turn the piston so the pad spring (2) is oriented as shown. Carefully insert pistons, by hand, into bores of both caliper housings. Press pistons squarely into place until they bottom in the bores. If installation shows resistance, remove piston and check that seals and wipers are properly installed.
5. Place a **new** crossover seal (1) on inside caliper housing.
6. Assemble caliper housings.
   a. Install bleeder screw. Tighten to 80-100 **in-lbs** (9.0-11.3 Nm).
   b. Verify that **new** crossover seal is installed on inside caliper housing.
   c. See Figure 2-56. Mate inside and outside caliper housings using bridge bolt (11) and upper mounting bolt (long) (13) (metric).
   d. Tighten bridge bolt to 28-38 ft-lbs (38.0-51.5 Nm).

⚠WARNING

Always replace brake pads in complete sets for correct and safe brake operation. Improper brake operation could result in death or serious injury. (00111a)

NOTES

- *See Figure 2-61. Verify the pad spring tabs (1) on brake pad engage the pad springs in the pistons.*
- *If the directional tab (2) does not face down when caliper is installed, brake noise may develop.*

7. Install **new** pads into caliper. The directional tab (2) must face down when caliper is installed.
8. See Figure 2-56. Install pad pin/bridge bolt (12) (metric). Tighten to 15-16 ft-lbs (20.3-22.6 Nm).

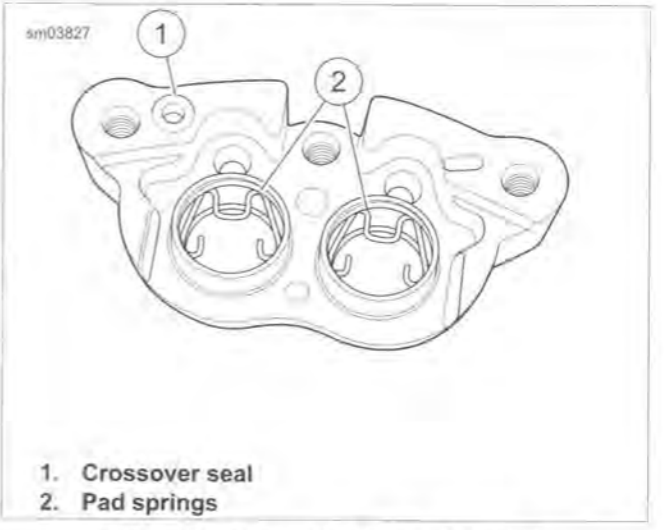

1. **Crossover seal**
2. **Pad springs**

Figure 2-60. Front Caliper Pad Springs

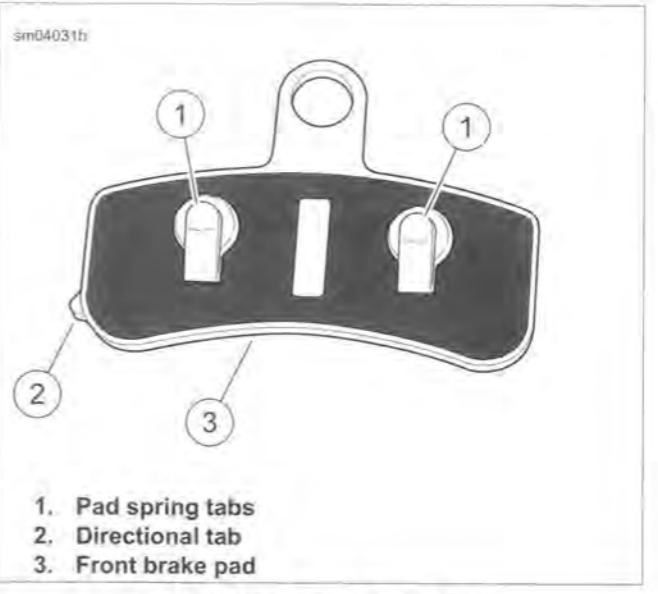

1. **Pad spring tabs**
2. **Directional tab**
3. **Front brake pad**

Figure 2-61. Front Brake Pad

INSTALLATION

FASTENER	TORQUE VALUE	
Front brake caliper lower mounting bolt	28-38 ft-lbs	38.0-51.5 Nm
Front brake caliper upper mounting bolt	28-38 ft-lbs	38.0-51.5 Nm
Front caliper banjo bolt	17-22 ft-lbs	23.1-29.9 Nm
Master cylinder reservoir cover screws: front cover	6-8 **in-lbs**	0.7-0.9 Nm

1. See Figure 2-62. Attach caliper to fork leg.
   a. Place caliper over brake disc with bleeder screw facing upwards.
   b. **ABS models:** Install wheel speed sensor cable retainer when installing caliper to front fork.
   c. Loosely install upper mounting bolt (4) (metric) into top hole on fork leg.
   d. Install lower mounting bolt (5) (metric) into bottom hole on fork leg. Tighten bottom mounting bolt to 28-38 ft-lbs (38.0-51.5 Nm).
   e. Final tighten the top mounting bolt to 28-38 ft-lbs (38.0-51.5 Nm).

NOTICE

Avoid leakage. Be sure gaskets, banjo bolt(s), brake line and master cylinder bore are clean and undamaged before assembly. (00322a)

2. Lubricate **new** steel/rubber washers with DOT 4 BRAKE FLUID. Connect the brake line (3) to caliper using two **new** steel/rubber washers (2) and banjo bolt (1). Tighten to 17-22 ft-lbs (23.1-29.9 Nm).

⚠CAUTION

Direct contact of D.O.T. 4 brake fluid with eyes can cause irritation. Avoid eye contact. In case of eye contact flush with large amounts of water and get medical attention. Swallowing large amounts of D.O.T. 4 brake fluid can cause digestive discomfort. If swallowed, obtain medical attention. Use in well ventilated area. KEEP OUT OF REACH OF CHILDREN. (00240a)

3. Remove cover from front brake master cylinder. Fill master cylinder with DOT 4 BRAKE FLUID. Verify that fluid level is 1/8-3/8 in (3.2-9.5 mm) below top of reservoir with master cylinder in a level position.

⚠WARNING

After servicing brakes and before moving motorcycle, pump brakes to build brake system pressure. Insufficient pressure can adversely affect brake performance, which could result in death or serious injury. (00279a)

⚠WARNING

When any hydraulic brake component, line or connection is loosened or replaced on an ABS motorcycle, Digital Technician II must be used during the brake bleeding procedure to verify all air is removed from the system. Failure to properly bleed the brake system could adversely affect braking, which could result in death or serious injury. (00585c)

4. Bleed brake system. See 2.16 BLEEDING BRAKES.

⚠WARNING

A plugged or covered relief port can cause brake drag or lock-up, which could lead to loss of control, resulting in death or serious injury. (00288a)

5. Check proper operation of the master cylinder relief port by actuating the brake pedal or lever with the cover removed. A slight spurt of fluid will break the fluid surface in the reservoir if internal components are working properly.
6. Install gasket and cover on master cylinder with screws. Tighten to 6-8 **in-lbs** (0.7-0.9 Nm).

⚠WARNING

After repairing the brake system, test brakes at low speed. If brakes are not operating properly, testing at high speeds can cause loss of control, which could result in death or serious injury. (00289a)

7. Test brakes.
   a. Turn ignition switch ON. Apply brakes to check proper lamp operation.
   b. Test ride motorcycle. Repeat the bleeding procedure if brakes feel spongy. See 2.16 BLEEDING BRAKES.

NOTE

*Avoid making hard stops for the first 100 miles (160 km). This procedure allows the **new** pads to become conditioned to the brake discs.*

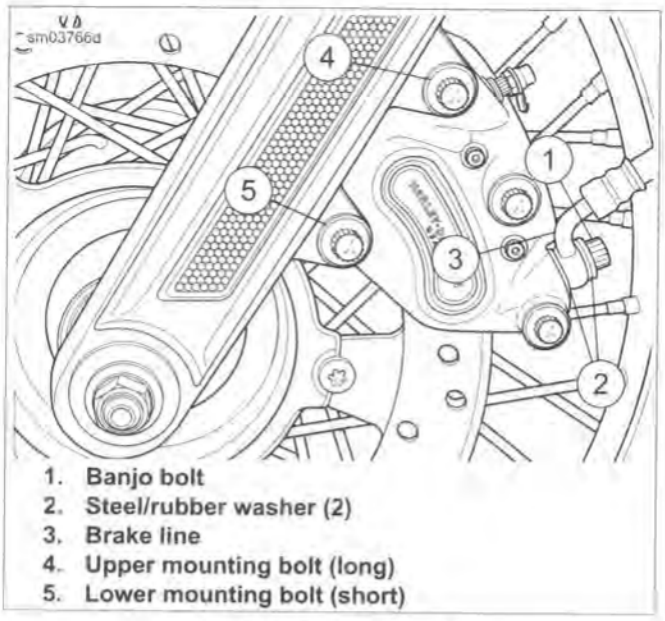

1. Banjo bolt
2. Steel/rubber washer (2)
3. Brake line
4. Upper mounting bolt (long)
5. Lower mounting bolt (short)

Figure 2-62. Front Caliper

REMOVAL

⚠CAUTION

Direct contact of D.O.T. 4 brake fluid with eyes can cause irritation. Avoid eye contact. In case of eye contact flush with large amounts of water and get medical attention. Swallowing large amounts of D.O.T. 4 brake fluid can cause digestive discomfort. If swallowed, obtain medical attention. Use in well ventilated area. KEEP OUT OF REACH OF CHILDREN. (00240a)

NOTICE

D.O.T. 4 brake fluid will damage painted and body panel surfaces it comes in contact with. Always use caution and protect surfaces from spills whenever brake work is performed. Failure to comply can result in cosmetic damage. (00239b)

NOTICE

Do not allow dirt or debris to enter the master cylinder reservoir. Dirt or debris in the reservoir can cause improper operation and equipment damage. (00205c)

1. See Figure 2-63 or Figure 2-64. Remove banjo bolt (14) and gaskets (13). Discard washers.
2. Remove jamnut (12).
3. Loosen jamnut (22) on rod (23 or 24).
4. Unscrew pushrod (9) from brake rod.

NOTE

Use a wrench on pushrod flats if necessary.

5. Raise pedal to move master cylinder/reservoir forward and out of frame bracket.

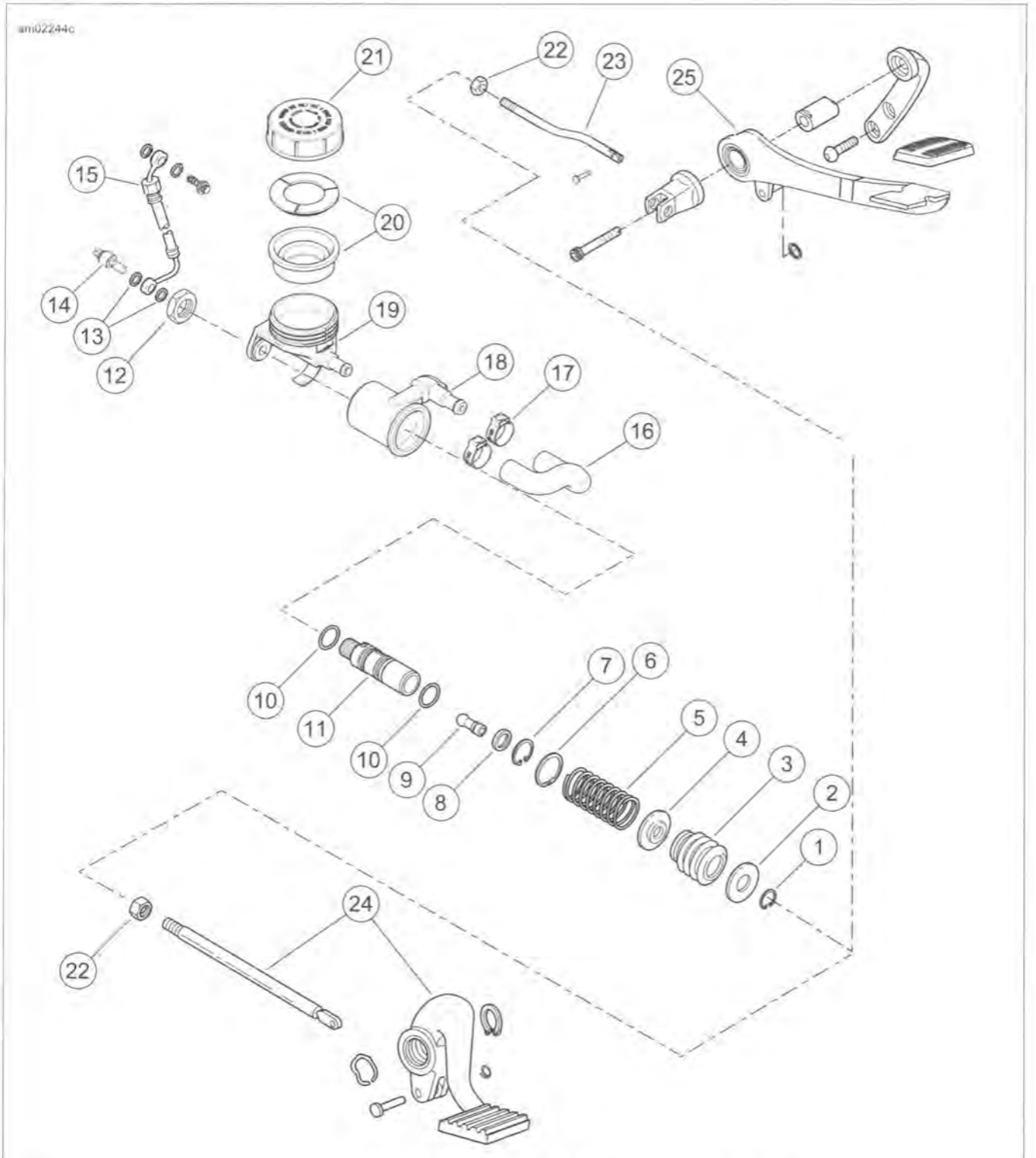

1. Retaining ring
2. Washer
3. Boot
4. Spring retainer
5. Spring
6. Retaining ring
7. Retaining ring
8. Washer
9. Pushrod
10. Cartridge body O-ring (2)
11. Cartridge body
12. Jamnut
13. Sealing washer (2)
14. Banjo bolt
15. Brake line
16. Hose
17. Clamp (2)
18. Housing
19. Reservoir
20. Cover gasket assembly
21. Cap
22. Jamnut
23. Pushrod (FXDWG, FXDF)
24. Brake lever assembly (all but FXDWG, FXDF)
25. Brake pedal (FXDWG, FXDF)

Figure 2-63. Rear Brake Master Cylinder: All But FLD, ABS Only

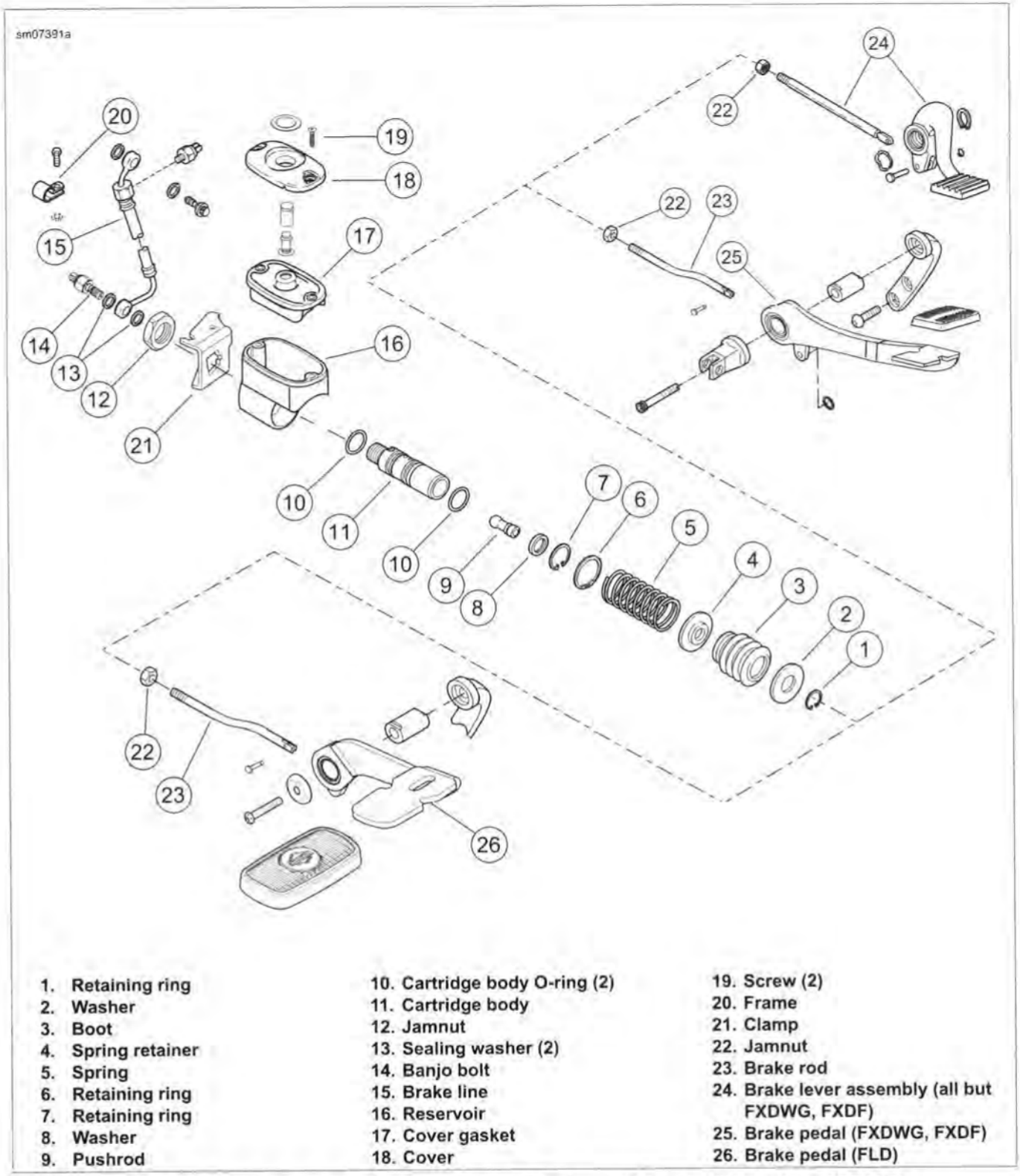

1. Retaining ring
2. Washer
3. Boot
4. Spring retainer
5. Spring
6. Retaining ring
7. Retaining ring
8. Washer
9. Pushrod
10. Cartridge body O-ring (2)
11. Cartridge body
12. Jamnut
13. Sealing washer (2)
14. Banjo bolt
15. Brake line
16. Reservoir
17. Cover gasket
18. Cover
19. Screw (2)
20. Frame
21. Clamp
22. Jamnut
23. Brake rod
24. Brake lever assembly (all but FXDWG, FXDF)
25. Brake pedal (FXDWG, FXDF)
26. Brake pedal (FLD)

Figure 2-64. Rear Brake Master Cylinder: FLD (ABS and non-ABS) and All Other Non-ABS Models

DISASSEMBLY

1. Wash exterior of master cylinder/reservoir with a clean, nonflammable solvent.
2. See Figure 2-63 or Figure 2-64. Thread banjo bolt (14) into the cartridge body (11).
3. Remove boot (3) from groove in master cylinder/reservoir.
4. Set master cylinder/reservoir upright with banjo bolt resting on bench. Push master cylinder/reservoir down and off the cartridge body.
5. Protect cartridge body from dirt or grease.
6. Press down on washer (2) to compress spring (5). Remove retaining ring (1) from groove in pushrod (9).

7. Carefully release spring and remove washer, boot, spring retainer (4) (inside boot) and spring.
8. Remove and discard retaining ring (7) from bore of cartridge body and remove pushrod and washer (8).

NOTE

Do not disassemble cartridge body (11). Cartridge body components are not sold separately. Replace cartridge body if piston seal leaks.

CLEANING AND INSPECTION

⚠WARNING

Use denatured alcohol to clean brake system components. Do not use mineral-based solvents (such as gasoline or paint thinner), which will deteriorate rubber parts even after assembly. Deterioration of these components can cause brake failure, which could result in death or serious injury. (00291a)

⚠WARNING

Compressed air can pierce the skin and flying debris from compressed air could cause serious eye injury. Wear safety glasses when working with compressed air. Never use your hand to check for air leaks or to determine air flow rates. (00061a)

1. Clean exterior of master cylinder/reservoir with a clean, nonflammable solvent. Lubricate all internal parts with lubricant provided in kit.
2. See Figure 2-63 or Figure 2-64. Inspect reservoir bore for scratches. Replace if scratches are present.
3. Check boot (3) for tears. Replace if any exist.
4. Inspect threads on cartridge body (11), pushrod (9) and banjo bolt (14). Replace any part with damaged threads.
5. Inspect spring for cracks or damaged coils. If any exist, replace spring.
6. Carefully remove O-rings (10) from cartridge body. Do not scratch O-ring grooves. Clean grooves with soft cotton cloth moistened with alcohol. Inspect grooves for scratches and dirt. Remove dirt or replace cartridge body if grooves are scratched.

ASSEMBLY

NOTICE

Avoid leakage. Be sure gaskets, banjo bolt(s), brake line and master cylinder bore are clean and undamaged before assembly. (00322a)

1. See Figure 2-63 or Figure 2-64. Lubricate cartridge body O-rings (10) with DOT 4 BRAKE FLUID. Install in O-ring grooves on cartridge body (11).
2. Lubricate bore of master cylinder/reservoir with DOT 4 BRAKE FLUID.
3. Insert cartridge body into reservoir. Using hand-pressure only, press cartridge body into adapter making sure notch on cartridge body engages lug inside bore of the adapter.
4. Install banjo bolt (14) into cartridge body and stand master cylinder upright with banjo bolt resting on bench.
5. Place washer (8) on pushrod (9).
6. Place a **new** retaining ring (7) on pushrod. Insert ball-end of pushrod into piston. Push piston downward with pushrod until washer is properly seated in the cartridge bore.
7. Install the **new** retaining ring in groove inside cartridge bore. Make sure that retaining ring is fully seated in groove.
8. Release downward pressure on pushrod. Check that pushrod rotates freely.
9. Install retaining ring (6) in groove on cartridge body.
10. Install on pushrod, spring (5), spring retainer (4) (large cupped side toward spring), boot (3) with drain hole down, and washer (2).
11. Press down on washer and install retaining ring (1) in pushrod groove.
12. Seat sealing lip of boot into groove on master cylinder/reservoir adapter.

INSTALLATION

FASTENER	TORQUE VALUE	
Master cylinder mounting nut, rear	30-40 ft-lbs	40.7-54.2 Nm
Banjo bolt to rear master cylinder	17-22 ft-lbs	23.0-29.8 Nm
Master cylinder reservoir rear cover screws; FLD (ABS and non-ABS) and all other non-ABS models	6-8 **in-lbs**	0.68-0.90 Nm

1. See Figure 2-63 or Figure 2-64. Guide threaded end of master cylinder/reservoir through hole in frame bracket. Make sure the square body of the master cylinder/reservoir is engaged in the square hole of the mounting bracket.
2. Install jamnut (12). Tighten to 30-40 ft-lbs (40.7-54.2 Nm).
3. Install pushrod (9) fully onto brake rod (23) or brake lever assembly (24). Do not tighten jamnut (22) now.
4. Lubricate **new** steel/rubber washers (13) with DOT 4 BRAKE FLUID. Install brake line (15) using banjo bolt (14) and **new** steel/rubber washers (13). Tighten banjo bolt to 17-22 ft-lbs (23.0-29.8 Nm).

⚠WARNING

After servicing brakes and before moving motorcycle, pump brakes to build brake system pressure. Insufficient pressure can adversely affect brake performance, which could result in death or serious injury. (00279a)

⚠WARNING

When adjusting brake control rod, never allow more than nine threads to be exposed between control rod and jam nut. If more than nine threads are exposed, brake rod can come apart resulting in loss of rear brake, which could cause death or serious injury. (00306c)

5. Tighten jamnut after adjustment. Verify that no more than nine threads are visible on brake rod.
6. Verify that water drain hole in boot (3) is positioned at bottom.

⚠WARNING

When any hydraulic brake component, line or connection is loosened or replaced on an ABS motorcycle, Digital Technician II must be used during the brake bleeding procedure to verify all air is removed from the system. Failure to properly bleed the brake system could adversely affect braking, which could result in death or serious injury. (00585c)

NOTE

Brake pedal free play is built into master cylinder. No adjustment is required. When pedal is pushed down with hand, a small amount of free play must be felt.

7. Bleed brake system. See 2.16 BLEEDING BRAKES.
8. **All ABS models but FLD:** See Figure 2-63. Install cover gasket assembly (20) and cap (21). Tighten cap securely.
9. **FLD (ABS and non-ABS) and all other non-ABS models:** See Figure 2-64. Install cover gasket (17) and cover (18) on master cylinder/reservoir. Tighten cover screws to 6-8 **in-lbs** (0.68-0.90 Nm).

⚠WARNING

After repairing the brake system, test brakes at low speed. If brakes are not operating properly, testing at high speeds can cause loss of control, which could result in death or serious injury. (00289a)

10. Test brakes.
    a. Turn ignition switch ON. Apply brakes to check proper lamp operation.
    b. Test ride motorcycle. Repeat the bleeding procedure if brakes feel spongy. See 2.16 BLEEDING BRAKES.

NOTE

See Figure 2-64. A sight glass in cover (18) enables the rider to check the brake fluid level without removing the master cylinder cover. Sight glass appears dark if fluid is present. As the fluid level drops, the glass appears lighter to indicate this condition to the rider. Sight glass is included on:

- *All Non-ABS models*
- *All FLD ABS models*

REMOVAL

NOTICE

D.O.T. 4 brake fluid will damage painted and body panel surfaces it comes in contact with. Always use caution and protect surfaces from spills whenever brake work is performed. Failure to comply can result in cosmetic damage. (00239b)

NOTE

If only replacing brake pads, do not remove rear brake caliper. If pad replacement is necessary, see 1.15 BRAKE PADS AND DISCS.

1. See Figure 2-65. Remove the banjo bolt (1) and both steel/rubber washers (2) to detach rear brake line from caliper. Discard washers.
2. Remove both the slider pin (3) and mounting bolt (4) (metric). Remove caliper assembly from brake disc.
3. To remove rear caliper mount:
   a. Remove axle from rear wheel. See 2.5 REAR WHEEL.
   b. Lift rear caliper mount away from axle and rear fork. Notch in caliper mount must clear tab on rear fork.

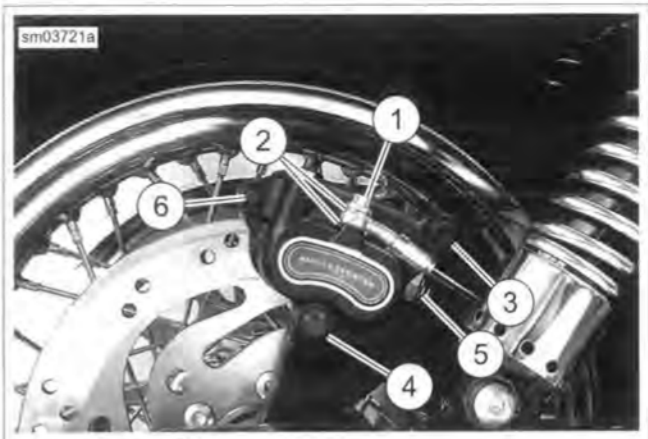

1. **Banjo bolt**
2. **Steel/rubber washer (2)**
3. **Slider pin**
4. **Mounting bolt**
5. **Tab slot**
6. **Pad pin**

Figure 2-65. Rear Caliper

DISASSEMBLY

PART NUMBER	TOOL NAME
HD-48648	BRAKE CALIPER PISTON REMOVER

1. See Figure 2-66. Remove pad pin (3) and brake pads (12).
2. If necessary, remove bleeder screw (4).

NOTE

If phenolic insulators (8) are loose, remove from pistons.

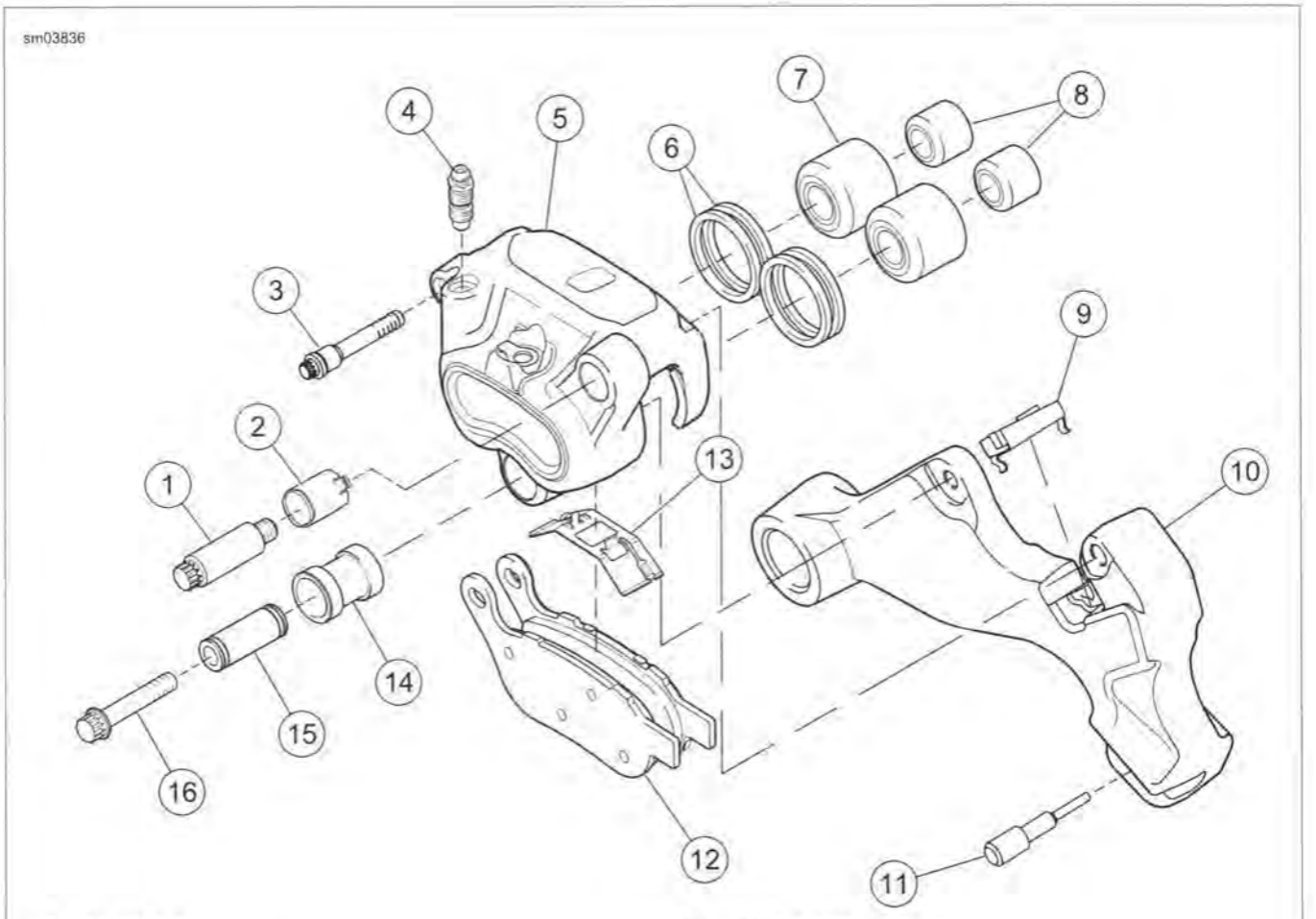

1. Slider pin
2. Bushing (upper)
3. Pad pin
4. Bleeder screw with O-ring
5. Caliper housing
6. Square seals (4)
7. Piston (2)
8. Phenolic insulator (available only in repair kit)
9. Torque clip
10. Rear caliper mount
11. Rubber bumper
12. Brake pads (2)
13. Anti-rattle spring
14. Rubber boot
15. Bushing (lower)
16. Mounting bolt

Figure 2-66. Rear Brake Caliper

⚠WARNING

Compressed air can pierce the skin and flying debris from compressed air could cause serious eye injury. Wear safety glasses when working with compressed air. Never use your hand to check for air leaks or to determine air flow rates. (00061a)

⚠CAUTION

When removing piston with compressed air, piston can develop considerable force and fly out of caliper bore. Keep hands away from piston to avoid possible injury. (00530b)

NOTE

Reuse phenolic insulators unless damaged.

3. See Figure 2-67. Remove pistons.
   a. Place BRAKE CALIPER PISTON REMOVER (Part No. HD-48648) (3) into caliper housing. Install bolt (2) finger-tight.

   NOTE

   Do not use a wrench to tighten remover retaining bolt (2).

   b. If the bleeder screw was removed, install it finger-tight.
   c. Apply low pressure compressed air to banjo bolt hole (1) to remove pistons from caliper bores. Listen for both pistons to "pop" against the tool.
   d. Remove piston remover tool.
4. Wiggle pistons to remove them completely from caliper bores.

NOTICE

Avoid leakage. Prevent damage to piston or piston bore. Use non-metallic tools when servicing components. (00529d)

5. See Figure 2-68. Using a wooden toothpick (1), remove two square seals (2) from each caliper bore. Discard all removed parts.
6. Pull anti-rattle spring (3) straight out to remove.

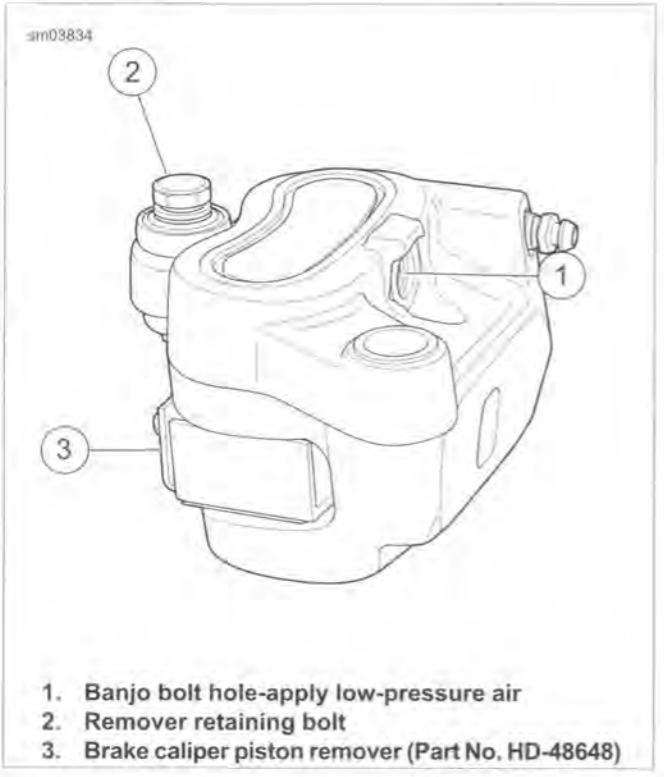

1. **Banjo bolt hole-apply low-pressure air**
2. **Remover retaining bolt**
3. **Brake caliper piston remover (Part No. HD-48648)**

Figure 2-67. Removing Pistons

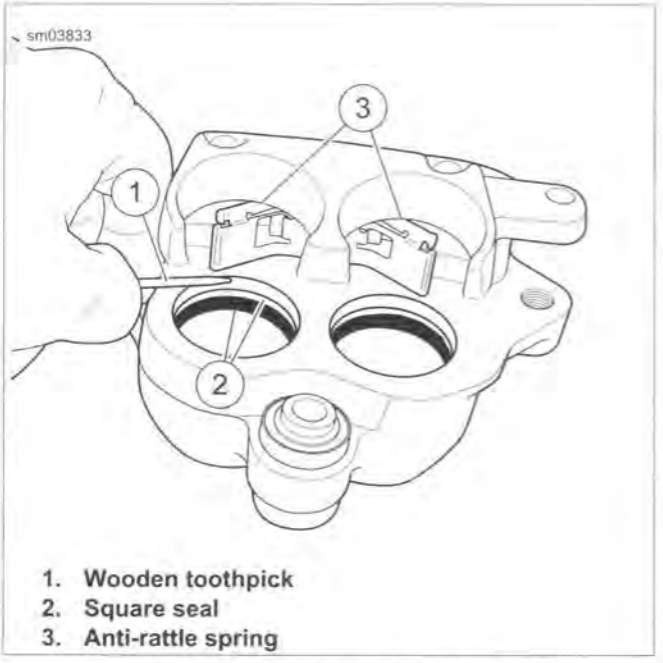

1. **Wooden toothpick**
2. **Square seal**
3. **Anti-rattle spring**

Figure 2-68. Seals and Spring

CLEANING, INSPECTION AND REPAIR

WARNING

Use denatured alcohol to clean brake system components. Do not use mineral-based solvents (such as gasoline or paint thinner), which will deteriorate rubber parts even after assembly. Deterioration of these components can cause brake failure, which could result in death or serious injury. (00291a)

WARNING

Compressed air can pierce the skin and flying debris from compressed air could cause serious eye injury. Wear safety glasses when working with compressed air. Never use your hand to check for air leaks or to determine air flow rates. (00061a)

1. Clean all parts with denatured alcohol or DOT 4 BRAKE FLUID. Do not contaminate with mineral oil or other solvents. Wipe parts dry with a clean, lint-free cloth. Clear drilled passages and bore with clean compressed air. Do not use a wire or similar instrument to clean drilled passages.
2. Inspect parts for wear or damage. Replace parts if necessary.
   a. Check pistons for pitting, scratches or corrosion on face and also on ground surfaces.
   b. Inspect phenolic insulators for damage.
   c. Inspect caliper piston bore. Do not hone bore. If bore shows pitting or corrosion, replace caliper.
   d. Inspect pad pin for grooving and wear. Measure the pad pin diameter in an unworn area. Then measure in the area of any grooving or wear. If wear exceeds 0.015 in (0.38 mm), replace both pins.
   e. See Figure 2-66. Inspect rubber boot (14) for cracks and damage. Inspect bushing (15) for free movement. Inspect bushing (2) for free movement or damage.
   f. Always replace square seals after disassembly.
3. If decal on outside housing is removed, scrape remaining adhesive from surface with a razor blade.
4. Inspect brake pads and brake disc. See 1.15 BRAKE PADS AND DISCS.

ASSEMBLY

FASTENER	TORQUE VALUE	
Brake caliper bleeder screw	80-100 **in-lbs**	9.0-11.3 Nm
Brake pad pin, rear caliper	80-120 **in-lbs**	9.0-13.6 Nm

NOTE

Do not use DOT 4 BRAKE FLUID for lubrication. Use of DOT 4 BRAKE FLUID increases lever travel.

1. Lubricate the following parts before assembly using the lubricant supplied in the service parts kit. All other surfaces must be dry for assembly.
   a. Lubricate nose radius and outside diameter of piston. Apply lube to inside of caliper piston bores.
   b. Apply lube to inside diameter of square seals.

NOTICE

Avoid leakage. Prevent damage to piston or piston bore. Use non-metallic tools when servicing components. (00529d)

2. See Figure 2-68. Install two **new** square seals (2) into each piston bore. Use a wooden toothpick (1) to aid installation if needed.
3. Install anti-rattle spring (3). Verify that it is positioned correctly.
4. Carefully insert pistons, by hand, into bores of caliper housing. Press pistons squarely into place until they bottom in the bores. If installation shows resistance, remove piston. Check that seals are properly installed.
5. See Figure 2-66. Install bleeder screw with O-ring (4) in caliper housing, if removed. Tighten to 80-100 **in-lbs** (9.0-11.3 Nm).

NOTE

Verify phenolic insulators (8) are in place before installing brake pads.

6. Insert brake pads into caliper with friction material facing opening for brake disc.
7. Install pad pin (3). Tighten to 80-120 **in-lbs** (9.0-13.6 Nm).

NOTE

If pad pins do not fit, check the following:

- *A set of pads are installed, not two identical pads.*
- *Anti-rattle spring orientation matches Figure 2-66.*

INSTALLATION

FASTENER	TORQUE VALUE	
Brake caliper mounting bolt, rear	120-168 **in-lbs**	13.6-18.9 Nm
Rear caliper banjo bolt	17-22 ft-lbs	23.1-29.9 Nm

1. Install rear axle and caliper mount, if removed. Verify notch in mount engages tab on rear fork. See 2.5 REAR WHEEL.
2. See Figure 2-66. Verify torque clip (9) is in place in caliper mount.
3. See Figure 2-65. Install caliper with pads on caliper mount. Tighten slider pin (3) and mounting bolt (4) (metric) to 120-168 **in-lbs** (13.6-18.9 Nm). Verify tabs on brake pads engage tab slot (5) in caliper mount.

NOTICE

Avoid leakage. Be sure gaskets, banjo bolt(s), brake line and caliper bore are clean and undamaged before assembly. (00321a)

4. Lubricate **new** sealing washers with DOT 4 BRAKE FLUID. Connect the brake line to caliper using two **new** sealing washers (2) and banjo bolt (1). Tighten to 17-22 ft-lbs (23.1-29.9 Nm).

⚠CAUTION

Direct contact of D.O.T. 4 brake fluid with eyes can cause irritation. Avoid eye contact. In case of eye contact flush with large amounts of water and get medical attention. Swallowing large amounts of D.O.T. 4 brake fluid can cause digestive discomfort. If swallowed, obtain medical attention. Use in well ventilated area. KEEP OUT OF REACH OF CHILDREN. (00240a)

5. Remove cover from rear brake master cylinder. Fill master cylinder with DOT 4 BRAKE FLUID. Verify that fluid level is 1/4-1/2 in (6.4-12.7 mm) below top of reservoir with master cylinder in a level position.

⚠WARNING

When any hydraulic brake component, line or connection is loosened or replaced on an ABS motorcycle, Digital Technician II must be used during the brake bleeding procedure to verify all air is removed from the system. Failure to properly bleed the brake system could adversely affect braking, which could result in death or serious injury. (00585c)

⚠WARNING

After servicing brakes and before moving motorcycle, pump brakes to build brake system pressure. Insufficient pressure can adversely affect brake performance, which could result in death or serious injury. (00279a)

6. Bleed brake system. See 2.16 BLEEDING BRAKES.

⚠WARNING

After repairing the brake system, test brakes at low speed. If brakes are not operating properly, testing at high speeds can cause loss of control, which could result in death or serious injury. (00289a)

7. Test brakes.
   a. Turn ignition switch ON. Check operation of rear lamps.
   b. Test ride motorcycle. Repeat the bleeding procedure if brakes feel spongy. See 2.16 BLEEDING BRAKES.

NOTE

*Avoid making hard stops for the first 100 miles (160 km). This procedure allows the **new** pads to become conditioned to the brake discs.*

FRONT MASTER CYLINDER TO FRONT CALIPER LINE ASSEMBLY

PART NUMBER	TOOL NAME
HD-48650	DIGITAL TECHNICIAN II
SNAP-ON BB200A	BASIC VACUUM BRAKE BLEEDER

FASTENER	TORQUE VALUE	
Banjo bolt to front master cylinder	17-22 ft-lbs	23.0-29.8 Nm
Front brake line manifold fastener	36-48 **in-lbs**	4.1-5.4 Nm
Banjo bolt to front caliper	17-22 ft-lbs	23.0-29.8 Nm
ABS brake line flare nuts	120-144 **in-lbs**	13.6-16.3 Nm

Removal

NOTE

See Figure 2-69. The front master cylinder to manifold brake line, manifold and manifold to front caliper brake line must be replaced as an assembly.

1. **ABS models:** Remove cable straps securing WSS harness to front brake line.

NOTE

For best results, use the BASIC VACUUM BRAKE BLEEDER (Part No. Snap-on BB200A) or equivalent tool to drain the brake systems.

2. Drain front brake system.

NOTE

Wrap banjo fittings with pieces of lint-free shop towel to absorb any loss of brake fluid.

3. Remove banjo bolt from master cylinder reservoir. Discard sealing washers.
4. Remove banjo bolt securing brake line to caliper. Discard sealing washers.
5. **ABS models:** See Figure 2-69. Disconnect ABS module to front manifold brake lines (4) from manifold (5).
6. Remove front brake line manifold to lower fork bracket fastener (6).
7. Remove brake line assembly.

Installation

1. Secure brake line with **new** sealing washers to master cylinder. Tighten banjo bolt to 17-22 ft-lbs (23.0-29.8 Nm).
2. See Figure 2-69. Secure front brake line manifold (5) and tighten front manifold to lower fork bracket fastener (6) to 36-48 **in-lbs** (4.1-5.4 Nm).
3. Install brake line to front caliper with banjo bolt and **new** sealing washers. Tighten to 17-22 ft-lbs (23.0-29.8 Nm). Repeat for models with dual front calipers.
4. **ABS models:** Install ABS module to front manifold brake lines (4) to manifold (5). Tighten to 120-144 **in-lbs** (13.6-16.3 Nm).
5. **ABS models:** Secure WSS cable to brake line with cable straps at correct locations. See 7.25 WHEEL SPEED SENSORS.

⚠WARNING

When any hydraulic brake component, line or connection is loosened or replaced on an ABS motorcycle, Digital Technician II must be used during the brake bleeding procedure to verify all air is removed from the system. Failure to properly bleed the brake system could adversely affect braking, which could result in death or serious injury. (00585c)

6. Bleed brake system. See 2.16 BLEEDING BRAKES.
7. To confirm that brake system is properly connected and all air is purged, install master cylinder reservoir cover. Connect motorcycle to DIGITAL TECHNICIAN II (Part No. HD-48650) and perform "ABS Service" procedure.

⚠WARNING

After repairing the brake system, test brakes at low speed. If brakes are not operating properly, testing at high speeds can cause loss of control, which could result in death or serious injury. (00289a)

8. Test brakes.
   a. Check operation of rear brake lamp.
   b. Test ride motorcycle. Repeat the bleeding procedure if brakes feel spongy.

ABS MODULE TO FRONT MANIFOLD BRAKE LINES

PART NUMBER	TOOL NAME
HD-48650	DIGITAL TECHNICIAN II
SNAP-ON BB200A	BASIC VACUUM BRAKE BLEEDER

FASTENER	TORQUE VALUE	
Banjo bolt to ABS module	14-18 ft-lbs	18.9-24.4 Nm
ABS brake line flare nuts	120-144 **in-lbs**	13.6-16.3 Nm

Removal

1. Remove fuel tank. See 4.4 FUEL TANK.
2. Remove battery and battery tray. See 7.10 BATTERY TRAY AND BATTERY CABLES.
3. **Active exhaust:** Remove active exhaust cable. See 7.31 ACTIVE EXHAUST: HDI.

NOTE

For best results, use the BASIC VACUUM BRAKE BLEEDER (Part No. Snap-on BB200A) or equivalent tool to drain the brake systems.

4. Drain front brake system.
5. See Figure 2-70. Cut cable strap (1). Remove anchor from frame.
6. Remove cable strap securing WSS harness to brake lines.

NOTICE

D.O.T. 4 brake fluid will damage painted and body panel surfaces it comes in contact with. Always use caution and protect surfaces from spills whenever brake work is performed. Failure to comply can result in cosmetic damage. (00239b)

NOTE

Wrap banjo fittings with pieces of lint-free shop towel to absorb any loss of brake fluid.

7. See Figure 2-72. Remove banjo bolts from ABS module to front brake line manifold (1) and front master cylinder to ABS module (2). Discard sealing washers.
8. See Figure 2-69. Disconnect brake lines from manifold (5) under the lower fork bracket. Hold suitable container under manifold to allow reservoir to drain.
9. Remove ABS brake lines from frame.

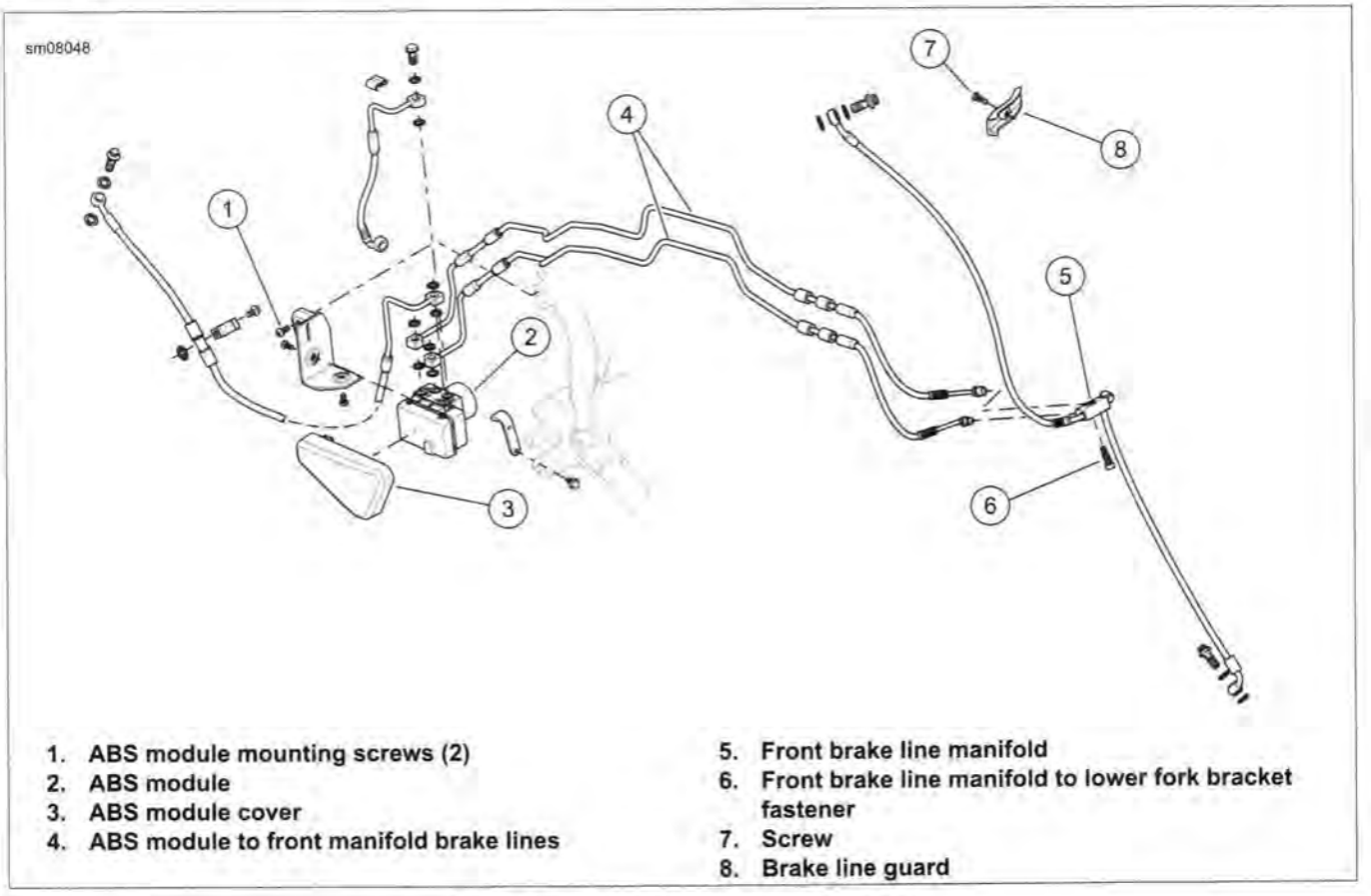

1. **ABS module mounting screws (2)**
2. **ABS module**
3. **ABS module cover**
4. **ABS module to front manifold brake lines**
5. **Front brake line manifold**
6. **Front brake line manifold to lower fork bracket fastener**
7. **Screw**
8. **Brake line guard**

Figure 2-69. ABS Brake System (typical)

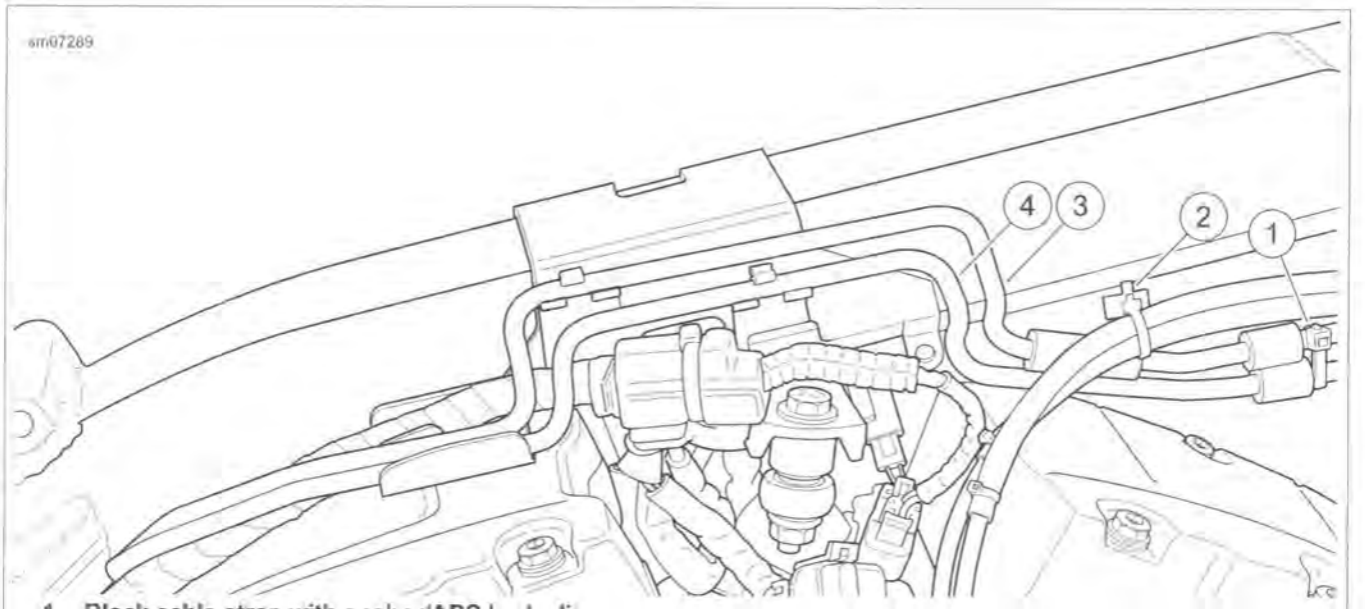

1. Black cable strap with anchor/ABS brake lines
2. White cable strap with anchor/throttle cables
3. ABS brake line from module to front brake line manifold to caliper
4. ABS brake lines from module to front brake line manifold to master cylinder

Figure 2-70. ABS Brake Lines with Anchors

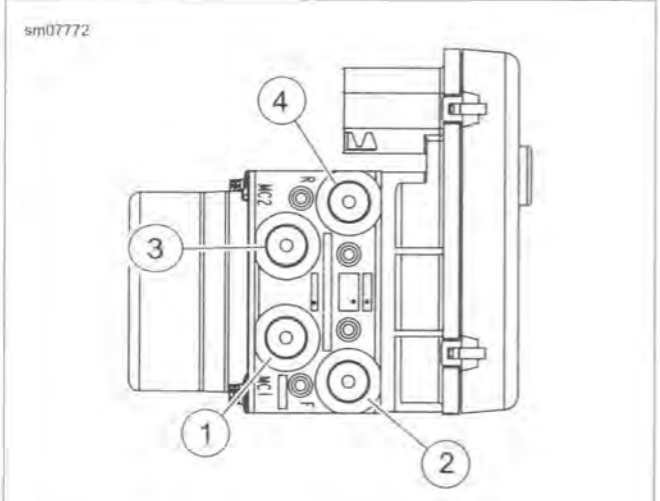

1. Front brake master cylinder (MC1) in
2. Front (F) caliper out
3. Rear brake master cylinder (MC2) in
4. Rear (R) caliper out

Figure 2-71. Brake Fluid Line Connections

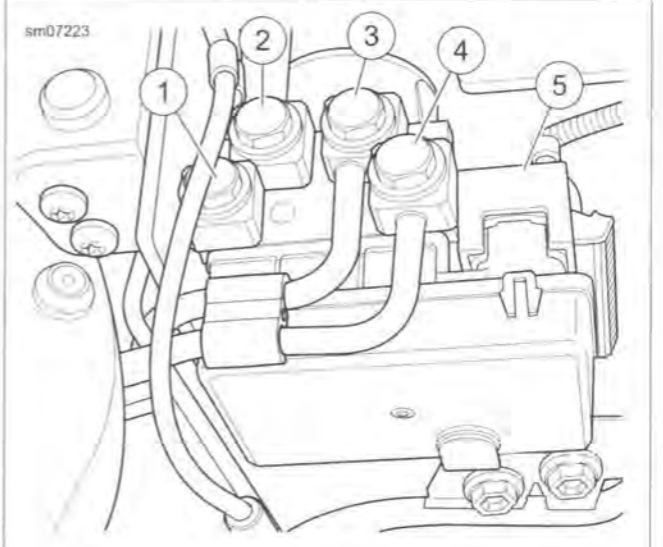

1. ABS module to front brake line manifold (F)
2. Front master cylinder to ABS module (MC 1)
3. Rear master cylinder to ABS module (MC 2)
4. ABS module to rear caliper (R)
5. Electrical connector

Figure 2-72. ABS Module Connections

Installation

1. Route brake lines from ABS module through caddy on frame backbone.

NOTE

See Figure 2-70. Install anchor into frame and cable strap (1) before tightening brake lines at manifold to prevent brake lines from moving when tightening.

2. See Figure 2-70. Install anchor into main frame. Secure lines with cable strap (1).
3. See Figure 2-72. Secure brake lines to ABS module with **new** sealing washers. Tighten to 14-18 ft-lbs (18.9-24.4 Nm).
4. Install brake lines to manifold. Tighten to 120-144 **in-lbs** (13.6-16.3 Nm).
5. Secure rear WSS to brake lines with cable straps.
6. Bleed brake system. See 2.16 BLEEDING BRAKES.
7. Install battery tray and battery. See 7.10 BATTERY TRAY AND BATTERY CABLES and 1.18 BATTERY MAINTENANCE.
8. **Active exhaust:** Install active exhaust cable. See 7.31 ACTIVE EXHAUST: HDI.
9. Install fuel tank. See 4.4 FUEL TANK.

⚠WARNING

When any hydraulic brake component, line or connection is loosened or replaced on an ABS motorcycle, Digital Technician II must be used during the brake bleeding procedure to verify all air is removed from the system. Failure to properly bleed the brake system could adversely affect braking, which could result in death or serious injury. (00585c)

10. To confirm that brake system is properly connected and that all air is purged, connect motorcycle to DIGITAL TECHNICIAN II (Part No. HD-48650) and perform "ABS Service" procedure.

⚠WARNING

After installing seat, pull upward on seat to be sure it is locked in position. While riding, a loose seat can shift causing loss of control, which could result in death or serious injury. (00070b)

11. Install seat.

⚠WARNING

After repairing the brake system, test brakes at low speed. If brakes are not operating properly, testing at high speeds can cause loss of control, which could result in death or serious injury. (00289a)

12. Test brakes.
    a. Apply brakes to check proper lamp operation.
    b. Test ride motorcycle. Repeat the bleeding procedure if brakes feel spongy.

REAR MASTER CYLINDER TO ABS MODULE

PART NUMBER	TOOL NAME
HD-48650	DIGITAL TECHNICIAN II

FASTENER	TORQUE VALUE	
Brake switch/banjo bolt to rear master cylinder	17-22 ft-lbs	23.0-29.8 Nm
Banjo bolt to ABS module	14-18 ft-lbs	18.9-24.4 Nm

Removal

1. Remove seat.
2. **FLD models:** Remove right side saddlebag. See 2.34 SADDLEBAGS: FLD.
3. Drain rear brake fluid.
4. Remove battery and battery tray. See 7.10 BATTERY TRAY AND BATTERY CABLES.
5. **Active exhaust:** Remove active exhaust cable. See 7.31 ACTIVE EXHAUST: HDI.
6. See Figure 2-73. Remove clip from ABS module brake lines.

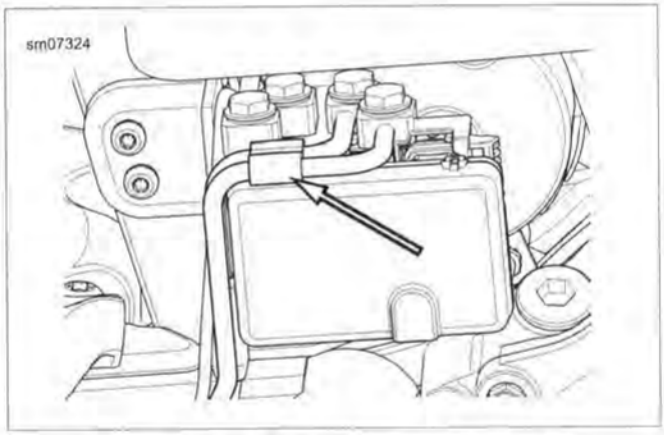

Figure 2-73. Brake Line Clip at ABS Module

7. Remove terminals from rear brake lamp switch.
8. Remove brake switch/banjo bolt from master cylinder reservoir. Hold suitable container under banjo bolt bore and allow reservoir to drain. Discard sealing washers.

NOTE

Wrap banjo fittings with pieces of lint-free shop towel to absorb any loss of brake fluid.

9. See Figure 2-72. Remove banjo bolt at module location (3) to release brake line from ABS module. Discard sealing washers.
10. Remove brake line.

Installation

1. Place rear brake line in approximate installed position.
2. Attach brake line to ABS module with banjo bolt and **new** sealing washers.

3. Attach rear brake line to master cylinder with rear brake switch/banjo bolt and **new** sealing washers. Using flats on rear brake switch/banjo bolt, tighten to 17-22 ft-lbs (23.0-29.8 Nm).
4. Connect terminals onto rear brake lamp switch. If removed, install **new** cable strap to secure rear brake lamp switch wires.

NOTE

See Figure 2-73. Failure to install clip on rear brake lines at ABS module may result in the brake lines rubbing against the rear fork during vehicle operation.

5. See Figure 2-73. Install brake line clip at ABS module.
6. Tighten banjo bolt securing brake line to ABS module to 14-18 ft-lbs (18.9-24.4 Nm).
7. See Figure 2-74. Secure WSS cable to rear brake line with cable straps (2).

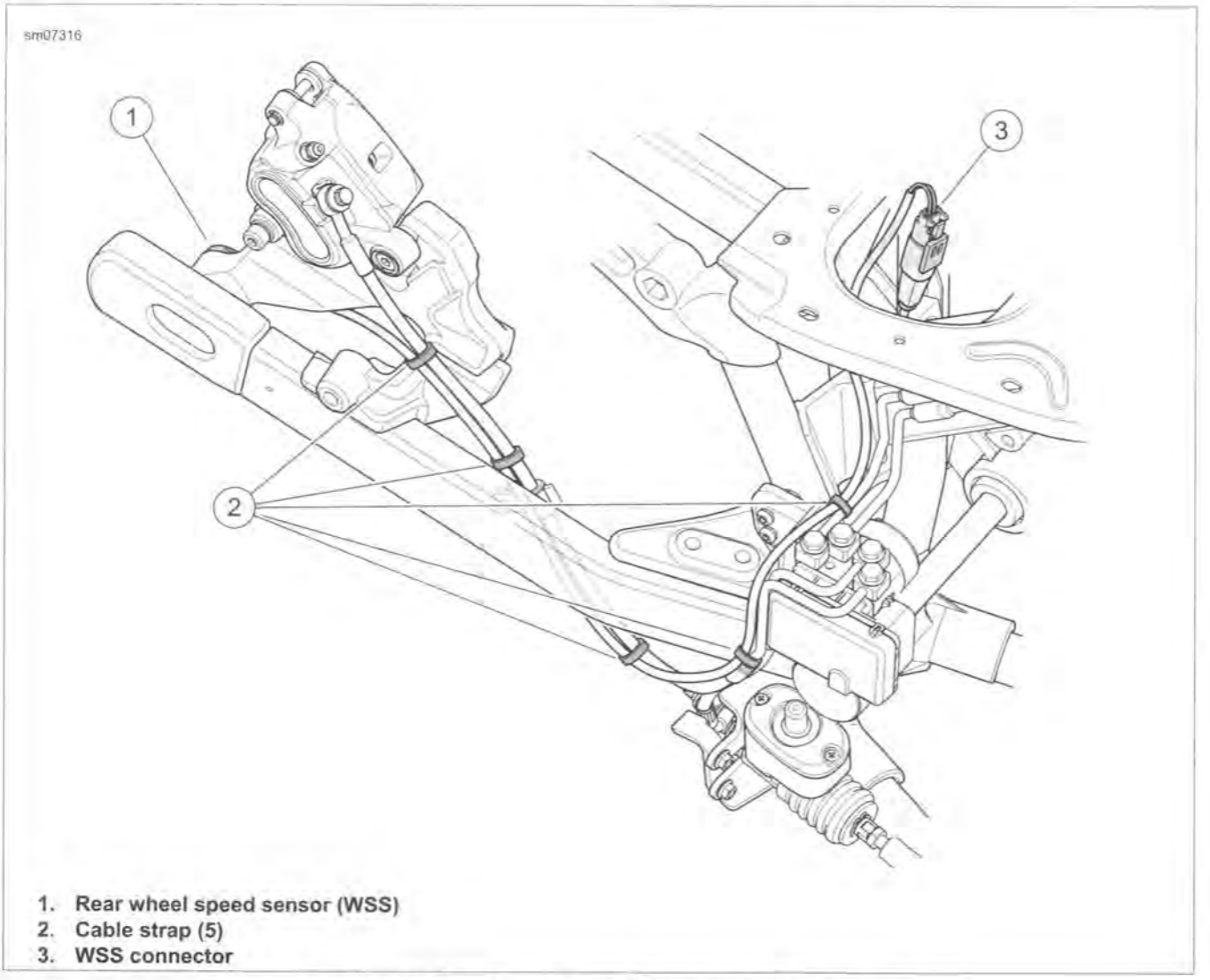

1. **Rear wheel speed sensor (WSS)**
2. **Cable strap (5)**
3. **WSS connector**

Figure 2-74. Rear Wheel Speed Sensor and Cable Routing

8. Bleed brake system. See 2.16 BLEEDING BRAKES.

⚠WARNING

When any hydraulic brake component, line or connection is loosened or replaced on an ABS motorcycle, Digital Technician II must be used during the brake bleeding procedure to verify all air is removed from the system. Failure to properly bleed the brake system could adversely affect braking, which could result in death or serious injury. (00585c)

9. To confirm that brake system is properly connected and all air is purged, install master cylinder reservoir cover. Connect motorcycle to DIGITAL TECHNICIAN II (Part No. HD-48650) and perform "ABS Service" procedure.
10. Install battery tray and battery. See 7.10 BATTERY TRAY AND BATTERY CABLES and 1.18 BATTERY MAINTENANCE.
11. **Active exhaust:** Install active exhaust cable. See 7.31 ACTIVE EXHAUST: HDI.
12. **FLD models:** Install right side saddlebag. See 2.34 SADDLEBAGS: FLD.

⚠WARNING

After installing seat, pull upward on seat to be sure it is locked in position. While riding, a loose seat can shift causing loss of control, which could result in death or serious injury. (00070b)

13. Install seat.

⚠WARNING

After repairing the brake system, test brakes at low speed. If brakes are not operating properly, testing at high speeds can cause loss of control, which could result in death or serious injury. (00289a)

14. Test brakes.
    a. Apply brakes to check proper lamp operation.
    b. Test ride motorcycle. Repeat the bleeding procedure if brakes feel spongy.

ABS MODULE TO REAR BRAKE CALIPER

PART NUMBER	TOOL NAME
HD-48650	DIGITAL TECHNICIAN II
SNAP-ON BB200A	BASIC VACUUM BRAKE BLEEDER

FASTENER	TORQUE VALUE	
Banjo bolt to ABS module	14-18 ft-lbs	18.9-24.4 Nm
Banjo bolt to rear caliper	17-22 ft-lbs	23.0-29.8 Nm
Rear fork brake hose J-clip	40-60 **in-lbs**	4.5-6.8 Nm

Removal

1. Remove seat.
2. **FLD models:** Remove right side saddlebag. See 2.34 SADDLEBAGS: FLD.
3. Remove four cable straps securing rear WSS to rear brake line.
4. Remove rear brake line from clamp on inside of rear fork.
5. Remove battery. See 1.18 BATTERY MAINTENANCE.
6. Remove battery tray. See 7.10 BATTERY TRAY AND BATTERY CABLES.
7. **Active exhaust:** Remove active exhaust cable. See 7.31 ACTIVE EXHAUST: HDI.

NOTE

For best results, use the BASIC VACUUM BRAKE BLEEDER (Part No. Snap-on BB200A) or equivalent tool to drain the brake systems.

8. Drain rear brake fluid.
9. See Figure 2-75. Remove brake line clip.

NOTE

Wrap banjo fittings with pieces of lint-free shop towel to absorb any loss of brake fluid.

10. See Figure 2-72. Remove banjo bolt at module location (4) to release rear brake line from ABS module. Discard sealing washers.
11. Remove banjo bolt from rear brake caliper. Discard sealing washers.
12. Remove brake line.

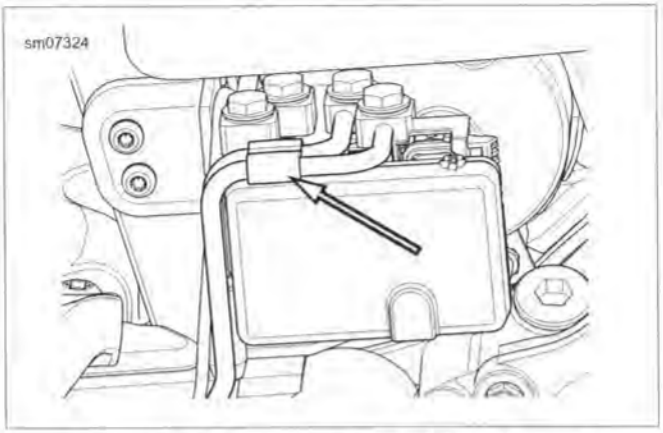

Figure 2-75. Brake Line Clip at ABS Module

Installation

1. Place rear brake line into approximate installed position.

NOTE

See Figure 2-75. Failure to install clip on rear brake lines at ABS module may result in the brake lines rubbing against the rear fork during vehicle operation.

2. See Figure 2-75. Install brake line clip at ABS module.
3. See Figure 2-72. Attach brake line to ABS module with banjo bolt and **new** sealing washers. Tighten to 14-18 ft-lbs (18.9-24.4 Nm).
4. Attach brake line to rear caliper with banjo bolt and **new** sealing washers. Tighten to 17-22 ft-lbs (23.0-29.8 Nm).
5. See Figure 2-76. If removed, align J-clip as shown and install screw. Tighten to 40-60 **in-lbs** (4.5-6.8 Nm). Do not allow clip to pass above top of rear fork.
6. Capture rear brake hose in J-clip mounted on rear fork.
7. Capture rear speed sensor cable along brake line using four cable straps. See 7.25 WHEEL SPEED SENSORS, Rear Wheel Speed Sensor (WSS).
8. Install battery tray and battery. See 7.10 BATTERY TRAY AND BATTERY CABLES and 1.18 BATTERY MAINTENANCE.
9. **Active exhaust:** Install active exhaust cable. See 7.31 ACTIVE EXHAUST: HDI.
10. Bleed brake system. See 2.16 BLEEDING BRAKES.

⚠WARNING

When any hydraulic brake component, line or connection is loosened or replaced on an ABS motorcycle, Digital Technician II must be used during the brake bleeding procedure to verify all air is removed from the system. Failure to properly bleed the brake system could adversely affect braking, which could result in death or serious injury. (00585c)

11. To confirm that brake system is properly connected and all air is purged, connect motorcycle to DIGITAL TECHNICIAN II (Part No. HD-48650) and perform "ABS Service" procedure.
12. **FLD models:** Install right side saddlebag. See 2.34 SADDLEBAGS: FLD.

⚠WARNING

After repairing the brake system, test brakes at low speed. If brakes are not operating properly, testing at high speeds can cause loss of control, which could result in death or serious injury. (00289a)

13. Test brakes.
    a. Turn ignition switch ON and verify operation of the brake lamp.
    b. Test ride motorcycle. Repeat the bleeding procedure if brakes feel spongy.

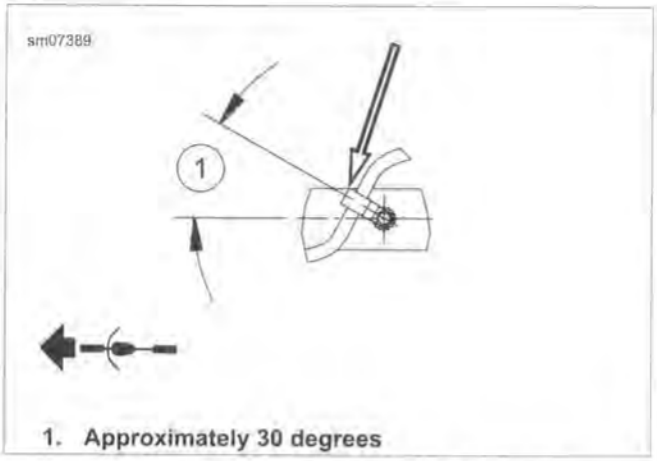

1. **Approximately 30 degrees**

Figure 2-76. Brake Line J-Clip at Rear Fork

GENERAL

FASTENER	TORQUE VALUE	
Brake line guard screw: FXDF	45-65 **in-lbs**	5.1-7.3 Nm

⚠WARNING

Do not use parts from single caliper repair kits (9/16 inch bore) on dual caliper models. Likewise, do not use parts from dual caliper repair kits (11/16 inch bore) on single caliper models. Using incorrect parts can cause brake failure, which could result in death or serious injury. (00278a)

⚠CAUTION

Direct contact of D.O.T. 4 brake fluid with eyes can cause irritation. Avoid eye contact. In case of eye contact flush with large amounts of water and get medical attention. Swallowing large amounts of D.O.T. 4 brake fluid can cause digestive discomfort. If swallowed, obtain medical attention. Use in well ventilated area. KEEP OUT OF REACH OF CHILDREN. (00240a)

NOTICE

D.O.T. 4 brake fluid will damage painted and body panel surfaces it comes in contact with. Always use caution and protect surfaces from spills whenever brake work is performed. Failure to comply can result in cosmetic damage. (00239b)

NOTICE

Do not allow dirt or debris to enter the master cylinder reservoir. Dirt or debris in the reservoir can cause improper operation and equipment damage. (00205c)

NOTES

- *See Figure 2-78. FXDF models equipped with ABS brakes have a brake line guard (8) on the right side upper fork clamp. When reinstalling or replacing guard, tighten screw (7) to 45-65* ***in-lbs*** *(5.1-7.3 Nm).*
- *All Dyna models equipped with ABS brakes (except FLD) use a remote brake fluid reservoir on the rear.*

ELECTRO HYDRAULIC CONTROL UNIT (EHCU)

PART NUMBER	TOOL NAME
HD-48650	DIGITAL TECHNICIAN II
SNAP-ON BB200A	BASIC VACUUM BRAKE BLEEDER

FASTENER	TORQUE VALUE	
ABS module to bracket fastener	50-70 **in-lbs**	5.6-7.9 Nm
ABS module to frame fastener	90-114 **in-lbs**	10.2-12.8 Nm
Banjo bolt to ABS module	14-18 ft-lbs	18.9-24.4 Nm

NOTE

The ABS module consists of the hydraulic control unit (HCU) and electrical control unit (ECU). The two are not serviced separately.

Removal

1. Remove seat.
2. **FLD models:** Remove right side saddlebag. See 2.34 SADDLEBAGS: FLD.
3. Remove battery and battery tray. See 7.10 BATTERY TRAY AND BATTERY CABLES.
4. **Active exhaust:** Remove active exhaust cable. See 7.31 ACTIVE EXHAUST: HDI.

NOTE

For best results, use the BASIC VACUUM BRAKE BLEEDER (Part No. Snap-on BB200A) or equivalent tool to drain the brake systems.

5. Drain brake systems.
6. See Figure 2-77. Disconnect ABS module electrical connector (5).

NOTE

Wrap banjo fittings with pieces of lint-free shop towel to absorb any loss of brake fluid.

7. Remove cable strap securing the rear WSS to the rear brake line.
8. See Figure 2-79. Remove brake line clip at ABS module.
9. See Figure 2-77. Remove four banjo bolts to release brake lines from ABS module. Discard sealing washers.

NOTICE

This device is sensitive to electrostatic discharge (ESD). To prevent damage to the device, always touch the motorcycle frame or a grounded surface before handling. (00588c)

10. See Figure 2-78. Remove two ABS module mounting screws (1) to release ABS module (2) bracket from frame.
11. Remove ABS module.

12. Remove two fasteners to release ABS module from mounting bracket.

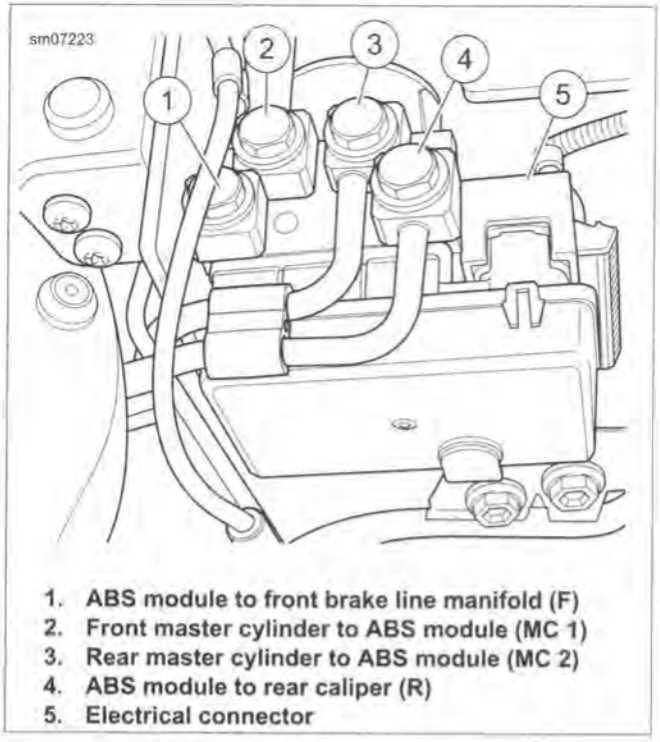

1. ABS module to front brake line manifold (F)
2. Front master cylinder to ABS module (MC 1)
3. Rear master cylinder to ABS module (MC 2)
4. ABS module to rear caliper (R)
5. Electrical connector

Figure 2-77. ABS Module Connections

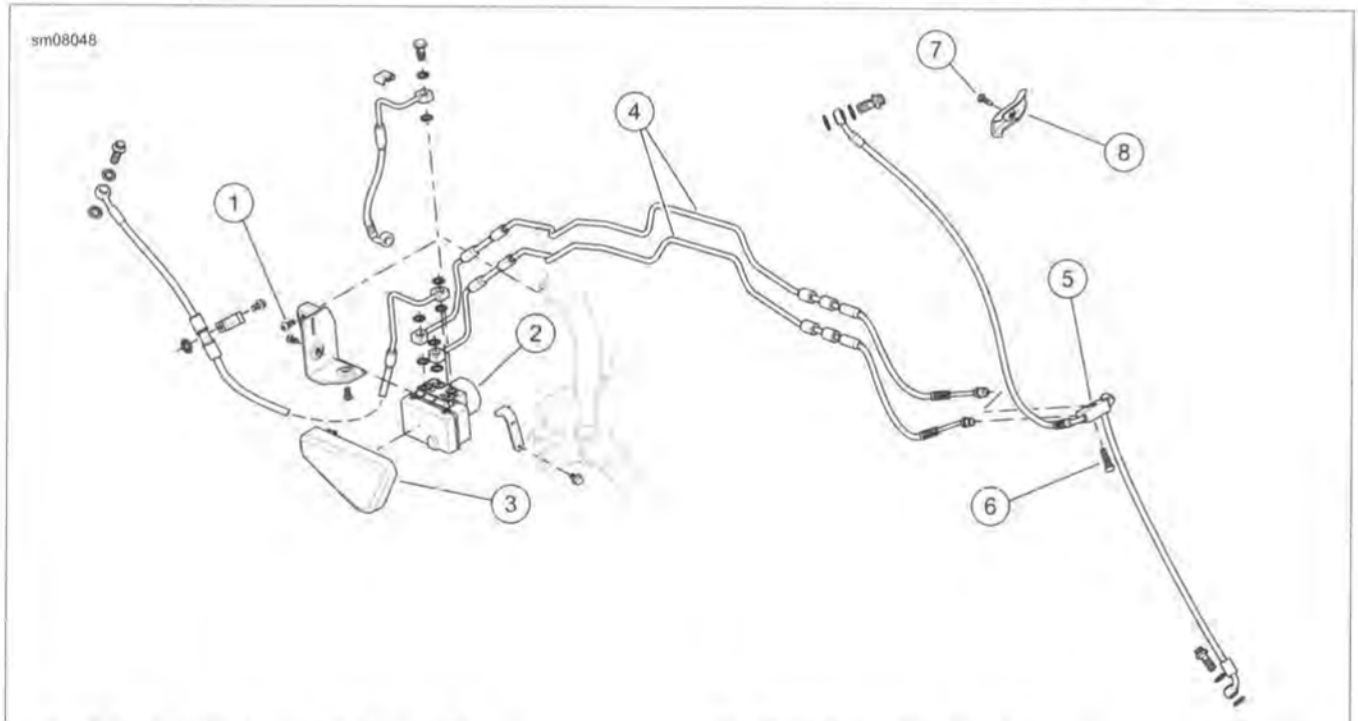

1. ABS module mounting screws (2)
2. ABS module
3. ABS module cover
4. ABS module to front manifold brake lines
5. Front brake line manifold
6. Front brake line manifold to lower fork bracket fastener
7. Screw
8. Brake line guard

Figure 2-78. ABS Brake System (typical)

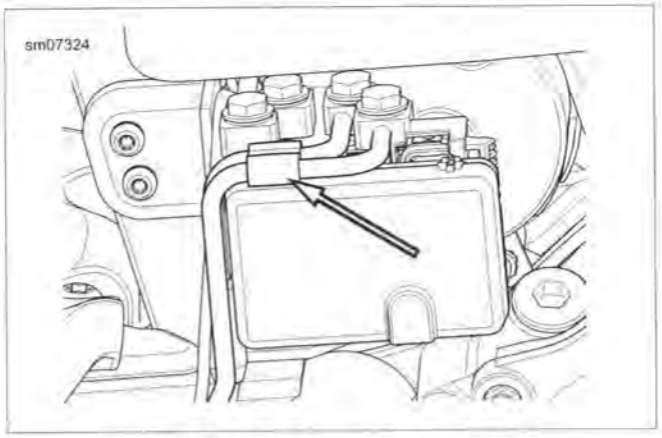

Figure 2-79. Brake Line Clip at ABS Module

Installation

1. Install two fasteners attaching ABS module to mounting bracket. Tighten to 50-70 **in-lbs** (5.6-7.9 Nm).
2. See Figure 2-78. Position ABS module (2) on frame.
3. Install two ABS module mounting screws (1) attaching bracket to frame. Tighten to 90-114 **in-lbs** (10.2-12.8 Nm).

NOTE

Markings on ABS module designate brake line connections.

4. See Figure 2-77. Loosely install banjo fittings to their respective ports on the ABS module using **new** sealing washers.

NOTE

See Figure 2-79. Failure to install clip on rear brake lines at ABS module may result in the brake lines rubbing against the rear fork during vehicle operation.

5. See Figure 2-79. Install brake line clip at ABS module.
6. Tighten banjo bolts to 14-18 ft-lbs (18.9-24.4 Nm).
7. Install cable strap securing the rear WSS to the rear brake line.
8. Connect ABS module electrical connector.
9. Install battery tray and battery. See 7.10 BATTERY TRAY AND BATTERY CABLES and 1.18 BATTERY MAINTENANCE.
10. **Active exhaust:** Install active exhaust cable. See 7.31 ACTIVE EXHAUST: HDI.
11. If a **new** ABS module assembly was installed, program the ABS module using DIGITAL TECHNICIAN II (Part No. HD-48650).
12. Bleed brake system. See 2.16 BLEEDING BRAKES.

⚠WARNING

When any hydraulic brake component, line or connection is loosened or replaced on an ABS motorcycle, Digital Technician II must be used during the brake bleeding procedure to verify all air is removed from the system. Failure to properly bleed the brake system could adversely affect braking, which could result in death or serious injury. (00585c)

13. To confirm that the brake systems are properly connected and air is completely purged, install master cylinder reservoir covers, connect motorcycle to DIGITAL TECHNICIAN II (Part No. HD-48650) and perform "ABS Service" procedure.
14. Install ABS module cover.
15. **FLD models:** Install right side saddlebag. See 2.34 SADDLEBAGS: FLD.

⚠WARNING

After installing seat, pull upward on seat to be sure it is locked in position. While riding, a loose seat can shift causing loss of control, which could result in death or serious injury. (00070b)

16. Install seat.

⚠WARNING

After repairing the brake system, test brakes at low speed. If brakes are not operating properly, testing at high speeds can cause loss of control, which could result in death or serious injury. (00289a)

17. Test brakes.
    a. Turn ignition switch ON and verify operation of the brake lamp.
    b. Test ride motorcycle. Repeat the bleeding procedure if brakes feel spongy.

GENERAL

⚠WARNING

When any hydraulic brake component, line or connection is loosened or replaced on an ABS motorcycle, Digital Technician II must be used during the brake bleeding procedure to verify all air is removed from the system. Failure to properly bleed the brake system could adversely affect braking, which could result in death or serious injury. (00585c)

⚠WARNING

Use denatured alcohol to clean brake system components. Do not use mineral-based solvents (such as gasoline or paint thinner), which will deteriorate rubber parts even after assembly. Deterioration of these components can cause brake failure, which could result in death or serious injury. (00291a)

⚠CAUTION

Direct contact of D.O.T. 4 brake fluid with eyes can cause irritation. Avoid eye contact. In case of eye contact flush with large amounts of water and get medical attention. Swallowing large amounts of D.O.T. 4 brake fluid can cause digestive discomfort. If swallowed, obtain medical attention. Use in well ventilated area. KEEP OUT OF REACH OF CHILDREN. (00240a)

NOTICE

D.O.T. 4 brake fluid will damage painted and body panel surfaces it comes in contact with. Always use caution and protect surfaces from spills whenever brake work is performed. Failure to comply can result in cosmetic damage. (00239b)

- **If DOT 4 brake fluid contacts painted surfaces, IMMEDIATELY flush area with clear water.**

NOTICE

Do not allow dirt or debris to enter the master cylinder reservoir. Dirt or debris in the reservoir can cause improper operation and equipment damage. (00205c)

Verify front brake hand lever and rear brake foot pedal have a firm feel when applied. If not, bleed system as described.

PROCEDURE

PART NUMBER	TOOL NAME
HD-48650	DIGITAL TECHNICIAN II
SNAP-ON BB200A	BASIC VACUUM BRAKE BLEEDER

FASTENER	TORQUE VALUE	
Brake caliper bleeder valve	80-100 **in-lbs**	9.0-11.3 Nm
Front master cylinder reservoir cover screws	6-8 **in-lbs**	0.7-0.9 Nm
Rear master cylinder reservoir cover screws, non-ABS models	6-8 **in-lbs**	0.7-0.9 Nm

NOTES

- *For best results, use of BASIC VACUUM BRAKE BLEEDER (Part No. Snap-on BB200A) or equivalent tool is recommended, particularly if the brake system was drained. If a vacuum brake bleeder is not available, use the following procedure.*
- ***ABS models:** To confirm that the brake systems are properly connected and air is completely purged, install master cylinder reservoir covers, connect motorcycle to DIGITAL TECHNICIAN II (Part No. HD-48650) and perform "ABS Service" procedure.*

1. Remove bleeder screw cap. Install end of clear plastic tubing over bleeder valve. Place free end in a suitable container.
2. Position vehicle or handlebar so master cylinder reservoir is level.

NOTES

- *Wrap a clean shop towel around the outside of the master cylinder reservoir to protect paint from brake fluid spills.*
- *Clean master cylinder reservoir cover before removal.*

3. Remove cover from master cylinder reservoir.

⚠WARNING

A plugged or covered relief port can cause brake drag or lock-up, which could lead to loss of control, resulting in death or serious injury. (00288a)

4. See Figure 2-80. Add brake fluid as necessary. Verify proper operation of the master cylinder relief port by actuating the brake pedal or lever. A slight spurt of fluid will break the fluid surface in the reservoir if internal components are working properly. Refer to Table 2-12.
5. Operate the brake lever or pedal to build hydraulic pressure.

NOTE

Pay careful attention to fluid level in the master cylinder reservoir. Add fluid before it empties to avoid drawing air into the brake lines.

6. While holding pressure with the brake lever or pedal:
   a. Open bleeder screw about 3/4 turn.
   b. Close bleeder valve as soon as the lever or pedal has moved full range of travel.
   c. Allow brake lever or pedal to return slowly to its released position.
7. Repeat steps until all air bubbles are purged and a solid column of fluid is observed in the bleeder tube.
8. Tighten bleeder screw to specification. Refer to Table 2-13. Install bleeder screw cap.

NOTE

Dual caliper brake system: *Bleed both calipers.*

9. Check and fill reservoir to specified level.
10. Verify that gasket and sealing surfaces are free of debris. Install master cylinder reservoir cover:
    a. **Front master cylinder reservoir:** Align the cover with the vent holes facing the rear. Install cover screws. Tighten to specification.
    b. **Rear master cylinder reservoir, all models without remote reservoir, non-ABS models.** Install cover screws.
    c. Tighten to specification. Refer to Table 2-13.
11. **ABS models:** Connect DIGITAL TECHNICIAN II (Part No. HD-48650) and perform "ABS Service" procedure.
12. Apply brakes to check proper lamp operation.

⚠WARNING

After repairing the brake system, test brakes at low speed. If brakes are not operating properly, testing at high speeds can cause loss of control, which could result in death or serious injury. (00289a)

13. Test ride motorcycle. Repeat the bleeding procedure if brakes feel spongy.

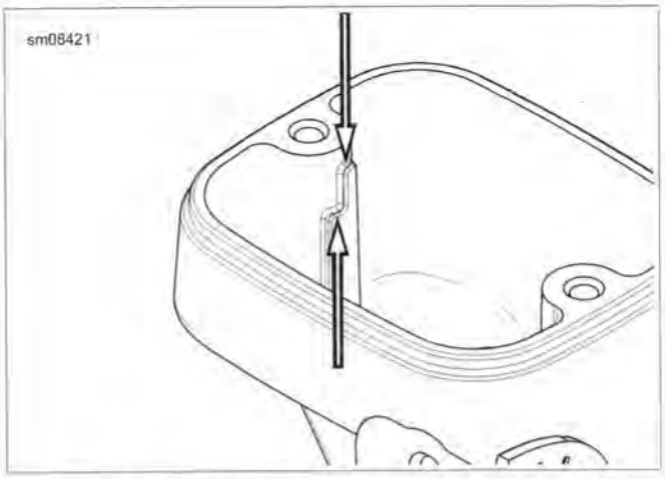

Figure 2-80. FILL Level Boss (front master cylinder)

Table 2-12. Fluid Level

ITEM	SPECIFICATION
Front reservoir	Between the fill level bosses
Rear reservoir: Models without remote reservoir	1/4-1/2 in (6.4-12.7 mm) below gasket surface
Rear reservoir: Models with remote reservoir	Between upper and lower level

Table 2-13. Torque Specifications

COMPONENT	TORQUE
Bleeder	80-100 **in-lbs** (9.0-11.3 Nm)
Front cover	6-8 **in-lbs** (0.7-0.9 Nm)
Rear cover, models without remote reservoir, non-ABS models	6-8 **in-lbs** (0.7-0.9 Nm)

GENERAL

⚠WARNING

Use only Harley-Davidson specified tires. See a Harley-Davidson dealer. Using non-specified tires can adversely affect stability, handling or braking, which could result in death or serious injury. (00024b)

⚠WARNING

Be sure tires are properly inflated, balanced, undamaged, and have adequate tread. Inspect your tires regularly and see a Harley-Davidson dealer for replacements. Riding with excessively worn, unbalanced, improperly inflated, overloaded or damaged tires can lead to tire failure and adversely affect stability and handling, which could result in death or serious injury. (00014b)

Always maintain proper tire pressure as specified in Table 2-7. Do not load tires beyond GAWR specified in Table 2-3. Under-inflated, over-inflated or overloaded tires can fail.

NOTES

- *Check runout on all wheels before installing a* ***new*** *tire. See 2.8 CHECKING AND TRUING WHEELS.*
- *Store* ***new*** *tires on a horizontal tire rack. Avoid stacking* ***new*** *tires in a vertical stack. The weight of the stack compresses the tires and closes down the beads.*
- *Inspect tires for punctures, cuts, breaks and wear at least weekly.*
- *See Figure 2-81. The tread wear indicator bars will appear on tire tread surfaces when 1/32 in (0.8 mm) or less of tread remains. Always remove tires from service before they reach the tread wear indicator bars.*

New tires are needed if any of the following conditions exist. See 1.7 TIRES AND WHEELS.

1. Tire wear indicator bars are visible on the tread surfaces.
2. Tire cords or fabric are visible through cracked sidewalls, snags or deep cuts.
3. A bump, bulge or split in the tire.
4. Puncture, cut or other damage to the tire that cannot be repaired.

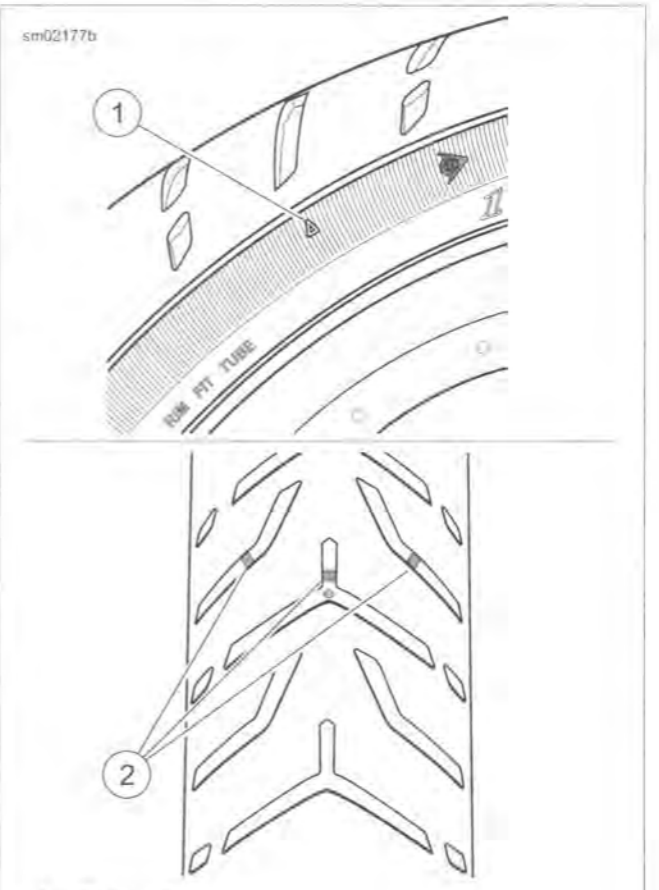

1. **Sidewall**
2. **Tread surface**

Figure 2-81. Tread Wear Indicators (Typical)

REMOVE

NOTE

Take care when replacing tire to prevent cosmetic damage to wheel.

1. Remove wheel. See 2.4 FRONT WHEEL, Removal or 2.5 REAR WHEEL, Removal.
2. Deflate tire.

NOTE

Replace tube only: *Do not completely remove tire from rim to replace tube. Remove one side to access tube and inspect tire.*

3. Loosen both tire beads from rim flange.
4. Remove tire.

CLEAN, INSPECT AND REPAIR

1. Clean.
   a. Clean the inside of tire and outer surface of tube.
   b. Clean rim bead area with a stiff wire brush.

2. Inspect.
   a. Verify that wheel is true. See 2.8 CHECKING AND TRUING WHEELS.
   b. Check tire tread depth.
   c. Inspect tire for punctures or tears. Small punctures can be repaired.

⚠WARNING

Replace punctured or damaged tires. In some cases, small punctures in the tread area may be repaired from within the removed tire by a Harley-Davidson dealer. Speed should NOT exceed 50 mph (80 km/h) for the first 24 hours after repair, and the repaired tire should NEVER be used over 80 mph (130 km/h). Failure to follow this warning could lead to tire failure and result in death or serious injury. (00015b)

3. Repair.
   a. Patch inner tubes only as an emergency measure. Replace a damaged or patched tube as soon as possible.
   b. Repair tread on tubeless tires if puncture is 1/4 in (6.4 mm) or smaller.
   c. Make repairs from inside the tire.
   d. Always combine a patch and plug when repairing tire.

INSTALLATION

FASTENER	TORQUE VALUE	
Valve stem nut, tube type	3-7 **in-lbs**	0.3-0.8 Nm
Valve stem nut	12-15 **in-lbs**	1.4-1.7 Nm

⚠WARNING

Harley-Davidson front and rear tires are not the same. Interchanging front and rear tires can cause tire failure, which could result in death or serious injury. (00026a)

⚠WARNING

Do not exceed manufacturer's recommended pressure to seat beads. Exceeding recommended bead seat pressure can cause tire rim assembly to burst, which could result in death or serious injury. (00282a)

⚠WARNING

Be sure tires are properly inflated, balanced, undamaged, and have adequate tread. Inspect your tires regularly and see a Harley-Davidson dealer for replacements. Riding with excessively worn, unbalanced, improperly inflated, overloaded or damaged tires can lead to tire failure and adversely affect stability and handling, which could result in death or serious injury. (00014b)

For tire pressures, see 1.7 TIRES AND WHEELS, Tires.

Some tires have arrows molded into the tire sidewall. These tires should be mounted on the rim with the arrow pointing in the direction of forward rotation. The colored dot on the sidewall is a balance mark. Locate this dot next to the valve stem hole.

Tube Type Tires

⚠WARNING

Match tires, tubes, rim strips or seals, air valves and caps to the correct wheel. Contact a Harley-Davidson dealer. Mismatching can lead to tire damage, allow tire slippage on the wheel or cause tire failure, which could result in death or serious injury. (00023c)

NOTES

- *For correct tire and tube types, see 2.2 SPECIFICATIONS.*
- *Whenever a tube type tire is replaced, also replace the tube. Only patch inner tubes as an emergency measure. Replace a damaged or patched tube as soon as possible. Install* ***new*** *rim strips on all laced wheels.*

1. See Figure 2-82. On laced wheels, install a rim strip into the rim well. Make sure no spokes protrude through nipples, and be sure to align the valve stem hole in rim strip with valve stem hole in rim.
2. Install tube and tire.
3. Tighten the valve stem nut to 3-7 **in-lbs** (0.3-0.8 Nm).



Figure 2-82. Installed Rim Strip

Tubeless Tires

⚠WARNING

Only install original equipment tire valves and valve caps. A valve, or valve and cap combination, that is too long or too heavy can strike adjacent components and damage the valve, causing rapid tire deflation. Rapid tire deflation can cause loss of vehicle control, which could result in death or serious injury. (00281a)

1. See Figure 2-83. Replace damaged or leaking valve stems.
2. Install rubber grommet (5) on valve stem before tightening nut (3).
3. Insert valve stem into rim hole.
4. Install metal washer (4).
5. Install nut and tighten to 12-15 **in-lbs** (1.4-1.7 Nm).
6. Install tire.

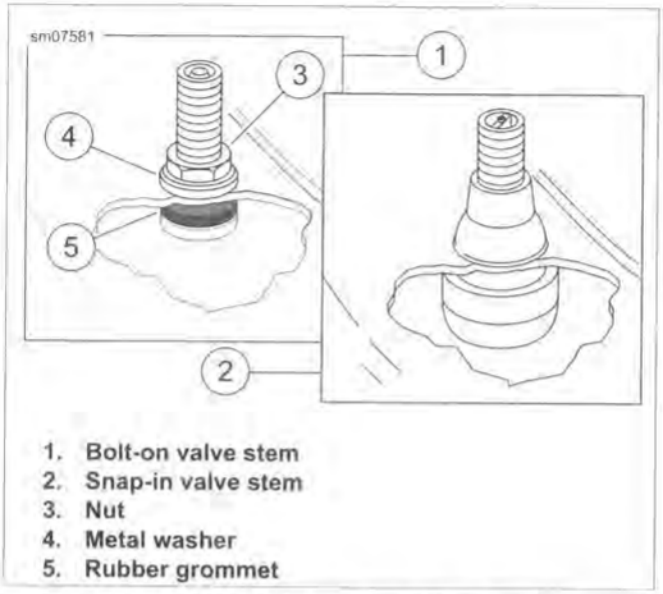

1. **Bolt-on valve stem**
2. **Snap-in valve stem**
3. **Nut**
4. **Metal washer**
5. **Rubber grommet**

Figure 2-83. Tubeless Tire Valve Stems

CHECK TIRE RUNOUT

Lateral Runout

NOTES

- *Measure runout with wheel installed on motorcycle or using a wheel stand.*
- *Avoid measuring on raised letters or vents.*

1. Check tire pressure.
2. See Figure 2-84. Spin the wheel and measure lateral runout from a fixed point to a smooth area on the tire sidewall.
3. If lateral runout exceeds 0.090 in (2.29 mm), remove tire from rim and check rim lateral runout. See 2.8 CHECKING AND TRUING WHEELS.
   a. If rim runout is within specification, replace faulty tire.
   b. If rim runout is not within specification, adjust spokes on laced wheel or replace cast wheel. See 2.8 CHECKING AND TRUING WHEELS.

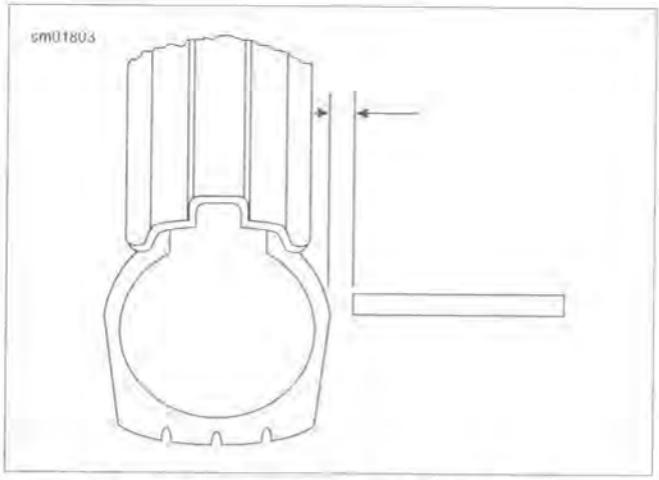

Figure 2-84. Checking Tire Lateral Runout

Radial Runout

1. Check tire pressure.
2. See Figure 2-85. Spin the wheel on the axle and measure radial runout at the tread centerline.
3. If tire runout exceeds 0.090 in (2.29 mm), remove tire from rim and check rim radial runout. See 2.8 CHECKING AND TRUING WHEELS.
   a. If rim runout is within specification, replace faulty tire.
   b. If rim runout is not within specification, adjust spokes on laced wheel or replace cast wheel. See 2.8 CHECKING AND TRUING WHEELS.

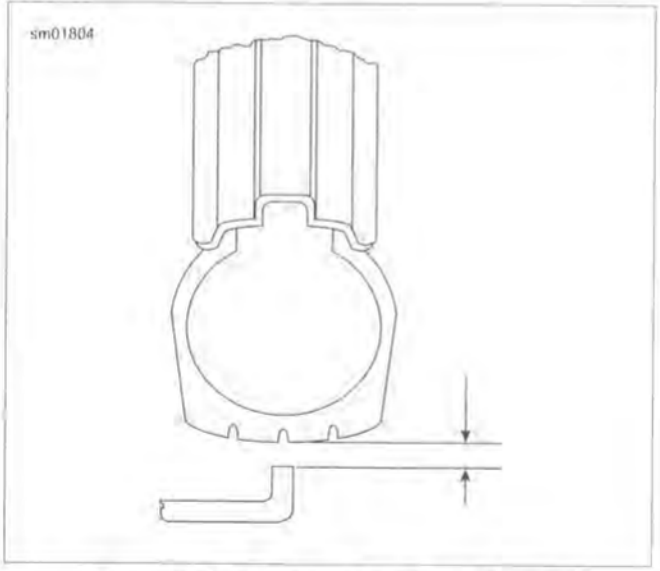

Figure 2-85. Checking Tire Radial Runout

BALANCE WHEEL

Static vs Dynamic

Wheel balancing is recommended to improve handling. Balanced wheels reduce vibration especially at high speeds.

Static balancing produces satisfactory results for normal highway speeds. Dynamic balancing can produce better results for deceleration.

Weights

NOTES

- *If more than 3.5 oz (99.2 g) of weight is required to balance wheel, rotate the tire 180 degrees on the rim and again balance the assembly. Balance wheels to within 0.5 oz (14 g).*
- *All wheel weights currently supplied by Harley-Davidson are made from zinc which is lighter than lead. The weight of each zinc segment is 0.18 oz (5 g) as compared to 0.25 oz (7 g) for lead. Weights are stamped for easy identification.*
- *If adding more than 1.5 oz (43 g) of weight at one location, divide the amount to apply half to each side of rim.*
- *On cast wheels without a flat area near the bead, place the weights cross-wise through the opening.*

1. See Figure 2-87. Place weights on a smooth surface of the wheel rim such that centrifugal force keeps them in place. Make sure that the area of application is clean, dry and free of oil and grease.

NOTE

See Figure 2-86. When installing wheel weights, consider cosmetics. Snaking (1) is not to exceed 0.040 in (1.02 mm) (2) of straight. The angle alignment of individual segments is not to exceed three degrees (3).

2. Remove paper backing from the weight. Press firmly in place and hold for ten seconds.

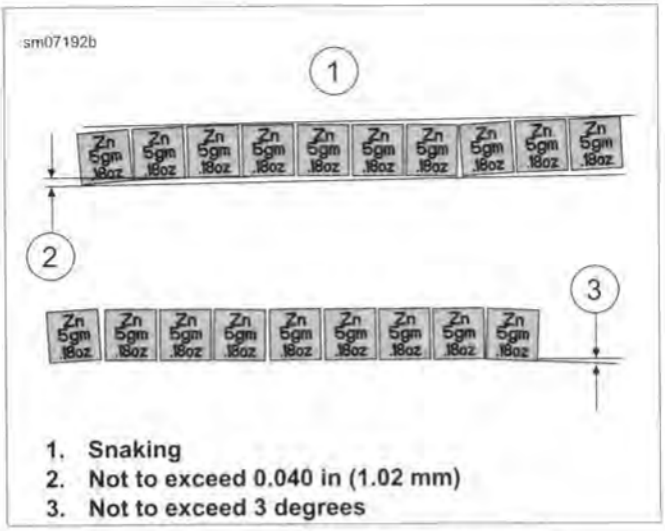

1. **Snaking**
2. **Not to exceed 0.040 in (1.02 mm)**
3. **Not to exceed 3 degrees**

Figure 2-86. Weight Segment Alignment

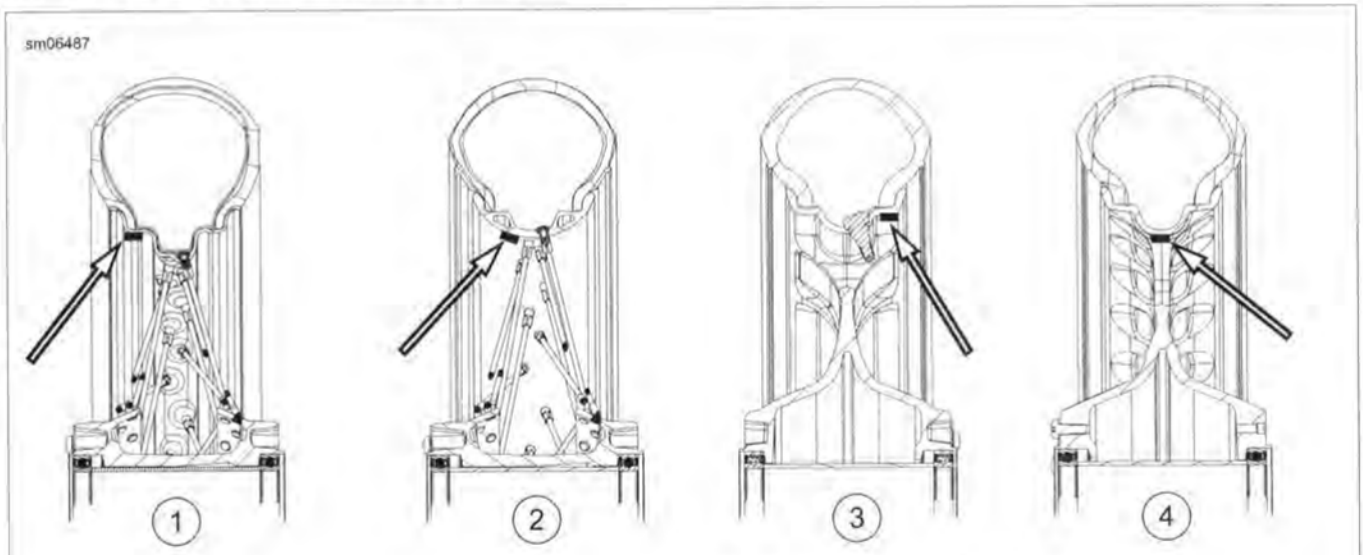

1. **Laced steel**
2. **Laced profile**
3. **Cast (typical with flat bead area)**
4. **Cast (special with no flat bead area)**

Figure 2-87. Wheel Weight Placement

CHECK FOR OIL LEAK

Fork Oil Seals

The fork oil seal allows a fine film of oil to lubricate the fork sliding surface.

- The oil film is more visible after continuous high-speed compression and rebound movement.
- Due to greater lubrication needs, larger forks have a greater amount of oil film than smaller forks.

Check Oil Leak

1. Observe oil ring.
2. Wipe fork clean.
3. Ride motorcycle over bumpy road or complete six braking events.
4. See Figure 2-88. Check fork slider tube for oil.
   a. If a normal oil/dust film (1, 2) is present, there is no leak.
   b. If an oil run or drip (3) is present, perform procedure two or three more times to confirm oil leak.

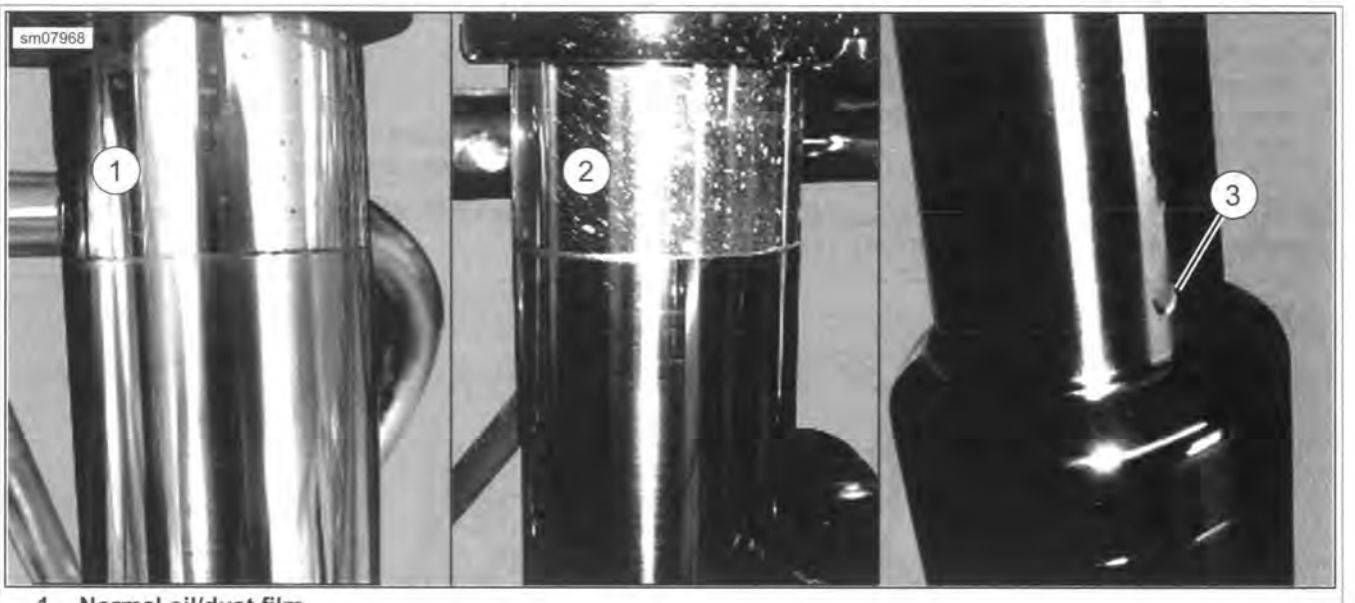

1. **Normal oil/dust film**
2. **Normal oil/dust film**
3. **Drip**

Figure 2-88. Front Forks

REMOVAL

1. Raise the front of the motorcycle.
2. Remove brake caliper and front wheel. See 2.4 FRONT WHEEL.
3. Remove front fender. See 2.28 FRONT FENDER.
4. See Figure 2-92. Loosen, but do not remove, fork tube caps (25).
5. Loosen fork bracket pinch bolts. Remove left and right fork assemblies from fork brackets.

DISASSEMBLY: ALL BUT FLD LEFT SIDE

PART NUMBER	TOOL NAME
HD-41177	FORK HOLDING TOOL

⚠WARNING

Wear safety glasses or goggles when servicing fork assembly. Do not remove slider tube caps without relieving spring preload or caps and springs can fly out, which could result in death or serious injury. (00297a)

NOTICE

Exercise caution to avoid scratching or nicking fork tube. Damaging tube can result in fork oil leaks after assembly. (00421b)

NOTE

This procedure applies to all conventional front fork assemblies. For left side FLD cartridge style front fork, see 2.18 FRONT FORK, Disassembly: Cartridge Fork (FLD, Left Side).

1. See Figure 2-89. Clamp fork tube and slider assembly in FORK HOLDING TOOL (Part No. HD-41177) and mount in vise.

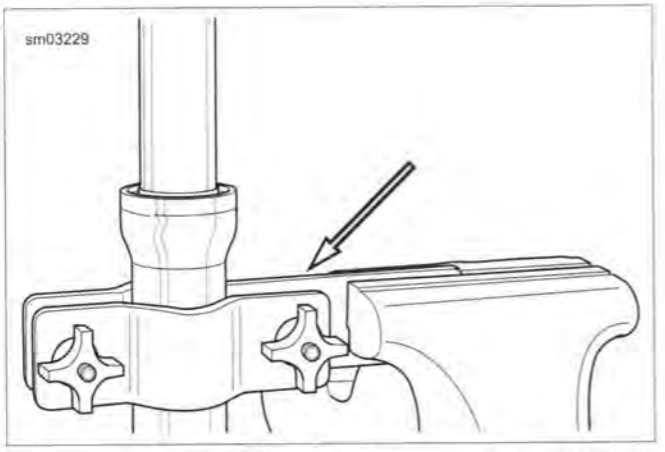

Figure 2-89. Fork Holding Tool (mounted vertically to slider)

NOTE

See Figure 2-92. On right fork tube and slider assembly, remove screws (18), lockwashers (17) and axle holder (16) to access seat pipe screw (15).

2. See Figure 2-90. While internal components are still under tension and less prone to rotate, break loose but do not completely remove seat pipe screw.
3. See Figure 2-92. Remove fork tube cap (25) and O-ring (24).
4. Remove spring collar (23), washer (22) and spring (21).
5. Remove fork assembly from fork holding tool and invert fork over a suitable container. Allow fork to drain. Extend and retract slider several times to push oil out of internal components.
6. Clamp fork tube in holder. Mount fork holding tool horizontally in vise.
7. See Figure 2-91. Remove cosmetic cover from fork slider by inserting brass drift into notch in fork slider and lightly tapping cover.
8. See Figure 2-92. Compress retaining ring (5). Remove retaining ring from groove in top of fork slider bore.
9. Remove seat pipe screw (15) and copper washer (14) from bottom of slider assembly (12, 13, FLD: 26). Discard seat pipe screw and copper washer.
10. Withdraw fork slider from fork tube (1) until guide bushing (8) contacts bushing (2) on fork tube. Guide bushing is a slight interference fit in fork slider.
11. Remove fork tube from fork slider. To overcome any resistance, use the fork tube as a slide hammer. Push fork tube into fork slider. Then pull outward with moderate force. Repeat until fork tube separates from fork slider.
12. Drain fork slider. Allow oil lock (9) to fall free.

NOTE

If replacing the fork slider only, further disassembly is not required. Proceed to fork assembly. See 2.18 FRONT FORK, Assembly: All But FLD Left Side.

13. If still attached to seat pipe (20), remove oil lock from lower end of seat pipe.
14. Remove seat pipe.
15. Remove rebound spring (19).
16. Remove oil seal (6), seal spacer (7), and guide bushing (8).
17. Repeat procedure for opposite side.



Figure 2-90. Seat Pipe Screw (right fork assembly)

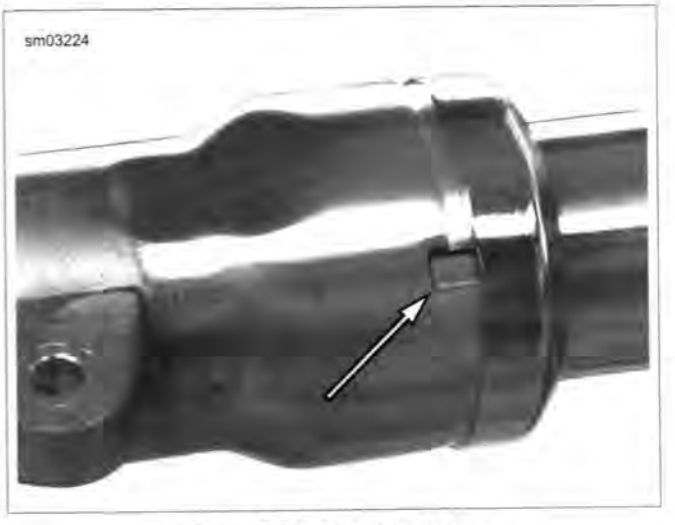

Figure 2-91. Notch in Slider

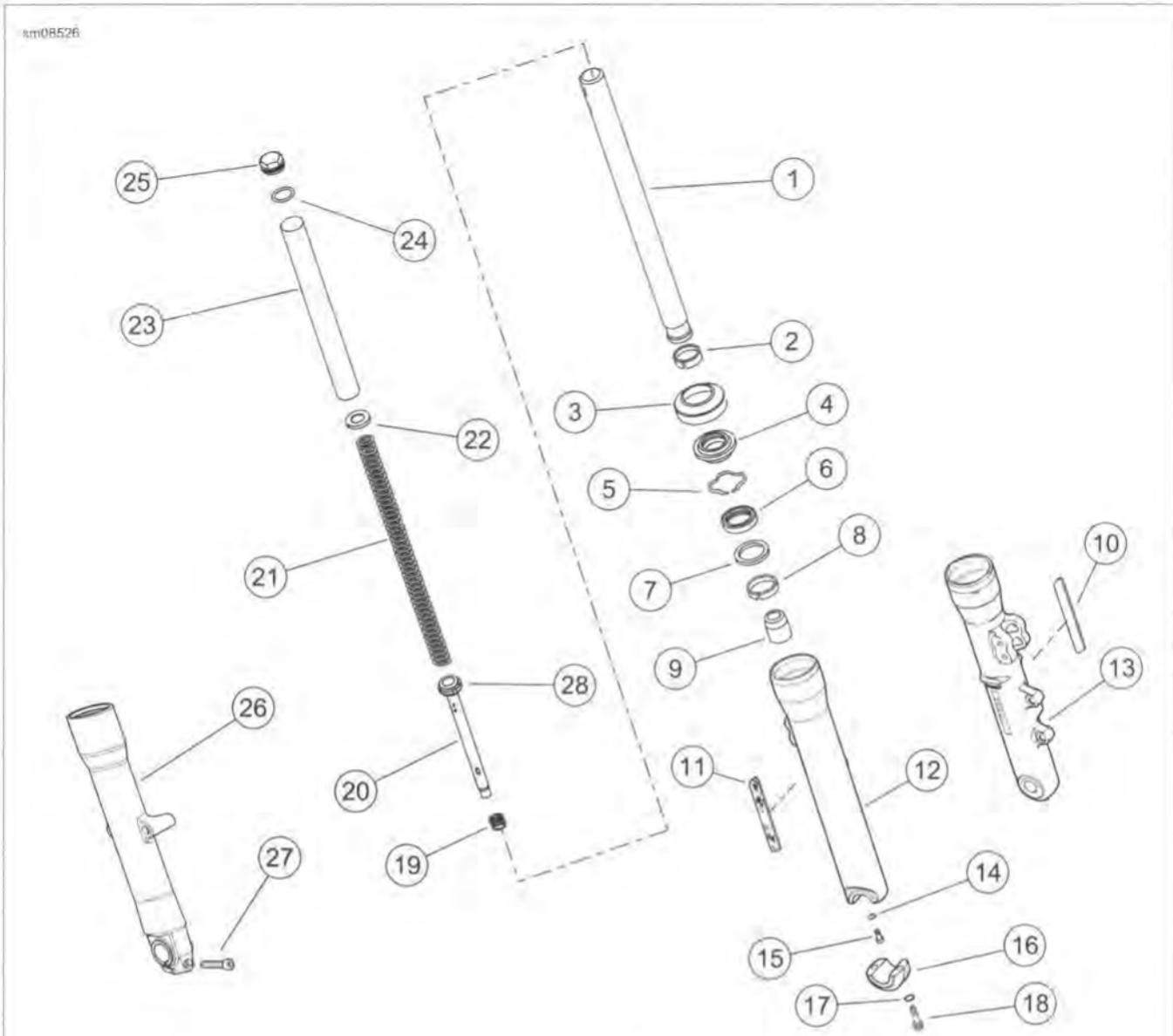

1. Fork tube
2. Bushing
3. Cosmetic cover
4. Dust seal
5. Retaining ring
6. Oil seal
7. Seal spacer
8. Guide bushing
9. Oil lock
10. Reflector (left)
11. Reflector (right)
12. Fork slider (right)
13. Fork slider (left, all but FLD)
14. Copper washer
15. Seat pipe screw
16. Axle holder (all but FLD)
17. Lockwasher (2, all but FLD)
18. Screw (2, all but FLD)
19. Rebound spring
20. Seat pipe
21. Spring
22. Washer
23. Spring collar
24. O-ring
25. Fork tube cap
26. Fork slider (right, FLD)
27. Screw (FLD)
28. Piston ring

Figure 2-92. Front Fork (all but FLD left side)

DISASSEMBLY: CARTRIDGE FORK (FLD, LEFT SIDE)

PART NUMBER	TOOL NAME
HD-41177	FORK HOLDING TOOL
HD-45966	FORK SPRING COMPRESSING TOOL
HD-45966-2	FORK SPRING COMPRESSING TOOL COLLAR

NOTICE

Exercise caution to avoid scratching or nicking fork tube. Damaging tube can result in fork oil leaks after assembly. (00421b)

1. See Figure 2-93. Clamp fork tube in FORK HOLDING TOOL (Part No. HD-41177) and mount in vise.

⚠WARNING

Wear safety glasses or goggles when servicing fork assembly. Do not remove slider tube caps without relieving spring preload or caps and springs can fly out, which could result in death or serious injury. (00297a)

2. Remove fork tube cap (1) from fork tube.



1. **Fork tube cap**
2. **Hex nut**
3. **O-ring**

Figure 2-93. Install Fork Tube Into Fork Holder

3. Pull up on fork slider to compress fork assembly. This method causes damper rod to protrude from top of fork tube.
4. Holding nut (2), remove fork tube cap from threaded end of damper rod. Remove O-ring (3) from fork tube cap. Discard O-ring.
5. Remove fork assembly from FORK HOLDING TOOL (Part No. HD-41177). Turning fork upside down, drain fork oil into a suitable container.

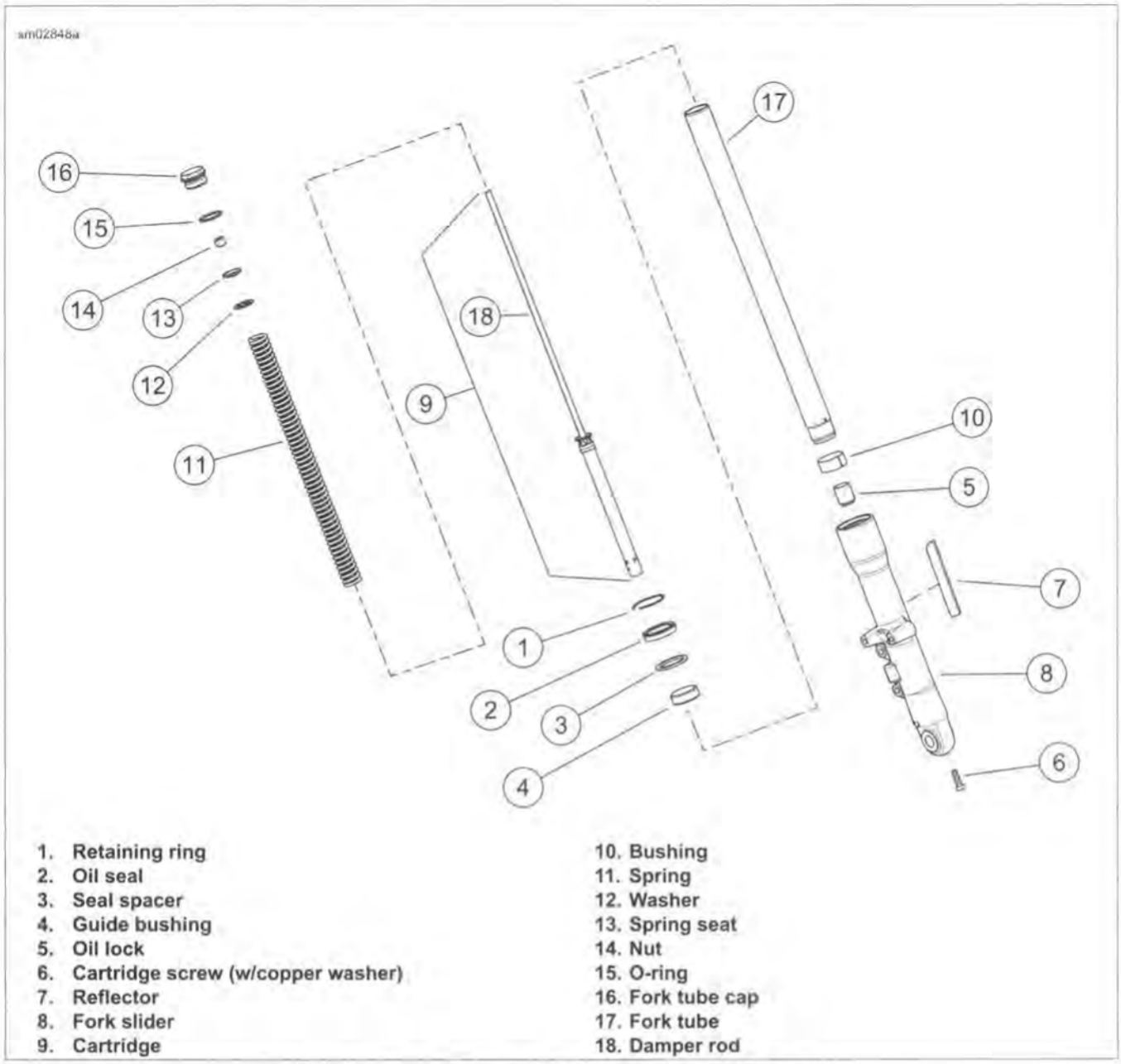

1. **Retaining ring**
2. **Oil seal**
3. **Seal spacer**
4. **Guide bushing**
5. **Oil lock**
6. **Cartridge screw (w/copper washer)**
7. **Reflector**
8. **Fork slider**
9. **Cartridge**
10. **Bushing**
11. **Spring**
12. **Washer**
13. **Spring seat**
14. **Nut**
15. **O-ring**
16. **Fork tube cap**
17. **Fork tube**
18. **Damper rod**

Figure 2-94. Front Fork: FLD Left Side (Cartridge Fork)

6. See Figure 2-95. Obtain FORK SPRING COMPRESSING TOOL (Part No. HD-45966). Install:
   a. Clamp tool (1) in vise in a vertical position with length adjuster screw (2) topside.
   b. Pull up on fork slider to compress fork assembly.
   c. Place hole at bottom of fork slider over post (5) at bottom end of tool.
   d. With the smaller OD topside, place FORK SPRING COMPRESSING TOOL COLLAR (Part No. HD-45966-2) (4) over nut, spring seat and flat washer of fork assembly.

NOTE

Use only hand tools to turn length adjuster screw on fork spring compressing tool. Do not use an air impact wrench.

   e. Adjust tool as necessary until three retaining pins engage blind holes in spring compressor. Turn length adjuster screw counterclockwise to lengthen, clockwise to shorten.
   f. Turn retaining pins as necessary to lock position of spring compressor collar.
   g. Tighten length adjuster screw to compress spring.
7. Using deep socket, remove nut from end of damper rod.

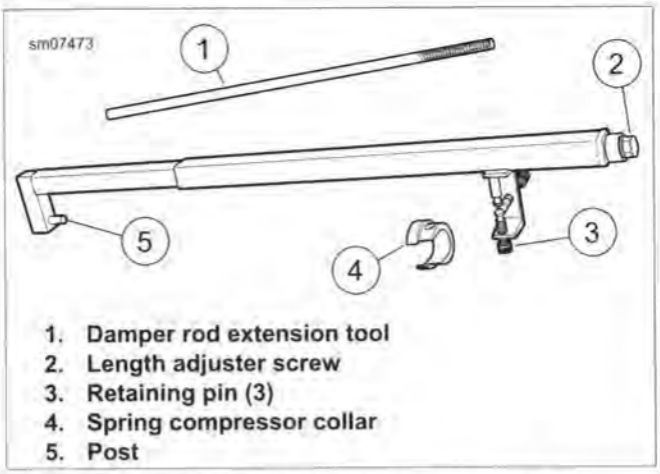

1. **Damper rod extension tool**
2. **Length adjuster screw**
3. **Retaining pin (3)**
4. **Spring compressor collar**
5. **Post**

Figure 2-95. Fork Spring Compressing Tool

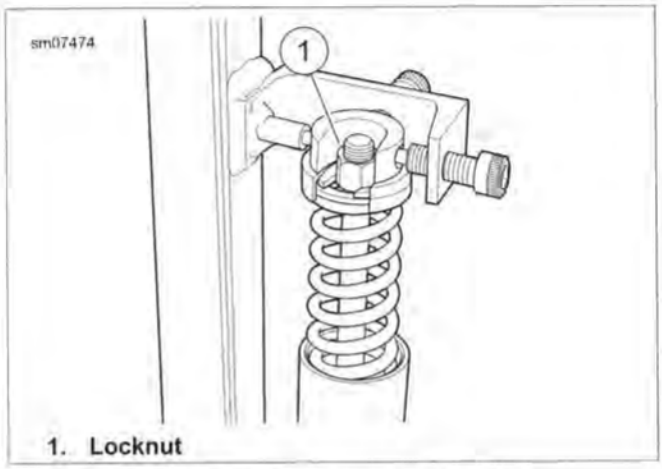

1. **Locknut**

Figure 2-96. Compress Fork Spring

8. Loosen length adjustment screw (2) to release tension on fork spring. Loosen retaining pins. Remove spring compressor collar (4). Remove spring seat and flat washer.
9. Remove fork assembly from tool. Remove fork spring from fork tube.
10. Obtain damper rod extension tool from FORK SPRING COMPRESSING TOOL (Part No. HD-45966) shown in Figure 2-97. Install extension tool onto end of damper rod.
11. See Figure 2-98. Turn fork assembly upside down over drain pan and slowly pump damper rod at least 20 times until rod moves freely.

NOTE

If only changing the fork oil, continue procedure at 2.18 FRONT FORK, Assembly: Cartridge Fork (FLD, Left Side). If overhauling the fork assembly, continue with procedure.

12. See Figure 2-97. Remove extension tool from damper rod. Install fork spring back into fork tube.
13. See Figure 2-94. Remove cartridge screw (6).
    a. Place a clean shop rag on the floor, and turning fork assembly upside down, press end of spring against rag.
    b. While compressing spring to prevent rotation of damper cartridge, remove cartridge screw from end of fork slider.
    c. Use an air impact wrench for best results. Discard cartridge screw with copper washer.
14. Remove spring and damper cartridge from fork tube.

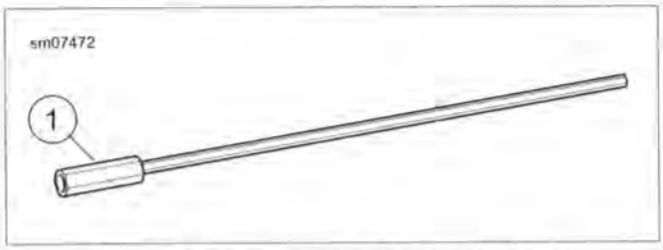

Figure 2-97. Damper Rod Extension Tool

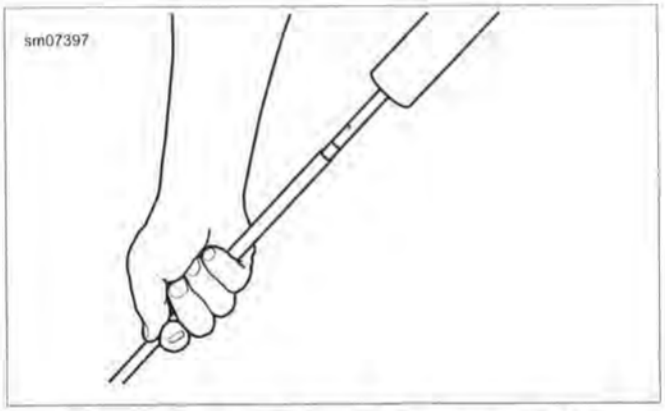

Figure 2-98. Pump Damper Rod Extension Tool

NOTE

See Figure 2-94. Do not expand or stretch retaining ring (1) to remove from fork tube (17) or ring can become bent or distorted.

15. See Figure 2-94. Using a pick tool, remove retaining ring (1) between fork slider (8) and fork tube (17).
16. Remove fork tube from fork slider. To overcome any resistance, use the fork tube as a slide hammer. Push fork tube into fork slider. Then pull outward with moderate force. Repeat until fork tube separates from fork slider.
17. Slide oil seal (2), seal spacer (3) and guide bushing (4) off end of fork tube. Discard oil seal.
18. Remove oil lock (5) from fork slider or end of cartridge (9) if still installed.

CLEANING AND INSPECTION

1. Clean all parts.
2. Inspect parts for wear or damage. Replace parts if necessary.
3. Replace retaining ring if bent or distorted.

4. Inspect OD of slider guide bushing and ID of fork tube bushing.
   a. If coating is worn through (metallic substrate showing), replace bushing.
   b. Inspect for distortion.
   c. If deep scratches or scoring are found, replace bushing. Also inspect mating components for similar wear. Replace or repair as necessary.
5. Check fork tube and slider for scoring, scratches and abnormal wear.
6. Inspect fork tube for nicks from stones and road debris, especially in area where seal contacts it. Replace if necessary.
7. See Figure 2-99. Check runout with a dial indicator.
   a. Set fork tube on V-blocks.
   b. Replace fork if runout exceeds 0.008 in (0.2 mm).

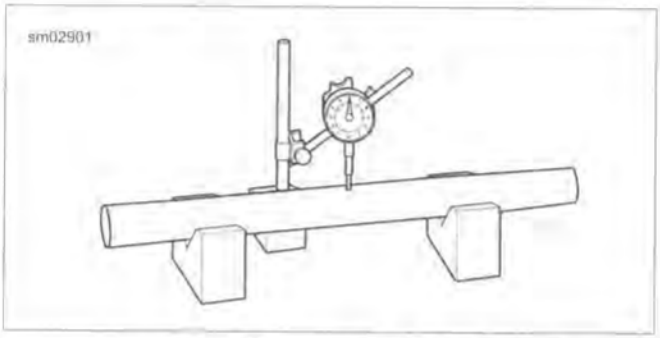

Figure 2-99. Measure Fork Tube Runout

ASSEMBLY: ALL BUT FLD LEFT SIDE

PART NUMBER	TOOL NAME
HD-41177	FORK HOLDING TOOL
HD-45305	FORK SEAL DRIVER
HD-59000A	PRO-LEVEL OIL GAUGE

FASTENER	TORQUE VALUE	
Front fork seat pipe screw	30-37 ft-lbs	40-50 Nm
Fork tube caps	22-59 ft-lbs	30-80 Nm

NOTE

This procedure applies to all conventional front fork assemblies. For left side FLD cartridge style front fork, see 2.18 FRONT FORK, Assembly: Cartridge Fork (FLD, Left Side).

1. See Figure 2-92. If bushing (2) was not removed, coat with TYPE "E" HYDRAULIC FORK OIL. If bushing was removed, install **new** bushing.
   a. Coat **new** bushing with TYPE "E" HYDRAULIC FORK OIL.
   b. Gently expand bushing at split line only enough to fit over end of fork tube (1).
   c. Slide bushing into groove in fork tube.
2. Insert seat pipe (20) with rebound spring (19) into fork tube (1).
3. Coat entire diameter of **new** oil seal (6) with Harley-Davidson SEAL GREASE.
4. Coat **new** guide bushing (8) with TYPE "E" HYDRAULIC FORK OIL. Slide guide bushing down to bushing (2) on fork tube. Follow with seal spacer (7), oil seal, retaining ring (5), dust seal (4) and cosmetic cover (3).
5. Install fork tube into FORK HOLDING TOOL (Part No. HD-41177) mounted horizontally in a vise.
6. Fit oil lock (9) onto seat pipe.
7. See Figure 2-100. Slide seat pipe back into fork tube until seat pipe is centered in tube.
8. See Figure 2-92. Gently install fork slider assembly (12, 13 or 26) onto fork tube and bushing.
9. Apply LOCTITE 565 THREAD SEALANT to **new** seat pipe screw (15). Insert seat pipe screw and copper washer (14) into seat pipe through bottom of fork slider assembly. Draw screw into seat pipe but do not tighten.
10. Verify action of fork by sliding fork slider up and down fork tube.
11. Assemble the FORK SEAL DRIVER (Part No. HD-45305) over fork tube in front of oil seal.

NOTE

Place the lettered side of the seal facing upward.

12. See Figure 2-101. Holding fork seal driver (4) together, tap oil seal (3), seal spacer (2) and guide bushing (1) into fork slider bore.
13. See Figure 2-92. Install retaining ring (5) into groove in top of oil seal.
14. Push dust seal (4) against oil seal and retaining ring.
15. Rotate cosmetic cover (3) to match any removal burrs to notch in fork slider. Snap cosmetic cover into place.
16. Move fork slider through its full range of travel several times to verify alignment.
17. Pull down on fork slider to apply downward force on rebound spring.
18. Tighten seat pipe screw to 30-37 ft-lbs (40-50 Nm).
19. Position fork tube vertically in fork holding tool. With fork slider compressed, fill the fork with TYPE "E" HYDRAULIC FORK OIL as referred to in Table 2-14.

Table 2-14. Fork Oil Volume

MODEL	OZ	CC	IN	MM
FXDB/C/P	28.6	845	3.74	95.0
FXDF	26.5	784	4.72	120.0
FXDWG	29.4	869	3.74	95.0
FXDL	26.4	780	4.65	118.0
FLD (left)	11.8	350	5.79	147.0
FLD (right)	14.1	417	5.08	129.0

20. Slowly pump fork slider 8-10 times to exhaust air from assembly. Fully compress fork slider to determine oil level.

NOTE

Measure fork oil level from top of fork tube with spacer and spring removed and fork fully compressed.

21. Using the PRO-LEVEL OIL GAUGE (Part No. HD-59000A), adjust the oil level to specification.
22. Pull out fork slider. Install spring (21) in fork tube with tightly wound end at bottom.
23. Install washer (22) and spring collar (23).

⚠WARNING

Wear safety glasses or goggles when servicing fork assembly. Do not remove slider tube caps without relieving spring preload or caps and springs can fly out, which could result in death or serious injury. (00297a)

24. Install fork tube cap (25) with **new** O-ring (24). Tighten to 22-59 ft-lbs (30-80 Nm).

NOTE

To prevent cross threading fork tube cap, use caution when threading in cap with the spring compressed.

25. Repeat procedure for opposite side.



Figure 2-100. Seat Pipe Centered in Fork Tube

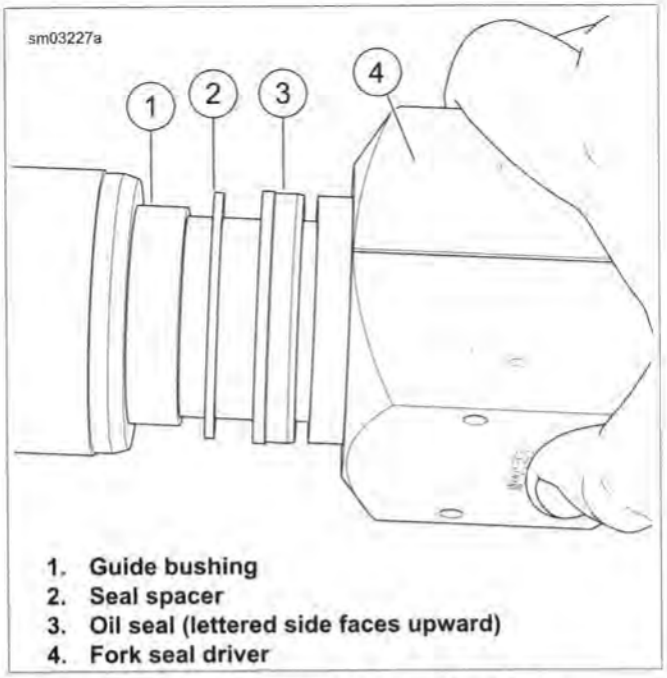

1. **Guide bushing**
2. **Seal spacer**
3. **Oil seal (lettered side faces upward)**
4. **Fork seal driver**

Figure 2-101. Assembled Fork Seal Driver

ASSEMBLY: CARTRIDGE FORK (FLD, LEFT SIDE)

PART NUMBER	TOOL NAME
HD-34634	FORK OIL SEAL INSTALLER
HD-41177	FORK HOLDING TOOL
HD-45966	FORK SPRING COMPRESSING TOOL
HD-59000B	FORK OIL LEVEL GAUGE

FASTENER	TORQUE VALUE	
Cartridge screw: FLD (left side)	10.8-18.0 ft-lbs	14.7-24.5 Nm
Nut, fork tube cap: FLD (left side)	13.0-16.6 ft-lbs	17.5-22.5 Nm
Fork tube cap: FLD (left side)	22-59 ft-lbs	30-80 Nm

NOTICE

Exercise caution to avoid scratching or nicking fork tube. Damaging tube can result in fork oil leaks after assembly. (00421b)

1. See Figure 2-94. If bushing (10) was not removed, coat with TYPE "E" HYDRAULIC FORK OIL. If bushing was removed, install **new** bushing.
   a. Coat **new** bushing with TYPE "E" HYDRAULIC FORK OIL.
   b. Gently expand bushing at split line only enough to fit over end of fork tube (17).
   c. Slide bushing into groove in fork tube.
2. Slide cartridge (9) into fork tube so that cartridge end drops through hole at bottom of fork tube.
3. Install oil lock (5) at end of cartridge.

4. Install fork tube into fork slider (8).
5. Apply LOCTITE 565 THREAD SEALANT to **new** cartridge screw with copper washer (6). Insert screw through hole at bottom of fork slider and start into end of cartridge or oil lock.
6. Coat **new** guide bushing (4) ID with TYPE "E" HYDRAULIC FORK OIL. Slide guide bushing down fork tube.
7. Slide seal spacer (3) down fork tube until it contacts guide bushing.
8. Slide FORK OIL SEAL INSTALLER (Part No. HD-34634) down fork tube. Using tool as a slide hammer, drive guide bushing into counterbore of fork slider. Remove tool.

NOTE

Place masking tape over edge of fork tube to avoid damaging lip of fork oil seal during installation.

9. Coat entire diameter of **new** oil seal (2) with Harley-Davidson SEAL GREASE.
10. Place the lettered side of the oil seal facing upward. Slide oil seal down fork tube until it contacts seal spacer.
11. Remove masking tape from edge of fork tube.

NOTICE

Exercise caution to avoid scratching or nicking fork tube. Damaging tube can result in fork oil leaks after assembly. (00421b)

12. Slide FORK OIL SEAL INSTALLER (Part No. HD-34634) down fork tube until it contacts oil seal.
13. See Figure 2-102. Using tool as a slide hammer, drive oil seal down fork tube until retaining ring groove is visible in fork slider ID. Remove tool.

NOTE

See Figure 2-94. Do not expand or stretch retaining ring (1) to install on fork tube or retaining ring can become bent or distorted.

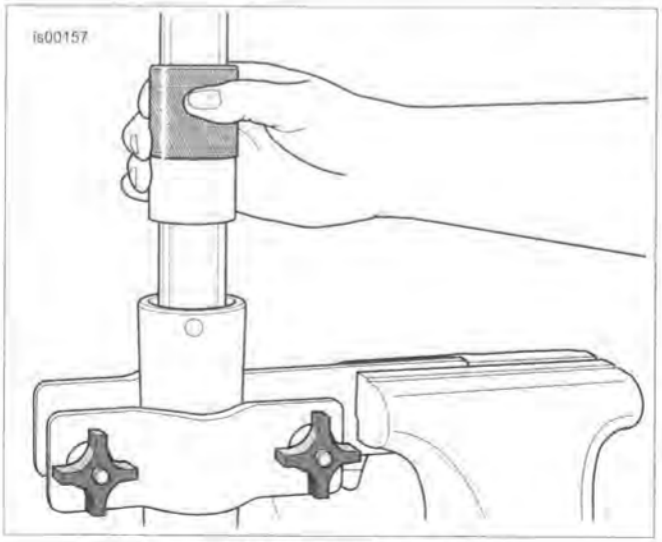

Figure 2-102. Install Fork Oil Seal

14. See Figure 2-94. Slide retaining ring (1) down fork tube until it contacts oil seal. Install retaining ring in fork slider groove.
15. Tighten cartridge screw to 10.8-18.0 ft-lbs (14.7-24.5 Nm).
16. Clamp fork slider upright in FORK HOLDING TOOL (Part No. HD-41177).
17. Fill fork tube:
    a. Install damper rod extension tool from FORK SPRING COMPRESSING TOOL (Part No. HD-45966)) onto end of damper rod (18).
    b. Pour 5 oz (147.0 ml) of TYPE "E" HYDRAULIC FORK OIL into fork tube.
    c. See Figure 2-103. Grasping extension tool, slowly pump damper rod until resistance is felt, then pump five more times.
    d. Place damper rod in fully bottomed position. Remove extension tool from end of damper rod.
    e. Pour an extra 6 oz (177.5 ml) of TYPE "E" HYDRAULIC FORK OIL into fork tube.
18. Adjust fork oil level to 5.8 in (147 mm) from top of fork tube with fork compressed:
    a. See Figure 2-104. Obtain FORK OIL LEVEL GAUGE (Part No. HD-59000B).
    b. Loosen thumbscrew on metal ring. Move ring up or down rod until bottom of ring is 5.8 in (147 mm) from end of rod. Tighten thumbscrew.
    c. Push plunger on cylinder in all of the way.
    d. See Figure 2-105. Insert rod into top of fork tube until metal ring rests flat on top of fork tube.
    e. Pull out plunger to evacuate excess fork oil from fork tube. Observe fork oil through transparent tube as it is drawn into cylinder. If no oil is drawn through transparent tube, add enough oil so tool usage sets fork oil level.
    f. Remove rod from fork tube. Push plunger into cylinder to eject excess fork oil into suitable container.
    g. If necessary, repeat fork oil evacuation procedure. Fork oil level is correct when no more fork oil is observed being drawn through transparent tube.

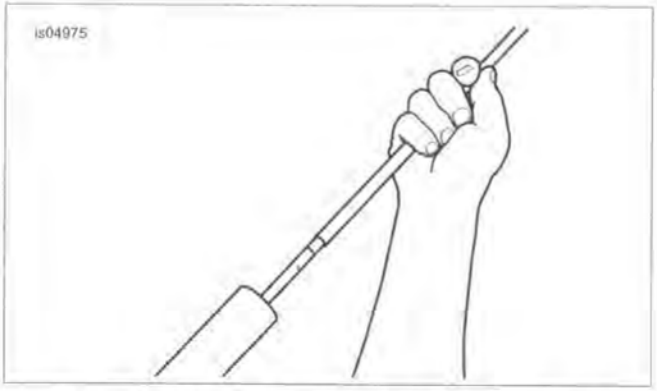

Figure 2-103. Pump Damper Rod Extension Tool

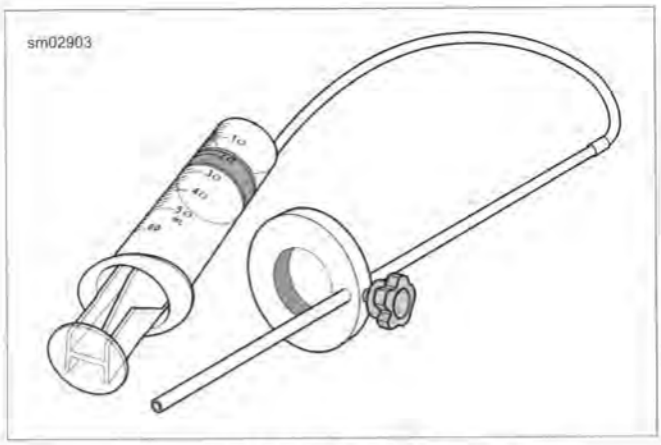

Figure 2-104. Fork Oil level Gauge

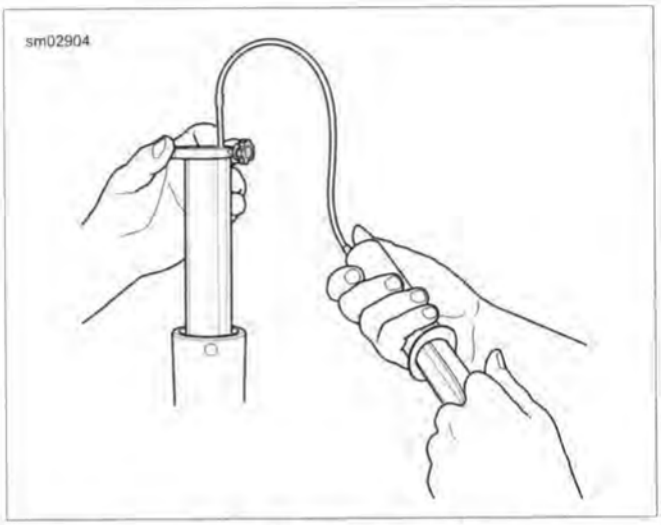

Figure 2-105. Remove Excess Fork Oil

⚠WARNING

Incorrect amount of fork oil can adversely affect handling and lead to loss of vehicle control, which could result in death or serious injury. (00298a)

19. See Figure 2-94. With tightly wound coils toward bottom, slide spring (11) into fork tube (17).
20. Pull up on fork slider to compress fork assembly. Compressing fork assembly causes damper rod and spring to protrude from top of fork tube.
21. Install damper rod extension tool onto end of damper rod.
22. Remove fork assembly from FORK HOLDING TOOL (Part No. HD-41177).

⚠WARNING

Wear safety glasses or goggles when servicing fork assembly. Do not remove slider tube caps without relieving spring preload or caps and springs can fly out, which could result in death or serious injury. (00297a)

23. See Figure 2-95. Clamp FORK SPRING COMPRESSING TOOL (Part No. HD-45966) in vise in a vertical position with length adjuster screw (2) topside.
24. Pull up on fork slider to compress fork assembly.
25. Place hole at bottom of fork slider over post (5) at bottom end of tool.
26. See Figure 2-94. Place washer (12) rounded side up over damper rod extension tool and on top of spring (11).
27. Place spring seat (13) concave side up on top of washer.
28. With smaller OD topside, place spring compressor over spring seat and washer.

NOTE

Use only hand tools to turn length adjuster screw on fork spring compressing tool. Do not use an air impact wrench or tool damage can occur.

29. Adjust tool as necessary until three retaining pins engage blind holes in spring compressor. Turn length adjuster screw counterclockwise to lengthen, clockwise to shorten.

⚠WARNING

Wear safety glasses or goggles when servicing fork assembly. Do not remove slider tube caps without relieving spring preload or caps and springs can fly out, which could result in death or serious injury. (00297a)

30. See Figure 2-96. Turn retaining pins as necessary to lock position of spring compressor.
31. Tighten length adjuster screw to compress spring.
32. After several turns, pull up on extension tool to raise damper rod. If threaded portion of rod cannot be pulled out of spring, compress spring further.
33. Repeat previous step until threaded portion of rod can be pulled out of spring. Remove extension tool. Do not let go of damper rod.
34. See Figure 2-94. Using a deep socket, thread nut (14) onto damper rod (18) until it contacts shoulder.
35. Loosen length adjuster screw to release tension on fork spring. Loosen retaining pins and remove spring compressor. Remove fork assembly from tool.
36. Clamp FORK HOLDING TOOL (Part No. HD-41177) in vise. Clamp fork tube into tool.
37. Install **new** O-ring (15) onto fork tube cap (16).
38. Thread fork tube cap onto threaded end of rod until it bottoms.
39. Now thread nut in until it contacts fork tube cap. Tighten to 13.0-16.6 ft-lbs (17.5-22.5 Nm).
40. Tighten fork tube cap to 22-59 ft-lbs (30-80 Nm).
41. Remove fork assembly from fork holding tool.

INSTALLATION

FASTENER	TORQUE VALUE	
Pinch bolts	30-35 ft-lbs	40.7-47.5 Nm

1. Slide left and right fork assemblies upward through lower and upper fork clamps.

2. See Figure 2-106. Make sure that top of fork tube cap extends above upper fork clamp according to specification listed in Table 2-15.

NOTES

- *Take measurement from midpoint of fork tube between top surface of fork clamp and top of fork cap.*
- ***FLD:** Fork protrusion can best be measured by placing a metal ruler flat on top of the fork tube cap. Then use a dial caliper to measure the protrusion from the top of the upper fork clamp to the top surface of the ruler. Subtract the thickness of the ruler to obtain the final measurement.*

Table 2-15. Fork Protrusion Specification

MODEL	SPECIFICATION
All but FLD	0.575-0.675 in (14.6-17.1 mm)
FLD	0.670-0.770 in (17.0-20.0 mm)

3. Tighten pinch bolts to 30-35 ft-lbs (40.7-47.5 Nm).
4. Install front fender. See 2.28 FRONT FENDER.
5. Install front brake caliper hydraulic lines. Install front brake calipers. See 2.11 FRONT BRAKE CALIPER.
6. Install front wheel. See 2.4 FRONT WHEEL.

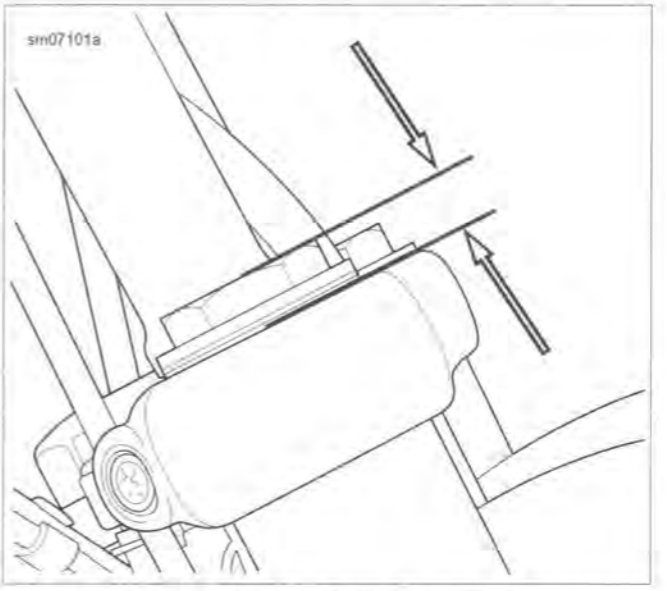

Figure 2-106. Fork Tube Protrusion

REMOVAL: ALL BUT FLD

1. Cover painted parts to protect finish.
2. Remove left and right fork assemblies from upper and lower fork bracket. See 2.18 FRONT FORK.
3. Remove the headlamp from lower fork bracket. See 7.12 HEADLAMP.
4. See Figure 2-107. Remove the fork stem cap (1).

NOTE

Do not pinch or kink control cables.

5. Remove the fork stem nut and the handlebar with upper bracket (4).
6. Remove the adjusting nut (5) and pull the fork stem and bracket (10, 11) out of the steering head.
7. Remove the upper dust shield (6) and bearing (7).
8. Slide fork stem and bracket from frame.

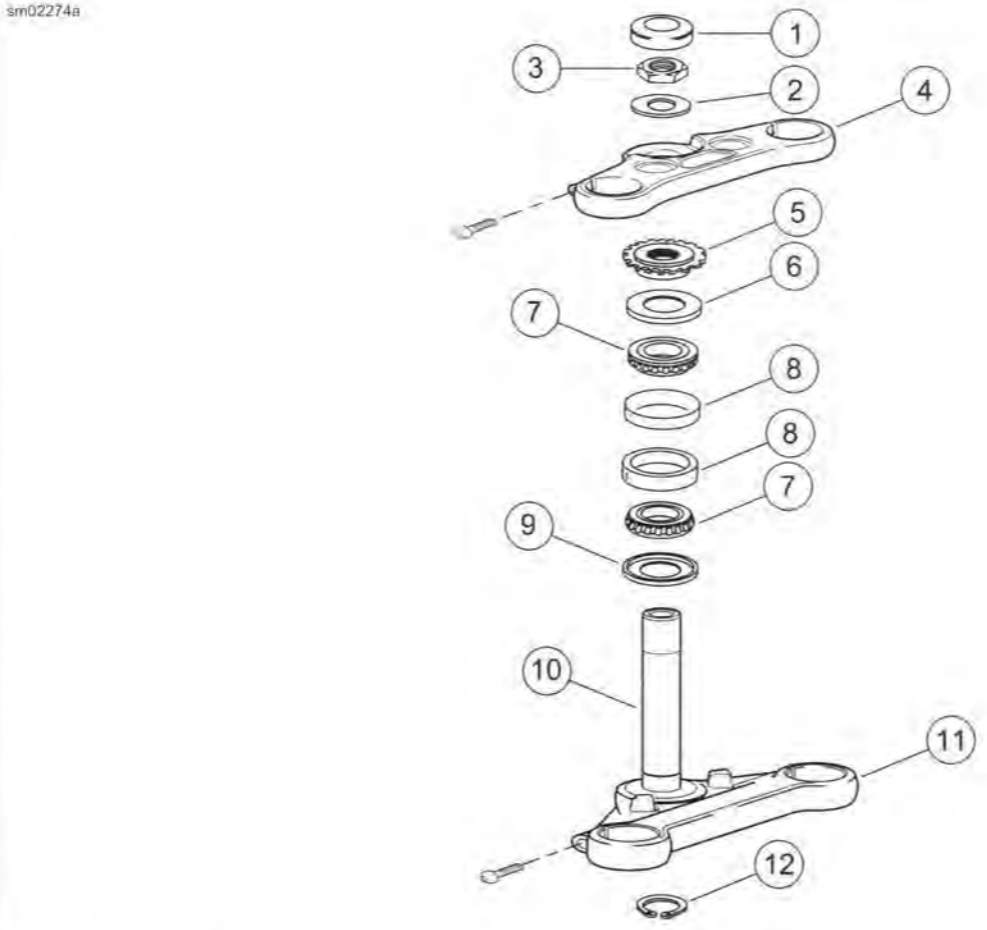

1. **Fork stem cap**
2. **Hardened flat washer**
3. **Fork stem nut**
4. **Upper fork bracket**
5. **Adjusting nut**
6. **Upper dust shield**
7. **Bearing (2)**
8. **Bearing cup (2)**
9. **Lower dust shield**
10. **Fork stem**
11. **Lower fork bracket**
12. **Retaining ring**

Figure 2-107. Steering Head

REMOVAL: FLD

1. Raise the front end of the motorcycle.
2. Remove brake caliper and front wheel. See 2.4 FRONT WHEEL.
3. Remove front fender. See 2.28 FRONT FENDER.
4. Remove headlight assembly. See 7.12 HEADLAMP.
5. Loosen handlebar riser bolts, but do not remove.
6. Loosen fork bracket pinch bolts. Do not remove tube caps. Slide left and right fork assemblies downward clear of fork brackets.
7. Remove fuel tank. See 4.4 FUEL TANK.
8. Remove wire harness shield and grommets from backbone of frame. See 7.32 MAIN WIRING HARNESS.

9. Disconnect handlebar control module connectors under fuel tank.
10. **ABS models:**
    a. Disconnect front wheel speed sensor connector
    b. Remove the brake line manifold from the lower fork bracket
11. Remove windshield assembly and docking hardware.

NOTES

- *Slider covers attach to the lower nacelle.*
- *Only remove slider covers from lower nacelle if replacing them.*

12. Remove lower nacelle along with slider covers.
13. Pull handlebar control module harnesses through upper fork clamp. Remove handlebar riser bolts from upper fork clamp.

NOTE

Always remove upper fork clamp first.

14. Remove upper nacelle and upper fork clamp.
15. Remove lower fork clamp.
16. Replace steering head bearings and cups as needed.

INSPECTION

1. Check upper and lower bearing cups in steering head. If they are pitted or grooved, replace the bearings and bearing cups in sets.

NOTICE

Replace both bearing assemblies even if one assembly appears to be good. Mismatched bearings can lead to excessive wear and premature replacement. (00532c)

2. Replace bearings that do not turn freely.

DISASSEMBLY

PART NUMBER	TOOL NAME
HD-33416	UNIVERSAL DRIVER
HD-39301-A	STEERING HEAD BEARING RACE REMOVER

Steering Head Bearing Race Removal

1. See Figure 2-108. With the tapered side down, seat the two-piece STEERING HEAD BEARING RACE REMOVER (Part No. HD-39301-A) (1) on the upper bearing race leaving a gap in the middle.
2. Install the collet (2) on the UNIVERSAL DRIVER (Part No. HD-33416).
3. Insert the driver (3) at the bottom of the steering head tube. While holding the remover tool on the race, center the collet (2) in the gap. Tap the driver to remove the upper race.
4. Reverse the tool and repeat the procedure to remove the lower bearing race.

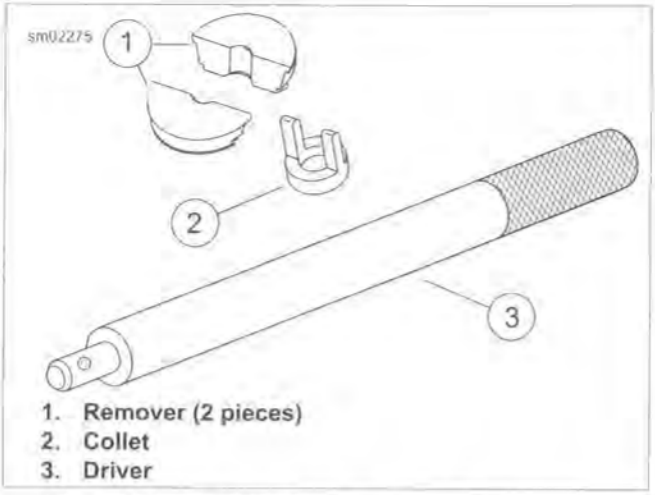

1. **Remover (2 pieces)**
2. **Collet**
3. **Driver**

Figure 2-108. Race Remover Tools

NOTE

If bearing cups are removed, they must be replaced. The lower bearing cone is not pressed on fork stem. Bearing cone can be slipped off fork stem along with lower dust shield.

ASSEMBLY

PART NUMBER	TOOL NAME
HD-39302	STEERING HEAD BEARING RACE INSTALLER

1. Pack the **new** bearings with SPECIAL PURPOSE GREASE.

NOTE

Press only on inner bearing race or damage to bearing will occur.

2. See Figure 2-107. Install the lower dust shield (9) and **new** bearing (7) on the fork stem (10).

⚠WARNING

Properly seat bearing cups in steering head bore. Improper seating can loosen fork stem bearings adversely affecting stability and handling, which could result in death or serious injury. (00302a)

3. Lubricate the races with engine oil. Install the **new** races using STEERING HEAD BEARING RACE INSTALLER (Part No. HD-39302).

INSTALLATION: ALL BUT FLD

⚠WARNING

Properly adjust fork stem bearings. Improper adjustments can adversely affect stability and handling, which could result in death or serious injury. (00301c)

1. See Figure 2-107. Insert the stem and bracket assembly into the frame steering head and install the bearing (7) and upper dust shield (6).
2. Secure with the adjusting nut (5) and tighten until there is no noticeable shake or free play between bearings and races. Fork stem must turn freely from side to side.

NOTE

The washer under the fork stem nut is a special hardened material. Never replace this washer with a common flat washer. Doing so may allow the fork stem nut torque to loosen resulting in loss of steering control.

3. Install upper fork bracket (4) and hardened flat washer (2).
4. Install stem nut and hand tighten.
5. Install the headlamp assembly. See 7.12 HEADLAMP.
6. Install fork sides. See 2.18 FRONT FORK.
7. Adjust steering head bearings for proper fall-away. See 1.17 STEERING HEAD BEARINGS.

NOTE

After tightening the fork stem nut, verify that the fall-away is correct.

8. Align headlamp. See 1.20 HEADLAMP ALIGNMENT.

INSTALLATION: FLD

PART NUMBER	TOOL NAME
HD-50651	FORK STEM NUT SOCKET

FASTENER	TORQUE VALUE	
Lower nacelle fasteners: FLD	84-120 **in-lbs**	9.5-13.5 Nm
Upper and lower pinch bolts: FLD	30-35 ft-lbs	40.7-47.5 Nm
Handlebar riser bolts: FLD	30-40 ft-lbs	40.7-54.2 Nm
Headlight to nacelle: FLD	7-10 **in-lbs**	0.8-1.1 Nm
Upper nacelle fasteners: FLD	84-120 **in-lbs**	9.5-13.5 Nm
Windshield docking hardware: FLD	84-120 **in-lbs**	9.5-13.5 Nm
Brake manifold to lower fork: FLD	36-48 **in-lbs**	4.0-5.4 Nm
Fork stem nut: FLD	70-80 ft-lbs	94.9-108.4 Nm

1. Install lower fork clamp.

NOTE

The washer under the fork stem nut is a special hardened material. Never replace this washer with a common flat washer. Doing so may allow the fork stem nut to loosen.

2. Install upper fork clamp.

NOTE

Always install the lower nacelle cover and cover assemblies before installing fork sides into brackets.

3. Install lower nacelle along with cover assemblies. Tighten two lower fasteners to 84-120 **in-lbs** (9.5-13.5 Nm).
4. Slide left and right fork assemblies upward and into upper and lower fork brackets.
5. See Figure 2-109. Make sure that the top of fork slider cap extends 0.670-0.770 in (17.0-20.0 mm) above upper fork clamp.
6. Install upper and lower pinch bolts. Tighten to 30-35 ft-lbs (40.7-47.5 Nm).
7. Install upper nacelle with two fasteners in rear of nacelle, but do not tighten.
8. Install handlebar riser bolts through upper fork clamp and upper nacelle. Pull handlebar control module harnesses down through upper fork clamp and upper nacelle.
9. Tighten handlebar riser bolts to 30-40 ft-lbs (40.7-54.2 Nm).
10. Install headlight assembly. Tighten to 7-10 **in-lbs** (0.8-1.1 Nm).
11. Tighten upper nacelle fasteners to 84-120 **in-lbs** (9.5-13.5 Nm).
12. Install docking hardware and windshield assembly. Tighten to 84-120 **in-lbs** (9.5-13.5 Nm).
13. **ABS models:** Install the brake line manifold to the lower fork bracket and lower nacelle. Tighten to 36-48 **in-lbs** (4.0-5.4 Nm).

NOTE

***ABS models:** See 2.15 ABS MODULE (EHCU).*

14. Connect handlebar control modules.
15. **ABS models:** Connect front WSS connector.
16. Install harness shield and grommets into backbone of frame. See 7.32 MAIN WIRING HARNESS.
17. Install fuel tank. See 4.4 FUEL TANK.
18. Install front fender. See 2.28 FRONT FENDER.
19. Install front wheel and caliper. See 2.4 FRONT WHEEL.
20. Adjust steering head. See 1.17 STEERING HEAD BEARINGS.
21. If proper fall-away has been achieved, then use FORK STEM NUT SOCKET (Part No. HD-50651) to tighten fork stem nut. Tighten to 70-80 ft-lbs (94.9-108.4 Nm).

NOTE

After tightening the fork stem nut and before installing the fork stem cap, verify that the fall-away is correct.

22. Install the fork stem cap.
23. Align headlamp. See 1.20 HEADLAMP ALIGNMENT.

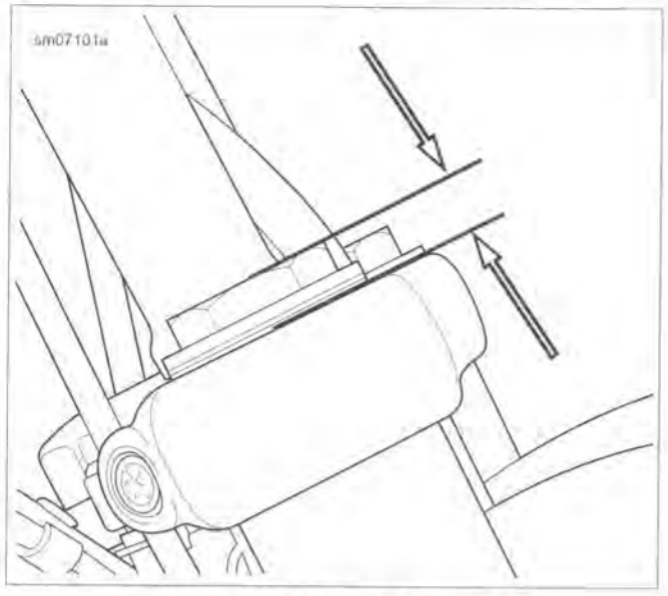

Figure 2-109. Fork Tube Protrusion

BELT GUARD REMOVAL

1. See Figure 2-110. Remove front fastener (1) and washer (2).
2. Remove rear fastener (3) and washer (2) from nut (8).
3. Lift belt guard (9) away from rear fork.
4. Disassemble belt guard by removing grommets (7) and spacers (6).

BELT GUARD INSTALLATION

FASTENER	TORQUE VALUE	
Front belt guard fastener	120-180 **in-lbs**	13.6-20.3 Nm
Rear belt guard fastener	120-180 **in-lbs**	13.6-20.3 Nm

1. See Figure 2-110. If removed, install grommets (7) and spacers (6) on belt guard.
2. Place assembled belt guard over front and rear tabs on rear fork.
3. Loosely install front fastener (1) and washer (2).
4. Loosely install rear fastener (3) and washer (2) with nut (8).
5. Tighten front fastener (1) to 120-180 **in-lbs** (13.6-20.3 Nm).
6. Tighten rear fastener (3) and nut (8) to 120-180 **in-lbs** (13.6-20.3 Nm).
7. Verify that belt guard does not contact belt during rear fork travel.

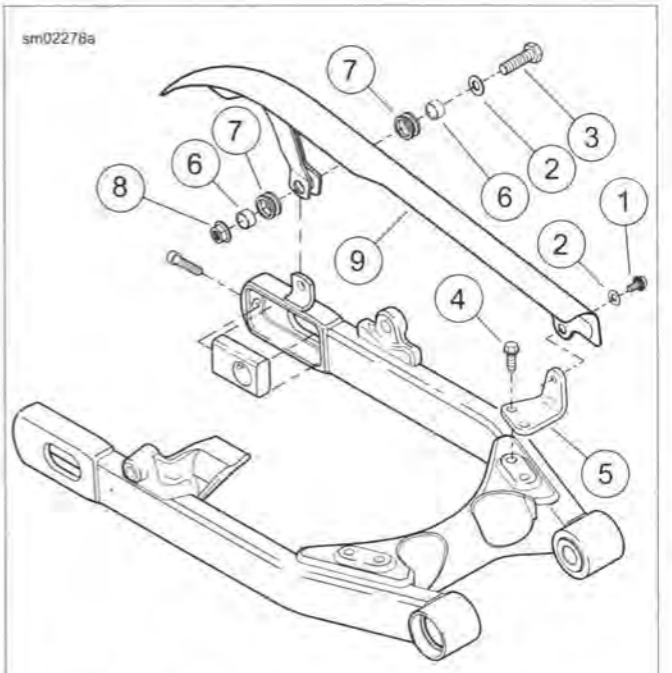

1. **Front fastener**
2. **Washer (2)**
3. **Rear fastener**
4. **Screw, belt guard bracket (2)**
5. **Belt guard bracket (FXDF model only)**
6. **Spacer (2)**
7. **Grommet (2)**
8. **Nut**
9. **Belt guard**

Figure 2-110. Belt Guard

DEBRIS DEFLECTOR REMOVAL

See Figure 2-111. Remove three screws to detach debris deflector from rear fork.

DEBRIS DEFLECTOR INSTALLATION

FASTENER	TORQUE VALUE	
Debris deflector screws	40-60 **in-lbs**	4.5-6.8 Nm

See Figure 2-111. Attach debris deflector to rear fork using three screws. Tighten to 40-60 **in-lbs** (4.5-6.8 Nm).

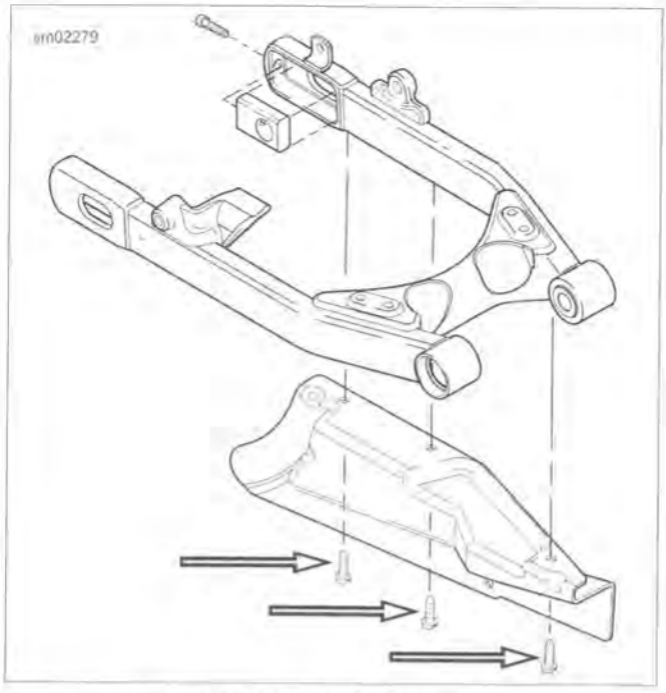

Figure 2-111. Debris Deflector Screws

REMOVAL/DISASSEMBLY

1. See Figure 2-112. Loosen cable adjuster jamnuts.
2. Rotate throttle cable adjuster until it is as short as possible.
3. Remove the two screws that hold the handlebar housing together to separate the upper and lower housings.
4. Remove the ferrules and cables from the throttle grip and lower housing.
5. Remove air cleaner assembly. See 4.3 AIR CLEANER ASSEMBLY, Removal, All But HO103.
6. Disconnect throttle cables from induction module.
7. See Figure 2-113. Apply a drop of oil to the retaining ring holding each cable assembly in the lower housing.
8. Using a rocking motion, firmly pull the bent tubing portion of each cable assembly out of the housing.

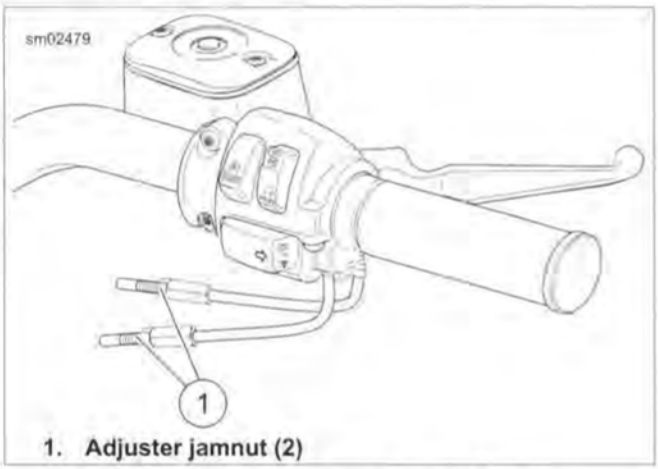

1. **Adjuster jamnut (2)**

Figure 2-112. Handlebar Throttle Control

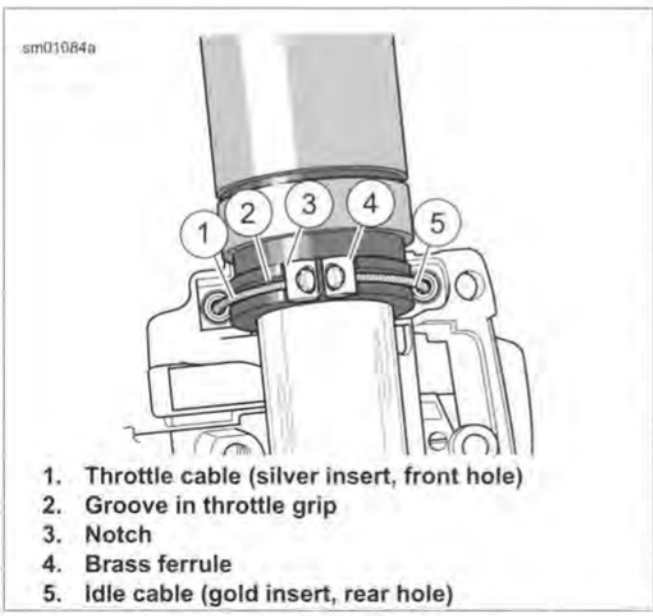

1. **Throttle cable (silver insert, front hole)**
2. **Groove in throttle grip**
3. **Notch**
4. **Brass ferrule**
5. **Idle cable (gold insert, rear hole)**

Figure 2-113. Throttle Cable Attachment

CLEANING AND INSPECTION

⚠WARNING

Compressed air can pierce the skin and flying debris from compressed air could cause serious eye injury. Wear safety glasses when working with compressed air. Never use your hand to check for air leaks or to determine air flow rates. (00061a)

1. Wash all components in non-flammable cleaning solvent. Blow parts dry with low pressure compressed air.
2. Replace the control cables if frayed, kinked or bent.
3. Put one or two drops of oil into the housing of each control cable.

ASSEMBLY/INSTALLATION

FASTENER	TORQUE VALUE	
Hand control module screws	35-45 **in-lbs**	4.0-5.1 Nm

1. Apply a light coating of graphite to handlebar and inside surface of housings.
2. See Figure 2-113. Attach the control cable assemblies to the lower housing.
   a. Push the silver insert of the throttle cable (1) housing into the hole in front of the tension adjuster screw.
   b. Push the gold insert of the idle cable (5) housing into the hole at the rear of the tension adjuster screw.
   c. Install adjusting screw, spring and friction pad in the lower housing if they were removed.
3. Position the throttle grip on the handlebar. Place the lower housing on the throttle.
4. Position the ferrules and retaining rings over the cable balls and seat them in the throttle notches.

⚠WARNING

Do not tighten throttle friction adjustment screw to the point where the engine will not return to idle automatically. Over-tightening can lead to loss of vehicle control, which could result in death or serious injury. (00031b)

5. Fasten upper housing to lower housing using two screws. Tighten to 35-45 **in-lbs** (4.0-5.1 Nm).
6. Check throttle cable routing.
7. Install throttle cables and adjust. See 1.12 THROTTLE CABLES.
8. Install air cleaner.

THROTTLE CABLE ROUTING

⚠WARNING

Pinched throttle cables can restrict throttle response, which could result in loss of control and death or serious injury. (00423b)

⚠WARNING

Be sure that steering is smooth and free without interference. Interference with steering could result in loss of vehicle control and death or serious injury. (00371a)

- Make sure throttle/idle control cables do not pull tight when handlebars are turned fully to left or right fork stops.
- Make sure that cables are not pinched between the frame and/or forks.

NOTE

Install cable straps securing throttle cables to frame so that tail of cable faces top of vehicle. Using this method verifies proper placement of cables.

See Figure 2-114 and Figure 2-115. Throttle cables are routed behind front fork upper bracket. Then routed under right side of tank to induction module.

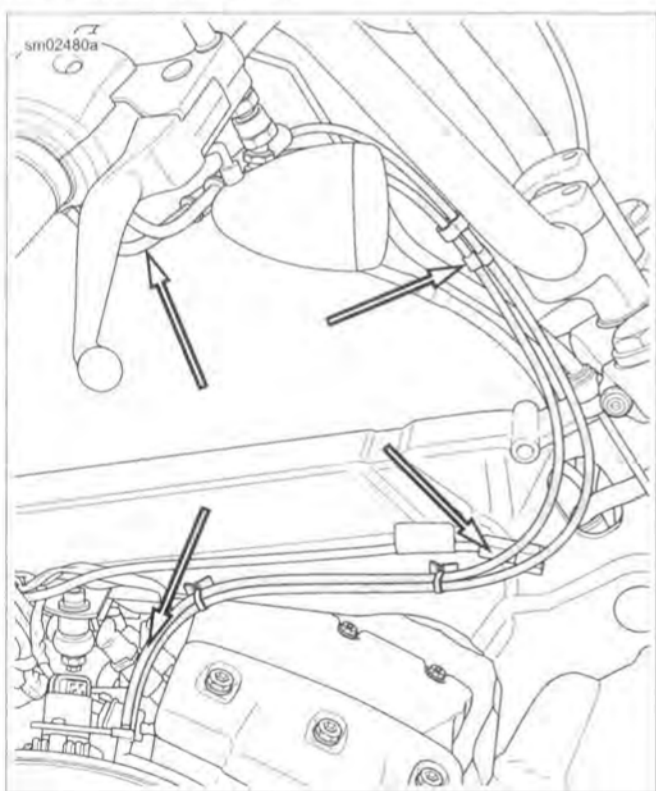

Figure 2-114. Throttle Cable Routing: FXDWG, FXDF (Typical)

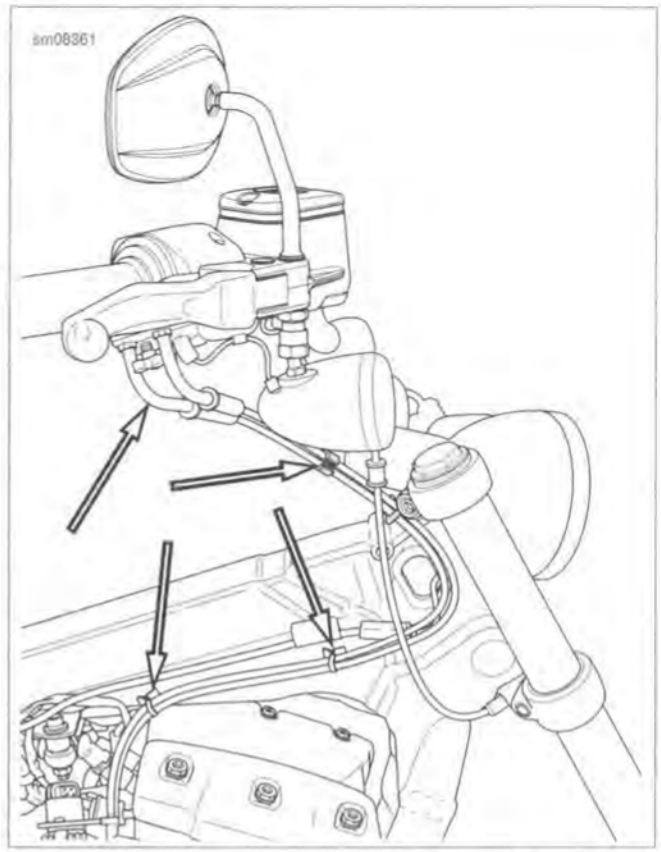

Figure 2-115. Throttle Cable Routing: FXDL

GENERAL

If a lift is not available, service one shock absorber at a time.

For information on preload adjustment and suspension settings, see 1.21 SUSPENSION ADJUSTMENTS.

REMOVAL

1. Raise the rear of the motorcycle.
2. See Figure 2-116. Remove lower mounting screw (1). Jamnut (9) is only used on left side.
3. Remove upper mounting nut (2), washer (4), shock absorber (5), and cover (3).
4. Repeat for other shock absorber.
5. If removing stud (6), remove nut (8) and hardened washer (7).

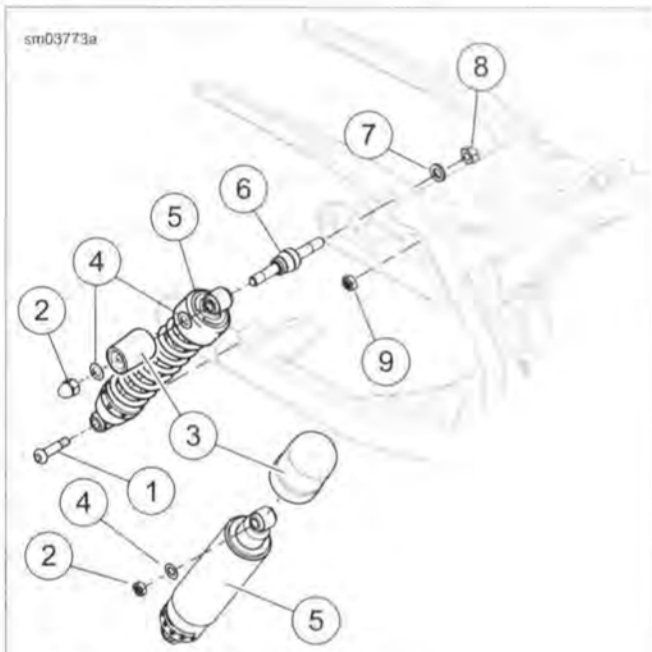

1. **Lower mounting screw (2)**
2. **Upper mounting nut (2)**
3. **Cover, chrome (FXDB only, full top cover FLD only) (2)**
4. **Washer (4)**
5. **Shock absorber (2)**
6. **Stud (2)**
7. **Hardened washer (2)**
8. **Nut (2)**
9. **Jamnut (lower-left side only)**

Figure 2-116. Rear Shock Absorber Mounting

INSPECTION

NOTE

Shocks are non-repairable items, except for the rubber mounting bushings. Replace leaking or damaged shocks as an assembly.

1. Inspect the rubber mounting bushings for cracks or wear.
   a. Inspect the shock for leaks.

   NOTE

   The unit should not leak and should compress slightly easier than it extends.

   b. Compare the action of the shock with a **new** one to judge if it is worn.
   c. Replace the shock if necessary.
2. Inspect shock mounting hardware. Replace or clean if necessary.

INSTALLATION

FASTENER	TORQUE VALUE	
Shock mounting stud nut, inner	75-85 ft-lbs	101.7-115.2 Nm
Shock mounting fastener, lower	30-40 ft-lbs	40.7-54.2 Nm
Shock mounting fastener, upper	30-40 ft-lbs	40.7-54.2 Nm

1. See Figure 2-116. If removed, install stud (6), hardened washer (7) and nut (8). Tighten to 75-85 ft-lbs (101.7-115.2 Nm).
2. Fasten each shock to the frame and rear fork using the original hardware.
3. Attach lower shock mount to rear fork.
   a. Apply two to three drops of LOCTITE 243 MEDIUM STRENGTH THREADLOCKER AND SEALANT (blue) to threads of lower mounting screw (1).
   b. Install lower mounting screw and hand tighten.
4. Apply two to three drops of LOCTITE 243 MEDIUM STRENGTH THREADLOCKER AND SEALANT (blue) to threads of upper mounting nut (2).
   a. Install cover (3), shock absorber (5), and washer (4).
   b. Install upper mounting nut (2) finger-tight.
5. Tighten upper nut and lower shock mount screws:
   a. Lower mount: 30-40 ft-lbs (40.7-54.2 Nm)
   b. Upper mount: 30-40 ft-lbs (40.7-54.2 Nm)
6. Adjust shocks if needed. See 1.21 SUSPENSION ADJUSTMENTS.

REMOVAL

1. Remove exhaust system. See 4.15 EXHAUST SYSTEM.
2. Remove rear brake caliper. See 2.13 REAR BRAKE CALIPER.
3. Remove rear wheel. See 2.5 REAR WHEEL.
4. Remove lower shock absorber fasteners and swing shock absorbers away from rear fork. See 2.22 REAR SHOCK ABSORBERS.
5. Remove belt guard and debris deflector. See 2.20 BELT GUARD AND DEBRIS DEFLECTOR.
6. Remove rear brake line clamp from rear fork.
7. See Figure 2-117. Remove plug (2).
8. Remove nut (3).
9. Remove pivot shaft (4) with attached nut. Support rear fork (1). Pull assembly from frame.

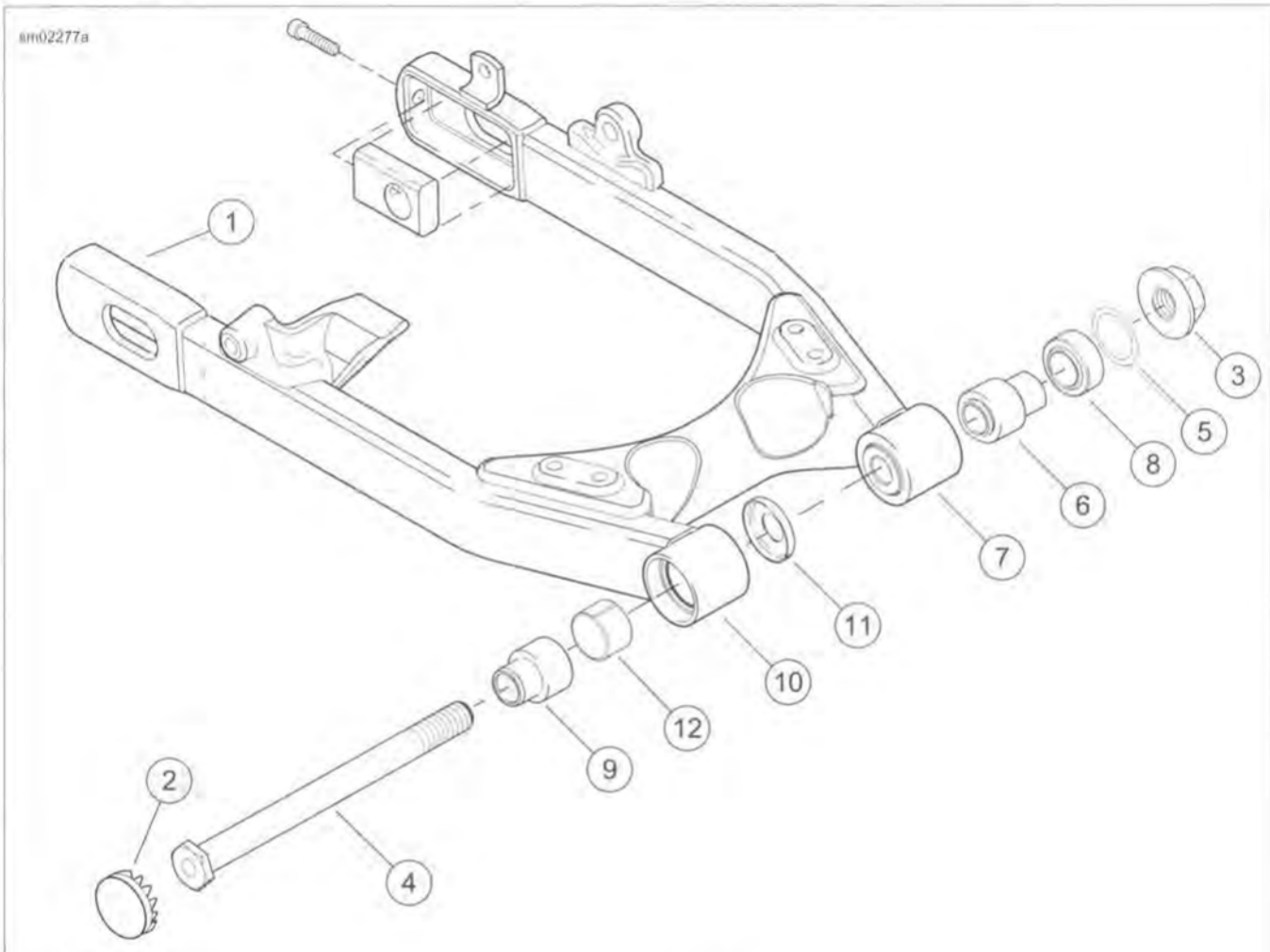

1. **Rear fork**
2. **Plug**
3. **Nut**
4. **Pivot shaft**
5. **Retaining ring**
6. **Left spacer**
7. **Left boss**
8. **Pivot bearing**
9. **Right spacer**
10. **Right boss**
11. **Dust shield**
12. **Bushing**

Figure 2-117. Rear Fork

DISASSEMBLY

Carefully mark all components as they are removed, so components can be easily returned to their original locations.

NOTE

See Figure 2-117. The pivot bearing (8) is lifetime lubricated and requires no further attention other than cleaning. Only disassemble components from left boss of fork if they are damaged.

1. Remove retaining ring (5), push or with a brass drift tap left spacer (6) inboard to remove it from left boss (7).
2. From inboard side, press or drive pivot bearing (8) from left boss.
3. Push or with a brass drift tap right spacer (9) outboard to remove it from right boss (10).
4. Press bushing (12) and dust shield (11) from fork assembly.

CLEANING AND INSPECTION

See Figure 2-117. Clean the bearing bore of rear fork with a clean shop towel, removing any dirt or grit adhering to the bearing surface.

1. Inspect bearing components for damage or corrosion. Replace if necessary.
2. Replace bent or twisted rear forks.

ASSEMBLY

FASTENER	TORQUE VALUE	
Rear fork brake hose J-clip	40-60 **in-lbs**	4.5-6.8 Nm

1. See Figure 2-117. If necessary, install **new** pivot bearing (8). Press **new** bearing from outboard side until outer race is seated against shoulder in left boss (7).
2. Install retaining ring (5) and left spacer (6). The spacer must be inserted from the inboard side.
3. If bushing (12) must be replaced, press the bushing and dust shield (11) into the fork bore so dust shield is flush to 0.060 in (1.50 mm) above fork bore.
4. Coat right spacer (9) with WHEEL BEARING GREASE. Insert spacer into bushing with chamfered end facing inward.
5. See Figure 2-118. If removed, align J-clip as shown and install screw. Tighten to 40-60 **in-lbs** (4.5-6.8 Nm). Do not allow clip to pass above top of rear fork.

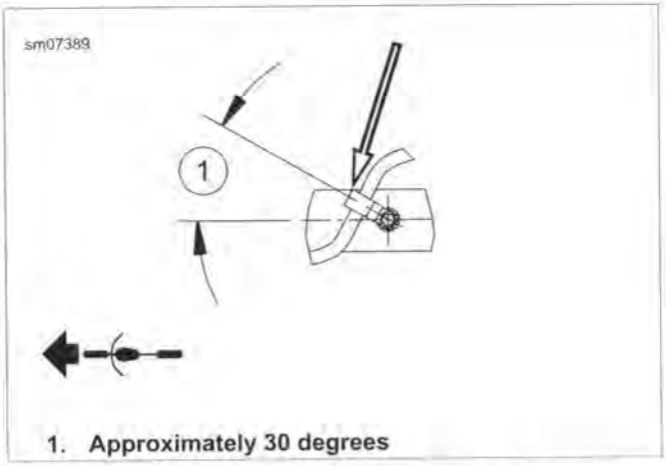

1. Approximately 30 degrees

Figure 2-118. Brake Line J-Clip at Rear Fork

INSTALLATION

FASTENER	TORQUE VALUE	
Pivot shaft nut	70-77 ft-lbs	95.0-104.5 Nm

1. Coat pivot shaft with ANTI-SEIZE LUBRICANT.
2. Slide rear fork assembly into position on mounting boss of transmission case.
3. See Figure 2-117. Hold fork assembly in position. Install the pivot shaft (4) with attached nut from right side. Install nut (3) on threads of pivot shaft. Tighten nut to 70-77 ft-lbs (95.0-104.5 Nm).
4. Swing shock absorbers into position. Install lower shock absorber fasteners. See 2.22 REAR SHOCK ABSORBERS.
5. Install rear brake caliper. See 2.13 REAR BRAKE CALIPER.
6. Install rear brake line in clamp mounted on rear fork.
7. Install rear wheel and adjust drive belt deflection. See 2.5 REAR WHEEL.
8. Install belt guard and debris deflector. See 2.20 BELT GUARD AND DEBRIS DEFLECTOR.
9. Install exhaust system. See 4.15 EXHAUST SYSTEM.

REMOVAL

1. Loosen clutch adjuster so clutch cable is fully slack. See 1.10 CLUTCH, Adjustment.

⚠WARNING

Wear safety glasses or goggles when removing or installing retaining rings. Retaining rings can slip from the pliers and could be propelled with enough force to cause serious eye injury. (00312a)

2. See Figure 2-119. Remove the anchor pin (1) from the hand lever. To remove anchor pin, remove the retaining ring (2) and pivot pin (4).
3. Drain transmission. Remove transmission side cover. See 6.5 CLUTCH RELEASE COVER.
4. See Figure 2-120. Note position of retaining ring opening (6). Retaining ring opening must be positioned in approximately the same location during assembly. Remove retaining ring (4).
5. Pull inner ramp and ramp coupling (3) out of side cover. Hold inner and outer ramps together to keep balls from falling free.
6. Rotate the inner ramp to a position which allows the coupling to be disconnected from the inner ramp lever arm. Disconnect coupling from inner ramp. Disconnect clutch cable end (2) from coupling.
7. Unscrew cable fitting (1) from side cover.

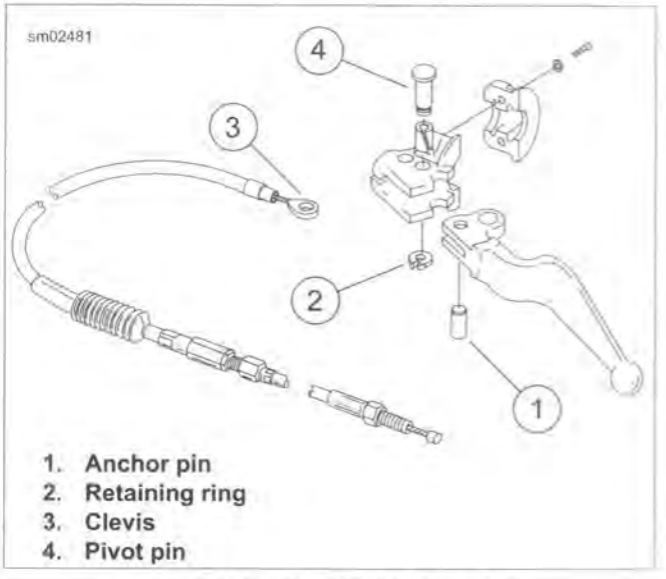

1. **Anchor pin**
2. **Retaining ring**
3. **Clevis**
4. **Pivot pin**

Figure 2-119. Clutch Cable Installation

INSTALLATION

1. See Figure 2-120. Apply a drop of LOCTITE 243 MEDIUM STRENGTH THREADLOCKER AND SEALANT (blue) to clutch cable fitting (1). Screw fitting (with O-ring) into clutch release cover. Leave fasteners loose.
2. Connect cable end to ramp coupling (3). Rotate ramps for best access. Install coupling on inner ramp. Place ramp assembly in position in side cover.

⚠WARNING

Wear safety glasses or goggles when removing or installing retaining rings. Retaining rings can slip from the pliers and could be propelled with enough force to cause serious eye injury. (00312a)

3. Install retaining ring (4). Position retaining ring opening (6) to the right of the outer ramp tang (the stop that prevents rotation).
4. Place **new** gasket on side cover. Install cover, fully tightening the clutch cable fitting. See 6.5 CLUTCH RELEASE COVER.
5. Place a few drops of oil inside cable housing.

NOTES

- *Anchor pin does not require lubrication.*
- *When clutch cable is installed, route cable in front of the handlebar for all models except FXDB. Install clutch cable behind the handlebar on FXDB models.*

6. Check that clutch cable is properly routed along left side of steering head, behind the fork brackets and through the clips on front frame crossmember.
7. See Figure 2-119. Insert anchor pin (1) through handle and clevis (3).
8. Place handle in bracket. Install pivot pin (4) and retaining ring (2).
9. Adjust clutch. See 1.10 CLUTCH, Adjustment.

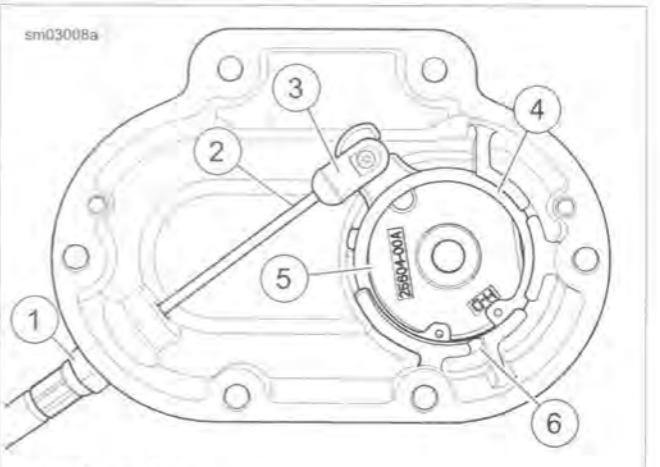

1. **Cable fitting**
2. **Clutch cable end**
3. **Ramp coupling**
4. **Retaining ring**
5. **Inner ramp**
6. **Retaining ring opening**

Figure 2-120. Clutch Cable Connection

REMOVAL

⚠WARNING

To prevent accidental vehicle start-up, which could cause death or serious injury, disconnect negative (-) battery cable before proceeding. (00048a)

1. Disconnect negative battery cable.
2. Cover painted parts to protect finish.
3. Remove front master cylinder assembly. See 2.10 FRONT BRAKE MASTER CYLINDER.
4. Remove clutch control assembly. See 2.24 CLUTCH CONTROL.
5. Remove right and left handlebar switch assemblies and throttle. See 7.35 RIGHT HANDLEBAR CONTROL MODULE and 7.34 LEFT HANDLEBAR CONTROL MODULE.

NOTE

Original equipment left grip is glued in place. Remove grip by cutting off only if necessary.

6. If removing left handlebar grip, slice grip open with a sharp knife. Peel grip off handlebar. See 2.25 HANDLEBAR: FLD, Left Hand Grip.
7. Remove windshield.
8. Remove headlamp assembly from nacelle. See 7.12 HEADLAMP.

NOTE

See Figure 2-121. If removing risers, loosen handlebar riser fasteners (8) before removing upper handlebar clamp.

9. Remove upper handlebar clamp fasteners (1).
10. Remove upper handlebar clamp (2).
11. Remove handlebar.
12. If removing risers (3), remove two handlebar riser fasteners (8), lockwashers (7) and risers from upper fork bracket.
13. Replace bushings (5) if necessary.

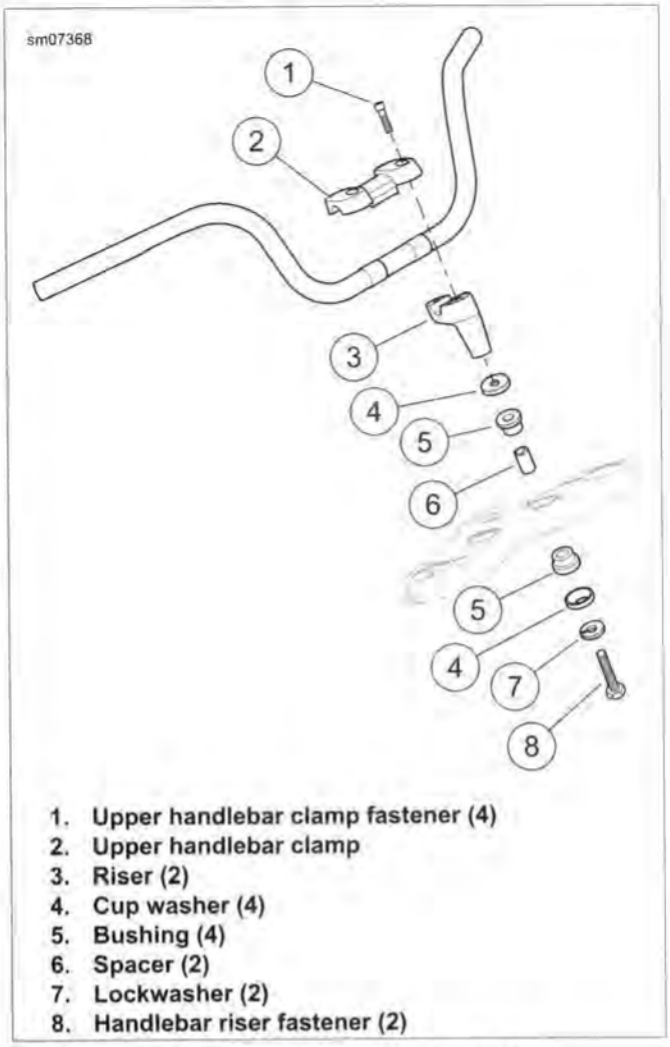

1. **Upper handlebar clamp fastener (4)**
2. **Upper handlebar clamp**
3. **Riser (2)**
4. **Cup washer (4)**
5. **Bushing (4)**
6. **Spacer (2)**
7. **Lockwasher (2)**
8. **Handlebar riser fastener (2)**

Figure 2-121. Handlebars: FLD

INSTALLATION

FASTENER	TORQUE VALUE	
Upper handlebar clamp fastener, front: all	12-16 ft-lbs	16.3-21.7 Nm
Upper handlebar clamp fastener, rear: all	12-16 ft-lbs	16.3-21.7 Nm
Handlebar riser fastener: FLD	30-40 ft-lbs	40.7-54.2 Nm
Control module housing screw	35-45 **in-lbs**	4.0-5.1 Nm
Control module housing screw	35-45 **in-lbs**	4.0-5.1 Nm
Battery terminal screw	60-70 **in-lbs**	6.8-7.9 Nm

NOTES

- *Always make sure that cup washers, bushings and spacers are in position in upper fork bracket before installing handlebars or risers.*
- *On some models, upper handlebar clamp hides knurled areas of handlebar. These areas are not visible when handlebar is centered properly.*

1. See Figure 2-121. If risers (3) were removed, install lockwashers (7) on handlebar riser fasteners (8).
2. Loosely secure risers to upper fork bracket.
3. Place handlebars on risers. Install upper handlebar clamp (2) but do not tighten upper handlebar clamp fasteners (1).
4. Using knurled areas of handlebar as a guide, center handlebars between handlebar risers.
5. See Figure 2-122. Place a straight edge across the windshield bushings.
6. Measure from the straight edge to the front of the handlebar just below the top bend.
7. Rotate the handlebar in the risers until the gap measures 1.370 in (34.8 mm).
8. See Figure 2-121. Secure handlebars in clamp:
   a. Tighten two rear fasteners (1) until cast-in spacers contact risers.
   b. Tighten front fasteners to 12-16 ft-lbs (16.3-21.7 Nm).
   c. Final tighten rear fasteners to 12-16 ft-lbs (16.3-21.7 Nm). Slight gap between upper clamp and handlebar risers should exist at front.
9. Tighten riser fasteners to 30-40 ft-lbs (40.7-54.2 Nm).
10. Install headlamp. See 7.12 HEADLAMP.
11. Install windshield.
12. Install a **new** left hand grip, if necessary. See 2.25 HANDLEBAR: FLD, Left Hand Grip.
13. Install right and left handlebar control module assemblies and throttle. Leave fasteners loose. See 7.35 RIGHT HANDLEBAR CONTROL MODULE and 7.34 LEFT HANDLEBAR CONTROL MODULE.
14. Install clutch control assembly. See 2.24 CLUTCH CONTROL.
15. Install front brake master cylinder. See 2.10 FRONT BRAKE MASTER CYLINDER.
16. Tighten:
   a. Left hand control module clamp screws to 35-45 **in-lbs** (4.0-5.1 Nm).
   b. Right hand control module clamp screws to 35-45 **in-lbs** (4.0-5.1 Nm).
17. Connect negative battery cable. Tighten to 60-70 **in-lbs** (6.8-7.9 Nm).
18. Test front brake lever for pressure and operation.
19. Test throttle for correct operation. Adjust as required. See 1.12 THROTTLE CABLES.
20. Test switches for proper operation.

⚠WARNING

Be sure that all lights and switches operate properly before operating motorcycle. Low visibility of rider can result in death or serious injury. (00316a)

21. Check operation of all lamps.

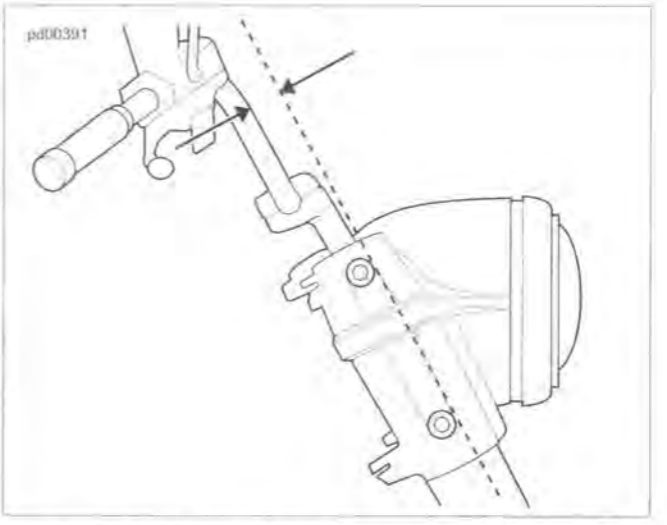

Figure 2-122. Handlebar Adjustment: FLD, FLD103

LEFT HAND GRIP

Removal

Slice hand grip open with a sharp knife. Peel hand grip open to remove.

Installation

1. Rough left grip end of handlebar with emery cloth.
2. Clean grip end with acetone.
3. Apply LOCTITE 770 PRISM PRIMER to inside of a **new** hand grip. Remove any excess primer with a clean cloth. Wait two minutes for the primer to set.
4. Apply LOCTITE 411 PRISM INSTANT ADHESIVE to inside of **new** hand grip.

NOTE

LOCTITE 411 PRISM INSTANT ADHESIVE sets in four minutes and cures in 24 hours.

5. Install **new** hand grip with a twisting motion.

REMOVAL

⚠WARNING

To prevent accidental vehicle start-up, which could cause death or serious injury, disconnect negative (-) battery cable before proceeding. (00048a)

1. Disconnect negative battery cable.
2. Remove instrument panel. See 7.21 INSTRUMENTS: FXDF AND FLD or 7.22 INSTRUMENTS: FXDB, FXDBC, FXDBP AND FXDWG.
3. Disconnect fuel gauge connector.
4. Remove fuel tank fasteners, vent, fuel supply fitting and slide fuel tank back. See 4.4 FUEL TANK.
5. Cover painted parts to protect finish.
6. Disconnect all hand control connectors from main harness.
7. Remove terminals from turn signal connector. See electrical diagnostic manual.
8. Remove front master cylinder assembly. See 2.10 FRONT BRAKE MASTER CYLINDER.
9. Remove clutch control assembly from handlebar. See 2.24 CLUTCH CONTROL.
10. Separate right handlebar control module housing. Remove throttle. See 7.35 RIGHT HANDLEBAR CONTROL MODULE.

NOTE

Original equipment left handlebar grip is glued in place. Remove grip by cutting off only if necessary.

11. If removing left handlebar grip, slice grip open with a sharp knife. Peel grip off handlebar.
12. Remove control module housings, turn signals and wiring from handlebars.

FXDB, FXDBC, FXDBP

1. See Figure 2-123. If removing handlebar risers (4, 5), loosen, but do not remove two lower handlebar riser fasteners (11).
2. Remove upper handlebar clamp fasteners (1).
3. Remove upper handlebar clamp (2).
4. Remove handlebar (3).
5. Remove two handlebar riser fasteners (11) and lockwashers (10).
6. Remove right and left handlebar risers (4, 5) from upper fork bracket (9). Replace bushings (7) if necessary.
7. See Figure 2-124 for mini-ape, pullback or fat drag bar.

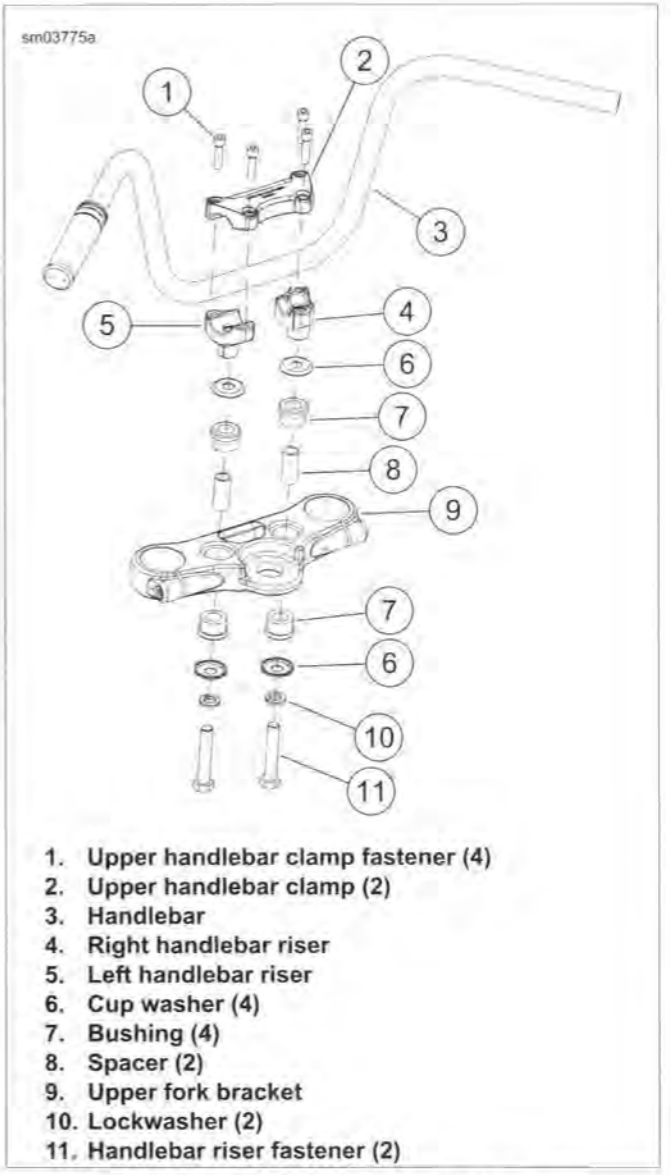

1. **Upper handlebar clamp fastener (4)**
2. **Upper handlebar clamp (2)**
3. **Handlebar**
4. **Right handlebar riser**
5. **Left handlebar riser**
6. **Cup washer (4)**
7. **Bushing (4)**
8. **Spacer (2)**
9. **Upper fork bracket**
10. **Lockwasher (2)**
11. **Handlebar riser fastener (2)**

Figure 2-123. Handlebar: FXDB/P

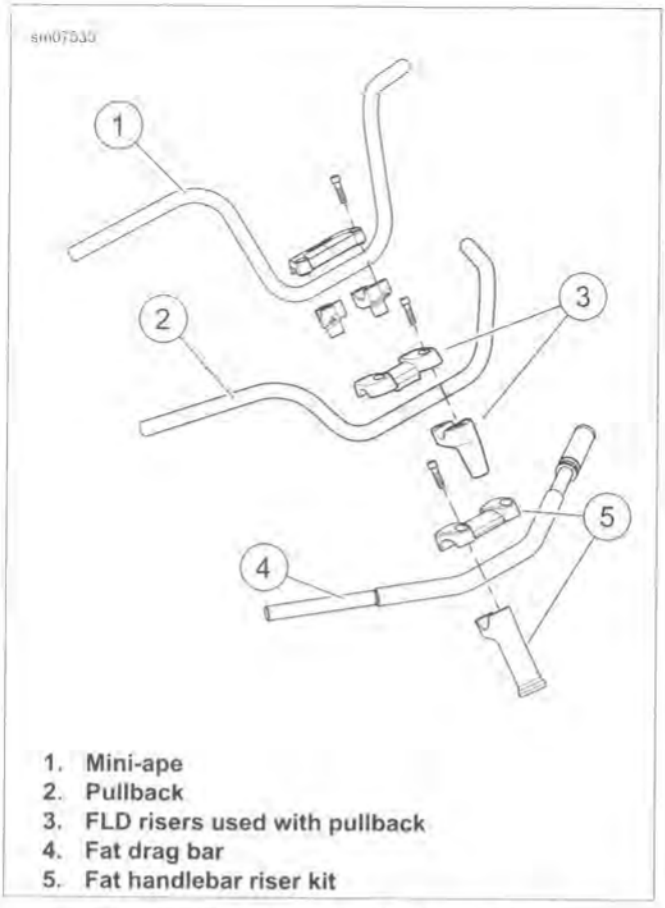

1. Mini-ape
2. Pullback
3. FLD risers used with pullback
4. Fat drag bar
5. Fat handlebar riser kit

Figure 2-124. Handlebar Options: FXDBP

FXDF and FXDWG

1. See Figure 2-125 or Figure 2-126. Remove upper handlebar clamp fasteners (1) and upper handlebar clamp (2). Remove handlebar (3).
2. If removing handlebar risers (4), remove two handlebar riser fasteners (9), lockwashers (8) and handlebar risers from upper fork bracket. Replace bushings (6) if necessary.

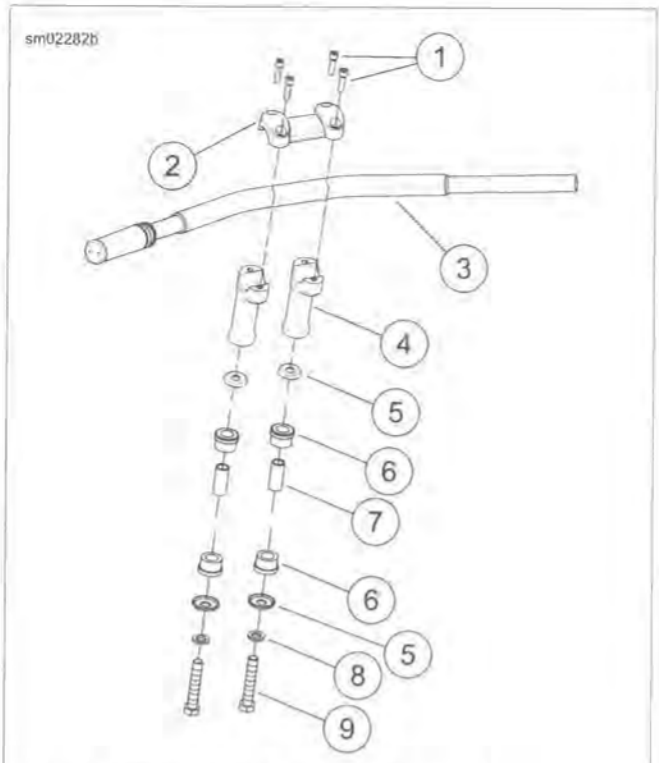

1. Upper handlebar clamp fasteners (4)
2. Upper handlebar clamp
3. Handlebar
4. Handlebar riser (2)
5. Cup washers (4)
6. Bushings (4)
7. Spacer (2)
8. Lockwasher (2)
9. Handlebar riser fastener (2)

Figure 2-125. Fat Drag Bar with Risers, FXDF

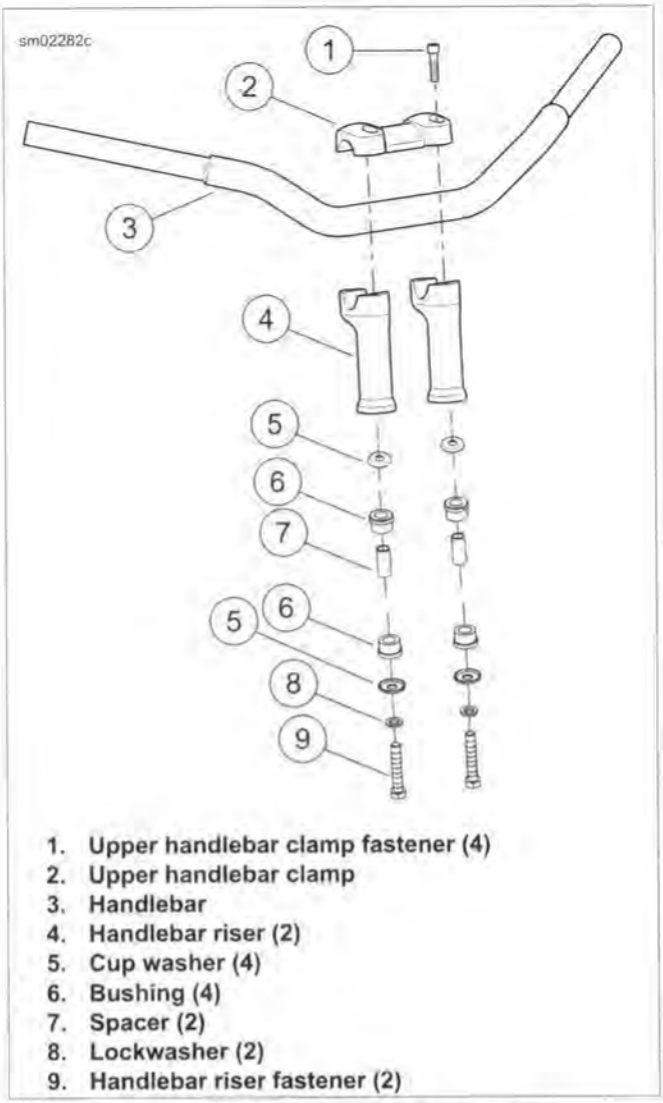

1. **Upper handlebar clamp fastener (4)**
2. **Upper handlebar clamp**
3. **Handlebar**
4. **Handlebar riser (2)**
5. **Cup washer (4)**
6. **Bushing (4)**
7. **Spacer (2)**
8. **Lockwasher (2)**
9. **Handlebar riser fastener (2)**

Figure 2-126. Handlebar: FXDWG

INSTALLATION

FASTENER	TORQUE VALUE	
Upper handlebar clamp fastener: FXDB, FXDBC, FXDBP, FXDF, FXDWG, final tightening	12-16 ft-lbs	16.3-21.7 Nm
Handlebar riser fastener: FXDF, FXDWG, final tightening	30-40 ft-lbs	40.7-54.2 Nm
Upper handlebar clamp fastener: FXDB, FXDBC, FXDBP, initial tightening	12-16 ft-lbs	16.3-21.7 Nm
Handlebar riser fastener: FXDB, FXDBC, FXDBP final tightening	30-40 ft-lbs	40.7-54.2 Nm
Upper handlebar clamp fastener: FXDB, FXDBC, FXDBP final tightening	12-16 ft-lbs	16.3-21.7 Nm
Negative battery fastener: all	60-70 **in-lbs**	6.8-7.9 Nm

NOTE

The turn signal wires enter the switch housings through a relief grommet in the housing. Support turn signals throughout this procedure to prevent pulling the grommet or the turn sign wires out of the housing.

1. Repair or replace switches, turn signal switches, wires and grommets as necessary.

NOTE

For handlebar switch repair procedures, see 7.33 HANDLEBAR CONTROL MODULES.

2. Wrap wire ends and open ends of conduit with electrical tape.
3. Cut a length of mechanics wire to use as a leader.
4. Lay mechanics wire along the wire harnesses so a few inches overlap. Secure using electrical tape.

⚠WARNING

Grommets in each of the wiring holes in the handlebar must remain in position after routing the wiring through the handlebar. Operation without the grommets in place can damage wires, causing a short circuit which could result in death or serious injury. (00416d)

5. If necessary, replace grommets on handlebar wire openings.
6. Lubricate wire conduits with glass cleaner or isopropyl alcohol.
7. See Figure 2-128. Install the wire leaders through the handlebar grommets and to the center hole.
8. Pull wire bundles through to the handlebar center hole.
9. Loosely install left and right control module housings.
10. Pull slack from wire harnesses and remove the tape and mechanics wire.

11. **FXDF models:** See Figure 2-125. Install handlebar.
    a. If handlebar risers (4) were removed, install lockwashers (8) on handlebar riser fasteners (9).
    b. If removed, install cup washers (5), bushings (6) and spacers (7) in upper fork bracket.
    c. Slide handlebar riser fasteners (9) through upper fork bracket.
    d. Loosely install handlebar risers (4) to upper fork bracket using handlebar riser fasteners.
    e. Place handlebar (3) on handlebar risers. Install upper handlebar clamp (2). Install but do not tighten clamp fasteners (1).
12. **FXDB, FXDBC, FXDBP models:** See Figure 2-123. Place handlebar (3) on risers. Install upper handlebar clamp (2). Install but do not tighten upper handlebar clamp fasteners (1).
13. Connect left and right hand control connectors [22, 24].
14. Connect turn signal connector [31].

NOTE

When clutch control is installed on handlebar, route cable in front of the handlebar for all models except FXDB, FXDBC and FXDBP. Clutch cables on FXDB, FXDBC and FXDBP models are routed behind the handlebar unless a different handlebar is being used.

15. Install clutch control and front master cylinder. Align housings and tighten fasteners. See 2.24 CLUTCH CONTROL and 2.10 FRONT BRAKE MASTER CYLINDER.
16. Install fuel tank. Connect vent hose and fuel supply fitting. See 4.4 FUEL TANK.
17. Connect fuel gauge connector [117].
18. Install instrument console. See 7.21 INSTRUMENTS: FXDF AND FLD or 7.22 INSTRUMENTS: FXDB, FXDBC, FXDBP AND FXDWG.
19. Using knurled areas of handlebar as a guide, center handlebars between handlebar risers.

NOTE

On some models, upper handlebar clamp hides knurled areas of handlebar when handlebar is centered properly.

20. See Figure 2-127. Lay a straightedge against the front of the upper and lower fork brackets. Rotate the handlebar to 3.5 in (89 mm).

NOTE

***FXDF models:** Verify gaps between upper clamp and lower risers are equal front and rear.*

21. **FXDF models:** see Figure 2-125. Tighten upper handlebar clamp:
    a. Tighten front and rear upper handlebar clamp fasteners (1) to 12-16 ft-lbs (16.3-21.7 Nm).
    b. Remove one handlebar riser fastener (9). Apply LOCTITE 271 HIGH STRENGTH THREADLOCKER (red) to fastener threads.
    c. Install fastener. Tighten to 30-40 ft-lbs (40.7-54.2 Nm). Repeat for other fastener.
22. **FXDB, FXDBC, FXDBP models:** see Figure 2-123. Tighten upper handlebar clamp:
    a. Tighten two front upper handlebar clamp fasteners (1) until cast-in spacers contact risers.
    b. Tighten two rear upper handlebar clamp fasteners (1) to 12-16 ft-lbs (16.3-21.7 Nm).
    c. Remove one handlebar riser fastener (11). Apply LOCTITE 271 HIGH STRENGTH THREADLOCKER (red) to fastener threads.
    d. Install fastener. Tighten to 30-40 ft-lbs (40.7-54.2 Nm). Repeat for other fastener.
    e. Tighten two front upper handlebar clamp fasteners (1) to 12-16 ft-lbs (16.3-21.7 Nm).



Figure 2-127. Handlebar Adjustment Measurement: FXDB, FXDBC and FXDBP

23. Connect negative battery cable. Tighten to 60-70 **in-lbs** (6.8-7.9 Nm).
24. Test front brake lever for pressure and operation.
25. Test throttle for correct operation. Adjust as required. See 1.12 THROTTLE CABLES.

⚠WARNING

Be sure that all lights and switches operate properly before operating motorcycle. Low visibility of rider can result in death or serious injury. (00316a)

26. Turn ignition switch ON. Test switches for proper operation.
27. Operate brake lever to test stop lamp.



Figure 2-128. Wire Leader in Handlebar (Handlebar Removed from Motorcycle): Typical

REMOVAL

⚠WARNING

To prevent accidental vehicle start-up, which could cause death or serious injury, remove main fuse before proceeding. (00251b)

NOTE

Handlebar bushings are located in the headlamp visor. If handlebar bushing replacement is necessary, see 7.12 HEADLAMP.

1. Remove main fuse.
2. Remove right side steering head plug.
3. Cover painted parts to protect finish.
4. Disconnect all left and right side hand control connectors from connectors on main harness.
5. Pull harnesses through headlamp bracket.
6. Remove front master cylinder assembly. See 2.10 FRONT BRAKE MASTER CYLINDER.
7. Remove clutch control assembly from handlebar. See 2.24 CLUTCH CONTROL.
8. Separate right handlebar control module housing. Remove throttle. See 7.35 RIGHT HANDLEBAR CONTROL MODULE.

NOTE

Original equipment left handlebar grip is glued in place. Remove grip only if necessary. Instructions are given in next step.

9. If removing left handlebar grip, slice grip open with a sharp knife. Peel grip off handlebar.
10. Remove control module housings, turn signals and wiring from handlebars.
11. See Figure 2-129. Remove upper handlebar clamp fasteners (1).
12. Remove upper handlebar clamp (2).
13. Remove handlebar (3).

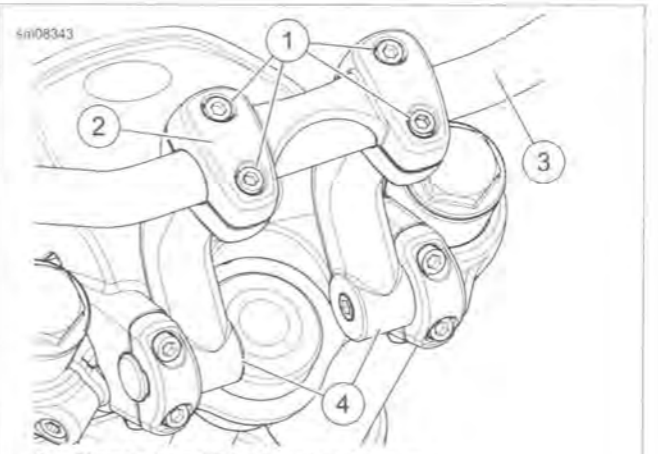

1. **Upper handlebar clamp screws**
2. **Upper handlebar clamp**
3. **Handlebar**
4. **Risers**

Figure 2-129. Handlebar: FXDL

INSTALLATION

FASTENER	TORQUE VALUE	
Handlebar clamp fastener: FXDL	12-16 ft-lbs	16.3-21.7 Nm

NOTE

The turn signal wires enter the switch housings through a relief grommet in the housing. Support turn signals throughout this procedure to prevent pulling the grommet or the turn sign wires out of the housing.

1. Repair or replace switches, turn signal switches, wires and grommets as necessary.

NOTE

For handlebar switch repair procedures, see 7.33 HANDLEBAR CONTROL MODULES.

2. Wrap wire ends and open ends of conduit with electrical tape.
3. Cut a length of mechanics wire to use as a leader.
4. Lay mechanics wire along the wire harnesses so a few inches overlap. Secure using electrical tape.
5. Lubricate parts with glass cleaner or isopropyl alcohol.
6. See Figure 2-130. Install the wire leaders through the handlebar grommets and to the center hole.
7. Pull wire bundles through to the handlebar center hole.
8. Loosely install left and right control module housings.
9. Pull slack from wire harnesses and remove the tape and mechanics wire.
10. See Figure 2-129. Place handlebar (3) on handlebar risers (4). Install upper handlebar clamp (2). Install but do not tighten upper clamp fasteners (1).
11. Connect left and right side control connectors [22, 24].

12. Connect turn signal connector [31].

NOTE

When clutch control is installed on handlebars, route cable in front of the handlebars.

13. Install clutch control and front master cylinder. Align housings and tighten fasteners. See 2.24 CLUTCH CONTROL and 2.10 FRONT BRAKE MASTER CYLINDER.
14. Using knurled areas of handlebar as a guide, center handlebars between handlebar risers.
15. Snug handlebar clamp fasteners.

NOTE

When adjusted according to this procedure, the handlebar height above seat does not exceed 15 in (38.1 cm). Handlebar adjustment must adhere to local regulations.

16. Without raising vehicle height, level vehicle by using lift or other suitable method.
17. See Figure 2-132. Place a piece of tape (1) on hand grip.
18. Mark center of hand grip (2).
19. Measure center of hand grips to floor to verify that handlebars are level.
20. If measurements are the same, adjust hand grips to a maximum of 42 in (106 cm).
21. If measurements are not the same, add both sides and divide by two to get handlebar height average. Adjust handlebar grips to a maximum of 42 in (106 cm).
22. See Figure 2-129. Tighten upper handlebar clamp:
    a. Verify gaps between upper clamp and lower risers are equal front and rear.
    b. See Figure 2-131. Tighten front and rear clamp fasteners in sequence shown to 12-16 ft-lbs (16.3-21.7 Nm).
23. Install main fuse.
24. Test front brake lever for pressure and operation.
25. Test throttle for correct operation. Adjust as required. See 1.12 THROTTLE CABLES.

⚠WARNING

Be sure that all lights and switches operate properly before operating motorcycle. Low visibility of rider can result in death or serious injury. (00316a)

26. Turn ignition switch ON. Test switches for proper operation.
27. Operate brake lever to test stop lamp.



Figure 2-130. Wire Leader in Handlebar (Handlebar Removed from Motorcycle): Typical

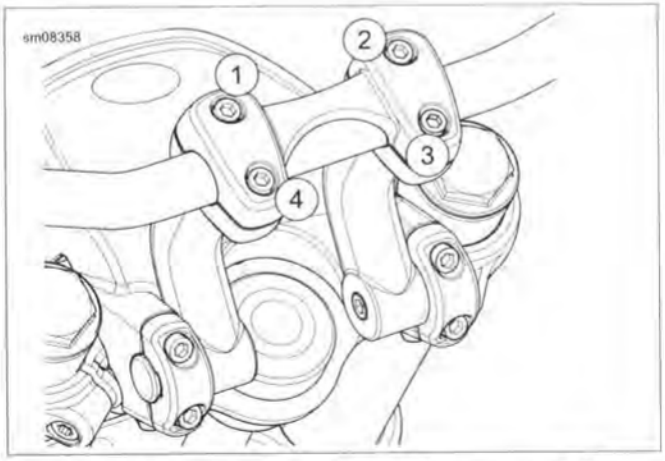

Figure 2-131. Handlebar Torque Sequence: FXDL

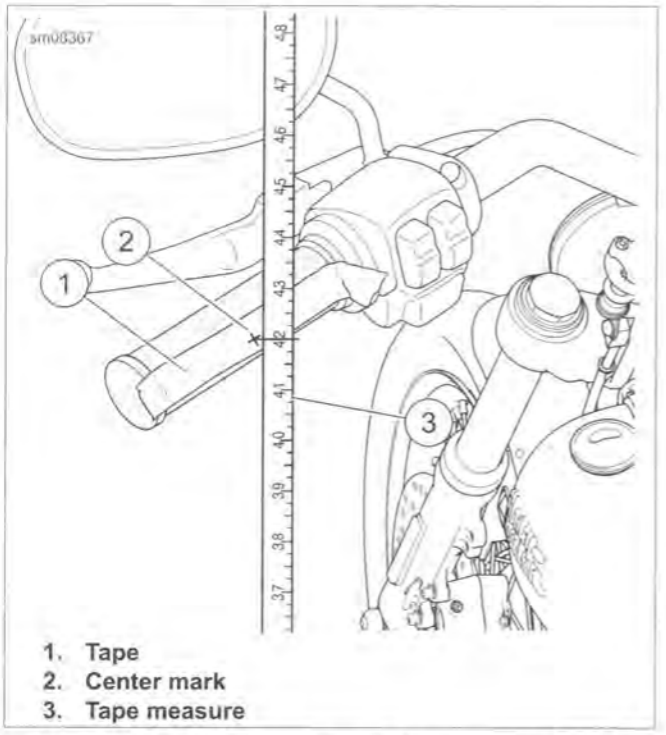

1. Tape
2. Center mark
3. Tape measure

Figure 2-132. Handlebar Height Measurement: FXDL

HANDLEBAR AND RISER ADJUSTMENT

FASTENER	TORQUE VALUE	
Handlebar riser clamp screws	12-16 ft-lbs	16.3-21.7 Nm

1. Cover painted parts to protect finish.
2. See Figure 2-133. Loosen four handlebar riser clamp screws (1).
3. Rotate risers (3) to desired position.

NOTE

Maintain equal gap between upper and lower half of clamps (2).

4. See Figure 2-134. Tighten screws in sequence shown to 12-16 ft-lbs (16.3-21.7 Nm).
5. Adjust handlebars. See 2.27 HANDLEBAR: FXDL, Installation.

NOTICE

Control wiring is routed inside handlebar and may be pinched or cut if controls are rotated too far. Electrical damage to control wiring can result. (00571b)

6. Adjust hand levers. See steps under 7.34 LEFT HANDLEBAR CONTROL MODULE, Installation and 7.35 RIGHT HANDLEBAR CONTROL MODULE, Installation.
7. Adjust turn signals and mirrors. See steps under 7.14 TURN SIGNALS, Front Lamp Housing Replacement: All But FLD
8. Turn handlebars to left lock and right lock. Check clearance.

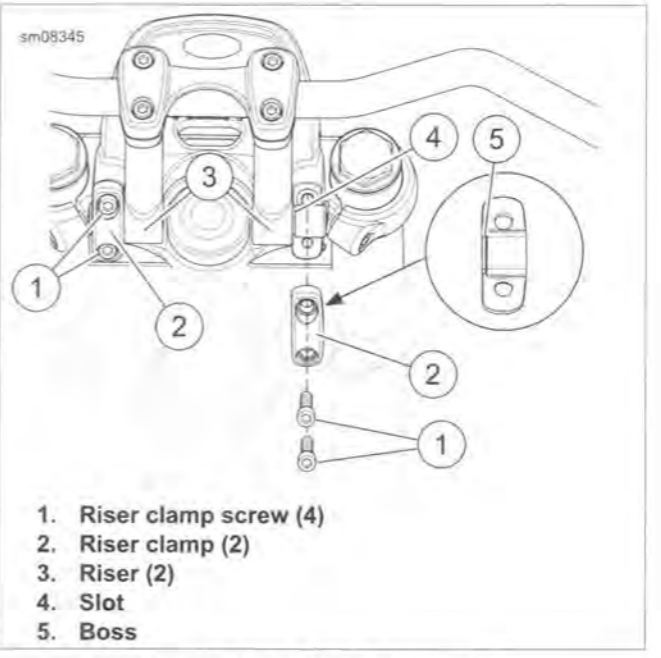

1. Riser clamp screw (4)
2. Riser clamp (2)
3. Riser (2)
4. Slot
5. Boss

Figure 2-133. Riser Assembly

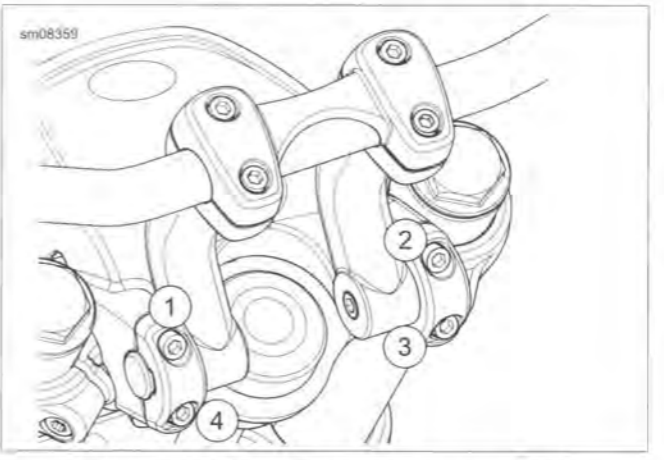

Figure 2-134. Riser Torque Sequence: FXDL

REMOVAL

1. See Figure 2-135 or Figure 2-136. Remove both screws (3) and nuts (2) on each side.
2. Carefully remove fender without scratching painted surfaces.

INSTALLATION

FASTENER	TORQUE VALUE	
Front fender nuts: all	15-21 ft-lbs	20.3-28.5 Nm

1. See Figure 2-135 or Figure 2-136. Carefully position fender and align mounting holes.
2. Verify that the fender mounting brackets are resting against the machined bosses of the forks.
3. Install screws (3) through fender mounting holes in fork legs.
4. Install nuts (2) onto screws. Tighten to 15-21 ft-lbs (20.3-28.5 Nm).

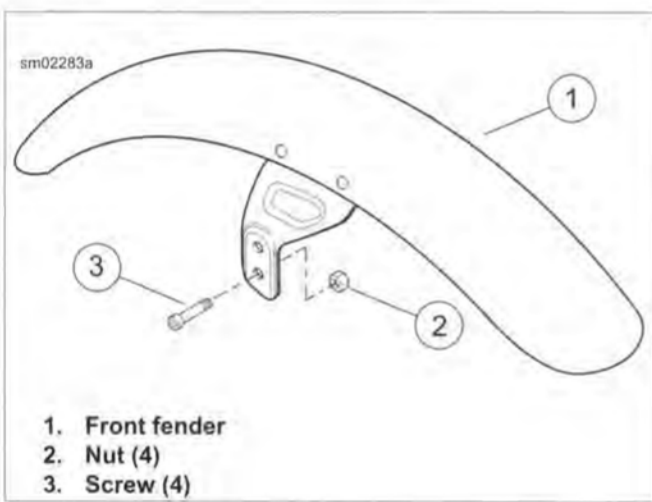

1. **Front fender**
2. **Nut (4)**
3. **Screw (4)**

Figure 2-135. Front Fender: All But FLD

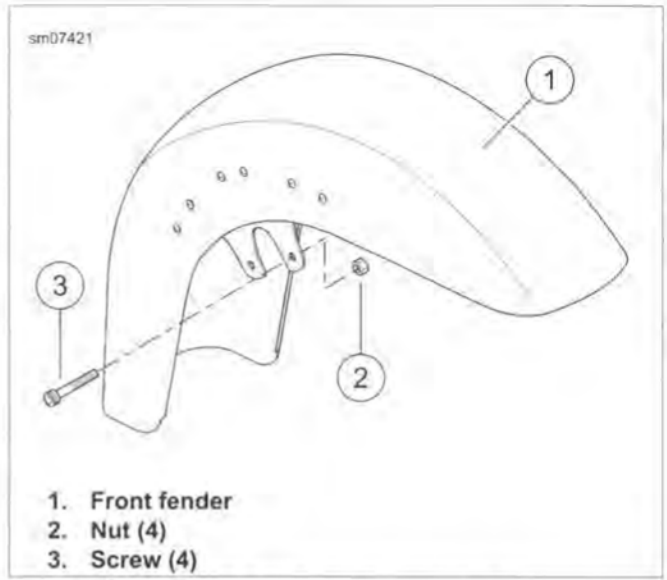

1. **Front fender**
2. **Nut (4)**
3. **Screw (4)**

Figure 2-136. Front Fender: FLD

GENERAL

This topic is split by vehicle type. However, the following steps are common to all models.

Removal

1. Remove seat.

⚠WARNING

To prevent accidental vehicle start-up, which could cause death or serious injury, disconnect negative (-) battery cable before proceeding. (00048a)

2. Disconnect negative battery cable.
3. Detach rear electrical harness.
   a. Follow the tail lamp and rear turn signal wire harness to the connector under the seat.
   b. Separate the connector.
   c. If necessary, remove the wires and the attached socket terminals from the connector. See the electrical diagnostic manual and A.2 WIRING DIAGRAMS.
4. Cut cable strap securing harness to frame. Pull harness through fender opening.
5. Continue with the removal steps for your specific vehicle.

Tail Lamp/Turn Signal Harness Routing

NOTES

- *Conduit is not used to route wiring on FXDB, FXDBC, FXDBP and FXDF models. Wires are run between fender supports and fender through wire channel.*
- *Conduit replacement may require adhesive removal.* ***Do NOT use solvents or harsh chemicals to remove adhesive as damage to painted surfaces may occur.***

1. Thoroughly clean inside surface of fender with soap and water until it is free of dirt, oil, or other debris.

NOTE

For typical wiring harness/conduit placement, see Figure 2-138.

2. Dry the surface, then wipe the area where conduit will be placed with isopropyl alcohol. Allow to dry completely.
3. Slide tail lamp wiring harness through conduit and plug connectors into appropriate sockets. See the electrical diagnostic manual and A.2 WIRING DIAGRAMS.
4. See Figure 2-137. Remove protective strip covering adhesive on conduit and lightly position the conduit in place.

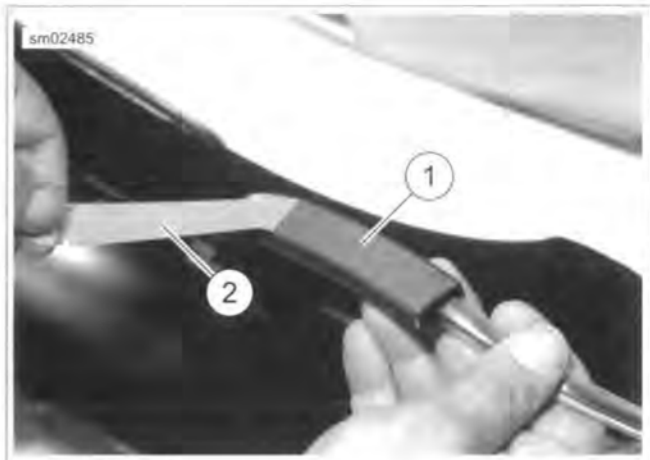

1. **Conduit**
2. **Protective strip**

Figure 2-137. Removing Protective Strip from Conduit

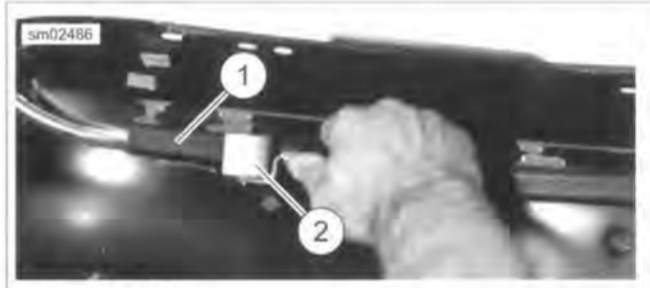

1. **Conduit**
2. **Wallpaper corner roller**

Figure 2-138. Purging Air Between Adhesive and Fender

5. See Figure 2-138. Using a wallpaper corner roller (available at most home improvement stores), roll along conduit to purge the air from between the adhesive and the fender.

NOTES

- *Do NOT rub the conduit to make it adhere to the fender. This method does not do an adequate job of purging the air from between the adhesive and fender.*
- *Once the adhesive is in place, full cure time is 72 hours. Do NOT pull or try to reposition the conduit during this period.*

6. Continue with the installation steps for your specific vehicle.

Installation

After attaching fender, perform the following steps on all models.

1. Route harness through opening in fender.
2. Install socket terminals back into connector. See the electrical diagnostic manual and A.2 WIRING DIAGRAMS.
3. Connect negative battery cable.

⚠WARNING

After installing seat, pull upward on seat to be sure it is locked in position. While riding, a loose seat can shift causing loss of control, which could result in death or serious injury. (00070b)

4. Install seat.

⚠WARNING

Be sure that all lights and switches operate properly before operating motorcycle. Low visibility of rider can result in death or serious injury. (00316a)

5. Test lights for proper operation.

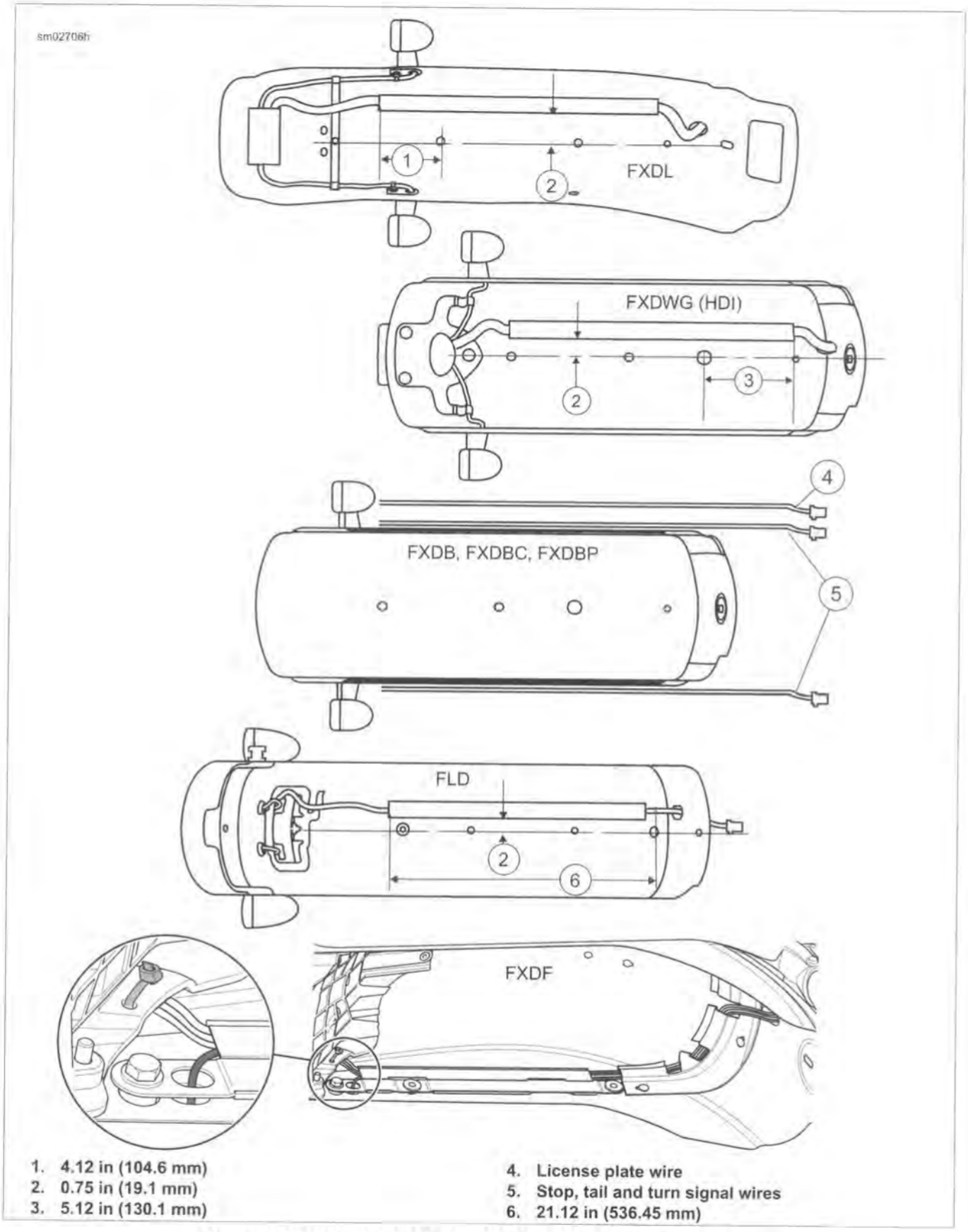

1. 4.12 in (104.6 mm)
2. 0.75 in (19.1 mm)
3. 5.12 in (130.1 mm)
4. License plate wire
5. Stop, tail and turn signal wires
6. 21.12 in (536.45 mm)

Figure 2-139. Rear Fender Harness Routing-Viewed from Underneath

FXDL

FASTENER	TORQUE VALUE	
Rear fender screw: FXDL	12-18 ft-lbs	16.3-24.4 Nm

Removal

1. Remove rear turn signal lamps. See 7.14 TURN SIGNALS.
2. See Figure 2-140. Remove screws (1) and spacers (6) that hold fender in place and carefully remove fender and covers (3).

Installation

1. Before installing fender, install tail lamp/turn signal harness and conduit to underside of fender. See Tail Lamp/Turn Signal Harness Routing instructions under 2.29 REAR FENDER, General.
2. See Figure 2-140. Apply LOCTITE 243 MEDIUM STRENGTH THREADLOCKER AND SEALANT (blue) to the threads of screws (1). Place fender and covers (3) into position. Place spacers (6) into position and tighten screws (1) to 12-18 ft-lbs (16.3-24.4 Nm).
3. Install rear turn signals. See 7.14 TURN SIGNALS.
4. Finish with installation instructions under 2.29 REAR FENDER, General.

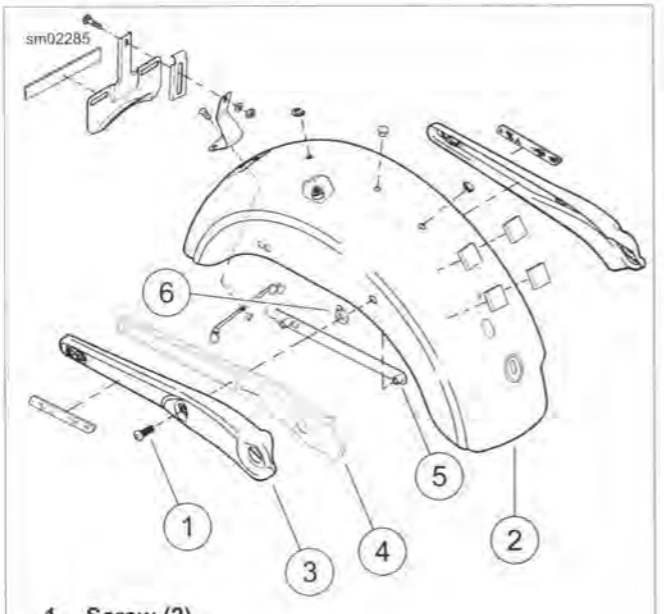

1. **Screw (2)**
2. **Fender**
3. **Covers (2)**
4. **Fender support**
5. **Mounting bracket (inside fender)**
6. **Spacer (2)**

Figure 2-140. Rear Fender: FXDL

FXDB, FXDBC, FXDBP

FASTENER	TORQUE VALUE	
Rear fender screw: FXDB, FXDBC, FXDBP	12-18 ft-lbs	16.3-24.4 Nm

Removal

1. Remove rear turn signal lamps. See 7.14 TURN SIGNALS.
2. See Figure 2-141. Remove screws (1, 11) and spacers (9) that hold fender in place and carefully remove fender from supports.

Installation

1. Before installing fender, install tail lamp/turn signal harness and conduit to underside of fender. See Tail Lamp/Turn Signal Harness Routing instructions under 2.29 REAR FENDER, General.
2. See Figure 2-141. Apply LOCTITE 243 MEDIUM STRENGTH THREADLOCKER AND SEALANT (blue) to the threads of bolts (1) and screws (11).
3. Place fender and mounting bracket (3) into position.
4. Place spacers (9) into position and tighten screws (11, 1) to 12-18 ft-lbs (16.3-24.4 Nm).
5. Install rear turn signals. See 7.14 TURN SIGNALS.
6. Finish with installation instructions under 2.29 REAR FENDER, General.

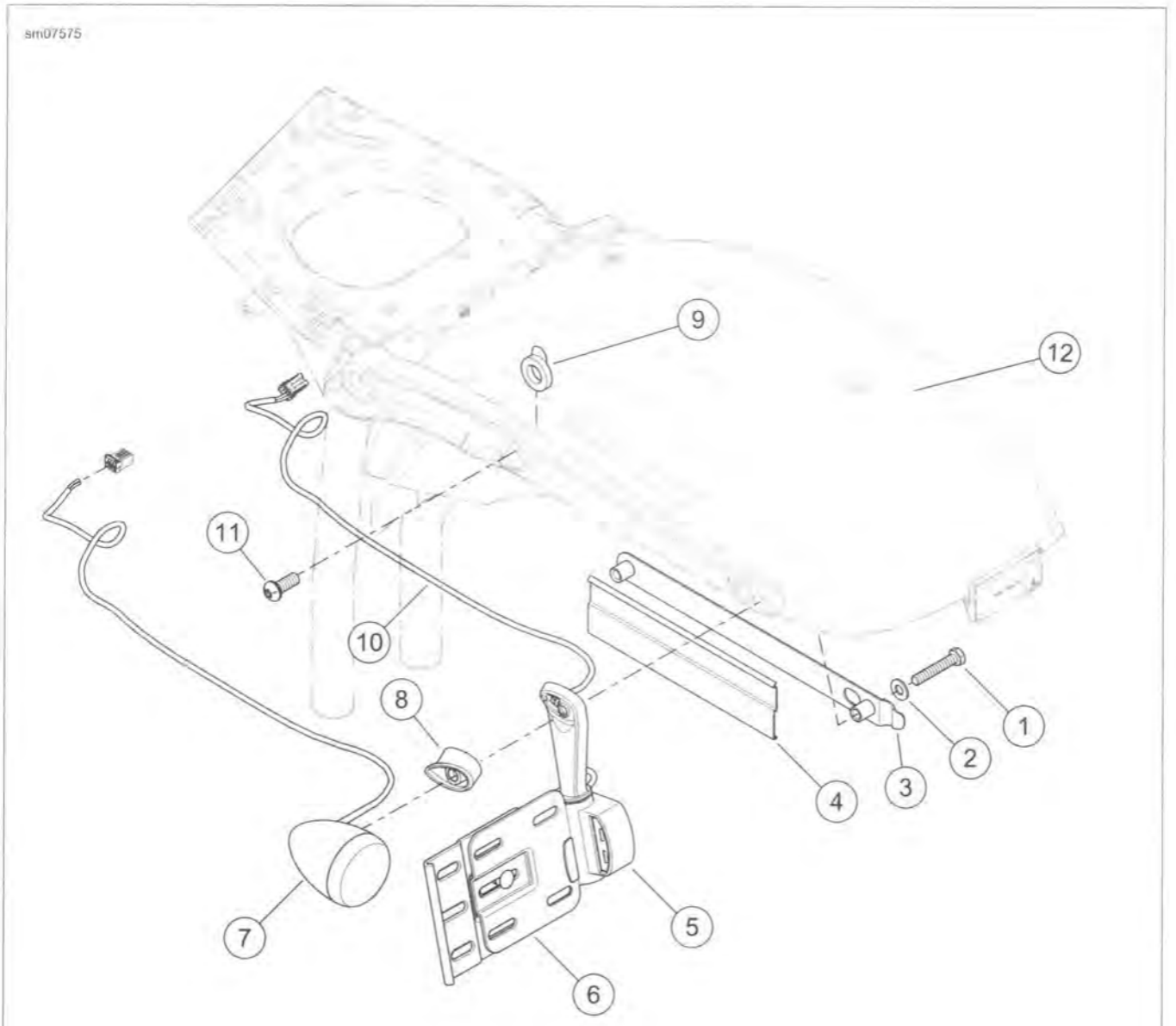

1. **Bolt (2)**
2. **Washer (2)**
3. **Rear fender mounting bracket (2)**
4. **Wire channel (2)**
5. **License plate lamp, illuminator**
6. **License plate bracket assembly with lamp**
7. **Rear directional lamp**
8. **Left rear directional lamp standoff**
9. **Spacers (2)**
10. **Rear lighting harness**
11. **Screw (2)**
12. **Rear fender**

Figure 2-141. FXDB Rear Fender with Side Mount License Bracket and Lamp (Domestic and California)

FXDWG

FASTENER	TORQUE VALUE	
Rear fender screw: FXDWG	12-18 ft-lbs	16.3-24.4 Nm
Side mount license plate bracket screws: FXDWG	84-180 **in-lbs**	9.5-20.3 Nm
Rear mount license plate bracket screws: FXDWG	30-40 **in-lbs**	3.4-4.5 Nm

Removal

1. Remove rear turn signal lamps. See 7.14 TURN SIGNALS.
2. To ease installation, remove rear shock absorber lower bolts. See 2.22 REAR SHOCK ABSORBERS.
3. See Figure 2-142. Remove screws (1) and spacers (6) that hold fender in place and carefully remove fender from fender supports (4).

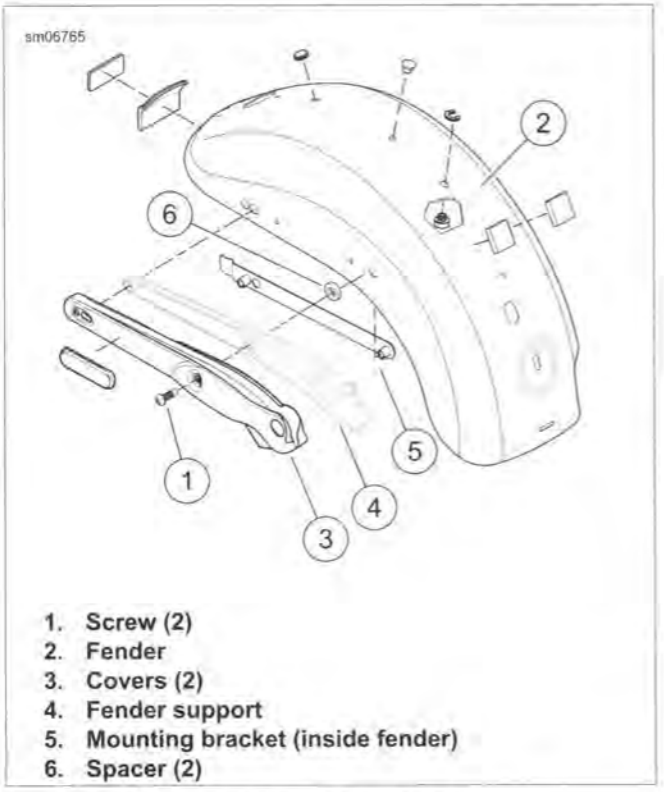

1. **Screw (2)**
2. **Fender**
3. **Covers (2)**
4. **Fender support**
5. **Mounting bracket (inside fender)**
6. **Spacer (2)**

Figure 2-142. Rear Fender: FXDWG

Sissy Bar

NOTE

Using clean cardboard strips helps prevent scratches to the fender when removing and installing the sissy bar.

1. See Figure 2-143. Install clean cardboard (1) between the fender and sissy bar on each side.
2. Remove push-in fasteners (2) that secure the sissy bar to the fender.
3. Carefully raise the sissy bar up away from the fender, making sure that the cardboard stays between the fender and sissy bar until it's removed.
4. Install sissy bar onto fender using cardboard (1) and secure to fender with **new** push-in fasteners.

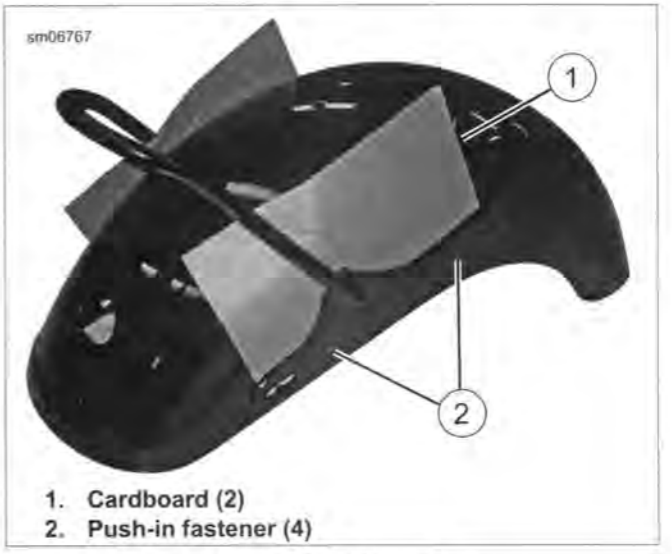

1. **Cardboard (2)**
2. **Push-in fastener (4)**

Figure 2-143. Sissy Bar

Installation

1. **FXDWG HDI models:** Install tail lamp/turn signal harness conduit, if removed, to underside of fender. See Tail Lamp/Turn Signal Harness Routing instructions under 2.29 REAR FENDER, General.
2. See Figure 2-142. Apply LOCTITE 243 MEDIUM STRENGTH THREADLOCKER AND SEALANT (blue) to the threads of screws (1). Place fender (2), covers (3), mounting bracket (5) and spacers (6) into position. Tighten screws (1) to 12-18 ft-lbs (16.3-24.4 Nm).
3. Install rear turn signals. See 7.14 TURN SIGNALS.
4. Make sure that wires are properly routed on inner side of fender and that no wires will come in contact with rear wheel.
   a. **FXDWG HDI models:** wires should be routed through wire conduit.
   b. **FXDWG U.S. models:** wires are routed along channels on both sides of fender and through a wire channel on front of fender.
5. If license plate bracket was removed, install bracket and tighten fasteners to:
   a. Side mount license plate bracket screws: 84-180 **in-lbs** (9.5-20.3 Nm).
   b. Rear mount license plate bracket screws: 30-40 **in-lbs** (3.4-4.5 Nm).
6. Install rear shock absorber lower bolts. See 2.22 REAR SHOCK ABSORBERS.
7. Finish with installation instructions under 2.29 REAR FENDER, General.

FLD

FASTENER	TORQUE VALUE	
Seat strap nut: FLD	60-90 **in-lbs**	6.8-10.2 Nm
Saddlebag lower mount spool: FLD	15-20 ft-lbs	20.3-27.1 Nm
Rear fender screw: FLD	30-37 ft-lbs	40.7-50.2 Nm

Removal

1. Remove seat.

⚠WARNING

To prevent accidental vehicle start-up, which could cause death or serious injury, remove main fuse before proceeding. (00251b)

2. Remove main fuse.
3. Remove saddlebags.

NOTE

See Figure 2-139. To verify proper installation, make note of fender wire routing and hardware locations before removal.

4. Locate rear lighting wiring harness connector [7] under seat and disconnect.

NOTE

See Figure 2-144. If disassembling fender, loosen screws (4) before removing screws (1).

5. Remove screws (1) along with spools (2, 13). Remove rear fender assembly.

Disassembly

1. Remove rear lighting. See 7.13 TAIL LAMP and 7.14 TURN SIGNALS, Rear Turn Signal Lamps and Bracket: FLD.
2. See Figure 2-144. Remove inner brackets (6).
3. Push push-in fasteners (9) in. Remove outer spacers (10).
4. Remove screws (4), spools (5) and doubler bracket (11).
5. Remove retention washer (8) and nut (7).
6. Remove harness and conduit if necessary. See 2.29 REAR FENDER, General.
7. Remove seat strap.

Assembly

1. Install seat strap. Tighten to 60-90 **in-lbs** (6.8-10.2 Nm).
2. Install harness and **new** conduit, if removed. See 2.29 REAR FENDER, General.
3. See Figure 2-144. Install nut (7) and retention washer (8).
4. Install doubler bracket (11) and spools (5). Apply LOCTITE 243 MEDIUM STRENGTH THREADLOCKER AND SEALANT (blue) to screws (4). Tighten to 15-20 ft-lbs (20.3-27.1 Nm).
5. Install outer spacers (10) and engage push-in fasteners (9) to hold spacer in place.
6. Hold inner brackets (6) in place. Install rear lighting. See 7.13 TAIL LAMP and 7.14 TURN SIGNALS, Rear Turn Signal Lamps and Bracket: FLD.

Installation

1. See Figure 2-144. Apply LOCTITE 243 MEDIUM STRENGTH THREADLOCKER AND SEALANT (blue) to threads of screws (1).

NOTE

Spacers (12) are adhered to outer spacers (10). Verify that they are in place when installing fender.

2. Secure fender with screws (1). Tighten to 30-37 ft-lbs (40.7-50.2 Nm).
3. Mate rear lighting connector [7].

⚠WARNING

After installing seat, pull upward on seat to be sure it is locked in position. While riding, a loose seat can shift causing loss of control, which could result in death or serious injury. (00070b)

4. Install seat.
5. Install main fuse.
6. Install saddlebags.

⚠WARNING

Be sure that all lights and switches operate properly before operating motorcycle. Low visibility of rider can result in death or serious injury. (00316a)

7. Verify lighting operation.

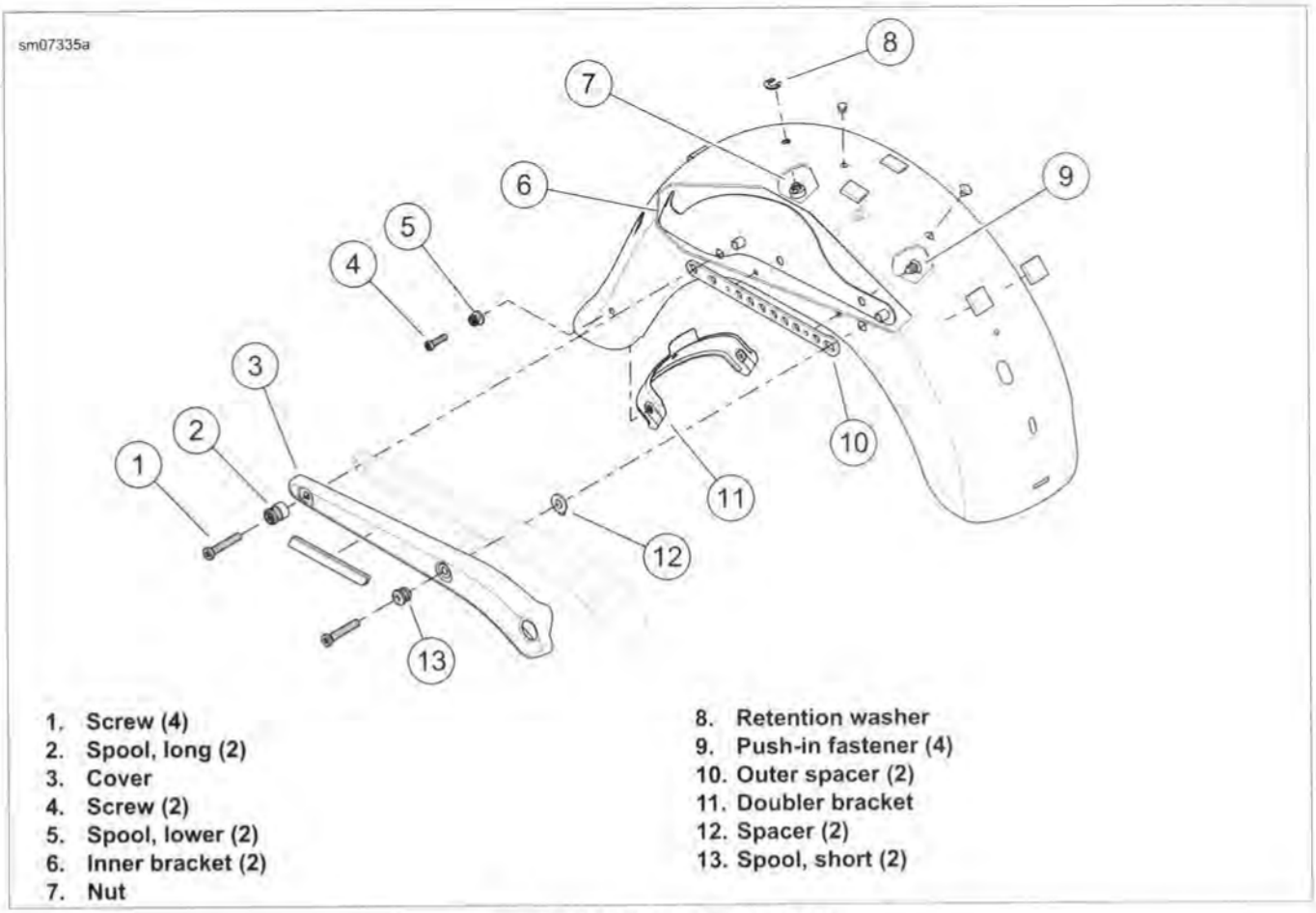

1. **Screw (4)**
2. **Spool, long (2)**
3. **Cover**
4. **Screw (2)**
5. **Spool, lower (2)**
6. **Inner bracket (2)**
7. **Nut**
8. **Retention washer**
9. **Push-in fastener (4)**
10. **Outer spacer (2)**
11. **Doubler bracket**
12. **Spacer (2)**
13. **Spool, short (2)**

Figure 2-144. Rear Fender: FLD

FXDF

FASTENER	TORQUE VALUE	
Rear fender screw: FXDF	12-18 ft-lbs	16.3-24.4 Nm

Removal

1. Remove rear turn signal lamps. See 7.14 TURN SIGNALS.

NOTE

See Figure 2-145. Note wire routing and orientation of wire channel (4) before removal.

2. See Figure 2-145. Remove wiring from wire channels.
3. Remove screws (1).
4. Remove covers (2), wire channels (4) and fender mounting brackets (5).
5. Remove fender (8).

Installation

NOTE

See Figure 2-145. Conduit is not used to route wiring on FXDF models. Wire is routed on both sides of fender through wire channels (4) and wire guide (6).

1. See Figure 2-145. Install wire channels (4) on fender mounting brackets (5).
2. Place fender (8) and fender mounting brackets into position.
3. Install spacers (12) over fender mounting brackets.
4. Apply LOCTITE 243 MEDIUM STRENGTH THREADLOCKER AND SEALANT (blue) to the threads of screws (1). Place covers (2) over fender supports (3). Tighten screws to 12-18 ft-lbs (16.3-24.4 Nm).
5. Install rear turn signals. See 7.14 TURN SIGNALS.
6. Remove lower shock absorber mounting screws. See 2.22 REAR SHOCK ABSORBERS. Lower wheel to allow for adequate space for wire routing.
7. Route tail lamp, license plate lamp and turn signal wiring through wire channels and wire guide.
8. Install lower shock absorber mounting screws. See 2.22 REAR SHOCK ABSORBERS.
9. Finish with installation instructions under 2.29 REAR FENDER, General.

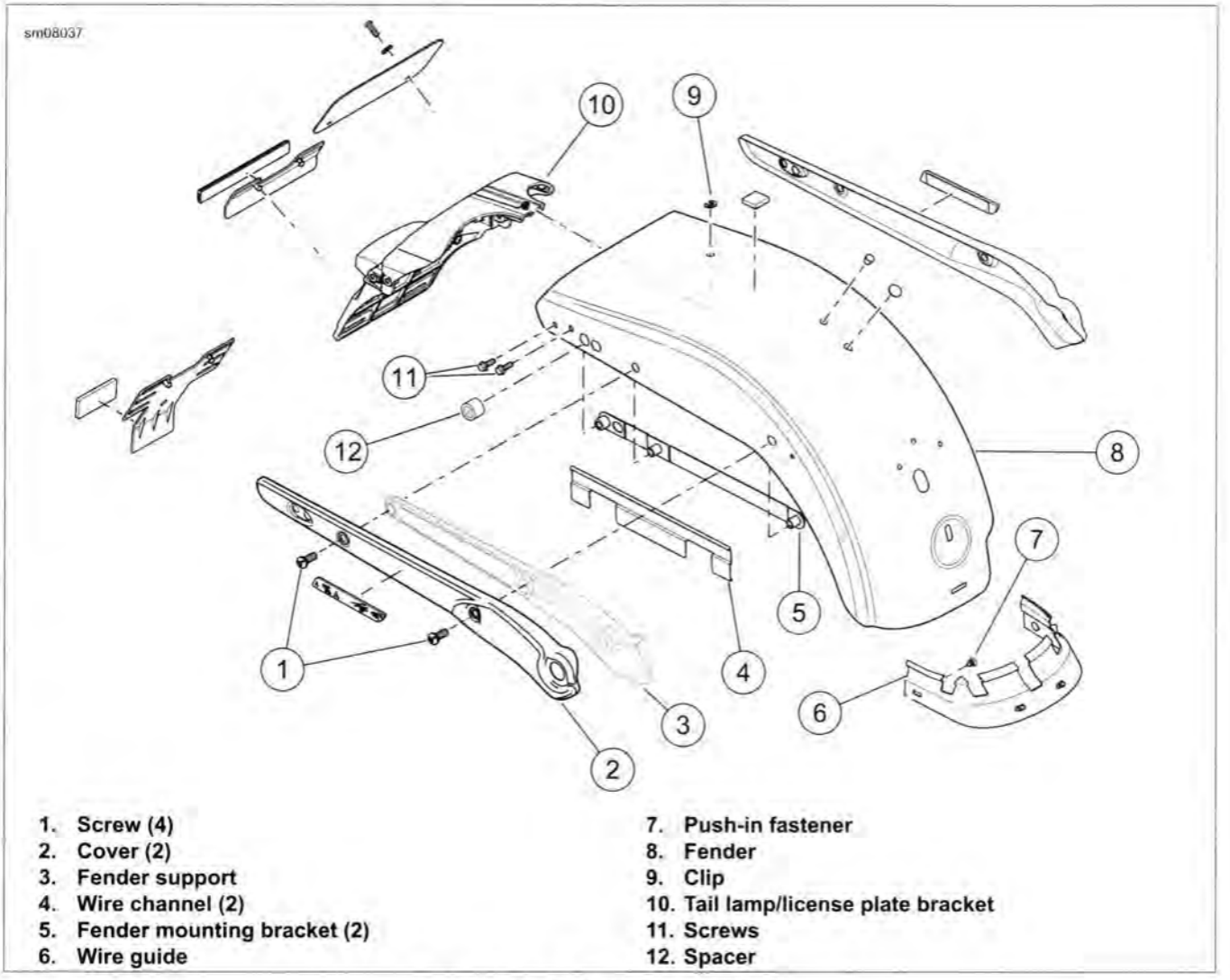

1. Screw (4)
2. Cover (2)
3. Fender support
4. Wire channel (2)
5. Fender mounting bracket (2)
6. Wire guide
7. Push-in fastener
8. Fender
9. Clip
10. Tail lamp/license plate bracket
11. Screws
12. Spacer

Figure 2-145. Rear Fender (FXDF)

REMOVAL

Seat and Seat Strap: All But FXDWG

NOTES

- *See Figure 2-146. There is a nylon retaining clip between the rear seat bracket and the fender. DO NOT lose this clip, substitute a clip of different material or install the seat without this clip. Any of these actions results in scratched fender paint. The nylon retaining clip secures the seat screw nut.*
- *There is a bracket at the front of the seat that slips under a U-shaped frame bracket.*
- *There is no need to remove the seat bracket from the seat pan.*

1. See Figure 2-146. Remove screw (1) from bracket (2). Nylon clip remains with fender assembly.
2. Slide seat to the rear and lift seat.
3. If equipped with seat strap, remove nut (16) and washer (15) and seat strap (11).

Seat and Seat Strap: FXDWG

NOTES

- *The front of the seat pillion is secured to a shoulder bolt located under the pillion.*
- *There is a bracket at the front of the seat that slips under a U-shaped frame bracket.*
- *There is no need to remove the seat bracket from the seat pan.*
- *See Figure 2-146. The seat strap (3) is secured to the fender by a shoulder bolt (6) and shoulder washer (7).*
- *Note the orientation of the shoulder washer (7) for installation.*

1. Remove screw (1) from pillion (8). Nylon clip remains with fender assembly.
2. Slide the passenger pillion forward slightly and lift away from the shoulder bolt.
3. Remove shoulder bolt (6), shoulder washer (7), and seat strap (3).
4. Lift rear of seat and slide seat to the rear.

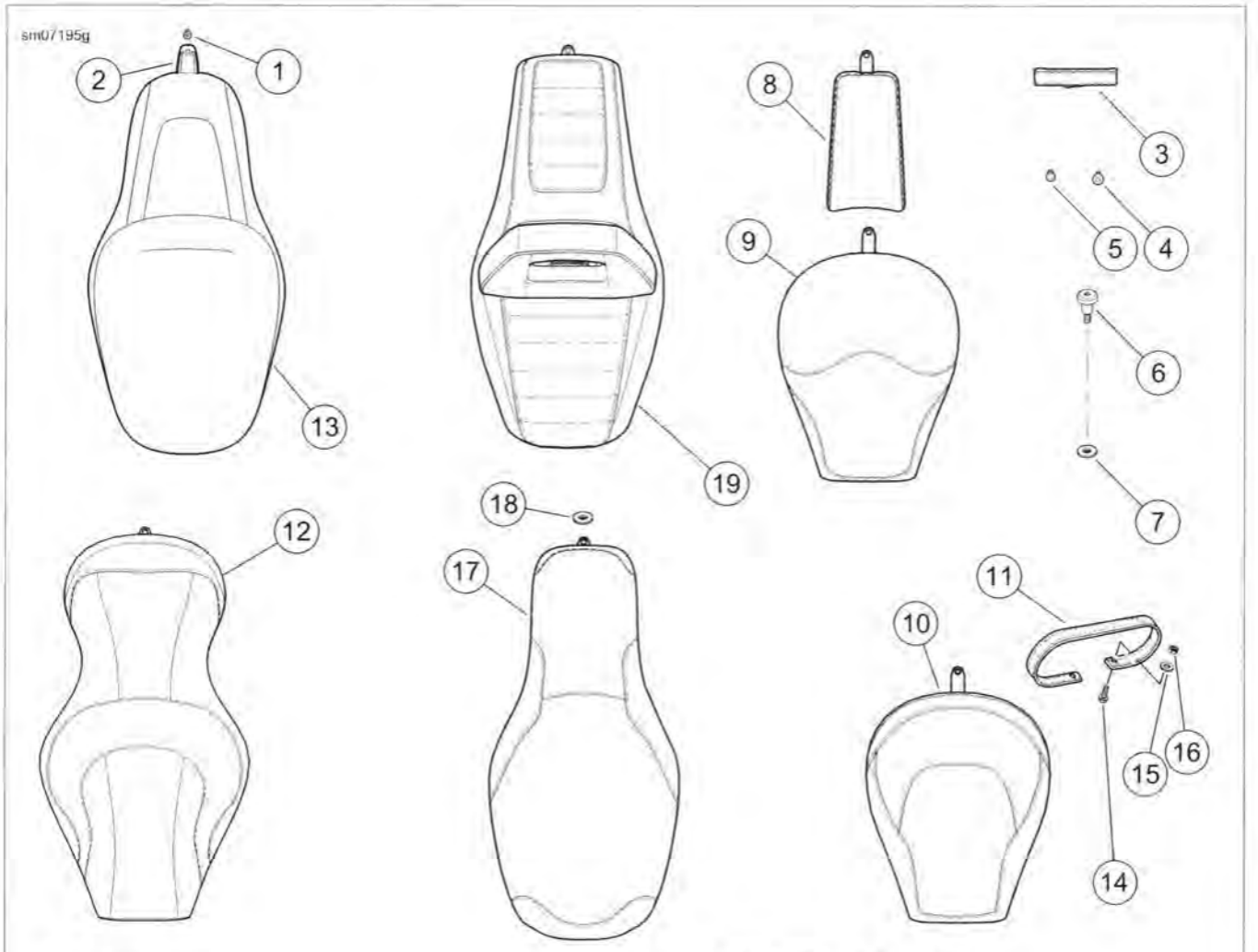

1. **Screw**
2. **Bracket**
3. **Seat strap (FXDWG)**
4. **Nut (FXDWG)**
5. **Washer, top hat (FXDWG)**
6. **Shoulder bolt (FXDWG)**
7. **Shoulder washer (FXDWG)**
8. **Passenger pillion (FXDWG)**
9. **Solo seat (FXDWG)**
10. **Solo seat (FXDB, FXDBC, FXDBP)**
11. **Seat strap (all but FXDWG)**
12. **Seat (FLD)**
13. **Seat (FXDF)**
14. **Screw**
15. **Washer**
16. **Nut**
17. **Seat (FXDBP 2-up, Badlander)**
18. **Seat washer (FXDBP)**
19. **Seat (FXDL)**

Figure 2-146. Seat

INSTALLATION

FASTENER	TORQUE VALUE	
Seat rear fastener: all	20-40 **in-lbs**	2.3-4.5 Nm
Seat strap nut: FXDWG	60-90 **in-lbs**	6.8-10.2 Nm
Seat shoulder bolt: FXDWG	80-90 **in-lbs**	9.0-10.2 Nm
Seat rear fastener: all	20-40 **in-lbs**	2.3-4.5 Nm

Seat and Seat Strap: All But FXDWG

1. **FXDBP model:** See Figure 2-146. Place washer (15) between fender and the seat with small diameter facing up.
2. Slide back of seat through seat strap loop.
3. Slide seat bracket, located under front of seat, into the U-shaped frame bracket.

⚠WARNING

After installing seat, pull upward on seat to be sure it is locked in position. While riding, a loose seat can shift causing loss of control, which could result in death or serious injury. (00070b)

4. Verify that nylon retaining clip is in position on fender. Install screw (1). Tighten to 20-40 **in-lbs** (2.3-4.5 Nm).

Seat and Seat Strap: FXDWG

1. **Seat strap:** See Figure 2-146. Install seat strap, if equipped. Tighten nut (4) to 60-90 **in-lbs** (6.8-10.2 Nm).

NOTE

When the shoulder washer (7) is installed properly, the shoulder fits into the hole in the seat bracket.

2. Install shoulder bolt (6).
   a. Insert shoulder bolt through both holes in seat strap.
   b. Place shoulder washer (7) onto shoulder bolt.
   c. Install shoulder bolt through the rear seat bracket and into the fender clip.
   d. Tighten shoulder bolt to 80-90 **in-lbs** (9.0-10.2 Nm).
3. Insert the pillion through the seat strap. Align the slot under the front of the pillion with the shoulder bolt.
4. Slide pillion backward until firmly secured by the shoulder bolt.

⚠WARNING

After installing seat, pull upward on seat to be sure it is locked in position. While riding, a loose seat can shift causing loss of control, which could result in death or serious injury. (00070b)

5. Verify that nylon retaining clip is in position on fender. Install screw (1). Tighten to 20-40 **in-lbs** (2.3-4.5 Nm).

LUMBAR PAD: FXDL

FASTENER	TORQUE VALUE	
Lumbar nameplate mounting screw: FXDL	48-60 **in-lbs**	5.4-6.8 Nm
Lumbar pad mounting screw: FXDL	48-60 **in-lbs**	5.4-6.8 Nm

Removal

NOTE

Loosely install lumbar pad screws into back of lumbar pad after removal.

1. See Figure 2-147. Remove seat (1).
2. Remove lumbar pad screws (6) and washers (5) from the lumbar pad (3).
3. Remove nameplate screws (2) from the nameplate (4).
4. Remove nameplate from lumbar pad.
5. Place nameplate on seat (1).
6. Install screws into nameplate. Tighten screws.

Installation

1. See Figure 2-147. Remove screws (2) from nameplate (4).
2. Place nameplate on lumbar pad (3).
3. Install screws in nameplate. Tighten to 48-60 **in-lbs** (5.4-6.8 Nm).
4. Insert lumbar pad on seat (1).
5. Install screws (6) and washers (5) to lumbar pad. Tighten to 48-60 **in-lbs** (5.4-6.8 Nm).
6. Install seat.

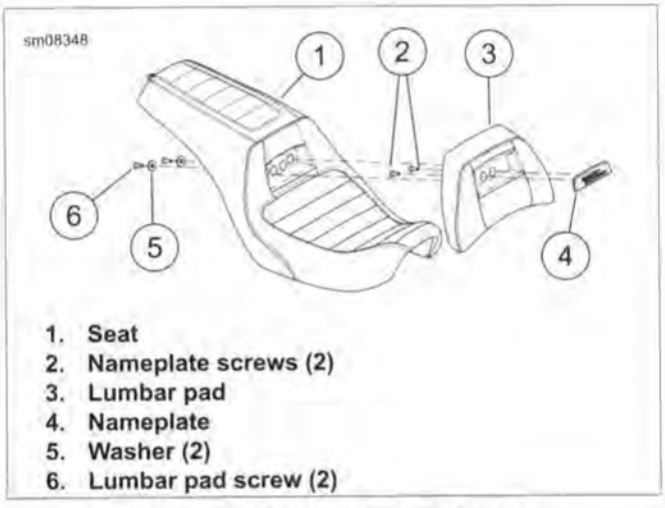

1. **Seat**
2. **Nameplate screws (2)**
3. **Lumbar pad**
4. **Nameplate**
5. **Washer (2)**
6. **Lumbar pad screw (2)**

Figure 2-147. Lumbar Pad: FXDL

RIDER FOOTBOARDS

FASTENER	TORQUE VALUE	
Rider footboard pivot bolt nut	60-80 **in-lbs**	6.8-9.0 Nm
Rider footboard bracket screws	32-37 ft-lbs	43-50 Nm
Shift rod fastener with acorn nut	96-144 **in-lbs**	10.8-16.2 Nm

Removal

NOTE

Both brake pedal and shifter levers are removed with the footboard brackets.

1. Disconnect brake rod from brake pedal.
2. Remove acorn nut and disconnect shift rod from shift lever.
3. See Figure 2-148. Remove footboard support mounting screws (6) from footboard supports.
4. Remove footboards and bracket assemblies.

Disassembly

NOTE

If only replacing the rubber pad, refer to step 1. Then see steps 3-4 under ASSEMBLY.

1. Tilt footboard upward. From bottom of footboard, use a large flat blade screwdriver to push the rubber anchors on pad up through holes in footboard.
2. See Figure 2-148. Remove flange locknuts (8) and shoulder bolts (7) from underside of footboard.
3. Remove footboard from brackets.

Assembly

1. Position footboard between brackets. Install shoulder bolts (7) so the flange locknuts (8) are on the inboard side.
2. Install flange locknuts onto shoulder bolts. Tighten to 60-80 **in-lbs** (6.8-9.0 Nm).
3. Moisten the rubber anchors on bottom of **new** pad with soapy water.
4. Position pad on footboard. From bottom of footboard, use pliers to pull rubber anchors through holes in footboard.

Installation

1. See Figure 2-148. Install footboard and bracket assembly using footboard support mounting screws (6).
2. Tighten screws to 32-37 ft-lbs (43-50 Nm).
3. Attach brake rod to brake pedal with a **new** pretzel clip for the cotter pin.
4. Attach shift levers to shift rod using acorn nut. Tighten to 96-144 **in-lbs** (10.8-16.2 Nm).

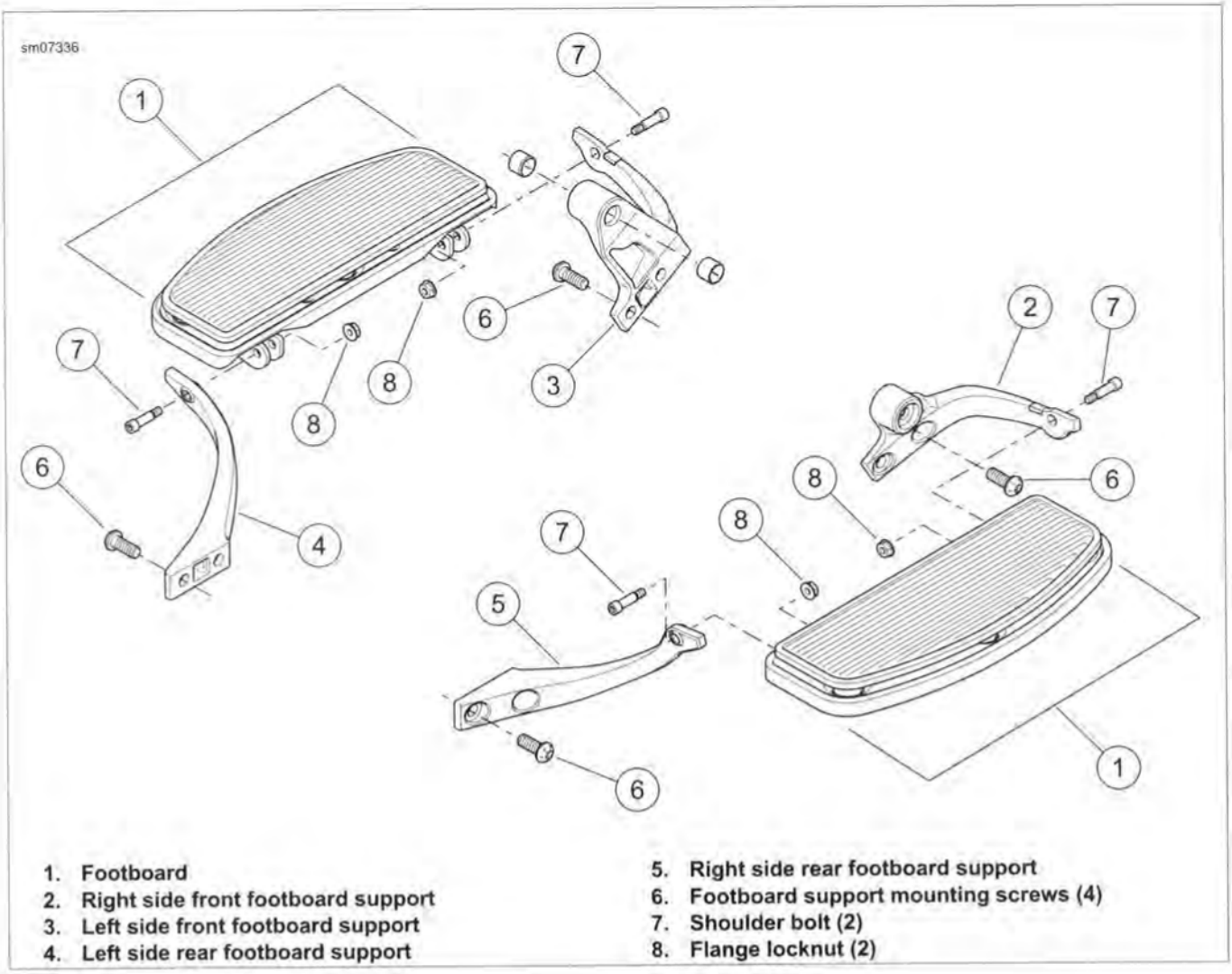

1. **Footboard**
2. **Right side front footboard support**
3. **Left side front footboard support**
4. **Left side rear footboard support**
5. **Right side rear footboard support**
6. **Footboard support mounting screws (4)**
7. **Shoulder bolt (2)**
8. **Flange locknut (2)**

Figure 2-148. Rider Footboards (Quantities shown are for each footboard)

RIDER FOOTRESTS: MID CONTROLS

FASTENER	TORQUE VALUE	
Footrest support mounting screws	30-40 ft-lbs	40.7-54.2 Nm
Footrest support mounting screws	30-40 ft-lbs	40.7-54.2 Nm
Footrest mounting screws and nuts	84-108 **in-lbs**	9.5-12.2 Nm

Removal

1. See Figure 2-149. Remove screw (2), nut and spring washer to remove rider footrests (1).
2. Remove mounting screws (5) and lockwashers (6) to remove left rider footrest support (3).
3. Remove clevis pin and circle cotter pin and disconnect brake rod from brake pedal.
4. Remove mounting screws (5) and lockwashers (6) to remove right rider footrest support (4) along with brake pedal.

Installation

1. See Figure 2-149. Install right rider footrest support (4) and brake pedal with mounting screws (5) and lockwashers (6). Tighten to 30-40 ft-lbs (40.7-54.2 Nm).
2. Install clevis pin and **new** circle cotter pin and connect brake rod to brake pedal.
3. Install left rider footrest support (3) with mounting screws (5) and lockwashers (6). Tighten to 30-40 ft-lbs (40.7-54.2 Nm).
4. Install each rider footrest (1) with screw (2), nut and spring washer. Tighten to 84-108 **in-lbs** (9.5-12.2 Nm).

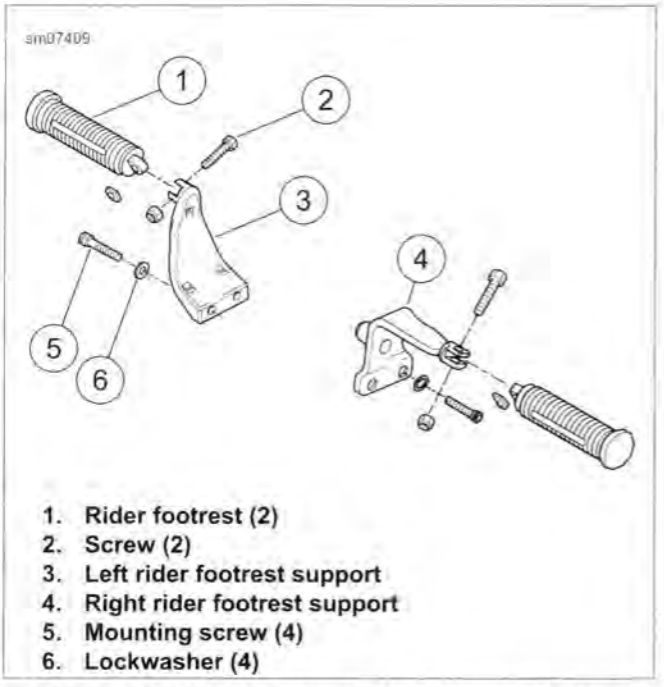

1. **Rider footrest (2)**
2. **Screw (2)**
3. **Left rider footrest support**
4. **Right rider footrest support**
5. **Mounting screw (4)**
6. **Lockwasher (4)**

Figure 2-149. Rider Footrests: Mid Controls (Typical)

RIDER FOOTRESTS: FORWARD CONTROLS

FASTENER	TORQUE VALUE	
Footrest support mounting screws	32-37 ft-lbs	43.4-50.2 Nm
Footrest support mounting screws	32-37 ft-lbs	43.4-50.2 Nm
Footrest mounting screws and nuts	84-108 **in-lbs**	9.5-12.2 Nm

Removal

1. See Figure 2-150. Remove rider footrest screw (2), nut and spring washer to remove rider footrests (1).
2. Disconnect shift rod from shift lever.
3. Remove mounting screws (8) to remove left rider footrest support (3).
4. Remove clevis pin and cotter pin. Disconnect brake rod from brake pedal and remove footrest mounting clevis screw (7), brake pedal, footrest mounting clevis (6) and pivot shaft (5).
5. Remove mounting screws (8) to remove right rider footrest support (4).

Installation

1. See Figure 2-150. Install mounting screws (8) to install right rider footrest support (4). Tighten to 32-37 ft-lbs (43.4-50.2 Nm).
2. Install footrest mounting clevis screw (7), brake pedal, footrest mounting clevis (6) and pivot shaft (5). Connect brake rod to brake pedal using a **new** cotter pin.
3. Install mounting screws (8) to install left rider footrest support (3). Tighten to 32-37 ft-lbs (43.4-50.2 Nm).
4. Connect shift rod to shift lever.
5. Install footrest screw (2), nut, spring washer and rider footrest (1). Tighten to 84-108 **in-lbs** (9.5-12.2 Nm).

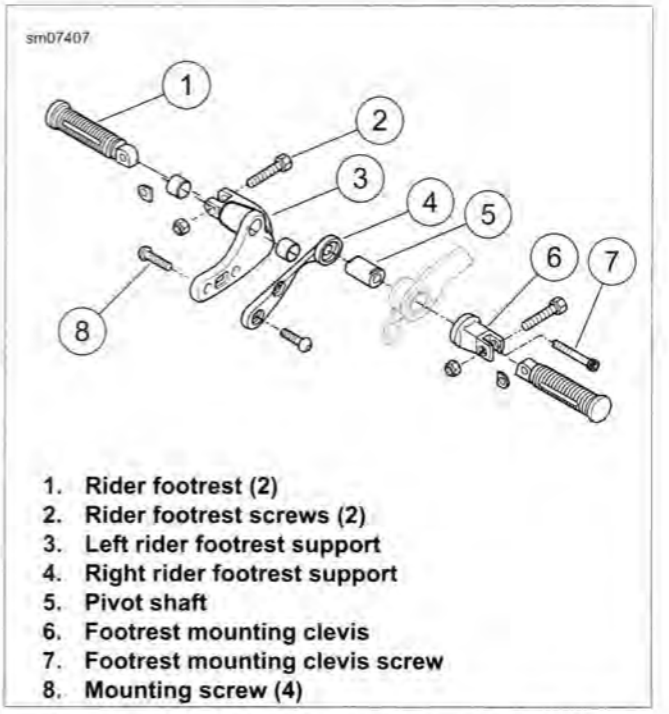

1. **Rider footrest (2)**
2. **Rider footrest screws (2)**
3. **Left rider footrest support**
4. **Right rider footrest support**
5. **Pivot shaft**
6. **Footrest mounting clevis**
7. **Footrest mounting clevis screw**
8. **Mounting screw (4)**

Figure 2-150. Rider Footrests: Forward Controls

PASSENGER FOOTRESTS: ALL BUT FXDB

FASTENER	TORQUE VALUE	
Passenger footrest support mounting screw	25-35 ft-lbs	33.9-47.4 Nm
Passenger footrest screw and nut	84-108 **in-lbs**	9.5-12.2 Nm

Removal

1. See Figure 2-151. Remove passenger footrest screw with nut and spring washer (2) to remove passenger footrest (1).
2. Remove mounting screws (5) to remove left and right passenger footrest supports (3, 4).

Installation

1. See Figure 2-151. Install left (3) and right (4) passenger footrest supports using mounting screws (5). Tighten to 25-35 ft-lbs (33.9-47.4 Nm).
2. Install passenger footrest (1) with passenger footrest screw with nut and spring washer (2). Tighten to 84-108 **in-lbs** (9.5-12.2 Nm).

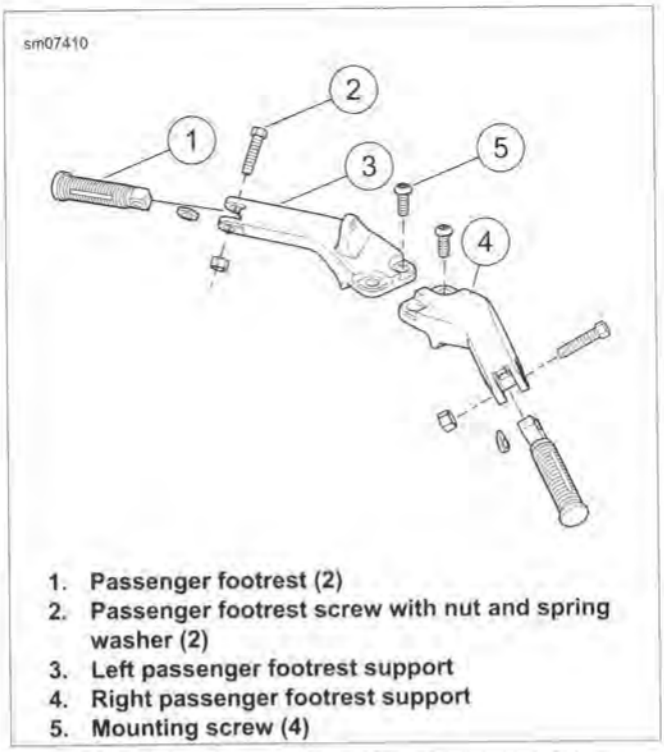

1. Passenger footrest (2)
2. Passenger footrest screw with nut and spring washer (2)
3. Left passenger footrest support
4. Right passenger footrest support
5. Mounting screw (4)

Figure 2-151. Passenger Footrests (Typical)

UPPER AND LOWER NACELLE

FASTENER	TORQUE VALUE	
Slider cover fasteners: FLD	84-120 **in-lbs**	9.5-13.5 Nm
Handlebar riser bolts: FLD	30-40 ft-lbs	40.7-54.2 Nm
Lower nacelle fasteners: FLD	84-120 **in-lbs**	9.5-13.5 Nm
Upper nacelle fasteners: FLD	84-120 **in-lbs**	9.5-13.5 Nm
Headlight to nacelle: FLD	7-10 **in-lbs**	0.8-1.1 Nm
Windshield docking hardware: FLD	84-120 **in-lbs**	9.5-13.5 Nm

Removal

1. Remove brake caliper and front wheel. See 2.4 FRONT WHEEL.
2. Remove front fender. See 2.28 FRONT FENDER.

NOTES

- *Take care when removing and installing handlebars to prevent cosmetic damage to upper nacelle.*
- *Cover painted parts to protect finish.*

3. Remove headlight assembly.
4. Remove handlebar riser bolts and lay handlebars on protective cover on fuel tank.
5. Loosen the pinch screws at upper and lower fork brackets. Slide left and right fork assemblies downward clear of fork brackets.
6. **ABS models:** Remove the brake line manifold from the lower fork bracket.
7. See Figure 2-152. Remove windshield assembly and docking hardware (1).
8. Remove lower nacelle (4) and slider covers (5).
9. Remove upper nacelle (2).

Installation

NOTE

Install lower headlight nacelle and slider covers before fork assemblies are installed into the upper and lower fork brackets.

1. Install slider covers (5) if previously removed. Tighten to 84-120 **in-lbs** (9.5-13.5 Nm).
2. Install lower nacelle (4) along with slider covers (5). Install two lower screws (6) to hold lower nacelle in place but do not tighten.
3. Slide left and right fork assemblies upward and into upper and lower fork brackets.
4. Install upper nacelle (2), but do not tighten fasteners.
5. See 2.25 HANDLEBAR: FLD. Install handlebar riser bolts through upper fork clamp and upper nacelle. Tighten to 30-40 ft-lbs (40.7-54.2 Nm).
6. Tighten two lower nacelle screws to 84-120 **in-lbs** (9.5-13.5 Nm).
7. Tighten two upper nacelle screws to 84-120 **in-lbs** (9.5-13.5 Nm).
8. Install headlight assembly. Tighten to 7-10 **in-lbs** (0.8-1.1 Nm).
9. Install docking hardware and windshield assembly. Tighten to 84-120 **in-lbs** (9.5-13.5 Nm).

NOTE

ABS models: *see 2.15 ABS MODULE (EHCU).*

10. **ABS models:** Install the brake line manifold to the lower fork bracket and lower nacelle.
11. Install front fender. See 2.28 FRONT FENDER.
12. Install front wheel and caliper. See 2.4 FRONT WHEEL.

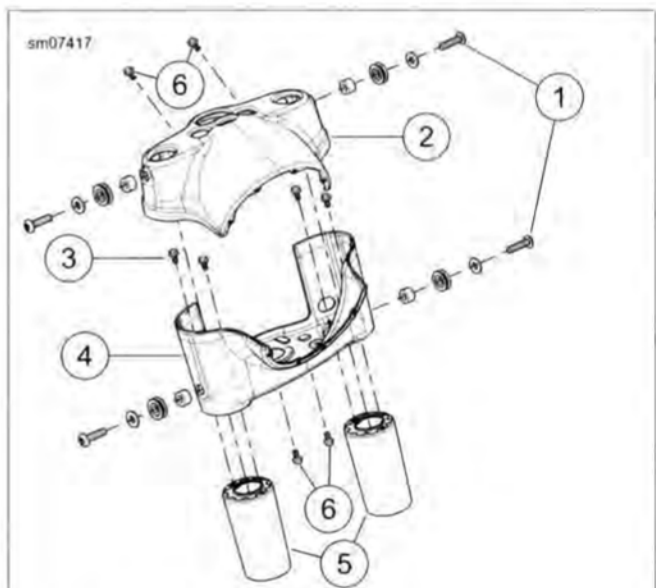

1. **Docking hardware (4)**
2. **Upper nacelle**
3. **Slider cover screws (4)**
4. **Lower nacelle**
5. **Slider covers (2)**
6. **Upper and lower nacelle screws (4)**

Figure 2-152. Headlamp Nacelles and Slider Covers

WINDSHIELD

Removal

1. See Figure 2-153. Raise the wireform latch springs (1) on both sides of the windshield (2).
2. Gently pull on the top of the windshield until the upper notches on the windshield brackets are free of the upper grommets.
3. Carefully raise the windshield until the lower notches are free of the lower grommets.
4. Remove windshield.

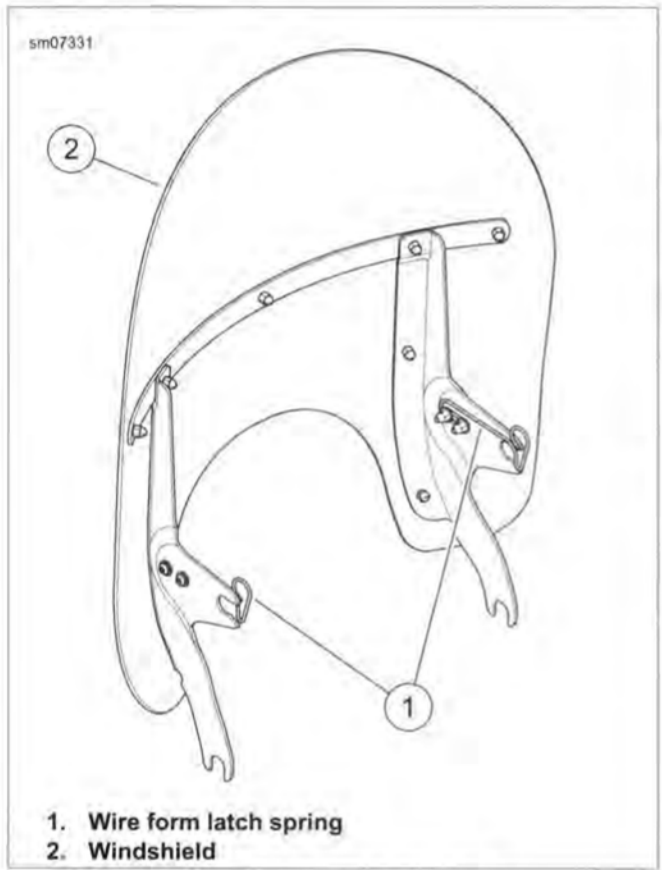

1. **Wire form latch spring**
2. **Windshield**

Figure 2-153. Windshield (FLD)

Installation

NOTE

Firmly seat windshield brackets to prevent scratching headlamp nacelle.

1. Carefully insert the windshield brackets around the headlamp nacelle. Lower the windshield into position until the lower notches on the windshield brackets are seated on the lower grommets.
2. See Figure 2-153. Gently push the top of the windshield toward the rear until the upper notches fully engage the upper grommets (2).
3. Push down on the wireform latch springs (1), so that they overhang the rubber grommets. If some adjustment is necessary, loosen the retaining screws and rotate the latch springs into the proper position.

WINDSHIELD WINDOW

PART NUMBER	TOOL NAME
HD-25070	ROBINAIR HEAT GUN

FASTENER	TORQUE VALUE	
Windshield window screws: FLD	20-25 **in-lbs**	2.3-2.8 Nm

Removal

1. Remove windshield. See 2.33 WINDSHIELD: FLD.
2. Place windshield front side up on clean padded surface.
3. See Figure 2-154. Remove acorn nuts (8). Remove shorter and longer windshield mounting screws (6, 7) from right and left outer vertical windshield braces (3) to release right and left wireform mounting bracket (2).
4. Remove three remaining screws from horizontal brace.

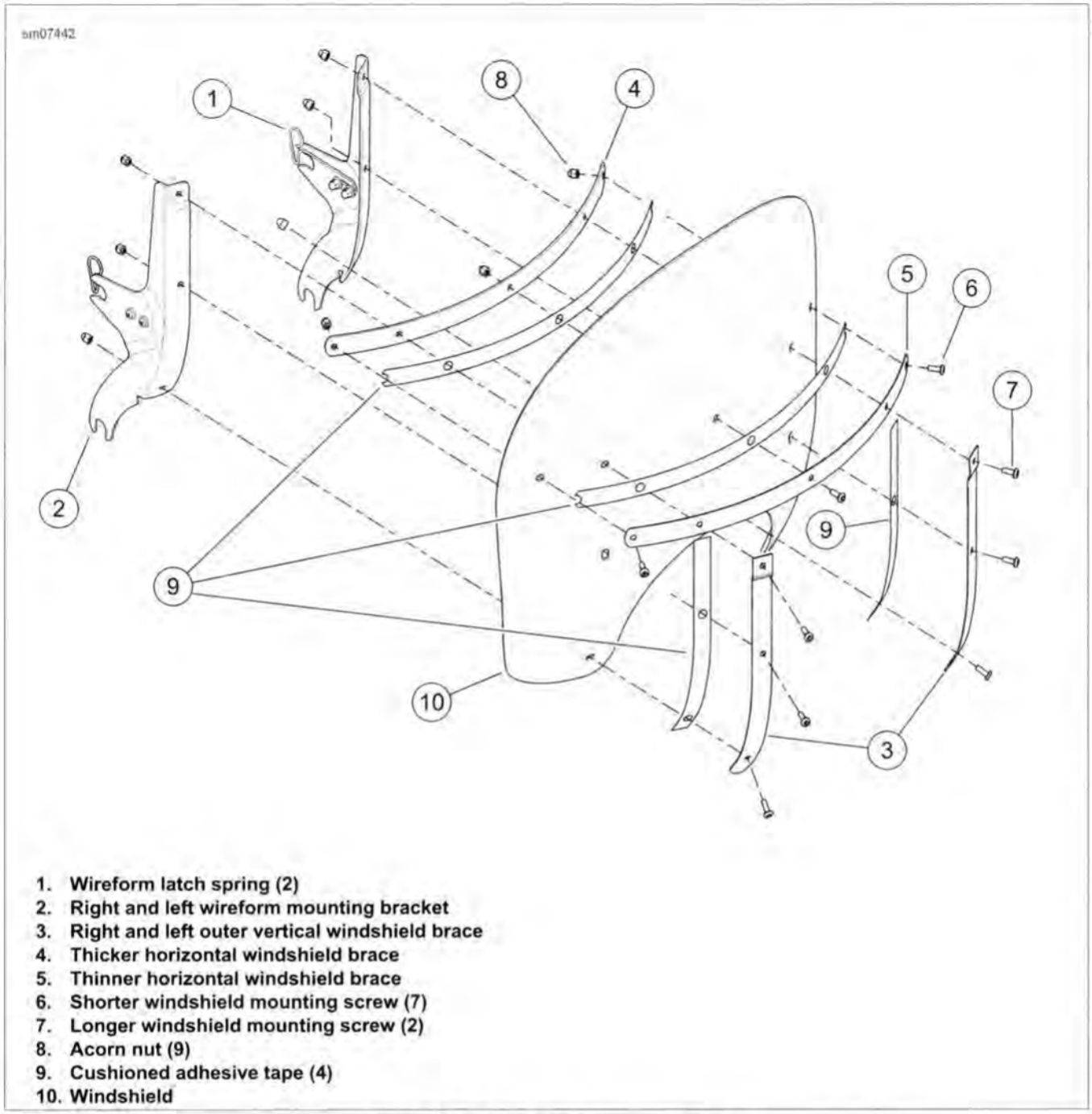

1. **Wireform latch spring (2)**
2. **Right and left wireform mounting bracket**
3. **Right and left outer vertical windshield brace**
4. **Thicker horizontal windshield brace**
5. **Thinner horizontal windshield brace**
6. **Shorter windshield mounting screw (7)**
7. **Longer windshield mounting screw (2)**
8. **Acorn nut (9)**
9. **Cushioned adhesive tape (4)**
10. **Windshield**

Figure 2-154. Windshield Assembly: FLD

5. Carefully pry braces from windshield (10). Discard windshield.

⚠WARNING

Be sure to follow manufacturer's instructions when using the Robinair Heat Gun or any other radiant heating device. Failure to follow manufacturer's instructions can cause a fire, which could result in death or serious injury. (00379a)

6. Remove cushioned adhesive tape (9) from braces (3, 4, 5):
   a. Liberally apply 3M GENERAL PURPOSE ADHESIVE REMOVER and allow to soak.
   b. Apply heat with ROBINAIR HEAT GUN (Part No. HD-25070).
   c. Peel cushioned adhesive tape (9) from braces.
   d. Remove any remaining adhesive with 3M GENERAL PURPOSE ADHESIVE REMOVER.

Installation

NOTES

- *Carefully align the holes in the new tape with the holes in the braces.*
- *The thicker horizontal brace (4) mounts to the **rear** surface of the windshield.*

1. See Figure 2-154. Remove paper backing from one side of each cushioned adhesive tape (9). Apply to windshield side of each brace (3, 4, 5).
2. Place **new** windshield with front side down on clean padded surface.
3. Remove paper backing from cushioned adhesive tape (9) on thicker horizontal brace. Align holes in brace with holes in windshield and press brace into position.
4. Turn windshield over (front side up).
5. Remove paper backing from cushioned adhesive tape (9) on thinner horizontal brace. Align holes in brace with holes in windshield. Edges of inner and outer braces must be even. Press into position.
6. Install three short screws through the middle and outer holes of the horizontal braces. Loosely install acorn nuts on rear side.
7. See Figure 2-154. Remove paper backing from cushioned adhesive tape (9) on vertical brace. With the stepped end overlapping the horizontal brace and the end with the slight bend angled outward, align holes in brace with holes in windshield. Press into position.
8. Position mounting bracket on rear side of windshield with the wireform facing inboard.
9. Install the longer screw at the stepped end where the vertical brace overlaps the horizontal brace, and short screws in the remaining holes. Loosely install acorn nuts.
10. Install second vertical brace and mounting bracket in a similar manner.
11. See Figure 2-155. Following the sequence shown, tighten all screws to 20-25 **in-lbs** (2.3-2.8 Nm).
12. Install windshield. See 2.33 WINDSHIELD: FLD.

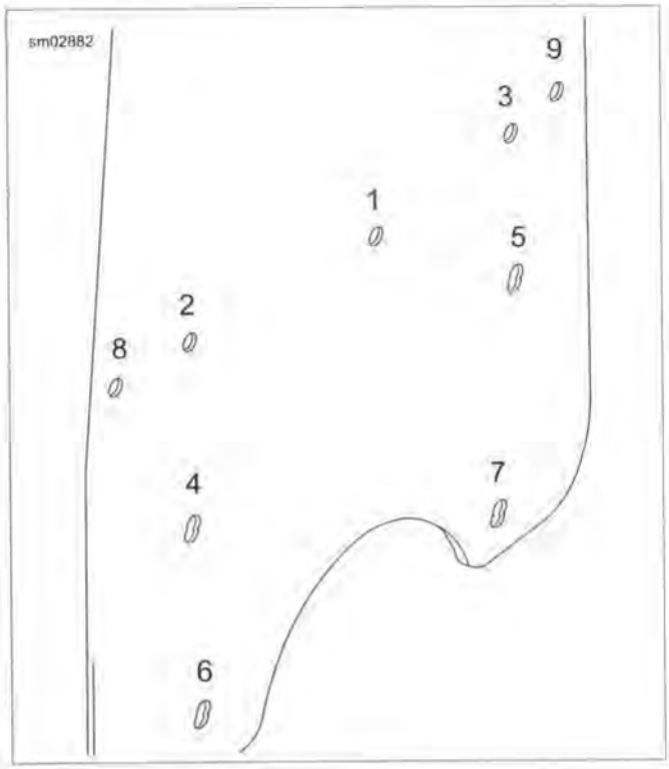

Figure 2-155. Windshield Torque Sequence

SADDLEBAG

FASTENER	TORQUE VALUE	
Bracket, saddlebag theft prevention: FLD	24-36 **in-lbs**	2.7-4.1 Nm
Saddlebag latch pivot screw: FLD	96-120 **in-lbs**	10.8-13.6 Nm
Saddlebag inner/outer support screws: FLD	96-120 **in-lbs**	10.8-13.6 Nm
Saddlebag lower mount screws: FLD	96-120 **in-lbs**	10.8-13.6 Nm
Saddlebag latch attaching screws: FLD	14-20 **in-lbs**	1.6-2.3 Nm

Removal

1. Open saddlebag.
2. See Figure 2-156. Inside the saddlebag, pull the knob outward and rotate to the UNLOCK (2) position.
3. See Figure 2-157. Hold the saddlebag and slide it toward the rear to remove it from the three docking posts.

NOTES

- *Unless secured in the upright position, the left saddlebag is easily tipped.*
- *The right saddlebag has a larger cavity along the bottom to accommodate the rear fork and axle.*
- *Place saddlebag on a level surface, preferably supported against a wall or other surface.*
- *Avoid dragging the saddlebag on the ground to prevent scratches.*

Installation

NOTE

Replace missing or damaged docking bushings before mounting saddlebag.

1. See Figure 2-157. With the knob in the UNLOCK position, slide the saddlebag on to the motorcycle, engaging the saddlebag brackets to the three docking posts (1).
2. See Figure 2-156. Pull the knob outward and rotate to the LOCK (1) position until the knob snaps into place.
3. Check that the saddlebag is secure on all three docking posts and the locking latch is secure. Gently pull the saddlebag to the rear to check that it is secure.
4. Close saddlebag and make sure that the lid is shut and latched.

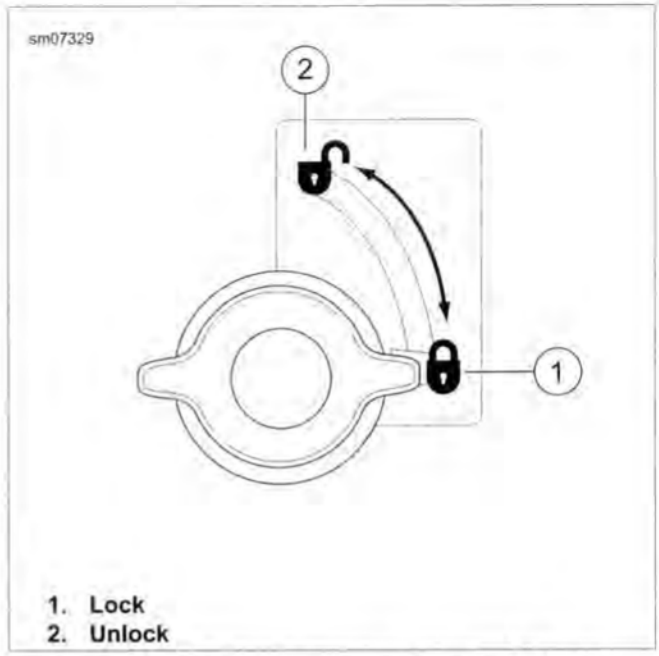

1. **Lock**
2. **Unlock**

Figure 2-156. Saddlebag Lock Knob: FLD Model

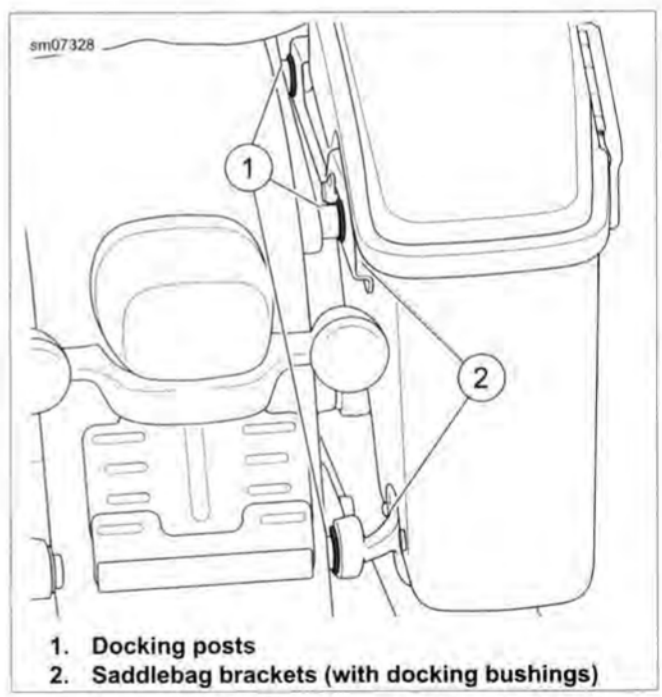

1. **Docking posts**
2. **Saddlebag brackets (with docking bushings)**

Figure 2-157. Saddlebag Installation: FLD Model

Disassembly

1. Remove saddlebag.
2. See Figure 2-158. Remove two check strap screws (1) to release tether assembly from saddlebag.
3. Remove two latch screws (2) to release latch and lid from saddlebag. Set lid assembly aside.

NOTE

See 2.34 SADDLEBAGS: FLD, Saddlebag Lid for service of the saddlebag lid assembly.

4. See Figure 2-159. Remove screws (17). Remove lower mount (16).
5. Remove outer support screws (15) and outer support plate (12).
6. Remove cap (11).
7. Hold nut (10). Remove screw (1). Remove latch (2), spring (3), spacer (6) and knob (9).
8. Remove screw (4) and washer (5). Remove inner support plate (8).
9. Remove screws (14) and theft prevention bracket (13) if necessary.

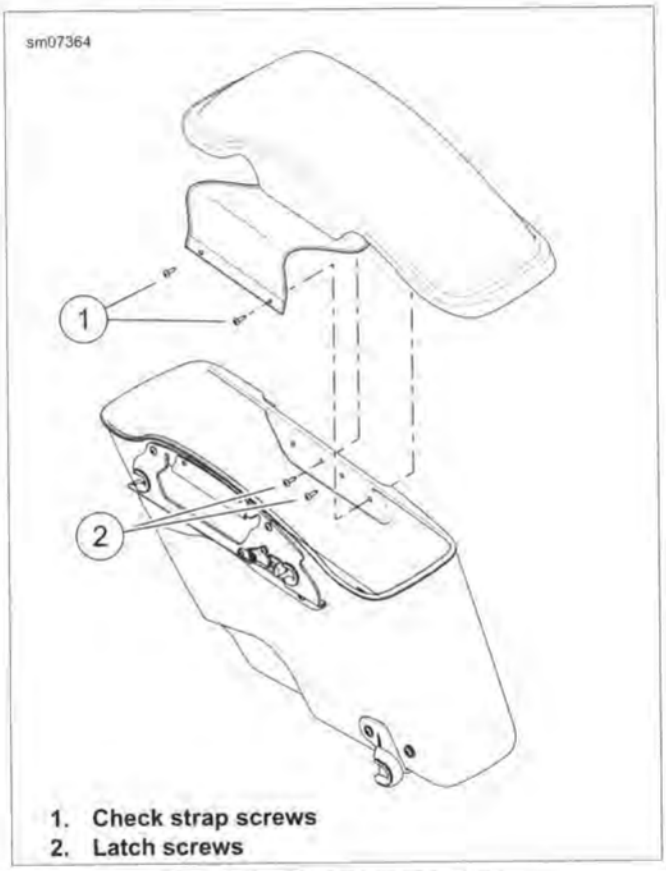

1. **Check strap screws**
2. **Latch screws**

Figure 2-158. Saddlebag: FLD

Assembly

1. See Figure 2-159. Install theft prevention bracket (13). Tighten to 24-36 **in-lbs** (2.7-4.1 Nm).
2. Hold inner support in place and loosely install screw (4) and washer (5). Loosely install a second outer support screw (15) to help support inner support.
3. Install latch components (1, 2, 3, 6, 9, 10). Tighten to 96-120 **in-lbs** (10.8-13.6 Nm). Install cap (11).
4. Install outer support plate (12). Tighten screws (4, 15) to 96-120 **in-lbs** (10.8-13.6 Nm).
5. Install lower mount (16). Tighten to 96-120 **in-lbs** (10.8-13.6 Nm).
6. Install lid assembly. Tighten screws to 14-20 **in-lbs** (1.6-2.3 Nm).
7. Install saddlebag.

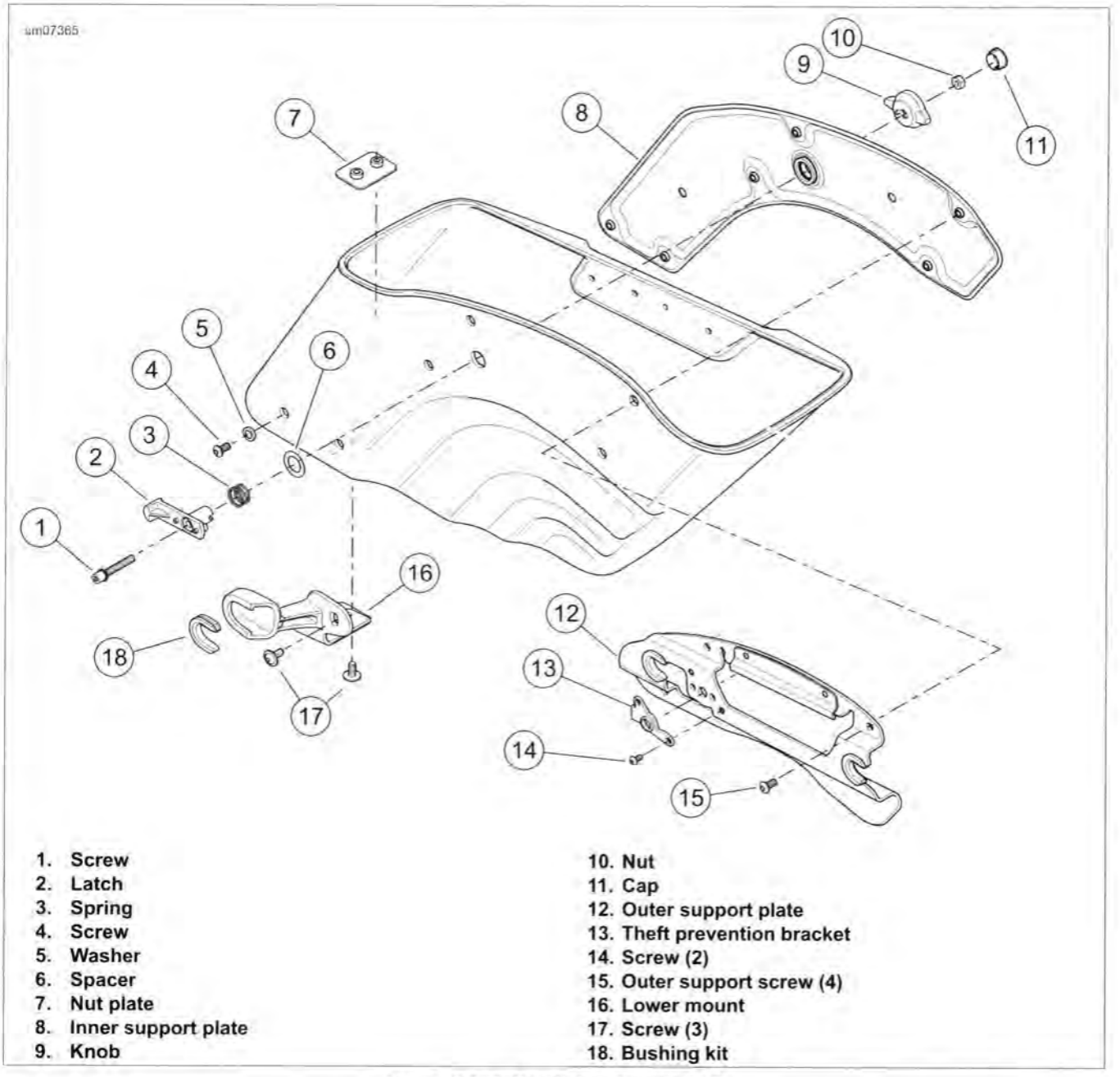

1. **Screw**
2. **Latch**
3. **Spring**
4. **Screw**
5. **Washer**
6. **Spacer**
7. **Nut plate**
8. **Inner support plate**
9. **Knob**
10. **Nut**
11. **Cap**
12. **Outer support plate**
13. **Theft prevention bracket**
14. **Screw (2)**
15. **Outer support screw (4)**
16. **Lower mount**
17. **Screw (3)**
18. **Bushing kit**

Figure 2-159. Saddlebag Lower: FLD

SADDLEBAG LID

FASTENER	TORQUE VALUE	
Tether assembly screws: FLD	8-12 **in-lbs**	0.9-1.4 Nm
Saddlebag latch screws: FLD	14-20 **in-lbs**	1.6-2.3 Nm
Saddlebag latch faceplate screws: FLD	14-20 **in-lbs**	1.6-2.3 Nm
Saddlebag latch faceplate nut: FLD	7-17 **in-lbs**	0.8-1.9 Nm
Saddlebag lock screws: FLD	30-40 **in-lbs**	3.4-4.5 Nm

Seal

1. Remove seal from lid.
2. Clean old adhesive using 3M GENERAL PURPOSE ADHESIVE REMOVER.
3. Verify that seal insert is in place and located near the end of the seal.

NOTE

See Figure 2-160. The seal adheres to the side of the inner flange surface.

4. See Figure 2-161. Align end with tube inside lid with line on saddlebag lid. Begin installation being sure that seal is flush with edge of flange.
5. Do not stretch seal during installation and continue until ends meet.

NOTE

Ends must meet with no gap.

6. Trim flush or slightly long and complete installation.

7. Close saddlebag.
8. Inspect to verify that seal is in complete contact with saddlebag.



Figure 2-160. Saddlebag Lid Seal

Disassembly

NOTE

Lock assembly, faceplate and tether assembly can be replaced without disassembling saddlebag.

1. Remove lid from saddlebag. See 2.34 SADDLEBAGS: FLD, Saddlebag.
2. See Figure 2-161. Remove screws (9) and lock (10).
3. Remove screws (4), nut plate (11) and nut (7). Remove faceplate (5).
4. Remove screws (6) and latch assembly (8).
5. Remove screws (3). Remove tether assembly (1).

Assembly

1. Secure tether assembly (1) to lid with screws. Tighten to 8-12 **in-lbs** (0.9-1.4 Nm)
2. Install latch assembly. Tighten to 14-20 **in-lbs** (1.6-2.3 Nm).
3. Install faceplate. Tighten screws (4) to 14-20 **in-lbs** (1.6-2.3 Nm). Tighten nut (7) to 7-17 **in-lbs** (0.8-1.9 Nm).
4. Install lock assembly. Tighten screws to 30-40 **in-lbs** (3.4-4.5 Nm).
5. Install lid on saddlebag. See 2.34 SADDLEBAGS: FLD, Saddlebag.

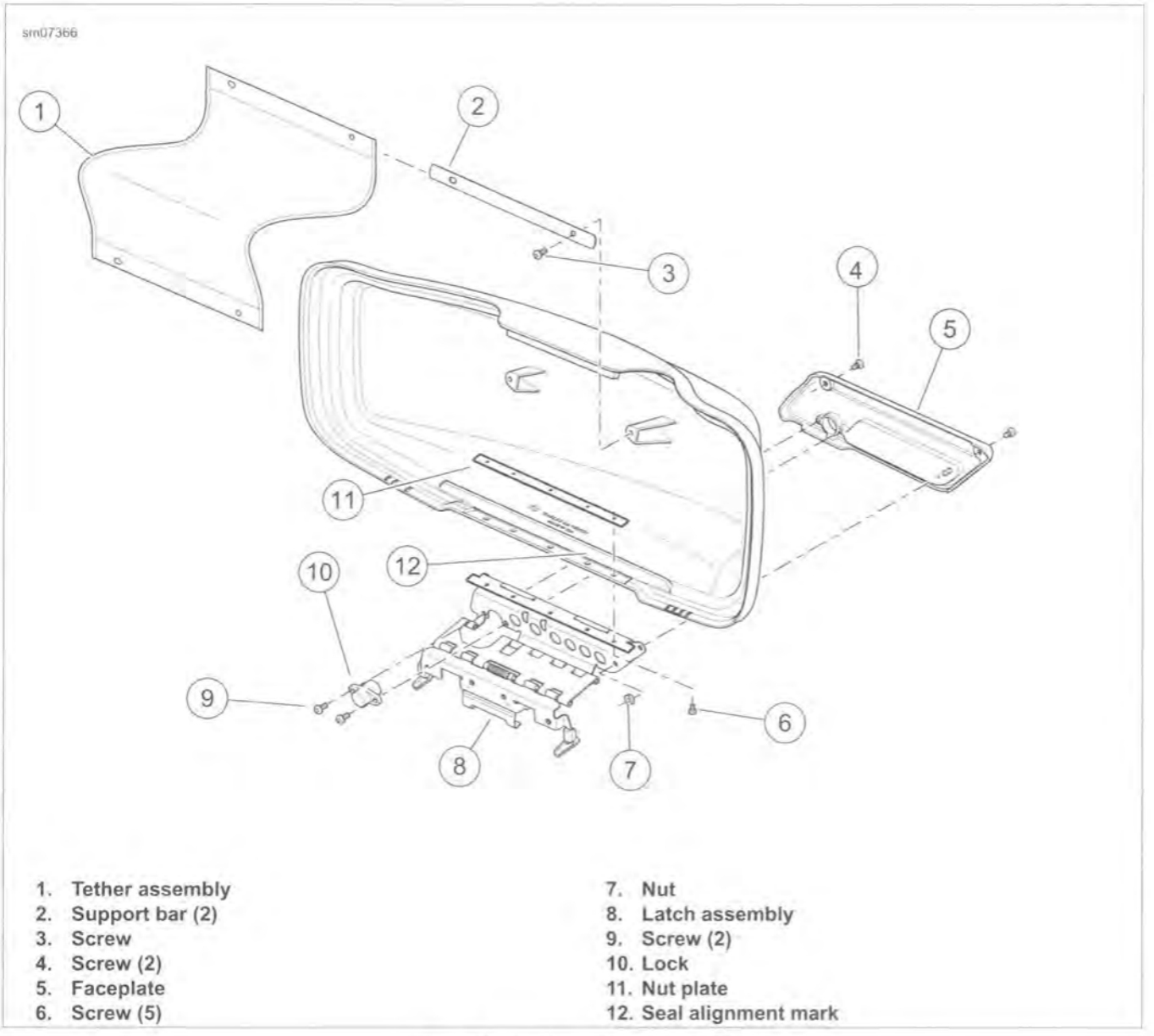

1. Tether assembly
2. Support bar (2)
3. Screw
4. Screw (2)
5. Faceplate
6. Screw (5)
7. Nut
8. Latch assembly
9. Screw (2)
10. Lock
11. Nut plate
12. Seal alignment mark

Figure 2-161. Saddlebag Lid: FLD

CLEANING

1. Raise the motorcycle.
2. See Figure 2-162. Inspect top of catch (6 or 8) and pivot block (10) mating surface. If covered with dirt, wipe off dirt with a shop towel.
3. Apply ANTI-SEIZE LUBRICANT to mating surface.
4. Move jiffy stand leg (13) forward and back to spread lubricant between mating parts.
5. Apply ANTI-SEIZE LUBRICANT on shaft of jiffy stand leg and pin (16) to lubricate the mating surface between pin and pivot block (10). Move leg back and forth and downward while spraying lubricant.
6. Check that jiffy stand operates correctly before placing in service.

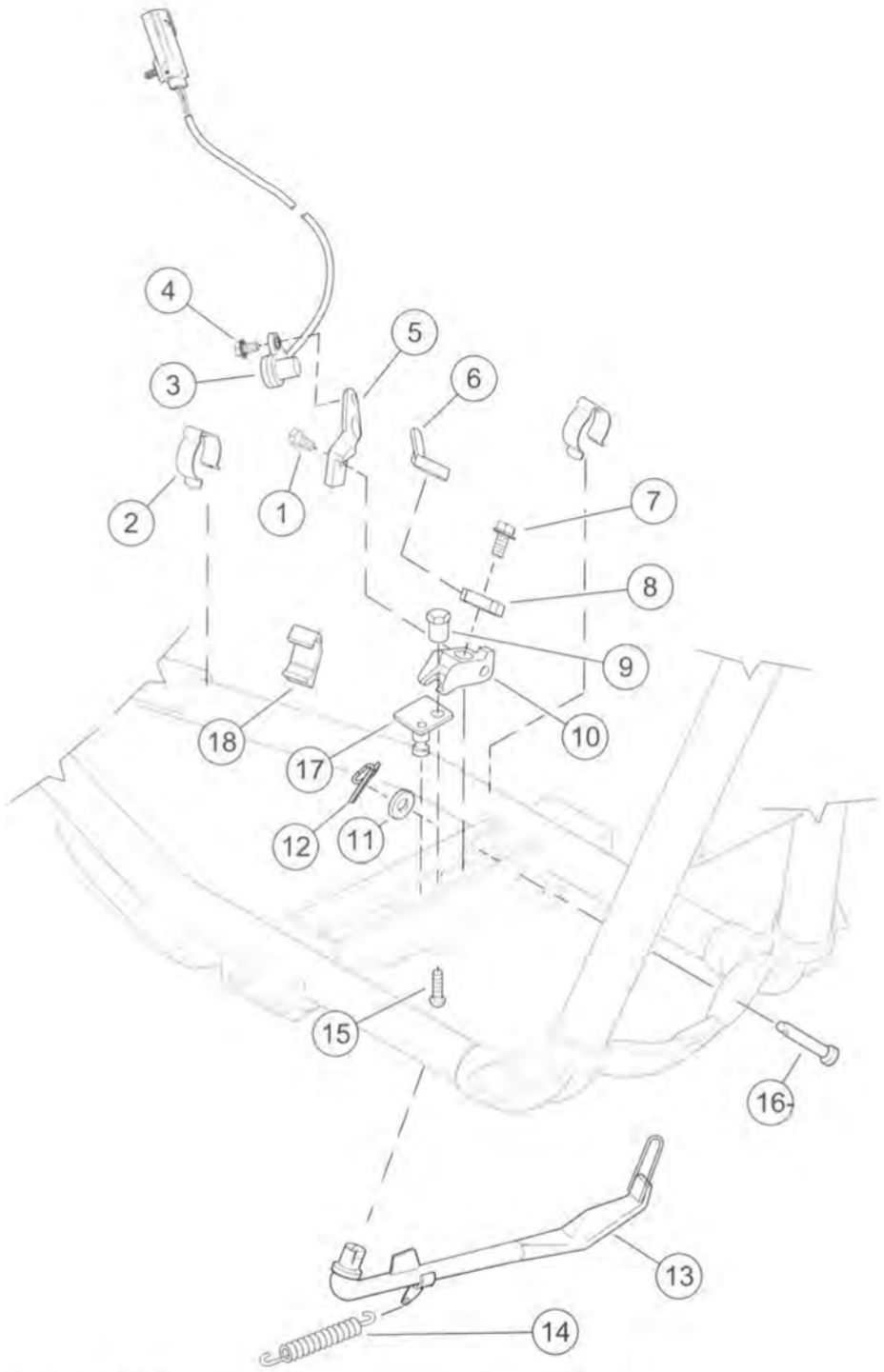

1. Sensor bracket screw (HDI)
2. Harness retainer (2) (HDI)
3. Sensor (HDI)
4. Sensor screw (HDI)
5. Sensor bracket (HDI)
6. Catch (HDI)
7. Bolt
8. Catch (non-HDI)
9. Threaded spacer
10. Pivot block
11. Washer
12. Pretzel clip
13. Jiffy stand leg
14. Spring
15. Screw
16. Pin (secures pivot block)
17. Anchor plate
18. Bumper

Figure 2-162. Jiffy Stand

JIFFY STAND SENSOR: HDI MODELS

FASTENER	TORQUE VALUE	
Jiffy stand sensor screw	96-144 **in-lbs**	10.8-16.3 Nm

1. See Figure 2-163. Record harness routing for ease of assembly. Disconnect sensor connector [133] located under the seat.
2. See Figure 2-162. Remove harness retainers (2).
3. Remove sensor screw (4). Remove sensor (3).
4. If necessary, remove sensor bracket screw (1). Remove sensor bracket (5).
5. Installation is in reverse of removal. Tighten screws (1, 4) to 96-144 **in-lbs** (10.8-16.3 Nm).

NOTES

- *See Figure 2-163. Verify that the sensor harness is routed to the inside of the left-lower frame and under the rear engine mount casting.*
- *See Figure 2-164. Route the sensor harness in the same retainer cavity (3) as the front engine harness (2).*

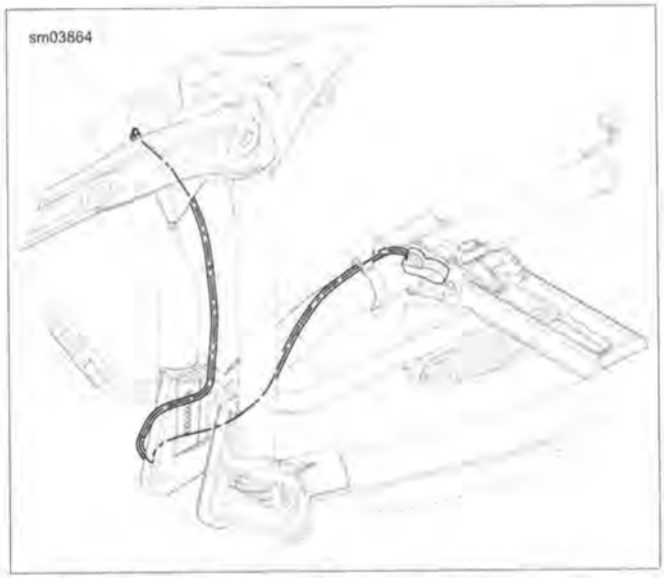

Figure 2-163. Jiffy Stand Sensor Harness Routing

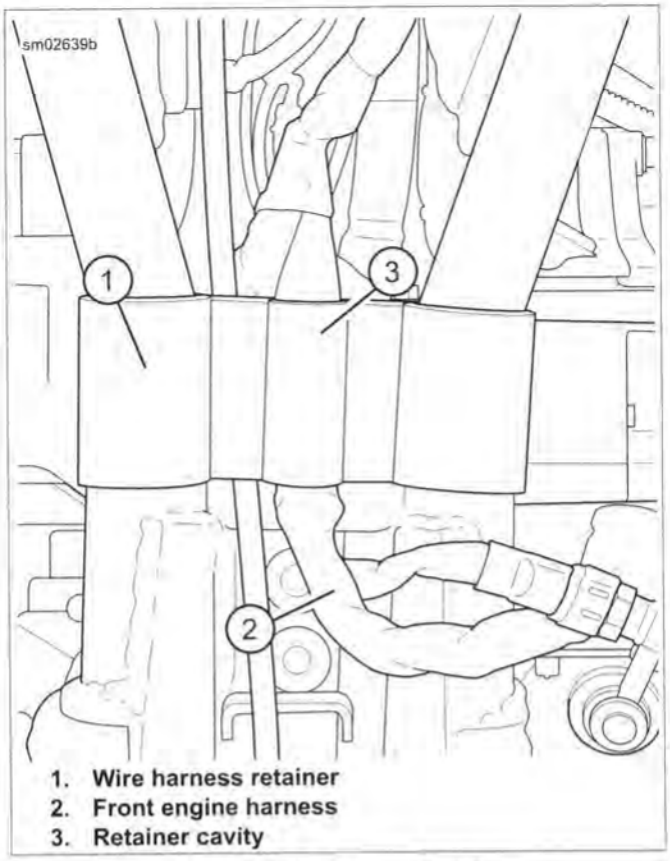

1. **Wire harness retainer**
2. **Front engine harness**
3. **Retainer cavity**

Figure 2-164. Harness Retainer

REMOVAL

⚠WARNING

Block or jack vehicle under frame in a way that the vehicle will not fall over. Failure to properly block and/or raise the vehicle could result in death or serious injury. (00462c)

1. Block motorcycle underneath frame so both wheels are raised off the ground.
2. See Figure 2-162. Remove pretzel clip (12) and washer (11) from pin (16). Discard pretzel clip.
3. Detach spring (14) from jiffy stand and anchor plate (17).
4. Pull pin (16) from between frame tubes. Jiffy stand and pivot block components will drop as an assembly.

INSTALLATION

⚠WARNING

If leg stop is incorrectly installed, excessive wear can allow vehicle to fall when rested on jiffy stand, which could result in death or serious injury. (00479b)

1. See Figure 2-162. Place pivot block (10) and jiffy stand leg (13) assembly between frame tubes.
2. Insert pin (16) from front of vehicle through frame tubes and pivot block. Secure with washer and a **new** pretzel clip (12).

3. Attach spring (14) to anchor plate (17) and jiffy stand leg. When properly installed, hook on spring side connected to jiffy stand leg faces upward.
4. Apply ANTI-SEIZE LUBRICANT on shaft of jiffy stand leg and pin to lubricate the mating surface between pin and pivot block. Move leg back and forth and downward while spraying lubricant.
5. Check that jiffy stand operates correctly before placing in service.

REMOVAL

PART NUMBER	TOOL NAME
HD-47853	FORK LOCK WRENCH

1. Remove decal.
2. See Figure 2-165. Place FORK LOCK WRENCH (Part No. HD-47853) (1) on face nut (2). Turn fork lock wrench clockwise to loosen face nut. Turn face nut clockwise until it bottoms on fork lock.
3. See Figure 2-166. Remove plug from fork lock boss cavity (4).
4. Rotate fork lock (2) clockwise to allow fork lock boss (3) to clear fork lock boss cavity (4). Remove fork lock from frame.

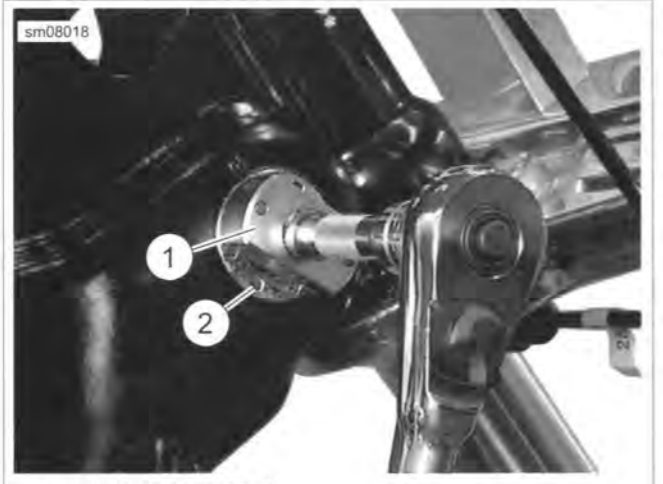

1. Fork lock wrench
2. Face nut

Figure 2-165. Fork Lock Wrench



1. Face nut
2. Fork lock
3. Fork lock boss
4. Fork lock boss cavity

Figure 2-166. Fork Lock

INSTALLATION

PART NUMBER	TOOL NAME
HD-47853	FORK LOCK WRENCH

1. See Figure 2-166. Apply a drop of LOCTITE 243 MEDIUM STRENGTH THREADLOCKER AND SEALANT (blue) to threads of face nut (1).
2. Install face nut on fork lock (2). Turn face nut clockwise until it bottoms on fork lock.
3. Install connector on fork lock.
4. With fork lock boss (3) facing front of vehicle, install fork lock into frame.
5. Install plug into fork lock boss cavity (4).
6. See Figure 2-167. Align flats on fork lock with slots (2) in fork lock cavity (1).

NOTE

In next step, setting fork lock in the "locked" position will ease installation.

7. See Figure 2-166. Rotate fork lock until fork lock boss (3) engages fork lock boss cavity (4).
8. To verify proper fork lock positioning, hold fork lock as far forward as possible in frame while tightening.
9. See Figure 2-165. Using FORK LOCK WRENCH (Part No. HD-47853), turn face nut counterclockwise until tight.
10. Install decal.
11. Remove and save key code tag (on key ring with two keys). Key code is not marked on keys.
12. Test fork lock operation.

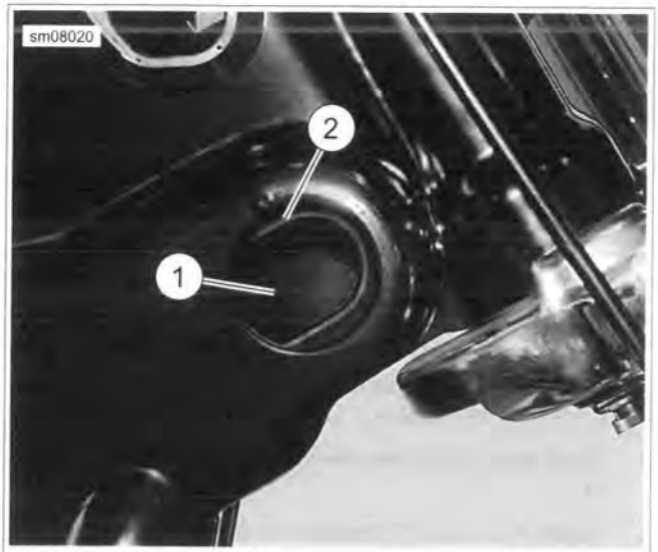

1. **Fork lock cavity**
2. **Slot**

Figure 2-167. Fork Lock Cavity

REMOVAL

⚠WARNING

Block or jack vehicle under frame in a way that the vehicle will not fall over. Failure to properly block and/or raise the vehicle could result in death or serious injury. (00462c)

NOTE

Motorcycle must be upright and level before performing this procedure.

Front Isolator

1. Support front of engine with jack.
2. See Figure 2-168. Remove bolts, lockwashers and washers securing front isolator (2) to frame.
3. Remove bolts, flange nuts and washers securing the front isolator (2) to the front engine bracket (1). Remove front isolator (2).

Rear Isolator

1. Remove left side footpeg and debris deflector.
2. Use a jack on the oil pan to support rear of transmission.
3. See Figure 2-168. Use a long extension, from right side of motorcycle and a wrench on the left side of rear isolator (3). Remove bolts, flange nuts and washers securing rear isolator to powertrain.

NOTE

Vary the load on the mount to slip the bolts out of the rear isolator (3).

4. Remove bolts, lockwashers and washers securing rear isolator (3) to frame. Remove rear isolator (3).

INSTALLATION

FASTENER	TORQUE VALUE	
Front isolator mounting bolts to front engine bracket	22-27 ft-lbs	29.9-36.6 Nm
Front isolator mounting bolts to frame	22-27 ft-lbs	29.9-36.6 Nm
Front engine bracket bolts to engine	25-32 ft-lbs	34.0-43.3 Nm
Engine mount flange nut	22-27 ft-lbs	29.9-36.6 Nm
Rear isolator to frame bolts	22-27 ft-lbs	29.9-36.6 Nm

Front Isolator

1. Support front of engine with jack.
2. See Figure 2-168. Install front engine bracket (1) to front of engine with bolts and washers. Tighten finger-tight.
3. Place front isolator (2) in position on frame and install bolts lockwashers and washers securing front isolator (2) to frame. Tighten finger-tight.
4. Install bolts, flange nuts and washers securing front isolator (2) to front engine bracket (1). Tighten flange nuts to 22-27 ft-lbs (29.9-36.6 Nm).
5. Tighten isolator to frame bolts to 22-27 ft-lbs (29.9-36.6 Nm).
6. Tighten front engine bracket bolts to 25-32 ft-lbs (34.0-43.3 Nm).

NOTE

For best isolator performance, minimum clearance between engine bracket and top rubber snubber on engine isolator is 0.030 in (0.76 mm). Measure the vehicle at rest, vertically without jack under engine.

Rear Isolator

1. See Figure 2-168. Use a jack on the oil pan to support rear of transmission.

NOTE

Vary the load on the rear isolator (3) to slip the bolts in.

2. Place rear isolator (3) in position on frame and install bolts, lockwashers and washers. Tighten finger-tight.
3. Use a long extension, from right side of motorcycle and a wrench on the left side of rear isolator (3). Install bolts, flange nuts and washers. Tighten flange nuts to 22-27 ft-lbs (29.9-36.6 Nm).
4. Tighten rear isolator (3) to frame bolts to 22-27 ft-lbs (29.9-36.6 Nm).
5. Install left side footpeg and debris deflector.

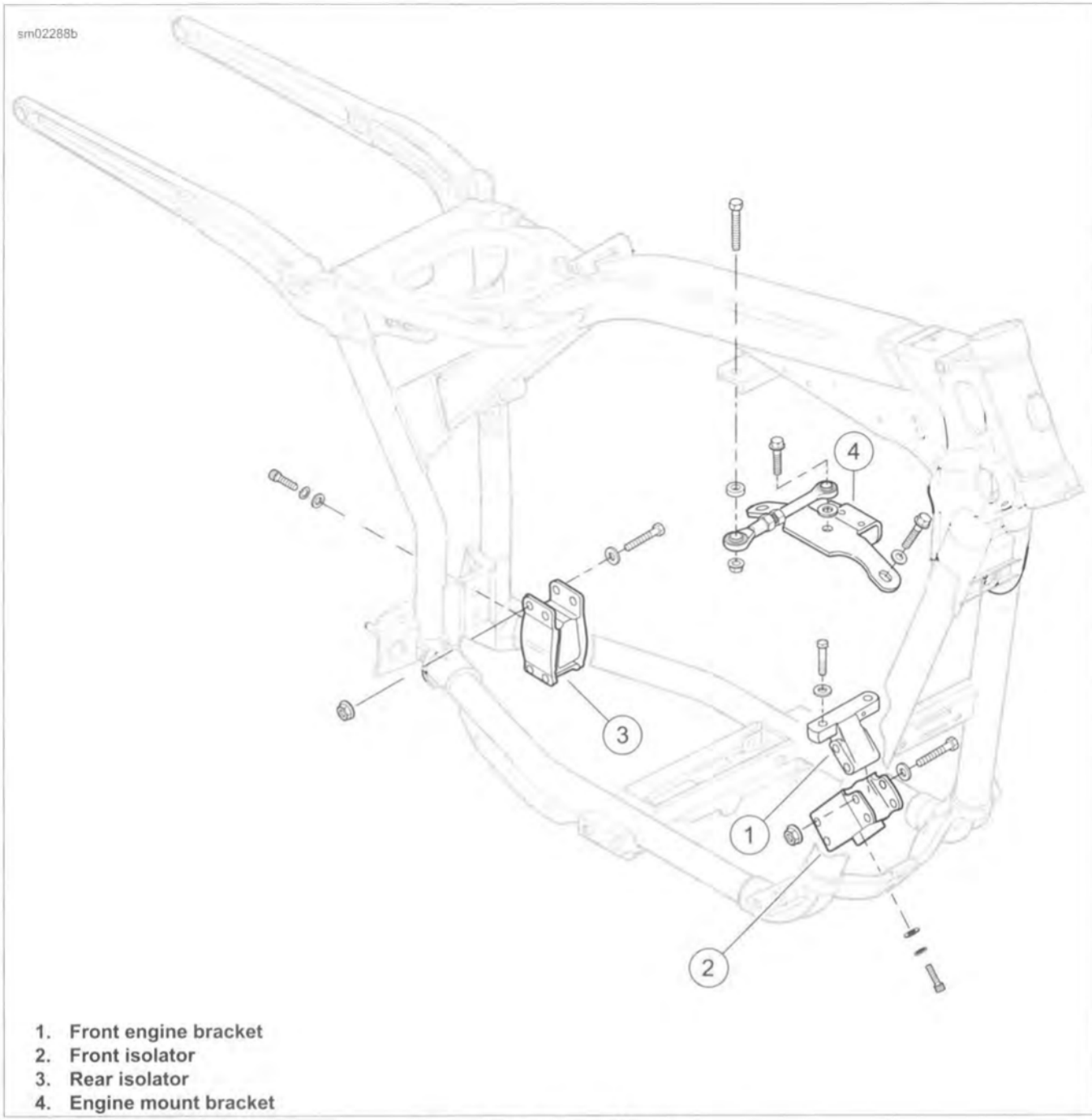

1. Front engine bracket
2. Front isolator
3. Rear isolator
4. Engine mount bracket

Figure 2-168. Engine Mounts

REPLACEMENT

FASTENER	TORQUE VALUE	
Rear fender cover rear screw: all	12-18 ft-lbs	16.3-24.4 Nm
Rear fender cover front screw: all	12-18 ft-lbs	16.3-24.4 Nm
Rear shock, lower screws: all	30-40 ft-lbs	40.7-54.2 Nm

Removal

1. Support motorcycle so rear wheel is off floor or lift in order to remove rear fender fasteners.
2. See 2.22 REAR SHOCK ABSORBERS. Remove lower shock screws and lower rear wheel to floor or lift.
3. Remove rear screws from rear fender and turn signals.
4. Remove front screws from rear fender.

Installation

NOTE

See 2.29 REAR FENDER. Install saree guards between fender and frame, using existing fender mounting hardware.

1. See Figure 2-169. Install front mounting screw through saree guard and leave loose.
2. See Figure 2-170. Install rear mounting screw through saree guard into turn signal. Tighten to 12-18 ft-lbs (16.3-24.4 Nm).
3. Tighten front screw to 12-18 ft-lbs (16.3-24.4 Nm).
4. Raise the rear wheel. Install lower shock screws. Tighten to 30-40 ft-lbs (40.7-54.2 Nm).

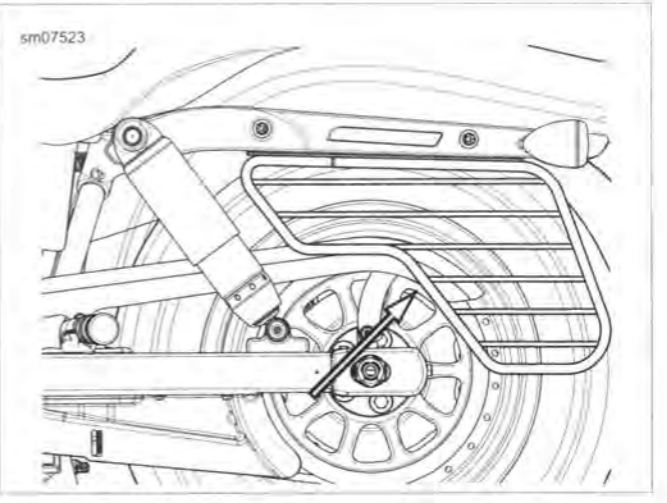

Figure 2-169. Saree Guard, Left Side

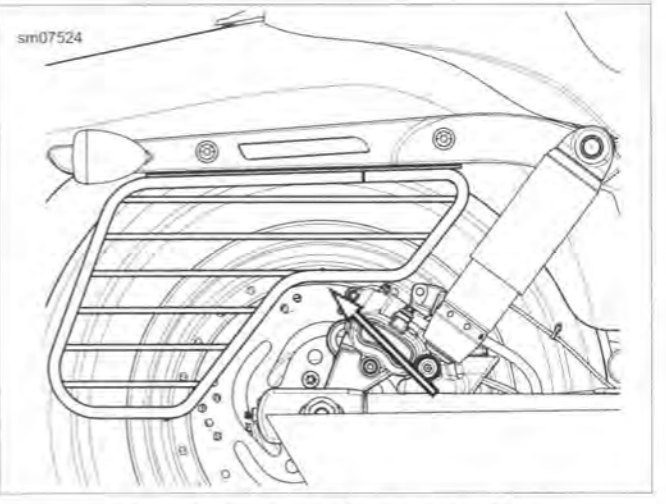

Figure 2-170. Saree Guard, Right Side

REMOVAL

1. Mark location of emblem with masking tape.

NOTE

Wear protective gloves.

2. Saw behind emblem with mono-filament fishing line or waxed dental floss to remove emblem.
3. Use 3M GENERAL PURPOSE ADHESIVE REMOVER to remove remaining foam backing tape and adhesive from mounting surface.

NOTE

For maximum bond, surface must be clean and dry.

4. Clean with a mixture of 50 percent isopropyl alcohol and 50 percent distilled water.

NOTE

Apply medallion within minutes of cleaning.

5. Allow to dry completely.

INSTALLATION

NOTES

- *Apply in ambient temperatures between 70-100 °F (21-38 °C).*
- *Do not remove protective film from adhesive until ready to apply.*
- *Do not bend emblem to fit contour of mounting surface.*

1. Test fit medallion in intended location.
   a. Check medallion against curve of mounting surface.
   b. Match left and right sides of fuel tank.

NOTES

- *Protect adhesive from grease, oil, dust, dirt and fingerprints.*
- *Once applied, do not shift medallion.*
- *The adhesive bonds in 72 hours at room temperature.*

2. Remove protective film from back of medallion.
3. Apply even pressure across entire surface with palms and fingers of both hands. Hold in place for 15 seconds.
4. Wait 20 minutes before touching medallion.
5. Wait 24 hours before washing.

SUBJECT PAGE NO.

3.1 FASTENER TORQUE VALUES..... 3-1
3.2 SPECIFICATIONS..... 3-2
3.3 SERVICE WEAR LIMITS..... 3-5
3.4 ENGINE OIL FLOW..... 3-7
3.5 OIL PUMP OPERATION..... 3-12
3.6 BREATHER OPERATION..... 3-14
3.7 OIL PRESSURE..... 3-15
3.8 TROUBLESHOOTING..... 3-17
3.9 HOW TO USE THIS SECTION..... 3-19
3.10 TOP END SERVICE..... 3-20
3.11 CAM COMPARTMENT SERVICE..... 3-22
3.12 STRIPPING MOTORCYCLE FOR SERVICE..... 3-24
3.13 ASSEMBLING MOTORCYCLE AFTER SERVICE..... 3-25
3.14 REMOVING ENGINE FRON CHASSIS..... 3-26
3.15 INSTALLING ENGINE IN CHASSIS..... 3-27
3.16 TOP END OVERHAUL: DISASSEMBLY..... 3-29
3.17 BREATHER ASSEMBLY..... 3-35
3.18 ROCKER ARM SUPPORT PLATE..... 3-36
3.19 PUSHRODS, LIFTERS AND COVERS..... 3-39
3.20 CYLINDER HEAD..... 3-42
3.21 CYLINDER..... 3-52
3.22 PISTON..... 3-56
3.23 TOP END OVERHAUL: ASSEMBLY..... 3-60
3.24 CAM COMPARTMENT AND COMPONENTS..... 3-70
3.25 OIL PUMP..... 3-83
3.26 CRANKCASE DISASSEMBLY AND REPAIR..... 3-85
3.27 FLYWHEEL AND CONNECTING RODS..... 3-93
3.28 CRANKCASE ASSEMBLY..... 3-95
3.29 OIL PAN..... 3-97

NOTES

FASTENER TORQUE VALUES IN THIS CHAPTER

The table below lists torque values for all fasteners presented in this chapter.

FASTENER	TORQUE VALUE		NOTES
Breather assembly screws	120-156 **in-lbs**	13.6-17.6 Nm	3.23 TOP END OVERHAUL: ASSEMBLY, Breather and Rocker Cover
Cam chain tensioner fasteners	100-120 **in-lbs**	11.3-13.6 Nm	3.24 CAM COMPARTMENT AND COMPONENTS, Cam Support Plate and Cover Installation
Cam cover screws	125-155 **in-lbs**	14.1-17.5 Nm	3.24 CAM COMPARTMENT AND COMPONENTS, Cam Support Plate and Cover Installation
Cam sprocket flange bolt, final torque	34 ft-lbs	46.1 Nm	3.24 CAM COMPARTMENT AND COMPONENTS, Cam Support Plate and Cover Installation/Apply LOCTITE 262 HIGH STRENGTH THREADLOCKER AND SEALANT (red)
Cam sprocket flange bolt, first torque	15 ft-lbs	20.3 Nm	3.24 CAM COMPARTMENT AND COMPONENTS, Cam Support Plate and Cover Installation
Cam support plate screws	100-120 **in-lbs**	11.3-13.6 Nm	3.24 CAM COMPARTMENT AND COMPONENTS, Cam Support Plate and Cover Installation
Crankcase pipe plugs	120-144 **in-lbs**	13.6-16.3 Nm	3.26 CRANKCASE DISASSEMBLY AND REPAIR, Pipe Plug and Oil Fittings
Crankcase screws, final torque	15-19 ft-lbs	20.3-25.8 Nm	3.28 CRANKCASE ASSEMBLY, Crankcase Assembly
Crankcase screws, first torque	120 **in-lbs**	13.6 Nm	3.28 CRANKCASE ASSEMBLY, Crankcase Assembly/Loosen then final tighten
Crankshaft sprocket bolt, final torque	24 ft-lbs	32.5 Nm	3.24 CAM COMPARTMENT AND COMPONENTS, Cam Support Plate and Cover Installation
Crankshaft sprocket bolt, first torque	15 ft-lbs	20.3 Nm	3.24 CAM COMPARTMENT AND COMPONENTS, Cam Support Plate and Cover Installation/Apply LOCTITE 262 HIGH STRENGTH THREADLOCKER AND SEALANT (red)
Cylinder head bolts, final torque	90 degrees	90 degrees	3.23 TOP END OVERHAUL: ASSEMBLY, Cylinder Head
Cylinder head bolts, first torque	120-144 **in-lbs**	13.6-16.3 Nm	3.23 TOP END OVERHAUL: ASSEMBLY, Cylinder Head/ See procedure to tighten
Cylinder head bolts, second torque	15-17 ft-lbs	20.3-23.0 Nm	3.23 TOP END OVERHAUL: ASSEMBLY, Cylinder Head
Cylinder head bracket bolts	35-40 ft-lbs	47.5-54.2 Nm	3.13 ASSEMBLING MOTORCYCLE AFTER SERVICE, Procedure
Cylinder head bracket bolts	35-40 ft-lbs	47.5-54.2 Nm	3.15 INSTALLING ENGINE IN CHASSIS, Procedure
Cylinder stud	120-240 **in-lbs**	13.6-27.1 Nm	3.26 CRANKCASE DISASSEMBLY AND REPAIR, Cylinder Studs
Cylinder torque plate bolts, final torque	90 degrees	90 degrees	3.21 CYLINDER, Inspection
Cylinder torque plate bolts, first torque	120-144 **in-lbs**	13.6-16.3 Nm	3.21 CYLINDER, Inspection/ See procedure to tighten
Cylinder torque plate bolts, second torque	15-17 ft-lbs	20.3-23.0 Nm	3.21 CYLINDER, Inspection
Engine oil drain plug	14-21 ft-lbs	19.0-28.5 Nm	3.29 OIL PAN, Installation/Clean plug before installation

FASTENER	TORQUE VALUE		NOTES
Footpeg bracket screws	25-35 ft-lbs	33.9-47.5 Nm	3.13 ASSEMBLING MOTORCYCLE AFTER SERVICE, Procedure
Footpeg bracket screws	25-35 ft-lbs	33.9-47.5 Nm	3.15 INSTALLING ENGINE IN CHASSIS, Procedure
Footpeg bracket screws	25-35 ft-lbs	33.9-47.5 Nm	3.15 INSTALLING ENGINE IN CHASSIS, Procedure
Front engine mounting bracket bolts	25-32 ft-lbs	33.9-43.4 Nm	3.15 INSTALLING ENGINE IN CHASSIS, Procedure
Lifter cover screws	100-120 **in-lbs**	11.3-13.6 Nm	3.23 TOP END OVERHAUL: ASSEMBLY, Pushrods, Lifters and Covers
Main bearing, right, retaining screws	40-70 **in-lbs**	4.5-7.9 Nm	3.26 CRANKCASE DISASSEMBLY AND REPAIR, Right Crankcase Half/Used screws - apply LOCTITE 243 MEDIUM STRENGTH THREADLOCKER AND SEALANT (blue)
Oil pan screws	132-156 **in-lbs**	14.9-17.6 Nm	3.29 OIL PAN, Installation
Oil pump screws, final torque	90-120 **in-lbs**	10.2-13.6 Nm	3.24 CAM COMPARTMENT AND COMPONENTS, Cam Support Plate and Cover Installation
Oil pump screws, first torque	40-45 **in-lbs**	4.5-5.1 Nm	3.24 CAM COMPARTMENT AND COMPONENTS, Cam Support Plate and Cover Installation
Piston jet screws	25-35 **in-lbs**	2.8-3.9 Nm	3.26 CRANKCASE DISASSEMBLY AND REPAIR, Right Crankcase Half
Rocker arm support plate screws	18-22 ft-lbs	24.4-29.8 Nm	3.23 TOP END OVERHAUL: ASSEMBLY, Rocker Arm Support Plate
Rocker cover screws	15-18 ft-lbs	20.3-24.4 Nm	3.23 TOP END OVERHAUL: ASSEMBLY, Breather and Rocker Cover/Apply LOCTITE 243 MEDIUM STRENGTH THREADLOCKER AND SEALANT (blue).
Rocker housing screws	120-168 **in-lbs**	13.6-19.0 Nm	3.23 TOP END OVERHAUL: ASSEMBLY, Cylinder Head/Apply LOCTITE 243 MEDIUM STRENGTH THREADLOCKER AND SEALANT (blue).
Secondary cam chain tensioner fastener	90-120 **in-lbs**	10.2-13.6 Nm	3.24 CAM COMPARTMENT AND COMPONENTS, Camshafts
Shifter foot lever pinch bolt	18-22 ft-lbs	24.4-29.8 Nm	3.15 INSTALLING ENGINE IN CHASSIS, Procedure
Spark plug	12-18 ft-lbs	16.3-24.4 Nm	3.8 TROUBLESHOOTING, Compression Test
Stabilizer link bolt	18-22 ft-lbs	24.4-29.8 Nm	3.13 ASSEMBLING MOTORCYCLE AFTER SERVICE, Procedure
Stabilizer link bolt	18-22 ft-lbs	24.4-29.8 Nm	3.15 INSTALLING ENGINE IN CHASSIS, Procedure
Timer cover screws	20-30 **in-lbs**	2.3-3.4 Nm	3.24 CAM COMPARTMENT AND COMPONENTS, Cam Support Plate and Cover Installation
Transmission drain plug	14-21 ft-lbs	19.0-28.5 Nm	3.29 OIL PAN, Installation/Clean plug before installation
Transmission mounting bolts, final torque	34-39 ft-lbs	46.1-52.9 Nm	3.15 INSTALLING ENGINE IN CHASSIS, Procedure
Transmission mounting bolts, initial torque	15 ft-lbs	20.3 Nm	3.15 INSTALLING ENGINE IN CHASSIS, Procedure

SPECIFICATIONS

Table 3-1. Engine: Twin Cam 96

ITEM	SPECIFICATION	
Number of cylinders	2	
Type	4-cycle, 45 degree V-Type, air cooled	
Compression ratio	9.2:1	
Bore	3.75 in	95.3 mm
Stroke	4.38 in	111.1 mm
Displacement	96.7 in^3	1585 cm^3
Lubrication system	Pressurized, dry sump	

Table 3-2. Engine: Twin Cam 103

ITEM	SPECIFICATION	
Number of cylinders	2	
Type	4-cycle, 45 degree V-Type, air-cooled	
Compression ratio	9.6:1	
Bore	3.875 in	98.42 mm
Stroke	4.375 in	111.12 mm
Displacement	103.0 in^3	1690 cm^3
Lubrication system	Pressurized, dry sump	

Table 3-3. Oiling System

ITEM	SPECIFICATION
Capacity with filter (approximate)	3 qt (2.8 L)
Recommended oil	Genuine Harley-Davidson H-D 360 Motorcycle Oil
Type	Twin gerotor, dual scavenge, crank mounted and driven, internal oil pump, dry sump
Pressure	30-38 psi (207-262 kPa) at 2000 rpm and normal operating temperature of 230 °F (110 °C)
Filtration	5 micron media, filtered between pump and engine

Table 3-4. Rocker Arms Specifications

ROCKER ARMS	IN	MM
Shaft fit in bushing (loose)	0.0005-0.0020	0.013-0.051
End clearance	0.003-0.013	0.08-0.33
Bushing fit in rocker arm (tight)	0.002-0.004	0.051-0.102

Table 3-5. Rocker Arm Shaft Specifications

ROCKER ARM SHAFTS	IN	MM
Shaft fit in rocker arm support plate (loose)	0.0007-0.0022	0.018-0.056

Table 3-6. Hydraulic Lifter Specifications

HYDRAULIC LIFTERS	IN	MM
Fit in crankcase (loose)	0.0009-0.0026	0.023-0.066

Table 3-7. Cylinder Head Specifications

CYLINDER HEAD	IN	MM
Valve guide in head (tight)	0.0022-0.0033	0.051-0.084
Valve seat in head (tight)	0.003-0.0045	0.076-0.114
Valve stem protrusion (min)	2.022	51.36
Head gasket surface (flatness)	0-0.006	0-0.152

Table 3-8. Valve Specifications

VALVES	IN	MM
Exhaust: fit in guide	0.001-0.003	0.0254-0.0762
Intake: fit in guide	0.001-0.003	0.0254-0.0762
Seat width	0.040-0.062	1.02-1.58
Stem protrusion from cylinder head boss	2.012-2.032	51.10-51.61

Table 3-9. Valve Springs Specifications

VALVE SPRINGS	IN	MM
Closed	135 lbs @ 1.850 in.	61.2 kg @ 47.0 mm
Open	312 lbs @ 1.300 in.	141.5 kg @ 33.0 mm
Free length	2.325 in.	59.1 mm

Table 3-10. Piston: Twin Cam 96

PISTON		IN	MM
Fit in cylinder (loose)		0.0014-0.0025	0.036-0.064
Piston pin fit (loose)		0.0002-0.0005	0.005-0.013
Ring end gap	Top compression	0.010-0.020	0.254-0.508
	2nd compression	0.014-0.024	0.356-0.610
	Oil control ring	0.010-0.050	0.254-1.27
Ring side clearance	Top compression	0.0012-0.0037	0.030-0.094
	2nd compression	0.0012-0.0037	0.030-0.094
	Oil control rails	0.0031-0.0091	0.079-0.231

Table 3-11. Piston: Twin Cam 103

PISTON		IN	MM
Fit in cylinder (loose)		0.0014-0.0025	0.036-0.064
Piston pin fit (loose)		0.0002-0.0005	0.005-0.013
Ring end gap	Top compression	0.012-0.022	0.305-0.559
	2nd compression	0.015-0.025	0.381-0.635
	Oil control ring	0.010-0.050	0.254-1.270
Ring side clearance	Top compression	0.0012-0.0037	0.030-0.094
	2nd compression	0.0012-0.0037	0.030-0.094
	Oil control rails	0.0031-0.0091	0.079-0.231

Table 3-12. Connecting Rod Specifications

CONNECTING ROD	IN	MM
Piston pin fit (loose)	0.0007-0.0012	0.018-0.030
Side play between flywheels	greater than 0.005	greater than 0.13
Connecting rod to crankpin (loose)	0.0004-0.0017	0.0102-0.0432

Table 3-13. Flywheel Specifications

FLYWHEELS	IN	MM
Runout (shaft measured in case)	0.000-0.010	0.0-0.254
Runout (measured in truing stand)	0.000-0.004	0.0-0.102
End play	0.003-0.013	0.076-0.330

Table 3-14. Crankshaft/Sprocket Shaft Bearing Specifications

CRANKSHAFT/SPROCKET SHAFT BEARINGS	IN	MM
Roller bearing fit (loose)	0.0002-0.0015	0.005-0.038
Bearing fit in crankcase (tight)	0.0038-0.0054	0.097-0.137
Bearing inner race on crankshaft (tight)	0.0004-0.0014	0.010-0.036

GENERAL

Wear limits are given here as a guideline for measuring used engine components. Replace components when they exceed values listed here.

Table 3-15. Rocker Arm/Rocker Arm Shaft

ROCKER ARM/ROCKER ARM SHAFT	REPLACE IF WEAR EXCEEDS	
	IN	MM
Shaft fit in bushing (loose)	0.0035	0.089
End clearance	0.025	0.635
Shaft fit in rocker arm support (loose)	0.0035	0.089

Table 3-16. Hydraulic Lifter

HYDRAULIC LIFTER	REPLACE IF WEAR EXCEEDS	
	IN	MM
Fit in crankcase	0.006	0.152
Roller fit	0.0015	0.038
Roller end clearance	0.022	0.559

Table 3-17. Cam Support Plate

ITEM	REPLACE IF WEAR EXCEEDS	
	IN	MM
Cam chain tensioner shoe thickness	0.060 min.	1.52 min.
Crankshaft bore maximum ID	0.8545	21.704
Camshaft bore	1.1023	27.998
Flatness	0.010	0.25

Table 3-18. Oil Pump

OIL PUMP	REPLACE IF WEAR EXCEEDS	
	IN	MM
Rotor tip clearance	0.004	0.10
Rotor thickness variation	0.001	0.025
Rotor protrusion (pump assembled)	0.015-0.025	0.38-0.64

Table 3-19. Cylinder Head

CYLINDER HEAD	REPLACE IF	
	IN	MM
Valve guide press fit in head	Less than 0.002	Less than 0.05
Valve seat press fit in head	Less than 0.002	Less than 0.05
Valve seat width (max)	0.062	1.57
Valve margin (min)	0.031	0.80
Valve stem protrusion (max)	2.069	52.55
Head warpage (max)	0.006	0.15

Table 3-20. Cylinder

CYLINDER	REPLACE IF WEAR EXCEEDS	
	IN	MM
Taper	0.002	0.051
Out of round	0.002	0.051
Warpage of gasket surfaces: top	0.006	0.152
Warpage of gasket or O-ring surfaces: base	0.004	0.102

Table 3-21. Cylinder Bore: Twin Cam 96

CYLINDER BORE	REPLACE IF WEAR EXCEEDS	
	IN	MM
Standard	3.752	95.301
0.005 in oversize	3.757	95.428
0.010 in oversize	3.762	95.555

Table 3-22. Cylinder Bore: Twin Cam 103

ITEM	REPLACE IF WEAR EXCEEDS	
	IN	MM
Standard	3.877	98.48
0.005 in oversize	3.882	98.60
0.010 in oversize	3.887	98.73

Table 3-23. Piston

PISTON		REPLACE IF WEAR EXCEEDS	
		IN	MM
Fit in cylinder (loose)		0.003	0.076
Piston pin fit (loose)		0.0008	0.020
Ring end gap	Top compression	0.030	0.762
	Second compression	0.034	0.864
	Oil control rails	0.050	1.27
Ring side clearance	Top compression	0.0045	0.114
	Second compression	0.0045	0.114
	Oil control rails	0.010	0.254

Table 3-24. Connecting Rod

CONNECTING ROD	REPLACE IF WEAR EXCEEDS	
	IN	MM
Piston pin fit (loose)	0.002	0.051
Fit on crankpin (loose)	0.002	0.051

Table 3-25. Breather Assembly

BREATHER ASSEMBLY	REPLACE IF WEAR EXCEEDS	
	IN	MM
Breather cover warpage	0.005	0.13
Breather baffle warpage	0.005	0.13

Table 3-26. Valve Stem to Guide

VALVE STEM TO GUIDE	REPLACE IF WEAR EXCEEDS	
	IN	MM
Intake	0.0038	0.0965
Exhaust	0.0038	0.0965

Table 3-27. Flywheel

FLYWHEEL	REPLACE IF WEAR EXCEEDS	
	IN	MM
Runout (shaft measured in case)	0.012	0.305
Runout (measured in truing stand)	0.005	0.127
End play	0.013	0.330

Table 3-28. Crankshaft Roller Bearing

CRANKSHAFT ROLLER BEARING	REPLACE IF	
	IN	MM
Roller bearing fit (loose)	More than 0.0015	More than 0.038
Bearing fit in crankcase (tight)	Less than 0.0038	Less than 0.097
Inner race on crankshaft (tight)	Less than 0.0004	Less than 0.010

OIL FEED

NOTE

The oiling system is carefully designed for optimum efficiency. All oil holes and passageways are specially sized. Avoid enlarging oil holes during cleaning. Any modification of the oiling system will adversely affect oil pressure or cooling and lubrication efficiency.

Two illustrations accompany this explanation.

- Cam support plate oil flow is shown in Figure 3-1.
- Top end oil flow is shown in Figure 3-2.

Oil flows from the oil pan through an internal passageway at the front of the transmission housing, and enters the lower passageway (A1) cast into the rear right side of the crankcase.

Oil exits a hole in the crankcase flange (B2). It then enters a hole on the inboard side of the cam support plate. Passing through a channel in the cam support plate (A3), oil enters the feed side of the oil pump. See 3.5 OIL PUMP OPERATION. The feed gerotors of the pump direct the flow up a second channel in the cam support plate (A4).

A passage in this channel connects to a pressure relief valve mounted in the bypass port of the cam support plate (A5). When the oil pressure exceeds the setting of the relief valve spring 35 psi (241.3 kPa), the orifice opens to bypass excess oil back to the feed side of the pump (A3).

Oil not returned to the oil pump feed side exits a hole on the inboard side of the cam support plate. Oil then flows through a hole in the crankcase flange (B6). Oil flows through a passageway in the crankcase and exits the lower off-center hole in the oil filter mount (D8). The oil pressure sending unit (B7) is also connected to this passage.

After circulating through the oil filter, the flow is directed back into the crankcase through the center hole in the oil filter mount (D9). Exiting a passageway in the crankcase through a hole in the crankcase flange (B10), the flow of oil reenters the cam support plate.

Filtered oil is then routed to the top and bottom ends of the engine as described in 3.4 ENGINE OIL FLOW, Top End and 3.4 ENGINE OIL FLOW, Bottom End which follow.

TOP END

Two illustrations accompany this explanation.

- Cam support plate oil flow is shown in Figure 3-1.
- Top end oil flow is shown in Figure 3-2.

Oil passes through a channel in the cam support plate. It exits on the crankcase side through two holes near the top (A11, A12). Oil enters two holes in the crankcase flange (B13, B14). One passage leads to the front cylinder and the other to the rear cylinder. Oil then travels through passageways in the crankcase to the hydraulic lifter bores (D15).

Oil enters each lifter bore through oblong holes (E16), flows around the lifter and enters a hole at the side of the lifter body. As the chamber inside the lifter body is filled, the pushrod socket rises to eliminate lash of the valve train components. Oil then exits a hole centered in the lifter socket and flows up the hollow pushrods.

NOTE

An additional round hole (E17) drilled into the lifter bores feeds oil to the piston jets.

Exiting holes at the top of the pushrods, oil enters the rocker arms lubricating the rocker arm bushings. Oil flows along the rocker arm shafts and exits a pin hole in the outboard side of each rocker arm (F18). This oil lubricates the valve springs and the top of the valve stem.

Oil runs to the low side of the rocker housing and enters the exhaust valve spring pocket. A drain hole (G19) leads to a passageway in the cylinder head casting.

Oil exits the bottom of the cylinder head and passes through a dowel pin (H20) on the cylinder flange. Oil flows through a vertical passageway in the cylinder. It then passes through a second dowel pin on the cylinder deck (I21) and enters the left crankcase half.

Flowing through a horizontal passageway in the left crankcase half (J22), oil runs through a third dowel pin (K23) to the right crankcase half. Finally it travels through another passageway before emptying into the cam compartment (B23, B24).

Oil collecting in the cam compartment is picked up by one of two scavenge lobes on the oil pump (B25).

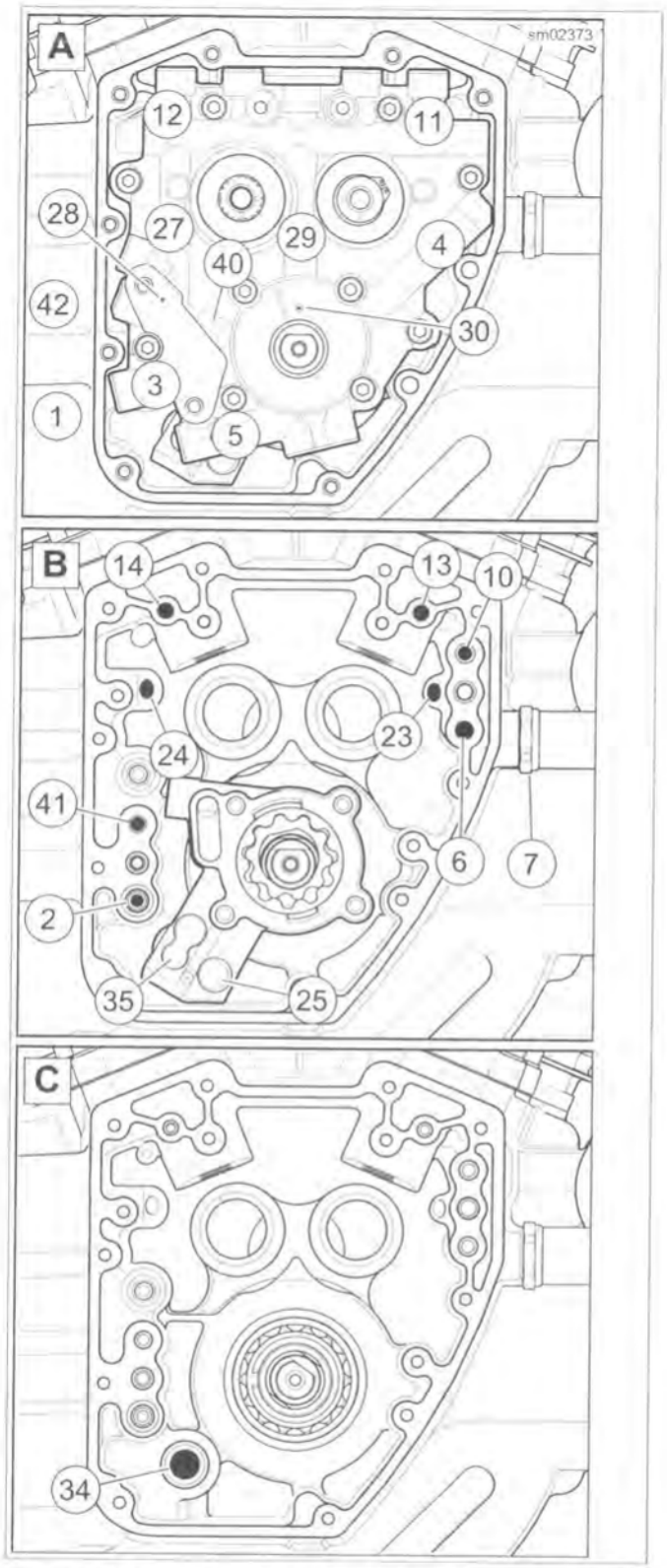

Figure 3-1. Engine Oil Flow: Cam Support Plate and Right Crankcase Half

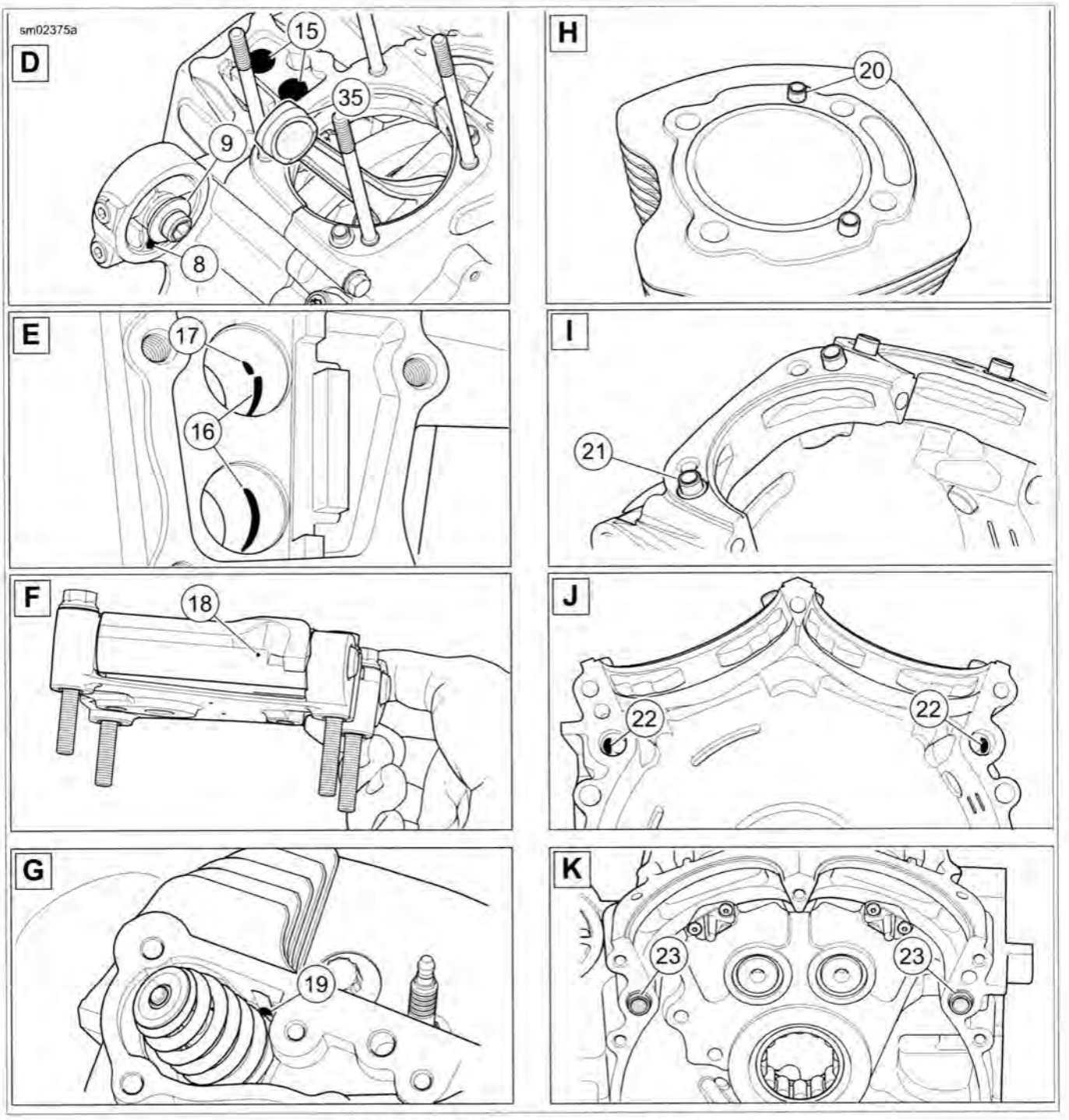

Figure 3-2. Engine Oil Flow: Top End

BOTTOM END

Three illustrations accompany this explanation.

- Cam support plate oil flow is shown in Figure 3-1.
- Top end oil flow is shown in Figure 3-2.
- Bottom end oil flow is shown in Figure 3-3.

Oil traveling through the horizontal passage (A11-A12) at the top of the cam support plate (en route to the cylinders) also passes through a hole at the top of each camshaft bore. This oil lubricates the journals of the plain bearing cams. Some oil flowing to the rear cylinder sprays through a pin hole to lubricate the secondary cam chain.

Oil to the rear cylinder also travels down the vertical passage (A27) at the rear of the cam support plate. This oil exits a hole on the outboard side to supply oil to the primary cam chain tensioner (A28).

The flow of oil in the vertical passage (A29) at the center of the cam support plate passes through a hole on the inboard side. This supplies oil to the secondary cam chain tensioner. Oil also sprays through a pin hole (A30) to lubricate the primary cam chain. Oil then flows through a hole in the crankshaft bushing where it enters a passage in the crankshaft (L31).

Oil flows through the center of the crankshaft and through a cross passage into the right side of the flywheel. Oil enters the

crank pin and exits through three holes to lubricate the lower rod bearing set.

Oil splash and mist created by flywheel rotation lubricates the crankshaft and the camshaft bearings in the right crankcase half. This same action serves to lubricate the sprocket shaft bearing in the left crankcase half (M32).

Since the oil mist also lubricates the cylinder walls, three holes on each side of the piston (in the area of the third ring land) evacuate excess oil scraped from the walls on the piston downstroke.

The piston jets (N33) receive oil from the intake lifter bores. They spray the underside of the piston for cooling of the piston crown and skirt area. A check valve in each jet opens only when the oil pressure reaches 12-18 psi (82.7-124.1 kPa), at which point the engine is operating above idle speed. Oil pressure at idle speeds will be 9-12 psi (62.1-82.7 kPa). At this pressure the valve remains closed to prevent over oiling and to provide proper system operating pressure.

Oil spray from each piston jet also sprays the bottom of each pin boss (O34) to lubricate the piston pin. The spray also allows a portion of the oil to reach the upper rod bushing (D35).

Surplus oil falls back to the bottom of the flywheel compartment where it collects in the sump area (P36). Oil in the sump is drawn to the scavenge side of the oil pump (B35) through an internal channel (P37, C34).

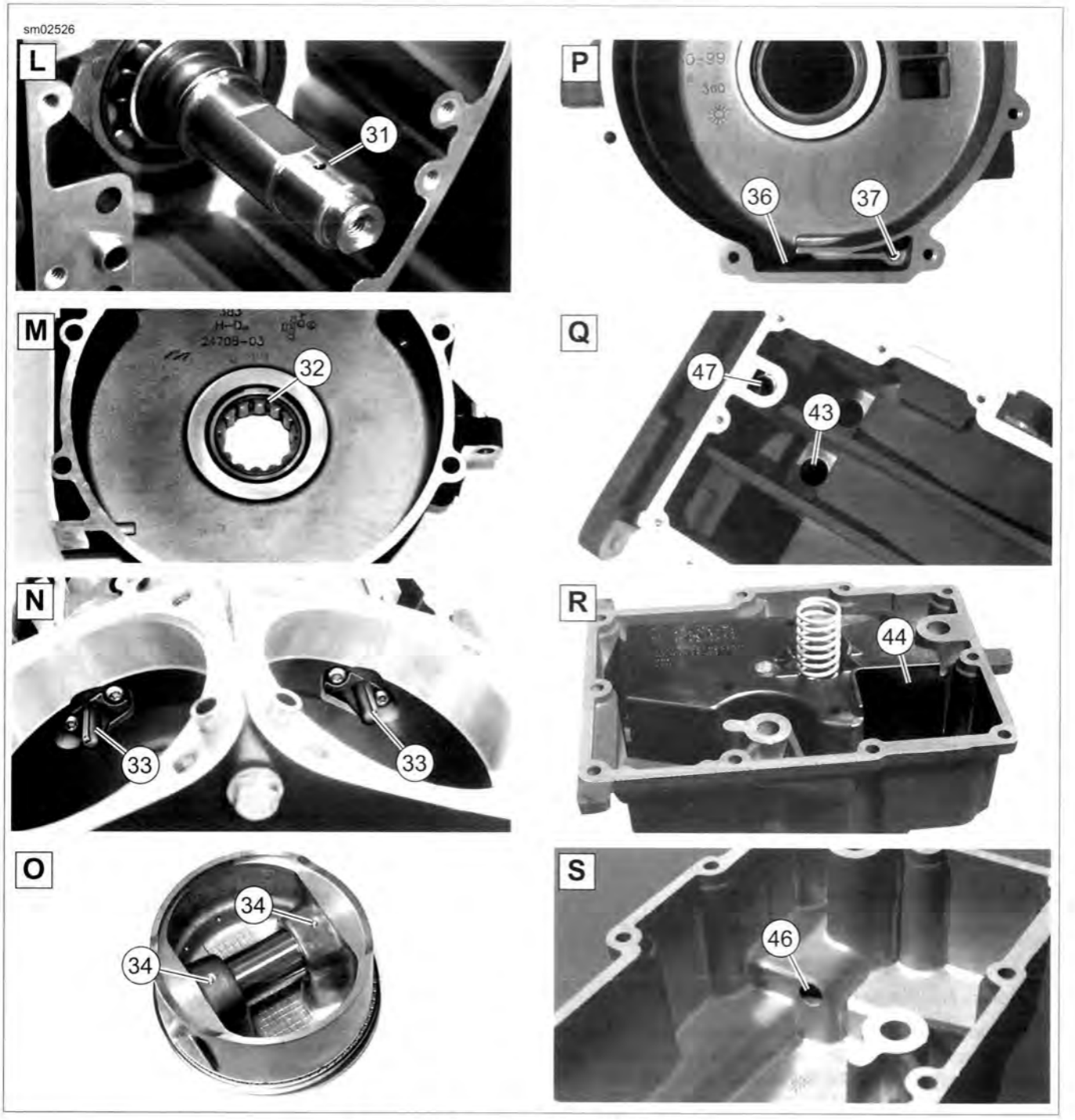

Figure 3-3. Engine Oil Flow-Bottom End

OIL RETURN

Two illustrations accompany this explanation.

- Cam support plate oil flow is shown in Figure 3-1.
- Bottom end oil flow is shown in Figure 3-3.

The "dual kidney" designation given to the oil pump refers to its two scavenging functions, whereby it simultaneously draws oil from both the cam and flywheel compartments.

Oil sucked up by the scavenge lobes passes through the scavenge gerotors of the oil pump and is directed through a return channel in the cam support plate (A40). See 3.5 OIL PUMP OPERATION.

Exiting a hole on the inboard side of the cam support plate,the oil enters the upper hole in the crankcase flange (B41).

The oil flows through the upper passageway in the crankcase (A42), enters a passageway at the front of the transmission housing and empties into the oil pan at the front of the baffle (Q43, R44).

The oil flows to the rear of the oil pan along each side of the baffle. Spring tension holds the unit tight against the bottom of the pan to prevent oil from entering or escaping around the perimeter of the baffle. At the back of the oil pan, the oil enters the open side of the baffle where it is redirected for-ward. The baffle plates slow the circulation of the oil through the pan to enhance cooling.

Oil pickup occurs in the front compartment of the baffle where a passageway in the casting (S46) directs the flow upward. Passing through a second passageway in the trans-mission housing (Q47), the flow of oil enters the lower passageway in the crankcase (A1) to repeat the circuit.

GENERAL

See Figure 3-4. The oil pump has two gerotor gear sets driven by the crankshaft.

- The feed gerotor set distributes oil to the engine.
- The scavenge gerotor set draws oil from the cam and flywheel compartments and returns it to the oil pan.

Each gerotor gear set has an inner and outer gerotor. The inner and outer gerotors have fixed centers that are slightly offset to one another. Also, the inner gerotor has one less tooth.

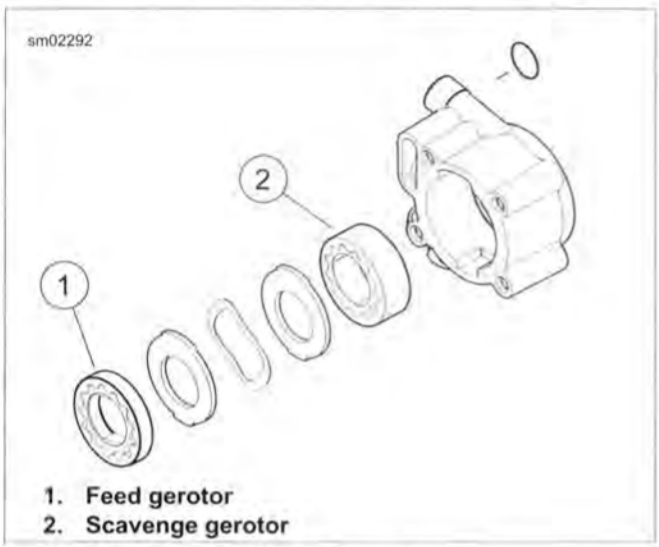

1. **Feed gerotor**
2. **Scavenge gerotor**

Figure 3-4. Oil Pump Gerotors

OPERATION

The oil pump is driven by the crankshaft. The inlet and outlet sides of the pump are sealed by the tips and lobes of the inner and outer gerotors. This prevents oil on the outlet side (high pressure) from being transferred to the inlet side.

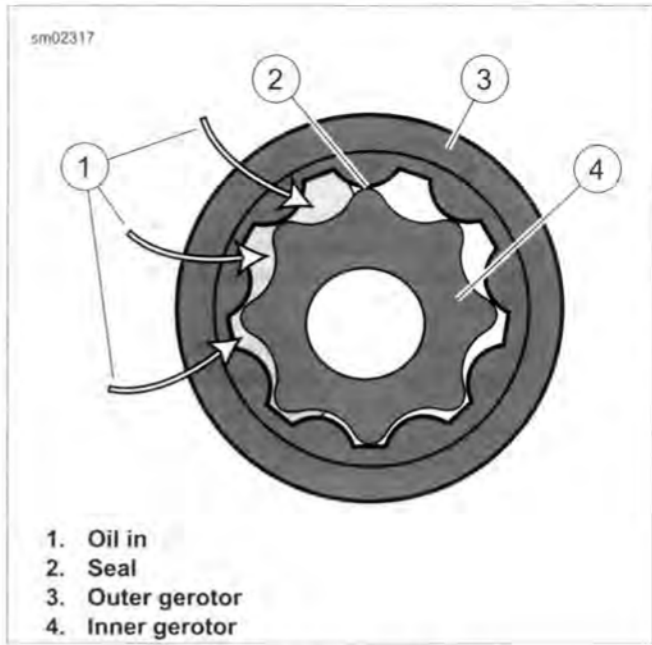

1. **Oil in**
2. **Seal**
3. **Outer gerotor**
4. **Inner gerotor**

Figure 3-5. Inlet Side Oil Flow

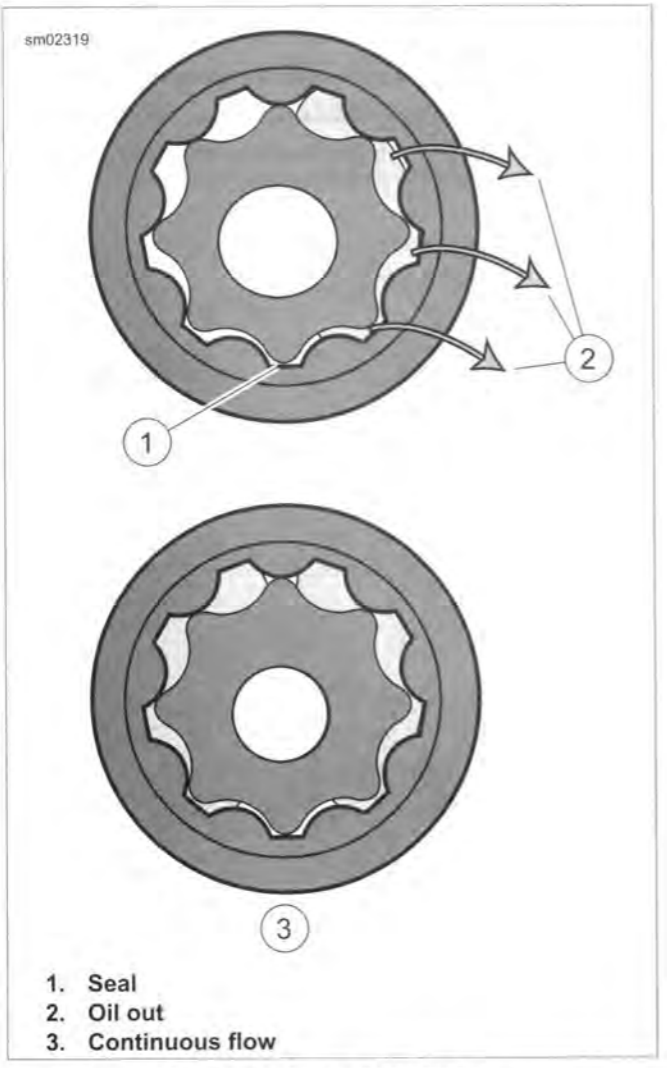

1. Seal
2. Oil out
3. Continuous flow

Figure 3-6. Outlet Side Oil Flow

See Figure 3-5. As the gerotors rotate, the cavity volume increases between the inner and outer gerotors on the inlet side of the pump. This creates a vacuum causing oil to be drawn in. The cavity increases until the volume is equivalent to that of the missing tooth on the inner gerotor.

See Figure 3-6. As the oil moves to the outlet side of the pump, the cavity decreases in volume. This forces pressurized oil out the discharge port. In operation, the gerotors provide a continuous flow of oil.

GENERAL

The crankcase breather system relieves crankcase pressure produced by the downstroke of the pistons. Crankcase vapors are then directed into the intake air stream to be burned during normal combustion. Burning crankcase vapors eliminates the pollutants normally discharged from the crankcase.

See Figure 3-7. As pistons push downward, displaced air in the crankcase is vented through the crankshaft roller bearing into the cam compartment. The air then flows up the pushrod covers (1) into the rocker housing. The moving air absorbs a small amount if oil vapor as it travels through the engine.

The oil/air vapor rushes under the rocker arm support plate and passes through an opening at the bottom of the plate to enter the breather baffle compartment (2).

In the baffle compartment, the flow of air passes upward through the oil filter gauze, where the oil is removed from the air. Two pin holes in the rocker arm support plate allow the separated oil to drain back into the crankcase.

Passing through the oil filter gauze, the vapor passes through the umbrella valve (3) into the breather compartment. The umbrella valve only allows air to be vented one way.

In the breather compartment, air flows downward through holes aligned in the breather baffle, rocker arm support plate and rocker housing. Exiting the rocker housing, air enters a passageway cast into the top of the cylinder head. Proper orientation of the rocker housing gasket is critical for effective sealing of this passageway.

Air flows through the cylinder head passageway and through a passage in the air cleaner backplate bolt (4). It passes through a breather tube (5) into the air filter element. It then joins with the intake air stream and is burned during normal combustion.

NOTE

Always connect breather tubes. Loose or detached tubes vent crankcase gases into the atmosphere which violates emissions standards.

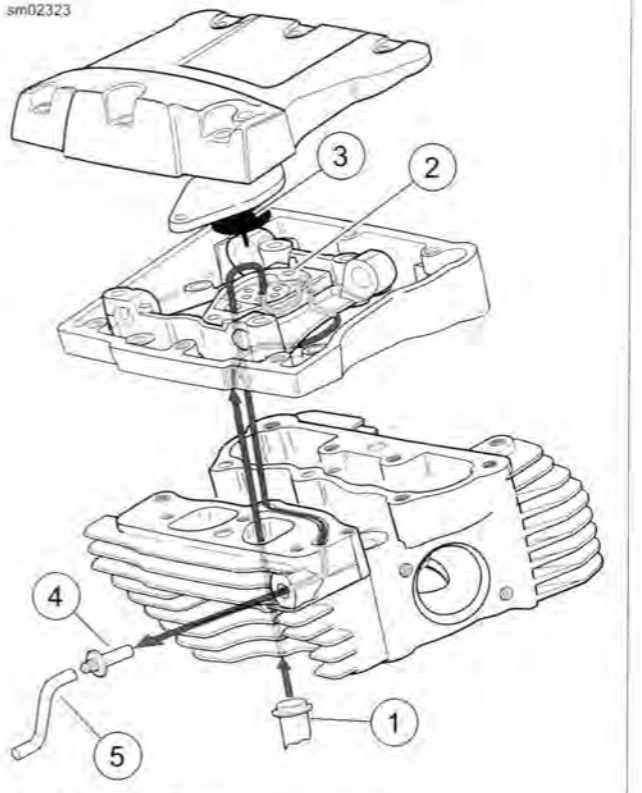

1. **Pushrod cover**
2. **Breather baffle compartment**
3. **Umbrella valve**
4. **Air cleaner backplate bolt**
5. **Breather tube**

Figure 3-7. Breather Air Flow

OIL PRESSURE INDICATOR LAMP

See Figure 3-8. The red OIL PRESSURE indicator lamp illuminates to indicate improper pressure of the engine oil. The lamp illuminates when the ignition is initially turned on (before the engine is started), but should extinguish once the engine is running.

NOTICE

If the oil pressure indicator lamp remains lit, always check the oil supply first. If the oil supply is normal and the lamp is still lit, stop the engine at once and do not ride further until the trouble is located and the necessary repairs are made. Failure to do so may result in engine damage. (00157a)

If the indicator lamp does not extinguish, it may be caused by low oil level or diluted oil supply. In freezing weather, the oil feed and return lines can clog with ice or sludge. Other conditions that may cause the lamp to remain lit are:

- Faulty lamp wiring
- Faulty oil pressure sending unit
- Damaged oil pump
- Plugged oil filter element
- Incorrect oil viscosity for the operating temperature
- Fractured or weak spring in the oil pressure relief valve
- Incorrectly installed O-rings in the engine

To troubleshoot the problem, always check the engine oil level first. If the oil level is OK, determine if oil returns to the oil pan. If oil does not return, shut off the engine until the problem is located and corrected.

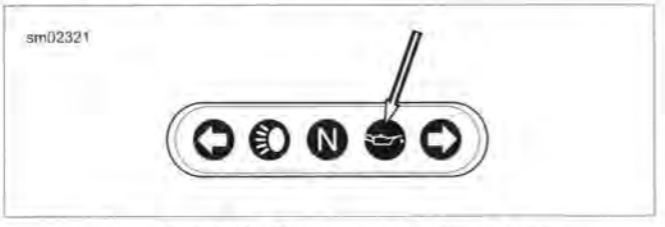

Figure 3-8. Oil Pressure Indicator Lamp

CHECKING OIL PRESSURE

PART NUMBER	TOOL NAME
HD-96921-52D	OIL PRESSURE GAUGE SET

1. Verify that engine oil is at the proper level. See 1.5 ENGINE OIL AND FILTER.
2. Ride motorcycle until engine oil is at normal operating temperature.
3. See Figure 3-9. Remove oil pressure switch from crankcase. See 7.28 OIL PRESSURE SWITCH.
4. See Figure 3-10. Install OIL PRESSURE GAUGE SET (Part No. HD-96921-52D).
   a. Hand-tighten adapter (2) in oil pressure switch mounting hole.
   b. Assemble banjo bolt (3), washer (4), oil pressure gauge (1), banjo fitting and second washer onto adapter. Hand-tighten.

NOTE

Engine oil should be at normal operating temperature, 230 °F (110 °C), for an accurate reading.

5. Verify that oil pressure is within specifications. Refer to Table 3-29.
6. See 3.8 TROUBLESHOOTING if readings are not within specification.
7. Stop engine. Remove oil pressure gauge assembly.
8. Install oil pressure switch. See 7.28 OIL PRESSURE SWITCH.

Table 3-29. Oil Pressure

CHECK	SPECIFICATION *	
	SAE	METRIC
Oil pressure - min at idle	5 psi	34.5 kPa
Oil pressure - normal at 2000 rpm	30-38 psi	207-262 kPa
Oil pressure - max	50 psi	345 kPa
* With oil at normal operating temperature of 230 °F (110 °C)		

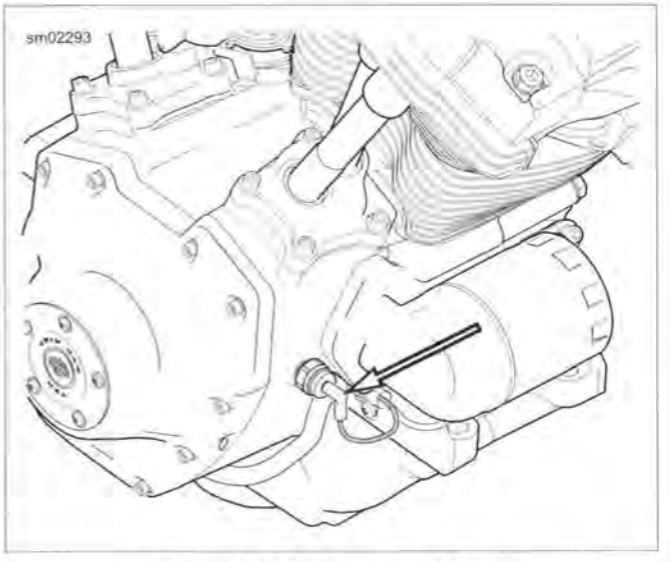

Figure 3-9. Oil Pressure Switch

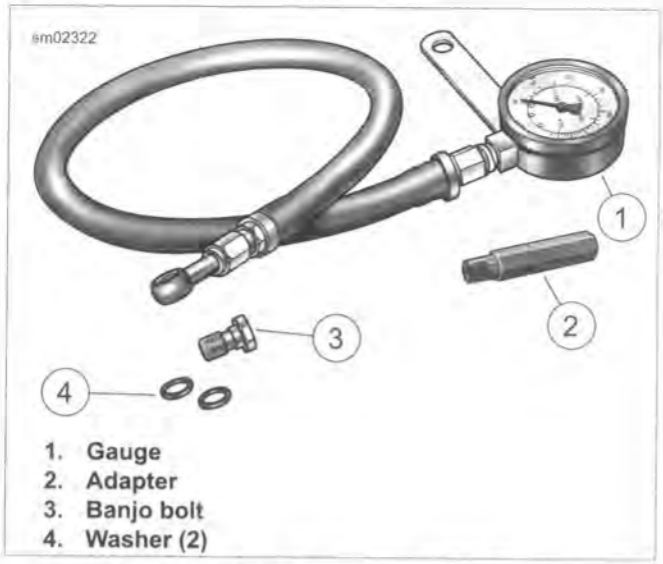

1. Gauge
2. Adapter
3. Banjo bolt
4. Washer (2)

Figure 3-10. Oil Pressure Gauge Set

DIAGNOSING VALVE TRAIN NOISE

NOTE

When starting an engine which has been turned off even for a few minutes, the valve mechanism may be slightly noisy until the hydraulic lifters completely refill with oil. If the valve mechanism becomes abnormally noisy, other than for a short period immediately after engine is started, it may indicate that one or more of the hydraulic lifters is not functioning properly.

1. With engine and oil at normal operating temperature, check oil pressure at 2000 rpm. If oil pressure is above 50 psi (345 kPa) or below 5 psi (34 kPa), inspect the following for restrictions or blockage:
   a. Oil pump
   b. Crankcase passages
   c. Oil hoses
2. Replace or repair as necessary.
3. If oil not reaching the hydraulic lifters is suspected, remove lifters and inspect. See 3.19 PUSHRODS, LIFTERS AND COVERS, Inspect Lifters. Clean lifter bore of all foreign material. Replace hydraulic lifter if necessary.
4. Inspect pushrod, lifter and lifter bore for proper fit and unusual wear. Replace or repair as necessary.
5. Visually inspect camshaft lobes for abnormal wear.
6. Check cam chain tensioning shoe for wear.
7. Check top end components.
   a. Remove rocker box assemblies and cylinder heads.
   b. Check rocker arm for excess end play or binding.
   c. Inspect valve stems for scuffing and check stem to guide clearance.
   d. Check valve seats for signs of looseness or shifting.
8. Grind valves and valve seats. See 3.20 CYLINDER HEAD, Valve and Seat Refacing.

COMPRESSION TEST

PART NUMBER	TOOL NAME
HD-33223-1	CYLINDER COMPRESSION GAUGE

FASTENER	TORQUE VALUE	
Spark plug	12-18 ft-lbs	16.3-24.4 Nm

Check for cylinder leakage with a compression test. Use CYLINDER COMPRESSION GAUGE (Part No. HD-33223-1) with a screw-in type adapter.

NOTE

All Twin Cam engines use a 12 mm adapter with the compression gauge.

1. Run motorcycle until engine is at normal operating temperature.
2. Disconnect spark plug wires, clean around plug base. Remove spark plugs.
3. Remove air cleaner. See 4.3 AIR CLEANER ASSEMBLY.
4. Connect compression tester to front cylinder per manufacturer's instructions.
5. Verify transmission is in NEUTRAL. Hold throttle at wide open throttle position and crank engine continuously through 5-7 full compression strokes. Note gauge readings at the end of the first and last compression strokes. Record test results.
6. **ACR models:** Disconnect the ACR. Repeat the test.
7. Repeat tests on rear cylinder.
8. Clear DTC codes when test is complete.

NOTE

Verify that throttle is closed before assembling air cleaner.

9. Install air cleaner. See 4.3 AIR CLEANER ASSEMBLY.
10. Refer to Table 3-30. Normal readings are within specifications and do not indicate more than a 10 percent variance between cylinders.
11. If readings do not meet specifications:
    a. Disconnect ACRs.
    b. Inject approximately 1/2 oz. (15 ml) engine oil into each cylinder.
    c. Repeat the compression tests on both cylinders.
    d. Readings that are considerably higher during the second test indicate worn piston rings.

    If worn piston rings are not suspected, refer to Table 3-31 for possible causes.
12. Install the spark plugs. Tighten to 12-18 ft-lbs (16.3-24.4 Nm). Connect spark plug wires.

Table 3-30. Compression Specifications

ACR STATUS	PSI	kPa
Engines without ACR	125 (min)	862 (min)
ACR connected	110 (min)	758 (min)
ACR disconnected	175 (min)	1207 (min)

NOTE

The following conditions assume the ACRs are disconnected and closed.

Table 3-31. Compression Test Results

DIAGNOSIS	TEST RESULTS
Ring trouble	Compression low on first stroke, tends to build up on the following strokes, but does not reach normal. Improves considerably when oil is added to cylinder.
Valve trouble	Compression low on first stroke, does not build up much on following strokes. Does not improve considerably with the addition of oil. Check for correct pushrod length.
Head gasket leak	Same reaction as valve trouble.

CYLINDER LEAKDOWN TEST

PART NUMBER	TOOL NAME
HD-35667-A	CYLINDER LEAKDOWN TESTER

NOTE

On vehicles with automatic compression release (ACR), verify the ACRs are closed for this test. Perform the test with the ignition switch turned OFF.

The cylinder leakdown test helps pinpoint leaking valves, worn, damaged or stuck piston rings and blown head gaskets. The cylinder leakage tester applies compressed air to the cylinder at a controlled pressure and volume. It then measures the percent of leakage from the cylinder.

Use the CYLINDER LEAKDOWN TESTER (Part No. HD-35667-A). Follow the specific instructions supplied with the tester.

1. Before performing the cylinder leakdown test, verify the tester itself is free from leakage.
   a. Apply a soap solution around all tester fittings.
   b. Connect cylinder leakdown tester to compressed air source.
   c. Look for any bubbles that indicate leakage from the tester.
2. Run motorcycle until engine is at normal operating temperature. Stop engine.
3. Clean around spark plug base. Remove spark plugs.
4. Rotate crankshaft until piston in the cylinder being tested is at top dead center (TDC) of compression stroke (both valves closed).
5. Engage transmission in highest gear and lock the rear brake. This prevents the engine from turning over when air pressure is applied to the cylinder.
6. Following the manufacturer's instructions, perform a cylinder leakdown test on the front cylinder. Make a note of the percent of leakage. Leakage greater than 10 percent indicates internal engine problems.
7. Listen for air leaks at throttle body, exhaust pipe and head gasket. Air escaping through the throttle body indicates a leaking intake valve. Air escaping through the exhaust pipe indicates a leaking exhaust valve.

NOTE

If air is escaping through valves, verify that piston is still at TDC or check for correct pushrod length.

8. Repeat procedure on rear cylinder.

DIAGNOSING SMOKING ENGINE OR HIGH OIL CONSUMPTION

Perform both a compression test and a cylinder leakage test. See 3.8 TROUBLESHOOTING, Compression Test and 3.8 TROUBLESHOOTING, Cylinder Leakdown Test. If further testing is needed, inspect for the following:

Check Before Cylinder Head Removal:

1. Oil level too high
2. Oil carryover
3. Breather hose restricted
4. Restricted oil filter

Check After Cylinder Head Removal:

1. Oil return passages for clogging
2. Valve guide seals
3. Valve guide to valve stem clearance
4. Gasket surface of both head and cylinder
5. Cylinder head casting porosity allowing oil to drain into combustion chamber
6. O-ring damaged or missing from oil pump/crankcase junction
7. If the above checks do not reveal the cause, remove the cylinder to inspect for excess piston ring wear. Also verify that the piston ring gaps are properly staggered.

TOP END REPAIR

NOTE

During top end disassembly, the engine may be left in the chassis for service.

If servicing only cylinder head components, pistons or cylinders, two options are available depending on engine status.

- 3.10 TOP END SERVICE, Engine in Chassis.
- 3.10 TOP END SERVICE, Engine Removed from Chassis.

BOTTOM END REPAIR

NOTE

Servicing components in the cam compartment requires only partial disassembly. This can be done with the engine left in the chassis.

After disassembling to the cylinder heads, it might become evident that bottom end repair is necessary. Bottom end service requires either partial or complete disassembly of the engine.

- To service the cam compartment, see 3.24 CAM COMPARTMENT AND COMPONENTS.
- To service components in the flywheel compartment, the engine must be removed and the crankcase halves separated. See 3.11 CAM COMPARTMENT SERVICE, Engine Removed From Chassis.

TYPICAL SYMPTOMS

Symptoms indicating a need for engine repair are often misleading. If more than one symptom is present, possible causes can be narrowed to make at least a partial diagnosis.

For example, an above normal consumption of oil could be caused by several mechanical faults. However when accompanied by blue-gray smoke from the exhaust and low compression, it indicates the rings need replacing. Low compression by itself is more likely to be caused by improperly seated or burned valves, not worn rings.

Certain knocking noises may occur because of loose bearings, others by piston slap. Piston slap is a condition where piston or cylinder or both are out of tolerance. This excessive clearance allows the piston to slap the cylinder as it moves up and down.

Most frequently, valves, rings, pins, bushings and bearings need attention at about the same time. If the symptoms indicate that any one of the above components is worn, service all related parts.

ENGINE IN CHASSIS

Table 3-32. Engine In Chassis

SERVICE PROCEDURE		COMPONENT REPAIR PROCEDURE
Remove parts to gain access to all components above cylinder deck. See 3.12 STRIPPING MOTORCYCLE FOR SERVICE.		
Disassemble top end. See 3.16 TOP END OVERHAUL: DISASSEMBLY.		
	BREATHER ASSEMBLY	Inspect and repair. See 3.17 BREATHER ASSEMBLY*.
	ROCKER ARM SUPPORT	Inspect and repair. See 3.18 ROCKER ARM SUPPORT PLATE*.
	PUSHRODS, LIFTERS AND COVERS	Inspect and repair. See 3.19 PUSHRODS, LIFTERS AND COVERS*.
	CYLINDER HEAD	Inspect and repair. See 3.20 CYLINDER HEAD*.
	CYLINDER	Inspect and repair. See 3.21 CYLINDER*.
	PISTON	Inspect and repair. See 3.22 PISTON*.
Assemble top end. See 3.23 TOP END OVERHAUL: ASSEMBLY.		
Assemble motorcycle. See 3.13 ASSEMBLING MOTORCYCLE AFTER SERVICE.		
Note: * If no other work is to be done, advance to 3.23 TOP END OVERHAUL: ASSEMBLY when this step is completed during top end service.		

ENGINE REMOVED FROM CHASSIS

Table 3-33. Engine Removed From Chassis

SERVICE PROCEDURE		COMPONENT REPAIR PROCEDURE
Remove engine from motorcycle. See 3.14 REMOVING ENGINE FROM CHASSIS.		
Disassemble top end. See 3.16 TOP END OVERHAUL: DISASSEMBLY.		
	BREATHER ASSEMBLY	Inspect and repair. See 3.17 BREATHER ASSEMBLY*.
	ROCKER ARM SUPPORT	Inspect and repair. See 3.18 ROCKER ARM SUPPORT PLATE*.
	PUSHRODS, LIFTERS AND COVERS	Inspect and repair. See 3.19 PUSHRODS, LIFTERS AND COVERS*.
	CYLINDER HEAD	Inspect and repair. See 3.20 CYLINDER HEAD*.
	CYLINDER	Inspect and repair. See 3.21 CYLINDER*.
	PISTON	Inspect and repair. See 3.22 PISTON.
Assemble top end. See 3.23 TOP END OVERHAUL: ASSEMBLY.		
Install engine in motorcycle. See 3.15 INSTALLING ENGINE IN CHASSIS.		
Note: * If no other work is to be done, advance to 3.23 TOP END OVERHAUL: ASSEMBLY when this step is completed during top end service.		

REPLACE CAMSHAFT

Table 3-34. Engine In Chassis: Cam Compartment Service

SERVICE PROCEDURE		COMPONENT REPAIR PROCEDURES
Remove parts to gain access to all components above cylinder deck. See 3.12 STRIPPING MOTORCYCLE FOR SERVICE.		
Disassemble top end. See 3.16 TOP END OVERHAUL: DISASSEMBLY.		
	BREATHER ASSEMBLY.	Inspect and repair. See 3.17 BREATHER ASSEMBLY.
	ROCKER ARM SUPPORT PLATE.	Inspect and repair. See 3.18 ROCKER ARM SUPPORT PLATE.
	PUSHRODS, LIFTERS AND COVERS.	Inspect and repair. See 3.19 PUSHRODS, LIFTERS AND COVERS.
Disassemble bottom end. See 3.24 CAM COMPARTMENT AND COMPONENTS.		
	COVER AND CAM SUPPORT PLATE	Inspect and repair. See 3.24 CAM COMPARTMENT AND COMPONENTS*.
	OIL PUMP	Inspect and repair. See 3.25 OIL PUMP.
Assemble bottom end. See 3.24 CAM COMPARTMENT AND COMPONENTS.		
Assemble motorcycle. See 3.13 ASSEMBLING MOTORCYCLE AFTER SERVICE.		
Note: * If no other work is to be done, advance to 3.28 CRANKCASE ASSEMBLY when this step is completed during bottom end service.		

ENGINE REMOVED FROM CHASSIS

Table 3-35. Engine Removed: Flywheel Compartment Service or Complete Engine Overhaul

SERVICE PROCEDURE		COMPONENT REPAIR PROCEDURES
Remove engine from motorcycle. See 3.14 REMOVING ENGINE FROM CHASSIS.		
Disassemble top end. See 3.16 TOP END OVERHAUL: DISASSEMBLY.		
	BREATHER ASSEMBLY	Inspect and repair. See 3.17 BREATHER ASSEMBLY.
	ROCKER ARM SUPPORT PLATE	Inspect and repair. See 3.18 ROCKER ARM SUPPORT PLATE.
	PUSHRODS, LIFTERS AND COVERS	Inspect and repair. See 3.19 PUSHRODS, LIFTERS AND COVERS.
	CYLINDER HEAD	Inspect and repair. See 3.20 CYLINDER HEAD.
	CYLINDER	Inspect and repair. See 3.21 CYLINDER.
	PISTON	Inspect and repair. See 3.22 PISTON.
Disassemble bottom end.		
	COVER AND CAM SUPPORT PLATE	Inspect and repair. See 3.24 CAM COMPARTMENT AND COMPONENTS.
	CRANKCASE	Inspect crankcase and repair. See 3.26 CRANKCASE DISASSEMBLY AND REPAIR.
		Inspect and repair flywheel/connecting rod assembly. See 3.27 FLYWHEEL AND CONNECTING RODS.
Assemble bottom end. See 3.28 CRANKCASE ASSEMBLY and 3.24 CAM COMPARTMENT AND COMPONENTS.		
Assemble top end. See 3.23 TOP END OVERHAUL: ASSEMBLY.		
Install engine in motorcycle. See 3.15 INSTALLING ENGINE IN CHASSIS.		

PROCEDURE

Cam Compartment Service Only

⚠WARNING

To prevent accidental vehicle start-up, which could cause death or serious injury, disconnect negative (-) battery cable before proceeding. (00048a)

1. Disconnect negative battery cable.
2. Remove exhaust shields and exhaust. See 4.15 EXHAUST SYSTEM.
3. Remove the fuel tank. See 4.4 FUEL TANK.
4. **Mid mount controls:** Remove rear brake pedal and right footpeg bracket. Disconnect assembly from master cylinder actuator lever.
5. Remove air cleaner cover and backplate. See 4.3 AIR CLEANER ASSEMBLY.
6. Remove spark plugs.

Complete Top End Service

1. Perform all steps under Cam Compartment Service Only
2. Remove throttle control cables from induction module. See 4.8 INDUCTION MODULE.
3. Remove induction module. See 4.8 INDUCTION MODULE.
4. Remove stabilizer link and horn bracket as an assembly.
   a. Remove right side stabilizer link nut, bolt and spacer from frame tab.
   b. Remove two bolts from horn bracket and cylinder heads.
5. Gather disconnected branches of the harness and tape to the top of the wire trough to keep out of the way.

PROCEDURE

FASTENER	TORQUE VALUE	
Stabilizer link bolt	18-22 ft-lbs	24.4-29.8 Nm
Cylinder head bracket bolts	35-40 ft-lbs	47.5-54.2 Nm
Footpeg bracket screws	25-35 ft-lbs	33.9-47.5 Nm

After Complete Top End Service

1. Install induction module. See 4.8 INDUCTION MODULE.
2. Release disconnected branches of main harness from wire trough.

NOTE

If the stabilizer link bolt cannot be installed without pushing the engine to the right or left, perform the vehicle alignment procedure. See 2.9 VEHICLE ALIGNMENT.

3. Install horn bracket/stabilizer link assembly. Place spacer between frame tab and stabilizer link. Make sure that horn ground wire is installed beneath bracket on front cylinder.
   a. Tighten the stabilizer link bolt to 18-22 ft-lbs (24.4-29.8 Nm).
   b. Tighten two cylinder head bracket bolts to 35-40 ft-lbs (47.5-54.2 Nm).
4. Install spark plugs. See 1.16 SPARK PLUGS.
5. Install throttle cables to induction module. See 4.8 INDUCTION MODULE.
6. Continue with steps under After Cam Compartment Service Only.

After Cam Compartment Service Only

1. Install fuel tank. See 4.4 FUEL TANK.
2. Install air cleaner components. See 4.3 AIR CLEANER ASSEMBLY.
3. **Mid mount controls:** Install right footpeg bracket and rear brake pedal with two screws. Tighten to 25-35 ft-lbs (33.9-47.5 Nm).
4. Install exhaust system. See 4.15 EXHAUST SYSTEM.
5. Connect negative battery cable.

PROCEDURE

1. Position motorcycle on a lift.
2. Remove seat.

⚠WARNING

Disconnect negative (-) battery cable first. If positive (+) cable should contact ground with negative (-) cable connected, the resulting sparks can cause a battery explosion, which could result in death or serious injury. (00049a)

3. Disconnect both battery cables, negative battery cable first.
4. Remove air cleaner cover and backplate. See 4.3 AIR CLEANER ASSEMBLY.

⚠WARNING

To prevent spray of fuel, purge system of high-pressure fuel before supply line is disconnected. Gasoline is extremely flammable and highly explosive, which could result in death or serious injury. (00275a)

5. Remove fuel tank. See 4.4 FUEL TANK.
6. Remove throttle control cables from induction module. See 4.8 INDUCTION MODULE.
7. Remove exhaust system. See 4.15 EXHAUST SYSTEM.
8. Remove rear brake pedal and right footpeg bracket. Disconnect assembly from master cylinder actuator lever.
9. Disconnect the following connectors.
   a. Crankshaft position sensor connector [79]
   b. Stator/voltage regulator connector [46]
   c. Oil pressure sending unit connector [140]
10. Drain primary chaincase. See 1.8 PRIMARY CHAINCASE LUBRICANT.
11. Remove shifter foot lever from primary chaincase.
12. Remove left footpeg and bracket.
13. Remove primary chaincase housing. See 5.5 PRIMARY CHAINCASE HOUSING.
14. Remove spark plugs.
15. Remove stabilizer link and horn bracket as an assembly.
   a. Remove right side stabilizer link nut, bolt and spacer from frame tab.
   b. Remove two bolts from horn bracket and cylinder heads.
16. Disconnect MAP sensor connector [80].

NOTE

Note routing of clutch cable before removing.

17. Disconnect clutch cable:
   a. Disconnect clutch cable from clutch lever. See 2.24 CLUTCH CONTROL.
   b. Unclip cable at left frame downtube. Pull cable through chassis to right side of motorcycle.
   c. Leave cable installed on transmission.
18. Place protective material on both front downtubes.
19. Position jack under transmission with a wooden block between jack and oil pan. Raise jack enough to support transmission.
20. Secure transmission to chassis (vertically) with a ratchet strap to prevent transmission from shifting position.
21. Remove four bolts and washers to free engine from transmission.
22. Remove two bolts and washers that secure engine to front engine mount bracket.
23. Remove engine oil dipstick.

NOTE

The engine aligns to the transmission with two dowels that fit in the lower mounting bolt holes and extend out approximately 0.5 in (12.7 mm) from the transmission. The engine may have to be rotated counterclockwise slightly to disengage the locating dowels.

24. Using a hoist, remove engine from the right side of chassis.

PROCEDURE

FASTENER	TORQUE VALUE	
Transmission mounting bolts, initial torque	15 ft-lbs	20.3 Nm
Transmission mounting bolts, final torque	34-39 ft-lbs	46.1-52.9 Nm
Front engine mounting bracket bolts	25-32 ft-lbs	33.9-43.4 Nm
Stabilizer link bolt	18-22 ft-lbs	24.4-29.8 Nm
Cylinder head bracket bolts	35-40 ft-lbs	47.5-54.2 Nm
Footpeg bracket screws	25-35 ft-lbs	33.9-47.5 Nm
Shifter foot lever pinch bolt	18-22 ft-lbs	24.4-29.8 Nm
Footpeg bracket screws	25-35 ft-lbs	33.9-47.5 Nm

1. Install **new** engine to transmission case gasket.
2. Using a hoist, position engine in chassis and align four transmission mounting holes. Position engine so two lower locating dowel pins engage holes in crankcase.
3. Install four bolts and washers to mate transmission and engine. Tighten bolts finger-tight.
4. Align two front engine mount bracket holes. Install bolts and washers. Tighten bolts finger-tight.
5. See Figure 3-11. Tighten the transmission mounting bolts in the sequence shown:
   a. Tighten to 15 ft-lbs (20.3 Nm).
   b. Tighten to 34-39 ft-lbs (46.1-52.9 Nm).
6. Tighten two crankcase to front engine mounting bracket bolts to 25-32 ft-lbs (33.9-43.4 Nm).
7. Remove ratchet strap securing transmission to chassis.
8. Install engine oil dipstick.
9. Remove jack and wooden block from under transmission.
10. Remove protective material from front downtubes.
11. See 2.24 CLUTCH CONTROL. Route clutch cable to left side. Install to clutch lever. Secure clutch cable to left downtube with clip.
12. Connect MAP sensor connector [80] to MAP sensor.

NOTE

If the stabilizer link bolt cannot be installed without pushing the engine to the right or left, perform the vehicle alignment procedure. See 2.9 VEHICLE ALIGNMENT.

13. Install horn bracket/stabilizer link assembly. Place spacer between frame tab and stabilizer link. Make sure that horn ground wire is installed beneath bracket on front cylinder.
    a. Tighten the stabilizer link bolt to 18-22 ft-lbs (24.4-29.8 Nm).
    b. Tighten two cylinder head bracket bolts to 35-40 ft-lbs (47.5-54.2 Nm).
14. Install spark plugs. See 1.16 SPARK PLUGS.
15. Install primary chaincase housing. See 5.5 PRIMARY CHAINCASE HOUSING.

NOTE

Make sure that spring washer is in position on shifter shaft between engine and primary chaincase.

16. Adjust clutch. See 1.10 CLUTCH.

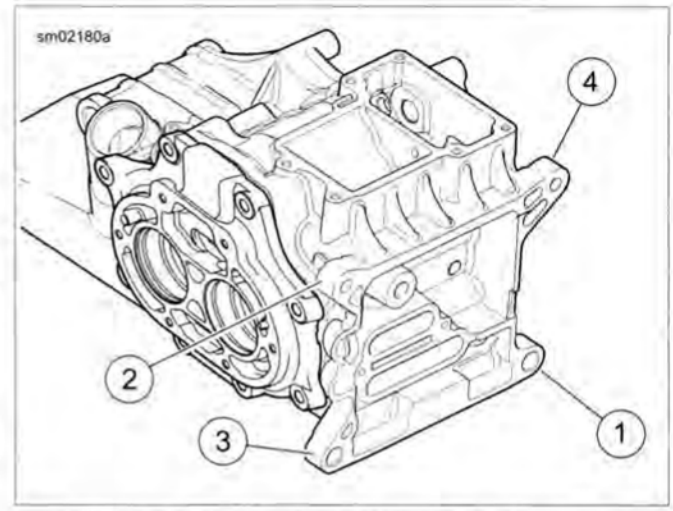

Figure 3-11. Transmission Housing to Crankcase Tightening Sequence

17. Install primary chaincase cover. Install drain plug. See 5.5 PRIMARY CHAINCASE HOUSING.
18. Fill primary chaincase. See 1.8 PRIMARY CHAINCASE LUBRICANT.
19. Install left side footpeg and bracket with two screws. Tighten to 25-35 ft-lbs (33.9-47.5 Nm).
20. Install shifter foot lever to primary chaincase. Tighten pinch bolt to 18-22 ft-lbs (24.4-29.8 Nm). Connect shifter linkage.
21. Connect the following connectors.
    a. Crankshaft position sensor connector [79]
    b. Stator/voltage regulator connector [46]
    c. Oil pressure sending unit connector [140]
22. Install right footpeg bracket and rear brake pedal with two screws. Tighten to 25-35 ft-lbs (33.9-47.5 Nm).
23. Install exhaust and exhaust shields. See 4.15 EXHAUST SYSTEM.
24. Install throttle control cables to induction module. See 4.8 INDUCTION MODULE.

⚠WARNING

When servicing the fuel system, do not smoke or allow open flame or sparks in the vicinity. Gasoline is extremely flammable and highly explosive, which could result in death or serious injury. (00330a)

25. Install fuel tank. See 4.4 FUEL TANK.

26. Install air cleaner components. See 4.3 AIR CLEANER ASSEMBLY.

⚠WARNING

Connect positive (+) battery cable first. If positive (+) cable should contact ground with negative (-) cable connected, the resulting sparks can cause a battery explosion, which could result in death or serious injury. (00068a)

27. Connect both battery cables, positive battery cable first.

⚠WARNING

After installing seat, pull upward on seat to be sure it is locked in position. While riding, a loose seat can shift causing loss of control, which could result in death or serious injury. (00070b)

28. Install seat.
29. Install **new** oil filter. Fill engine with oil. See 1.5 ENGINE OIL AND FILTER.
30. Remove motorcycle from lift.
31. Perform vehicle alignment. See 2.9 VEHICLE ALIGNMENT.
32. Check rear brakes, clutch and throttle for proper operation.
33. Check engine oil level. See 1.5 ENGINE OIL AND FILTER.

GENERAL

It is assumed that each step performed on one cylinder is repeated on the other.

To perform a complete top end overhaul, follow all steps listed in this section including inspection and repair procedures.

ROCKER COVERS

NOTE

Dirt caked on cooling fins and other areas can fall into crankcase bore. It can also stick to sub-assemblies as parts are removed. Abrasive particles can damage machined surfaces or plug oil passageways. Clean parts before disassembly to prevent component damage.

1. Use low-pressure, compressed air to thoroughly clean exterior surfaces of engine before disassembly.
2. See Figure 3-12. Following the sequence shown, loosen the six rocker cover screws. Remove the rocker cover screws.
3. Remove the rocker cover and gasket. Discard gasket.

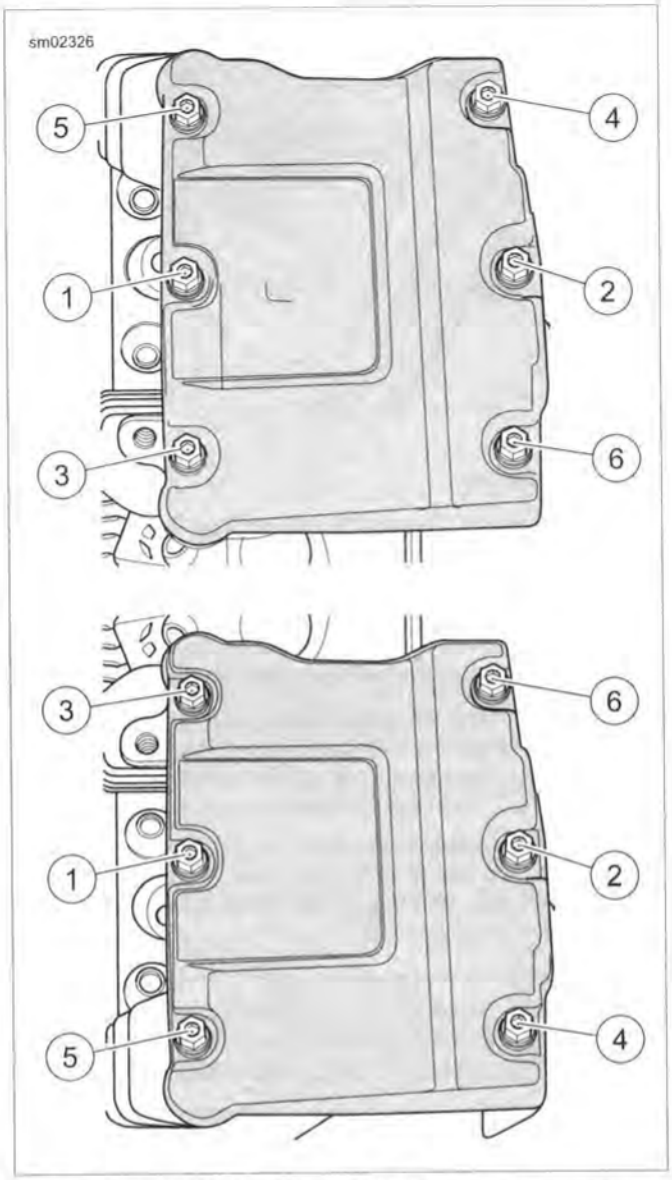

Figure 3-12. Rocker Cover Bolt Removal Sequence

ROCKER ARM SUPPORT PLATE

PART NUMBER	TOOL NAME
HD-48283	CRANKSHAFT ROTATING WRENCH

1. See Figure 3-13. Release pushrod covers:
   a. Insert the blade of a screwdriver into tab (1) of spring cap retainer.
   b. While pushing down on spring cap (2), rotate bottom of screwdriver toward outboard side to remove.
   c. Repeat step on second pushrod cover.
   d. Collapse upper and lower pushrod covers.

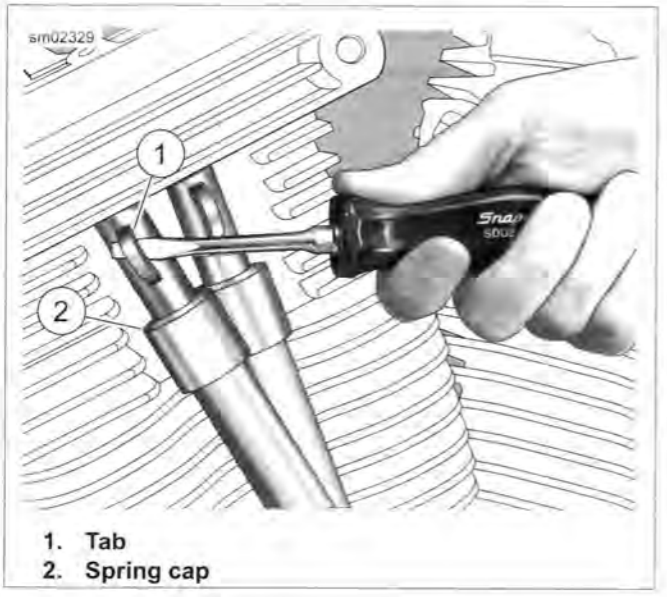

1. **Tab**
2. **Spring cap**

Figure 3-13. Removing Spring Cap Retainer

NOTE

Do not attempt to rotate the crankshaft by placing a socket on the crankshaft or compensating sprocket bolt.

2. When removing the rocker arm support plate, both lifters must be on the base circle (lowest position) of the cam. Rotate the crankshaft until piston for cylinder being serviced is at TDC of the compression stroke.
   a. **With primary cover installed:** Remove spark plugs. With the rear wheel raised, place the transmission in sixth gear and rotate rear wheel backward until the base circle is found.
   b. **With primary cover removed:** Remove spark plugs. Verify transmission is in NEUTRAL. Using a large socket on the compensating sprocket retainer, rotate counterclockwise until the base circle is found.
   c. See Figure 3-14. **With engine mounted in engine stand:** Install CRANKSHAFT ROTATING WRENCH (Part No. HD-48283) on sprocket shaft. Rotate counterclockwise until the base circle is found.



Figure 3-14. Crankshaft Rotating Wrench

NOTE

*Breather baffle assembly is manufactured with gaskets attached. Any time the breather is disassembled, the baffle assembly must be replaced with a **new** assembly.*

3. See Figure 3-15. Remove breather assembly (arrow) and filter element from the rocker arm support plate. For inspection and repair information, see 3.17 BREATHER ASSEMBLY.
4. Loosen the four rocker arm support plate screws one-quarter turn at a time in the sequence shown. Remove the screws.
5. Remove the rocker arm support plate assembly. For inspection and repair information, see 3.18 ROCKER ARM SUPPORT PLATE.
6. See Figure 3-16. Remove and discard breather O-ring from rocker housing.

NOTE

If the other cylinder also requires service, find the cam base circle for that cylinder before disassembling.

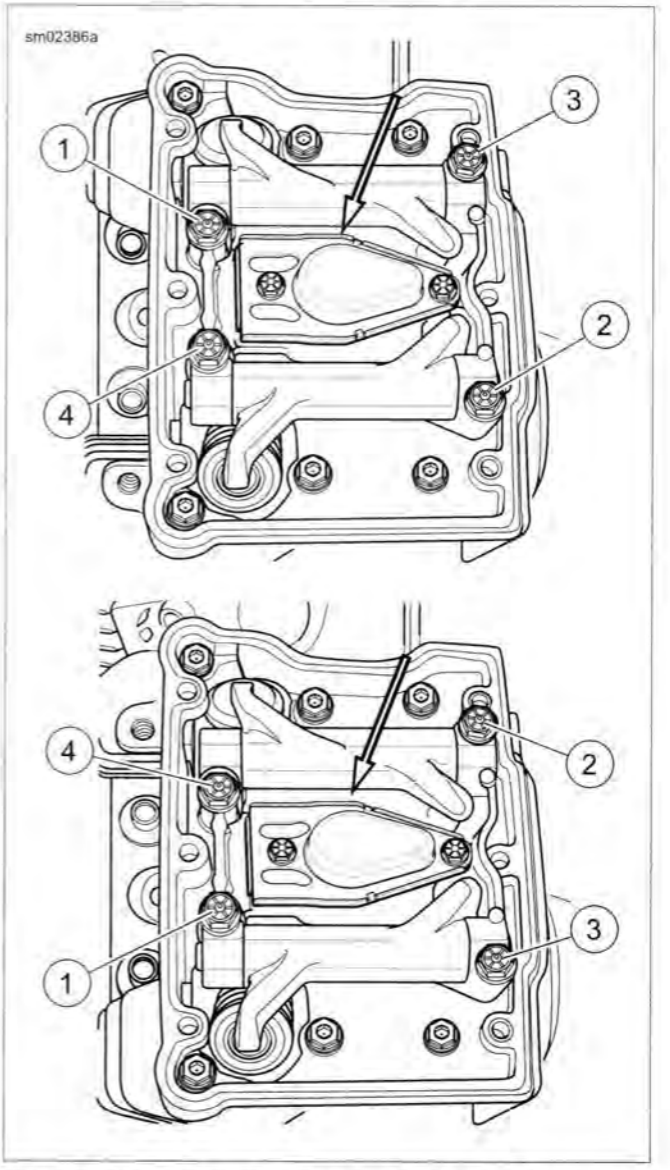

Figure 3-15. Rocker Arm Support Tightening Sequence

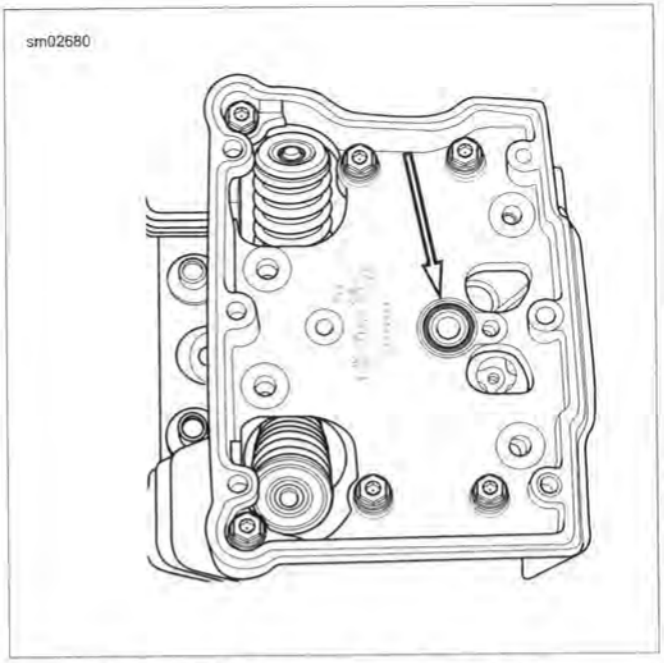

Figure 3-16. Breather Baffle Hole O-Ring

PUSHRODS, LIFTERS AND COVERS

NOTE

Mark parts for location and orientation upon removal.

1. See Figure 3-17. Remove the pushrods and pushrod covers:
   a. Remove pushrods.
   b. Remove pushrod covers.
   c. Remove and discard three O-rings from pushrod covers. If O-ring is missing from upper pushrod cover, make sure to remove it from the cylinder head bore.
2. See Figure 3-18. Remove lifter covers:
   a. Remove four screws (1).
   b. Remove the lifter cover (2) and gasket. Discard gasket.
3. Remove lifters:
   a. Remove the lifter anti-rotation pin.
   b. Remove the lifters and place in clean plastic bags to prevent contamination.
4. For inspection and repair information, see 3.19 PUSHRODS, LIFTERS AND COVERS.

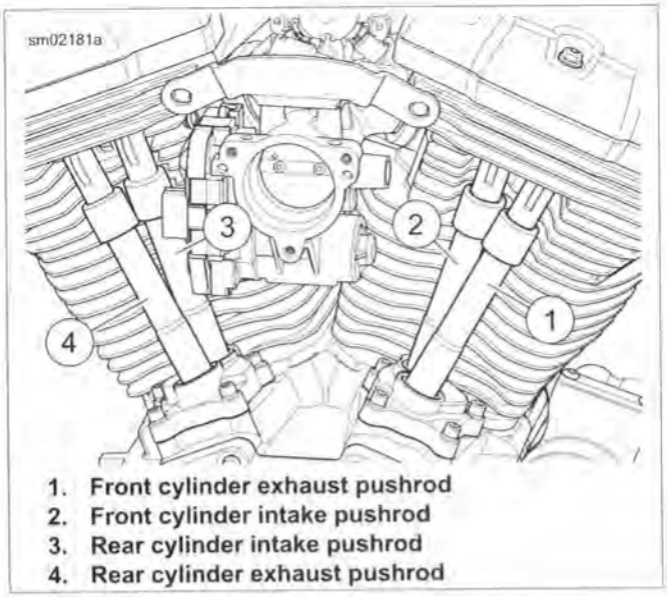

1. **Front cylinder exhaust pushrod**
2. **Front cylinder intake pushrod**
3. **Rear cylinder intake pushrod**
4. **Rear cylinder exhaust pushrod**

Figure 3-17. Pushrod Locations



1. **Screw with captive washer (4)**
2. **Lifter cover**

Figure 3-18. Lifter Cover

CYLINDER HEAD

PART NUMBER	TOOL NAME
HD-42324-A	CYLINDER TORQUE PLATES

1. See Figure 3-19. Following the sequence shown, remove the six rocker housing screws.
2. Remove rocker housing and gasket. Discard gasket.

NOTE

To prevent distortion of the cylinder head, cylinder and cylinder studs, gradually loosen the cylinder headbolts in the specified sequence.

3. See Figure 3-20. Remove cylinder headbolts:
   a. Following the sequence shown, loosen cylinder headbolts one-quarter turn at a time.
   b. Remove the cylinder headbolts.
4. Remove cylinder head and head gasket.

NOTE

Save the cylinder head gasket (if salvageable) for use with the CYLINDER TORQUE PLATES (Part No. HD-42324-A) when measuring, boring or honing of the cylinder is required.

5. For inspection and repair information, see 3.20 CYLINDER HEAD.

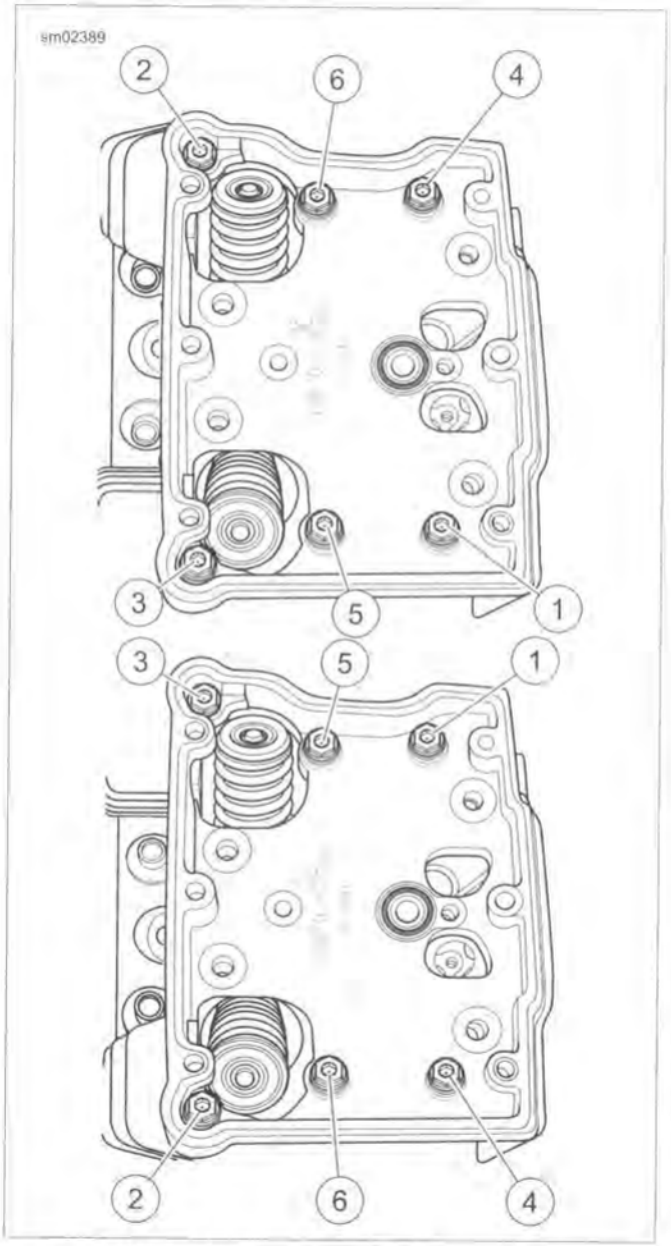

Figure 3-19. Rocker Housing Bolts Removal Sequence

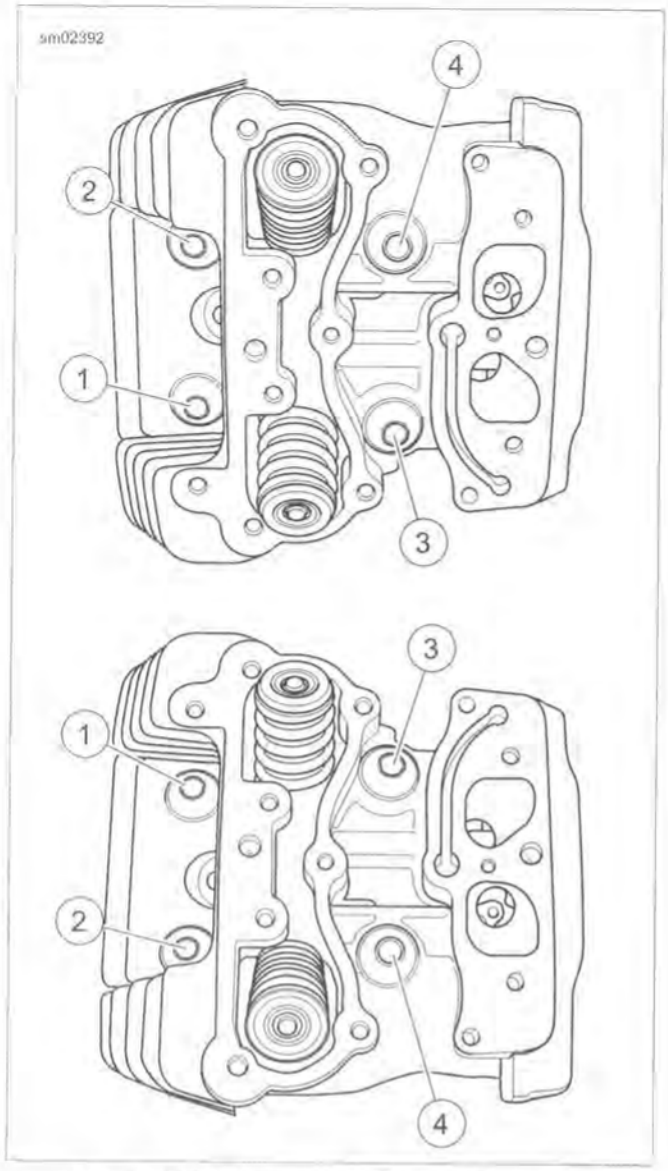

Figure 3-20. 1/4 Turn Head Bolts in Sequence

CYLINDER

1. Raise the cylinder just enough to place clean shop towels under the piston. This will prevent any dirt or debris, such as broken ring pieces, from falling into the crankcase bore.

NOTE

Do not bend the cylinder studs. Even a slight bend or nick can cause a stress riser leading to stud failure.

2. Carefully remove the cylinder. Exercise caution to avoid bending the cylinder studs. As the piston becomes free of the cylinder, hold it upright to prevent it from striking the studs or dragging across the stud thread area.
3. Mark cylinder FRONT or REAR as appropriate.
4. Slide approximately 6.0 in (152 mm) of plastic tubing, rubber hose or conduit over each cylinder stud. Use material with ID of 0.5 in (12.7 mm) to protect cylinder studs and piston from damage.
5. See Figure 3-21. Remove O-ring seal (4) from the bottom of the cylinder liner. Discard O-ring seal.

6. See Figure 3-22. Remove O-ring from dowel pin (4) on base of cylinder deck. Discard O-ring.
7. For inspection and repair information, see 3.21 CYLINDER.

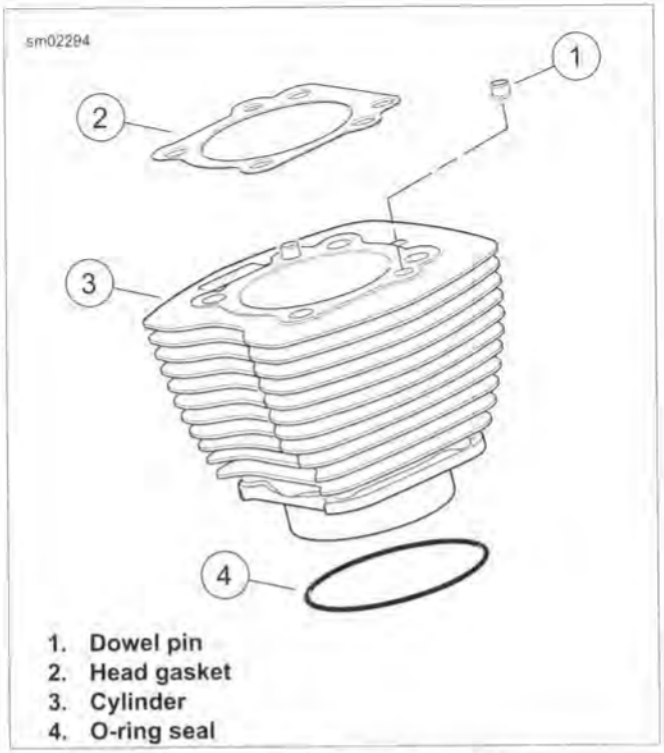

1. **Dowel pin**
2. **Head gasket**
3. **Cylinder**
4. **O-ring seal**

Figure 3-21. Cylinder Assembly

PISTON

PART NUMBER	TOOL NAME
HD-42317-A	PISTON PIN RETAINING RING INSTALLER
HD-42320-C	PISTON PIN REMOVER

1. Place clean shop towels over crankcase bore. This prevents the piston pin retaining ring from falling into the crankcase.

⚠WARNING

Wear safety glasses or goggles when removing or installing piston pin retaining rings. Piston pin retaining rings are compressed in the ring groove and can fly out when removed from the groove, which could result in serious eye injury. (00293a)

NOTE

It is not necessary to remove both piston pin retaining rings for piston removal.

2. See Figure 3-22. Using PISTON PIN RETAINING RING INSTALLER (Part No. HD-42317-A), remove and discard one piston pin retaining ring.
   a. Insert tool (1) into piston pin bore. Position claw on tool in slot of piston (2) (directly under retaining ring).
   b. Squeeze handles of tool together. Pull retaining ring from bore. Discard retaining ring.

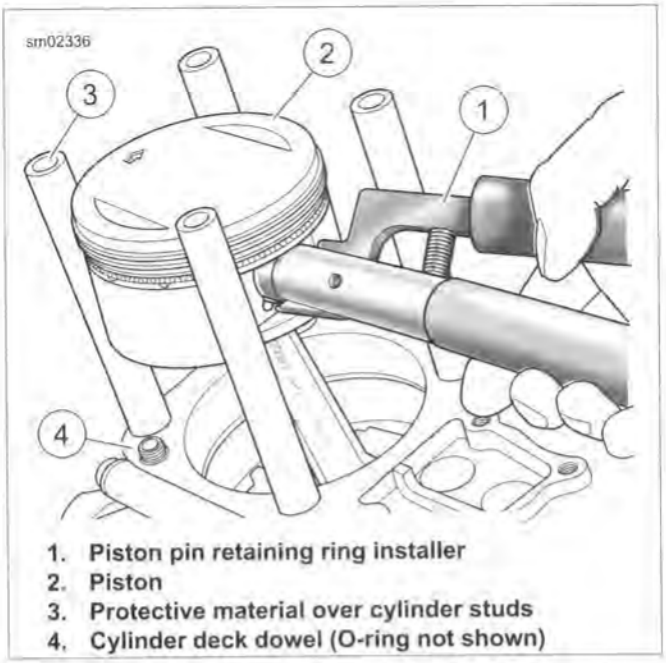

1. **Piston pin retaining ring installer**
2. **Piston**
3. **Protective material over cylinder studs**
4. **Cylinder deck dowel (O-ring not shown)**

Figure 3-22. Piston Pin Retaining Ring Removal

3. See Figure 3-23. Remove the piston pin. Use PISTON PIN REMOVER (Part No. HD-42320-C) if necessary.
4. Remove the piston. Hold the connecting rod to prevent it from striking the crankcase.
5. Place a 3.0 in (76.2 mm) long piece of foam-type water pipe insulation around connecting rod to prevent damage. Use material with an ID of 1.0 in (25.4 mm).
6. Turn the piston over. Mark the pin boss with the letters F (front) or R (rear) to identify location.
7. For inspection information, see 3.22 PISTON.
8. Complete engine repair:
   a. If performing a top end overhaul only, see 3.23 TOP END OVERHAUL: ASSEMBLY.
   b. If performing a complete engine overhaul, see 3.24 CAM COMPARTMENT AND COMPONENTS and 3.26 CRANKCASE DISASSEMBLY AND REPAIR.

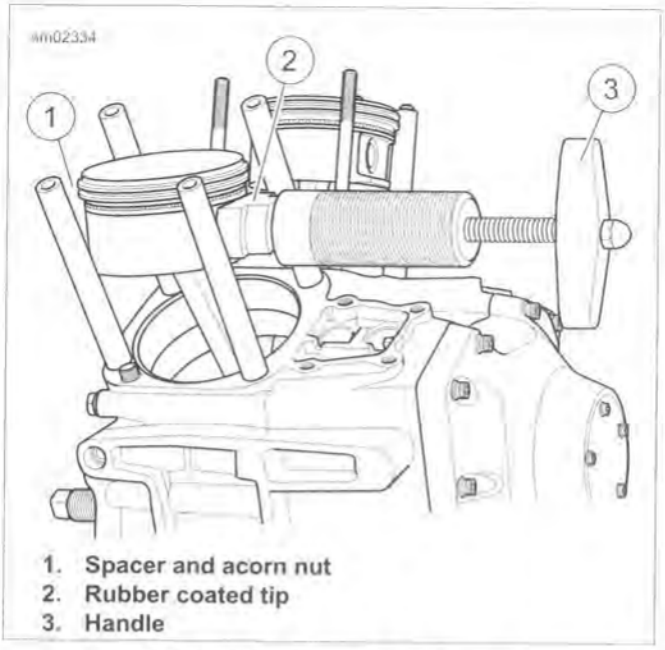

1. Spacer and acorn nut
2. Rubber coated tip
3. Handle

Figure 3-23. Piston Pin Removal

DISASSEMBLY

NOTE

See Figure 3-24. Breather baffle assembly is manufactured with gaskets attached. Replacement part is supplied with the filter element (5) and umbrella valve (3). Any time the breather is disassembled, the baffle assembly must be replaced with a ***new*** *assembly.*

1. Remove rocker cover. See 3.16 TOP END OVERHAUL: DISASSEMBLY, Rocker Covers.
2. Remove two fasteners (1). Remove breather cover (2).
3. Remove breather baffle (4). Discard breather baffle, filter element (5) and umbrella valve (3).

CLEANING AND INSPECTION

⚠WARNING

Compressed air can pierce the skin and flying debris from compressed air could cause serious eye injury. Wear safety glasses when working with compressed air. Never use your hand to check for air leaks or to determine air flow rates. (00061a)

1. Clean cover and screws in a non-volatile cleaning solution or solvent. Dry parts with low-pressure, compressed air.
2. Set a straightedge diagonally across the length of the breather cover gasket surface.
3. Slide a feeler gauge beneath the straightedge to check the breather cover flatness.
4. Repeat checking the opposite diagonal.
5. Replace the breather cover if warpage exceeds 0.005 in (0.13 mm).

ASSEMBLY

See Figure 3-24. Install breather assembly and rocker cover using **new** baffle assembly. See 3.23 TOP END OVERHAUL: ASSEMBLY, Breather and Rocker Cover.

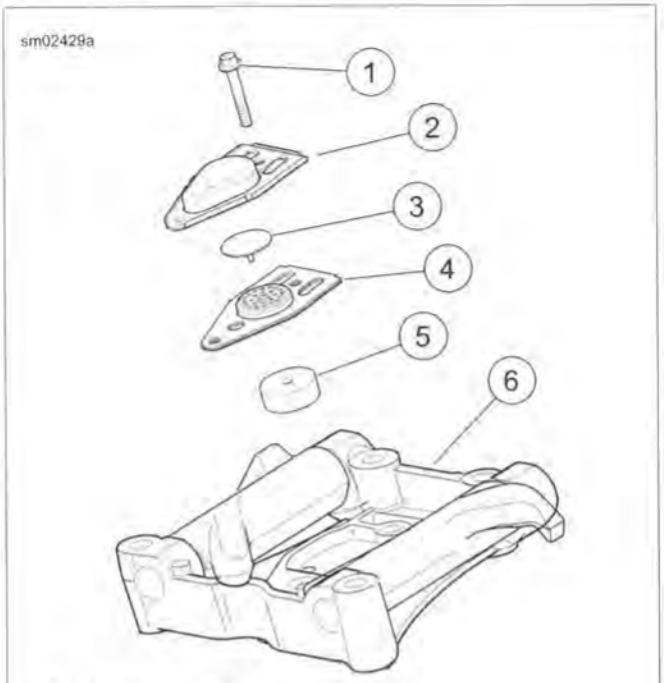

1. **Fasteners (2)**
2. **Breather cover**
3. **Umbrella valve**
4. **Breather baffle**
5. **Filter element**
6. **Rocker arm support plate**

Figure 3-24. Breather Assembly

DISASSEMBLY

1. See Figure 3-26. Remove four bolts and flat washers (1) from the rocker arm support plate (5).
2. See Figure 3-25. Check for proper end play.
   a. Insert a feeler gauge between the rocker arm and support plate.
   b. Repeat measurement on other rocker arm.
   c. Replace the rocker arm, rocker arm support plate or both if end play exceeds 0.025 in (0.635 mm).
3. See Figure 3-26. Remove the rocker arm shafts (4) so that the notched ends exit the rocker arm support plate (5) first. Use a hammer and brass drift if necessary. Mark the shafts so that they are installed in their original locations at time of assembly.
4. Remove the rocker arms. Mark the rocker arms to indicate location.



Figure 3-25. Check End Play

CLEANING, INSPECTION AND REPAIR

Inspection

⚠WARNING

Compressed air can pierce the skin and flying debris from compressed air could cause serious eye injury. Wear safety glasses when working with compressed air. Never use your hand to check for air leaks or to determine air flow rates. (00061a)

1. Clean all parts in a non-volatile cleaning solution or solvent. Dry parts with low-pressure, compressed air.
2. See Figure 3-26. Inspect rocker arms (3). Replace rocker arm if excessive wear is found.
   a. Check for uneven wear or pitting where valve stem tips make contact.
   b. Check for concave wear where rocker arms contact the pushrod ends.
3. Verify that oil holes in rocker arms and rocker arm support plate (5) are clean and open.
4. Inspect rocker arm shafts (4) for scratches, burrs, scoring or excessive wear. Replace if necessary.

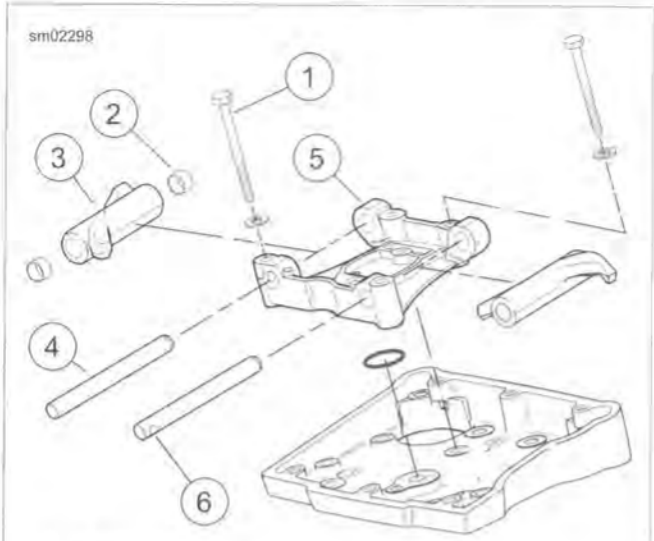

1. **Bolt with flat washer**
2. **Rocker arm bushings**
3. **Rocker arm**
4. **Rocker arm shaft**
5. **Rocker arm support plate**
6. **Notch**

Figure 3-26. Rocker Arm Assembly

Rocker Shaft Fit

1. See Figure 3-27. Measure the inside diameter of the rocker arm support plate bore.
2. See Figure 3-28. Measure the outside diameter of the rocker arm shaft where it fits in the bore.
3. Repeat the measurement on opposite side of support plate and shaft. Replace shaft, support plate or both if clearance exceeds service wear limit of 0.0035 in (0.089 mm).

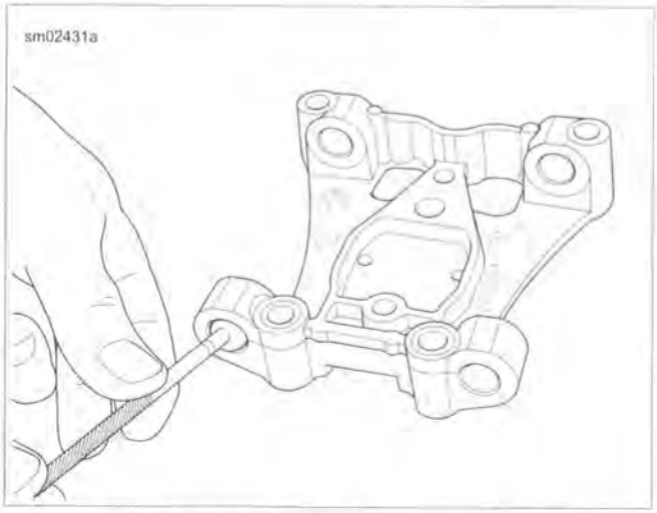

Figure 3-27. Checking Support Plate Bore

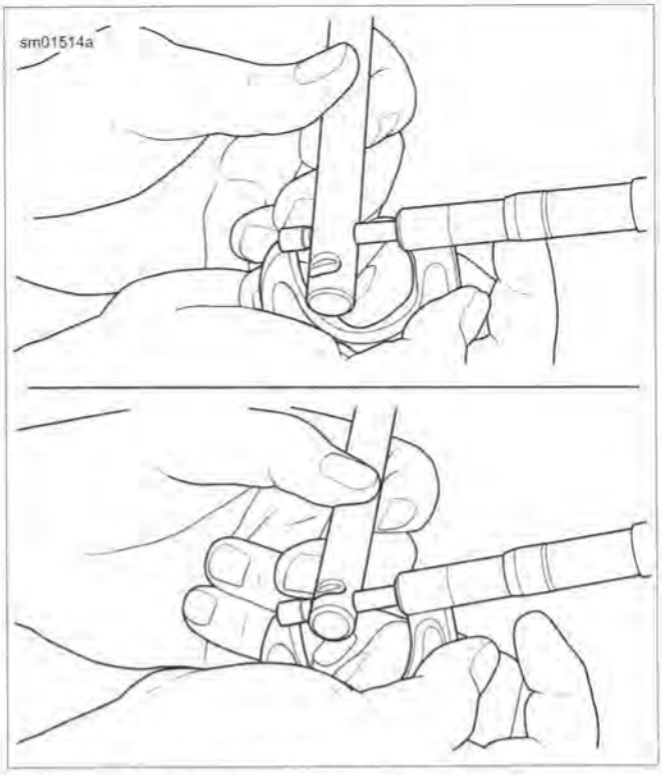

Figure 3-28. Measuring Rocker Arm Shaft Diameter at Bushing Position (top) and Cover Position (bottom)

Rocker Arm Shaft to Bushing

1. Check rocker arm shaft to bushing fit.
   a. See Figure 3-29. Measure the inside diameter of the rocker arm bushing.
   b. See Figure 3-28. Measure the outside diameter of the rocker arm shaft where it rides in the bushing.
2. Repeat measurement on opposite side of rocker arm and shaft. Replace shaft or bushings if clearance exceeds service wear limit of 0.0035 in (0.089 mm).

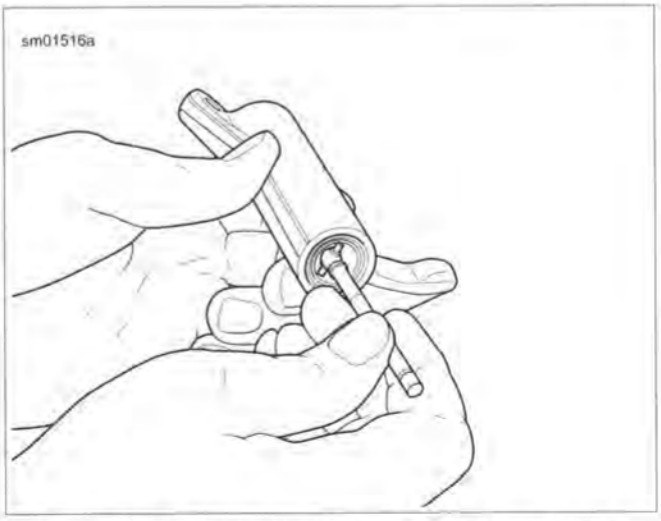

Figure 3-29. Measuring Rocker Arm Bushing Inner Diameter

Replace Rocker Arm Bushings

NOTE

Bushing replacement and reaming must be done one at a time to achieve proper alignment. Follow all steps for one bushing. Then repeat for the other bushing.

1. See Figure 3-30. Remove rocker arm bushing:
   a. Turn a 9/16-18 tap into bushing until tight.
   b. Place rocker arm under ram of arbor press with tap at bottom.
   c. Use a discarded rocker arm shaft as a press arbor.
   d. Press against shaft until both tap and bushing are free.
2. Orient bushing with split line facing top of rocker arm. Using a suitable driver, press **new** bushing into rocker arm until flush with casting.

NOTE

*Never back the reamer out of rocker arm or **new** bushing will be damaged.*

3. Ream bushing:
   a. Secure rocker arm in a vise with soft jaws.
   b. Insert reamer through opposite bushing until it contacts **new** bushing.
   c. Rotate reamer until it exits the opposite side.
   d. Draw the reamer through **new** bushing to remove.
4. Repeat steps to remove, install and ream second bushing.

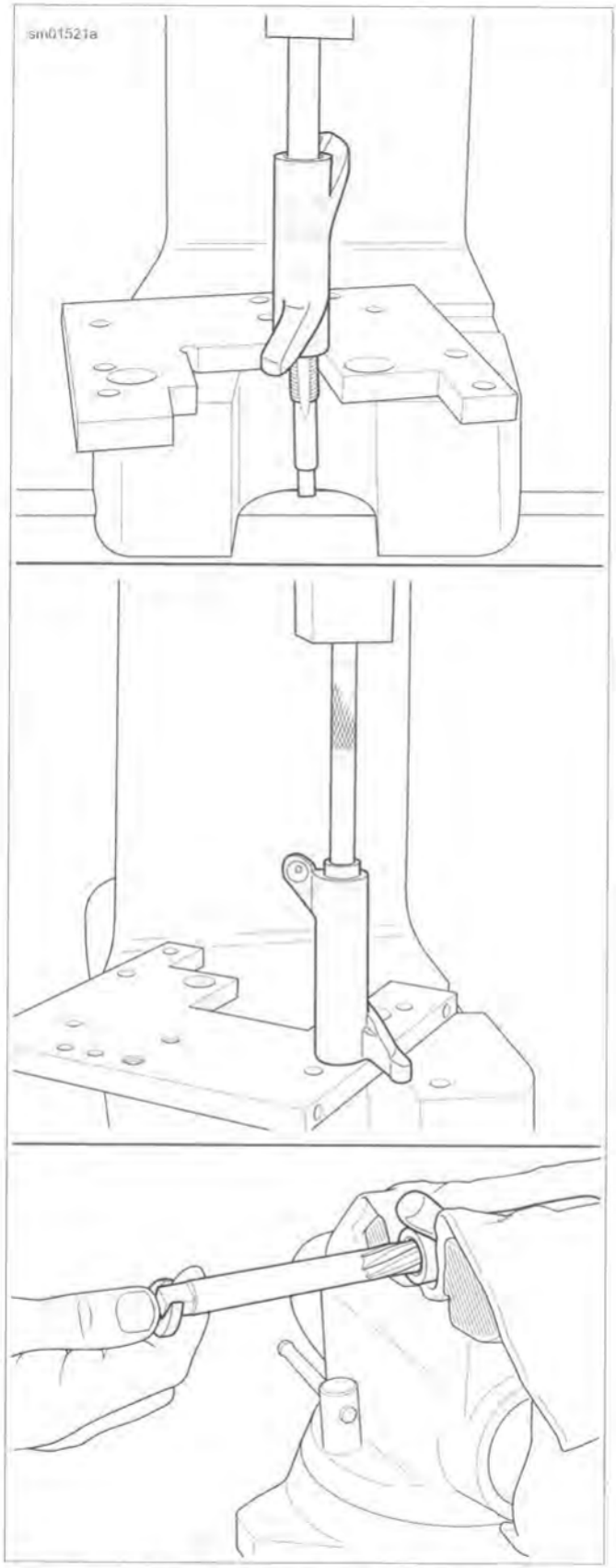

Figure 3-30. Replacing Rocker Arm Bushings

ASSEMBLY

1. Place the rocker arms into position on the rocker arm support plate.
2. Install rocker arm shafts:
   a. Push unnotched ends of rocker arm shafts into right side of support plate, then into rocker arms.
   b. As they approach their fully installed positions, rotate shafts until notches are aligned with bolt holes in support plate.
3. Install the four bolts in the rocker arm support plate. Make sure the bolts on the pushrod side (right) engage the notches in the rocker arm shafts.

DISASSEMBLY

1. See Figure 3-32. Separate upper (2) and lower (8) pushrod covers.
2. Remove and discard O-ring (9).
3. Remove O-ring (1). Slide O-ring (7), flat washer (6), spring (5) and spring cap (4) from upper pushrod cover (2). Discard O-rings.

CLEANING AND GENERAL INSPECTION

1. See Figure 3-32. Clean old gasket material from the lifter cover (11).
2. Except for the hydraulic lifters (14), clean all parts in a non-volatile cleaning solution or solvent. Verify that the O-ring seats and contact surfaces of the pushrod covers (2, 8) are completely clean.

⚠WARNING

Compressed air can pierce the skin and flying debris from compressed air could cause serious eye injury. Wear safety glasses when working with compressed air. Never use your hand to check for air leaks or to determine air flow rates. (00061a)

3. Dry parts with low-pressure, compressed air. Verify that all oil holes are clean and open.
4. Examine lifter rollers. If damaged, examine the cam lobe on which the lifter operates.
   a. Verify that the hydraulic lifter rollers turn freely.
   b. Check for flat spots, scuff marks and pitting.
   c. See Figure 3-31. Inspection may show that hydraulic lifter roller surface appears dull. This is frosting (2). Frosting is considered a cosmetic condition and does not affect function.
5. Inspect the lifter socket for signs of wear. Verify that the plunger of the hydraulic lifter is fully extended up against the C-clip. Pump plunger to verify lifter operation.
6. See Figure 3-32. Examine the pushrods (15). Replace any pushrods that are bent, dented, damaged, discolored or if the ball ends show signs of excessive wear or damage.
7. Cover all parts to protect them from dust and dirt.

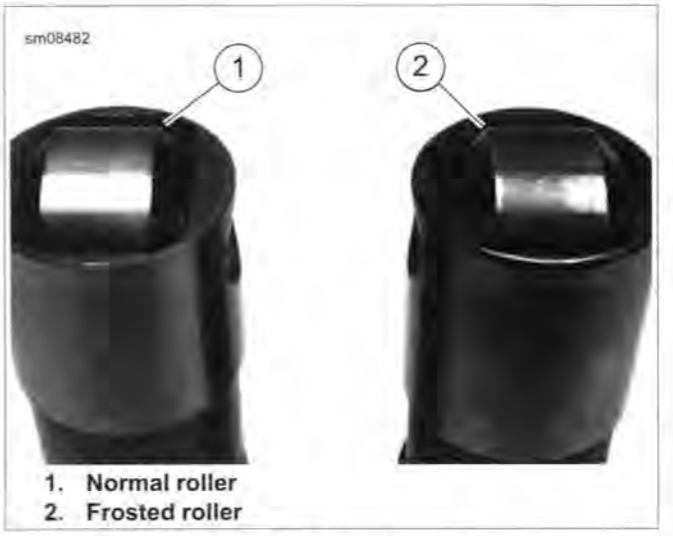

1. **Normal roller**
2. **Frosted roller**

Figure 3-31. Roller Inspection

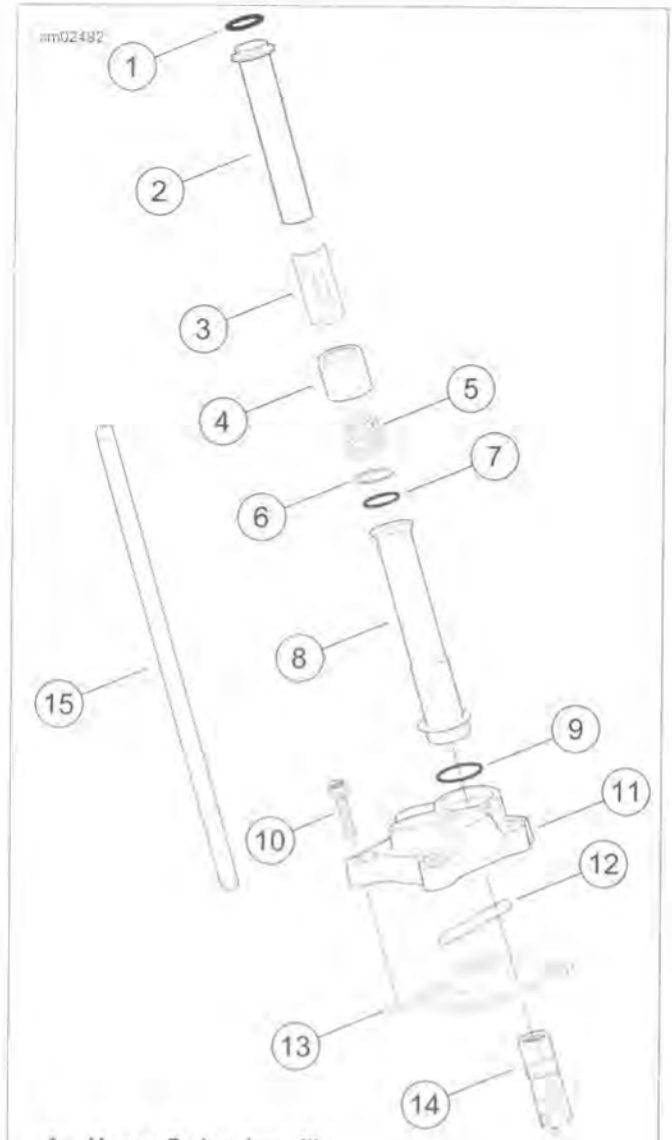

1. Upper O-ring (small)
2. Upper pushrod cover
3. Spring cap retainer
4. Spring cap
5. Spring
6. Flat washer
7. Middle O-ring (intermediate)
8. Lower pushrod cover
9. Lower O-ring (large)
10. Lifter cover screw
11. Lifter cover
12. Anti-rotation pin
13. Lifter cover gasket
14. Hydraulic lifter
15. Pushrod

Figure 3-32. Pushrods, Lifters and Covers

INSPECT LIFTERS

1. Measure the lifter outer diameter. Record the measurement.
2. Measure lifter bore. Subtract this measurement from the lifter measurement to determine clearance.
   a. Clearance when **new** is 0.0008-0.0020 in (0.0203-0.0508 mm).
   b. Install **new** lifters and/or replace crankcases if clearance exceeds service wear limit of 0.007 in (0.076 mm).
3. Check lifter roller end clearance.
   a. Allowable end clearance is within 0.008-0.022 in (0.203-0.559 mm).
   b. Replace lifters if end clearance exceeds service wear limit of 0.022 in (0.559 mm).
4. Soak lifters in clean engine oil. Keep covered until assembly.

ASSEMBLE

1. See Figure 3-33. Apply a thin film of clean engine oil to **new** O-rings (1, 7 and 9) before installation.
2. Install upper O-ring (1) on the upper pushrod cover (2).
3. Slide the spring cap (4), spring (5), flat washer (6) and middle O-ring (7) onto the body of the upper pushrod cover. Move parts up until spring cap contacts upper O-ring seat.
4. Fit the straight end of the upper pushrod cover into the flared end of the lower pushrod cover (8).
5. Install lower O-ring (9) on lower pushrod cover.

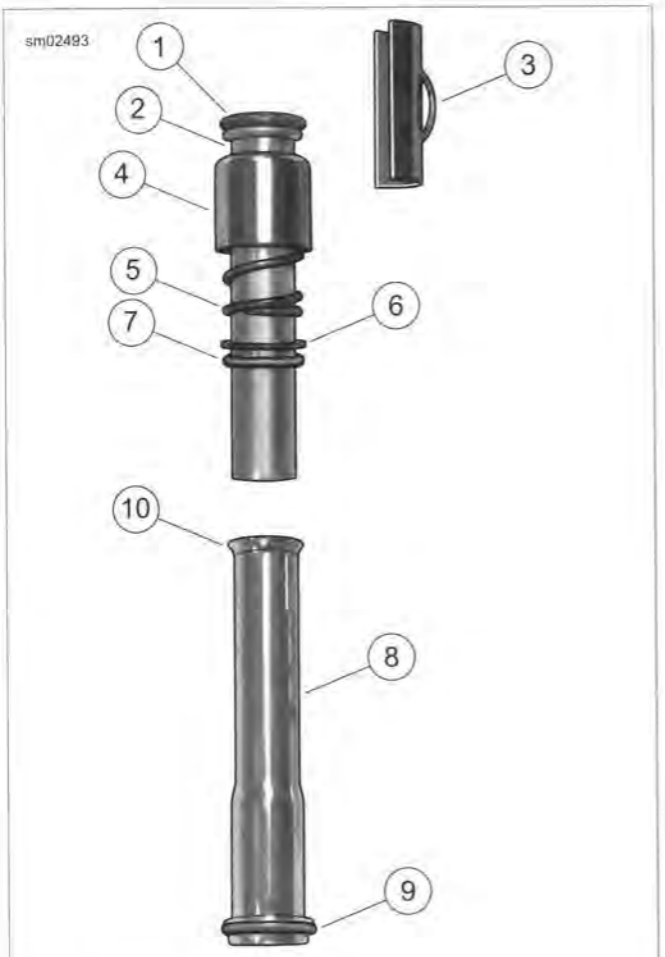

1. Upper O-ring (small)
2. Upper pushrod cover
3. Spring cap retainer
4. Spring cap
5. Spring
6. Flat washer
7. Middle O-ring (intermediate)
8. Lower pushrod cover
9. Lower O-ring (large)
10. Flared end of lower pushrod cover

Figure 3-33. Assembled Pushrod Cover

DETERMINING SERVICE

1. With valves installed, raise cylinder head to strong light source. If light is visible around edges of seats, proceed to 3.20 CYLINDER HEAD, Disassembly to recondition cylinder head.
2. One at a time, fill each port with solvent. Wait ten seconds and check for leakage past the valve seats. If solvent leaks, proceed to 3.20 CYLINDER HEAD, Disassembly to recondition cylinder head.

DISASSEMBLY

PART NUMBER	TOOL NAME
HD-34736-B	VALVE SPRING COMPRESSOR
HD-39786	CYLINDER HEAD HOLDING FIXTURE

1. **ACR models:** Remove ACR. See 7.16 AUTOMATIC COMPRESSION RELEASE (ACR).
2. See Figure 3-34. Secure cylinder head for service.
   a. Turn 12 mm end of CYLINDER HEAD HOLDING FIXTURE (Part No. HD-39786) (1) into cylinder head (2) spark plug hole.
   b. Clamp tool in vise at a 45 degree angle or one that offers a comfortable working position.

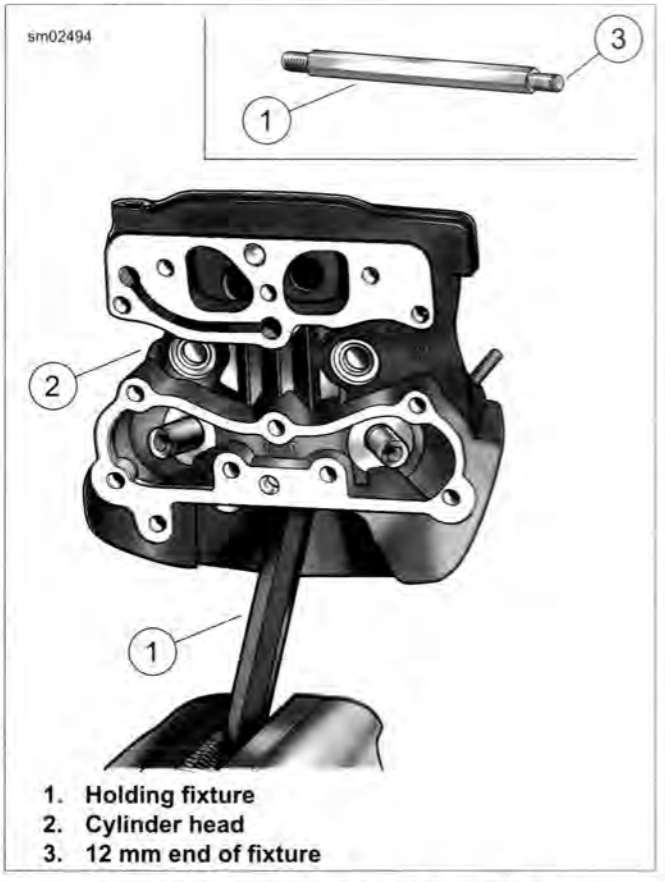

1. **Holding fixture**
2. **Cylinder head**
3. **12 mm end of fixture**

Figure 3-34. Cylinder Head Holding Fixture

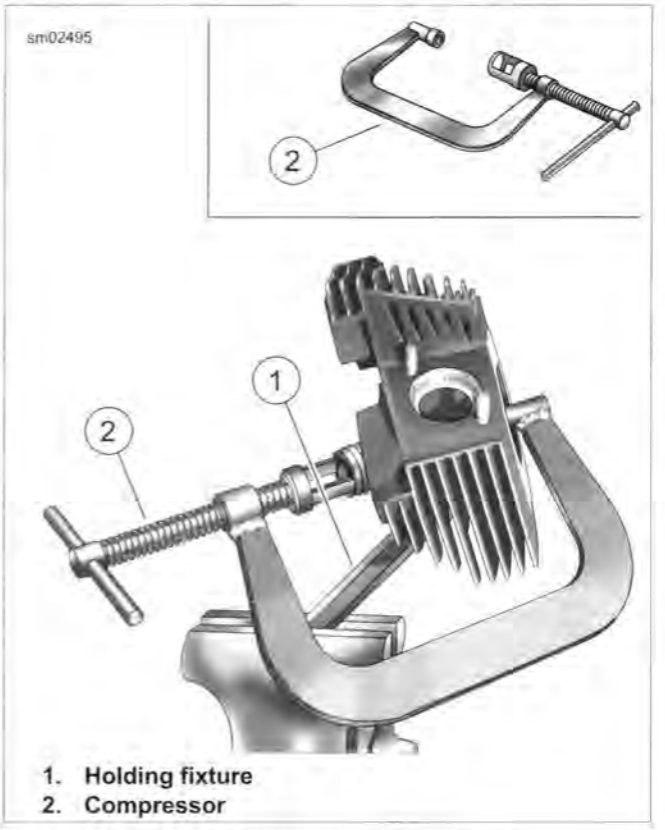

1. **Holding fixture**
2. **Compressor**

Figure 3-35. Valve Spring Compressor

3. See Figure 3-35. Release valve spring compression.
   a. Place VALVE SPRING COMPRESSOR (Part No. HD-34736-B) (2) over cylinder head. Center blunt end on the valve head. Seat adapter on the valve spring retainer.
   b. See Figure 3-36. Rotate forcing screw to compress valve spring until tapered keepers (1) can be removed from valve stem (11).
   c. Rotate forcing screw to release valve spring compression.
4. Remove spring retainer (2) and valve spring (3).
5. Slide valve (11) from the valve guide (5).
6. Remove valve stem seal assembly (4).
7. Mark valve head F (front) or R (rear) for identification. Also, separate and tag tapered keepers, valve spring and spring retainer so that they are installed on the same valve at time of assembly.
8. Remove remaining valve and components.
9. Remove holding fixture from spark plug hole.

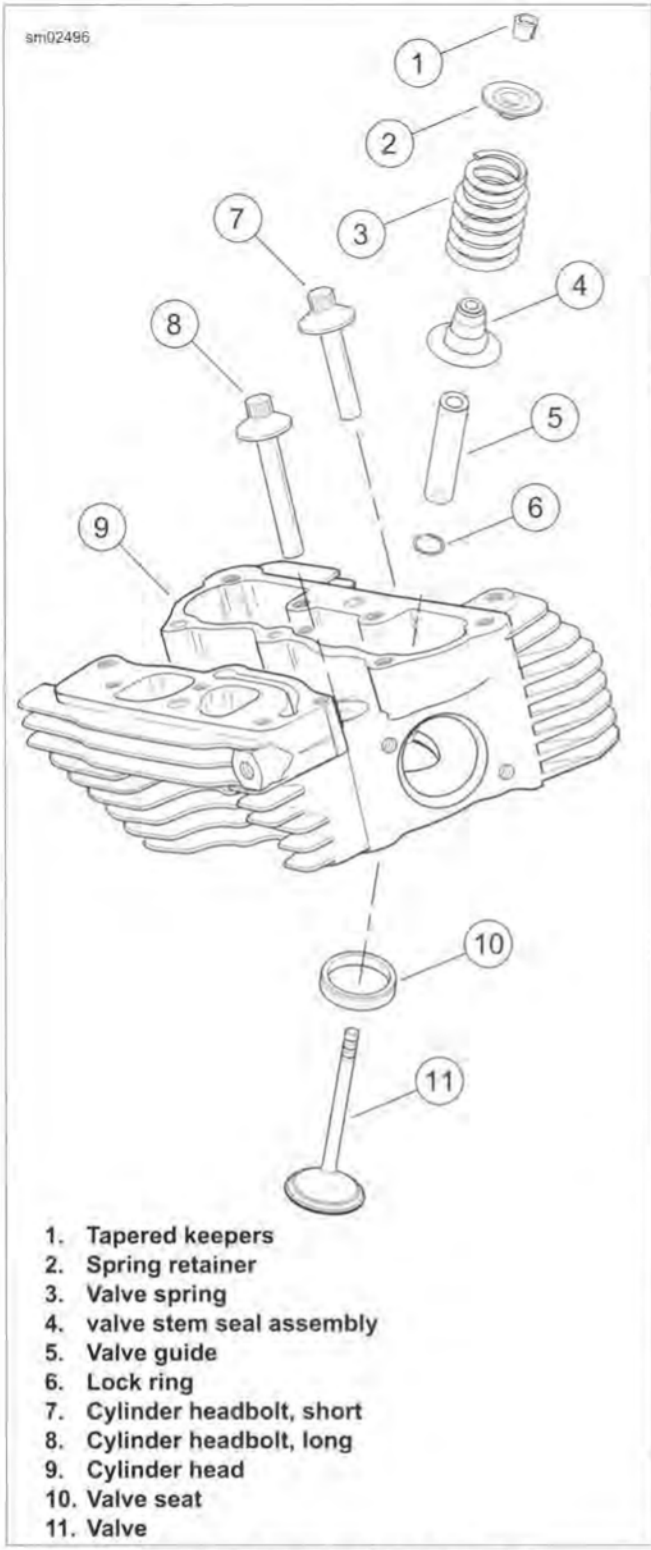

1. **Tapered keepers**
2. **Spring retainer**
3. **Valve spring**
4. **valve stem seal assembly**
5. **Valve guide**
6. **Lock ring**
7. **Cylinder headbolt, short**
8. **Cylinder headbolt, long**
9. **Cylinder head**
10. **Valve seat**
11. **Valve**

Figure 3-36. Cylinder Head Assembly

CLEANING

1. Remove old gasket material from cylinder head. Do not cause scratches or nicks.

NOTICE

Do not use glass or sand to bead blast surfaces exposed to engine oil. Blasting materials can lodge in pores of the casting. Heat expansion releases this material which can contaminate oil resulting in engine damage. (00534b)

NOTE

Bead blasting materials could enter threaded holes. This would adversely affect fastener engagement and torque indication. Cover all threaded holes before bead blasting.

2. Remove all carbon deposits from combustion chamber and machined surfaces of cylinder head. Do not remove any metal material.
3. To soften stubborn deposits, soak the cylinder head in a chemical solution, such as GUNK HYDRO-SEAL or other carbon and gum dissolving agent. Repeat previous step as necessary.

NOTE

Keep all parts grouped by location so they can be installed in the original location.

4. Thoroughly clean the cylinder head, spring retainers, tapered keepers, valves and valve springs in a non-volatile cleaning solution or solvent. Follow up with a thorough wash in hot soapy water.

⚠WARNING

Compressed air can pierce the skin and flying debris from compressed air could cause serious eye injury. Wear safety glasses when working with compressed air. Never use your hand to check for air leaks or to determine air flow rates. (00061a)

5. Dry parts with low-pressure, compressed air.

INSPECTION

PART NUMBER	TOOL NAME
B-45525	VALVE GUIDE HONE
HD-34751	VALVE GUIDE CLEANING BRUSH
HD-42324-A	CYLINDER TORQUE PLATES

Cylinder Head

1. Check for scratches and nicks on all gasket sealing surfaces.
2. Using a straightedge, check gasket surface for warpage. Discard the head if warpage is 0.006 in (0.152 mm) or greater.

3. **Check for Warpage - Alternate Method**
   a. Use one of the CYLINDER TORQUE PLATES (Part No. HD-42324-A) instead the straightedge.
   b. Lay the upper plate (without vise grip step) flat on the machined surface of the head.
   c. If the plate rocks, the head is immediately suspect.
   d. Insert a feeler gauge between the plate and head at various locations.
   e. Discard the head if warpage is 0.006 in (0.152 mm) or greater.
4. Verify that all oil holes are clean and open.

Valve Guides

1. Inspect external surfaces, particularly the combustion chamber side, for cracks. Replace if necessary.
2. Prepare valve guides for inspection.
   a. Lightly hone bore using the VALVE GUIDE HONE (Part No. B-45525).
   b. Scrub with the VALVE GUIDE CLEANING BRUSH (Part No. HD-34751) to remove any dust or debris.
   c. Polish the valve stem with fine emery cloth or steel wool to remove carbon buildup.
3. Check valve stem to guide clearance:
   a. Measure the **inside** diameter of the valve guide using a ball gauge.
   b. Measure the **outside** diameter of the valve stem with a micrometer.
   c. If the clearance between stem and guide exceeds the limits, the valve stem and/or guide are excessively worn. Refer to Table 3-36.
   d. Repeat measurements with a **new** valve to determine if the guide must be replaced.

Table 3-36. Valve Stem to Guide Clearance Service Wear Limits

VALVE	IN	MM
Intake	0.0038	0.0965
Exhaust	0.0038	0.0965

Valves

1. Replace the valve if there is evidence of burning or cracking.
2. Inspect the end of the valve stem for pitting or uneven wear. Replace if necessary.
3. Inspect for burrs around the valve stem keeper groove. Remove burrs with a fine tooth file.
4. To determine if the valve stem is excessively worn, see valve guide inspection.

Valve Springs

1. Inspect springs for cracked or discolored coils. Replace if necessary.
2. Set the valve springs on a level surface. Check for proper squareness.
3. Check free length of springs using a caliper. Load test using a commercially available valve spring tester. Replace springs if free length or compression force do not meet specifications. See 3.2 SPECIFICATIONS.

Tapered Keepers

Install **new** keepers any time valves are installed.

Valve Seats

1. Inspect seats for cracking, chipping or burning. Replace if necessary.
2. Check seats wear by measuring valve stem protrusion. See 3.20 CYLINDER HEAD, Valve and Seat Refacing.

VALVE GUIDE REPLACEMENT

PART NUMBER	TOOL NAME
B-45523	VALVE GUIDE REAMER
B-45524-1	VALVE GUIDE DRIVER
B-45524-2A	VALVE GUIDE INSTALLER SLEEVE
B-45525	VALVE GUIDE HONE
HD-34751	VALVE GUIDE CLEANING BRUSH
HD-39782-B	CYLINDER HEAD SUPPORT STAND KIT
HD-39786	CYLINDER HEAD HOLDING FIXTURE
HD-39847	REAMER T-HANDLE
HD-39964	REAMER LUBRICANT

Removal

NOTES

- *If valve guide replacement is necessary, always install **new** guide before refacing valve seat.*
- *CYLINDER HEAD SUPPORT STAND KIT (Part No. HD-39782-B) makes sure that valve guide and seat are perpendicular. Not keeping cylinder head valve guide bore perpendicular results in damage during the press procedure.*

1. See Figure 3-37. Prepare cylinder head for valve guide replacement.
   a. Obtain CYLINDER HEAD SUPPORT STAND KIT (Part No. HD-39782-B).
   b. Insert sleeve of appropriate seat adapter (3 or 4) into tube at top of support stand (2).
   c. Position cylinder head with valve seat centered on seat adapter.

NOTE

Always press valve guide toward combustion chamber. Carbon buildup on combustion chamber side of guide can damage cylinder head bore. This may prevent a proper interference fit.

2. Remove and discard lock ring from valve guide groove.

NOTE

Lock ring is present on original exhaust valve guides only and both intake and exhaust replacement guides.

3. Insert VALVE GUIDE DRIVER (Part No. B-45524-1) (1) into valve guide bore.
4. See Figure 3-38. Center valve guide driver under ram of arbor press. Apply pressure until valve guide drops free of cylinder head. Discard valve guide.



1. **Valve guide driver**
2. **Cylinder head support stand**
3. **Intake seat adapter**
4. **Exhaust seat adapter**
5. **Valve guide installer sleeve**

Figure 3-37. Valve Guide Replacement Tools

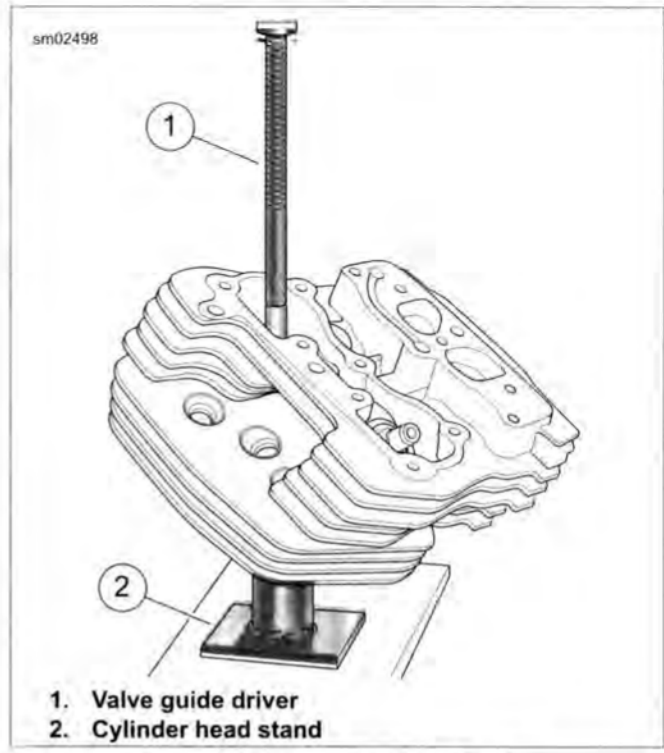

1. **Valve guide driver**
2. **Cylinder head stand**

Figure 3-38. Remove Valve Guide

Installation

1. Check valve guide interference fit.
   a. Measure the outside diameter of a **new** standard valve guide.
   b. Measure the cylinder head valve guide bore. The valve guide should be 0.0020-0.0033 in (0.051-0.084 mm) larger than the bore.
   c. If interference is not within specification, select an oversize guide from an aftermarket supplier or replace the cylinder head.

NOTE

Pressing out guide may remove material. Installing a larger size is not uncommon to provide proper interference fit.

2. Select a guide that provides the correct interference fit.

NOTE

The support stand provides support so the valve guide and seat are perpendicular.

3. Prepare cylinder head for valve guide replacement.
   a. See Figure 3-37. Insert sleeve of the appropriate seat adapter (3 or 4) into tube at top of support stand (2). Position cylinder head with valve seat centered on seat adapter.
   b. Apply a thin film of petroleum jelly to external surface of valve guide.
   c. Start valve guide into bore.
   d. See Figure 3-39. Place VALVE GUIDE INSTALLER SLEEVE (Part No. B-45524-2A) (2) over valve guide. Insert valve guide driver (1) into sleeve.
   e. Center valve guide driver under ram of arbor press and apply pressure only until valve guide is started in bore. Then back off ram slightly to allow guide to center itself.

NOTE

Always back off ram to allow the valve guide to find center. Pressing the guide into the cylinder head in one stroke can bend the driver, break the guide, distort the cylinder head casting or damage the cylinder head valve guide bore.

   f. Verify that support stand (3) and driver (1) are square. Center driver under ram. Press valve guide further into bore, then back off ram again to allow valve guide to center itself.
   g. Repeat step until installer sleeve contacts machined area of cylinder head.
   h. Install **new** lock ring into valve guide groove. Verify that lock ring is square and fully seated in the groove.

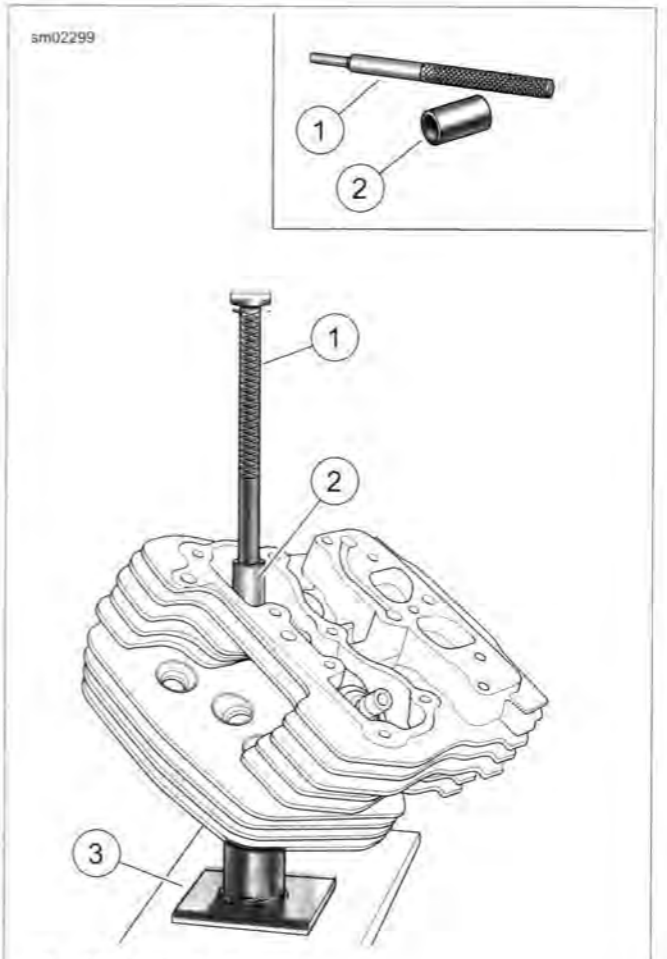

1. **Valve guide driver**
2. **Valve guide installer sleeve**
3. **Cylinder head stand**

Figure 3-39. Install Valve Guide

4. Secure cylinder head for service.
   a. Turn 12 mm end of CYLINDER HEAD HOLDING FIXTURE (Part No. HD-39786) into spark plug hole.
   b. Clamp tool in vise at a 45 degree angle or another comfortable working position.



1. **T-handle**
2. **Valve guide reamer**

Figure 3-40. Reaming Valve Guide Bore

NOTE

Valve guides are reamed to within 0.0005-0.0001 in (0.013-0.0025 mm) under finished size.

5. See Figure 3-40. Ream the guide.
   a. Install REAMER T-HANDLE (Part No. HD-39847) (1) on VALVE GUIDE REAMER (Part No. B-45523) (2).
   b. Apply a liberal amount of REAMER LUBRICANT (Part No. HD-39964) to valve guide bore and reamer. Start reamer into bore.

   NOTE

   Never turn reamer counterclockwise.

   c. Apply slight pressure on reamer while rotating clockwise. Squirt additional lubricant onto reamer and into guide as necessary.

   NOTE

   For best results, do not push reamer or apply pressure to the reamer handle. Excessive pressure results in a rough cut and the bore will be tapered if pressure is not centrally applied.

   d. Continue rotating reamer T-handle until entire bit has passed through valve guide bore.
   e. Remove T-handle from reamer, and carefully draw out reamer through combustion chamber side of valve guide.

⚠WARNING

Compressed air can pierce the skin and flying debris from compressed air could cause serious eye injury. Wear safety glasses when working with compressed air. Never use your hand to check for air leaks or to determine air flow rates. (00061a)

6. Remove metal shavings with low-pressure, compressed air.
7. See Figure 3-41. Clean with the VALVE GUIDE CLEANING BRUSH (Part No. HD-34751).
8. See Figure 3-42. Hone bore to finished size.
   a. Install VALVE GUIDE HONE (Part No. B-45525) in a high-speed electric drill.
   b. Apply reamer lubricant to stones of hone and valve guide bore.
   c. Start stones of hone into bore.
   d. Rotate the hone while moving the stones through the entire length of the bore for 10-12 complete strokes. Work for a crosshatch pattern of approximately 60 degrees.
9. Remove debris with low-pressure, compressed air. Clean with the VALVE GUIDE CLEANING BRUSH (Part No. HD-34751).

NOTE

Always check valve stem to valve guide clearance after honing.

10. Check valve stem to valve guide clearance. Refer to Table 3-37. If the clearance is not within specification, repeat the honing process and recheck.

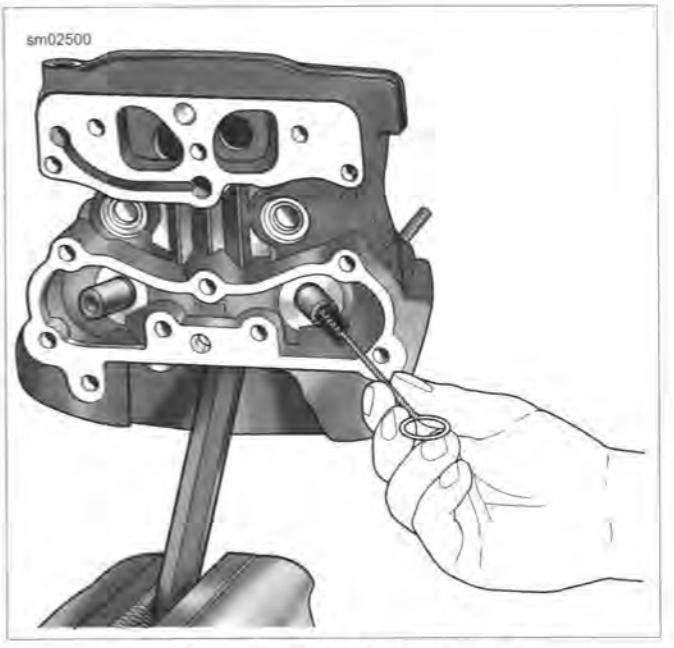

Figure 3-41. Scrubbing Valve Guide Bore

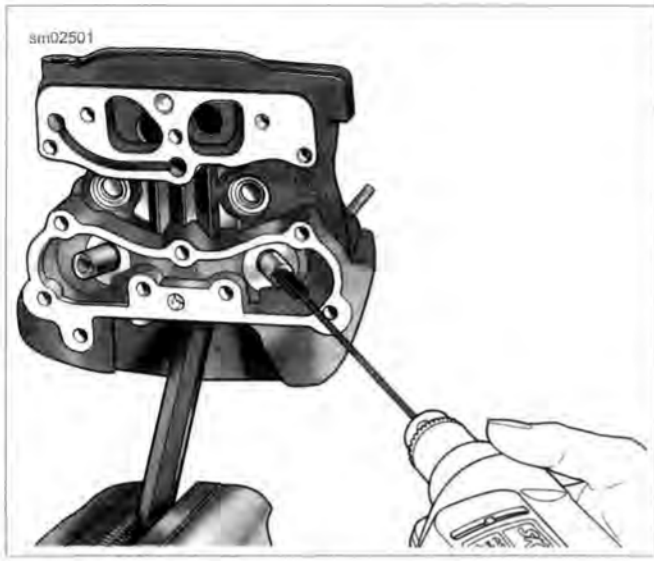

Figure 3-42. Honing Valve Guide Bore

11. Clean cylinder head assembly.
    a. Using cleaning solvent, thoroughly clean cylinder head and valve guide bore.
    b. Scrub valve guide bore with the VALVE GUIDE CLEANING BRUSH (Part No. HD-34751). For best results, clean the valve guide bore with the type of swabs or patches found in gun cleaning kits and a thin engine oil.
    c. Continue to wipe bore until a clean cloth shows no evidence of dirt or debris. Follow up with a thorough wash in hot soapy water.

⚠WARNING

Compressed air can pierce the skin and flying debris from compressed air could cause serious eye injury. Wear safety glasses when working with compressed air. Never use your hand to check for air leaks or to determine air flow rates. (00061a)

12. Dry parts with low-pressure, compressed air.

Table 3-37. Valve Stem to Guide Clearance

VALVE	IN	MM
Intake	0.001-0.003	0.0254-0.0762
Exhaust	0.001-0.003	0.0254-0.0762

VALVE AND SEAT REFACING

PART NUMBER	TOOL NAME
HD-34751	VALVE GUIDE CLEANING BRUSH
HD-35758-C	NEWAY VALVE SEAT CUTTER SET
HD-39786	CYLINDER HEAD HOLDING FIXTURE

NOTES

- *Verify correct valve stem to valve guide clearance before refacing. If **new** guides must be installed, complete that task before refacing valve seats. Refer to Table 3-37.*
- *This procedure is not based on valve lapping. The result is an interference fit between the 45 degree valve face and the 46 degree valve seat.*

1. Remove carbon deposits from valve head, face and stem with a wire wheel. Do not remove any metal. Carbon left on stem may affect alignment during valve refacing.
2. Polish valve stem with steel wool or crocus cloth to remove marks left by wire wheel.
3. Grind valve face to a 45 degree angle using a valve grinding machine.

NOTES

- *Do not remove any more metal than necessary to clean up and true the valve face.*
- *See Figure 3-43. Replace the valve if margin (5) is less than 0.0313 in (0.795 mm).*

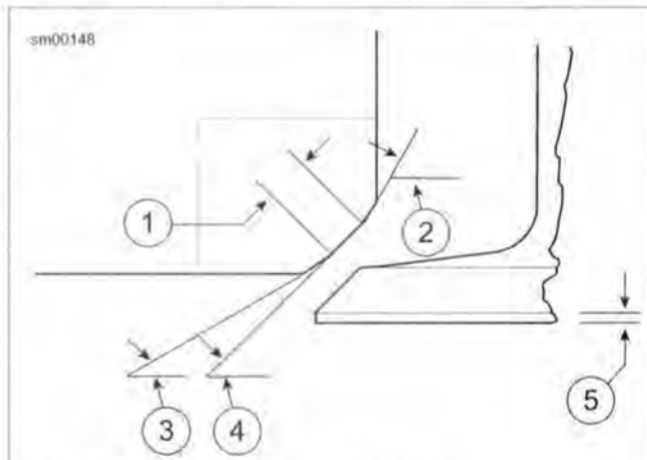

1. **0.040-0.062 in (1.016-1.575 mm)**
2. **60 degrees**
3. **31 degrees**
4. **46 degrees**
5. **Margin: 0.0313 in (0.795 mm) minimum**

Figure 3-43. Valve and Seat Dimensions

4. Wipe valve seats and valve faces clean. Install the valve into the valve guide. Push on head of valve until it contacts the valve seat.

5. See Figure 3-44. Measure valve stem protrusion.
   a. Use a dial caliper to check the distance from the top of the valve stem to the machined area on the cylinder head.
   b. If protrusion exceeds 2.069 in (52.553 mm), replace the valve, valve seat or cylinder head as necessary.

NOTE

Do not shorten the valve by grinding the end of the stem. Grinding removes the hardened case which results in accelerated wear.

6. Secure cylinder head for servicing.
   a. Turn 12 mm end of CYLINDER HEAD HOLDING FIXTURE (Part No. HD-39786) into spark plug hole.
   b. Securely clamp fixture in vise.
   c. Place cylinder head at a 45 degree angle or another comfortable working position.
7. To determine the correct location of the 46 degree valve seat in the head, measure the diameter of the valve head and subtract 0.080 in (2.032 mm) from that number.
8. Set the dial caliper to the calculated measurement and lock down for quick reference. This is the diameter of the valve seat.
9. Use a permanent marker to highlight the valve seat area. Highlight all three angles. Allow marker to dry before proceeding.

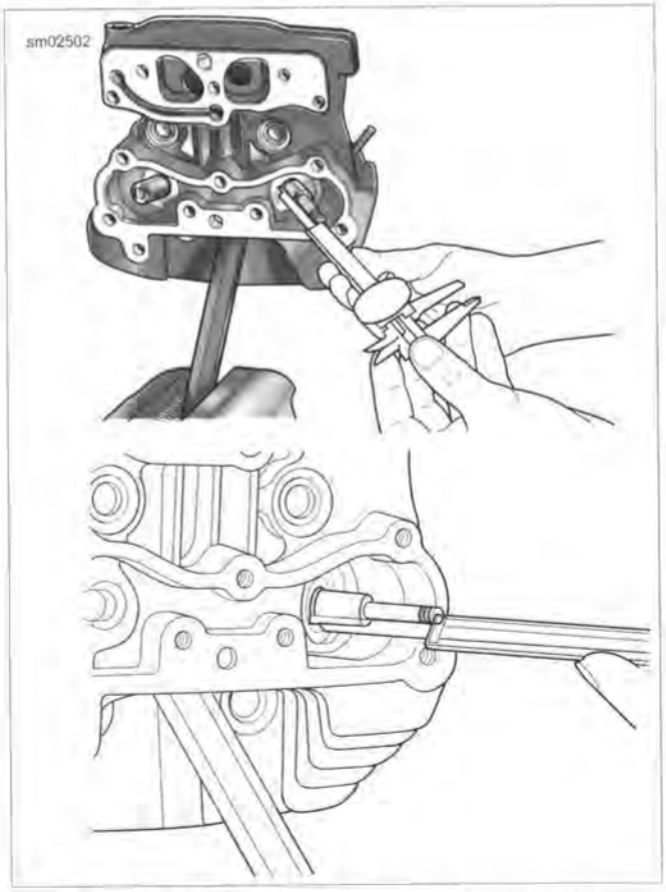

Figure 3-44. Checking Valve Stem Protrusion

NOTES

- *Always verify that cutter blades and cutter pilot are clean before beginning the cutting process. The correct cleaning brush is supplied with the Neway tool set.*
- *Always verify that the inside of the valve guide is clean by using VALVE GUIDE CLEANING BRUSH (Part No. HD-34751).*

10. See Figure 3-45. Obtain the NEWAY VALVE SEAT CUTTER SET (Part No. HD-35758-C). Choose the cutter pilot that fits properly into the valve guide hole. Securely seat the pilot by pushing down and turning using the installation tool supplied in the tool set.
11. Choose the proper 46 degree cutter (intake or exhaust) and gently slide the cutter onto the pilot. Do not drop the cutter onto the seat.
12. While applying a constant and consistent pressure, remove only enough metal to provide a uniform finish and to remove pitting.

NOTES

- *If the width of the clean-up cut is greater on one side of the seat than the other, the guide may require replacement due to improper installation.*
- *If a groove cut completely around the seat is apparent, slightly stagger the blades of the cutter.*

13. Measure the 46 degree cut at the outermost edge at the widest point of the circle to determine what cut will be made next.
   a. If the outer diameter is too large, use the 31 degree cutter to lower the valve seat.
   b. If the outer diameter is too small, use the 46 degree cutter to widen the valve seat or move it away from the port.

NOTES

- *Because the OD measurement of the valve seat is used as a reference point, it will usually be necessary to use the 31 degree cutter following the initial 46 degree cut.*
- *Always highlight the valve seat with the permanent marker in order to better view the location of the 46 degree valve seat.*

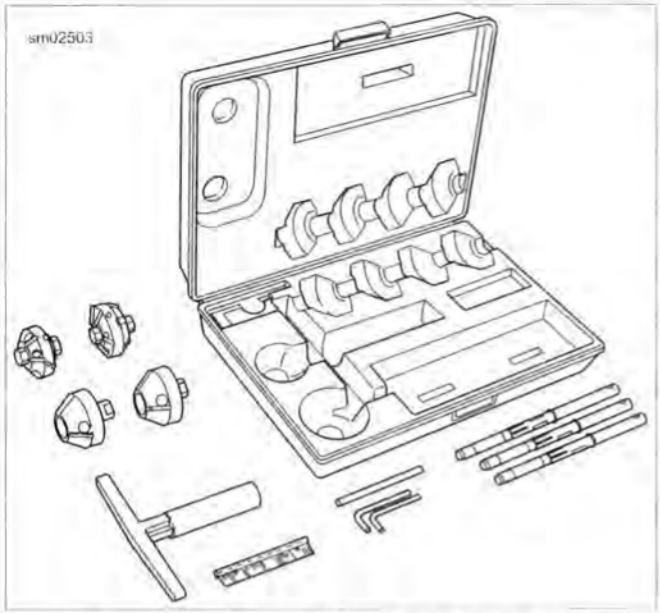

Figure 3-45. Neway Valve Seat Cutter Set

14. If the location of the valve seat is not correct, repeat steps 9 through 13.
15. When a complete clean-up of the 46 degree angle is accomplished and the width is at least 0.062 in (1.575 mm), proceed to the next step.
16. Select the proper 60 degree cutter and gently slide the cutter down the cutter pilot to the valve seat.
17. Remove just enough material to provide an even valve seat width of 0.040-0.062 in (1.016-1.575 mm).
18. Remove cutter and cutter pilot. Clean cuttings from seat area.
19. Insert valve into the cylinder head. Use thumb pressure against valve to hold it closed.
20. Completely fill the port with solvent to verify proper seal between valve and valve seat.

NOTE

Hold pressure against the valve for a minimum of 10 seconds. If any leakage occurs, examine the valve and valve seat for irregularities or defects. If necessary, repeat the above valve grinding or valve seat cutting process.

21. Repeat the process on any valve seat that needs service.
22. Clean valves, cylinder head and valve seats in solvent. Follow up with a thorough wash in hot soapy water.

⚠WARNING

Compressed air can pierce the skin and flying debris from compressed air could cause serious eye injury. Wear safety glasses when working with compressed air. Never use your hand to check for air leaks or to determine air flow rates. (00061a)

23. Dry parts with low-pressure, compressed air.

ASSEMBLY

PART NUMBER	TOOL NAME
HD-34736-B	VALVE SPRING COMPRESSOR
HD-34751	VALVE GUIDE CLEANING BRUSH
HD-39786	CYLINDER HEAD HOLDING FIXTURE

1. Secure cylinder head for service.
   a. Turn 12 mm end of CYLINDER HEAD HOLDING FIXTURE (Part No. HD-39786) into spark plug hole.
   b. Clamp tool in vise at a 45 degree angle or another comfortable working position.

NOTE

At the time of disassembly, all parts should have been marked or tagged so that they are installed on the same valve (and in the same head).

2. Run the VALVE GUIDE CLEANING BRUSH (Part No. HD-34751) through the valve guide bore to verify cleanliness.
3. Apply a liberal amount of SCREAMIN' EAGLE ASSEMBLY LUBE to valve stem.
4. Install the valve into the cylinder head.
5. To distribute the assembly lube evenly around the valve stem and guide, spin the valve as it is installed. Work the valve back and forth in the bore to verify that it slides smoothly and seats properly.
6. Remove the valve and apply a second coat of SCREAMIN' EAGLE ASSEMBLY LUBE to the valve stem. Install the valve.

NOTICE

Failure to install plastic capsule can cause the valve stem seal to catch the edge of the valve stem keeper groove. The resulting damage can cause leakage around the valve stem, excessive oil consumption and valve sticking. (00535b)

7. See Figure 3-46. Hold valve against the valve seat. Slide plastic capsule over valve stem tip and keeper groove.
8. Apply a very thin film of SCREAMIN' EAGLE ASSEMBLY LUBE to capsule.
9. See Figure 3-47. Slide **new** valve stem seal assembly over capsule and down valve stem until seated against cylinder head casting. Remove capsule from valve stem tip.

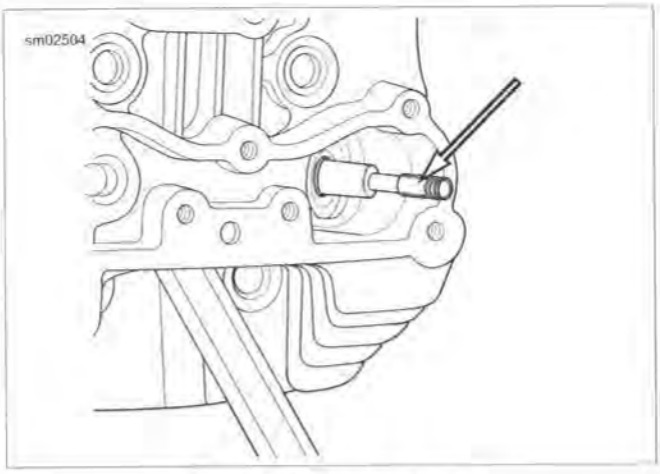

Figure 3-46. Plastic Capsule

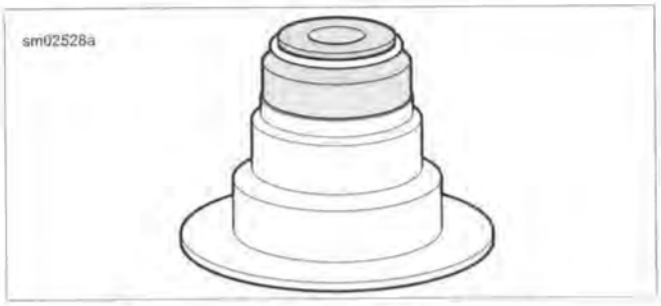

Figure 3-47. Valve Stem Seal Assembly

10. See Figure 3-48. Apply a liberal amount of SCREAMIN' EAGLE ASSEMBLY LUBE to valve stem tip and keeper groove.
11. With the smaller diameter coils topside, install the valve spring (3). Place the spring retainer (2) on top of the valve spring.
12. Install keepers:
    a. Place VALVE SPRING COMPRESSOR (Part No. HD-34736-B) over cylinder head so that the blunt end is centered on the valve head and adapter is seated on the valve spring retainer.
    b. Rotate forcing screw to compress valve spring.

    NOTE

    For best results, apply a dab of grease to the inboard side of the keepers before installation and use a magnetic rod for easy placement.

    c. With the tapered side down, fit the keepers into the valve stem groove.
    d. Arrange tapered keepers so that the gaps are evenly spaced. Release valve spring compression.
13. Tap the end of the valve stem once or twice with a soft mallet to make sure that tapered keepers are tightly seated.
14. Install the other valve and components.
15. Release the cylinder head holding fixture from the vise. Remove fixture tool from spark plug hole.
16. Cover the cylinder head to protect it from dust and dirt until time of installation.

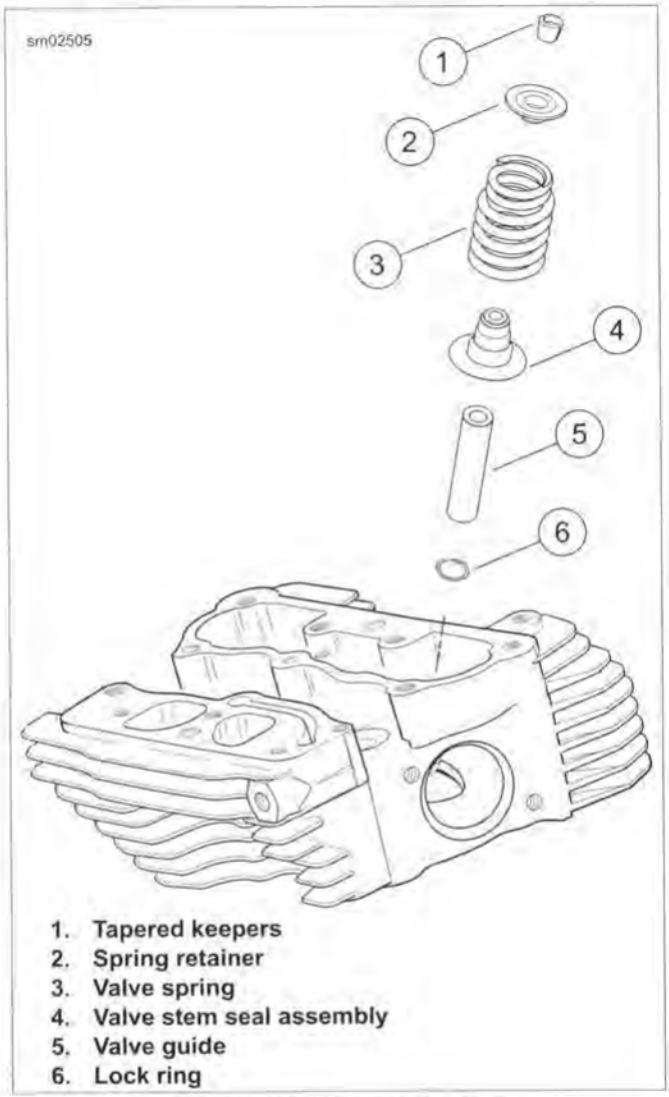

1. **Tapered keepers**
2. **Spring retainer**
3. **Valve spring**
4. **Valve stem seal assembly**
5. **Valve guide**
6. **Lock ring**

Figure 3-48. Valve Assembly

CLEANING

1. See Figure 3-49. Clean all remaining cylinder head gasket material from the cylinder (3).

⚠WARNING

Compressed air can pierce the skin and flying debris from compressed air could cause serious eye injury. Wear safety glasses when working with compressed air. Never use your hand to check for air leaks or to determine air flow rates. (00061a)

2. Clean cylinder in a non-volatile cleaning solution or solvent. Dry parts with low-pressure, compressed air. Verify that all oil holes are clean and open.
3. Inspect the cylinder bore for obvious defects or damage in the ring travel area. Replace cylinders that are severely scored, scuffed, scratched, burnt or gouged.
4. Use a file to carefully remove any nicks or burrs from the machined surfaces of the cylinder.

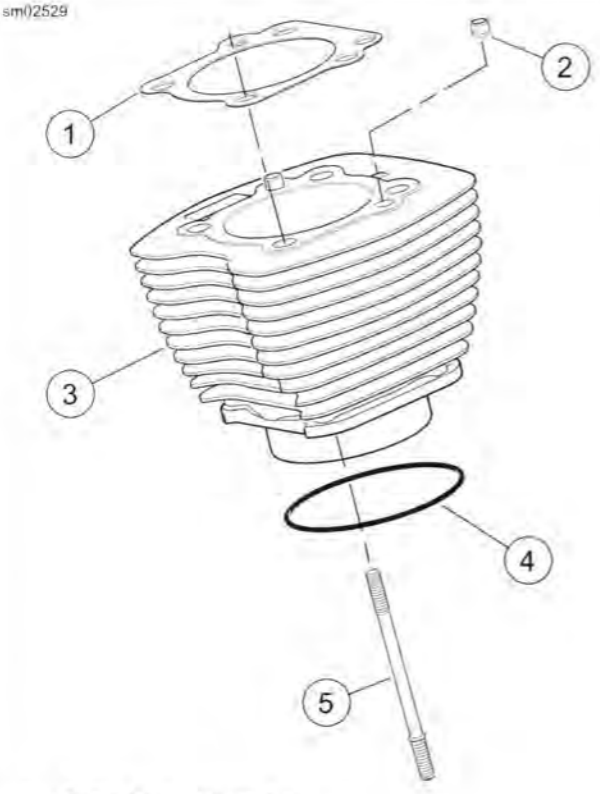

1. **Cylinder head gasket**
2. **Dowel pin**
3. **Cylinder**
4. **O-ring seal**
5. **Cylinder stud**

Figure 3-49. Cylinder Assembly

INSPECTION

PART NUMBER	TOOL NAME
HD-42324-A	CYLINDER TORQUE PLATES
TA360	SNAP-ON TORQUE ANGLE GAUGE

FASTENER	TORQUE VALUE	
Cylinder torque plate bolts, first torque	120-144 **in-lbs**	13.6-16.3 Nm
Cylinder torque plate bolts, second torque	15-17 ft-lbs	20.3-23.0 Nm
Cylinder torque plate bolts, final torque	90 degrees	90 degrees

1. Using dye penetrant, inspect the cylinder for cracks. If no cracks are found, thoroughly wash cylinder to remove traces of dye.
2. See Figure 3-50. Check the machined surfaces for flatness using a feeler gauge and CYLINDER TORQUE PLATES (Part No. HD-42324-A).
   a. Lay gasket side of the upper plate (3) flat against the head gasket surface of the cylinder.
   b. Check if the plate rocks. If the plate rocks, the head is immediately suspect.
   c. Insert a feeler gauge between the plate and cylinder at various locations.
   d. The head gasket surface must be flat within 0.006 in (0.15 mm).
   e. Lay the seal side of the lower plate (2) flat against the O-ring seal surface. Check flatness using a feeler gauge.
   f. The O-ring seal surface must be flat within 0.004 in (0.102 mm).
   g. Replace the cylinder and piston if either surface exceeds specification.

NOTE

Failure to use cylinder torque plates can produce measurements that vary by as much as 0.001 in (0.025 mm). This may result in the use of parts that are unsuitable for service.

3. Install CYLINDER TORQUE PLATES (Part No. HD-42324-A).
   a. Remove O-ring seal from cylinder sleeve, if installed.
   b. See Figure 3-51. Clamp the stepped side of the lower plate in a vise with soft jaws.
   c. Lightly oil threads and shoulders of four bolts (1) with clean engine oil and slide through holes of lower plate (2).
   d. Slide cylinder onto bolts with the indent in the cooling fins facing upward.
   e. Place a used head gasket on cylinder. Install upper plate with blind holes aligned with dowel pins in cylinder. Secure with bolts (1).
   f. See Figure 3-52. Tighten the bolts to 120-144 **in-lbs** (13.6-16.3 Nm) in the sequence shown.
   g. Following the same sequence, tighten each bolt to 15-17 ft-lbs (20.3-23.0 Nm).
   h. Final-tighten each bolt an additional 90 degrees (90 degrees) in the same sequence.

NOTE

For best results use SNAP-ON TORQUE ANGLE GAUGE (Part No. TA360). If the tool is not available, mark a straight line on each bolt head continuing the line onto the lower plate.

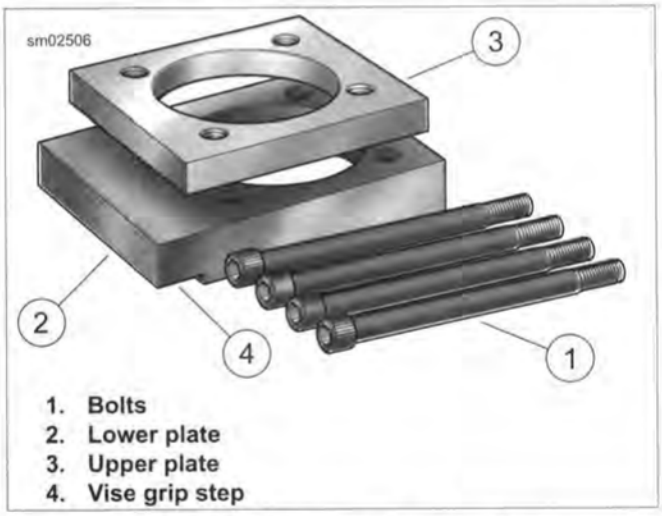

1. **Bolts**
2. **Lower plate**
3. **Upper plate**
4. **Vise grip step**

Figure 3-50. Cylinder Torque Plates

NOTE

Maximum cylinder wear occurs at the top of top ring travel. Minimum wear occurs below ring travel. Always take measurements in both areas.

4. Using an inside micrometer or dial bore gauge, check cylinder bore for out-of round and taper:
   a. At the top of the piston ring travel zone, measure the cylinder diameter parallel and perpendicular to the crankshaft. Record the readings.
   b. Repeat the measurements at the center of the piston ring travel zone and again at a point below the piston ring travel zone.
   c. See 3.3 SERVICE WEAR LIMITS. If the measurements are not within specification, the cylinder must be rebored and honed to accept the next standard oversize piston. See 3.21 CYLINDER, Boring and Honing Cylinder.
   d. If cylinders are not scuffed, scored or worn beyond the service limits, see 3.21 CYLINDER, Deglazing Cylinder.

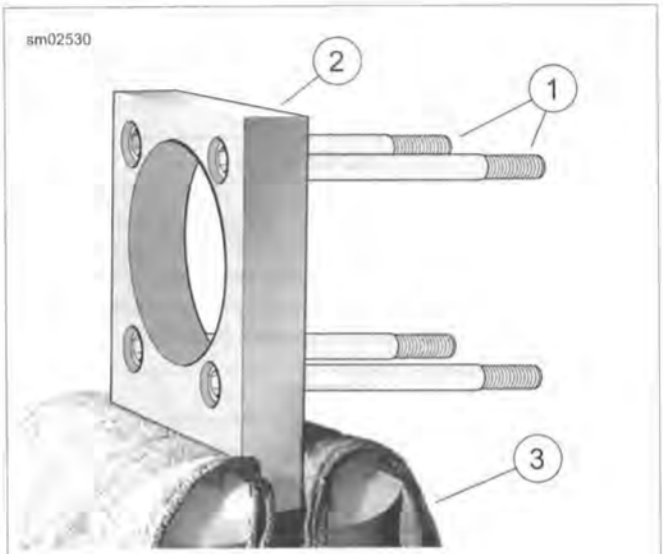

1. **Bolt (4)**
2. **Lower plate**
3. **Vise**

Figure 3-51. Attaching Cylinder Torque Plates

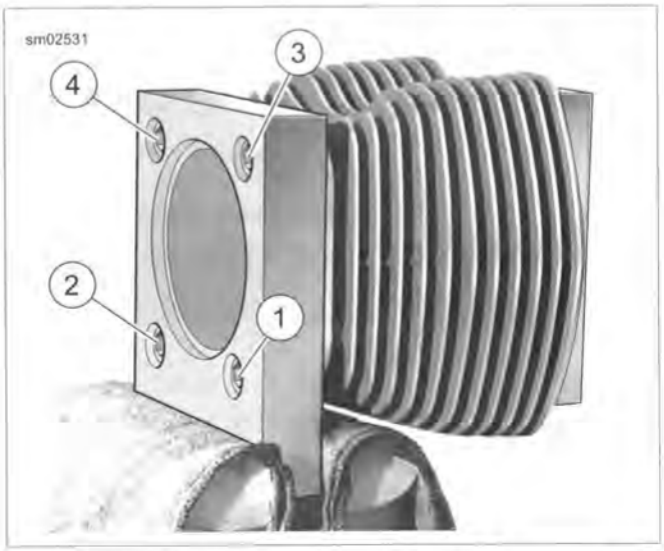

Figure 3-52. Cylinder Torque Plate Bolt Sequence

DEGLAZING CYLINDER

NOTE

Deglazing removes wear patterns, minor scuff marks and scratches without enlarging the bore diameter.

1. Lightly swab the cylinder bore with a cloth dipped in clean engine oil.
2. Obtain a 240 grit flexible ball-type deglazing tool with a bristle tip or finishing stone able to produce a 60 degree crosshatch pattern.
3. Install the deglazing tool in a slow-speed drill. The speed at which the tool rotates determines the speed at which it must be stroked up and down the bore to produce the 60 degree crosshatch pattern.
4. Starting at the bottom of the cylinder, move the deglazing tool up and down the entire length of the cylinder bore for 10 to 12 complete strokes.
5. Stop frequently to examine the cylinder bore and/or take measurements. A precise 60 degree crosshatch pattern in the piston travel area is the most important.

NOTICE

The angular crosshatch pattern ensures an even flow of oil onto the cylinder walls and promotes longer cylinder, piston and ring life. An incorrect cross hatch pattern will result in insufficient oil retention and possible piston seizure and/or high oil consumption. (00536c)

NOTICE

Failure to remove all abrasive particles may result in premature cylinder, piston and ring wear and engine failure. (00537c)

6. Thoroughly wash the cylinder bore with liquid dishwashing soap and hot water. Continue cleaning until a clean cloth shows no evidence of dirt or debris.
7. Hot rinse the cylinder and dry with moisture free compressed air. Immediately apply a thin film of clean engine oil to a clean white paper towel and thoroughly wipe the inside of the cylinder to prevent the cylinder bore from rusting.

NOTE

After wiping the cylinder with a clean, oiled paper towel, the towel will be dark with contamination.

8. Repeat wiping process until a **new** towel remains white.
9. With the cylinder at room temperature, check the piston clearance in the cylinder in which the piston will run. See 3.22 PISTON, Inspection.

BORING AND HONING CYLINDER

1. Bore cylinder with gaskets and torque plates attached. Bore the cylinder to 0.003 in (0.08 mm) under the desired finished size. Refer to Table 3-38 or Table 3-39.

NOTICE

An incorrect crosshatch pattern or too fine a hone will result in insufficient oil retention and possible piston seizure and/or high oil consumption. (00538c)

2. Honing the cylinder:
   a. Hone the cylinder to its finished size using a 280 grit rigid hone followed by a 240 grit flexible ball hone.
   b. Honing must be done with the torque plates attached.
   c. All honing must be done from the bottom (crankcase) end of the cylinder. Work for a 60 degree crosshatch pattern.
3. Stop frequently to examine the cylinder bore and/or take measurements.

NOTICE

Failure to remove all abrasive particles may result in premature cylinder, piston and ring wear and engine failure. (00537c)

4. Thoroughly wash the cylinder bore with liquid dishwashing soap and hot water. Continue cleaning until a clean cloth shows no evidence of dirt or debris.
5. Hot rinse the cylinder and dry with moisture free compressed air. Immediately apply a thin film of clean engine oil to a clean white paper towel. Thoroughly wipe the inside of the cylinder to prevent the cylinder bore from rusting.

NOTE

After wiping the cylinder with a clean, oiled paper towel, the towel will be dark with contamination.

6. Repeat wiping process until a **new** towel remains white.
7. With the cylinder at room temperature, check the piston clearance in the cylinder in which the piston will run. See 3.22 PISTON, Inspection.

Table 3-38. Oversize Pistons and Cylinder Bores, Twin Cam 96

PISTON		CYLINDER BORE FINISHED SIZE	
TYPE	**SIZE**	**MINIMUM**	**MAXIMUM**
Standard	STD	3.7500 in (95.250 mm)	3.7505 in (95.263 mm)
Oversize	0.005 in (0.13 mm)	3.7550 in (95.377 mm)	3.7555 in (95.390 mm)
	0.010 in (0.25 mm)	3.7600 in (95.504 mm)	3.7605 in (95.517 mm)

Table 3-39. Oversize Pistons and Cylinder Bores, Twin Cam 103

PISTON		CYLINDER BORE FINISHED SIZE	
TYPE	SIZE	MINIMUM	MAXIMUM
Standard	STD	3.8750 in (98.425 mm)	3.8755 in (98.438 mm)
Oversize	0.010 in (0.25 mm)	3.8850 in (98.679 mm)	3.8855 in (98.692 mm)

DISASSEMBLY

PART NUMBER	TOOL NAME
SNAP-ON PRS8	PISTON RING EXPANDER

Piston Rings

⚠WARNING

Wear safety glasses or goggles when removing or installing compression rings. Compression rings can slip from the pliers and could be propelled with enough force to cause serious eye injury. (00469c)

1. See Figure 3-53. Carefully remove top (7) and second (6) compression rings using PISTON RING EXPANDER (Part No. Snap-on PRS8).
2. Remove top and bottom oil rails (4) with fingers. Remove the oil rail expansion ring (5).
3. Discard the piston rings.

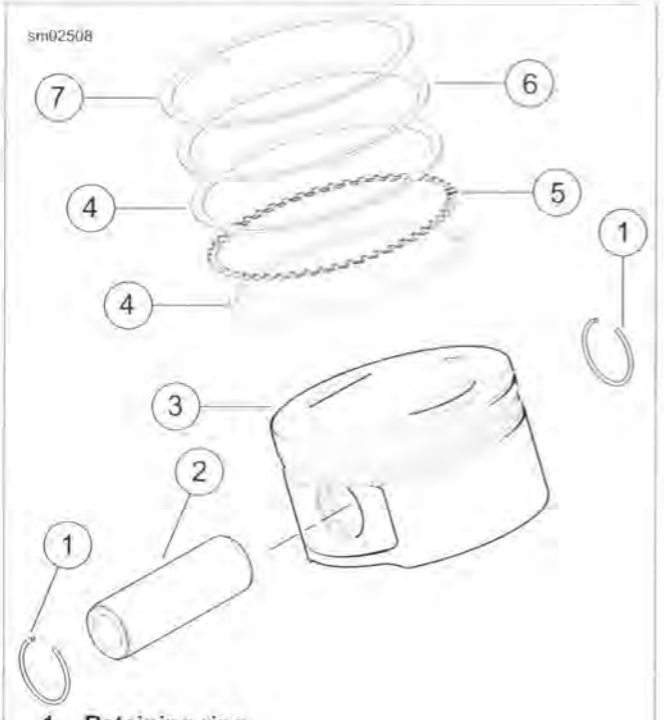

1. **Retaining ring**
2. **Piston pin**
3. **Piston**
4. **Oil rail**
5. **Expansion ring**
6. **Second compression ring**
7. **Top compression ring**

Figure 3-53. Piston Assembly

CLEANING

1. Remove all combustion deposits by soaking the pistons in hot water with dishwashing liquid or a cleaner designed to remove carbon and which does not corrode aluminum. Follow the manufacturer's instructions when using these cleaners.

⚠WARNING

Compressed air can pierce the skin and flying debris from compressed air could cause serious eye injury. Wear safety glasses when working with compressed air. Never use your hand to check for air leaks or to determine air flow rates. (00061a)

NOTE

Do not sandblast or glass bead blast pistons. Bead blasting rounds off ring lands. This results in oil contamination leading to accelerated wear.

2. Thoroughly rinse the pistons. Dry with moisture-free, compressed air.
3. Clean the oil drain holes in the oil control ring groove. Run a small bristle brush through the passageways. Do not damage or enlarge the holes. Do not use a wire brush.
4. Verify that all oil holes are clean and open.

NOTE

Avoid scratching the sides of the piston ring grooves.

5. Thoroughly clean the three piston ring grooves of all carbon deposits. A portion of a compression ring properly ground to a sharp chisel-like edge works well for this purpose.

INSPECTION

1. Using dye penetrant, inspect the piston for surface cracks. Particularly examine the area around the pin bores, ring lands and oil drain holes beneath the piston crown. If no cracks are found, thoroughly wash piston to remove traces of dye.
2. See Figure 3-54. Check piston pin. Pin must slide without binding.
   a. Insert a lightly oiled good piston pin into the piston pin bore to feel for the proper fit. The pin should slide in and out without binding, pivoting or rocking.
   b. Measure pin and pin bore diameters to determine running clearance. Replace piston and/or pin if clearance exceeds 0.0008 in (0.020 mm).

NOTE

Pistons with superficial wear marks, minor scratching or mild scoring are acceptable for use.

3. Carefully inspect the pistons for damage or excessive wear. Discard if any of the following conditions are found:
   a. Cracked, worn or bent ring lands
   b. Cracks, gouges, deep scratches or heavy scoring
   c. Evidence of burning, etching or melting
   d. Marks or imprints caused by contact with valves
4. Feel for dings, nicks or burrs around the edge of the piston crown. Lightly file to remove any defects.

NOTE

Worn ring grooves result in high oil consumption and blow-by of exhaust gases. Blow-by of exhaust gases contaminate the engine oil supply with acids and leaves sludge in the crankcase. It also reduces engine efficiency by weakening the combustion seal necessary for efficient transfer of energy to the piston.

5. See Figure 3-55. Measure piston ring side clearance.
   a. Insert the edge of a **new** ring into the piston ring groove. Insert a feeler gauge between the upper surface of the ring and the ring land.
   b. Since the grooves wear unevenly, repeat this check at several locations around the piston groove circumference.
   c. Discard the piston if the side clearance of either compression ring exceeds 0.0045 in (0.11 mm).
   d. Discard the piston if the oil control ring side clearance exceeds 0.010 in (0.25 mm).

NOTES

- *Check the piston clearance in the cylinder in which the piston will run. The cylinder must be deglazed and have torque plates installed when measuring bore.*
- *This inspection is very heat-sensitive. Both the piston and cylinder must be at room temperature before proceeding. Do not check piston running clearance immediately after honing or deglazing cylinder. Even holding the piston for too long can cause measurements to vary by as much as 0.0002 in (0.0051 mm).*
- *See upper frame of Figure 3-56. The coating has an oval-shaped opening (1) on each side of the piston for proper micrometer placement.*
- *See lower frame of Figure 3-56. The oval openings are too small for a standard flat anvil micrometer. Use a blade or ball anvil style micrometer to measure piston.*

6. See Figure 3-56. Measure running clearance of pistons:
   a. Measure the piston skirt at the bare aluminum openings (1) in the coating. Transfer that measurement to dial bore gauge.
   b. Mark the top, middle and bottom of the piston ring travel zone in the cylinder bore. Measure at markings in cylinder parallel and perpendicular to crankshaft.
   c. Replace piston and/or cylinder if running clearance exceeds 0.003 in (0.076 mm).



Figure 3-54. Piston Pin Clearance

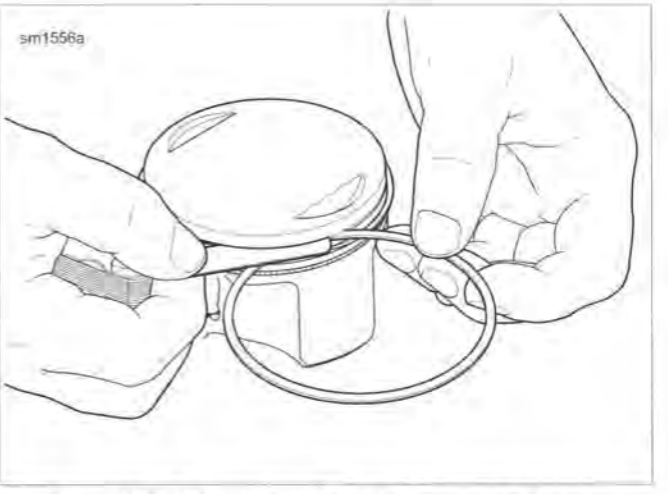

Figure 3-55. Measuring Ring Clearance in Groove



1. **Bare aluminum opening**
2. **4-5 in micrometer**
3. **Spherical ball anvil adapters**

Figure 3-56. Measuring Running Clearance of Piston

ASSEMBLY

PART NUMBER	TOOL NAME
SNAP-ON PRS8	PISTON RING EXPANDER

Checking Piston Ring Gap

NOTES

- *Always use **new** piston rings. Piston rings take a definite set and must not be reused if the engine has been operated. Always deglaze (or hone) the cylinder before installing **new** rings.*
- *Insufficient ring gap may cause the ends to abut at operating temperatures. This will result in ring breakage, cylinder scuffing and/or piston seizure.*
- *Excessive ring gap results in high oil consumption and blow-by of exhaust gases. Blow-by contaminates the oil supply and leaves sludge in the crankcase. It also reduces engine efficiency by weakening the combustion seal necessary for efficient transfer of energy to the piston.*

1. See Figure 3-57. Check end gap of each ring before placing on the piston.
   a. Insert the **new** ring into the cylinder and square it in the bore using the top of the piston.
   b. Measure the ring end gap with a feeler gauge. Refer to Table 3-40.

⚠WARNING

Compressed air can pierce the skin and flying debris from compressed air could cause serious eye injury. Wear safety glasses when working with compressed air. Never use your hand to check for air leaks or to determine air flow rates. (00061a)

NOTE

Ring end gap dimensions also apply to oversize rings. Replace ring if end gap exceeds specification. If end gap is under specification, filing is permissible.

2. Use low-pressure, compressed air to remove any dirt or dust that may have settled in the oil drain holes and piston ring grooves.

Table 3-40. Piston Ring End Gap: Twin Cam 96/103

PISTON RING	IN	MM
Top compression	0.012-0.022	0.305-0.559
Second compression	0.015-0.025	0.381-0.635
Oil control	0.010-0.050	0.254-1.270

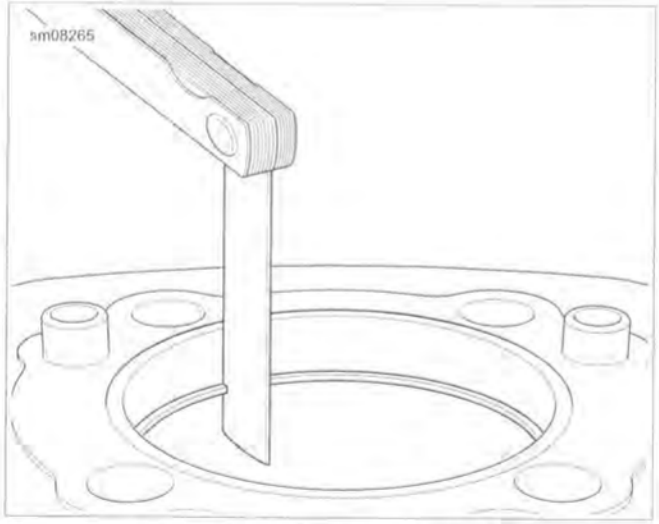

Figure 3-57. Measuring Ring Gap

Installing Piston Rings

1. See Figure 3-58. Apply clean engine oil to three piston ring grooves.
2. Install expansion ring (4) into third ring groove.
3. Spiral bottom oil rail (5) into space below expansion ring (4). Position gap 90 degrees from the gap in the expansion ring.
4. Spiral top oil rail (3) into space above expansion ring (4). Position gap 180 degrees from the gap in the bottom oil rail.

⚠WARNING

Wear safety glasses or goggles when removing or installing compression rings. Compression rings can slip from the pliers and could be propelled with enough force to cause serious eye injury. (00469c)

NOTES

- *Use the proper piston ring spreader to prevent excessive ring twist and expansion. Over expansion may cause the ring to crack.*
- *Installing the second compression ring upside down will cause oil to be scraped up into the combustion chamber. This will result in increased oil consumption and lower service life on valves and other components.*

5. Using PISTON RING EXPANDER (Part No. Snap-on PRS8), carefully install the second compression ring. Make sure the dot (punch mark) near the ring gap faces the piston crown. Rotate the ring so the gap is 180 degrees from the gap in the oil expansion ring.
6. Install the top compression ring. Make sure the dot (punch mark) near the ring gap faces the piston crown. Rotate the ring so the gap is 180 degrees from the gap in the second compression ring.
7. Rotate the three piston rings using the palms of both hands. The rings must rotate freely.
8. See Figure 3-59. Verify that the ring gaps are still properly staggered.

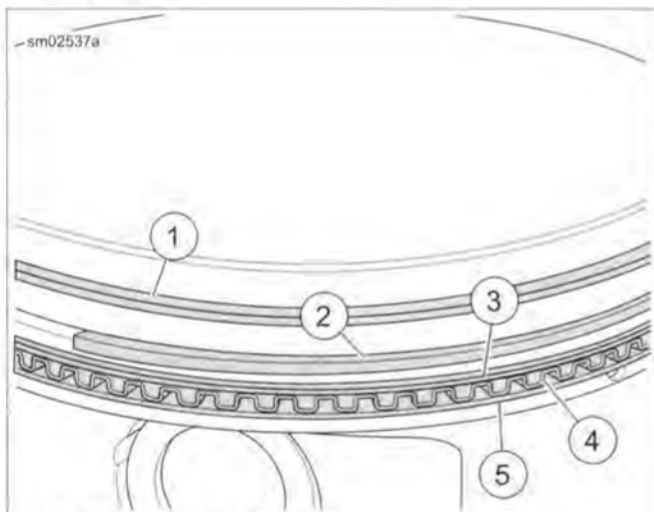

1. **Top compression ring**
2. **Second compression ring**
3. **Top oil rail**
4. **Expansion ring**
5. **Bottom oil rail**

Figure 3-58. Piston Rings

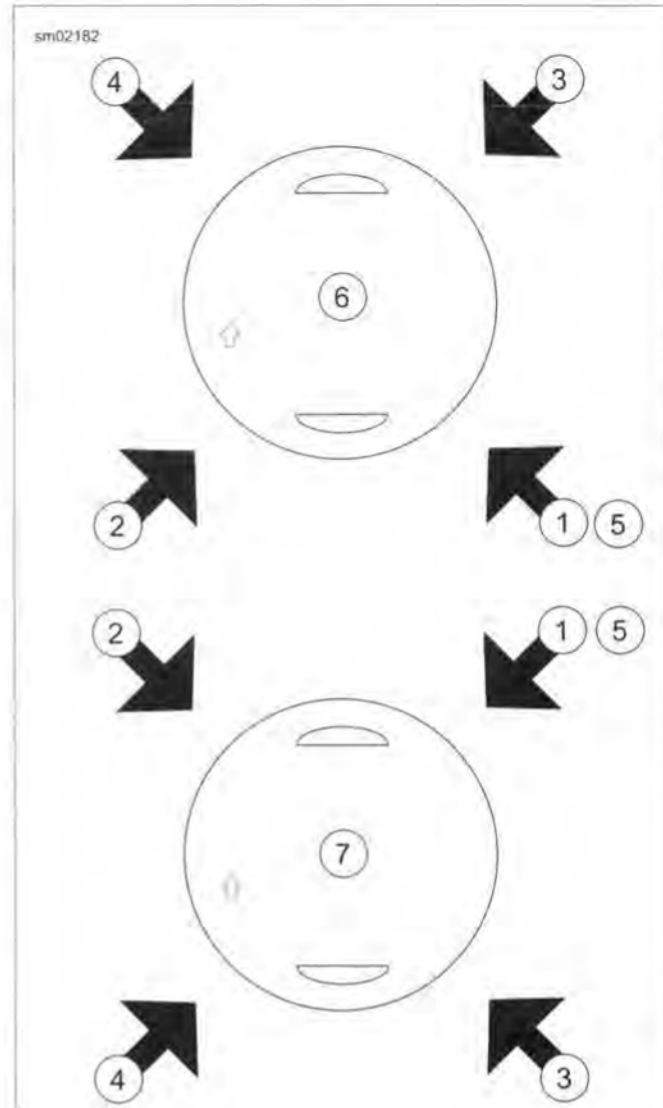

1. **Expander ring**
2. **Bottom oil rail**
3. **Top oil rail**
4. **Second compression ring**
5. **Top compression ring**
6. **Front**
7. **Rear**

Figure 3-59. Piston Ring Order of Assembly and Gap Alignment

GENERAL

NOTES

- *Perform each step on one cylinder. Then repeat on the other cylinder.*
- *Make sure the piston is correct for the connecting rod style.*

This section provides a sequential process for top end assembly after a complete disassembly. If only a partial disassembly was performed, start where necessary and continue to the end of the section.

PISTON

PART NUMBER	TOOL NAME
HD-42317-A	PISTON PIN RETAINING RING INSTALLER

1. Slide approximately 6.0 in (152 mm) of plastic tubing, rubber hose or conduit over each cylinder stud. Use material with ID of 0.5 in (12.7 mm).
2. See Figure 3-61Install one **new** piston pin retaining ring with the PISTON PIN RETAINING RING INSTALLER (Part No. HD-42317-A).
3. Apply SCREAMIN' EAGLE ASSEMBLY LUBE to piston pin, piston pin bores and upper connecting rod bore.
4. Remove water pipe insulation from connecting rod shank.
5. See Figure 3-60. Place piston over rod end with the arrow stamped on the top of the piston pointing toward the front of the engine.
6. See Figure 3-61. Insert piston pin (1) through pin bore and upper connecting rod bore. Push pin until it contacts retaining ring installed in opposite pin boss. Verify that end gap (3) for retaining ring is 180 degrees from opening (2).
7. Place clean shop towels over the cylinder and lifter bores to prevent the piston pin retaining ring from falling into the crankcase. Verify that the retaining ring groove is clean and free of dirt and grime.

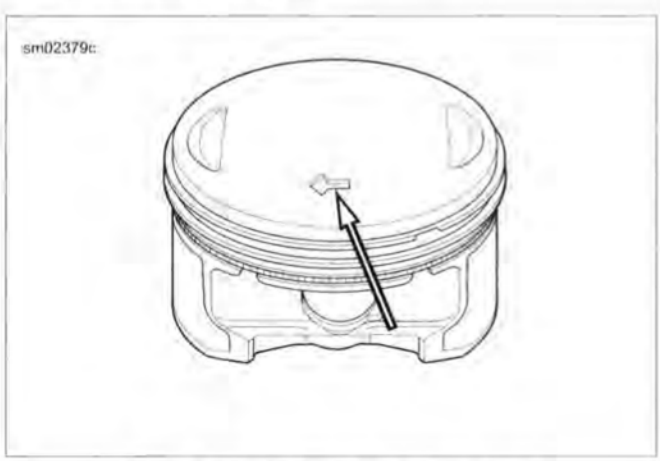

Figure 3-60. Piston Installation Arrow

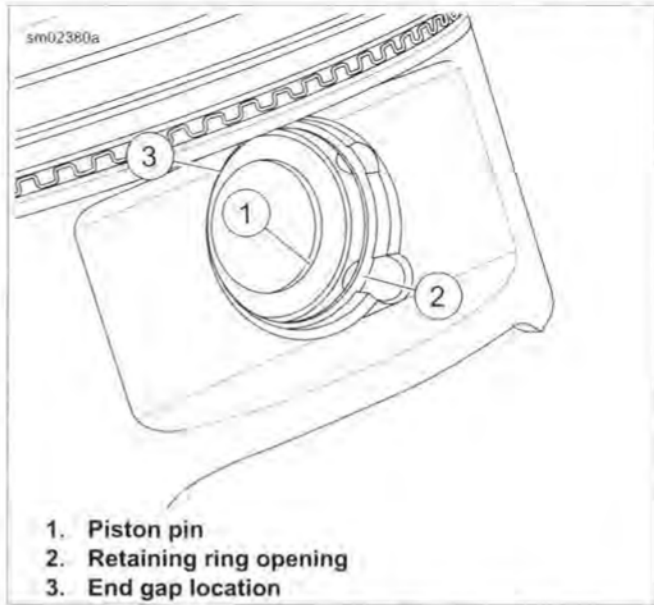

1. **Piston pin**
2. **Retaining ring opening**
3. **End gap location**

Figure 3-61. Pre-Installed Retaining Ring

NOTE

Do not reuse piston pin retaining rings.

8. Install **new** piston pin retaining ring with the PISTON PIN RETAINING RING INSTALLER (Part No. HD-42317-A).
   a. See Figure 3-62. Slide retaining ring down nose of tool until it contacts claw. Lightly squeeze handles of tool to capture retaining ring in claw.
   b. Release pressure on handles, rotate retaining ring so the end gap is centered at top of tool, then recapture in claw.
   c. Tilt the retaining ring forward until the end gap contacts nose of tool.
   d. See Figure 3-63. Insert the tool (1) into the piston pin bore until claw is aligned with slot (2) in piston.
   e. Firmly push the tool into the piston pin bore until it bottoms. Release handles and remove tool.
   f. Inspect the retaining ring to verify that it is fully seated in the groove.

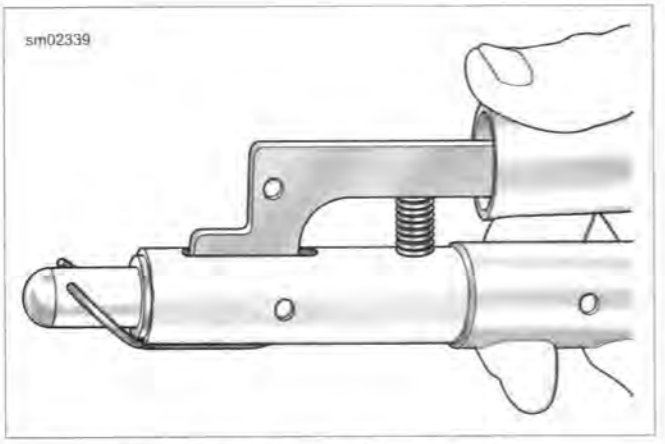

Figure 3-62. Aligning Retaining Ring

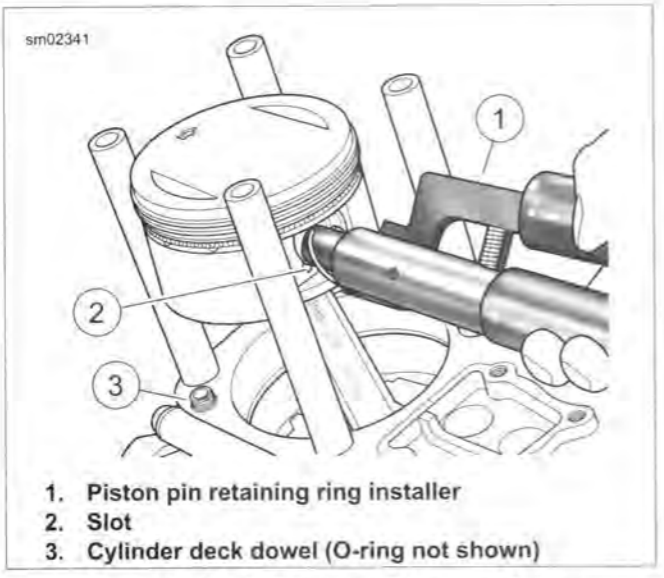

1. **Piston pin retaining ring installer**
2. **Slot**
3. **Cylinder deck dowel (O-ring not shown)**

Figure 3-63. Pin Retaining Ring Installation

CYLINDER

PART NUMBER	TOOL NAME
HD-42322-A	PISTON SUPPORT PLATE
HD-95952-1	THREADED CYLINDERS
HD-95952-33C	CONNECTING ROD CLAMPING TOOL
HD-96333-51F	PISTON RING COMPRESSOR

1. See Figure 3-63. Apply a very thin film of clean engine oil to **new** O-rings for both lower cylinder deck dowels. Install and verify that O-ring is properly seated in groove.
2. Apply a very thin film of clean engine oil to **new** O-ring seal for the bottom of the cylinder liner. Install **new** O-ring seal.

NOTE

Excessive lubrication of cylinder sleeve O-ring seal will result in oil weepage between cylinder and crankcase as engine is run. This condition may be incorrectly diagnosed as an oil leak.

3. See Figure 3-59. Verify that the piston ring end gaps are staggered. Rotate each ring to position the gap 90-180 degrees from the gap in the ring above it. Locate the top piston ring (5) gap towards the intake port.
4. Apply clean engine oil to piston, piston rings and cylinder bore.
5. Remove protective covers from cylinder studs. Rotate engine until piston is at top dead center. If necessary, see 3.16 TOP END OVERHAUL: DISASSEMBLY, Rocker Arm Support Plate for different methods of engine rotation.
6. See Figure 3-64. Install the PISTON SUPPORT PLATE (Part No. HD-42322-A).
   a. Slide both knobs (2) on support plate (1) away from forked end. Tighten knobs when contact is made with flats at end of slots.
   b. Point the forked end of the tool toward the center of the engine and the knobs facing downward. Capture shank of connecting rod in fork. Lay tool on cylinder deck so that knobs contact wall of cylinder bore.
   c. Rotate engine until piston skirt is centered and firmly seated on top of support plate.

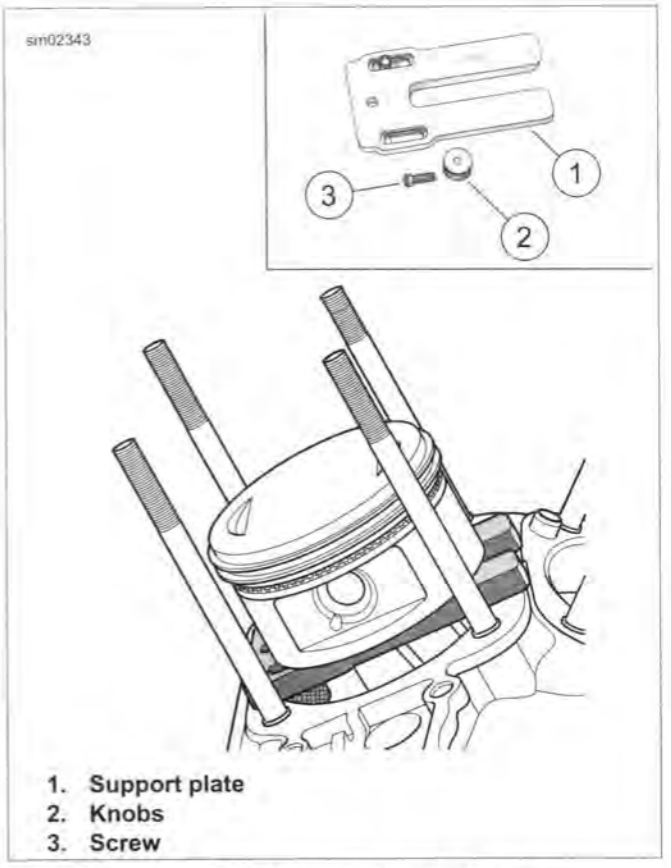

1. **Support plate**
2. **Knobs**
3. **Screw**

Figure 3-64. Piston Support Plate

7. See Figure 3-65. Install cylinder using PISTON RING COMPRESSOR (Part No. HD-96333-51F).
   a. Fit tabs on pliers (1) into slots of ring compressor band (2). The arrow stamped on the band indicates the side that faces up. The word "bottom" refers to the piston bottom.
   b. Place band around piston. Press the lever on the right side of the pliers to open the jaws for band expansion.
   c. Orient tool so that the top of the band is positioned between the top compression ring and the piston crown.
   d. Tightly squeeze handles of tool to compress piston rings. The ratcheting action of the tool allows release of the handles after the rings are compressed.
   e. With the indent in the cooling fins facing the right side of the engine, gently slide cylinder over the cylinder studs and the piston, resting it on the top of the ring compressor.
   f. Use the palms of both hands to push down on the cylinder with a sharp, quick motion to pass the piston ring area.
   g. Rotate the crankshaft slightly to raise piston off support plate. Remove pliers from connecting rod. Remove piston support plate.
8. Remove shop towels from around the crankcase bore.
9. Carefully set the cylinder over the two dowel pins in the cylinder deck. Push down on the cylinder until it is fully seated in the crankcase bore.
10. See Figure 3-66. Install THREADED CYLINDERS (Part No. HD-95952-1) from CONNECTING ROD CLAMPING TOOL (Part No. HD-95952-33C) onto cylinder studs with the knurled side down.

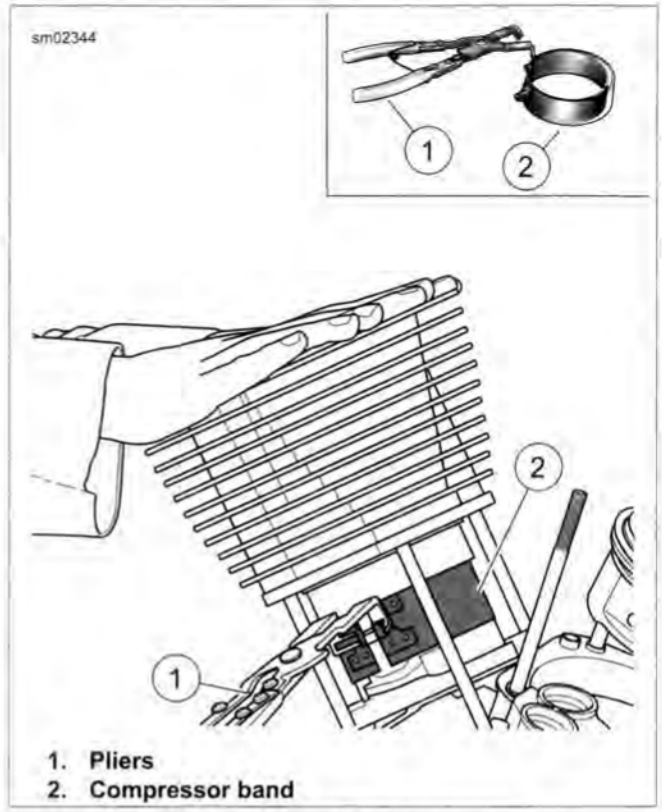

1. Pliers
2. Compressor band

Figure 3-65. Piston Ring Compressor

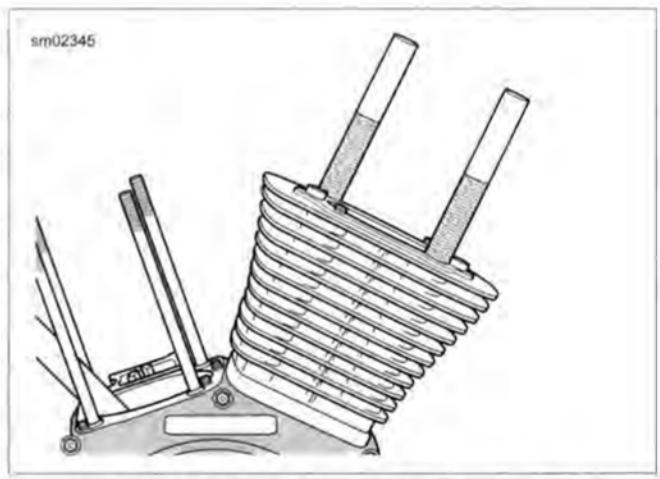

Figure 3-66. Install Threaded Cylinders to Studs

CYLINDER HEAD

PART NUMBER	TOOL NAME
HD-95952-1	THREADED CYLINDERS
TA360	SNAP-ON TORQUE ANGLE GAUGE

FASTENER	TORQUE VALUE	
Cylinder head bolts, first torque	120-144 **in-lbs**	13.6-16.3 Nm
Cylinder head bolts, second torque	15-17 ft-lbs	20.3-23.0 Nm
Cylinder head bolts, final torque	90 degrees	90 degrees
Rocker housing screws	120-168 **in-lbs**	13.6-19.0 Nm

NOTES

- *"Front" or "Rear" is cast into the top of the cylinder head for proper installation. The indent in the cooling fins always faces the right side of the engine.*
- *Lower the cylinder head at an angle that closely approximates the angle of the cylinder to avoid damage.*
- *Thoroughly clean and lubricate the threads of the cylinder head bolts before installation. Friction caused by dirt and grime results in a false torque indication.*

1. Remove the THREADED CYLINDERS (Part No. HD-95952-1).
2. See Figure 3-67. With the part number facing up, place the head gasket over the two dowel pins in the upper flange of the cylinder.
3. Slide cylinder head squarely over the two cylinder flange dowel pins (2).
4. Lightly coat the threads and bottom face of the cylinder head bolts with clean engine oil. Wipe off excess oil.
5. See Figure 3-68. Loosely install the cylinder head bolts. Install two short bolts on the left side of the engine and two long bolts on the right.

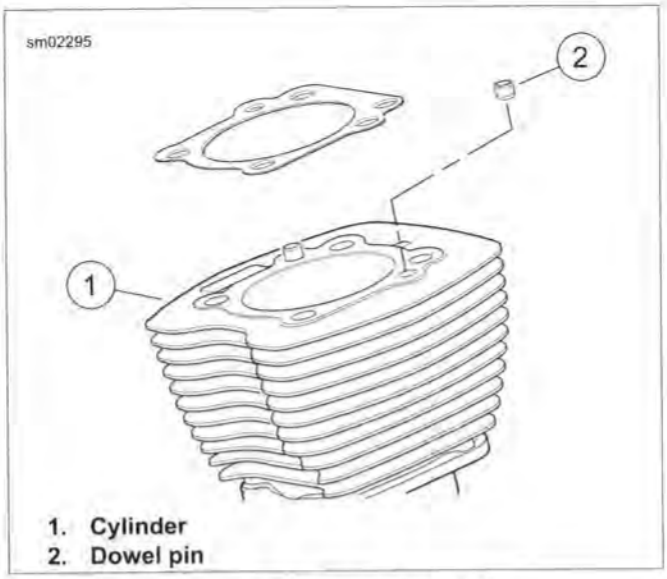

1. **Cylinder**
2. **Dowel pin**

Figure 3-67. Cylinder Dowel Pins

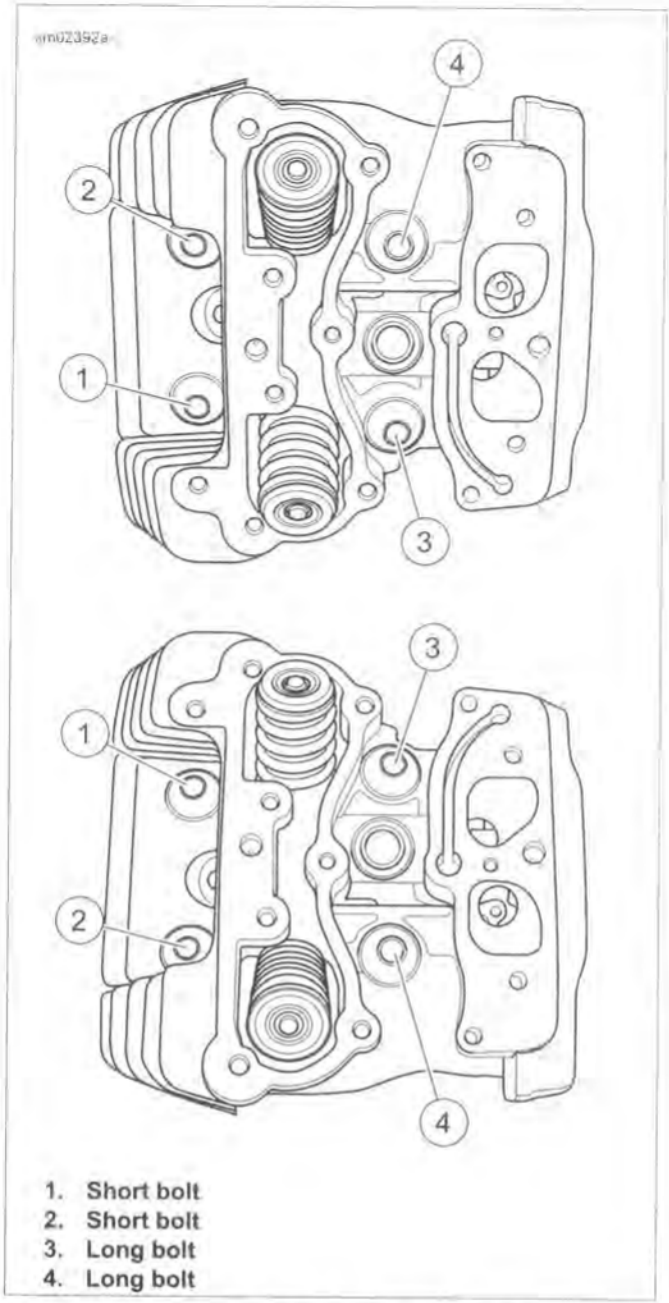

1. **Short bolt**
2. **Short bolt**
3. **Long bolt**
4. **Long bolt**

Figure 3-68. Cylinder Head Bolt Torque Sequence (Top: Front Cylinder Head, Bottom: Rear Cylinder Head)

NOTE

Improperly tightened cylinder head bolts may result in gasket leaks, stud failure or distortion of the cylinder and/or cylinder head.

6. Tighten the cylinder head bolts:
   a. See Figure 3-68. Tighten cylinder head bolts finger-tight in sequence shown.
   b. Following the same sequence, tighten the cylinder head bolts to 120-144 **in-lbs** (13.6-16.3 Nm).
   c. Continuing the same sequence, tighten each bolt to 15-17 ft-lbs (20.3-23.0 Nm).
7. See Figure 3-69. Final-tighten each bolt an additional 90 degrees (90 degrees) in the same sequence. For best results use SNAP-ON TORQUE ANGLE GAUGE (Part No. TA360).
   a. If using a grease pencil, mark a straight line on the cylinder head bolt continuing the line over onto the cylinder head.
   b. Use the marks as a guide to achieve the 90 degrees.

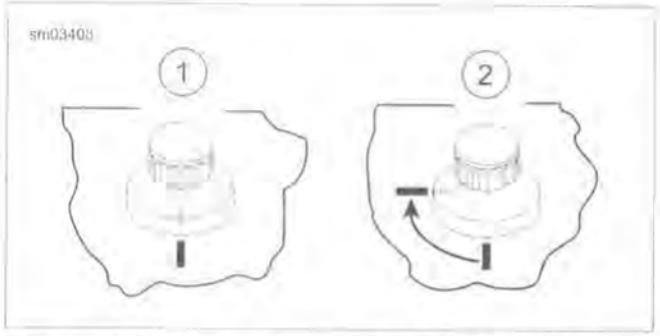

Figure 3-69. Final Tightening for Cylinder Head Bolts

8. **103 and larger engines:** Install the ACR. See 7.16 AUTOMATIC COMPRESSION RELEASE (ACR).

NOTES

- *The rocker housing gasket can be installed upside down resulting in an open breather channel. This causes a major oil leak when the vehicle is started, possibly resulting in engine and/or property damage.*
- *On front cylinder head, install side of gasket marked "front" facing up. On rear cylinder head, install side of gasket marked "rear" facing up.*

9. See Figure 3-70. Install a **new** rocker housing gasket on the cylinder head. Verify that the rocker housing gasket covers the breather channel.

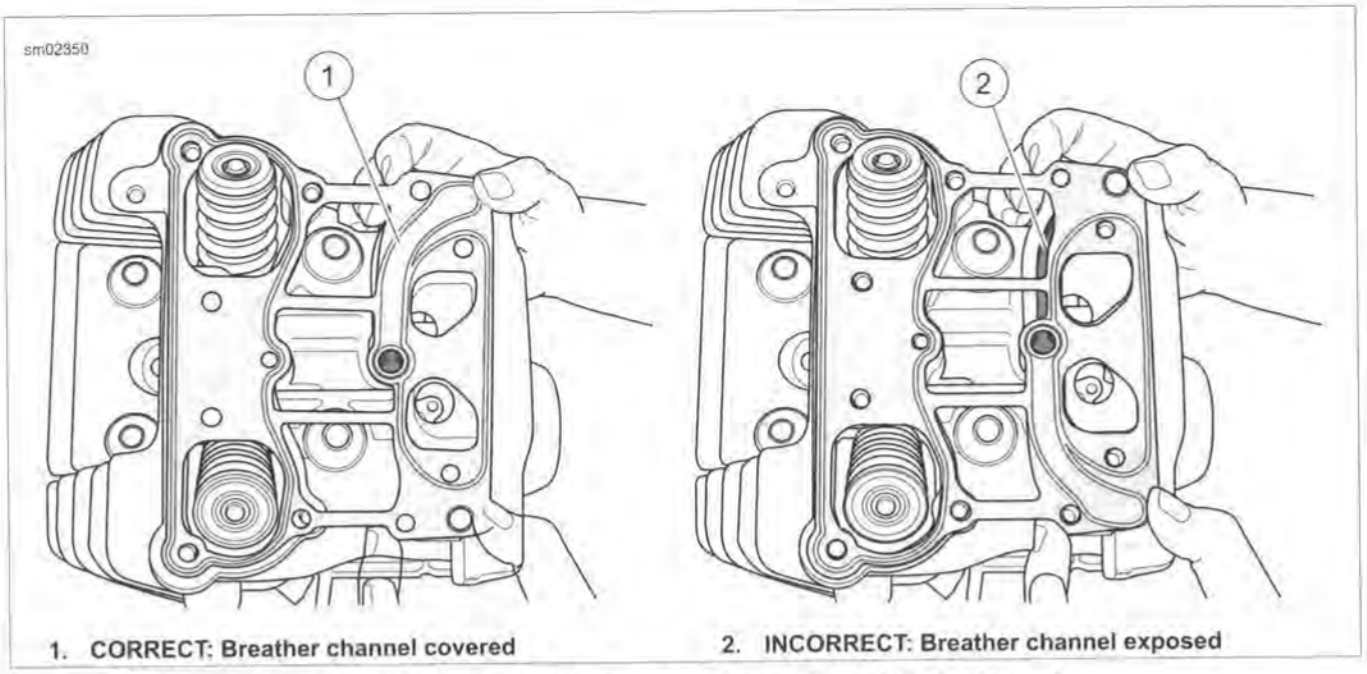

1. **CORRECT: Breather channel covered**
2. **INCORRECT: Breather channel exposed**

Figure 3-70. Install Rocker Housing Gasket (Rear Cylinder Shown)

10. See Figure 3-72. Install rocker housing.
    a. With the indent (1) facing forward, place the rocker housing into position.
    b. See Figure 3-71. Apply a drop of LOCTITE 243 MEDIUM STRENGTH THREADLOCKER AND SEALANT (blue) to the rocker housing screws.
    c. Install two long screws (2, 3) on the left side of the engine and four intermediate screws in the interior.
    d. Tighten in the sequence shown to 120-168 **in-lbs** (13.6-19.0 Nm).

NOTE

*Since many O-rings are similar in size and appearance, always use **new** O-rings, keeping them packaged until use to avoid confusion. **Use of the wrong O-ring will result in either oil leakage or low oil pressure.***

11. See Figure 3-72. Apply a very thin film of clean engine oil to **new** breather baffle hole O-ring (2). Install **new** O-ring in groove around breather baffle hole in rocker housing.

NOTE

Do not confuse breather baffle hole O-ring (large inner diameter) with the top pushrod O-ring (small inner diameter).

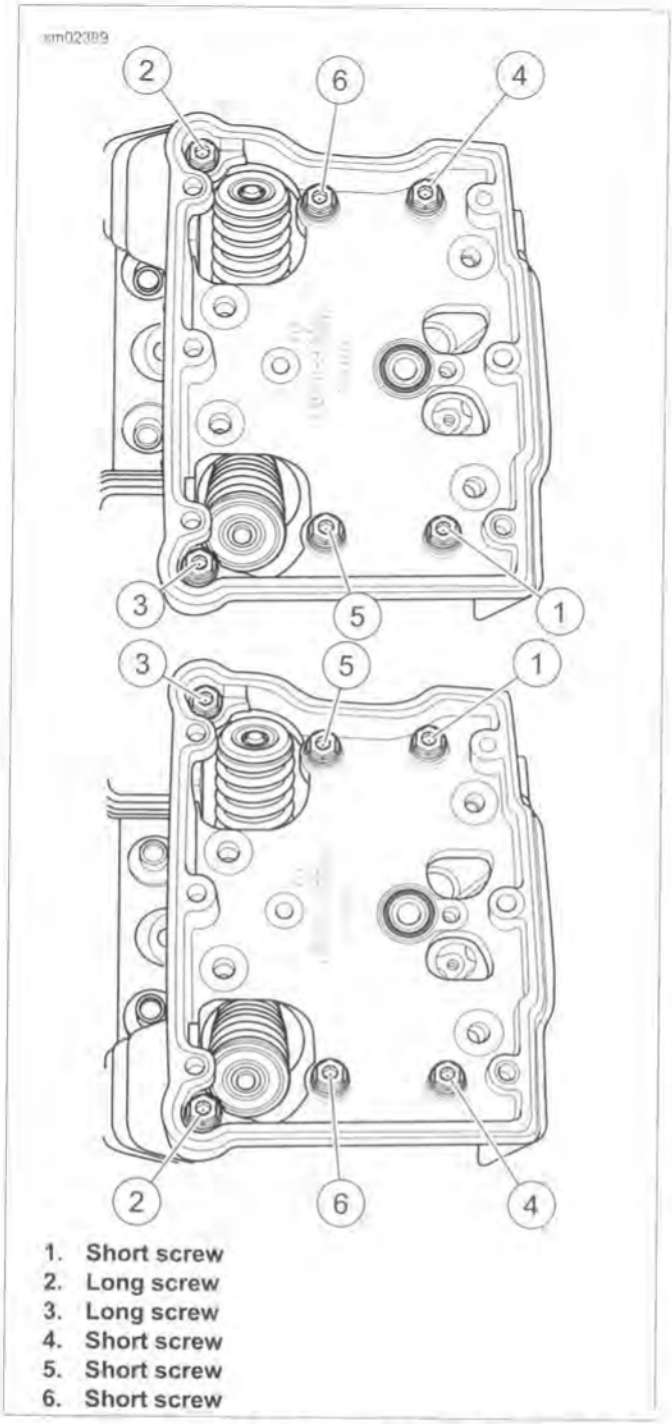

1. **Short screw**
2. **Long screw**
3. **Long screw**
4. **Short screw**
5. **Short screw**
6. **Short screw**

Figure 3-71. Rocker Housing Torque Sequence



1. **Indent**
2. **Breather baffle hole O-ring**

Figure 3-72. Rocker Housing Alignment

PUSHRODS, LIFTERS AND COVERS

FASTENER	TORQUE VALUE	
Lifter cover screws	100-120 **in-lbs**	11.3-13.6 Nm

1. Apply a thin film of SCREAMIN' EAGLE ASSEMBLY LUBE to outer surface of each lifter. Pour a small amount onto each cam lobe.
2. Carefully install lifters in the crankcase bores with the lifter oil hole aligned with the oil passage in the crankcase. Do not drop lifters onto cam lobes.
3. See Figure 3-73. Install the anti-rotation pin (4).

NOTE

During cover installation, verify that the anti-rotation pin (4) is held in place by the ribs (3) cast into the inboard side of the lifter cover. Movement or loss of the pin can result in lifter rotation causing engine damage.

4. Install the lifter cover (1) and **new** gasket (2) with four screws. Tighten to 100-120 **in-lbs** (11.3-13.6 Nm) in a cross-wise pattern.
5. Install **new** O-rings in the lifter cover bores and the cylinder head pushrod cover bores.
6. Install pushrod covers.
   a. Assemble pushrod covers with **new** O-rings.
   b. Hand compress the pushrod cover assembly and fit the pushrod cover into the lifter cover bore.
   c. Extending the assembly, fit the pushrod cover into the cylinder head bore.
   d. Do not install the spring cap retainers now.

NOTE

To install spring cap retainers, see 3.23 TOP END OVERHAUL: ASSEMBLY, Rocker Arm Support Plate.

7. Apply a small amount of SCREAMIN' EAGLE ASSEMBLY LUBE to the ends of each pushrod.
8. See Figure 3-74. Install the pushrods. If installing original parts, install them in their original locations and orientation.

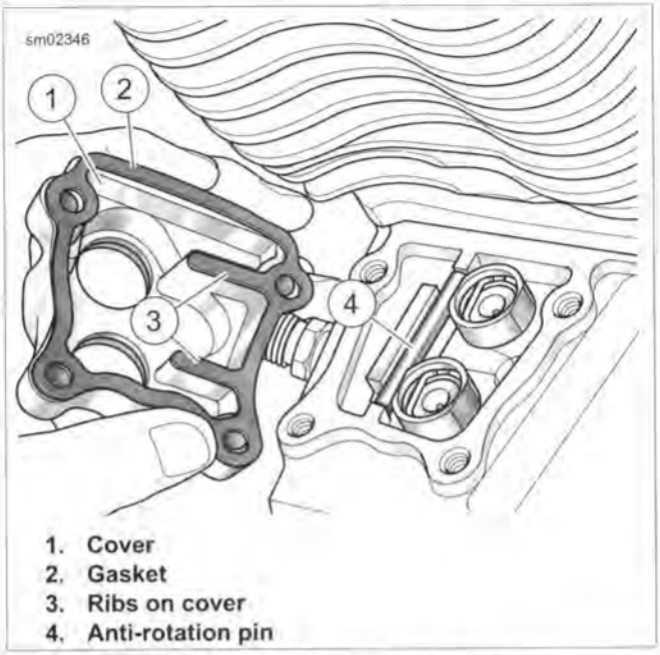

1. **Cover**
2. **Gasket**
3. **Ribs on cover**
4. **Anti-rotation pin**

Figure 3-73. Installing Lifters

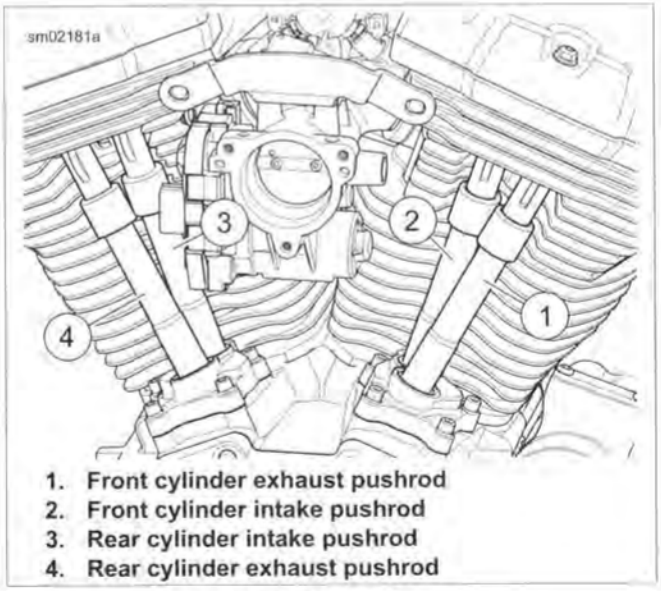

1. **Front cylinder exhaust pushrod**
2. **Front cylinder intake pushrod**
3. **Rear cylinder intake pushrod**
4. **Rear cylinder exhaust pushrod**

Figure 3-74. Pushrod Locations

ROCKER ARM SUPPORT PLATE

PART NUMBER	TOOL NAME
FRDH161	SNAP-ON "DOG BONE" TORQUE ADAPTER

FASTENER	TORQUE VALUE	
Rocker arm support plate screws	18-22 ft-lbs	24.4-29.8 Nm

NOTE

Installing the rocker arms and rotating the crankshaft with the valve train loaded can damage valve train components.

1. Rotate the crankshaft so both lifters of the cylinder being serviced are on the base circle (or lowest position) of the cam lobe.
2. See Figure 3-75. Place the rocker arm support plate assembly into the rocker housing. Loosely install four screws.

NOTE

***Engine in chassis:** Final tighten rocker arm support plate bolt on rear left side of rear cylinder using 3/8 in drive torque wrench with 1/2 in flank drive SNAP-ON "DOG BONE" TORQUE ADAPTER (Part No. FRDH161) or equivalent.*

3. Tighten rocker arm support plate bolts.
   a. Following the sequence shown, alternately tighten each of the four rocker arm support plate bolts one-quarter turn at a time until snug.
   b. Following the same sequence, tighten the bolts to 18-22 ft-lbs (24.4-29.8 Nm).
4. Verify that both pushrods spin freely.

NOTE

Always service each cylinder separately. After the first cylinder is serviced, rotate the crankshaft to find the base circle on the second cam.

5. Repeat steps on remaining cylinder.

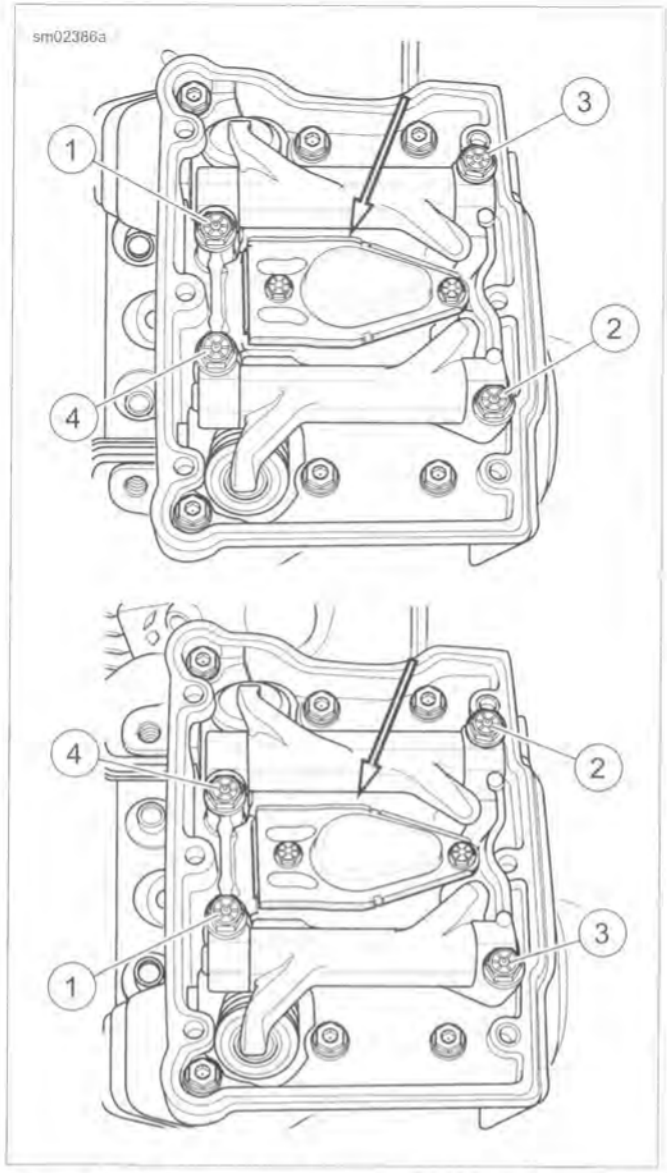

Figure 3-75. Rocker Arm Support Tightening Sequence

6. Complete installation of the pushrod covers.
   a. Verify that the O-ring ends of the upper and lower pushrod covers fit snugly into the cylinder head and lifter cover bores.
   b. Insert the upper edge of spring cap retainer into the cylinder head bore leaving the bottom edge free.
   c. Insert blade of small screwdriver between bottom edge of spring cap retainer and top of spring cap.

NOTE

For best results, verify that screwdriver, spring cap and spring cap retainer are free of grease and oil.

   d. See Figure 3-76. Press spring cap down and slide bottom edge of retainer toward tip of screwdriver.
   e. Verify that spring cap retainer seats tightly against upper pushrod cover.



Figure 3-76. Install Spring Cap Retainers

BREATHER AND ROCKER COVER

PART NUMBER	TOOL NAME
SNAP-ON FRDH141	"DOG BONE" TORQUE ADAPTER

FASTENER	TORQUE VALUE	
Breather assembly screws	120-156 **in-lbs**	13.6-17.6 Nm
Rocker cover screws	15-18 ft-lbs	20.3-24.4 Nm

NOTE

For breather assembly service procedures, see 3.17 BREATHER ASSEMBLY.

1. To secure breather assembly, tighten two screws to 120-156 **in-lbs** (13.6-17.6 Nm).

NOTE

If the engine is in the chassis, final tighten the three rocker cover screws on the left side of the rear cylinder using a 3/8 in drive torque wrench with a 7/16 in flank drive "DOG BONE" TORQUE ADAPTER (Part No. Snap-on FRDH141). Failure to properly use this combination will over-tighten the bolts causing distortion of the rocker cover.

2. Apply a drop of LOCTITE 243 MEDIUM STRENGTH THREADLOCKER AND SEALANT (blue) to rocker cover screws.
3. See Figure 3-77. Install rocker cover and a **new** rocker cover gasket. Tighten in the sequence shown to 15-18 ft-lbs (20.3-24.4 Nm).
4. Complete motorcycle assembly.
   a. If engine was left in the chassis for service, see 3.13 ASSEMBLING MOTORCYCLE AFTER SERVICE.
   b. If engine was removed for service, see 3.15 INSTALLING ENGINE IN CHASSIS.

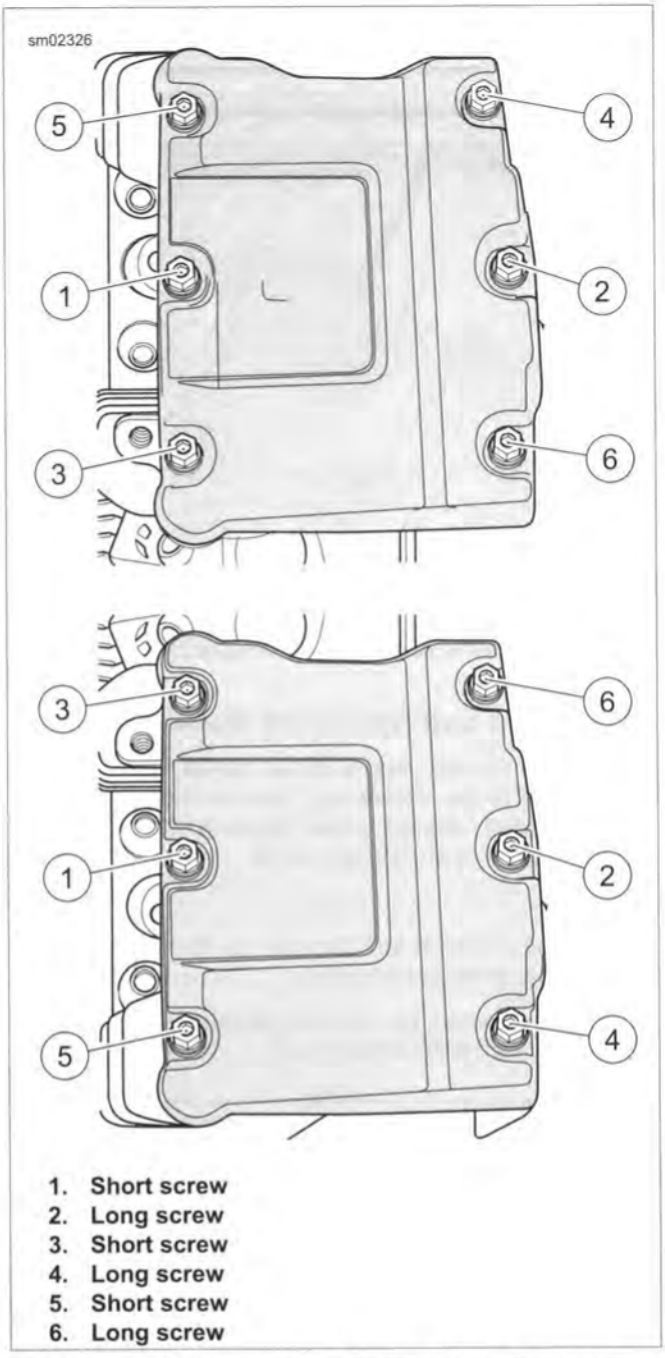

1. Short screw
2. Long screw
3. Short screw
4. Long screw
5. Short screw
6. Long screw

Figure 3-77. Rocker Cover Bolts Torque Sequence

CAM SUPPORT PLATE AND COVER REMOVAL

PART NUMBER	TOOL NAME
93979-10	SCREAMIN' EAGLE MAGNETIC LIFTER HOLDERS
HD-47941	CRANKSHAFT/CAMSHAFT SPROCKET LOCKING TOOL

Prepare Engine

NOTE

The following steps outline removal with the rest of the engine intact. If performing a complete engine overhaul, perform all steps under 3.16 TOP END OVERHAUL: DISASSEMBLY.

1. Remove breather assembly, rocker arm support plate, pushrods and pushrod covers. Do not remove lifters. See appropriate topics under 3.16 TOP END OVERHAUL: DISASSEMBLY.
2. See Figure 3-79. Support lifters using SCREAMIN' EAGLE MAGNETIC LIFTER HOLDERS (Part No. 93979-10).

NOTE

Label cam cover screws to aid during assembly.

3. See Figure 3-78. Remove the screws to release the cam cover. Remove and discard the cam cover gasket.

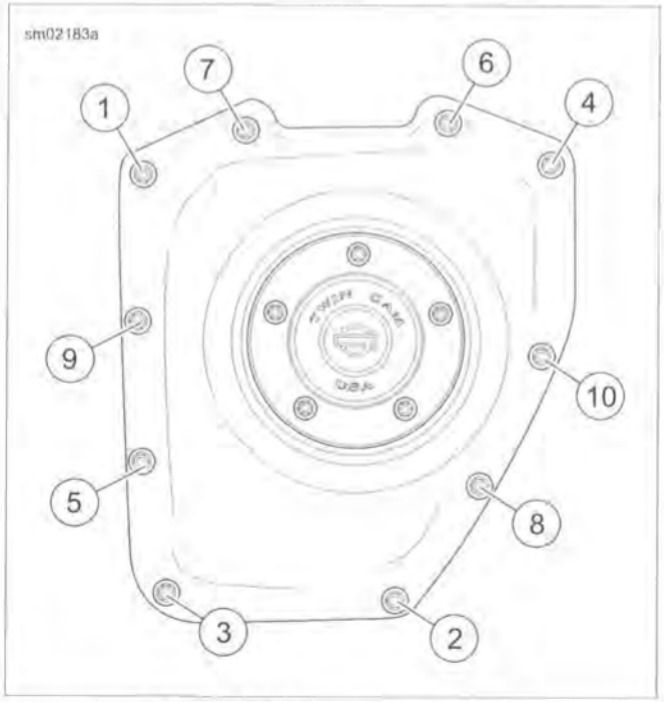

Figure 3-78. Cam Cover Screws

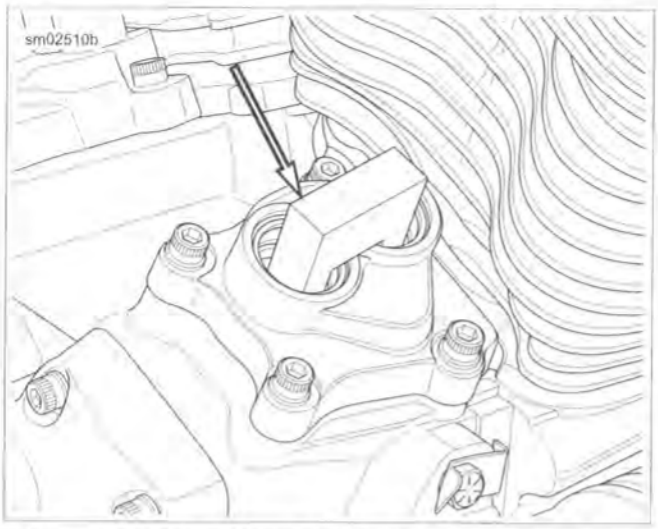

Figure 3-79. SCREAMIN' EAGLE Magnetic Lifter Holder

Cam Chain and Sprockets Removal

1. See Figure 3-80. Using a colored marker, mark one of the links (1) of the primary cam chain to identify the visible side. Maintaining the original direction of rotation during assembly may prolong service life.

NOTE

Use a piece of wire in retention hole (6) to keep cam chain tensioner components assembled.

2. Remove primary cam chain tensioner fasteners (4) and primary cam chain tensioner (3).

NOTE

Verify side of tool labeled "crank side" faces crankshaft sprocket.

3. See Figure 3-81. Install CRANKSHAFT/CAMSHAFT SPROCKET LOCKING TOOL (Part No. HD-47941) between rear cam sprocket (2) and crank sprocket (5).

⚠WARNING

Be sure to follow manufacturer's instructions when using propane torches. Failure to follow manufacturer's instructions can cause a fire, which could result in death or serious injury. (00465c)

- **Avoid directing heat toward any fuel system component. Extreme heat can cause fuel ignition/explosion resulting in death or serious injury.**
- **Avoid directing heat toward any electrical system component.**

NOTES

- *Only use approved methods for removing rear cam bolt. Other methods of removal, such as the use of a large*

breaker bar, may result in damage to chain drive and other components.

- *If necessary, soften threadlocker by using heat from a small propane torch. Apply flame evenly around bolt in a circular motion, but do not allow bolt to turn blue.*

4. Remove the rear cam sprocket bolt and flat washer (1).
5. Remove the crank sprocket bolt and flat washer (4).
6. Remove camshaft locking tool.
7. Use a small pry bar between rear cam sprocket and cam support plate to carefully remove rear cam sprocket.
8. Use a small pry bar to ease off crank sprocket. Remove both sprockets and primary cam chain.

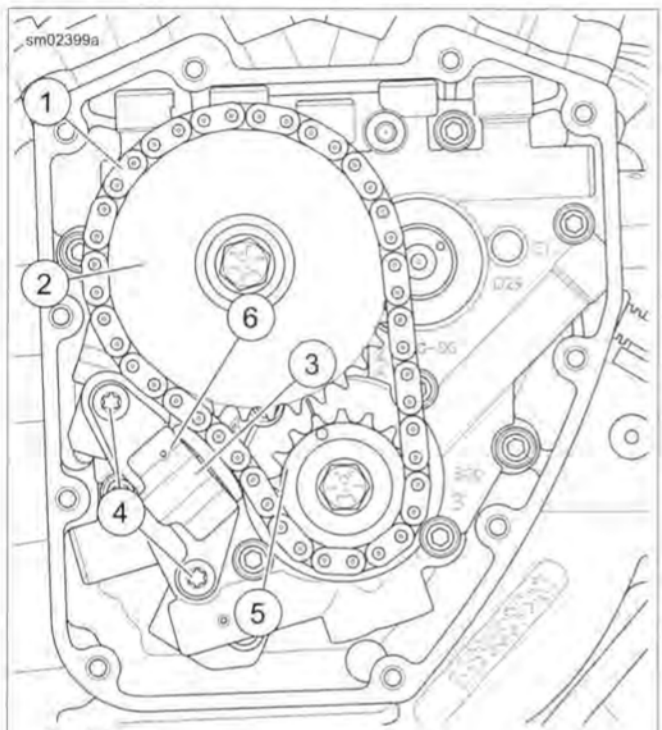

1. **Link**
2. **Rear cam sprocket**
3. **Primary cam chain tensioner**
4. **Primary cam chain tensioner fasteners**
5. **Crank sprocket**
6. **Retention hole**

Figure 3-80. Cam Support Plate Assembly

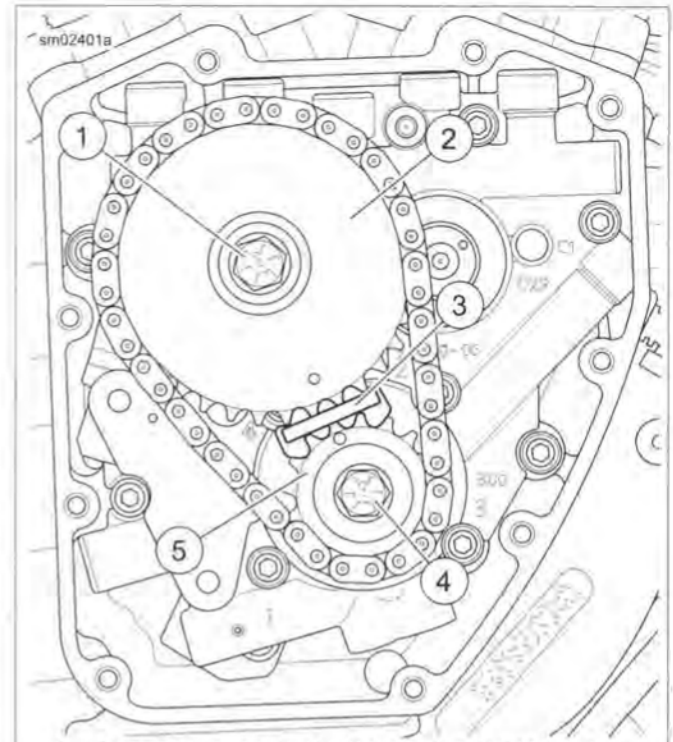

1. **Rear cam sprocket bolt (large) and flat washer**
2. **Rear cam sprocket**
3. **Camshaft locking tool**
4. **Crank sprocket bolt (small) and flat washer**
5. **Crank sprocket**

Figure 3-81. Cam Support Plate Assembly

Cam Support Plate Removal

1. See Figure 3-82. Following the sequence shown, remove four screws.
2. See Figure 3-83. Following the sequence shown, remove six screws to release the cam support plate from the crankcase.
3. See Figure 3-84. Use a small pry bar between the cam support plate and crankcase flange in areas near the ring dowels (2, 3). Remove cam support plate and camshafts.

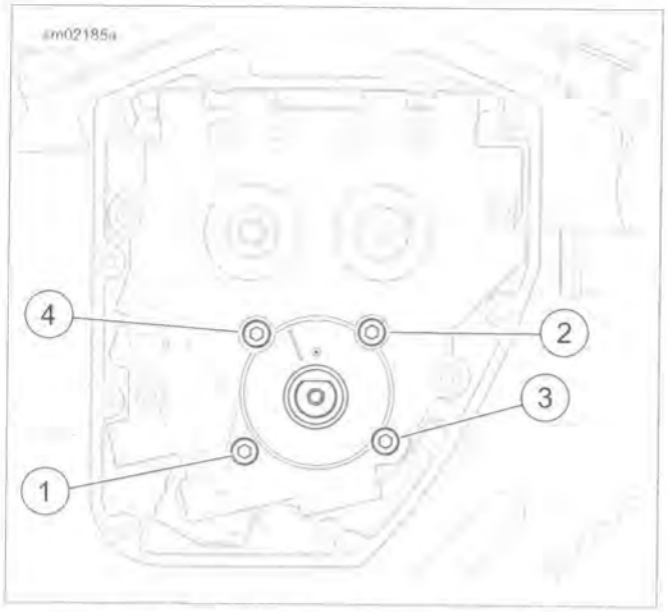

Figure 3-82. Oil Pump Torque Sequence

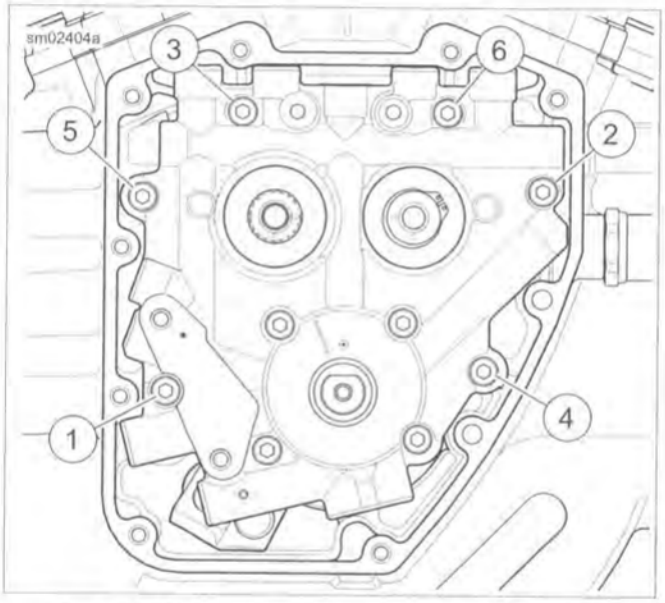

Figure 3-83. Cam Support Plate Torque Sequence

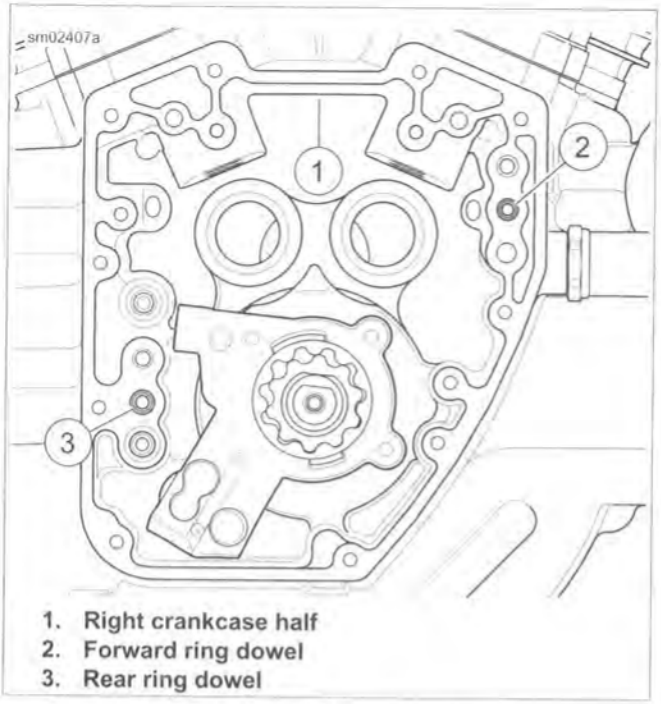

1. Right crankcase half
2. Forward ring dowel
3. Rear ring dowel

Figure 3-84. Ring Dowels

CAM SUPPORT PLATE CLEANING AND INSPECTION

Oil Pressure Relief Valve

Inspect oil pressure valve. See 3.24 CAM COMPARTMENT AND COMPONENTS, Oil Pressure Relief Valve.

Cam Support Plate

1. Measure the diameters of the camshaft bores and crankshaft bore. See 3.3 SERVICE WEAR LIMITS, General.
2. Measure flatness of support plate. See 3.3 SERVICE WEAR LIMITS, General.
3. Inspect gerotor area for excessive wear or deep grooves.
4. Verify that all oil holes are clean and open.

NOTE

The oiling system is carefully designed for optimum efficiency. All oil holes and passageways are specially sized. Avoid enlarging oil holes during cleaning. Any modification of the oiling system will adversely affect oil pressure or cooling and lubrication efficiency.

CAMSHAFTS

PART NUMBER	TOOL NAME
HD-47956	CAMSHAFT ASSEMBLY TOOL

FASTENER	TORQUE VALUE	
Secondary cam chain tensioner fastener	90-120 **in-lbs**	10.2-13.6 Nm

Removal

1. See Figure 3-85. Remove screws (4). Remove secondary cam chain tensioner (3).

⚠WARNING

Wear safety glasses or goggles when removing or installing retaining rings. Retaining rings can slip from the pliers and could be propelled with enough force to cause serious eye injury. (00312a)

2. Remove retaining ring securing front camshaft. Discard retaining ring.
3. Remove spacer from front camshaft. Do not mix front and rear camshaft spacers. Front spacer is 0.100 in (2.54 mm) thick.
4. Using a colored marker, mark one of the links of the secondary cam chain. Maintaining the original direction of rotation during assembly may prolong service life.
5. Slide camshafts and secondary cam chain out of cam support plate.
6. Remove secondary cam chain from cam sprockets.

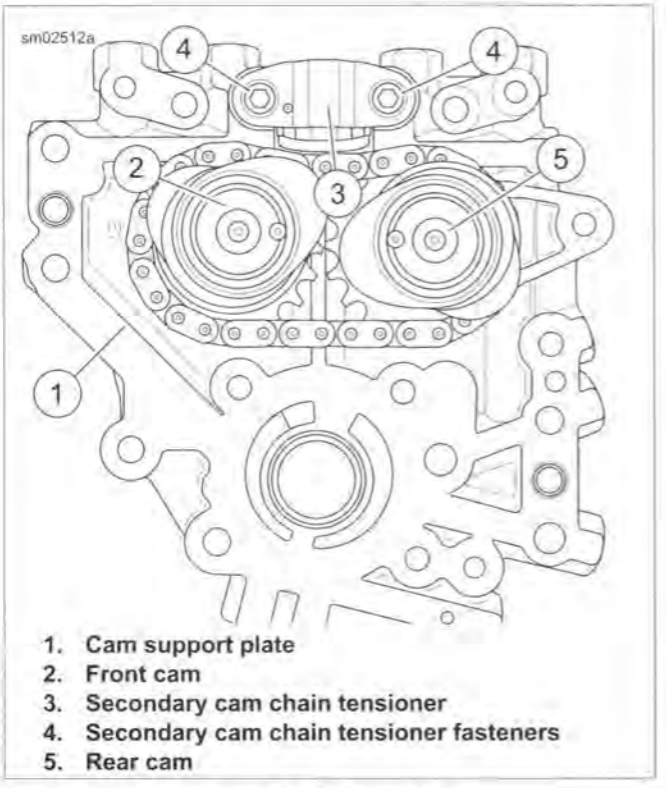

1. **Cam support plate**
2. **Front cam**
3. **Secondary cam chain tensioner**
4. **Secondary cam chain tensioner fasteners**
5. **Rear cam**

Figure 3-85. Camshafts

Installation

1. See Figure 3-86. Align timing marks on teeth of cam sprockets.

NOTE

Do not mix camshafts during installation. The rear camshaft, identified by the splined shaft, must go into the hole at the rear of the cam support plate.

2. Place secondary cam chain around sprockets of both camshafts while keeping timing marks (6) in alignment. Verify mark placed on chain link during disassembly is visible.

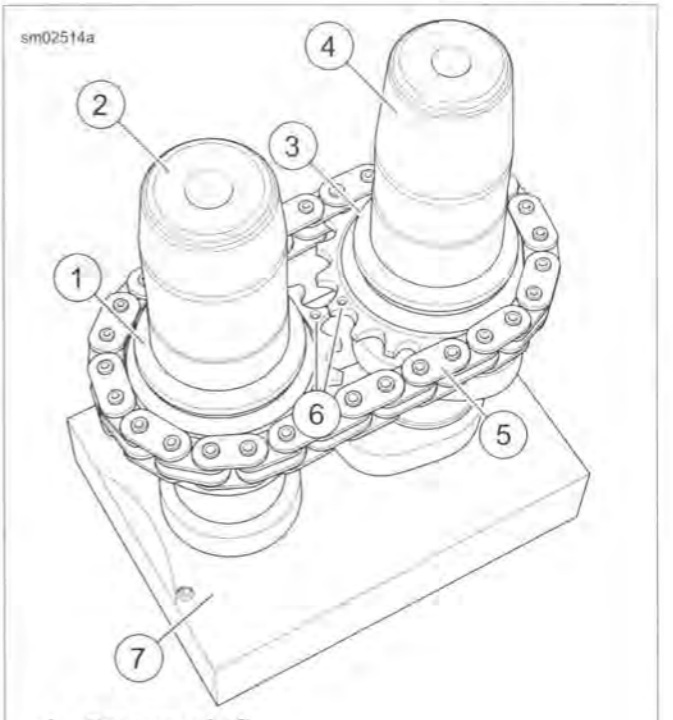

1. **Rear camshaft**
2. **Small guide**
3. **Front camshaft**
4. **Large guide**
5. **Cam chain**
6. **Timing marks**
7. **Assembly tool base**

Figure 3-86. Camshaft Assembly Tool

3. See Figure 3-86. Place crankcase side of camshaft/cam chain assembly into CAMSHAFT ASSEMBLY TOOL (Part No. HD-47956) base (7) while maintaining cam timing mark (6) alignment.
4. Place small guide (2) on rear camshaft (1). Place large guide (4) on front camshaft (3).
5. Lubricate support plate camshaft cavities with SCREAMIN' EAGLE ASSEMBLY LUBE.
6. Install cam support plate over guides.
7. Remove guides and base.
8. See Figure 3-88. Using a straightedge, verify that the timing marks are in alignment. If they are not, remove, align and recheck.
9. Install 0.100 in (2.54 mm) thick front camshaft spacer over end of front camshaft.

⚠WARNING

Wear safety glasses or goggles when removing or installing retaining rings. Retaining rings can slip from the pliers and could be propelled with enough force to cause serious eye injury. (00312a)

NOTE

The front camshaft retaining ring is a wave style. Correct orientation of the retaining ring is important so the retaining ring ears do not contact the cam drive sprocket spacer.

10. Install **new** retaining ring in groove at end of front camshaft.
    a. See Figure 3-87. Orient retaining ring so concave side (2) faces the cam drive sprocket spacer (5).
    b. When correctly installed, ears (1) of retaining ring are raised slightly.
    c. Attempt to insert a 0.0015 in (0.04 mm) flat feeler gauge (4) between ears (1) of retaining ring (3) and cam drive sprocket spacer (5). If feeler gauge cannot be inserted, remove and discard retaining ring. Install a new retaining ring. Again verify that the feeler gauge will pass between ears and spacer.

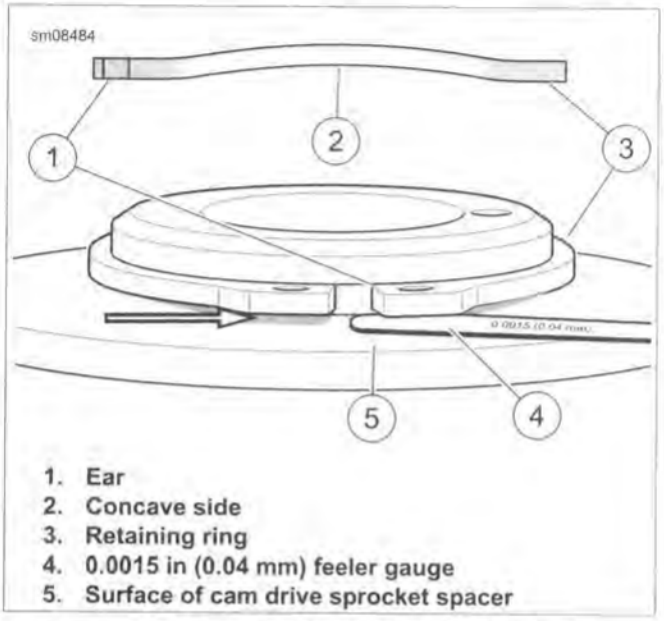

1. **Ear**
2. **Concave side**
3. **Retaining ring**
4. **0.0015 in (0.04 mm) feeler gauge**
5. **Surface of cam drive sprocket spacer**

Figure 3-87. Camshaft Retaining Ring Orientation

11. See Figure 3-89. Inspect primary and secondary cam chain tensioners.
    a. Inspect tensioners for wear. Replace tensioners if damaged or if chain contact portion of shoe material is less than 0.060 in (1.52 mm) thick.
    b. Make sure primary and secondary cam chain tensioners are assembled as shown. If assembled incorrectly, tensioners will not function properly.
12. Install secondary cam chain tensioner and fasteners. Tighten to 90-120 **in-lbs** (10.2-13.6 Nm).

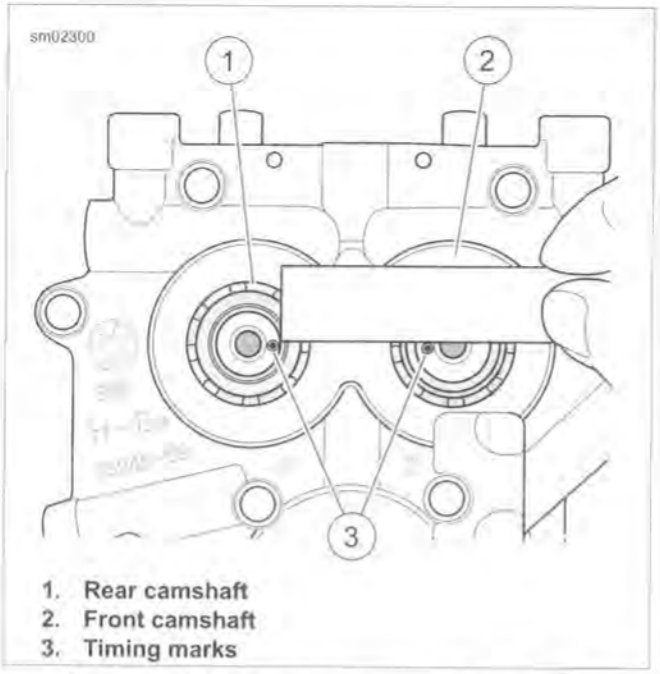

1. **Rear camshaft**
2. **Front camshaft**
3. **Timing marks**

Figure 3-88. Verify Alignment of Timing Marks

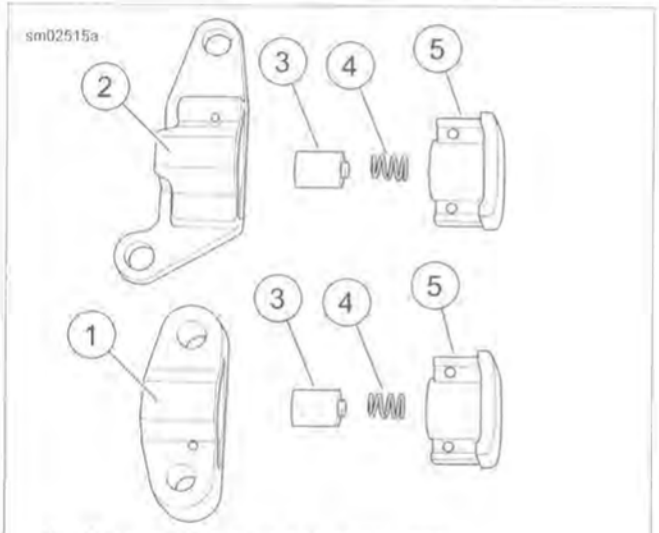

1. **Secondary cam chain tensioner**
2. **Primary cam chain tensioner**
3. **Piston**
4. **Spring**
5. **Shoe**

Figure 3-89. Cam Chain Tensioner Assemblies

OIL PRESSURE RELIEF VALVE

Removal

1. See Figure 3-90. Secure the cam support plate in a vise with soft jaws.

2. Measure depth of piston in cam support plate:
   a. With piston in place, insert straight stiff wire into bore until it bottoms in the piston.
   b. Mark wire at edge of bore in cam support plate.
   c. Remove wire. Measure distance from the end to the mark. Depth should be approximately 2.25 in (57.15 mm).
   d. If it is less than specified, the piston is not fully seated and a low oil pressure condition likely the result.
3. Use a 1/8 in punch to remove roll pin (1). Discard roll pin.
4. Remove spring (2) and piston (3) from bypass port.

Inspection

NOTE

A stretched spring or sticking piston can result in high oil pressure.

1. Inspect spring for stretching, kinks and distortion.
2. Inspect piston and bore for burrs, scoring or other damage. Look for steel particles or aluminum chips. Replace cam support plate and piston if any of these conditions are found.
3. Measure running clearance of piston in bore. If running clearance exceeds 0.003 in (0.076 mm), install **new** piston and measure again. Replace cam support plate if running clearance still exceeds specification.

Installation

1. Secure the cam support plate in a vise with soft jaws.
2. See Figure 3-90. Lubricate piston (3) with SCREAMIN' EAGLE ASSEMBLY LUBE. Slide piston into bypass port of cam support plate with the open side facing outward.
3. Slide spring (2) into bypass port until seated in piston.
4. Start **new** roll pin (1) into hole in cam support plate. Compress spring using the blade of a small screwdriver.
5. Hold spring compressed and tap roll pin into cam support plate until it approaches pin hole on opposite side.
6. Remove screwdriver to release spring. Verify that spring is straight and square in bore.
7. Use a 1/8 in punch to install roll pin until flush with casting.

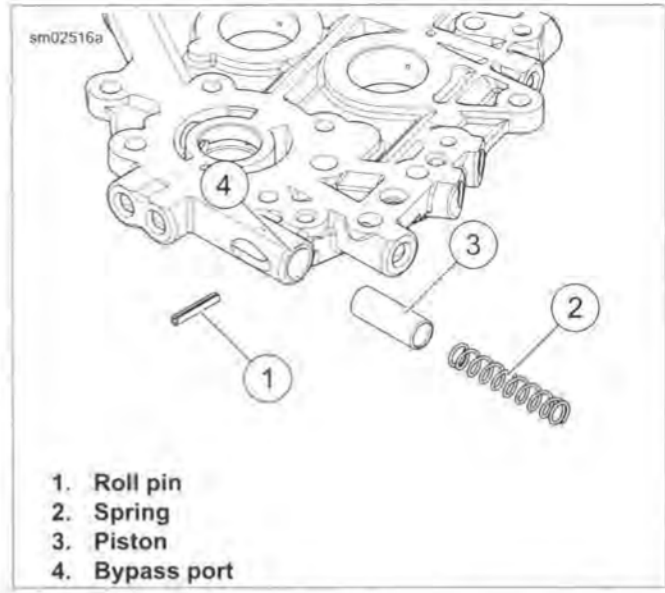

1. **Roll pin**
2. **Spring**
3. **Piston**
4. **Bypass port**

Figure 3-90. Oil Pressure Relief Valve Assembly

CAM NEEDLE BEARINGS

PART NUMBER	TOOL NAME
HD-42325-A	CAMSHAFT NEEDLE BEARING REMOVER/INSTALLER

Removal

1. Obtain the CAMSHAFT NEEDLE BEARING REMOVER/INSTALLER (Part No. HD-42325-A).
2. See Figure 3-92. Remove four thumbscrews (1) from threaded holes in support plate (2), if installed.
3. Sparingly apply clean engine oil (9) to threads of collet (3).
4. Slide collet through support plate so that threaded end exits stamped side of plate.
5. Aligning two large holes in support plate with needle bearing bores, hang right side of plate on ring dowel in crankcase flange.
6. Install thumbscrews to secure support plate to crankcase.
7. Center expandable end of collet in bearing bore and slide bearing (7) and flat washer (5) on threaded end. Start hex nut (8) on threaded end.
8. Push expandable end of collet through bearing bore into flywheel compartment. Feel for inside edge of needle bearing using end of collet and then back off slightly.

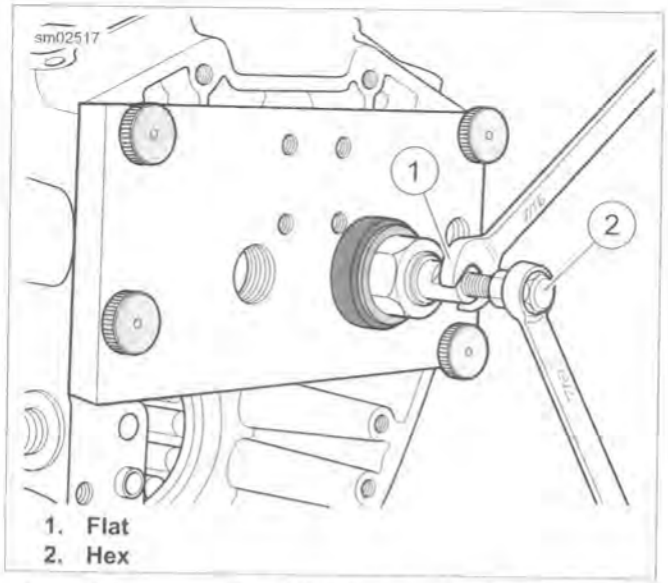

1. Flat
2. Hex

Figure 3-91. Expanding Collet by Turning Hex Clockwise

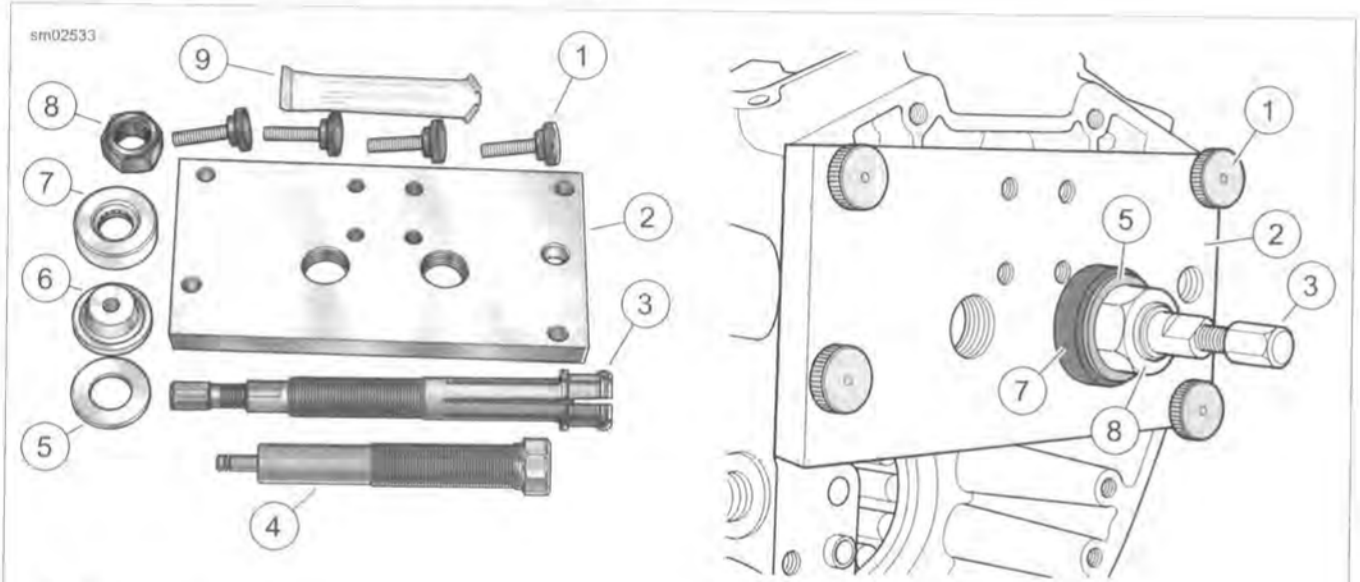

1. Thumbscrew
2. Support plate
3. Removal collet (Threaded end: left, Expandable end: right)
4. Installer forcing screw
5. Flat washer
6. Installer (1.0 in, 25.4 mm)
7. Bearing
8. Hex nut
9. Graphite lubricant

Figure 3-92. Camshaft Needle Bearing Remover/Installer

9. Holding collet to prevent lateral movement, finger-tighten hex nut until bearing contacts support plate.
10. See Figure 3-91. Hold the flat on the collet and expand collet by turning hex at end of shaft clockwise.
11. See Figure 3-93. Turn hex nut clockwise until bearing is free.
12. Remove four thumbscrews. Pull support plate from crankcase.
13. Turn hex at end of shaft counterclockwise to close collet. Remove and discard needle bearing.
14. Repeat procedure to remove second needle bearing.

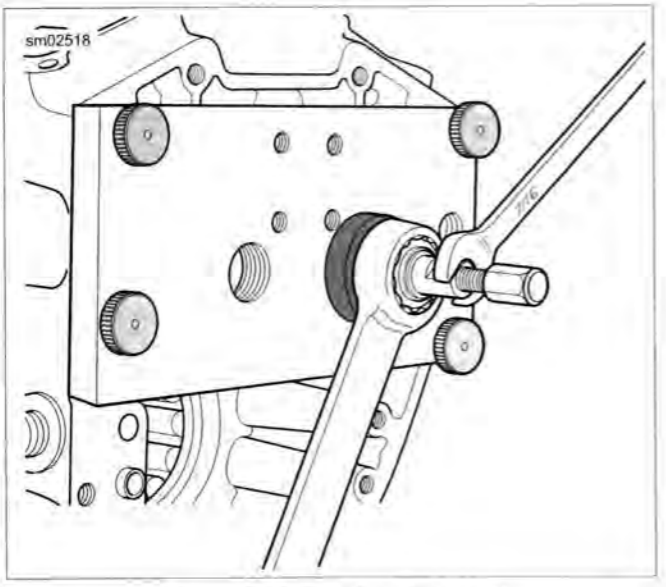

Figure 3-93. Bearing Removal

Installation

1. Obtain the CAMSHAFT NEEDLE BEARING REMOVER/INSTALLER (Part No. HD-42325-A).

NOTE

To avoid engine damage, install needle bearings to the correct depth.

2. See Figure 3-94. Using a dial caliper, measure thickness of support plate.
3. Determine the required distance from the top of the support plate to the edge of the installed needle bearing by adding support plate thickness to 3.10 in (78.7 mm). Record this value.

NOTE

For example, if the support plate is 0.50 in (12.7 mm) thick, then the measurement from the top of the support plate to the face of the needle bearing should be 3.60 in (91.4 mm).

4. See Figure 3-92. Sparingly apply clean engine oil to threads of installer forcing screw (4).
5. Thread installer forcing screw into stamped side of support plate (2) until threads begin to emerge from opposite side.
6. Place installer (6) at end of installer forcing screw.
7. Place **new** needle bearing on installer with letters facing cam compartment.
8. See Figure 3-95. Aligning two large holes in support plate with needle bearing bores, hang right side of plate on ring dowel in crankcase flange.
9. Install thumbscrews to secure support plate to crankcase.

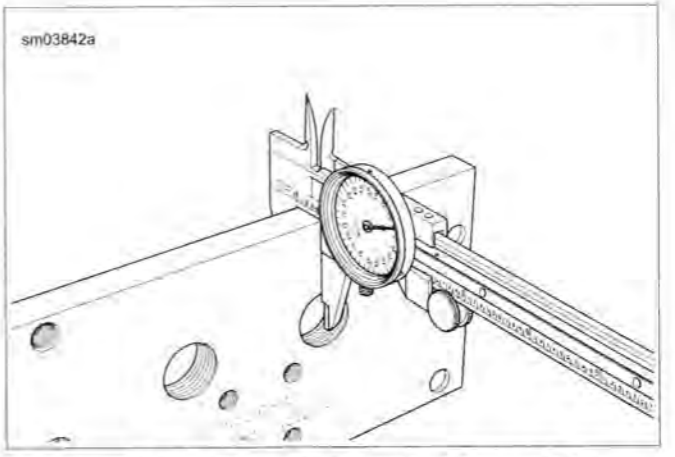

Figure 3-94. Measure Thickness of Support Plate

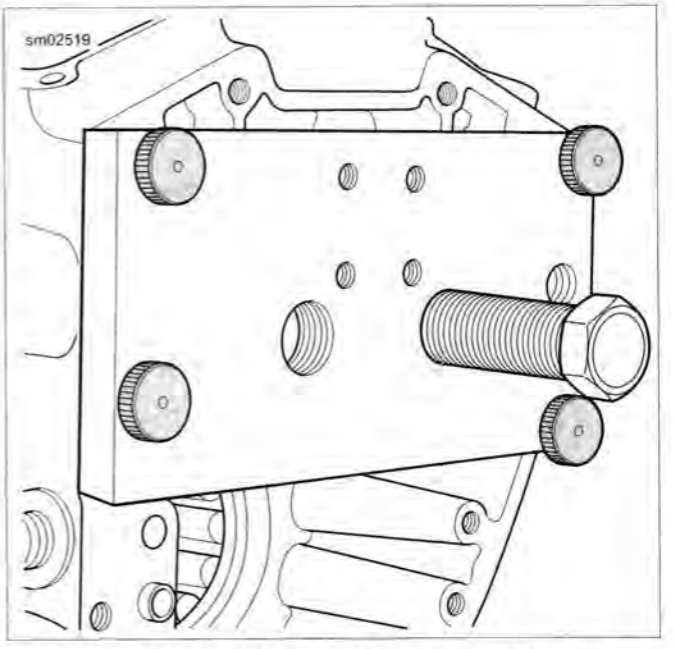

Figure 3-95. Installer Forcing Screw Installation

10. Install first needle bearing:
    a. See Figure 3-96. Turn forcing screw clockwise to press needle bearing into bore.
    b. Back out forcing screw. Remove installer. Remove forcing screw from support plate.
    c. See Figure 3-97. Insert dial caliper through forcing screw bore and measure distance from top of support plate to edge of needle bearing.
    d. Repeat steps until bearing is at correct installed depth. Temporarily leave tool in this position.
11. See Figure 3-98. Once the bearing is at correct depth, measure from head (top) of installer forcing screw to support plate. Record this measurement.

12. Repeat installation with second **new** needle bearing.
    a. Remove forcing screw from support plate. Install over second needle bearing bore.
    b. Turn forcing screw until distance from head (top) of forcing screw to support plate equals measurement recorded previously.

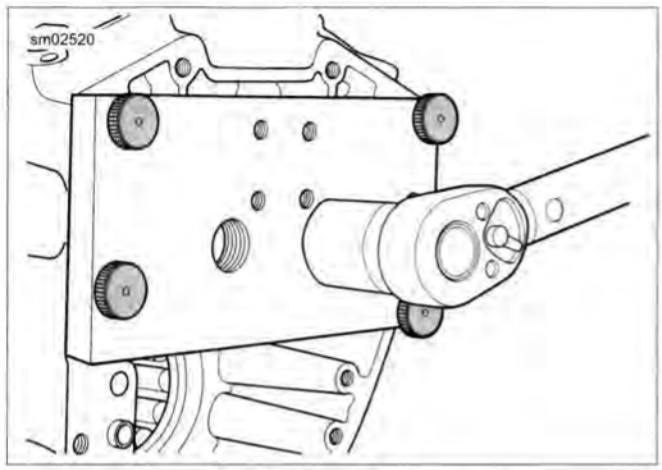

Figure 3-96. Bearing Installation

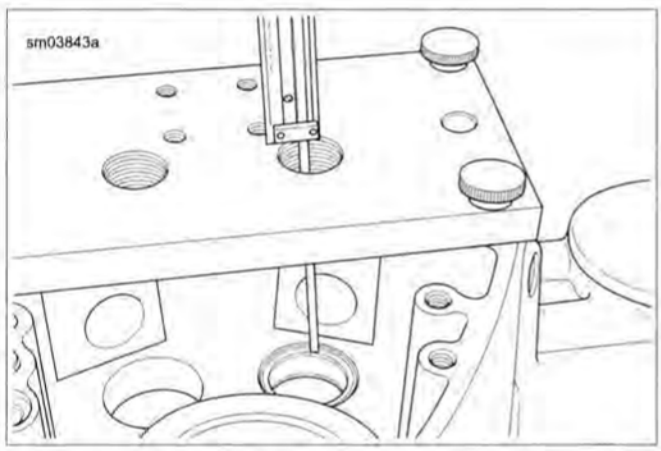

Figure 3-97. Measure from Top of Support Plate to Edge of Needle Bearing

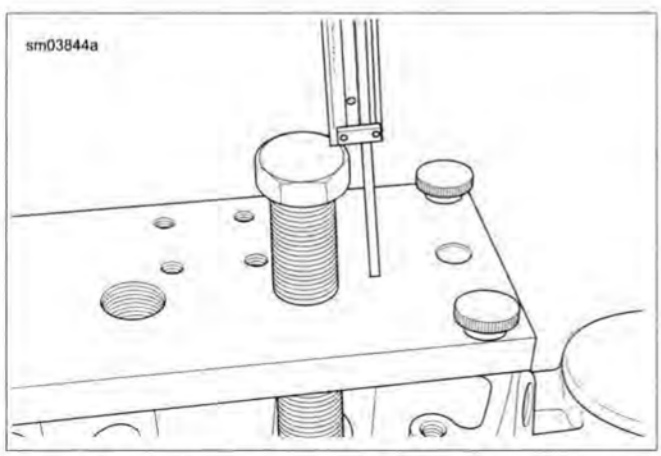

Figure 3-98. Measure from Top of Forcing Screw to Support Plate

CAM SUPPORT PLATE AND COVER INSTALLATION

PART NUMBER	TOOL NAME
HD-47941	CRANKSHAFT/CAMSHAFT SPROCKET LOCKING TOOL

FASTENER	TORQUE VALUE	
Cam support plate screws	100-120 **in-lbs**	11.3-13.6 Nm
Oil pump screws, first torque	40-45 **in-lbs**	4.5-5.1 Nm
Oil pump screws, final torque	90-120 **in-lbs**	10.2-13.6 Nm
Cam sprocket flange bolt, first torque	15 ft-lbs	20.3 Nm
Crankshaft sprocket bolt, first torque	15 ft-lbs	20.3 Nm
Cam sprocket flange bolt, final torque	34 ft-lbs	46.1 Nm
Crankshaft sprocket bolt, final torque	24 ft-lbs	32.5 Nm
Cam chain tensioner fasteners	100-120 **in-lbs**	11.3-13.6 Nm
Cam cover screws	125-155 **in-lbs**	14.1-17.5 Nm
Timer cover screws	20-30 **in-lbs**	2.3-3.4 Nm

1. See Figure 3-99. Apply a thin film of SCREAMIN' EAGLE ASSEMBLY LUBE to **new** O-ring (1). Install in groove.
2. Lubricate cam needle bearings with SCREAMIN' EAGLE ASSEMBLY LUBE.
3. Apply SCREAMIN' EAGLE ASSEMBLY LUBE to the crankshaft bore in the cam support plate.
4. See Figure 3-100. Verify that the timing marks on the ends of the camshafts are aligned.

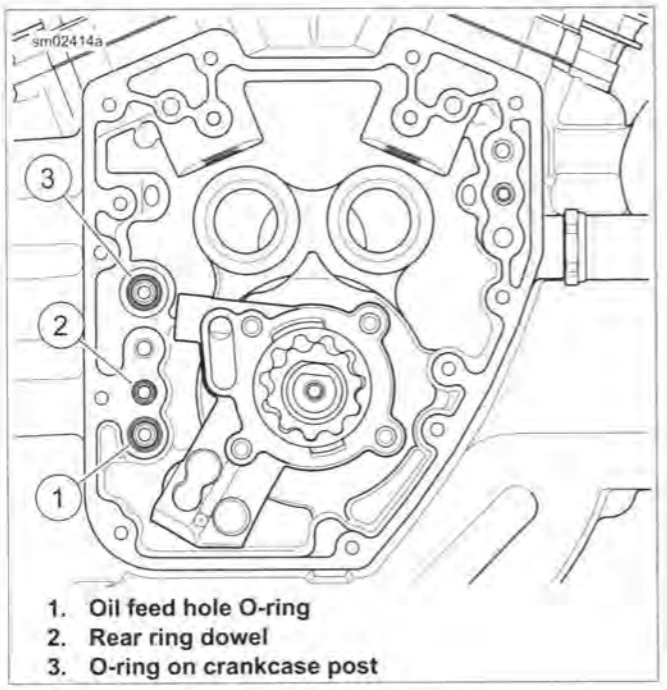

1. **Oil feed hole O-ring**
2. **Rear ring dowel**
3. **O-ring on crankcase post**

Figure 3-99. Oil Feed Hole

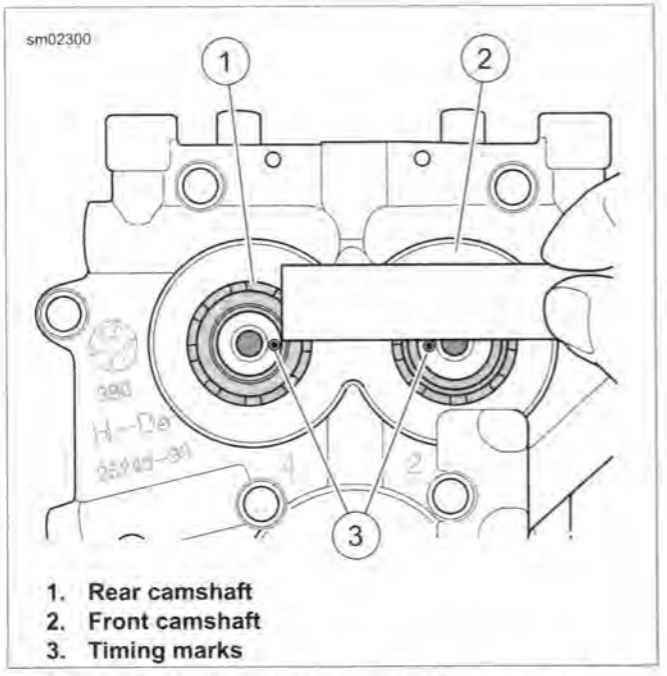

1. **Rear camshaft**
2. **Front camshaft**
3. **Timing marks**

Figure 3-100. Verify Alignment of Timing Marks

5. Slide cam support plate over crankshaft and onto two ring dowels in crankcase flange. Use a rubber mallet to fully seat cam support plate on ring dowels.
6. See Figure 3-101. Install cam support plate screws. Tighten to 100-120 **in-lbs** (11.3-13.6 Nm) in the sequence shown.

NOTES

- *Rotating the crankshaft while tightening screws allows the oil pump to find its natural center. For methods of crankshaft rotation, see 3.16 TOP END OVERHAUL: DISASSEMBLY, Rocker Arm Support Plate.*
- *Numbers cast next to the bolt holes indicate the oil pump torque sequence.*

7. See Figure 3-102. Secure oil pump.
   a. Start four screws to secure oil pump.
   b. While rotating the crankshaft, install screws (1, 2) until snug.
   c. Install screws (3, 4) until snug.
   d. Tighten all four screws to 40-45 **in-lbs** (4.5-5.1 Nm) in the sequence shown.
   e. Final tighten all four screws to 90-120 **in-lbs** (10.2-13.6 Nm) in the sequence shown.
8. With the lettering facing inboard, install rear cam sprocket spacer onto the rear camshaft.

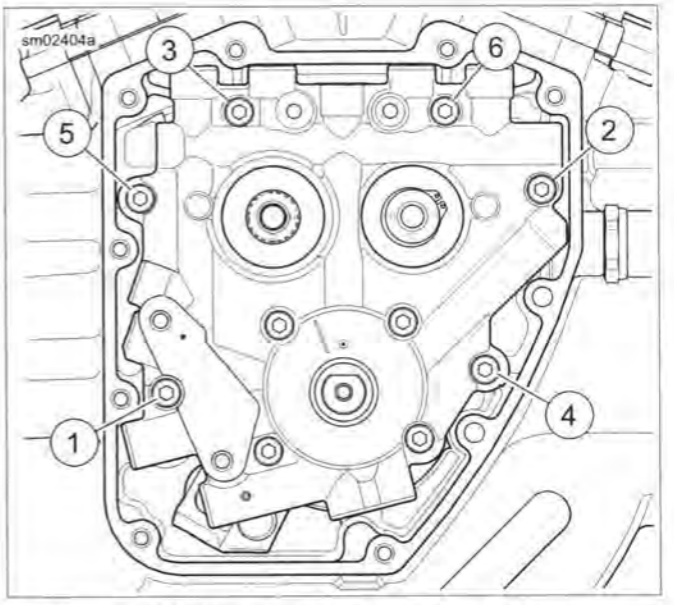

Figure 3-101. Cam Support Plate Torque Sequence

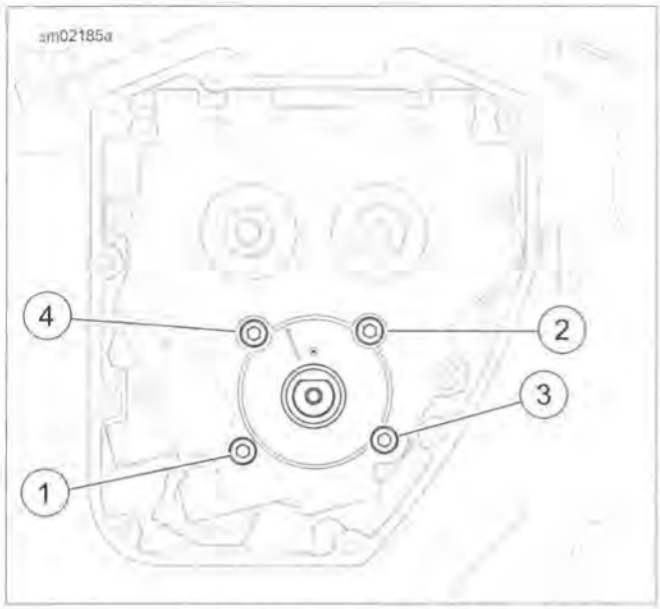

Figure 3-102. Oil Pump Torque Sequence

9. **Engines with one or more of the following new parts** - cam support plate, camshafts, primary cam sprocket, crankshaft sprocket or flywheel assembly:
   a. Install primary cam sprocket without chain using the long flange bolt with thicker flat washer.
   b. Install crankshaft sprocket without chain using the short flange bolt and a smaller diameter flat washer from bulk inventory.
   c. Position the CRANKSHAFT/CAMSHAFT SPROCKET LOCKING TOOL (Part No. HD-47941) between the crankshaft and primary cam sprockets. Tighten both sprocket flange bolts to 15 ft-lbs (20.3 Nm). Remove the sprocket locking tool.
   d. **Remove end play with engine in stand:** Rotate engine stand so cam compartment is pointing upward. Push on crankshaft and rear camshaft to eliminate end play.
   e. **Remove end play with engine in motorcycle:** Install compensating sprocket assembly to pull the crankshaft to the left side of the engine. Push on crankshaft and rear camshaft to eliminate end play.
   f. See Figure 3-103. Place a straightedge across the sprocket faces. Attempt to insert a 0.010 in (0.254 mm) feeler gauge between the straightedge and each sprocket face. If the feeler gauge will not fit at either location, sprocket offset is within specification. Remove both sprockets and discard temporary small washer.
   g. If measurement is not within specification, replace the rear cam sprocket spacer using Table 3-41 as a guide.
   h. Repeat alignment inspection with the **new** spacer installed. Remove both sprockets when measurement is within specification and discard temporary small washer.

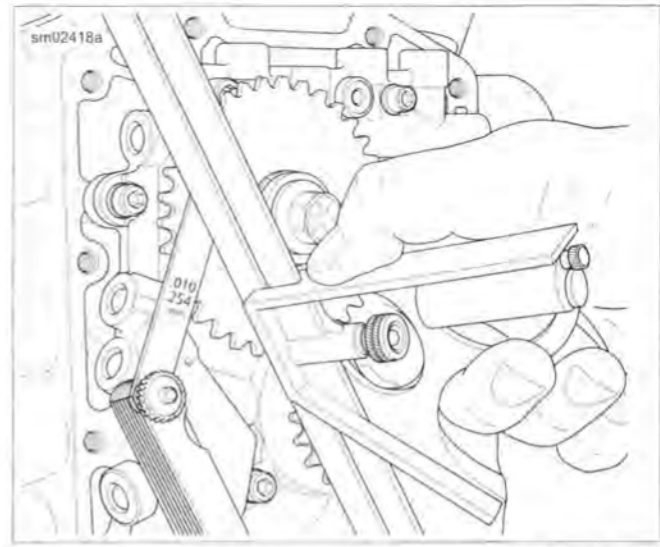

Figure 3-103. Check Alignment of Crank and Rear Cam Sprocket Faces

Table 3-41. Rear Cam Sprocket Spacers

PART NO.	IN	MM
25729-06	0.100	2.54
25731-06	0.110	2.79
25734-06	0.120	3.05
25736-06	0.130	3.30
25737-06	0.140	3.56
25738-06	0.150	3.81

10. See Figure 3-104. Apply a light film of SCREAMIN' EAGLE ASSEMBLY LUBE to splines on rear cam. Install the primary cam chain and sprocket assembly.
    a. Place both cam sprockets (2, 4) in the primary chain with the timing marks aligned. Verify that the marked chain link (7) is on the same side as the timing marks and is visible during installation.
    b. With the timing marks in alignment, start the rear cam sprocket onto the end of the rear camshaft. Note that the sprocket has an integral key that must be aligned with the keyway in the camshaft.
    c. Maintaining the position of the crankshaft sprocket on the chain, rotate the rear cam sprocket clockwise until the flat on the crankshaft sprocket is aligned with the flat on the crankshaft. Install the crankshaft sprocket.
11. Rotate the crankshaft clockwise until the timing marks on the sprockets are aligned and also aligned with alignment mark (5) on cam support plate.

NOTES

- *Both crank and rear cam sprocket flange bolts are specially hardened and the flat washers are of a special diameter.*
- *Use only genuine Harley-Davidson parts when replacement is necessary.*
- *If **new** flange bolts are not available, thoroughly clean both internal and external threads.*
- *Apply a **small** amount of LOCTITE 262 HIGH STRENGTH THREADLOCKER AND SEALANT (red) before installation.*
- *Both sprocket bolts must install freely by hand.*
- *The crankshaft and rear cam sprocket flange bolts and flat washers are **not** interchangeable.*

12. Apply a film of oil to bottom of both sprocket bolt heads and washers. Loosely install to secure sprockets.
13. Position the CRANKSHAFT/CAMSHAFT SPROCKET LOCKING TOOL (Part No. HD-47941) between the crankshaft and rear cam sprockets to prevent rotation. The handle of the tool is stamped "Crank" and "Cam" to verify proper orientation.
    a. Tighten both sprocket bolts (1, 3) to 15 ft-lbs (20.3 Nm).
    b. Loosen both bolts one revolution (360 degrees).
    c. Final tighten the rear cam sprocket bolt (1) to 34 ft-lbs (46.1 Nm).
    d. Final tighten the crank sprocket bolt (3) to 24 ft-lbs (32.5 Nm).
    e. Remove the sprocket locking tool.
14. Install primary cam chain tensioner. Tighten to 100-120 **in-lbs** (11.3-13.6 Nm).
15. Apply SCREAMIN' EAGLE ASSEMBLY LUBE to both sprockets.

NOTE

Inserting a screw into a blind hole with debris can damage the crankcase.

16. Clean all blind holes in crankcase.
17. See Figure 3-105. Install cam cover and **new** cam cover gasket.

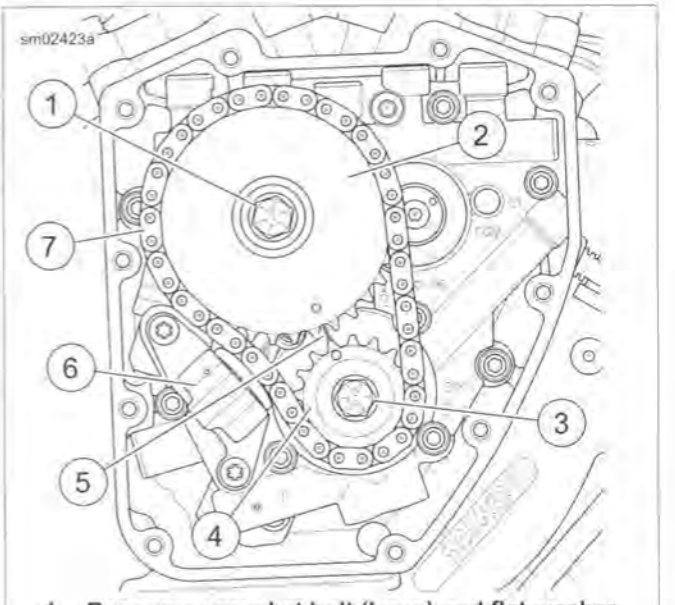

1. **Rear cam sprocket bolt (large) and flat washer**
2. **Rear cam sprocket**
3. **Crank sprocket bolt (small) and flat washer**
4. **Crank sprocket**
5. **Alignment mark on support plate**
6. **Primary chain tensioner**
7. **Marked link**

Figure 3-104. Primary Chain and Sprockets

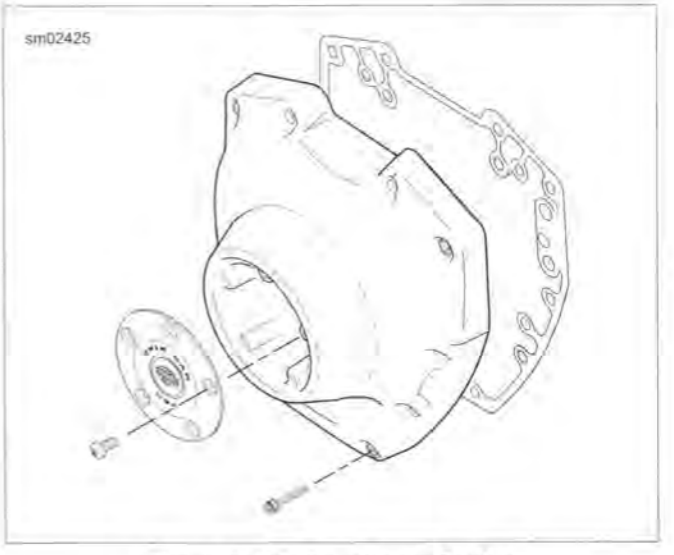

Figure 3-105. Cam Cover Gasket

18. See Figure 3-106. Secure cover with socket head screws. Following the sequence shown, tighten to 125-155 **in-lbs** (14.1-17.5 Nm).
19. If removed, install timer cover with five screws. Tighten to 20-30 **in-lbs** (2.3-3.4 Nm).

20. Complete motorcycle assembly.
    a. If engine was completely overhauled, see 3.23 TOP END OVERHAUL: ASSEMBLY. Perform all steps.
    b. If only cam compartment components were serviced, install pushrod covers, pushrods, rocker arm support plate and breather assembly. See appropriate topics under 3.23 TOP END OVERHAUL: ASSEMBLY.

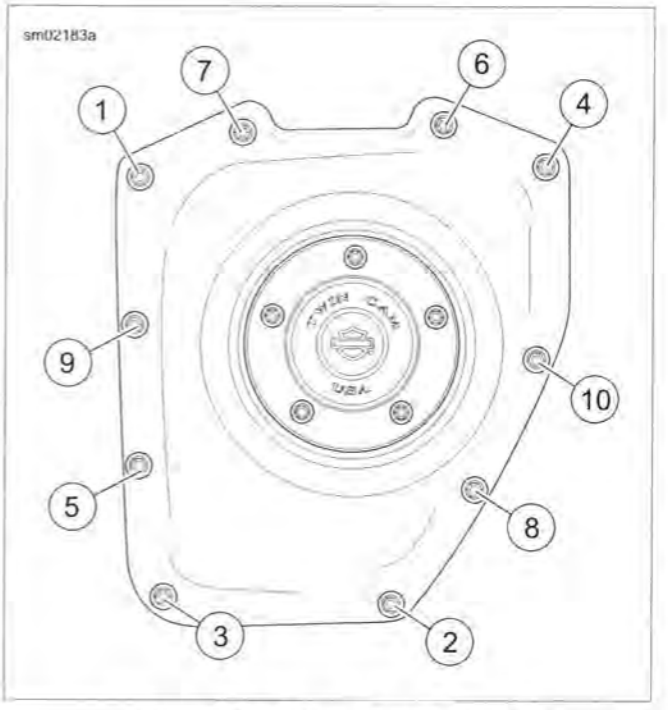

Figure 3-106. Cam Cover Screws

REMOVAL

PART NUMBER	TOOL NAME
93979-10	SCREAMIN' EAGLE MAGNETIC LIFTER HOLDERS

1. See 3.16 TOP END OVERHAUL: DISASSEMBLY.
   a. Remove breather assembly.
   b. Remove rocker arm support plate.
   c. Remove pushrods and pushrod covers. Do not remove lifters or lifter covers.
   d. Support hydraulic lifters from dropping into the cam compartment using SCREAMIN' EAGLE MAGNETIC LIFTER HOLDERS (Part No. 93979-10). See 3.24 CAM COMPARTMENT AND COMPONENTS.
2. Remove cover and cam support plate. See 3.24 CAM COMPARTMENT AND COMPONENTS.
3. Carefully remove oil pump assembly from crankshaft.
4. See Figure 3-107. Remove and discard O-rings (1, 2).
5. See Figure 3-108. Disassemble and inspect oil pump components.

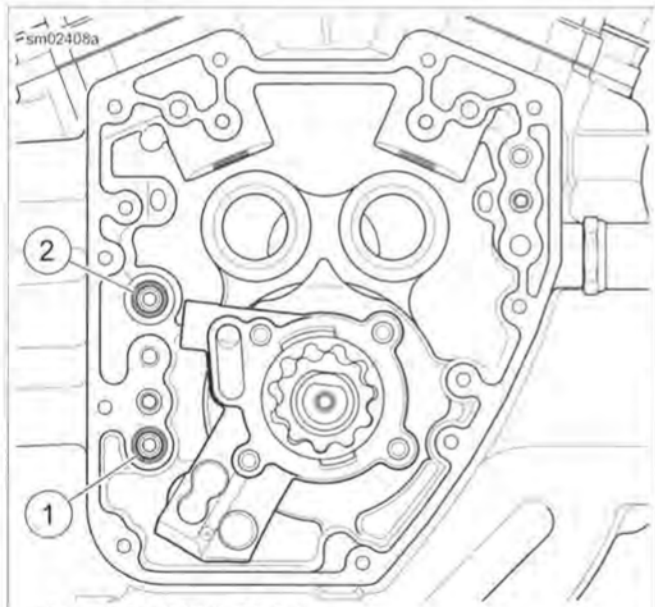

1. **Oil feed hole O-ring**
2. **O-ring on crankcase post**

Figure 3-107. Oil Pump O-rings

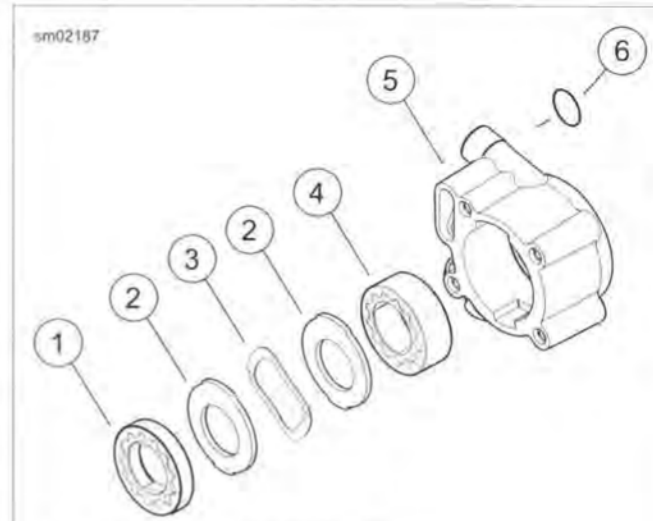

1. **Narrow gerotor set (feed)**
2. **Separator plate**
3. **Wave washer**
4. **Wide gerotor set (scavenge)**
5. **Oil pump housing**
6. **Scavenge port O-ring**

Figure 3-108. Assembling Oil Pump

CLEANING AND INSPECTION

1. Clean all parts in a non-volatile cleaning solution or solvent.

⚠WARNING

Compressed air can pierce the skin and flying debris from compressed air could cause serious eye injury. Wear safety glasses when working with compressed air. Never use your hand to check for air leaks or to determine air flow rates. (00061a)

2. Dry parts using low-pressure, compressed air. Verify that all oil holes are clean and open.
3. Inspect for scoring, gouging or cracking.
4. Inspect for grooves or scratches on the cam support plate.
5. Check for excessive wear or damage on lobes of outer and inner gerotor gears.
6. See Figure 3-109. Check gerotor wear.
   a. Mesh rotors of one gerotor set together.
   b. Use a feeler gauge to determine clearance between tips of lobes on inner and outer gerotors.
   c. Replace gerotors as a set if clearance exceeds 0.004 in (0.10 mm). Inspect second gerotor set in the same manner.
7. Measure and compare thickness of each rotor in both gerotor sets. Replace the gerotor set if the difference exceeds 0.001 in (0.025 mm).
8. See Figure 3-110. Assemble the oil pump.

9. Verify that feed gerotors extend past the oil pump surface 0.015-0.025 in (0.38-0.64 mm).
10. If measurement is less than 0.015 in (0.38 mm), remove feed gerotor set and assemble using **new** wave washer.
11. Repeat measurement and replace oil pump body if not within specification.

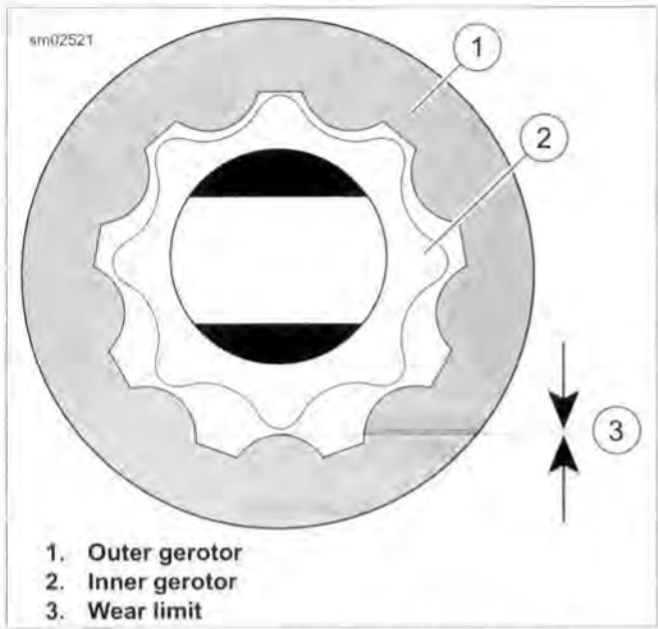

1. **Outer gerotor**
2. **Inner gerotor**
3. **Wear limit**

Figure 3-109. Measure Gerotor Sets for Wear

INSTALLATION

NOTE

Lubricate parts with SCREAMIN' EAGLE ASSEMBLY LUBE during assembly.

1. See Figure 3-110. Apply a very thin film of SCREAMIN' EAGLE ASSEMBLY LUBE to **new** scavenge port stub O-ring (6). Install O-ring on scavenge port of oil pump housing.
2. Slide oil pump housing (5) onto crankshaft while fitting O-ring on scavenge port into crankcase bore.
   a. Firmly push on scavenge port with thumb to verify that it is snug in bore.
   b. Inspect O-ring to verify that it is not pinched or distorted.
3. Assemble the wide gerotor set (4). Install on the crankshaft until it bottoms in the oil pump housing.
4. Install inner separator plate (2) on the crankshaft until it contacts the wide gerotor set (4). Install wave washer (3) and outer separator plate (2).
5. Assemble the narrow gerotor set (1). Install on the crankshaft until it contacts the outer separator plate (2).
6. See Figure 3-111. Apply a very thin film of SCREAMIN' EAGLE ASSEMBLY LUBE to **new** O-ring (3) for crankcase post. Install **new** O-ring in groove on crankcase post.
7. Complete engine assembly. See 3.24 CAM COMPARTMENT AND COMPONENTS and 3.23 TOP END OVERHAUL: ASSEMBLY.

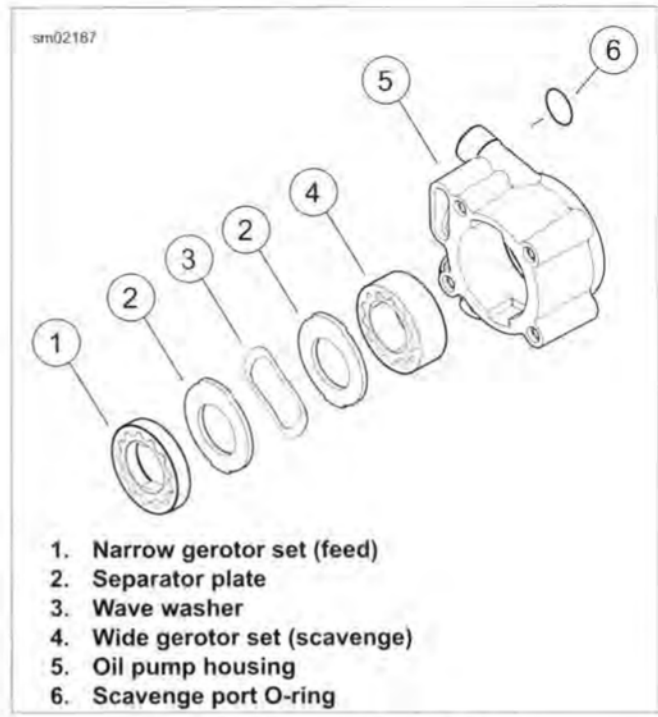

1. **Narrow gerotor set (feed)**
2. **Separator plate**
3. **Wave washer**
4. **Wide gerotor set (scavenge)**
5. **Oil pump housing**
6. **Scavenge port O-ring**

Figure 3-110. Assembling Oil Pump

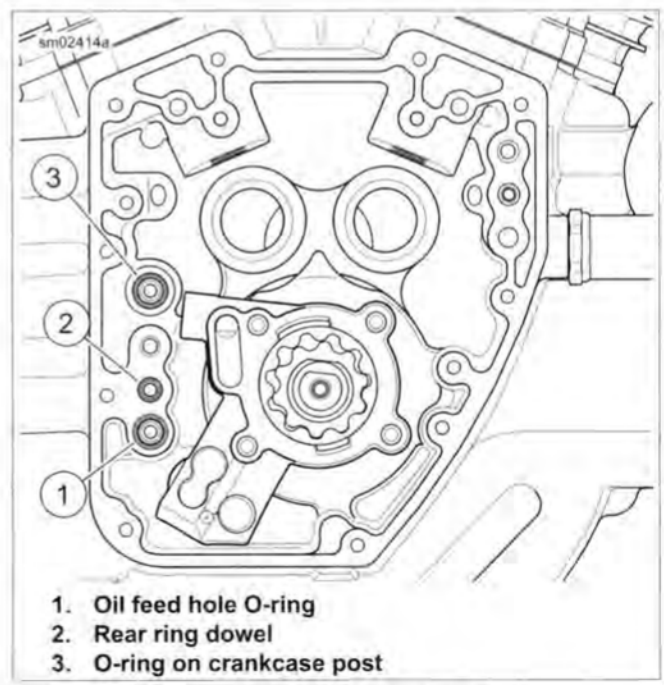

1. **Oil feed hole O-ring**
2. **Rear ring dowel**
3. **O-ring on crankcase post**

Figure 3-111. Oil Feed Hole

CRANKCASE DISASSEMBLY

1. Remove oil pump from crankshaft.

⚠CAUTION

Do not rotate crankcase half in engine stand when flywheel is installed. The flywheel assembly can fall out, resulting in parts damage or moderate injury. (00552c)

2. Rotate crankcase in engine stand so that cam cover flange is facing upward.
3. See Figure 3-112. Remove the nine crankcase bolts in the sequence shown.

NOTE

Never move or lift the crankcase by grasping the cylinder studs. The crankcase is too heavy to be carried in this manner and could be dropped.

4. Separate case halves. Lift right crankcase half off end of crankshaft.
5. See Figure 3-113. Remove two dowel pins in split line face of right case half.
6. Remove flywheel assembly from the crankcase. Inspect crankshaft/flywheel assembly. See 3.27 FLYWHEEL AND CONNECTING RODS.

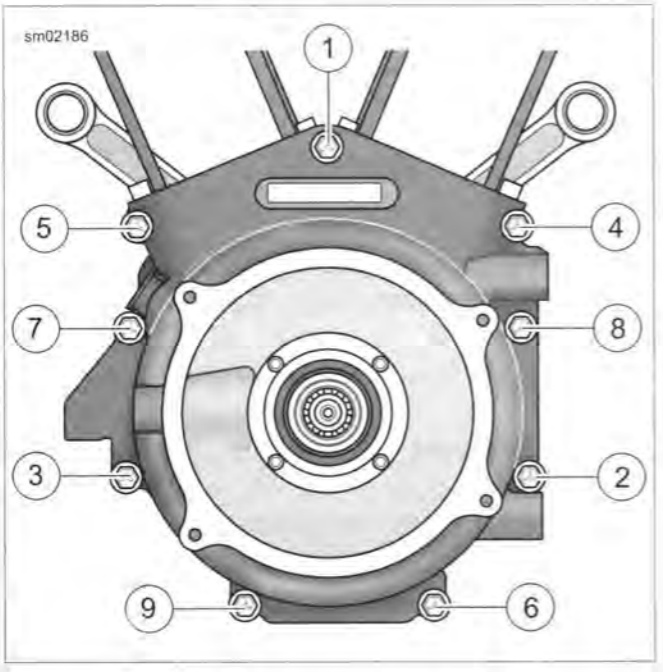

Figure 3-112. Crankcase Bolt Sequence

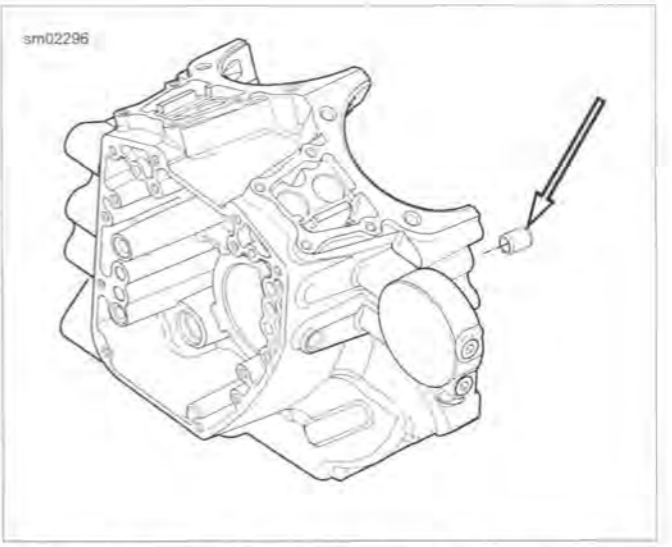

Figure 3-113. Right Crankcase Forward Dowel Pin (Rear Dowel Pin Not Shown)

CLEANING AND INSPECTION

1. Remove all gasket material from the crankcase flanges.
2. Clean all parts in a non-volatile cleaning solution or solvent.

⚠WARNING

Compressed air can pierce the skin and flying debris from compressed air could cause serious eye injury. Wear safety glasses when working with compressed air. Never use your hand to check for air leaks or to determine air flow rates. (00061a)

3. Dry parts with moisture-free compressed air.
4. Verify that all oil holes are clean and open.
5. Check ring dowels for looseness, wear or damage. Replace if necessary.
6. Use a file to carefully remove any nicks or burrs from machined surfaces.
7. Clean out tapped holes and clean up damaged threads.
8. Check the top of the crankcase for flatness with a straightedge and feeler gauge. Replace if warped.
9. Spray all machined surfaces with clean engine oil.
10. Inspect crankshaft/flywheel assembly. See 3.27 FLYWHEEL AND CONNECTING RODS.

RIGHT CRANKCASE HALF

PART NUMBER	TOOL NAME
B-45655	CRANKCASE BEARING REMOVER/INSTALLER
HD-42720-4	CRANKSHAFT BEARING DRIVER SHIM
HD-42720-5	REMOVER/INSTALLER SUPPORT TUBE

FASTENER	TORQUE VALUE	
Main bearing, right, retaining screws	40-70 **in-lbs**	4.5-7.9 Nm
Piston jet screws	25-35 **in-lbs**	2.8-3.9 Nm

Main Bearing Removal

NOTE

Never move or lift the crankcase by grasping the cylinder studs. The crankcase is too heavy to be carried in this manner and could be dropped.

1. See Figure 3-116. Remove two main bearing retaining screws (5) from the cam compartment side.
2. See Figure 3-114. Obtain CRANKCASE BEARING REMOVER/INSTALLER (Part No. B-45655) and REMOVER/INSTALLER SUPPORT TUBE (Part No. HD-42720-5).
3. Place support tube (4) on hydraulic press table with the end marked "A" up.
4. With the cam compartment side facing downward, position main bearing bore over support tube.
5. Slide remover/installer (1) through bearing into support tube.
6. Center remover/installer under ram (3) of press. Apply pressure until bearing is free.
7. Remove crankcase, remover/installer and bearing from support tube. Discard bearing.

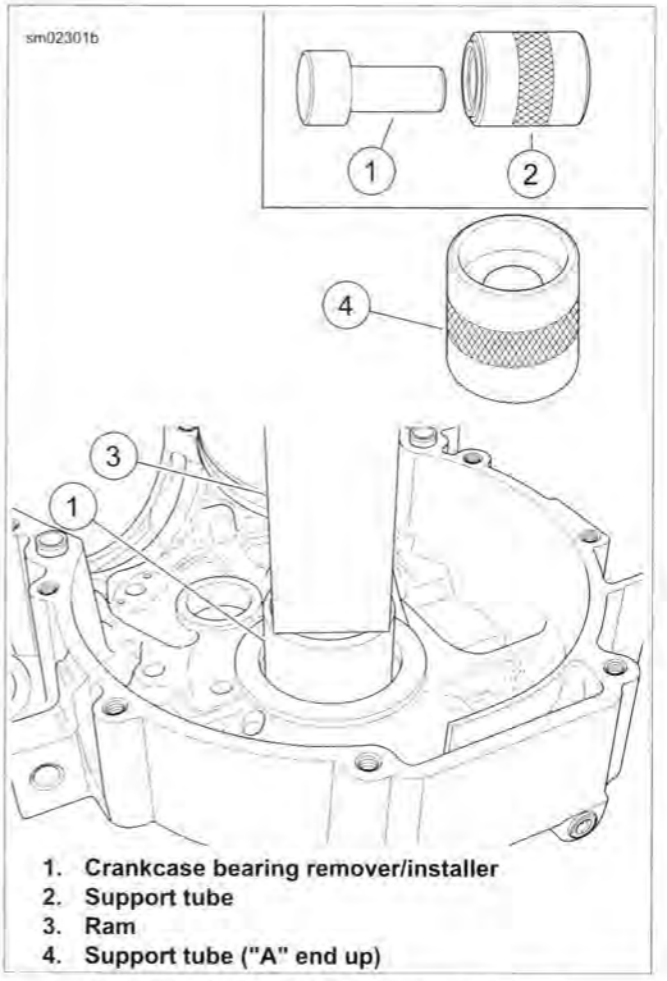

1. **Crankcase bearing remover/installer**
2. **Support tube**
3. **Ram**
4. **Support tube ("A" end up)**

Figure 3-114. Right Main Bearing Removal

Main Bearing Installation

1. See Figure 3-115. Obtain CRANKCASE BEARING REMOVER/INSTALLER (Part No. B-45655), CRANKSHAFT BEARING DRIVER SHIM (Part No. HD-42720-4) and REMOVER/INSTALLER SUPPORT TUBE (Part No. HD-42720-5).
2. Spread a thin film of clean engine oil on OD of **new** bearing (5).
3. Place support tube (3) on press table with the end marked "B" up.
4. Place CRANKSHAFT BEARING DRIVER SHIM (Part No. HD-42720-4) (2) on support tube (3).
5. With the cam compartment side facing upward, position main bearing bore over support tube.
6. Start the **new** bearing in bearing bore with the lettering facing into the cam compartment (up).
7. Slide remover/installer (1) through bearing into support tube.
8. Center remover/installer under ram (4) of press. Apply pressure until resistance is felt and bearing is bottomed on the support tube.
9. Remove remover/installer and crankcase half from support tube.

NOTES

- *Verify that the bearing is flush or slightly below the surface of the crankcase. Never push the bearing into position using the retaining screws.*
- *If **new** retaining screws are not available, apply LOCTITE 243 MEDIUM STRENGTH THREADLOCKER AND SEALANT (blue).*

10. See Figure 3-116. Install two **new** main bearing retaining screws (5). Tighten to 40-70 **in-lbs** (4.5-7.9 Nm).

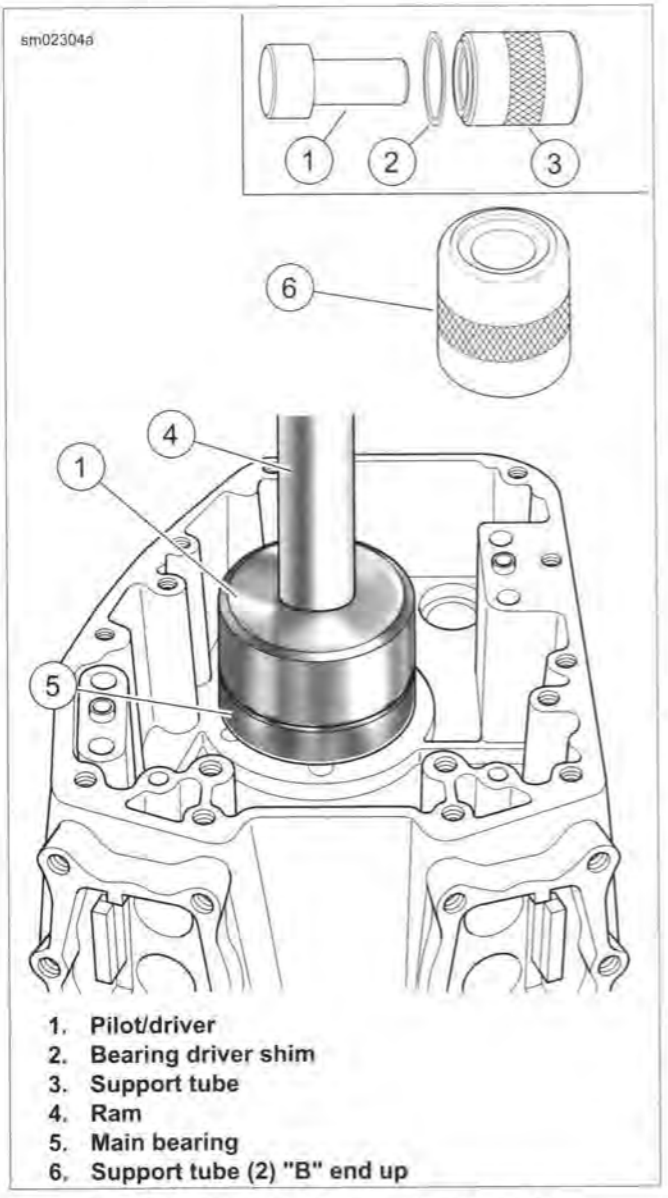

1. **Pilot/driver**
2. **Bearing driver shim**
3. **Support tube**
4. **Ram**
5. **Main bearing**
6. **Support tube (2) "B" end up**

Figure 3-115. Right Main Bearing Installation

Piston Jets Removal

1. See Figure 3-116. Remove two screws (1) to free piston jet (2) from crankcase.
2. Remove O-ring (3) from groove in mounting flange of jet. Discard O-ring.

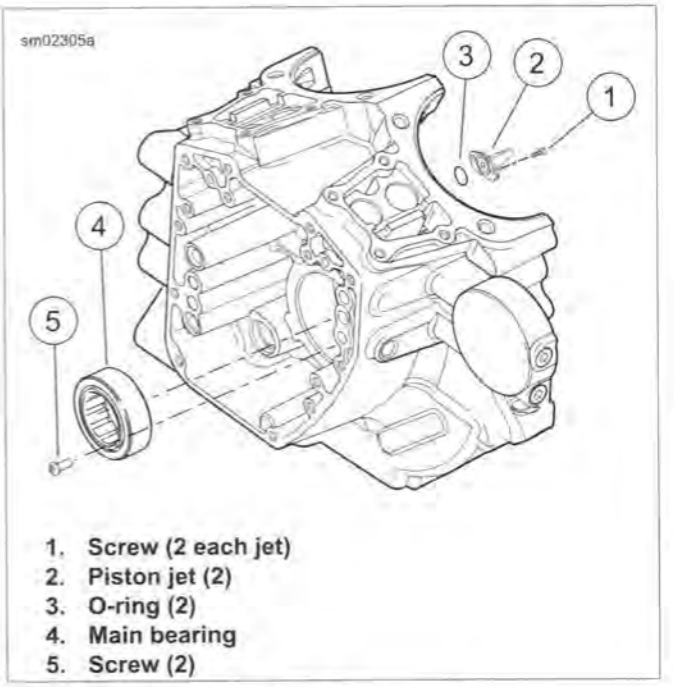

1. **Screw (2 each jet)**
2. **Piston jet (2)**
3. **O-ring (2)**
4. **Main bearing**
5. **Screw (2)**

Figure 3-116. Piston Jets

Piston Jets Installation

1. See Figure 3-116. Apply a very thin film of clean engine oil to **new** O-ring (3). Install **new** O-ring in groove of jet mounting flange.

NOTE

If piston jet is being reused, apply LOCTITE 222 LOW STRENGTH THREADLOCKER AND SEALANT (purple) to screws.

2. With jet pointed upward, secure piston jet (2) with two screws (1). Tighten to 25-35 **in-lbs** (2.8-3.9 Nm).

LEFT CRANKCASE HALF

PART NUMBER	TOOL NAME
B-45655	CRANKCASE BEARING REMOVER/INSTALLER
HD-42720-5	REMOVER/INSTALLER SUPPORT TUBE

Main Bearing Removal

⚠CAUTION

Do not rotate crankcase half in engine stand when flywheel is installed. The flywheel assembly can fall out, resulting in parts damage or moderate injury. (00552c)

NOTE

Never move or lift the crankcase by grasping the cylinder studs. The crankcase is too heavy to be carried in this manner and could be dropped.

1. Hold flywheel assembly to prevent it from falling out of left crankcase half. Rotate bottom end assembly in engine stand so assembly is upright and flywheel shafts are horizontal.

2. Carefully slide flywheel assembly out of left crankcase and place it in a clean safe place.
3. Remove thrust washer from outboard side of crankcase half by pulling it past oil seal. Set thrust washer aside for inspection or reuse.
4. Remove oil seal from crankcase bore. Discard oil seal.
5. See Figure 3-117. Using a flat blade screwdriver, carefully lift edge of bearing retaining ring up out of its groove in crankcase.
6. Slide screwdriver tip around edge of bearing, lifting retaining ring up and out of groove. Do not damage lip of groove in crankcase.

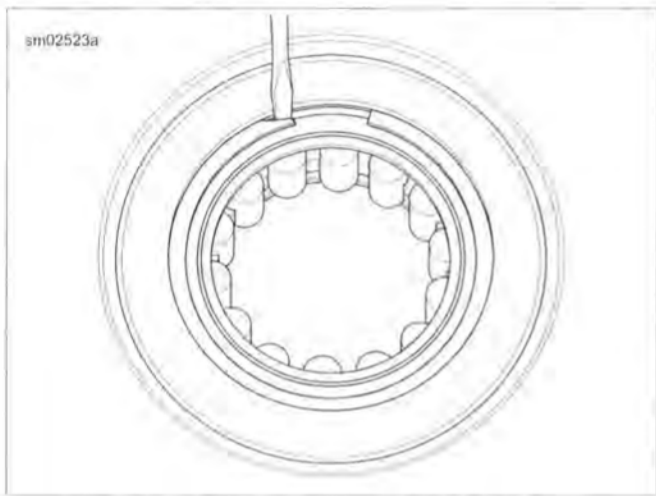

Figure 3-117. Removing Retaining Ring

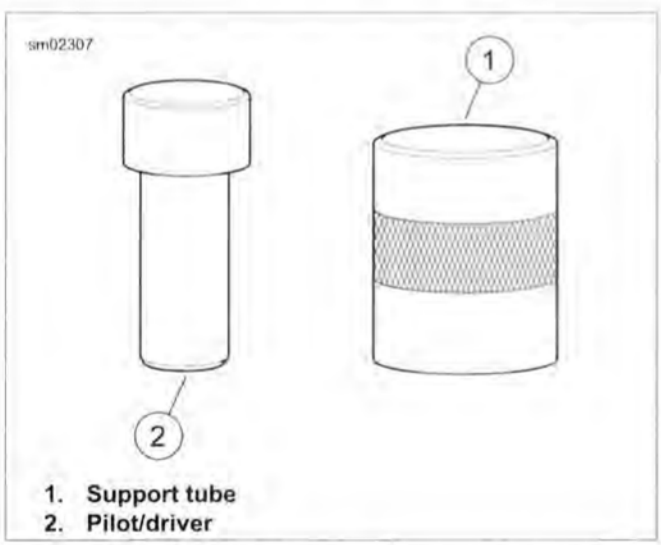

1. **Support tube**
2. **Pilot/driver**

Figure 3-118. Left Main Bearing Remover and Installer Tools

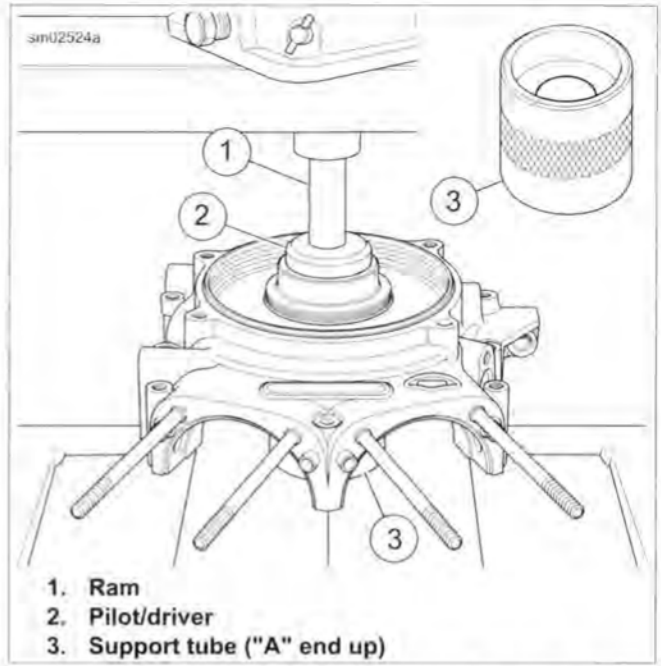

1. **Ram**
2. **Pilot/driver**
3. **Support tube ("A" end up)**

Figure 3-119. Left Main Bearing Removal

NOTE

See Figure 3-118. If the ram of the press is wider than the head of pilot/driver (2), use a suitable press plug to remove the main bearing.

7. Obtain CRANKCASE BEARING REMOVER/INSTALLER (Part No. B-45655) and REMOVER/INSTALLER SUPPORT TUBE (Part No. HD-42720-5).
8. See Figure 3-119. Place support tube (3) on press table with end marked "A" up.
9. With the outboard side of the left crankcase half facing upward, position main bearing bore over support tube.
10. Slide remover/installer (2) through the main bearing into support tube (3).
11. Center remover/installer under ram (1) of press. Apply pressure to pilot/driver until bearing is free.
12. Remove crankcase half, remover/installer and bearing from support tube. Discard bearing.

Main Bearing Installation

NOTES

- *Never move or lift the crankcase by grasping the cylinder studs. The crankcase is too heavy to be carried in this manner and could be dropped.*
- *Always replace sprocket shaft bearing inner race whenever left main bearing is replaced. See 3.26 CRANKCASE DISASSEMBLY AND REPAIR, Sprocket Shaft Bearing Inner Race.*

1. See Figure 3-118. Obtain CRANKCASE BEARING REMOVER/INSTALLER (Part No. B-45655) and REMOVER/INSTALLER SUPPORT TUBE (Part No. HD-42720-5).

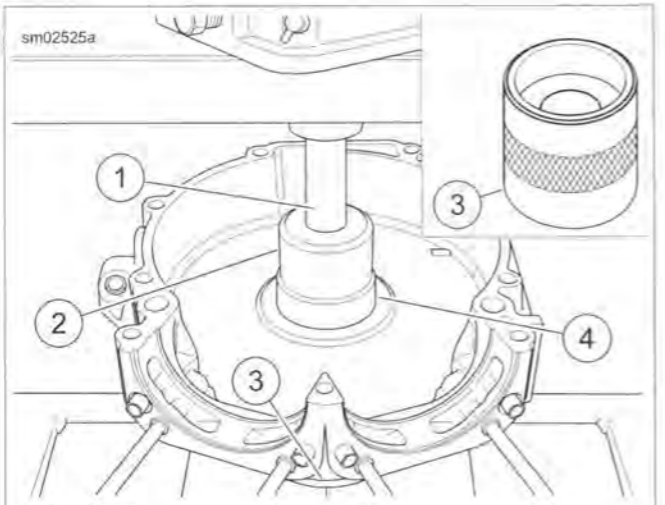

1. **Ram**
2. **Remover/installer**
3. **Support tube ("A" end up)**
4. **Main bearing**

Figure 3-120. Left Main Bearing Installation

2. See Figure 3-120. Place a thin film of clean engine oil on outer diameter of **new** main bearing (4).
3. Place support tube (3) on hydraulic press table with the end marked "A" up.
4. With the inboard side of the left crankcase half facing up, position main bearing bore over support tube.
5. Start **new** main bearing in bearing bore, letter side down.
6. Slide remover/installer (2) through bearing into support tube.
7. Apply pressure to until bearing is lightly bottomed in main bearing bore.
8. Remove crankcase half and remover/installer from support tube.
9. Install **new** retaining ring in bearing bore groove, being careful not to damage edges of groove. Make sure that retaining ring is fully seated in groove.

NOTE

If retaining ring will not fit into groove, the bearing is not fully seated in the bore. Inspect bearing and bore. If necessary, remove bearing, clean bore and install bearing. Install retaining ring.

SPROCKET SHAFT BEARING INNER RACE

PART NUMBER	TOOL NAME
HD-25070	ROBINAIR HEAT GUN
HD-34902-B	MAINSHAFT BEARING INNER RACE PULLER/INSTALLER
HD-44358	FLYWHEEL SUPPORT FIXTURE
HD-95637-46B	WEDGE ATTACHMENT
HD-97225-55C	SPROCKET SHAFT BEARING INSTALLER

Removal

If reusing flywheel, remove bearing inner race and thrust washer from sprocket shaft:

1. See Figure 3-121. Obtain FLYWHEEL SUPPORT FIXTURE (Part No. HD-44358). Clamp tool in soft-jawed vise with the round hole topside.
2. Insert crankshaft end through hole, resting flywheel assembly on fixture. Slide knurled locating pin down slot in tool to engage crank pin hole. Hand-tighten locating pin.
3. Secure flywheel with hold-down clamps (2).

NOTE

For proper clamping force, hold-down clamp must not be tilted. Rotate hex on outboard stud until clamp is level.

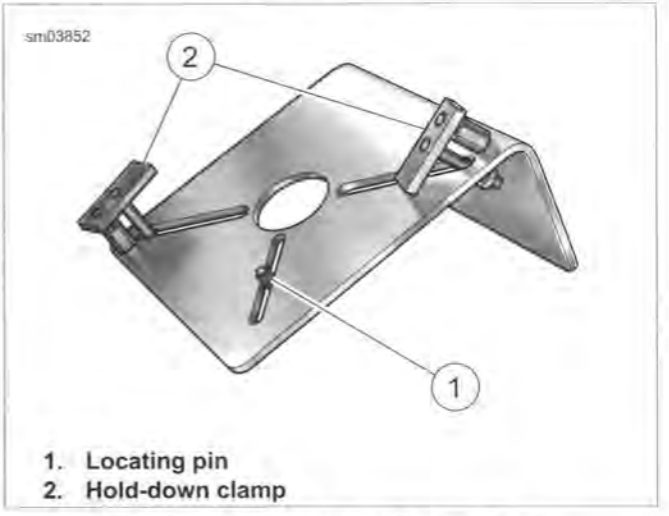

1. **Locating pin**
2. **Hold-down clamp**

Figure 3-121. Flywheel Holding Fixture

4. See Figure 3-122. Position WEDGE ATTACHMENT (Part No. HD-95637-46B) (5) on inboard side of thrust washer. Turn hex nuts an equal number of turns to draw halves of wedge together.

NOTICE

Install wedge attachment only so far as necessary to ensure positive contact with bearing inner race. Installing tool with more contact than necessary will result in damage to the flywheel (00500b)

5. Obtain two 3/8-16 bolts 7-1/2 in long and flat washers. Install flat washers on bolts. Obtain bridge and forcing screw from MAINSHAFT BEARING INNER RACE

PULLER/INSTALLER (Part No. HD-34902-B). Also obtain a suitable hardened washer to use between the puller screw and the end of the shaft.

6. Slide one bolt through each side of bridge with flat washer between bridge and bolt head. Turn bolts into wedge attachment an equal number of turns.
7. Sparingly apply graphite lubricant to threads of forcing screw to prolong service life and provide smooth operation. Start the forcing screw into center hole of bridge.

NOTE

Failure to use hardened washer may result in damage to forcing screw or sprocket shaft.

8. Place hardened washer against end of sprocket shaft. Turn forcing screw into bridge until the steel ball at the end of the screw makes firm contact with hardened washer.

⚠WARNING

Do not use heating devices with penetrating oil. Penetrating oil is flammable which could result in death or serious injury. (00375a)

9. Using the ROBINAIR HEAT GUN (Part No. HD-25070), uniformly heat the bearing inner race for about 30 seconds using a circular motion.

NOTE

To assist removal without heat, apply a light penetrating oil to shaft and leading edge of bearing inner race.

10. Turn forcing screw until thrust washer and bearing inner race move approximately 1/8 in (3.2 mm).
11. Reposition WEDGE ATTACHMENT (Part No. HD-95637-46B) to pull on bearing inner race only.

NOTICE

Install wedge attachment only so far as necessary to ensure positive contact with bearing inner race. Installing tool with more contact than necessary will result in damage to the flywheel (00500b)

12. See Figure 3-122. Verify that the tool assembly is square, so that the inner race remains straight during removal.
13. Using the ROBINAIR HEAT GUN (Part No. HD-25070), uniformly heat the bearing inner race in a circular motion for about 30 seconds.

NOTE

To assist removal without heat, apply a light penetrating oil to shaft and leading edge of bearing inner race.

14. Turn forcing screw until bearing inner race is pulled free of sprocket shaft.
15. Remove thrust washer from sprocket shaft.

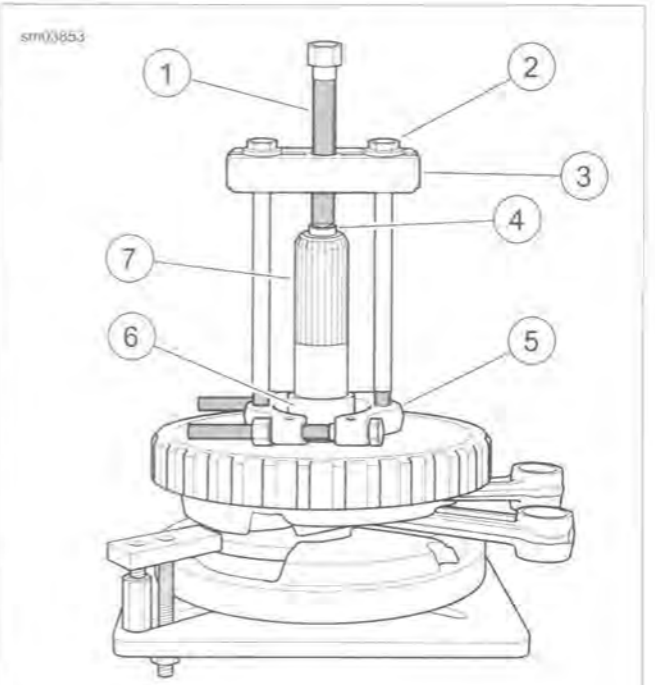

1. **Forcing screw**
2. **3/8-16 bolt with flat washer**
3. **Bridge**
4. **Hardened washer**
5. **Wedge attachment**
6. **Bearing inner race**
7. **Sprocket shaft**

Figure 3-122. Remove Inner Race from Sprocket Shaft

Installation

1. Place **new** thrust washer over sprocket shaft.
2. Place **new** bearing inner race on bench top. Using the ROBINAIR HEAT GUN (Part No. HD-25070), uniformly heat bearing inner race in a circular motion for about 60 seconds.
3. Wearing suitable gloves to protect hands from burns, place heated bearing inner race over sprocket shaft.

⚠WARNING

Do not use heating devices with penetrating oil. Penetrating oil is flammable which could result in death or serious injury. (00375a)

NOTE

To assist installation without heat, apply a light penetrating oil to shaft and leading edge of bearing inner race.

4. See Figure 3-123. Obtain the SPROCKET SHAFT BEARING INSTALLER (Part No. HD-97225-55C). Assemble tool as described below.
   a. See Figure 3-124. Turn pilot adapter into sprocket shaft.
   b. Turn pilot shaft onto pilot adapter.
   c. Slide long collar over pilot shaft until it contacts bearing inner race.
   d. Slide short collar over pilot shaft until it contacts long collar.
   e. Slide bearing and large flat washer over pilot shaft.
   f. Sparingly apply graphite lubricant to the pilot shaft to prolong service life and provide smooth operation.
   g. See Figure 3-125. Turn handle onto pilot shaft.
5. See Figure 3-126. Rotate handle of tool clockwise until bearing inner race makes firm contact with thrust washer. Verify that thrust washer cannot be rotated by hand.
6. Remove bearing installer components from sprocket shaft.

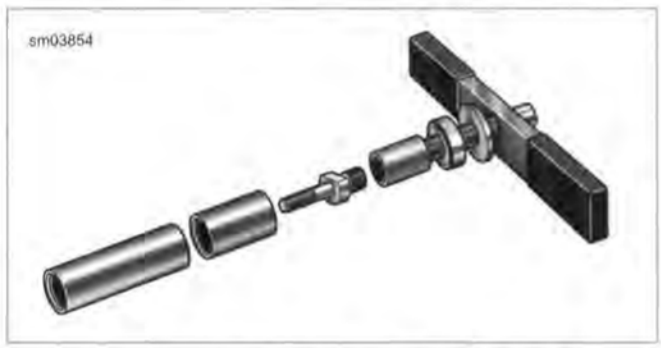

Figure 3-123. Sprocket Shaft Bearing Installer

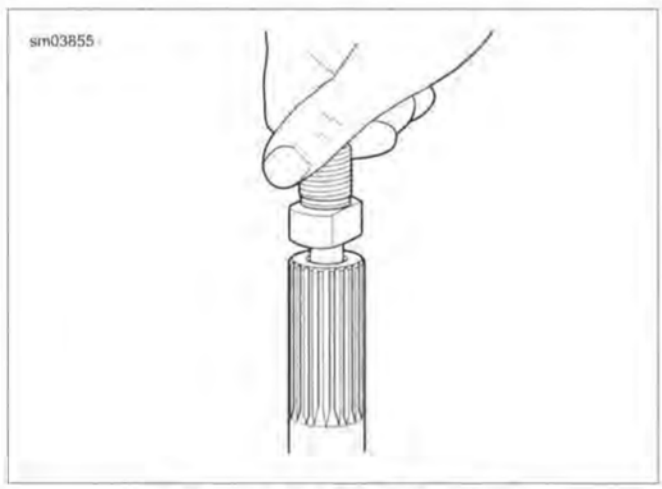

Figure 3-124. Pilot Adapter

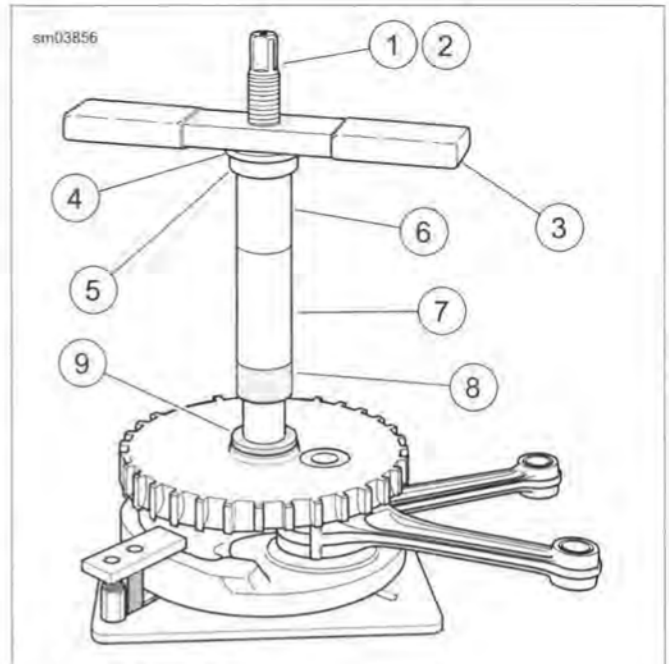

1. **Pilot adapter**
2. **Pilot shaft**
3. **Handle**
4. **Flat washer**
5. **Bearing**
6. **Short collar**
7. **Long collar**
8. **Inner race**
9. **Thrust washer**

Figure 3-125. Press Inner Race onto Sprocket Shaft: Setup

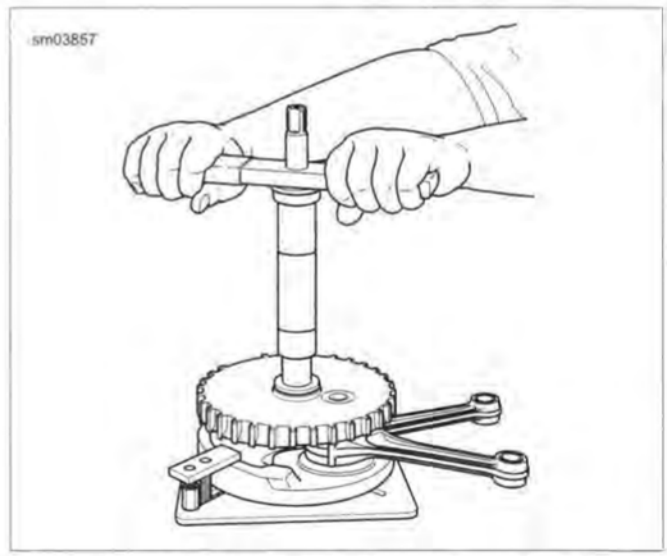

Figure 3-126. Press Inner Race onto Sprocket Shaft: Operation

CYLINDER STUDS

FASTENER	TORQUE VALUE	
Cylinder stud	120-240 **in-lbs**	13.6-27.1 Nm

Removal

1. Tighten two nuts together on threads of stud.
2. Place wrench on lower nut. Turn to remove stud.

Installation

1. Place a steel ball inside a head screw. Put the head screw on the end of the cylinder stud without the collar.
2. Start the stud in the cylinder deck with the collar side down. Tighten using air gun until collar reaches crankcase.
3. Hand-tighten stud to 120-240 **in-lbs** (13.6-27.1 Nm).

PIPE PLUG AND OIL FITTINGS

FASTENER	TORQUE VALUE	
Crankcase pipe plugs	120-144 **in-lbs**	13.6-16.3 Nm

Removal

See Figure 3-127. Turn pipe plug counterclockwise until free.

Installation

1. Apply LOCTITE 565 THREAD SEALANT to threads.
2. Install pipe plug. Tighten to 120-144 **in-lbs** (13.6-16.3 Nm).

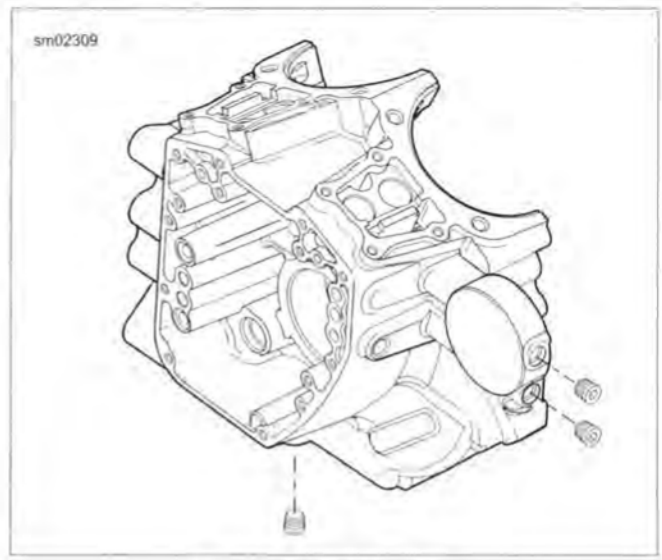

Figure 3-127. Pipe Plug

SYMPTOMS

Overview

Flywheels that shift out of true at the crank pin generally exhibit one of two symptoms: no oil pressure or vibration. This condition is also known as scissored flywheels.

No Oil Pressure

When the crankshaft shifts more than 0.015 in (0.381 mm), it can break the oil pump gerotors. This causes a loss of oil pressure.

If a low or no oil pressure condition is confirmed, inspect the oil pump and cam support plate. If the oil pump gerotors are bound or damaged, the cause is likely from a contaminant running through the pump or a shifted crankshaft. If this type of damage is found, always replace the oil lines and clean all debris from the entire lubrication system. See 1.23 TROUBLESHOOTING for general diagnostics of low oil pressure.

Vibration

Generally, left crankshaft runout must exceed 0.020 in (0.508 mm) to be noticeable to the rider. It is much more likely that vibration issues are resolved by following the checklist in 1.23 TROUBLESHOOTING.

If correct chassis set-up has been verified and other items in 1.23 TROUBLESHOOTING have been eliminated, checking left crankshaft runout is appropriate.

INSPECTION

NOTE

Do not attempt to straighten connecting rods. Straightening rods damage both the upper bushing and lower bearing.

1. Replace the flywheel/connecting rod assembly if any of the following conditions are noted:
   a. Bent or twisted connecting rods
   b. Connecting rods do not fall under their own weight or are in a bind
   c. Sprocket teeth are worn in an irregular pattern or chipped
   d. The crankshaft (roller) bearing inner races are brinelled, burnt, scored, blued or damaged
   e. Crankshaft runout exceeds specification

NOTE

Bluing on connecting rods is part of the hardening process and is considered a normal condition.

2. Check connecting rod bearing clearance. Place the assembly as shown in Figure 3-128.
   a. Holding the shank of each rod just above the bearing bore, pull up and down on the connecting rods.
   b. Any up and down movement indicates excessive lower bearing clearance. Replace the flywheel/connecting rod assembly.
3. Measure crankshaft runout if the crankshaft is suspected of being out-of-true.

NOTE

If the flywheel, connecting rods or right side bearing inner race require replacement, replace the entire flywheel assembly.

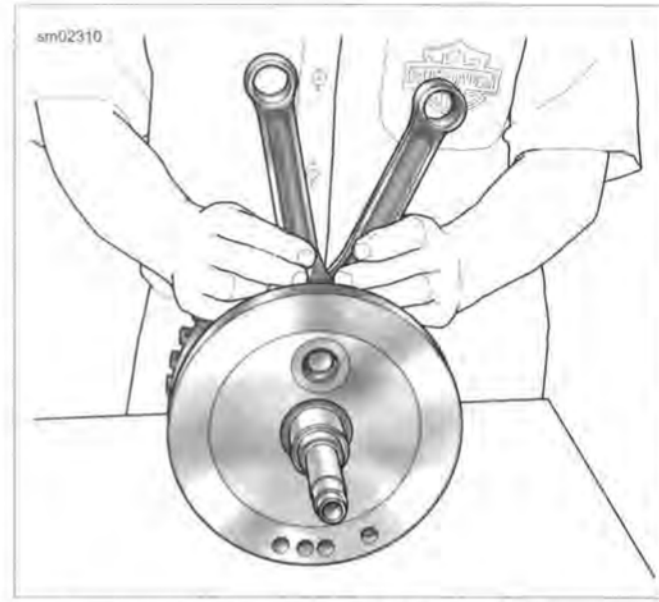

Figure 3-128. Connecting Rod Bearing Clearance

MEASURING CRANKSHAFT RUNOUT

Crankshaft Installed

NOTES

- *Perform the following checks during engine disassembly as a method to determine condition of crankshaft and whether crankshaft is suitable for reuse. The checks can be done with the engine either installed in the frame or removed.*
- *Dial indicators must be set up and zeroed **perpendicular to the shaft in both directions**. The indicator must be 90 degrees when viewed from the end and from the side.*
- *For a reliable reading, only measure on the cam support plate bushing machined surface of the crankshaft, never on a shaft adapter or the bolt holes.*
- *Never secure the dial indicator base to the vehicle frame. Movement within the engine mounts will result in a false reading.*
- *While rotating the crankshaft, the indicator needle may move to both the minus and plus sides of zero. The total indicator reading is the value to record.*

1. **Right Side**
   a. Remove spark plugs.
   b. Remove the cam support plate. See 3.11 CAM COMPARTMENT SERVICE.
   c. Secure a dial indicator base to a stable location (crankcase, engine stand, etc.).

NOTE

To obtain an accurate measurement, the dial indicator must be set up perpendicular in both directions to the shaft being measured.

d. Attach a dial indicator and set it up to measure runout at the cam plate bearing contact area of the crankshaft. Adjust the indicator to zero.

e. Slowly rotate the crankshaft one complete revolution and record the total needle movement.

f. Compare results of measurements. If the total indicator reading exceeds service wear limit, the crankshaft/flywheel assembly should be removed and checked on a truing stand. Refer to Table 3-42.

2. **Left Side**

a. Remove spark plugs.

b. Remove the primary cover and compensating sprocket. See 5.4 DRIVE COMPONENTS.

c. Secure a dial indicator base to a stable location (crankcase, engine stand, etc.).

NOTE

To obtain an accurate measurement, the dial indicator must be set up perpendicular in both directions to the shaft being measured.

d. Attach a dial indicator set up to measure runout near the end of the splined area of the crankshaft. Adjust the indicator to zero on the "high" part of one spline.

e. Mark the crankshaft and crankcase to use as reference for the amount of rotation.

NOTE

Pay attention to only the values from the "high" part of the splines.

f. Slowly rotate the crankshaft one complete revolution and record the total needle movement.

g. Compare results to Table 3-42. If the total indicator reading exceeds service wear limit, remove the crankshaft/flywheel assembly and check on a truing stand.

Crankshaft Removed

NOTES

- *The following procedure should be performed if the crankshaft/flywheel assembly is suspected of being out-of-true.*
- *The crankshaft must be supported by the bearing races during inspection. Never use centers as the holes may not be perfectly centered.*
- *Verify that the bearing races are in good condition and suitable for performing this inspection.*

1. See Figure 3-129. Mount crankshaft in truing stand so it is supported on the bearing races (1) by the roller supports (2).

2. Secure a dial indicator mount near each end of the crankshaft.

NOTE

Dial indicators must be perpendicular to the shaft in both directions.

3. Set up each indicator (3) to measure the machined surface (4) on one end and splines (5) on the other.

4. Adjust both indicators to zero.

5. Slowly rotate the crankshaft assembly while observing the total indicator reading.

NOTE

Twin Cam crankshaft/flywheel assemblies are not serviceable. Replace parts not within specifications.

6. Compare results of measurements. If the total indicator reading exceeds service wear limit, replace the crankshaft/flywheel assembly. Refer to Table 3-42.

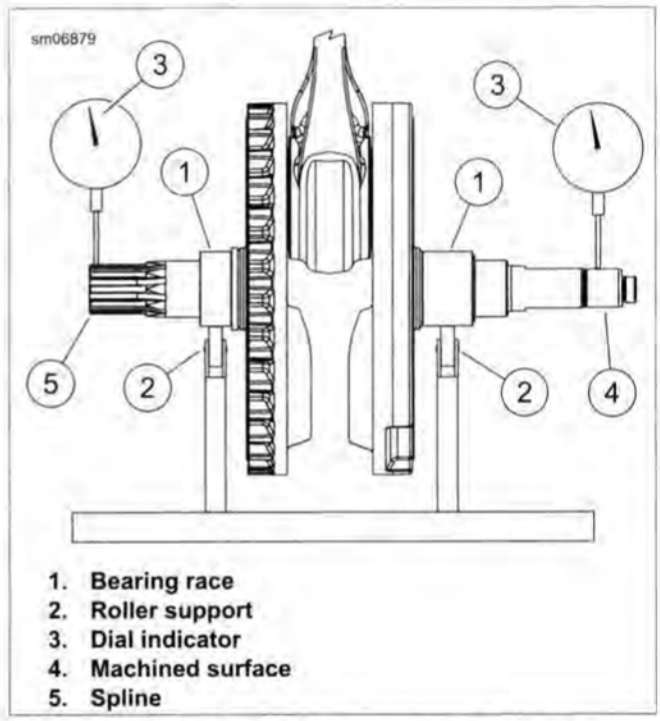

1. **Bearing race**
2. **Roller support**
3. **Dial indicator**
4. **Machined surface**
5. **Spline**

Figure 3-129. Checking Crankshaft Runout

Table 3-42. Flywheel

FLYWHEEL	REPLACE IF WEAR EXCEEDS	
	IN	MM
Runout (shaft measured in case)	0.012	0.305
Runout (measured in truing stand)	0.005	0.127
End play	0.013	0.330

CRANKCASE ASSEMBLY

PART NUMBER	TOOL NAME
99650-02	HIGH-PERFORMANCE SEALANT, GRAY
HD-39361-B	SPROCKET SHAFT OIL SEAL INSTALLER
HD-42326-B	CRANKSHAFT GUIDE
HD-97225-55C	SPROCKET SHAFT BEARING INSTALLER

FASTENER	TORQUE VALUE	
Crankcase screws, first torque	120 **in-lbs**	13.6 Nm
Crankcase screws, final torque	15-19 ft-lbs	20.3-25.8 Nm

1. Secure left crankcase half upright in engine stand.
2. Apply a liberal amount of SCREAMIN' EAGLE ASSEMBLY LUBE to both main bearings. Work into bearings to distribute lube.
3. Slide CRANKSHAFT GUIDE (Part No. HD-42326-B) onto flywheel sprocket shaft.
4. Slide flywheel assembly into left crankcase half. Remove crankshaft guide tool.
5. Rotate crankcase assembly so flywheel pinion shaft is pointing straight up.
6. Verify that both dowel pins are installed in split line face of right case half.
7. Apply a bead of HIGH-PERFORMANCE SEALANT, GRAY (Part No. 99650-02) approximately 0.056 in (1.42 mm) wide to the split line face and around the two dowel pins of right crankcase half.
8. See Figure 3-130. Place CRANKSHAFT GUIDE (Part No. HD-42326-B) over end of crankshaft until it contacts shoulder on shaft.
9. Mate case halves. Remove crankshaft guide.

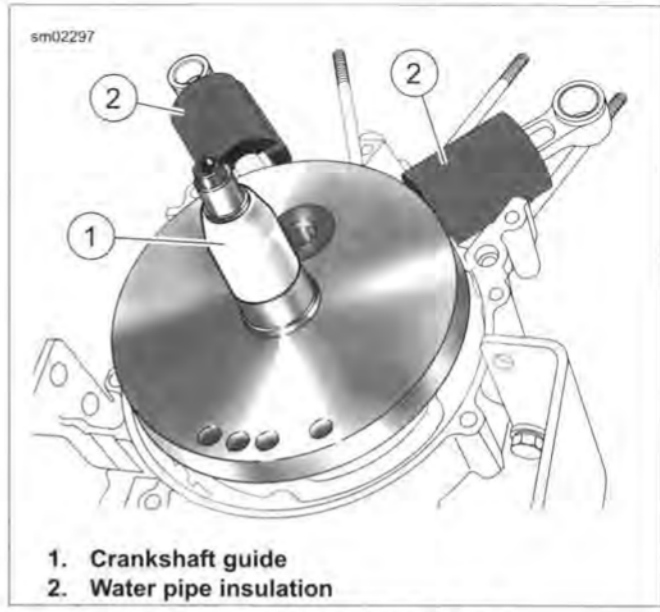

1. **Crankshaft guide**
2. **Water pipe insulation**

Figure 3-130. Crankshaft Guide

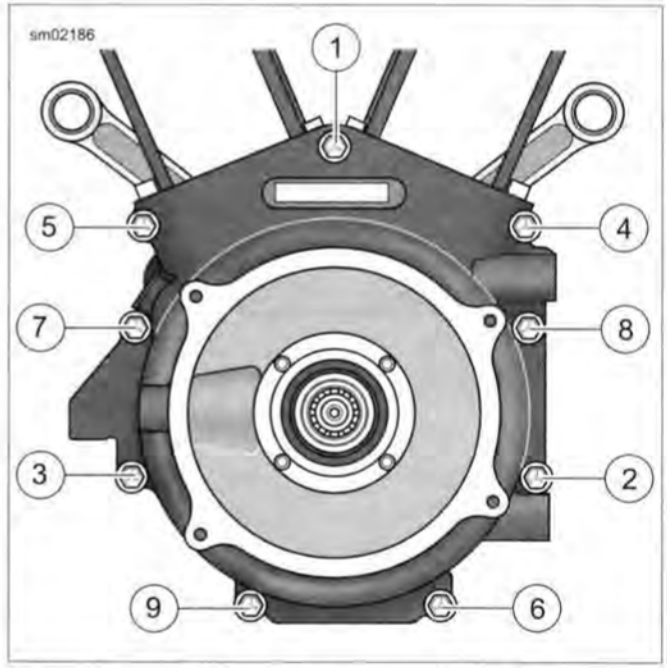

Figure 3-131. Tightening Crankcase Bolts

10. See Figure 3-131. Start the nine crankcase bolts and tighten in the following sequence.
    a. Finger-tighten each crankcase bolt.
    b. Tighten the crankcase bolts to 120 **in-lbs** (13.6 Nm) in the order shown.
    c. Following the same sequence, tighten each bolt to 15-19 ft-lbs (20.3-25.8 Nm).
11. Rotate crankcase assembly so sprocket shaft is pointing straight up.

12. Install thrust washer on sprocket shaft with "THIS SIDE OUT" facing out (and the chamfer inboard). If using original part without markings, orient to preserve existing wear pattern.
13. See Figure 3-132. Install **new** oil seal into bearing bore.
    a. Obtain pilot adapter, pilot shaft, short collar, bearing, large flat washer and handle from SPROCKET SHAFT BEARING INSTALLER (Part No. HD-97225-55C).
    b. Turn pilot adapter into sprocket shaft.
    c. Turn pilot shaft onto pilot adapter.
    d. Verify that lip garter spring is in place on both sides of oil seal.
    e. Install sprocket shaft spacer in oil seal bore.
    f. With the lettering on the oil seal facing outward, slide sprocket shaft spacer and oil seal over pilot shaft until it contacts bearing bore.
    g. Slide SPROCKET SHAFT OIL SEAL INSTALLER (Part No. HD-39361-B) over pilot shaft until it contacts oil seal.

    NOTE

    Sparingly apply graphite lubricant to the pilot shaft to prolong service life and provide smooth operation.

    h. Slide short collar, bearing and large flat washer onto pilot shaft. Turn handle on to complete assembly of tool.
14. Rotate handle clockwise until oil seal installer makes firm contact with crankcase stator mount.
15. Remove tool components from sprocket shaft.
16. Rotate crankcase in engine stand so that cam cover flange is facing upward.
17. Apply a liberal amount of SCREAMIN' EAGLE ASSEMBLY LUBE to the main bearing. Rotate flywheel assembly to distribute lube.
18. Install oil pump and cam support plate. See 3.24 CAM COMPARTMENT AND COMPONENTS.
19. Complete engine assembly.

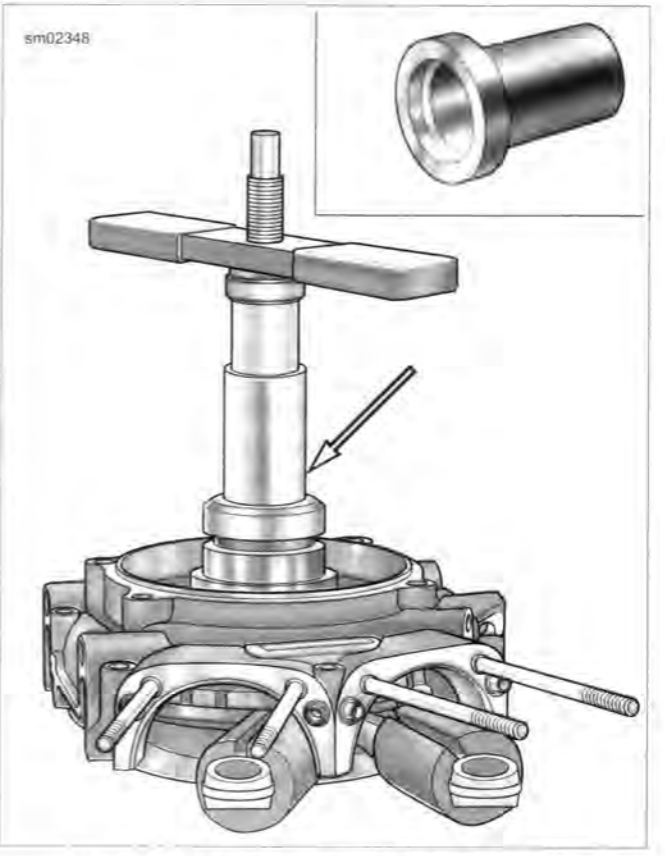

Figure 3-132. Sprocket Shaft Oil Seal Installer

REMOVAL

1. Position motorcycle on a lift.
2. See Figure 3-133. Remove the engine oil drain plug (4). Remove fill plug/dipstick and oil filter. Drain oil into suitable container.
3. Remove the transmission drain plug (7) and drain transmission lubricant into suitable container.
4. Remove screws (8) that secure the oil pan to the transmission housing.
5. Remove oil pan (5) and gasket (1). Discard gasket.
6. Remove baffle assembly (3) and spring (2) from oil pan.
7. Thoroughly inspect and clean the oil pan, especially if there was a major engine failure. Debris that remains in the pan causes a repeat failure. Install a **new** oil pan if necessary.

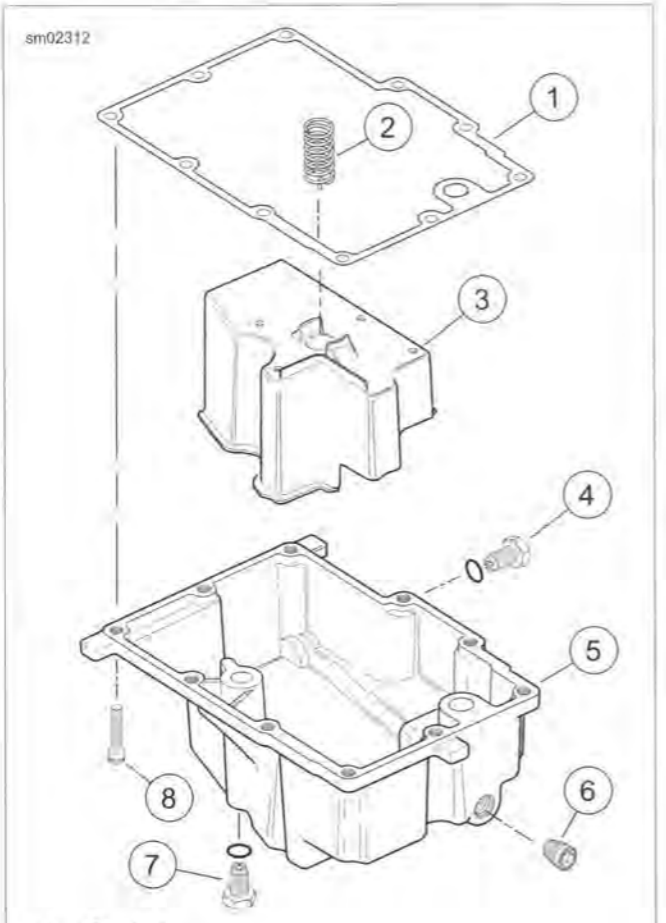

1. **Gasket**
2. **Spring**
3. **Baffle assembly**
4. **Engine oil drain plug**
5. **Oil pan**
6. **Pipe plug**
7. **Transmission drain plug and O-ring**
8. **Screw (10)**

Figure 3-133. Oil Pan Assembly

INSTALLATION

FASTENER	TORQUE VALUE	
Oil pan screws	132-156 **in-lbs**	14.9-17.6 Nm
Transmission drain plug	14-21 ft-lbs	19.0-28.5 Nm
Engine oil drain plug	14-21 ft-lbs	19.0-28.5 Nm

1. Clean and examine all flange surfaces.
2. See Figure 3-133. Insert baffle assembly (3) and spring (2) in oil pan.
3. Place **new** gasket (1) on oil pan.
4. Apply a thin coat of HYLOMAR GASKET AND THREAD SEALANT to oil pan flange.
5. Place **new** gasket (1) on oil pan flange. Allow sealer to dry until tacky.

NOTE

*If oil pan fasteners will be reused, apply 1-2 drops of LOCTITE 243 MEDIUM STRENGTH THREADLOCKER AND SEALANT (blue). **New** fasteners have a lock patch applied.*

6. Position oil pan with gasket on bottom of transmission and loosely install screws (8). Tighten to 132-156 **in-lbs** (14.9-17.6 Nm) following sequence shown in Figure 3-134.
7. Clean engine oil and transmission lubricant drain plugs. Replace O-rings as required.
8. Install transmission drain plug and O-ring (5). Tighten to 14-21 ft-lbs (19.0-28.5 Nm).
9. Install engine oil drain plug and O-ring (3). Tighten to 14-21 ft-lbs (19.0-28.5 Nm).
10. Remove motorcycle from lift.
11. Replace fluids.
    a. Fill transmission with transmission lubricant. See 1.9 TRANSMISSION LUBRICANT.
    b. Install engine oil filter. Fill engine oil. See 1.5 ENGINE OIL AND FILTER.

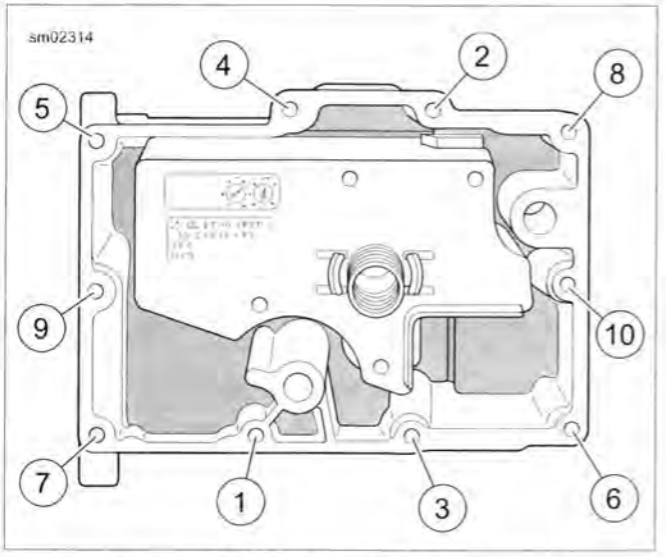

Figure 3-134. Oil Pan Torque Sequence

SUBJECT PAGE NO.

4.1 FASTENER TORQUE VALUES..... 4-1
4.2 SPECIFICATIONS: FUEL SYSTEM..... 4-4
4.3 AIR CLEANER ASSEMBLY..... 4-5
4.4 FUEL TANK..... 4-9
4.5 THROTTLE POSISITON SENSOR (TPS)..... 4-12
4.6 INTAKE AIR TEMPERATURE SENSOR -IAT)..... 4-13
4.7 ENGINE TEMPERATURE SENSOR (ET)..... 4-14
4.8 INDUCTION MODULE..... 4-16
4.9 IDLE AIR CONTROL (IAC)..... 4-18
4.10 MANIFOLD ABSOLUTE PRESSURE SENSOR (MAP)..... 4-19
4.11 OXYGEN SENSOR..... 4-20
4.12 FUEL INJECTORS..... 4-21
4.13 FUEL PUMP..... 4-23
4.14 FUEL PRESSURE TEST..... 4-30
4.15 EXHAUST SYSTEM..... 4-32
4.16 INTAKE LEAK TEST..... 4-44
4.17 EVAPORATIVE EMISSIONS CONTROL..... 4-46

NOTES

FASTENER TORQUE VALUES IN THIS CHAPTER

The table below lists torque values for all fasteners presented in this chapter.

FASTENER	TORQUE VALUE		NOTES
Adapter plate screw	55-60 **in-lbs**	5.2-6.8 Nm	4.3 AIR CLEANER ASSEMBLY, Installation, HO103
Air cleaner cover bracket screw	40-60 **in-lbs**	4.5-6.8 Nm	4.3 AIR CLEANER ASSEMBLY, Installation, All But HO103
Air cleaner cover screw	36-60 **in-lbs**	4.1-6.8 Nm	4.3 AIR CLEANER ASSEMBLY, Installation, All But HO103
Air cleaner cover screw	36-60 **in-lbs**	4.1-6.8 Nm	4.3 AIR CLEANER ASSEMBLY, Installation, HO103/Apply LOCTITE 243 MEDIUM STRENGTH THREADLOCKER AND SEALANT (blue).
Breather bolt	120-144 **in-lbs**	13.6-16.3 Nm	4.3 AIR CLEANER ASSEMBLY, Installation, HO103
Breather bolts	22-24 ft-lbs	29.8-32.5 Nm	4.3 AIR CLEANER ASSEMBLY, Installation, All But HO103/metric
Charcoal canister fasteners: FLD	15-20 **in-lbs**	1.7-2.3 Nm	4.15 EXHAUST SYSTEM, Installation: FLD
Charcoal canister fasteners: FXDL	15-20 **in-lbs**	1.7-2.3 Nm	4.15 EXHAUST SYSTEM, Installation: FXDL
Charcoal canister mounting fasteners	15-20 **in-lbs**	1.7-2.3 Nm	4.17 EVAPORATIVE EMISSIONS CONTROL, Charcoal Canister
Cover insert screw	27-32 **in-lbs**	3.1-3.6 Nm	4.3 AIR CLEANER ASSEMBLY, Installation, HO103
Engine temperature sensor	120-180 **in-lbs**	13.6-20.3 Nm	4.7 ENGINE TEMPERATURE SENSOR (ET), Installation/Hand start 2-3 turns
Exhaust bracket bolt, rear	25-30 ft-lbs	33.9-40.7 Nm	4.15 EXHAUST SYSTEM, Installation: FXDB, FXDBC and FXDBP
Exhaust cross-over pipe clamp	20-25 ft-lbs	27.1-33.9 Nm	4.15 EXHAUST SYSTEM, Installation: FXDB, FXDBC and FXDBP
Exhaust flange nut (lower front cylinder)	100-120 **in-lbs**	11.3-13.6 Nm	4.15 EXHAUST SYSTEM, Installation: FXDB, FXDBC and FXDBP
Exhaust flange nut (lower front cylinder): FLD	100-120 **in-lbs**	11.3-13.6 Nm	4.15 EXHAUST SYSTEM, Installation: FLD
Exhaust flange nut (lower front cylinder): FXDF and FXDWG	100-120 **in-lbs**	11.3-13.6 Nm	4.15 EXHAUST SYSTEM, Installation: FXDF and FXDWG
Exhaust flange nut (lower front cylinder): FXDL	100-120 **in-lbs**	11.3-13.6 Nm	4.15 EXHAUST SYSTEM, Installation: FXDL
Exhaust flange nut (lower rear cylinder)	100-120 **in-lbs**	11.3-13.6 Nm	4.15 EXHAUST SYSTEM, Installation: FXDB, FXDBC and FXDBP
Exhaust flange nut (lower rear cylinder): FLD	100-120 **in-lbs**	11.3-13.6 Nm	4.15 EXHAUST SYSTEM, Installation: FLD
Exhaust flange nut (lower rear cylinder): FXDF and FXDWG	100-120 **in-lbs**	11.3-13.6 Nm	4.15 EXHAUST SYSTEM, Installation: FXDF and FXDWG
Exhaust flange nut (lower rear cylinder): FXDL	100-120 **in-lbs**	11.3-13.6 Nm	4.15 EXHAUST SYSTEM, Installation: FXDL
Exhaust flange nut (upper front cylinder, final torque)	100-120 **in-lbs**	11.3-13.6 Nm	4.15 EXHAUST SYSTEM, Installation: FXDB, FXDBC and FXDBP
Exhaust flange nut (upper front cylinder, final torque): FLD	100-120 **in-lbs**	11.3-13.6 Nm	4.15 EXHAUST SYSTEM, Installation: FLD

FASTENER	TORQUE VALUE		NOTES
Exhaust flange nut (upper front cylinder, final torque): FXDF and FXDWG	100-120 **in-lbs**	11.3-13.6 Nm	4.15 EXHAUST SYSTEM, Installation: FXDF and FXDWG
Exhaust flange nut (upper front cylinder, final torque): FXDL	100-120 **in-lbs**	11.3-13.6 Nm	4.15 EXHAUST SYSTEM, Installation: FXDL
Exhaust flange nut (upper front cylinder, initial torque)	9-18 **in-lbs**	1-2 Nm	4.15 EXHAUST SYSTEM, Installation: FXDB, FXDBC and FXDBP
Exhaust flange nut (upper front cylinder, initial torque): FLD	9-18 **in-lbs**	1-2 Nm	4.15 EXHAUST SYSTEM, Installation: FLD
Exhaust flange nut (upper front cylinder, initial torque): FXDF and FXDWG	9-18 **in-lbs**	1-2 Nm	4.15 EXHAUST SYSTEM, Installation: FXDF and FXDWG
Exhaust flange nut (upper front cylinder, initial torque): FXDL	9-18 **in-lbs**	1-2 Nm	4.15 EXHAUST SYSTEM, Installation: FXDL
Exhaust flange nut (upper rear cylinder, final torque)	100-120 **in-lbs**	11.3-13.6 Nm	4.15 EXHAUST SYSTEM, Installation: FXDB, FXDBC and FXDBP
Exhaust flange nut (upper rear cylinder, final torque): FLD	100-120 **in-lbs**	11.3-13.6 Nm	4.15 EXHAUST SYSTEM, Installation: FLD
Exhaust flange nut (upper rear cylinder, final torque): FXDF and FXDWG	100-120 **in-lbs**	11.3-13.6 Nm	4.15 EXHAUST SYSTEM, Installation: FXDF and FXDWG
Exhaust flange nut (upper rear cylinder, final torque): FXDL	100-120 **in-lbs**	11.3-13.6 Nm	4.15 EXHAUST SYSTEM, Installation: FXDL
Exhaust flange nut (upper rear cylinder, initial torque)	9-18 **in-lbs**	1-2 Nm	4.15 EXHAUST SYSTEM, Installation: FXDB, FXDBC and FXDBP
Exhaust flange nut (upper rear cylinder, initial torque): FLD	9-18 **in-lbs**	1-2 Nm	4.15 EXHAUST SYSTEM, Installation: FLD
Exhaust flange nut (upper rear cylinder, initial torque): FXDF and FXDWG	9-18 **in-lbs**	1-2 Nm	4.15 EXHAUST SYSTEM, Installation: FXDF and FXDWG
Exhaust flange nut (upper rear cylinder, initial torque): FXDL	9-18 **in-lbs**	1-2 Nm	4.15 EXHAUST SYSTEM, Installation: FXDL
Exhaust pipe clamp, front	25-30 ft-lbs	33.9-40.7 Nm	4.15 EXHAUST SYSTEM, Installation: FXDB, FXDBC and FXDBP
Exhaust shield worm drive clamps	20-40 **in-lbs**	2.3-4.5 Nm	4.15 EXHAUST SYSTEM, Installation: FXDB, FXDBC and FXDBP
Exhaust shield worm drive clamps: FLD	20-40 **in-lbs**	2.3-4.5 Nm	4.15 EXHAUST SYSTEM, Installation: FLD
Exhaust shield worm drive clamps: FXDF and FXDWG	20-40 **in-lbs**	2.3-4.5 Nm	4.15 EXHAUST SYSTEM, Installation: FXDF and FXDWG
Exhaust shield worm drive clamps: FXDL	20-40 **in-lbs**	2.3-4.5 Nm	4.15 EXHAUST SYSTEM, Installation: FXDL
Filter element screw	55-60 **in-lbs**	5.2-6.8 Nm	4.3 AIR CLEANER ASSEMBLY, Installation, HO103/Apply LOCTITE 243 MEDIUM STRENGTH THREADLOCKER AND SEALANT (blue)
Front pipe clamp: FLD	25-30 ft-lbs	33.9-40.6 Nm	4.15 EXHAUST SYSTEM, Installation: FLD
Fuel supply tube fastener	90-110 **in-lbs**	10.2-12.4 Nm	4.12 FUEL INJECTORS, Installation
Fuel tank mounting fasteners	15-20 ft-lbs	20.3-27.1 Nm	4.4 FUEL TANK, Installation/Front and rear
Intake air temperature sensor fastener	15-20 **in-lbs**	1.7-2.3 Nm	4.6 INTAKE AIR TEMPERATURE SENSOR (IAT), Installation
Manifold mounting screws, final torque	96-156 **in-lbs**	10.9-17.6 Nm	4.8 INDUCTION MODULE, Installation
Manifold mounting screws, first torque	16-20 **in-lbs**	1.8-2.3 Nm	4.8 INDUCTION MODULE, Installation
Mounting stud	55-60 **in-lbs**	5.2-6.8 Nm	4.3 AIR CLEANER ASSEMBLY, Installation, HO103
Muffler bracket bolt: FXDF and FXDWG	15-19 ft-lbs	20.3-25.8 Nm	4.15 EXHAUST SYSTEM, Installation: FXDF and FXDWG
Muffler bracket fastener: FLD	17-21 ft-lbs	23.0-28.5 Nm	4.15 EXHAUST SYSTEM, Installation: FLD
Muffler bracket fastener: FXDL	17-21 ft-lbs	23.0-28.5 Nm	4.15 EXHAUST SYSTEM, Installation: FXDL

FASTENER	TORQUE VALUE		NOTES
Muffler bracket flange nuts: FXDF and FXDWG	15-19 ft-lbs	20.3-25.8 Nm	4.15 EXHAUST SYSTEM, Installation: FXDF and FXDWG
Muffler clamp nut: FLD	38-43 ft-lbs	51.6-58.4 Nm	4.15 EXHAUST SYSTEM, Installation: FLD
Muffler clamp nut: FXDL	38-43 ft-lbs	51.6-58.4 Nm	4.15 EXHAUST SYSTEM, Installation: FXDL
Muffler clamp nuts	38-43 ft-lbs	51.6-58.4 Nm	4.15 EXHAUST SYSTEM, Installation: FXDB, FXDBC and FXDBP
Muffler clamp nuts: FXDF and FXDWG	38-43 ft-lbs	51.6-58.4 Nm	4.15 EXHAUST SYSTEM, Installation: FXDF and FXDWG
Muffler fastener: FLD	17-21 ft-lbs	23.0-28.5 Nm	4.15 EXHAUST SYSTEM, Installation: FLD
Muffler fastener: FXDL	17-21 ft-lbs	23.0-28.5 Nm	4.15 EXHAUST SYSTEM, Installation: FXDL
Muffler mounting bolt: FXDF and FXDWG	15-19 ft-lbs	20.3-25.8 Nm	4.15 EXHAUST SYSTEM, Installation: FXDF and FXDWG
Muffler support bracket nuts	20-30 ft-lbs	27.1-40.7 Nm	4.15 EXHAUST SYSTEM, Installation: FXDB, FXDBC and FXDBP
Oxygen sensor	12.2-14.2 ft-lbs	16.5-19.3 Nm	4.11 OXYGEN SENSOR, Installation
Quick-connect fitting	22-26 ft-lbs	29.8-35.3 Nm	4.4 FUEL TANK, Installation
Throttle cable bracket fasteners	20-35 **in-lbs**	2.3-4.0 Nm	4.9 IDLE AIR CONTROL (IAC), Installation
Throttle cable bracket fasteners	20-35 **in-lbs**	2.3-4.0 Nm	4.10 MANIFOLD ABSOLUTE PRESSURE SENSOR (MAP), Installation/Use new screws
Throttle position sensor fasteners	18 **in-lbs**	2.0 Nm	4.5 THROTTLE POSITION SENSOR (TPS), Installation
Top plate fasteners	27-33 **in-lbs**	3.1-3.7 Nm	4.13 FUEL PUMP, Installation

SPECIFICATIONS

Table 4-1. Fuel Capacity

MODEL	GALLONS	LITERS
FXDB, FXDBC, FXDBP, FXDWG, FLD, FXDL	4.7	17.8
FXDF	5.0	18.9

REMOVAL, ALL BUT HO103

1. See Figure 4-1 or Figure 4-2. Remove screw (1) and air cleaner cover (2).
2. Gently pull both rubber breather tubes (6) from the element.
3. **All but FXDB:** Slide speed nut (12) to the left to access third screw (4).
4. Remove three screws (4), bracket (5) and filter element (7).
5. Gently pull breather tubes from breather bolts (8) on backplate (9).

⚠WARNING

Do not use gasoline or solvents to clean filter element. Flammable cleaning agents can cause an intake system fire, which could result in death or serious injury. (00101a)

6. Inspect filter element. See 1.6 AIR CLEANER AND EXHAUST SYSTEM. Replace filter element if damaged or if filter media cannot be adequately cleaned.
7. Inspect seal ring (3) for cracks or tears. Verify that seal ring seals tightly to backplate. Replace as required.
8. Alternately loosen both breather bolts (8) a few turns at a time while pulling backplate (9) away from induction module. Continue this process until breather bolts are clear.
9. Remove backplate, gasket (10) and gasket (11). Discard gaskets.
10. Clean dust from air cleaner cover and backplate.

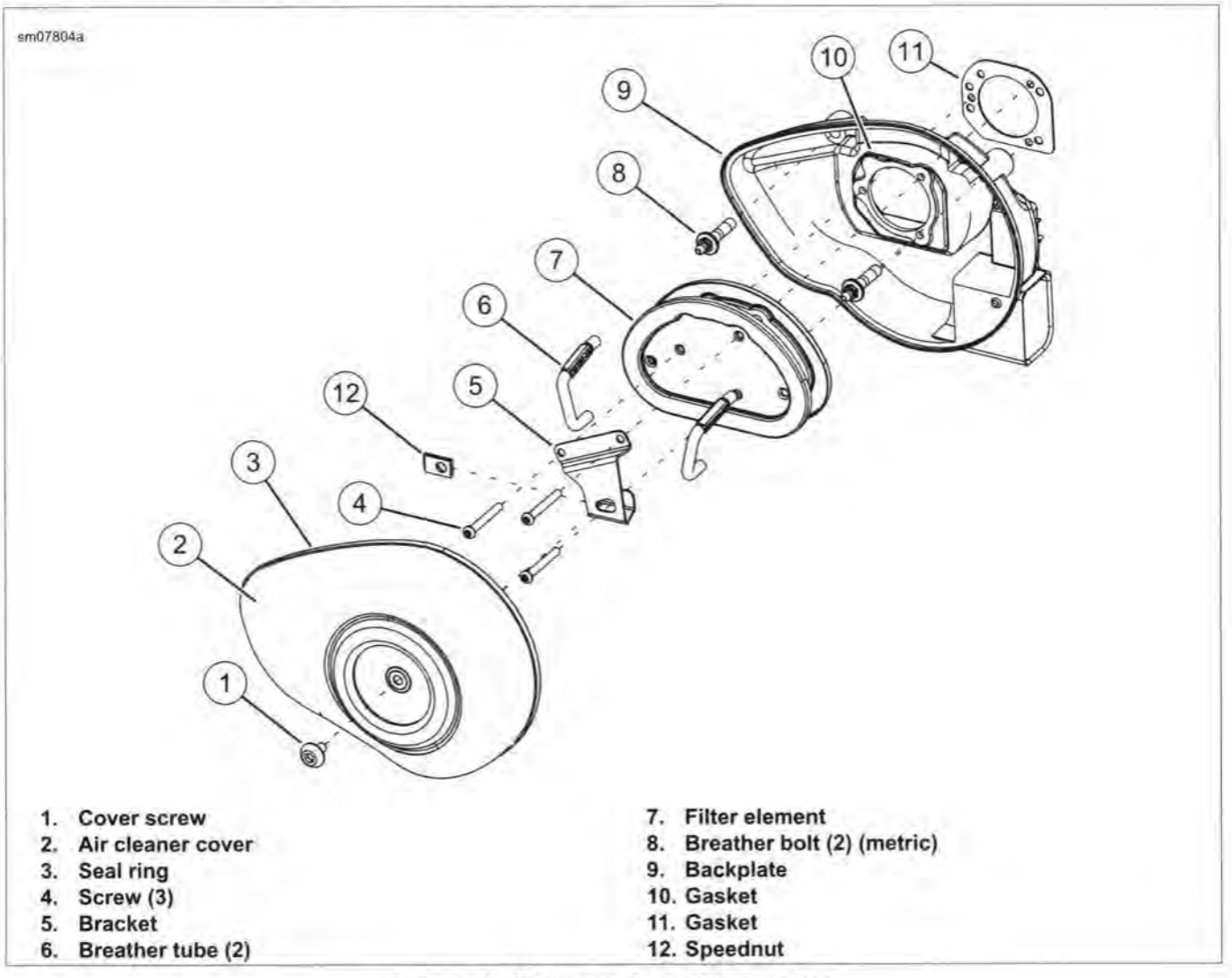

1. Cover screw
2. Air cleaner cover
3. Seal ring
4. Screw (3)
5. Bracket
6. Breather tube (2)
7. Filter element
8. Breather bolt (2) (metric)
9. Backplate
10. Gasket
11. Gasket
12. Speednut

Figure 4-1. Air Cleaner Assembly, Teardrop

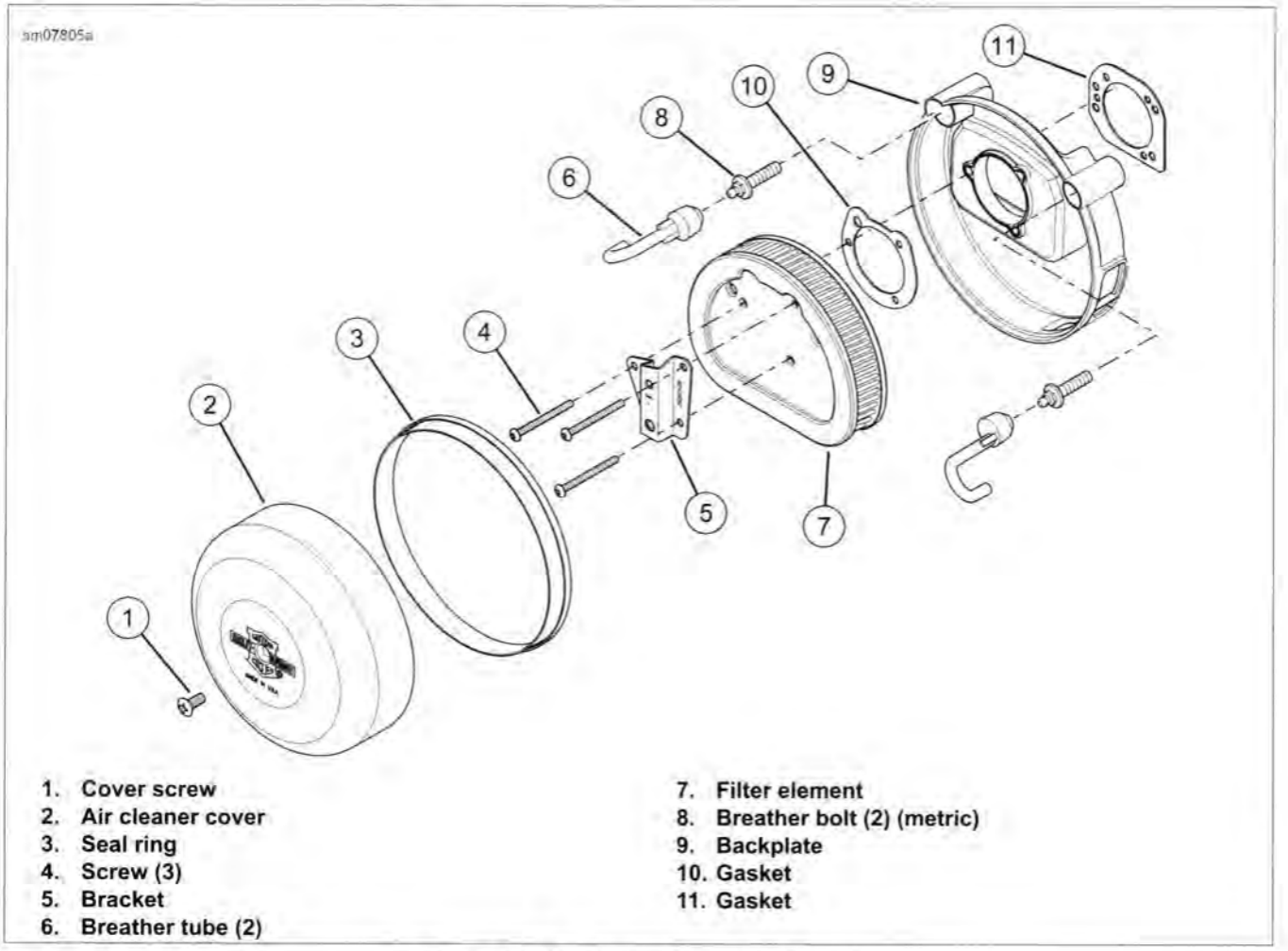

1. **Cover screw**
2. **Air cleaner cover**
3. **Seal ring**
4. **Screw (3)**
5. **Bracket**
6. **Breather tube (2)**
7. **Filter element**
8. **Breather bolt (2) (metric)**
9. **Backplate**
10. **Gasket**
11. **Gasket**

Figure 4-2. Air Cleaner Assembly, Round

INSTALLATION, ALL BUT HO103

FASTENER	TORQUE VALUE	
Breather bolts	22-24 ft-lbs	29.8-32.5 Nm
Air cleaner cover bracket screw	40-60 **in-lbs**	4.5-6.8 Nm
Air cleaner cover screw	36-60 **in-lbs**	4.1-6.8 Nm

1. See Figure 4-1 or Figure 4-2. Position **new** gasket (11) on backplate (9). Insert two breather bolts (8) (metric) through backplate into each cylinder head. Tighten bolts to 22-24 ft-lbs (29.8-32.5 Nm).
2. Position **new** gasket (10) on filter element (7). Make sure that gasket holes are aligned with screw holes.
3. Attach breather tubes (6) to breather screws on backplate.
4. Install air filter element and bracket (5) with three screws (4). Tighten to 40-60 **in-lbs** (4.5-6.8 Nm).
5. **All but FXDB:** Slide speed nut (12) to the right and into place.
6. Insert breather tubes (6) into holes in filter element.
7. Install air cleaner cover (2).
   a. Apply a drop of LOCTITE 243 MEDIUM STRENGTH THREADLOCKER AND SEALANT (blue) to threads of air cleaner cover screw (1).
   b. Install air cleaner cover and screw. Tighten screw to 36-60 **in-lbs** (4.1-6.8 Nm).

REMOVAL, HO103

1. See Figure 4-3. Remove insert screws (1) and cover insert (2).
2. Remove cover screw (3) and air cleaner cover (4).
3. Remove screws (5) and filter element (6).

⚠WARNING

Do not use gasoline or solvents to clean filter element. Flammable cleaning agents can cause an intake system fire, which could result in death or serious injury. (00101a)

4. Inspect filter element. See 1.6 AIR CLEANER AND EXHAUST SYSTEM. Replace filter element if damaged or if filter media cannot be adequately cleaned.
5. Remove screws (7) and adapter plate (8).
6. Remove breather plugs (10) and breather bolts (11).

7. Remove mounting studs (9) and backplate (12).
8. Remove and discard gaskets (13 and 14).

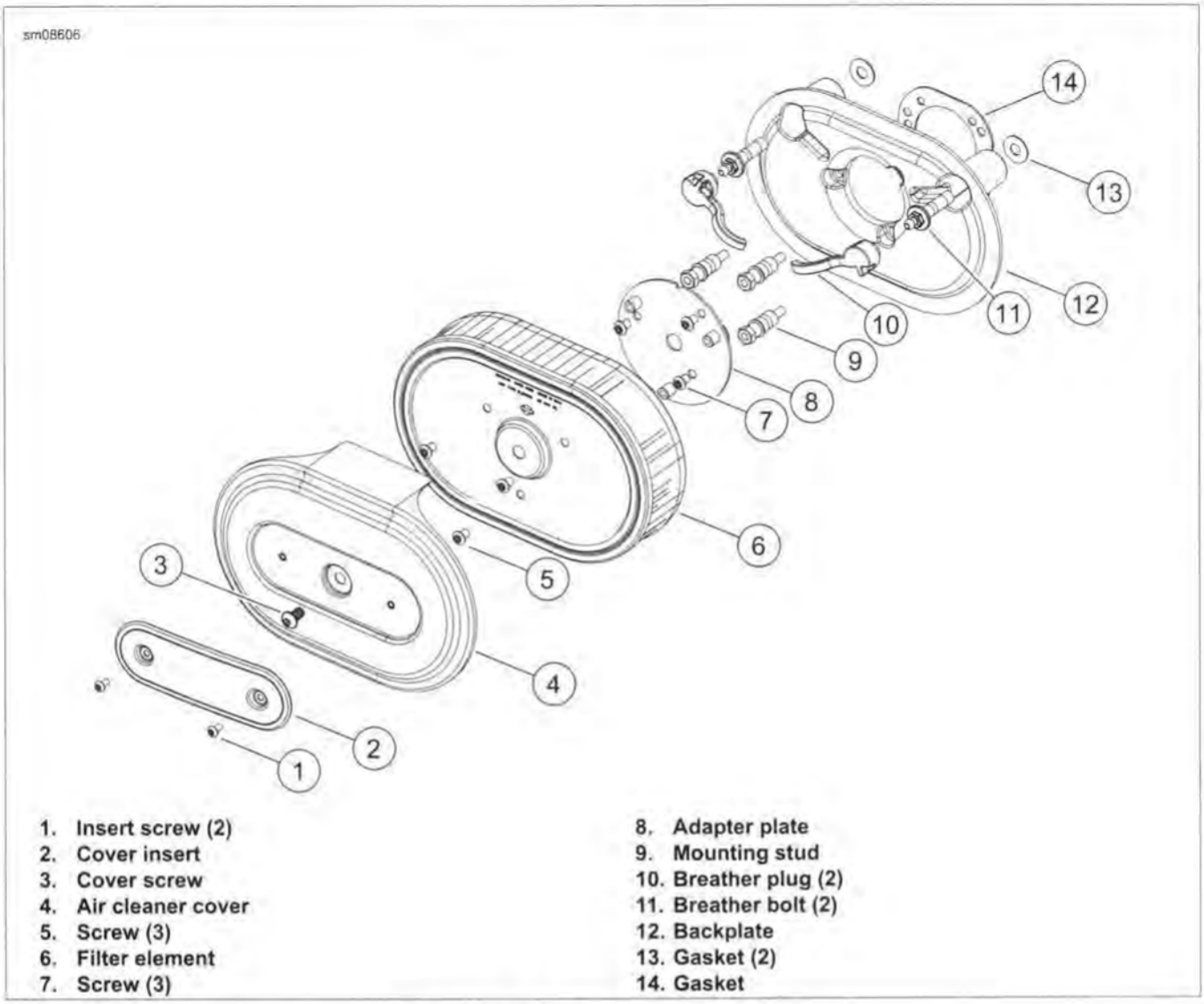

1. **Insert screw (2)**
2. **Cover insert**
3. **Cover screw**
4. **Air cleaner cover**
5. **Screw (3)**
6. **Filter element**
7. **Screw (3)**
8. **Adapter plate**
9. **Mounting stud**
10. **Breather plug (2)**
11. **Breather bolt (2)**
12. **Backplate**
13. **Gasket (2)**
14. **Gasket**

Figure 4-3. Air Cleaner Assembly, HO103

INSTALLATION, HO103

FASTENER	TORQUE VALUE	
Mounting stud	55-60 **in-lbs**	5.2-6.8 Nm
Breather bolt	120-144 **in-lbs**	13.6-16.3 Nm
Adapter plate screw	55-60 **in-lbs**	5.2-6.8 Nm
Filter element screw	55-60 **in-lbs**	5.2-6.8 Nm
Air cleaner cover screw	36-60 **in-lbs**	4.1-6.8 Nm
Cover insert screw	27-32 **in-lbs**	3.1-3.6 Nm

1. See Figure 4-3. Position **new** gaskets (13 and 14) on backplate (12).
2. Place backplate into position.
3. Install, but do not tighten mounting studs (9).
4. Loosely install breather bolts (11) into cylinder heads.
5. Tighten mounting studs to 55-60 **in-lbs** (5.2-6.8 Nm).
6. Tighten breather bolts to 120-144 **in-lbs** (13.6-16.3 Nm).
7. Install breather plugs (10). Position plugs with plug ends pointing toward throttle body opening.
8. Install adapter plate (8) and screws (7). Tighten to 55-60 **in-lbs** (5.2-6.8 Nm).
9. Install filter element (6) onto adapter plate.
   a. Apply LOCTITE 243 MEDIUM STRENGTH THREADLOCKER AND SEALANT (blue) to screws (5).
   b. Install screws. Tighten to 55-60 **in-lbs** (5.2-6.8 Nm).
10. Install air cleaner cover (4).
    a. Apply LOCTITE 243 MEDIUM STRENGTH THREADLOCKER AND SEALANT (blue) to cover screw (3).
    b. Install cover screw. Tighten to 36-60 **in-lbs** (4.1-6.8 Nm).

11. Install cover insert (2) and insert screws (1). Tighten to 27-32 **in-lbs** (3.1-3.6 Nm).

BACKPLATE ASSEMBLY: HDI MODELS

See Figure 4-4. HDI models have unique backplates. These parts may be distinguished by:

- A different intake with a solenoid-operated trap door assembly at the mouth of the intake.
- An intake solenoid connector (2) on the backplate.

Perform the same routine maintenance on HDI models, but also check that the trap door in the backplate operates properly.

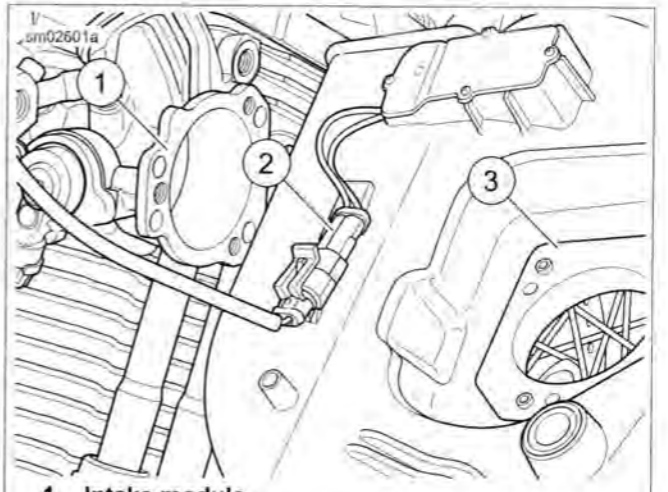

1. **Intake module**
2. **Intake solenoid connector [178]**
3. **Air cleaner backplate**

Figure 4-4. Backplate: HDI Models

GENERAL

⚠WARNING

Stop the engine when refueling or servicing the fuel system. Do not smoke or allow open flame or sparks near gasoline. Gasoline is extremely flammable and highly explosive, which could result in death or serious injury. (00002a)

⚠WARNING

Do not use solvents or other products that contain chlorine on plastic fuel system components. Chlorine can degrade plastic fuel system components, which can cause a loss of fuel system pressure or engine stalling and could result in death or serious injury. (000621b)

The fuel tank is treated to resist rusting. However, long term storage requires special treatment, see 1.22 STORAGE.

For information on the tank-mounted fuel gauge, see the electrical diagnostic manual and 7.19 FUEL GAUGE.

REMOVAL

⚠WARNING

To prevent spray of fuel, purge system of high-pressure fuel before supply line is disconnected. Gasoline is extremely flammable and highly explosive, which could result in death or serious injury. (00275a)

1. Purge and disconnect fuel supply line.
   a. See Figure 4-5. Disconnect the fuel pump module connector from the tank plate.
   b. Start the engine. Allow the motorcycle to run until engine stalls.
   c. Operate starter an extra 3 seconds after engine stalls to remove remaining fuel from fuel supply line.

⚠WARNING

Gasoline can drain from quick-connect fitting when removing fuel line. Gasoline is extremely flammable and highly explosive, which could result in death or serious injury. Wipe up spilled fuel immediately and dispose of rags in a suitable manner. (00267a)

⚠WARNING

Do not twist fuel line fitting, as fuel line can crack causing a fuel leak. Gasoline is extremely flammable and highly explosive, which could result in death or serious injury. (00274a)

2. See Figure 4-6. Pull up on chrome sleeve of quick-connect fitting (1). Pull down on fuel supply line (2) to disconnect.

⚠WARNING

To prevent accidental vehicle start-up, which could cause death or serious injury, disconnect negative (-) battery cable before proceeding. (00048a)

3. Disconnect negative battery cable.
4. Remove instrument panel.
   a. **FXDF and FLD models:** See 7.21 INSTRUMENTS: FXDF AND FLD.
   b. **FXDB and FXDWG models:** See 7.22 INSTRUMENTS: FXDB, FXDBC, FXDBP AND FXDWG.
   c. **FXDL models:** See 7.23 INSTRUMENTS: FXDL.

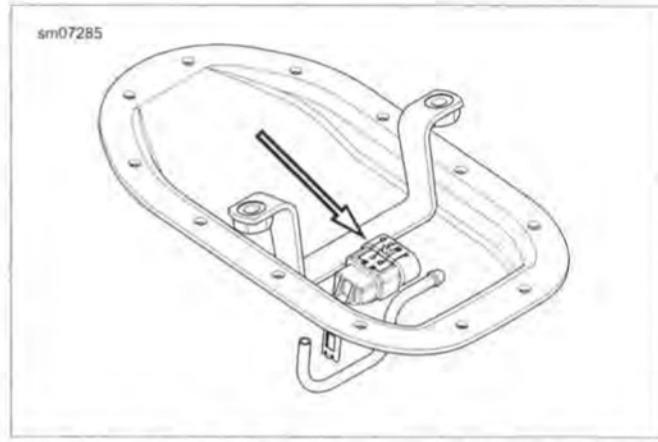

Figure 4-5. Fuel Pump Connector [141] (Typical)

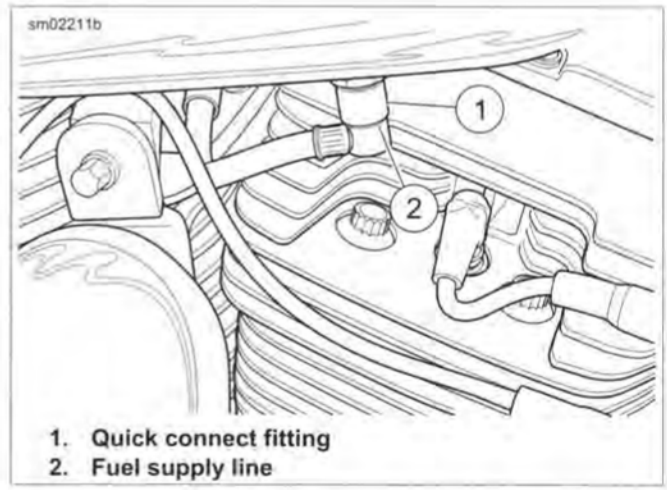

1. **Quick connect fitting**
2. **Fuel supply line**

Figure 4-6. Fuel Supply Line Fitting

5. See Figure 4-5. Disconnect fuel pump module connector [141].

⚠WARNING

Gasoline can drain from the crossover line when disconnected from fuel tank. Gasoline is extremely flammable and highly explosive, which could result in death or serious injury. Wipe up spilled fuel immediately and dispose of rags in a suitable manner. (00259a)

6. Drain fuel tank.
   a. Obtain a short section of 5/16 in (7.94 mm) ID hose. Insert bolt in one end of hose. Install hose clamp to verify that end is securely plugged.
   b. See Figure 4-7. Cut clamp (2) from one end of cross-over hose (3). Quickly replace cross-over hose on fuel tank fitting with open end of short hose while directing flow of gasoline from free end of cross-over hose into suitable container.
7. See Figure 4-8. Disconnect continuous venting system vent line (9).
8. Remove the front mounting fastener (2), flat washers (3), and acorn nut (4).
9. Remove the rear mounting fastener (5), flat washers (6), and acorn nut (7).
10. See Figure 4-7. Disconnect fuel gauge connector [117] (1) located under left side of fuel tank.

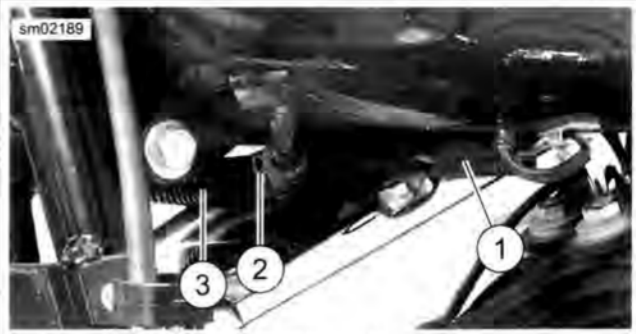

1. **Fuel gauge connector [117]**
2. **Clamp**
3. **Crossover hose**

Figure 4-7. Fuel Gauge Connector and Crossover Hose

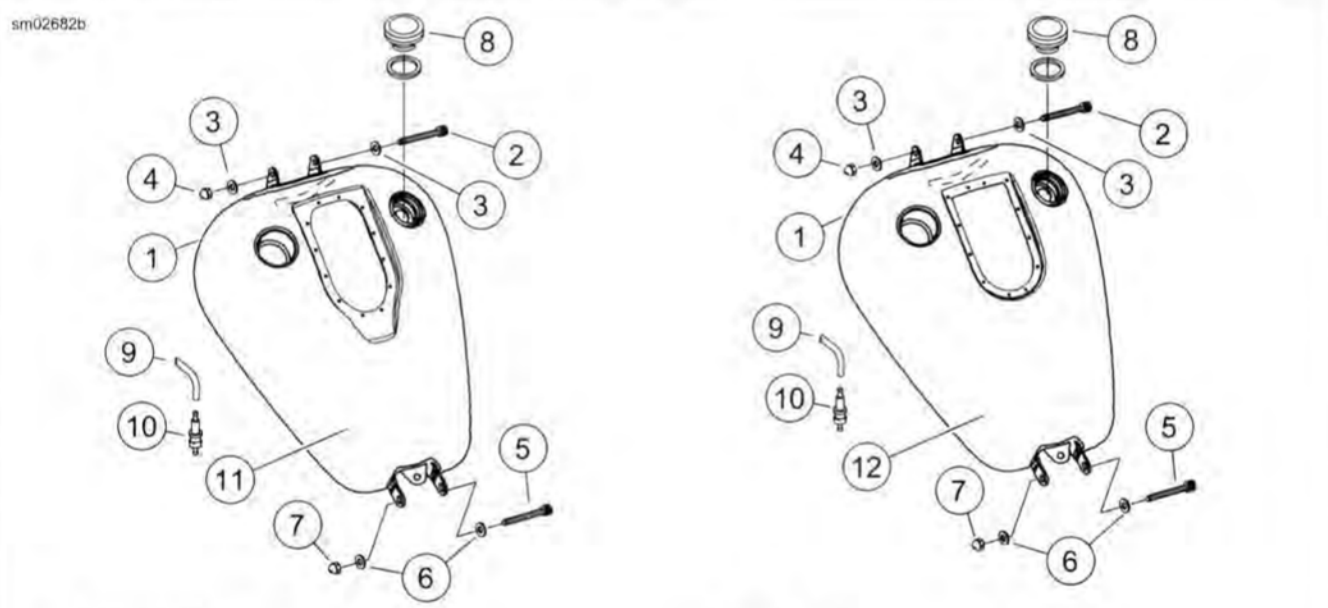

1. **Crossover line**
2. **Front mounting fastener**
3. **Flat washer (2)**
4. **Acorn nut**
5. **Rear mounting fastener**
6. **Flat washer (2)**
7. **Acorn nut**
8. **Fuel cap**
9. **Continuous venting system vent line**
10. **Vapor valve**
11. **FXDB, FXDWG, FLD, FXDL**
12. **FXDF**

Figure 4-8. Fuel Tank

CLEANING AND INSPECTION

1. Remove fuel pump. See 4.13 FUEL PUMP.
2. Remove fuel gauge sending unit. See 7.20 FUEL GAUGE SENDER.
3. Clean the tank interior with commercial cleaning solvent or a soap and water solution. Shake the tank to agitate the cleaning agent.
4. Flush the tank thoroughly after cleaning. Allow it to air dry.
5. Inspect the interconnect lines, continuous venting system vent line (if applicable) and fuel line for cuts, cracks or holes. Replace lines as needed.
6. Inspect the tank for leaks and other damage. If a damaged tank cannot be successfully repaired, replace it.
7. Install fuel gauge sending unit. See 7.20 FUEL GAUGE SENDER.
8. Install fuel pump. See 4.13 FUEL PUMP.

INSTALLATION

PART NUMBER	TOOL NAME
HD-97087-65B	HOSE CLAMP PLIERS

FASTENER	TORQUE VALUE	
Quick-connect fitting	22-26 ft-lbs	29.8-35.3 Nm
Fuel tank mounting fasteners	15-20 ft-lbs	20.3-27.1 Nm

⚠WARNING

Excessive pressure can build in the fuel tank if vapor valve is not mounted vertically with long fitting to top. Leaks due to excessive pressure can cause a fire or explosion, which could result in death or serious injury. (00265a)

1. Install fuel tank quick-connect fitting if it has been removed. Tighten to 22-26 ft-lbs (29.8-35.3 Nm).
2. See Figure 4-8. Install continuous venting system vent line (9) to vapor valve (10).
3. Place a washer (3, 6) over each fastener (2, 5) and insert the fasteners through the tank mounting lugs and frame bracket tubes.
4. Install acorn nuts (4, 7). Tighten to 15-20 ft-lbs (20.3-27.1 Nm).

NOTE

In next step, make sure crimped end of clamp faces toward front of vehicle.

5. See Figure 4-7. Connect the cross-over hose (3). Install **new** clamp (2) using HOSE CLAMP PLIERS (Part No. HD-97087-65B).
6. Connect the fuel feed line. Install **new** hose clamp using HOSE CLAMP PLIERS.
7. Connect the fuel gauge connector located under left side of fuel tank. See 7.19 FUEL GAUGE.
8. Install instrument panel.
   a. **FXDF and FLD models:** see 7.21 INSTRUMENTS: FXDF AND FLD.
   b. **FXDB, FXDBC, FXDBP and FXDWG models:** see 7.22 INSTRUMENTS: FXDB, FXDBC, FXDBP AND FXDWG.
   c. **FXDL model:** see 7.23 INSTRUMENTS: FXDL.
9. Check for leaks.

NOTE

The low fuel lamp does not turn off until there is sufficient fuel in the tank, the ignition switch has been turned off and back on, and the vehicle has begun forward movement.

Vapor Valve

⚠WARNING

Keep vent and vapor valve lines away from exhaust and engine. Gasoline is extremely flammable and highly explosive, which could result in death or serious injury. (00263a)

See Figure 4-9. The vapor valve (2) attaches to the frame member ahead of the fuel tank on the left side with reusable clamp with an anchor. Mark the two lines (1, 4) connected to the upper and lower fittings of the vapor valve before removing it from its clamp (3). When installing the vapor valve, place the valve back into the cable strap with the long necked end at the top.

NOTE

On California and APC models, the hose from the vapor valve bottom fitting goes to the charcoal EVAP canister. On non-California models, the bottom fitting hose is vented to the atmosphere.

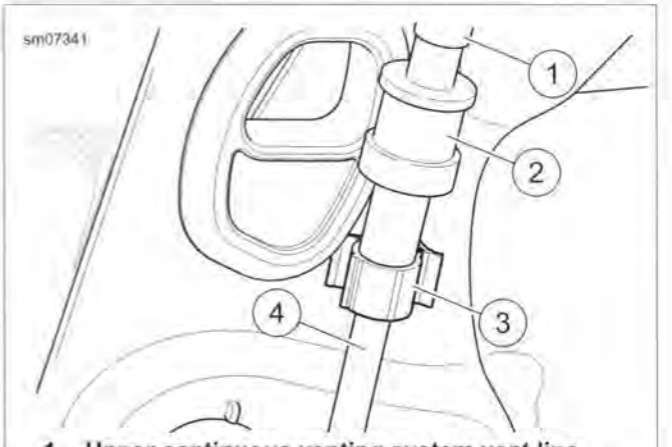

1. **Upper continuous venting system vent line**
2. **Vapor valve**
3. **Resealable clamp with fin clip**
4. **Lower continuous venting system vent line**

Figure 4-9. Vapor Valve Installation

GENERAL

See the electrical diagnostic manual for information on the function and testing of the throttle position sensor (TPS).

REMOVAL

1. Remove seat.

⚠WARNING

To prevent accidental vehicle start-up, which could cause death or serious injury, remove main fuse before proceeding. (00251b)

2. Remove main fuse.
3. Remove air cleaner assembly. See 4.3 AIR CLEANER ASSEMBLY.
4. See Figure 4-10. Disconnect TP sensor connector [88].
5. Remove two fasteners to detach TP sensor from throttle body. Discard fasteners.

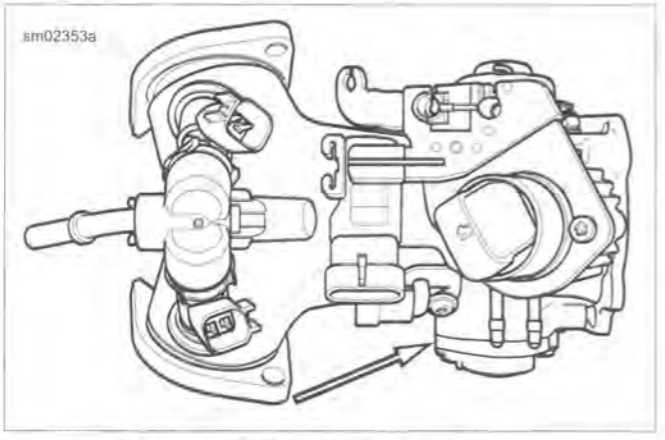

Figure 4-10. Throttle Position Sensor

INSTALLATION

FASTENER	TORQUE VALUE	
Throttle position sensor fasteners	18 **in-lbs**	2.0 Nm

NOTE

Close throttle for proper installation of throttle position sensor.

1. See Figure 4-11. Replace O-ring (2) if necessary.
2. Fit pocket (3) of throttle position sensor over throttle shaft while engaging index pin (1) with hole on machined flange of induction module.
3. Install two **new** fasteners (4) to fasten throttle position sensor to induction module. Tighten to 18 **in-lbs** (2.0 Nm).
4. Using the throttle lever mechanism, open and close the throttle plates to check for proper operation. Be sure that the mechanism operates smoothly without binding or sticking.
5. Connect TP sensor connector [88].
6. Install air cleaner assembly. See 4.3 AIR CLEANER ASSEMBLY.
7. Install main fuse.

⚠WARNING

After installing seat, pull upward on seat to be sure it is locked in position. While riding, a loose seat can shift causing loss of control, which could result in death or serious injury. (00070b)

8. Install seat.

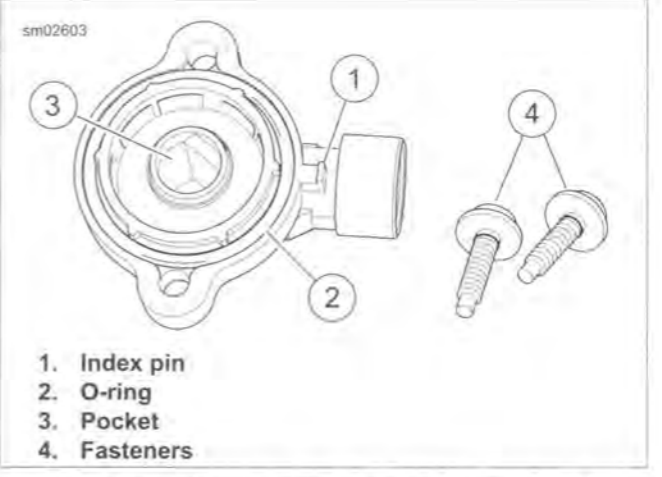

1. **Index pin**
2. **O-ring**
3. **Pocket**
4. **Fasteners**

Figure 4-11. Throttle Position Sensor Installation

GENERAL

See the electrical diagnostic manual for information on the function and testing of the intake air temperature sensor (IAT sensor).

REMOVAL

⚠WARNING

To prevent accidental vehicle start-up, which could cause death or serious injury, disconnect negative (-) battery cable before proceeding. (00048a)

1. Disconnect negative battery cable.
2. Remove air cleaner backplate. See 4.3 AIR CLEANER ASSEMBLY.
3. See Figure 4-12. Disconnect IAT sensor connector [89].
4. Remove fastener to detach IAT sensor. Discard fastener.

INSTALLATION

FASTENER	TORQUE VALUE	
Intake air temperature sensor fastener	15-20 **in-lbs**	1.7-2.3 Nm

1. See Figure 4-13. Install **new** O-ring (1) if necessary.
2. See Figure 4-12. Insert sensor into induction module. Verify electrical connectors face toward the left side.
3. See Figure 4-13. Install fastener (2). Tighten to 15-20 **in-lbs** (1.7-2.3 Nm).
4. Connect IAT sensor connector [89].
5. Install air cleaner assembly. See 4.3 AIR CLEANER ASSEMBLY.
6. Connect negative battery cable.

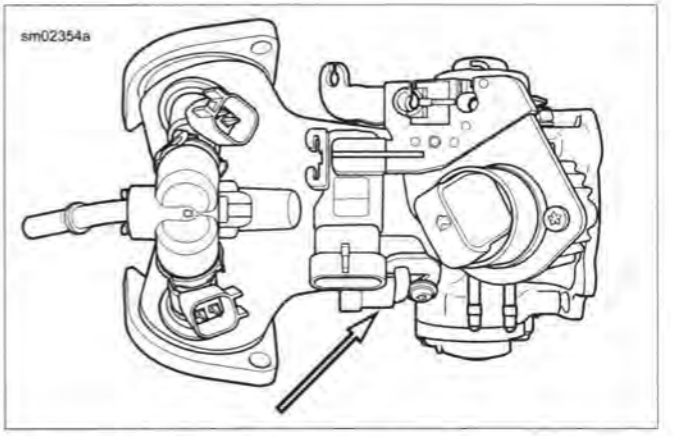

Figure 4-12. Intake Air Temperature Sensor Location



1. **O-ring**
2. **Fastener**

Figure 4-13. Intake Air Temperature Sensor

GENERAL

⚠WARNING

Stop the engine when refueling or servicing the fuel system. Do not smoke or allow open flame or sparks near gasoline. Gasoline is extremely flammable and highly explosive, which could result in death or serious injury. (00002a)

See the electrical diagnostic manual for information on the function and testing of the engine temperature sensor (ET sensor).

REMOVAL

⚠WARNING

To prevent spray of fuel, purge system of high-pressure fuel before supply line is disconnected. Gasoline is extremely flammable and highly explosive, which could result in death or serious injury. (00275a)

1. Purge and disconnect fuel supply line.
   a. See Figure 4-14. Disconnect the fuel pump module connector from the tank plate.
   b. Run engine.
   c. When the engine stalls, operate the starter for 3 seconds to remove any remaining fuel from the fuel lines.

⚠WARNING

Gasoline can drain from quick-connect fitting when removing fuel line. Gasoline is extremely flammable and highly explosive, which could result in death or serious injury. Wipe up spilled fuel immediately and dispose of rags in a suitable manner. (00267a)

2. See Figure 4-15. Pull up on chrome sleeve of quick-connect fitting (1) and pull down on fuel supply line (2) to disconnect.

⚠WARNING

To prevent accidental vehicle start-up, which could cause death or serious injury, disconnect negative (-) battery cable before proceeding. (00048a)

3. Disconnect negative battery cable.
4. See Figure 4-16. Pull back boot to reveal ET sensor at back of front cylinder.
5. Disconnect ET sensor connector [90] by pulling external latch outward and using rocking motion to remove.
6. See Figure 4-17. Loosen ET sensor using socket. When sensor starts to turn easily, finish removing by hand.

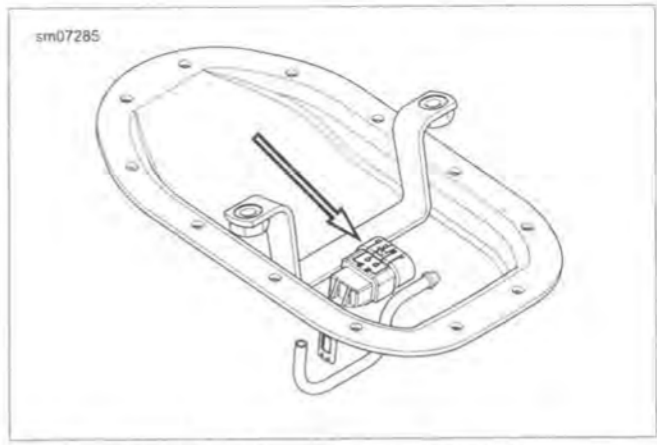

Figure 4-14. Fuel Pump Connector [141] (Typical)

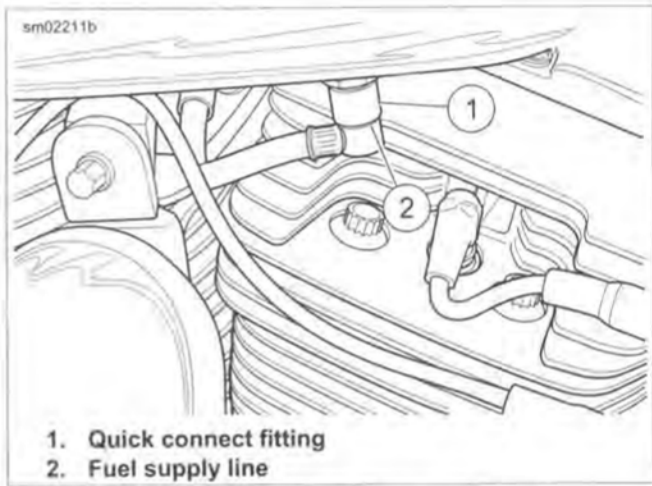

1. **Quick connect fitting**
2. **Fuel supply line**

Figure 4-15. Fuel Supply Line Fitting

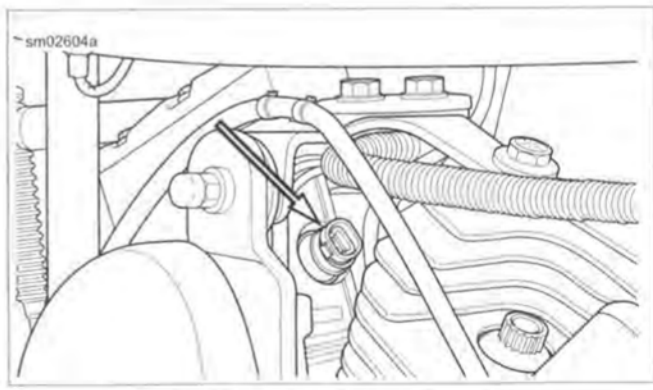

Figure 4-16. Engine Temperature Sensor

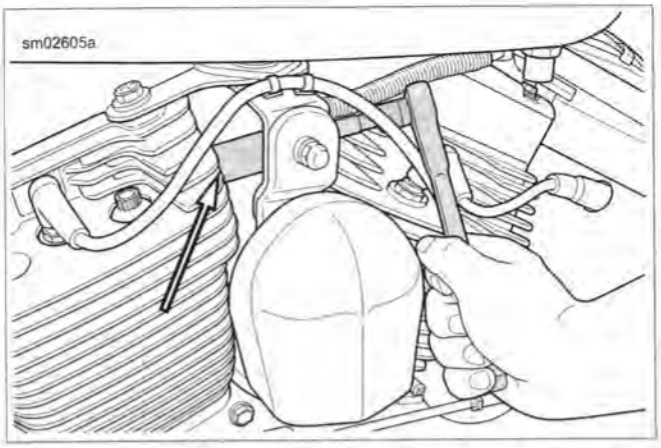

Figure 4-17. Engine Temperature Sensor Removal

INSTALLATION

FASTENER	TORQUE VALUE	
Engine temperature sensor	120-180 **in-lbs**	13.6-20.3 Nm

1. Hand start **new** ET sensor into cylinder head bore 2-3 turns.
2. Tighten sensor to 120-180 **in-lbs** (13.6-20.3 Nm).
3. Connect ET sensor connector [90].
4. Pull boot over connector.
5. See Figure 4-15. Install fuel line fitting.
6. Connect negative battery cable.

REMOVAL

⚠WARNING

Stop the engine when refueling or servicing the fuel system. Do not smoke or allow open flame or sparks near gasoline. Gasoline is extremely flammable and highly explosive, which could result in death or serious injury. (00002a)

1. Gain access to the induction module by removing fuel tank mounting fasteners and fuel line. Carefully pivot tank upward and prop in position. See 4.4 FUEL TANK.
2. Loosen cable adjusters on throttle cables.
3. Remove air cleaner backplate. See 4.3 AIR CLEANER ASSEMBLY.
4. See Figure 4-18. Pull purge hose from fitting (5) at top of induction module (California and select models only).
5. See Figure 4-19. Pull idle cable barrel (1) from upper hole in throttle wheel. Pull throttle cable barrel (2) from lower hole. Using slots, release idle and throttle cables from guides in throttle cable bracket.
6. See Figure 4-18. Remove idle air control connector [87] (3) and manifold absolute pressure sensor connector [80] (7).

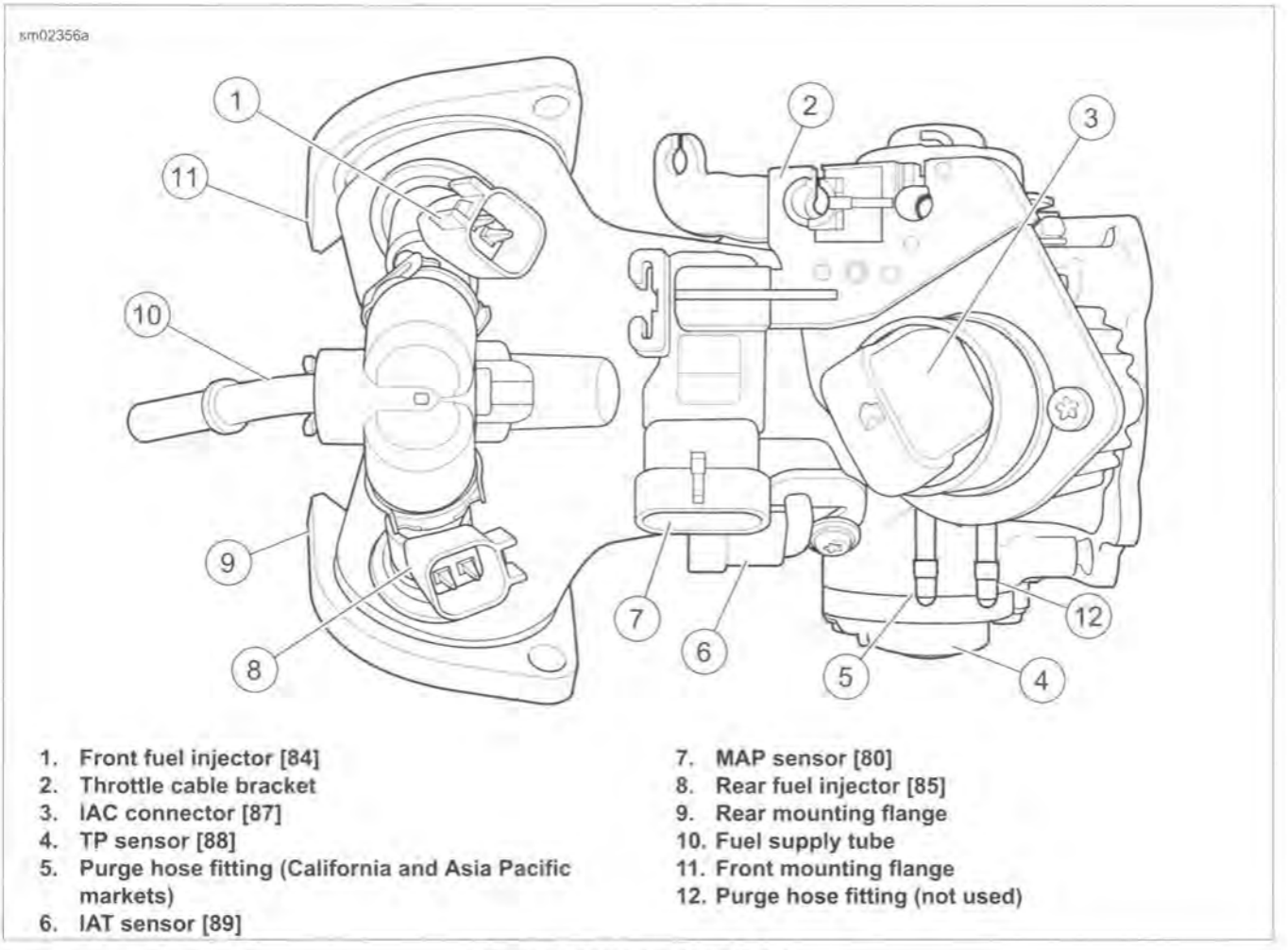

1. **Front fuel injector [84]**
2. **Throttle cable bracket**
3. **IAC connector [87]**
4. **TP sensor [88]**
5. **Purge hose fitting (California and Asia Pacific markets)**
6. **IAT sensor [89]**
7. **MAP sensor [80]**
8. **Rear fuel injector [85]**
9. **Rear mounting flange**
10. **Fuel supply tube**
11. **Front mounting flange**
12. **Purge hose fitting (not used)**

Figure 4-18. Induction Module

7. Remove front fuel injector connector [84] (1) and rear fuel injector connector [85] (8).
8. Remove throttle position sensor connector [88] (4) and intake air temperature sensor connector [89] (6).
9. On left side of vehicle, loosen two screws holding front and rear mounting flanges (9, 11) to cylinder head.
10. On right side of vehicle, remove two screws holding front and rear mounting flanges to cylinder head. Remove induction module.

⚠WARNING

Gasoline can drain from the fuel line when disconnected from induction module. Gasoline is extremely flammable and highly explosive, which could result in death or serious injury. Wipe up spilled fuel immediately and dispose of rags in a suitable manner. (00269a)

11. See Figure 4-20. If replacing fuel supply line (2), squeeze ends of tab (1) and pull tab away from fuel supply line to release from fuel supply tube (3).
12. Remove seals from flange adapters. Discard seals. Remove flange adapters from outlet ports of induction module.

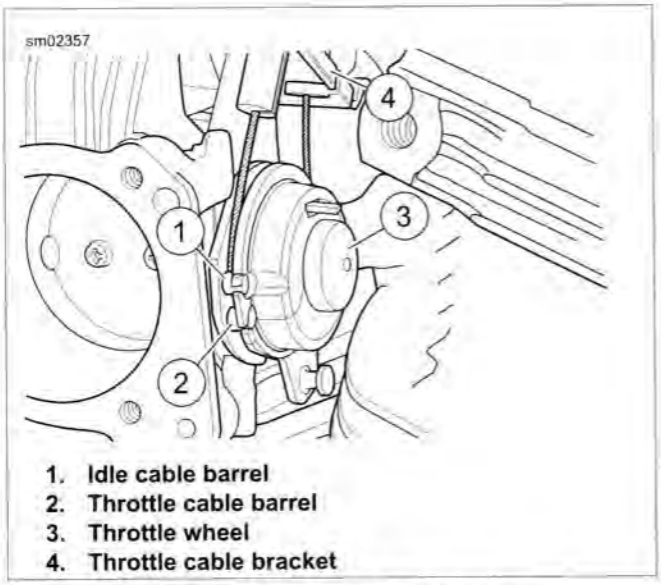

1. **Idle cable barrel**
2. **Throttle cable barrel**
3. **Throttle wheel**
4. **Throttle cable bracket**

Figure 4-19. Throttle/Idle Cables

INSTALLATION

FASTENER	TORQUE VALUE	
Manifold mounting screws, first torque	16-20 **in-lbs**	1.8-2.3 Nm
Manifold mounting screws, final torque	96-156 **in-lbs**	10.9-17.6 Nm

1. See Figure 4-18. Place a **new** seal in each mounting flange (9, 11) with the beveled side in against the counter-bore.

NOTE

When induction module is positioned on manifold mounting screws, verify that the mounting flanges are correctly installed on the manifold. Verify that the rubber seals are in place.

2. Place intake manifold seal, flanges and induction module in position. Install the manifold mounting screws finger-tight.
3. See Figure 4-20. Slide fuel supply line (2) onto fuel supply tube (3). Push in on tab until it locks the fuel supply line (2) on fuel supply tube (3). Tug on fuel supply line (2) to verify that it is locked in place.
4. See Figure 4-19. Install sleeve on throttle cable housing into cable guide at top of throttle cable bracket (4).
5. Drawing throttle cable downward, fit barrel end (2) into lower hole in throttle wheel (3).
6. Install sleeve and spring on idle cable housing into cable guide at bottom of throttle cable bracket. Insert barrel end (1) into upper hole in throttle wheel.
7. Adjust throttle cables. See 1.12 THROTTLE CABLES.
8. **EVAP models:** See Figure 4-18. Attach purge hose to fitting (5) on throttle body.
9. Connect front (1) and rear (8) fuel injector connectors. connect IAC (3) connector, MAP sensor (7) connector, TP sensor (4) connector and IAT (6) sensor connector.
10. Install air cleaner backplate. See 4.3 AIR CLEANER ASSEMBLY.
11. Tighten manifold mounting screws to an initial torque of 16-20 **in-lbs** (1.8-2.3 Nm).
12. Tighten manifold mounting screws to a final torque of 96-156 **in-lbs** (10.9-17.6 Nm).
13. Turn ignition switch ON. Turn ignition switch back to OFF to reset idle air control to park position.
14. Install air cleaner filter and cover.
15. Install fuel tank. See 4.4 FUEL TANK.

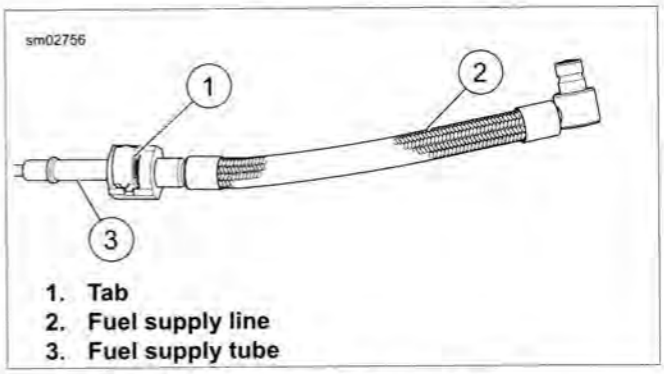

1. **Tab**
2. **Fuel supply line**
3. **Fuel supply tube**

Figure 4-20. Fuel Supply Line

GENERAL

⚠WARNING

Stop the engine when refueling or servicing the fuel system. Do not smoke or allow open flame or sparks near gasoline. Gasoline is extremely flammable and highly explosive, which could result in death or serious injury. (00002a)

See electrical diagnostic manual for information on the function and testing of the idle air control (IAC).

REMOVAL

1. Remove induction module. See 4.8 INDUCTION MODULE.
2. See Figure 4-21. Remove two fasteners (2) to release throttle cable bracket (1) from induction module. Discard fasteners.
3. See Figure 4-22. Pull IAC (1) and O-ring (2) from throttle body.

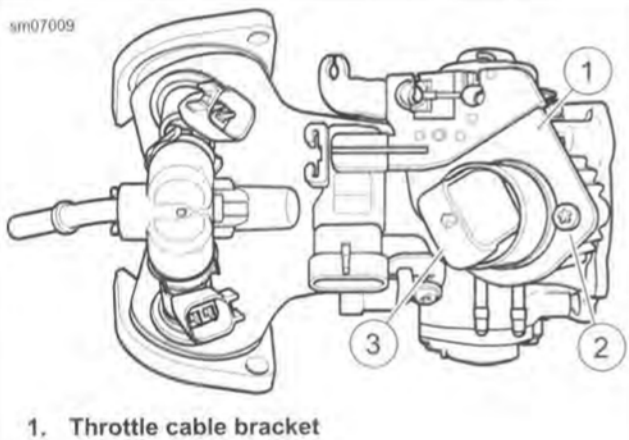

1. **Throttle cable bracket**
2. **Fastener (2)**
3. **Idle air control (IAC)**

Figure 4-21. Idle Air Control (IAC) Location



1. **Idle air control (IAC)**
2. **O-ring**

Figure 4-22. Idle Air Control (IAC)

INSTALLATION

FASTENER	TORQUE VALUE	
Throttle cable bracket fasteners	20-35 **in-lbs**	2.3-4.0 Nm

1. See Figure 4-22. Apply **clean** engine oil to IAC O-ring (2). Install O-ring in counterbore of induction module.
2. With the electrical connector facing the rear left side of the induction module, install idle air control into bore.
3. Place idle air control and O-ring into throttle body. Be sure O-ring is properly seated in throttle body groove.
4. See Figure 4-23. Insert index pin (2) at bottom of throttle cable bracket (1) into hole in boss at top of induction module.
5. See Figure 4-21. Install **new** throttle cable bracket fasteners (2). Tighten to 20-35 **in-lbs** (2.3-4.0 Nm).
6. Install induction module. See 4.8 INDUCTION MODULE.



1. **Throttle cable bracket**
2. **Index pin**

Figure 4-23. Throttle Cable Bracket

MANIFOLD ABSOLUTE PRESSURE SENSOR (MAP) 4.10

GENERAL

See the electrical diagnostic manual for information on the function and testing of the manifold absolute pressure (MAP) sensor.

REMOVAL

1. Remove induction module. See 4.8 INDUCTION MODULE.
2. See Figure 4-24. Remove two fasteners (2) to release throttle cable bracket (1) from induction module. Discard fasteners.
3. Gently push up on MAP sensor and attached seal to remove from intake manifold.

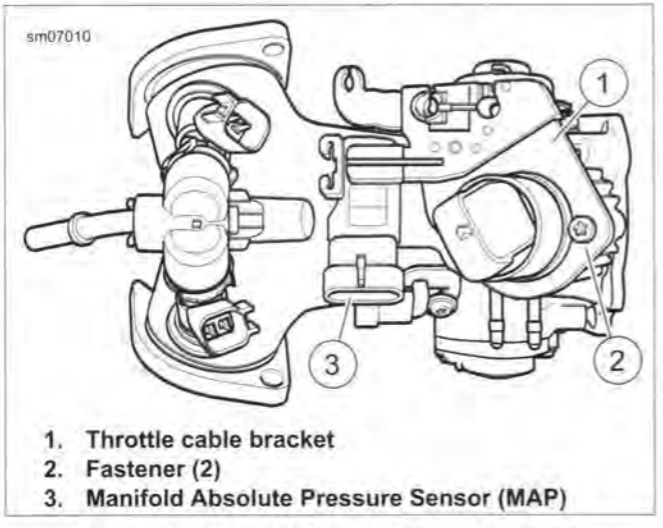

1. **Throttle cable bracket**
2. **Fastener (2)**
3. **Manifold Absolute Pressure Sensor (MAP)**

Figure 4-24. Throttle Cable Bracket Location

INSTALLATION

FASTENER	TORQUE VALUE	
Throttle cable bracket fasteners	20-35 **in-lbs**	2.3-4.0 Nm

NOTE

*See Figure 4-25. Prior to installing the original sensor, inspect the seal (1). Worn or damaged seals could cause vacuum leaks. Install **new** seal if necessary.*

1. Push MAP sensor and seal into intake manifold.
2. With the electrical connector facing toward the rear of the induction module (side opposite throttle wheel), insert MAP sensor into hole in induction module.
3. See Figure 4-23. Insert index pin (2) at bottom of throttle cable bracket into hole in boss at top of induction module.
4. See Figure 4-24. Install **new** throttle cable bracket fasteners (2). Tighten to 20-35 **in-lbs** (2.3-4.0 Nm).
5. Install induction module. See 4.8 INDUCTION MODULE.

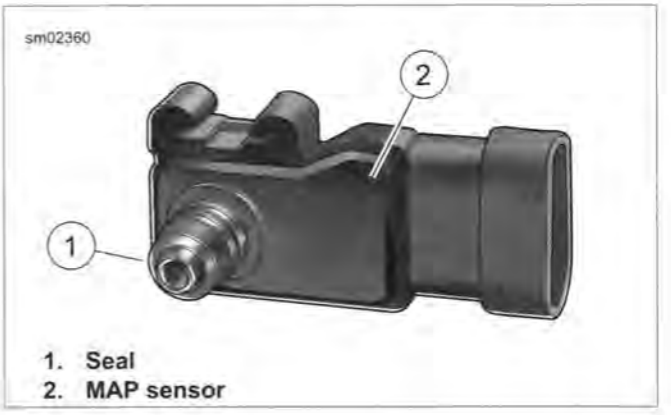

1. **Seal**
2. **MAP sensor**

Figure 4-25. MAP Sensor

GENERAL

See the electrical diagnostic manual for information on the function and testing of the heated oxygen sensor (HO2).

REMOVAL

1. The O2 sensors are installed in threaded bosses on the inboard side of front and rear exhaust pipes.

NOTE

See Figure 4-26. Front oxygen sensor connector is located in front electrical caddy. See 7.3 ELECTRICAL CADDY.

2. Open front electrical caddy and disconnect front O2 sensor connector (2). Remove any cable straps securing harness before loosening and removing front O2 sensor.
3. See Figure 4-27. Remove seat. Disconnect rear O2 sensor connector (1). Remove any cable straps securing harness before loosening and removing rear O2 sensor.

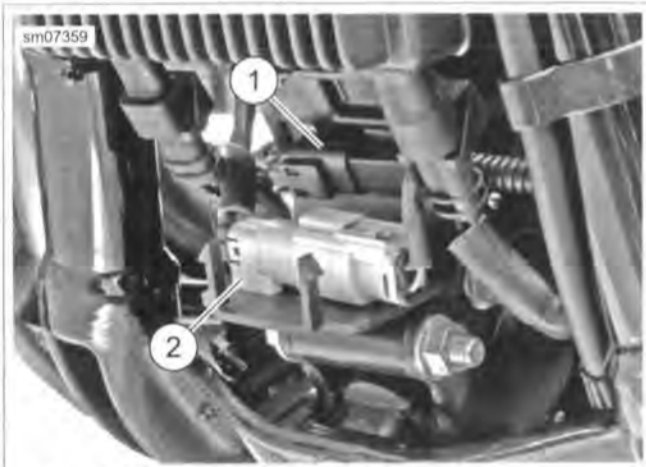

1. **CKP connector**
2. **Front O2 sensor connector**

Figure 4-26. Front Electrical Caddy

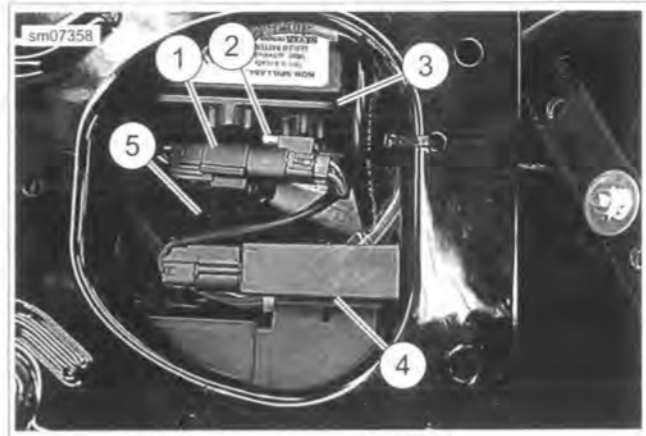

1. **Rear O2 sensor connector [137]**
2. **Connector anchor**
3. **Battery tray**
4. **Security antenna**
5. **Tail lamp connector [7]**

Figure 4-27. Rear O2 Sensor Connector Location

INSTALLATION

FASTENER	TORQUE VALUE	
Oxygen sensor	12.2-14.2 ft-lbs	16.5-19.3 Nm

NOTES

- *Do not install sensors that have been dropped or impacted by other components. Damage to the sensing element can occur.*
- *Replacement sensor assemblies have threads coated with ANTI-SEIZE LUBRICANT and **new** seal rings.*
- *If O2 sensor is reused, replace the gasket. Use a high-quality professional grade sidecutters for gasket removal. Make sure larger side of **new** gasket faces exhaust pipe.*
- *If O2 sensor is reused, apply a thin coat of ANTI-SEIZE LUBRICANT to threads of each oxygen sensor before installing in header. Do not use any other grease or sealant product on sensor threads.*
- *The electrical connector must be clean and free of any dielectric grease.*

1. Install sensor into threaded boss on exhaust pipe. Tighten to 12.2-14.2 ft-lbs (16.5-19.3 Nm).

NOTE

Verify that both connector halves are clean and free of any dielectric grease. Never use dielectric grease on sealed connectors.

2. Route sensor harness to mating connector and connect. Install cable straps that were removed during removal.
3. Repeat previous steps for other sensor.

GENERAL

⚠WARNING

Stop the engine when refueling or servicing the fuel system. Do not smoke or allow open flame or sparks near gasoline. Gasoline is extremely flammable and highly explosive, which could result in death or serious injury. (00002a)

⚠WARNING

Do not use solvents or other products that contain chlorine on plastic fuel system components. Chlorine can degrade plastic fuel system components, which can cause a loss of fuel system pressure or engine stalling and could result in death or serious injury. (000621b)

See the electrical diagnostic manual for information on the function and testing of the fuel injectors.

REMOVAL

1. Remove induction module. See 4.8 INDUCTION MODULE.

NOTE

Unless replacing fuel supply tube or O-rings, do not remove fuel supply tube from fuel rail.

2. See Figure 4-28. Remove fastener (1) retaining fuel supply tube (2).
3. Pull fuel supply tube from fuel rail. Remove sealing washer (4) and O-ring (3) from fuel supply tube. Remove second O-ring from fuel rail bore. Discard sealing washer and O-rings.
4. See Figure 4-29. With a rocking motion, pull fuel injectors with attached fuel rail from the induction module.
5. See Figure 4-30. Remove spring clips (2) from fuel injectors. Pull fuel injectors from fuel rail. To overcome the resistance of the top O-ring, gently rock each fuel injector while pulling.
6. Remove O-rings (1) from fuel injectors. Discard O-rings.

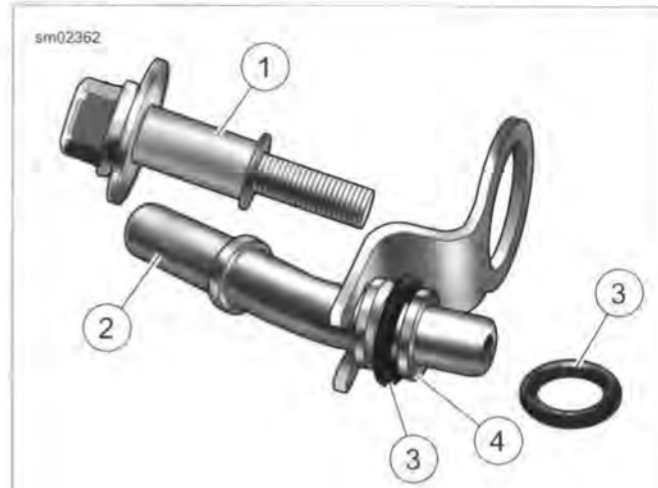

1. **Fastener**
2. **Fuel supply tube**
3. **O-ring (2)**
4. **Sealing washer**

Figure 4-28. Fuel Supply Tube

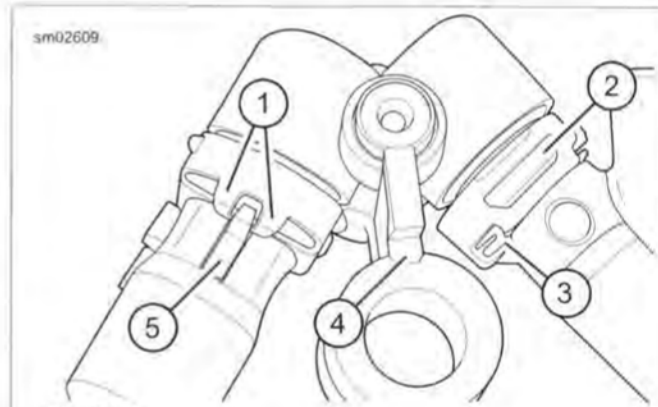

1. **Fork**
2. **Lip**
3. **Opening**
4. **Rail tab**
5. **Injector tab**

Figure 4-29. Fuel Rail

INSTALLATION

FASTENER	TORQUE VALUE	
Fuel supply tube fastener	90-110 **in-lbs**	10.2-12.4 Nm

1. See Figure 4-30. Apply a thin coat of clean engine oil to **new** fuel injector O-rings (1). Install on fuel injectors.
2. See Figure 4-29. Push electrical connector side of fuel injectors into fuel rail.
3. With the concave side toward the fuel rail, install spring clip into slot on fuel injector. In the installed position, openings (3) in sides of clip engage lip (2) on fuel rail. Fork (1) at back of clip captures rail tab (4) on fuel injector.

4. Rotate fuel injectors until the electrical connectors are on the outboard side. Push fuel injectors into induction module bores until tab on fuel rail engages machined slot at top of induction module.
5. See Figure 4-28. Slide **new** O-ring (3) down shorter neck of the fuel supply tube until it contacts the collar. Slide **new** sealing washer (4) downtube until it contacts O-ring. Install second O-ring (3) in fuel rail bore.
6. Push fuel supply tube (2) into fuel rail bore until clamp is seated on round step of fuel rail. Install fastener (1). Tighten to 90-110 **in-lbs** (10.2-12.4 Nm).
7. Install induction module. See 4.8 INDUCTION MODULE.



1. **O-ring (2)**
2. **Spring clip**

Figure 4-30. Fuel Injector

GENERAL

⚠WARNING

When servicing the fuel system, do not smoke or allow open flame or sparks in the vicinity. Gasoline is extremely flammable and highly explosive, which could result in death or serious injury. (00330a)

Carefully inspect hose for cuts, tears, holes or other damage. Replace hose if any damage is found. Even a small hole can cause a reduction in fuel pressure.

See the electrical diagnostic manual for information on the function and testing of the fuel pump.

REMOVAL

⚠WARNING

To prevent spray of fuel, purge system of high-pressure fuel before supply line is disconnected. Gasoline is extremely flammable and highly explosive, which could result in death or serious injury. (00275a)

1. Purge and disconnect fuel supply line.
   a. See Figure 4-31. Disconnect the fuel pump module connector from the tank plate.
   b. Run engine.
   c. Operate starter an extra 3 seconds after engine stalls to remove remaining fuel from fuel supply line.

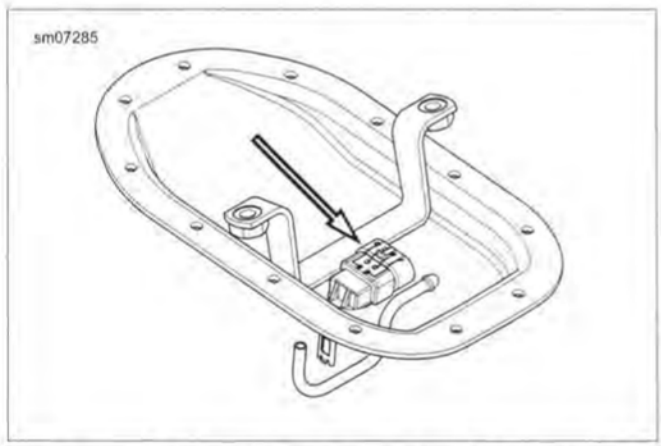

Figure 4-31. Fuel Pump Connector [141] (Typical)

⚠WARNING

To prevent accidental vehicle start-up, which could cause death or serious injury, disconnect negative (-) battery cable before proceeding. (00048a)

2. Disconnect negative battery cable.
3. Remove instrument console.
   a. **FXDF and FLD models:** See 7.21 INSTRUMENTS: FXDF AND FLD.
   b. **FXDB and FXDWG models:** See 7.22 INSTRUMENTS: FXDB, FXDBC, FXDBP AND FXDWG.
   c. **FXDL model:** See 7.23 INSTRUMENTS: FXDL.
4. Disconnect console wiring.

⚠WARNING

Gasoline can drain from the crossover line when disconnected from fuel tank. Gasoline is extremely flammable and highly explosive, which could result in death or serious injury. Wipe up spilled fuel immediately and dispose of rags in a suitable manner. (00259a)

5. Drain fuel tank.
   a. Obtain a short section of 5/16 in (7.94 mm) ID hose. Insert bolt in one end of hose and install hose clamp to verify that end is securely plugged.
   b. See Figure 4-32. Cut clamp (1) from one end of cross-over hose (2). Quickly replace cross-over hose on fuel tank fitting with open end of short hose while directing flow of gasoline from free end of cross-over hose into suitable container.
6. See Figure 4-33. Disconnect fuel pump and sender connector [141] (1).
7. Remove vent hose (3).
8. Remove screws (2) and discard.
9. See Figure 4-34. On all models, rotate top plate (3) until vent tube (1) clears fuel tank.

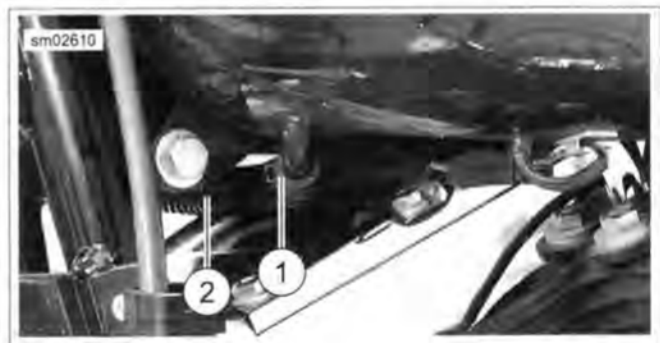

1. **Clamp**
2. **Cross-over hose**

Figure 4-32. Fuel Cross-over Hose

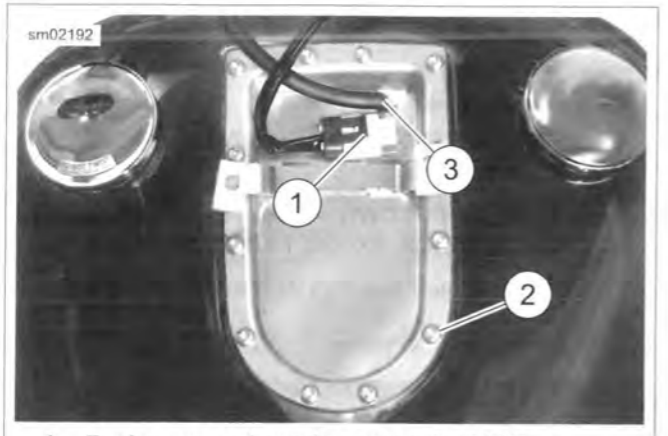

1. Fuel pump and sender connector [141]
2. Screws (12)
3. Vent hose

Figure 4-33. Top Plate Screws (Typical)

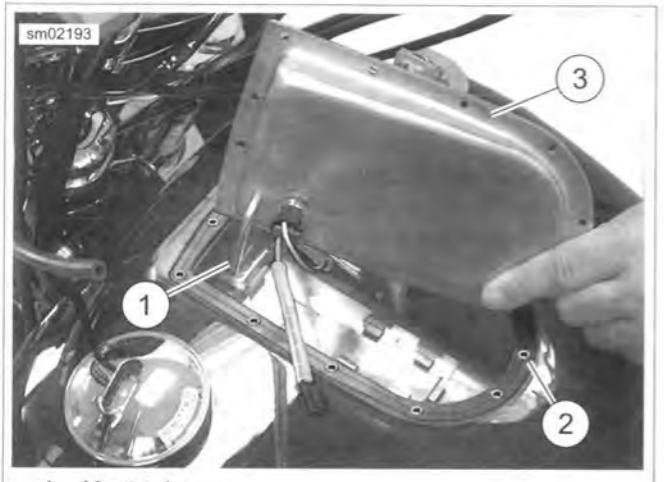

1. Vent tube
2. Gasket
3. Top plate

Figure 4-34. Top Plate

10. See Figure 4-35. Press tab and remove fuel pump/sender wiring from top plate. Remove top plate.
11. See Figure 4-36. Press tabs (1) and remove fuel line (4) from fuel pump assembly (2).
12. Remove fuel gauge wiring harness (5) from clip (6).
13. Disconnect fuel pump connector (3).
14. See Figure 4-37. Lift fuel pump assembly tab. Push assembly toward front of vehicle to disengage from fuel tank.
15. Rotate fuel pump assembly clockwise and upward to remove assembly from fuel tank.

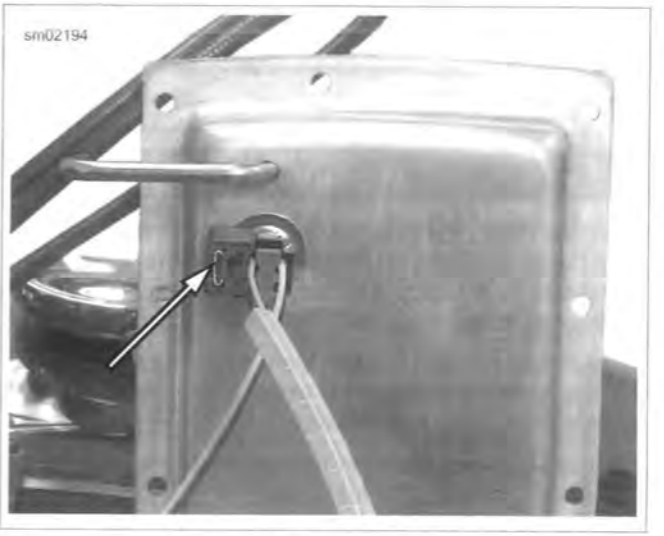

Figure 4-35. Connector Tab

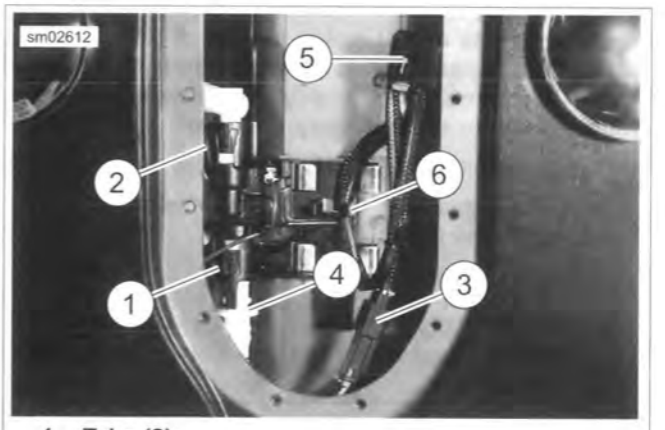

1. Tabs (2)
2. Fuel pump assembly
3. Fuel pump connector
4. Fuel line
5. Fuel gauge wiring harness
6. Clip

Figure 4-36. Fuel Pump

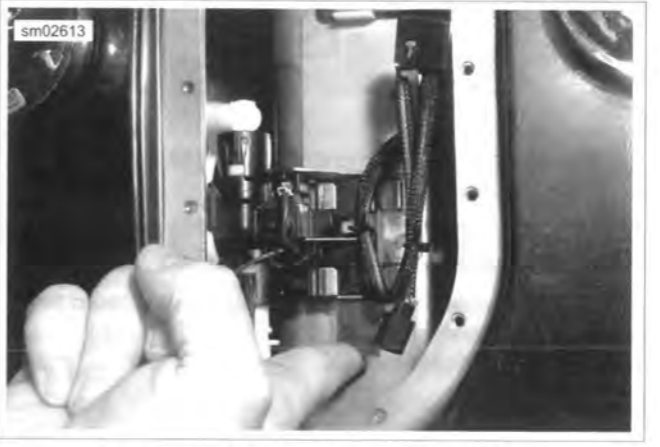

Figure 4-37. Fuel Pump Removal

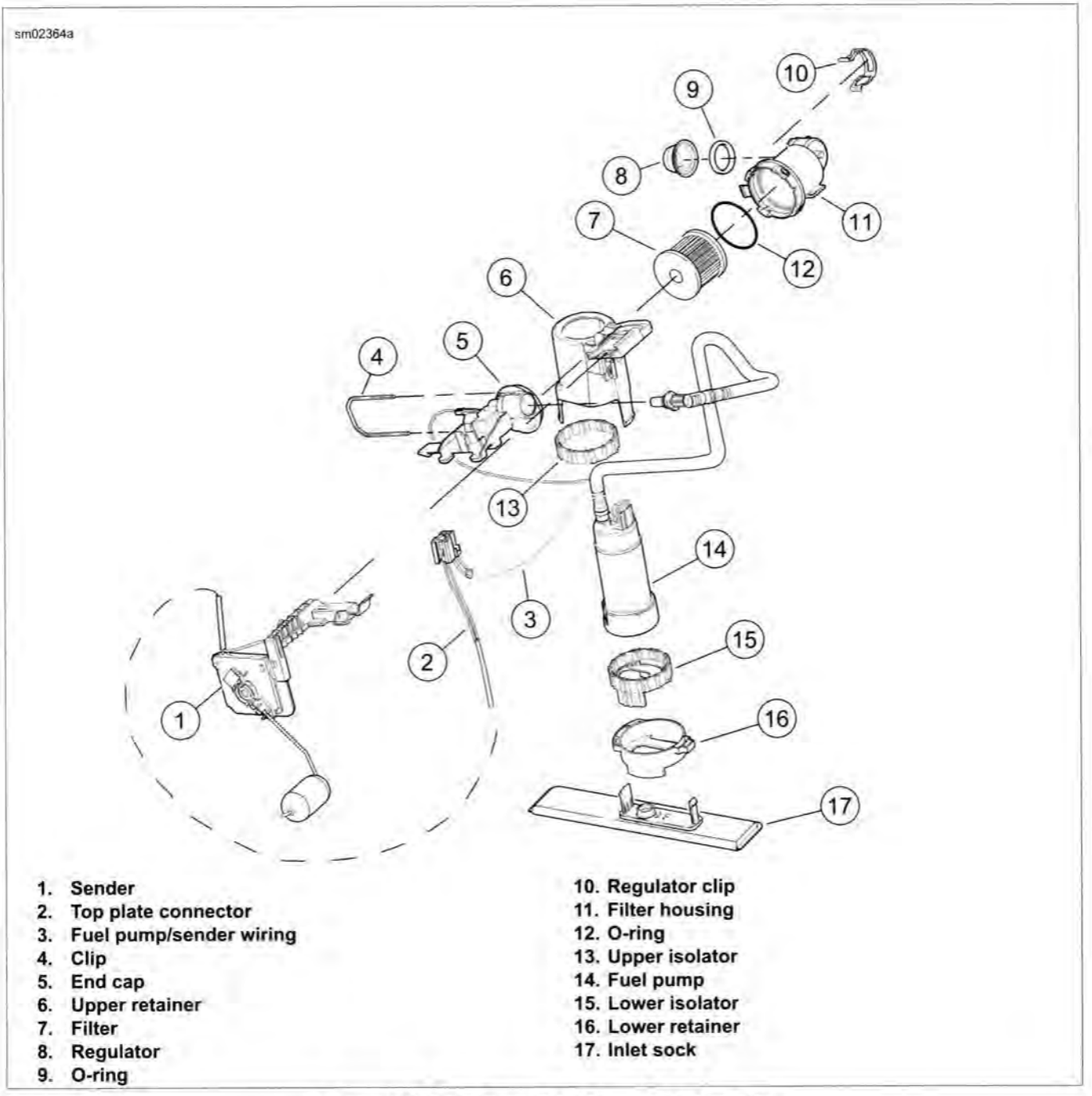

Figure 4-38. Fuel Pump/Fuel Gauge Sending Unit

DISASSEMBLY AND ASSEMBLY

Fuel Filter

1. See Figure 4-39. Press tab and remove fuel filter retainer clip (1).
2. Separate fuel pump body from end cap (2).
3. See Figure 4-40. Remove O-ring (2).
4. Remove fuel pump filter (1).
5. Install **new** fuel pump filter.
6. Install **new** O-ring (2).
7. See Figure 4-39. Place end cap (2) on fuel pump body.
8. Install fuel filter retainer clip (1).

Regulator

1. See Figure 4-41. Remove wire terminal (3).
2. Disengage clip (2) from regulator.
3. Remove regulator from pump assembly.
4. Install **new** O-ring on **new** regulator.
5. Install regulator into pump assembly.
6. Install clip over regulator.
7. Replace wire terminal.

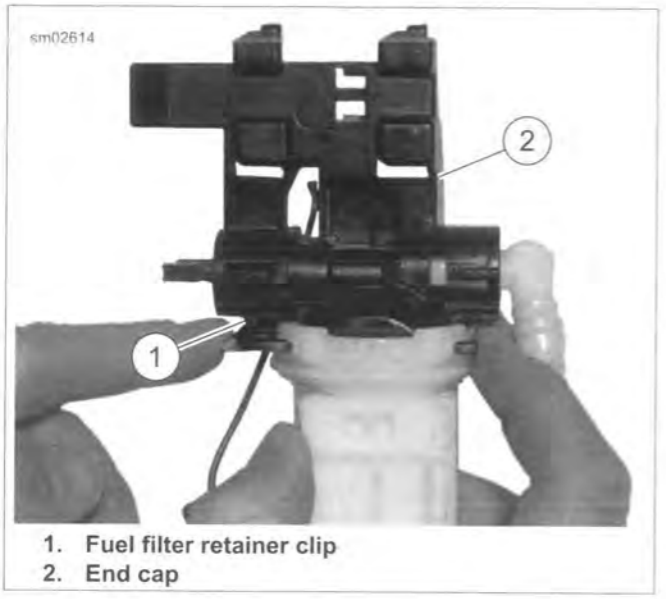

1. Fuel filter retainer clip
2. End cap

Figure 4-39. Filter Retainer Clip

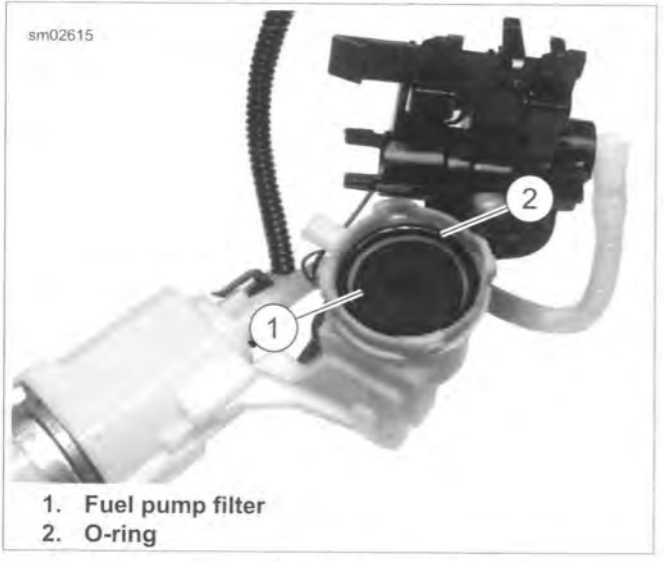

1. Fuel pump filter
2. O-ring

Figure 4-40. Bail Bracket

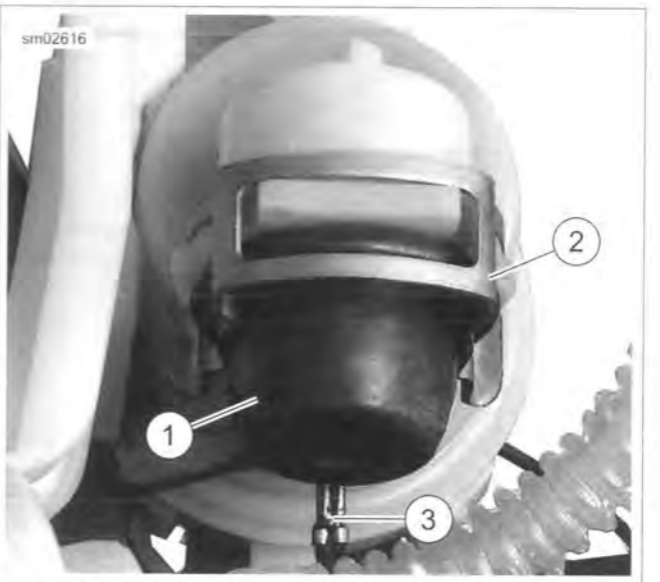

1. Regulator
2. Clip
3. Wire terminal

Figure 4-41. Regulator

Inlet Sock

1. See Figure 4-42. Press tabs (2) securing inlet sock (1) to upper retainer (3).
2. Remove inlet sock from upper retainer.

NOTE

See Figure 4-43. In next step, verify inlet sock engages fuel pump inlet.

3. See Figure 4-42. Install inlet sock (1) on upper retainer (3). Make sure tabs (2) engage slots in body.

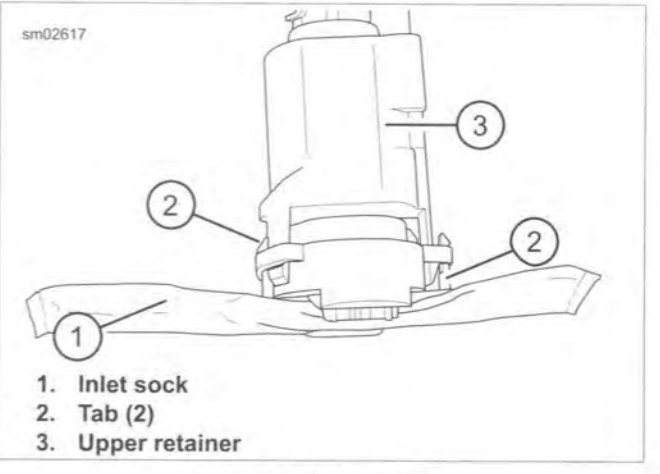

1. Inlet sock
2. Tab (2)
3. Upper retainer

Figure 4-42. Fuel Sock

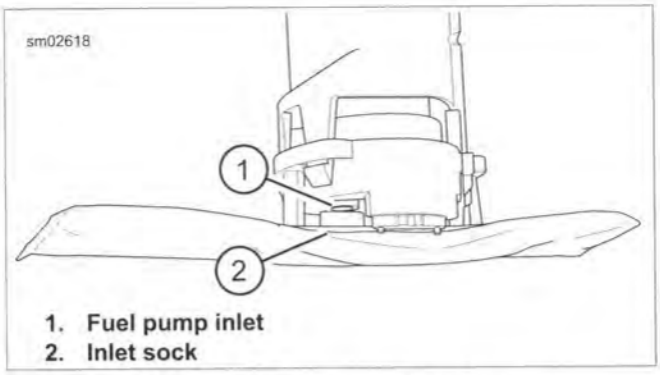

1. **Fuel pump inlet**
2. **Inlet sock**

Figure 4-43. Fuel Sock Installation

Fuel Pump

1. See Figure 4-44. Using screwdriver, break tabs securing fuel pump hose to end cap.
2. Remove inlet sock. See 4.13 FUEL PUMP, Disassembly and Assembly.
3. See Figure 4-45. Disconnect fuel pump connector (1).
4. See Figure 4-46. Press tabs (1) and remove lower retainer (2) from upper retainer.
5. Remove fuel pump from fuel pump body.
6. See Figure 4-38. Install lower isolator in lower retainer.
7. Install upper isolator into upper retainer.
8. Install fuel pump into upper retainer.
9. See Figure 4-46. Install lower retainer.
10. See Figure 4-44. Install fuel pump hose into **new** end cap.
11. See Figure 4-45. Install fuel pump connector (1). Inspect fuel pump wiring, (2) replace if damaged.
12. Install inlet sock. See 4.13 FUEL PUMP, Disassembly and Assembly.

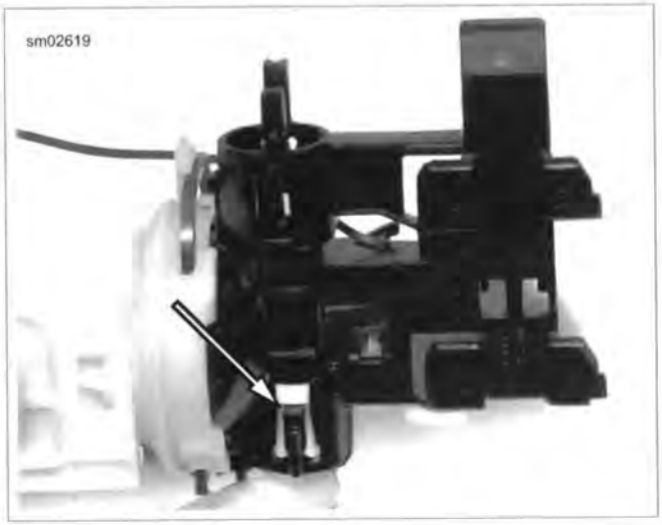

Figure 4-44. Fuel Pump Hose Retaining Clip (2)

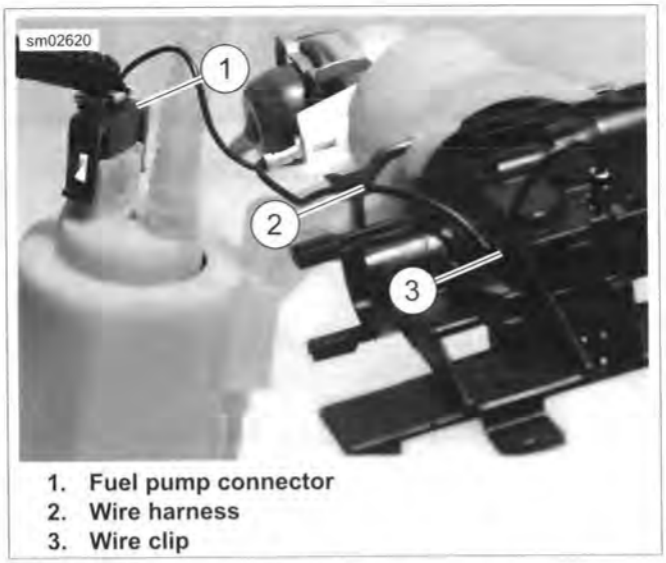

1. **Fuel pump connector**
2. **Wire harness**
3. **Wire clip**

Figure 4-45. Fuel Pump Connector

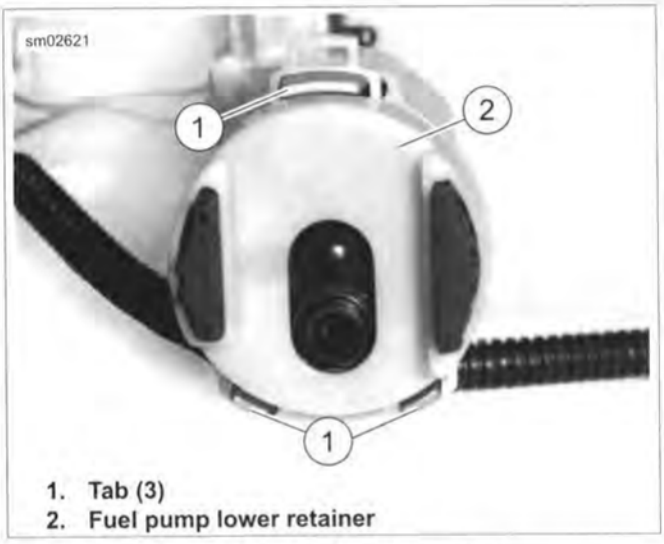

1. **Tab (3)**
2. **Fuel pump lower retainer**

Figure 4-46. Filter Retainer Clip

INSTALLATION

FASTENER	TORQUE VALUE	
Top plate fasteners	27-33 **in-lbs**	3.1-3.7 Nm

1. See Figure 4-47. Install fuel pump into left side of fuel tank as shown.
2. Rotate pump counterclockwise and downward into position.
3. See Figure 4-48. Install fuel pump so end cap (8) engages mounting tabs (4).
4. Connect fuel pump connector (7).
5. Place fuel gauge wiring harness (5) into clip (6).
6. Install **new** O-ring on fuel line (1). Install fuel line.
7. Install **new** top plate gasket on fuel tank. Do not apply any type of sealant to gasket.



Figure 4-47. Fuel Pump Installation

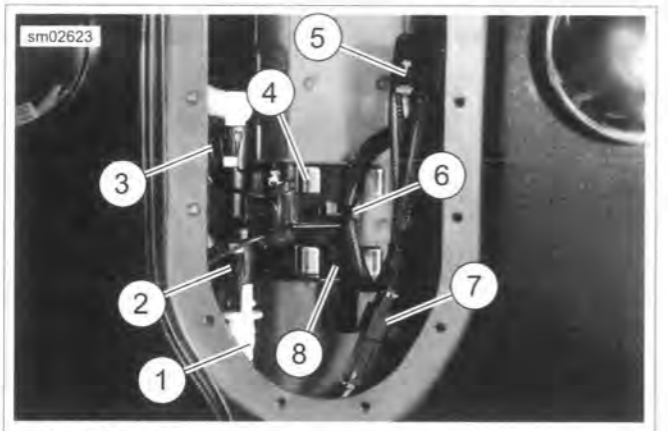

1. **Fuel line**
2. **Tabs (2)**
3. **Fuel pump assembly**
4. **Mounting tabs (4)**
5. **Fuel gauge wiring harness**
6. **Clip**
7. **Fuel pump connector**
8. **End cap**

Figure 4-48. Fuel Pump

8. See Figure 4-49. Install fuel pump/sender wire connector (4) on top plate (3).
9. Install top plate.
   a. **FXDF model:** Hold top plate at 90 degree angle.
   b. See Figure 4-48. Install sender wiring into clip (6).
   c. Make sure that vent tube is installed inside tank. Rotate top plate into position.
10. Loosely install **new** sealing screws in top plate.
11. See Figure 4-52. Tighten sealing fasteners using pattern shown to 27-33 **in-lbs** (3.1-3.7 Nm).
12. Connect fuel pump/sending unit connector [141].
13. Install instrument console.
    a. **FXDF and FLD models:** See 7.21 INSTRUMENTS: FXDF AND FLD.
    b. **FXDB, FXDBC, FXDBP and FXDWG models:** See 7.22 INSTRUMENTS: FXDB, FXDBC, FXDBP AND FXDWG.
    c. **FXDL model:** See 7.23 INSTRUMENTS: FXDL.

NOTE

Make sure crimped end of clamp faces toward front of vehicle.

14. Connect cross-over hose with **new** clamps.
15. Connect negative battery cable.

⚠WARNING

When servicing the fuel system, do not smoke or allow open flame or sparks in the vicinity. Gasoline is extremely flammable and highly explosive, which could result in death or serious injury. (00330a)

16. Fill tank with gasoline and check for leaks.
17. Check fuel system pressure. See 4.14 FUEL PRESSURE TEST.

NOTE

The low fuel lamp does not turn off until there is sufficient fuel in the tank, the ignition switch is turned off and back on, and the vehicle has begun forward motion.

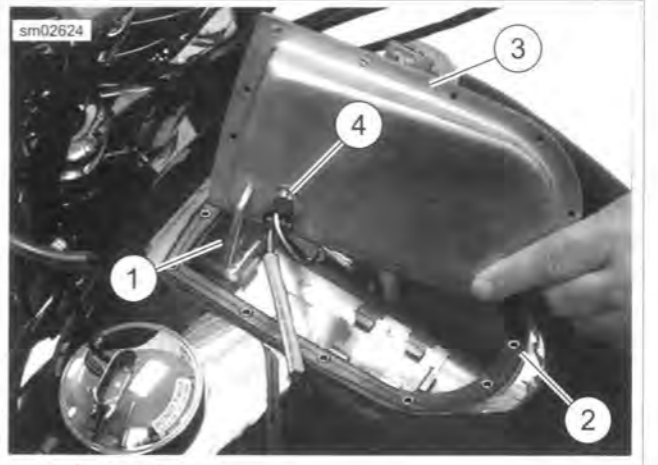

1. **Vent tube**
2. **Gasket**
3. **Top plate**
4. **Fuel pump/sender wire connector**

Figure 4-49. Top Plate: FXDF

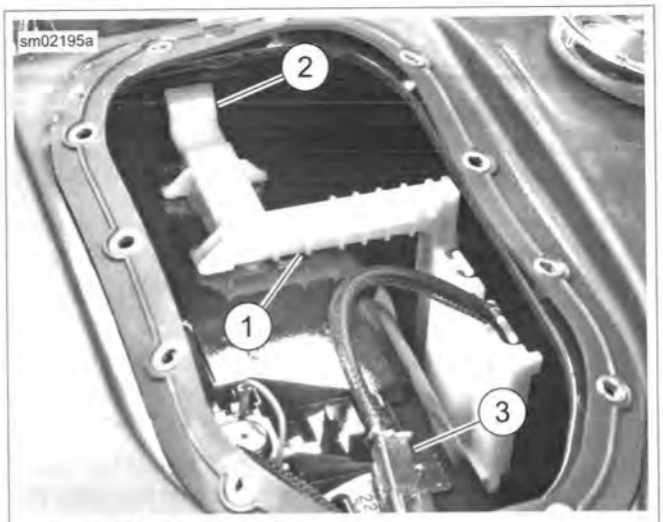

1. Fuel gauge sender
2. Removal tab
3. Connector

Figure 4-50. Fuel Gauge Sender

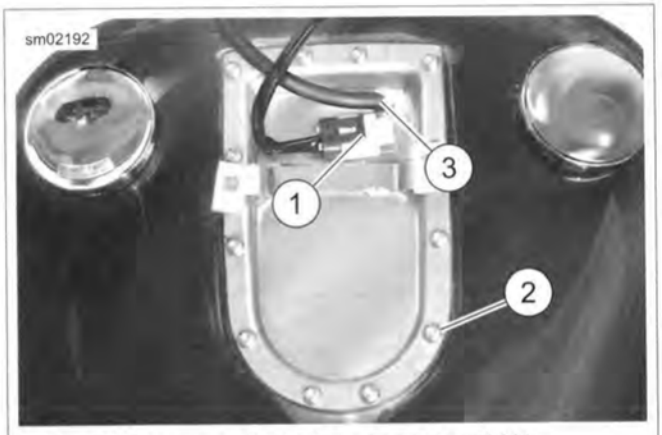

1. Fuel pump and sender connector [141]
2. Screws (12)
3. Vent hose

Figure 4-51. Top Plate: FXDF Models

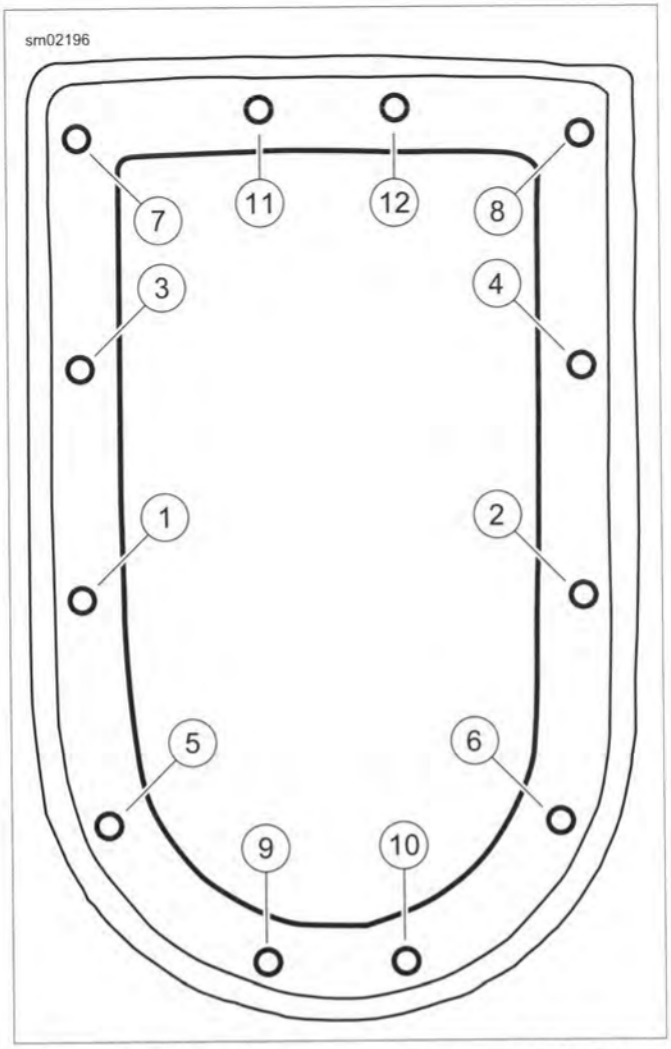

Figure 4-52. Top Plate Torque Sequence: All Models

GENERAL

Improper fuel system pressure may contribute to one of the following conditions:

- Cranks, but will not run.
- Cuts out (may feel like ignition problem).
- Hesitation, loss of power or poor fuel economy.

See the electrical diagnostic manual for further information on the function and testing of the fuel system.

TESTING

PART NUMBER	TOOL NAME
HD-41182	FUEL PRESSURE GAUGE
HD-44061	FUEL PRESSURE GAUGE ADAPTER

The fuel pressure gauge (0-100 PSI) allows for fuel injector and fuel system pressure diagnosis. A special adapter allows the gauge to be attached to the external fuel supply line.

Avoid kinking the fuel line when installing/removing fuel pressure gauge and adapter.

1. Remove instrument console. See 7.21 INSTRUMENTS: FXDF AND FLD or 7.22 INSTRUMENTS: FXDB, FXDBC, FXDBP AND FXDWG.

⚠WARNING

To prevent spray of fuel, purge system of high-pressure fuel before supply line is disconnected. Gasoline is extremely flammable and highly explosive, which could result in death or serious injury. (00275a)

2. Purge the fuel supply line of high pressure gas.
   a. Disconnect the fuel pump module connector from the tank plate.
   b. Start the engine and allow the vehicle to run.
   c. When the engine stalls, operate the starter for 3 seconds to remove any remaining fuel from the fuel lines.

⚠WARNING

Gasoline can drain from quick-connect fitting when removing fuel line. Gasoline is extremely flammable and highly explosive, which could result in death or serious injury. Wipe up spilled fuel immediately and dispose of rags in a suitable manner. (00267a)

3. Pull up on chrome sleeve of quick-connect fitting (fitting on left side of fuel tank) and pull down on fuel supply line to disconnect.

NOTE

Use two fuel pressure gauge adapters to prevent twisting fuel line. Failure to do this may result in a damaged fuel line or fuel line fitting.

4. Attach fuel line to gauge assembly.
   a. See Figure 4-53. Install a second adapter in series with the first.
   b. See Figure 4-54. Pull up on chrome sleeve of quick-connect fitting and insert neck of FUEL PRESSURE GAUGE ADAPTER (Part No. HD-44061) into fuel supply line.
   c. While pushing up on bottom of adapter, pull down on chrome sleeve until it clicks into the locked position. Pull on adapter to be sure that it will not come free.
   d. In the same manner, install neck of second fuel supply line fitting into quick-connect fitting on fuel tank. Pull on fuel supply line to be sure that it will not come free.

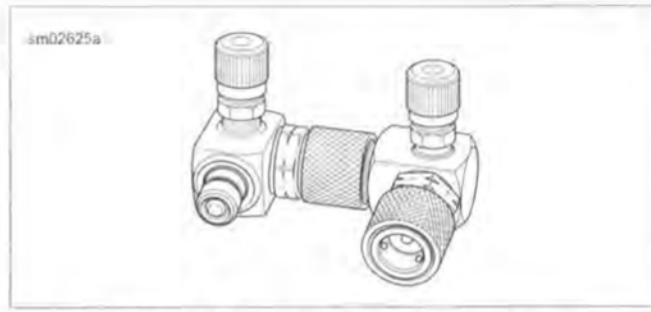

Figure 4-53. Fuel Pressure Gauge Adapters

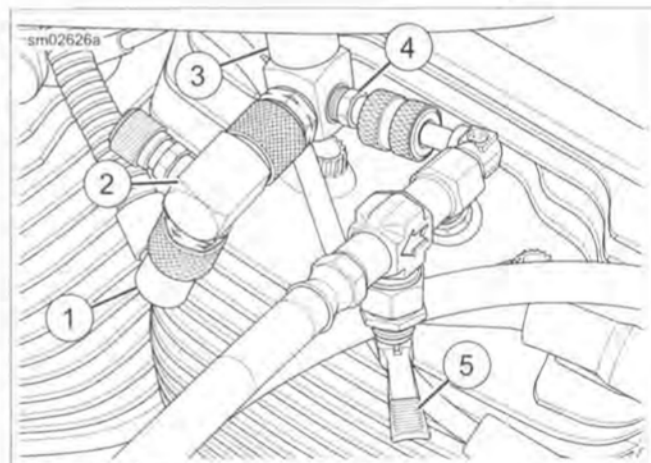

1. **Fuel supply line**
2. **Adapter to fuel line**
3. **Adapter to fuel tank**
4. **Pressure adapter Schroeder valve union**
5. **Fuel valve (closed position)**

Figure 4-54. Fuel Pressure Test Connections

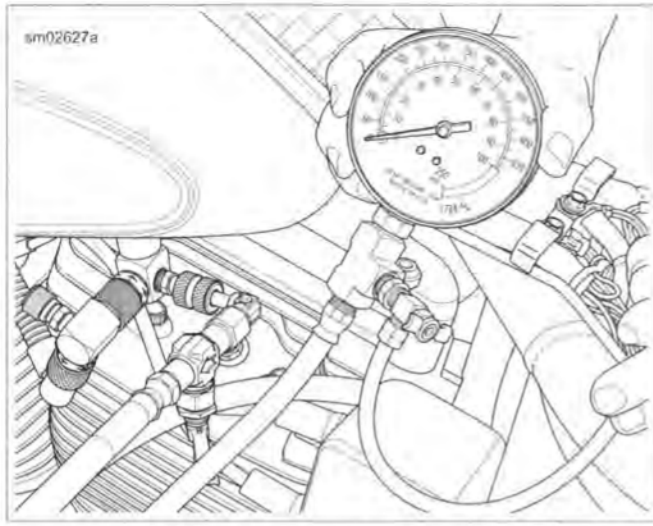

Figure 4-55. Fuel Pressure Gauge Installed (Typical)

⚠WARNING

To prevent spray of fuel, be sure quick-connect fittings are properly mated. Gasoline is extremely flammable and highly explosive, which could result in death or serious injury. (00268a)

5. Verify that the fuel valve and air bleed petcock on the FUEL PRESSURE GAUGE (Part No. HD-41182) are closed.
6. See Figure 4-53. Remove protective cap from free end of fuel pressure gauge adapter. Connect fuel pressure gauge to Schroeder valve.
7. Start and idle engine to pressurize the fuel system. Open the fuel valve to allow the flow of fuel down the hose of the pressure gauge.
8. Position the clear air bleed tube in a suitable container and open and close the air bleed petcock to purge the gauge and hose of air. Repeat this step several times until only a solid stream of fuel (without bubbles) flows from the air bleed tube. Close the petcock.
9. Open and close throttle to change engine speed. Note the reading of the pressure gauge. Fuel pressure should remain steady at 55-62 psi (380-425 kPa).

NOTE

If fuel pressure gauge reading is not within specifications, see electrical diagnostic manual.

10. Turn the engine off. Position the air bleed tube in a suitable container. Open the air bleed petcock to relieve the fuel system pressure and purge the pressure gauge of gasoline.

⚠WARNING

Gasoline can drain from the adapter when gauge is removed. Gasoline is extremely flammable and highly explosive, which could result in death or serious injury. Wipe up spilled fuel immediately and dispose of rags in a suitable manner. (00254a)

11. Remove fuel pressure gauge from the adapter. Install protective cap over Schroeder valve.

⚠WARNING

Gasoline can drain from the fuel line and adapter when removed. Gasoline is extremely flammable and highly explosive, which could result in death or serious injury. Wipe up spilled fuel immediately and dispose of rags in a suitable manner. (00255a)

12. Pull up on sleeve of quick-connect fitting and remove fuel supply line from fuel pressure gauge adapter. Release adapter from fuel tank in the same manner.

⚠WARNING

To prevent spray of fuel, be sure quick-connect fittings are properly mated. Gasoline is extremely flammable and highly explosive, which could result in death or serious injury. (00268a)

13. Pull up on chrome sleeve of quick-connect fitting (forward fitting on left side of tank) and insert neck of fuel supply line fitting. While pushing up on bottom of fuel supply line fitting, pull down on chrome sleeve until it clicks into the locked position. Pull on fuel supply line to be sure that it will not come free.
14. Install instrument console. See 7.21 INSTRUMENTS: FXDF AND FLD or 7.22 INSTRUMENTS: FXDB, FXDBC, FXDBP AND FXDWG.

REMOVAL: FXDB, FXDBC AND FXDBP

NOTE

If removing exhaust as an assembly and not removing mufflers or exhaust shields, skip muffler and exhaust shield removal steps.

1. Remove seat.
2. See Figure 4-56. Disconnect rear O2 sensor connector [137] (1). Note wire routing for proper installation.
3. See Figure 4-57. Open front electrical caddy cover and disconnect front O2 sensor connector [138] (2). Remove connector housing from caddy.
4. See Figure 4-58. On models with an active exhaust module, remove active exhaust cable (1):
   a. Remove cable (1) and cable retainer (2) from exhaust pipe.
   b. Remove ferrule (3) from bellcrank (4).
5. See Figure 4-59. Remove nuts (29) from bolts (30). Remove muffler support bracket (28).
6. Loosen locknuts (17) on muffler clamps (19) to exhaust pipes. Remove mufflers (16, 27).
7. Loosen or remove front and rear exhaust shields (1, 8) by opening worm drive clamps (2).
8. Remove flange nuts (35) from front and rear cylinder head exhaust studs.
9. Remove locknut (3) and bolt (41) attaching front exhaust pipe front clamp (4) to front exhaust bracket (40).
10. Remove bolt (13) and washer (14) attaching bracket (15).
11. Remove exhaust system as an assembly.

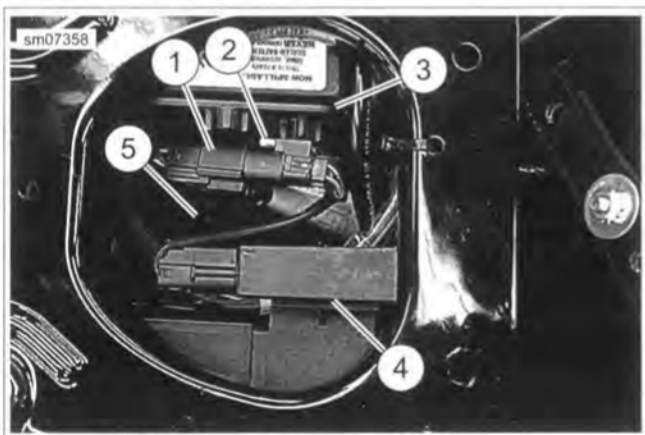

1. **Rear O2 sensor connector [137]**
2. **Connector anchor**
3. **Battery tray**
4. **Security antenna**
5. **Tail lamp connector [7]**

Figure 4-56. Rear O2 Sensor Connector Location

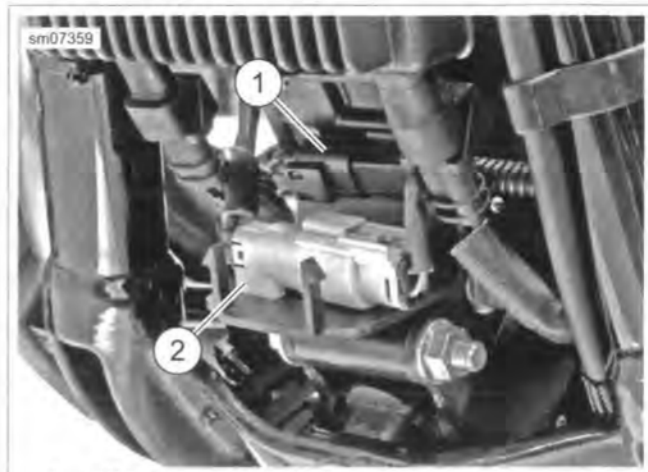

1. **CKP connector**
2. **Front O2 sensor connector**

Figure 4-57. Front Electrical Caddy

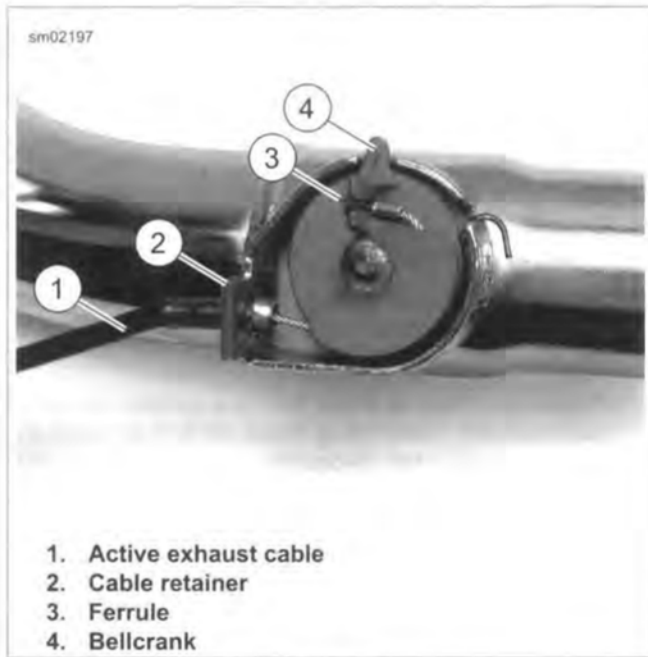

1. **Active exhaust cable**
2. **Cable retainer**
3. **Ferrule**
4. **Bellcrank**

Figure 4-58. Bellcrank

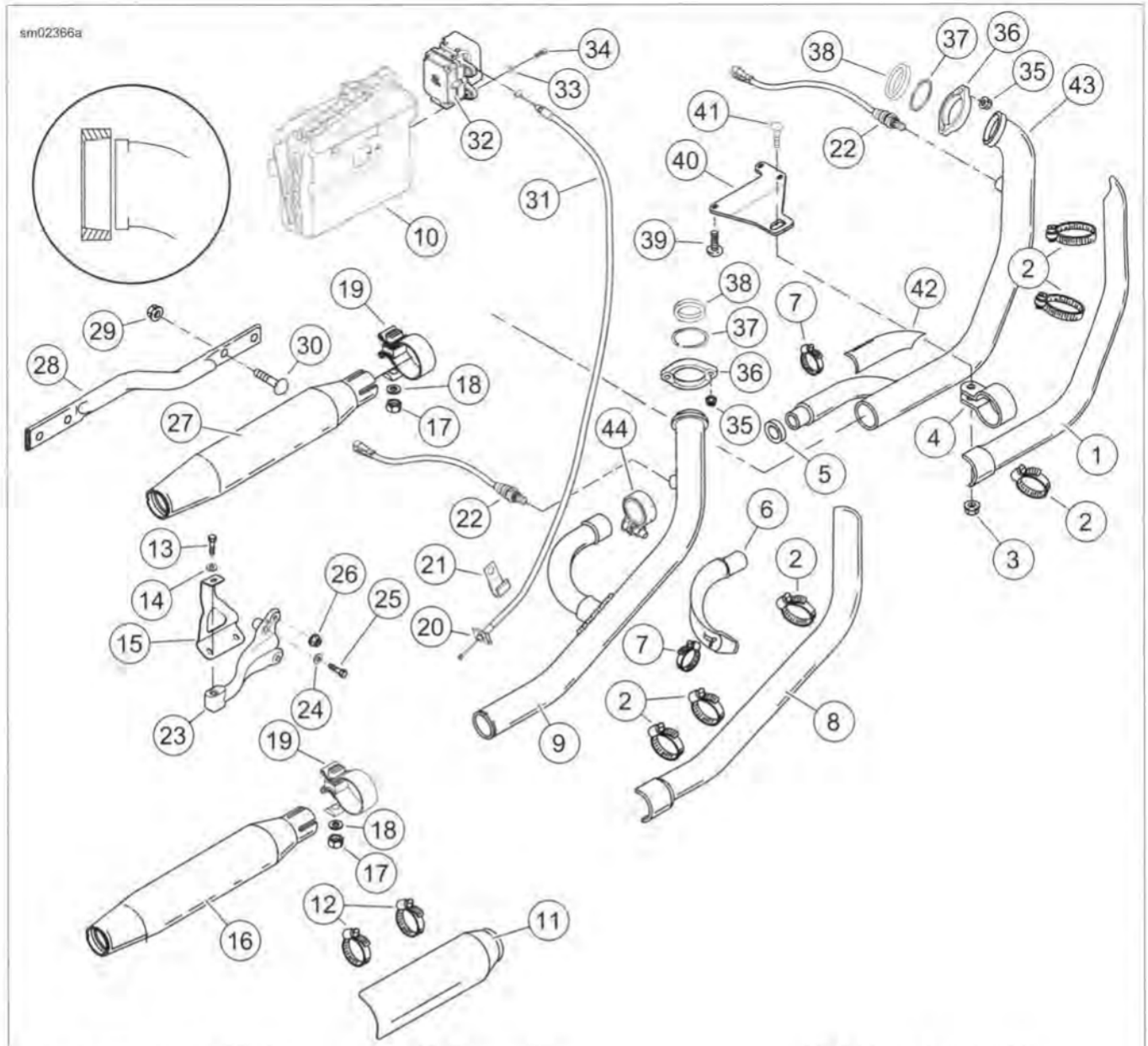

1. Front exhaust shield
2. Worm drive clamp (6)
3. Locknut
4. Exhaust pipe front clamp
5. Interconnect gasket
6. Rear cross-over pipe exhaust shield
7. Worm drive clamp (4)
8. Rear exhaust shield
9. Rear exhaust pipe
10. Battery tray
11. Muffler exhaust shield (2)
12. Worm drive clamp (4)
13. Bolt
14. Washer
15. Bracket (active exhaust equipped models only)
16. Rear muffler
17. Locknut (2)
18. Washer
19. Muffler clamp (2)
20. Cable retainer
21. Active exhaust cable clip
22. Oxygen sensor (2, DOM only)
23. Rear exhaust bracket
24. Washer
25. Rear exhaust bracket fastener
26. Nut (2)
27. Front muffler
28. Muffler support bracket
29. Nut (2)
30. Bolt (2)
31. Active exhaust cable
32. Active exhaust module
33. Washer
34. Active exhaust module fastener
35. Flange nut (4)
36. Exhaust manifold flange (2)
37. Retaining ring (2)
38. Exhaust gasket (2)
39. Screw (3)
40. Front exhaust bracket
41. Bolt
42. Front cross-over pipe exhaust shield
43. Front exhaust pipe
44. Muffler clamp

Figure 4-59. Exhaust System: FXDB, FXDBC and FXDBP

DISASSEMBLY: FXDB, FXDBC AND FXDBP

1. See Figure 4-59. Remove muffler clamp (44).
2. Remove front exhaust pipe (43) from rear exhaust pipe (9) by twisting and separating at cross-over pipe.

3. Examine exhaust gaskets (38) and retaining rings (37) in cylinder head exhaust ports. Replace if necessary.
4. Replace the front (42) and rear (6) cross-over pipe exhaust shields, if necessary.
5. Remove interconnect gasket (5) from cross-over pipe bell on rear exhaust pipe.

ASSEMBLY: FXDB, FXDBC AND FXDBP

1. See Figure 4-59. If front (42) and rear (6) cross-over pipe exhaust shields have been removed, install now.
2. Insert **new** interconnect gasket (5) into cross-over pipe bell on rear exhaust pipe (9). Connect rear exhaust pipe to front exhaust pipe (43) at cross-over pipe with **new** muffler clamp (44) but do not tighten clamp now.

INSTALLATION: FXDB, FXDBC AND FXDBP

FASTENER	TORQUE VALUE	
Exhaust flange nut (upper front cylinder, initial torque)	9-18 **in-lbs**	1-2 Nm
Exhaust flange nut (lower front cylinder)	100-120 **in-lbs**	11.3-13.6 Nm
Exhaust flange nut (upper front cylinder, final torque)	100-120 **in-lbs**	11.3-13.6 Nm
Exhaust flange nut (upper rear cylinder, initial torque)	9-18 **in-lbs**	1-2 Nm
Exhaust flange nut (lower rear cylinder)	100-120 **in-lbs**	11.3-13.6 Nm
Exhaust flange nut (upper rear cylinder, final torque)	100-120 **in-lbs**	11.3-13.6 Nm
Exhaust pipe clamp, front	25-30 ft-lbs	33.9-40.7 Nm
Exhaust bracket bolt, rear	25-30 ft-lbs	33.9-40.7 Nm
Exhaust shield worm drive clamps	20-40 **in-lbs**	2.3-4.5 Nm
Muffler support bracket nuts	20-30 ft-lbs	27.1-40.7 Nm
Muffler clamp nuts	38-43 ft-lbs	51.6-58.4 Nm
Exhaust cross-over pipe clamp	20-25 ft-lbs	27.1-33.9 Nm

NOTES

- *See inset in Figure 4-59. Replacement exhaust gaskets (38) are tapered internally. Make sure that the thin end goes over the exhaust pipe. Also check condition of retaining ring (37) before installation.*
- *If mufflers and exhaust shields were not removed, skip muffler and exhaust shield installation steps.*

1. Position ends of exhaust pipes into front and rear cylinder head exhaust ports with holes in exhaust manifold flanges (36) over cylinder head exhaust studs. Loosely install flange nuts (35).
2. Position exhaust pipe front clamp (4) on front exhaust bracket (40). Install bolt (41) and locknut (3). Do not tighten nut and bolt.
3. Position bracket (15) on rear exhaust bracket (23). Install bolt (13) and washer (14). Leave fasteners loose.

NOTE

*TORCA muffler clamps have eliminated the need for silicone or graphite tape during assembly. Discard clamps upon removal. Always use **new** clamps for installation.*

4. Install front and rear mufflers (27, 16) on front and rear exhaust pipes. Install muffler clamps (19) using nuts (17). Leave fasteners loose.
5. Install muffler support bracket (28) and bracket (15) (if equipped) using nuts (29) and bolts (30). Leave fasteners loose. Install exhaust system.
6. Align exhaust system beginning at cylinder head exhaust ports and working backwards tightening all nuts and bolts.
7. Tighten flange nuts (35), at front cylinder studs:
   a. Install lower nut and tighten finger-tight.
   b. Install upper nut. Tighten to 9-18 **in-lbs** (1-2 Nm).
   c. Tighten lower nut to 100-120 **in-lbs** (11.3-13.6 Nm).
   d. Tighten upper nut to 100-120 **in-lbs** (11.3-13.6 Nm).

NOTE

Make sure position on rear exhaust shield on ABS models is oriented so that a minimum of 0.500 in (12.7 mm) of clearance is maintained between clamp and ABS module or module cover.

8. Tighten flange nuts at rear cylinder studs:
   a. Install upper nut and tighten finger-tight.
   b. Install lower nut. Tighten to 9-18 **in-lbs** (1-2 Nm).
   c. Tighten upper nut to 100-120 **in-lbs** (11.3-13.6 Nm).
   d. Tighten lower nut to 100-120 **in-lbs** (11.3-13.6 Nm).
9. Tighten locknut (3) to 25-30 ft-lbs (33.9-40.7 Nm).
10. Tighten bolt (13) to 25-30 ft-lbs (33.9-40.7 Nm).
11. Open the worm drive clamps (2). Install exhaust shields (1, 8). Tighten worm drive clamps (2) to 20-40 **in-lbs** (2.3-4.5 Nm).
12. Tighten nuts (29) to 20-30 ft-lbs (27.1-40.7 Nm).
13. Align mufflers. Tighten locknuts (17) to 38-43 ft-lbs (51.6-58.4 Nm).
14. Tighten muffler clamp (44) to 20-25 ft-lbs (27.1-33.9 Nm).
15. See Figure 4-58. On models with an active exhaust module, install active exhaust cable (1) to bellcrank (4):
   a. Install ferrule (3) in bellcrank.
   b. Wrap cable around bellcrank.
   c. Install cable retainer (2) on exhaust pipe.
   d. See Figure 4-60. Verify that cable is properly routed and secured.
16. See Figure 4-56. Connect rear O2 sensor connector [137] (1).

NOTE

Connector halves must be clean and dry. Do not apply dielectric grease to sealed connectors or terminals.

17. See Figure 4-57. Connect front O2 sensor connector [138] (2). Close front electrical caddy cover.

⚠WARNING

After installing seat, pull upward on seat to be sure it is locked in position. While riding, a loose seat can shift causing loss of control, which could result in death or serious injury. (00070b)

18. Install seat.

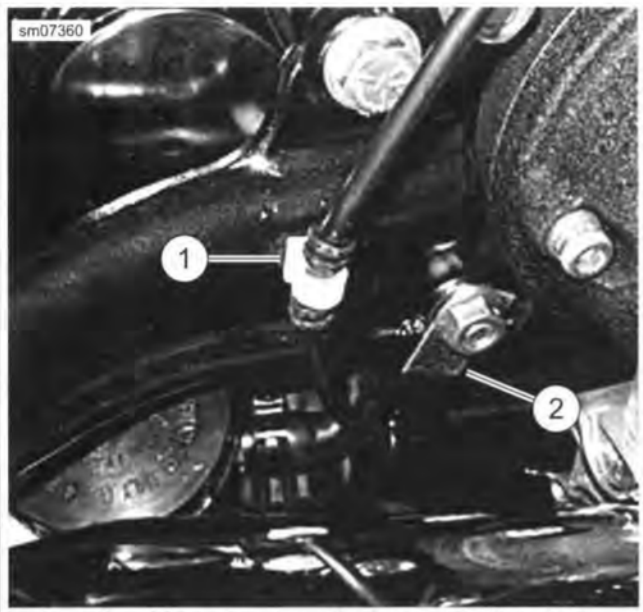

1. **Clip with anchor mounted to muffler bracket**
2. **Clamp mounted to transmission**

Figure 4-60. Active Exhaust Cable Retention

REMOVAL: FXDF AND FXDWG

NOTE

If removing exhaust as an assembly and not removing mufflers, skip muffler removal steps.

1. Remove seat.
2. See Figure 4-61. Disconnect rear O2 sensor connector [137]. Note wire routing for proper installation.
3. See Figure 4-62. Open front electrical caddy cover and disconnect front O2 sensor connector [138] (2). Remove connector housing from caddy.
4. See Figure 4-63. On models with an active exhaust module, remove active exhaust cable (1):
   a. Remove active exhaust cable and cable retainer (2) from exhaust pipe.
   b. Remove ferrule (3) from bellcrank (4).
5. See Figure 4-64. Remove muffler-to-muffler screw (1) attaching mufflers together.
6. Remove muffler mounting bolt (4) and washer (3) attaching front and rear mufflers (22, 23) to muffler bracket (5).
7. Loosen nuts on muffler clamps (21). Remove mufflers.
8. Loosen or remove exhaust shields (16, 17, 18) by opening worm drive clamps (15, 19).
9. Remove flange nuts (12) from front and rear cylinder head exhaust studs.
10. Remove head pipe assembly (14).
11. If necessary, remove flange locknuts (7) and bolt to remove muffler bracket (5).



Figure 4-61. Rear O2 Connector and Harness

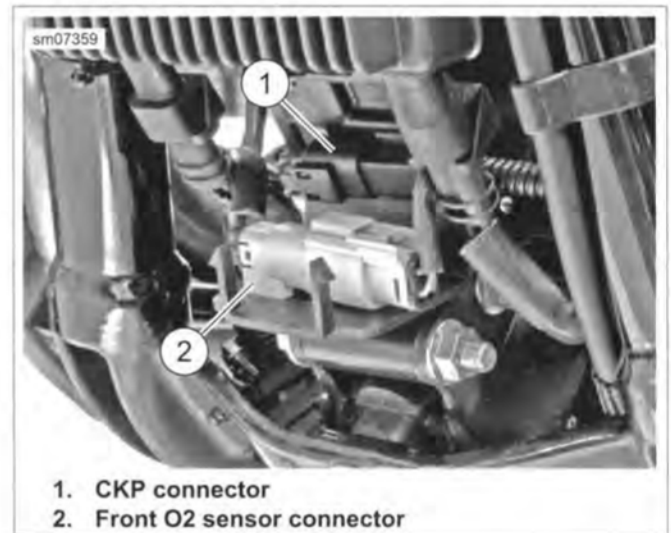

1. **CKP connector**
2. **Front O2 sensor connector**

Figure 4-62. Front Electrical Caddy

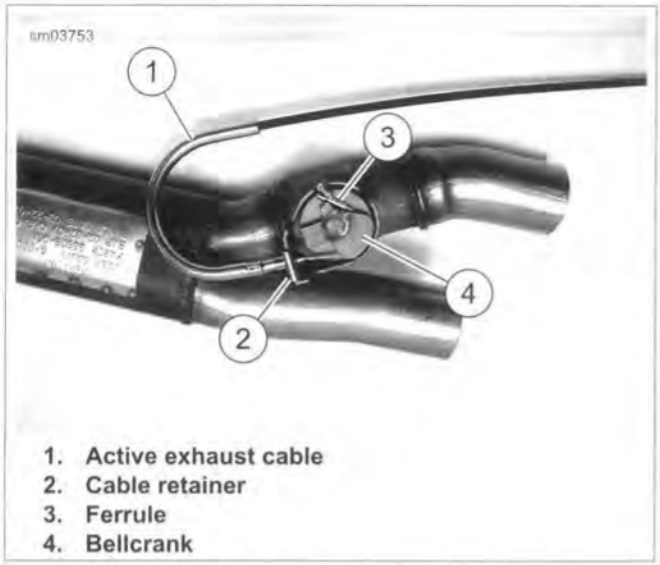

1. Active exhaust cable
2. Cable retainer
3. Ferrule
4. Bellcrank

Figure 4-63. Bellcrank: FXDF/FXDWG

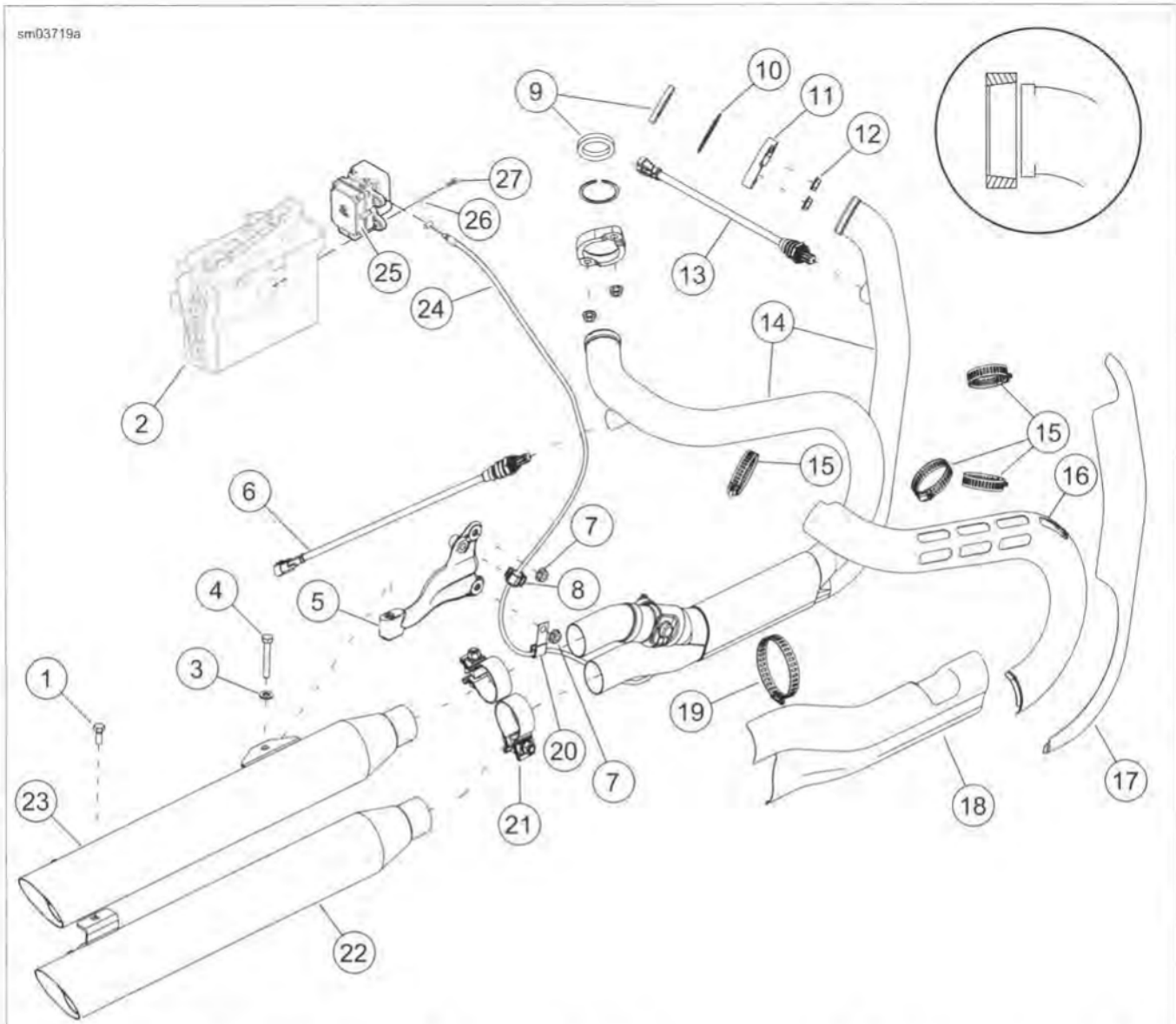

1. Muffler-to-muffler screw
2. Battery tray
3. Washer
4. Muffler mounting bolt
5. Muffler bracket
6. Rear oxygen sensor
7. Flange locknut (2)
8. Clamp with anchor
9. Exhaust gasket (2)
10. Retaining ring (2)
11. Exhaust pipe flange
12. Flange nut (4)
13. Front oxygen sensor
14. Head pipe assembly
15. Worm drive clamp, small (4)
16. Rear exhaust shield
17. Front exhaust shield
18. Collector exhaust shield
19. Worm drive clamp, large (3)
20. Cable clamp (2)
21. Muffler clamp (2)
22. Front (lower) muffler
23. Rear (upper) muffler
24. Active exhaust cable assembly
25. Active exhaust module
26. Washer
27. Active exhaust module fastener

Figure 4-64. Exhaust System: FXDF and FXDWG

INSTALLATION: FXDF AND FXDWG

FASTENER	TORQUE VALUE	
Muffler bracket flange nuts: FXDF and FXDWG	15-19 ft-lbs	20.3-25.8 Nm
Muffler bracket bolt: FXDF and FXDWG	15-19 ft-lbs	20.3-25.8 Nm
Exhaust flange nut (upper front cylinder, initial torque): FXDF and FXDWG	9-18 **in-lbs**	1-2 Nm
Exhaust flange nut (lower front cylinder): FXDF and FXDWG	100-120 **in-lbs**	11.3-13.6 Nm
Exhaust flange nut (upper front cylinder, final torque): FXDF and FXDWG	100-120 **in-lbs**	11.3-13.6 Nm
Exhaust flange nut (upper rear cylinder, initial torque): FXDF and FXDWG	9-18 **in-lbs**	1-2 Nm
Exhaust flange nut (lower rear cylinder): FXDF and FXDWG	100-120 **in-lbs**	11.3-13.6 Nm
Exhaust flange nut (upper rear cylinder, final torque): FXDF and FXDWG	100-120 **in-lbs**	11.3-13.6 Nm
Exhaust shield worm drive clamps: FXDF and FXDWG	20-40 **in-lbs**	2.3-4.5 Nm
Muffler mounting bolt: FXDF and FXDWG	15-19 ft-lbs	20.3-25.8 Nm
Muffler clamp nuts: FXDF and FXDWG	38-43 ft-lbs	51.6-58.4 Nm

NOTES

- *See inset in Figure 4-64. Replacement exhaust gaskets (9) are tapered internally. Make sure that the thin end goes over the exhaust pipe. Also check condition of retaining ring (10) before installation.*
- *If mufflers and exhaust shields were not removed, skip muffler and exhaust shield installation steps.*

1. See Figure 4-64. If removed, install muffler bracket.
   a. Tighten flange locknuts (7) to 15-19 ft-lbs (20.3-25.8 Nm).
   b. Tighten bolt (4) to 15-19 ft-lbs (20.3-25.8 Nm).
2. Position ends of head pipe assembly (14) into front and rear cylinder head exhaust ports with holes in exhaust pipe flanges (11) over cylinder head exhaust studs. Loosely install flange nuts (12).
3. Slide muffler clamps (21) onto exhaust pipes.

NOTE

*TORCA muffler clamps have eliminated the need for silicone or graphite tape during assembly. Discard clamps upon removal. Always use **new** clamps for installation.*

4. Install front and rear mufflers (22, 23) on exhaust pipes. Install muffler clamps (21). Leave fasteners loose.
5. Install muffler-to-muffler screw (1). Leave fasteners loose.
6. Install muffler mounting bolt (4) and washer (3). Leave fasteners loose.

NOTE

Align exhaust system beginning at cylinder head exhaust ports and working backwards tightening all nuts and bolts.

7. Tighten flange nuts (12) at front cylinder studs:
   a. Install lower nut and tighten finger-tight.
   b. Install upper nut. Tighten to 9-18 **in-lbs** (1-2 Nm).
   c. Tighten lower nut to 100-120 **in-lbs** (11.3-13.6 Nm).
   d. Tighten upper nut to 100-120 **in-lbs** (11.3-13.6 Nm).
8. Tighten flange nuts at rear cylinder studs:
   a. Install upper nut and tighten finger-tight.
   b. Install lower nut. Tighten to 9-18 **in-lbs** (1-2 Nm).
   c. Tighten upper nut to 100-120 **in-lbs** (11.3-13.6 Nm).
   d. Tighten lower nut to 100-120 **in-lbs** (11.3-13.6 Nm).
9. Open the small and large worm drive clamps (15, 19) and install exhaust shields (16, 17, 18). Tighten small and large worm drive clamps to 20-40 **in-lbs** (2.3-4.5 Nm).
10. Tighten muffler mounting bolt (4) to 15-19 ft-lbs (20.3-25.8 Nm). Tighten muffler-to-muffler screw (1) securely.
11. Align mufflers. Tighten muffler clamp nuts to 38-43 ft-lbs (51.6-58.4 Nm).
12. See Figure 4-63. On models with an active exhaust module, install active exhaust cable (1):
    a. Install ferrule (3) in bellcrank (4).
    b. Wrap cable around bellcrank.
    c. Install active exhaust cable and cable retainer (2) on exhaust pipe.
    d. See Figure 4-65. Make sure that cable routing is correct. Secure with two clamps (3).

NOTE

Connector halves must be clean and dry. Do not apply dielectric grease to sealed connectors or terminals.

13. See Figure 4-61. Connect rear O2 sensor connector [137].
14. See Figure 4-62. Connect front O2 sensor connector [138] (2). Close front electrical caddy cover.

⚠WARNING

After installing seat, pull upward on seat to be sure it is locked in position. While riding, a loose seat can shift causing loss of control, which could result in death or serious injury. (00070b)

15. Install seat.

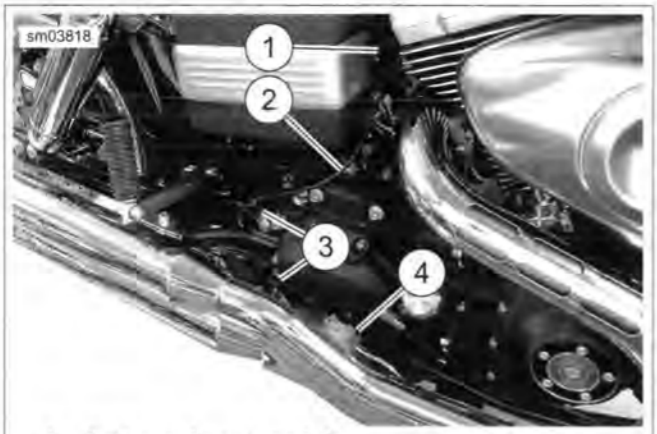

1. **Active exhaust module**
2. **Active exhaust cable**
3. **Clamp (2)**
4. **Bellcrank**

Figure 4-65. Active Exhaust Cable: FXDF and FXDWG

REMOVAL: FLD

1. Remove seat.
2. Remove right saddlebag. See 2.34 SADDLEBAGS: FLD.
3. Remove right side front footboard and rear bracket from frame as an assembly. See 2.31 FOOTBOARDS AND FOOTRESTS.
4. See Figure 4-66. Loosen muffler clamp (10).
5. Remove muffler to exhaust bracket fastener (11) and muffler (12).
6. Remove muffler clamp (10).
7. If equipped, loosen charcoal canister mounting bracket fasteners. See 4.17 EVAPORATIVE EMISSIONS CONTROL. Slide canister to the left of vehicle to access the front O2 sensor connector. Do not remove canister.
8. Disconnect front and rear O2 sensor connectors. See 4.11 OXYGEN SENSOR.
9. Remove front, rear and collector exhaust shields (19, 22) from pipes.
10. Remove four flange nuts (4) to release exhaust pipe assembly (9) from studs of front and rear cylinder heads. Slide exhaust flanges down exhaust pipe to gain clearance around exhaust port.
11. Remove carriage bolt with locknut (5) and top and bottom exhaust pipe clamps (6, 7).
12. Remove exhaust pipe assembly.
13. Remove and discard exhaust port gaskets (2) from front and rear exhaust ports.

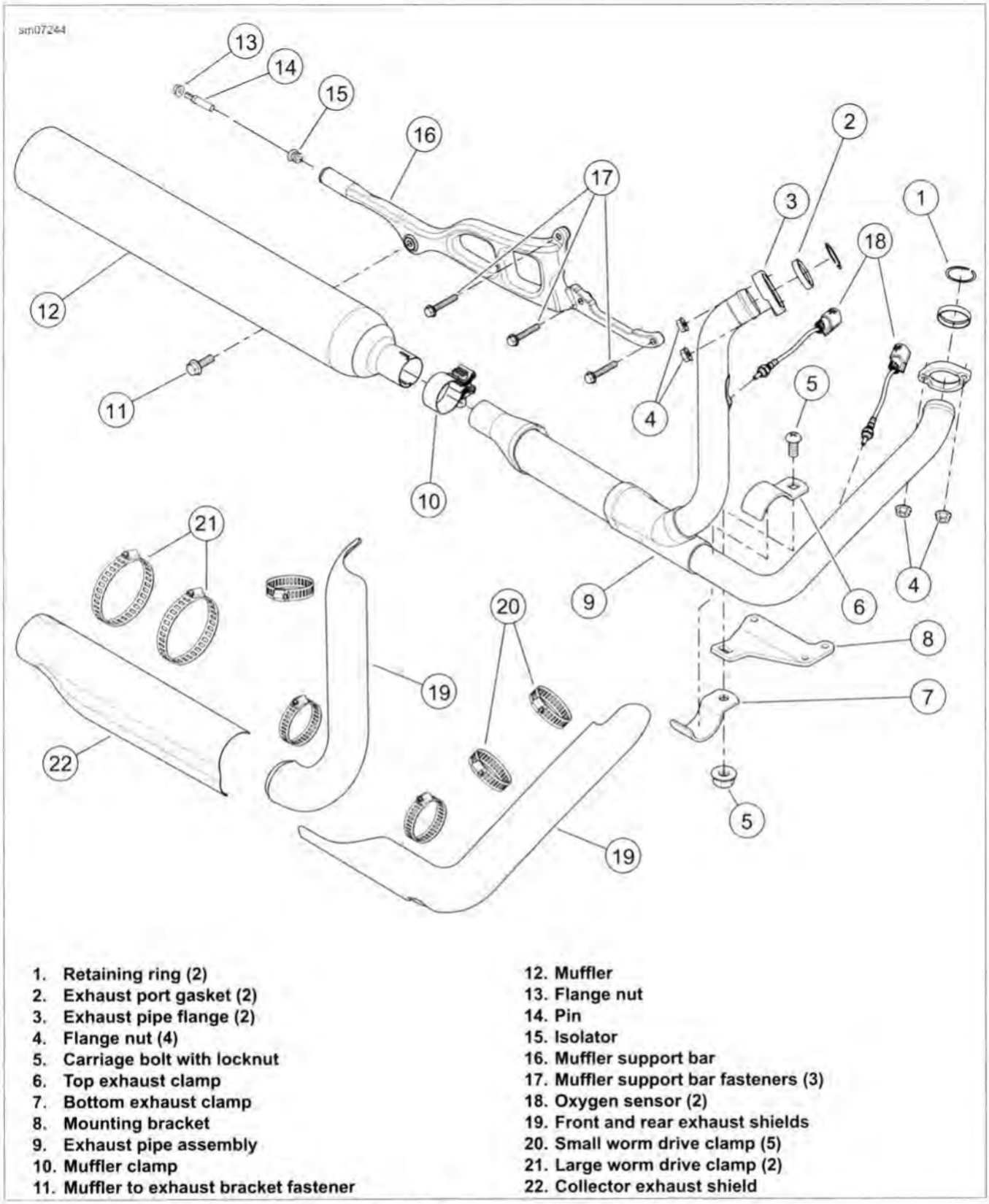

1. Retaining ring (2)
2. Exhaust port gasket (2)
3. Exhaust pipe flange (2)
4. Flange nut (4)
5. Carriage bolt with locknut
6. Top exhaust clamp
7. Bottom exhaust clamp
8. Mounting bracket
9. Exhaust pipe assembly
10. Muffler clamp
11. Muffler to exhaust bracket fastener
12. Muffler
13. Flange nut
14. Pin
15. Isolator
16. Muffler support bar
17. Muffler support bar fasteners (3)
18. Oxygen sensor (2)
19. Front and rear exhaust shields
20. Small worm drive clamp (5)
21. Large worm drive clamp (2)
22. Collector exhaust shield

Figure 4-66. Exhaust System: FLD

INSTALLATION: FLD

FASTENER	TORQUE VALUE	
Muffler bracket fastener: FLD	17-21 ft-lbs	23.0-28.5 Nm
Exhaust flange nut (upper front cylinder, initial torque): FLD	9-18 **in-lbs**	1-2 Nm
Exhaust flange nut (lower front cylinder): FLD	100-120 **in-lbs**	11.3-13.6 Nm
Exhaust flange nut (upper front cylinder, final torque): FLD	100-120 **in-lbs**	11.3-13.6 Nm
Exhaust flange nut (upper rear cylinder, initial torque): FLD	9-18 **in-lbs**	1-2 Nm
Exhaust flange nut (lower rear cylinder): FLD	100-120 **in-lbs**	11.3-13.6 Nm
Exhaust flange nut (upper rear cylinder, final torque): FLD	100-120 **in-lbs**	11.3-13.6 Nm
Front pipe clamp: FLD	25-30 ft-lbs	33.9-40.6 Nm
Muffler clamp nut: FLD	38-43 ft-lbs	51.6-58.4 Nm
Muffler fastener: FLD	17-21 ft-lbs	23.0-28.5 Nm
Exhaust shield worm drive clamps: FLD	20-40 **in-lbs**	2.3-4.5 Nm
Charcoal canister fasteners: FLD	15-20 **in-lbs**	1.7-2.3 Nm

NOTES

- *See Figure 4-66. Replacement exhaust port gaskets (2) are tapered internally. Make sure that the thin end goes over the exhaust pipe. Also check condition of retaining ring (1) before installation.*
- *If muffler and exhaust shields were not removed, skip muffler and exhaust shield installation steps.*

1. Install **new** exhaust port gaskets (2).
2. Inspect retaining rings (1) and exhaust pipe flanges (3). Replace if necessary.
3. Position ends of exhaust pipes into front and rear cylinder head exhaust ports. Install exhaust manifold flanges (3) over cylinder head exhaust studs. Install flange nuts (4). Leave fasteners loose.
4. Position top and bottom exhaust clamps (6, 7) on mounting bracket (8). Install carriage bolt with locknut (5). Leave fasteners loose.

NOTE

*TORCA muffler clamps (10) have eliminated the need for silicone or graphite tape during assembly. Always use **new** clamps for installation.*

5. Install **new** muffler clamp (10) onto muffler (12) inlet. Do not tighten nut and bolt now.
6. If muffler bracket was removed, install and tighten fasteners to 17-21 ft-lbs (23.0-28.5 Nm).
7. Install muffler (12) onto exhaust pipe assembly (9). Leave fasteners loose.
8. Tighten flange nuts (4) at front cylinder studs.
   a. Install lower nut and tighten finger-tight.
   b. Install upper nut. Tighten to 9-18 **in-lbs** (1-2 Nm).
   c. Tighten lower nut to 100-120 **in-lbs** (11.3-13.6 Nm).
   d. Tighten upper nut to 100-120 **in-lbs** (11.3-13.6 Nm).
9. Tighten flange nuts (4) at rear cylinder studs.
   a. Install lower nut and tighten finger-tight.
   b. Install upper nut. Tighten to 9-18 **in-lbs** (1-2 Nm).
   c. Tighten lower nut to 100-120 **in-lbs** (11.3-13.6 Nm).
   d. Tighten upper nut to 100-120 **in-lbs** (11.3-13.6 Nm).
10. Tighten carriage bolt with locknut (5) to 25-30 ft-lbs (33.9-40.6 Nm).
11. Align muffler. Tighten mounting bracket (8) nut to 38-43 ft-lbs (51.6-58.4 Nm).
12. Verify muffler alignment. Tighten muffler to exhaust bracket fastener (11) to 17-21 ft-lbs (23.0-28.5 Nm).

NOTE

O2 sensor connector halves must be clean and dry. Do not apply dielectric grease to sealed connectors or terminals.

13. See Figure 4-61. Connect rear O2 sensor connector [137].
14. See Figure 4-62. Connect front O2 sensor connector [138] (2). Close front electrical caddy cover.
15. See Figure 4-66. Open the small and large worm drive clamps (20, 21) and install front, rear and collector exhaust shields (19, 22). Tighten small and large worm drive clamps to 20-40 **in-lbs** (2.3-4.5 Nm).
16. Install right saddlebag. See 2.34 SADDLEBAGS: FLD.
17. Install right side front footboard and brackets onto frame and attach brake rod. See 2.31 FOOTBOARDS AND FOOTRESTS.
18. Install charcoal canister if equipped. Tighten fasteners to 15-20 **in-lbs** (1.7-2.3 Nm). See 4.17 EVAPORATIVE EMISSIONS CONTROL.

REMOVAL: FXDL

1. Remove seat.
2. Disconnect front and rear O2 sensor connectors (5).
3. See Figure 4-67. Remove front, rear and collector exhaust shields (7, 10) from exhaust.
4. Loosen muffler clamp (9).
5. Remove muffler to exhaust bracket fastener (13) and muffler (12).
6. Remove muffler clamp.
7. If equipped, loosen charcoal canister mounting bracket fasteners. See 4.17 EVAPORATIVE EMISSIONS CONTROL. Slide canister to the left of vehicle to access the front O2 sensor connector. Do not remove canister.
8. Remove four flange nuts (4) to release exhaust pipe assembly (6) from studs of front and rear cylinder heads.

Slide exhaust flanges down exhaust pipe to gain clearance around exhaust port.

9. Remove exhaust pipe assembly.

10. Remove and discard gaskets (2) from front and rear exhaust ports.

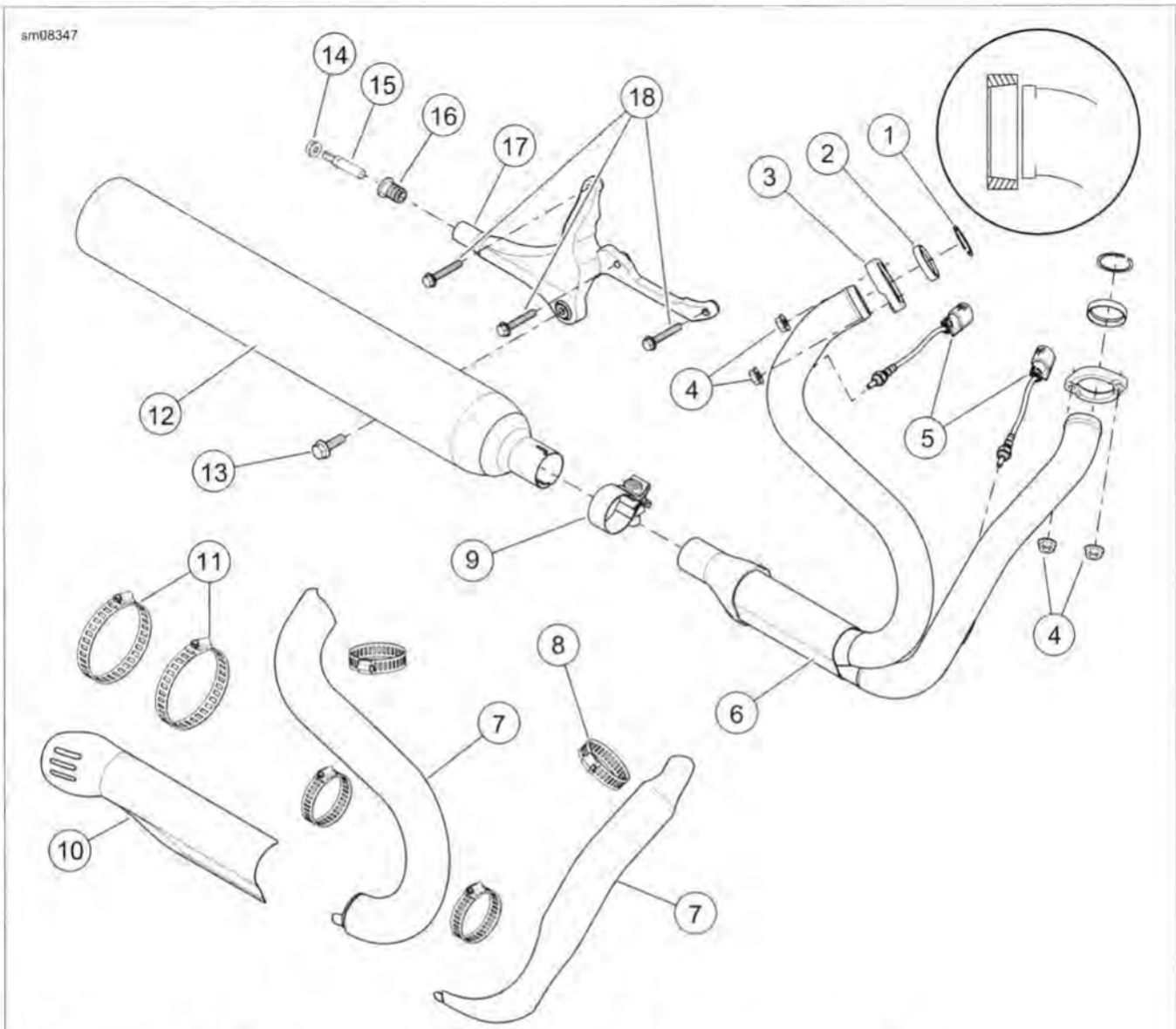

1. Retaining ring (2)
2. Exhaust port gasket (2)
3. Exhaust pipe flange (2)
4. Flange nut (4)
5. Oxygen sensor (2)
6. Exhaust pipe assembly
7. Front and rear exhaust shields
8. Small worm drive clamp (4)
9. Muffler clamp
10. Collector exhaust shield
11. Large worm drive clamp (2)
12. Muffler
13. Muffler to exhaust bracket fastener
14. Flange nut
15. Pin
16. Isolator
17. Muffler support bar
18. Muffler support bar fasteners (3)

Figure 4-67. Exhaust System: FXDL

INSTALLATION: FXDL

FASTENER	TORQUE VALUE	
Muffler bracket fastener: FXDL	17-21 ft-lbs	23.0-28.5 Nm
Exhaust flange nut (upper front cylinder, initial torque): FXDL	9-18 **in-lbs**	1-2 Nm
Exhaust flange nut (lower front cylinder): FXDL	100-120 **in-lbs**	11.3-13.6 Nm
Exhaust flange nut (upper front cylinder, final torque): FXDL	100-120 **in-lbs**	11.3-13.6 Nm
Exhaust flange nut (upper rear cylinder, initial torque): FXDL	9-18 **in-lbs**	1-2 Nm
Exhaust flange nut (lower rear cylinder): FXDL	100-120 **in-lbs**	11.3-13.6 Nm
Exhaust flange nut (upper rear cylinder, final torque): FXDL	100-120 **in-lbs**	11.3-13.6 Nm
Muffler clamp nut: FXDL	38-43 ft-lbs	51.6-58.4 Nm
Muffler fastener: FXDL	17-21 ft-lbs	23.0-28.5 Nm
Exhaust shield worm drive clamps: FXDL	20-40 **in-lbs**	2.3-4.5 Nm
Charcoal canister fasteners: FXDL	15-20 **in-lbs**	1.7-2.3 Nm

NOTE

See Figure 4-67. Replacement exhaust port gaskets (2) are tapered internally. Make sure that the thin end goes over the exhaust pipe. Also check condition of retaining ring (1) before installation.

1. Install **new** exhaust port gaskets (2).
2. Inspect retaining rings (1) and exhaust pipe flanges (3). Replace if necessary.
3. Position ends of exhaust pipes into front and rear cylinder head exhaust ports. Install exhaust manifold flanges over cylinder head exhaust studs. Install flange nuts (4). Leave fasteners loose.

NOTE

*TORCA muffler clamps have eliminated the need for silicone or graphite tape during assembly. Always use **new** clamps for installation.*

4. Install **new** muffler clamp onto muffler (12) inlet. Do not tighten nut and bolt now.
5. If muffler support bar (17) was removed, install fasteners. Tighten to 17-21 ft-lbs (23.0-28.5 Nm).
6. Install muffler onto exhaust pipe assembly (6). Leave fasteners loose.
7. Tighten flange nuts at front cylinder studs.
   a. Install lower nut and tighten finger-tight.
   b. Install upper nut. Tighten to 9-18 **in-lbs** (1-2 Nm).
   c. Tighten lower nut to 100-120 **in-lbs** (11.3-13.6 Nm).
   d. Tighten upper nut to 100-120 **in-lbs** (11.3-13.6 Nm).
8. Tighten flange nuts at rear cylinder studs.
   a. Install lower nut and tighten finger-tight.
   b. Install upper nut. Tighten to 9-18 **in-lbs** (1-2 Nm).
   c. Tighten lower nut to 100-120 **in-lbs** (11.3-13.6 Nm).
   d. Tighten upper nut to 100-120 **in-lbs** (11.3-13.6 Nm).
9. Align muffler. Tighten muffler clamp nut to 38-43 ft-lbs (51.6-58.4 Nm).
10. Verify muffler alignment. Tighten muffler to exhaust bracket fastener (13) to 17-21 ft-lbs (23.0-28.5 Nm).

NOTE

O2 sensor connector halves must be clean and dry. Do not apply dielectric grease to sealed connectors or terminals.

11. See Figure 4-61. Connect rear O2 sensor connector [137].
12. See Figure 4-62. Connect front O2 sensor connector [138] (2). Close front electrical caddy cover.
13. See Figure 4-67. Open the small and large worm drive clamps (8, 11) and install front, rear and collector exhaust shields (7, 10). Tighten small and large worm drive clamps to 20-40 **in-lbs** (2.3-4.5 Nm).
14. Install charcoal canister if equipped. Tighten fasteners to 15-20 **in-lbs** (1.7-2.3 Nm). See 4.17 EVAPORATIVE EMISSIONS CONTROL.

GENERAL

⚠WARNING

Do not allow open flame or sparks near propane. Propane is extremely flammable, which could cause death or serious injury. (00521b)

⚠WARNING

Read and follow warnings and directions on propane bottle. Failure to follow warnings and directions can result in death or serious injury. (00471b)

NOTES

- *To prevent false readings, keep air cleaner cover installed when performing test.*
- *Do not direct propane into air cleaner. It causes false readings.*
- ***Screamin' Eagle air cleaner assemblies:** This type of air cleaner has an open backplate. Even with air cleaner cover on, directing nozzle too close to backplate can give false readings.*

LEAK TESTER

PART NUMBER	TOOL NAME
HD-41417	PROPANE ENRICHMENT KIT

Parts List

- 14 oz propane cylinder.
- PROPANE ENRICHMENT KIT (Part No. HD-41417).

Assemble Tester

1. See Figure 4-68. Make sure valve knob (6) is closed (fully clockwise).
2. Install valve assembly (5) onto propane bottle (1).

Adjust Tester

1. See Figure 4-68. Press and hold trigger button (8).
2. Slowly open valve knob (6) until pellet in flow gauge (7) rises 5-10 SCFH on gauge.
3. Release trigger button.

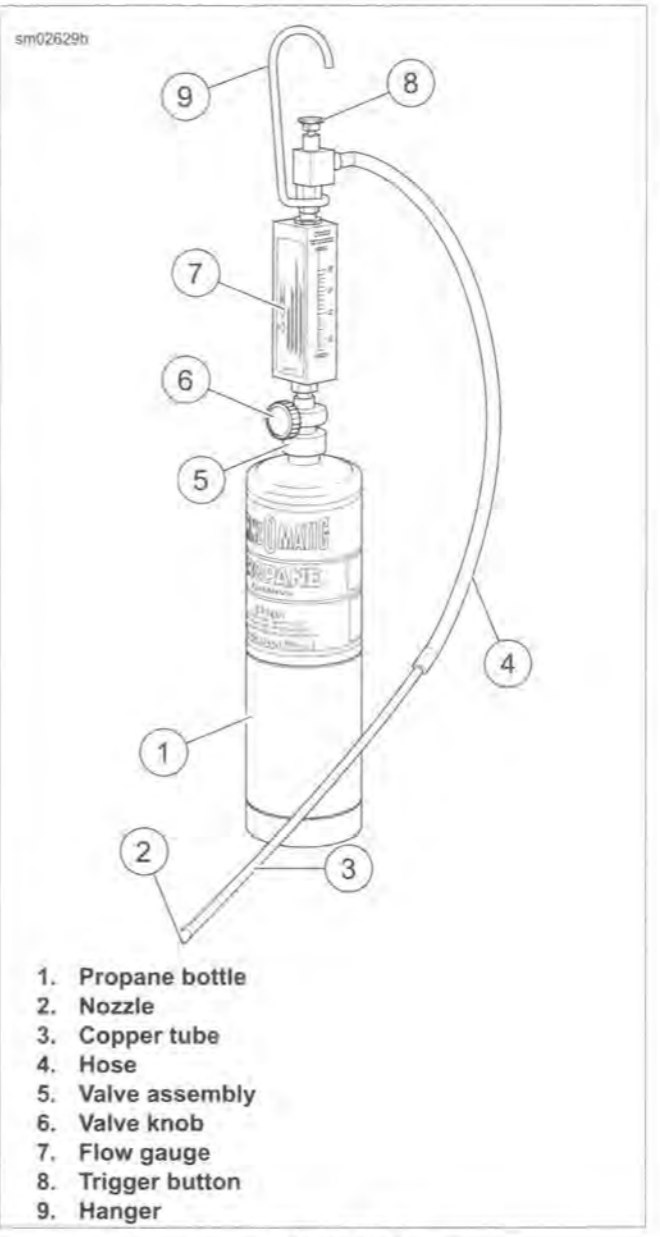

1. **Propane bottle**
2. **Nozzle**
3. **Copper tube**
4. **Hose**
5. **Valve assembly**
6. **Valve knob**
7. **Flow gauge**
8. **Trigger button**
9. **Hanger**

Figure 4-68. Leak Tester

PROCEDURE

1. Run motorcycle until engine is at normal operating temperature.
2. See Figure 4-69. Aim nozzle (3) toward possible sources of leak such as intake manifold mating surfaces.
3. Press and release trigger button (2) to dispense propane. The tone of the engine changes when propane enters source of leak. Repeat as necessary to detect leak.
4. When test is finished, close valve knob (turn knob fully clockwise).

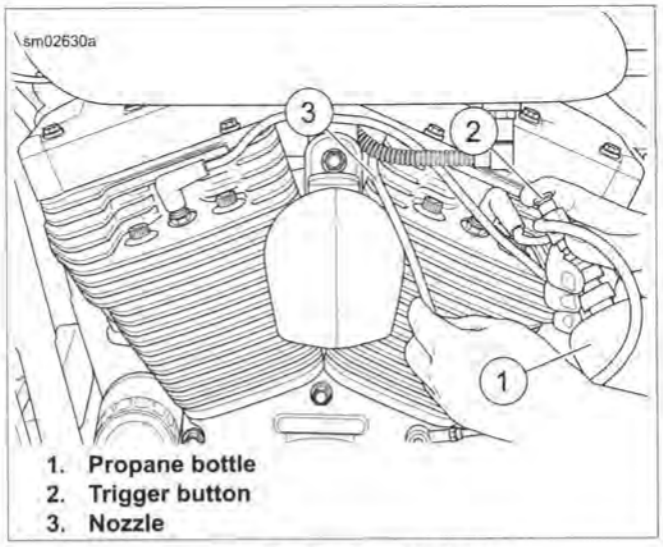

1. Propane bottle
2. Trigger button
3. Nozzle

Figure 4-69. Checking for Leaks

GENERAL

Motorcycles sold in some markets are equipped with an evaporative (EVAP) emissions control system. See Figure 4-70. The EVAP system functions as follows:

- The fuel vapor vent tube (6) connects to the vent tube on the fuel tank top plate (7). It allows fuel vapors in the fuel tank to be vented to the charcoal canister (9).
- Under certain engine conditions, the ECM (working with the EFI system relay) opens the purge solenoid (2). Negative pressure (vacuum) draws the fuel vapors in the charcoal canister through the purge tube to the induction module. They are then burned as part of the normal combustion process.

⚠WARNING

Keep evaporative emissions vent lines away from exhaust and engine. Gasoline is extremely flammable and highly explosive, which could result in death or serious injury. (00266a)

NOTE

The EVAP system has been designed to operate with a minimum of maintenance. Check that all tubes are correctly routed and properly connected. Also, verify that the tubes are not pinched or kinked. Verify that there is no contact between the tubes and engine parts.

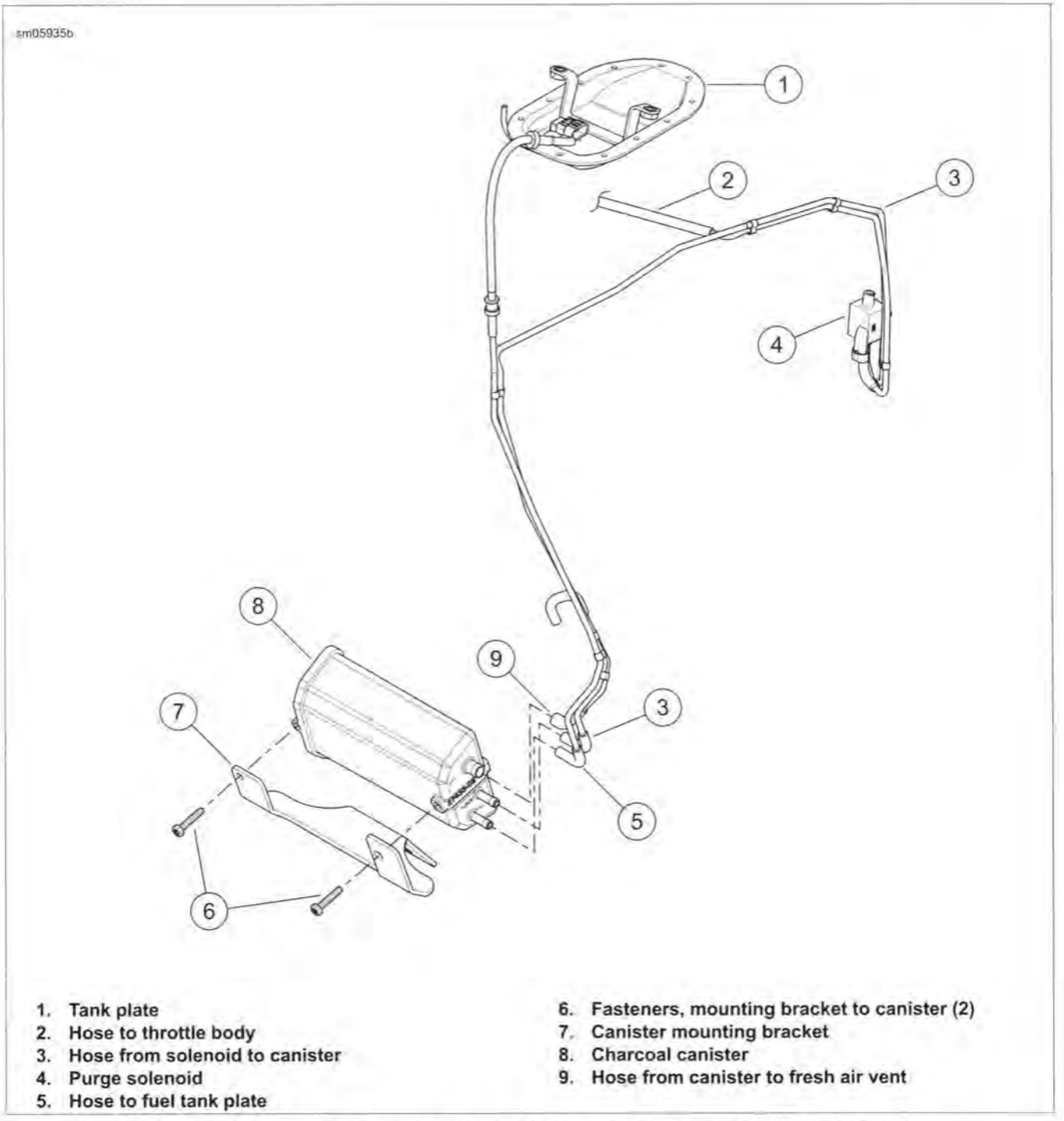

1. Tank plate
2. Hose to throttle body
3. Hose from solenoid to canister
4. Purge solenoid
5. Hose to fuel tank plate
6. Fasteners, mounting bracket to canister (2)
7. Canister mounting bracket
8. Charcoal canister
9. Hose from canister to fresh air vent

Figure 4-70. Evaporative Emissions Control System: California and Asia-Pacific Markets

CHARCOAL CANISTER

FASTENER	TORQUE VALUE	
Charcoal canister mounting fasteners	15-20 **in-lbs**	1.7-2.3 Nm

Removal

⚠WARNING

To prevent accidental vehicle start-up, which could cause death or serious injury, remove main fuse before proceeding. (00251b)

NOTE

See Figure 4-71. The EVAP charcoal canister is mounted between the forward frame downtubes.

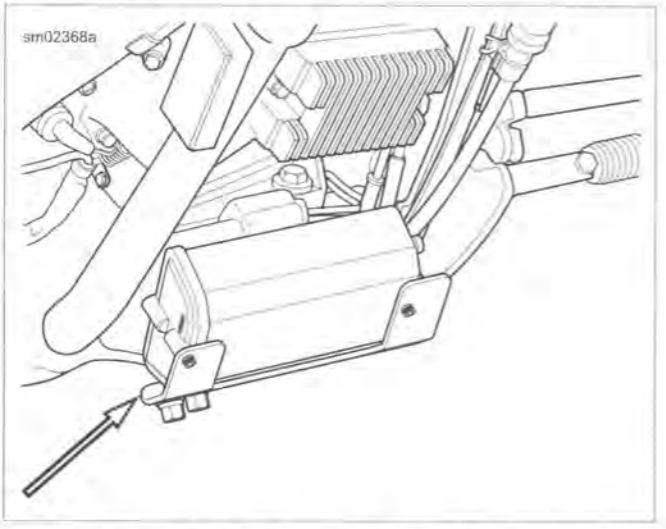

Figure 4-71. Charcoal Canister Location

1. Remove main fuse. See 7.8 FUSES.
2. Pull clean air hose off large nipple on charcoal canister.

NOTE

See Figure 4-72. Note the two hose connections on the lower left side of the charcoal canister.

3. To verify correct assembly, label each hose to match the stamps on the charcoal canister before disconnecting.
4. Remove two fasteners retaining charcoal canister.
5. Remove charcoal canister.

Installation

1. See Figure 4-71. Slide charcoal canister into mounting bracket. Install two fasteners retaining charcoal canister. Tighten to 15-20 **in-lbs** (1.7-2.3 Nm).
2. Attach all hoses to throttle body. See 4.8 INDUCTION MODULE.
3. See Figure 4-72. Attach hoses to charcoal canister nipples as marked.

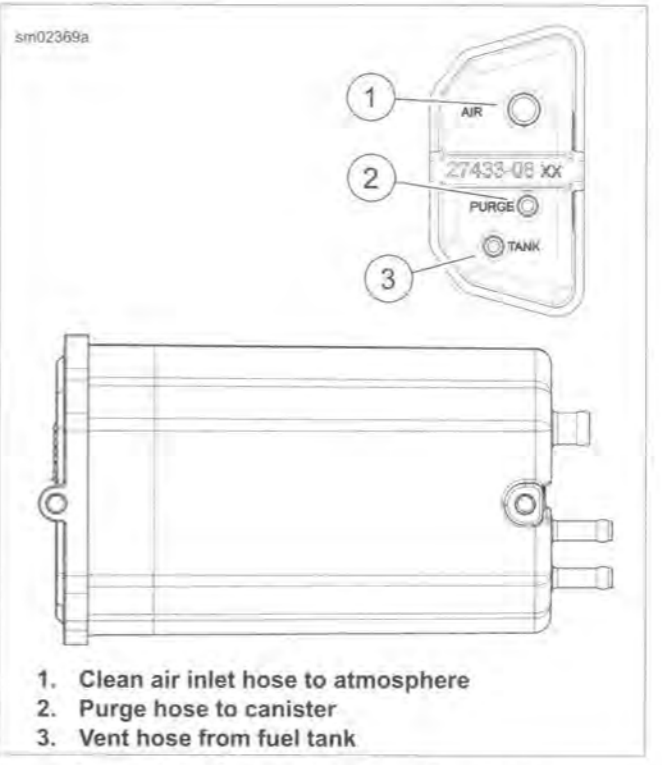

1. **Clean air inlet hose to atmosphere**
2. **Purge hose to canister**
3. **Vent hose from fuel tank**

Figure 4-72. Charcoal Canister Connections

SUBJECT PAGE NO.

5.1 FASTENER TORQUE VALUES..... 5-1
5.2 SPECIFICATIONS: DRIVE..... 5-2
5.3 PRIMARY CHAINCASE COVER..... 5-3
5.4 DRIVE COMPONENTS..... 5-5
5.5 PRIMARY CHAINCASE HOUSING..... 5-10
5.6 CLUTCH..... 5-14
5.7 TRANSMISSION SPROCKET..... 5-18
5.8 DRIVE BELT..... 5-21

NOTES

FASTENER TORQUE VALUES IN THIS CHAPTER

The table below lists torque values for all fasteners presented in this chapter.

FASTENER	TORQUE VALUE		NOTES
Clutch diaphragm spring retainer bolts	70-100 **in-lbs**	7.9-11.3 Nm	5.6 CLUTCH, Clutch Pack Only
Clutch hub mainshaft nut	70-80 ft-lbs	94.9-108.5 Nm	5.4 DRIVE COMPONENTS, Installation
Compensating sprocket bolt, final torque	175 ft-lbs	237.3 Nm	5.4 DRIVE COMPONENTS, Installation
Compensating sprocket bolt, first torque	100 ft-lbs	135.6 Nm	5.4 DRIVE COMPONENTS, Installation/Loosen then final tighten
Primary chaincase sealing fasteners	26-28 ft-lbs	35.3-38.0 Nm	5.5 PRIMARY CHAINCASE HOUSING, Installation
Primary chain tensioner fasteners	21-24 ft-lbs	28.5-32.6 Nm	5.4 DRIVE COMPONENTS, Installation
Primary cover fasteners	12-13 ft-lbs	16.0-17.6 Nm	5.3 PRIMARY CHAINCASE COVER, Installation/Apply LOCTITE 243 MEDIUM STRENGTH THREADLOCKER AND SEALANT (blue).
Primary cover mass, Japanese models only	15-19 ft-lbs	20.3-25.6 Nm	5.3 PRIMARY CHAINCASE COVER, Installation/Apply two drops of LOCTITE 262 HIGH STRENGTH THREADLOCKER AND SEALANT (red)
Shift lever bolt	18-22 ft-lbs	24.4-29.8 Nm	5.3 PRIMARY CHAINCASE COVER, Installation
Transmission sprocket lockplate screws	90-120 **in-lbs**	10.2-13.6 Nm	5.7 TRANSMISSION SPROCKET, Installation/Lock patch, use 3-5 times
Transmission sprocket nut, final torque	35 ft-lbs	47.5 Nm	5.7 TRANSMISSION SPROCKET, Installation/plus 35-40 degrees
Transmission sprocket nut, final torque	35-40 degrees	35-40 degrees	5.7 TRANSMISSION SPROCKET, Installation/Do not loosen to align lockplate screws.
Transmission sprocket nut, initial torque	100 ft-lbs	135.6 Nm	5.7 TRANSMISSION SPROCKET, Installation/Right-hand threads, initial torque only, apply several drops of LOCTITE 271 HIGH STRENGTH THREADLOCKER (red) to last few threads.

SPECIFICATIONS

Table 5-1. Sprocket Specifications

SPROCKETS	NO. OF TEETH
	DOM/HDI
Compensating	34
Clutch	46
Transmission	32
Rear wheel: All But Japanese Market	66
Rear wheel: Japanese Market	64

Table 5-2. Clutch Specifications

CLUTCH	DESCRIPTION
Type	Wet-multiple disc
Clutch lever free play (after internal adjustment)	1/16-1/8 in (1.6-3.2 mm)

Table 5-3. Gear Specifications

GEAR	OVERALL GEAR RATIO	
	DOM/HDI	Japan
First (low)	9.311	9.029
Second	6.454	6.259
Third	4.793	4.648
Fourth	3.882	3.764
Fifth	3.307	3.207
Sixth (high)	2.790	2.706

NOTE

Overall gear ratios indicate number of engine revolutions required to drive rear wheel one revolution.

Table 5-4. Primary Chaincase Lubricant Refill Capacity

CONDITION	CAPACITY	
	fl oz	L
Wet	34	1.0
Dry *	38	1.1
* Quantity after complete disassembly.		

GENERAL

The primary chaincase is a sealed housing containing the primary chain, chain tensioner, clutch, engine compensating sprocket and alternator.

For information on primary chain lubrication, see 1.8 PRIMARY CHAINCASE LUBRICANT.

REMOVAL

⚠WARNING

To prevent accidental vehicle start-up, which could cause death or serious injury, disconnect negative (-) battery cable before proceeding. (00048a)

1. Disconnect negative battery cable.
2. Remove shift lever.
3. Drain primary chaincase. See 1.8 PRIMARY CHAINCASE LUBRICANT, Change Primary Chaincase Lubricant.
4. See Figure 5-1. Remove fasteners (1, 2). Remove primary chaincase cover.
5. Remove and discard cover gasket.

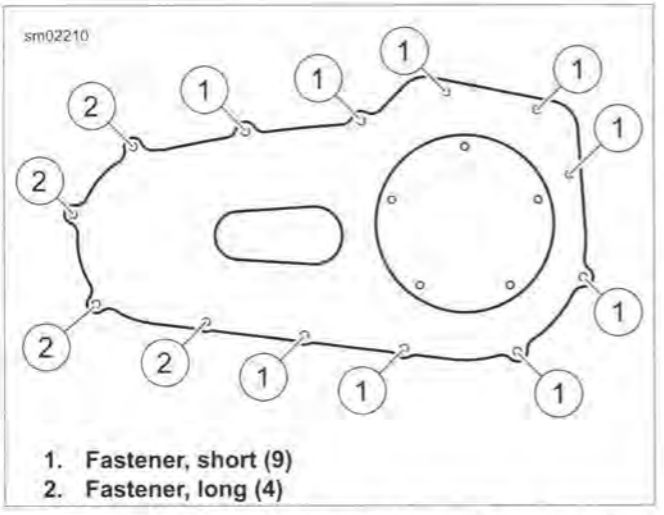

1. **Fastener, short (9)**
2. **Fastener, long (4)**

Figure 5-1. Primary Chaincase Cover and Fasteners

INSTALLATION

FASTENER	TORQUE VALUE	
Primary cover mass, Japanese models only	15-19 ft-lbs	20.3-25.6 Nm
Primary cover fasteners	12-13 ft-lbs	16.0-17.6 Nm
Shift lever bolt	18-22 ft-lbs	24.4-29.8 Nm

1. **Japanese models with forward controls:** See Figure 5-2. If primary cover mass (3) was removed from primary chaincase cover (2):
   a. Apply two drops of LOCTITE 262 HIGH STRENGTH THREADLOCKER AND SEALANT (red) to threads of cover mass.
   b. Install cover mass.
   c. Tighten to 15-19 ft-lbs (20.3-25.6 Nm).
2. **All models without forward controls:** Install **new** tower gasket (4).

NOTE

Always install a new gasket between primary cover and housing.

3. Install **new** cover gasket (1).
4. See Figure 5-1. Apply a drop of LOCTITE 243 MEDIUM STRENGTH THREADLOCKER AND SEALANT (blue) to each primary cover fastener (1, 2). Install in locations shown. Tighten finger-tight.
5. See Figure 5-3. Tighten primary cover fasteners to 12-13 ft-lbs (16.0-17.6 Nm) in the sequence shown.
6. See Figure 5-4. Install shift lever (3) with screw (1) and lockwasher (2). Tighten to 18-22 ft-lbs (24.4-29.8 Nm).
7. Fill primary chaincase. See 1.8 PRIMARY CHAINCASE LUBRICANT, Change Primary Chaincase Lubricant.
8. Connect negative battery cable.

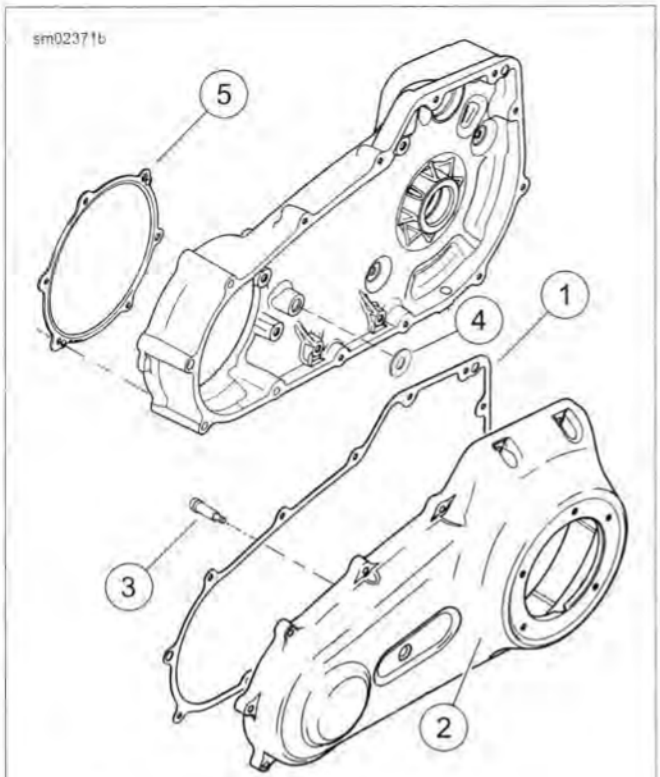

1. Cover gasket
2. Primary chaincase cover
3. Primary cover mass (models with forward controls, Japan only)
4. Gasket (Japan only)
5. Crankcase gasket

Figure 5-2. Primary Chaincase Cover Gasket

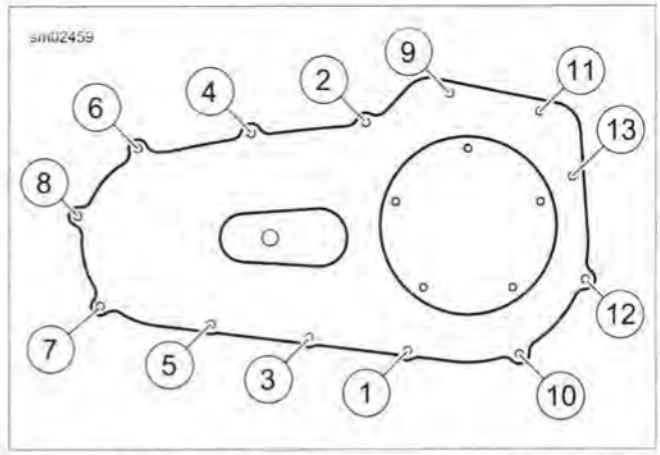

Figure 5-3. Primary Chaincase Cover Torque Sequence

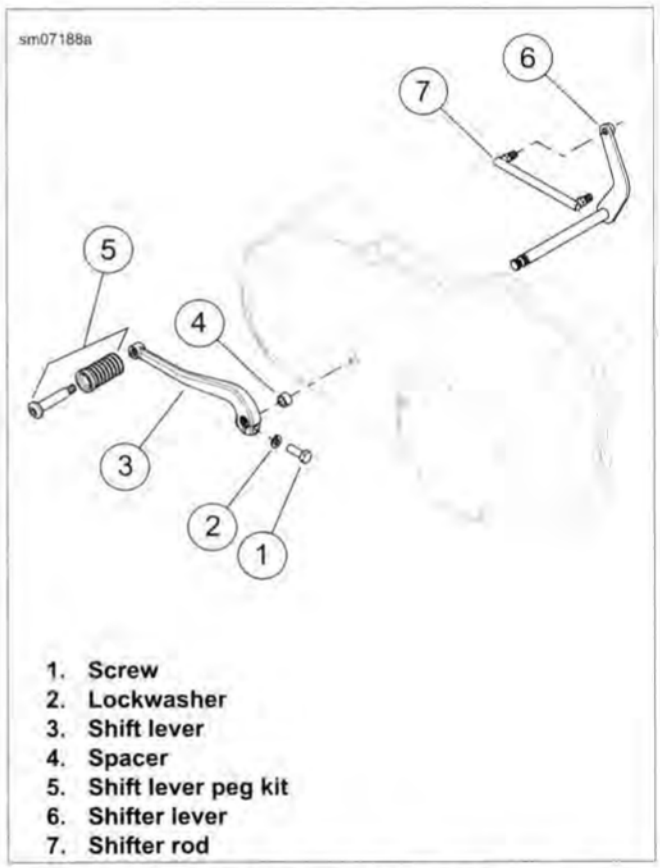

1. Screw
2. Lockwasher
3. Shift lever
4. Spacer
5. Shift lever peg kit
6. Shifter lever
7. Shifter rod

Figure 5-4. Mid-Control Shifter Linkage

REMOVAL

PART NUMBER	TOOL NAME
HD-48219	PRIMARY DRIVE LOCKING TOOL
OTC 6198	T70 SOCKET BIT
SNAP-ON STX70E	T70 SOCKET BIT

⚠WARNING

To prevent accidental vehicle start-up, which could cause death or serious injury, disconnect negative (-) battery cable before proceeding. (00048a)

1. Disconnect negative battery cable.
2. Remove primary chaincase cover. See 5.3 PRIMARY CHAINCASE COVER, Removal.

NOTE

To remove the primary chain, remove compensating sprocket, clutch assembly and primary chain as an assembly.

3. See Figure 5-5. Install cable strap (2) as shown. Exposed portion below cover indicates need for removal before cover installation.
4. See Figure 5-6. Remove chain tensioner fasteners (2). Remove chain tensioner (1).
5. Mark one of the links of the primary chain. Maintaining the original direction of rotation during assembly may prolong service life.
6. See Figure 5-7. Loosen locknut (3).

⚠WARNING

Wear safety glasses or goggles when removing or installing retaining rings. Retaining rings can slip from the pliers and could be propelled with enough force to cause serious eye injury. (00312a)

7. Remove retaining ring (1) and release plate (2).

NOTE

The mainshaft nut has left-hand threads.

8. See Figure 5-8. Place the PRIMARY DRIVE LOCKING TOOL (Part No. HD-48219) between engine and clutch sprockets as shown.
9. Rotate clutch hub mainshaft nut (4) clockwise to remove.
10. See Figure 5-9. Place the primary drive locking tool between the teeth of the engine and clutch sprockets as shown.

NOTE

The compensating sprocket bolt is a T70 drive. Use T70 SOCKET BIT (Part No. Snap-on STX70E), T70 SOCKET BIT (Part No. OTC 6198) or equivalent.

11. Rotate compensating sprocket bolt (1) counterclockwise to remove.
12. See Figure 5-10. Remove bolt (10), retainer (9), thrust bearing (8) and thrust washers (7).
13. Inspect thrust bearing and thrust washers for damage.
14. Clean sprocket retainer (9). Verify that oil holes are clear.
15. Remove clutch assembly, primary chain and compensating sprocket assembly as a single assembly.

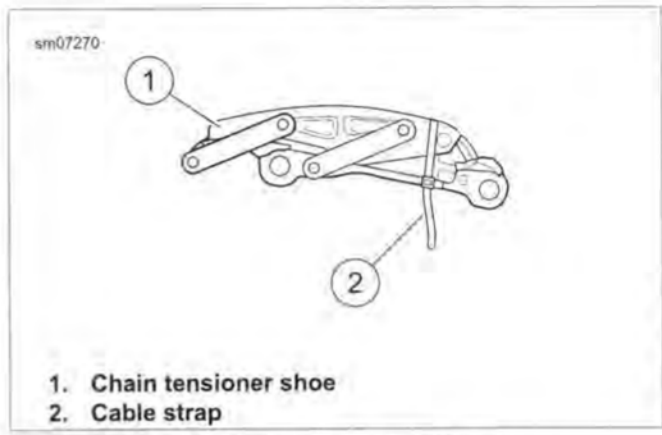

1. **Chain tensioner shoe**
2. **Cable strap**

Figure 5-5. Securing Chain Tensioner

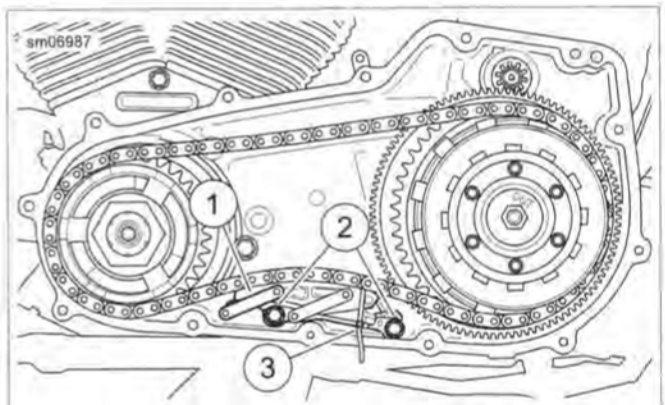

1. **Chain tensioner**
2. **Chain tensioner fasteners**
3. **Cable strap**

Figure 5-6. Chain Tensioner

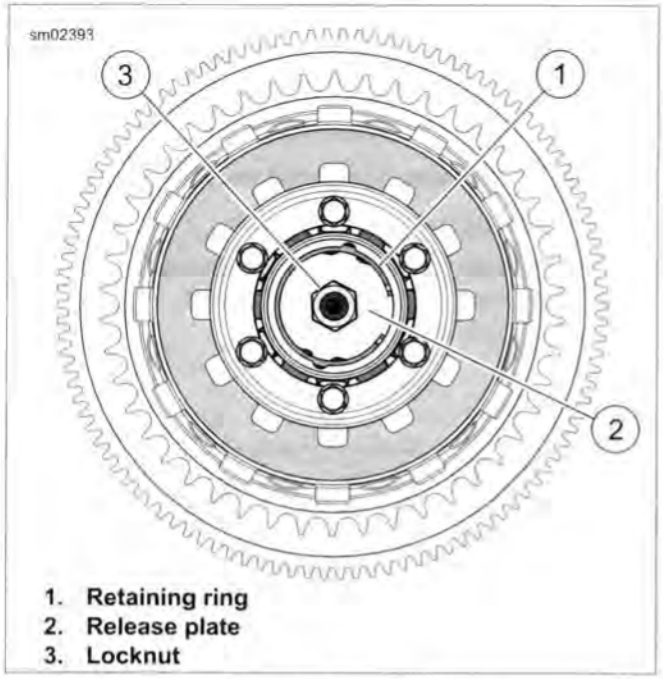

1. Retaining ring
2. Release plate
3. Locknut

Figure 5-7. Clutch

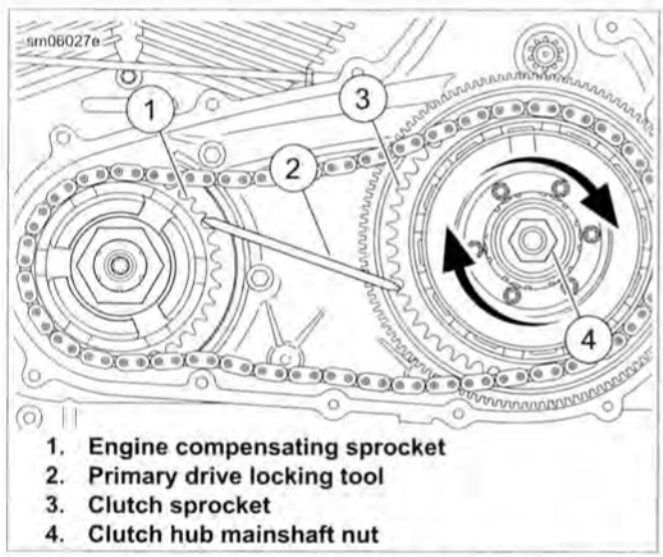

1. Engine compensating sprocket
2. Primary drive locking tool
3. Clutch sprocket
4. Clutch hub mainshaft nut

Figure 5-8. Removing Clutch Hub Mainshaft Nut

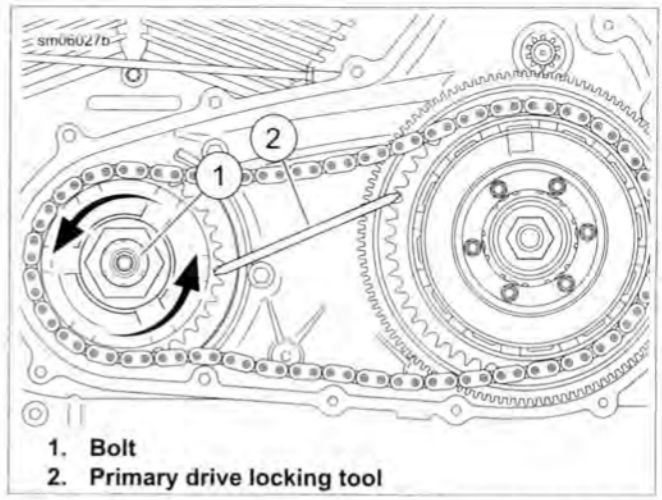

1. Bolt
2. Primary drive locking tool

Figure 5-9. Removing Engine Compensating Sprocket Bolt

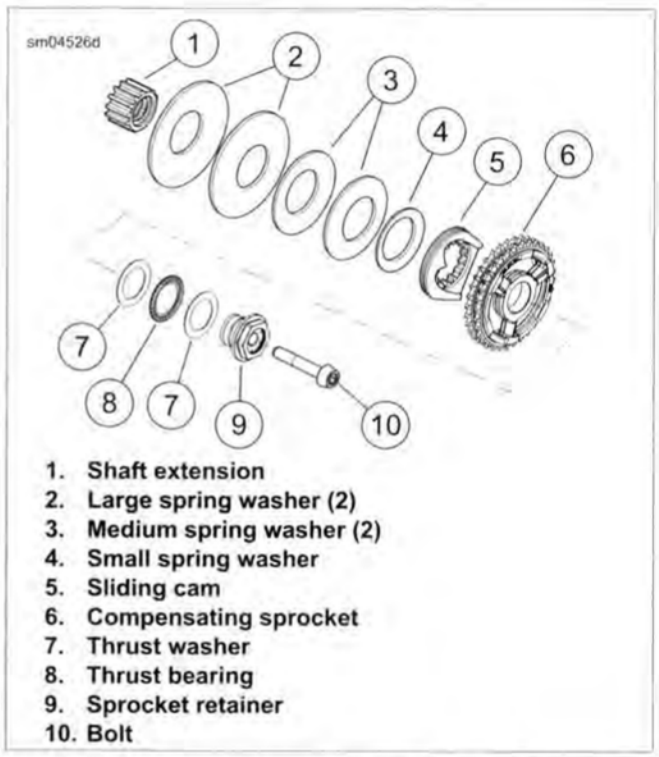

1. Shaft extension
2. Large spring washer (2)
3. Medium spring washer (2)
4. Small spring washer
5. Sliding cam
6. Compensating sprocket
7. Thrust washer
8. Thrust bearing
9. Sprocket retainer
10. Bolt

Figure 5-10. Engine Compensating Sprocket Assembly

INSTALLATION

PART NUMBER	TOOL NAME
HD-48219	PRIMARY DRIVE LOCKING TOOL
OTC 6198	T70 SOCKET BIT
SNAP-ON STX70E	T70 SOCKET BIT

FASTENER	TORQUE VALUE	
Compensating sprocket bolt, first torque	100 ft-lbs	135.6 Nm
Compensating sprocket bolt, final torque	175 ft-lbs	237.3 Nm
Clutch hub mainshaft nut	70-80 ft-lbs	94.9-108.5 Nm
Primary chain tensioner fasteners	21-24 ft-lbs	28.5-32.6 Nm

NOTES

- *Install the primary chain, compensating sprocket and clutch as a single unit.*
- *The O-ring inside the shaft extension is for manufacturing assembly only and has no replacement part.*

1. See Figure 5-10. Apply a thin layer of primary chaincase oil to the inner diameter of the compensating sprocket (6) and the splines of shaft extension (1). Install shaft extension.

NOTE

Outer diameter of spring washers must contact each other.

2. Install large spring washers (2) and medium spring washers (3).
3. Install small spring washer (4) so outer diameter contacts sliding cam (5).
4. Install primary chain, compensating sprocket and clutch as an assembly.
5. Lightly lubricate thrust bearing (8). Install thrust washers (7), bearing (8), retainer (9) and **new** bolt (10). Hand-tighten.

NOTE

Clutch hub mainshaft nut has left-hand threads.

6. Clean and prime threads of clutch hub mainshaft nut. Apply two drops of LOCTITE 262 HIGH STRENGTH THREADLOCKER AND SEALANT (red) to the threads. Start nut onto mainshaft. Hand-tighten.
7. See Figure 5-12. Place the PRIMARY DRIVE LOCKING TOOL (Part No. HD-48219) between the engine and clutch sprockets as shown.

NOTE

The compensating sprocket bolt is a T70 drive. Use T70 SOCKET BIT (Part No. Snap-on STX70E), T70 SOCKET BIT (Part No. OTC 6198) or equivalent.

8. Tighten compensating sprocket bolt (1) to 100 ft-lbs (135.6 Nm).
9. Loosen one-half turn.
10. Final tighten to 175 ft-lbs (237.3 Nm).
11. See Figure 5-13. Install the PRIMARY DRIVE LOCKING TOOL (Part No. HD-48219) between the engine and clutch sprockets as shown.
12. Tighten clutch hub mainshaft nut (2) to 70-80 ft-lbs (94.9-108.5 Nm). Remove primary drive locking tool.
13. See Figure 5-14. Install release plate (2) with locknut (3) and adjuster screw into clutch hub bore. The word "OUT" stamped on the release plate faces out.

⚠WARNING

Wear safety glasses or goggles when removing or installing retaining rings. Retaining rings can slip from the pliers and could be propelled with enough force to cause serious eye injury. (00312a)

14. Inspect retaining ring (1) and replace if necessary. Install retaining ring in clutch hub bore. Verify that retaining ring is completely seated in groove.
15. Adjust clutch. See 1.10 CLUTCH, Adjustment.

NOTE

Primary chain tensioner is non-repairable. If tensioner is worn or damaged, replace assembly.

16. Tensioner parts can be disassembled. If primary chain tensioner becomes disassembled, assemble in order shown:
    a. See Figure 5-15. Locate end of spring rod (2) on roll pin (3).
    b. See Figure 5-16. Slide wedge (2) of primary chain tensioner in direction of arrow until all travel is removed.
    c. See Figure 5-17. Push shoe (1) down until it contacts wedge. Keep tension on shoe so wedge stays in place.
    d. Insert cable strap (2) as shown to hold wedge in place. Verify that end of cable strap is located below primary chain tensioner. Cable strap hangs below primary cover gasket surface and serves as a reminder to remove before installing primary cover.

NOTE

Primary chain tensioner will not complete chain adjustment until vehicle is ridden. Test ride vehicle after tensioner removal/installation to verify proper adjustment.

17. See Figure 5-18. Install primary chain tensioner (1) with fasteners (2). Tighten to 21-24 ft-lbs (28.5-32.6 Nm). Remove cable strap.
18. Set preliminary chain tension:
    a. Check tension at the top span while pulling down on chain midway between sprockets. Correct tension is 0.500-0.625 in (13-14 mm)
    b. If chain is loose, move chain adjuster one notch. Check tension.
    c. Repeat steps until tension is within specification.

NOTES

- *Always install a **new** gasket between primary cover and housing. Not replacing this gasket may cause primary chaincase leaks.*
- *Verify that all debris is washed from the inside ribs.*

19. Install primary chaincase cover. Fill primary chaincase. See 5.3 PRIMARY CHAINCASE COVER, Installation.
20. Connect negative battery cable.

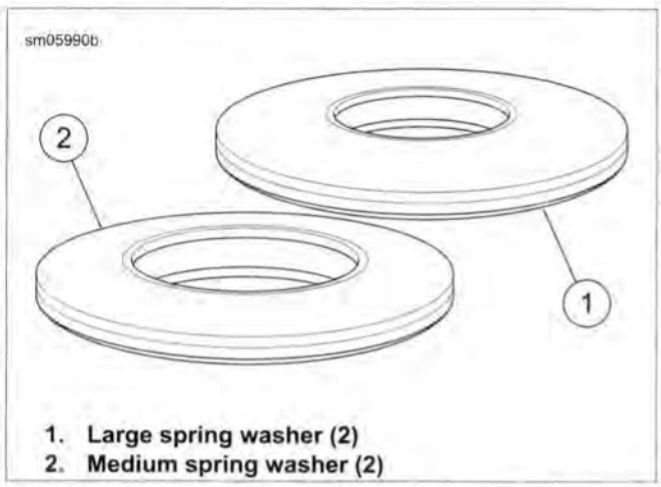

1. Large spring washer (2)
2. Medium spring washer (2)

Figure 5-11. Spring Washer Orientation

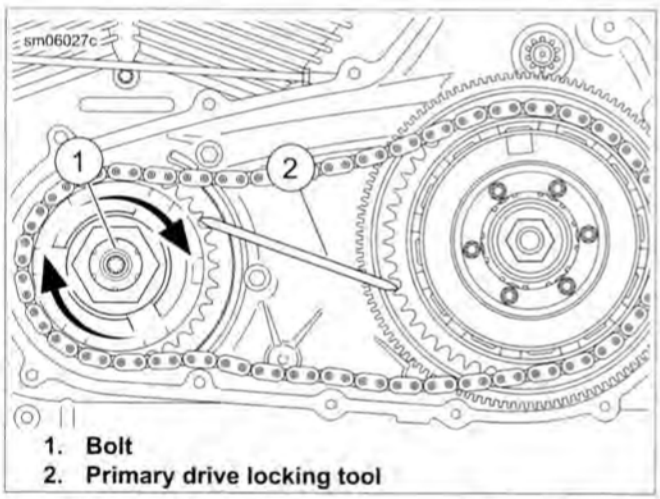

1. Bolt
2. Primary drive locking tool

Figure 5-12. Installing Engine Compensating Sprocket Bolt

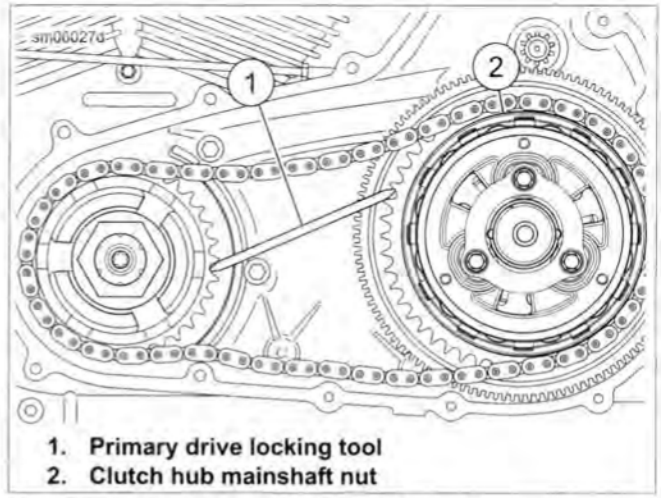

1. Primary drive locking tool
2. Clutch hub mainshaft nut

Figure 5-13. Installing Clutch Hub Mainshaft Nut

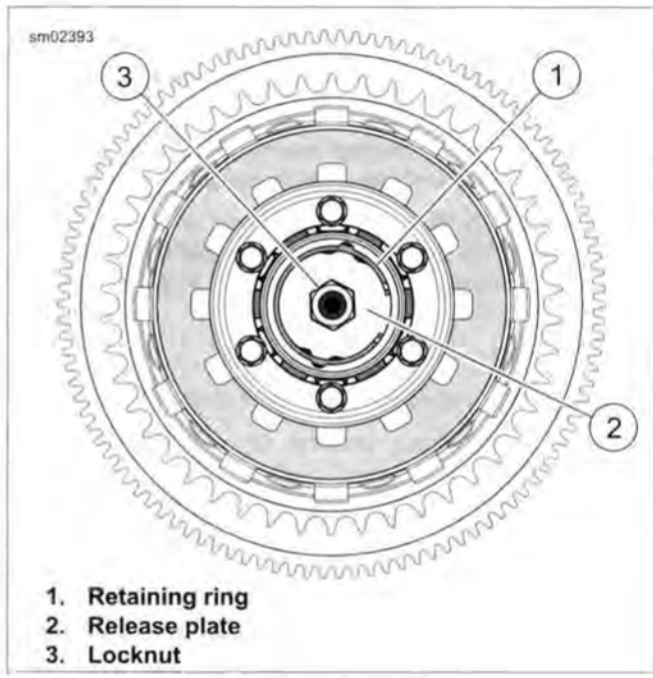

1. Retaining ring
2. Release plate
3. Locknut

Figure 5-14. Clutch

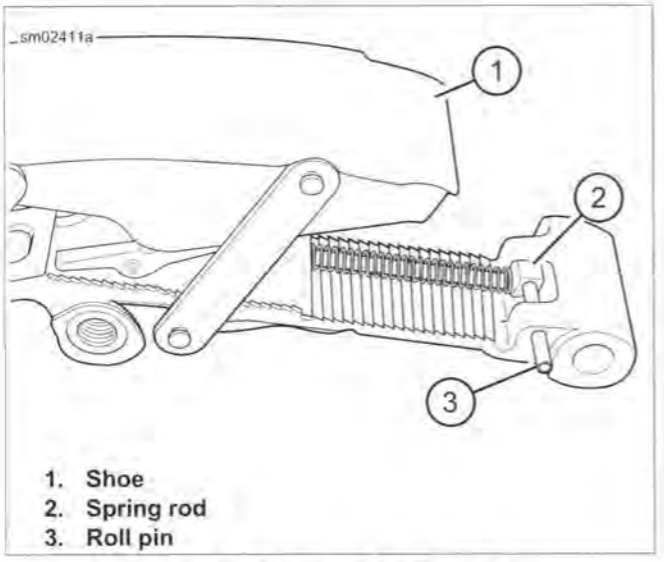

1. Shoe
2. Spring rod
3. Roll pin

Figure 5-15. Spring Rod Location

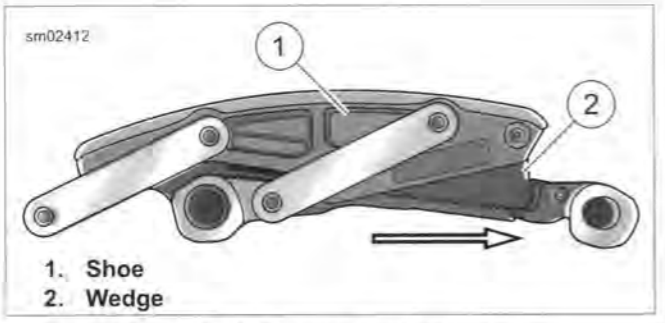

1. Shoe
2. Wedge

Figure 5-16. Primary Chain Tensioner

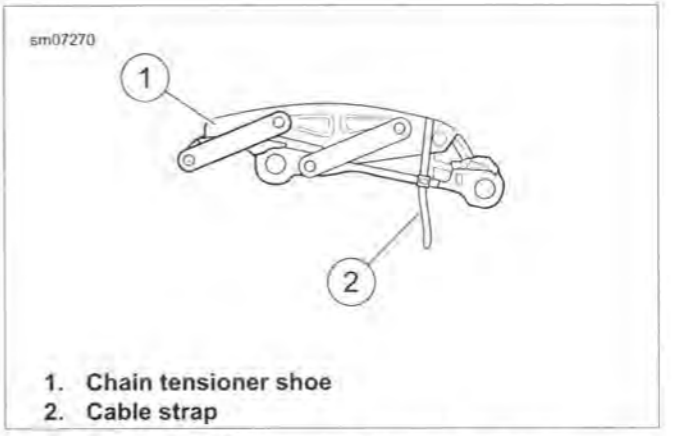

1. Chain tensioner shoe
2. Cable strap

Figure 5-17. Securing Chain Tensioner

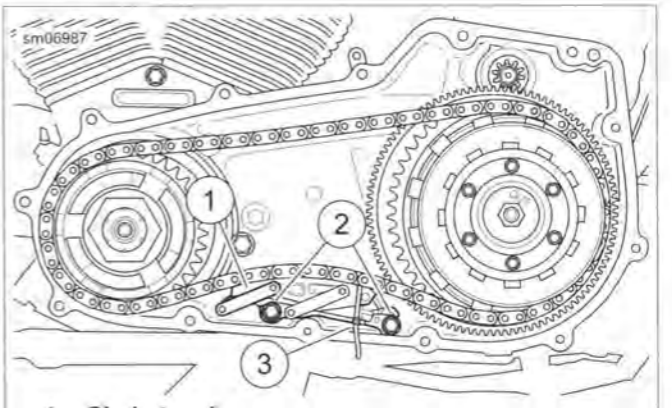

1. Chain tensioner
2. Chain tensioner fasteners
3. Cable strap

Figure 5-18. Chain Tensioner

REMOVAL

⚠WARNING

To prevent accidental vehicle start-up, which could cause death or serious injury, disconnect negative (-) battery cable before proceeding. (00048a)

1. Disconnect negative battery cable.
2. Remove primary chaincase cover. See 5.3 PRIMARY CHAINCASE COVER, Removal.
3. Remove starter. See 7.11 STARTER, Removal.
4. Remove primary chain, clutch and compensating sprocket. See 5.4 DRIVE COMPONENTS, Removal.
5. See Figure 5-19. Remove five sealing fasteners (5). Remove primary chaincase housing (6). Discard the crankcase gasket (7) and sealing fasteners.

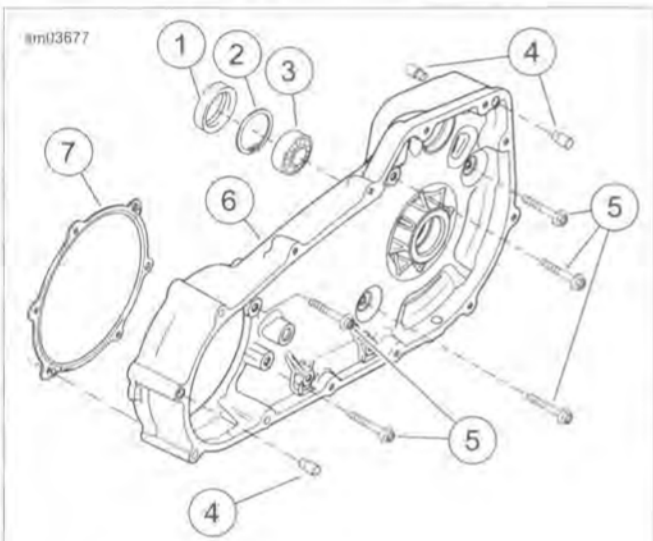

1. **Seal**
2. **Lock ring**
3. **Bearing**
4. **Dowel pin**
5. **Sealing fastener (5)**
6. **Primary chaincase housing**
7. **Crankcase gasket**

Figure 5-19. Primary Chaincase Housing

INSPECTION

1. Inspect primary chaincase for cracks or damaged gasket surface.
2. Check the mainshaft bearing.
3. Replace if bearing does not rotate freely. See 5.5 PRIMARY CHAINCASE HOUSING, Mainshaft Bearing and Seal.
4. Replace the oil seal. See 5.5 PRIMARY CHAINCASE HOUSING, Mainshaft Bearing and Seal.
5. **Models with forward controls:** Inspect shifter shaft bushing for wear. Replace if necessary. See 5.5 PRIMARY CHAINCASE HOUSING, Shifter Shaft Bushing.

MAINSHAFT BEARING AND SEAL

Removal

⚠WARNING

Wear safety glasses or goggles when removing or installing retaining rings. Retaining rings can slip from the pliers and could be propelled with enough force to cause serious eye injury. (00312a)

1. Remove seal. Use a seal remover or rolling head pry bar for best results.
2. See Figure 5-20. Remove retaining ring (1).

NOTE

Support the bearing support area on the transmission side of the primary chaincase while pressing bearing out.

3. Place inner primary chaincase in an arbor press with clutch side up.
4. Press out bearing from clutch side applying pressure to the outer race.

Installation

1. Inspect the bearing bore to verify that it is clean and smooth.

NOTE

Support the bearing support area on the clutch side of the primary chaincase while pressing bearing.

2. Place primary chaincase in arbor press with the transmission side up.
3. Apply a thin film of oil to outer diameter of bearing.
4. Applying pressure to the outer race, press **new** bearing letter side up until it makes solid contact with the bearing support area.
5. See Figure 5-20. Retaining ring (1) must be oriented as shown to prevent blocking of oil passage (2). Install retaining ring. Verify that the ring is fully seated in the groove.

NOTES

- *The garter spring side of the oil seal is also identified by the words "OIL SIDE."*
- *Install oil seal with a seal driver that presses only against outer rim of oil seal, NOT against the inner area.*
- ***Minimum allowable depth:** Oil seal case is flush with machined surface of primary housing.*
- ***Maximum allowable depth:** Oil seal case contacts retaining ring.*

6. Install mainshaft oil seal:
   a. Lubricate the OD of the **new** seal with SCREAMIN' EAGLE ASSEMBLY LUBE. Place over bore with the lip garter spring side (stamped "OIL SIDE") facing toward the bearing.
   b. Press the seal into bore until outer edge of seal is flush with machined surface of inner primary housing.
7. Lubricate the bearing and seal lip with multi-purpose grease or SCREAMIN' EAGLE ASSEMBLY LUBE.

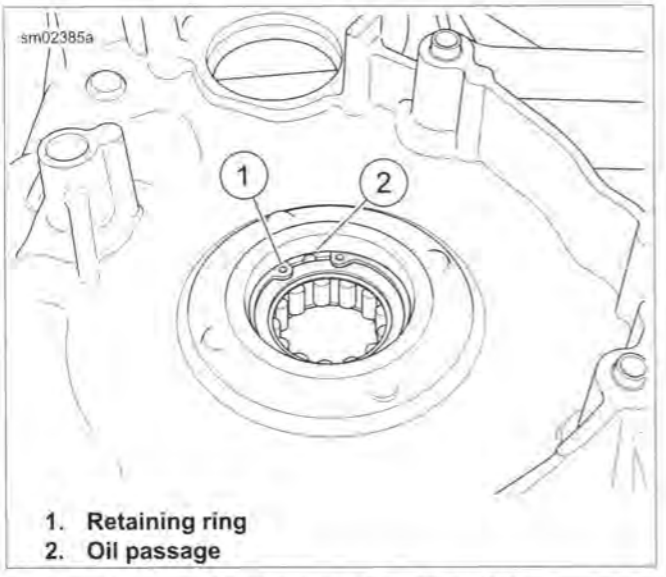

1. **Retaining ring**
2. **Oil passage**

Figure 5-20. Retaining Ring Orientation

MAINSHAFT BEARING INNER RACE

PART NUMBER	TOOL NAME
HD-34902-C	MAINSHAFT BEARING INNER RACE REMOVER/INSTALLER

Removal

NOTE

Bearing outer race installation requires properly aligned bearing inner race. Use the recommended tool, MAINSHAFT BEARING INNER RACE REMOVER/INSTALLER (Part No. HD-34902-C).

1. See Figure 5-21. Install end cap (2) into end of mainshaft.
2. Position puller (3) around mainshaft, under bearing inner race.
3. Turn forcing screw (4) clockwise while holding puller to remove bearing.

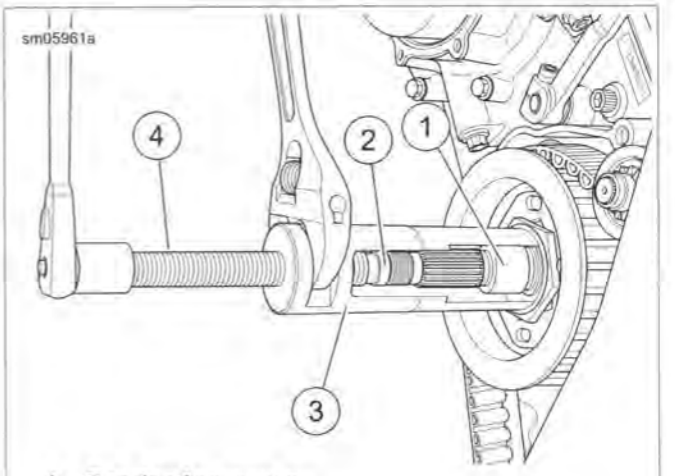

1. **Bearing inner race**
2. **End cap**
3. **Puller**
4. **Forcing screw**

Figure 5-21. Pulling Mainshaft Inner Bearing Race

Installation

1. See Figure 5-22. Slide bearing inner race (1) onto mainshaft.

NOTE

Extension shaft has left-hand threads.

2. Install extension shaft (2) onto end of mainshaft.
3. Position installer sleeve (4) over extension shaft and against bearing inner race. Apply graphite lubricant to threads of extension shaft.
4. Place two washers (5) over threaded portion of extension shaft and install nut.
5. Tighten nut (6) while holding extension shaft stationary with wrench on flats (3) at end of screw threads. Press race onto shaft until edge of race contacts step on shaft.
6. Lubricate race with SCREAMIN' EAGLE ASSEMBLY LUBE.

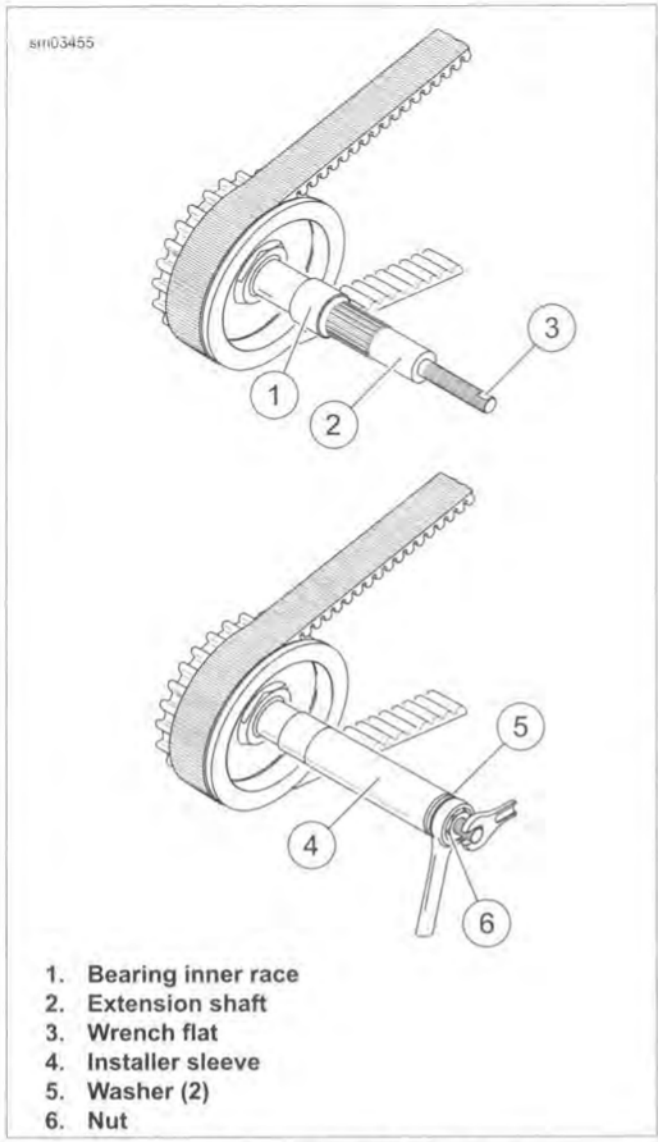

1. **Bearing inner race**
2. **Extension shaft**
3. **Wrench flat**
4. **Installer sleeve**
5. **Washer (2)**
6. **Nut**

Figure 5-22. Installing Bearing Race

SHIFTER SHAFT BUSHING

1. See Figure 5-23. Press out old bushing from clutch side of housing. Inspect the bushing bore to verify that it is clean and smooth.
2. Press **new** bushing into bore from transmission side of housing. Installed bushing must be flush to 0.020 in (0.51 mm) below edge of bore.

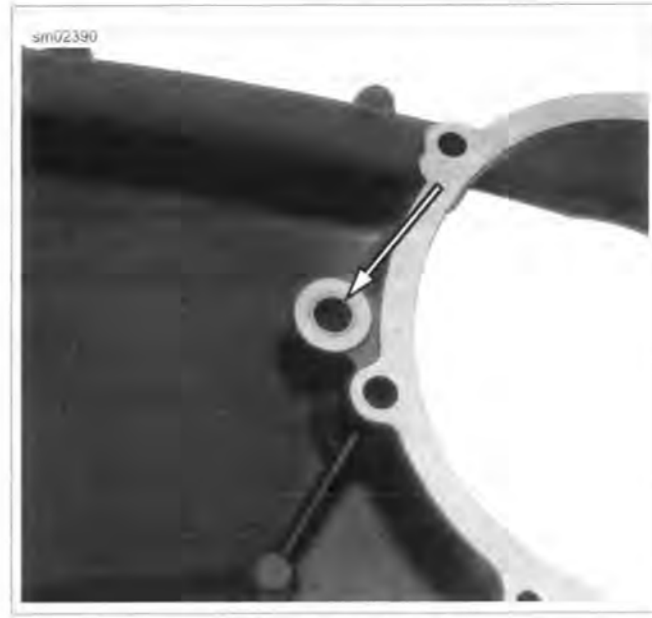

Figure 5-23. Shifter Shaft Bushing

INSTALLATION

FASTENER	TORQUE VALUE	
Primary chaincase sealing fasteners	26-28 ft-lbs	35.3-38.0 Nm

NOTE

Cover mainshaft clutch hub splines with tape to prevent the splines from damaging the primary housing inner oil seal.

1. Verify pivot shaft torque. See 2.23 REAR FORK, Installation.

NOTE

See Figure 5-24. Dowels (1) in crankcase gasket (2) must engage holes in crankcase.

2. See Figure 5-25. Position gasket on gasket surface (2). Verify dowels in gasket engage dowel holes (3).
3. Spread a thin film of oil on mainshaft oil seal lip and rubber portion of crankcase gasket.
4. Install chaincase. Avoid damaging mainshaft seal during installation.
5. See Figure 5-26. Install **new** sealing fasteners.
6. See Figure 5-27. Tighten in sequence shown to 26-28 ft-lbs (35.3-38.0 Nm).
7. Install the primary chain, clutch, compensating sprocket and chain tensioner. See 5.4 DRIVE COMPONENTS, Installation.
8. Install starter. See 7.11 STARTER, Installation.

NOTE

*Always install a **new** gasket between primary cover and housing.*

9. Install primary chaincase cover and **new** gasket. Fill primary chaincase. See 5.3 PRIMARY CHAINCASE COVER, Installation.
10. Adjust drive belt deflection.

11. Connect negative battery cable.

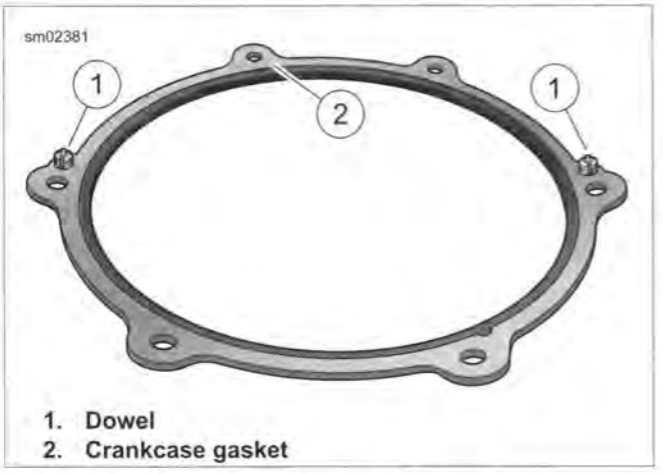

1. Dowel
2. Crankcase gasket

Figure 5-24. Crankcase Gasket

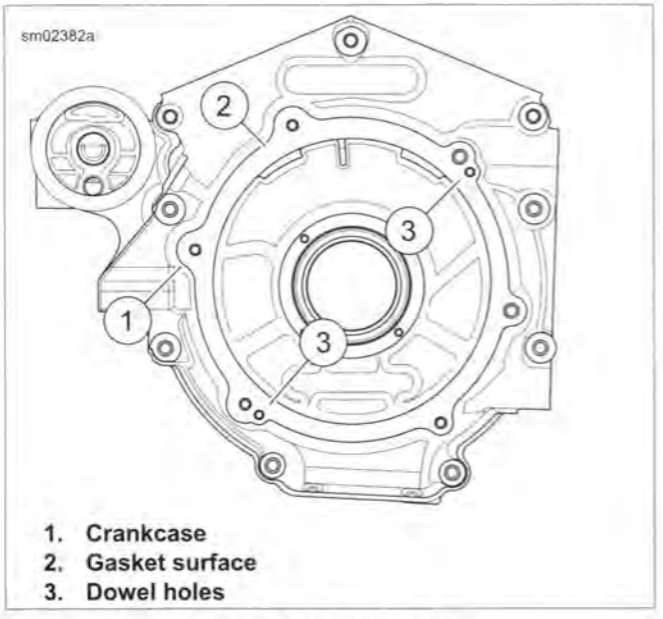

1. Crankcase
2. Gasket surface
3. Dowel holes

Figure 5-25. Crankcase

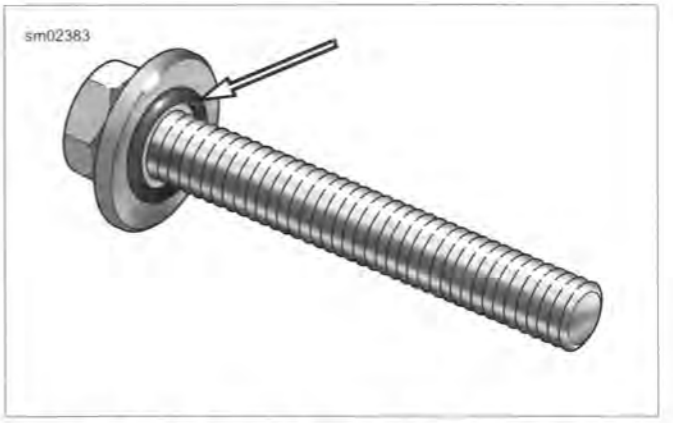

Figure 5-26. Primary Chaincase Sealing Fastener

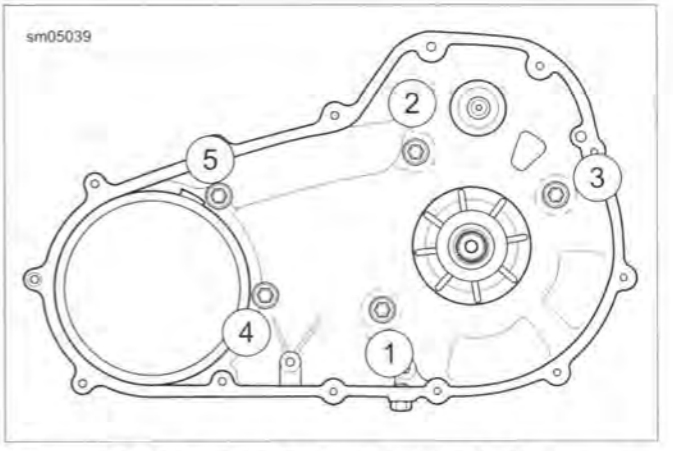

Figure 5-27. Sealing Fastener Tightening Sequence

REMOVAL AND INSTALLATION

To remove the clutch without disassembly or for installation instructions, see 5.4 DRIVE COMPONENTS, Removal.

CLUTCH PACK ONLY

FASTENER	TORQUE VALUE	
Clutch diaphragm spring retainer bolts	70-100 **in-lbs**	7.9-11.3 Nm

Partial Disassembly

NOTE

This procedure can be performed on the motorcycle without removing the clutch shell or hub.

1. Remove primary chaincase cover. See 5.3 PRIMARY CHAINCASE COVER, Removal.
2. See Figure 5-28. Remove six bolts (1) (metric) to release diaphragm spring retainer (2) from clutch hub. Loosen each bolt gradually in a crosswise pattern.
3. Remove diaphragm spring retainer, diaphragm spring (3) and pressure plate (4) from clutch hub.
4. Remove friction plates (5, 7), steel plates (6), damper spring (8) and damper spring seat (9) from clutch hub (11).

Cleaning And Inspection

⚠WARNING

Compressed air can pierce the skin and flying debris from compressed air could cause serious eye injury. Wear safety glasses when working with compressed air. Never use your hand to check for air leaks or to determine air flow rates. (00061a)

1. Wash all parts in cleaning solvent, except for friction plates and bearing, if removed. Dry parts with low-pressure, compressed air.
2. Check **friction plates**:
   a. Use compressed air to remove all lubricant from the friction plates. Do not wipe off with a rag.
   b. Measure the thickness of each friction plate.
   c. If the thickness of any plate is less than 0.143 in (3.62 mm), replace with an entirely **new** set.
   d. Look for worn or damaged fiber surface material (both sides).

NOTE

*Replace all nine friction plates with an entirely **new** set if any individual plate shows evidence of wear or damage.*

3. Check the **steel plates**:
   a. Discard any plate that is grooved or bluish in color. Blue plates are likely warped or distorted.
   b. Check each plate for distortion. Lay the plate on a precision flat surface. Insert a feeler gauge between the plate and the flat surface in several places. Replace any steel plate that is warped more than 0.006 in (0.15 mm).
4. Hold the clutch hub and rotate the clutch shell to check bearing for smooth operation. Replace the bearing if it runs rough, binds or has any end play.
5. Inspect the primary chain sprocket and the starter ring gear on the clutch shell. Replace the clutch shell if worn or damaged.
6. Check the slots that mate with the clutch plates on both the clutch shell and hub. Replace if slots are worn or damaged.

NOTE

Springs are identified by a dab of paint on one face. See the parts catalog to verify that the correct spring is installed.

7. Check the diaphragm spring and diaphragm spring retainer for cracks or bent tabs. Replace part if either condition exists.

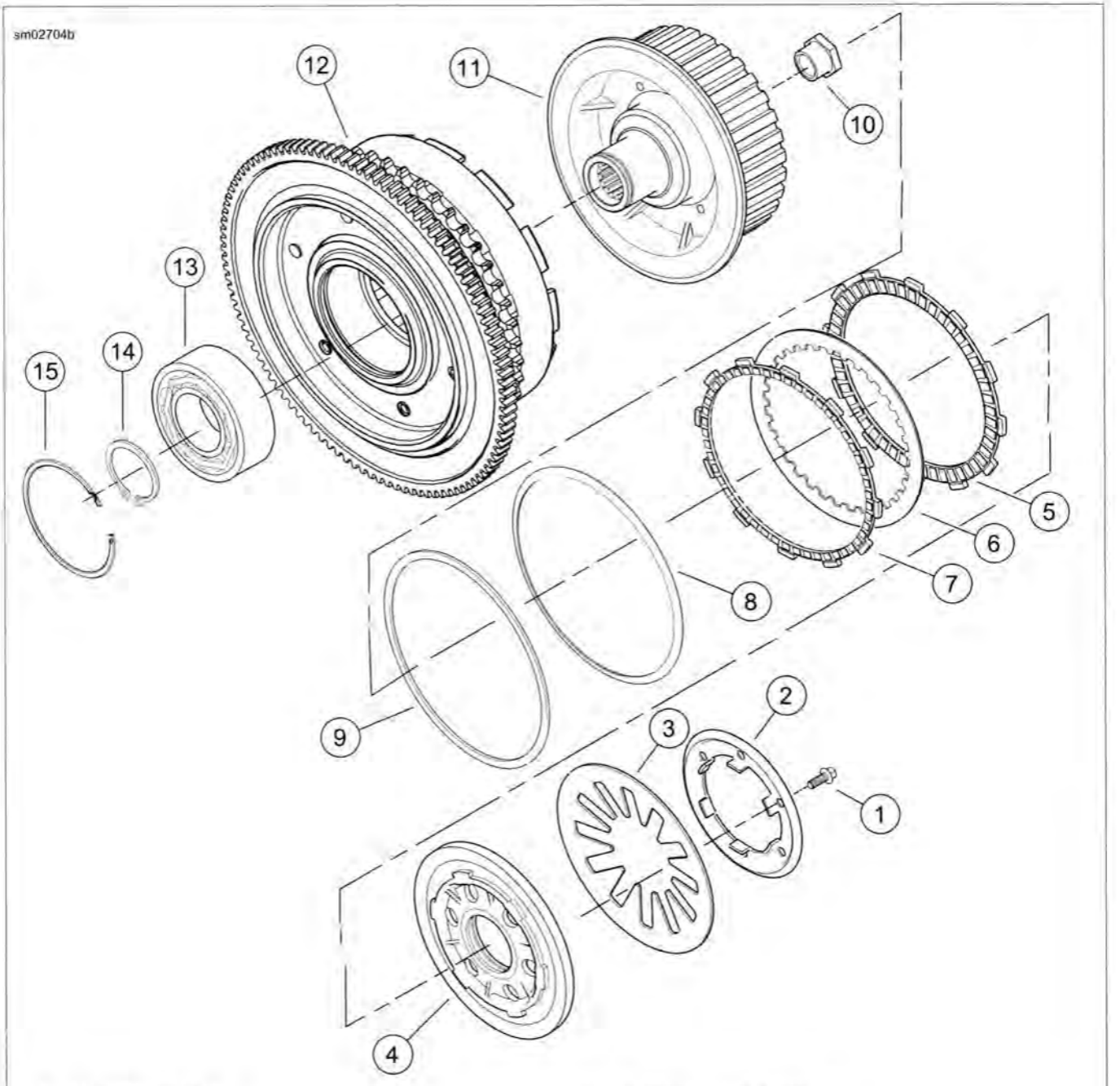

1. **Bolt (6) (metric)**
2. **Diaphragm spring retainer**
3. **Diaphragm spring**
4. **Pressure plate**
5. **Friction plate (9)**
6. **Steel plate (8)**
7. **Narrow friction plate**
8. **Damper spring**
9. **Damper spring seat**
10. **Mainshaft nut (metric)**
11. **Clutch hub**
12. **Clutch shell**
13. **Bearing**
14. **Retaining ring**
15. **Retaining ring**

Figure 5-28. Clutch Shell Assembly

Assembly

NOTE

Submerge and soak all friction plates in primary chaincase lubricant for at least 5 minutes.

1. See Figure 5-30. Install the narrow friction plate on the clutch hub.
2. See Figure 5-28. Install damper spring seat (9) on clutch hub (11). It must sit inboard of narrow friction plate (7).

NOTE

See Figure 5-29. Note damper spring (4) orientation to damper spring seat (3).

3. See Figure 5-28. Install damper spring (8) on clutch hub with the concave side facing away from damper spring seat.
4. Install a steel plate (6) with round edge outward, then a friction plate (5) on the clutch hub. Install seven remaining sets in the same manner, alternating between steel plates and friction plates.
5. Install pressure plate (4) on clutch hub, aligning holes in plate with threaded bosses on hub.
6. Seal diaphragm spring (3) in recess of pressure plate with the concave side inward.
7. Align holes in diaphragm spring retainer (2) with threaded bosses on clutch hub. Tabs on spring retainer contact flats on inboard side of bosses.
8. Install six bolts (1) (metric) to secure diaphragm spring retainer to clutch hub. Alternately tighten to 70-100 **in-lbs** (7.9-11.3 Nm).

NOTE

*Always install a **new** gasket between primary cover and housing.*

9. Install primary chaincase cover. Fill primary chaincase. See 5.3 PRIMARY CHAINCASE COVER, Installation.

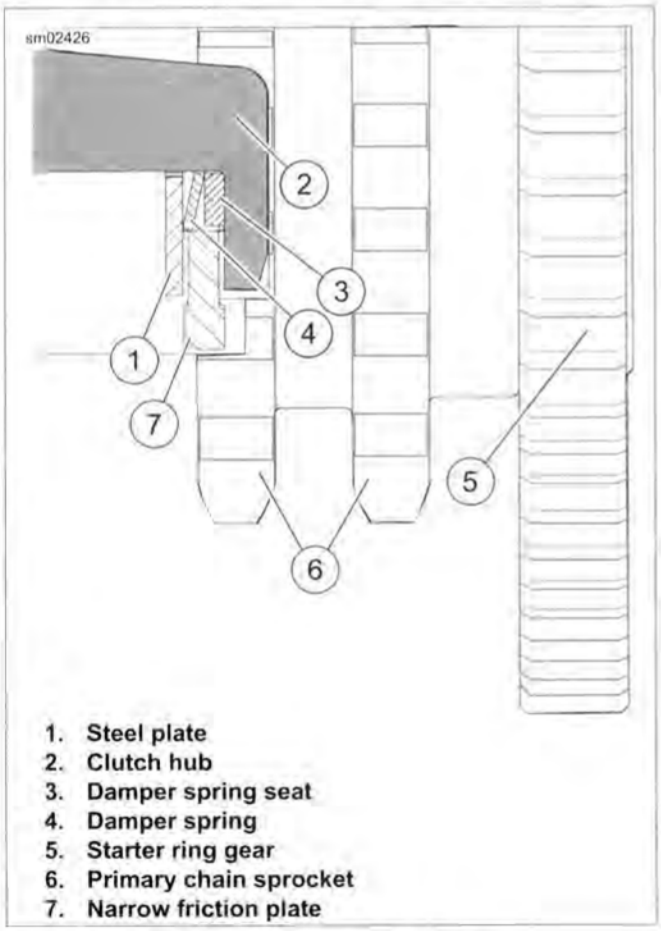

1. **Steel plate**
2. **Clutch hub**
3. **Damper spring seat**
4. **Damper spring**
5. **Starter ring gear**
6. **Primary chain sprocket**
7. **Narrow friction plate**

Figure 5-29. Clutch Stackup

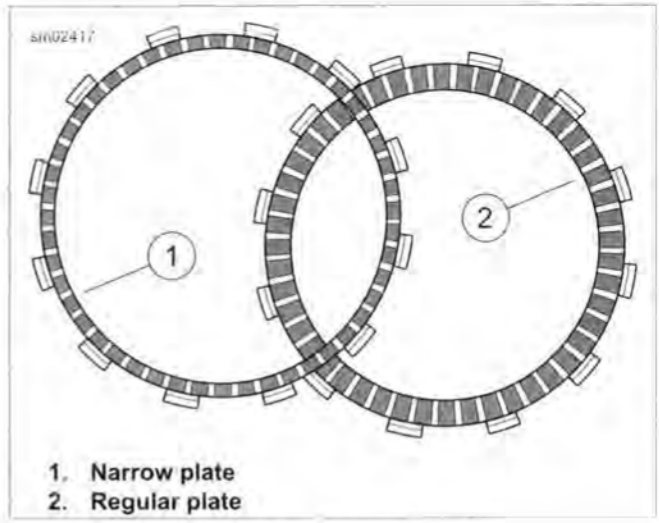

1. **Narrow plate**
2. **Regular plate**

Figure 5-30. Friction Plates

CLUTCH PACK AND BEARING

Complete Disassembly

1. Remove primary chaincase cover. See 5.3 PRIMARY CHAINCASE COVER, Removal.
2. Remove clutch assembly. See 5.4 DRIVE COMPONENTS, Removal.
3. Disassemble clutch pack. See 5.6 CLUTCH, Clutch Pack Only.

⚠WARNING

Wear safety glasses or goggles when removing or installing retaining rings. Retaining rings can slip from the pliers and could be propelled with enough force to cause serious eye injury. (00312a)

NOTE

Do not disassemble the clutch shell and hub assembly unless the bearing, hub or shell require replacement. Replace the bearing if disassembled.

4. See Figure 5-31. Remove clutch hub retaining ring (2).
5. See Figure 5-32. Support clutch shell in arbor press with ring gear side up. Press hub from bearing in clutch shell.
6. See Figure 5-31. Remove bearing retaining ring (1) from groove in clutch shell bore.
7. See Figure 5-33. Support clutch shell in arbor press with ring gear side is down. Use a suitable press plug to remove bearing.
8. Clean and inspect components. See 5.6 CLUTCH, Clutch Pack Only.

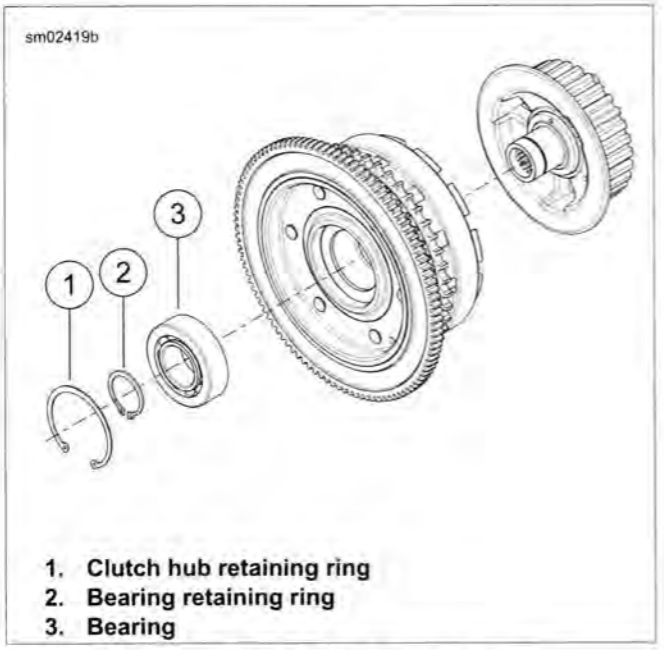

1. **Clutch hub retaining ring**
2. **Bearing retaining ring**
3. **Bearing**

Figure 5-31. Clutch Retaining Rings

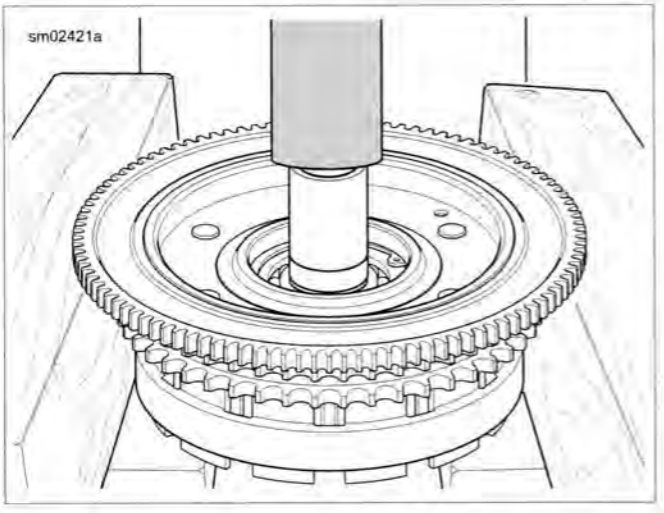

Figure 5-32. Pressing Clutch Hub From Bearing

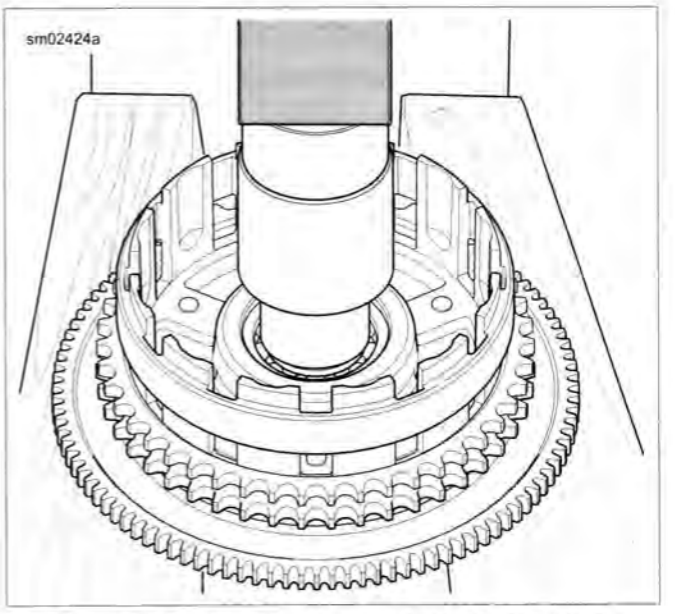

Figure 5-33. Pressing Bearing From Clutch Shell

Assembly

1. Place clutch shell in arbor press with ring gear side up. Support clutch shell bore on sprocket side to avoid damage to ears on clutch basket.
2. Using a suitable press plug, press against outer race until bearing contacts shoulder in clutch shell bore.

⚠WARNING

Wear safety glasses or goggles when removing or installing retaining rings. Retaining rings can slip from the pliers and could be propelled with enough force to cause serious eye injury. (00312a)

3. See Figure 5-31. Install bearing retaining ring (1) with flat side toward bearing.
4. Place clutch shell in arbor press with sprocket side up. Center the hub in bearing. Support bearing inner race with a sleeve on transmission side.
5. Press hub into bearing until shoulder contacts bearing inner race.
6. Turn assembly over. Install clutch hub retaining ring (2) in groove of clutch hub.
7. Assemble clutch components. See 5.6 CLUTCH, Clutch Pack Only.
8. Install clutch. See 5.4 DRIVE COMPONENTS, Installation.

NOTE

*Always install a **new** gasket between primary cover and housing.*

9. Install primary chaincase cover and **new** gasket. Fill primary chaincase. See 5.3 PRIMARY CHAINCASE COVER, Installation.

REMOVAL

PART NUMBER	TOOL NAME
HD-46282-A	FINAL DRIVE SPROCKET LOCKING TOOL
HD-47910	MAINSHAFT LOCKNUT WRENCH
HD-94660-2	PILOT

1. Remove primary chaincase housing. See 5.5 PRIMARY CHAINCASE HOUSING, Removal.
2. Remove debris deflector. See 2.20 BELT GUARD AND DEBRIS DEFLECTOR.

NOTE

Loosen both axle adjusters an equal number of turns to maintain wheel alignment.

3. See Figure 5-34. Remove retaining ring (3). Loosen rear axle nut (2). Loosen both axle adjusters (1) to release tension on the drive belt.

NOTE

Only remove sprocket nut while transmission is installed in frame. Failure to do so will damage transmission or transmission stand.

4. Remove transmission sprocket.
   a. See Figure 5-35. Remove both screws (1) and lockplate (2).
   b. See Figure 5-36. Secure sprocket using FINAL DRIVE SPROCKET LOCKING TOOL (Part No. HD-46282-A) (3). Final drive sprocket locking tool must rest against lower portion of rear fork pivot nut (2).

NOTE

*Sprocket nut has a **right-hand** thread.*

   c. Install PILOT (Part No. HD-94660-2) on mainshaft.
   d. Remove the sprocket nut using MAINSHAFT LOCKNUT WRENCH (Part No. HD-47910) (1).
5. Remove belt from sprocket as sprocket is removed.

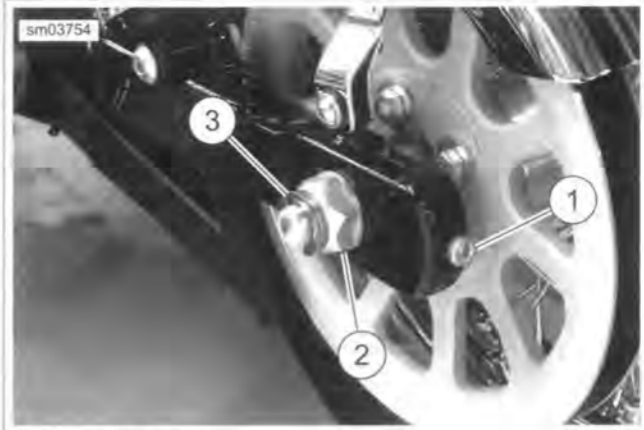

1. **Axle adjuster**
2. **Axle nut**
3. **Retaining ring**

Figure 5-34. Axle Adjusters (Left Side Shown)

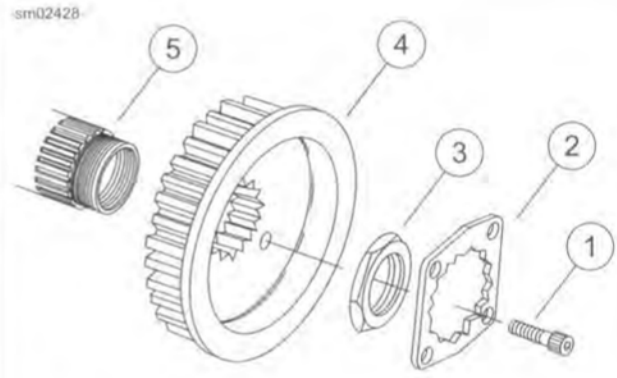

1. **Screw (2)**
2. **Lockplate**
3. **Sprocket nut**
4. **Sprocket**
5. **Main drive gear**

Figure 5-35. Transmission Sprocket

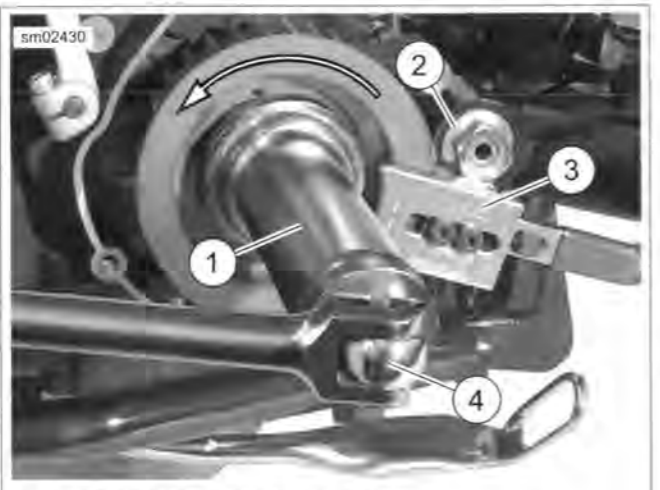

1. **Mainshaft locknut wrench**
2. **Rear fork pivot nut**
3. **Final drive sprocket locking tool**
4. **3/4 in breaker bar**

Figure 5-36. Sprocket Nut Removal (Typical)

CLEANING AND INSPECTION

1. Using a non-volatile cleaning solvent, clean sprocket of all grease and dirt.
2. Inspect belt and sprocket. See 1.11 DRIVE BELT AND SPROCKETS, Inspection.
3. Inspect both main drive gear and mainshaft seals. Replace if damaged.

INSTALLATION

PART NUMBER	TOOL NAME
HD-46282A	FINAL DRIVE SPROCKET LOCKING TOOL
HD-47910	MAINSHAFT LOCKNUT WRENCH
HD-94660-2	PILOT
SNAP-ON TA360	TORQUE ANGLE GAUGE

FASTENER	TORQUE VALUE	
Transmission sprocket nut, initial torque	100 ft-lbs	135.6 Nm
Transmission sprocket nut, final torque	35 ft-lbs	47.5 Nm
Transmission sprocket nut, final torque	35-40 degrees	35-40 degrees
Transmission sprocket lock-plate screws	90-120 **in-lbs**	10.2-13.6 Nm

NOTE

Install sprocket nut only while transmission is installed in frame. Failure to do so will damage to transmission or transmission stand.

1. Place transmission sprocket in position. Install the belt on the sprocket as the sprocket is installed.
2. If reusing the sprocket nut, apply LOCTITE 271 HIGH STRENGTH THREADLOCKER (red) to the threads of the sprocket nut.

NOTES

- *Never get oil on the threads of the sprocket nut or the integrity of the lock patch can be compromised.*
- *The transmission sprocket nut has **right-hand** threads. Turn the nut **clockwise** to install.*

3. See Figure 5-35. Apply a thin film of clean engine oil to the mating surfaces of the sprocket nut (3) and the sprocket (4). Install the sprocket nut until finger-tight.
4. See Figure 5-37. Lock transmission sprocket with the FINAL DRIVE SPROCKET LOCKING TOOL (Part No. HD-46282A) (2). The locking tool must rest against the rear fork pivot (3).
5. Install PILOT (Part No. HD-94660-2) on mainshaft.
6. Using MAINSHAFT LOCKNUT WRENCH (Part No. HD-47910), tighten sprocket nut to 100 ft-lbs (135.6 Nm) initial torque.
7. Loosen sprocket nut one full turn.
8. Tighten to 35 ft-lbs (47.5 Nm).

NOTE

See Figure 5-38. To determine proper angles during final tightening, scribe lines (3) or use TORQUE ANGLE GAUGE (Part No. SNAP-ON TA360) after the 35 ft-lbs (47.5 Nm) torque is applied.

9. Continue turning sprocket nut an extra 35-40 degrees (35-40 degrees)

NOTE

The lockplate has four screw holes and can be installed either side out. If the screw holes cannot be properly aligned, tighten the nut slightly to align. Do not exceed 45 degrees. Never loosen nut to align the screw holes.

10. Install lockplate over transmission sprocket nut with two lockplate holes aligned with tapped holes in sprocket.

NOTES

- ***New** screws have lock patches.*
- *Screws can be reused up to three times if LOCTITE 271 HIGH STRENGTH THREADLOCKER (red) is applied before installation.*
- *To confirm the lockplate security, install BOTH screws.*

11. See Figure 5-35. Install two screws (1) to secure lockplate (2) to sprocket (4). Tighten to 90-120 **in-lbs** (10.2-13.6 Nm).
12. Install primary chain assembly. See 5.4 DRIVE COMPONENTS.

NOTE

*Always install a **new** gasket between primary cover and housing.*

13. Install primary chaincase cover. Fill primary chaincase. See 5.3 PRIMARY CHAINCASE COVER.
14. Verify pivot shaft torque. See 2.23 REAR FORK.
15. Adjust drive belt deflection. See 1.11 DRIVE BELT AND SPROCKETS.

16. Verify vehicle alignment and tighten rear axle. See 2.9 VEHICLE ALIGNMENT.
17. Install debris deflector. See 2.20 BELT GUARD AND DEBRIS DEFLECTOR.

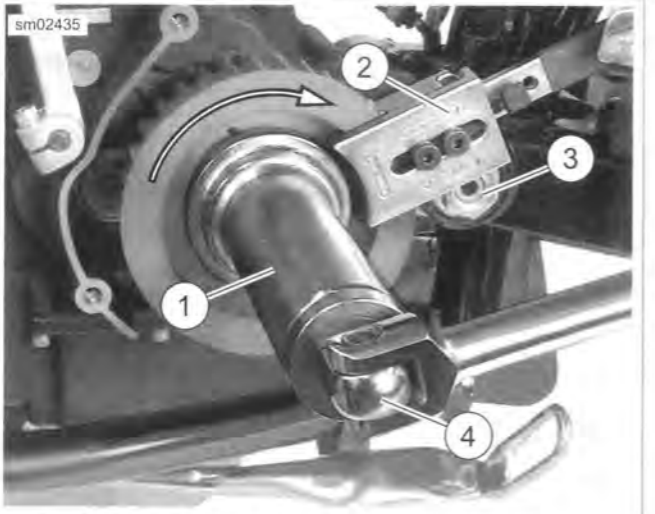

1. Mainshaft locknut wrench
2. Final drive sprocket locking tool
3. Rear fork pivot nut
4. Breaker bar

Figure 5-37. Sprocket Nut Installation (Typical)

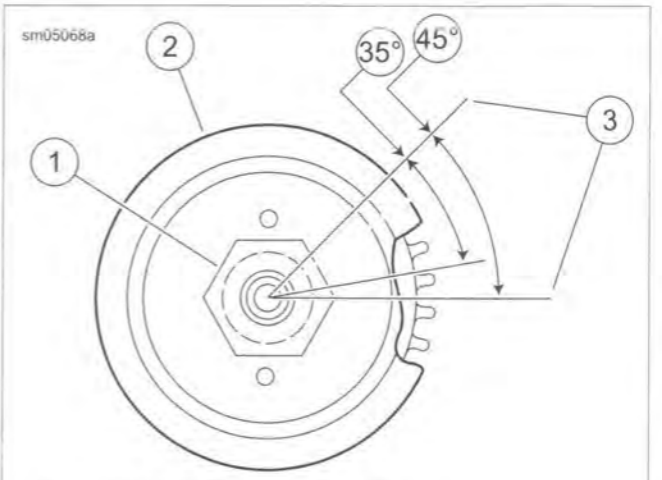

1. Transmission sprocket nut
2. Transmission sprocket
3. Scribed lines

Figure 5-38. Transmission Sprocket Nut Final Tightening

REMOVAL

1. Remove rear wheel. See 2.5 REAR WHEEL, Removal.
2. Remove primary chain, clutch, engine compensating sprocket and chain adjuster. See 5.4 DRIVE COMPONENTS.
3. Remove primary chaincase housing. See 5.5 PRIMARY CHAINCASE HOUSING, Removal.
4. Remove lower shock absorber fasteners, allow rear fork to rotate down. See 2.22 REAR SHOCK ABSORBERS.
5. Slip drive belt from transmission sprocket and rear fork.
6. Inspect belt and sprockets. See 1.11 DRIVE BELT AND SPROCKETS, Inspection.

INSTALLATION

⚠WARNING

Never bend belt forward into a loop smaller than the drive sprocket diameter. Never bend belt into a reverse loop. Over bending can damage belt resulting in premature failure, which could cause loss of control and death or serious injury. (00339a)

1. Install belt over transmission sprocket and rear fork.

NOTE

See Figure 5-39. Improper handling of belt during installation can affect belt durability.

2. Rotate rear fork up. Install lower shock absorber mounting fasteners. See 2.22 REAR SHOCK ABSORBERS, Installation.
3. Install primary chaincase housing. See 5.5 PRIMARY CHAINCASE HOUSING, Installation.

NOTE

Always install a new gasket between primary cover and housing.

4. Install primary chain assembly. See 5.4 DRIVE COMPONENTS.
5. Install primary chaincase cover. See 5.3 PRIMARY CHAINCASE COVER.
6. Fill primary chaincase. See 1.8 PRIMARY CHAINCASE LUBRICANT.
7. Install rear wheel. See 2.5 REAR WHEEL, Installation.
8. Align vehicle. See 2.9 VEHICLE ALIGNMENT.
9. Adjust drive belt deflection. See 1.11 DRIVE BELT AND SPROCKETS, Adjusting Belt Deflection.

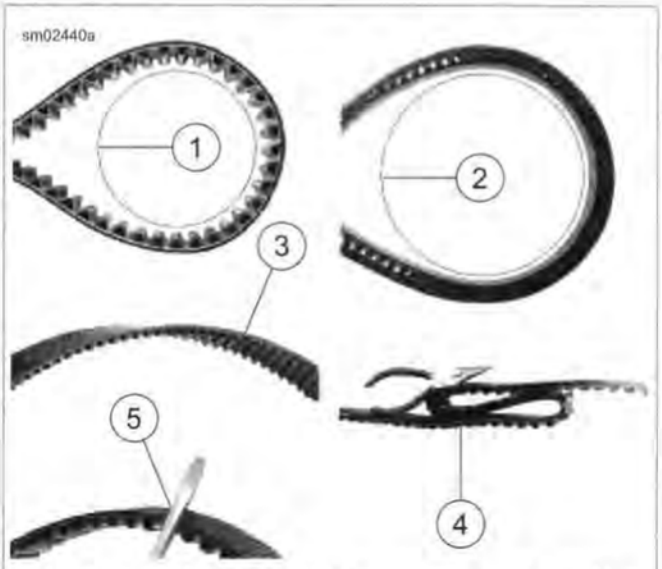

1. **Forward bend: 5 in (127 mm) minimum diameter**
2. **Reverse bend: 10 in (254 mm) minimum diameter**
3. **Do not twist**
4. **Do not crimp, pinch or kink**
5. **Do not pry**

Figure 5-39. Proper Drive Belt Handling

NOTES

SUBJECT PAGE NO.

6.1 FASTENER TORQUE VALUES..... 6-1
6.2 SPECIFICATIONS: TRANSMISSION..... 6-2
6.3 TRANSMISSION..... 6-4
6.4 SHIFTER LINKAGE..... 6-6
6.5 CLUTCH RELEASE COVER..... 6-7
6.6 TRANSMISSION ASSEMBLY..... 6-9
6.7 MAIN DRIVE GEAR AND BEARING..... 6-22
6.8 TRANSMISSION CASE..... 6-29

NOTES

FASTENER TORQUE VALUES IN THIS CHAPTER

The table below lists torque values for all fasteners presented in this chapter.

FASTENER	TORQUE VALUE		NOTES
Battery ground cable to transmission	66-114 **in-lbs**	7.5-12.9 Nm	6.8 TRANSMISSION CASE, Installation
Clutch cable fitting	90-120 **in-lbs**	10.2-13.6 Nm	6.5 CLUTCH RELEASE COVER, Assembly and Installation
Clutch release cover screws	132-156 **in-lbs**	14.9-17.6 Nm	6.5 CLUTCH RELEASE COVER, Assembly and Installation
Mainshaft/countershaft nuts	85-95 ft-lbs	115.3-128.8 Nm	6.6 TRANSMISSION ASSEMBLY, Assembly
Neutral switch	120-180 **in-lbs**	13.6-20.3 Nm	6.8 TRANSMISSION CASE, Installation
Oil spout fastener	84-132 **in-lbs**	9.5-14.9 Nm	6.6 TRANSMISSION ASSEMBLY, Installation
Shift drum detent arm fastener	120-150 **in-lbs**	13.6-17.0 Nm	6.6 TRANSMISSION ASSEMBLY, Assembly
Shift drum lock plate fasteners	57-63 **in-lbs**	6.4-7.1 Nm	6.6 TRANSMISSION ASSEMBLY, Assembly
Shifter linkage locknut	96-144 **in-lbs**	10.8-16.3 Nm	6.4 SHIFTER LINKAGE, Shifter Rod Adjustment
Shifter pawl centering screw	18-23 ft-lbs	24.4-31.2 Nm	6.8 TRANSMISSION CASE, Assembly
Shifter rod lever pinch screw, transmission lever	18-22 ft-lbs	24.4-29.8 Nm	6.8 TRANSMISSION CASE, Assembly
Shift lever screw	18-22 ft-lbs	24.4-29.8 Nm	6.4 SHIFTER LINKAGE, Shifter Rod Adjustment
Shift rod jamnut	80-120 **in-lbs**	9.0-13.6 Nm	6.4 SHIFTER LINKAGE, Shifter Rod Adjustment
Transmission bearing housing fasteners	23-25 ft-lbs	31.2-33.9 Nm	6.6 TRANSMISSION ASSEMBLY, Installation
Transmission drain plug	14-21 ft-lbs	19.0-28.5 Nm	6.6 TRANSMISSION ASSEMBLY, Installation
Transmission drain plug	14-21 ft-lbs	19.0-28.5 Nm	6.8 TRANSMISSION CASE, Installation
Transmission mounting bolts, final torque	34-39 ft-lbs	46.1-52.9 Nm	6.8 TRANSMISSION CASE, Installation
Transmission mounting bolts, initial torque	15 ft-lbs	20.3 Nm	6.8 TRANSMISSION CASE, Installation
Transmission top cover	90-120 **in-lbs**	10.2-13.6 Nm	6.6 TRANSMISSION ASSEMBLY, Installation
VSS fastener	100-120 **in-lbs**	11.3-13.6 Nm	6.8 TRANSMISSION CASE, Installation

SPECIFICATIONS

Table 6-1. Transmission Specifications

TRANSMISSION	DATA
Type	6-speed forward constant mesh
FORMULA+ TRANSMISSION AND PRIMARY CHAINCASE LUBRICANT	Part No. 99851-05 (qt)
SYN3 20W50 Oil	Part No. 99824-03/00QT (qt)
Capacity (dry)	32 oz. (946.4 ml)

Table 6-2. Transmission Gear Ratios

GEAR	GEAR RATIO
First (low)	3.34
Second	2.31
Third	1.72
Fourth	1.39
Fifth	1.19
Sixth (high)	1.00

NOTE

Final gear ratios indicate the number of mainshaft revolutions required to drive the output sprocket one revolution.

SERVICE WEAR LIMITS

Table 6-3. Main Drive Gear Specifications

MAIN DRIVE GEAR (sixth)	IN	MM
Bearing fit in transmission case (loose)	0.0003-0.0017	0.0076-0.043
Fit in bearing (press-fit)	0.001-0.003	0.025-0.076
End play	none	none

Table 6-4. Mainshaft Tolerance Specifications

MAINSHAFT TOLERANCE	IN	MM
Mainshaft runout	0.000-0.003	0.00-0.08
Mainshaft end play	none	none
Fifth gear end play (axial)	0.002-0.026	0.05-0.66
Fifth gear clearance (radial)	0.0004-0.0020	0.009-0.052
Main drive gear (sixth) fit	0.0009-0.0022	0.023-0.056

Table 6-5. Countershaft Tolerance Specifications

COUNTERSHAFT TOLERANCE	IN	MM
Countershaft runout	0.000-0.003	0.00-0.08
Countershaft end play	0.001-0.003	0.025-0.08
First gear end play (axial)	0.001-0.023	0.03-0.58
First gear clearance (radial)	0.0004-0.0020	0.010-0.052
Second gear end play (axial)	0.001-0.40	0.03-1.02
Second gear clearance (radial)	0.0004-0.0020	0.010-0.052
Third gear end play (axial)	0.001-0.042	0.03-1.07
Third gear clearance (radial)	0.0004-0.0020	0.010-0.052
Fourth gear end play (axial)	0.001-0.028	0.03-0.71
Fourth gear clearance (radial)	0.0004-0.0020	0.010-0.052

Table 6-6. Shifter Dog Clearance Specifications

SHIFTER DOG	IN	MM
First	0.013-0.121	0.33-3.07
Second	0.016-0.138	0.41-3.51
Third	0.010-0.125	0.25-3.17
Fourth	0.018-0.129	0.46-3.28
Fifth	0.007-0.117	0.18-2.97
Sixth	0.022-0.131	0.56-3.33

Table 6-7. Bearing Housing Bearing Specifications

BEARING HOUSING BEARING	IN	MM
Fit in bearing housing (tight)	0.0001-0.0014	0.0025-0.0356
Fit on countershaft (tight)	-0.0004	-0.010
Fit on countershaft (loose)	+0.0012	+0.030
Fit on mainshaft (tight)	-0.0004	-0.010
Fit on mainshaft (loose)	+0.0012	+0.030

Table 6-8. Shifter Fork Specifications

SHIFTER FORKS	IN	MM
Shifter fork to cam groove end play	0.004-0.012	0.102-0.305
Shifter fork to dog ring end play	0.004-0.016	0.102-0.4060
First and second gear shift fork pad thickness wear limit	0.258	6.55
Third and fourth gear shift fork pad thickness wear limit	0.198	5.03
Fifth and sixth gear shift fork pad thickness wear limit	0.258	6.55

POWER FLOW

See Figure 6-1. The 6-speed transmission consists of two parallel shafts supporting six gears each. The longer, or mainshaft (7), also supports the clutch and serves as the input shaft. The shorter shaft is called the countershaft (8).

Each gear on the mainshaft is in constant mesh with a corresponding gear on the countershaft. Each of these six pairs of gears makes up a different speed in the transmission.

The transmission gears are divided into two types, gears that rotate with the shaft, and gears that spin freely on the shaft. A gear that rotates with the shaft always meshes with a freewheeling gear. Also, three dog rings are able to slide sideways on the shaft. These dog rings are used to change transmission speeds. The dogs on the sides of dog rings engage dogs on adjacent freewheeling gears, transmitting power through the transmission.

Gear shifting is accomplished by three forks which fit into grooves machined into the dog rings that slide on the guide hubs. The position of the shifter forks is controlled by a drum-shaped shifter cam located in the transmission bearing housing.

Neutral

Power is introduced to the transmission through the clutch. In neutral, with the clutch engaged, the mainshaft first, second, third and fourth gears are rotating. No power is transferred to the countershaft since countershaft first, second, third and fourth gears are freewheeling gears.

First Gear

When the transmission is shifted into first gear, the dog ring between countershaft first and second, which rotates with the countershaft, engages countershaft first, which has been spinning freely on the countershaft driven by mainshaft first.

Now countershaft first is no longer freewheeling, but locked to the countershaft causing the countershaft and countershaft sixth to turn. Countershaft sixth transmits the power to the main drive gear and the sprocket as shown (1).

Second Gear

Second gear is engaged when the dog ring between countershaft first and second is shifted out of countershaft first and engages countershaft second. This locks countershaft second to the countershaft to complete the power flow as shown (2).

Third Gear

Two shifter forks are used to make the shift from second to third. One fork moves the dog ring between countershaft first and second to its neutral position. At the same time another fork engages the dog ring between countershaft third and fourth with countershaft third. This locks countershaft third to the countershaft to complete the power flow as shown (3).

Fourth Gear

Fourth gear is engaged when the dog ring between countershaft third and fourth is shifted out of countershaft third and engages countershaft fourth. This locks countershaft fourth to the countershaft to complete the power flow as shown (4).

Fifth Gear

Two shifter forks are used to make the shift from fourth to fifth. One fork moves the dog ring between countershaft third and fourth to its neutral position. At the same time another fork engages the dog ring between mainshaft fifth and sixth with mainshaft fifth. This locks mainshaft fifth to the mainshaft to complete the power flow as shown (5).

Sixth Gear

The shift from fifth to sixth gear occurs when the dog ring between mainshaft fifth and sixth is shifted out of mainshaft fifth. It is shifted directly into the main drive gear (sixth gear). The main drive gear is locked to the mainshaft. this results in a direct one-to-one drive ratio from the clutch to the sprocket as shown (6).

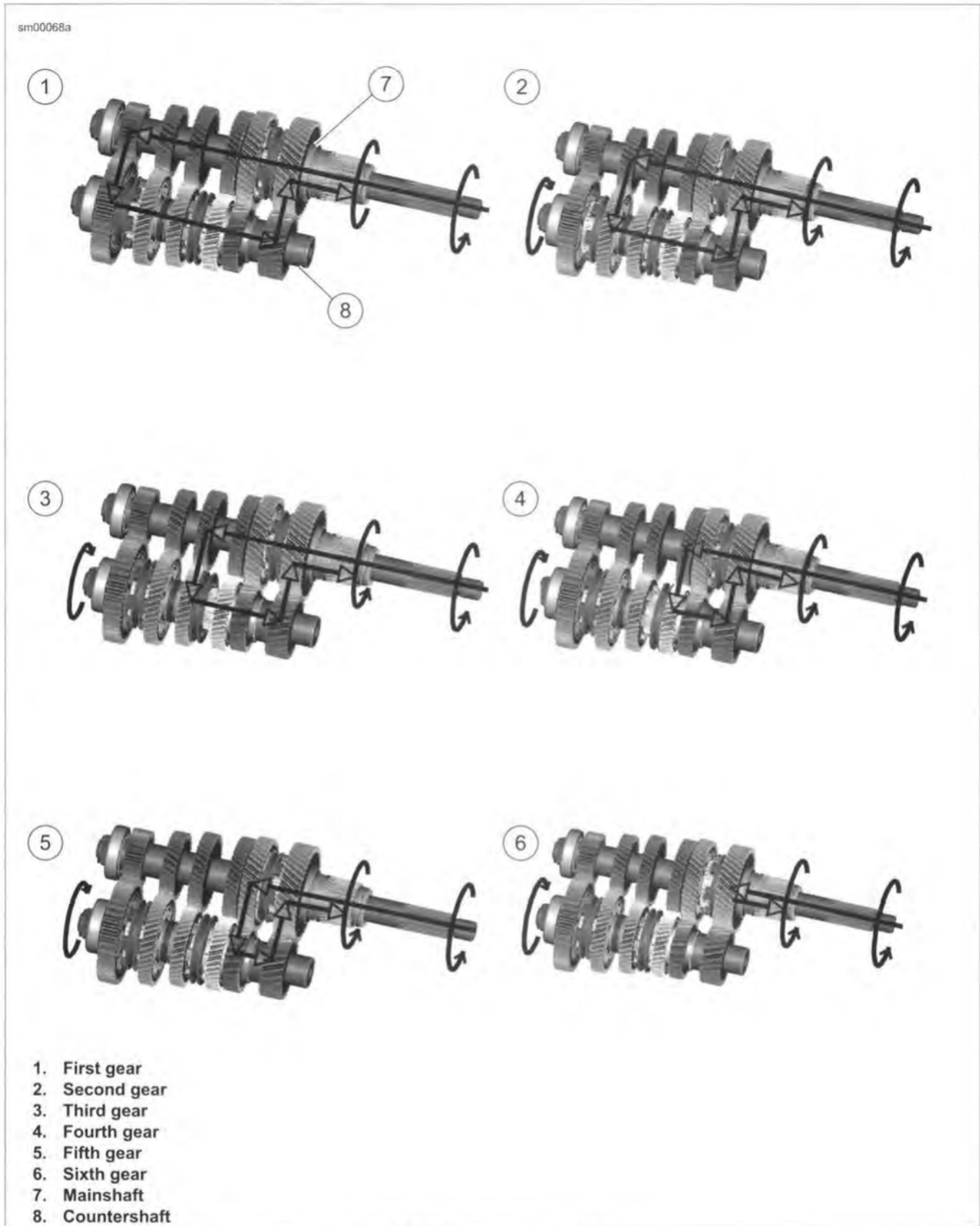

1. First gear
2. Second gear
3. Third gear
4. Fourth gear
5. Fifth gear
6. Sixth gear
7. Mainshaft
8. Countershaft

Figure 6-1. Transmission Power Flow

SHIFTER ROD ADJUSTMENT

FASTENER	TORQUE VALUE	
Shifter linkage locknut	96-144 **in-lbs**	10.8-16.3 Nm
Shift rod jamnut	80-120 **in-lbs**	9.0-13.6 Nm
Shift lever screw	18-22 ft-lbs	24.4-29.8 Nm

NOTE

See Figure 6-3. Not all models are equipped with adjustable linkage.

Forward Control Shifter Adjustment

The shift rod is set at the factory and should not need adjustment under normal circumstances. However, if full engagement or full lever travel is not achieved, adjust the shift rod.

1. See Figure 6-2. Remove locknut (3), lockwasher and flat washer to free forward end of shift rod from inner shift arm.
2. Loosen jamnuts (1). Adjust rod (2) as necessary.
3. Secure shift rod to inner shift arm with flat washer, lockwasher and locknut (3). Tighten to 96-144 **in-lbs** (10.8-16.3 Nm).
4. Tighten jamnuts (1) to 80-120 **in-lbs** (9.0-13.6 Nm).

Mid-Control Shifter Adjustment

1. See Figure 6-3. Remove screw (1) and lockwasher (2).
2. Slide shift lever (3) off shifter lever (6). Raise or lower shift peg end of shift lever to adjust for rider comfort.
3. Slide shift lever on to shifter lever.
4. Install screw and lockwasher. Tighten to 18-22 ft-lbs (24.4-29.8 Nm).

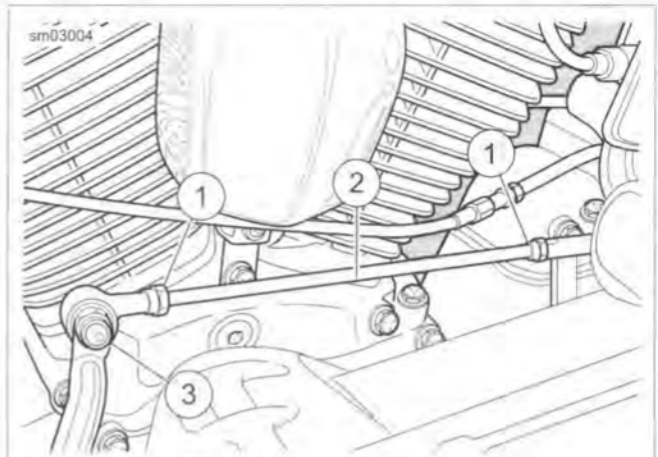

1. **Jamnut (2)**
2. **Rod**
3. **Locknut**

Figure 6-2. Forward Control Shifter Linkage

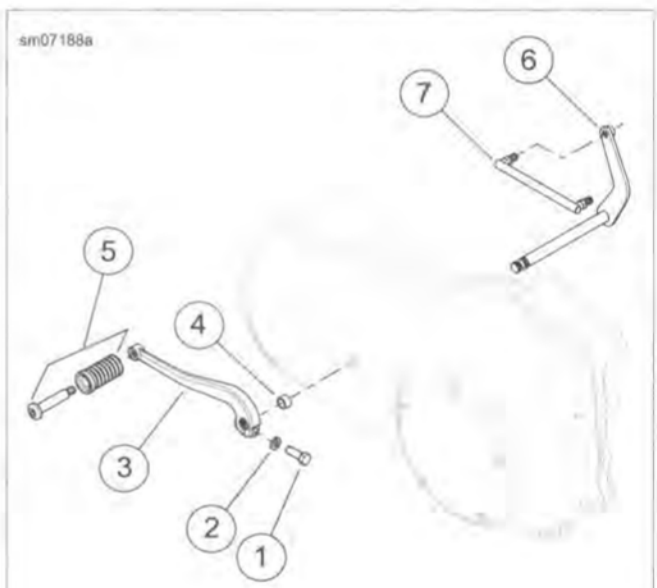

1. **Screw**
2. **Lockwasher**
3. **Shift lever**
4. **Spacer**
5. **Shift lever peg kit**
6. **Shifter lever**
7. **Shifter rod**

Figure 6-3. Mid-Control Shifter Linkage

REMOVAL AND DISASSEMBLY

1. Remove main fuse.
2. Remove exhaust system if needed. See 4.15 EXHAUST SYSTEM.
3. Drain transmission. See 1.9 TRANSMISSION LUBRICANT.

NOTE

Actuating the clutch hand lever after removing the six screws will help break the cover free.

4. See Figure 6-4. Remove six screws securing the clutch release cover. Remove the clutch release cover. Discard the gasket.
5. Add free play to clutch cable. See 1.10 CLUTCH.

⚠WARNING

Wear safety glasses or goggles when removing or installing retaining rings. Retaining rings can slip from the pliers and could be propelled with enough force to cause serious eye injury. (00312a)

6. See Figure 6-5. Remove retaining ring (4). Lift inner ramp (5) and ramp coupling (3) out of clutch release cover. Disconnect clutch cable end (2) from the ramp coupling (3).
7. Remove coupling (3) from inner ramp.
8. See Figure 6-6. Remove balls (4) and outer ramp (2).
9. Remove clutch cable fitting from clutch release cover.

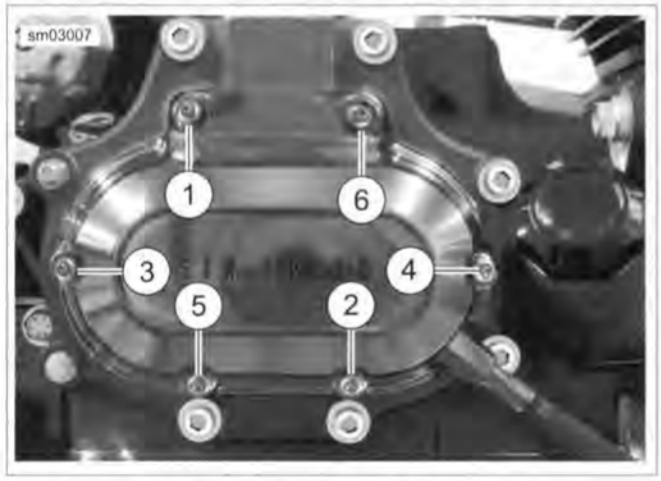

Figure 6-4. Cover Screws

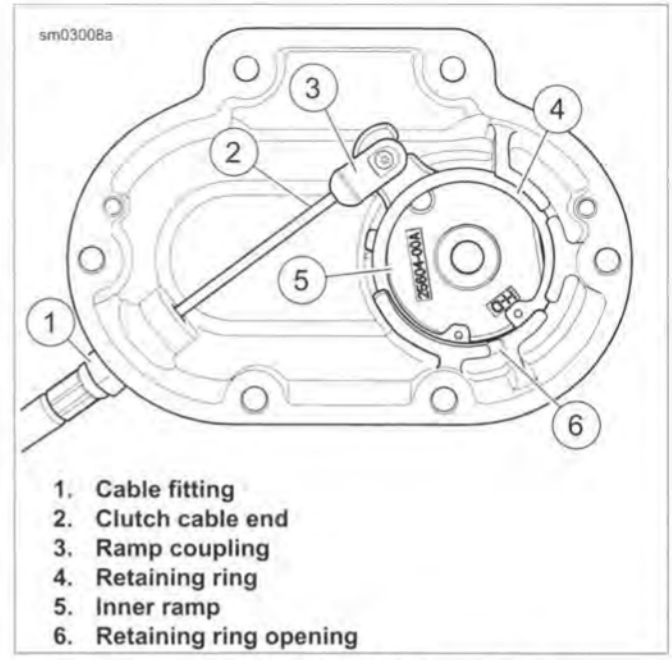

1. **Cable fitting**
2. **Clutch cable end**
3. **Ramp coupling**
4. **Retaining ring**
5. **Inner ramp**
6. **Retaining ring opening**

Figure 6-5. Clutch Cable Connection

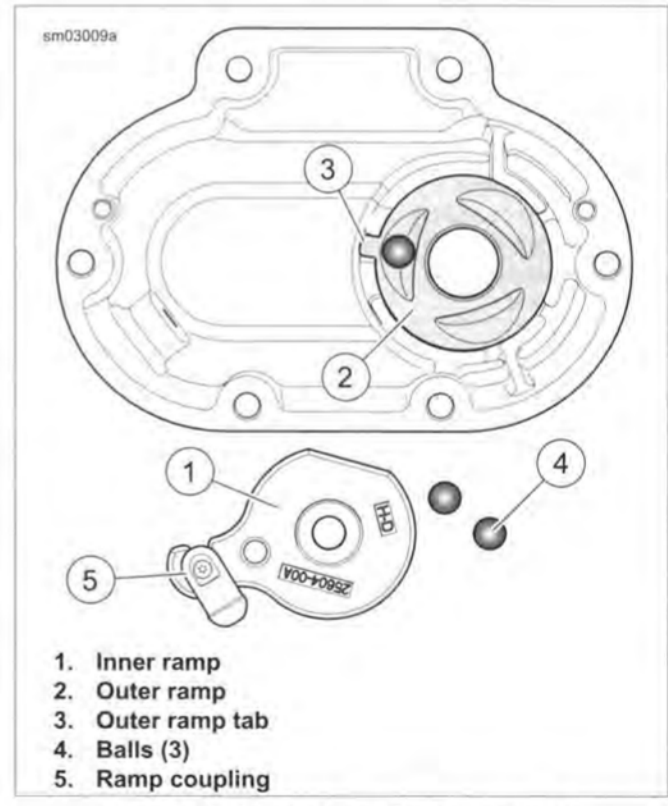

1. **Inner ramp**
2. **Outer ramp**
3. **Outer ramp tab**
4. **Balls (3)**
5. **Ramp coupling**

Figure 6-6. Coupling and Ramp Assembly

CLEANING AND INSPECTION

1. See Figure 6-7. Wash the ball and ramp mechanism components in cleaning solvent.

2. Inspect the three balls (2) and ball socket surfaces on ramps (1, 3) for wear, pitting, surface breakdown and other damage. Replace as necessary.
3. Check fit of the ramp coupling (4) on inner ramp (1). Replace both parts if there is excessive wear.
4. Inspect the retaining ring (6) for damage or distortion.
5. Check clutch cable end for frayed or worn ends. Replace cable if damaged or worn. Check cable fitting O-ring for damage.
6. Check the bore in the clutch release cover (5) where the ramps (1, 3) are retained. There should be no wear that would cause the ramps to tilt, causing improper clutch adjustment.

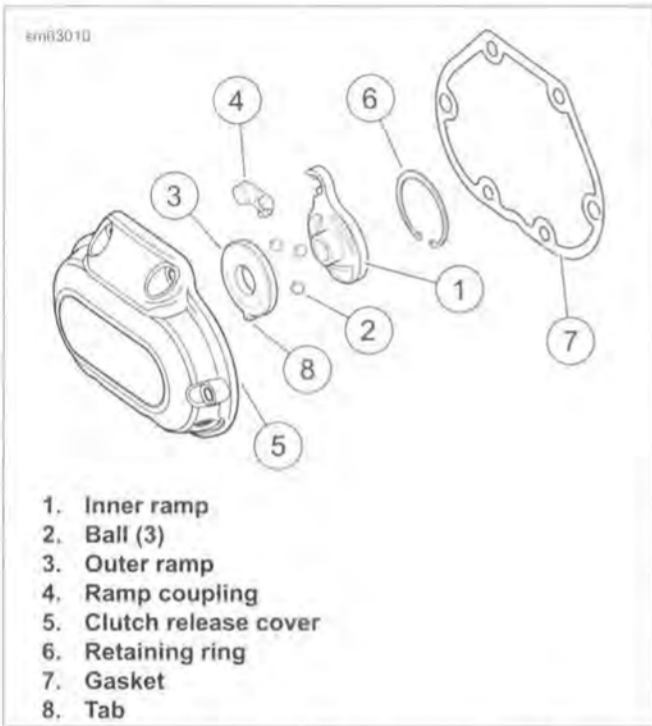

1. **Inner ramp**
2. **Ball (3)**
3. **Outer ramp**
4. **Ramp coupling**
5. **Clutch release cover**
6. **Retaining ring**
7. **Gasket**
8. **Tab**

Figure 6-7. Release Mechanism Assembly

ASSEMBLY AND INSTALLATION

FASTENER	TORQUE VALUE	
Clutch release cover screws	132-156 **in-lbs**	14.9-17.6 Nm
Clutch cable fitting	90-120 **in-lbs**	10.2-13.6 Nm

NOTE

Replace cable fitting O-ring if damaged.

1. See Figure 6-5. Apply a drop of LOCTITE 243 MEDIUM STRENGTH THREADLOCKER AND SEALANT (blue) to the clutch cable fitting (1). Install in clutch release cover. Leave fasteners loose.
2. See Figure 6-7. Place outer ramp (3) with ball socket side up in clutch release cover. Confirm tab (8) is in clutch release cover slot.
3. Apply a multi-purpose grease to the balls and outer ramp sockets. Place a ball in each of the outer ramp sockets.
4. See Figure 6-5. Connect cable end to ramp coupling (3). Install coupling on inner ramp (5). Place inner ramp and coupling in position in clutch release cover.

⚠WARNING

Wear safety glasses or goggles when removing or installing retaining rings. Retaining rings can slip from the pliers and could be propelled with enough force to cause serious eye injury. (00312a)

NOTE

Center the opening of the retaining ring above the break in the ribbing at bottom of the clutch release cover.

5. Install retaining ring (4).
6. Verify that two dowel pins are in place on transmission bearing housing flange. Place a **new** gasket on dowel pins.

NOTE

See Figure 6-4. Clutch release cover screws in positions (1) and (6) are shorter than the others.

7. See Figure 6-4. Install clutch release cover. Tighten to 132-156 **in-lbs** (14.9-17.6 Nm) in sequence shown.
8. Tighten clutch cable fitting to 90-120 **in-lbs** (10.2-13.6 Nm).
9. Fill transmission. See 1.9 TRANSMISSION LUBRICANT, Change Transmission Lubricant.
10. Adjust clutch cable. See 1.10 CLUTCH.
11. Install exhaust system if removed. See 4.15 EXHAUST SYSTEM.
12. Install main fuse.

REMOVAL

NOTE

Leave the transmission case in the frame unless the case itself requires replacement. For clarity, some illustrations may show the case removed. For case removal see 6.8 TRANSMISSION CASE.

1. Drain transmission. See 1.9 TRANSMISSION LUBRICANT.
2. Remove exhaust system. See 4.15 EXHAUST SYSTEM.
3. Loosen drive belt. See 1.11 DRIVE BELT AND SPROCKETS.
4. Remove primary chaincase cover, clutch assembly, primary chain, compensating sprocket assembly and primary chaincase. See 5.5 PRIMARY CHAINCASE HOUSING, Removal.
5. Remove the transmission mainshaft bearing inner race. See 5.5 PRIMARY CHAINCASE HOUSING, Mainshaft Bearing Inner Race.
6. Remove the clutch release cover. See 6.5 CLUTCH RELEASE COVER, Removal and Disassembly.
7. See Figure 6-8. Remove oil slinger assembly from mainshaft. Remove pushrod.
8. Remove transmission top cover, leaving the cover gasket in place.
9. See Figure 6-9. Place shifter cam pawl on top cover gasket.

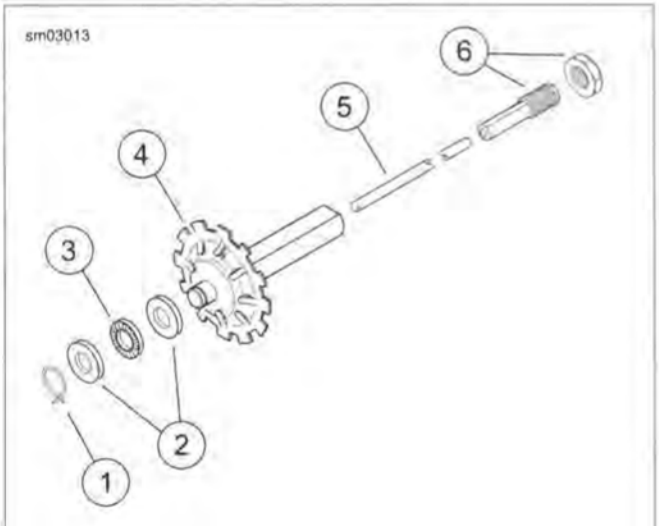

1. **Retaining ring**
2. **Thrust washer (2)**
3. **Throw out bearing**
4. **Oil slinger**
5. **Pushrod**
6. **Pushrod end, left side**

Figure 6-8. Pushrod Assembly: Cable Clutch

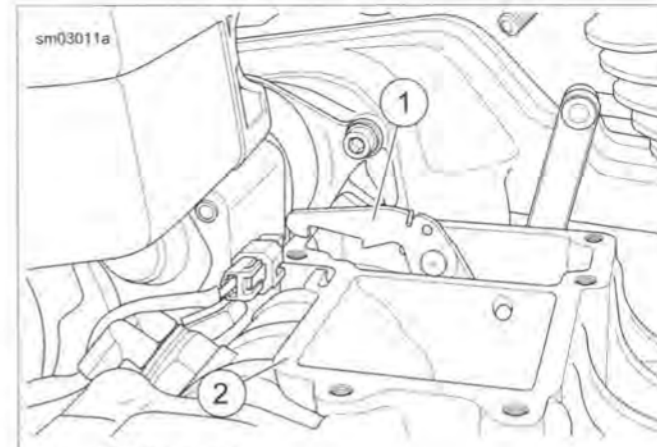

1. **Shifter pawl**
2. **Top cover gasket**

Figure 6-9. Set Shifter Pawl on Gasket

NOTES

- *Remove and install sprocket nut only while transmission is in vehicle frame. Failure to do so will damage transmission or transmission stand.*
- *The main drive gear bearing and retainer must be replaced if the main drive gear is removed. The bearing is damaged during the removal procedure.*

10. For main drive gear removal see 6.7 MAIN DRIVE GEAR AND BEARING, Removal.
11. See Figure 6-10. Remove oil spout fastener (8), oil spout (6) and O-ring (7). Discard O-ring.
12. Cover mainshaft clutch hub splines with tape to prevent the splines damaging the main drive gear bearings.

NOTE

See Figure 6-11. Never tap on shafts with a hammer to remove transmission assembly. The bearing housing bearings will be damaged. Pry loose using indents at each side of bearing housing.

13. See Figure 6-12. Remove the transmission bearing housing:
    a. Remove the transmission bearing housing screws.
    b. Remove exhaust bracket, if equipped.
    c. Pry the bearing housing loose.
    d. Remove bearing housing, mainshaft, countershaft and shifter cam from transmission case as an assembly.
    e. Discard gasket.

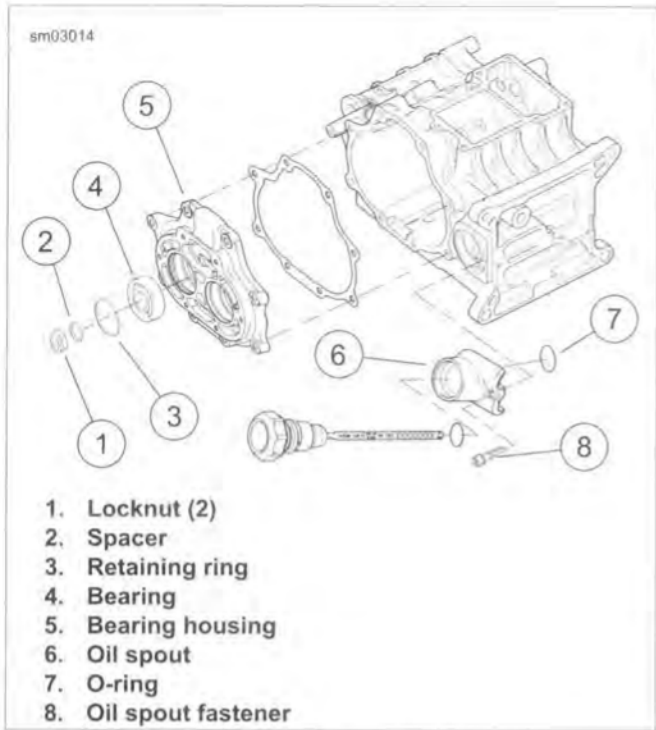

1. Locknut (2)
2. Spacer
3. Retaining ring
4. Bearing
5. Bearing housing
6. Oil spout
7. O-ring
8. Oil spout fastener

Figure 6-10. Bearing Housing Bearings

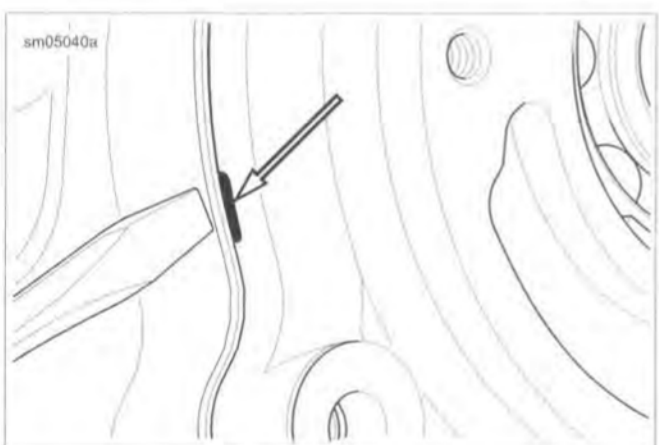

Figure 6-11. Bearing Housing Pry Point

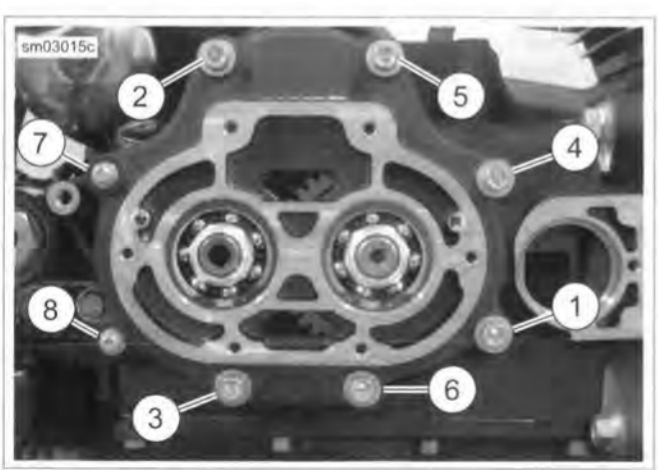

Figure 6-12. Torque Sequence

DISASSEMBLY

PART NUMBER	TOOL NAME
J-5586A	TRANSMISSION SHAFT RETAINING RING PLIERS

Shifter Cam/Shifter Forks

1. See Figure 6-13. Remove shift fork shafts:
   a. Place bearing housing on end (shafts pointing up).

   NOTE

   Shafts have slight interference fit. Shafts can be reused. Use care to not damage end of shafts.

   b. Remove shift fork shafts using easy-out screw extractor (14) (non-flute design) or vise grips.
   c. Mark end of shaft to aid during assembly.
2. Remove shift forks from dog rings.
3. See Figure 6-14. Remove lock plate screws (3) from lock plate (2). Discard screws.
4. See Figure 6-15. Insert screwdriver and gently pry back detent arm (4) to remove detent spring (3) tension from shift cam (5). Remove shift cam.
5. If servicing detent assembly, remove detent screw (2), detent arm (4), sleeve and detent spring (3). Discard detent screw.

NOTE

Many transmission parts can be installed in either direction. To prolong usable life, install used parts in same direction as removed.

6. See Figure 6-16. Using dog rings, lock two gears in place. Temporarily place transmission assembly into transmission case.
7. Remove mainshaft and countershaft locknuts.
8. Remove transmission assembly from transmission case.

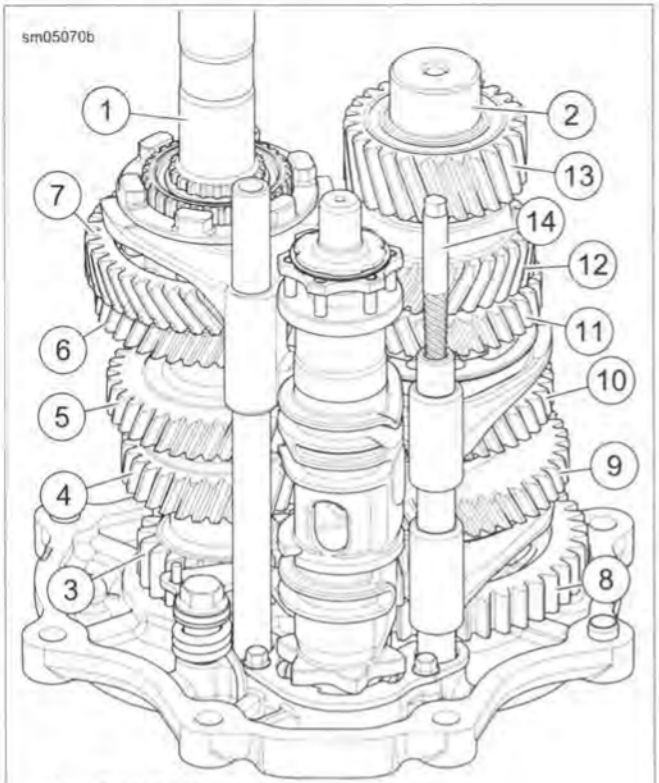

1. Mainshaft
2. Countershaft
3. Mainshaft first gear
4. Mainshaft second gear
5. Mainshaft third gear
6. Mainshaft fourth gear
7. Mainshaft fifth gear
8. Countershaft first gear
9. Countershaft second gear
10. Countershaft third gear
11. Countershaft fourth gear
12. Countershaft fifth gear
13. Countershaft sixth gear
14. Screw extractor

Figure 6-13. Gear Set

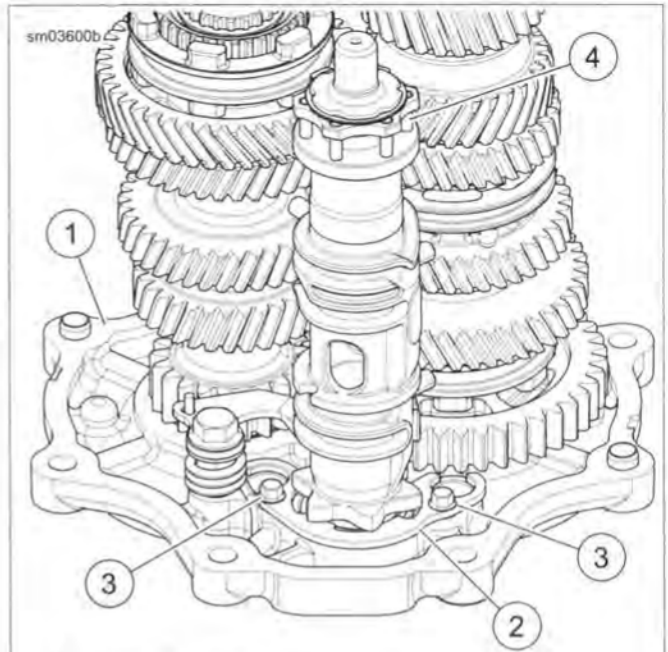

1. Bearing housing
2. Lock plate
3. Lock plate screw (2)
4. Shift cam

Figure 6-14. Shift Drum

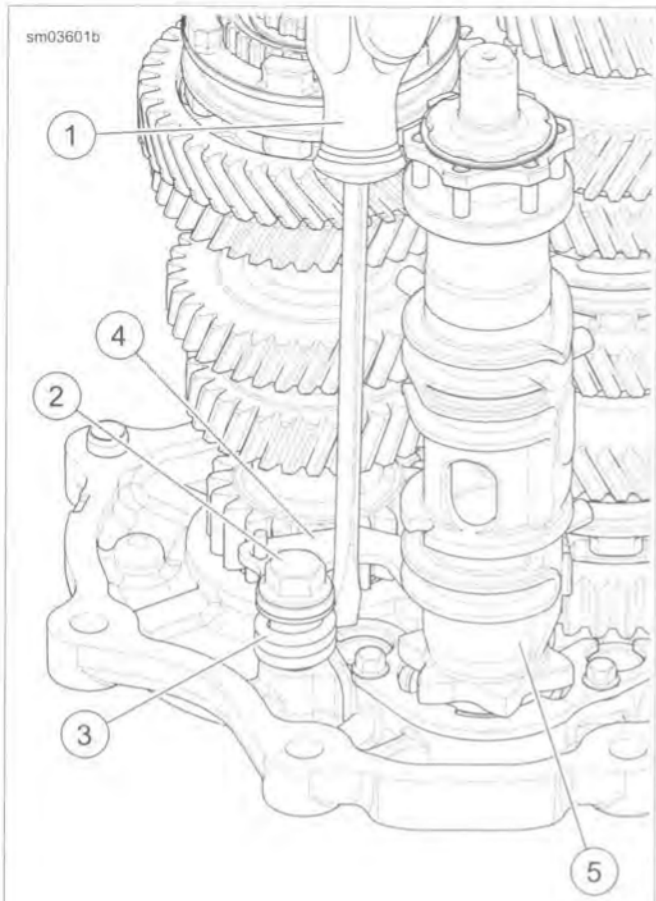

1. Screwdriver
2. Detent fastener
3. Detent spring
4. Detent arm
5. Shift cam

Figure 6-15. Detent Assembly

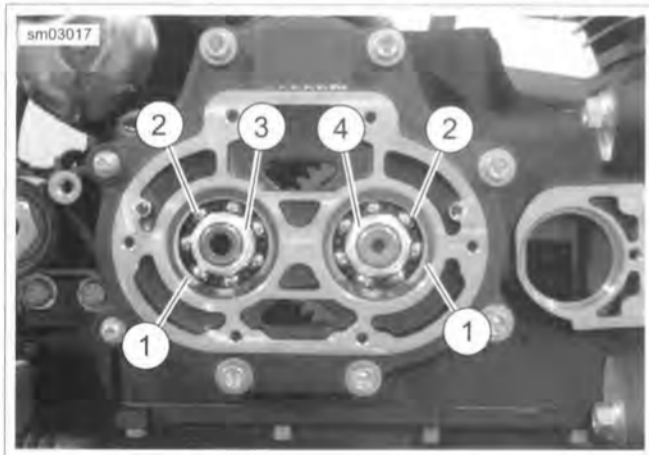

1. Retaining ring (2)
2. Bearing (2)
3. Mainshaft locknut
4. Countershaft locknut

Figure 6-16. Bearing Housing Locknuts

Mainshaft

⚠WARNING

Wear safety glasses or goggles when removing or installing retaining rings. Retaining rings can slip from the pliers and could be propelled with enough force to cause serious eye injury. (00312a)

NOTE

The mainshaft fourth gear, third gear, second gear and first gear are integral parts of the shaft. Damage to any gear requires mainshaft replacement.

1. See Figure 6-17. Using TRANSMISSION SHAFT RETAINING RING PLIERS (Part No. J-5586A), remove retaining ring. Remove dog ring (3), guiding hub (2), mainshaft fifth gear (4) and bearing.

NOTE

Do not press directly on the end of the mainshaft. Place a spacer such as a washer between the end of the mainshaft and the press ram.

2. Place transmission assembly in arbor press. Press mainshaft out of bearing housing bearings.

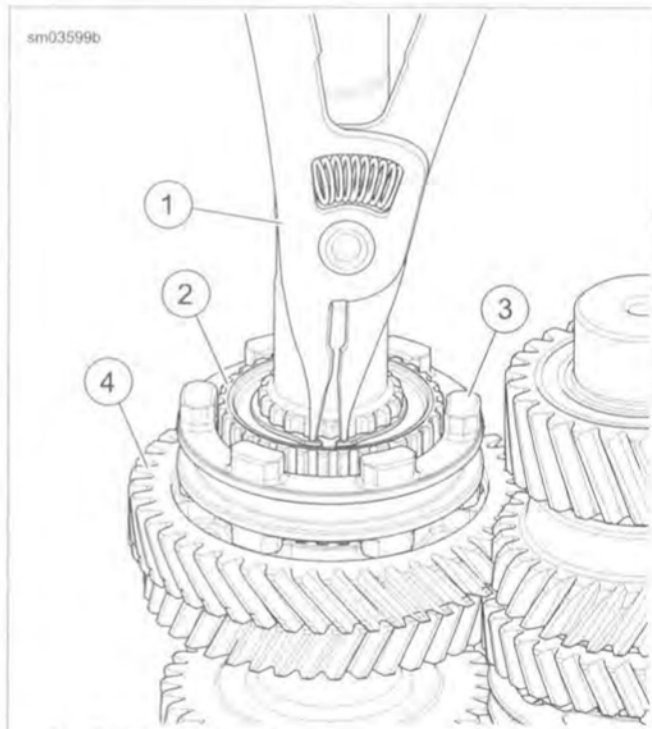

1. Retaining ring pliers
2. Guiding hub
3. Dog ring
4. Mainshaft fifth gear

Figure 6-17. Mainshaft Fifth Gear

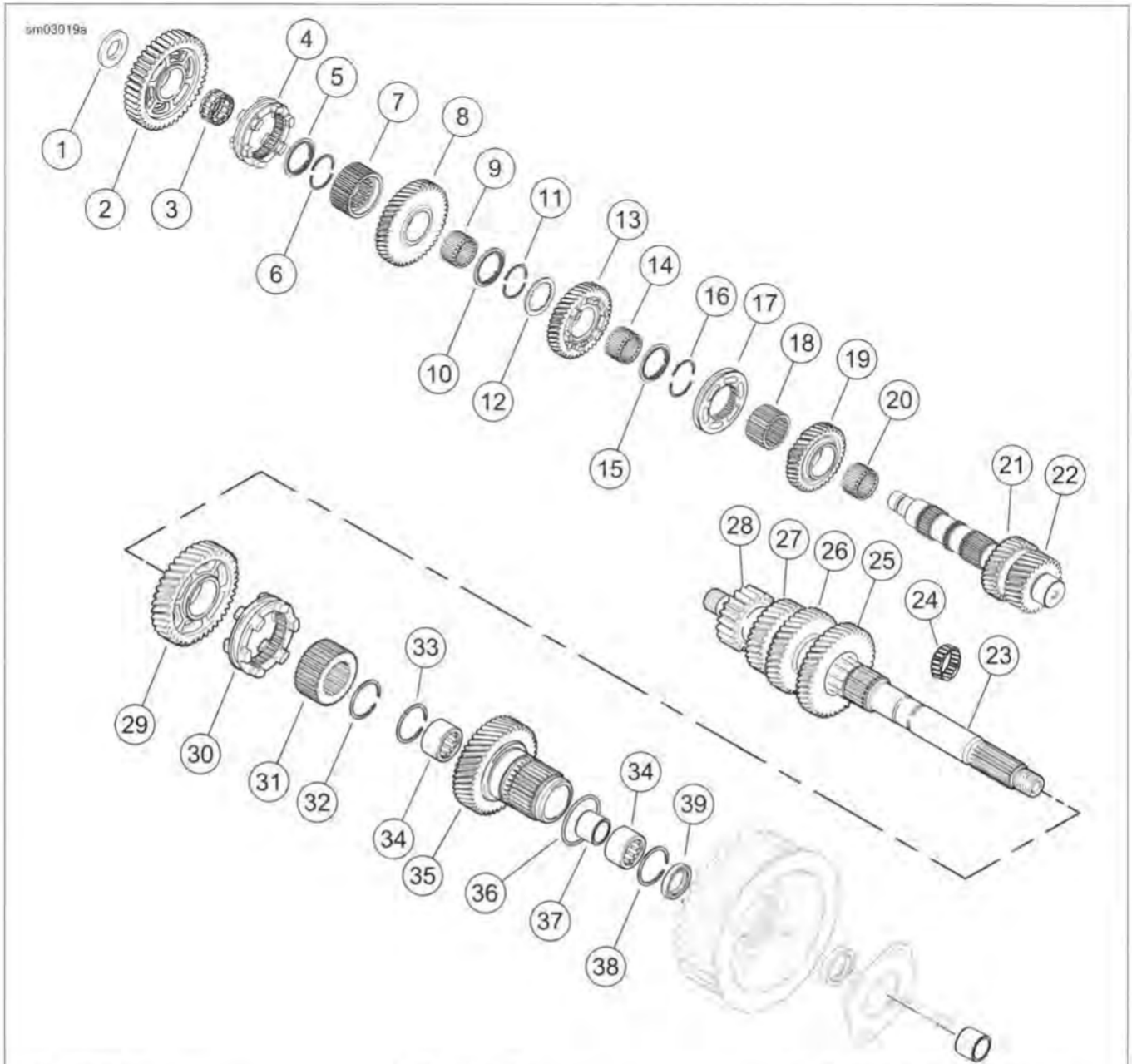

1. Spacer
2. Countershaft first gear
3. Bearing
4. Dog ring
5. Lock ring
6. Securing segment (2)
7. Guiding hub
8. Countershaft second gear
9. Bearing
10. Lock ring
11. Securing segment (2)
12. Internal spline washer
13. Countershaft third gear
14. Bearing
15. Lock ring
16. Securing segment (2)
17. Dog ring
18. Guiding hub
19. Countershaft fourth gear
20. Bearing
21. Countershaft fifth gear (part of countershaft)
22. Countershaft sixth gear (part of countershaft)
23. Mainshaft
24. Bearing
25. Mainshaft fourth gear
26. Mainshaft third gear
27. Mainshaft second gear
28. Mainshaft first gear
29. Mainshaft fifth gear
30. Dog ring
31. Guiding hub
32. Retaining ring
33. Retaining ring
34. Main drive gear bearing (2)
35. Main drive gear
36. O-ring
37. Bearing spacer
38. Retaining ring
39. Oil seal

Figure 6-18. Mainshaft and Countershaft Assembly

Countershaft

NOTES

- *If removing countershaft without removing the mainshaft, hold countershaft third and fourth gear shift dog up while pressing countershaft out of bearing housing bearings.*
- *Do not press directly on the end of the countershaft. Place a spacer such as a washer between the end of the countershaft and the press ram.*

1. Press countershaft out of bearing housing bearings.
2. See 6.6 TRANSMISSION ASSEMBLY for bearing replacement.
3. See Figure 6-19. Remove washer (1), countershaft first gear (2) and bearing.

NOTE

See Figure 6-20. Note the direction that the second gear lock ring is installed.

4. Remove countershaft second gear lock ring.
5. See Figure 6-21. Remove securing segments (2). Remove dog ring (5), guiding hub (3), countershaft second gear (4) and bearing.



1. **Washer**
2. **Countershaft first gear**

Figure 6-19. Countershaft First Gear

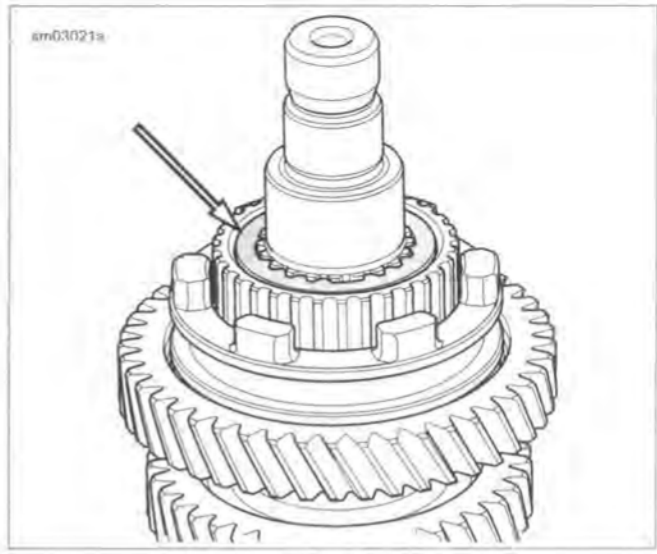

Figure 6-20. Lock Ring

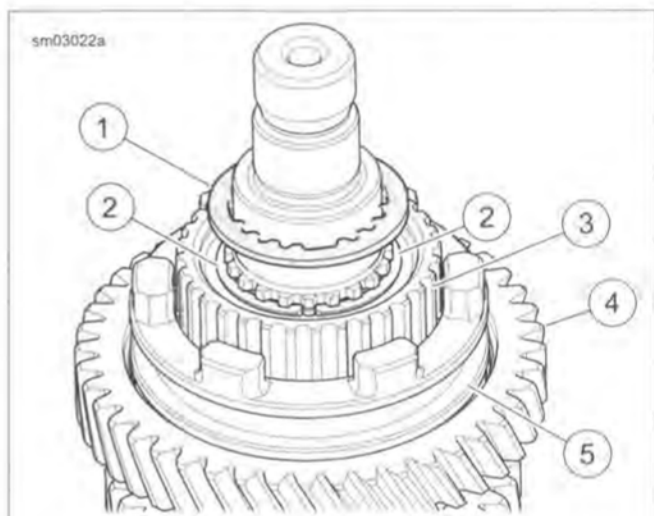

1. **Lock ring**
2. **Securing segment (2)**
3. **Guiding hub**
4. **Countershaft second gear**
5. **Dog ring**

Figure 6-21. Countershaft Second Gear

NOTE

See Figure 6-22. Note the direction that the third gear lock ring is installed.

6. Remove countershaft third gear lock ring.
7. See Figure 6-23. Remove securing segments (2), internal spline washer (3), countershaft third gear (4) and bearing.

NOTE

See Figure 6-24. Note the direction that the fourth gear lock ring is installed.

8. Remove fourth gear lock ring (1), securing segments (2), dog ring (5), guiding hub (3) and countershaft fourth gear (4) and bearing.

NOTE

The countershaft fifth gear and sixth gear are integral parts of the shaft. Damage to either gear requires countershaft replacement.

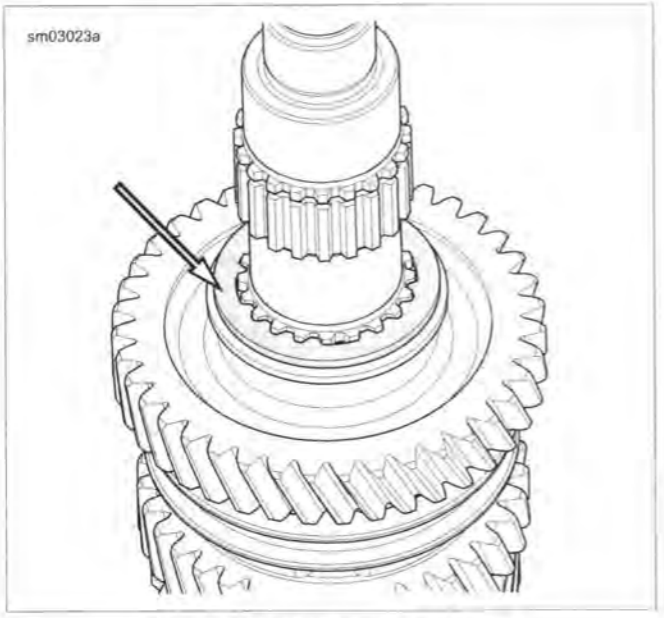

Figure 6-22. Third Gear Lock Ring

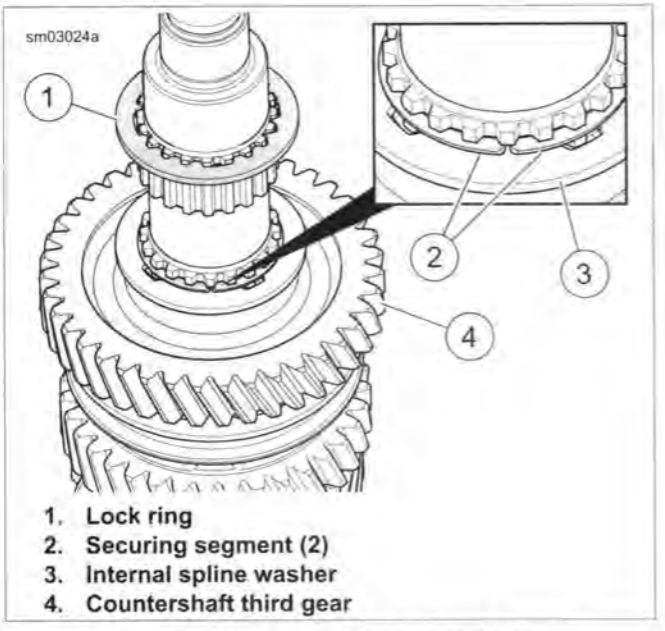

1. **Lock ring**
2. **Securing segment (2)**
3. **Internal spline washer**
4. **Countershaft third gear**

Figure 6-23. Countershaft Third Gear

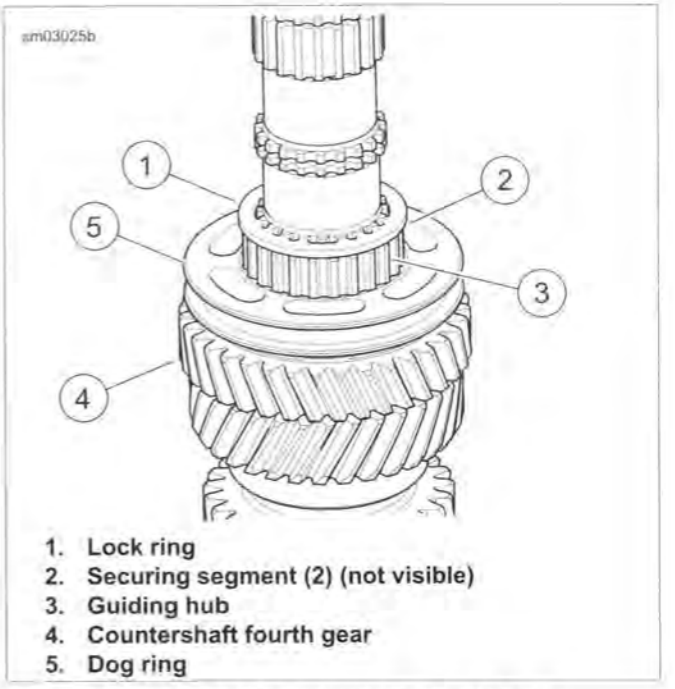

1. **Lock ring**
2. **Securing segment (2) (not visible)**
3. **Guiding hub**
4. **Countershaft fourth gear**
5. **Dog ring**

Figure 6-24. Countershaft Fourth Gear

Removing Bearing Housing Bearings

⚠WARNING

Wear safety glasses or goggles when removing or installing retaining rings. Retaining rings can slip from the pliers and could be propelled with enough force to cause serious eye injury. (00312a)

NOTE

Always replace bearing housing bearing if the shaft is pressed out.

1. See Figure 6-25. Remove the retaining rings (2).
2. Press the bearings out of the bearing housing.

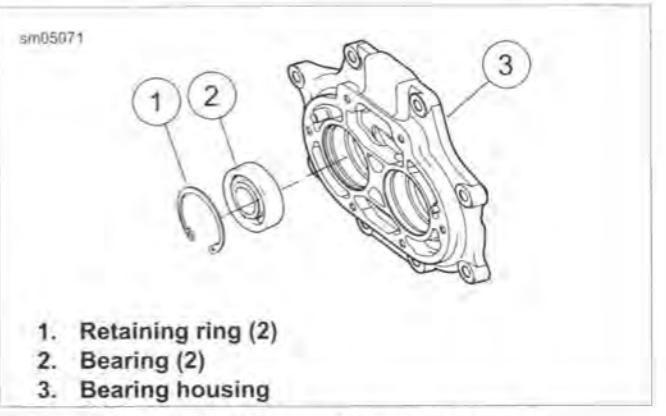

1. **Retaining ring (2)**
2. **Bearing (2)**
3. **Bearing housing**

Figure 6-25. Bearing Housing Bearings

CLEANING AND INSPECTION

⚠WARNING

Compressed air can pierce the skin and flying debris from compressed air could cause serious eye injury. Wear safety glasses when working with compressed air. Never use your hand to check for air leaks or to determine air flow rates. (00061a)

1. Clean all parts with solvent. Dry parts with low-pressure, compressed air.
2. Replace gears that are worn or damaged
3. Replace the dog rings if dogs and/or pockets are rounded, battered or chipped.
4. Replace guiding hubs if splines are rounded, battered or chipped.
5. Replace shift fork shafts if bent or damaged.
6. Replace a shift fork if it is excessively worn or shows signs of overheating.
7. See Figure 6-26. Using a small square, verify that the shift forks are square. Replace shift fork if not square.
8. Replace shift drum assembly if drum or bearing are damaged.
9. Clean shift cam lock plate mounting holes in transmission bearing housing.



Figure 6-26. Checking Fork

ASSEMBLY

PART NUMBER	TOOL NAME
J-5586A	TRANSMISSION SHAFT RETAINING RING PLIERS

FASTENER	TORQUE VALUE	
Mainshaft/countershaft nuts	85-95 ft-lbs	115.3-128.8 Nm
Shift drum detent arm fastener	120-150 **in-lbs**	13.6-17.0 Nm
Shift drum lock plate fasteners	57-63 **in-lbs**	6.4-7.1 Nm

Installing Bearing Housing Bearings

NOTES

- *Always replace bearing housing bearing if the shaft was pressed out.*
- *Always use a plate to support the bearing housing when pressing in bearings.*
- *When pressing **new** bearings into bearing housing, press on the outside diameter of the bearing side with the numbers stamped on it.*

1. Support the bearing housing from the opposite side at the bearing bores with a flat plate.
2. Position **new** bearing over bore with number side up.
3. Press the outer diameter of the bearing until the bearing seats in the bore.

⚠WARNING

Wear safety glasses or goggles when removing or installing retaining rings. Retaining rings can slip from the pliers and could be propelled with enough force to cause serious eye injury. (00312a)

4. See Figure 6-25. Install beveled retaining ring (1) with the flat side against the bearing.

Countershaft

NOTES

- *Replace retaining ring and all gear needle bearings with **new** parts during assembly. Lubricate needle bearings and races with SCREAMIN' EAGLE ASSEMBLY LUBE before installation.*
- *Install securing segments so the side with the rounded edge is facing up and the side with the straight edge is down. Verify segments fully engage grooves in countershaft.*
- *One side of the second, third and fourth gear lock rings have a waved, stepped face. The waved, stepped face always faces the securing segments.*

1. See Figure 6-24. Install **new** needle bearing, countershaft fourth gear (4), guiding hub (3), dog ring (5) securing segments (2) and fourth gear lock ring (1) on countershaft.
2. See Figure 6-23. Install **new** needle bearing, countershaft third gear (4), internal spline washer (3), securing segments (2) and lock ring (1).

NOTES

- *Install the guiding hub with the deeper counterbore faceing countershaft second gear.*
- *Countershaft second gear bearing is wider than other bearings on the countershaft.*

3. See Figure 6-21. Install **new** needle bearing, countershaft second gear (4), guiding hub (3), dog ring (5) and securing segments (2) on countershaft.
4. See Figure 6-20. Place lock ring over securing segments with the stepped face of the lock ring against the securing segments.
5. See Figure 6-19. Install **new** needle bearing, countershaft first gear (2) and washer (1).

NOTES

- *If installing countershaft only, hold countershaft third and fourth gear shift dog up while pressing bearing housing bearing on to countershaft.*
- *Failure to press on inner bearing races while pressing bearings on the shafts damages the bearings.*

6. See Figure 6-27. Place countershaft in an arbor press supporting countershaft sixth gear. Using a suitable sleeve, press on inner bearing race until bearing housing bearing contacts countershaft first gear washer.

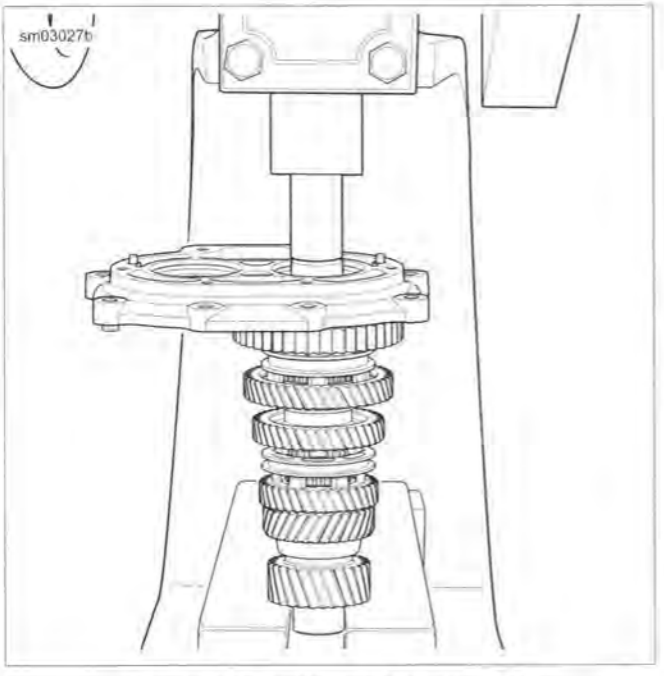

Figure 6-27. Installing Countershaft

Mainshaft

NOTES

- *Failure to press on inner bearing race while pressing bearing on the shaft damages the bearing.*
- *See Figure 6-28. Hold dog ring so that it is engaged with countershaft third gear during the press procedure. Otherwise bearing and gear damage is possible.*

1. Place mainshaft in an arbor press, supporting mainshaft fourth gear.
2. Place rear bearing housing bearing over mainshaft. Using a suitable sleeve, press on inner bearing race until bearing housing bearing contacts mainshaft first gear.
3. See Figure 6-17. With bearing housing on end (shafts pointing upward), install **new** bearing and mainshaft fifth gear (4).
4. Verify that guiding hub counterbore is facing mainshaft fifth gear. Install guiding hub (2) and dog ring (3).

⚠WARNING

Wear safety glasses or goggles when removing or installing retaining rings. Retaining rings can slip from the pliers and could be propelled with enough force to cause serious eye injury. (00312a)

5. Install **new** retaining ring using TRANSMISSION SHAFT RETAINING RING PLIERS (Part No. J-5586A) (1).

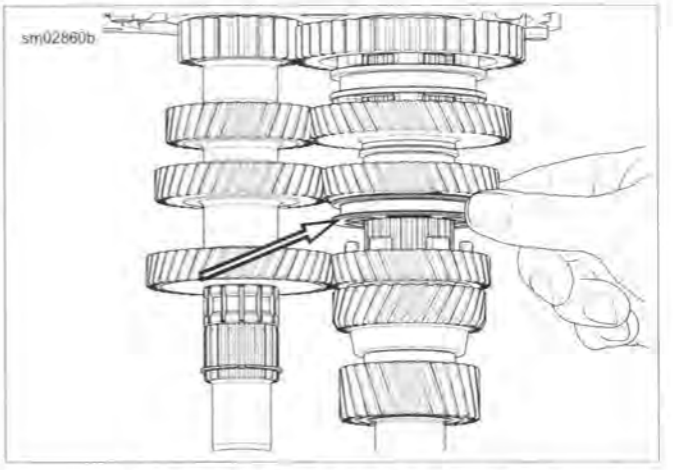

Figure 6-28. Raise and Hold Dog Ring

Shifter Cam/Shifter Forks

1. Using dog rings, lock two gears in place. Temporarily place transmission assembly into transmission case.
2. Install **new** nuts on mainshaft and countershaft. Tighten to 85-95 ft-lbs (115.3-128.8 Nm).
3. Remove transmission assembly from case.
4. Place bearing housing on bench with shafts pointing upward.
5. If removed, install detent arm assembly:
   a. See Figure 6-29. Clean detent screw mounting hole in transmission bearing housing.
   b. Assemble **new** detent screw, detent arm, sleeve and detent spring. Make sure to orient spring and detent arm as shown.
   c. Mount detent assembly in bearing housing as shown.
   d. Tighten to 120-150 **in-lbs** (13.6-17.0 Nm).
6. See Figure 6-30. Using screwdriver (1), pull detent arm back to allow installation of shift cam assembly.
7. Install shift cam assembly (5).

8. See Figure 6-31. Install lock plate (2) and **new** lock plate fasteners (3). Tighten to 57-63 **in-lbs** (6.4-7.1 Nm).

NOTE

See Figure 6-32. The forks are different from each other and are identified as shown.

9. See Figure 6-33.Install long shift shaft (1):
   a. Insert shifter fork (2) into the slot of the dog ring between mainshaft fifth and sixth gear.
   b. Slide long shift shaft through fifth and sixth gear shifter fork.
   c. Install shaft in hole in bearing housing.
10. Install short shift shaft (4):
   a. Insert shifter fork (6) into the slot of the dog ring between countershaft third and fourth gear.
   b. Insert shifter fork (9) into the slot of the dog ring between countershaft first and second gear.
   c. Slide short shift shaft through countershaft shifter forks.
   d. Install shaft in hole in bearing housing.

NOTE

If main drive gear was removed, install it now. See 6.7 MAIN DRIVE GEAR AND BEARING.

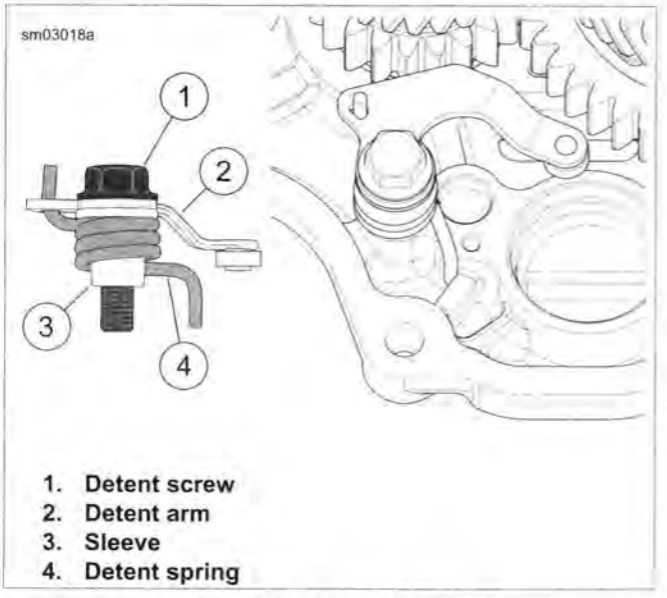

1. **Detent screw**
2. **Detent arm**
3. **Sleeve**
4. **Detent spring**

Figure 6-29. Detent Assembly

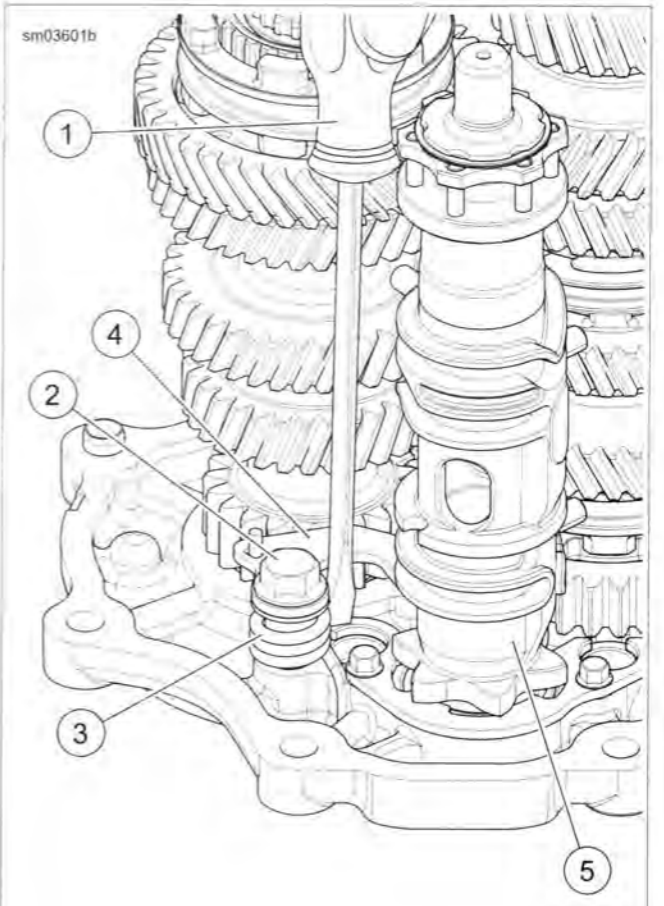

1. **Screwdriver**
2. **Detent fastener**
3. **Detent spring**
4. **Detent arm**
5. **Shift cam**

Figure 6-30. Detent Assembly

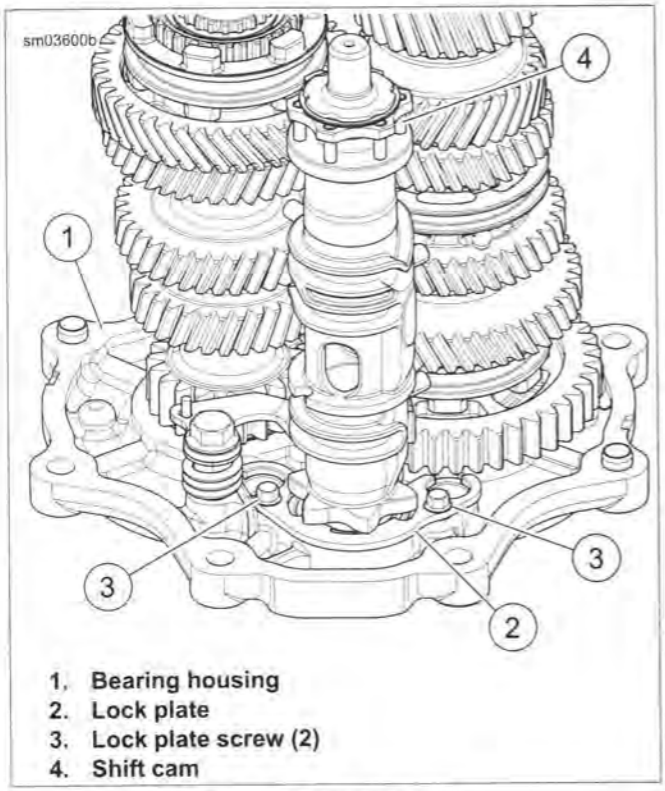

1. Bearing housing
2. Lock plate
3. Lock plate screw (2)
4. Shift cam

Figure 6-31. Shift Drum

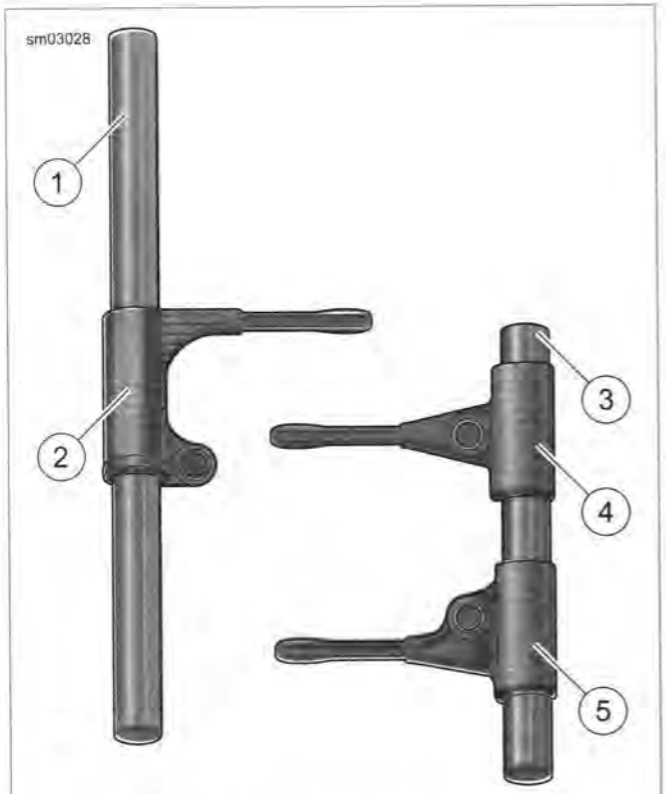

1. Long shift shaft
2. Fifth and sixth gear shifter fork
3. Short shift shaft
4. Third and fourth gear shifter fork
5. First and second gear shifter fork

Figure 6-32. Shifter Forks and Shafts

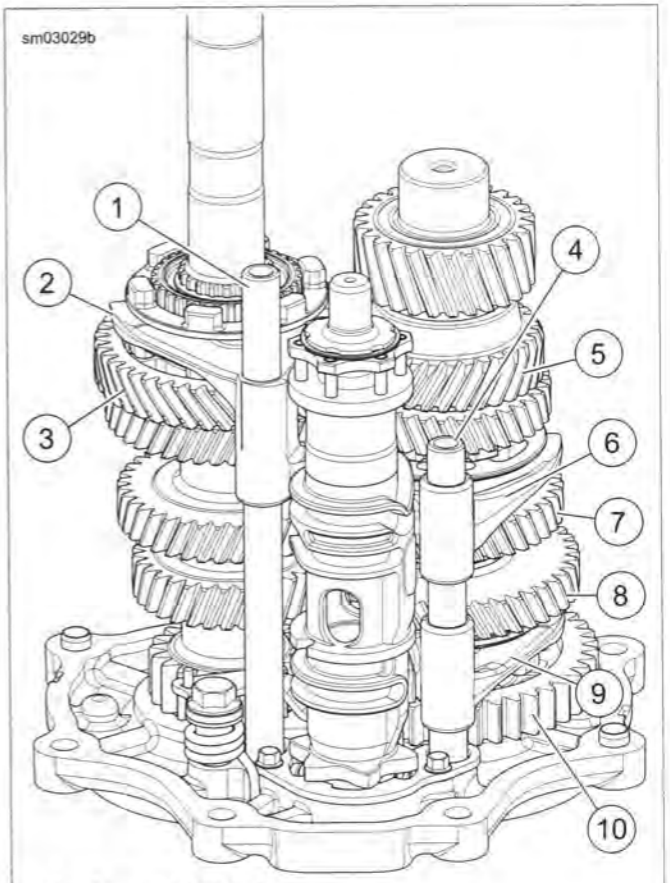

1. Long shift shaft
2. Fifth and sixth gear shifter fork
3. Mainshaft fifth gear
4. Short shift shaft
5. Countershaft fifth gear
6. Third and fourth gear shifter fork
7. Third gear
8. Second gear
9. First and second gear shifter fork
10. First gear

Figure 6-33. Transmission Gears and Shifter Forks

INSTALLATION

FASTENER	TORQUE VALUE	
Transmission bearing housing fasteners	23-25 ft-lbs	31.2-33.9 Nm
Transmission top cover	90-120 **in-lbs**	10.2-13.6 Nm
Oil spout fastener	84-132 **in-lbs**	9.5-14.9 Nm
Transmission drain plug	14-21 ft-lbs	19.0-28.5 Nm

1. Cover mainshaft clutch hub splines with tape to prevent the splines damaging the main drive gear oil seal.
2. Verify that two ring dowels are in place on bearing housing flange. place a **new** gasket on the ring dowels.
3. Apply clean transmission lubricant to the main drive gear bearings.

NOTE

Verify the transmission filler plug/dipstick is removed before installing transmission assembly. Contact with the filler plug/dipstick prevents installation of transmission assembly.

4. Install the transmission assembly in the transmission case.
5. If equipped, place exhaust bracket into position. Install bearing housing fasteners.
6. See Figure 6-34. Tighten in the sequence shown to 23-25 ft-lbs (31.2-33.9 Nm).

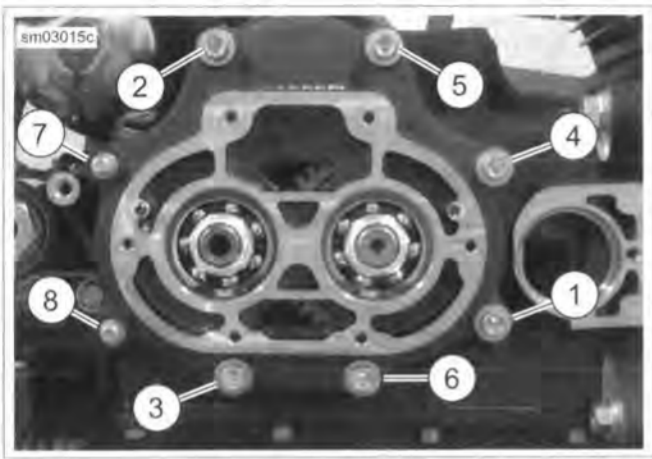

Figure 6-34. Torque Sequence

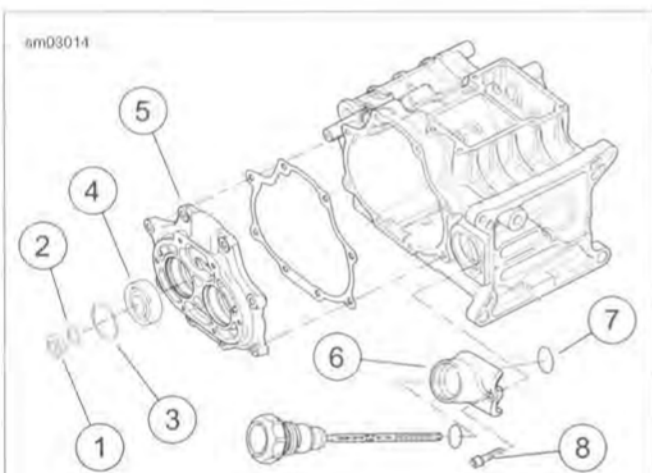

1. **Locknut (2)**
2. **Spacer**
3. **Retaining ring**
4. **Bearing**
5. **Bearing housing**
6. **Oil spout**
7. **O-ring**
8. **Oil spout fastener**

Figure 6-35. Bearing Housing Bearings

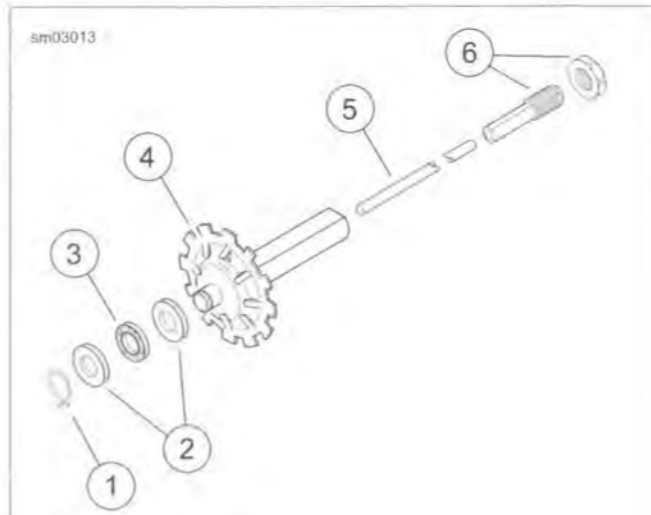

1. **Retaining ring**
2. **Thrust washer (2)**
3. **Throw out bearing**
4. **Oil slinger**
5. **Pushrod**
6. **Pushrod end, left side**

Figure 6-36. Pushrod Assembly: Cable Clutch

7. Install mainshaft bearing inner race. See 5.5 PRIMARY CHAINCASE HOUSING, Mainshaft Bearing Inner Race.
8. See Figure 6-36. Install pushrod assembly (2-5) in mainshaft hole. Secure with **new** retaining ring (1) if removed.

NOTE

The two upper-most side cover fasteners are shorter than the others.

9. Install clutch release cover and **new** gasket. See 6.5 CLUTCH RELEASE COVER.
10. Install top cover:
    a. Remove shifter cam pawl from top cover gasket surface and place on shift cam.
    b. Install **new** transmission top cover gasket.
    c. Install transmission top cover and fasteners.
    d. Tighten to 90-120 **in-lbs** (10.2-13.6 Nm).
11. Install vent hose to top cover fitting, if removed.
12. See Figure 6-35. Install oil spout:
    a. Install **new** O-ring (7) on oil spout (6).
    b. Apply clean engine oil to O-ring.
    c. Push oil spout into transmission case.
    d. Install oil spout fastener (8). Tighten to 84-132 **in-lbs** (9.5-14.9 Nm).
13. Install transmission sprocket nut. See 5.7 TRANSMISSION SPROCKET.
14. Install primary chaincase, clutch assembly and primary cover. See 5.5 PRIMARY CHAINCASE HOUSING, Installation.

15. Clean transmission drain plug. Install drain plug with new O-ring. Tighten to 14-21 ft-lbs (19.0-28.5 Nm).
16. Fill transmission. See 1.9 TRANSMISSION LUBRICANT.
17. Install exhaust system. See 4.15 EXHAUST SYSTEM.

REMOVAL

PART NUMBER	TOOL NAME
HD-35316-10	PILOT
HD-35316-11	RECEIVER CUP
HD-35316-3A	CROSS PLATE
HD-35316-4A	8 IN BOLT
HD-35316-5	12 IN BOLT
HD-35316-7	WASHER
HD-35316-9	BEARING DRIVER
HD-35316-D	MAIN DRIVE GEAR/BEARING REMOVER AND INSTALLER
HD-95637-10	LONG BOLTS
HD-95637-46B	WEDGE ATTACHMENT
RS-25100-200	BEARING

NOTE

Leave transmission case in the frame unless the case itself must be replaced. Some illustrations show the case removed for clarity.

1. Remove exhaust system. See 4.15 EXHAUST SYSTEM.
2. Remove primary chaincase housing. See 5.5 PRIMARY CHAINCASE HOUSING.
3. Remove bearing inner race from the transmission mainshaft. See 5.5 PRIMARY CHAINCASE HOUSING, Mainshaft Bearing Inner Race.
4. Remove transmission bearing housing and gear assembly. See 6.6 TRANSMISSION ASSEMBLY.

NOTICE

Failure to use Main Drive Gear Remover and Installer can cause premature failure of bearing and related parts. (00540b)

NOTE

Main drive gear and bearing can be removed with the transmission case in the frame after removing bearing housing. Use MAIN DRIVE GEAR/BEARING REMOVER AND INSTALLER (Part No. HD-35316-D).

5. Remove retaining ring.

NOTES

- *The main drive gear bearing and retaining ring must be replaced if the main drive gear is removed. The bearing is damaged during the removal procedure.*
- *Mount cross plate CROSS PLATE (Part No. HD-35316-3A) with end stamped "UP 6 SPEED" pointing up.*

6. See Figure 6-37. Install CROSS PLATE (Part No. HD-35316-3A):
   a. Place cross plate (1) on right side of transmission case as shown.
   b. Position cross plate with large bolt hole in cross plate aligned with center of main drive gear (4).
   c. Secure with two screws (2).
7. Apply a light coat of graphite lubricant to the threads of the 12 IN BOLT (Part No. HD-35316-5) (3). Insert through cross plate and main drive gear.
8. At left side of transmission case, place WASHER (Part No. HD-35316-7), BEARING (Part No. RS-25100-200) (6) and nut (7) over end of bolt. Tighten nut until main drive gear is free.

NOTES

- *When removing the main drive gear, the bearing is destroyed. Always install a **new** bearing.*
- *See Figure 6-38. When the main drive gear is removed, a portion of the bearing inner race remains attached to the main drive gear. If the main drive gear is reused, remove the inner race.*

9. Remove tool. Remove gear from gearcase.
10. See Figure 6-38. Use WEDGE ATTACHMENT (Part No. HD-95637-46B) and LONG BOLTS (Part No. HD-95637-10) to remove inner race from main drive gear.
11. Remove large main drive gear oil seal.
12. Remove retaining ring from bearing bore.
13. See Figure 6-39. Slide PILOT (Part No. HD-35316-10) (3) over small end of BEARING DRIVER (Part No. HD-35316-9) (2).
14. Apply a light coat of graphite lubricant to the threads of the 8 IN BOLT (Part No. HD-35316-4A) (1) and insert through bearing driver and pilot.
15. Insert bolt with bearing driver and pilot into right side of transmission case, through main drive gear bearing (4). Make sure that bearing driver fits up against main drive gear bearing and that pilot is centered in bearing bore.
16. At left side of case, slide RECEIVER CUP (Part No. HD-35316-11) (5) onto bolt and over main drive gear bearing. Install BEARING (Part No. RS-25100-200) (6) and nut (7) over end of bolt.

NOTE

Support bearing remover assembly as you remove bearing in the following step. Entire assembly falls out of transmission case when bearing comes free.

17. Tighten nut until main drive gear bearing is free.
18. Discard main drive gear bearing.

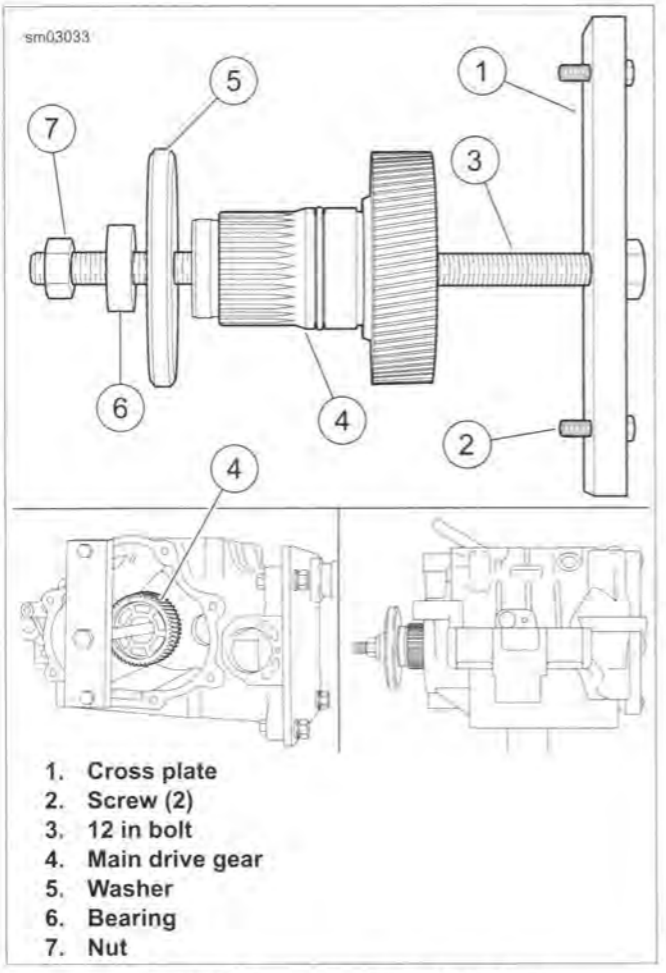

1. Cross plate
2. Screw (2)
3. 12 in bolt
4. Main drive gear
5. Washer
6. Bearing
7. Nut

Figure 6-37. Removing Main Drive Gear

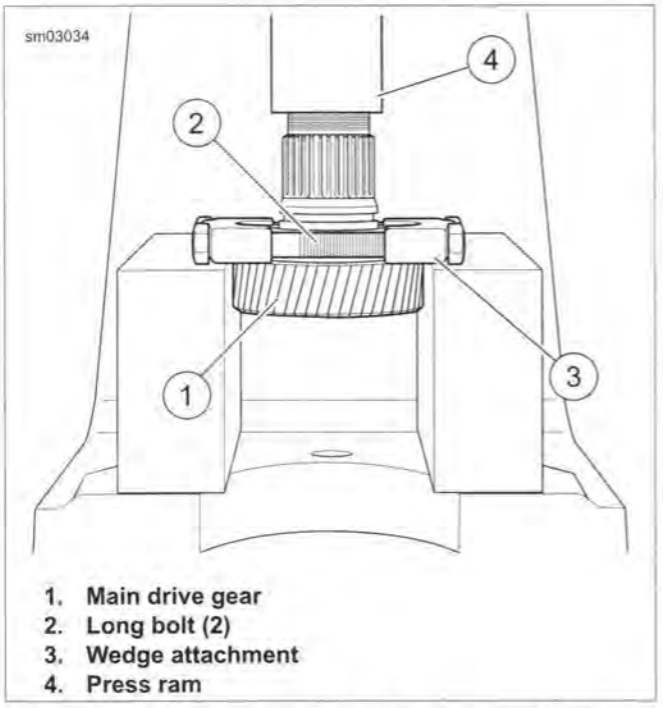

1. Main drive gear
2. Long bolt (2)
3. Wedge attachment
4. Press ram

Figure 6-38. Removing Inner Bearing Race From Main Drive Gear

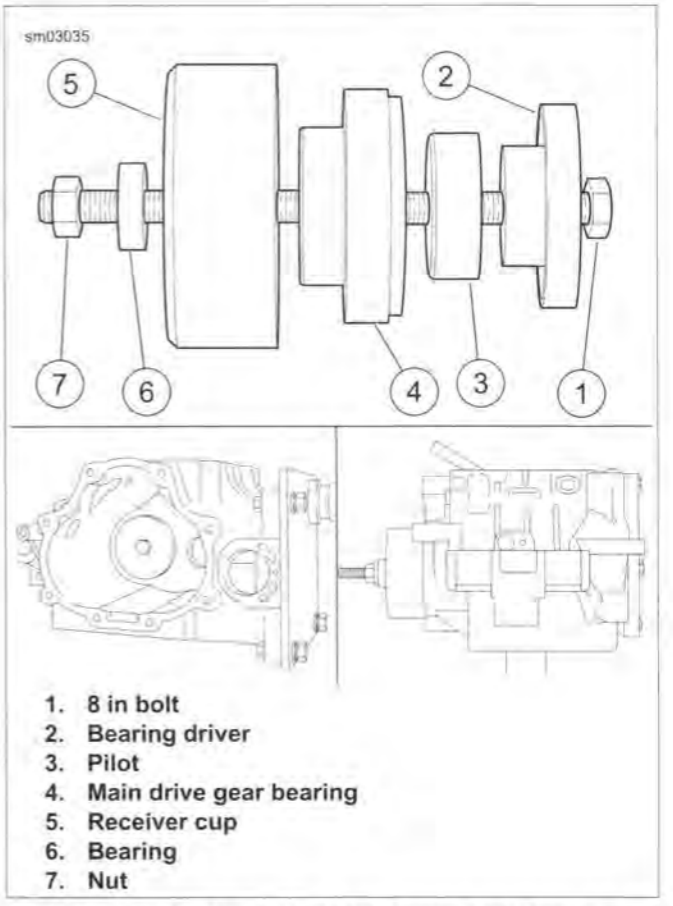

1. 8 in bolt
2. Bearing driver
3. Pilot
4. Main drive gear bearing
5. Receiver cup
6. Bearing
7. Nut

Figure 6-39. Removing Main Drive Gear Bearing

CLEANING AND INSPECTION

PART NUMBER	TOOL NAME
HD-47932	MAIN DRIVE GEAR BEARING AND SEAL INSTALLATION TOOL

⚠WARNING

Compressed air can pierce the skin and flying debris from compressed air could cause serious eye injury. Wear safety glasses when working with compressed air. Never use your hand to check for air leaks or to determine air flow rates. (00061a)

1. Clean all parts in solvent except the transmission case and needle bearings. Dry parts with low-pressure, compressed air.

NOTE

Never wash the transmission case and needle bearings with solvent unless replacing the needle bearings. Normal cleaning methods wash dirt or other contaminants into the bearing case (behind the needles) and leads to bearing failure.

2. Inspect the main drive gear for pitting and wear. Replace if necessary.
3. Inspect the needle bearings inside the main drive gear. Replace the needle bearings if the mainshaft race is pitted or grooved.

4. Replace the sprocket if teeth are cracked or worn. See 5.7 TRANSMISSION SPROCKET, Cleaning and Inspection.

NOTE

If replacing the main drive gear needle bearings and/or seal, continue. Otherwise, proceed to 6.8 TRANSMISSION CASE, Assembly.

Needle Bearing Replacement

⚠WARNING

Wear safety glasses or goggles when removing or installing retaining rings. Retaining rings can slip from the pliers and could be propelled with enough force to cause serious eye injury. (00312a)

NOTES

- *See Figure 6-41. When replacing needle bearings, replace retaining rings (1) with **new** retaining rings (2).*
- *To install the main drive gear needle bearings and mainshaft seal, use MAIN DRIVE GEAR BEARING AND SEAL INSTALLATION TOOL (Part No. HD-47932).*

1. See Figure 6-40. Remove mainshaft seal (7).
2. Remove retaining rings (1), needle bearings (2, 6) and spacer (5) from main drive gear (3). Discard retaining rings.
3. Remove and discard O-ring (4).

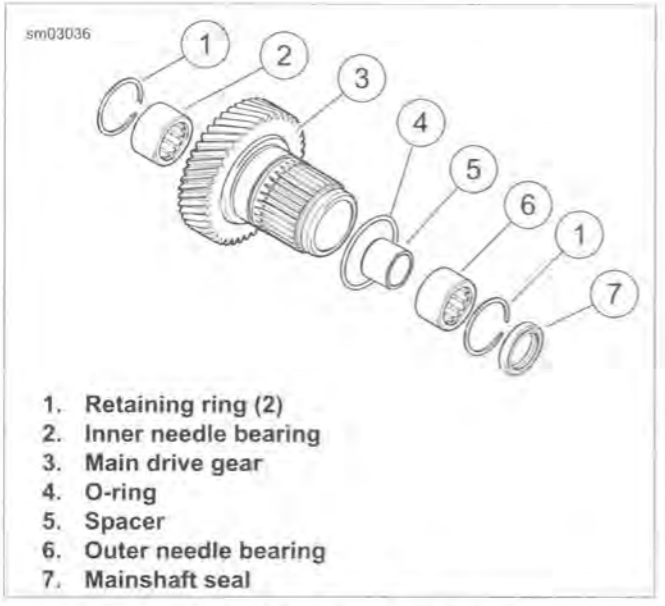

1. **Retaining ring (2)**
2. **Inner needle bearing**
3. **Main drive gear**
4. **O-ring**
5. **Spacer**
6. **Outer needle bearing**
7. **Mainshaft seal**

Figure 6-40. Main Drive Gear Assembly

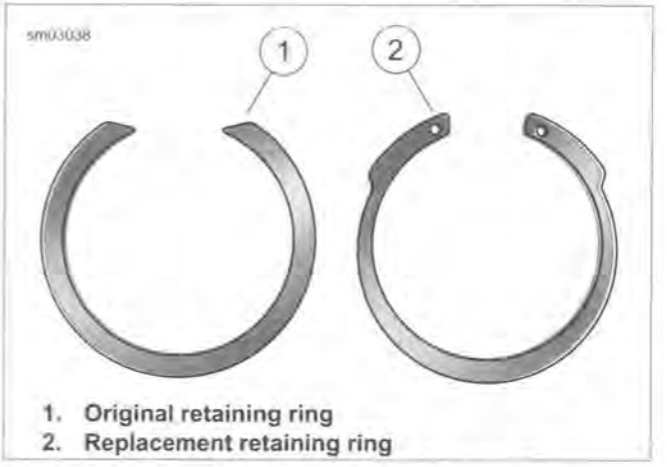

1. **Original retaining ring**
2. **Replacement retaining ring**

Figure 6-41. Main Drive Gear Retaining Rings

4. See Figure 6-42. Install outer needle bearing using an arbor press and the 0.400 in step end of tool as shown. Press until tool contacts gear.

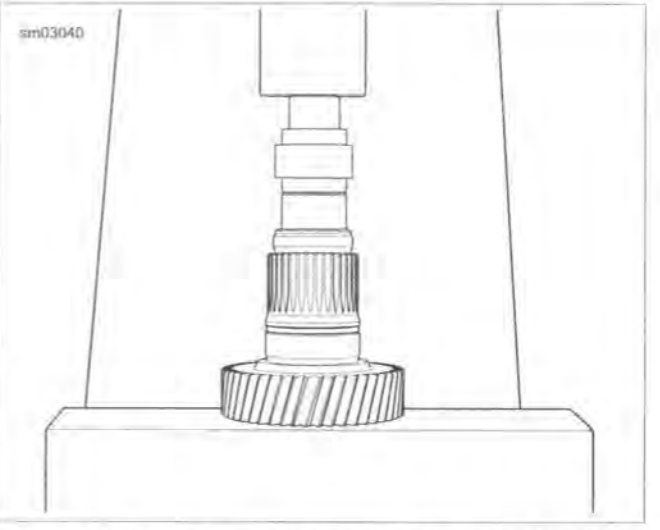

Figure 6-42. Installing Outer Needle Bearing in Main Drive Gear

NOTE

The mainshaft seal can be pressed into place after installation of the main drive gear. See 6.7 MAIN DRIVE GEAR AND BEARING, Removal.

5. See Figure 6-43. Turn over tool and press in mainshaft seal using the 0.090 in step with garter spring side down.
6. See Figure 6-40. Install spacer (5).
7. See Figure 6-40. Turn over the main drive gear. With the tool at the 0.188 in step, press inner needle bearing until tool contacts gear.

⚠WARNING

Wear safety glasses or goggles when removing or installing retaining rings. Retaining rings can slip from the pliers and could be propelled with enough force to cause serious eye injury. (00312a)

8. See Figure 6-40. Install **new** retaining rings (1).

9. Install **new** O-ring (4) into groove in main drive gear.

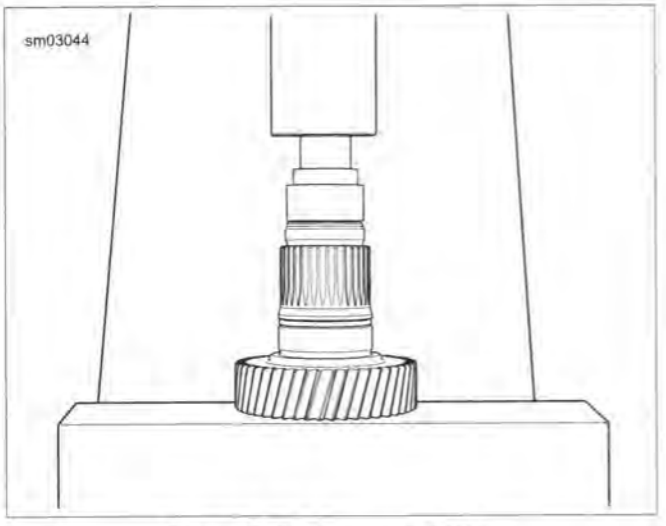

Figure 6-43. Pressing in Seal

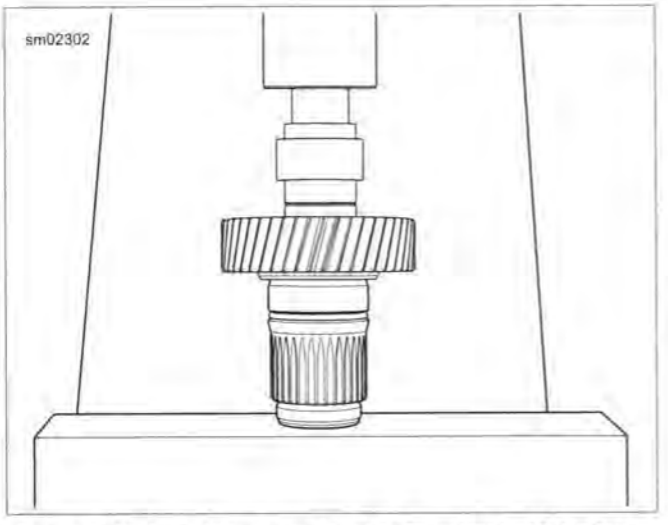

Figure 6-44. Installing Inner Needle Bearing in Main Driver Gear

INSTALLATION

PART NUMBER	TOOL NAME
HD-35316-12	INSTALLER CUP
HD-35316-3A	CROSS PLATE
HD-35316-4A	8 IN BOLT
HD-35316-5	12 IN BOLT
HD-35316-7	WASHER
HD-35316-8	BEARING DRIVER
HD-47856-1	INSTALLER
HD-47856-2	PILOT
HD-47856-3	ADAPTER
HD-47856-6	NUT
HD-47856-7	CROW'S FOOT WRENCH

NOTICE

Improper tightening of sprocket nut can cause drive component damage. (00541b)

Installing Main Drive Gear Bearing

NOTE

The CROSS PLATE (Part No. HD-35316-3A) is stamped, "UP 6 SPEED". Mount cross plate with this end pointing up.

1. See Figure 6-45. Install CROSS PLATE (Part No. HD-35316-3A):
   a. Place cross plate (2) on right side of transmission case as shown.
   b. Position cross plate with large bolt hole in cross plate aligned with center of main drive gear bearing.
   c. Secure with two screws (3).
2. Apply a light coat of graphite lubricant to the threads of 12 IN BOLT (Part No. HD-35316-5) (1). Install through cross plate and main drive gear bearing bore.
3. Place main drive gear bearing (4), BEARING DRIVER (Part No. HD-35316-8) (5), bearing (6) and nut (7) over end of bolt.
4. Tighten nut until main drive gear bearing bottoms against lip cast into transmission case bearing bore.

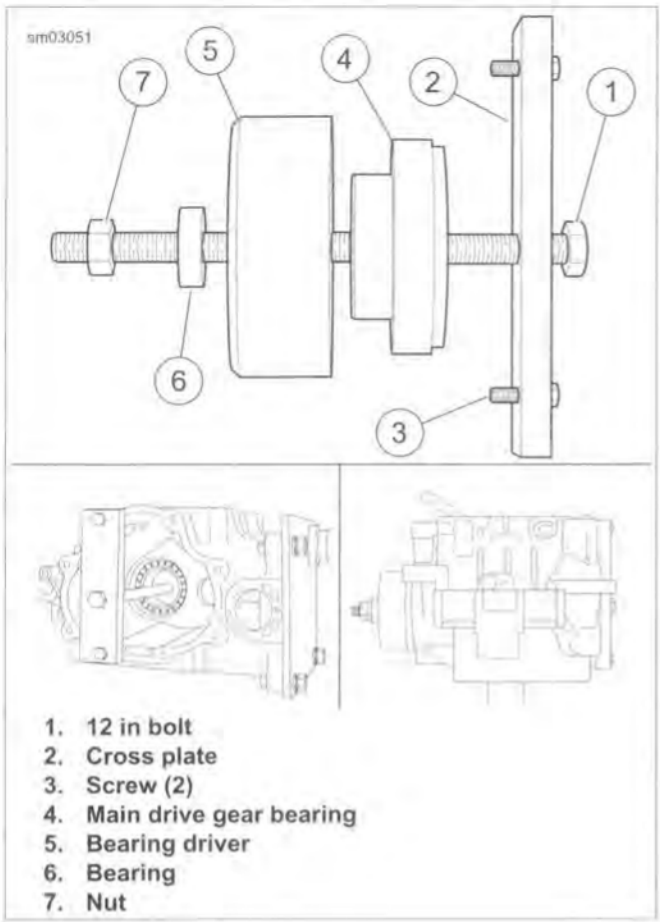

1. 12 in bolt
2. Cross plate
3. Screw (2)
4. Main drive gear bearing
5. Bearing driver
6. Bearing
7. Nut

Figure 6-45. Installing Main Drive Gear Bearing (Typical)

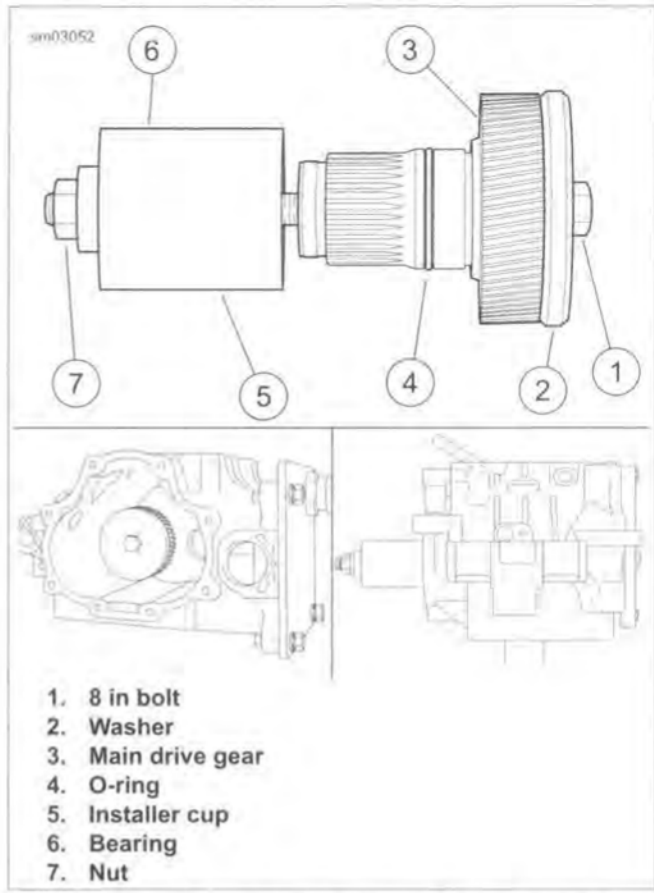

1. 8 in bolt
2. Washer
3. Main drive gear
4. O-ring
5. Installer cup
6. Bearing
7. Nut

Figure 6-46. Installing Main Drive Gear (Typical)

Installing Main Drive Gear

NOTE

See Figure 6-46. Make sure ***new*** *O-ring (4) is installed onto main drive gear (3). Lubricate O-ring with clean engine oil.*

1. See Figure 6-46. Apply a light coat of graphite lubricant to the threads of 8 IN BOLT (Part No. HD-35316-4A) (1) and insert through WASHER (Part No. HD-35316-7) (2) and main drive gear (3). Insert assembly into transmission case, through main drive gear bearing.
2. Place INSTALLER CUP (Part No. HD-35316-12) (5), BEARING (6) and NUT (7) over end of bolt.
3. Tighten nut until main drive gear contacts main drive gear bearing.

⚠WARNING

Wear safety glasses or goggles when removing or installing retaining rings. Retaining rings can slip from the pliers and could be propelled with enough force to cause serious eye injury. (00312a)

NOTE

See Figure 6-47. Retaining ring must be installed with the flat side facing the bearing and the opening within the 90 degree range shown.

4. See Figure 6-48. Install **new** retaining ring (2).

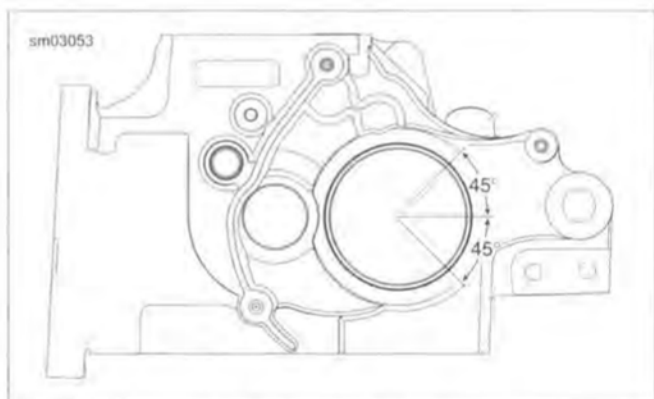

Figure 6-47. Retaining Ring Opening

Installing Main Drive Gear Large Seal

1. See Figure 6-48. Install PILOT (Part No. HD-47856-2) over end of main drive gear bearing inner race.
2. Coat lips of **new** main drive gear seal with transmission lubricant.
3. See Figure 6-49. Place seal over pilot with garter spring facing bearing. Position seal squarely in end of crankcase bore.

NOTE

ADAPTER (Part No. HD-47856-3) and main drive gear have right-hand threads.

4. See Figure 6-50. Install ADAPTER (Part No. HD-47856-3) onto end of main drive gear until it contacts main drive gear.

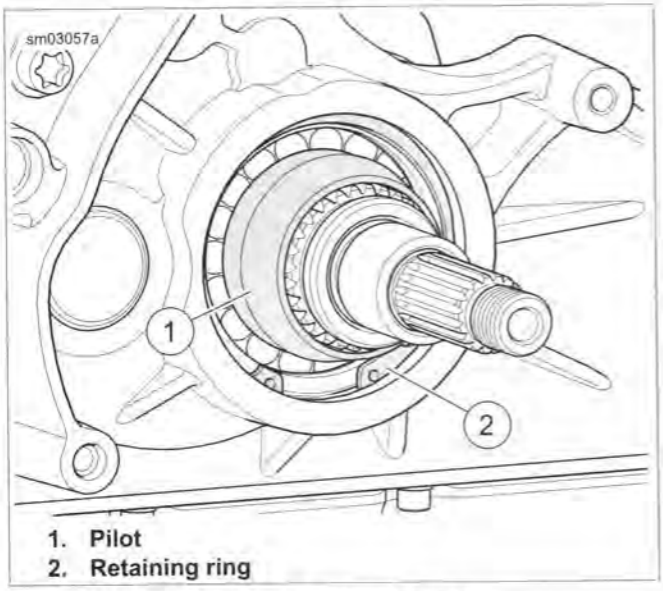

1. **Pilot**
2. **Retaining ring**

Figure 6-48. Install Pilot

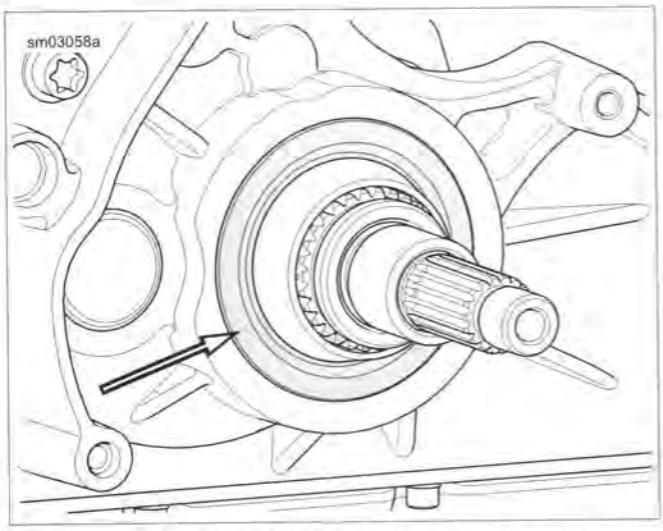

Figure 6-49. Place Main Drive Gear Seal Over Pilot

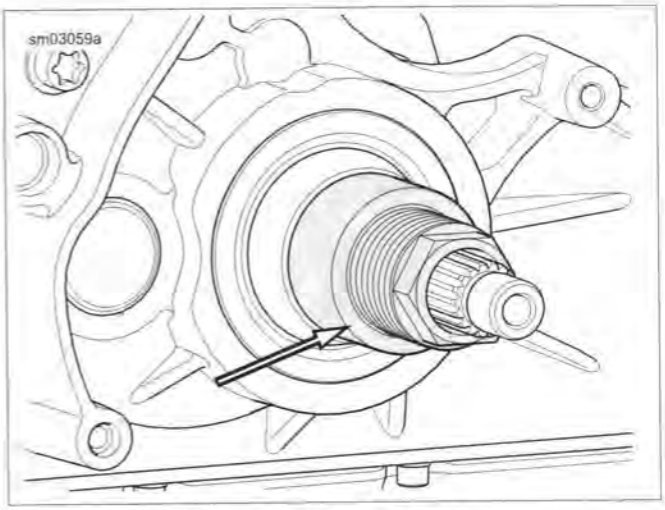

Figure 6-50. Install Adapter

5. See Figure 6-51. Slide INSTALLER (Part No. HD-47856-1) (1) over adapter until cupped end of installer is flat against seal.
6. Install NUT (Part No. HD-47856-6) (2) onto end of adapter against installer.
7. See Figure 6-52. Hold adapter from rotating and tighten large nut with CROW'S FOOT WRENCH (Part No. HD-47856-7) (1) and breaker bar (2) until installer contacts the case.

NOTE

Tool controls seal depth. Seal is recessed as much as 0.030 in (0.762 mm) below outer edge of bore.

8. Remove nut, installer, adapter and pilot.
9. Install bearing housing and transmission components. See 6.6 TRANSMISSION ASSEMBLY, Installation.
10. Install sprocket and drive belt. See 5.7 TRANSMISSION SPROCKET. Do not adjust belt deflection now.
11. Install the bearing inner race on the transmission mainshaft. See 6.6 TRANSMISSION ASSEMBLY, Assembly.
12. Install primary chaincase housing. See 5.5 PRIMARY CHAINCASE HOUSING, Installation.
13. Install primary chain, compensating sprocket and clutch as an assembly. See 5.4 DRIVE COMPONENTS, Installation.
14. Install primary chaincase cover. See 5.3 PRIMARY CHAINCASE COVER, Installation.
15. Adjust drive belt deflection. See 1.11 DRIVE BELT AND SPROCKETS, Check Drive Belt Deflection.
16. Install exhaust system. See 4.15 EXHAUST SYSTEM.

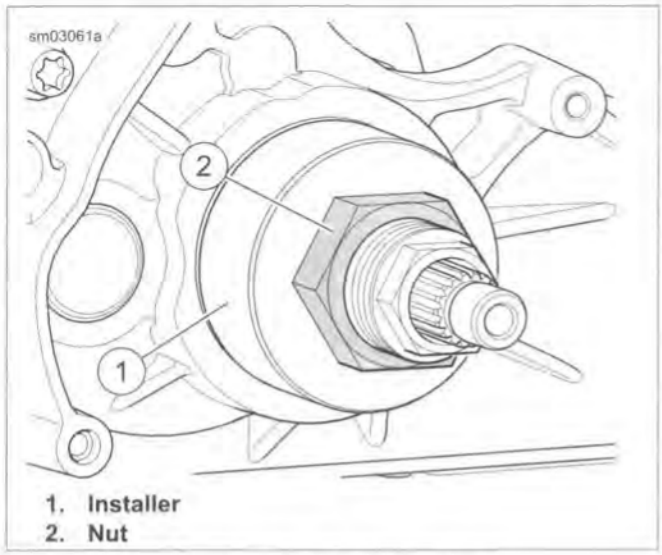

1. Installer
2. Nut

Figure 6-51. Installer and Nut

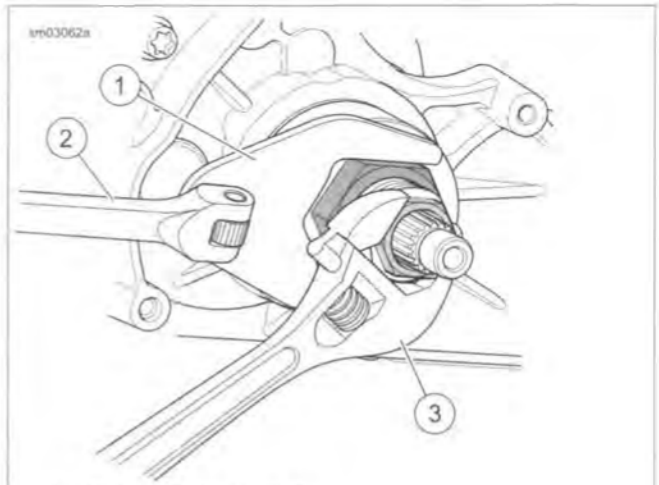

1. Crow's foot wrench
2. Breaker bar
3. Adjustable wrench

Figure 6-52. Press Seal into Crankcase

REMOVAL

⚠WARNING

Disconnect negative (-) battery cable first. If positive (+) cable should contact ground with negative (-) cable connected, the resulting sparks can cause a battery explosion, which could result in death or serious injury. (00049a)

1. Disconnect battery.
2. Drain engine oil. See 1.5 ENGINE OIL AND FILTER.
3. Drain transmission. See 1.9 TRANSMISSION LUBRICANT.
4. Remove starter. See 7.11 STARTER.
5. Remove transmission assembly. See 6.6 TRANSMISSION ASSEMBLY.
6. Remove oil pan. See 3.29 OIL PAN, Removal.

NOTICE

When lifting a motorcycle using a jack, be sure jack contacts both lower frame tubes where down tubes and lower frame tubes converge. Never lift by jacking on crossmembers, oil pan, mounting brackets, components or housings. Failure to comply can cause serious damage resulting in the need to perform major repair work. (00586d)

7. Position jack across lower frame to support rear of motorcycle. Slide wooden blocks beneath the crankcase to support the weight of the engine and transmission assembly.
8. Remove rear fork. See 2.23 REAR FORK.
9. Disconnect vehicle speed sensor (VSS). See 7.24 VEHICLE SPEED SENSOR (VSS).
10. Disconnect neutral switch. See 7.27 NEUTRAL SWITCH, Removal.
11. Remove battery negative ring terminal from ground post at top of transmission case.
12. Move aside the harness that terminates at the O2 sensor, starter solenoid, neutral switch and VSS.
13. Mark splines on shift arm and shift shaft to help with assembly. Remove shift arm from shift shaft.
14. In a crosswise pattern, remove four bolts securing transmission to engine.

NOTE

See Figure 6-53. Do not use a hammer to remove transmission. If the transmission sticks or binds on the ring dowels, gently pry away from crankcase using the pry point.

15. Move transmission rearward until two ring dowels in lower flange are free of crankcase. Remove transmission case from left side of the motorcycle.

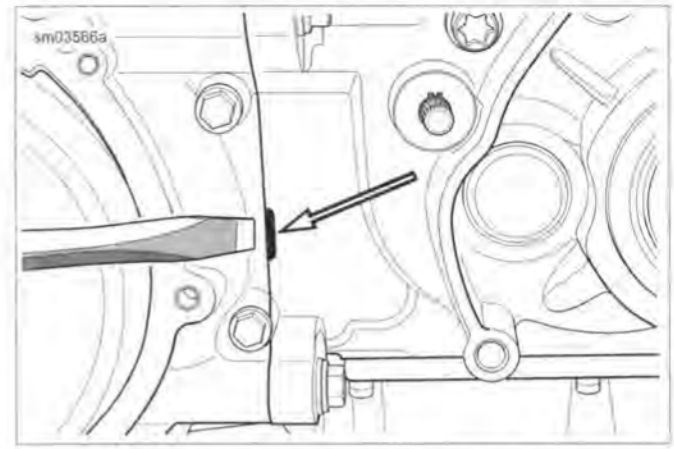

Figure 6-53. Transmission Case Pry Point

INSTALLATION

FASTENER	TORQUE VALUE	
Transmission mounting bolts, initial torque	15 ft-lbs	20.3 Nm
Transmission mounting bolts, final torque	34-39 ft-lbs	46.1-52.9 Nm
Battery ground cable to transmission	66-114 **in-lbs**	7.5-12.9 Nm
Neutral switch	120-180 **in-lbs**	13.6-20.3 Nm
VSS fastener	100-120 **in-lbs**	11.3-13.6 Nm
Transmission drain plug	14-21 ft-lbs	19.0-28.5 Nm

1. Install **new** ground post at top of transmission case. Tighten ground post until snug.

NOTE

*A **new** transmission case comes with the shifter shaft sleeve and seal, centering screw, countershaft needle bearing and main drive gear bearing and seal installed.*

2. Thoroughly wipe all engine oil from pockets in crankcase flange.
3. Install **new** engine-to-transmission gasket engaging two index pins in holes of transmission flange.
4. Verify that transmission dowels are seated. Place transmission case into position.
5. Install bolts.
   a. Install shorter bolts at the top, longer bolts at the bottom. Hand-tighten bolts.
   b. See Figure 6-54. Tighten bolts in the sequence shown to 15 ft-lbs (20.3 Nm).
   c. Final tighten to 34-39 ft-lbs (46.1-52.9 Nm) in the same sequence.
6. Install oil pan. See 3.29 OIL PAN.
7. Install rear fork. See 2.23 REAR FORK, Installation.

8. Install shift arm on shift shaft. Align marks made during disassembly.
9. Install transmission and bearing housing assembly. See 6.6 TRANSMISSION ASSEMBLY, Installation.
10. Secure battery ground cable to ground post at top of transmission case. Tighten to 66-114 **in-lbs** (7.5-12.9 Nm).
11. Adjust drive belt deflection. See 1.11 DRIVE BELT AND SPROCKETS.
12. Install primary chaincase housing. See 5.5 PRIMARY CHAINCASE HOUSING.
13. Install drive components. See 5.4 DRIVE COMPONENTS.

NOTE

*Always install a **new** gasket between primary cover and housing.*

14. Install primary chaincase cover and **new** gasket. See 5.3 PRIMARY CHAINCASE COVER.
15. Install neutral switch. Tighten to 120-180 **in-lbs** (13.6-20.3 Nm).
16. Install VSS with screw. Tighten to 100-120 **in-lbs** (11.3-13.6 Nm).
17. Connect VSS, O2 sensors, starter solenoid and neutral switch connectors to main harness.
18. Install starter. See 7.11 STARTER, Installation.
19. Install exhaust system. See 4.15 EXHAUST SYSTEM.
20. Install drain plug. Tighten to 14-21 ft-lbs (19.0-28.5 Nm). Fill transmission. See 1.9 TRANSMISSION LUBRICANT.

NOTICE

Do not overfill the primary chaincase with lubricant. Overfilling can cause rough clutch engagement, incomplete disengagement, clutch drag and/or difficulty in finding neutral at engine idle. (00199b)

21. Fill primary chaincase. See 1.8 PRIMARY CHAINCASE LUBRICANT, Change Primary Chaincase Lubricant.
22. Fill engine oil. See 1.5 ENGINE OIL AND FILTER, Changing Oil and Oil Filter.

⚠WARNING

Connect positive (+) battery cable first. If positive (+) cable should contact ground with negative (-) cable connected, the resulting sparks can cause a battery explosion, which could result in death or serious injury. (00068a)

23. Connect battery cables.

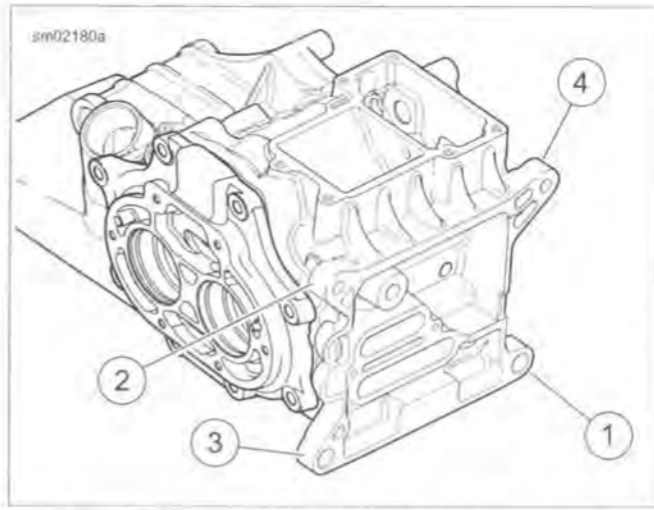

Figure 6-54. Transmission Housing to Crankcase Tightening Sequence

DISASSEMBLY

Shifter Arm Assembly

1. See Figure 6-55. After removing bearing housing and transmission assembly, remove screw (8). Remove shifter rod lever (9) from the shifter pawl lever assembly (1).
2. Remove retaining ring (7), washer (6) and seal (5). Discard retaining ring and seal. Pull shifter pawl lever assembly out of the transmission case.
3. Inspect sleeve (2) inside transmission case.

CLEANING AND INSPECTION

⚠WARNING

Compressed air can pierce the skin and flying debris from compressed air could cause serious eye injury. Wear safety glasses when working with compressed air. Never use your hand to check for air leaks or to determine air flow rates. (00061a)

1. Clean all parts in solvent except the case and main drive gear needle bearings. Dry parts with low-pressure, compressed air.

NOTE

Never wash the transmission case and needle bearings with solvent. Normal cleaning methods wash dirt or other contaminants into the bearing case (behind the needles) leading to bearing failure.

2. See Figure 6-55. Inspect the shifter pawl lever assembly (1) for wear. Replace assembly if pawl ends are damaged. Replace centering spring (3) if elongated.
3. Inspect the shifter shaft lever spring (4). Replace if the spring fails to hold the pawl on the cam pins.
4. Thoroughly clean the oil pan with solvent.
5. Inspect transmission top cover vent hose for damage. Replace if necessary. Use low-pressure, compressed air to verify that hose and fitting are unobstructed.

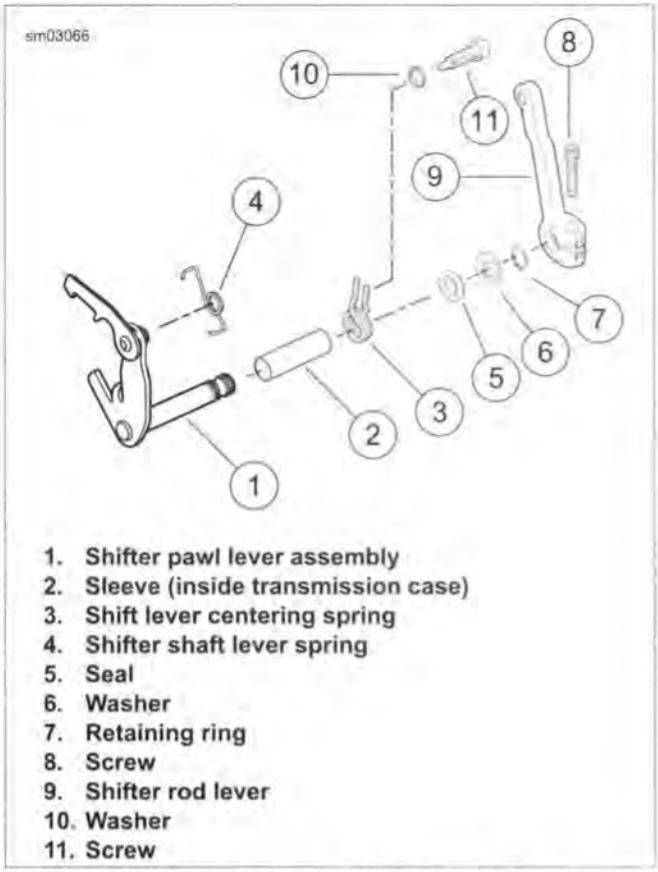

1. **Shifter pawl lever assembly**
2. **Sleeve (inside transmission case)**
3. **Shift lever centering spring**
4. **Shifter shaft lever spring**
5. **Seal**
6. **Washer**
7. **Retaining ring**
8. **Screw**
9. **Shifter rod lever**
10. **Washer**
11. **Screw**

Figure 6-55. Shifter Arm Assembly

ASSEMBLY

PART NUMBER	TOOL NAME
HD-51337	SHIFTER SHAFT SEAL INSTALLATION TOOL

FASTENER	TORQUE VALUE	
Shifter pawl centering screw	18-23 ft-lbs	24.4-31.2 Nm
Shifter rod lever pinch screw, transmission lever	18-22 ft-lbs	24.4-29.8 Nm

Countershaft Needle Bearing Replacement

1. Find a suitable bearing driver 1.25 in (31.75 mm) in diameter.
2. Check bearing position.
   a. From the outside of the transmission case, place the needle bearing, open end first, next to the bearing bore.
   b. Hold the driver squarely against the closed end of the bearing and tap the bearing into place.
   c. The bearing is properly positioned when it is driven inward flush with the outside surface of the case or to a maximum depth of 0.030 in (0.76 mm).
3. Lubricate the bearing with SCREAMIN' EAGLE ASSEMBLY LUBE.

Shifter Pawl Lever Assembly

1. See Figure 6-55. Verify that sleeve (2) is inside transmission case.
2. Install screw (11) and washer (10) into side of transmission case. Tighten to 18-23 ft-lbs (24.4-31.2 Nm).
3. See Figure 6-56. Slide shifter lever centering spring (3) over shaft of shifter pawl lever assembly (2). Align opening on spring with tab on lever.
4. Place shifter shaft lever spring (4) on shifter pawl lever assembly.

NOTE

Do not bend shifter shaft lever spring more than necessary for assembly.

5. See Figure 6-57. Insert the assembly into the transmission case.
6. See Figure 6-58. Verify that pin sits inside shifter shaft lever spring.
7. See Figure 6-59. Using SHIFTER SHAFT SEAL INSTALLATION TOOL (Part No. HD-51337), install a **new** seal with garter spring facing the transmission. Drive the seal in until the tool bottoms out on the transmission case.
8. See Figure 6-57. Install washer (1) and a **new** retaining ring (2).

NOTE

In next step, shifter rod lever must be installed so angle of lever is toward front of vehicle, one spline from vertical.

9. See Figure 6-55. Install shifter rod lever (9) on the shifter pawl lever assembly shaft using screw (8). Tighten to 18-22 ft-lbs (24.4-29.8 Nm).

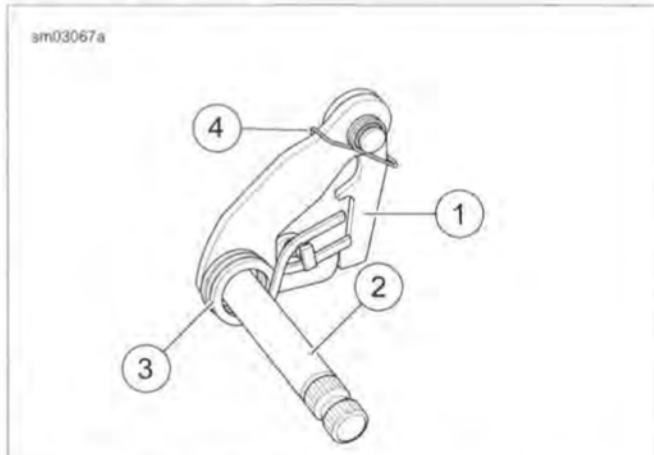

1. **Pawl (part of shifter pawl lever assembly)**
2. **Shifter pawl lever assembly**
3. **Shifter lever centering spring**
4. **Shifter shaft lever spring**

Figure 6-56. Shifter Pawl Lever Assembly

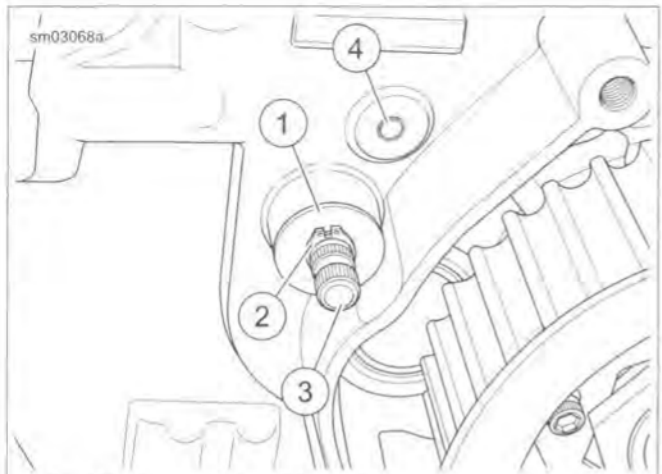

1. Washer (with seal behind)
2. Retaining ring
3. Shifter shaft lever
4. Pin

Figure 6-57. Shifter Shaft Lever, Exterior View

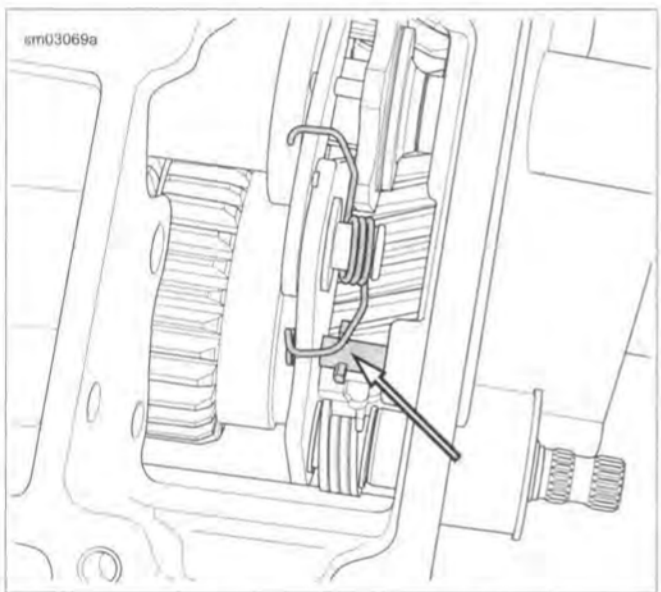

Figure 6-58. Shifter Shaft Lever Spring

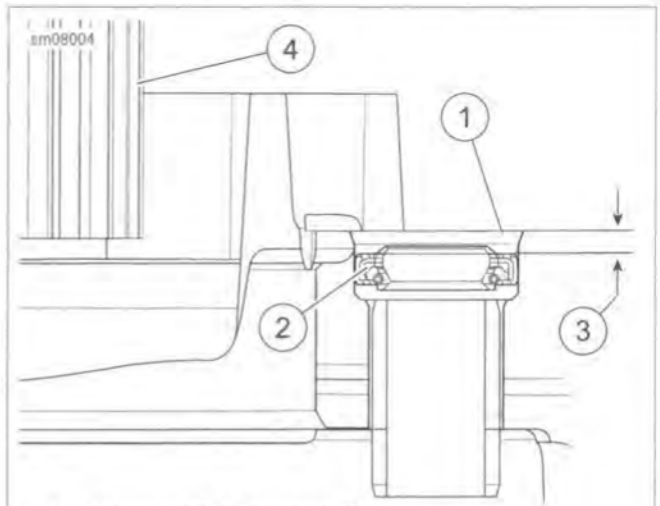

1. Transmission case surface
2. Shift shaft seal
3. 0.120-0.140 in (3.05-3.56 mm)
4. Transmission sprocket

Figure 6-59. Shift Shaft Seal Installation

SUBJECT PAGE NO.

7.1 FASTENER TORQUE VALUES..... 7-1
7.2 SPECIFICATIONS: ELECTRICAL..... 7-4
7.3 ELECTRICAL CADDY..... 7-5
7.4 ELECTRONIC CONTROL MODULE (ECM)..... 7-8
7.5 BODY CONTROL MODULE (BCM)..... 7-9
7.6 SECURITY SIREN..... 7-11
7.7 SPARK PLUG CABLES..... 7-12
7.8 FUSES..... 7-13
7.9 IGNITION SWITCH..... 7-14
7.10 BATTERY TRAY AND BATTERY CABLES..... 7-17
7.11 STARTER..... 7-20
7.12 HEADLAMP..... 7-24
7.13 TAIL LAMP..... 7-31
7.14 TURN SIGNALS..... 7-36
7.15 CRANK POSITION SENSOR (CKP)..... 7-43
7.16 AUTOMATIC COMPRESSION RELEASE (ACR)..... 7-44
7.17 VOLTAGE REGULATOR..... 7-46
7.18 ALTERNATOR..... 7-47
7.19 FUEL GAUGE..... 7-49
7.20 FUEL GAUGE SENDER..... 7-50
7.21 INSTRUMENTS: FXDF AND FLD..... 7-53
7.22 INSTRUMENTS: FXDB, FXDBC, FXDBP AND FXDWG..... 7-54
7.23 INSTRUMENTS: FXDL..... 7-56
7.24 VEHICLE SPEED SENSOR (VSS)..... 7-57
7.25 WHEEL SPEED SENSORS..... 7-58
7.26 INDICATOR LAMPS..... 7-62
7.27 NEUTRAL SWITCH..... 7-64
7.28 OIL PRESSURE SWITCH..... 7-65
7.29 REAR STOPLAMP SWITCH..... 7-66
7.30 HORN..... 7-67
7.31 ACTIVE EXHAUST: HDI..... 7-69
7.32 MAIN WIRING HARNESS..... 7-71
7.33 HANDLEBAR CONTROL MODULES..... 7-77
7.34 LEFT HANDLEBAR CONTROL MODULE..... 7-78
7.35 RIGHT HANDLEBAR CONTROL MODULE..... 7-80
7.36 H-DSSS MAINTENANCE..... 7-83
7.37 PERSONAL IDENTIFICATION NUMBER (PIN)..... 7-84
7.38 H-DSSS ACTUATION..... 7-86

NOTES

FASTENER TORQUE VALUES IN THIS CHAPTER

The table below lists torque values for all fasteners presented in this chapter.

FASTENER	TORQUE VALUE		NOTES
ABS module bracket	90-114 **in-lbs**	10.2-12.8 Nm	7.11 STARTER, Installation
ABS module bracket	90-114 **in-lbs**	10.2-12.8 Nm	7.32 MAIN WIRING HARNESS, Installation
ACR	13-17 ft-lbs	17.6-23.0 Nm	7.16 AUTOMATIC COMPRESSION RELEASE (ACR), Installation/Apply three equally spaced dots of LOCTITE 246 MEDIUM STRENGTH/HIGH TEMPERATURE THREADLOCKER (blue) around lower third of threads
Active exhaust cable clip screw	24-48 **in-lbs**	2.7-5.4 Nm	7.31 ACTIVE EXHAUST: HDI, Installation
Active exhaust module fasteners	36-60 **in-lbs**	4.0-6.8 Nm	7.31 ACTIVE EXHAUST: HDI, Installation
Battery tray screws	96-120 **in-lbs**	10.8-13.6 Nm	7.10 BATTERY TRAY AND BATTERY CABLES, Battery Tray
Brake line clamp fastener: FXDL	45-65 **in-lbs**	5.1-7.3 Nm	7.12 HEADLAMP, Headlamp Visor: FXDL
CKP sensor screw	90-120 **in-lbs**	10.1-13.6 Nm	7.15 CRANK POSITION SENSOR (CKP), Installation
Clutch cable guide fastener: FXDL	45-65 **in-lbs**	5.1-7.3 Nm	7.12 HEADLAMP, Headlamp Visor: FXDL
Console back clamp screw	10-20 **in-lbs**	1.1-2.3 Nm	7.23 INSTRUMENTS: FXDL, Installation
Console mounting screws	41-49 **in-lbs**	4.6-5.5 Nm	7.9 IGNITION SWITCH, Installation
Console mounting screws: FLD	41-49 **in-lbs**	4.6-5.5 Nm	7.26 INDICATOR LAMPS, Installation
Console mounting screws: FXDB, FXDBC, FXDBP, FXDWG and FXDF	41-49 **in-lbs**	4.6-5.5 Nm	7.26 INDICATOR LAMPS, Installation
Console mounting screws: FXDF, FLD	41-49 **in-lbs**	4.6-5.5 Nm	7.21 INSTRUMENTS: FXDF AND FLD, Speedometer
Console to fuel tank fasteners: FXDB, FXDBC, FXDBP and FXDWG	41-49 **in-lbs**	4.6-5.5 Nm	7.22 INSTRUMENTS: FXDB, FXDBC, FXDBP AND FXDWG, Installation
Console to fuel tank fasteners: FXDL	41-49 **in-lbs**	4.6-5.5 Nm	7.23 INSTRUMENTS: FXDL, Installation
Electrical caddy fastener, front	40-60 **in-lbs**	4.5-6.8 Nm	7.3 ELECTRICAL CADDY, Installation
Electrical caddy fasteners, top	90-110 **in-lbs**	10.1-12.4 Nm	7.3 ELECTRICAL CADDY, Installation
Fuel tank trim screw: FXDF, FLD	18-24 **in-lbs**	2.03-2.71 Nm	7.21 INSTRUMENTS: FXDF AND FLD, Speedometer
Hand control module housing screws	35-45 **in-lbs**	4.0-5.1 Nm	7.34 LEFT HANDLEBAR CONTROL MODULE, Installation
Hand control module housing screws	35-45 **in-lbs**	4.0-5.1 Nm	7.35 RIGHT HANDLEBAR CONTROL MODULE, Installation
Handlebar clutch lever clamp screws	60-80 **in-lbs**	6.8-9.0 Nm	7.34 LEFT HANDLEBAR CONTROL MODULE, Installation
Handlebar master cylinder clamp screws	60-80 **in-lbs**	6.8-9.0 Nm	7.35 RIGHT HANDLEBAR CONTROL MODULE, Installation
Handlebar module assembly retainer screws	8-10 **in-lbs**	0.9-1.1 Nm	7.34 LEFT HANDLEBAR CONTROL MODULE, Installation
Handlebar module assembly retainer screws	8-10 **in-lbs**	0.9-1.1 Nm	7.35 RIGHT HANDLEBAR CONTROL MODULE, Installation
Handlebar switch assembly retainer screws	8-10 **in-lbs**	0.9-1.1 Nm	7.34 LEFT HANDLEBAR CONTROL MODULE, Clutch Switch Replacement

FASTENER	TORQUE VALUE		NOTES
Handlebar switch assembly retainer screws	8-10 **in-lbs**	0.9-1.1 Nm	7.35 RIGHT HANDLEBAR CONTROL MODULE, Front Brake Switch Replacement
Headlamp door screw: FLD	9-18 **in-lbs**	1.0-2.0 Nm	7.12 HEADLAMP, Headlamp: FLD
Headlamp screws: FLD	7-10 **in-lbs**	0.8-1.1 Nm	7.12 HEADLAMP, Headlamp: FLD
Headlamp visor bolts: FXDL	30-40 ft-lbs	40.7-54.2 Nm	7.12 HEADLAMP, Headlamp Visor: FXDL
Headlight horizontal adjusting bolt	25-30 ft-lbs	33.9-40.7 Nm	7.12 HEADLAMP, Headlamp Assembly: All But FLD and FXDL
Horn mounting nut	120-180 **in-lbs**	13.6-20.3 Nm	7.30 HORN, Replacement: All But FXDL
Horn mounting nut	80-100 **in-lbs**	9.0-11.3 Nm	7.30 HORN, Replacement: FXDL
Horn mount screw	13-15 ft-lbs	17.6-20.3 Nm	7.30 HORN, Replacement: FXDL
Ignition switch nut	140-160 **in-lbs**	15.8-18.1 Nm	7.9 IGNITION SWITCH, Installation
Ignition switch screws	20-30 **in-lbs**	2.3-3.4 Nm	7.9 IGNITION SWITCH, Installation
Ignition switch set screw	20-26 **in-lbs**	2.3-2.9 Nm	7.9 IGNITION SWITCH, Installation
License bracket screws: FLD	60-80 **in-lbs**	6.8-9.0 Nm	7.14 TURN SIGNALS, Rear Turn Signal Lamps and Bracket: FLD
License plate lamp screws: FXDF	10-17 **in-lbs**	1.1-1.9 Nm	7.13 TAIL LAMP, Tail Lamp Replacement: FXDF
Mirror acorn nut: FLD	84-156 **in-lbs**	9.5-17.6 Nm	7.14 TURN SIGNALS, Front Turn Signal Lamps: FLD
Neutral switch	120-180 **in-lbs**	13.6-20.3 Nm	7.27 NEUTRAL SWITCH, Installation
Oil pressure switch	96-144 **in-lbs**	10.8-16.3 Nm	7.28 OIL PRESSURE SWITCH, Installation
Rear light bar housing screws: FLD	84-144 **in-lbs**	9.5-16.3 Nm	7.14 TURN SIGNALS, Rear Turn Signal Lamps and Bracket: FLD/Use LOCTITE 271 HIGH STRENGTH THREADLOCKER (red)
Rear stop lamp switch	12-15 ft-lbs	16.3-20.3 Nm	7.29 REAR STOPLAMP SWITCH, Installation
Rear turn signal lamp fastener	12-16 ft-lbs	16.3-21.7 Nm	7.14 TURN SIGNALS, Rear Lamp Housing Replacement: All But FLD
Riser clamp fasteners: FXDL	15-19 ft-lbs	20.3-25.8 Nm	7.12 HEADLAMP, Headlamp Visor: FXDL
Solenoid contact post jamnut	65-80 **in-lbs**	7.3-9.0 Nm	7.11 STARTER, Solenoid
Solenoid terminal post nut	70-90 **in-lbs**	7.9-10.2 Nm	7.11 STARTER, Drive Assembly
Speedometer screw: FXDB, FXDBC, FXDBP and FXDWG	10-20 **in-lbs**	1.1-2.3 Nm	7.22 INSTRUMENTS: FXDB, FXDBC, FXDBP AND FXDWG, Installation
Speedometer VSS mounting bolt	84-108 **in-lbs**	9.5-12.2 Nm	7.24 VEHICLE SPEED SENSOR (VSS), Installation
Starter end cover screw	90-110 **in-lbs**	10.2-12.4 Nm	7.11 STARTER, Drive Assembly
Starter mounting fasteners	25-27 ft-lbs	33.9-36.6 Nm	7.11 STARTER, Installation
Starter positive terminal nut	60-80 **in-lbs**	6.8-9.0 Nm	7.10 BATTERY TRAY AND BATTERY CABLES, Battery Cables/metric
Starter positive terminal nut	60-80 **in-lbs**	6.8-9.0 Nm	7.11 STARTER, Installation
Starter ring terminal hex nut	60-80 **in-lbs**	6.8-9.0 Nm	7.11 STARTER, Solenoid
Starter through bolts	39-65 **in-lbs**	4.4-7.3 Nm	7.11 STARTER, Drive Assembly
Stator screws	55-75 **in-lbs**	6.2-8.4 Nm	7.18 ALTERNATOR, Installation/Stator screws, use only once
Tail lamp base screws: FLD, FXDL	40-48 **in-lbs**	4.5-5.4 Nm	7.13 TAIL LAMP, Base Replacement: FLD and FXDL
Tail lamp base screws: FXDWG (HDI and Canada)	66-90 **in-lbs**	7.5-10.1 Nm	7.13 TAIL LAMP, Base Replacement: FXDWG/HDI and Canada
Tail lamp bracket screws: FXDF	60-80 **in-lbs**	6.8-9.0 Nm	7.13 TAIL LAMP, Tail Lamp Replacement: FXDF
Tail lamp lens screws	20-24 **in-lbs**	2.3-2.7 Nm	7.13 TAIL LAMP, Tail Lamp Bulb Replacement: FLD and FXDL

FASTENER	TORQUE VALUE		NOTES
Tail lamp lens screws: FLD, FXDL	20-24 **in-lbs**	2.3-2.7 Nm	7.13 TAIL LAMP, Base Replacement: FLD and FXDL
Tail lamp screws: FXDF	13-18 **in-lbs**	1.4-2.0 Nm	7.13 TAIL LAMP, Tail Lamp Replacement: FXDF
Throttle cable guide fastener: FXDL	45-65 **in-lbs**	5.1-7.3 Nm	7.12 HEADLAMP, Headlamp Visor: FXDL
Top plate fasteners	27-33 **in-lbs**	3.1-3.7 Nm	7.20 FUEL GAUGE SENDER, Installation
Transmission ground stud nut	96-144 **in-lbs**	10.8-16.3 Nm	7.10 BATTERY TRAY AND BATTERY CABLES, Battery Cables
Voltage regulator fasteners	100-120 **in-lbs**	11.2-13.6 Nm	7.17 VOLTAGE REGULATOR, Installation

SPECIFICATIONS

Table 7-1. Ignition

IGNITION	DATA
Idle speed	1000 ± 50 rpm
Spark plug size	12 mm
Spark plug gap	0.038-0.043 in
	0.97-1.09 mm
Ignition coil primary resistance	0.5-0.7 ohms
Ignition coil secondary resistance	5500-7500 ohms

Table 7-2. Fuses

FUSE	AMPS
Main fuse	40
Battery	15
Accessories	15

Table 7-3. Charging System

CHARGING SYSTEM	DATA
Battery	19 A hour/315 CCA
Alternator AC voltage output	16-23 VAC per 1000 rpm
Alternator stator coil resistance	0.1-0.2 ohms
Regulator voltage output @ 3600 rpm	14.3-14.7 VDC @ 75 °F (24 °C)
Regulator amperes @ 3000 rpm	35-50 A

Table 7-4. Starter Specifications

STARTER DATA	
Free speed	3000 rpm (min) @ 11.5 V
Free current	90 A (max) @ 11.5 V
Cranking current	200 A (max) @ 68 °F (20 °C)
Stall torque	8.0 ft-lbs (10.8 Nm) @ 2.4 V

REMOVAL

NOTE

Security siren connector [142] is located under seat in the rear of the electrical caddy.

1. Remove seat.

⚠WARNING

To prevent accidental vehicle start-up, which could cause death or serious injury, disconnect negative (-) battery cable before proceeding. (00048a)

2. Remove battery cover.
3. Disconnect negative battery cable.
4. See Figure 7-1. Remove electrical caddy cover:
   a. Push up on the lower tab securing the electrical caddy cover.
   b. Pull outward on bottom until retainer on cover clears tab.
   c. Lift cover up and off two upper tabs on electrical caddy and remove.
5. See Figure 7-2. Slide data link connector (2) [91] up to disengage from electrical caddy.



Figure 7-1. Electrical Caddy Cover

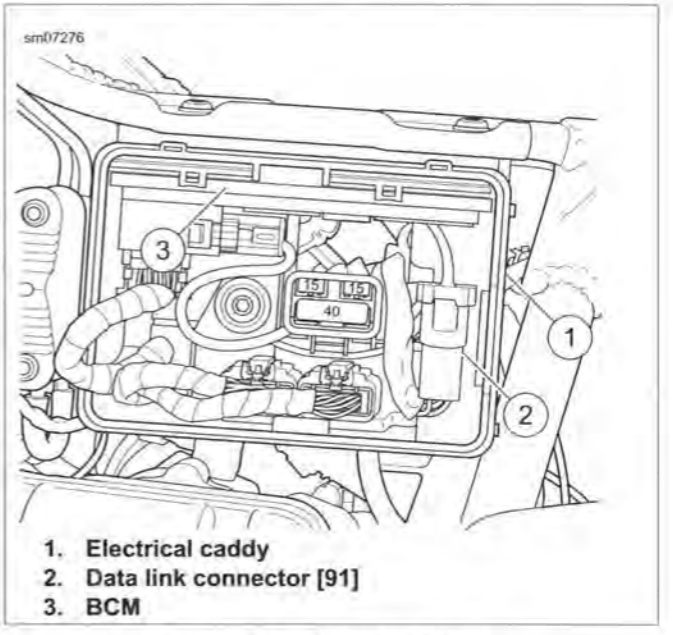

1. **Electrical caddy**
2. **Data link connector [91]**
3. **BCM**

Figure 7-2. Electrical Caddy

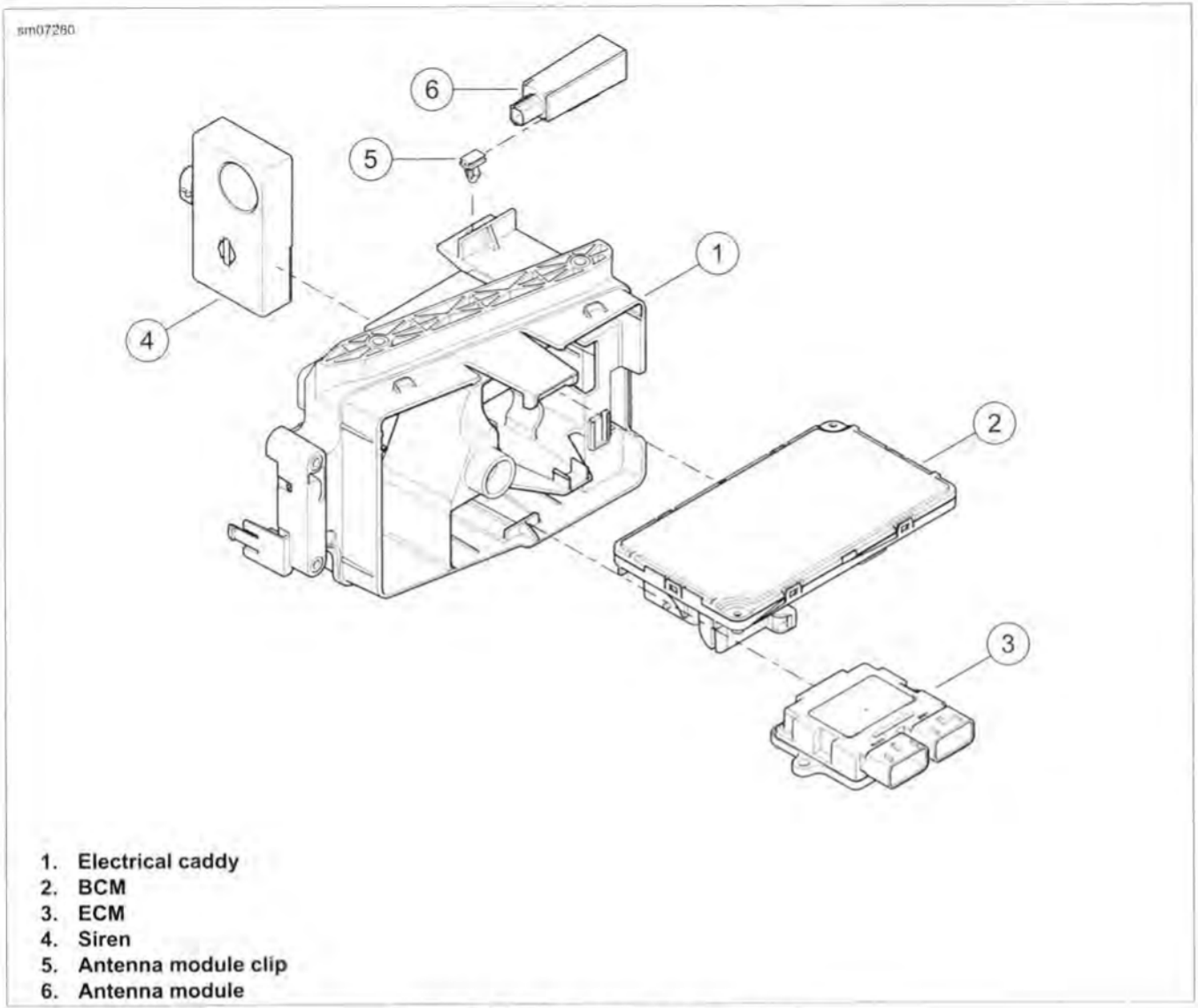

1. Electrical caddy
2. BCM
3. ECM
4. Siren
5. Antenna module clip
6. Antenna module

Figure 7-3. Electrical Caddy Components

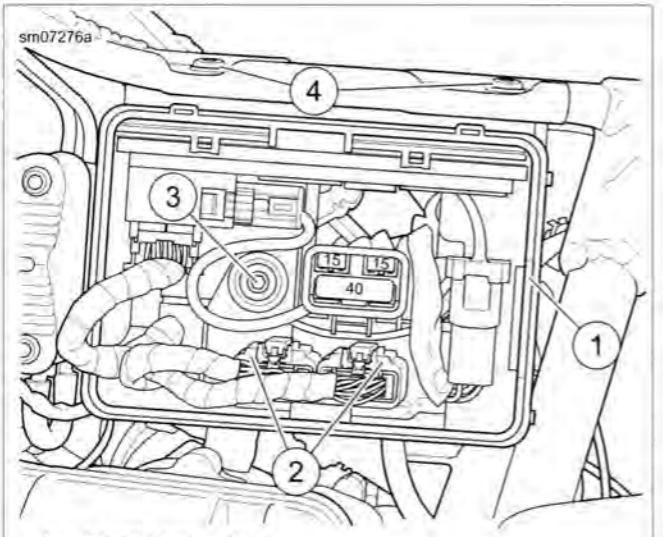

1. **Electrical caddy**
2. **ECM connectors [78]**
3. **Front electrical caddy fastener**
4. **Electrical caddy fasteners (2)**

Figure 7-4. Electrical Caddy Fasteners

NOTE

No modules are held in with fasteners.

6. See Figure 7-3. Disconnect ECM connectors [78-1], [78-2]. Remove the ECM (3).
7. Disconnect BCM connectors [259], [242]. Remove the BCM (2).
8. Disconnect antenna module (6) for security siren [209] and remove.
9. Disconnect ignition coil connector [83].
10. Disconnect spark plug cables from coil.
11. See Figure 7-4. Remove front electrical caddy fastener (3).
12. Remove top electrical caddy fasteners (4).
13. Pull the electrical caddy (1) away from vehicle. Remove wiring from back of electrical caddy.
14. With electrical caddy pulled away from the vehicle, disconnect security siren connector [142] and remove siren.
15. See Figure 7-4. Remove the electrical caddy.

INSTALLATION

FASTENER	TORQUE VALUE	
Electrical caddy fasteners, top	90-110 **in-lbs**	10.1-12.4 Nm
Electrical caddy fastener, front	40-60 **in-lbs**	4.5-6.8 Nm

NOTE

No fasteners are used to attach the BCM or ECM to the electrical caddy.

1. See Figure 7-3. Snap ECM into electrical caddy.
2. Route all wiring and fuse block through back of electrical caddy along with ECM and data link connectors before installing the electrical caddy.
3. Connect BCM connectors to BCM (2). Install BCM.
4. Connect siren connector. Insert siren (4) into back of electrical caddy. Unless equipped with security system, attach siren connector to back of electrical caddy.
5. See Figure 7-4. Install but do not tighten electrical caddy front fastener (3).
6. Install electrical caddy top fasteners (4). Tighten to 90-110 **in-lbs** (10.1-12.4 Nm).
7. Tighten electrical caddy front fastener to 40-60 **in-lbs** (4.5-6.8 Nm).
8. Connect electronic control module (ECM) connectors [78-1] [78-2].
9. See Figure 7-5. Install data link connector (2) to electrical caddy as shown.
10. Install main fuse.
11. Attach coil connector [83].
12. Attach spark plug cables. Install rear cable on upper coil tower.
13. Install electrical caddy cover.
14. Connect negative battery cable. Install battery cover.

⚠WARNING

After installing seat, pull upward on seat to be sure it is locked in position. While riding, a loose seat can shift causing loss of control, which could result in death or serious injury. (00070b)

15. Install seat.

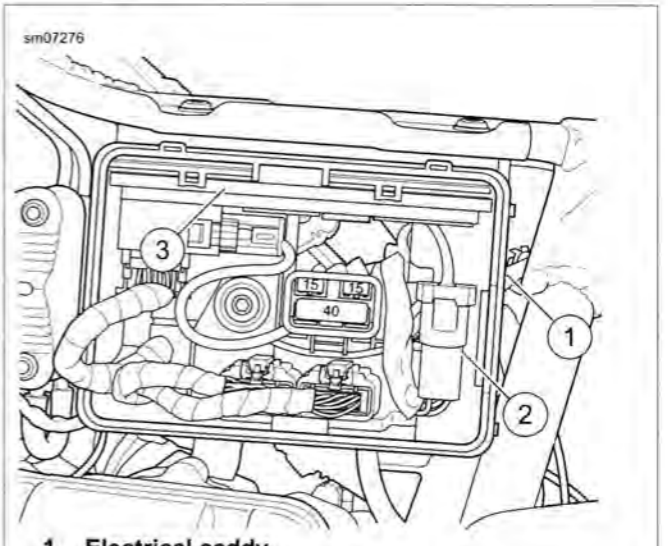

1. **Electrical caddy**
2. **Data link connector [91]**
3. **BCM**

Figure 7-5. Electrical Caddy

GENERAL

PART NUMBER	TOOL NAME
HD-48650	DIGITAL TECHNICIAN II

The ECM is mounted in the bottom of the electrical caddy.

See the electrical diagnostic manual for information on the function and testing of the ECM.

NOTES

- *The ECM cannot be repaired. Replace the unit if it fails.*
- *Always calibrate replaced ECMs with DIGITAL TECHNICIAN II (Part No. HD-48650).*

REPLACEMENT

Removal

⚠WARNING

To prevent accidental vehicle start-up, which could cause death or serious injury, remove main fuse before proceeding. (00251b)

1. Remove electrical caddy cover.
2. Remove main fuse.
3. See Figure 7-3. Remove ECM (3) from mounting bracket.
   a. A lip on the electrical caddy holds the ECM in place. Press latches on connectors [78-1] ECM (BK), [78-2] ECM (GY) and disconnect from ECM.
   b. Lift the ECM and slide it out of the electrical caddy after it has been disconnected.

Installation

1. See Figure 7-3. Install ECM (3) into bottom of electrical caddy and snap in place to secure.
2. Plug connectors [78-1] 18-place Tyco (BK), [78-2] 18-place Tyco (GY) into ECM.
3. Install main fuse.
4. Install electrical caddy cover.

GENERAL

See Figure 7-6. The BCM (2) is on the left side of the vehicle in the top of the electrical caddy. The BCM supplies ignition and accessory power to the vehicle. The fuses are the main fuse (40 amp), the battery fuse (15 amp) and the accessories fuse (15 amp). For diagnostic information see the electrical diagnostic manual.

REMOVAL

1. Remove electrical caddy cover.

⚠WARNING

To prevent accidental vehicle start-up, which could cause death or serious injury, remove main fuse before proceeding. (00251b)

2. Remove main fuse. See 7.8 FUSES.
3. See Figure 7-6. Slide BCM (2) out of electrical caddy (1).
4. Disconnect electrical connectors [259] BCM battery power (Bk), [242] BCM (Bk) on the body control module (BCM).

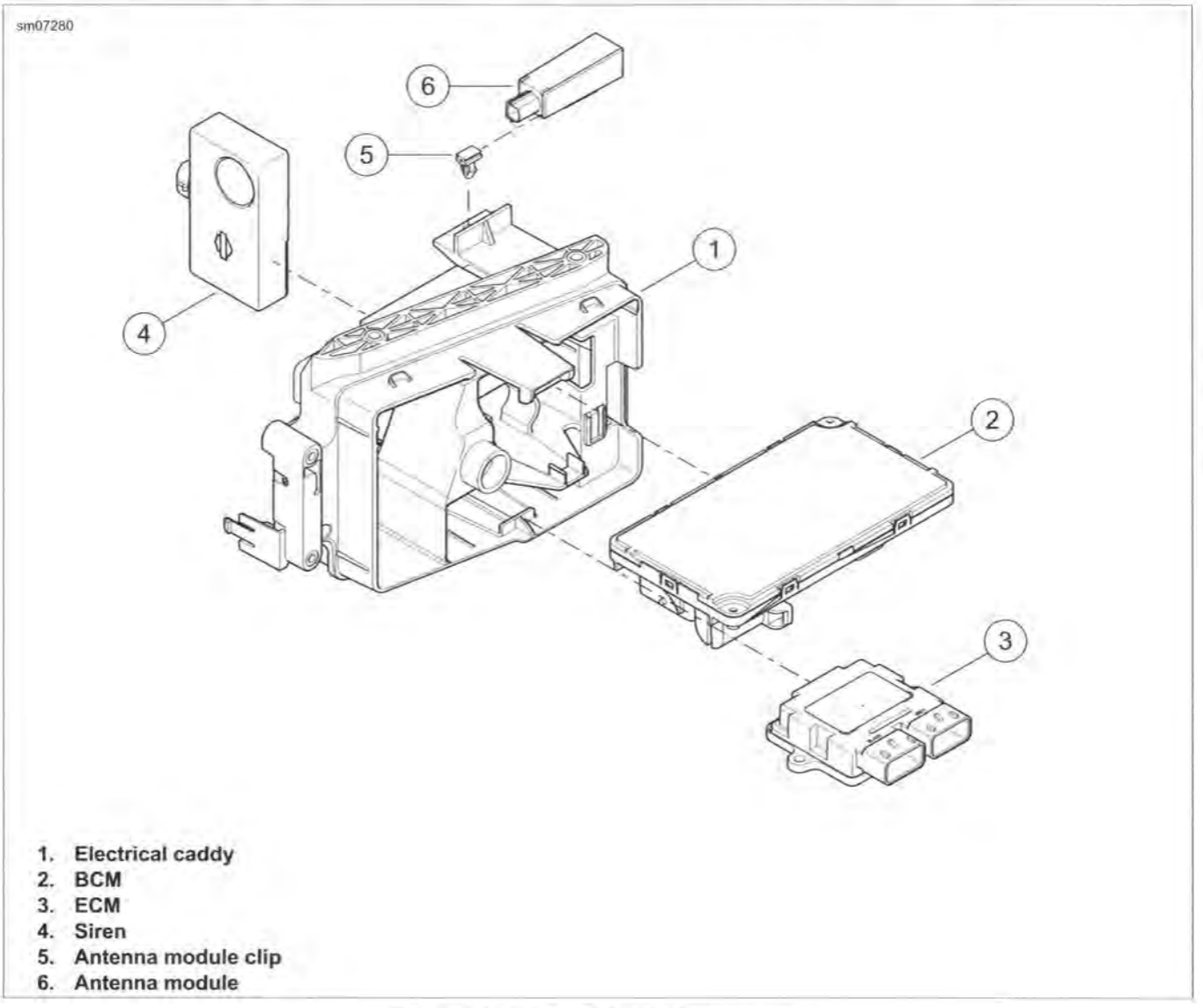

1. **Electrical caddy**
2. **BCM**
3. **ECM**
4. **Siren**
5. **Antenna module clip**
6. **Antenna module**

Figure 7-6. Electrical Caddy Components

INSTALLATION

PART NUMBER	TOOL NAME
HD-48650	DIGITAL TECHNICIAN II

NOTES

- *All replacement BCMs are configured for keyless ignition. If the RUN/STOP switch is in the RUN position when the BCM is replaced and the battery is reconnected, the vehicle enables all ignition functions and does not respond to the ignition switch. If this situation occurs, turn the ignition and RUN/STOP switches OFF, then turn the ignition ON.*
- *If ignition is cycled ON when BCM is not secured in electrical caddy, the lights may cycle ON for 2 seconds and the word "tip" is displayed on the odometer.*

1. Verify that ignition and RUN/STOP switches are in the OFF position.
2. See Figure 7-6. Connect both BCM connectors [259], [242]. Install BCM (2) into electrical caddy.
3. Install main fuse.
4. Turn ignition switch to ON to configure BCM for keyed ignition operation.

NOTE

Use DIGITAL TECHNICIAN II (Part No. HD-48650) for configuration and password learning after replacing BCM.

5. Configure BCM.

⚠WARNING

Be sure that all lights and switches operate properly before operating motorcycle. Low visibility of rider can result in death or serious injury. (00316a)

6. Turn ignition on. Check operation of all lamps.

REMOVAL

NOTE

For information on the anti-theft module and antenna for vehicles sold in the Brazilian market, see the electrical diagnostic manual.

1. Disarm security system if equipped.
2. Remove electrical caddy. See 7.3 ELECTRICAL CADDY.
3. See Figure 7-7. Remove security siren (2) from electrical caddy.

INSTALLATION

1. See Figure 7-7. Install security siren (2) into back of electrical caddy.
2. Install electrical caddy. See 7.3 ELECTRICAL CADDY.
3. Test security system.

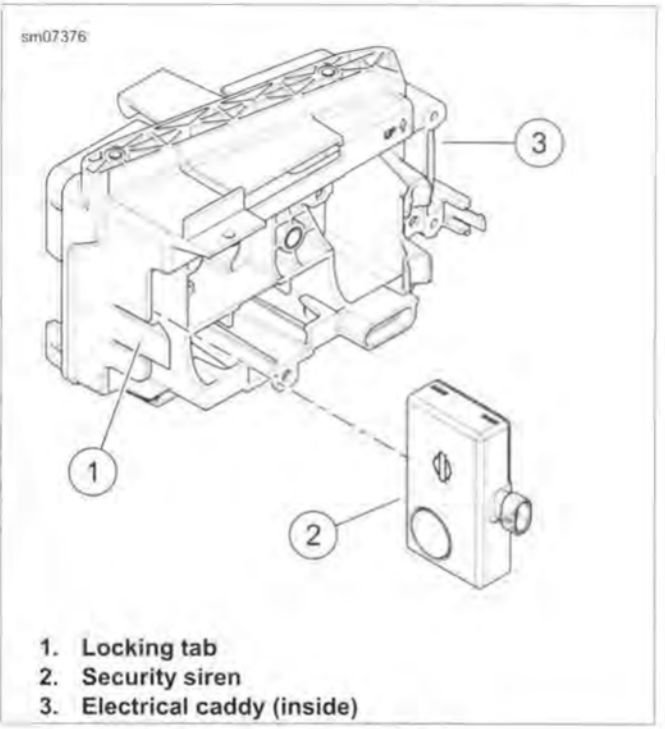

1. **Locking tab**
2. **Security siren**
3. **Electrical caddy (inside)**

Figure 7-7. Security Siren

INSPECT SPARK PLUG CABLES

1. Inspect spark plug cables. Replace if necessary.
   a. Check for cracks or loose terminals.
   b. Check for loose fit on ignition coil and spark plugs.
2. Check cable boots and caps for cracks or tears. Replace cable if boots or caps are worn or damaged.
3. See Figure 7-8. Check spark plug cable resistance with an ohmmeter. Replace cables not meeting resistance specifications. Refer to Table 7-5.

Table 7-5. Spark Plug Cable Resistance Values: Dyna

DESCRIPTION	LENGTH		RESISTANCE VALUE (OHMS)
	In	mm	
Front cable	19.00	483	4720-12,920
Rear cable	7.25	184	1813-5000

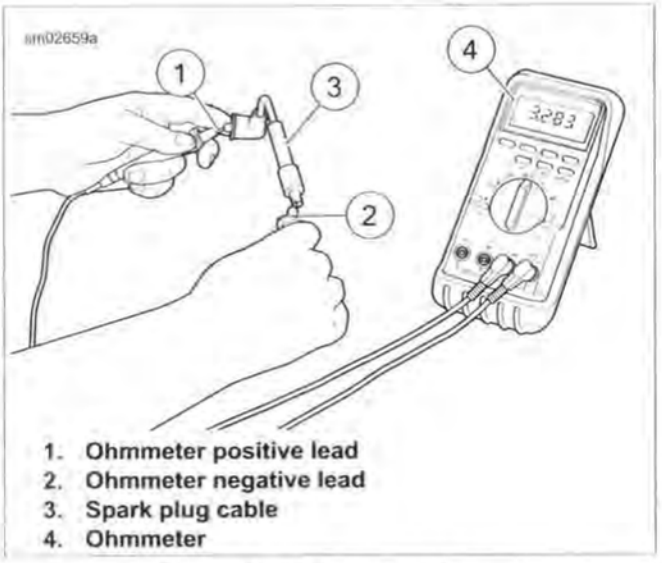

1. **Ohmmeter positive lead**
2. **Ohmmeter negative lead**
3. **Spark plug cable**
4. **Ohmmeter**

Figure 7-8. Testing Resistance

REMOVAL

⚠WARNING

Disconnecting spark plug cable with engine running can result in electric shock and death or serious injury. (00464b)

NOTE

When disconnecting spark plug cable, grasp and pull on the rubber boot at the end of the cable assembly. Do not pull on the cable portion itself. Pulling on the cable damages the carbon core of the cable.

1. Disconnect spark plug cables from ignition coil and spark plug terminals. Inspect all removed cables for damage.
2. See Figure 7-9. Remove horn bracket clips (1) on horn bracket for front spark plug cable.

INSTALLATION

1. See Figure 7-9. Connect spark plug cables to ignition coil and spark plugs. Rear cylinder plug cable attaches to top coil terminal (4). Fasten boots/caps securely. Tight connections provide the necessary moisture-proof environment for the ignition coil and spark plug terminals.
2. Secure front spark plug cable to horn bracket with horn bracket clips (1).
3. Install cable retention clip (2) over spark plug cables. Make sure that clip is 1.5-2.0 in (38.1-50.8 mm) from spark plug boots (3).

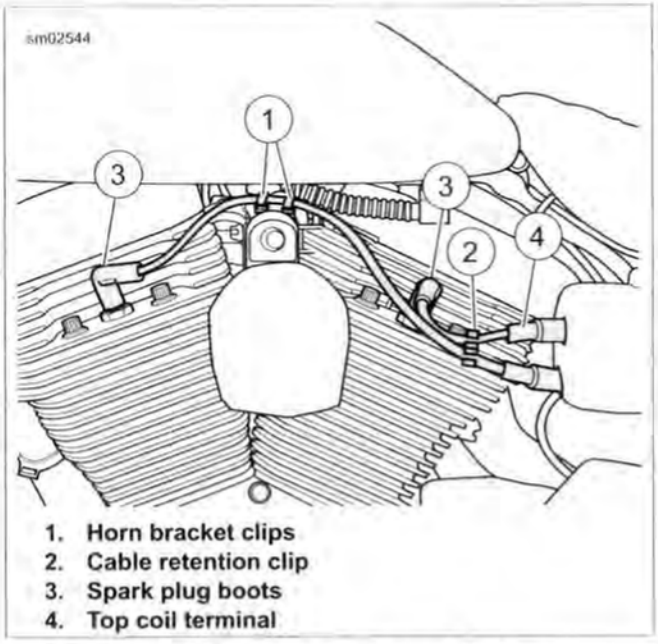

1. **Horn bracket clips**
2. **Cable retention clip**
3. **Spark plug boots**
4. **Top coil terminal**

Figure 7-9. Spark Plug Cable Routing

GENERAL

See Figure 7-11. The fuse block is under the electrical caddy cover. The block contains a 40 ampere main fuse and two 15 ampere fuses.

REPLACEMENT

1. Disarm security system.
2. Turn ignition switch OFF.
3. See Figure 7-10. Remove the electrical caddy cover.
4. See Figure 7-11. Remove main fuse.
5. Remove suspect fuse.
6. Plug in **new** fuse.
7. Install main fuse.
8. Install the electrical caddy cover.



Figure 7-10. Electrical Caddy Cover

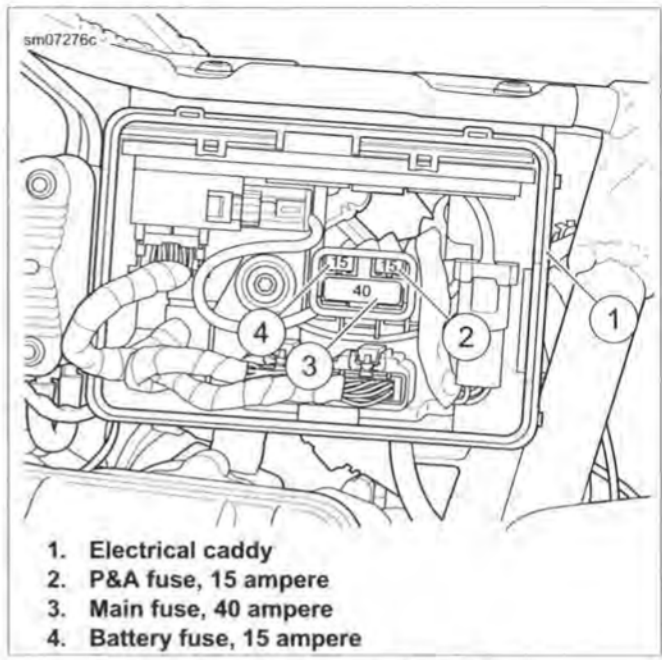

1. **Electrical caddy**
2. **P&A fuse, 15 ampere**
3. **Main fuse, 40 ampere**
4. **Battery fuse, 15 ampere**

Figure 7-11. Fuses/Electrical Caddy

REMOVAL

PART NUMBER	TOOL NAME
HD-50988	IGNITION SWITCH SPANNER WRENCH

All but FXDL

⚠WARNING

The automatic-on headlamp feature provides increased visibility of the rider to other motorists. Be sure headlamp is on at all times. Poor visibility of rider to other motorists can result in death or serious injury. (00030b)

NOTES

- *Dyna model ignition/light/key switches cannot be repaired. Replace assembly upon failure.*
- *The ignition switch is on the fuel tank instrument panel.*
- *Switch is locked or unlocked by lifting switch cover, inserting key and turning key counterclockwise to lock or clockwise to unlock.*
- *Key may be removed in any position.*

1. Remove seat.

⚠WARNING

To prevent accidental vehicle start-up, which could cause death or serious injury, disconnect negative (-) battery cable before proceeding. (00048a)

2. Disconnect negative battery cable.
3. See Figure 7-12. Remove fasteners (1) from console (2, 5 or 6).
4. Remove console.
5. Disconnect switch connector.
6. Remove mounting screws (4).

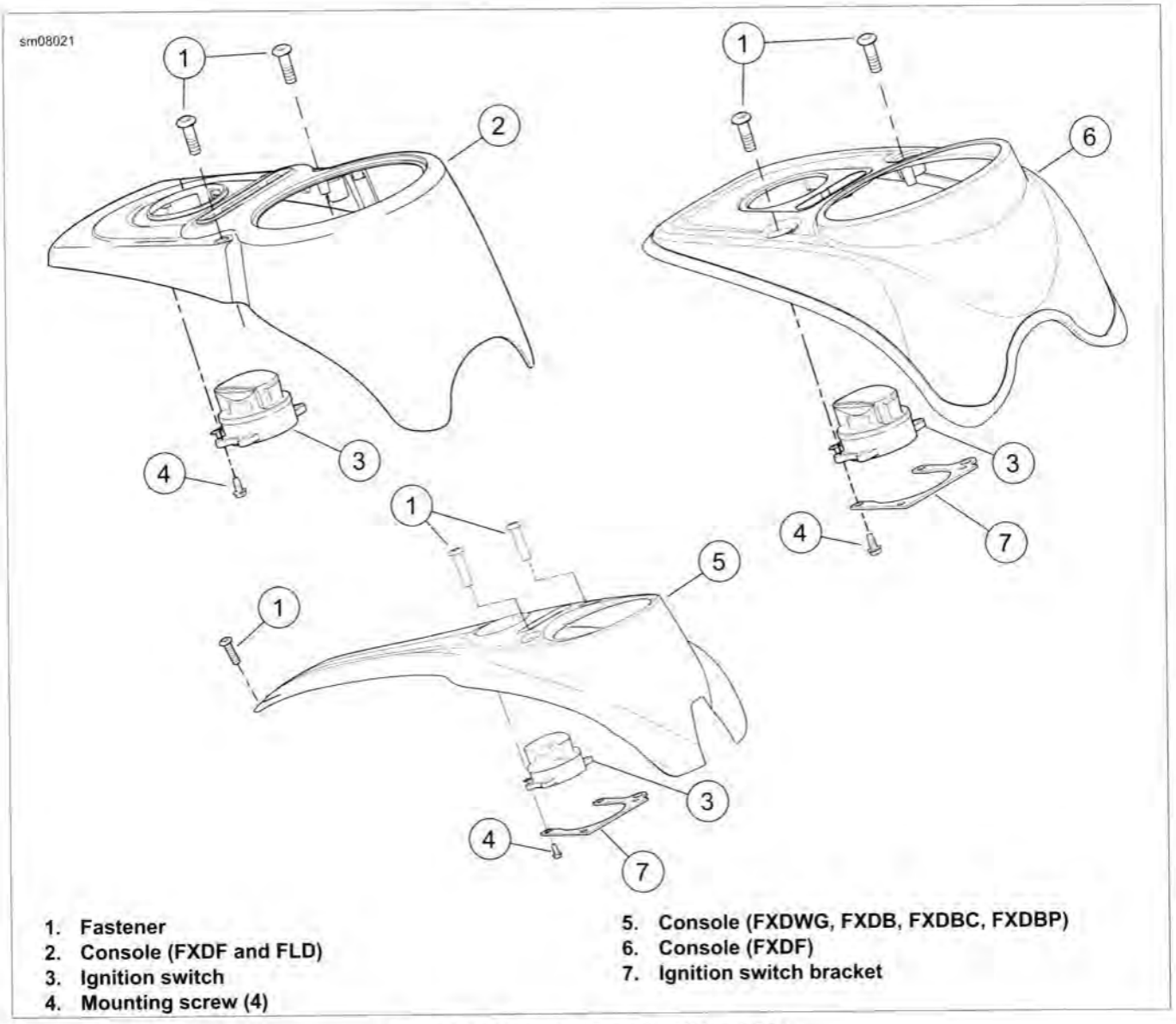

1. **Fastener**
2. **Console (FXDF and FLD)**
3. **Ignition switch**
4. **Mounting screw (4)**
5. **Console (FXDWG, FXDB, FXDBC, FXDBP)**
6. **Console (FXDF)**
7. **Ignition switch bracket**

Figure 7-12. Ignition Switch: All but FXDL

FXDL

NOTE

The ignition switch is on the left side of the vehicle between the engine cylinders.

1. See Figure 7-13. Remove set screw (5) securing knob (4) to ignition switch (1).
2. Remove nut (3) using IGNITION SWITCH SPANNER WRENCH (Part No. HD-50988).
3. Remove cover (6) from engine mounting bracket (2).
4. Disconnect wiring harness from ignition switch.
5. Remove ignition switch (1).

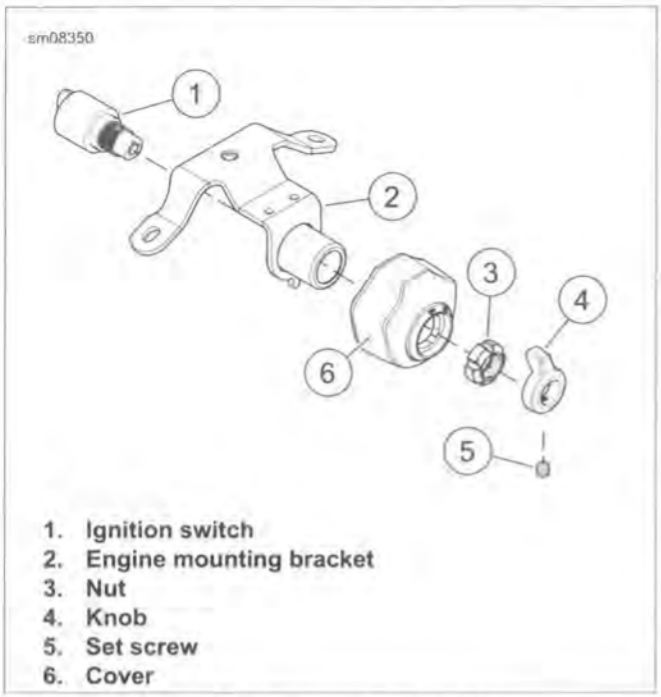

1. **Ignition switch**
2. **Engine mounting bracket**
3. **Nut**
4. **Knob**
5. **Set screw**
6. **Cover**

Figure 7-13. Ignition Switch: FXDL

INSTALLATION

PART NUMBER	TOOL NAME
HD-50988	IGNITION SWITCH SPANNER WRENCH

FASTENER	TORQUE VALUE	
Ignition switch screws	20-30 **in-lbs**	2.3-3.4 Nm
Console mounting screws	41-49 **in-lbs**	4.6-5.5 Nm
Ignition switch nut	140-160 **in-lbs**	15.8-18.1 Nm
Ignition switch set screw	20-26 **in-lbs**	2.3-2.9 Nm

All but FXDL

1. See Figure 7-12. Replace ignition switch (3). Install screws (4). Tighten to 20-30 **in-lbs** (2.3-3.4 Nm).
2. Reconnect switch wire connectors in their original positions.
3. Install console (2, 5, 6) with fasteners (1). Tighten to 41-49 **in-lbs** (4.6-5.5 Nm).
4. Connect negative battery cable.

⚠WARNING

After installing seat, pull upward on seat to be sure it is locked in position. While riding, a loose seat can shift causing loss of control, which could result in death or serious injury. (00070b)

5. Install seat.
6. Test vehicle operation. Refer to Table 7-6.

Table 7-6. Ignition Switch Positions

SWITCH POSITION	FUNCTION
OFF	Ignition, lamps and accessories are off.
ACC*	Accessories are on. Hazard warning flashers can be operated. Instrument lamps are on. The headlamp switch can be switched between HI and LO. Brake lamp and horn can be activated.
IGNITION*	Ignition, lamps and accessories are on.

*International models have an additional function - position lamp and tail lamp are also on.
NOTE: Leaving the motorcycle in ACC for an extended amount of time can discharge the battery. If in ACC, the motorcycle will be automatically turned OFF after two hours to prevent battery from complete discharge. To resume normal operation turn the ignition switch back to OFF and then to the desired position.

FXDL

1. See Figure 7-13. Install ignition switch (1) into engine mounting bracket (2).
2. Install ignition switch wiring.
3. Install cover (6) over ignition switch.
4. Install nut (3) using IGNITION SWITCH SPANNER WRENCH (Part No. HD-50988). Tighten to 140-160 **in-lbs** (15.8-18.1 Nm).
5. Install knob (4) on ignition switch. Tighten set screw to 20-26 **in-lbs** (2.3-2.9 Nm).
6. Test vehicle operation. Refer to Table 7-6.

BATTERY TRAY

FASTENER	TORQUE VALUE	
Battery tray screws	96-120 **in-lbs**	10.8-13.6 Nm

NOTES

- *Record routing and retention points before removing battery cables.*
- ***ABS models:** The ABS module is located below the battery tray. Install tray by tipping top of tray inward first, then swinging bottom of tray inward.*

Removal

1. **ABS models:** Remove ABS module cover.
2. Remove battery. See 1.18 BATTERY MAINTENANCE, Disconnection and Removal.
3. See Figure 7-14. Remove two screws and washers (1).
4. Remove screw and washer (2).
5. Guide battery cables out through holes in rear of battery tray (3). Remove tray.

Installation

NOTES

ABS models:

- *Check that rear wheel speed sensor wires are routed so they are not pinched during installation.*
- *Check that rear brake line is routed so it is not pinched during installation.*

1. Guide battery cables through holes in rear of battery tray (3) and place tray in position.
2. See Figure 7-15. Place battery cables in recesses at upper corners of battery tray.
3. See Figure 7-14. Install screws and washers (1, 2). Tighten to 96-120 **in-lbs** (10.8-13.6 Nm).
4. **ABS models:** Install ABS module cover.

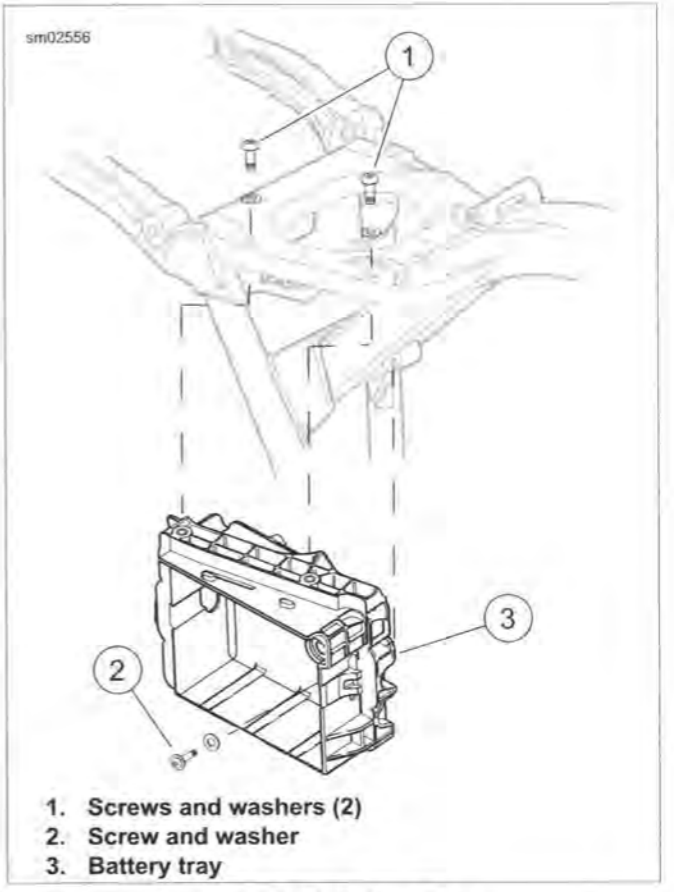

1. **Screws and washers (2)**
2. **Screw and washer**
3. **Battery tray**

Figure 7-14. Battery Tray

BATTERY CABLES

FASTENER	TORQUE VALUE	
Starter positive terminal nut	60-80 **in-lbs**	6.8-9.0 Nm
Transmission ground stud nut	96-144 **in-lbs**	10.8-16.3 Nm

Routing

1. See Figure 7-15. Route positive cable from battery positive terminal through upper front hole in battery tray. Continue to route positive battery cable to starter post on right side of chassis.

⚠WARNING

Be sure rubber boot covers starter solenoid terminal connected to positive (+) battery cable. An uncovered terminal can short and cause sparks, which could result in a battery explosion and death or serious injury. (00463c)

⚠WARNING

Connect positive (+) battery cable first. If positive (+) cable should contact ground with negative (-) cable connected, the resulting sparks can cause a battery explosion, which could result in death or serious injury. (00068a)

NOTICE

Connect the cables to the correct battery terminals. Failure to do so could result in damage to the motorcycle electrical system. (00215a)

NOTICE

Do not over-tighten bolts on battery terminals. Use recommended torque values. Over-tightening battery terminal bolts could result in damage to battery terminals. (00216a)

2. See Figure 7-16 and Figure 7-17. Install positive battery cable to starter post with nut. Orient terminal so cable faces away (towards left side of motorcycle).
   a. Tighten nut to 60-80 **in-lbs** (6.8-9.0 Nm).
   b. Cover nut with protective rubber boot.
3. See Figure 7-17 and Figure 7-19. Route negative battery cable toward left side of motorcycle and then down to transmission ground stud.

NOTE

With ground stud nut loosely installed, pull gently on battery ground cable to position it correctly.

4. With negative battery cable installed on transmission ground stud, tighten to 96-144 **in-lbs** (10.8-16.3 Nm).
5. See Figure 7-16 and Figure 7-17. Route harness under starter and attach with positive cable.
6. See Figure 7-18. Install battery. Verify that all battery cables are routed correctly.
7. Attach positive cable to battery.
8. Attach negative cable.
9. Secure battery with battery strap. Install battery cover.
10. **ABS models:** Install module cover.

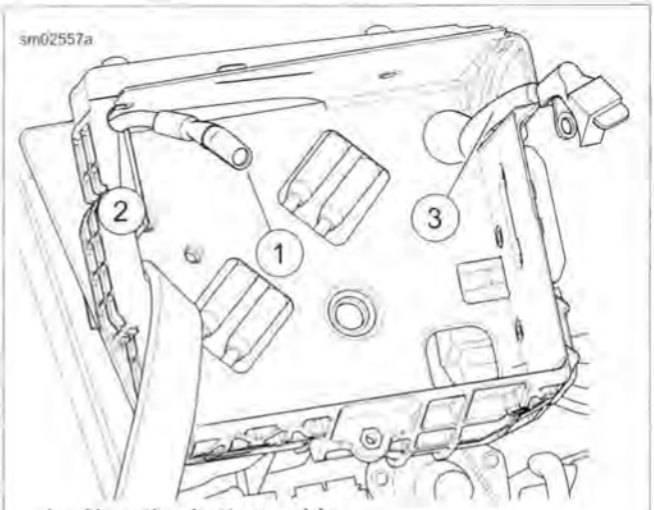

1. **Negative battery cable**
2. **Groove**
3. **Positive battery cable**

Figure 7-15. Battery Cables

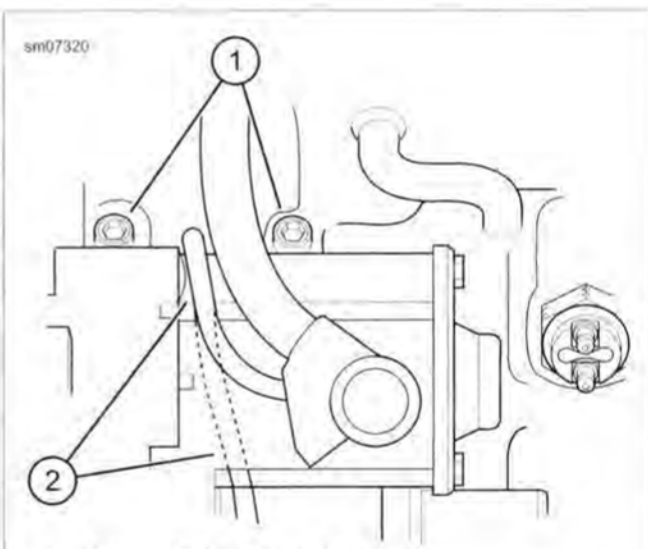

1. **Transmission cover screws (2)**
2. **Ring terminal harness (routed under starter)**

Figure 7-16. Starter Cable Connections

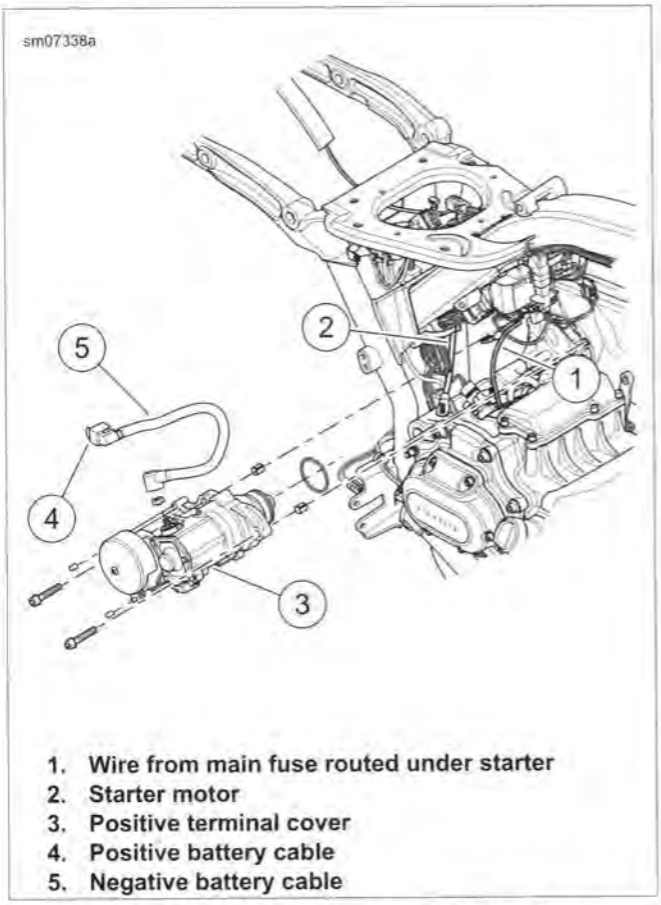

1. Wire from main fuse routed under starter
2. Starter motor
3. Positive terminal cover
4. Positive battery cable
5. Negative battery cable

Figure 7-17. Battery Cables and Starter Motor

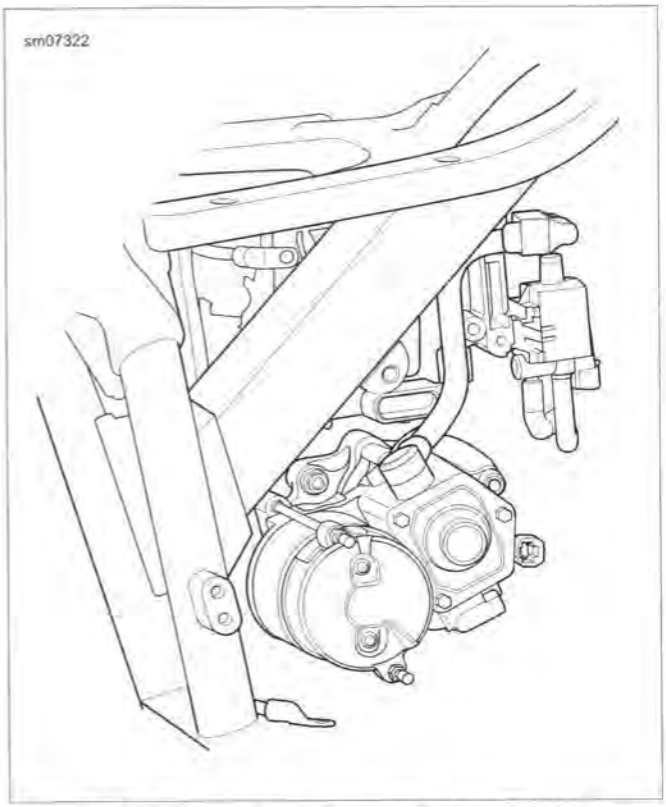

Figure 7-18. Starter Cable Correct Routing From Starter to Battery Area

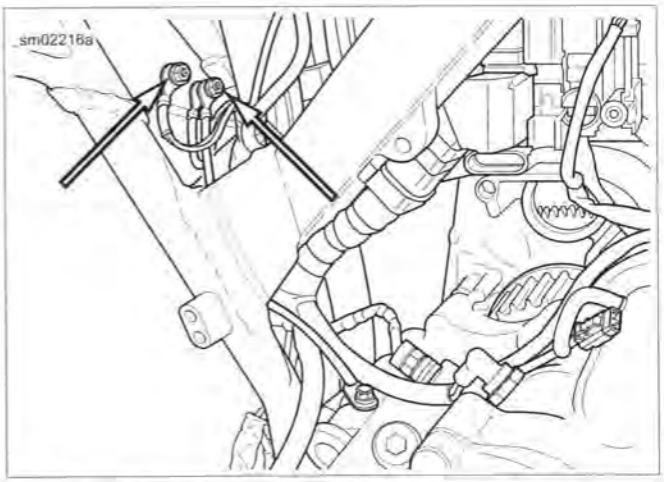

Figure 7-19. Vehicle Ground Studs and Routing

GENERAL

The starter assembly includes a field coil, solenoid and drive assembly.

NOTES

- *For troubleshooting and diagnostic information see the electrical diagnostic manual.*
- *Use touch-up paint as necessary prior to installation. Paint flaking does not require starter replacement.*

REMOVAL

⚠WARNING

To prevent accidental vehicle start-up, which could cause death or serious injury, disconnect negative (-) battery cable before proceeding. (00048a)

1. **ABS models:** Remove module cover.
2. Remove battery and battery tray. See 7.10 BATTERY TRAY AND BATTERY CABLES.
3. **ABS models:** Loosen, but do not remove, the fasteners securing the ABS module to the frame.
4. See Figure 7-20. Remove starter cover fastener (1) and starter cover (2) from starter, if applicable.
5. Disconnect starter wiring:
   a. Remove protective boot (4).
   b. Remove nut with washer (metric).
   c. Remove positive battery cable ring terminal.
   d. Disconnect solenoid wire (5).
6. Remove both starter mounting fasteners (3).
7. Remove starter from right side.
8. Discard starter housing O-ring.

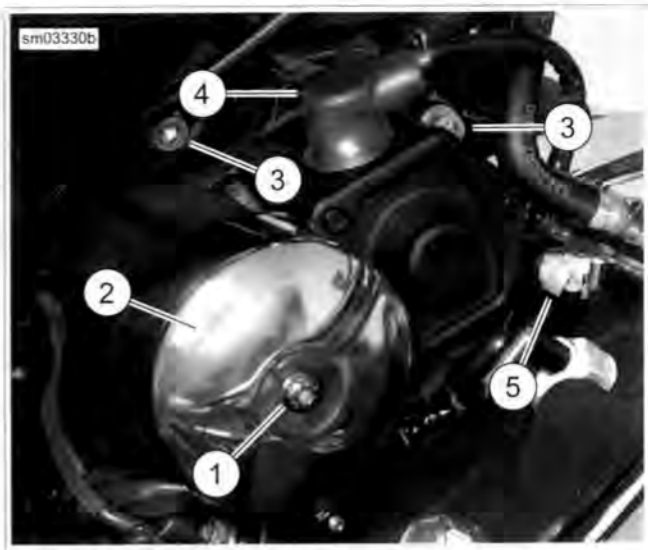

1. **Starter cover fastener***
2. **Starter cover***
3. **Starter mounting fasteners**
4. **Protective boot**
5. **Solenoid wire**

Figure 7-20. Starter (Items marked with an asterisk, not used on all models)

DRIVE ASSEMBLY

FASTENER	TORQUE VALUE	
Starter through bolts	39-65 **in-lbs**	4.4-7.3 Nm
Solenoid terminal post nut	70-90 **in-lbs**	7.9-10.2 Nm
Starter end cover screw	90-110 **in-lbs**	10.2-12.4 Nm

Disassembly

1. Remove end cover, if equipped.
2. Remove two nuts to release end cover bracket from through bolts, if equipped.
3. See Figure 7-21. Pull up rubber boot (1). Remove hex nut with captive lockwasher. Release field wire from terminal post on solenoid housing.
4. Loosen field coil housing through bolts (2) to release field coil housing from solenoid housing.

NOTE

Do not remove armature and brush plate from housing. No replacement parts are available.

5. Remove armature housing (3) keeping all contents together for reassembly.
6. Remove two screws to release drive housing from solenoid housing. Use a rubber mallet to separate drive and solenoid housings, if necessary.
7. Remove idler gear (5) from bearing cage in drive housing. Remove bearing cage with five roller bearings (6) from shaft in drive housing.

8. Push on end of drive shaft to remove clutch starter sub assembly (7) from drive housing.
9. Remove solenoid spring and ball from the output shaft of the clutch starter sub assembly.

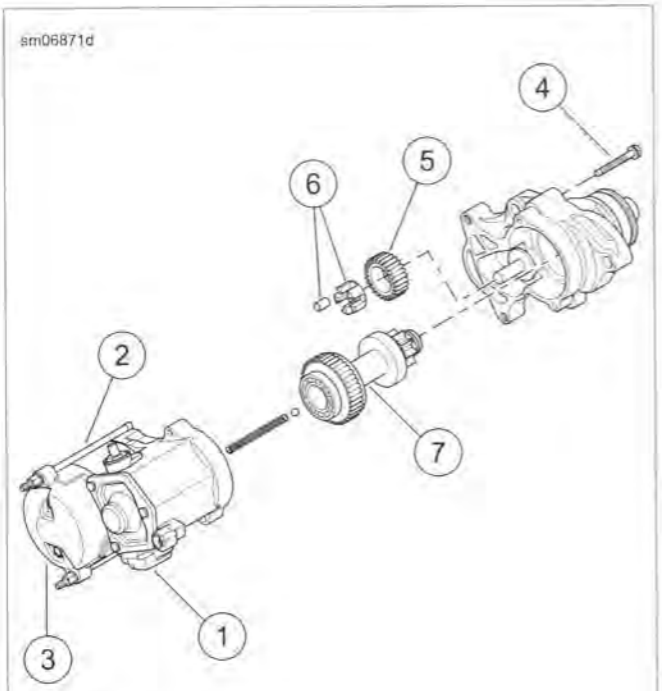

1. **Rubber boot**
2. **Field coil housing through bolt (2)**
3. **Armature housing**
4. **Screw (2)**
5. **Idler gear**
6. **Bearing cage with roller bearing (5)**
7. **Clutch starter sub-assembly**

Figure 7-21. Clutch Starter Sub-assembly and Housing

Inspection

1. Inspect two O-rings on drive housing for damage. Replace if necessary.
2. See Figure 7-21. Verify that the idler gear (5) rotates freely without drag or sticking.
3. Remove and inspect idler gear. Replace starter motor if the gear is damaged.
4. Inspect roller bearings (6). Bearings must rotate freely without drag or sticking. Replace starter motor if the bearings are pitted or grooved.
5. Inspect the steel ball for damage. Replace if necessary.

NOTE

Replace entire starter motor if solenoid return spring fails.

Assembly

1. See Figure 7-21. Assemble starter.
   a. Lubricate parts with high temperature grease such as LUBRIPLATE 110 during assembly.
   b. Install bearing cage with five roller bearings (6) onto shaft in drive housing.
   c. Confirm that all five roller bearings are installed in grooves of bearing cage. Install idler gear (5) over bearing cage.
2. Lubricate bearings with LUBRIPLATE 110 before installation. Install **new** clutch starter sub-assembly (7) in drive housing seating the larger bearing in the counterbore.
3. Apply a light film of LUBRIPLATE 110 to solenoid plunger shaft. Install return spring on solenoid plunger shaft.
4. Apply a thin layer of HARLEY-DAVIDSON HIGH PERFORMANCE SEALANT - GRAY to the mating surface of the drive housing.
5. Mate the solenoid and drive housings with two screws. Alternately tighten until snug.
6. Install through bolts to fasten field coil to solenoid housing. Tighten to 39-65 **in-lbs** (4.4-7.3 Nm).
7. Secure field wire ring terminal to short post on solenoid housing with hex nut with captive lockwasher. Tighten to 70-90 **in-lbs** (7.9-10.2 Nm). Cover field wire ring terminal with rubber boot (1).
8. Install end cover bracket onto through bolts, if equipped. Align longest end of bracket on the field wire side. Install two nuts. Tighten until snug.
9. Install end cover, if equipped. Tighten to 90-110 **in-lbs** (10.2-12.4 Nm).

SOLENOID

FASTENER	TORQUE VALUE	
Solenoid contact post jamnut	65-80 **in-lbs**	7.3-9.0 Nm
Starter ring terminal hex nut	60-80 **in-lbs**	6.8-9.0 Nm

Remove Cover and Plunger

1. See Figure 7-22. Remove fasteners (1), cover (2) and gasket (3).
2. Remove the plunger (4) with spring (5).

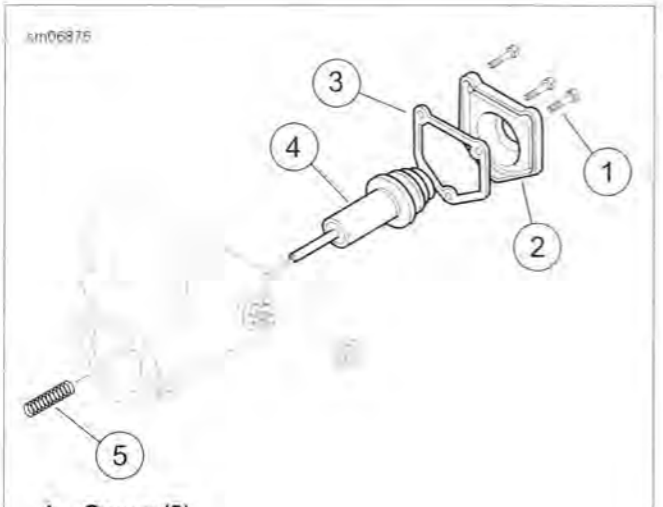

1. **Screw (3)**
2. **Cover**
3. **Gasket**
4. **Plunger**
5. **Spring**

Figure 7-22. Solenoid Plunger

Short Post Contact: Starter

1. Disassemble the short post contact:
   a. Remove the hex nut and the ring terminal from the post.
   b. See Figure 7-23. Remove jamnut (8), wave washer (7), O-ring (6) and round bushing (5).
   c. Remove the post bolt (1).
   d. Remove the hold-in terminal (2) from the post bolt.
   e. Remove the contact plate (3) and the square bushing (4).
2. Assemble the short post contact:
   a. Insert the square bushing into the housing.
   b. Install the contact plate with the 90 degree part of the contact plate against the solenoid winding.
   c. Install the post bolt through the hold-in terminal, the contact plate and the square bushing.
   d. Install the round bushing, O-ring, wave washer and jamnut.

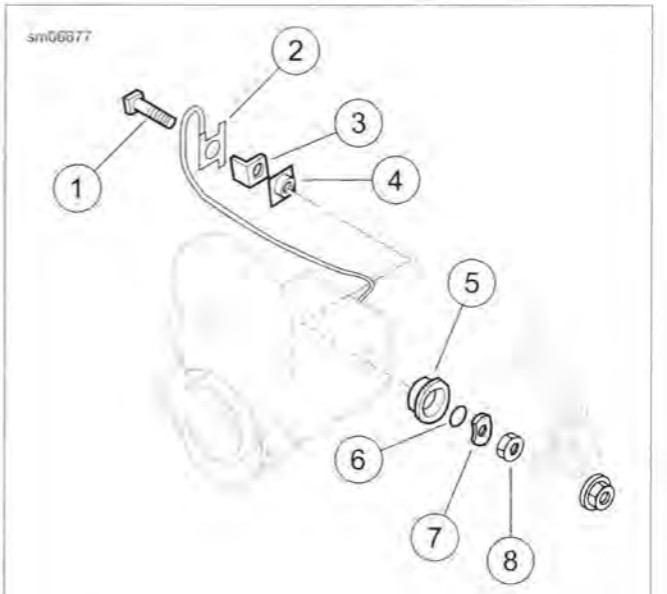

1. **Post bolt**
2. **Hold-in terminal**
3. **Contact plate**
4. **Square bushing**
5. **Round bushing**
6. **O-ring**
7. **Wave washer**
8. **Jamnut**

Figure 7-23. Short Post Contact (starter)

Long Post Contact: Battery Positive

1. See Figure 7-24. Remove the long post contact:
   a. Remove hex nut (9).
   b. Remove jamnut (8), wave washer (7), O-ring (6) and the round bushing (5).
   c. Remove post bolt (4), contact plate (3), square bushing (2) and paper insulator (1).
2. Install the long post contact:
   a. Insert the square bushing through the paper insulator into the housing.
   b. Install the contact plate with the foot against the solenoid winding.
   c. Install the post bolt.

   NOTE

   Check that the index pin on the round bushing fits the blind hole in the housing.

   d. Install the round bushing, O-ring, wave washer and jamnut.

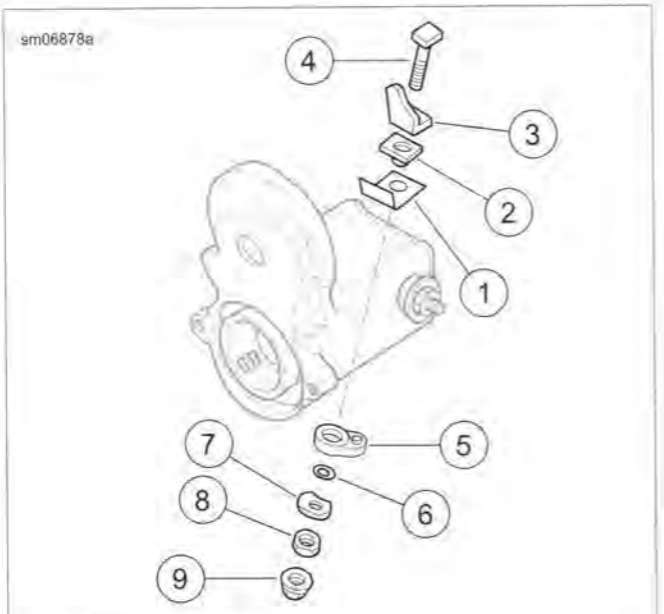

1. **Paper insulator**
2. **Square bushing**
3. **Contact plate**
4. **Post bolt**
5. **Round bushing**
6. **O-ring**
7. **Wave washer**
8. **Jamnut**
9. **Hex nut**

Figure 7-24. Long Post Contact (battery)

Install Plunger and Cover

1. Apply LUBRIPLATE 110 to the plunger shaft. Install the spring.
2. Install the plunger and spring in the housing.
3. While compressing the plunger, alternately tighten the contact post jamnuts to 65-80 **in-lbs** (7.3-9.0 Nm).
4. Check that the contact plates are aligned to the solenoid winding.
5. Install the cover:
   a. Install a **new** gasket on the cover.
   b. Install the cover.
   c. Install the fasteners until snug.
6. Install the starter positive ring terminal.
7. Install the hex nut. Tighten to 60-80 **in-lbs** (6.8-9.0 Nm).

INSTALLATION

FASTENER	TORQUE VALUE	
Starter mounting fasteners	25-27 ft-lbs	33.9-36.6 Nm
Starter positive terminal nut	60-80 **in-lbs**	6.8-9.0 Nm
ABS module bracket	90-114 **in-lbs**	10.2-12.8 Nm

1. Examine two split ring dowel bushings in inner primary housing where starter motor assembly mounts. If dowel bushings are loose, remove bushings and pry open slightly to provide an interference fit in primary housing. Install bushings into primary housing.
2. Install **new** starter housing O-ring.
3. Install starter from right side.
4. See Figure 7-20. Apply a drop of LOCTITE 243 MEDIUM STRENGTH THREADLOCKER AND SEALANT (blue) to threads of starter mounting fasteners (3).
5. Install the two starter mounting fasteners (3) and washers. Tighten to 25-27 ft-lbs (33.9-36.6 Nm).

⚠WARNING

Be sure rubber boot covers starter solenoid terminal connected to positive (+) battery cable. An uncovered terminal can short and cause sparks, which could result in a battery explosion and death or serious injury. (00463c)

6. See Figure 7-20. Attach positive battery cable, and solenoid wire (5). Tighten nut (metric) to 60-80 **in-lbs** (6.8-9.0 Nm). Place protective boot (4) securely over terminal.
7. Attach starter cover (2) using fastener (1) if present of this model.
8. Install battery tray and battery. See 7.10 BATTERY TRAY AND BATTERY CABLES and 1.18 BATTERY MAINTENANCE.
9. **ABS models:** Install module.
   a. Tighten mounting fasteners securing ABS module bracket to frame.
   b. Tighten to 90-114 **in-lbs** (10.2-12.8 Nm).
   c. Attach ABS module cover.

GENERAL

NOTICE

When replacement is required, use only the specified sealed beam unit or bulb, available from a Harley-Davidson dealer. An improper wattage sealed beam or bulb, can cause charging system problems. (00209a)

If either headlamp bulb filament burns out, discard bulb and replace. Use only direct replacement bulbs as specified in the Parts Catalog.

BULB REMOVAL: ALL BUT FLD

NOTICE

Never touch the quartz bulb. Fingerprints will etch the glass and decrease bulb life. Handle the bulb with paper or a clean, dry cloth. Failure to do so could result in bulb damage. (00210b)

Single Bulb Headlamp

1. See Figure 7-26. Loosen screw (19) and nut (18). Remove trim ring (17).
2. Remove boot (4) from back of headlamp lens (16).
3. Disconnect headlamp connector (2) from bulb (6).
4. See Figure 7-25. Squeeze wire retaining clip ends to unhook them from notches in headlamp assembly.

⚠WARNING

Handle bulb carefully and wear eye protection. Bulb contains gas under pressure, which, if not handled carefully, could cause serious eye injury. (00062b)

5. Pivot wire retaining clip away from bulb. Remove bulb from headlamp assembly.

NOTE

*Verify that connector contacts on **new** bulb are clean before installation.*

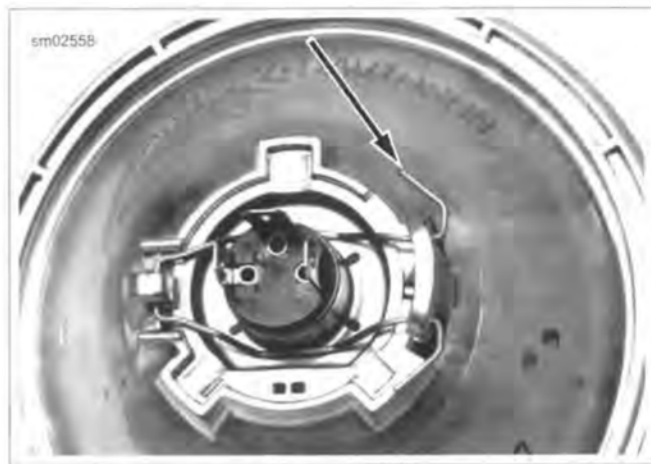

Figure 7-25. Wire Retaining Clip

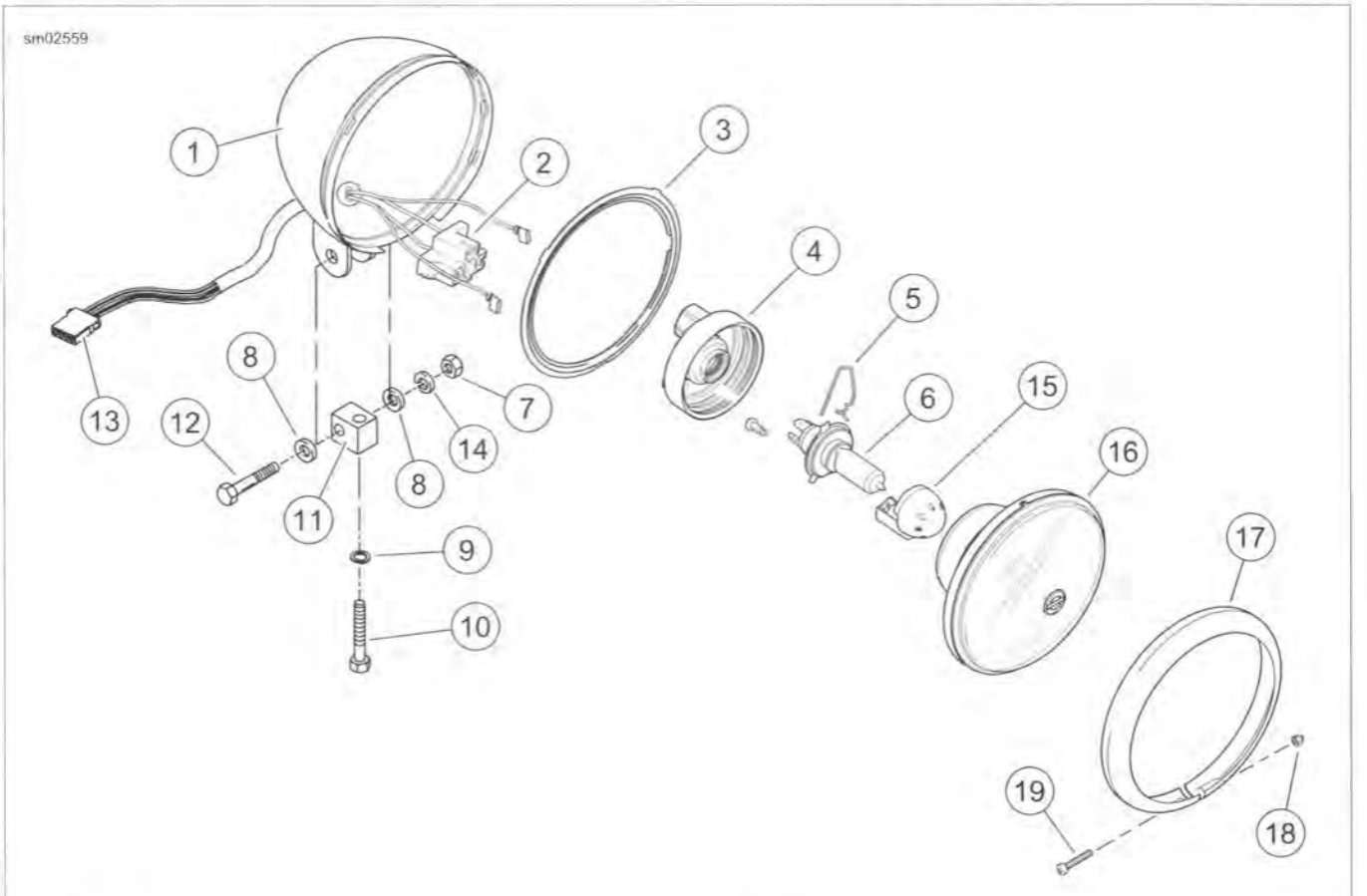

1. Headlamp housing
2. Headlamp connector
3. Adapter ring
4. Boot
5. Clip
6. Bulb
7. Vertical adjusting nut
8. Washer (2)
9. Lockwasher
10. Horizontal adjusting bolt
11. Mounting block
12. Vertical adjusting bolt
13. Headlamp housing connector
14. Lockwasher
15. Bulb shield
16. Headlamp lens
17. Trim ring
18. Nut
19. Screw

Figure 7-26. Single Bulb Headlamp

Dual Bulb Headlamp

1. See Figure 7-28. Remove two screws (1) and trim ring (6).
2. Pull reflector and lens assembly (5) away from the headlamp housing (2).
3. See Figure 7-27. Raise connector lock (1). Press connector latch (2) and disconnect connector.

⚠WARNING

Handle bulb carefully and wear eye protection. Bulb contains gas under pressure, which, if not handled carefully, could cause serious eye injury. (00062b)

4. Rotate bulb assembly counterclockwise to remove from housing.



1. Connector lock
2. Connector latch
3. Vent (yellow dot)

Figure 7-27. Dual Headlamp Connector

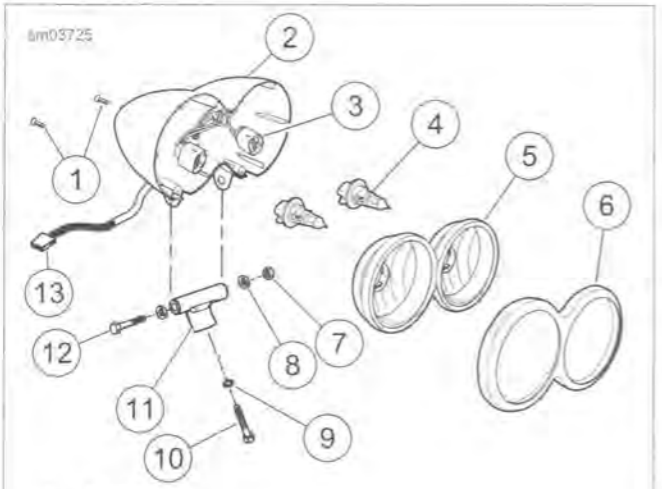

1. **Screw (2)**
2. **Headlamp housing**
3. **Headlamp connector (2)**
4. **Bulb (2)**
5. **Reflector and lens assembly**
6. **Trim ring**
7. **Vertical adjusting nut**
8. **Washer (2)**
9. **Lockwasher**
10. **Horizontal adjusting bolt**
11. **Mounting block**
12. **Vertical adjusting bolt**
13. **Headlamp housing connector**

Figure 7-28. Dual Bulb Headlamp

BULB INSTALLATION: ALL BUT FLD

Install **new** bulb and assemble headlamp components. To adjust light beam, see 1.20 HEADLAMP ALIGNMENT.

NOTES

- ***Single bulb headlamp:*** *When reassembling headlamp, make sure slots and tabs in headlamp, adapter ring and trim ring are aligned.*
- ***Dual bulb headlamp:*** *See Figure 7-27. Verify vents (3) (yellow dots) are UP when installing reflector assembly in housing.*

HEADLAMP ASSEMBLY: ALL BUT FLD AND FXDL

FASTENER	TORQUE VALUE	
Headlight horizontal adjusting bolt	25-30 ft-lbs	33.9-40.7 Nm

Removal

1. Loosen fuel tank to gain access to the headlamp harness connector (13). See 4.4 FUEL TANK.
2. See Figure 7-26 or Figure 7-28. Separate headlamp housing connector (13) [38].
3. Remove vertical adjusting bolt (12), vertical adjusting nut (7), washer (8) and lockwasher (14), if equipped.
4. Remove headlamp assembly.
5. Disassemble and repair headlamp as necessary.

Installation

1. See Figure 7-26 or Figure 7-28. Attach headlamp assembly to mounting block (11) using vertical adjusting bolt (12) vertical adjusting nut (7), washer (8) and lockwasher (14), if equipped.
2. Tighten horizontal adjusting bolt (10) to 25-30 ft-lbs (33.9-40.7 Nm).
3. Connect electrical harness connector. Attach fuel tank. See 4.4 FUEL TANK.
4. Align headlamp. See 1.20 HEADLAMP ALIGNMENT.

HEADLAMP ASSEMBLY: FXDL

Removal

1. Remove left side steering head plug.
2. Disconnect headlamp connector.
3. See Figure 7-29. Remove snap plug on top of headlamp visor:
   a. Insert a small screwdriver through hole (1) on left side under visor (2).
   b. Push up on plug.
4. See Figure 7-30. Remove nut (5), lockwasher (4) and washer (3).

Installation

1. Install **new** headlamp assembly into visor (2).
2. Install washer (3), lockwasher (4) and nut on headlamp threads.
3. Connect headlamp connector.
4. Install left side steering head plug.
5. Adjust headlamp. See 1.20 HEADLAMP ALIGNMENT.
6. Install steering head plug (6).

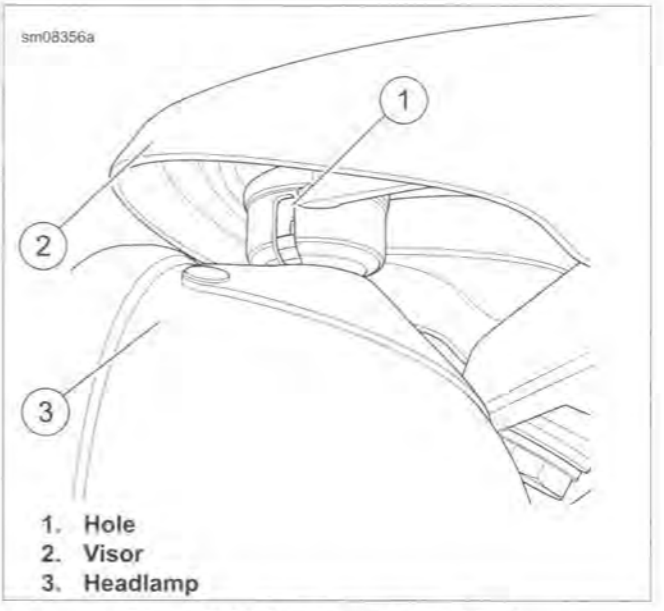

1. **Hole**
2. **Visor**
3. **Headlamp**

Figure 7-29. Headlamp Visor: FXDL

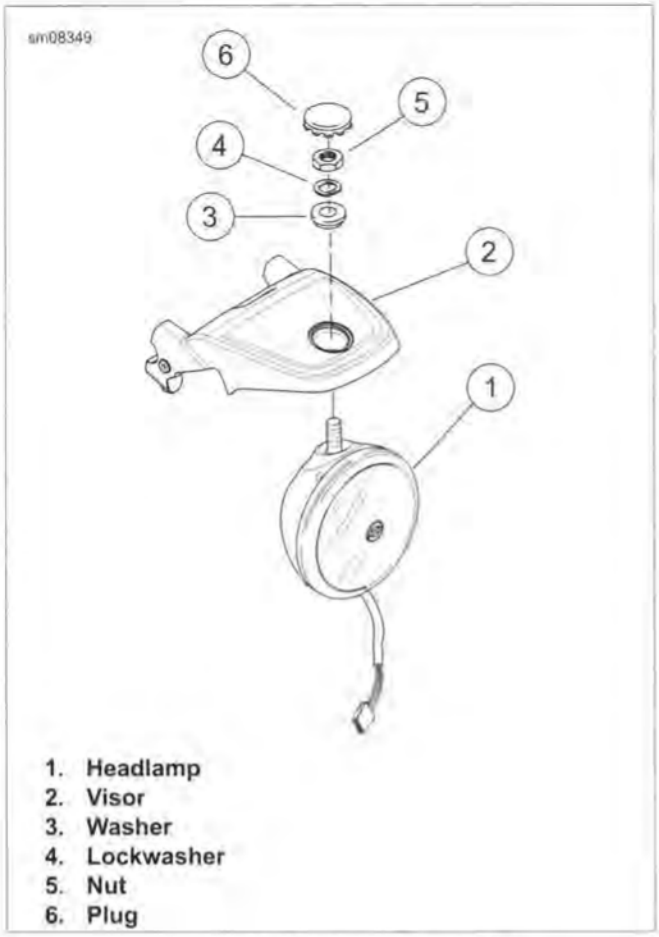

1. **Headlamp**
2. **Visor**
3. **Washer**
4. **Lockwasher**
5. **Nut**
6. **Plug**

Figure 7-30. Headlamp Assembly

HEADLAMP VISOR: FXDL

FASTENER	TORQUE VALUE	
Headlamp visor bolts: FXDL	30-40 ft-lbs	40.7-54.2 Nm
Riser clamp fasteners: FXDL	15-19 ft-lbs	20.3-25.8 Nm
Brake line clamp fastener: FXDL	45-65 **in-lbs**	5.1-7.3 Nm
Throttle cable guide fastener: FXDL	45-65 **in-lbs**	5.1-7.3 Nm
Clutch cable guide fastener: FXDL	45-65 **in-lbs**	5.1-7.3 Nm

Removal

1. Cover painted parts to protect finish.
2. Remove headlamp assembly. See 7.12 HEADLAMP, Headlamp Assembly: FXDL.
3. Remove right side steering head plug.
4. Disconnect left and right control connectors.
5. Pull harnesses through headlamp visor.
6. Remove throttle cable guide and brake line clamp from headlamp visor on right side.
7. Remove clutch cable guide from left side of headlamp visor.
8. Mark riser location to align with clamp surfaces.
9. See Figure 7-31. Remove riser clamp screws (10) and lower riser clamps (9). Rest handlebar assembly on covered fuel tank.
10. Remove headlamp visor mounting bolts (1). Remove headlamp visor (7).

Installation

1. See Figure 7-31. Inspect isolator (12). Replace if necessary, by pulling out isolator and pressing **new** isolator in place. No special tools are needed.

NOTE

See Figure 7-32. When installing riser clamps (2), make sure boss (5) is positioned over slot (4).

2. See Figure 7-31. Install headlamp visor (7) with mounting bolts (1). Tighten to 30-40 ft-lbs (40.7-54.2 Nm).
3. Install handlebar assembly. Position risers to align with marks from previous position. Secure with lower riser clamps (9) and riser clamp screws (10).
4. See Figure 7-33. Tighten clamps in sequence shown to 15-19 ft-lbs (20.3-25.8 Nm).
5. Install brake line clamp to headlamp bracket on right side. Tighten fastener to 45-65 **in-lbs** (5.1-7.3 Nm).
6. Install throttle cable guide to headlamp bracket on right side. Tighten fastener to 45-65 **in-lbs** (5.1-7.3 Nm).
7. Install clutch cable guide to headlamp bracket on left side. Tighten fastener to 45-65 **in-lbs** (5.1-7.3 Nm).
8. Route handlebar wires through bracket. Mate hand control electrical connectors.
9. Install frame plug.
10. Install headlamp.

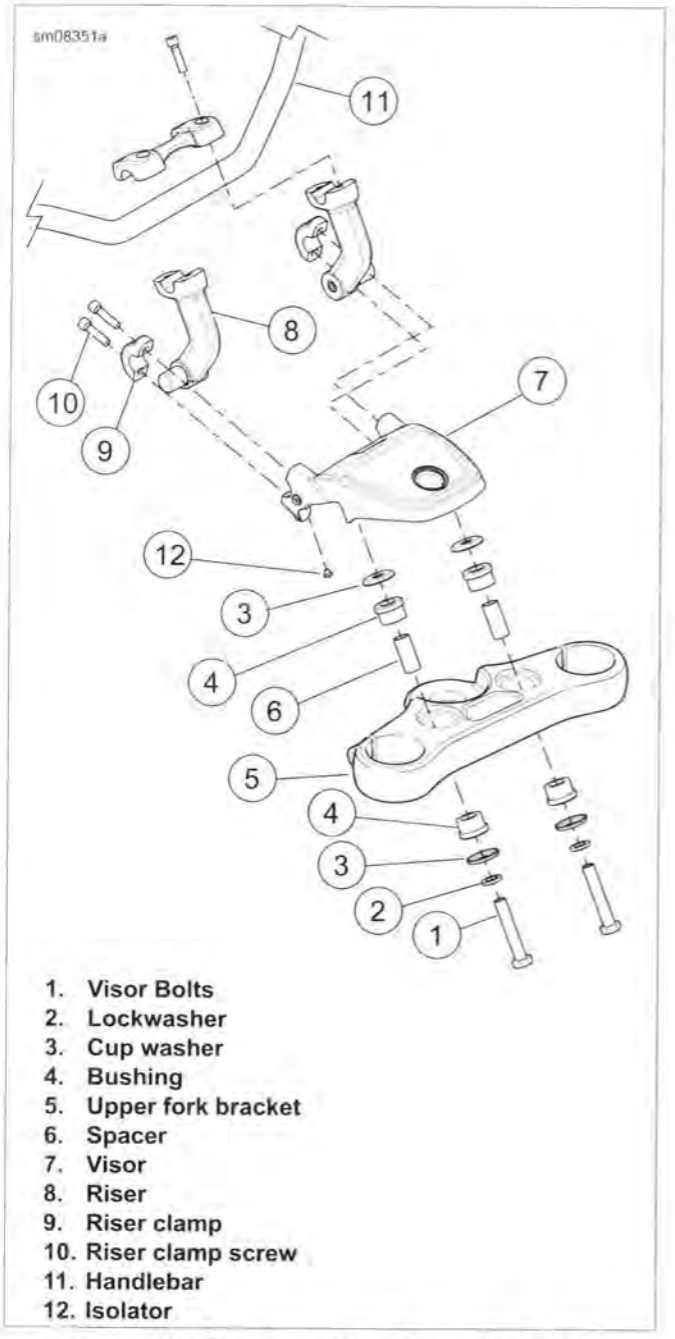

1. Visor Bolts
2. Lockwasher
3. Cup washer
4. Bushing
5. Upper fork bracket
6. Spacer
7. Visor
8. Riser
9. Riser clamp
10. Riser clamp screw
11. Handlebar
12. Isolator

Figure 7-31. Headlamp Visor Assembly: FXDL

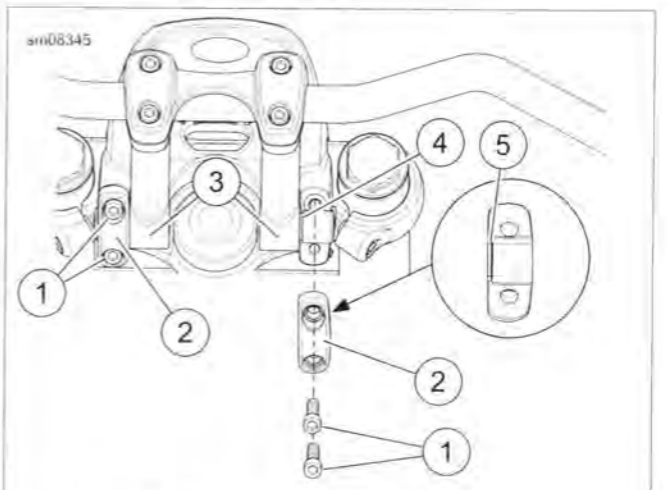

1. Riser clamp screw (4)
2. Riser clamp (2)
3. Riser (2)
4. Slot
5. Boss

Figure 7-32. Riser Assembly

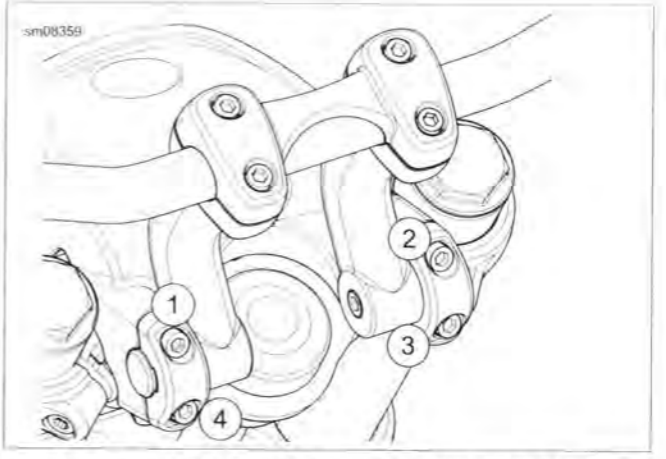

Figure 7-33. Riser Torque Sequence: FXDL

HEADLAMP: FLD

FASTENER	TORQUE VALUE	
Headlamp screws: FLD	7-10 **in-lbs**	0.8-1.1 Nm
Headlamp door screw: FLD	9-18 **in-lbs**	1.0-2.0 Nm

Removal

1. See Figure 7-34. Remove screw at bottom of headlamp door (1). Remove headlamp door.
2. Remove screws (3) securing headlamp assembly.
3. Remove boot (6) from back of reflector assembly (4).
4. Remove headlamp connector from bulb (5).

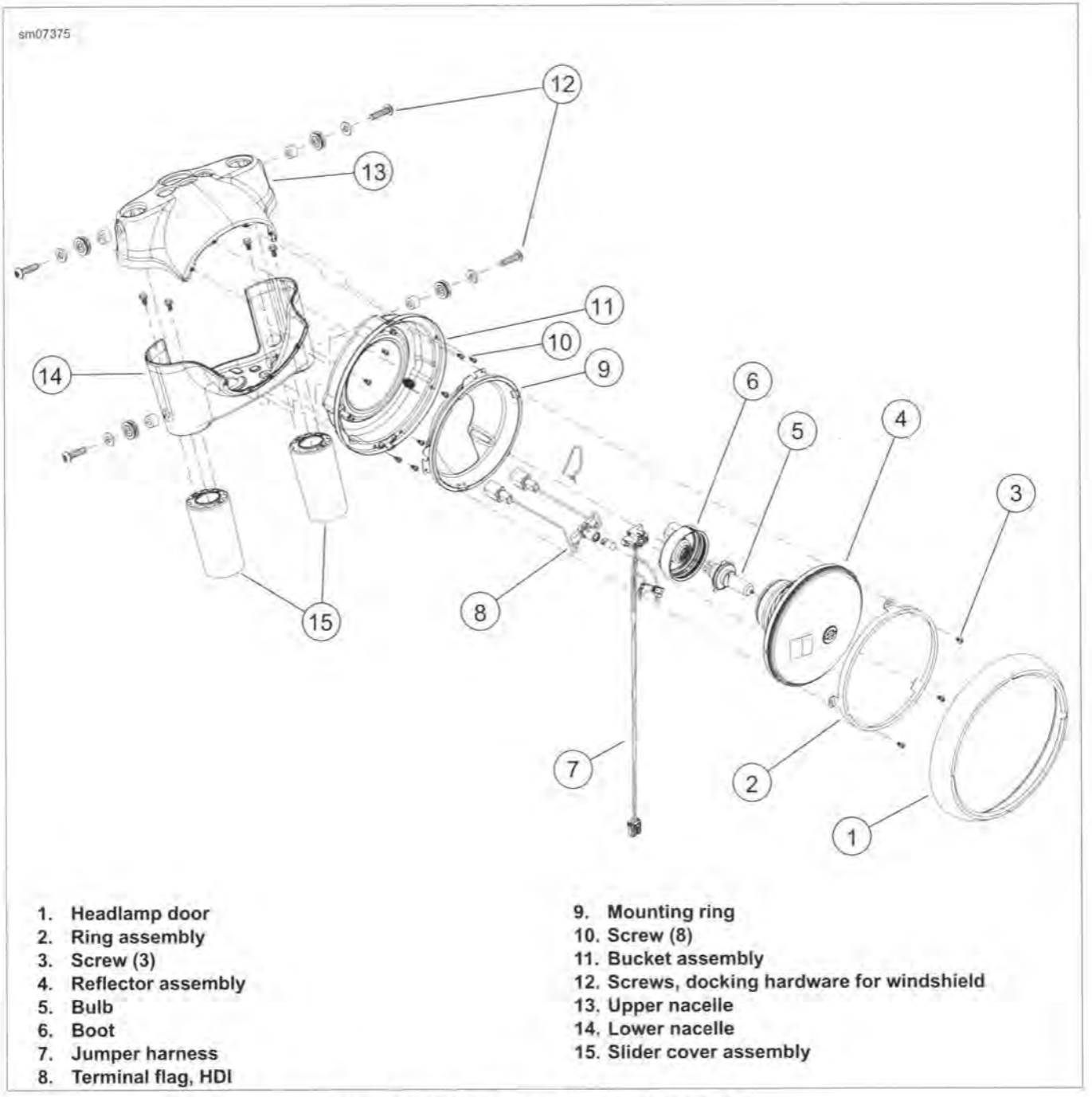

1. **Headlamp door**
2. **Ring assembly**
3. **Screw (3)**
4. **Reflector assembly**
5. **Bulb**
6. **Boot**
7. **Jumper harness**
8. **Terminal flag, HDI**
9. **Mounting ring**
10. **Screw (8)**
11. **Bucket assembly**
12. **Screws, docking hardware for windshield**
13. **Upper nacelle**
14. **Lower nacelle**
15. **Slider cover assembly**

Figure 7-34. Headlamp Assembly: FLD Models

Bulb Replacement

NOTICE

When replacement is required, use only the specified sealed beam unit or bulb, available from a Harley-Davidson dealer. An improper wattage sealed beam or bulb, can cause charging system problems. (00209a)

NOTE

The headlamp uses a replaceable quartz halogen bulb. Handle this fragile part with care.

1. See Figure 7-34. Remove reflector assembly (4).
2. Remove boot (6) at back of reflector assembly.

NOTE

Loosening retainer screw one-half to one turn helps in releasing clip.

3. See Figure 7-35. Release wire retaining clip (1) from retainer (2). Swing wire retaining clip out of the way.

⚠WARNING

Handle bulb carefully and wear eye protection. Bulb contains gas under pressure, which, if not handled carefully, could cause serious eye injury. (00062b)

4. Remove and discard bulb.

NOTICE

Never touch the quartz bulb. Fingerprints will etch the glass and decrease bulb life. Handle the bulb with paper or a clean, dry cloth. Failure to do so could result in bulb damage. (00210b)

5. Install **new** bulb. Align the tab on the bulb with the notch in the headlamp housing.

NOTE

If retainer screw was loosened to release wire retaining clip, hold retainer in place and tighten screw until snug. Verify that reflector cone is still centered under decorative logo. If it is not, loosen retainer screw and repeat step until centered.

6. See Figure 7-35. Rotate wire retaining clip (1) into place and latch under lip of retainer (2).
7. Install rubber boot at back of housing.
8. **HDI models:** Rotate position lamp bulb retainer one-quarter turn counterclockwise to remove. Replace bulb. Install bulb retainer in lamp housing.

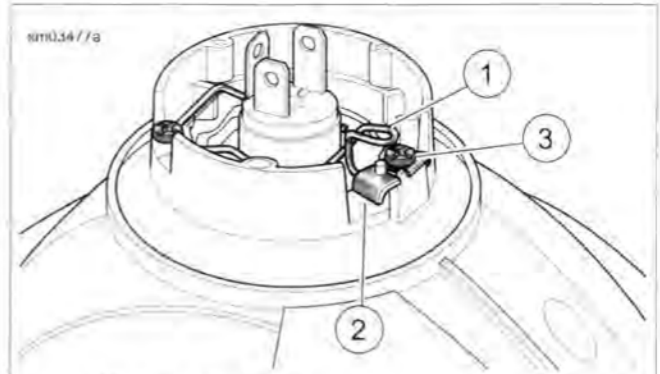

1. **Wire retaining clip**
2. **Retainer**
3. **Retainer screw**

Figure 7-35. Headlamp Bulb Assembly

Installation

1. Install headlamp connector on headlamp bulb.
2. Install headlamp assembly screws. Tighten to 7-10 **in-lbs** (0.8-1.1 Nm).
3. Fit the headlamp door spring into slot at top of headlamp housing. Secure the headlamp door (chrome ring) with screw. Tighten to 9-18 **in-lbs** (1.0-2.0 Nm).

GENERAL

FLD models have a tail lamp that uses a mini harness and circuit board to simplify replacement.

FXDF and FXDWG HDI models use an LED assembly with no replaceable bulb. The cover on the tail lamp is not removable.

FXDWG, FXDB and FXDBP domestic models combine the stop lamp with the turn signals. See 7.14 TURN SIGNALS.

FXDB Canadian models use a center mount license plate lamp with a built-in stop lamp.

TAIL LAMP BULB REPLACEMENT: FLD AND FXDL

FASTENER	TORQUE VALUE	
Tail lamp lens screws	20-24 **in-lbs**	2.3-2.7 Nm

1. Turn ignition switch OFF.
2. See Figure 7-36. Remove two screws and lens (1) from base (2).

NOTE

Disconnect 4-pin multilock connector from circuit board to simplify bulb removal.

3. Remove bulb assembly from lens (1). Remove bulb.
4. Coat base of **new** bulb with ELECTRICAL CONTACT LUBRICANT. Install **new** bulb.
5. Install bulb assembly to lens.
6. If removed, connect 4-pin multilock connector (3) to circuit board.
7. Install lens (1) to base (2) with two screws. Tighten to 20-24 **in-lbs** (2.3-2.7 Nm).

⚠WARNING

Be sure that all lights and switches operate properly before operating motorcycle. Low visibility of rider can result in death or serious injury. (00316a)

8. Turn ignition on. Check operation of all lamps.

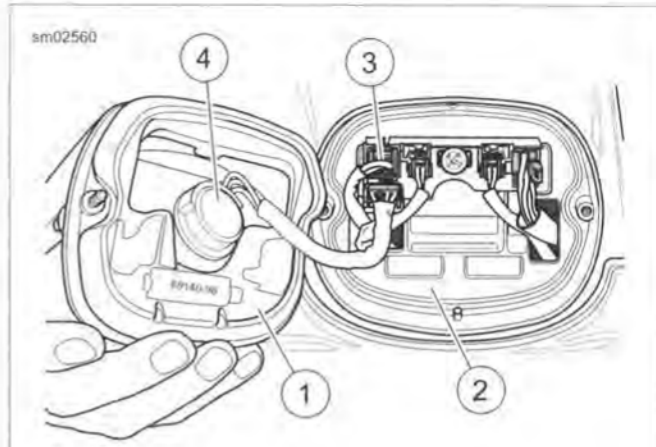

1. **Lens**
2. **Base**
3. **4-pin multilock connector**
4. **Bulb assembly**

Figure 7-36. Tail Lamp: FLD Models

BASE REPLACEMENT: FLD AND FXDL

FASTENER	TORQUE VALUE	
Tail lamp base screws: FLD, FXDL	40-48 **in-lbs**	4.5-5.4 Nm
Tail lamp lens screws: FLD, FXDL	20-24 **in-lbs**	2.3-2.7 Nm

1. See Figure 7-36. Remove two screws and lens (1) from base (2).
2. Press locking tab and remove 4-pin multilock connector from pin housing.
3. See Figure 7-37. Using a terminal pick (1) or small screwdriver, press locking tabs. Remove two 2-pin turn signal connectors (2) and 6-pin Power In connector from pin housing.
4. See Figure 7-38. Remove screw, pin housing (1) and circuit board (2) from base.
5. Remove two nuts, screws and base from rear fender.
6. Install **new** base to rear fender with two screws and nuts. Tighten to 40-48 **in-lbs** (4.5-5.4 Nm).
7. Attach circuit board (2) and pin housing (1) to base with screw. Circuit board snaps in on bottom.

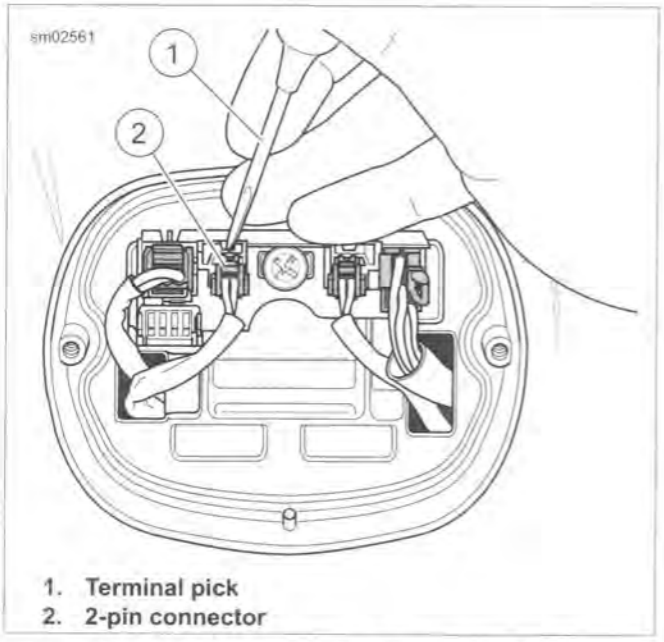

1. **Terminal pick**
2. **2-pin connector**

Figure 7-37. Removing 2-Pin Connectors

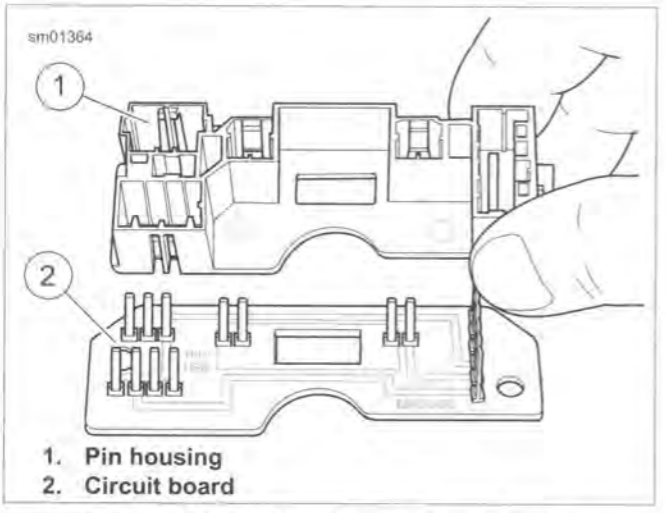

1. **Pin housing**
2. **Circuit board**

Figure 7-38. Pin Housing and Circuit Board

8. See Figure 7-39. Install connectors (1-4) to pin housing.
9. See Figure 7-36.Install lens (1) to base (2) with two screws. Tighten to 20-24 **in-lbs** (2.3-2.7 Nm).

⚠WARNING

Be sure that all lights and switches operate properly before operating motorcycle. Low visibility of rider can result in death or serious injury. (00316a)

10. Turn ignition on. Check operation of tail lamp and turn signals.

NOTE

Refer to Table 7-7. Cavity numbers are on back side of secondary locks.

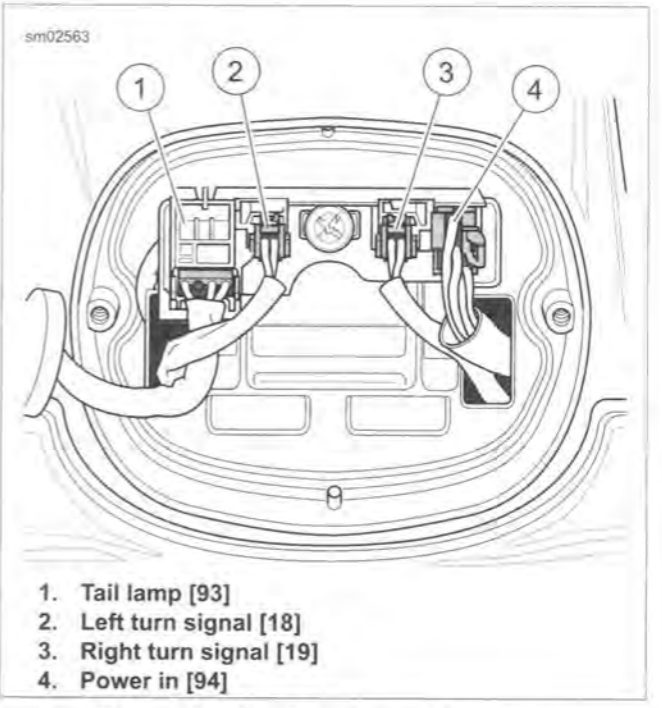

1. **Tail lamp [93]**
2. **Left turn signal [18]**
3. **Right turn signal [19]**
4. **Power in [94]**

Figure 7-39. Wire Location at Connectors

Table 7-7. Tail Lamp Wires: FLD AND FXDL

FUNCTION	NO.	TYPE	WIRE COLOR	CAVITY
Right turn signal	[19]	2-pin Multilock	V/BN	1
			BK	2
Left turn signal	[18]	2-pin Multilock	V/BN	1
			BK	2
Tail lamp	[93]	4-pin Multilock	BE	1
			HDI only-O/W or open on domestic models	2
			R/Y	3
			BK	4

Table 7-7. Tail Lamp Wires: FLD AND FXDL

FUNCTION	NO.	TYPE	WIRE COLOR	CAVITY
Power in	[94]	6-pin Multilock	O/W	1
			BN (V on FXDF)	2
			BE	3
			R/Y	4
			V (BN on FXDF)	5
			BK	6

BASE REPLACEMENT: FXDWG/HDI AND CANADA

FASTENER	TORQUE VALUE	
Tail lamp base screws: FXDWG (HDI and Canada)	66-90 **in-lbs**	7.5-10.1 Nm

NOTE

U.S. only, FXDB, FXDBP and FXDWG models combine the tail lamp with the turn signals.

1. See Figure 7-40. Remove plastic plug (2) from under rear fender (1).
2. Remove tail lamp screws (4).
3. Lift slightly on tail lamp (3) and disconnect gray four-way tail lamp connector (5).

NOTE

While installing tail lamp onto fender, make sure four-way turn signal socket connectors (6) fit properly into tail lamp housing. Verify that the wires do not get pinched between tail lamp and rear fender.

4. Install gray four-way tail lamp connector (5) to tail lamp and place tail lamp into position on fender.
5. Install tail lamp screws (4). Tighten to 66-90 **in-lbs** (7.5-10.1 Nm).
6. Install plastic plug (2).

⚠WARNING

Be sure that all lights and switches operate properly before operating motorcycle. Low visibility of rider can result in death or serious injury. (00316a)

7. Turn ignition on. Check operation of all lamps.

NOTE

Refer to Table 7-8 for proper wire routing of tail lamp and turn signal connectors.

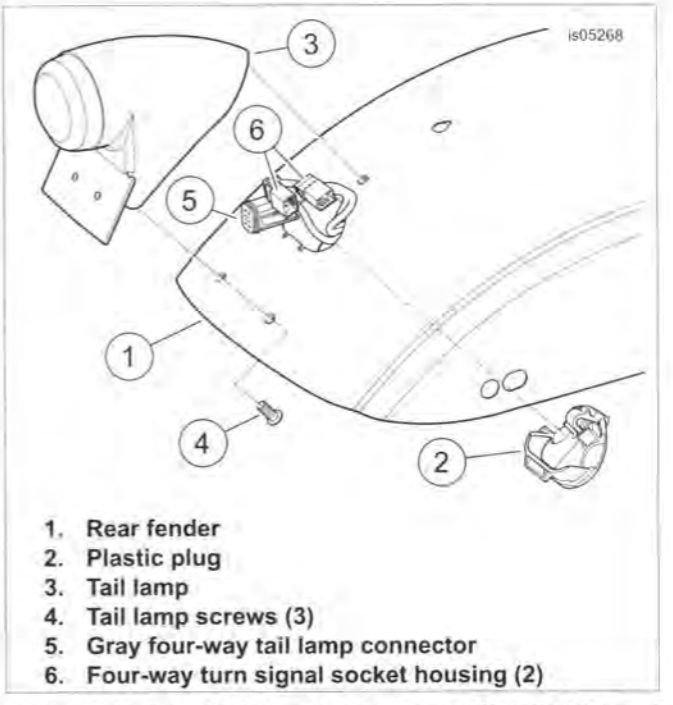

1. **Rear fender**
2. **Plastic plug**
3. **Tail lamp**
4. **Tail lamp screws (3)**
5. **Gray four-way tail lamp connector**
6. **Four-way turn signal socket housing (2)**

Figure 7-40. Rear Lighting Connections (FXDWG: HDI and Canada Models)

Table 7-8. Tail Lamp Wires: FXDWG

FUNCTION	NO.	TYPE	WIRE COLOR	CAVITY
Right turn signal	[19]	4-pin Multilock	BK	1
			BN	2
			BE	3
			Not used	4

Table 7-8. Tail Lamp Wires: FXDWG

FUNCTION	NO.	TYPE	WIRE COLOR	CAVITY
Left turn signal	[18]	4-pin Multilock	BK	1
			V	2
			BE	3
			Not used	4
Tail lamp	[93]	4-pin Deutsch	Not used	1
			R/Y	2
			O/W	3
			BK	4

TAIL LAMP REPLACEMENT: FXDF

FASTENER	TORQUE VALUE	
Tail lamp screws: FXDF	13-18 **in-lbs**	1.4-2.0 Nm
Tail lamp bracket screws: FXDF	60-80 **in-lbs**	6.8-9.0 Nm
License plate lamp screws: FXDF	10-17 **in-lbs**	1.1-1.9 Nm

Tail Lamp Removal

1. Remove rear fender. See 2.29 REAR FENDER.
2. See Figure 7-41. Remove clip (2).
3. Remove tail lamp bracket screws (7).
4. Remove tail lamp screws (6).
5. Disconnect connector (3).
6. See Figure 7-42. Cut cable strap (2). Remove wiring (3) from wire channel (4).

Tail Lamp Installation

1. See Figure 7-42. Connect connector (1) to tail lamp.
2. Install **new** cable strap.
3. Route wiring through channel.
4. See Figure 7-41. Install tail lamp screws (6). Tighten to 13-18 **in-lbs** (1.4-2.0 Nm).
5. Install tail lamp bracket (4) into fender. Install tail lamp bracket screws (7). Tighten to 60-80 **in-lbs** (6.8-9.0 Nm).
6. Install rear fender. See 2.29 REAR FENDER.

License Plate Lamp Replacement.

1. Remove rear fender. See 2.29 REAR FENDER.
2. Remove tail lamp.
3. Figure 7-43. Remove screws (5) and washers (4) securing cover (3) and license plate lamp (2) to tail lamp mounting bracket (1).
4. Remove wiring (7) from wire channel (8) in tail lamp bracket.
5. Remove wire terminals from connector (6).

NOTE

Wires can be installed in either connector cavity.

6. Install **new** wire terminals in connector.
7. Install license plate lamp, cover and screws into tail lamp bracket. Tighten screws to 10-17 **in-lbs** (1.1-1.9 Nm).
8. Connect tail lamp connector.
9. Route wiring through wire channel in tail lamp bracket.
10. Install tail lamp bracket into fender.
11. Install rear fender. See 2.29 REAR FENDER.

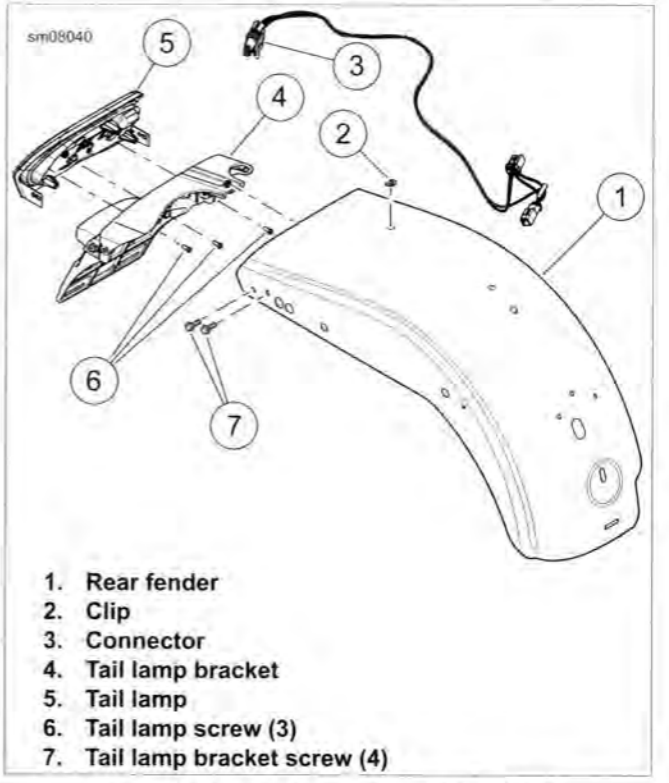

1. **Rear fender**
2. **Clip**
3. **Connector**
4. **Tail lamp bracket**
5. **Tail lamp**
6. **Tail lamp screw (3)**
7. **Tail lamp bracket screw (4)**

Figure 7-41. Tail Lamp Assembly: FXDF

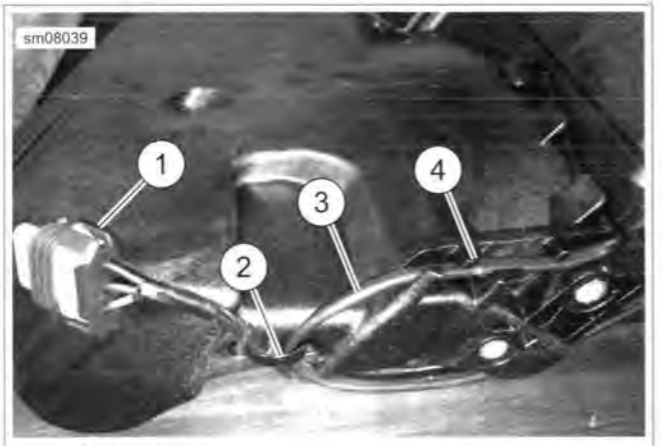

1. Connector
2. Cable strap
3. Wiring
4. Wire channel

Figure 7-42. Tail Lamp: FXDF

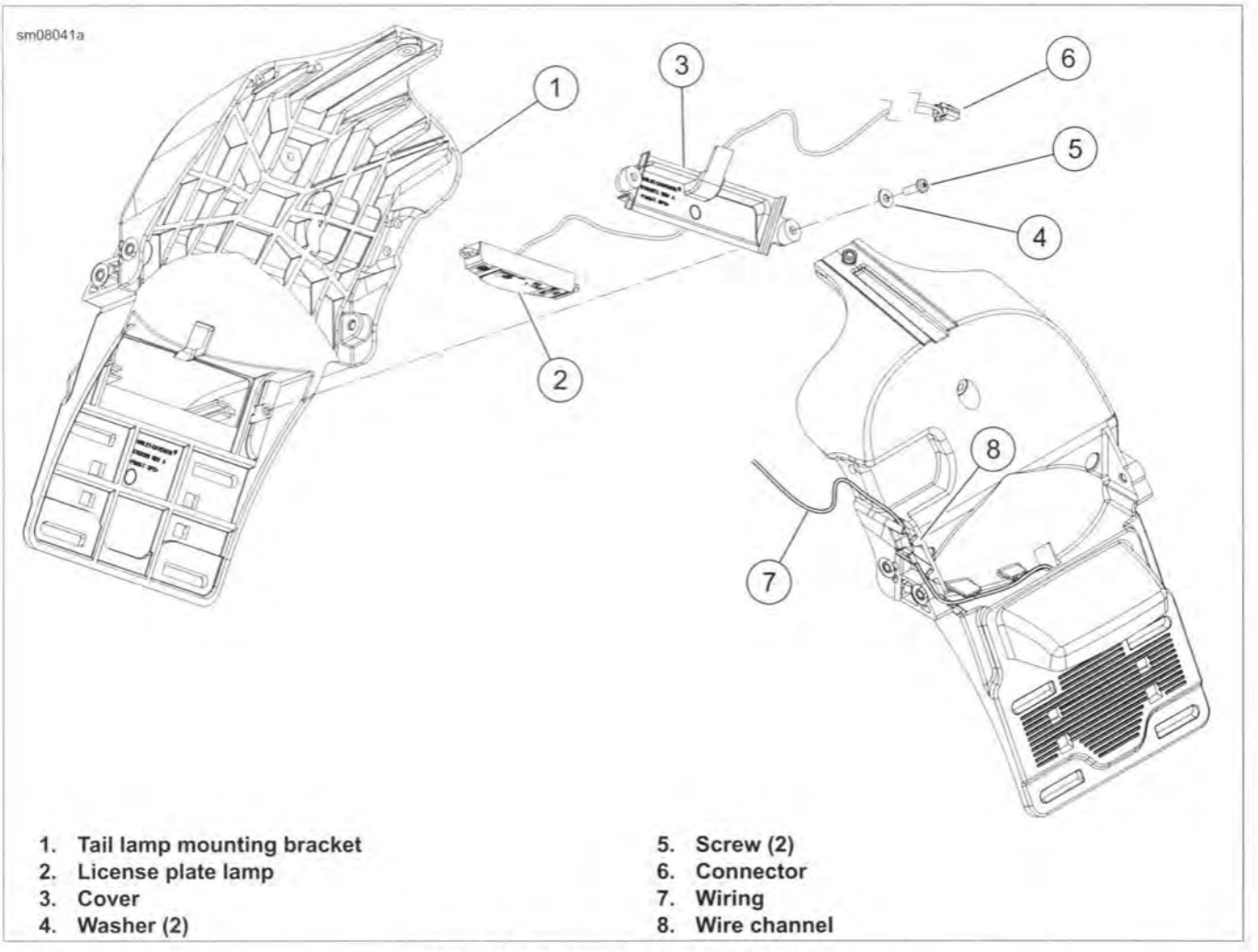

1. Tail lamp mounting bracket
2. License plate lamp
3. Cover
4. Washer (2)
5. Screw (2)
6. Connector
7. Wiring
8. Wire channel

Figure 7-43. License Plate Lamp: FXDF

TURN SIGNAL BULB REPLACEMENT: BULLET STYLE

NOTE

Models with LED lamps do not contain replacement bulbs. Replace the LED assembly.

1. See Figure 7-44. Insert a coin or the blade of a small screwdriver into the notch at the bottom of the lens cap. Carefully twist until the lens cap pops out of the lamp housing.
2. Push bulb in and rotate counterclockwise. Pull bulb from socket.
3. Inspect condition of electrical contacts in socket. If necessary, clean with a small wire brush and electrical contact cleaner.
4. Apply ELECTRICAL CONTACT LUBRICANT to contacts in socket and at bottom of **new** bulb.
5. Align pins on **new** bulb with pin guides in bulb socket. Push bulb in and turn clockwise to lock in place.
6. Snap lens cap onto the lamp housing with notch at bottom.

⚠WARNING

Be sure that all lights and switches operate properly before operating motorcycle. Low visibility of rider can result in death or serious injury. (00316a)

7. Check operation of all lamps.

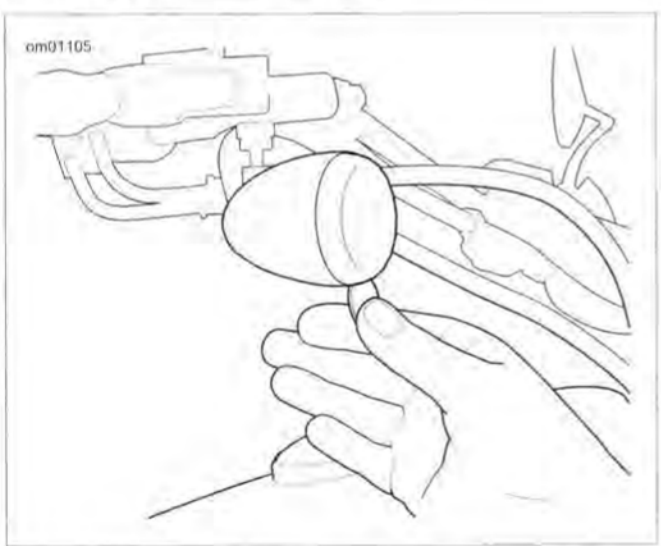

Figure 7-44. Turn Signal Lens Removal: Bullet Style

FRONT LAMP HOUSING REPLACEMENT: ALL BUT FLD

⚠WARNING

To prevent accidental vehicle start-up, which could cause death or serious injury, disconnect negative (-) battery cable before proceeding. (00048a)

NOTE

On FXDB, FXDL and FXDF models, the turn signal wiring is routed through the lower switch housings. The handlebar control modules are replaced with the turn signal lamps as an assembly.

1. Disconnect negative battery cable.

NOTE

Record wire routing and cable strap locations before removal.

2. Remove fuel tank fasteners, vent, fuel supply fitting and slide fuel tank back. See 4.4 FUEL TANK.
3. Disconnect fuel gauge connector [117].
4. Disconnect turn signal connector. Cut cable straps around turn signal wire conduit.
5. Remove turn signal lamp wires from multilock connector. See the electrical diagnostic manual.

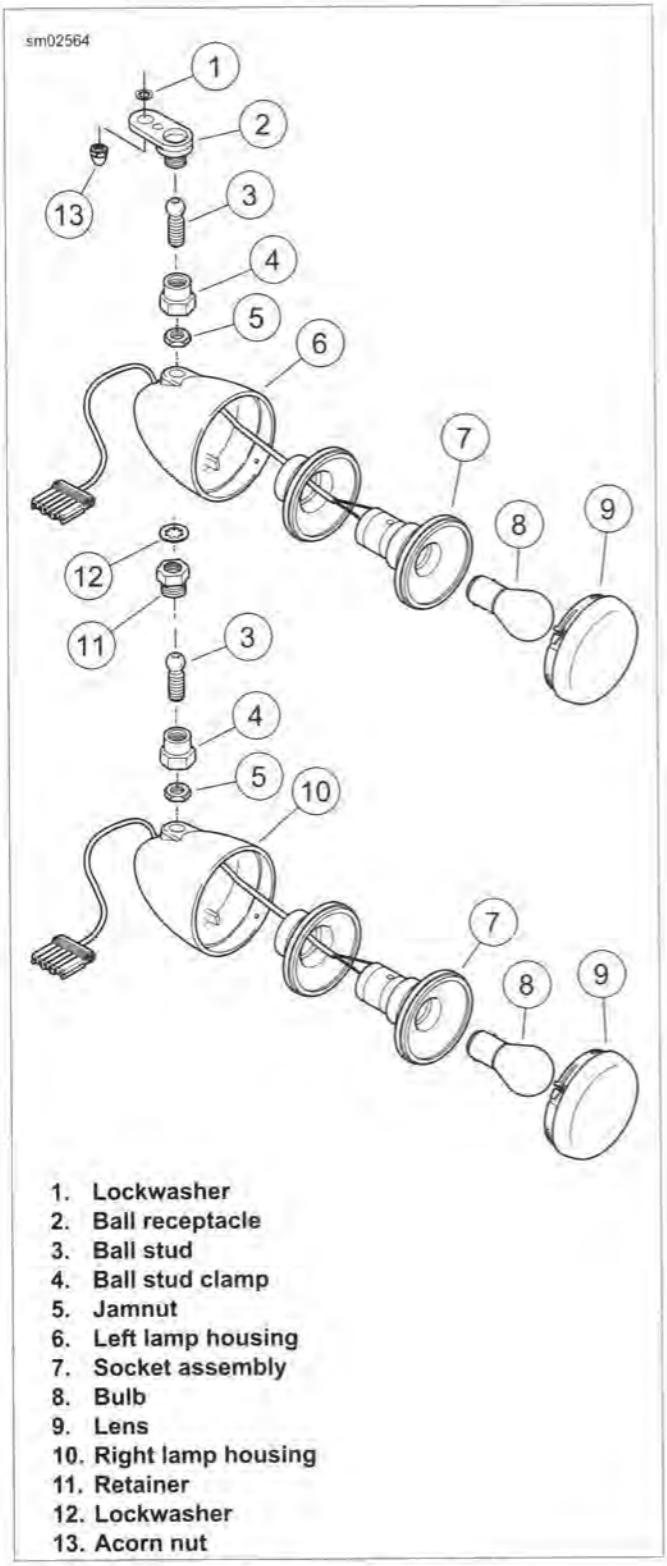

1. **Lockwasher**
2. **Ball receptacle**
3. **Ball stud**
4. **Ball stud clamp**
5. **Jamnut**
6. **Left lamp housing**
7. **Socket assembly**
8. **Bulb**
9. **Lens**
10. **Right lamp housing**
11. **Retainer**
12. **Lockwasher**
13. **Acorn nut**

Figure 7-45. Front Turn Signals

6. See Figure 7-45. Remove lamp housing:
   a. For left side housing, loosen ball stud clamp (4) until turn signal assembly is free from ball receptacle (2). Loosen jamnut (5) and remove ball stud (3) and ball stud clamp from lamp housing.
   b. For right side housing, loosen ball stud clamp (4) until turn signal assembly is free from retainer (11). Loosen jamnut (5) and remove ball stud (3) and ball stud clamp from lamp housing.
7. Pull turn signal wires from conduit. Remove turn signal lamp housing.
8. Lay old turn signal lamp housing next to **new** one. Cut **new** wires to length. Crimp **new** terminals onto wires. See the electrical diagnostic manual.
9. Install ball stud, ball stud clamp and jamnut in **new** lamp housing.
10. Install lamp housing:
    a. For left side housing, loosely install ball stud clamp to ball receptacle. Tighten jamnut.
    b. For right side housing, loosely install ball stud clamp to ball retainer. Tighten jamnut.
11. Using attached wire, pull turn signal wiring through conduit. Route wiring to connector location under fuel tank.
12. Install turn signal lamp wires in proper locations in multilock connector.
13. Connect turn signal connector [31]. Install connector inside frame backbone.
14. Connect fuel gauge connector.
15. Install fuel tank.
16. Connect negative battery cable.
17. Adjust turn signals:
    a. For left side lamp, adjust position of directional lamp as necessary. While holding lamp in position, tighten ball stud clamp.
    b. For right side lamp, adjust position of directional lamp as necessary. Hold retainer with a wrench then use another wrench to tighten ball stud clamp on right directional lamp.
18. Lay a protective blanket over fuel tank. Adjust lamps to prevent fuel tank contact. Always keep lens aimed forward.

⚠WARNING

Be sure that all lights and switches operate properly before operating motorcycle. Low visibility of rider can result in death or serious injury. (00316a)

19. Turn ignition switch ON. Test for proper turn signal operation.

REAR LAMP HOUSING REPLACEMENT: ALL BUT FLD

FASTENER	TORQUE VALUE	
Rear turn signal lamp fastener	12-16 ft-lbs	16.3-21.7 Nm

⚠WARNING

To prevent accidental vehicle start-up, which could cause death or serious injury, disconnect negative (-) battery cable before proceeding. (00048a)

1. Disconnect negative battery cable.

NOTE

Record wire routing and cable strap locations before removal.

2. Remove seat.
3. Disconnect turn signal wiring. See 7.14 TURN SIGNALS.
4. Cut cable straps around turn signal wires.
5. Remove turn signal lamp wires from multilock connector. See the electrical diagnostic manual.
6. See Figure 7-46. Remove fastener (7) and washer (6) inside rear fender. Then remove lamp housing (4) and lamp support (5).
7. Pull lamp housing wiring from conduit.
8. Lay old turn signal housing and wires next to **new** and cut **new** wires to length. Crimp **new** terminals onto wires. See the electrical diagnostic manual.
9. See Figure 7-47. Install **new** lamp housing and wires as shown. Install **new** cable straps, if removed. Insert terminals into connector and mate connector.
10. Rotate lamp assembly so lens points directly rearward.
11. While holding lamp assembly, tighten fastener to 12-16 ft-lbs (16.3-21.7 Nm).
12. Connect negative battery cable.

⚠WARNING

After installing seat, pull upward on seat to be sure it is locked in position. While riding, a loose seat can shift causing loss of control, which could result in death or serious injury. (00070b)

13. Install seat.

⚠WARNING

Be sure that all lights and switches operate properly before operating motorcycle. Low visibility of rider can result in death or serious injury. (00316a)

14. Turn ignition on. Test for proper turn signal operation.

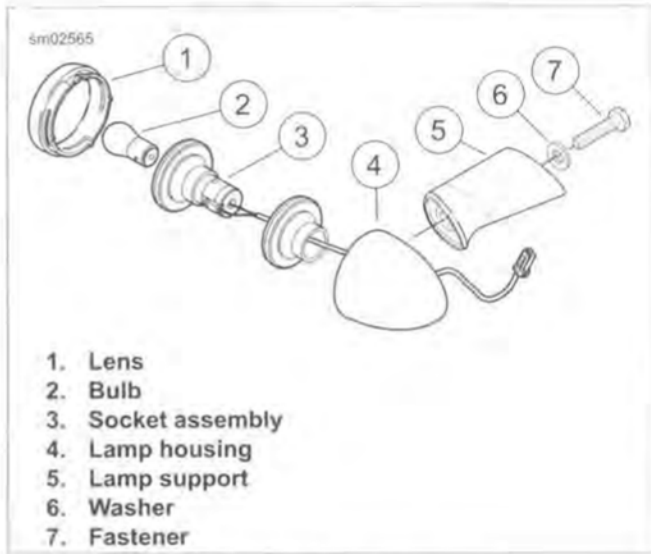

1. **Lens**
2. **Bulb**
3. **Socket assembly**
4. **Lamp housing**
5. **Lamp support**
6. **Washer**
7. **Fastener**

Figure 7-46. Rear Turn Signals

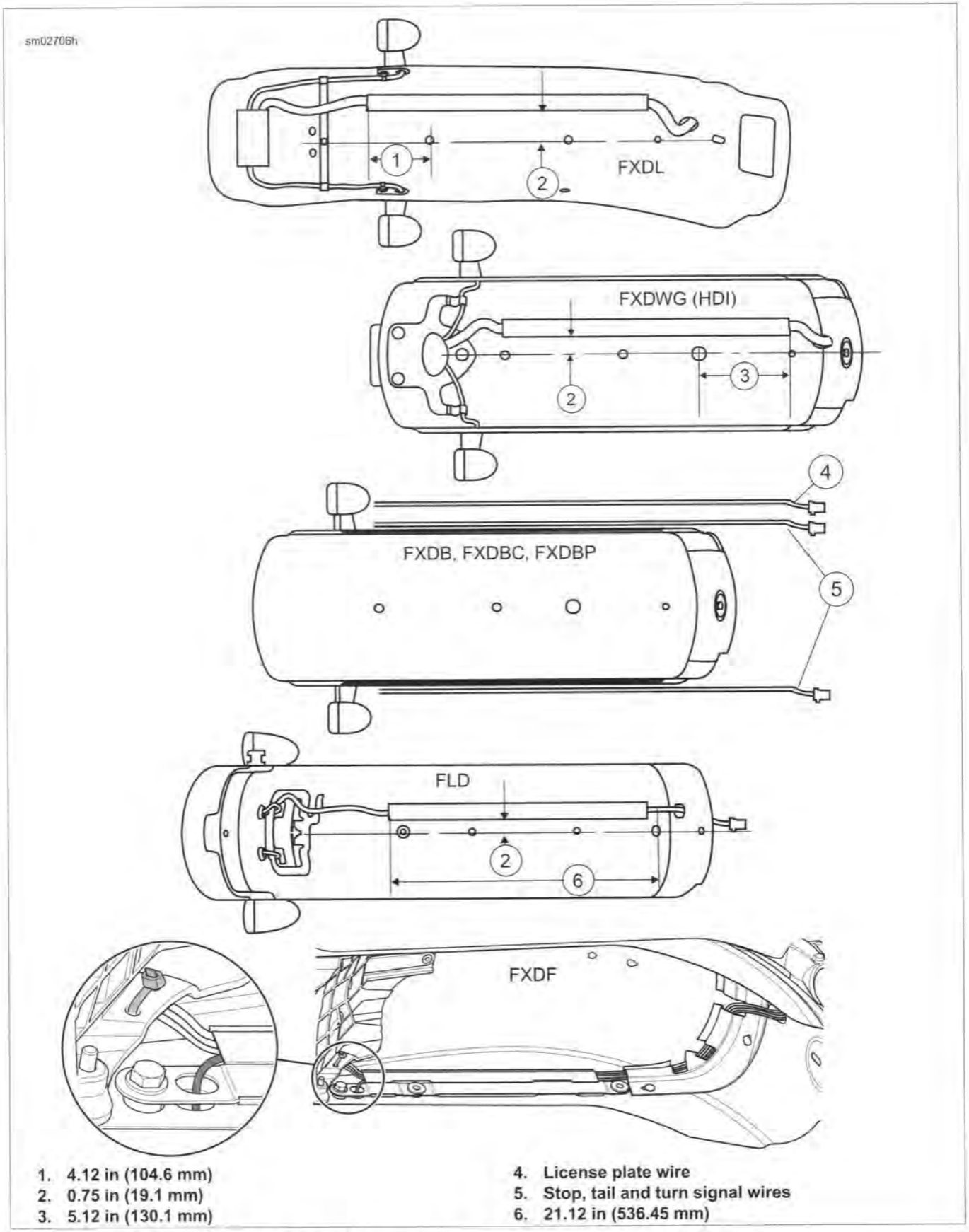

1. 4.12 in (104.6 mm)
2. 0.75 in (19.1 mm)
3. 5.12 in (130.1 mm)
4. License plate wire
5. Stop, tail and turn signal wires
6. 21.12 in (536.45 mm)

Figure 7-47. Rear Fender Harness Routing-Viewed from Underneath

FRONT TURN SIGNAL LAMPS: FLD

FASTENER	TORQUE VALUE	
Mirror acorn nut: FLD	84-156 **in-lbs**	9.5-17.6 Nm

Removal

1. See Figure 7-48. Remove grommet from frame.
2. Disconnect the turn signal lamp connector [31L/R] (4-place Multilock).
3. Remove all terminals from housing. See the electrical diagnostic manual.
4. Attach a chase wire to the harness. Pull up the harness through the headlamp nacelle.
5. Remove harness from retainers on handlebar.
6. See Figure 7-49. Loosen jamnut (3). Remove lamp housing from ball stud (6).
7. If turn signal bracket (2) requires removal, remove acorn nut (4).

NOTES

- *Reflector and harness are not serviced separately.*
- *Replace turn signal lamp assembly if damaged.*

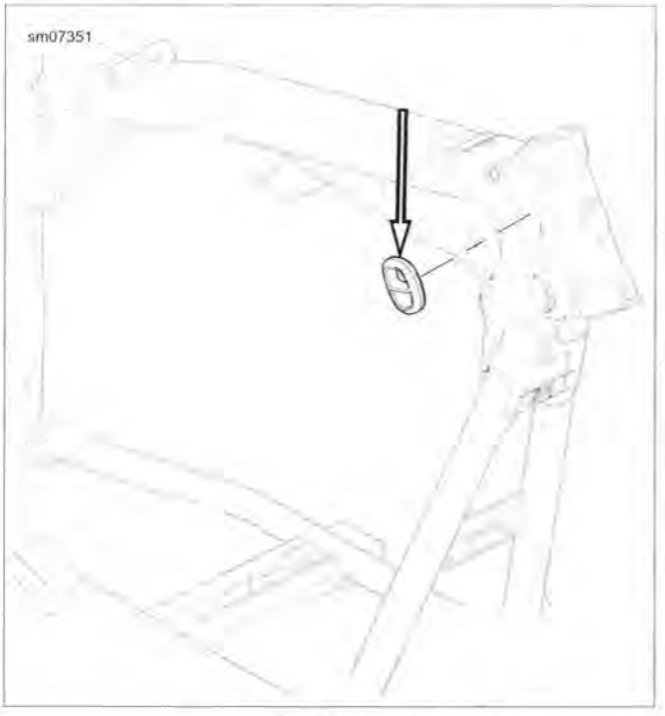

Figure 7-48. Frame Grommet

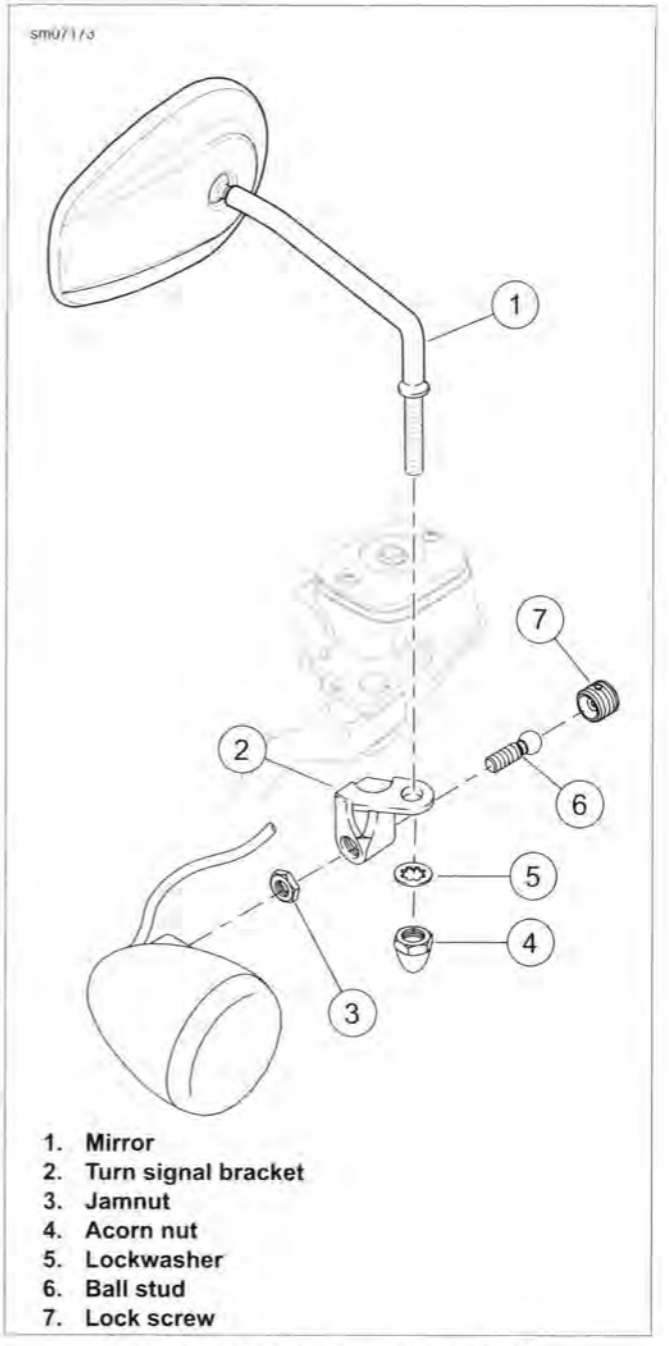

1. **Mirror**
2. **Turn signal bracket**
3. **Jamnut**
4. **Acorn nut**
5. **Lockwasher**
6. **Ball stud**
7. **Lock screw**

Figure 7-49. Front Turn Signals: FLD

Installation

1. See Figure 7-49. If removed, install turn signal bracket (2) and acorn nut (4). Tighten to 84-156 **in-lbs** (9.5-17.6 Nm).
2. Install lamp housing to ball stud (6). Tighten jamnut (3) securely.
3. Adjust turn signal as required and tighten lock screw (7).
4. Route wiring harness along handlebars. Secure with **new** anchors.
5. Route harness through hole in nacelle.
6. Install terminals into connector housing as shown in Table 7-9. See the electrical diagnostic manual.
7. See Figure 7-48. Connect to vehicle harness. Push connector into frame. Install grommet.

⚠WARNING

Be sure that all lights and switches operate properly before operating motorcycle. Low visibility of rider can result in death or serious injury. (00316a)

8. Turn ignition on. Check operation of turn signals.

Table 7-9. Turn Signal Lamp Connectors: FLD

CAVITY	COLOR
1	Violet
2	Black

REAR TURN SIGNAL LAMPS AND BRACKET: FLD

FASTENER	TORQUE VALUE	
License bracket screws: FLD	60-80 **in-lbs**	6.8-9.0 Nm
Rear light bar housing screws: FLD	84-144 **in-lbs**	9.5-16.3 Nm

Removal

1. Remove circuit board and chrome base. See 7.13 TAIL LAMP.
2. Release harnesses from cable clips inside fender.
3. See Figure 7-50. Remove light bar screws (3) to release light bar assembly. Remove bracket and harnesses from fender.
4. Remove license bracket screws (6) to release license bracket.
5. Remove license lamp screws (8) to release license lamp.
6. See 7.14 TURN SIGNALS, Rear Turn Signal Reflector/Isolator Repair: FLD if socket assembly (2) requires replacement.

Installation

1. See Figure 7-50. Install license lamp.
2. Install license bracket (7) and license bracket screws (6). Tighten to 60-80 **in-lbs** (6.8-9.0 Nm).
3. Verify grommets (4) are in place and feed harnesses through respective holes to inboard side of fender.
4. Apply one drop of LOCTITE 271 HIGH STRENGTH THREADLOCKER (red) to light bar screws (3).
5. Install rear turn signal lamps bracket and screws. Tighten to 84-144 **in-lbs** (9.5-16.3 Nm).
6. Install chrome base and circuit board assembly. See 7.13 TAIL LAMP.
7. Connect turn signal and license lamp connectors.
8. Secure harnesses under clips inside fender.

⚠WARNING

Be sure that all lights and switches operate properly before operating motorcycle. Low visibility of rider can result in death or serious injury. (00316a)

9. Turn ignition ON and test for proper lamp operation.

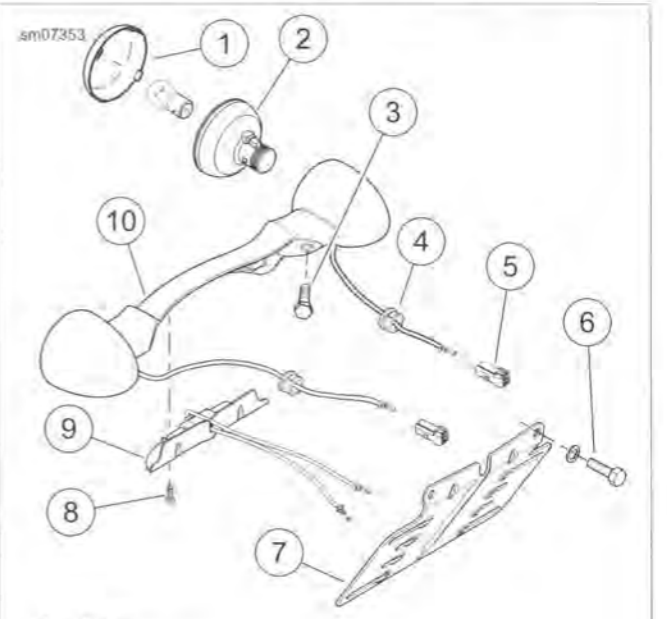

1. **Lens**
2. **Socket assembly**
3. **Light bar screw (2)**
4. **Grommet (2)**
5. **Connector housing (2)**
6. **License bracket screw (2)**
7. **License bracket**
8. **License lamp screw (2)**
9. **License lamp housing**
10. **Light bar housing**

Figure 7-50. Rear Turn Signals: FLD

REAR TURN SIGNAL REFLECTOR/ISOLATOR REPAIR: FLD

Removal

1. Remove circuit board and chrome base. See 7.13 TAIL LAMP.
2. Remove terminals from turn signal lamp connector housing. See the electrical diagnostic manual.
3. Release harness from cable clip inside fender.
4. Draw harness and terminals through hole to outboard side of fender.
5. Remove lens and bulb.
6. See Figure 7-51. Insert a right angle pick or a 7/64 in hex key through hole (4) and pull reflector from lamp.
7. Remove rubber isolator (3) from lamp if still installed.

Installation

1. Place **new** reflector/isolator assembly next to discarded unit and cut wires to proper length.

2. Install reflector/isolator assembly:
   a. Seat reflector assembly in rubber isolator, aligning tab on reflector with slot in isolator.
   b. Feed wires through lens opening and out through hole in lamp housing.
   c. Install grommet in lamp housing. Lightly lubricate grommet with glass cleaner, if necessary.
   d. Aligning tab on reflector with slot inside lamp, use thumbs of both hands and apply even pressure around outer edge of reflector assembly until fully seated.
   e. Liberally apply dielectric grease to contacts in socket and at bottom of bulb. Install bulb and lens with slot at bottom of lamp.
3. Install **new** terminals onto wires. See the electrical diagnostic manual.
4. Feed terminals through hole to inboard side of fender.
5. Install terminals into connector housing. Refer to Table 7-10. See the electrical diagnostic manual.
6. Capture harness in cable clip inside fender.
7. Install chrome base and circuit board assembly. See 7.13 TAIL LAMP.

⚠WARNING

Be sure that all lights and switches operate properly before operating motorcycle. Low visibility of rider can result in death or serious injury. (00316a)

8. Test lamp operation.

Table 7-10. Turn Signal Lamp Connectors: FLD

CAVITY	COLOR
1	Violet
2	Black



1. **Lamp terminal base**
2. **Spring**
3. **Rubber isolator**
4. **Hole**

Figure 7-51. Reflector Assembly

GENERAL

The CKP is a variable reluctance (VR) sensor. It generates an AC signal by sensing the passing of the 30 teeth machined in the left side flywheel. Two consecutive teeth are missing in the flywheel to establish a reference point. The CKP sends a signal to the electronic control module which references engine position (TDC) and engine speed.

REMOVAL

⚠WARNING

To prevent accidental vehicle start-up, which could cause death or serious injury, disconnect negative (-) battery cable before proceeding. (00048a)

1. Disconnect negative battery cable.

NOTE

Record wire routing and cable strap locations before removal.

2. Press upper front electrical caddy cover tabs to open cover.
3. See Figure 7-52. Remove CKP sensor connector (1) from front electrical caddy.
4. Disconnect CKP sensor connector.
5. See Figure 7-53. Remove screw and captive washer (2).
6. Carefully remove CKP (1).



1. **CKP connector**
2. **Front O2 sensor connector**

Figure 7-52. Front Electrical Caddy



1. **CKP sensor**
2. **Screw and captive washer**

Figure 7-53. Crank Position Sensor

INSTALLATION

FASTENER	TORQUE VALUE	
CKP sensor screw	90-120 **in-lbs**	10.1-13.6 Nm

1. See Figure 7-54. Lubricate CKP sensor O-ring with clean engine oil.
2. See Figure 7-53. Install **new** CKP sensor with screw and captive washer. Tighten to 90-120 **in-lbs** (10.1-13.6 Nm).
3. See Figure 7-52. Connect CKP connector (1).
4. Close and latch front electrical caddy cover.
5. Connect negative battery cable.

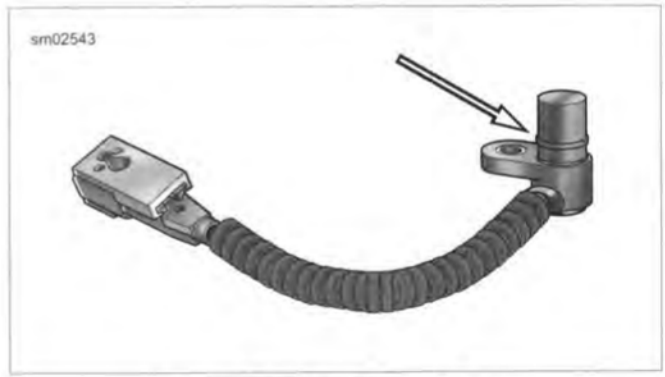

Figure 7-54. CKP Sensor O-Ring

GENERAL

NOTE

ACR is used only on 103 cu in and larger engines.

See Figure 7-55. The ECM controls opening and closing of the ACRs to assist starting.

See Figure 7-56. When open, compressed gases are released through the exhaust port.

REMOVAL

PART NUMBER	TOOL NAME
HD-48498-A	ACR SOLENOID SOCKET

1. Remove the rocker cover and the rocker box. See 3.10 TOP END SERVICE.
2. Separate the ACR rear [203R] or front [203F] connector from the main wiring harness and remove connectors from retainer clip.
3. See Figure 7-60. Use ACR SOLENOID SOCKET (Part No. HD-48498-A) to remove the ACR from the cylinder head.

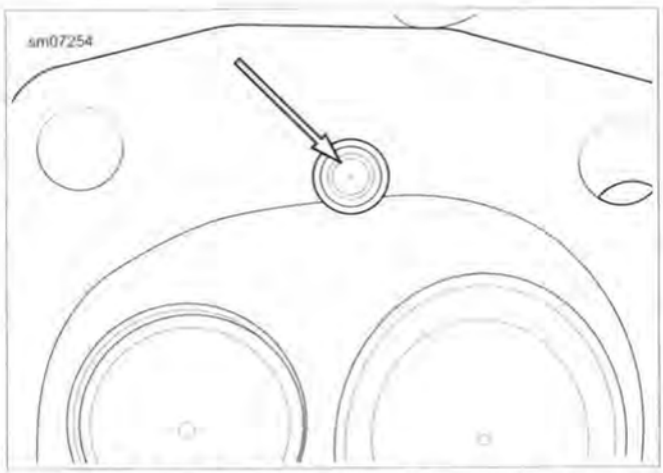

Figure 7-55. ACR Valve in Combustion Chamber

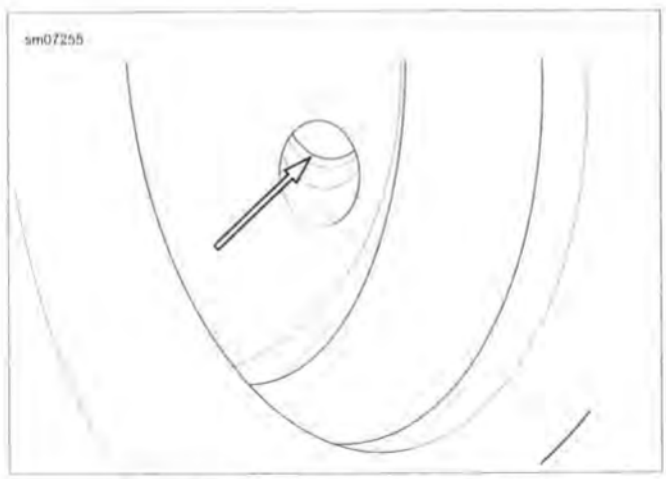

Figure 7-56. ACR Exhaust Port Release

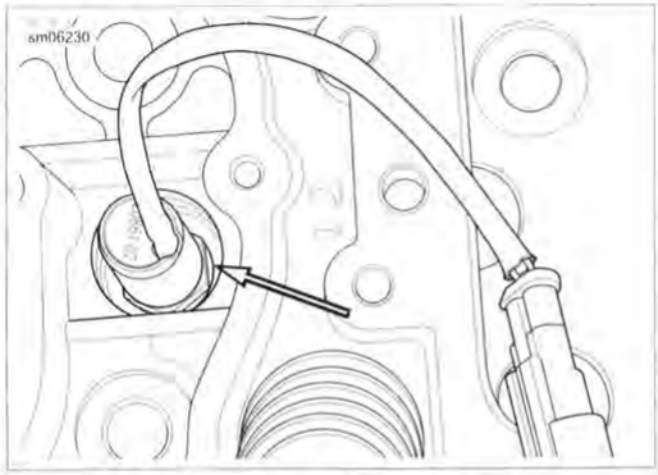

Figure 7-57. ACR in Head

INSTALLATION

PART NUMBER	TOOL NAME
HD-48498-A	ACR SOLENOID SOCKET

FASTENER	TORQUE VALUE	
ACR	13-17 ft-lbs	17.6-23.0 Nm

1. Verify that the copper seal washer is in place on the ACR.
2. See Figure 7-58. Identify a location around the threads of the ACR approximately one-third of distance from end.
3. See Figure 7-59. Apply three equally spaced dots of LOCTITE 246 MEDIUM STRENGTH/HIGH TEMPERATURE THREADLOCKER (blue) on threads.
4. To prevent cross-threading, install by hand and tighten finger-tight.
5. See Figure 7-60. Using ACR SOLENOID SOCKET (Part No. HD-48498-A), tighten to 13-17 ft-lbs (17.6-23.0 Nm).
6. Route the wire harness between the cylinders.
7. Install rocker box and rocker cover. See 3.10 TOP END SERVICE.
8. Connect the ACR connectors [203R] and [203F] to the main wiring harness. Secure connectors to retaining clip.

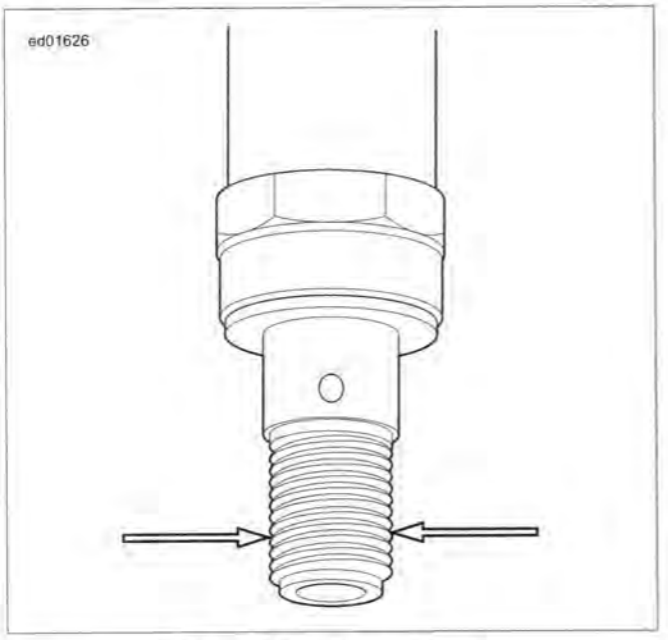

Figure 7-58. Bottom Third

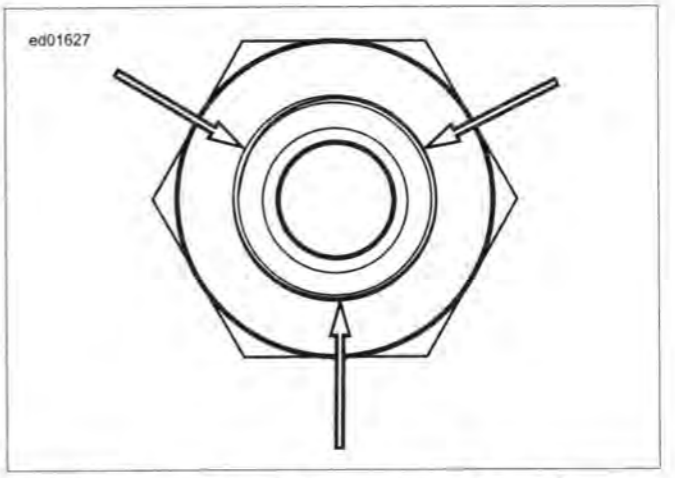

Figure 7-59. Three Dots of LOCTITE 246 MEDIUM STRENGTH/HIGH TEMPERATURE THREADLOCKER (blue)

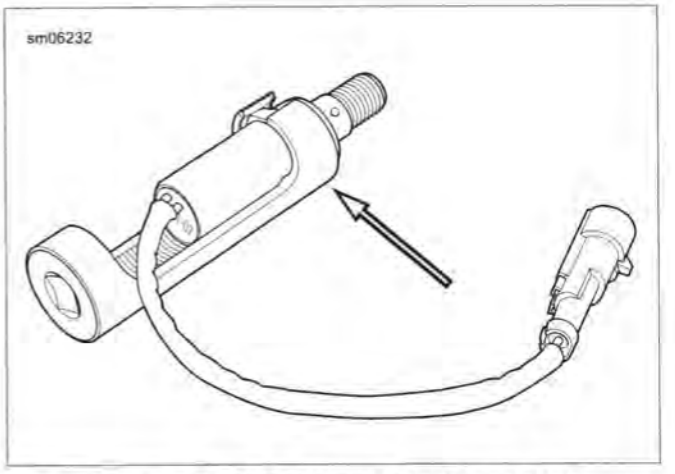

Figure 7-60. ACR Solenoid Socket and ACR

REMOVAL

⚠WARNING

To prevent accidental vehicle start-up, which could cause death or serious injury, disconnect negative (-) battery cable before proceeding. (00048a)

NOTES

- *The voltage regulator cannot be repaired. Replace assembly upon failure.*
- *Record wire routing and cable strap locations before removal.*

1. Disconnect negative battery cable.
2. See Figure 7-61. Release latches (1) from each connector.
3. Disconnect stator connector (3) and regulator output connector (2).
4. Remove regulator fasteners (4).

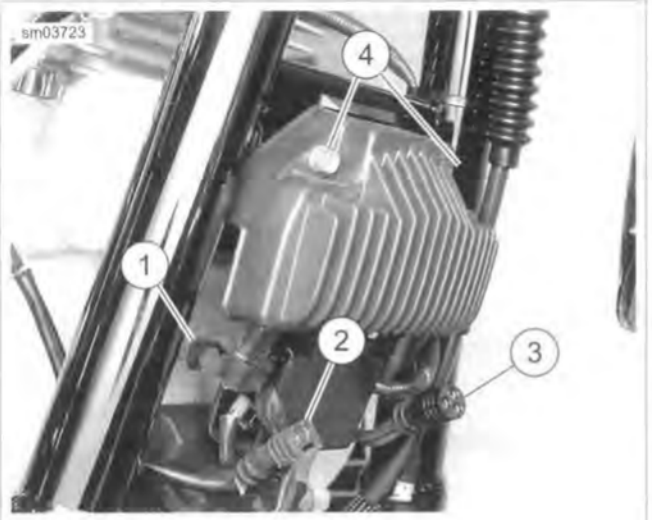

1. **Connector latch (2)**
2. **Regulator output connector**
3. **Stator connector**
4. **Regulator fastener (2)**

Figure 7-61. Voltage Regulator

INSTALLATION

FASTENER	TORQUE VALUE	
Voltage regulator fasteners	100-120 **in-lbs**	11.2-13.6 Nm

1. See Figure 7-61. Install voltage regulator with regulator fasteners (4). Tighten to 100-120 **in-lbs** (11.2-13.6 Nm).
2. Connect regulator output connector (2).
3. Connect stator connector (3).
4. Secure latches (1) on both connectors.
5. Connect negative battery cable.

REMOVAL

⚠WARNING

To prevent accidental vehicle start-up, which could cause death or serious injury, disconnect negative (-) battery cable before proceeding. (00048a)

1. Disconnect negative battery cable.
2. Remove primary chaincase housing. See 5.5 PRIMARY CHAINCASE HOUSING.
3. Disconnect stator connector from voltage regulator. See 7.17 VOLTAGE REGULATOR.

NOTE

Never pry rotor to remove or use sharp tools through holes in rotor face. Damage to stator wires is likely requiring replacement of stator.

4. See Figure 7-62. Remove alternator rotor (4). Two bolts can be inserted through the holes in the rotor face to aid removal.
   a. Clean lubricant from rotor shell.
   b. Using mechanics gloves, grasp and pull rotor to remove.

NOTE

See Figure 7-62. Lubricate parts with glass cleaner or isopropyl alcohol.

5. Move grommet (3) to one side and spray lubricant into gap to lubricate grommet and ease removal. Repeat previous step on opposite side.
6. Remove screws (2) and discard.
7. Remove stator (1) while pulling rubber grommet (3) and wires through crankcase hole.

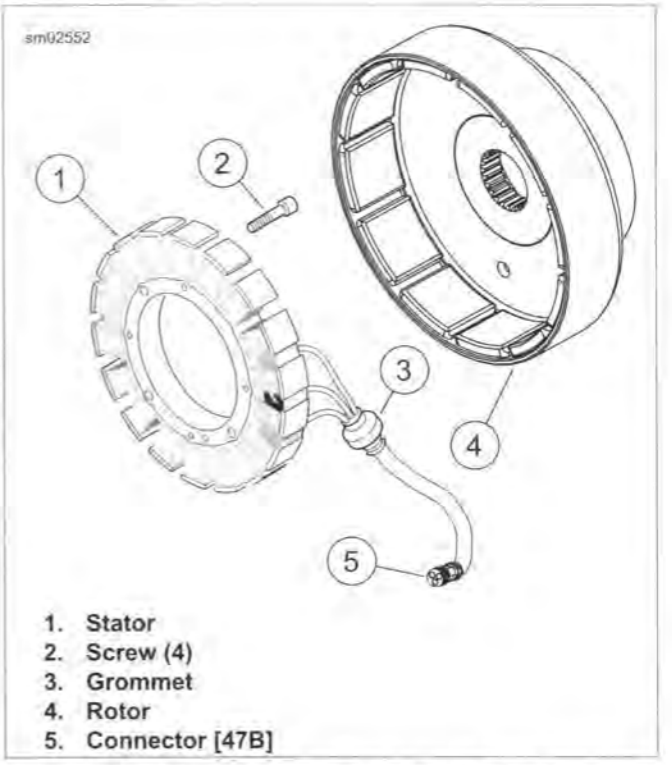

1. **Stator**
2. **Screw (4)**
3. **Grommet**
4. **Rotor**
5. **Connector [47B]**

Figure 7-62. Rotor and Stator (Typical)

CLEANING AND INSPECTION

1. Remove debris from rotor magnets. Clean rotor by wiping thoroughly with a clean cloth.
2. Check rotor for:
   a. Loose or cracked magnets.
   b. Stator bolt contact with rotor.
   c. Spline damage to rotor center mounting bolt hole.
3. Clean stator, stator leads and grommet thoroughly with a clean cloth.
4. Check stator for:
   a. Contact with rotor.
   b. Damaged or cracked insulation.
   c. Electrical failures. See the electrical diagnostic manual.

INSTALLATION

FASTENER	TORQUE VALUE	
Stator screws	55-75 **in-lbs**	6.2-8.4 Nm

NOTE

Discard and replace stator screws after each removal.

1. Insert wires through crankcase hole.
2. See Figure 7-62. Push rubber grommet (3) with wires through crankcase hole. If necessary, apply the same lubricant used during removal.

3. Install the stator (1) on the crankcase and fasten in place using **new** screws (2). Tighten to 55-75 **in-lbs** (6.2-8.4 Nm).
4. Connect connector [47] (5) onto voltage regulator and engage latch to secure. See 7.17 VOLTAGE REGULATOR.
5. Install rotor (4) on the sprocket shaft.
6. Install primary chaincase housing, clutch, primary drive and primary cover. See 5.5 PRIMARY CHAINCASE HOUSING and 5.4 DRIVE COMPONENTS.
7. Connect negative battery cable.

GENERAL

If replacing gauge, remove wires from back of gauge.

The fuel gauge sending unit is in the fuel tank. See 7.20 FUEL GAUGE SENDER

REMOVAL

⚠WARNING

Stop the engine when refueling or servicing the fuel system. Do not smoke or allow open flame or sparks near gasoline. Gasoline is extremely flammable and highly explosive, which could result in death or serious injury. (00002a)

⚠WARNING

To prevent accidental vehicle start-up, which could cause death or serious injury, disconnect negative (-) battery cable before proceeding. (00048a)

NOTE

The gauge wires are routed through a tube in the tank. Wires are secured by a cable strap located in the top frame tube underneath the fuel tank.

1. Disconnect negative battery cable.
2. Loosen fuel tank to gain access to the fuel gauge connector. See 4.4 FUEL TANK.
3. Disconnect fuel gauge connector [117] located under left side of fuel tank.
4. See Figure 7-63. Detach terminals from connector (4).

NOTE

Do not twist gauge and wiring during removal.

5. Pull up on gauge (1). Remove gauge, gasket (2) and wiring harness (3) from fuel tank. Discard gasket.

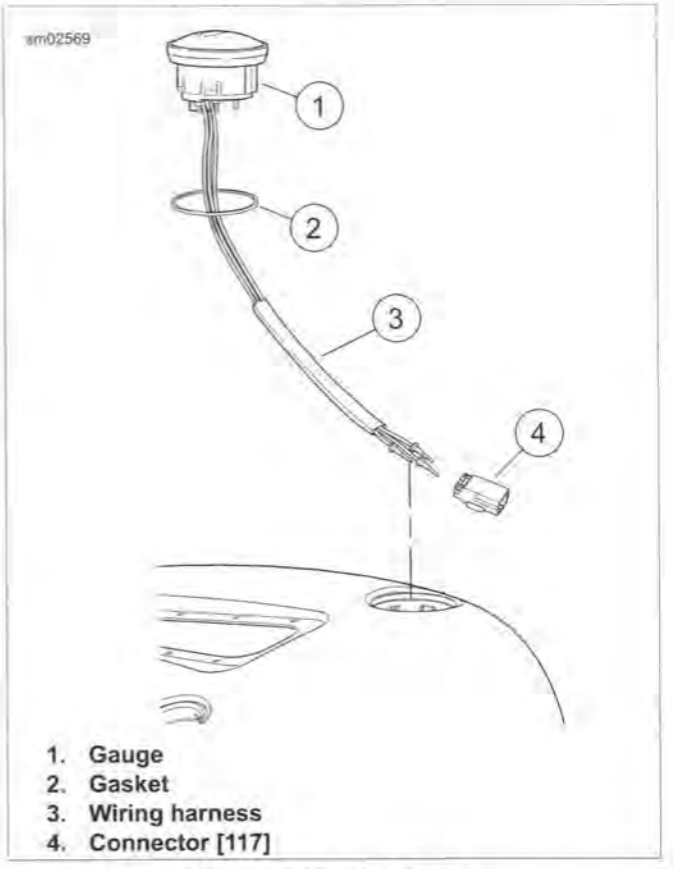

1. **Gauge**
2. **Gasket**
3. **Wiring harness**
4. **Connector [117]**

Figure 7-63. Fuel Gauge

REMOVAL

⚠WARNING

Stop the engine when refueling or servicing the fuel system. Do not smoke or allow open flame or sparks near gasoline. Gasoline is extremely flammable and highly explosive, which could result in death or serious injury. (00002a)

⚠WARNING

To prevent accidental vehicle start-up, which could cause death or serious injury, disconnect negative (-) battery cable before proceeding. (00048a)

1. Disconnect negative battery cable.
2. Drain fuel into adequately sized, approved gasoline container.
3. Remove instrument console.
   a. **For FXDF and FLD models:** See 7.21 INSTRUMENTS: FXDF AND FLD.
   b. **For FXDB, FXDBC, FXDBP and FXDWG models:** See 7.22 INSTRUMENTS: FXDB, FXDBC, FXDBP AND FXDWG.
   c. **FXDL models:** See 7.23 INSTRUMENTS: FXDL.
4. Disconnect console wiring.
5. See Figure 7-65. Disconnect fuel pump and sender connector (1) [141].
6. Remove vent hose (3).
7. Remove top plate screws (2) and discard.

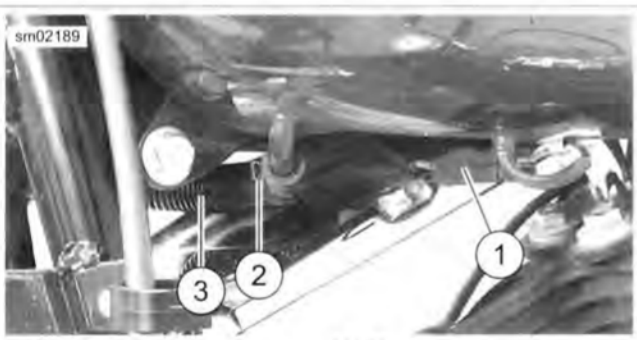

1. **Fuel gauge connector [117]**
2. **Clamp**
3. **Crossover hose**

Figure 7-64. Fuel Gauge Connector and Crossover Hose

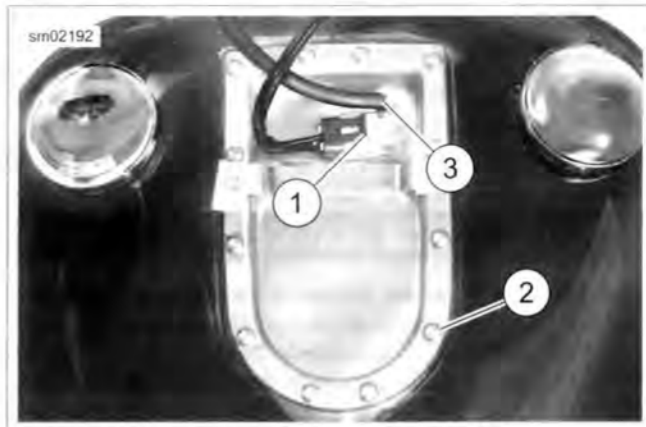

1. **Fuel pump and sender connector [141]**
2. **Screws (12)**
3. **Vent hose**

Figure 7-65. Top Plate Screws (Typical)

8. See Figure 7-66. Rotate top plate (3) until vent tube (1) clears fuel tank.
9. See Figure 7-67. Press tab and remove fuel pump/sender wiring from top plate. Remove top plate.
10. Disconnect wire harness from fuel pump.
11. See Figure 7-68. Pull removal tab (2) toward rear of vehicle to disengage fuel gauge sender (1) from mounting tabs.

NOTE

Do not bend float arm while removing. A bent float arm gives inaccurate readings.

12. Remove fuel gauge sender from fuel tank.

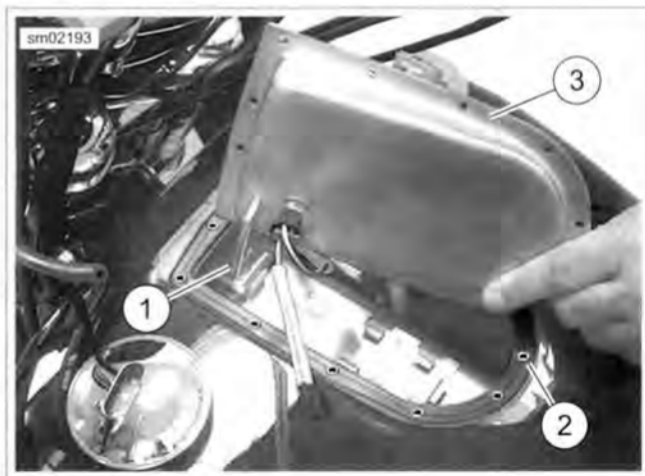

1. **Vent tube**
2. **Gasket**
3. **Top plate**

Figure 7-66. Top Plate

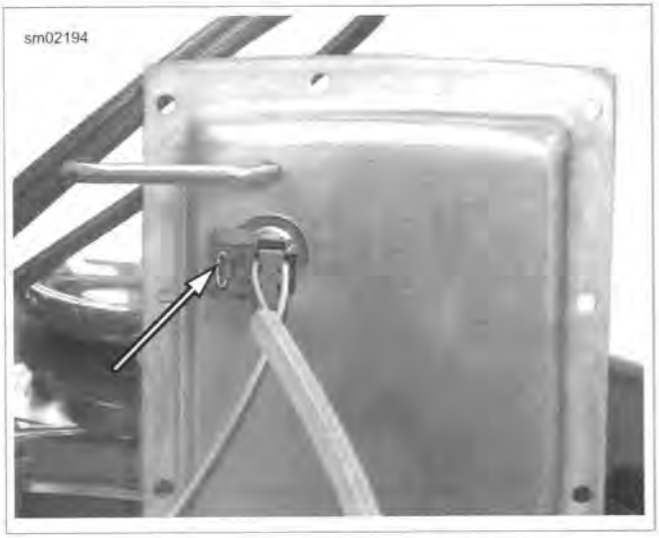

Figure 7-67. Connector Tab

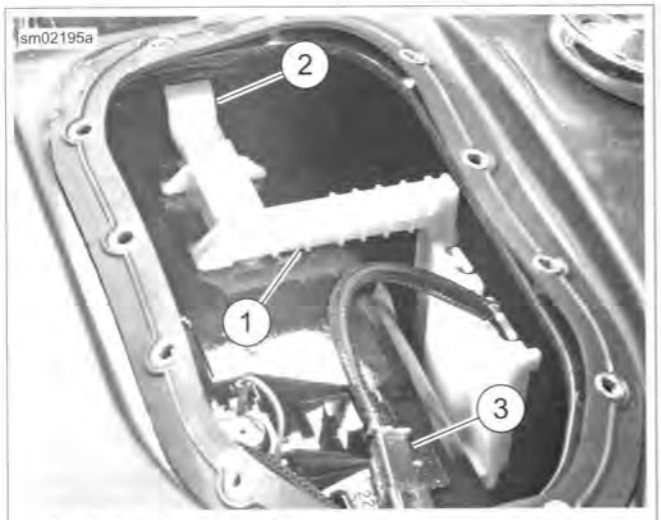

1. **Fuel gauge sender**
2. **Removal tab**
3. **Connector**

Figure 7-68. Fuel Gauge Sender

INSTALLATION

FASTENER	TORQUE VALUE	
Top plate fasteners	27-33 **in-lbs**	3.1-3.7 Nm

1. See Figure 7-68. Install fuel gauge sender (1), making sure that removal tab (2) is locked in place.
2. Attach connector (3) to wiring harness.

NOTE

Do not apply any type of sealant to gasket.

3. See Figure 7-69. Place **new** gasket (2) under top plate. Align gasket with screw holes.
4. Install fuel pump/sender wire connector (4) on top plate (3).
5. Hold top plate at 90 degree angle. Making sure that vent tube is installed inside of tank, rotate top plate into position.
6. Loosely install **new** sealing screws in top plate.

NOTE

All models use the same torque sequence despite shape differences in top plate.

7. See Figure 7-71. Tighten sealing fasteners using pattern shown to 27-33 **in-lbs** (3.1-3.7 Nm).
8. See Figure 7-70. Connect fuel pump/sending unit connector [141] (1).
9. Install instrument console.
   a. **For FXDF and FLD models:** See 7.21 INSTRUMENTS: FXDF AND FLD.
   b. **For FXDB, FXDBC, FXDBP and FXDWG models:** See 7.22 INSTRUMENTS: FXDB, FXDBC, FXDBP AND FXDWG.
   c. **FXDL models:** See 7.23 INSTRUMENTS: FXDL.

NOTE

In next step, make sure crimped end of clamp faces toward front of vehicle.

10. Connect fuel tank cross-over hose with **new** clamps.
11. Connect negative battery cable.
12. Fill fuel tank.
13. Check fuel tank for leaks.

NOTE

The low fuel lamp will not turn off until there is sufficient fuel in the tank, the ignition switch has been turned off and back on, and the vehicle has begun forward movement.

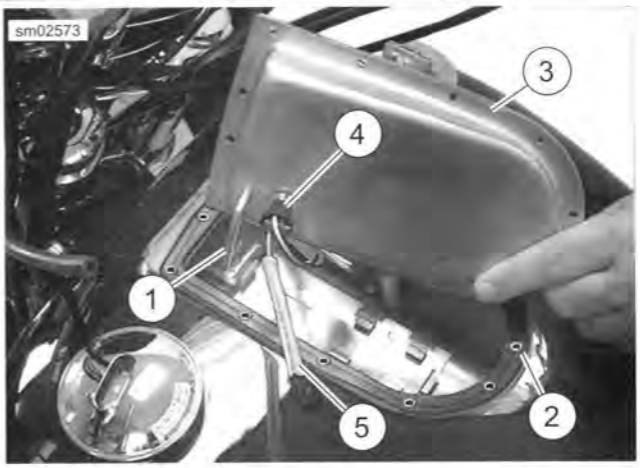

1. **Vent tube**
2. **Gasket**
3. **Top plate**
4. **Fuel pump/sender wire connector**
5. **Fuel pump harness**

Figure 7-69. Top Plate

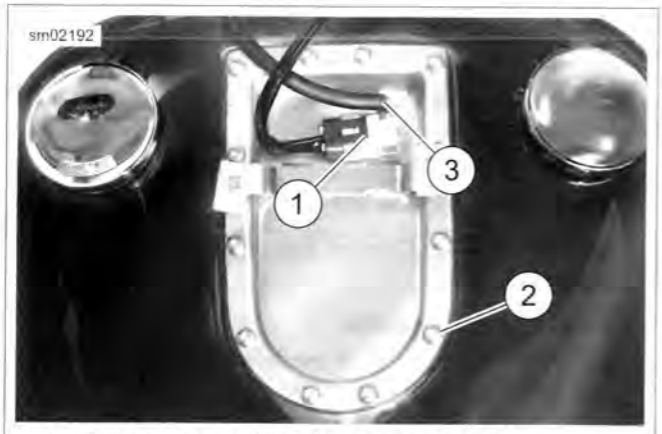

1. Fuel pump and sender connector [141]
2. Screws (12)
3. Vent hose

Figure 7-70. Top Plate Screws (Typical)

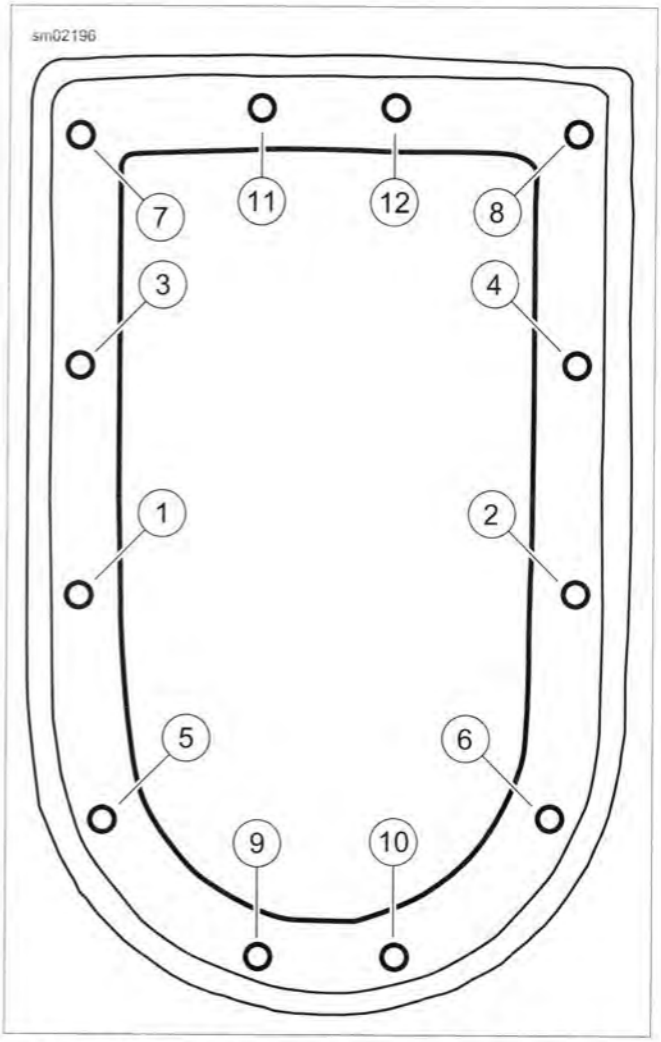

Figure 7-71. Top Plate Torque Sequence: All Models

SPEEDOMETER

FASTENER	TORQUE VALUE	
Console mounting screws: FXDF, FLD	41-49 **in-lbs**	4.6-5.5 Nm
Fuel tank trim screw: FXDF, FLD	18-24 **in-lbs**	2.03-2.71 Nm

Removal

NOTES

- *Both the ECM and the speedometer retain the odometer value. If the speedometer is replaced, the **new** speedometer displays the odometer value stored in the ECM. The **new** speedometer will lock to the mileage stored in the ECM after 31.1 mi (50 km) have been accumulated. The trip B odometer displays the count down mileage.*
- *If the speedometer is installed on another vehicle, after it has locked to the ECM, the odometer will display "VIN ERR" on the new vehicle.*
- *If the speedometer is removed from the vehicle before the count down reaches zero, it will reset the mileage count down 31.1 mi (50 km). This mileage count down allows for a road test to verify that speedometer replacement was the proper repair.*
- *Use glass cleaner to lubricate speedometer during removal and installation.*

1. See Figure 7-72. Remove screw (2) securing trim to fuel tank. Remove screws (3) securing console to top plate.

NOTE

Two push nuts secure trim to console.

2. Position clean towel on fuel tank and flip console over to expose underside.
3. Press connector tab and disconnect 12-place harness connector [39] from speedometer (5) under console.
4. Pry between three tabs and speedometer with a screwdriver to raise and release back clamp (7) from speedometer. Remove back clamp from speedometer.
5. Remove speedometer from console (6).
6. Remove gasket (4) from speedometer.

Installation

1. See Figure 7-72. Install gasket (4) to speedometer (5).
2. Position speedometer in console (6).
3. Press back clamp (7) until three tabs engage on back of speedometer.
4. Connect 12-place connector [39] to speedometer under console.

NOTE

Two push nuts secure trim to console.

5. Install console to fuel tank with screws (3). Tighten to 41-49 **in-lbs** (4.6-5.5 Nm).
6. Install screw (2) securing fuel tank trim (1) to fuel tank. Tighten to 18-24 **in-lbs** (2.03-2.71 Nm).
7. Test speedometer for proper operation.

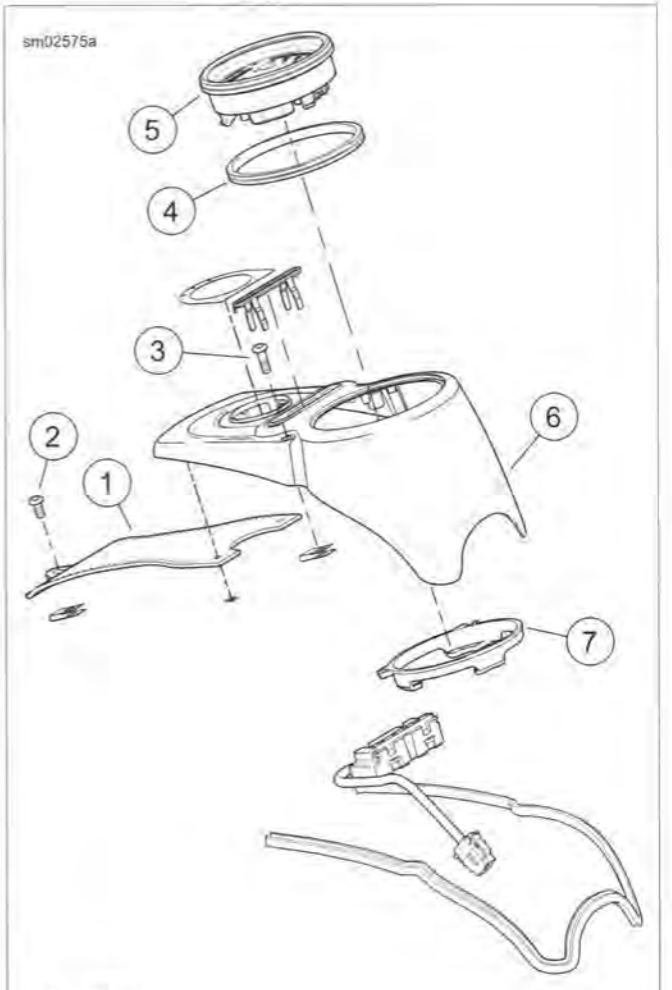

1. **Trim**
2. **Screw**
3. **Screw (2)**
4. **Gasket**
5. **Speedometer**
6. **Console**
7. **Back clamp**

Figure 7-72. Speedometer: FXDF, FLD

REMOVAL

NOTES

- *Both the ECM and the speedometer retain the odometer value. If the speedometer is replaced, the **new** speedometer displays the odometer value stored in the ECM. The **new** speedometer will lock to the mileage stored in the ECM after 31.1 mi (50 km) have been accumulated. The trip B odometer displays the count down mileage.*
- *If the speedometer is installed on another vehicle, after it has locked to the ECM, the odometer will display "VIN ERR" on the new vehicle.*
- *If the speedometer is removed from the vehicle before the count down reaches zero, it resets the mileage count down to 31.1 mi (50 km). This mileage count down allows for a road test to verify that speedometer replacement was the proper repair.*
- *Do not cut any of the wiring harness cable straps to replace the speedometer. Lubricate speedometer gasket with glass cleaner or isopropyl alcohol for removal and installation.*

1. See Figure 7-73. Remove screws (4, 5).
2. Lift console from fuel tank.
3. Position clean towel on fuel tank and flip console over to expose underside.
4. Remove screws (1) and back clamp (10).
5. While pressing connector tab, remove speedometer connector (8) from back of speedometer (7).
6. Remove speedometer from console. Remove gasket (6) from speedometer/console.

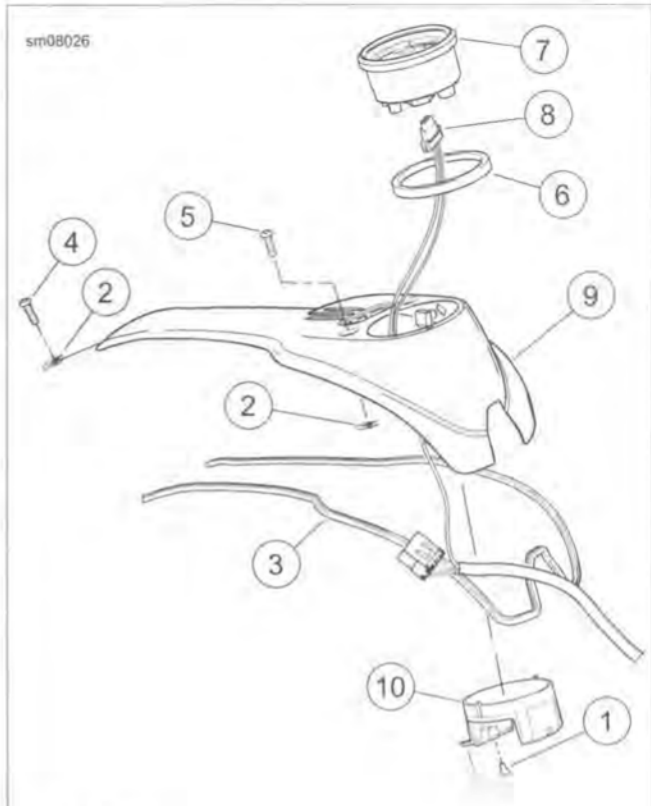

1. **Screw**
2. **Speed nut**
3. **Console trim**
4. **Screw**
5. **Screw (2)**
6. **Gasket**
7. **Speedometer**
8. **Speedometer connector**
9. **Console**
10. **Back clamp**

Figure 7-73. Speedometer: FXDB, FXDBC, FXDBP, FXDWG

INSTALLATION

FASTENER	TORQUE VALUE	
Speedometer screw: FXDB, FXDBC, FXDBP and FXDWG	10-20 **in-lbs**	1.1-2.3 Nm
Console to fuel tank fasteners: FXDB, FXDBC, FXDBP and FXDWG	41-49 **in-lbs**	4.6-5.5 Nm

NOTE

Lubricate gasket with alcohol or glass cleaner.

1. See Figure 7-73. Install console trim (3) to console (9).
2. Install gasket (6) on speedometer (7).
3. Install speedometer in console.

4. Install back clamp (10) to speedometer with screw (1). Tighten to 10-20 **in-lbs** (1.1-2.3 Nm). Make sure that there is no binding with the wiring harnesses and the bracket.
5. Install speedometer connector (8) to back of speedometer.
6. Install console to fuel tank with screws (4, 5). Tighten to 41-49 **in-lbs** (4.6-5.5 Nm).
7. Test speedometer for proper operation.

REMOVAL

NOTES

- *Both the ECM and the speedometer retain the odometer value. If the speedometer is replaced, the* ***new*** *speedometer displays the odometer value stored in the ECM. The* ***new*** *speedometer will lock to the mileage stored in the ECM after 31.1 mi (50 km) have been accumulated. The trip B odometer displays the count down mileage.*
- *If the speedometer is installed on another vehicle, after it has locked to the ECM, the odometer will display "VIN ERR" on the new vehicle.*
- *If the speedometer is removed from the vehicle before the count down reaches zero, it resets the mileage count down to 31.1 mi (50 km). This mileage count down allows for a road test to verify that speedometer replacement was the proper repair.*
- *Do not cut any of the wiring harness cable straps to replace the speedometer. Lubricate speedometer gasket with glass cleaner or isopropyl alcohol for removal and installation.*

1. See Figure 7-74. Remove screws (6, 7). Lift console (11) from fuel tank.
2. Position clean towel on fuel tank and flip console over to expose underside.
3. Remove screws (1) and back clamp (2).
4. While pressing connector tab, remove speedometer connector from back of speedometer (10).
5. While pressing connector tab, remove speedometer connector from back of tachometer (9).
6. Remove speedometer from console. Remove gaskets (8).

INSTALLATION

FASTENER	TORQUE VALUE	
Console back clamp screw	10-20 **in-lbs**	1.1-2.3 Nm
Console to fuel tank fasteners: FXDL	41-49 **in-lbs**	4.6-5.5 Nm

NOTE

Lubricate gaskets with alcohol or glass cleaner.

1. See Figure 7-74. Install console trim (3) to console (11).
2. Install gaskets (8) on speedometer (10) and tachometer.
3. Install speedometer in console.
4. Install tachometer in console.
5. Install back clamp (2) to speedometer and tachometer with screw (1). Tighten to 10-20 **in-lbs** (1.1-2.3 Nm). Make sure that there is no binding with the wiring harnesses and the bracket.
6. Install speedometer connector to back of speedometer.
7. Install tachometer connector to back of speedometer.
8. Install console to fuel tank with screws (6, 7). Tighten to 41-49 **in-lbs** (4.6-5.5 Nm).
9. Test instruments for proper operation.

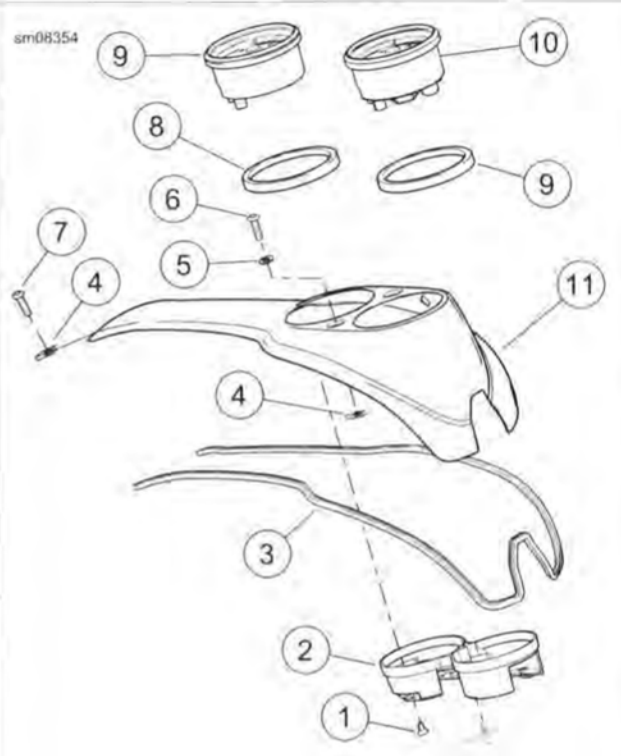

1. **Screw (4)**
2. **Back clamp**
3. **Console trim**
4. **Speed nut (3)**
5. **Washer**
6. **Screw (2)**
7. **Screw**
8. **Gasket**
9. **Tachometer**
10. **Speedometer**
11. **Console**

Figure 7-74. Speedometer: FXDL

GENERAL

The VSS is a Hall Effect sensor that takes readings off fourth gear in the transmission.

The VSS is on the transmission just behind the transmission top cover.

REMOVAL

⚠WARNING

To prevent accidental vehicle start-up, which could cause death or serious injury, disconnect negative (-) battery cable before proceeding. (00048a)

NOTE

Before removing VSS wire, carefully note wire routing. Lay the ***new*** *VSS wire next to the old wire. Remove and replace the wires together, one cable strap at a time, to verify proper routing.*

1. Disconnect negative battery cable.
2. See Figure 7-75. Disconnect the VSS connector [65].
3. Remove VSS mounting bolt.
4. Remove sensor from transmission case.

INSTALLATION

FASTENER	TORQUE VALUE	
Speedometer VSS mounting bolt	84-108 **in-lbs**	9.5-12.2 Nm

1. See Figure 7-75. Install VSS into transmission case using mounting bolt. Tighten to 84-108 **in-lbs** (9.5-12.2 Nm).
2. Install connector [65] to VSS.
3. Connect battery cables.



Figure 7-75. VSS Connector [65]

FRONT WHEEL SPEED SENSOR (WSS)

Removal

NOTE

WSS harness and connector are routed through the plastic clip in the steering head and then the hole on right hand side of steering head.

1. Remove fuel tank. See 4.4 FUEL TANK.
2. See Figure 7-76. Disconnect front WSS connector (6).
3. Cut cable straps (5) to release front WSS cable from brake hose.
4. Remove front WSS clip (1).
5. Retract axle until WSS (3) is free. See 2.4 FRONT WHEEL.

NOTE

The WSS works with the ABS encoder bearing installed in the wheel hub. If necessary, see 2.6 SEALED WHEEL BEARINGS for removal and installation instructions.

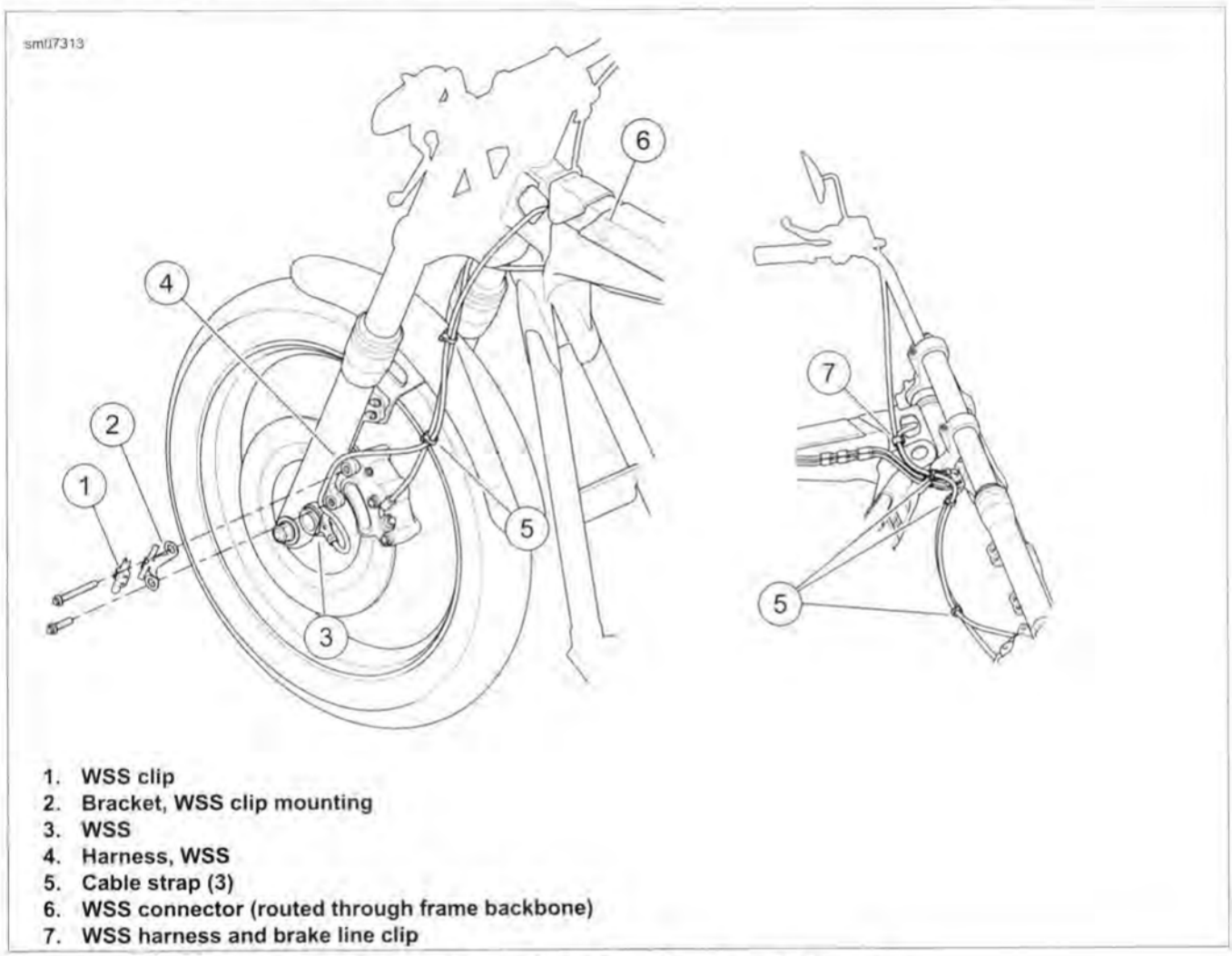

1. **WSS clip**
2. **Bracket, WSS clip mounting**
3. **WSS**
4. **Harness, WSS**
5. **Cable strap (3)**
6. **WSS connector (routed through frame backbone)**
7. **WSS harness and brake line clip**

Figure 7-76. Front Wheel Speed Sensor and Connector

Installation

NOTES

- *Keep WSS away from magnetic fields (magnetic parts trays, magnetic base dial indicators, alternator rotors and so on).*
- *Never pull WSS cable taut or use to retain wheel, axle or other components.*
- *See Figure 7-77. Install WSS with index pin on the outboard side and rotate until index pin contacts shoulder on fork slider.*

1. Push axle through **new** front WSS and left fork slider and secure. See 2.4 FRONT WHEEL.
2. See Figure 7-76. Route WSS wire and brake line through WSS harness and brake line clip (7).
3. Connect front WSS connector (6).

NOTE

See Figure 7-76. Cable straps (5) must be located at white stripe on brake line and approximately 1 in (25 mm) below connection at manifold.

4. Install three **new** cable straps (5) to secure front wheel speed sensor cable to brake hose.
5. Install WSS clip (1).
6. Install fuel tank. See 4.4 FUEL TANK.



Figure 7-77. Front Wheel Speed Sensor Index Pin (ABS Models)

REAR WHEEL SPEED SENSOR (WSS)

Removal

NOTE

The wheel speed sensor (WSS) is installed between the rear wheel hub and brake caliper bracket assembly.

1. **FLD models:** Remove right saddlebag. See 2.34 SADDLEBAGS: FLD.
2. Remove seat.
3. Remove battery and battery tray. See 1.18 BATTERY MAINTENANCE and 7.10 BATTERY TRAY AND BATTERY CABLES.
4. **Active exhaust:** Remove active exhaust cable. See 7.31 ACTIVE EXHAUST: HDI.
5. See Figure 7-78. Disconnect WSS connector (3).
6. Remove cable straps (2).
7. Remove cable strap securing WSS harness to brake line under the battery tray.
8. Remove axle to free WSS. See 2.5 REAR WHEEL.

NOTE

The WSS works with ABS encoder bearing installed in wheel hub. If necessary, see 2.6 SEALED WHEEL BEARINGS for removal and installation instructions.

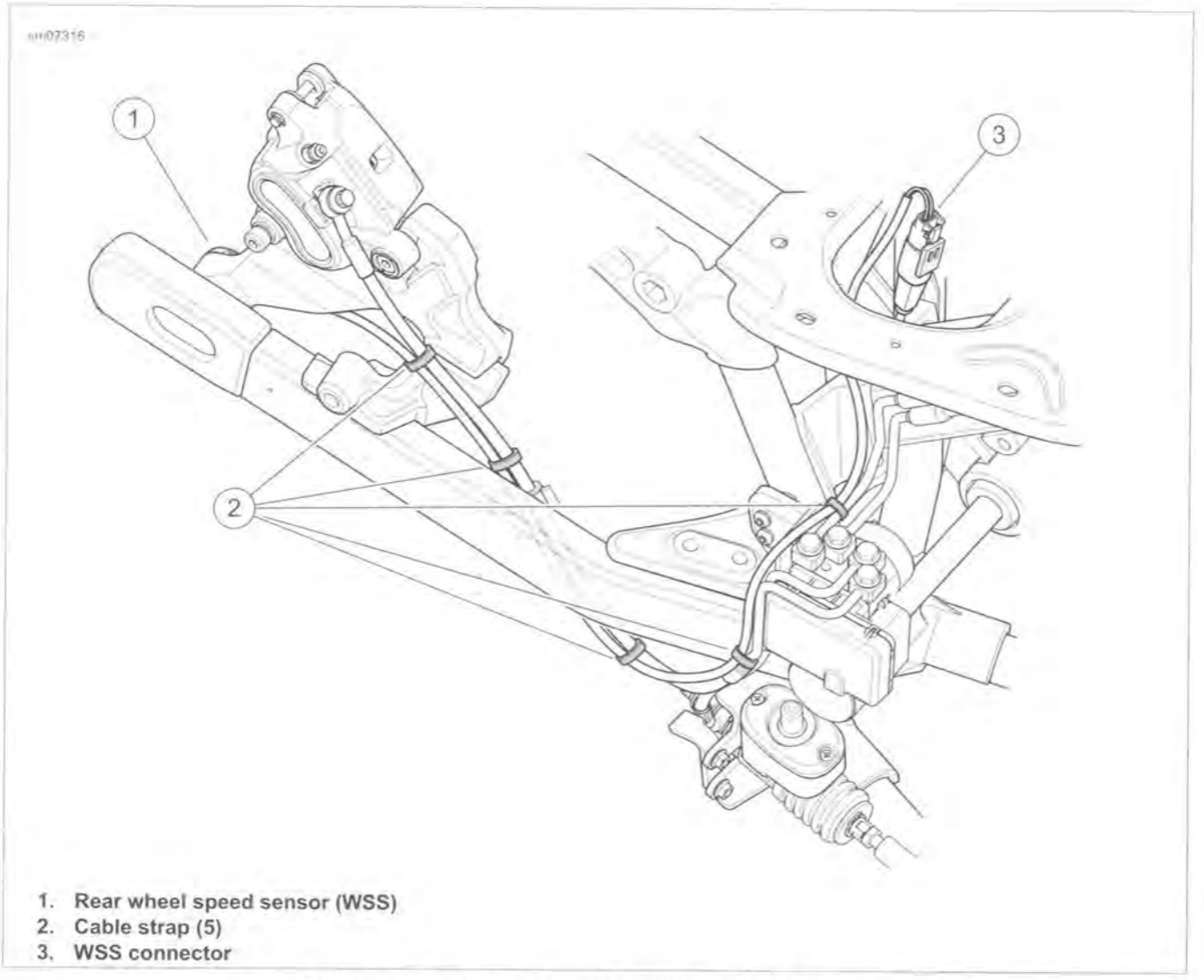

1. **Rear wheel speed sensor (WSS)**
2. **Cable strap (5)**
3. **WSS connector**

Figure 7-78. Rear Wheel Speed Sensor and Cable Routing

Installation

NOTES

- *Always keep the WSS away from magnetic fields (such as magnetic parts trays, magnetic base dial indicators and alternator rotors) or damage occurs. Never pull WSS cable taut or use to retain wheel, axle or other components.*
- *Install WSS with index pin on the outboard side to prevent sensor damage during installation.*

1. See 2.5 REAR WHEEL and Figure 7-79. Install axle with **new** rear WSS in place. Make sure that index pin is pointed outboard toward rear fork. Rotate WSS so index pin is against lower edge of rear caliper mounting bracket.
2. See Figure 7-78. Secure WSS cable to brake line at locations shown using cable straps (2).
3. Connect rear WSS connector (3).
4. Install a cable strap to secure the WSS harness to the brake line under the battery tray.
5. **Active exhaust:** Install active exhaust cable. See 7.31 ACTIVE EXHAUST: HDI.
6. Install battery tray and battery. See 7.10 BATTERY TRAY AND BATTERY CABLES and 1.18 BATTERY MAINTENANCE.

⚠WARNING

After installing seat, pull upward on seat to be sure it is locked in position. While riding, a loose seat can shift causing loss of control, which could result in death or serious injury. (00070b)

7. Install seat.
8. **FLD models:** Install right saddlebag. See 2.34 SADDLEBAGS: FLD.

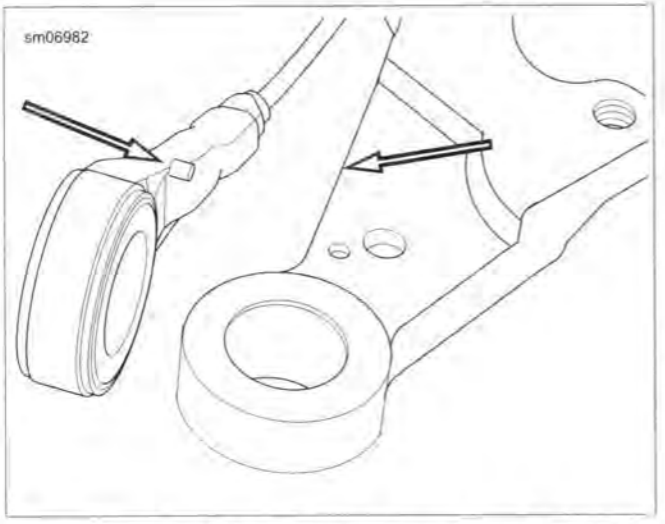

Figure 7-79. Rear Wheel Speed Sensor Index Pin (ABS Models)

REMOVAL

FLD

1. See Figure 7-80. Remove screws (2) and raise console (4) from fuel tank. Place shop rags on tank and turn console over to expose underside.
2. Squeeze clips (3) of bezel to free from tabs (6) on LED assembly with harness (5). Pry LED assembly with a screwdriver to remove.
3. Disconnect harness from speedometer, fuel tank, ignition switch and main harness. Remove harness and LED assembly.

FXDB, FXDBC, FXDBP, FXDWG and FXDF

1. See Figure 7-81. Remove console screws (4).
2. Raise console (2) from fuel tank. Place shop rags on tank and turn console over to expose underside.
3. Release clips (3) to free LED assembly with harness (5) from console.
4. Disconnect harness from speedometer, fuel tank, ignition switch and main harness. Remove harness and indicator lamp assembly.

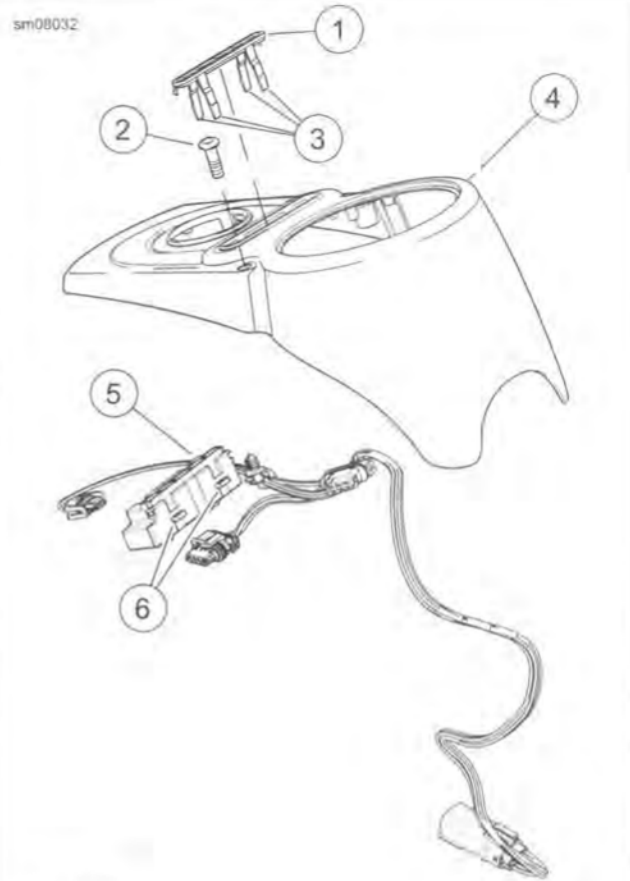

1. **Bezel**
2. **Screw (2)**
3. **Clip (4)**
4. **Console**
5. **LED assembly with harness**
6. **Tab (4)**

Figure 7-80. Indicator Lamp Assembly: FLD

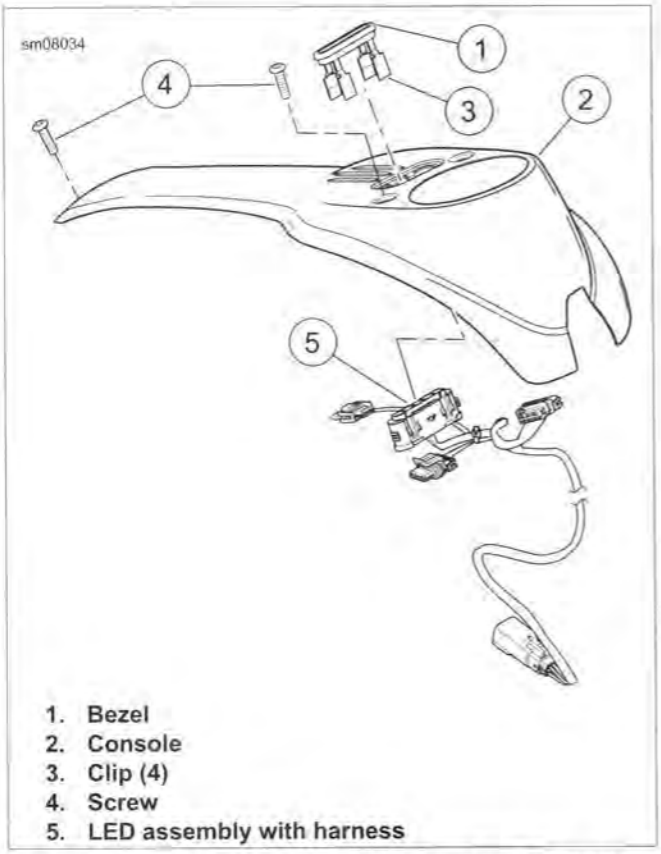

1. **Bezel**
2. **Console**
3. **Clip (4)**
4. **Screw**
5. **LED assembly with harness**

Figure 7-81. Indicator Lamp Assembly: FXDB, FXDBC, FXDBP, FXDWG and FXDF (typical)

Table 7-11. LED Assembly Wiring

INDICATOR LAMP	CONNECTION
Oil pressure	Ground through switch
Neutral	Ground through switch
High beam	12V when active
Right/left turn	12V when active

INSTALLATION

FASTENER	TORQUE VALUE	
Console mounting screws: FLD	41-49 **in-lbs**	4.6-5.5 Nm
Console mounting screws: FXDB, FXDBC, FXDBP, FXDWG and FXDF	41-49 **in-lbs**	4.6-5.5 Nm

FLD

1. See Figure 7-80. Install LED assembly into console. Make sure clips (3) engage to secure assembly in place.
2. Connect [20] to main wiring harness.
3. Install speedometer, fuel tank and ignition switch harness.
4. Secure console (4) in position with screws (2). Tighten to 41-49 **in-lbs** (4.6-5.5 Nm).

FXDB, FXDBC, FXDBP, FXDWG and FXDF

1. See Figure 7-81. Install LED assembly with harness (5) into console (2).
2. Engage clips (3) into tabs on LED assembly.
3. Install speedometer, fuel tank and ignition switch harness.
4. Connect [20] to main wiring harness.
5. Secure console (2) in position with screws (4). Tighten to 41-49 **in-lbs** (4.6-5.5 Nm).

GENERAL

The neutral switch is located on the transmission case. The two terminal switch is normally closed. When the transmission shifter is in neutral and the ignition switch is in the IGNITION position, the switch causes the NEUTRAL indicator light to illuminate.

REMOVAL

1. Place transmission in NEUTRAL.
2. See Figure 7-82. Remove two elbow connectors from neutral switch posts.
3. Remove neutral switch from transmission case.

INSTALLATION

FASTENER	TORQUE VALUE	
Neutral switch	120-180 **in-lbs**	13.6-20.3 Nm

1. See Figure 7-83. Inspect O-ring for damage. Replace as necessary. Lightly lubricate **new** O-ring with clean transmission oil before installation.
2. Verify that transmission is in NEUTRAL.
3. Install neutral switch in transmission case. Tighten to 120-180 **in-lbs** (13.6-20.3 Nm).

NOTE

The neutral switch is not polarity sensitive. Install connectors on either post.

4. Install both connectors onto neutral switch posts.
5. Verify proper operation of neutral switch.
   a. Turn ignition/light key switch to IGNITION.
   b. Verify that neutral indicator light illuminates.

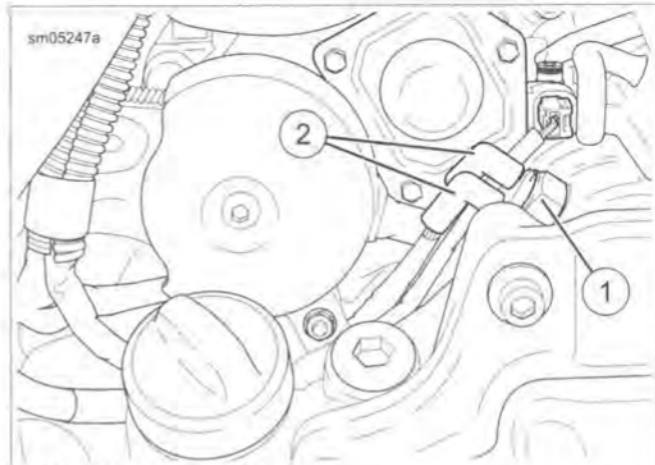

1. **Neutral switch**
2. **Elbow connector (2)**

Figure 7-82. Neutral Switch



Figure 7-83. Neutral Switch O-Ring

GENERAL

The oil pressure switch monitors oil pressure in the crankcase. If the oil pressure drops below 3 psi (20.6 kPa) the oil pressure switch is tripped and illuminates the low oil pressure indicator light.

See Figure 7-84. The oil pressure switch is located on the right side of the crankcase.

REMOVAL

1. See Figure 7-84. Remove connector (2) from oil pressure switch (1).
2. Remove oil pressure switch from crankcase.

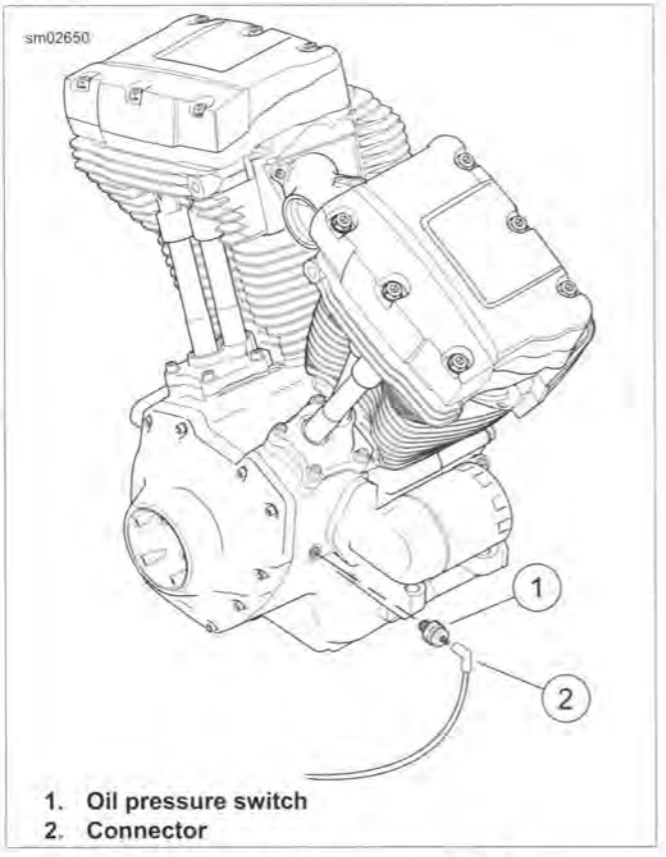

1. **Oil pressure switch**
2. **Connector**

Figure 7-84. Oil Pressure Switch

INSTALLATION

FASTENER	TORQUE VALUE	
Oil pressure switch	96-144 **in-lbs**	10.8-16.3 Nm

1. Coat threads of oil pressure switch with LOCTITE 565 THREAD SEALANT.
2. See Figure 7-84. Install oil pressure switch (1) to crankcase. Tighten to 96-144 **in-lbs** (10.8-16.3 Nm).
3. Attach connector (2) to oil pressure switch.
4. Test oil pressure switch for proper operation.

NOTE

If connector (2) requires replacement, see the electrical diagnostic manual.

GENERAL

See Figure 7-85. The rear stop lamp switch (1) monitors brake fluid pressure in the rear brake line. When pressure in the line reaches a preset level, the rear stop lamp switch is tripped and illuminates the tail light/stop lamp.

REMOVAL

NOTICE

D.O.T. 4 brake fluid will damage painted and body panel surfaces it comes in contact with. Always use caution and protect surfaces from spills whenever brake work is performed. Failure to comply can result in cosmetic damage. (00239b)

1. See Figure 7-85. Remove both connectors (2) from rear stop lamp switch (1).
2. Place a clean container under the rear stop lamp switch and brake line to catch escaping fluid.
3. Remove rear stop lamp switch.

INSTALLATION

FASTENER	TORQUE VALUE	
Rear stop lamp switch	12-15 ft-lbs	16.3-20.3 Nm

1. Coat threads of stop lamp switch with LOCTITE 565 THREAD SEALANT. Do not allow thread sealant to contact end of switch.
2. See Figure 7-85. Install rear stop lamp switch (1). Tighten to 12-15 ft-lbs (16.3-20.3 Nm).
3. Install switch connectors (2).

⚠WARNING

After repairing the brake system, test brakes at low speed. If brakes are not operating properly, testing at high speeds can cause loss of control, which could result in death or serious injury. (00289a)

4. Bleed brake system. See 2.16 BLEEDING BRAKES.

⚠WARNING

Be sure that all lights and switches operate properly before operating motorcycle. Low visibility of rider can result in death or serious injury. (00316a)

5. Check stop lamp for proper operation.

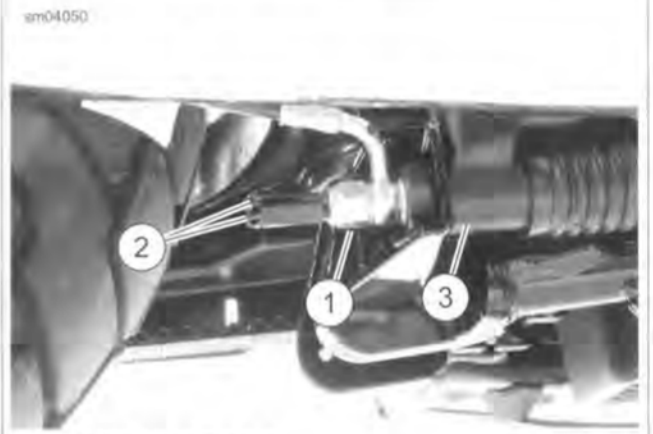

1. **Stop lamp switch**
2. **Connectors**
3. **Master cylinder**

Figure 7-85. Rear Stop Lamp Switch

INSPECTION

If the horn fails to sound or does not sound satisfactorily, check for loose, frayed or damaged wires leading to horn terminal, discharged battery or corroded ground.

The horn cannot be repaired or adjusted for tone. Only the mounting hardware is replaceable.

REPLACEMENT: ALL BUT FXDL

FASTENER	TORQUE VALUE	
Horn mounting nut	120-180 **in-lbs**	13.6-20.3 Nm

1. See Figure 7-86. Remove acorn nut (4) and washer (5) to detach horn bracket (6).
2. See Figure 7-87. Disconnect wires from posts (1, 2) on back side of horn.
3. See Figure 7-86. Remove screws (8) and nut (10) to detach horn from bracket. Remove wires from clamp (9).
4. Install **new** horn on bracket. Secure with screws (8), push nuts (3) and nut (10). Fold wires under clamp (9).
5. See Figure 7-87. Attach wiring.
   a. Connect Y/BK wire to gold post (1).
   b. Connect BK wire to silver post (2).

NOTE

When tightening fasteners, make sure that the horn does not contact the horn cover or other parts.

6. See Figure 7-86. Attach horn to vehicle using washer (5) and nut (4). Tighten to 120-180 **in-lbs** (13.6-20.3 Nm).

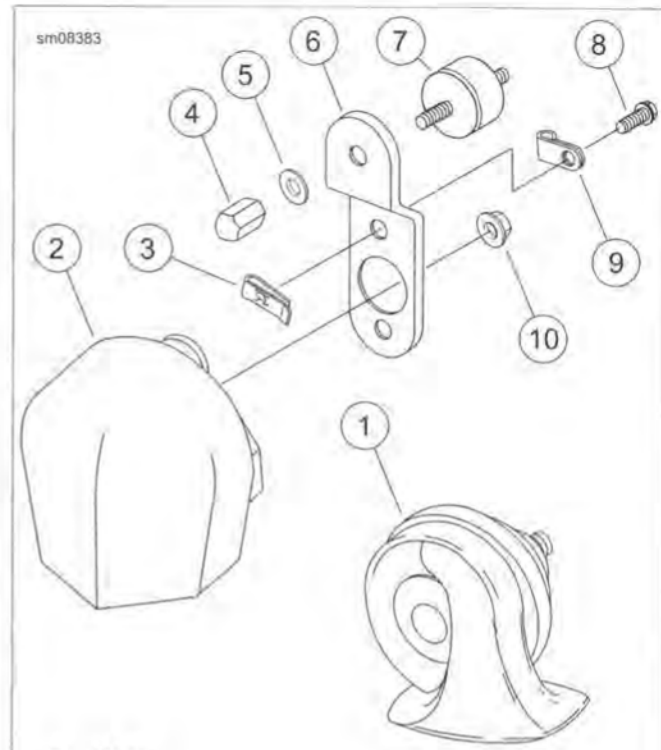

1. **Horn**
2. **Cover**
3. **Push nut (2)**
4. **Acorn nut**
5. **Washer**
6. **Bracket**
7. **Rubber mount**
8. **Screw (2)**
9. **Clamp**
10. **Nut**

Figure 7-86. Horn: All but FXDL

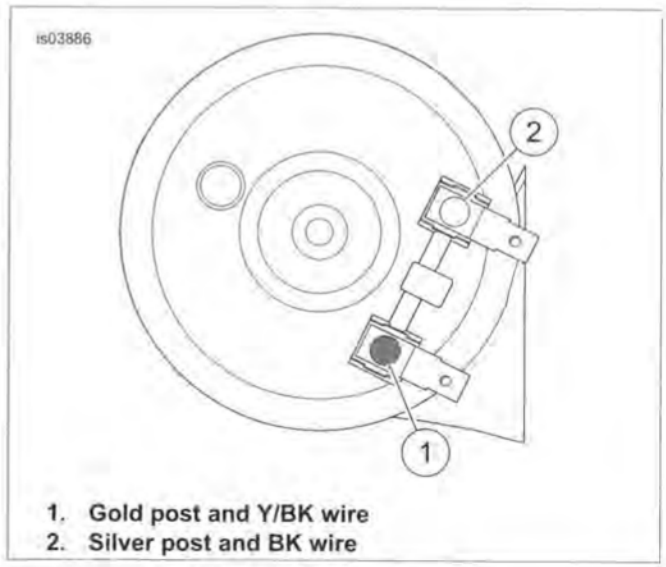

1. **Gold post and Y/BK wire**
2. **Silver post and BK wire**

Figure 7-87. Horn Wiring

REPLACEMENT: FXDL

FASTENER	TORQUE VALUE	
Horn mounting nut	80-100 **in-lbs**	9.0-11.3 Nm
Horn mount screw	13-15 ft-lbs	17.6-20.3 Nm

1. See Figure 7-88. Remove screw (5) and washer (4) to detach mount (3).
2. See Figure 7-87. Disconnect wires from posts (1, 2) on back side of horn.
3. See Figure 7-88. Remove nut (2) to detach horn from mount.
4. Install **new** horn on mount. Install nut. Tighten to 80-100 **in-lbs** (9.0-11.3 Nm)
5. See Figure 7-87. Attach wiring.
   a. Connect Y/BK wire to gold post (1).
   b. Connect BK wire to silver post (2).
6. See Figure 7-88. Attach horn mount using washer (4) and screw (5). Tighten to 13-15 ft-lbs (17.6-20.3 Nm).

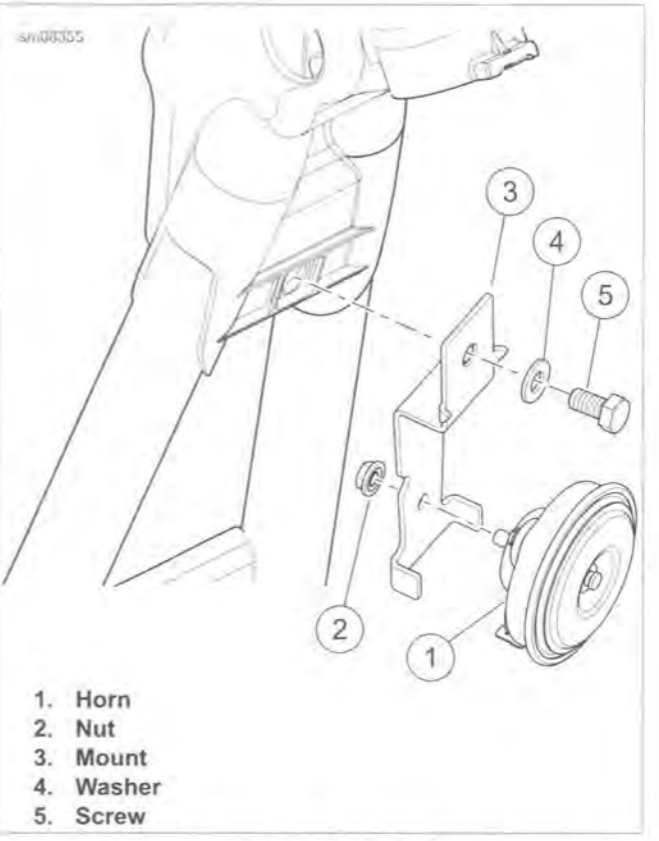

1. **Horn**
2. **Nut**
3. **Mount**
4. **Washer**
5. **Screw**

Figure 7-88. Horn: FXDL

GENERAL

The active exhaust system utilizes an actuator valve located in the rear exhaust pipe. The valve connects to a servo motor via a cable. The valve position automatically adjusts to enhance engine performance.

The active exhaust module is located in front of the battery tray. The attached cable is routed to a bellcrank on the rear exhaust pipe.

NOTE

***ABS models:** The active exhaust cable is routed on the outside of the ABS module cover.*

REMOVAL

1. See Figure 7-89. Remove active exhaust cable housing (1) from notch in shroud (2). Remove ferrule (3) from active exhaust module to remove cable (4).
2. See Figure 7-90. Remove module fasteners (4) and washers (3) from battery tray (1).
3. Remove cable (5) from cable clip (7), cable clamp (6) and exhaust valve cable retainer (8).
4. **All but FXDF and FXDWG:** Remove screw (9), washer (10) and cable clip (11) from under battery tray.
5. Detach cable from exhaust head pipe to remove cable.

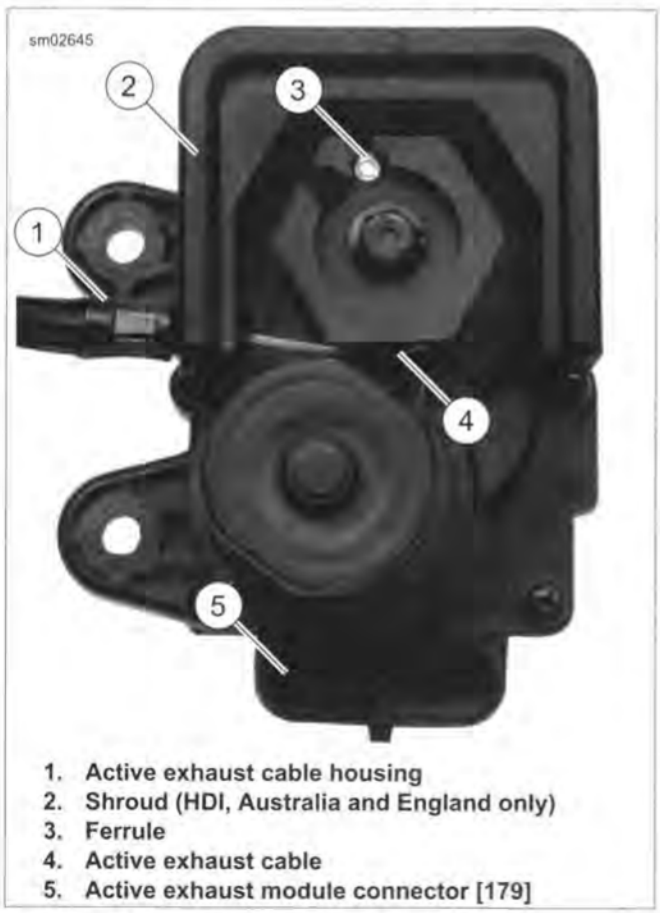

1. **Active exhaust cable housing**
2. **Shroud (HDI, Australia and England only)**
3. **Ferrule**
4. **Active exhaust cable**
5. **Active exhaust module connector [179]**

Figure 7-89. Active Exhaust Module

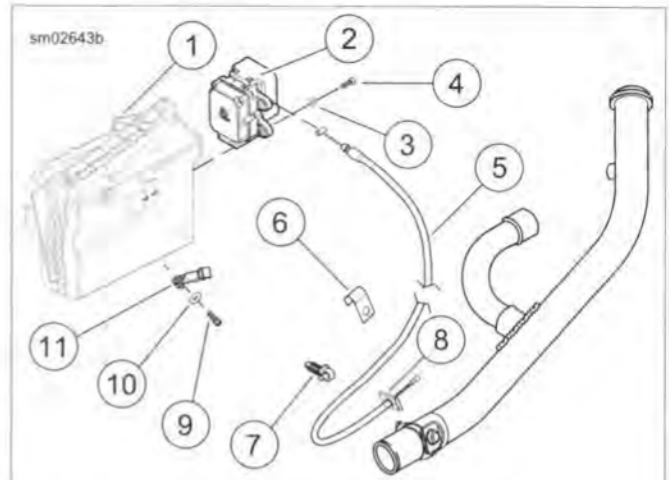

1. **Battery tray**
2. **Active exhaust module**
3. **Washer (2)**
4. **Module fastener (2)**
5. **Cable**
6. **Cable clamp**
7. **Cable clip**
8. **Exhaust valve cable retainer**
9. **Screw**
10. **Washer**
11. **Cable clip**

Figure 7-90. Active Exhaust

REPAIR

NOTE

See Figure 7-89. Shroud (2) can be replaced. Replace shroud if active exhaust cable housing (1) is a loose fit in shroud.

1. Remove fasteners securing shroud (2).
2. Replace shroud. Replace fasteners and tighten securely.

INSTALLATION

FASTENER	TORQUE VALUE	
Active exhaust module fasteners	36-60 **in-lbs**	4.0-6.8 Nm
Active exhaust cable clip screw	24-48 **in-lbs**	2.7-5.4 Nm

NOTE

Verify that active exhaust cable to does not contact rear exhaust pipe or any other part of the vehicle after installation.

1. See Figure 7-89. Install ferrule (3) into slot shown. Wrap cable counterclockwise around active exhaust module shroud as shown.
2. Clip cable housing into shroud (2).
3. Place active exhaust module into position in front of battery tray.
4. See Figure 7-90. Install module fasteners (4) and washers (3). Tighten to 36-60 **in-lbs** (4.0-6.8 Nm).

5. **All but FXDF and FXDWG:** Mount cable clip (11) with screw (9) and washer (10) to underside of battery tray. Tighten to 24-48 **in-lbs** (2.7-5.4 Nm).

6. See Figure 7-91. After installation, make sure that active exhaust cable is routed correctly. Cable must not contact the exhaust pipe, battery cover or transmission case.

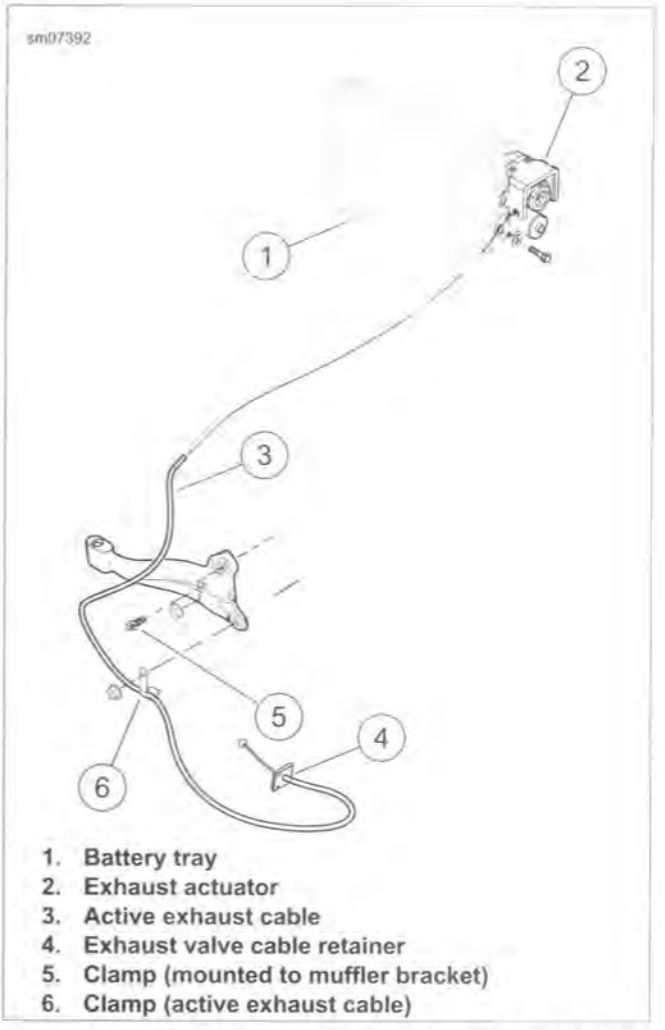

1. **Battery tray**
2. **Exhaust actuator**
3. **Active exhaust cable**
4. **Exhaust valve cable retainer**
5. **Clamp (mounted to muffler bracket)**
6. **Clamp (active exhaust cable)**

Figure 7-91. Active Exhaust Cable Retention: All HDI Models with Dual Exhaust Only

GENERAL

The main wiring harness is routed through the frame backbone. It has enough slack designed into it so that it can be pulled out of the front end of the backbone to access the connectors located inside the frame.

NOTE

See A.1 CONNECTORS, Connector Locations for a description of all connector locations.

REMOVAL

1. Remove seat.
2. **FLD models:** Remove saddlebags. See 2.34 SADDLEBAGS: FLD.

NOTES

- *Record wire routing and cable strap locations before removal.*
- *Main wire harness is removed from rear of vehicle through rear section of frame.*

3. **Security system:** Disarm system before removal of BCM and main harness.
4. **ABS models:** Loosen but do not remove fasteners attaching ABS module bracket to frame.

⚠WARNING

Disconnect negative (-) battery cable first. If positive (+) cable should contact ground with negative (-) cable connected, the resulting sparks can cause a battery explosion, which could result in death or serious injury. (00049a)

5. Disconnect both battery cables, negative battery cable first.
6. Remove battery.
7. Remove battery tray. See 7.10 BATTERY TRAY AND BATTERY CABLES.
8. Remove instrument console.
   a. **FXDF and FLD models:** See 7.21 INSTRUMENTS: FXDF AND FLD. On some models, removal includes removing the trim strip.
   b. **FXDB and FXDWG models:** See 7.22 INSTRUMENTS: FXDB, FXDBC, FXDBP AND FXDWG.
   c. **FXDL models:** See 7.23 INSTRUMENTS: FXDL.
   d. Disconnect [20] when removing instrument console.
9. See Figure 7-92. Disconnect fuel pump connector [141].
10. Remove fuel tank and detach fuel gauge connector [117]. See 4.4 FUEL TANK.
11. Remove muffler. See 4.15 EXHAUST SYSTEM.
12. Remove rear brake master cylinder. See 2.12 REAR BRAKE MASTER CYLINDER.
13. **HDI vehicles with dual exhaust:** Remove active exhaust module connector [179] on front of electrical caddy.

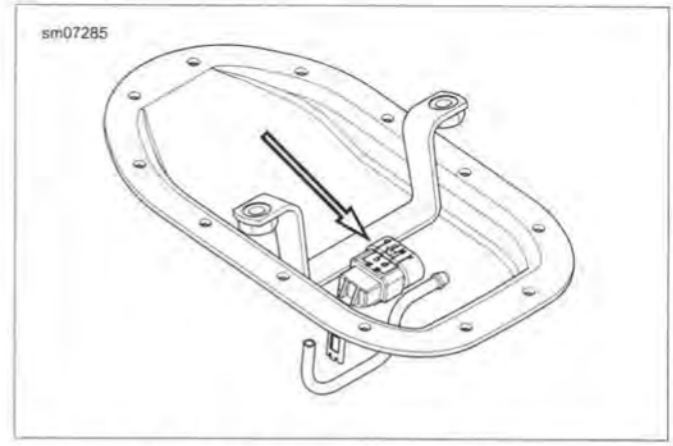

Figure 7-92. Fuel Pump Connector [141] (Typical)



Figure 7-93. Harness Shield

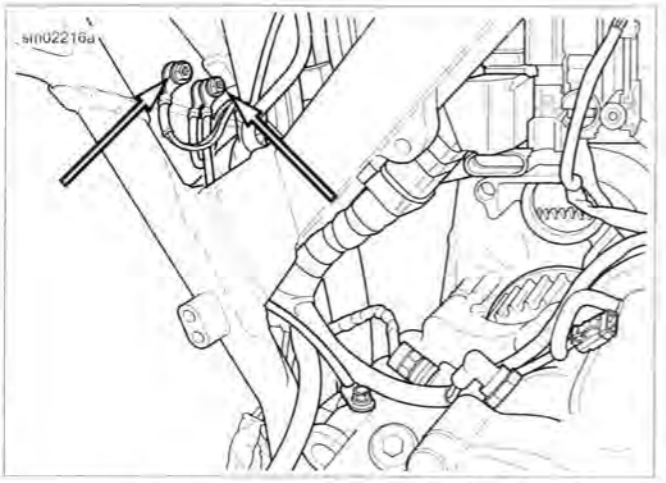

Figure 7-94. Vehicle Ground Studs

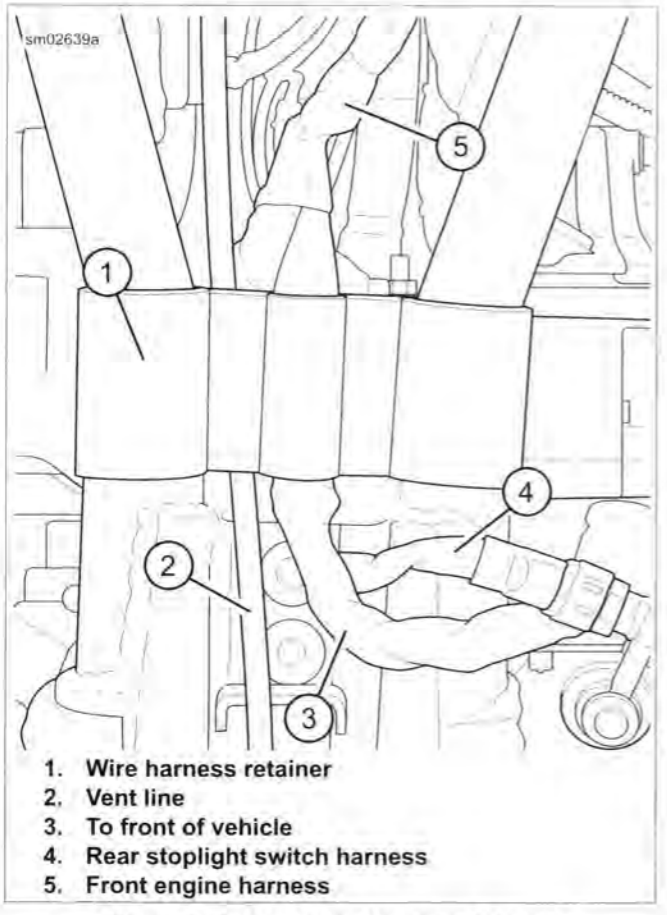

1. **Wire harness retainer**
2. **Vent line**
3. **To front of vehicle**
4. **Rear stoplight switch harness**
5. **Front engine harness**

Figure 7-95. Main Wire Harness Retainer

14. See Figure 7-93. Remove harness shield by pushing both tabs of shield in at the same time.
15. Pull harness connectors from inside frame.
16. Disconnect the following connectors:
    a. Right handlebar controls [22-1, 22-2]
    b. Left handlebar controls [24]
    c. Turn signals [31]
    d. Headlamp [38]
    e. Ignition switch [33]
    f. **ABS models:** Front wheel speed sensor [167]

NOTE

In next step, note location of ground wires before removal to verify proper installation.

17. See Figure 7-94. Remove ground wires from studs on frame.
18. Disconnect connectors located under seat:
    a. Accessory connector [4]
    b. Tail lamp harness connector [7]
    c. Rear oxygen sensor [137]
    d. **Security system:** Security siren connector [142]
    e. B+ connector [160]
    f. Jiffy stand sensor [133]
    g. **ABS models:** Rear wheel speed sensor [168]
    h. **ABS models:** ABS EHCU [166], electro hydraulic control unit
19. Disconnect starter solenoid [128].
20. Disconnect neutral switch.
21. Remove rear stop lamp switch terminals [121]. See 7.29 REAR STOPLAMP SWITCH.
22. Remove starter post nut, main wiring harness ring terminal and positive battery cable from starter post.
23. Remove rear fender. See 2.29 REAR FENDER.

NOTE

In order to access wire harness retainer, remove the lower shock bolts and lower rear fork.

24. See Figure 7-95. Slide wire harness retainer up frame tubes. Remove harness retainer from frame and harness.
25. Remove the following connectors located in fuel tank area:
    a. MAP sensor connector [80]
    b. Horn wires [122]
    c. IAT sensor connector [89]
    d. ET sensor connector [90]
    e. IAC connector [87]
    f. TP sensor connector [88]
    g. Front [84] and rear [85] fuel injector connectors
    h. ACR [203F & R], if equipped
    i. Intake solenoid connector [178] from air cleaner backplate

NOTES

- *Remove harness anchors from harness trough and frame.*
- *Do not reuse harness anchors.*

26. Disconnect:
    a. Voltage regulator [77]
    b. Crankshaft position sensor [79]
    c. Front oxygen sensor [138]
    d. Oil pressure switch [120]
27. Remove electrical caddy and ignition coil. See 7.3 ELECTRICAL CADDY.
28. Remove starter. See 7.11 STARTER

NOTE

The upper portion of the wiring harness is now free. Note routing before pulling harness out of position.

29. Attach a long thin wire to the top end of the wiring harness before pulling harness through frame backbone. This guide wire aids in pulling the **new** harness back through the backbone.
30. Gently pull wiring harness out of rear of frame tube.

INSTALLATION

FASTENER	TORQUE VALUE	
ABS module bracket	90-114 **in-lbs**	10.2-12.8 Nm

NOTES

- *Make sure to replace all cable straps and anchors.*
- *Do not remove factory installed wire harness tape securing connectors to harness unless necessary.*
- *Before installing starter, route all necessary cables and harnesses along top of crankcase.*

1. Guide wiring harness back into frame backbone. Pull the front of the harness through using the guide wire while pushing the harness through the frame tube opening.
2. Connect the following connectors:
    a. Right handlebar controls [22-1, 22-2]
    b. Left handlebar controls [24]
    c. Turn signals [31]
    d. Headlamp [38]
    e. Instruments [20]
    f. Ignition switch [33]
    g. **ABS models:** Front wheel speed sensor [167]

NOTE

Make sure to leave enough slack in harness at front of vehicle so when front wheel is turned, harness does not bind.

3. See Figure 7-96. Install connectors into frame. Install harness shield.
4. **ABS models:** Connect ABS components.
    a. ABS EHCU, electro hydraulic control module [166]
    b. Rear wheel speed sensor [168]
5. To ease installation, wrap voltage regulator terminals with electrical tape.
6. See Figure 7-95. Route engine harness (which contains voltage regulator connector [77], crankshaft position sensor connector [79], stator connector [46] and front oxygen sensor [138] wiring to front of vehicle. Install the oxygen sensor and crankshaft position sensor connectors in front electrical caddy, see 7.15 CRANK POSITION SENSOR (CKP). Connect the engine harness and stator connectors to the voltage regulator.
7. Install starter. See 7.11 STARTER.
8. Install starter post nut, positive battery cable and main wiring harness ring terminal to starter post.
9. Route rear brake switch wiring and connect to rear brake switch [121].
10. Route neutral switch wiring and connect to neutral switch [131].
11. Route starter solenoid wiring and connect to starter solenoid [128].
12. Install rear brake master cylinder and rear brake control. See 2.12 REAR BRAKE MASTER CYLINDER.
13. Secure front engine harness with harness clamps.
14. See Figure 7-97. Install wire harness retainer (1).



Figure 7-96. Harness Shield

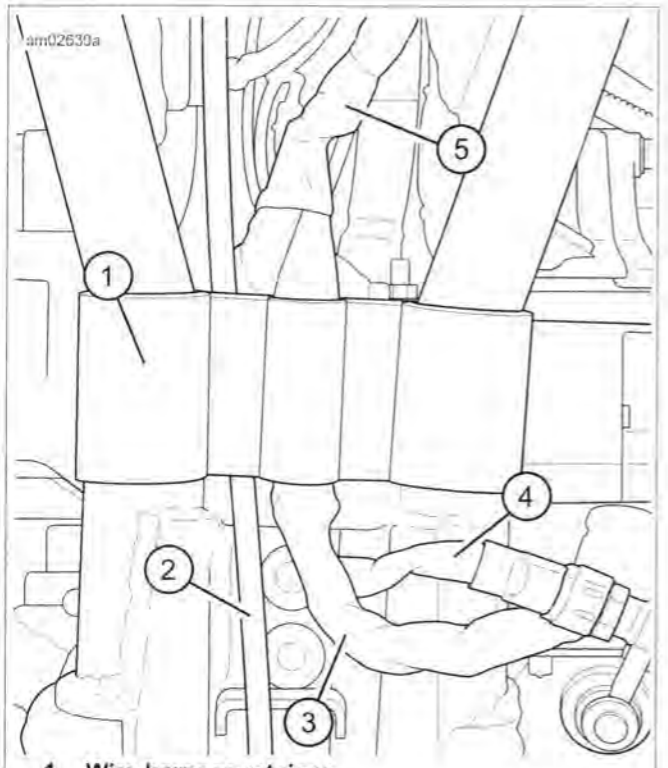

1. **Wire harness retainer**
2. **Vent line**
3. **To front of vehicle**
4. **Rear stoplight switch harness**
5. **Front engine harness**

Figure 7-97. Main Wire Harness Retainer

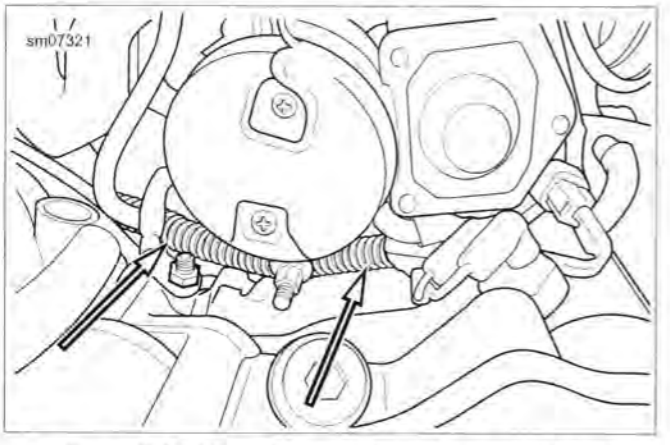

Figure 7-98. Wire Harness Routed Under Starter

NOTES

- *See Figure 7-95. To prevent contact with rear fork, front engine harness (5) and rear brake switch wiring must be secured in wire harness retainer (1).*
- *If equipped with jiffy stand sensor (HDI models only), route the sensor harness up along the vent line (2). Secure in the same retainer cavity as the vent line.*

15. Install rear stop lamp switch terminals. See 7.29 REAR STOPLAMP SWITCH.
16. Connect oil pressure switch [120].
17. See Figure 7-99. Connect vehicle speed sensor connector [65].
18. See Figure 7-100. Secure harness grounds to studs.
19. Route top engine harness to fuel tank area.
20. Connect:
    a. MAP sensor connector [80]
    b. Horn wires [122]
    c. IAT sensor connector [89]
    d. ET sensor connector [90]
    e. IAC connector [87]
    f. TP sensor connector [88]
    g. Front [84] and rear [85] fuel injector connectors
    h. ACR [203F&R], if equipped
    i. Intake solenoid connector [178] from air cleaner backplate
21. See Figure 7-101. Install wire harness retainer on frame tubes. Install harness retainer onto harness.
22. Install rear fender. See 2.29 REAR FENDER.
23. Install lower shock bolts through shocks and into rear fork.
24. Install electrical caddy, wiring and coil. See 7.3 ELECTRICAL CADDY.
25. See Figure 7-102. Mate connectors located under seat:
    a. Accessory connector [4], if used
    b. Tail lamp harness connector [7]
    c. Rear oxygen sensor [137]
    d. Security siren connector [142] if security siren installed
    e. B+ connector [160]
26. HDI models: Install active exhaust module connector [179] located in front of electrical caddy.
27. Install fuel tank. See 4.4 FUEL TANK. Connect fuel gauge connector [117].
28. See Figure 7-95. Connect fuel pump/sender connector [141].
29. For all models when installing instrument console connect [20].
30. Install instrument console.
    a. **FXDF and FLD models:** See 7.21 INSTRUMENTS: FXDF AND FLD.
    b. **FLD models:** Install trim strip and instrument console and disconnect [20].
    c. **FXDB, FXDBC, FXDBP and FXDWG models:** See 7.22 INSTRUMENTS: FXDB, FXDBC, FXDBP AND FXDWG.
    d. **FXDL models:** See 7.23 INSTRUMENTS: FXDL.
31. Install muffler. See 4.15 EXHAUST SYSTEM.

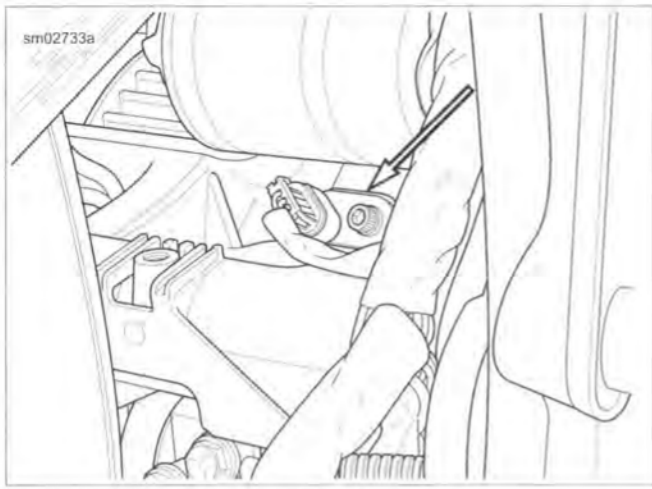

Figure 7-99. Vehicle Speed Sensor

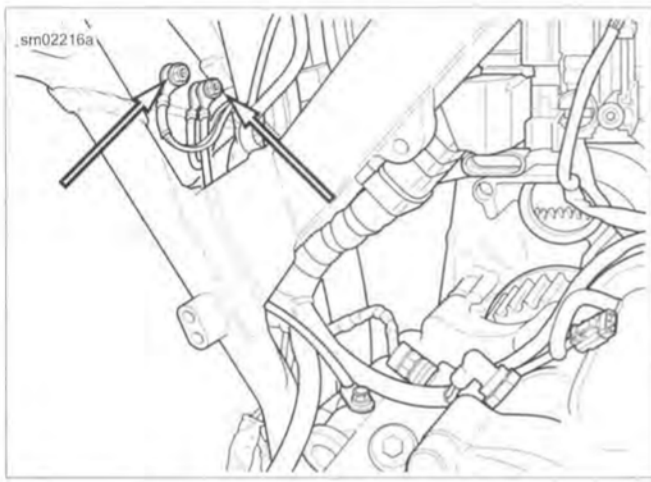

Figure 7-100. Vehicle Ground Studs

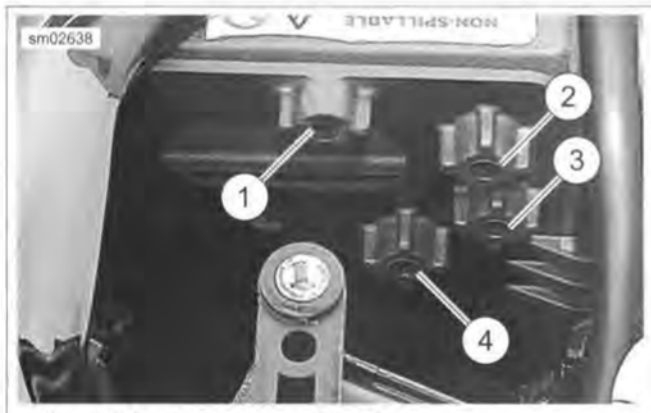

1. Tail lamp connector location
2. B+ connector location
3. Accessory connector location
4. Unused

Figure 7-101. Under Seat Connector Mounting Locations

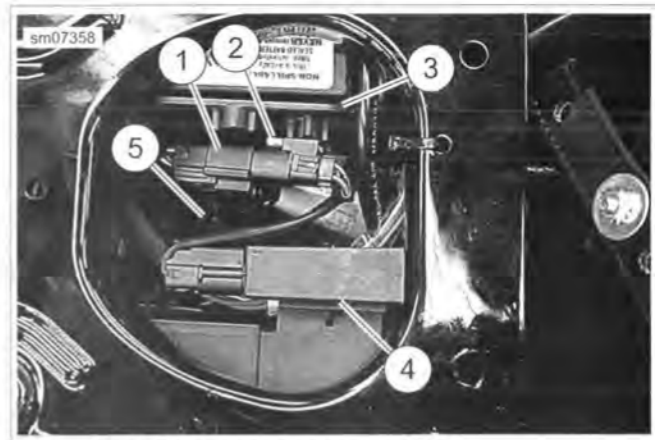

1. Rear O2 sensor connector [137]
2. Connector anchor
3. Battery tray
4. Security antenna
5. Tail lamp connector [7]

Figure 7-102. Rear O2 Sensor Connector Location

⚠WARNING

Connect positive (+) battery cable first. If positive (+) cable should contact ground with negative (-) cable connected, the resulting sparks can cause a battery explosion, which could result in death or serious injury. (00068a)

32. **ABS models:** Install the ABS module cover.
33. Install BCM and connect to main harness.
34. Install cable straps and anchors in correct locations after installing main wire harness.
35. Pull harness connectors inside of frame backbone. Install shield.

⚠WARNING

When any hydraulic brake component, line or connection is loosened or replaced on an ABS motorcycle, Digital Technician II must be used during the brake bleeding procedure to verify all air is removed from the system. Failure to properly bleed the brake system could adversely affect braking, which could result in death or serious injury. (00585c)

36. **ABS models:** Tighten fasteners attaching ABS module bracket to frame. Tighten to 90-114 **in-lbs** (10.2-12.8 Nm).
37. Install battery tray. See 7.10 BATTERY TRAY AND BATTERY CABLES.
38. Install battery.
39. Connect both battery cables, positive battery cable first.
40. Arm security, if equipped.
41. **FLD models:** Install saddlebags. See 2.34 SADDLEBAGS: FLD.

⚠WARNING

After installing seat, pull upward on seat to be sure it is locked in position. While riding, a loose seat can shift causing loss of control, which could result in death or serious injury. (00070b)

42. Install seat.

⚠WARNING

Be sure that all lights and switches operate properly before operating motorcycle. Low visibility of rider can result in death or serious injury. (00316a)

43. Turn ignition switch ON. Test all electrical components for correct operation.

GENERAL

The left hand control module includes headlamp HI - LO, horn, trip and left turn signal functions. The right hand control module includes engine start, RUN - OFF, right turn signal and flasher functions. The left and right hand control modules are non-repairable.

NOTES

- *On certain models, the turn signal wiring is hard wired to the hand control modules.*
- *To replace the right or left hand control modules, see 7.35 RIGHT HANDLEBAR CONTROL MODULE or 7.34 LEFT HANDLEBAR CONTROL MODULE.*

REPAIR PROCEDURES

PART NUMBER	TOOL NAME
HD-25070	ROBINAIR HEAT GUN
HD-39969	ULTRATORCH
HD-41183	HEAT SHIELD ATTACHMENT

1. Push conduit back to better access wires and avoid damaging conduit with radiant heating device. Secure conduit with cable strap.
2. Strip 0.5 in (12.7 mm) of insulation off switch wires. Twist stripped ends of switch wires until all strands are tightly coiled.
3. Cut dual wall heat shrink tubing, supplied in repair kit into 1.0 in (25.4 mm) segments. Slide tubing over each wire of **new** switch assembly.
4. Splice existing and **new** switch wires, matching wire colors. Solder the spliced connections. For best results, splice one wire at a time.
5. Center the heat shrink tubing over the soldered splices.

⚠WARNING

Be sure to follow manufacturer's instructions when using the UltraTorch UT-100 or any other radiant heating device. Failure to follow manufacturer's instructions can cause a fire, which could result in death or serious injury. (00335a)

- Avoid directing heat toward any fuel system component. Extreme heat can cause fuel ignition/explosion resulting in death or serious injury.
- Avoid directing heat toward any electrical system component other than the connectors on which heat shrink work is being performed.
- Always keep hands away from tool tip area and heat shrink attachment.

6. See Figure 7-103. Use ULTRATORCH (Part No. HD-39969) or ROBINAIR HEAT GUN (Part No. HD-25070) with HEAT SHIELD ATTACHMENT (Part No. HD-41183) or equivalent. Uniformly heat the heat shrink tubing to insulate and seal the soldered connections. Apply heat just until the meltable sealant exudes out both ends of tubing and assumes a smooth cylindrical appearance.
7. Inspect solder connection.
   a. Inspect the melted sealant for solder beads.
   b. Excess solder or heat can force out some solder with the melted sealant.
   c. Remove any solder found.
   d. Briefly heat the connection to reseal the tubing if solder beads were removed.
   e. Use less solder or reduce heating time or intensity when doing subsequent splices.

⚠WARNING

Be sure that all lights and switches operate properly before operating motorcycle. Low visibility of rider can result in death or serious injury. (00316a)



1. **Ultra Torch UT-100**
2. **Robinair Heat Gun**
3. **Heat Shield Attachment**

Figure 7-103. Radiant Heating Devices

REMOVAL

⚠WARNING

To prevent accidental vehicle start-up, which could cause death or serious injury, remove main fuse before proceeding. (00251b)

1. Remove main fuse.
2. Remove rubber grommets on each side of the frame.
3. Disconnect left hand control connector (8).
4. Loosen the upper handlebar clamp-to-clutch lever screws.
5. Remove the upper and lower module housing screws. Remove upper switch housing.
6. See Figure 7-104. Remove screws (3) and retainer (1).
7. Carefully remove clutch switch (2) and left hand control module from lower housing.

NOTE

Record wire routing along with clamp and cable strap locations before removal.

8. Remove left hand control module.

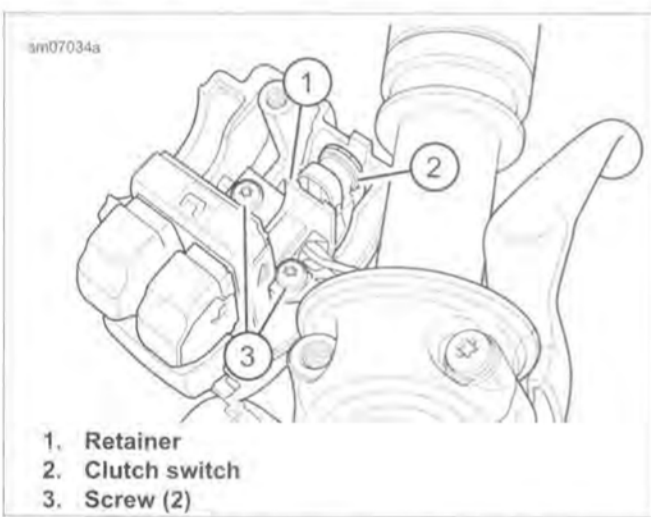

1. **Retainer**
2. **Clutch switch**
3. **Screw (2)**

Figure 7-104. Left Handlebar Control Module and Clutch Switch Retainer

CLUTCH SWITCH REPLACEMENT

FASTENER	TORQUE VALUE	
Handlebar switch assembly retainer screws	8-10 **in-lbs**	0.9-1.1 Nm

1. Remove upper switch housing cover. See 7.34 LEFT HANDLEBAR CONTROL MODULE, Removal.
2. See Figure 7-104. From inside the switch housing, remove screws (3) and retainer (1). Remove clutch switch (2) from housing.
3. Cut wires flush at inoperative clutch switch.
4. If **new** clutch switch wires have terminals installed, cut wires at terminal end.
5. Remove 0.25-0.3125 in (6.4-7.9 mm) of insulation from each wire end.
6. Cut two pieces of dual wall heat shrink tubing to 0.5 in (12.7 mm).
7. Solder wires together and cover with heat shrink tubing. See 7.33 HANDLEBAR CONTROL MODULES, Repair Procedures.
8. See Figure 7-104. Install clutch switch (2) into housing. Install retainer (1) and screws (3). Tighten screws to 8-10 **in-lbs** (0.9-1.1 Nm).
9. Assemble left handlebar switch housing. See 7.34 LEFT HANDLEBAR CONTROL MODULE, Installation.

INSTALLATION

FASTENER	TORQUE VALUE	
Handlebar module assembly retainer screws	8-10 **in-lbs**	0.9-1.1 Nm
Handlebar clutch lever clamp screws	60-80 **in-lbs**	6.8-9.0 Nm
Hand control module housing screws	35-45 **in-lbs**	4.0-5.1 Nm

NOTE

When installing the left hand control module and retainer, do not pinch wires. Verify that the rubber grommet on the wire harness is properly placed on the housing.

1. See Figure 7-104. Place hand control module into position on lower housing. Install clutch switch (2).

NOTES

- ***FXDWG models:*** *See Figure 7-106. When installing left hand control module, make sure the clamping surface (1) stays within the range marks (2) or damage to the wires occurs.*
- ***FXDF and FXDL models:*** *Use care as rotation of the controls too far can cause harness damage.*

2. See Figure 7-104. Install retainer (1) with screws (3). Tighten to 8-10 **in-lbs** (0.9-1.1 Nm).
3. Position the upper module housing over the handlebar and lower module housing.
4. Start the upper and lower module housing screws, but do not tighten.
5. See Figure 7-105. Position the clutch hand lever assembly inboard of the module housing assembly, engaging the tab (3) on the lower module housing in the groove (2) at the bottom of the clutch lever bracket.
6. Align the holes in the handlebar clutch lever clamp with the holes in the clutch lever bracket. Start the two screws (with flat washers). Position for rider comfort. Beginning with the top screw, tighten to 60-80 **in-lbs** (6.8-9.0 Nm).

NOTE

Always tighten lower switch housing screw first, so that any gap between upper and lower housings is at front of switch.

7. Tighten module housing screws to 35-45 **in-lbs** (4.0-5.1 Nm).
8. Connect left-hand control connector.
9. Secure harness with clamps and cable strap as noted during removal.
10. Install main fuse. See 7.8 FUSES.

⚠WARNING

Be sure that all lights and switches operate properly before operating motorcycle. Low visibility of rider can result in death or serious injury. (00316a)

11. Test the switches for proper operation.

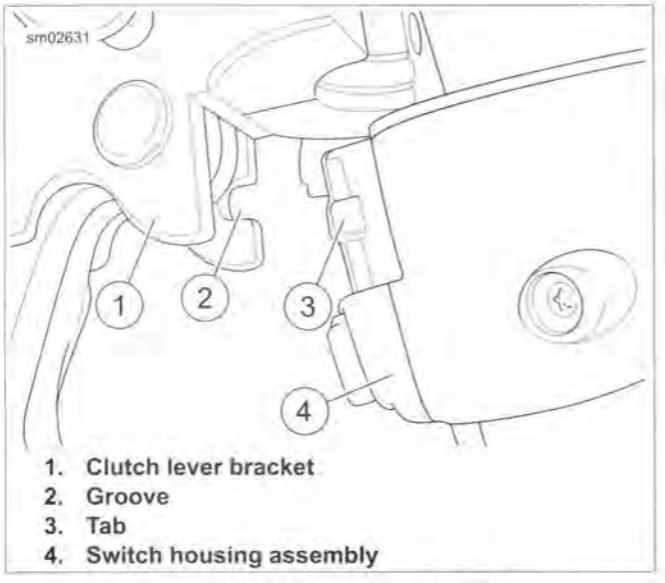

1. **Clutch lever bracket**
2. **Groove**
3. **Tab**
4. **Switch housing assembly**

Figure 7-105. Clutch Lever Bracket



1. **Clamping surface**
2. **Range marks**

Figure 7-106. Left Hand Control Assembly to Handlebar Alignment: FXDWG Models

REMOVAL

⚠WARNING

To prevent accidental vehicle start-up, which could cause death or serious injury, remove main fuse before proceeding. (00251b)

1. Remove main fuse.
2. See 7.32 MAIN WIRING HARNESS. Remove rubber grommets on each side of the frame and disconnect right hand control connectors.
3. Loosen the upper handlebar clamp to master cylinder housing screw. Remove the lower handlebar clamp to master cylinder housing screw.
4. Remove upper and lower switch housing screws.

NOTE

The friction shoe is a loose fit. It may fall out or become dislodged if the lower switch housing is turned upside down or shaken.

5. Remove the friction shoe from the end of the tension adjuster screw.
6. Loosen cable adjusters. See 1.12 THROTTLE CABLES.
7. See Figure 7-107. Remove the brass ferrules (4) from the notches on the inboard side of the throttle control grip. Remove the ferrules from the cable end fittings.
8. Remove the throttle control grip from the end of the handlebar.
9. See Figure 7-108. If replacing lower switch housing,
   a. Pull the crimped inserts at the end of the throttle and idle control cable housings from the lower switch housing.
   b. For best results, use a rocking motion while pulling.
   c. Place a drop of light oil on the retaining rings, if necessary.
   d. Remove the cables from the switch housing.
10. See Figure 7-109. Remove screws (3) and retainer (1).

NOTE

Record wire routing before removal.

11. Carefully remove brake switch (2) and right hand control module from lower housing. Remove right hand control module.

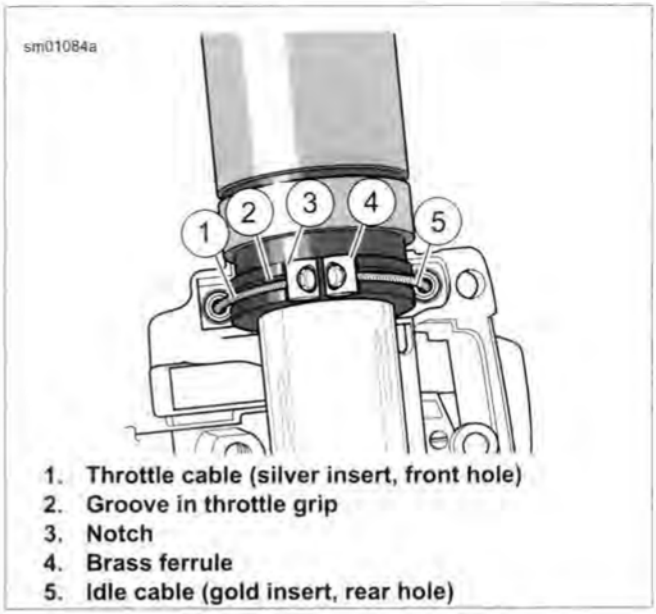

1. **Throttle cable (silver insert, front hole)**
2. **Groove in throttle grip**
3. **Notch**
4. **Brass ferrule**
5. **Idle cable (gold insert, rear hole)**

Figure 7-107. Throttle Cable Attachment

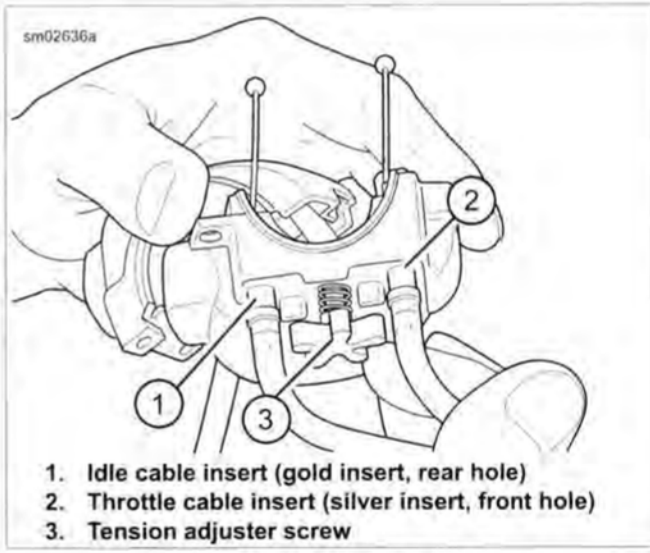

1. **Idle cable insert (gold insert, rear hole)**
2. **Throttle cable insert (silver insert, front hole)**
3. **Tension adjuster screw**

Figure 7-108. Right Lower Module Housing

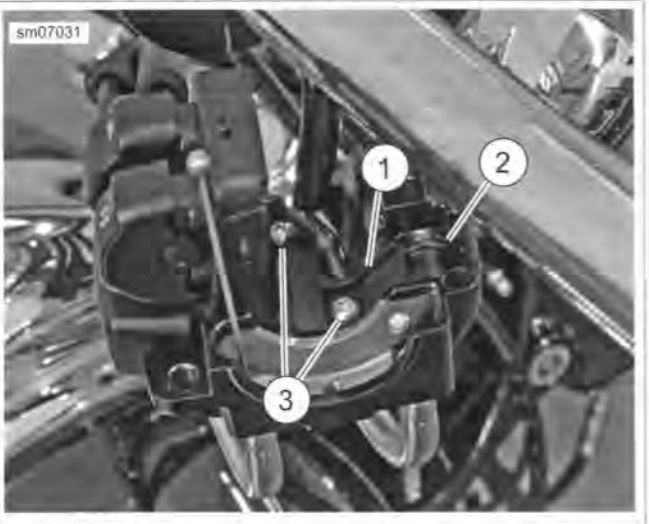

1. **Retainer**
2. **Brake switch**
3. **Screw (2)**

Figure 7-109. Right Control Module and Brake Switch Retainer

FRONT BRAKE SWITCH REPLACEMENT

FASTENER	TORQUE VALUE	
Handlebar switch assembly retainer screws	8-10 **in-lbs**	0.9-1.1 Nm

1. Remove upper switch housing cover. See 7.35 RIGHT HANDLEBAR CONTROL MODULE, Removal.
2. See Figure 7-109. From inside the switch housing, remove screws (3) and retainer (1). Remove brake switch (2) from housing.
3. Cut wires flush at inoperative brake switch.
4. If **new** brake switch wires have terminals installed, cut wires at terminal end.
5. Remove 0.25-0.3125 in (6.4-7.9 mm) of insulation from each wire end.
6. Cut two pieces of dual wall heat shrink tubing to 0.5 in (12.7 mm).
7. Solder wires together and cover with heat shrink tubing. See 7.33 HANDLEBAR CONTROL MODULES, Repair Procedures.
8. See Figure 7-109. Install brake switch (2) into housing. Install retainer (1) and screws (3). Tighten screws to 8-10 **in-lbs** (0.9-1.1 Nm).
9. Assemble right handlebar switch housing. See 7.35 RIGHT HANDLEBAR CONTROL MODULE, Installation.

INSTALLATION

FASTENER	TORQUE VALUE	
Handlebar module assembly retainer screws	8-10 **in-lbs**	0.9-1.1 Nm
Handlebar master cylinder clamp screws	60-80 **in-lbs**	6.8-9.0 Nm
Hand control module housing screws	35-45 **in-lbs**	4.0-5.1 Nm

NOTE

When installing the left hand control module and retainer, do not pinch wires. Verify that the rubber grommet on the wire harness is properly placed on the housing.

1. See Figure 7-109. Place control module into position on module housing. Install brake switch (2).
2. Install retainer (1) with screws (3). Tighten screws to 8-10 **in-lbs** (0.9-1.1 Nm).
3. See Figure 7-108. If previously removed from lower module housing, push the throttle and idle control cables into the lower module housing until they snap in place. Note the different diameter inserts crimped into the end of the throttle and idle cable housings.
   a. Push the throttle cable insert (2) of throttle cable housing into the hole in front of tension adjuster screw (3).
   b. Push the idle cable insert (1) of idle cable housing into the hole at the rear of tension adjuster screw (3).

NOTE

To aid assembly, place a drop of light oil on the retaining rings of the crimped inserts. Always replace the retaining rings if damaged or distorted.

4. Slide the throttle control grip over the end of the right handlebar until it bottoms against the closed end. Rotate the grip so that the ferrule notches are at the top. To prevent binding, pull the grip back about 1/8 in (3.2 mm).
5. With the concave side facing upward, install the friction shoe so that the pin hole is over the point of the adjuster screw.

NOTE

The friction shoe is a loose fit. It may fall out or become dislodged if the lower module housing is turned upside down or shaken.

6. See Figure 7-107. Position lower module housing beneath the throttle control grip. Install the brass ferrules (4) onto the cable so that the end fittings seat in the ferrule recess. Seat the ferrules in their respective notches (3) on the throttle control grip. Verify that the cables are captured in the grooves (2) molded into the grip.



1. **Clamping surface**
2. **Range marks**

Figure 7-110. Right Hand Control Assembly to Handlebar Alignment: FXDWG Models

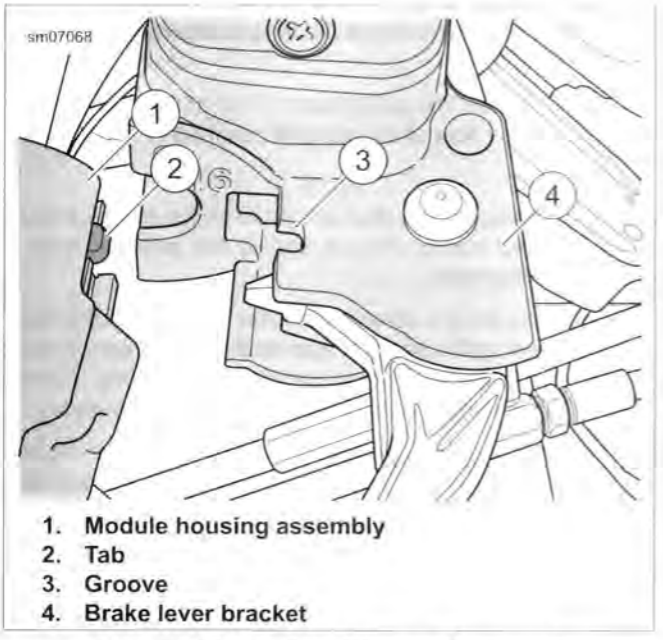

1. **Module housing assembly**
2. **Tab**
3. **Groove**
4. **Brake lever bracket**

Figure 7-111. Module Housing Alignment

NOTES

- *See Figure 7-110. When installing right handlebar module assembly on FXDWG models, make sure the clamping surface (1) stays within the range marks (2) or damage to the wires will occur.*
- *Use care with FXDF and FXDL models as rotation of the controls too far can cause harness damage.*

7. Position the upper module housing over the handlebar and lower module housing.
8. Start the upper and lower module housing screws, but do not tighten.
9. See Figure 7-111. Position the brake lever/master cylinder assembly inboard of the module housing assembly, engaging the tab (2) on the lower module housing in the groove (3) at the top of the brake lever bracket.
10. Install the lower handlebar clamp to master cylinder housing screw (with flat washer). Position for rider comfort. Beginning with the top screw, tighten to 60-80 **in-lbs** (6.8-9.0 Nm).
11. Tighten lower and upper module housing screws to 35-45 **in-lbs** (4.0-5.1 Nm).

NOTE

Always tighten lower switch housing screw first, so that any gap between upper and lower housings is at front of switch.

12. Adjust throttle cables. See 2.21 THROTTLE CONTROL.
13. Connect right hand control connectors.
14. Secure harness with clamps and cable strap as noted during removal.
15. Install main fuse. See 7.8 FUSES.

⚠WARNING

Be sure that all lights and switches operate properly before operating motorcycle. Low visibility of rider can result in death or serious injury. (00316a)

16. Test the switches for proper operation.

FOB BATTERY

Battery Replacement Schedule

Replace the fob battery every year.

Battery Replacement

1. Open the fob case.
   a. See Figure 7-112. Place a thin blade in the thumbnail slot (1) between the two halves of the case.
   b. Slowly twist the blade.

NOTE

Use a CR2032 or equivalent battery.

2. Install a new battery with the positive side down.
3. Close the case.
   a. See Figure 7-112. With O-ring (3) in place, align case halves.
   b. Snap case halves together.



1. **Thumbnail slot**
2. **Battery (CR2032)**
3. **O-ring**

Figure 7-112. Open Fob

SMART SIREN (IF INSTALLED)

Battery Replacement Schedule

The siren internal 9 V battery is rechargeable and does not require regular replacement. Battery life under normal conditions is approximately 3-6 years.

NOTE

If the motorcycle battery is less than 12.5 V, the internal siren battery may not charge.

Battery Replacement

1. Disarm system. Remove siren.
2. See Figure 7-113. With a small screwdriver, push the catches (1) in through the two slots (2) in the end of the siren. Release the battery cover (3).

NOTES

- *For protection against corrosion, battery terminals and battery clip are covered with a special grease. Do not wipe away this substance. Apply all available existing grease to terminals on* ***new*** *battery.*
- *Use only a 9 V nickel metal hydride battery in the siren.*

3. Replace 9 volt battery (4) by removing old battery from polarized battery clip.
4. Recharge and install or install a **new** 9 volt nickel metal hydride battery.
5. Install cover (3).
   a. Carefully replace the rubber seal (5) on the cover.
   b. Align battery cover with case placing round corners on cover away from connector [142A] (6).
   c. Snap cover into place.
6. Install siren and check operation. Two chirps after an arming command indicate a working siren.



1. **Catch (2)**
2. **Slot (2)**
3. **Cover**
4. **9V battery**
5. **Rubber seal**
6. **Connector [142A]**

Figure 7-113. Battery Compartment

GENERAL

The PIN consists of five digits. Each digit can be any number from 1 through 9. There can be no zeros (0) in the PIN. Use the PIN to disarm the security system in case the fob becomes unavailable.

CHANGING THE PIN

The rider can change the PIN at any time. Refer to Table 7-12.

Modifying an Existing PIN

If a PIN was previously entered, the odometer will display the equivalent digit. Each additional press of the left turn switch will increment the digit.

Examples:

- To advance from 5 to 6, press and release the left turn switch 1 time.
- To advance from 8 to 2, press and release the left turn switch 3 times (9-1-2).

Table 7-12. Changing the PIN

STEP NO.	ACTION	WAIT FOR CONFIRMATION	NOTES
1	Select a 5-digit (1 thru 9) PIN and record on the wallet card from owner's manual.		
2	With an assigned fob present, turn the engine stop switch to **OFF**.		
3	Turn the ignition switch to **IGN**.		
4	Cycle the OFF/RUN switch twice: **RUN - OFF - RUN - OFF - RUN**.		
5	Press **left** turn signal switch **two times**.	ENTER PIN will scroll through the odometer window.	
6	Press **right** turn signal switch **one time** and release.	Turn signals will flash three times. Current PIN will appear in odometer. The first digit will be flashing.	
7	Enter first digit of new PIN by pressing and releasing the **left** turn signal switch until the selected digit appears.		
8	Press **right** turn signal switch **one time** and release.	The new digit will replace the current in odometer window.	
9	Enter second digit of selected PIN by pressing and releasing the **left** turn signal switch until the selected digit is present.		
10	Press **right** turn signal switch **one time** and release.	The new digit will replace the current in odometer window.	
11	Enter third digit of the selected PIN by pressing and releasing the **left** turn signal switch until the selected digit is present.		
12	Press **right** turn switch **one time** and release.	The new digit will replace the current in odometer window.	
13	Enter fourth digit of new PIN by pressing and releasing the **left** turn signal switch until the selected digit is present.		
14	Press **right** turn switch **one time** and release.	The new digit will replace the current in odometer window.	
15	Enter fifth digit of the new PIN by pressing and releasing the **left** turn signal switch until the selected digit is present.		

Table 7-12. Changing the PIN

STEP NO.	ACTION	WAIT FOR CONFIRMATION	NOTES
16	Press **right** turn switch **one time** and release.	The new digit will replace the current in odometer window.	
17	Turn the engine stop switch **OFF**, then turn the ignition switch to **OFF**.		Pushing the engine stop switch to **OFF** stores the new PIN in the module.

SIDECAR CONFIGURATION

⚠WARNING

Do not add sidecar to this motorcycle. Operating motorcycle with sidecar can cause loss of vehicle control, which could result in death or serious injury. (00590d)

ACTIVATION

Activation consists of assigning two fobs to the system and entering an initial PIN.

NOTE

If the fob is lost or inoperable, the PIN allows the owner to disarm the system. See 7.37 PERSONAL IDENTIFICATION NUMBER (PIN), Changing The PIN.

1. Configure the security system by assigning both fobs to the vehicle.
2. Configure the security system by entering a PIN picked by the owner.

Record the PIN in the owner's manual. Instruct the customer to carry a copy (use the wallet card found in the owner's manual). See 7.37 PERSONAL IDENTIFICATION NUMBER (PIN).

Once the system has been activated, it "arms" within 5 seconds of switching the IGN switch to OFF and no motorcycle motion.

FOB ASSIGNMENT

PART NUMBER	TOOL NAME
HD-48650	DIGITAL TECHNICIAN II

Use DIGITAL TECHNICIAN II (Part No. HD-48650) to assign both fobs to the H-DSSS. Follow the menu prompts to scan the fob serial number with the bar code reader. Alternatively, enter the number using the keyboard. The initial PIN entry should be performed using DIGITAL TECHNICIAN II (Part No. HD-48650) in conjunction with fob assignment.

NOTE

Each fob has a unique serial number. Attach fob label to a blank NOTES page in the owner's manual for reference.

SUBJECT PAGE NO.

A.1 CONNECTORS..... A-1
A.2 WIRING DIAGRAMS..... A-4

NOTES

CONNECTOR LOCATIONS

Function/Location

All vehicle connectors are identified by their function and location. Refer to Table A-1.

Place and Color

The place (number of wire cavities of a connector housing) and color of the connector can also aid identification.

Connector Number

On wiring diagrams and in service instructions, connectors are identified by a number in brackets.

Repair Instructions

The repair instructions in Appendix B of the electrical diagnostic manual (EDM) are by connector type. Refer to Table A-1.

Table A-1. Dyna Connector Locations

NO.	DESCRIPTION	TYPE	TERMINAL PROBE COLOR	LOCATION
[7]	Tail lamp harness to main harness	8-place Tyco 070 Multilock Unsealed (BK)	Gray	Under seat
[18]	Right rear turn signal	4-place Tyco 070 Multilock Unsealed (BK) (except FLD, FXD/C/L) 2-place Tyco 070 Multilock Unsealed (BK) (FLD, FXD/C/L)	Gray	Inside tail lamp lens
[19]	Left rear turn signal	4-place Tyco 070 Multilock Unsealed (BK) (except FLD, FXD/C/L) 2-place Tyco 070 Multilock Unsealed (BK) (FLD, FXD/C/L)	Gray	Inside tail lamp lens
[20]	Console gauges/instrument lamps	8-place Molex MX 150 Sealed (BK)	Gray	Under console (except FXDB) Inside top frame tube (FXDB)
[22-1]	Right hand controls	4-place JAE MX19 Sealed (BK)	Yellow	Inside top frame tube
[22-2]	Right hand controls	2-place JAE MX19 Sealed (BK)	Yellow	Inside top frame tube
[24]	Left hand controls	4-place JAE MX19 Sealed (BK)	Yellow	Inside top frame tube
[29]	Position lamp (HDI)	Spade terminals	Red	Behind headlamp
[31L]	Left directional and DOM running lamps	3-place Tyco 070 Multilock Unsealed (BK)	Gray	Inside top frame tube
[31R]	Right directional and DOM running lamps	3-place Tyco 070 Multilock Unsealed (BK)	Gray	Inside top frame tube
[33]	Ignition switch	2-place Delphi GT 150 Sealed (GY)	Gray	Under fuel tank console (except FXDB) Inside top frame tube (FXDB)
[38]	Headlamp	4-place Tyco 070 Multilock Unsealed (BK)	Gray	Inside top frame tube (FXDB) Behind headlamp (except FXDB)
[39]	Speedometer	12-place Delphi Micro 64 Sealed (GY)	Breakout Box	Back of speedometer
[40]	LP, stop, and tail lamp	4-place Deutsch DT Sealed (FXDWG) (GY) 4-place Tyco 040 Multilock unsealed (BK) FXDF, FXDB/P	Brown Gray	Inside tail lamp lens Next to LP Lamp
[47]	Voltage regulator to stator	3-place Dekko (BK)	Green	Back of voltage regulator
[64]	Fuse block	Delphi 280 Metri-pack Sealed Delphi 800 Metri-pack Sealed (main fuse)	Purple/Red	Under left side cover
[65]	VSS	3-place Delphi GT 150 3.5 Sealed (BK)	Gray	Top of transmission case
[77]	Voltage regulator	2-place Dekko (BK)	Green	Back of voltage regulator

Table A-1. Dyna Connector Locations

NO.	DESCRIPTION	TYPE	TERMINAL PROBE COLOR	LOCATION
[78-1]	ECM	18-place Tyco GET 64 (BK)	Breakout Box	Under left side cover
[78-2]	ECM	18-place Tyco GET 64 (GY)	Breakout Box	Under left side cover
[79]	CKP sensor	2-place Deutsch DTM Sealed (BK)	Brown	Back of voltage regulator bracket
[80]	MAP sensor	3-place Delphi 150 Metri-Pack Sealed (GY)	Gray	Top of induction module
[83]	Ignition coil	4-place Delphi GT 150 Sealed (BK)	Gray	Back of coil
[84]	Front fuel injector	2-place Delphi GT 150 3.5 Sealed (GY)	Gray	Beneath fuel tank
[85]	Rear fuel injector	2-place Delphi GT 150 3.5 Sealed (GY)	Gray	Beneath fuel tank
[87]	IAC	4-place Delphi GT 150 3.5 Sealed (BK)	Gray	Top of induction module
[88]	TPS	3-place Delphi GT 150 Sealed (BK)	Gray	Behind air cleaner backing plate
[89]	IAT sensor	2-place Delphi GT 150 3.5 Sealed (GY)	Gray	Behind air cleaner backing plate
[90]	ET sensor	2-place Delphi GT 150 Sealed (BK)	Gray	Back of front cylinder, left side
[91]	DLC	6-place Deutsch DT Sealed (GY)	Black	Under left side cover
[93]	Tail lamp	4-place Tyco 070 Multilock Unsealed (BK)	Gray	Inside tail lamp lens (except FXDB)
[94]	Rear fender lights harness in circuit board	6-place Tyco 070 Multilock Unsealed (BK) (FLD, FXD/C/L) 3-place Delphi 150 Metri-Pack (BK) (FXDF)	Gray	Circuit board under tail lamp assembly (FLD, FXD/C/L) Tail Lamp (FXDF)
[95]	Purge solenoid	2-place Delphi 150 Metri-Pack Sealed (BK)	Purple	Behind coil left side
[108]	Tachometer	12-place Delphi Micro 64 (GY)	Breakout Box	Back of tachometer
[117]	Fuel gauge	4-place Tyco 040 Unsealed (BK)	Gray	Under fuel tank
[120]	Oil pressure switch	Right angle push on molded terminal (BK)		Front of right crankcase
[121]	Rear stop lamp switch	Tyco Insulated Spade terminal (BK)	Red	Right side of transmission
[122]	Horn	Spade terminals (BK)	Red	Between cylinders, left side
[128]	Starter solenoid	Spade terminal (W)	Red	Top of starter
[131]	Neutral switch	Right angle push on molded terminal (BK)		Top of transmission
[133]	JSS	3-place Molex MX 150 Sealed (BK)	Gray	Under seat
[137]	Rear HO2S	4-place Molex MX 150 Sealed (BK)	Gray	Under seat
[138]	Front HO2S	4-place Molex MX 150 Sealed (BK)	Gray	Behind voltage regulator
[141]	Fuel pump and sender	4-place Delphi GT 150 Sealed (BK)	Gray	Top of fuel tank

Table A-1. Dyna Connector Locations

NO.	DESCRIPTION	TYPE	TERMINAL PROBE COLOR	LOCATION
[142]	Security siren (optional)	3-place Delphi GT 150 Sealed (BK)	Gray	Under seat
[166]	ABS ECU	18-place Tyco (BK)	Breakout Box	Under battery
[167]	Front WSS	2-place Deutsch DTM Sealed (BK)	Brown	Inside top frame tube
[168]	Rear WSS	2-place Deutsch DTM Sealed (BK)	Brown	Under seat
[178]	Active intake solenoid	2-place Tyco Superseal 1.5 Sealed (BK)	Gray	Air cleaner backing plate
[179]	Active exhaust	5-place Tyco Superseal 1.5 Sealed (BK)	Gray	Above starter
[203F]	ACR (front)	2-place Tyco Superseal 1.5 Sealed	Gray	Bracket attached to the throttle body
[203R]	ACR (rear)	2-place Tyco Superseal 1.5 Sealed	Gray	Bracket attached to the throttle body
[209]	Security antenna	2-place Molex MX 64 Unsealed (BK)	Light Blue	Under seat
[222]	Ignition switch harness	2-place Deutsch DTM Sealed Gray (GY)	Brown	Inside top frame tube (FXDB)
[233]	License plate lamp	2-place Tyco 040 Multilock unsealed (BK)	Gray	Inside tail lamp housing
[242]	BCM	48-place Molex CMC Sealed (BK)	Breakout Box	Under left side cover
[259]	BCM battery power	1-place Delphi 800 Metri-Pack Sealed (BK)		Under left side cover
[GND1] [GND2]	Harness grounds	Ring terminals		Under seat

WIRING DIAGRAM INFORMATION

Wire Color Codes

Wire traces on wiring diagrams are labeled with alpha codes. Refer to Table A-2.

For Solid Color Wires: See Figure A-1. The alpha code identifies wire color.

For Striped Wires: The code is written with a slash (/) between the solid color code and the stripe code. For example, a trace labeled GN/Y is a green wire with a yellow stripe.

Wiring Diagram Symbols

See Figure A-1. On wiring diagrams and in service/repair instructions, connectors are identified by a number in brackets [ ]. The letter inside the brackets identifies whether the housing is a socket or pin housing.

A=Pin: The letter A and the pin symbol after a connector number identifies the pin side of the terminal connectors.

B=Socket: The letter B and the socket symbol after a connector number identifies the socket side of the terminal connectors. Other symbols found on the wiring diagrams include the following:

Diode: The diode allows current flow in one direction only in a circuit.

Wire break: The wire breaks are used to show option variances or page breaks.

No Connection: Two wires crossing over each other in a wiring diagram that are shown with no splice indicating they are not connected together.

Circuit to/from: This symbol indicates a more complete circuit diagram on another page. The symbol is also identifying the direction of current flow.

Splice: Splices are where two or more wires are connected together along a wiring diagram. The indication of a splice only indicates that wires are spliced to that circuit. It is not the true location of the splice in the wiring harness.

Ground: Grounds can be classified as either clean or dirty grounds. Clean grounds are identified by a (BK/GN) wire and are normally used for sensors or modules.

NOTE

Clean grounds usually do not have electric motors, coils or anything that may cause electrical interference on the ground circuit.

Dirty grounds are identified by a (BK) wire and are used for components that are not as sensitive to electrical interference.

Twisted pair: This symbol indicates the two wires are twisted together in the harness. This minimizes the circuit's electromagnetic interference from external sources. If repairs are necessary to these wires they should remain as twisted wires.

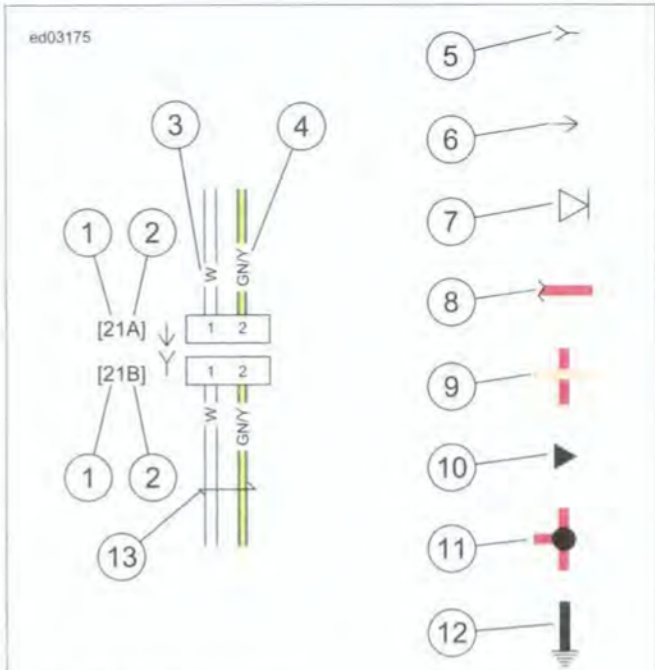

1. **Connector number**
2. **Terminal code (A=pin, B=socket)**
3. **Solid wire color**
4. **Striped wire color**
5. **Socket symbol**
6. **Pin symbol**
7. **Diode**
8. **Wire break**
9. **No connection**
10. **Circuit to/from**
11. **Splice**
12. **Ground**
13. **Twisted pair**

Figure A-1. Connector/Wiring Diagram Symbols

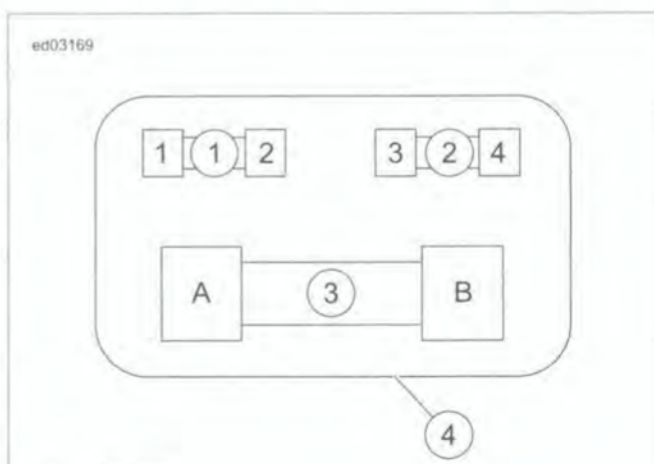

1. **Battery**
2. **P&A**
3. **Main**
4. **Fuse block [64]**

Figure A-2. Fuse Block and Socket Terminals

Table A-2. Wire Color Codes

ALPHA CODE	WIRE COLOR
BE	Blue
BK	Black
BN	Brown
GN	Green
GY	Gray
LBE	Light Blue
LGN	Light Green
O	Orange
PK	Pink
R	Red
TN	Tan
V	Violet
W	White
Y	Yellow

Refer to the table below for wiring diagram information.

Wiring Diagram List

DIAGRAM	LOCATION
Battery Power Distribution	Figure A-3
Ignition and Accessory Power Distribution: 1 of 3	Figure A-4
Ignition and Accessory Power Distribution: 2 of 3	Figure A-5
Ignition and Accessory Power Distribution: 3 of 3	Figure A-6
Sensor Grounds	Figure A-7
Ground Circuit: 1 of 3	Figure A-8
Ground Circuit: 2 of 3	Figure A-9
Ground Circuit: 3 of 3	Figure A-10
Front Lighting and Hand Controls: 2016 Dyna	Figure A-11
Main Harness 1 of 3 (except FXDL): 2016 Dyna	Figure A-12
Main Harness 2 of 3 (FXDL): 2016 Dyna	Figure A-13
Main Harness 3 of 3: 2016 Dyna	Figure A-14
Rear Lighting: 2016 Dyna	Figure A-15

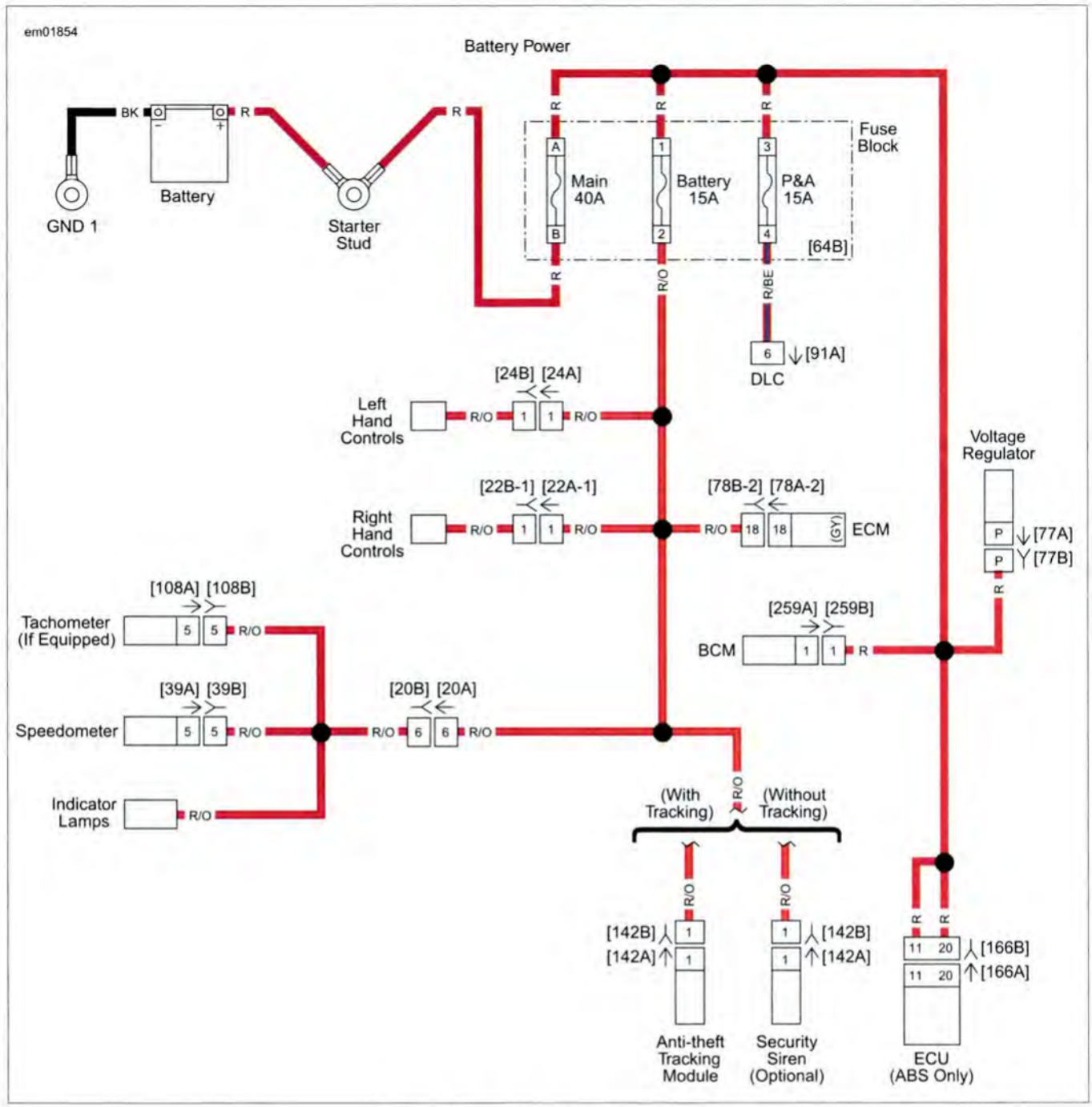

Figure A-3. Battery Power Distribution

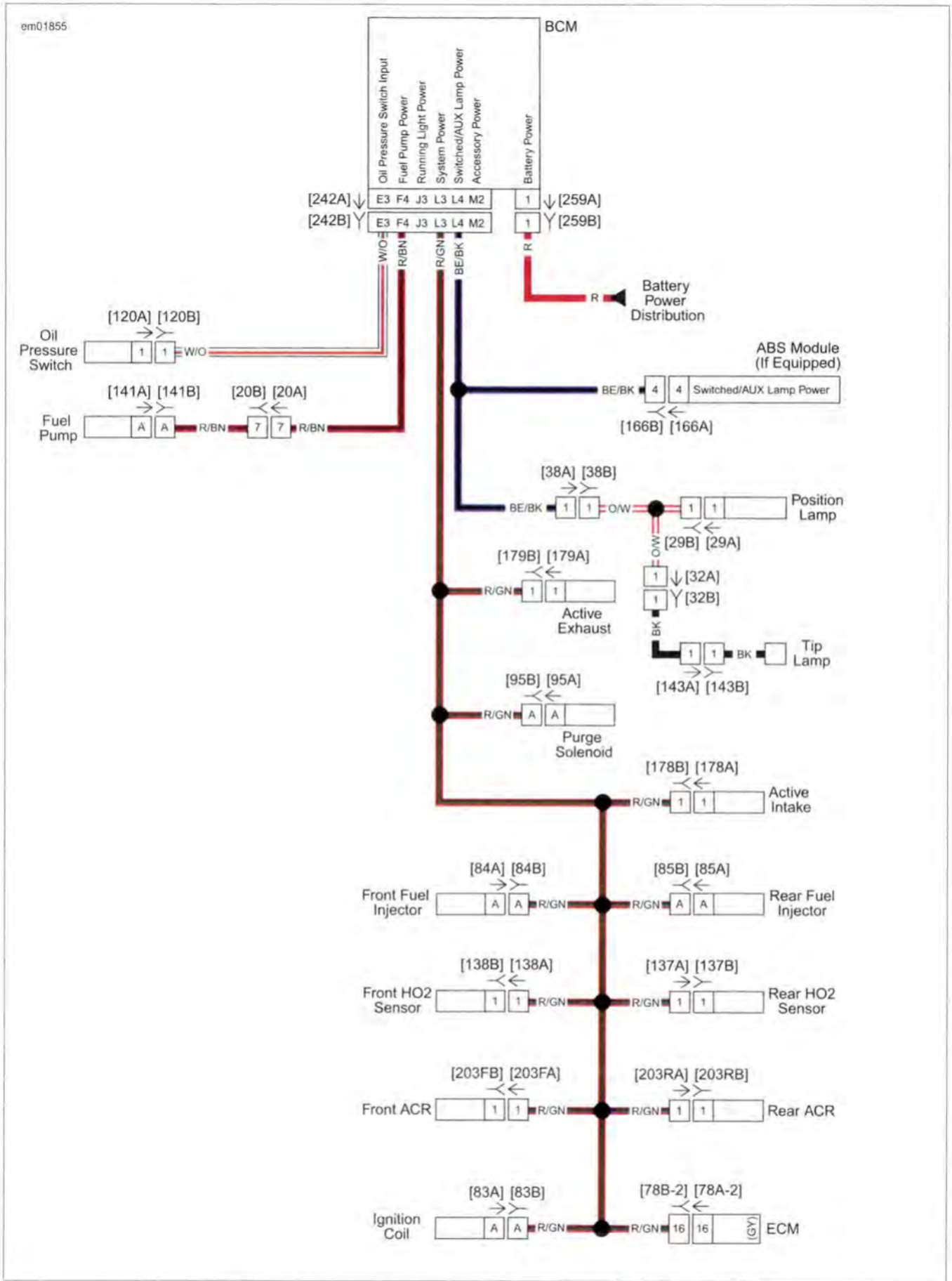

Figure A-4. Ignition and Accessory Power Distribution: 1 of 3

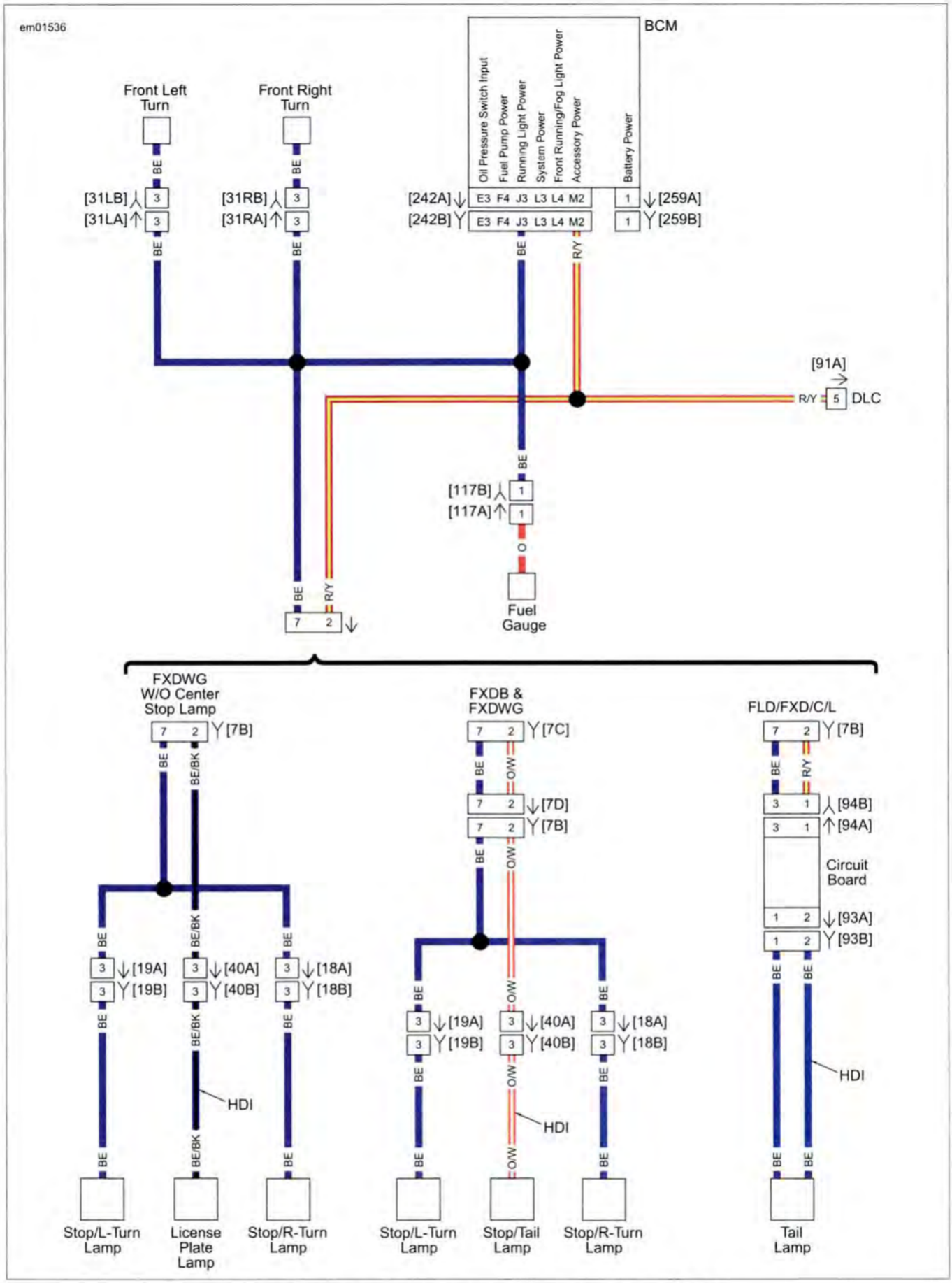

Figure A-5. Ignition and Accessory Power Distribution: 2 of 3

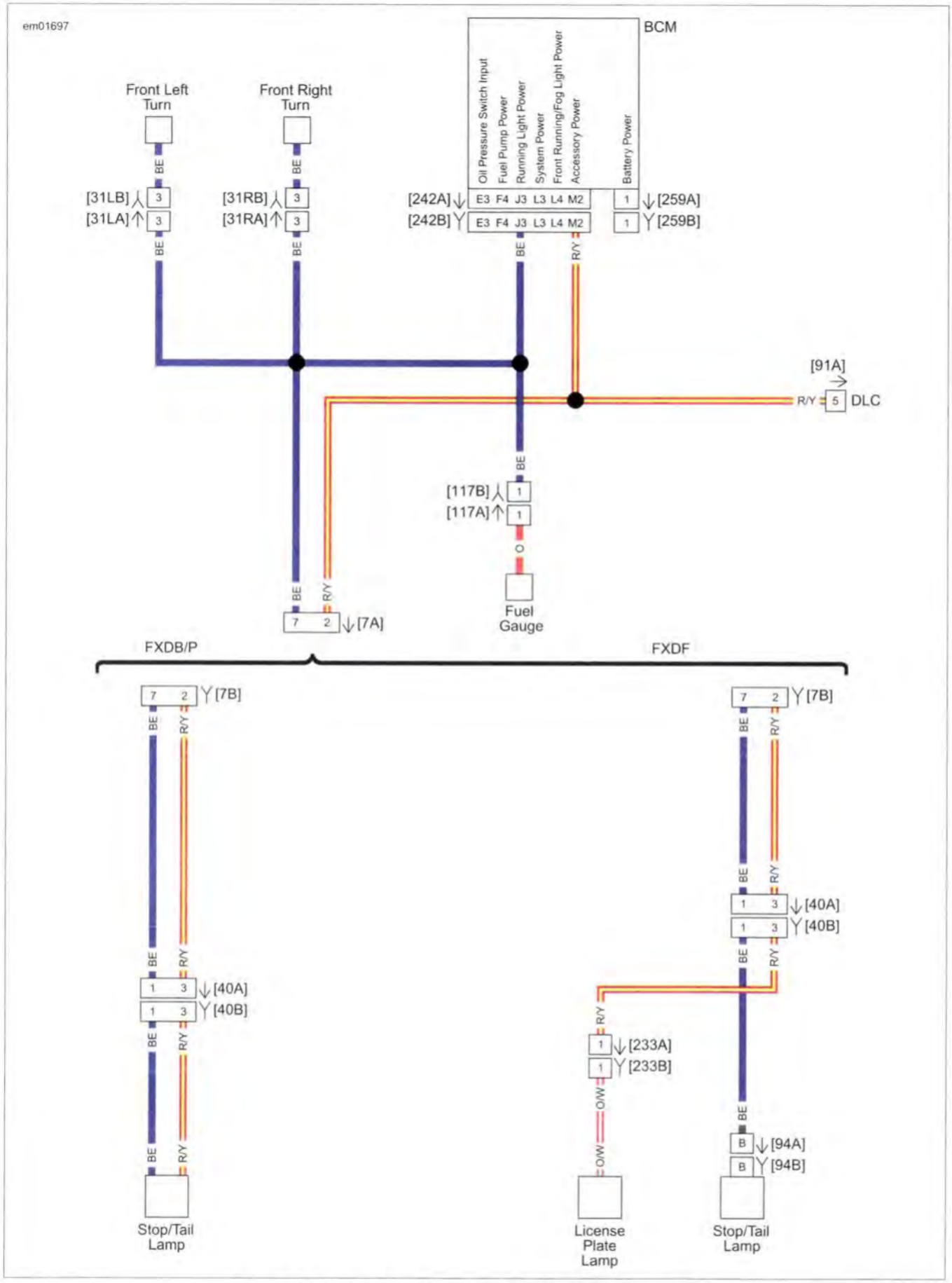

Figure A-6. Ignition and Accessory Power Distribution: 3 of 3

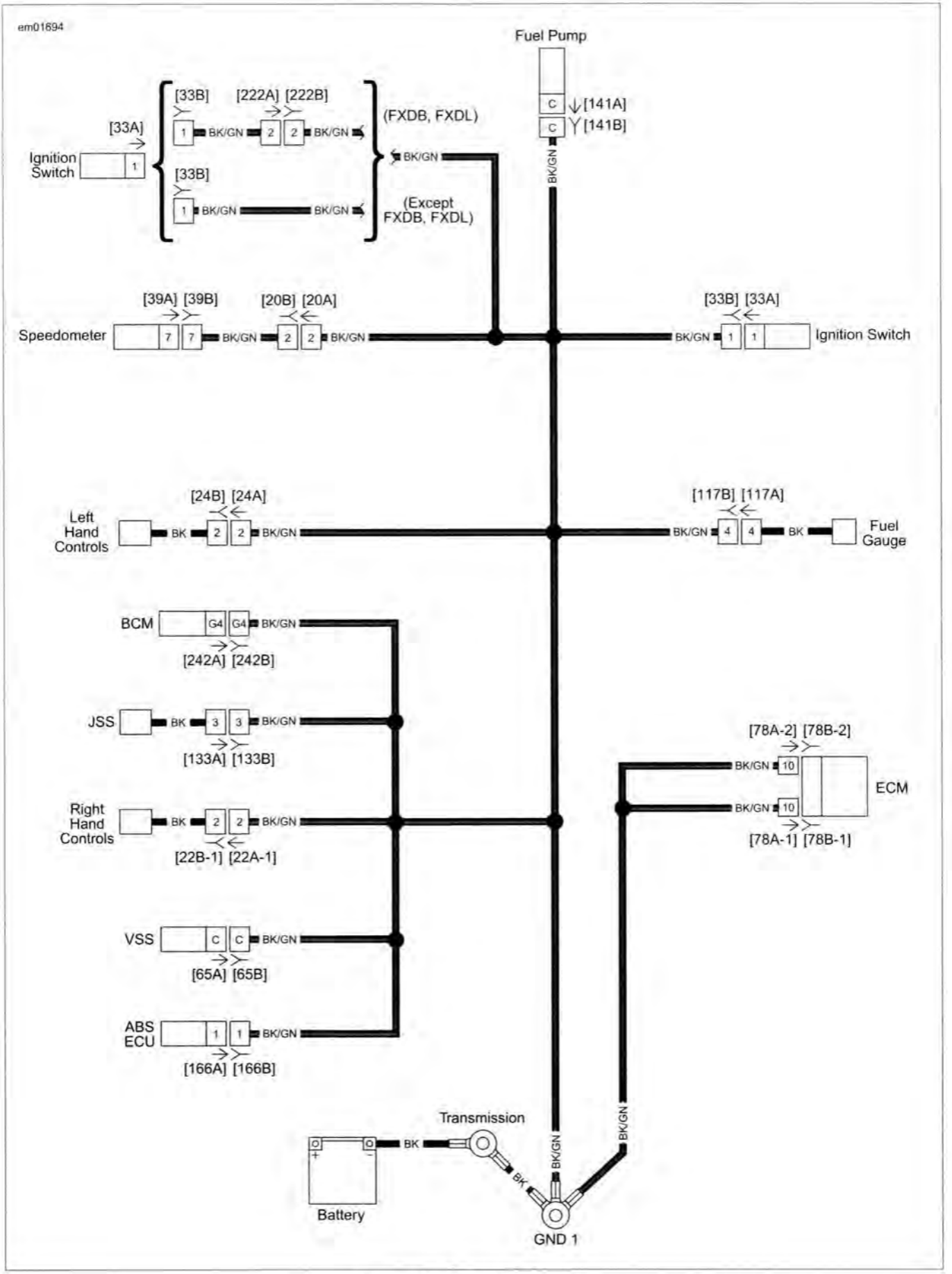

Figure A-7. Sensor Grounds

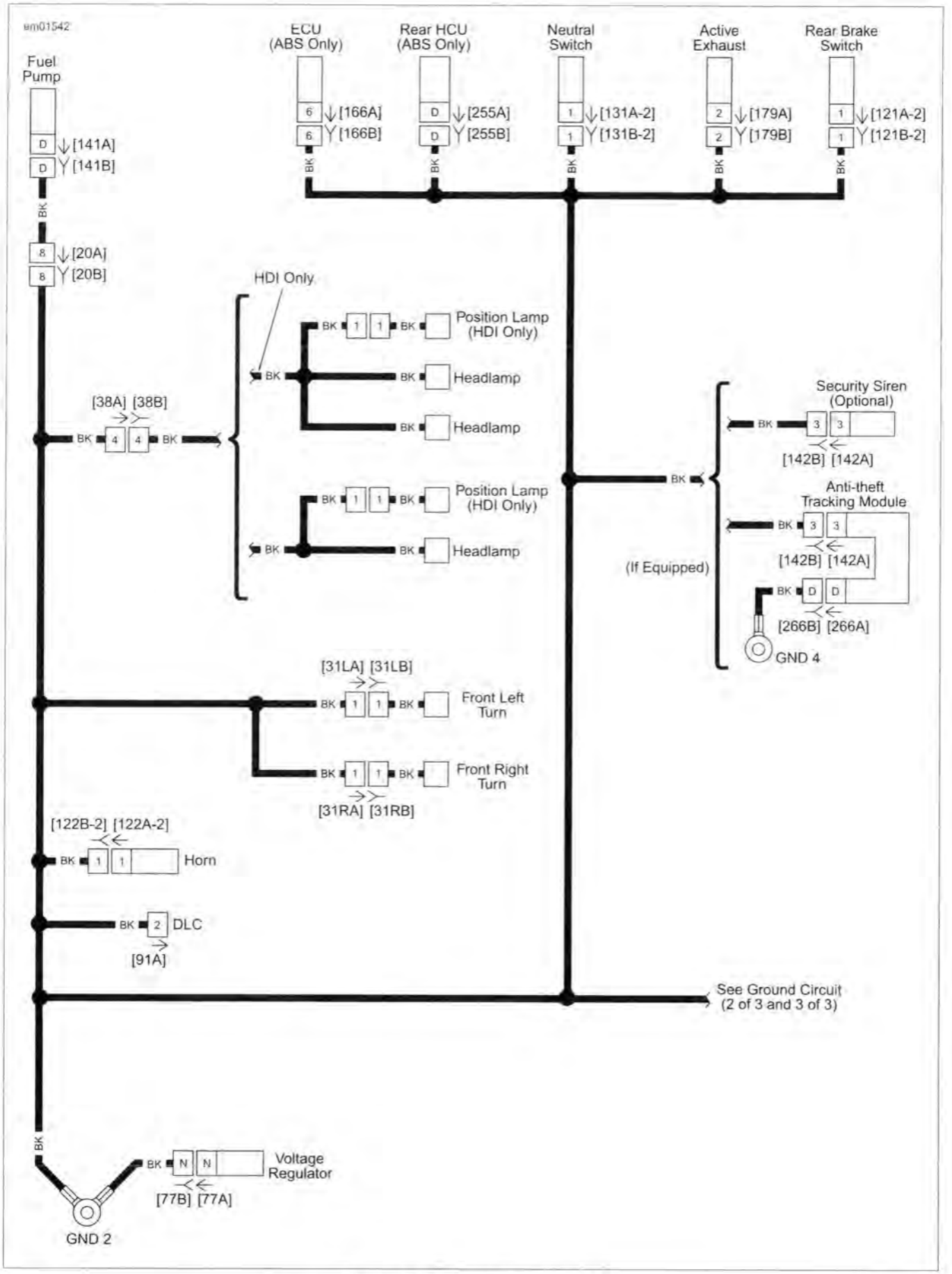

Figure A-8. Ground Circuit: 1 of 3

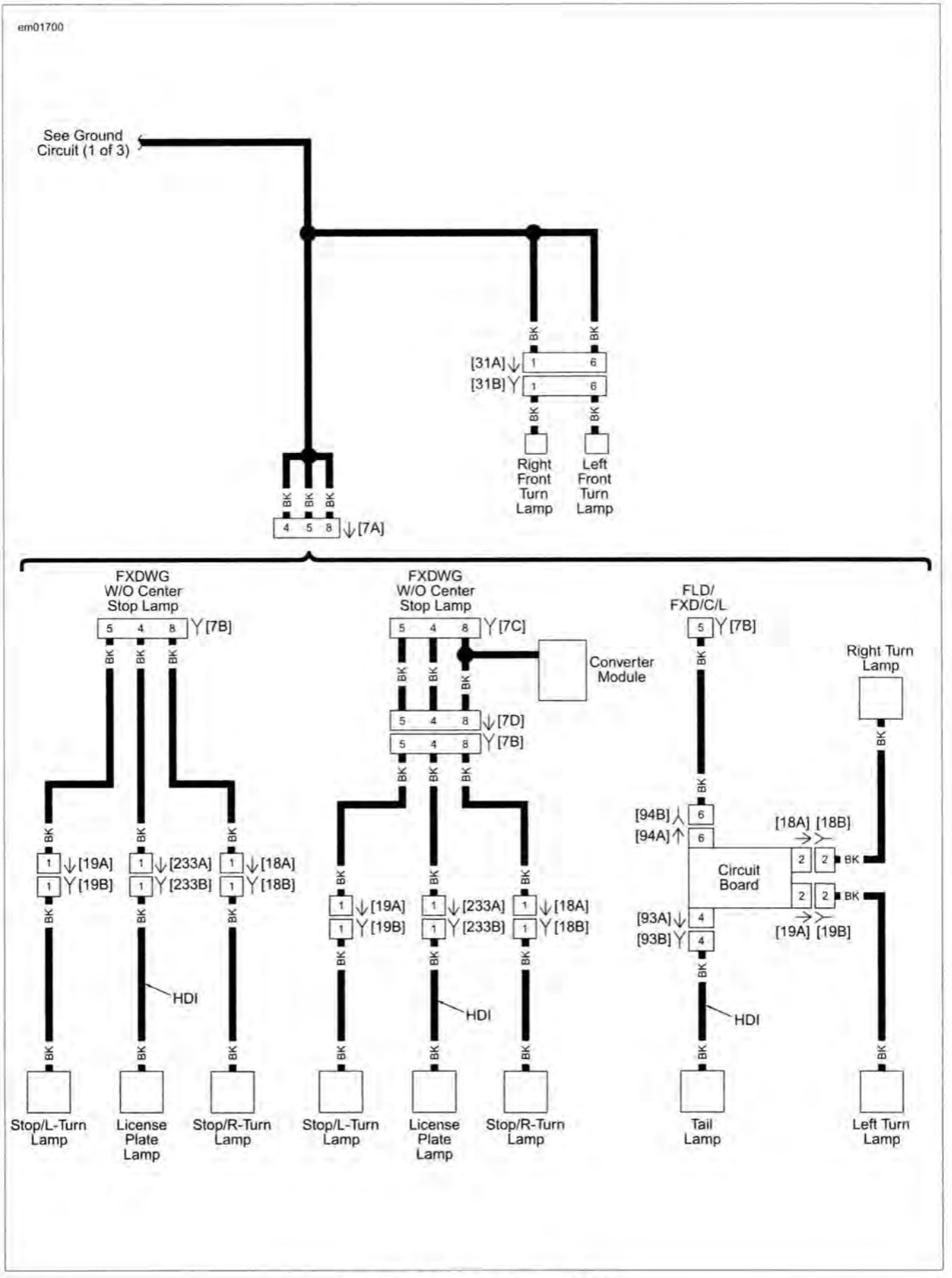

Figure A-9. Ground Circuit: 2 of 3

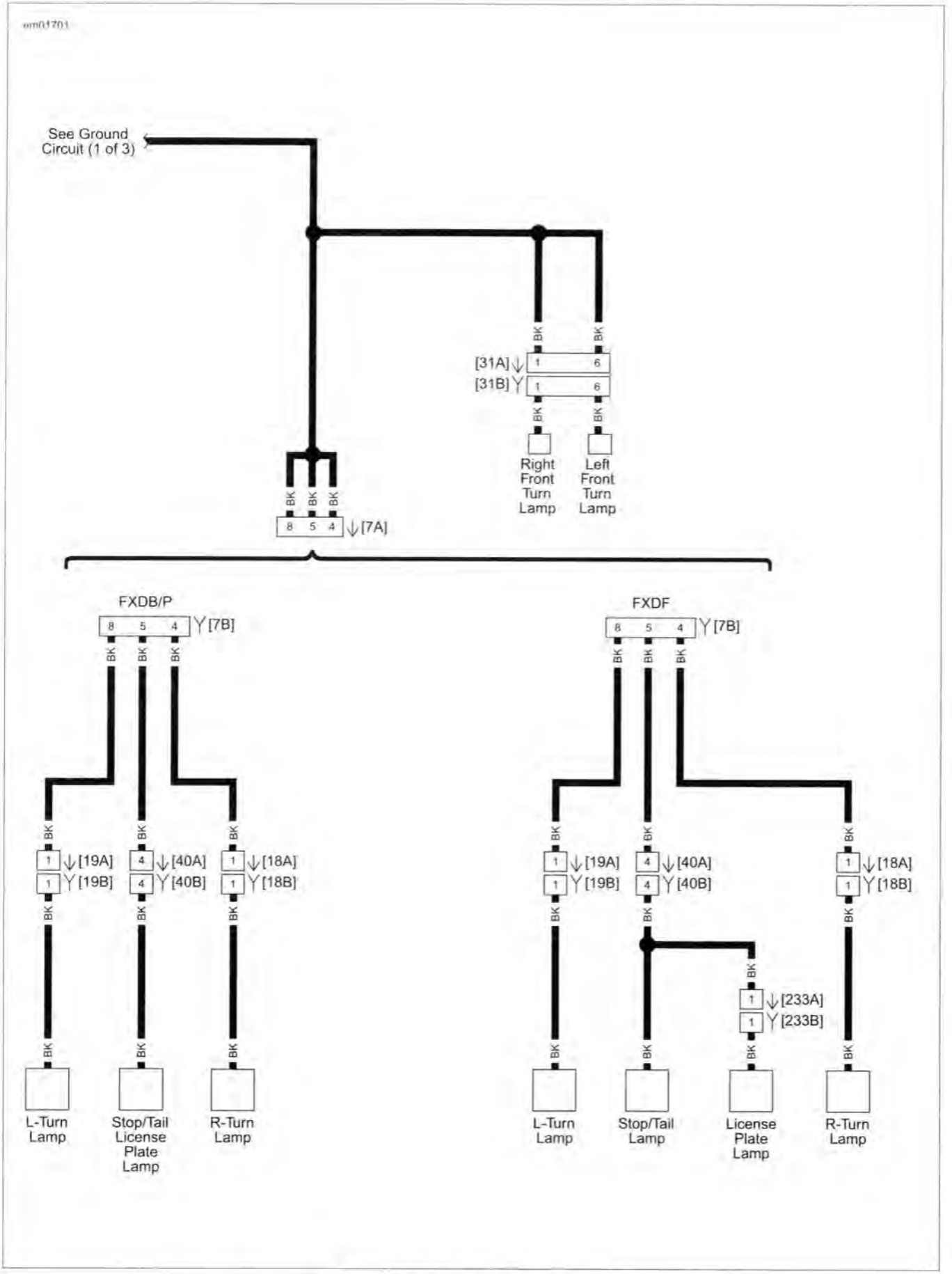

Figure A-10. Ground Circuit: 3 of 3

Figure A-11.
Front Lighting and Hand Controls: 2016 Dyna

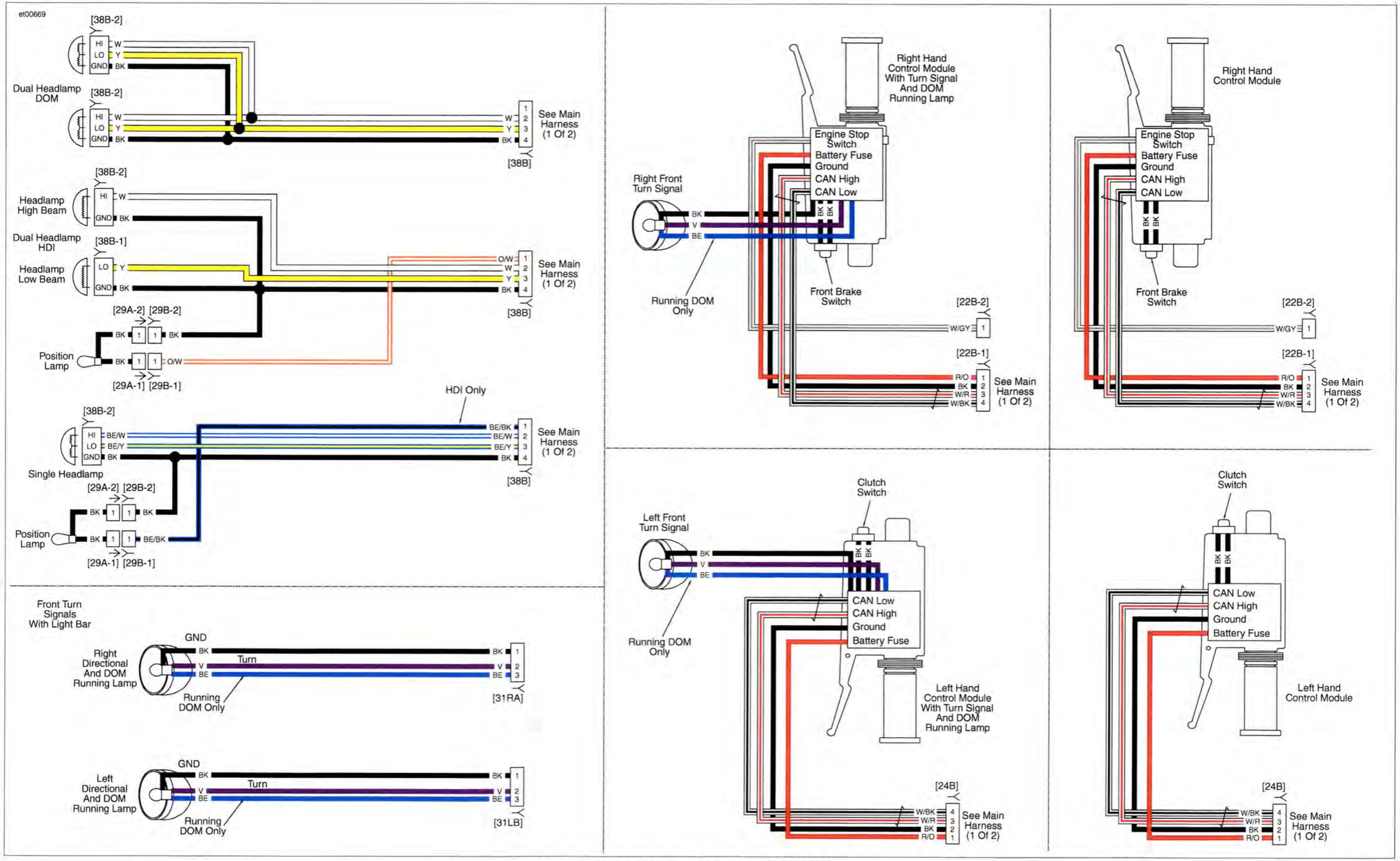

Figure A-11. Front Lighting and Hand Controls: 2016 Dyna

Figure A-12.
Main Harness 1 of 3 (except FXDL): 2016 Dyna

et00759

Figure A-12. Main Harness 1 of 3 (except FXDL): 2016 Dyna

Figure A-13.
Main Harness 2 of 3 (FXDL): 2016 Dyna

et00760

Figure A-13. Main Harness 2 of 3 (FXDL): 2016 Dyna

Figure A-14.
Main Harness 3 of 3: 2016 Dyna

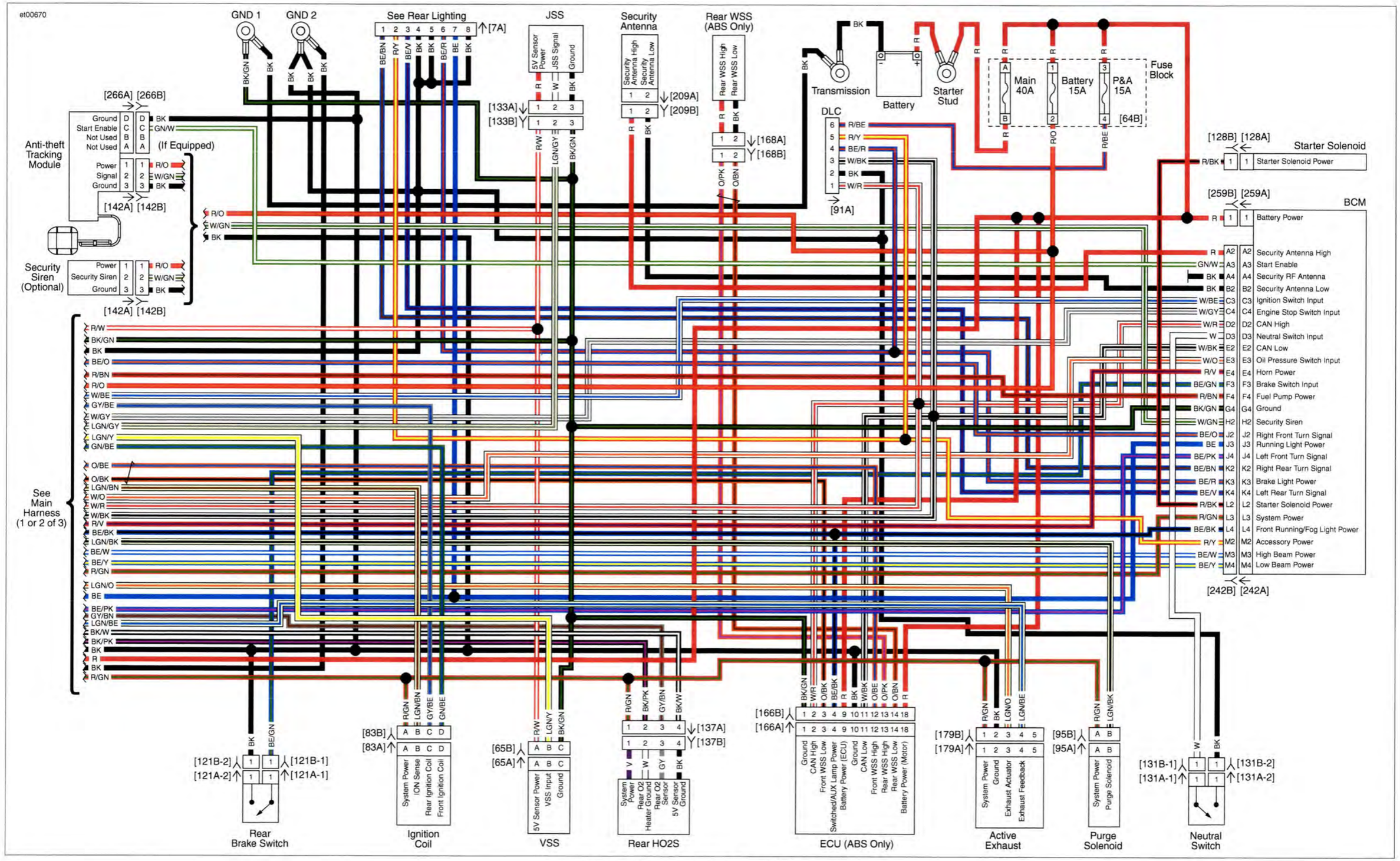

Figure A-14. Main Harness 3 of 3: 2016 Dyna

Figure A-15.
Rear Lighting: 2016 Dyna

et00720

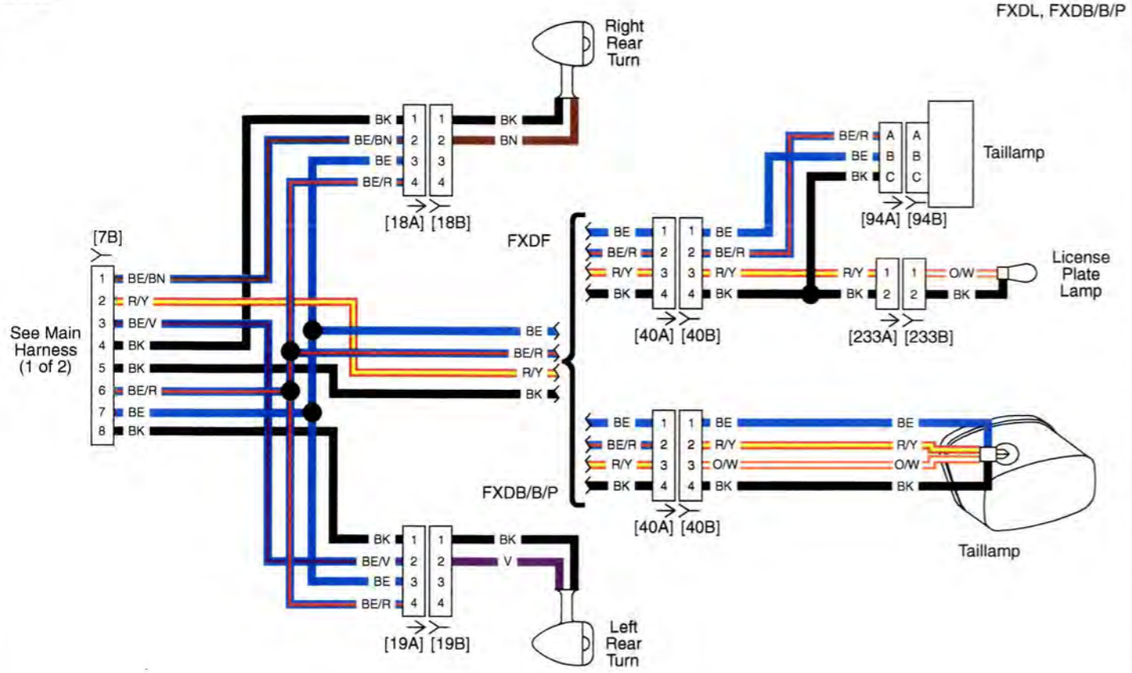

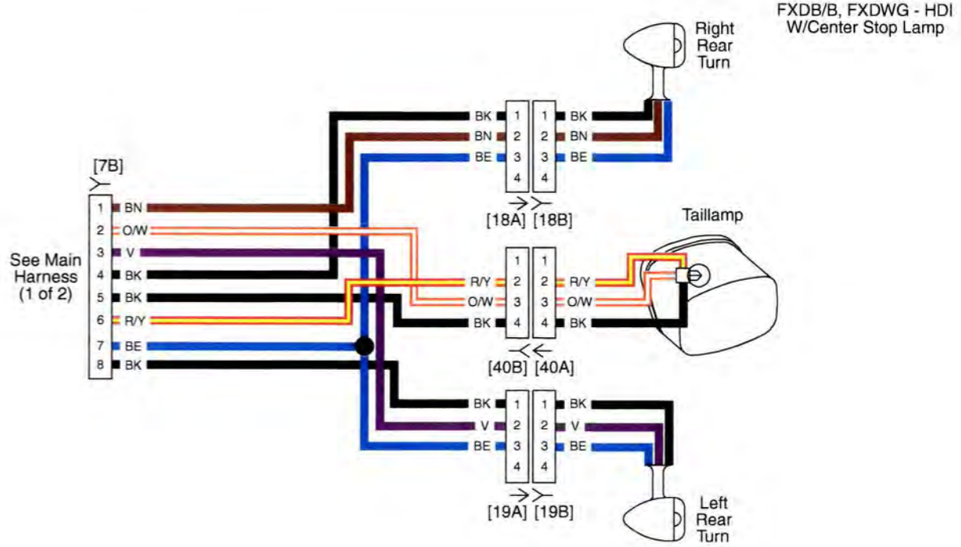

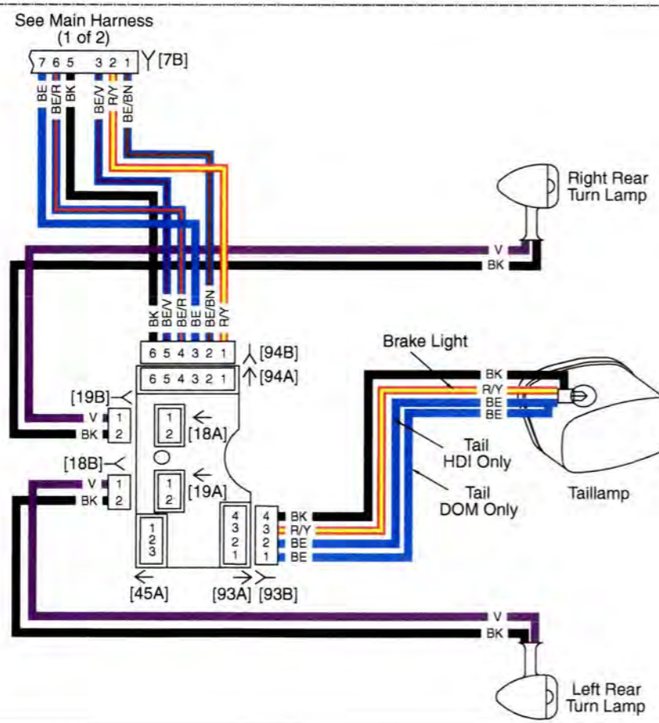

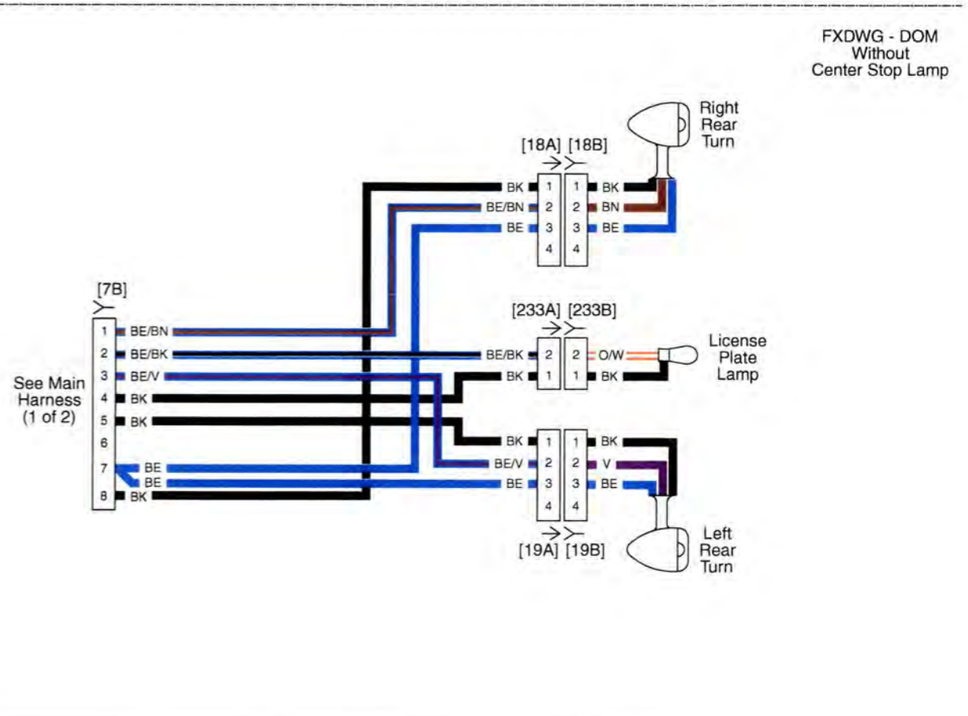

Figure A-15. Rear Lighting: 2016 Dyna

SUBJECT PAGE NO.

B.1 LENGTH CONVERSION..... B-1
B.2 FLUID CONVERSION..... B-2
B.3 TORQUE CONVERSION..... B-3
B.4 GLOSSARY..... B-4

NOTES

CONVERSION TABLE

Table B-1. Metric Conversions

MILLIMETERS to INCHES (MM x 0.03937 = IN)								INCHES to MILLIMETERS (IN x 25.40 = MM)							
mm	in	mm	in	mm	in	mm	in	in	mm	in	mm	in	mm	in	mm
.1	.0039	25	.9842	58	2.283	91	3.582	.001	.025	.6	15.240	1-15/16	49.21	3-5/16	84.14
.2	.0078	26	1.024	59	2.323	92	3.622	.002	.051	5/8	15.875	2	50.80	3-3/8	85.72
.3	.0118	27	1.063	60	2.362	93	3.661	.003	.076	11/16	17.462	2-1/16	52.39	3.4	86.36
.4	.0157	28	1.102	61	2.401	94	3.701	.004	.102	.7	17.780	2.1	53.34	3-7/16	87.31
.5	.0197	29	1.142	62	2.441	95	3.740	.005	.127	3/4	19.050	2-1/8	53.97	3-1/2	88.90
.6	.0236	30	1.181	63	2.480	96	3.779	.006	.152	.8	20.320	2-3/16	55.56	3-9/16	90.49
.7	.0275	31	1.220	64	2.519	97	3.819	.007	.178	13/16	20.638	2.2	55.88	3.6	91.44
.8	.0315	32	1.260	65	2.559	98	3.858	.008	.203	7/8	22.225	2-1/4	57.15	3-5/8	92.07
.9	.0354	33	1.299	66	2.598	99	3.897	.009	.229	.9	22.860	2.3	58.42	3-11/16	93.66
1	.0394	34	1.338	67	2.638	100	3.937	.010	.254	15/16	23.812	2-5/16	58.74	3.7	93.98
2	.0787	35	1.378	68	2.677	101	3.976	1/64	.397	1	25.40	2-3/8	60.32	3-3/4	95.25
3	.1181	36	1.417	69	2.716	102	4.016	.020	.508	1-1/16	26.99	2.4	60.96	3.8	96.52
4	.1575	37	1.456	70	2.756	103	4.055	.030	.762	1.1	27.94	2-7/16	61.91	3-13/16	96.84
5	.1968	38	1.496	71	2.795	104	4.094	1/32	.794	1-1/8	28.57	2-1/2	63.50	3-7/8	98.42
6	.2362	39	1.535	72	2.834	105	4.134	.040	1.016	1-3/16	30.16	2-9/16	65.09	3.9	99.06
7	.2756	40	1.575	73	2.874	106	4.173	.050	1.270	1.2	30.48	2.6	66.04	3-15/16	100.01
8	.3149	41	1.614	74	2.913	107	4.212	.060	1.524	1-1/4	31.75	2-5/8	66.67	4	101.6
9	.3543	42	1.653	75	2.953	108	4.252	1/16	1.588	1.3	33.02	2-11/16	68.26	4-1/16	102.19
10	.3937	43	1.693	76	2.992	109	4.291	.070	1.778	1-5/16	33.34	2.7	68.58	4.1	104.14
11	.4331	44	1.732	77	3.031	110	4.331	.080	2.032	1-3/8	34.92	2-3/4	69.85	4-1/8	104.77
12	.4724	45	1.772	78	3.071	111	4.370	.090	2.286	1.4	35.56	2.8	71.12	4-3/16	106.36
13	.5118	46	1.811	79	3.110	112	4.409	.1	2.540	1-7/16	36.51	2-13/16	71.44	4.2	106.68
14	.5512	47	1.850	80	3.149	113	4.449	1/8	3.175	1-1/2	38.10	2-7/8	73.02	4-1/4	107.95
15	.5905	48	1.890	81	3.189	114	4.488	3/16	4.762	1-9/16	39.69	2.9	73.66	4.3	109.22
16	.6299	49	1.929	82	3.228	115	4.527	.2	5.080	1.6	40.64	2-15/16	74.61	4-5/16	109.54
17	.6693	50	1.968	83	3.268	116	4.567	1/4	6.350	1-5/8	41.27	3	76.20	4-3/8	111.12
18	.7086	51	2.008	84	3.307	117	4.606	.3	7.620	1-11/16	42.86	3-1/16	77.79	4.4	111.76
19	.7480	52	2.047	85	3.346	118	4.645	5/16	7.938	1.7	43.18	3.1	78.74	4-7/16	112.71
20	.7874	53	2.086	86	3.386	119	4.685	3/8	9.525	1-3/4	44.45	3-1/8	79.37	4-1/2	114.30
21	.8268	54	2.126	87	3.425	120	4.724	.4	10.160	1.8	45.72	3-3/16	80.96	4-9/16	115.89
22	.8661	55	2.165	88	3.464	121	4.764	7/16	11.112	1-13/16	46.04	3.2	81.28	4.6	116.84
23	.9055	56	2.205	89	3.504	122	4.803	1/2	12.700	1-7/8	47.62	3-1/4	82.55	4-5/8	117.47
24	.9449	57	2.244	90	3.543	123	4.842	9/16	14.288	1.9	48.26	3.3	83.82	4-11/16	119.06

FLUID CONVERSION B.2

UNITED STATES SYSTEM

Unless otherwise specified, all fluid volume measurements in this manual are expressed in United States (U.S.) units-of-measure. See below:

- 1 pint (U.S.) = 16 fluid ounces (U.S.)
- 1 quart (U.S.) = 2 pints (U.S.) = 32 fl. oz. (U.S.)
- 1 gallon (U.S.) = 4 quarts (U.S.) = 128 fl. oz. (U.S.)

METRIC SYSTEM

Fluid volume measurements in this manual include the metric system equivalents. In the metric system, 1 liter (L) = 1,000 milliliters (mL). To convert between U.S. units-of-measure and metric units-of-measure, refer to the following:

- fluid ounces (U.S.) x 29.574 = milliliters
- pints (U.S.) x 0.473 = liters
- quarts (U.S.) x 0.946 = liters
- gallons (U.S.) x 3.785 = liters
- milliliters x 0.0338 = fluid ounces (U.S.)
- liters x 2.114 = pints (U.S.)
- liters x 1.057 = quarts (U.S.)
- liters x 0.264 = gallons (U.S.)

BRITISH IMPERIAL SYSTEM

Fluid volume measurements in this manual do not include the British Imperial (Imp.) system equivalents. The following conversions exist in the British Imperial system:

- 1 pint (Imp.) = 20 fluid ounces (Imp.)
- 1 quart (Imp.) = 2 pints (Imp.)
- 1 gallon (Imp.) = 4 quarts (Imp.)

Although the same unit-of-measure terminology as the U.S. system is used in the British Imperial (Imp.) system, the actual volume of each British Imperial unit-of-measure differs from its U.S. counterpart. The U.S. fluid ounce is larger than the British Imperial fluid ounce. However, the U.S. pint, quart, and gallon are smaller than the British Imperial pint, quart, and gallon, respectively. To convert between U.S. units and British Imperial units, refer to the following:

- fluid ounces (U.S.) x 1.042 = fluid ounces (Imp.)
- pints (U.S.) x 0.833 = pints (Imp.)
- quarts (U.S.) x 0.833 = quarts (Imp.)
- gallons (U.S.) x 0.833 = gallons (Imp.)
- fluid ounces (Imp.) x 0.960 = fluid ounces (U.S.)
- pints (Imp.) x 1.201 = pints (U.S.)
- quarts (Imp.) x 1.201 = quarts (U.S.)
- gallons (Imp.) x 1.201 = gallons (U.S.)

TORQUE CONVERSION B.3

UNITED STATES SYSTEM

The U.S. units of torque, foot pounds and inch pounds, are used in this manual. To convert units, use the following equations:

- foot pounds (ft-lbs) X 12.00000 = inch pounds (**in-lbs**)
- inch pounds (**in-lbs**) X 0.08333 = foot pounds (ft-lbs)

METRIC SYSTEM

All metric torque specifications are written in Newton-meters (Nm). To convert metric to United States units and United States to metric, use the following equations:

- Newton meters (Nm) X 0.737563 = foot pounds (ft-lbs)
- Newton meters (Nm) X 8.85085 = inch pounds (**in-lbs**)
- foot pounds (ft-lbs) X 1.35582 = Newton meters (Nm)
- inch pounds (**in-lbs**) X 0.112985 = Newton meters (Nm)

ACRONYMS AND ABBREVIATIONS

Table B-2. Acronyms and Abbreviations

ACRONYM OR ABBREVIATION	DESCRIPTION
A	Amperes
AAT	Ambient air temperature
ABS	Anti-lock braking system
AC	Alternating current
ACC	Accessory position on ignition switch
ACR	Automatic compression release
AGM	Absorbed glass mat (battery)
Ah	Ampere-hour
AIS	Active intake solenoid
AWG	American wire gauge
B+	Battery voltage
bar	Bar
BAS	Bank angle sensor
BCM	Body control module
BOB	Breakout box
BTDC	Before top dead center
°C	Celsius (Centigrade)
CA	California
CAL	Calibration
CAN	Controller area network
CB Tx	CB send transmission
CB Rx	CB receive transmission
cc	Cubic centimeters
CCA	Cold cranking amps
CCW	Counterclockwise
CKP	Crankshaft position
cm	Centimeters
cm^3	Cubic centimeters
CW	Clockwise
DC	Direct current
DLC	Data link connector
DOM	Domestic
DOT	Department of Transportation
DTC	Diagnostic trouble code
DVOM	Digital volt ohm meter
ECM	Electronic control module
ECT	Engine coolant temperature
ECU	Electronic control unit
EEPROM	Electrically erasable programmable read only memory
EFI	Electronic fuel injection
EHCU	Electro hydraulic control unit

Table B-2. Acronyms and Abbreviations

ACRONYM OR ABBREVIATION	DESCRIPTION
ET	Engine temperature
ETC	Electronic throttle control
EVAP	Evaporative emissions control system
°F	Fahrenheit
fl oz	Fluid ounce
FPS	Fuel pressure sensor
ft	Feet
ft-lbs	Foot pounds
FTP	Flash to pass
g	Gram
gal	Gallon
GAWR	Gross axle weight rating
GND	Ground (electrical)
GPS	Global positioning system
GVWR	Gross vehicle weight rating
HCU	Hydraulic control unit
HDI	Harley-Davidson International
HD-Link	Networking system
H-DSSS	Harley-Davidson smart security system
HFM	Hands-free mode
HFSM	Hands-free security module
Hg	Mercury
H02S	Heated oxygen sensor
hp	Horsepower
hr	Hour
IAC	Idle air control
IAT	Intake air temperature
IC	Instrument cluster
ID	Inside diameter
IGN	Ignition light/key switch position
IM	Instrument module
in	inch
in^3	Cubic inch
INJ PW	Injector pulse width
INTCM	Intercom
in-lbs	Inch pounds
JSS	Jiffy stand sensor
kg	Kilogram
km	Kilometer
km/h	Kilometers per hour
kPa	Kilopascal
kW	Kilowatt
L	Liter
lb	Pounds

Table B-2. Acronyms and Abbreviations

ACRONYM OR ABBREVIATION	DESCRIPTION
LCD	Liquid crystal display
LED	Light emitting diode
LH	Left hand
LHCM	Left hand control module
LP	License plate
LT	Left
mA	Milliampere
MAP	Manifold absolute pressure
max	Maximum
mi	Mile
min	Minimum
mL	Milliliter
mm	Millimeter
mph	Miles per hour
ms	Millisecond
Nm	Newton-meter
NIM	Navigation interface module
NiMH	Nickel metal hydride
N/A	Not applicable
O2	Oxygen
OD	Outside diameter
OEM	Original equipment manufacturer
oz	Ounce
P&A	Parts and Accessories
Part No.	Part number
PIN	Personal identification number
PND	Personal navigation device
psi	Pounds per square inch
PWM signal	Pulse width modulated signal
qt	Quart
RAD	Radio
RCM	Reverse control module
RDS	Radio data system
RES	Reserve mark on fuel supply valve
RH	Right hand
RHCM	Right hand control module
rpm	Revolutions per minute
RT	Right
s	Seconds
SCFH	Cubic feet per hour at standard conditions
SDARS	Satellite digital audio radio service
SPDO	Speedometer
SPKR	Speaker
STT	Stop/tail/turn

Table B-2. Acronyms and Abbreviations

ACRONYM OR ABBREVIATION	DESCRIPTION
TA	Traffic announcement
TCA	Throttle control actuator
TDC	Top dead center
TGS	Twist grip sensor
TPMS	Tire pressure monitoring system
TPS	Throttle position sensor
TSM	Turn signal module
TSSM	Turn signal/security module
TT	Telltale
USB	Universal serial bus
V	Volt
VAC	Volts of alternating current
VDC	Volts of direct current
VIN	Vehicle identification number
VR	Voice recognition
VSS	Vehicle speed sensor
W	Watt
WA	Weather alert
WSS	Wheel speed sensor

NOTES

Tools Used in This Manual

PART NUMBER	TOOL NAME	NOTES
93979-10	SCREAMIN' EAGLE MAGNETIC LIFTER HOLDERS	3.24 CAM COMPARTMENT AND COMPONENTS, Cam Support Plate and Cover Removal
93979-10	SCREAMIN' EAGLE MAGNETIC LIFTER HOLDERS	3.25 OIL PUMP, Removal
94448-82B	SHOCK ADJUSTMENT SPANNER	1.21 SUSPENSION ADJUSTMENTS, Shock Absorber Preload Adjustment
99650-02	HIGH-PERFORMANCE SEALANT, GRAY	3.28 CRANKCASE ASSEMBLY, Crankcase Assembly
B-45523	VALVE GUIDE REAMER	3.20 CYLINDER HEAD, Valve Guide Replacement
B-45524-1	VALVE GUIDE DRIVER	3.20 CYLINDER HEAD, Valve Guide Replacement
B-45524-2A	VALVE GUIDE INSTALLER SLEEVE	3.20 CYLINDER HEAD, Valve Guide Replacement
B-45525	VALVE GUIDE HONE	3.20 CYLINDER HEAD, Inspection
B-45525	VALVE GUIDE HONE	3.20 CYLINDER HEAD, Valve Guide Replacement
B-45655	CRANKCASE BEARING REMOVER/INSTALLER	3.26 CRANKCASE DISASSEMBLY AND REPAIR, Right Crankcase Half
B-45655	CRANKCASE BEARING REMOVER/INSTALLER	3.26 CRANKCASE DISASSEMBLY AND REPAIR, Right Crankcase Half
B-45655	CRANKCASE BEARING REMOVER/INSTALLER	3.26 CRANKCASE DISASSEMBLY AND REPAIR, Left Crankcase Half
B-45655	CRANKCASE BEARING REMOVER/INSTALLER	3.26 CRANKCASE DISASSEMBLY AND REPAIR, Left Crankcase Half
FRDH161	SNAP-ON "DOG BONE" TORQUE ADAPTER	3.23 TOP END OVERHAUL: ASSEMBLY, Rocker Arm Support Plate
HD-25070	ROBINAIR HEAT GUN	2.33 WINDSHIELD: FLD, Windshield Window
HD-25070	ROBINAIR HEAT GUN	3.26 CRANKCASE DISASSEMBLY AND REPAIR, Sprocket Shaft Bearing Inner Race
HD-25070	ROBINAIR HEAT GUN	3.26 CRANKCASE DISASSEMBLY AND REPAIR, Sprocket Shaft Bearing Inner Race
HD-25070	ROBINAIR HEAT GUN	7.33 HANDLEBAR CONTROL MODULES, Repair Procedures
HD-33223-1	CYLINDER COMPRESSION GAUGE	3.8 TROUBLESHOOTING, Compression Test
HD-33416	UNIVERSAL DRIVER	2.19 STEERING HEAD, Disassembly
HD-34634	FORK OIL SEAL INSTALLER	2.18 FRONT FORK, Assembly: Cartridge Fork (FLD, Left Side)
HD-34736-B	VALVE SPRING COMPRESSOR	3.20 CYLINDER HEAD, Disassembly
HD-34736-B	VALVE SPRING COMPRESSOR	3.20 CYLINDER HEAD, Assembly
HD-34751	VALVE GUIDE CLEANING BRUSH	3.20 CYLINDER HEAD, Inspection
HD-34751	VALVE GUIDE CLEANING BRUSH	3.20 CYLINDER HEAD, Valve Guide Replacement
HD-34751	VALVE GUIDE CLEANING BRUSH	3.20 CYLINDER HEAD, Valve Guide Replacement
HD-34751	VALVE GUIDE CLEANING BRUSH	3.20 CYLINDER HEAD, Valve and Seat Refacing
HD-34751	VALVE GUIDE CLEANING BRUSH	3.20 CYLINDER HEAD, Assembly
HD-34902-B	MAINSHAFT BEARING INNER RACE PULLER/INSTALLER	3.26 CRANKCASE DISASSEMBLY AND REPAIR, Sprocket Shaft Bearing Inner Race
HD-34902-C	MAINSHAFT BEARING INNER RACE REMOVER/INSTALLER	5.5 PRIMARY CHAINCASE HOUSING, Mainshaft Bearing Inner Race
HD-35316-10	PILOT	6.7 MAIN DRIVE GEAR AND BEARING, Removal
HD-35316-11	RECEIVER CUP	6.7 MAIN DRIVE GEAR AND BEARING, Removal
HD-35316-12	INSTALLER CUP	6.7 MAIN DRIVE GEAR AND BEARING, Installation
HD-35316-3A	CROSS PLATE	6.7 MAIN DRIVE GEAR AND BEARING, Removal
HD-35316-3A	CROSS PLATE	6.7 MAIN DRIVE GEAR AND BEARING, Installation

Tools Used in This Manual

PART NUMBER	TOOL NAME	NOTES
HD-35316-4A	8 IN BOLT	6.7 MAIN DRIVE GEAR AND BEARING, Removal
HD-35316-4A	8 IN BOLT	6.7 MAIN DRIVE GEAR AND BEARING, Installation
HD-35316-5	12 IN BOLT	6.7 MAIN DRIVE GEAR AND BEARING, Removal
HD-35316-5	12 IN BOLT	6.7 MAIN DRIVE GEAR AND BEARING, Installation
HD-35316-7	WASHER	6.7 MAIN DRIVE GEAR AND BEARING, Removal
HD-35316-7	WASHER	6.7 MAIN DRIVE GEAR AND BEARING, Installation
HD-35316-8	BEARING DRIVER	6.7 MAIN DRIVE GEAR AND BEARING, Installation
HD-35316-9	BEARING DRIVER	6.7 MAIN DRIVE GEAR AND BEARING, Removal
HD-35316-D	MAIN DRIVE GEAR/BEARING REMOVER AND INSTALLER	6.7 MAIN DRIVE GEAR AND BEARING, Removal
HD-35381-A	BELT TENSION GAUGE	1.11 DRIVE BELT AND SPROCKETS, Check Drive Belt Deflection
HD-35667-A	CYLINDER LEAKDOWN TESTER	3.8 TROUBLESHOOTING, Cylinder Leakdown Test
HD-35758-C	NEWAY VALVE SEAT CUTTER SET	3.20 CYLINDER HEAD, Valve and Seat Refacing
HD-39301-A	STEERING HEAD BEARING RACE REMOVER	2.19 STEERING HEAD, Disassembly
HD-39302	STEERING HEAD BEARING RACE INSTALLER	2.19 STEERING HEAD, Assembly
HD-39361-B	SPROCKET SHAFT OIL SEAL INSTALLER	3.28 CRANKCASE ASSEMBLY, Crankcase Assembly
HD-39782-B	CYLINDER HEAD SUPPORT STAND KIT	3.20 CYLINDER HEAD, Valve Guide Replacement
HD-39786	CYLINDER HEAD HOLDING FIXTURE	3.20 CYLINDER HEAD, Disassembly
HD-39786	CYLINDER HEAD HOLDING FIXTURE	3.20 CYLINDER HEAD, Valve Guide Replacement
HD-39786	CYLINDER HEAD HOLDING FIXTURE	3.20 CYLINDER HEAD, Valve and Seat Refacing
HD-39786	CYLINDER HEAD HOLDING FIXTURE	3.20 CYLINDER HEAD, Assembly
HD-39847	REAMER T-HANDLE	3.20 CYLINDER HEAD, Valve Guide Replacement
HD-39964	REAMER LUBRICANT	3.20 CYLINDER HEAD, Valve Guide Replacement
HD-39969	ULTRATORCH	7.33 HANDLEBAR CONTROL MODULES, Repair Procedures
HD-41177	FORK HOLDING TOOL	2.18 FRONT FORK, Disassembly: All But FLD Left Side
HD-41177	FORK HOLDING TOOL	2.18 FRONT FORK, Assembly: All But FLD Left Side
HD-41177	FORK HOLDING TOOL	2.18 FRONT FORK, Assembly: Cartridge Fork (FLD, Left Side)
HD-41177	FORK HOLDING TOOL	2.18 FRONT FORK, Assembly: Cartridge Fork (FLD, Left Side)
HD-41177	FORK HOLDING TOOL	2.18 FRONT FORK, Assembly: Cartridge Fork (FLD, Left Side)
HD-41182	FUEL PRESSURE GAUGE	4.14 FUEL PRESSURE TEST, Testing
HD-41183	HEAT SHIELD ATTACHMENT	7.33 HANDLEBAR CONTROL MODULES, Repair Procedures
HD-41417	PROPANE ENRICHMENT KIT	4.16 INTAKE LEAK TEST, Leak Tester
HD-41494	HUBCAP REMOVER AND INSTALLER	1.17 STEERING HEAD BEARINGS, Adjustment
HD-42311	OIL FILTER WRENCH	1.5 ENGINE OIL AND FILTER, Changing Oil and Oil Filter
HD-42317-A	PISTON PIN RETAINING RING INSTALLER	3.16 TOP END OVERHAUL: DISASSEMBLY, Piston
HD-42317-A	PISTON PIN RETAINING RING INSTALLER	3.23 TOP END OVERHAUL: ASSEMBLY, Piston

Tools Used in This Manual

PART NUMBER	TOOL NAME	NOTES
HD-42320-C	PISTON PIN REMOVER	3.16 TOP END OVERHAUL: DISASSEMBLY, Piston
HD-42322-A	PISTON SUPPORT PLATE	3.23 TOP END OVERHAUL: ASSEMBLY, Cylinder
HD-42324-A	CYLINDER TORQUE PLATES	3.16 TOP END OVERHAUL: DISASSEMBLY, Cylinder Head
HD-42324-A	CYLINDER TORQUE PLATES	3.20 CYLINDER HEAD, Inspection
HD-42324-A	CYLINDER TORQUE PLATES	3.21 CYLINDER, Inspection
HD-42325-A	CAMSHAFT NEEDLE BEARING REMOVER/INSTALLER	3.24 CAM COMPARTMENT AND COMPONENTS, Cam Needle Bearings
HD-42326-B	CRANKSHAFT GUIDE	3.28 CRANKCASE ASSEMBLY, Crankcase Assembly
HD-42326-B	CRANKSHAFT GUIDE	3.28 CRANKCASE ASSEMBLY, Crankcase Assembly
HD-42720-4	CRANKSHAFT BEARING DRIVER SHIM	3.26 CRANKCASE DISASSEMBLY AND REPAIR, Right Crankcase Half
HD-42720-4	CRANKSHAFT BEARING DRIVER SHIM	3.26 CRANKCASE DISASSEMBLY AND REPAIR, Right Crankcase Half
HD-42720-5	REMOVER/INSTALLER SUPPORT TUBE	3.26 CRANKCASE DISASSEMBLY AND REPAIR, Right Crankcase Half
HD-42720-5	REMOVER/INSTALLER SUPPORT TUBE	3.26 CRANKCASE DISASSEMBLY AND REPAIR, Right Crankcase Half
HD-42720-5	REMOVER/INSTALLER SUPPORT TUBE	3.26 CRANKCASE DISASSEMBLY AND REPAIR, Left Crankcase Half
HD-42720-5	REMOVER/INSTALLER SUPPORT TUBE	3.26 CRANKCASE DISASSEMBLY AND REPAIR, Left Crankcase Half
HD-44060-10A	COLLET	2.6 SEALED WHEEL BEARINGS, Removal
HD-44060-11A	COLLET	2.6 SEALED WHEEL BEARINGS, Removal
HD-44060-8	1 INCH INSTALLER	2.6 SEALED WHEEL BEARINGS, Installation
HD-44060C	WHEEL BEARING REMOVER/INSTALLER	2.6 SEALED WHEEL BEARINGS, Removal
HD-44060C	WHEEL BEARING REMOVER/INSTALLER	2.6 SEALED WHEEL BEARINGS, Installation
HD-44061	FUEL PRESSURE GAUGE ADAPTER	4.14 FUEL PRESSURE TEST, Testing
HD-44067A	OIL FILTER WRENCH	1.5 ENGINE OIL AND FILTER, Changing Oil and Oil Filter
HD-44358	FLYWHEEL SUPPORT FIXTURE	3.26 CRANKCASE DISASSEMBLY AND REPAIR, Sprocket Shaft Bearing Inner Race
HD-45305	FORK SEAL DRIVER	2.18 FRONT FORK, Assembly: All But FLD Left Side
HD-45966	FORK SPRING COMPRESSING TOOL	2.18 FRONT FORK, Disassembly: Cartridge Fork (FLD, Left Side)
HD-45966	FORK SPRING COMPRESSING TOOL	2.18 FRONT FORK, Disassembly: Cartridge Fork (FLD, Left Side)
HD-45966	FORK SPRING COMPRESSING TOOL	2.18 FRONT FORK, Assembly: Cartridge Fork (FLD, Left Side)
HD-45966	FORK SPRING COMPRESSING TOOL	2.18 FRONT FORK, Assembly: Cartridge Fork (FLD, Left Side)
HD-45966-2	FORK SPRING COMPRESSING TOOL COLLAR	2.18 FRONT FORK, Disassembly: Cartridge Fork (FLD, Left Side)
HD-46282A	FINAL DRIVE SPROCKET LOCKING TOOL	5.7 TRANSMISSION SPROCKET, Installation
HD-46282-A	FINAL DRIVE SPROCKET LOCKING TOOL	5.7 TRANSMISSION SPROCKET, Removal
HD-47853	FORK LOCK WRENCH	2.36 FORK LOCK, Removal

Tools Used in This Manual

PART NUMBER	TOOL NAME	NOTES
HD-47856-1	INSTALLER	6.7 MAIN DRIVE GEAR AND BEARING, Installation
HD-47856-2	PILOT	6.7 MAIN DRIVE GEAR AND BEARING, Installation
HD-47856-3	ADAPTER	6.7 MAIN DRIVE GEAR AND BEARING, Installation
HD-47856-6	NUT	6.7 MAIN DRIVE GEAR AND BEARING, Installation
HD-47856-7	CROW'S FOOT WRENCH	6.7 MAIN DRIVE GEAR AND BEARING, Installation
HD-47910	MAINSHAFT LOCKNUT WRENCH	5.7 TRANSMISSION SPROCKET, Removal
HD-47910	MAINSHAFT LOCKNUT WRENCH	5.7 TRANSMISSION SPROCKET, Installation
HD-47932	MAIN DRIVE GEAR BEARING AND SEAL INSTALLATION TOOL	6.7 MAIN DRIVE GEAR AND BEARING, Cleaning and Inspection
HD-47941	CRANKSHAFT/CAMSHAFT SPROCKET LOCKING TOOL	3.24 CAM COMPARTMENT AND COMPONENTS, Cam Support Plate and Cover Removal
HD-47941	CRANKSHAFT/CAMSHAFT SPROCKET LOCKING TOOL	3.24 CAM COMPARTMENT AND COMPONENTS, Cam Support Plate and Cover Installation
HD-47956	CAMSHAFT ASSEMBLY TOOL	3.24 CAM COMPARTMENT AND COMPONENTS, Camshafts
HD-48219	PRIMARY DRIVE LOCKING TOOL	5.4 DRIVE COMPONENTS, Removal
HD-48219	PRIMARY DRIVE LOCKING TOOL	5.4 DRIVE COMPONENTS, Installation
HD-48219	PRIMARY DRIVE LOCKING TOOL	5.4 DRIVE COMPONENTS, Installation
HD-48283	CRANKSHAFT ROTATING WRENCH	3.16 TOP END OVERHAUL: DISASSEMBLY, Rocker Arm Support Plate
HD-48498-A	ACR SOLENOID SOCKET	7.16 AUTOMATIC COMPRESSION RELEASE (ACR), Removal
HD-48648	BRAKE CALIPER PISTON REMOVER	2.13 REAR BRAKE CALIPER, Disassembly
HD-48649	FRONT BRAKE CALIPER PISTON REMOVER	2.11 FRONT BRAKE CALIPER, Disassembly
HD-48650	DIGITAL TECHNICIAN II	2.14 BRAKE LINES, Front Master Cylinder to Front Caliper Line Assembly
HD-48650	DIGITAL TECHNICIAN II	2.14 BRAKE LINES, ABS Module to Front Manifold Brake Lines
HD-48650	DIGITAL TECHNICIAN II	2.14 BRAKE LINES, ABS Module to Rear Brake Caliper
HD-48650	DIGITAL TECHNICIAN II	2.15 ABS MODULE (EHCU), Electro Hydraulic Control Unit (EHCU)
HD-48650	DIGITAL TECHNICIAN II	2.16 BLEEDING BRAKES, Procedure
HD-48650	DIGITAL TECHNICIAN II	7.4 ELECTRONIC CONTROL MODULE (ECM), General
HD-48650	DIGITAL TECHNICIAN II	7.38 H-DSSS ACTUATION, Fob Assignment
HD-48856-A	AXLE ALIGNMENT PLUG SET	2.9 VEHICLE ALIGNMENT, Inspection
HD-48985	SPOKE TORQUE WRENCH	1.7 TIRES AND WHEELS, Wheel Spokes
HD-48985	SPOKE TORQUE WRENCH	2.8 CHECKING AND TRUING WHEELS, True Laced Wheels
HD-50651	FORK NUT SOCKET	1.17 STEERING HEAD BEARINGS, Adjustment
HD-50651	FORK STEM NUT SOCKET	2.19 STEERING HEAD, Installation: FLD
HD-50988	IGNITION SWITCH SPANNER WRENCH	7.9 IGNITION SWITCH, Removal
HD-51337	SHIFTER SHAFT SEAL INSTALLATION TOOL	6.8 TRANSMISSION CASE, Assembly
HD-59000A	PRO-LEVEL OIL GAUGE	2.18 FRONT FORK, Assembly: All But FLD Left Side

Tools Used in This Manual

PART NUMBER	TOOL NAME	NOTES
HD-59000B	FORK OIL LEVEL GAUGE	2.18 FRONT FORK, Assembly: Cartridge Fork (FLD, Left Side)
HD-94660-2	PILOT	5.7 TRANSMISSION SPROCKET, Removal
HD-94660-2	PILOT	5.7 TRANSMISSION SPROCKET, Installation
HD-94681-80	SPOKE NIPPLE WRENCH	1.7 TIRES AND WHEELS, Wheel Spokes
HD-94681-80	SPOKE NIPPLE WRENCH	1.7 TIRES AND WHEELS, Wheel Spokes
HD-94681-80	SPOKE NIPPLE WRENCH	2.8 CHECKING AND TRUING WHEELS, Laced Wheel Rim Offset
HD-94681-80	SPOKE NIPPLE WRENCH	2.8 CHECKING AND TRUING WHEELS, True Laced Wheels
HD-94700-52C	SHOCK ADJUSTMENT SPANNER	1.21 SUSPENSION ADJUSTMENTS, Shock Absorber Preload Adjustment
HD-95637-10	LONG BOLTS	6.7 MAIN DRIVE GEAR AND BEARING, Removal
HD-95637-46B	WEDGE ATTACHMENT	3.26 CRANKCASE DISASSEMBLY AND REPAIR, Sprocket Shaft Bearing Inner Race
HD-95637-46B	WEDGE ATTACHMENT	3.26 CRANKCASE DISASSEMBLY AND REPAIR, Sprocket Shaft Bearing Inner Race
HD-95637-46B	WEDGE ATTACHMENT	6.7 MAIN DRIVE GEAR AND BEARING, Removal
HD-95952-1	THREADED CYLINDERS	3.23 TOP END OVERHAUL: ASSEMBLY, Cylinder
HD-95952-1	THREADED CYLINDERS	3.23 TOP END OVERHAUL: ASSEMBLY, Cylinder Head
HD-95952-33C	CONNECTING ROD CLAMPING TOOL	3.23 TOP END OVERHAUL: ASSEMBLY, Cylinder
HD-96333-51F	PISTON RING COMPRESSOR	3.23 TOP END OVERHAUL: ASSEMBLY, Cylinder
HD-96921-52D	OIL PRESSURE GAUGE SET	3.7 OIL PRESSURE, Checking Oil Pressure
HD-97087-65B	HOSE CLAMP PLIERS	4.4 FUEL TANK, Installation
HD-97225-55C	SPROCKET SHAFT BEARING INSTALLER	3.26 CRANKCASE DISASSEMBLY AND REPAIR, Sprocket Shaft Bearing Inner Race
HD-97225-55C	SPROCKET SHAFT BEARING INSTALLER	3.28 CRANKCASE ASSEMBLY, Crankcase Assembly
HD-99500-80	WHEEL TRUING AND BALANCING STAND	2.8 CHECKING AND TRUING WHEELS, Checking Wheel Runout
HD-99500-80	WHEEL TRUING AND BALANCING STAND	2.8 CHECKING AND TRUING WHEELS, True Laced Wheels
J-5586A	TRANSMISSION SHAFT RETAINING RING PLIERS	6.6 TRANSMISSION ASSEMBLY, Disassembly
OTC 6198	T70 SOCKET BIT	5.4 DRIVE COMPONENTS, Removal
OTC 6198	T70 SOCKET BIT	5.4 DRIVE COMPONENTS, Installation
RS-25100-200	BEARING	6.7 MAIN DRIVE GEAR AND BEARING, Removal
RS-25100-200	BEARING	6.7 MAIN DRIVE GEAR AND BEARING, Removal
SNAP-ON BB200A	BASIC VACUUM BRAKE BLEEDER	2.14 BRAKE LINES, Front Master Cylinder to Front Caliper Line Assembly
SNAP-ON BB200A	BASIC VACUUM BRAKE BLEEDER	2.14 BRAKE LINES, ABS Module to Front Manifold Brake Lines
SNAP-ON BB200A	BASIC VACUUM BRAKE BLEEDER	2.14 BRAKE LINES, ABS Module to Rear Brake Caliper
SNAP-ON BB200A	BASIC VACUUM BRAKE BLEEDER	2.15 ABS MODULE (EHCU), Electro Hydraulic Control Unit (EHCU)
SNAP-ON BB200A	BASIC VACUUM BRAKE BLEEDER	2.16 BLEEDING BRAKES, Procedure

Tools Used in This Manual

PART NUMBER	TOOL NAME	NOTES
SNAP-ON FRDH141	"DOG BONE" TORQUE ADAPTER	3.23 TOP END OVERHAUL: ASSEMBLY, Breather and Rocker Cover
SNAP-ON PRS8	PISTON RING EXPANDER	3.22 PISTON, Disassembly
SNAP-ON STX70E	T70 SOCKET BIT	5.4 DRIVE COMPONENTS, Removal
SNAP-ON STX70E	T70 SOCKET BIT	5.4 DRIVE COMPONENTS, Installation
SNAP-ON TA360	TORQUE ANGLE GAUGE	5.7 TRANSMISSION SPROCKET, Installation
TA360	SNAP-ON TORQUE ANGLE GAUGE	3.21 CYLINDER, Inspection
TA360	SNAP-ON TORQUE ANGLE GAUGE	3.23 TOP END OVERHAUL: ASSEMBLY, Cylinder Head

FASTENER	TORQUE VALUE		NOTES
ABS brake line flare nuts	120-144 **in-lbs**	13.6-16.3 Nm	2.14 BRAKE LINES, Front Master Cylinder to Front Caliper Line Assembly
ABS brake line flare nuts	120-144 **in-lbs**	13.6-16.3 Nm	2.14 BRAKE LINES, ABS Module to Front Manifold Brake Lines
ABS module bracket	90-114 **in-lbs**	10.2-12.8 Nm	7.11 STARTER, Installation
ABS module bracket	90-114 **in-lbs**	10.2-12.8 Nm	7.32 MAIN WIRING HARNESS, Installation
ABS module to bracket fastener	50-70 **in-lbs**	5.6-7.9 Nm	2.15 ABS MODULE (EHCU), Electro Hydraulic Control Unit (EHCU)
ABS module to frame fastener	90-114 **in-lbs**	10.2-12.8 Nm	2.15 ABS MODULE (EHCU), Electro Hydraulic Control Unit (EHCU)
ACR	13-17 ft-lbs	17.6-23.0 Nm	7.16 AUTOMATIC COMPRESSION RELEASE (ACR), Installation/Apply three equally spaced dots of LOCTITE 246 MEDIUM STRENGTH/HIGH TEMPERATURE THREADLOCKER (blue) around lower third of threads
Active exhaust cable clip screw	24-48 **in-lbs**	2.7-5.4 Nm	7.31 ACTIVE EXHAUST: HDI, Installation
Active exhaust module fasteners	36-60 **in-lbs**	4.0-6.8 Nm	7.31 ACTIVE EXHAUST: HDI, Installation
Adapter plate screw	55-60 **in-lbs**	5.2-6.8 Nm	4.3 AIR CLEANER ASSEMBLY, Installation, HO103
Air cleaner cover bracket screw	40-60 **in-lbs**	4.5-6.8 Nm	1.6 AIR CLEANER AND EXHAUST SYSTEM, Installation, All But HO103
Air cleaner cover bracket screw	40-60 **in-lbs**	4.5-6.8 Nm	4.3 AIR CLEANER ASSEMBLY, Installation, All But HO103
Air cleaner cover screw	36-60 **in-lbs**	4.1-6.8 Nm	1.6 AIR CLEANER AND EXHAUST SYSTEM, Installation, All But HO103/Apply LOCTITE 243 MEDIUM STRENGTH THREAD-LOCKER AND SEALANT (blue).
Air cleaner cover screw	36-60 **in-lbs**	4.1-6.8 Nm	1.6 AIR CLEANER AND EXHAUST SYSTEM, Installation, HO103/Apply a drop of LOCTITE 243 MEDIUM STRENGTH THREAD-LOCKER AND SEALANT (blue).
Air cleaner cover screw	36-60 **in-lbs**	4.1-6.8 Nm	4.3 AIR CLEANER ASSEMBLY, Installation, All But HO103
Air cleaner cover screw	36-60 **in-lbs**	4.1-6.8 Nm	4.3 AIR CLEANER ASSEMBLY, Installation, HO103/Apply LOCTITE 243 MEDIUM STRENGTH THREADLOCKER AND SEALANT (blue).
Axle adjuster	120-144 **in-lbs**	13.6-16.3 Nm	1.11 DRIVE BELT AND SPROCKETS, Adjusting Belt Deflection/Tighten after axle is tightened.
Axle cap fastener, front: all but FLD	132-180 **in-lbs**	14.9-20.3 Nm	2.4 FRONT WHEEL, Installation
Axle cap fastener, rear: all but FLD	132-180 **in-lbs**	14.9-20.3 Nm	2.4 FRONT WHEEL, Installation
Axle nut, front	70-75 ft-lbs	95.0-101.6 Nm	2.4 FRONT WHEEL, Installation
Axle nut, rear	95-105 ft-lbs	128.8-142.4 Nm	1.11 DRIVE BELT AND SPROCKETS, Adjusting Belt Deflection
Axle pinch bolt, front: FLD	18-22 ft-lbs	24.4-29.9 Nm	2.4 FRONT WHEEL, Installation
Banjo bolt to ABS module	14-18 ft-lbs	18.9-24.4 Nm	2.14 BRAKE LINES, ABS Module to Front Manifold Brake Lines
Banjo bolt to ABS module	14-18 ft-lbs	18.9-24.4 Nm	2.14 BRAKE LINES, Rear Master Cylinder to ABS Module
Banjo bolt to ABS module	14-18 ft-lbs	18.9-24.4 Nm	2.14 BRAKE LINES, ABS Module to Rear Brake Caliper
Banjo bolt to ABS module	14-18 ft-lbs	18.9-24.4 Nm	2.15 ABS MODULE (EHCU), Electro Hydraulic Control Unit (EHCU)

FASTENER	TORQUE VALUE		NOTES
Banjo bolt to front caliper	17-22 ft-lbs	23.0-29.8 Nm	2.14 BRAKE LINES, Front Master Cylinder to Front Caliper Line Assembly
Banjo bolt to front master cylinder	17-22 ft-lbs	23.0-29.8 Nm	2.10 FRONT BRAKE MASTER CYLINDER, Assembly and Installation
Banjo bolt to front master cylinder	17-22 ft-lbs	23.0-29.8 Nm	2.14 BRAKE LINES, Front Master Cylinder to Front Caliper Line Assembly
Banjo bolt to rear caliper	17-22 ft-lbs	23.0-29.8 Nm	2.14 BRAKE LINES, ABS Module to Rear Brake Caliper
Banjo bolt to rear master cylinder	17-22 ft-lbs	23.0-29.8 Nm	2.12 REAR BRAKE MASTER CYLINDER, Installation
Battery ground cable to transmission	66-114 **in-lbs**	7.5-12.9 Nm	6.8 TRANSMISSION CASE, Installation
Battery terminal screw	60-70 **in-lbs**	6.8-7.9 Nm	1.18 BATTERY MAINTENANCE, Installation and Connection
Battery terminal screw	60-70 **in-lbs**	6.8-7.9 Nm	1.18 BATTERY MAINTENANCE, Installation and Connection
Battery terminal screw	60-70 **in-lbs**	6.8-7.9 Nm	2.25 HANDLEBAR: FLD, Installation
Battery tray screws	96-120 **in-lbs**	10.8-13.6 Nm	7.10 BATTERY TRAY AND BATTERY CABLES, Battery Tray
Bottom brake caliper mounting bolt, front	28-38 ft-lbs	38.0-51.5 Nm	2.4 FRONT WHEEL, Installation
Bracket, saddlebag theft prevention: FLD	24-36 **in-lbs**	2.7-4.1 Nm	2.34 SADDLEBAGS: FLD, Saddlebag
Brake bridge bolt/pad pin, front caliper	15-16 ft-lbs	20.3-22.6 Nm	2.11 FRONT BRAKE CALIPER, Assembly
Brake caliper bleeder screw	80-100 **in-lbs**	9.0-11.3 Nm	2.11 FRONT BRAKE CALIPER, Assembly
Brake caliper bleeder screw	80-100 **in-lbs**	9.0-11.3 Nm	2.13 REAR BRAKE CALIPER, Assembly
Brake caliper bleeder valve	80-100 **in-lbs**	9.0-11.3 Nm	2.16 BLEEDING BRAKES, Procedure
Brake caliper bridge bolt, front	28-38 ft-lbs	38.0-51.5 Nm	2.11 FRONT BRAKE CALIPER, Assembly
Brake caliper mounting bolt, rear	120-168 **in-lbs**	13.6-18.9 Nm	2.13 REAR BRAKE CALIPER, Installation
Brake disc screws, rear	30-45 ft-lbs	40.7-61.0 Nm	2.5 REAR WHEEL, Assembly
Brake disc screws: front wheel	16-24 ft-lbs	21.7-32.5 Nm	2.4 FRONT WHEEL, Assembly
Brake disc screws: front wheel	16-24 ft-lbs	21.7-32.5 Nm	2.4 FRONT WHEEL, Assembly
Brake disc screws: front wheel	16-24 ft-lbs	21.7-32.5 Nm	2.4 FRONT WHEEL, Assembly
Brake disc screws: front wheel	16-24 ft-lbs	21.7-32.5 Nm	2.4 FRONT WHEEL, Assembly
Brake line clamp fastener: FXDL	45-65 **in-lbs**	5.1-7.3 Nm	7.12 HEADLAMP, Headlamp Visor: FXDL
Brake line clamp screw: FXDL	45-65 **in-lbs**	5.1-7.3 Nm	1.17 STEERING HEAD BEARINGS, Adjustment
Brake line guard screw: FXDF	45-65 **in-lbs**	5.1-7.3 Nm	2.15 ABS MODULE (EHCU), General
Brake manifold fastener	36-48 **in-lbs**	4.0-5.4 Nm	1.17 STEERING HEAD BEARINGS, Adjustment
Brake manifold to lower fork: FLD	36-48 **in-lbs**	4.0-5.4 Nm	2.19 STEERING HEAD, Installation: FLD
Brake pad pin, rear caliper	80-120 **in-lbs**	9.0-13.6 Nm	2.13 REAR BRAKE CALIPER, Assembly
Brake pad pin/bridge bolt, front caliper	15-16 ft-lbs	20.3-22.6 Nm	1.15 BRAKE PADS AND DISCS, Brake Pad Replacement
Brake switch/banjo bolt to rear master cylinder	17-22 ft-lbs	23.0-29.8 Nm	2.14 BRAKE LINES, Rear Master Cylinder to ABS Module
Breather assembly screws	120-156 **in-lbs**	13.6-17.6 Nm	3.23 TOP END OVERHAUL: ASSEMBLY, Breather and Rocker Cover
Breather bolt	120-144 **in-lbs**	13.6-16.3 Nm	4.3 AIR CLEANER ASSEMBLY, Installation, HO103

FASTENER	TORQUE VALUE		NOTES
Breather bolts	22-24 ft-lbs	29.8-32.5 Nm	4.3 AIR CLEANER ASSEMBLY, Installation, All But HO103/metric
Caliper, front, mounting bolt	28-38 ft-lbs	38.0-51.5 Nm	1.15 BRAKE PADS AND DISCS, Brake Pad Replacement
Cam chain tensioner fasteners	100-120 **in-lbs**	11.3-13.6 Nm	3.24 CAM COMPARTMENT AND COMPONENTS, Cam Support Plate and Cover Installation
Cam cover screws	125-155 **in-lbs**	14.1-17.5 Nm	3.24 CAM COMPARTMENT AND COMPONENTS, Cam Support Plate and Cover Installation
Cam sprocket flange bolt, final torque	34 ft-lbs	46.1 Nm	3.24 CAM COMPARTMENT AND COMPONENTS, Cam Support Plate and Cover Installation/Apply LOCTITE 262 HIGH STRENGTH THREADLOCKER AND SEALANT (red)
Cam sprocket flange bolt, first torque	15 ft-lbs	20.3 Nm	3.24 CAM COMPARTMENT AND COMPONENTS, Cam Support Plate and Cover Installation
Cam support plate screws	100-120 **in-lbs**	11.3-13.6 Nm	3.24 CAM COMPARTMENT AND COMPONENTS, Cam Support Plate and Cover Installation
Cartridge screw: FLD (left side)	10.8-18.0 ft-lbs	14.7-24.5 Nm	2.18 FRONT FORK, Assembly: Cartridge Fork (FLD, Left Side)
Charcoal canister fasteners: FLD	15-20 **in-lbs**	1.7-2.3 Nm	4.15 EXHAUST SYSTEM, Installation: FLD
Charcoal canister fasteners: FXDL	15-20 **in-lbs**	1.7-2.3 Nm	4.15 EXHAUST SYSTEM, Installation: FXDL
Charcoal canister mounting fasteners	15-20 **in-lbs**	1.7-2.3 Nm	4.17 EVAPORATIVE EMISSIONS CONTROL, Charcoal Canister
CKP sensor screw	90-120 **in-lbs**	10.1-13.6 Nm	7.15 CRANK POSITION SENSOR (CKP), Installation
Clutch adjuster screw jamnut	72-120 **in-lbs**	8.1-13.6 Nm	1.10 CLUTCH, Adjustment
Clutch cable adjustment jamnut	120 **in-lbs**	13.6 Nm	1.10 CLUTCH, Adjustment
Clutch cable fitting	90-120 **in-lbs**	10.2-13.6 Nm	6.5 CLUTCH RELEASE COVER, Assembly and Installation
Clutch cable guide fastener: FXDL	45-65 **in-lbs**	5.1-7.3 Nm	7.12 HEADLAMP, Headlamp Visor: FXDL
Clutch diaphragm spring retainer bolts	70-100 **in-lbs**	7.9-11.3 Nm	5.6 CLUTCH, Clutch Pack Only
Clutch hub mainshaft nut	70-80 ft-lbs	94.9-108.5 Nm	5.4 DRIVE COMPONENTS, Installation
Clutch inspection cover screws	84-108 **in-lbs**	9.5-12.2 Nm	1.8 PRIMARY CHAINCASE LUBRICANT, Change Primary Chaincase Lubricant/Torque sequence
Clutch inspection cover screws	84-108 **in-lbs**	9.5-12.2 Nm	1.10 CLUTCH, Adjustment
Clutch release cover screws	132-156 **in-lbs**	14.9-17.6 Nm	6.5 CLUTCH RELEASE COVER, Assembly and Installation
Compensating sprocket bolt, final torque	175 ft-lbs	237.3 Nm	5.4 DRIVE COMPONENTS, Installation
Compensating sprocket bolt, first torque	100 ft-lbs	135.6 Nm	5.4 DRIVE COMPONENTS, Installation/Loosen then final tighten
Console back clamp screw	10-20 **in-lbs**	1.1-2.3 Nm	7.23 INSTRUMENTS: FXDL, Installation
Console mounting screws	41-49 **in-lbs**	4.6-5.5 Nm	7.9 IGNITION SWITCH, Installation
Console mounting screws: FLD	41-49 **in-lbs**	4.6-5.5 Nm	7.26 INDICATOR LAMPS, Installation
Console mounting screws: FXDB, FXDBC, FXDBP, FXDWG and FXDF	41-49 **in-lbs**	4.6-5.5 Nm	7.26 INDICATOR LAMPS, Installation
Console mounting screws: FXDF, FLD	41-49 **in-lbs**	4.6-5.5 Nm	7.21 INSTRUMENTS: FXDF AND FLD, Speedometer

FASTENER	TORQUE VALUE		NOTES
Console to fuel tank fasteners: FXDB, FXDBC, FXDBP and FXDWG	41-49 **in-lbs**	4.6-5.5 Nm	7.22 INSTRUMENTS: FXDB, FXDBC, FXDBP AND FXDWG, Installation
Console to fuel tank fasteners: FXDL	41-49 **in-lbs**	4.6-5.5 Nm	7.23 INSTRUMENTS: FXDL, Installation
Control module housing screw	35-45 **in-lbs**	4.0-5.1 Nm	2.25 HANDLEBAR: FLD, Installation
Control module housing screw	35-45 **in-lbs**	4.0-5.1 Nm	2.25 HANDLEBAR: FLD, Installation
Cover insert screw	27-32 **in-lbs**	3.1-3.6 Nm	1.6 AIR CLEANER AND EXHAUST SYSTEM, Installation, HO103
Cover insert screw	27-32 **in-lbs**	3.1-3.6 Nm	4.3 AIR CLEANER ASSEMBLY, Installation, HO103
Crankcase pipe plugs	120-144 **in-lbs**	13.6-16.3 Nm	3.26 CRANKCASE DISASSEMBLY AND REPAIR, Pipe Plug and Oil Fittings
Crankcase screws, final torque	15-19 ft-lbs	20.3-25.8 Nm	3.28 CRANKCASE ASSEMBLY, Crankcase Assembly
Crankcase screws, first torque	120 **in-lbs**	13.6 Nm	3.28 CRANKCASE ASSEMBLY, Crankcase Assembly/Loosen then final tighten
Crankshaft sprocket bolt, final torque	24 ft-lbs	32.5 Nm	3.24 CAM COMPARTMENT AND COMPONENTS, Cam Support Plate and Cover Installation
Crankshaft sprocket bolt, first torque	15 ft-lbs	20.3 Nm	3.24 CAM COMPARTMENT AND COMPONENTS, Cam Support Plate and Cover Installation/Apply LOCTITE 262 HIGH STRENGTH THREADLOCKER AND SEALANT (red)
Cylinder head bolts, final torque	90 degrees	90 degrees	3.23 TOP END OVERHAUL: ASSEMBLY, Cylinder Head
Cylinder head bolts, first torque	120-144 **in-lbs**	13.6-16.3 Nm	3.23 TOP END OVERHAUL: ASSEMBLY, Cylinder Head/ See procedure to tighten
Cylinder head bolts, second torque	15-17 ft-lbs	20.3-23.0 Nm	3.23 TOP END OVERHAUL: ASSEMBLY, Cylinder Head
Cylinder head bracket bolts	35-40 ft-lbs	47.5-54.2 Nm	3.13 ASSEMBLING MOTORCYCLE AFTER SERVICE, Procedure
Cylinder head bracket bolts	35-40 ft-lbs	47.5-54.2 Nm	3.15 INSTALLING ENGINE IN CHASSIS, Procedure
Cylinder stud	120-240 **in-lbs**	13.6-27.1 Nm	3.26 CRANKCASE DISASSEMBLY AND REPAIR, Cylinder Studs
Cylinder torque plate bolts, final torque	90 degrees	90 degrees	3.21 CYLINDER, Inspection
Cylinder torque plate bolts, first torque	120-144 **in-lbs**	13.6-16.3 Nm	3.21 CYLINDER, Inspection/ See procedure to tighten
Cylinder torque plate bolts, second torque	15-17 ft-lbs	20.3-23.0 Nm	3.21 CYLINDER, Inspection
Debris deflector screws	40-60 **in-lbs**	4.5-6.8 Nm	2.5 REAR WHEEL, Installation
Debris deflector screws	40-60 **in-lbs**	4.5-6.8 Nm	2.20 BELT GUARD AND DEBRIS DEFLECTOR, Debris Deflector Installation
Electrical caddy fastener, front	40-60 **in-lbs**	4.5-6.8 Nm	7.3 ELECTRICAL CADDY, Installation
Electrical caddy fasteners, top	90-110 **in-lbs**	10.1-12.4 Nm	7.3 ELECTRICAL CADDY, Installation
Engine mount flange nut	22-27 ft-lbs	29.9-36.6 Nm	2.37 ENGINE MOUNTS, Installation
Engine oil drain plug	14-21 ft-lbs	19.0-28.5 Nm	1.5 ENGINE OIL AND FILTER, Changing Oil and Oil Filter
Engine oil drain plug	14-21 ft-lbs	19.0-28.5 Nm	3.29 OIL PAN, Installation/Clean plug before installation

FASTENER	TORQUE VALUE		NOTES
Engine temperature sensor	120-180 **in-lbs**	13.6-20.3 Nm	4.7 ENGINE TEMPERATURE SENSOR (ET), Installation/Hand start 2-3 turns
Exhaust bracket bolt, rear	25-30 ft-lbs	33.9-40.7 Nm	4.15 EXHAUST SYSTEM, Installation: FXDB, FXDBC and FXDBP
Exhaust cross-over pipe clamp	20-25 ft-lbs	27.1-33.9 Nm	4.15 EXHAUST SYSTEM, Installation: FXDB, FXDBC and FXDBP
Exhaust flange nut (lower front cylinder)	100-120 **in-lbs**	11.3-13.6 Nm	4.15 EXHAUST SYSTEM, Installation: FXDB, FXDBC and FXDBP
Exhaust flange nut (lower front cylinder): FLD	100-120 **in-lbs**	11.3-13.6 Nm	4.15 EXHAUST SYSTEM, Installation: FLD
Exhaust flange nut (lower front cylinder): FXDF and FXDWG	100-120 **in-lbs**	11.3-13.6 Nm	4.15 EXHAUST SYSTEM, Installation: FXDF and FXDWG
Exhaust flange nut (lower front cylinder): FXDL	100-120 **in-lbs**	11.3-13.6 Nm	4.15 EXHAUST SYSTEM, Installation: FXDL
Exhaust flange nut (lower rear cylinder)	100-120 **in-lbs**	11.3-13.6 Nm	4.15 EXHAUST SYSTEM, Installation: FXDB, FXDBC and FXDBP
Exhaust flange nut (lower rear cylinder): FLD	100-120 **in-lbs**	11.3-13.6 Nm	4.15 EXHAUST SYSTEM, Installation: FLD
Exhaust flange nut (lower rear cylinder): FXDF and FXDWG	100-120 **in-lbs**	11.3-13.6 Nm	4.15 EXHAUST SYSTEM, Installation: FXDF and FXDWG
Exhaust flange nut (lower rear cylinder): FXDL	100-120 **in-lbs**	11.3-13.6 Nm	4.15 EXHAUST SYSTEM, Installation: FXDL
Exhaust flange nut (upper front cylinder, final torque)	100-120 **in-lbs**	11.3-13.6 Nm	4.15 EXHAUST SYSTEM, Installation: FXDB, FXDBC and FXDBP
Exhaust flange nut (upper front cylinder, final torque): FLD	100-120 **in-lbs**	11.3-13.6 Nm	4.15 EXHAUST SYSTEM, Installation: FLD
Exhaust flange nut (upper front cylinder, final torque): FXDF and FXDWG	100-120 **in-lbs**	11.3-13.6 Nm	4.15 EXHAUST SYSTEM, Installation: FXDF and FXDWG
Exhaust flange nut (upper front cylinder, final torque): FXDL	100-120 **in-lbs**	11.3-13.6 Nm	4.15 EXHAUST SYSTEM, Installation: FXDL
Exhaust flange nut (upper front cylinder, initial torque)	9-18 **in-lbs**	1-2 Nm	4.15 EXHAUST SYSTEM, Installation: FXDB, FXDBC and FXDBP
Exhaust flange nut (upper front cylinder, initial torque): FLD	9-18 **in-lbs**	1-2 Nm	4.15 EXHAUST SYSTEM, Installation: FLD
Exhaust flange nut (upper front cylinder, initial torque): FXDF and FXDWG	9-18 **in-lbs**	1-2 Nm	4.15 EXHAUST SYSTEM, Installation: FXDF and FXDWG
Exhaust flange nut (upper front cylinder, initial torque): FXDL	9-18 **in-lbs**	1-2 Nm	4.15 EXHAUST SYSTEM, Installation: FXDL
Exhaust flange nut (upper rear cylinder, final torque)	100-120 **in-lbs**	11.3-13.6 Nm	4.15 EXHAUST SYSTEM, Installation: FXDB, FXDBC and FXDBP
Exhaust flange nut (upper rear cylinder, final torque): FLD	100-120 **in-lbs**	11.3-13.6 Nm	4.15 EXHAUST SYSTEM, Installation: FLD
Exhaust flange nut (upper rear cylinder, final torque): FXDF and FXDWG	100-120 **in-lbs**	11.3-13.6 Nm	4.15 EXHAUST SYSTEM, Installation: FXDF and FXDWG
Exhaust flange nut (upper rear cylinder, final torque): FXDL	100-120 **in-lbs**	11.3-13.6 Nm	4.15 EXHAUST SYSTEM, Installation: FXDL
Exhaust flange nut (upper rear cylinder, initial torque)	9-18 **in-lbs**	1-2 Nm	4.15 EXHAUST SYSTEM, Installation: FXDB, FXDBC and FXDBP

FASTENER	TORQUE VALUE		NOTES
Exhaust flange nut (upper rear cylinder, initial torque): FLD	9-18 **in-lbs**	1-2 Nm	4.15 EXHAUST SYSTEM, Installation: FLD
Exhaust flange nut (upper rear cylinder, initial torque): FXDF and FXDWG	9-18 **in-lbs**	1-2 Nm	4.15 EXHAUST SYSTEM, Installation: FXDF and FXDWG
Exhaust flange nut (upper rear cylinder, initial torque): FXDL	9-18 **in-lbs**	1-2 Nm	4.15 EXHAUST SYSTEM, Installation: FXDL
Exhaust pipe clamp, front	25-30 ft-lbs	33.9-40.7 Nm	4.15 EXHAUST SYSTEM, Installation: FXDB, FXDBC and FXDBP
Exhaust shield worm drive clamps	20-40 **in-lbs**	2.3-4.5 Nm	4.15 EXHAUST SYSTEM, Installation: FXDB, FXDBC and FXDBP
Exhaust shield worm drive clamps: FLD	20-40 **in-lbs**	2.3-4.5 Nm	4.15 EXHAUST SYSTEM, Installation: FLD
Exhaust shield worm drive clamps: FXDF and FXDWG	20-40 **in-lbs**	2.3-4.5 Nm	4.15 EXHAUST SYSTEM, Installation: FXDF and FXDWG
Exhaust shield worm drive clamps: FXDL	20-40 **in-lbs**	2.3-4.5 Nm	4.15 EXHAUST SYSTEM, Installation: FXDL
Filter element screw	55-60 **in-lbs**	5.2-6.8 Nm	1.6 AIR CLEANER AND EXHAUST SYSTEM, Installation, HO103/Apply LOCTITE 243 MEDIUM STRENGTH THREADLOCKER AND SEALANT (blue).
Filter element screw	55-60 **in-lbs**	5.2-6.8 Nm	4.3 AIR CLEANER ASSEMBLY, Installation, HO103/Apply LOCTITE 243 MEDIUM STRENGTH THREADLOCKER AND SEALANT (blue)
Footpeg bracket screws	25-35 ft-lbs	33.9-47.5 Nm	3.13 ASSEMBLING MOTORCYCLE AFTER SERVICE, Procedure
Footpeg bracket screws	25-35 ft-lbs	33.9-47.5 Nm	3.15 INSTALLING ENGINE IN CHASSIS, Procedure
Footpeg bracket screws	25-35 ft-lbs	33.9-47.5 Nm	3.15 INSTALLING ENGINE IN CHASSIS, Procedure
Footrest mounting screws and nuts	84-108 **in-lbs**	9.5-12.2 Nm	2.31 FOOTBOARDS AND FOOTRESTS, Rider Footrests: Mid Controls
Footrest mounting screws and nuts	84-108 **in-lbs**	9.5-12.2 Nm	2.31 FOOTBOARDS AND FOOTRESTS, Rider Footrests: Forward Controls
Footrest support mounting screws	30-40 ft-lbs	40.7-54.2 Nm	2.31 FOOTBOARDS AND FOOTRESTS, Rider Footrests: Mid Controls
Footrest support mounting screws	30-40 ft-lbs	40.7-54.2 Nm	2.31 FOOTBOARDS AND FOOTRESTS, Rider Footrests: Mid Controls
Footrest support mounting screws	32-37 ft-lbs	43.4-50.2 Nm	2.31 FOOTBOARDS AND FOOTRESTS, Rider Footrests: Forward Controls
Footrest support mounting screws	32-37 ft-lbs	43.4-50.2 Nm	2.31 FOOTBOARDS AND FOOTRESTS, Rider Footrests: Forward Controls
Fork clamp pinch bolts: lower	30-35 ft-lbs	40.7-47.5 Nm	1.17 STEERING HEAD BEARINGS, Adjustment
Fork clamp stem nut	70-80 ft-lbs	95-108.5 Nm	1.17 STEERING HEAD BEARINGS, Adjustment
Fork stem nut: FLD	70-80 ft-lbs	94.9-108.4 Nm	2.19 STEERING HEAD, Installation: FLD
Fork tube cap: FLD (left side)	22-59 ft-lbs	30-80 Nm	2.18 FRONT FORK, Assembly: Cartridge Fork (FLD, Left Side)
Fork tube caps	22-59 ft-lbs	30-80 Nm	2.18 FRONT FORK, Assembly: All But FLD Left Side
Front and rear isolator mounting bolts to frame	22-27 ft-lbs	29.9-36.6 Nm	2.9 VEHICLE ALIGNMENT, Inspection

FASTENER	TORQUE VALUE		NOTES
Front belt guard fastener	120-180 **in-lbs**	13.6-20.3 Nm	2.20 BELT GUARD AND DEBRIS DEFLECTOR, Belt Guard Installation
Front brake caliper lower mounting bolt	28-38 ft-lbs	38.0-51.5 Nm	2.11 FRONT BRAKE CALIPER, Installation
Front brake caliper upper mounting bolt	28-38 ft-lbs	38.0-51.5 Nm	2.11 FRONT BRAKE CALIPER, Installation
Front brake line manifold fastener	36-48 **in-lbs**	4.1-5.4 Nm	2.14 BRAKE LINES, Front Master Cylinder to Front Caliper Line Assembly
Front caliper banjo bolt	17-22 ft-lbs	23.1-29.9 Nm	2.11 FRONT BRAKE CALIPER, Installation
Front caliper mounting bolt	28-38 ft-lbs	38.0-51.5 Nm	1.15 BRAKE PADS AND DISCS, Brake Pad Replacement
Front engine bracket bolts to engine	25-32 ft-lbs	34.0-43.3 Nm	2.37 ENGINE MOUNTS, Installation
Front engine mounting bracket bolts	25-32 ft-lbs	33.9-43.4 Nm	3.15 INSTALLING ENGINE IN CHASSIS, Procedure
Front fender nuts: all	15-21 ft-lbs	20.3-28.5 Nm	2.28 FRONT FENDER, Installation
Front fork seat pipe screw	30-37 ft-lbs	40-50 Nm	2.18 FRONT FORK, Assembly: All But FLD Left Side
Front isolator mounting bolts to frame	22-27 ft-lbs	29.9-36.6 Nm	2.37 ENGINE MOUNTS, Installation
Front isolator mounting bolts to front engine bracket	22-27 ft-lbs	29.9-36.6 Nm	2.37 ENGINE MOUNTS, Installation
Front isolator mounting bolts to front engine bracket	18-22 ft-lbs	24.4-29.9 Nm	2.9 VEHICLE ALIGNMENT, Inspection
Front master cylinder reservoir cover screws	6-8 **in-lbs**	0.7-0.9 Nm	2.16 BLEEDING BRAKES, Procedure
Front pipe clamp: FLD	25-30 ft-lbs	33.9-40.6 Nm	4.15 EXHAUST SYSTEM, Installation: FLD
Fuel supply tube fastener	90-110 **in-lbs**	10.2-12.4 Nm	4.12 FUEL INJECTORS, Installation
Fuel tank mounting fasteners	15-20 ft-lbs	20.3-27.1 Nm	4.4 FUEL TANK, Installation/Front and rear
Fuel tank trim screw: FXDF, FLD	18-24 **in-lbs**	2.03-2.71 Nm	7.21 INSTRUMENTS: FXDF AND FLD, Speedometer
Hand control module housing screws	35-45 **in-lbs**	4.0-5.1 Nm	2.10 FRONT BRAKE MASTER CYLINDER, Assembly and Installation
Hand control module housing screws	35-45 **in-lbs**	4.0-5.1 Nm	7.34 LEFT HANDLEBAR CONTROL MODULE, Installation
Hand control module housing screws	35-45 **in-lbs**	4.0-5.1 Nm	7.35 RIGHT HANDLEBAR CONTROL MODULE, Installation
Hand control module screws	35-45 **in-lbs**	4.0-5.1 Nm	2.21 THROTTLE CONTROL, Assembly/Installation
Handlebar clamp fastener: FXDL	12-16 ft-lbs	16.3-21.7 Nm	2.27 HANDLEBAR: FXDL, Installation
Handlebar clutch lever clamp screws	60-80 **in-lbs**	6.8-9.0 Nm	7.34 LEFT HANDLEBAR CONTROL MODULE, Installation
Handlebar master cylinder clamp screws	60-80 **in-lbs**	6.8-9.0 Nm	2.10 FRONT BRAKE MASTER CYLINDER, Assembly and Installation
Handlebar master cylinder clamp screws	60-80 **in-lbs**	6.8-9.0 Nm	7.35 RIGHT HANDLEBAR CONTROL MODULE, Installation
Handlebar module assembly retainer screws	8-10 **in-lbs**	0.9-1.1 Nm	7.34 LEFT HANDLEBAR CONTROL MODULE, Installation
Handlebar module assembly retainer screws	8-10 **in-lbs**	0.9-1.1 Nm	7.35 RIGHT HANDLEBAR CONTROL MODULE, Installation
Handlebar riser bolts: FLD	30-40 ft-lbs	40.7-54.2 Nm	2.19 STEERING HEAD, Installation: FLD

FASTENER	TORQUE VALUE		NOTES
Handlebar riser bolts: FLD	30-40 ft-lbs	40.7-54.2 Nm	2.32 HEADLAMP NACELLE: FLD, Upper and Lower Nacelle
Handlebar riser clamp screws	12-16 ft-lbs	16.3-21.7 Nm	2.27 HANDLEBAR: FXDL, Handlebar and Riser Adjustment
Handlebar riser fastener: FLD	30-40 ft-lbs	40.7-54.2 Nm	2.25 HANDLEBAR: FLD, Installation
Handlebar riser fastener: FXDB, FXDBC, FXDBP final tightening	30-40 ft-lbs	40.7-54.2 Nm	2.26 HANDLEBAR: FXDB, FXDBC, FXDBP, FXDF AND FXDWG, Installation
Handlebar riser fastener: FXDF, FXDWG, final tightening	30-40 ft-lbs	40.7-54.2 Nm	2.26 HANDLEBAR: FXDB, FXDBC, FXDBP, FXDF AND FXDWG, Installation
Handlebar switch assembly retainer screws	8-10 **in-lbs**	0.9-1.1 Nm	7.34 LEFT HANDLEBAR CONTROL MODULE, Clutch Switch Replacement
Handlebar switch assembly retainer screws	8-10 **in-lbs**	0.9-1.1 Nm	7.35 RIGHT HANDLEBAR CONTROL MODULE, Front Brake Switch Replacement
Headlamp clamp nut: FXDL	120-240 **in-lbs**	14-27 Nm	1.20 HEADLAMP ALIGNMENT, Headlamp Adjustment: FXDL
Headlamp door screw: FLD	9-18 **in-lbs**	1.0-2.0 Nm	7.12 HEADLAMP, Headlamp: FLD
Headlamp horizontal adjusting bolt	25-30 ft-lbs	33.9-40.7 Nm	1.20 HEADLAMP ALIGNMENT, Headlamp Adjustment: All BUT FLD and FXDL
Headlamp screws: FLD	7-10 **in-lbs**	0.8-1.1 Nm	7.12 HEADLAMP, Headlamp: FLD
Headlamp vertical adjusting nut	25-30 ft-lbs	33.9-40.7 Nm	1.20 HEADLAMP ALIGNMENT, Headlamp Adjustment: All BUT FLD and FXDL
Headlamp visor bolts: FXDL	30-40 ft-lbs	40.7-54.2 Nm	7.12 HEADLAMP, Headlamp Visor: FXDL
Headlight horizontal adjusting bolt	25-30 ft-lbs	33.9-40.7 Nm	7.12 HEADLAMP, Headlamp Assembly: All But FLD and FXDL
Headlight to nacelle: FLD	7-10 **in-lbs**	0.8-1.1 Nm	2.19 STEERING HEAD, Installation: FLD
Headlight to nacelle: FLD	7-10 **in-lbs**	0.8-1.1 Nm	2.32 HEADLAMP NACELLE: FLD, Upper and Lower Nacelle
Horn mounting nut	120-180 **in-lbs**	13.6-20.3 Nm	7.30 HORN, Replacement: All But FXDL
Horn mounting nut	80-100 **in-lbs**	9.0-11.3 Nm	7.30 HORN, Replacement: FXDL
Horn mount screw	13-15 ft-lbs	17.6-20.3 Nm	7.30 HORN, Replacement: FXDL
Ignition switch nut	140-160 **in-lbs**	15.8-18.1 Nm	7.9 IGNITION SWITCH, Installation
Ignition switch screws	20-30 **in-lbs**	2.3-3.4 Nm	7.9 IGNITION SWITCH, Installation
Ignition switch set screw	20-26 **in-lbs**	2.3-2.9 Nm	7.9 IGNITION SWITCH, Installation
Intake air temperature sensor fastener	15-20 **in-lbs**	1.7-2.3 Nm	4.6 INTAKE AIR TEMPERATURE SENSOR (IAT), Installation
Jiffy stand sensor screw	96-144 **in-lbs**	10.8-16.3 Nm	2.35 JIFFY STAND, Jiffy Stand Sensor: HDI Models
License bracket screws: FLD	60-80 **in-lbs**	6.8-9.0 Nm	7.14 TURN SIGNALS, Rear Turn Signal Lamps and Bracket: FLD
License plate lamp screws: FXDF	10-17 **in-lbs**	1.1-1.9 Nm	7.13 TAIL LAMP, Tail Lamp Replacement: FXDF
Lifter cover screws	100-120 **in-lbs**	11.3-13.6 Nm	3.23 TOP END OVERHAUL: ASSEMBLY, Push-rods, Lifters and Covers
Lower nacelle fasteners: FLD	84-120 **in-lbs**	9.5-13.5 Nm	2.19 STEERING HEAD, Installation: FLD
Lower nacelle fasteners: FLD	84-120 **in-lbs**	9.5-13.5 Nm	2.32 HEADLAMP NACELLE: FLD, Upper and Lower Nacelle
Lumbar nameplate mounting screw: FXDL	48-60 **in-lbs**	5.4-6.8 Nm	2.30 SEAT, Lumbar Pad: FXDL
Lumbar pad mounting screw: FXDL	48-60 **in-lbs**	5.4-6.8 Nm	2.30 SEAT, Lumbar Pad: FXDL

FASTENER	TORQUE VALUE		NOTES
Main bearing, right, retaining screws	40-70 **in-lbs**	4.5-7.9 Nm	3.26 CRANKCASE DISASSEMBLY AND REPAIR, Right Crankcase Half/Used screws - apply LOCTITE 243 MEDIUM STRENGTH THREAD-LOCKER AND SEALANT (blue)
Mainshaft/countershaft nuts	85-95 ft-lbs	115.3-128.8 Nm	6.6 TRANSMISSION ASSEMBLY, Assembly
Manifold mounting screws, final torque	96-156 **in-lbs**	10.9-17.6 Nm	4.8 INDUCTION MODULE, Installation
Manifold mounting screws, first torque	16-20 **in-lbs**	1.8-2.3 Nm	4.8 INDUCTION MODULE, Installation
Master cylinder mounting nut, rear	30-40 ft-lbs	40.7-54.2 Nm	2.12 REAR BRAKE MASTER CYLINDER, Installation
Master cylinder reservoir cover screws: front cover	6-8 **in-lbs**	0.7-0.9 Nm	1.15 BRAKE PADS AND DISCS, Brake Pad Replacement
Master cylinder reservoir cover screws: front cover	6-8 **in-lbs**	0.68-0.90 Nm	2.10 FRONT BRAKE MASTER CYLINDER, Assembly and Installation
Master cylinder reservoir cover screws: front cover	6-8 **in-lbs**	0.7-0.9 Nm	2.11 FRONT BRAKE CALIPER, Installation
Master cylinder reservoir cover screws: rear cover, including ABS	6-8 **in-lbs**	0.7-0.9 Nm	1.15 BRAKE PADS AND DISCS, Brake Pad Replacement
Master cylinder reservoir rear cover screws: FLD (ABS and non-ABS) and all other non-ABS models	6-8 **in-lbs**	0.68-0.90 Nm	2.12 REAR BRAKE MASTER CYLINDER, Installation
Mirror acorn nut: FLD	84-156 **in-lbs**	9.5-17.6 Nm	7.14 TURN SIGNALS, Front Turn Signal Lamps: FLD
Mounting stud	55-60 **in-lbs**	5.2-6.8 Nm	4.3 AIR CLEANER ASSEMBLY, Installation, HO103
Muffler bracket bolt: FXDF and FXDWG	15-19 ft-lbs	20.3-25.8 Nm	4.15 EXHAUST SYSTEM, Installation: FXDF and FXDWG
Muffler bracket fastener: FLD	17-21 ft-lbs	23.0-28.5 Nm	4.15 EXHAUST SYSTEM, Installation: FLD
Muffler bracket fastener: FXDL	17-21 ft-lbs	23.0-28.5 Nm	4.15 EXHAUST SYSTEM, Installation: FXDL
Muffler bracket flange nuts: FXDF and FXDWG	15-19 ft-lbs	20.3-25.8 Nm	4.15 EXHAUST SYSTEM, Installation: FXDF and FXDWG
Muffler clamp nut: FLD	38-43 ft-lbs	51.6-58.4 Nm	4.15 EXHAUST SYSTEM, Installation: FLD
Muffler clamp nut: FXDL	38-43 ft-lbs	51.6-58.4 Nm	4.15 EXHAUST SYSTEM, Installation: FXDL
Muffler clamp nuts	38-43 ft-lbs	51.6-58.4 Nm	4.15 EXHAUST SYSTEM, Installation: FXDB, FXDBC and FXDBP
Muffler clamp nuts: FXDF and FXDWG	38-43 ft-lbs	51.6-58.4 Nm	4.15 EXHAUST SYSTEM, Installation: FXDF and FXDWG
Muffler fastener: FLD	17-21 ft-lbs	23.0-28.5 Nm	4.15 EXHAUST SYSTEM, Installation: FLD
Muffler fastener: FXDL	17-21 ft-lbs	23.0-28.5 Nm	4.15 EXHAUST SYSTEM, Installation: FXDL
Muffler mounting bolt: FXDF and FXDWG	15-19 ft-lbs	20.3-25.8 Nm	4.15 EXHAUST SYSTEM, Installation: FXDF and FXDWG
Muffler support bracket nuts	20-30 ft-lbs	27.1-40.7 Nm	4.15 EXHAUST SYSTEM, Installation: FXDB, FXDBC and FXDBP
Nacelle bolts, upper	84-120 **in-lbs**	9.5-13.5 Nm	1.17 STEERING HEAD BEARINGS, Adjustment
Negative battery fastener: all	60-70 **in-lbs**	6.8-7.9 Nm	2.26 HANDLEBAR: FXDB, FXDBC, FXDBP, FXDF AND FXDWG, Installation
Neutral switch	120-180 **in-lbs**	13.6-20.3 Nm	6.8 TRANSMISSION CASE, Installation
Neutral switch	120-180 **in-lbs**	13.6-20.3 Nm	7.27 NEUTRAL SWITCH, Installation

FASTENER	TORQUE VALUE		NOTES
Nut, fork tube cap: FLD (left side)	13.0-16.6 ft-lbs	17.5-22.5 Nm	2.18 FRONT FORK, Assembly: Cartridge Fork (FLD, Left Side)
Oil pan screws	132-156 **in-lbs**	14.9-17.6 Nm	3.29 OIL PAN, Installation
Oil pressure switch	96-144 **in-lbs**	10.8-16.3 Nm	7.28 OIL PRESSURE SWITCH, Installation
Oil pump screws, final torque	90-120 **in-lbs**	10.2-13.6 Nm	3.24 CAM COMPARTMENT AND COMPONENTS, Cam Support Plate and Cover Installation
Oil pump screws, first torque	40-45 **in-lbs**	4.5-5.1 Nm	3.24 CAM COMPARTMENT AND COMPONENTS, Cam Support Plate and Cover Installation
Oil spout fastener	84-132 **in-lbs**	9.5-14.9 Nm	6.6 TRANSMISSION ASSEMBLY, Installation
Oxygen sensor	12.2-14.2 ft-lbs	16.5-19.3 Nm	4.11 OXYGEN SENSOR, Installation
Pad pin, rear caliper	80-120 **in-lbs**	9.0-13.5 Nm	1.15 BRAKE PADS AND DISCS, Brake Pad Replacement
Passenger footrest screw and nut	84-108 **in-lbs**	9.5-12.2 Nm	2.31 FOOTBOARDS AND FOOTRESTS, Passenger Footrests: All But FXDB
Passenger footrest support mounting screw	25-35 ft-lbs	33.9-47.4 Nm	2.31 FOOTBOARDS AND FOOTRESTS, Passenger Footrests: All But FXDB
Pinch bolts	30-35 ft-lbs	40.7-47.5 Nm	2.18 FRONT FORK, Installation
Piston jet screws	25-35 **in-lbs**	2.8-3.9 Nm	3.26 CRANKCASE DISASSEMBLY AND REPAIR, Right Crankcase Half
Pivot shaft nut	70-77 ft-lbs	95.0-104.5 Nm	2.23 REAR FORK, Installation
Primary chaincase drain plug	14-21 ft-lbs	19.0-28.5 Nm	1.8 PRIMARY CHAINCASE LUBRICANT, Change Primary Chaincase Lubricant
Primary chaincase sealing fasteners	26-28 ft-lbs	35.3-38.0 Nm	5.5 PRIMARY CHAINCASE HOUSING, Installation
Primary chain tensioner fasteners	21-24 ft-lbs	28.5-32.6 Nm	5.4 DRIVE COMPONENTS, Installation
Primary cover fasteners	12-13 ft-lbs	16.0-17.6 Nm	5.3 PRIMARY CHAINCASE COVER, Installation/Apply LOCTITE 243 MEDIUM STRENGTH THREADLOCKER AND SEALANT (blue).
Primary cover mass, Japanese models only	15-19 ft-lbs	20.3-25.6 Nm	5.3 PRIMARY CHAINCASE COVER, Installation/Apply two drops of LOCTITE 262 HIGH STRENGTH THREADLOCKER AND SEALANT (red)
Quick-connect fitting	22-26 ft-lbs	29.8-35.3 Nm	4.4 FUEL TANK, Installation
Rear axle nut	95-105 ft-lbs	128.8-142.4 Nm	2.5 REAR WHEEL, Installation
Rear belt guard fastener	120-180 **in-lbs**	13.6-20.3 Nm	2.20 BELT GUARD AND DEBRIS DEFLECTOR, Belt Guard Installation
Rear caliper banjo bolt	17-22 ft-lbs	23.1-29.9 Nm	2.13 REAR BRAKE CALIPER, Installation
Rear caliper fasteners	16-20 ft-lbs	21.7-27.1 Nm	1.15 BRAKE PADS AND DISCS, Brake Pad Replacement
Rear fender cover front screw: all	12-18 ft-lbs	16.3-24.4 Nm	2.38 SAREE GUARD: INDIA MODELS, Replacement
Rear fender cover rear screw: all	12-18 ft-lbs	16.3-24.4 Nm	2.38 SAREE GUARD: INDIA MODELS, Replacement
Rear fender screw: FLD	30-37 ft-lbs	40.7-50.2 Nm	2.29 REAR FENDER, FLD/Apply LOCTITE 243 MEDIUM STRENGTH THREADLOCKER AND SEALANT (blue).
Rear fender screw: FXDB, FXDBC, FXDBP	12-18 ft-lbs	16.3-24.4 Nm	2.29 REAR FENDER, FXDB, FXDBC, FXDBP
Rear fender screw: FXDF	12-18 ft-lbs	16.3-24.4 Nm	2.29 REAR FENDER, FXDF

FASTENER	TORQUE VALUE		NOTES
Rear fender screw: FXDL	12-18 ft-lbs	16.3-24.4 Nm	2.29 REAR FENDER, FXDL
Rear fender screw: FXDWG	12-18 ft-lbs	16.3-24.4 Nm	2.29 REAR FENDER, FXDWG
Rear fork brake hose J-clip	40-60 **in-lbs**	4.5-6.8 Nm	2.14 BRAKE LINES, ABS Module to Rear Brake Caliper
Rear fork brake hose J-clip	40-60 **in-lbs**	4.5-6.8 Nm	2.23 REAR FORK, Assembly
Rear isolator mounting bolts to transmission case	22-27 ft-lbs	29.9-36.6 Nm	2.9 VEHICLE ALIGNMENT, Inspection
Rear isolator to frame bolts	22-27 ft-lbs	29.9-36.6 Nm	2.37 ENGINE MOUNTS, Installation
Rear light bar housing screws: FLD	84-144 **in-lbs**	9.5-16.3 Nm	7.14 TURN SIGNALS, Rear Turn Signal Lamps and Bracket: FLD/Use LOCTITE 271 HIGH STRENGTH THREADLOCKER (red)
Rear master cylinder reservoir cover screws, non-ABS models	6-8 **in-lbs**	0.7-0.9 Nm	2.16 BLEEDING BRAKES, Procedure
Rear mount license plate bracket screws: FXDWG	30-40 **in-lbs**	3.4-4.5 Nm	2.29 REAR FENDER, FXDWG
Rear shock, lower screws: all	30-40 ft-lbs	40.7-54.2 Nm	2.38 SAREE GUARD: INDIA MODELS, Replacement
Rear sprocket screws-final torque	67-73 ft-lbs	90.9-99.0 Nm	2.5 REAR WHEEL, Assembly
Rear sprocket screws-initial torque	50 ft-lbs	67.8 Nm	2.5 REAR WHEEL, Assembly
Rear stop lamp switch	12-15 ft-lbs	16.3-20.3 Nm	7.29 REAR STOPLAMP SWITCH, Installation
Rear turn signal lamp fastener	12-16 ft-lbs	16.3-21.7 Nm	7.14 TURN SIGNALS, Rear Lamp Housing Replacement: All But FLD
Rider footboard bracket screws	32-37 ft-lbs	43-50 Nm	2.31 FOOTBOARDS AND FOOTRESTS, Rider Footboards
Rider footboard pivot bolt nut	60-80 **in-lbs**	6.8-9.0 Nm	2.31 FOOTBOARDS AND FOOTRESTS, Rider Footboards
Riser clamp fasteners: FXDL	15-19 ft-lbs	20.3-25.8 Nm	7.12 HEADLAMP, Headlamp Visor: FXDL
Rocker arm support plate screws	18-22 ft-lbs	24.4-29.8 Nm	3.23 TOP END OVERHAUL: ASSEMBLY, Rocker Arm Support Plate
Rocker cover screws	15-18 ft-lbs	20.3-24.4 Nm	3.23 TOP END OVERHAUL: ASSEMBLY, Breather and Rocker Cover/Apply LOCTITE 243 MEDIUM STRENGTH THREADLOCKER AND SEALANT (blue).
Rocker housing screws	120-168 **in-lbs**	13.6-19.0 Nm	3.23 TOP END OVERHAUL: ASSEMBLY, Cylinder Head/Apply LOCTITE 243 MEDIUM STRENGTH THREADLOCKER AND SEALANT (blue).
Saddlebag inner/outer support screws: FLD	96-120 **in-lbs**	10.8-13.6 Nm	2.34 SADDLEBAGS: FLD, Saddlebag
Saddlebag latch attaching screws: FLD	14-20 **in-lbs**	1.6-2.3 Nm	2.34 SADDLEBAGS: FLD, Saddlebag
Saddlebag latch faceplate nut: FLD	7-17 **in-lbs**	0.8-1.9 Nm	2.34 SADDLEBAGS: FLD, Saddlebag Lid
Saddlebag latch faceplate screws: FLD	14-20 **in-lbs**	1.6-2.3 Nm	2.34 SADDLEBAGS: FLD, Saddlebag Lid
Saddlebag latch pivot screw: FLD	96-120 **in-lbs**	10.8-13.6 Nm	2.34 SADDLEBAGS: FLD, Saddlebag
Saddlebag latch screws: FLD	14-20 **in-lbs**	1.6-2.3 Nm	2.34 SADDLEBAGS: FLD, Saddlebag Lid
Saddlebag lock screws: FLD	30-40 **in-lbs**	3.4-4.5 Nm	2.34 SADDLEBAGS: FLD, Saddlebag Lid
Saddlebag lower mount screws: FLD	96-120 **in-lbs**	10.8-13.6 Nm	2.34 SADDLEBAGS: FLD, Saddlebag

FASTENER	TORQUE VALUE		NOTES
Saddlebag lower mount spool: FLD	15-20 ft-lbs	20.3-27.1 Nm	2.29 REAR FENDER, FLD/Apply LOCTITE 243 MEDIUM STRENGTH THREADLOCKER AND SEALANT (blue).
Seat rear fastener: all	20-40 **in-lbs**	2.3-4.5 Nm	2.30 SEAT, Installation
Seat rear fastener: all	20-40 **in-lbs**	2.3-4.5 Nm	2.30 SEAT, Installation
Seat shoulder bolt: FXDWG	80-90 **in-lbs**	9.0-10.2 Nm	2.30 SEAT, Installation
Seat strap nut: FLD	60-90 **in-lbs**	6.8-10.2 Nm	2.29 REAR FENDER, FLD
Seat strap nut: FXDWG	60-90 **in-lbs**	6.8-10.2 Nm	2.30 SEAT, Installation
Secondary cam chain tensioner fastener	90-120 **in-lbs**	10.2-13.6 Nm	3.24 CAM COMPARTMENT AND COMPONENTS, Camshafts
Shift drum detent arm fastener	120-150 **in-lbs**	13.6-17.0 Nm	6.6 TRANSMISSION ASSEMBLY, Assembly
Shift drum lock plate fasteners	57-63 **in-lbs**	6.4-7.1 Nm	6.6 TRANSMISSION ASSEMBLY, Assembly
Shifter foot lever pinch bolt	18-22 ft-lbs	24.4-29.8 Nm	3.15 INSTALLING ENGINE IN CHASSIS, Procedure
Shifter linkage locknut	96-144 **in-lbs**	10.8-16.3 Nm	6.4 SHIFTER LINKAGE, Shifter Rod Adjustment
Shifter pawl centering screw	18-23 ft-lbs	24.4-31.2 Nm	6.8 TRANSMISSION CASE, Assembly
Shifter rod lever pinch screw, transmission lever	18-22 ft-lbs	24.4-29.8 Nm	6.8 TRANSMISSION CASE, Assembly
Shift lever bolt	18-22 ft-lbs	24.4-29.8 Nm	5.3 PRIMARY CHAINCASE COVER, Installation
Shift lever screw	18-22 ft-lbs	24.4-29.8 Nm	6.4 SHIFTER LINKAGE, Shifter Rod Adjustment
Shift rod fastener with acorn nut	96-144 **in-lbs**	10.8-16.2 Nm	2.31 FOOTBOARDS AND FOOTRESTS, Rider Footboards
Shift rod jamnut	80-120 **in-lbs**	9.0-13.6 Nm	6.4 SHIFTER LINKAGE, Shifter Rod Adjustment
Shock mounting fastener, lower	30-40 ft-lbs	40.7-54.2 Nm	2.5 REAR WHEEL, Installation/LOCTITE 243 MEDIUM STRENGTH THREADLOCKER AND SEALANT (blue)
Shock mounting fastener, lower	30-40 ft-lbs	40.7-54.2 Nm	2.22 REAR SHOCK ABSORBERS, Installation/LOCTITE 243 MEDIUM STRENGTH THREADLOCKER AND SEALANT (blue)
Shock mounting fastener, upper	30-40 ft-lbs	40.7-54.2 Nm	2.5 REAR WHEEL, Installation/LOCTITE 243 MEDIUM STRENGTH THREADLOCKER AND SEALANT (blue)
Shock mounting fastener, upper	30-40 ft-lbs	40.7-54.2 Nm	2.22 REAR SHOCK ABSORBERS, Installation/LOCTITE 243 MEDIUM STRENGTH THREADLOCKER AND SEALANT (blue)
Shock mounting stud nut, inner	75-85 ft-lbs	101.7-115.2 Nm	2.22 REAR SHOCK ABSORBERS, Installation
Side mount license plate bracket screws: FXDWG	84-180 **in-lbs**	9.5-20.3 Nm	2.29 REAR FENDER, FXDWG
Slider cover fasteners: FLD	84-120 **in-lbs**	9.5-13.5 Nm	2.32 HEADLAMP NACELLE: FLD, Upper and Lower Nacelle
Solenoid contact post jamnut	65-80 **in-lbs**	7.3-9.0 Nm	7.11 STARTER, Solenoid
Solenoid terminal post nut	70-90 **in-lbs**	7.9-10.2 Nm	7.11 STARTER, Drive Assembly
Spark plug	12-18 ft-lbs	16.3-24.4 Nm	1.16 SPARK PLUGS, Inspection
Spark plug	12-18 ft-lbs	16.3-24.4 Nm	3.8 TROUBLESHOOTING, Compression Test
Speedometer screw: FXDB, FXDBC, FXDBP and FXDWG	10-20 **in-lbs**	1.1-2.3 Nm	7.22 INSTRUMENTS: FXDB, FXDBC, FXDBP AND FXDWG, Installation
Speedometer VSS mounting bolt	84-108 **in-lbs**	9.5-12.2 Nm	7.24 VEHICLE SPEED SENSOR (VSS), Installation

FASTENER	TORQUE VALUE		NOTES
Spoke nipple	55 **in-lbs**	6.2 Nm	1.7 TIRES AND WHEELS, Wheel Spokes
Spoke nipple	55 **in-lbs**	6.2 Nm	2.8 CHECKING AND TRUING WHEELS, True Laced Wheels
Stabilizer link bolt	18-22 ft-lbs	24.4-29.8 Nm	3.13 ASSEMBLING MOTORCYCLE AFTER SERVICE, Procedure
Stabilizer link bolt	18-22 ft-lbs	24.4-29.8 Nm	3.15 INSTALLING ENGINE IN CHASSIS, Procedure
Starter end cover screw	90-110 **in-lbs**	10.2-12.4 Nm	7.11 STARTER, Drive Assembly
Starter mounting fasteners	25-27 ft-lbs	33.9-36.6 Nm	7.11 STARTER, Installation
Starter positive terminal nut	60-80 **in-lbs**	6.8-9.0 Nm	7.10 BATTERY TRAY AND BATTERY CABLES, Battery Cables/metric
Starter positive terminal nut	60-80 **in-lbs**	6.8-9.0 Nm	7.11 STARTER, Installation
Starter ring terminal hex nut	60-80 **in-lbs**	6.8-9.0 Nm	7.11 STARTER, Solenoid
Starter through bolts	39-65 **in-lbs**	4.4-7.3 Nm	7.11 STARTER, Drive Assembly
Stator screws	55-75 **in-lbs**	6.2-8.4 Nm	7.18 ALTERNATOR, Installation/Stator screws, use only once
Switch housing screw	35-45 **in-lbs**	4.0-5.1 Nm	1.12 THROTTLE CABLES, Cable Inspection and Lubrication
Tail lamp base screws: FLD, FXDL	40-48 **in-lbs**	4.5-5.4 Nm	7.13 TAIL LAMP, Base Replacement: FLD and FXDL
Tail lamp base screws: FXDWG (HDI and Canada)	66-90 **in-lbs**	7.5-10.1 Nm	7.13 TAIL LAMP, Base Replacement: FXDWG/HDI and Canada
Tail lamp bracket screws: FXDF	60-80 **in-lbs**	6.8-9.0 Nm	7.13 TAIL LAMP, Tail Lamp Replacement: FXDF
Tail lamp lens screws	20-24 **in-lbs**	2.3-2.7 Nm	7.13 TAIL LAMP, Tail Lamp Bulb Replacement: FLD and FXDL
Tail lamp lens screws: FLD, FXDL	20-24 **in-lbs**	2.3-2.7 Nm	7.13 TAIL LAMP, Base Replacement: FLD and FXDL
Tail lamp screws: FXDF	13-18 **in-lbs**	1.4-2.0 Nm	7.13 TAIL LAMP, Tail Lamp Replacement: FXDF
Tether assembly screws: FLD	8-12 **in-lbs**	0.9-1.4 Nm	2.34 SADDLEBAGS: FLD, Saddlebag Lid
Throttle cable bracket fasteners	20-35 **in-lbs**	2.3-4.0 Nm	4.9 IDLE AIR CONTROL (IAC), Installation
Throttle cable bracket fasteners	20-35 **in-lbs**	2.3-4.0 Nm	4.10 MANIFOLD ABSOLUTE PRESSURE SENSOR (MAP), Installation/Use new screws
Throttle cable guide fastener: FXDL	45-65 **in-lbs**	5.1-7.3 Nm	7.12 HEADLAMP, Headlamp Visor: FXDL
Throttle position sensor fasteners	18 **in-lbs**	2.0 Nm	4.5 THROTTLE POSITION SENSOR (TPS), Installation
Timer cover screws	20-30 **in-lbs**	2.3-3.4 Nm	3.24 CAM COMPARTMENT AND COMPONENTS, Cam Support Plate and Cover Installation
Top brake caliper mounting bolt, front	28-38 ft-lbs	38.0-51.5 Nm	2.4 FRONT WHEEL, Installation
Top plate fasteners	27-33 **in-lbs**	3.1-3.7 Nm	4.13 FUEL PUMP, Installation
Top plate fasteners	27-33 **in-lbs**	3.1-3.7 Nm	7.20 FUEL GAUGE SENDER, Installation
Transmission bearing housing fasteners	23-25 ft-lbs	31.2-33.9 Nm	6.6 TRANSMISSION ASSEMBLY, Installation
Transmission drain plug	14-21 ft-lbs	19.0-28.5 Nm	1.9 TRANSMISSION LUBRICANT, Change Transmission Lubricant
Transmission drain plug	14-21 ft-lbs	19.0-28.5 Nm	3.29 OIL PAN, Installation/Clean plug before installation
Transmission drain plug	14-21 ft-lbs	19.0-28.5 Nm	6.6 TRANSMISSION ASSEMBLY, Installation

FASTENER	TORQUE VALUE		NOTES
Transmission drain plug	14-21 ft-lbs	19.0-28.5 Nm	6.8 TRANSMISSION CASE, Installation
Transmission filler plug/dipstick	25-75 **in-lbs**	2.8-8.5 Nm	1.9 TRANSMISSION LUBRICANT, Check Transmission Lubricant
Transmission filler plug/dipstick	25-75 **in-lbs**	2.8-8.5 Nm	1.9 TRANSMISSION LUBRICANT, Change Transmission Lubricant
Transmission ground stud nut	96-144 **in-lbs**	10.8-16.3 Nm	7.10 BATTERY TRAY AND BATTERY CABLES, Battery Cables
Transmission mounting bolts, final torque	34-39 ft-lbs	46.1-52.9 Nm	3.15 INSTALLING ENGINE IN CHASSIS, Procedure
Transmission mounting bolts, final torque	34-39 ft-lbs	46.1-52.9 Nm	6.8 TRANSMISSION CASE, Installation
Transmission mounting bolts, initial torque	15 ft-lbs	20.3 Nm	3.15 INSTALLING ENGINE IN CHASSIS, Procedure
Transmission mounting bolts, initial torque	15 ft-lbs	20.3 Nm	6.8 TRANSMISSION CASE, Installation
Transmission sprocket lockplate screws	90-120 **in-lbs**	10.2-13.6 Nm	5.7 TRANSMISSION SPROCKET, Installation/Lock patch, use 3-5 times
Transmission sprocket nut, final torque	35 ft-lbs	47.5 Nm	5.7 TRANSMISSION SPROCKET, Installation/plus 35-40 degrees
Transmission sprocket nut, final torque	35-40 degrees	35-40 degrees	5.7 TRANSMISSION SPROCKET, Installation/Do not loosen to align lockplate screws.
Transmission sprocket nut, initial torque	100 ft-lbs	135.6 Nm	5.7 TRANSMISSION SPROCKET, Installation/Right-hand threads, initial torque only, apply several drops of LOCTITE 271 HIGH STRENGTH THREADLOCKER (red) to last few threads.
Transmission top cover	90-120 **in-lbs**	10.2-13.6 Nm	6.6 TRANSMISSION ASSEMBLY, Installation
Upper and lower pinch bolts: FLD	30-35 ft-lbs	40.7-47.5 Nm	2.19 STEERING HEAD, Installation: FLD
Upper handlebar clamp fastener, front: all	12-16 ft-lbs	16.3-21.7 Nm	2.25 HANDLEBAR: FLD, Installation
Upper handlebar clamp fastener, rear: all	12-16 ft-lbs	16.3-21.7 Nm	2.25 HANDLEBAR: FLD, Installation
Upper handlebar clamp fastener: FXDB, FXDBC, FXDBP, FXDF, FXDWG, final tightening	12-16 ft-lbs	16.3-21.7 Nm	2.26 HANDLEBAR: FXDB, FXDBC, FXDBP, FXDF AND FXDWG, Installation
Upper handlebar clamp fastener: FXDB, FXDBC, FXDBP, initial tightening	12-16 ft-lbs	16.3-21.7 Nm	2.26 HANDLEBAR: FXDB, FXDBC, FXDBP, FXDF AND FXDWG, Installation
Upper handlebar clamp fastener: FXDB, FXDBC, FXDBP final tightening	12-16 ft-lbs	16.3-21.7 Nm	2.26 HANDLEBAR: FXDB, FXDBC, FXDBP, FXDF AND FXDWG, Installation
Upper nacelle fasteners: FLD	84-120 **in-lbs**	9.5-13.5 Nm	2.19 STEERING HEAD, Installation: FLD
Upper nacelle fasteners: FLD	84-120 **in-lbs**	9.5-13.5 Nm	2.32 HEADLAMP NACELLE: FLD, Upper and Lower Nacelle
Valve stem nut	12-15 **in-lbs**	1.4-1.7 Nm	2.17 TIRES, Installation
Valve stem nut, tube type	3-7 **in-lbs**	0.3-0.8 Nm	2.17 TIRES, Installation
Voltage regulator fasteners	100-120 **in-lbs**	11.2-13.6 Nm	7.17 VOLTAGE REGULATOR, Installation
VSS fastener	100-120 **in-lbs**	11.3-13.6 Nm	6.8 TRANSMISSION CASE, Installation
Windshield docking hardware: FLD	84-120 **in-lbs**	9.5-13.5 Nm	2.19 STEERING HEAD, Installation: FLD
Windshield docking hardware: FLD	84-120 **in-lbs**	9.5-13.5 Nm	2.32 HEADLAMP NACELLE: FLD, Upper and Lower Nacelle
Windshield window screws: FLD	20-25 **in-lbs**	2.3-2.8 Nm	2.33 WINDSHIELD: FLD, Windshield Window

A

ABS Brake Lines, Front
- Installation . . . 2-58
- Mid Line Installation . . . 2-60
- Mid Line Removal . . . 2-58
- Removal . . . 2-58

ABS Module
- Removal . . . 2-65

Acronyms and Abbreviations . . . B-4
Active Exhaust Module . . . 7-69
- Installation . . . 7-69
- Removal . . . 7-69
- Repair . . . 7-69

Air Cleaner
- Backplate Assembly: HDI Models . . . 4-8

Air Cleaner, All But HO103
- Installation . . . 4-6
- Removal . . . 4-5

Air Cleaner, HO103
- Installation . . . 4-7
- Removal . . . 4-6

Air Cleaner Filter, All But HO103
- Installation . . . 1-17
- Removal . . . 1-16

Air Filter, HO103
- Installation . . . 1-18
- Removal . . . 1-17

Alternator
- Installation . . . 7-47
- Removal . . . 7-47

Assembling Motorcycle after Service . . . 3-25
Automatic Compression Release (ACR) . . . 7-44
- Installation . . . 7-44
- Removal . . . 7-44

B

Badges . . . 2-142
Battery
- Charging . . . 1-45
- Cleaning . . . 1-45
- Inspection . . . 1-45
- Maintenance . . . 1-44
- Storage . . . 1-47
- Voltage Test . . . 1-45

Battery Cables
- Routing . . . 7-18

Battery Maintenance
- Disconnection and Removal . . . 1-46
- Installation and Connection . . . 1-47

Battery Tray and Battery Cables
- Battery Tray Installation . . . 7-17
- Battery Tray Removal . . . 7-17

Belt Guard
- Installation . . . 2-89
- Removal . . . 2-89

Body Control Module (BCM)
- Installation . . . 7-10
- Removal . . . 7-9

Bottom End Overhaul (Assembly)
- Cam Support Plate and Cover . . . 3-78
- Crankcase . . . 3-95

Bottom End Overhaul (Disassembly)
- Cam Support Plate . . . 3-70
- Crankcase . . . 3-85

Bottom End Service
- Cam Compartment Service . . . 3-22
- Engine Removed (Flywheel Compartment Service or Complete Engine Overhaul) . . . 3-23

Brake Line
- ABS Module to Rear Brake Caliper . . . 2-63
- Rear Master Cylinder to ABS Module . . . 2-61

Brake Pads and Discs
- Brake Pad Replacement . . . 1-39
- Inspection . . . 1-38

Brakes
- Bleeding . . . 2-68
- Rear Pedal Height . . . 1-36

Breather Assembly
- Cleaning and Inspection . . . 3-35
- Disassembly . . . 3-35
- Operation . . . 3-14

Bulb Replacement
- Headlamp (Single Headlamp Models) . . . 7-24
- Tail Lamp . . . 7-31
- Turn Signals (Bullet Style) . . . 7-36

C

Cable and Chassis Lubrication
- Jiffy Stand . . . 1-35

Cam Support Plate
- Cam Needle Bearings . . . 3-75
- Camshafts . . . 3-72
- Cleaning and Inspection . . . 3-72
- Installation . . . 3-78
- Oil Pressure Relief Valve . . . 3-74
- Removal . . . 3-70

Check
- Front Fork Oil Leak . . . 2-74

Cleaning
- Bearings . . . 1-5
- Cleaning Process . . . 1-5
- Part Protection . . . 1-5
- Rust or Corrosion Removal . . . 1-5

Clutch
- Adjustment . . . 1-27
- Clutch Pack and Bearing . . . 5-16
- Conventional Clutch Pack Only . . . 5-14
- Removal and Installation . . . 5-14

Clutch Control
- Installation . . . 2-96
- Removal . . . 2-96

Clutch Release Cover, Cable Clutch
- Assembly and Installation . . . 6-8
- Cleaning and Inspection . . . 6-7
- Removal and Disassembly . . . 6-7

Clutch Switch
- Replacement . . . 7-78

Compression Test . . . 3-17
Connectors
- Connector Number . . . A-1
- Description . . . A-1
- Function . . . A-1
- General Information . . . A-1
- Location Table . . . A-1
- Repair Instruction . . . A-1

Control Module, Handlebar, Right
- Installation . . . 7-81

Conversions
- Fluid . . . B-2
- Length . . . B-1
- Torque . . . B-3

Crankcase
- Cleaning and Inspection . . . 3-85
- Cylinder Studs . . . 3-92

Left Crankcase Half. . . . 3-87
Right Crankcase Half. . . . 3-86
Sprocket Shaft Bearing Inner Race. . . . 3-89
Crank Position Sensor (CKP). . . . 7-43
Installation. . . . 7-43
Removal. . . . 7-43
Crankshaft Runout, Measuring
Crankshaft Installed. . . . 3-93
Crankshaft Removed. . . . 3-94
Cylinder
Boring and Honing. . . . 3-54
Cleaning. . . . 3-52
Deglazing. . . . 3-54
Inspection. . . . 3-52
Cylinder Head
Assembly. . . . 3-50
Cleaning. . . . 3-43
Disassembly. . . . 3-42
Inspection. . . . 3-43
Inspection: Tapered Keepers. . . . 3-44
Inspection: Valve Guides. . . . 3-44
Inspection: Valves. . . . 3-44
Inspection: Valve Seats. . . . 3-44
Inspection: Valve Springs. . . . 3-44
Valve and Seat Refacing. . . . 3-48
Valve Guide Installation. . . . 3-45
Valve Guide Removal. . . . 3-44
Cylinder Heads
Determining Service. . . . 3-42

D

Debris Deflector
Installation. . . . 2-89
Removal. . . . 2-89
Disposal and Recycling. . . . 1-3
Drive Belt
Cleaning. . . . 1-29
Installation. . . . 5-21
Removal. . . . 5-21
Drive Belt Deflection. . . . 1-30
Adjusting Belt Deflection. . . . 1-31
Drive Components
Installation. . . . 5-7
Removal. . . . 5-5

E

Electrical Caddy
Installation. . . . 7-7
Removal. . . . 7-5
Electrical Caddy Components (20037)
General. . . . 7-9
Electronic Control Module
General. . . . 7-8
Installation. . . . 7-8
Removal. . . . 7-8
Engine
Compression Test. . . . 3-17
Symptoms For Engine Repair. . . . 3-19
Engine Mounts
Inspection. . . . 1-48
Installation. . . . 2-139
Removal. . . . 2-139
Engine Oil
Capacity (Table). . . . 2-6
Changing. . . . 1-14
Checking. . . . 1-14
Recommended Engine Oils. . . . 1-7
Winter Lubrication. . . . 1-8
Engine Oil Flow
Bottom End. . . . 3-9
Oil Feed. . . . 3-7
Oil Return. . . . 3-11
Top End. . . . 3-7
Engine Temperature Sensor (ET). . . . 4-14
Installation. . . . 4-15
Removal. . . . 4-14
Evaporative Emissions Control. . . . 4-46
Evaporative Emissions Control (CA Models)
Charcoal Canister. . . . 4-48
Exhaust System
Assembly: FXDB, FXDBC and FXDBP. . . . 4-34
Disassembly: FXDB, FXDBC and FXDBP. . . . 4-33
Exhaust System Leak Check. . . . 1-18
Installation: FLD. . . . 4-41
Installation: FXDB, FXDBC and FXDBP. . . . 4-34
Installation: FXDF and FXDWG. . . . 4-38
Installation: FXDL. . . . 4-43
Leakage Repair Procedures. . . . 1-18
Removal: FXDB, FXDBC, FXDBP. . . . 4-32
Removal: FXDF and FXDWG. . . . 4-35
System Installation: FLD. . . . 4-41
System Removal: FLD. . . . 4-39

F

Fluid Conversions. . . . B-2
Flywheel/Connecting Rod
Inspection. . . . 3-93
Symptoms. . . . 3-93
FOB
Assignment. . . . 7-86
Footboards
Installation. . . . 2-120
Pad Replacement. . . . 2-120
Removal. . . . 2-120
Fork
Front Fork Oil Leak Check. . . . 2-74
Fork, Front
Cleaning and Inspection. . . . 2-79
Fork Lock
Installation. . . . 2-137
Front Brake Caliper
Assembly. . . . 2-46
Cleaning, Inspection and Repair. . . . 2-45
Disassembly. . . . 2-43
Installation. . . . 2-47
Removal. . . . 2-43
Front Brake Master Cylinder. . . . 2-39
Assembly and Installation. . . . 2-41
Cleaning and Inspection. . . . 2-41
Removal and Disassembly. . . . 2-39
Front Brake Switch
Replacement. . . . 7-81
Front Fender
Installation. . . . 2-107
Removal. . . . 2-107

Front Fork
Assembly. 2-80
Cartridge Type Fork (FLD Left Side), Assembly. . . . 2-81
Cartridge Type Fork (FLD Left Side), Disassembly. . 2-77
Disassembly. 2-75
Installation. 2-83
Installation: FLD. 2-87
Removal: All but FLD. 2-74
Removal: FLD. 2-85
Front wheel
Disassembly. 2-11
Removal. 2-11
Front Wheel
Assembly. 2-16
Cleaning and Inspection. 2-15
Installation. 2-16
Front Wheel Speed Sensor and Connector
Removal. 7-58
Fuel
Capacity (Table). 2-6
Gasoline Blends. 1-7
Low Fuel Warning Level (Table). 2-6
Recommended Fuel. 1-7
Fuel Gauge. 7-49
Removal. 7-49
Fuel Gauge Sender
Installation. 7-51
Removal. 7-50
Fuel Injectors. 4-21
Installation. 4-21
Removal. 4-21
Fuel Pressure Test. 4-30
Testing. 4-30
Fuel Pump. 4-23
Disassembly and Assembly. 4-25
Installation. 4-27
Removal. 4-23
Fuel Tank
Cleaning and Inspection. 4-10
General. 4-9
Installation. 4-11
Removal. 4-9
Fuses and Relays. 7-13

G

Glossary
Acronyms and Abbreviations. B-4

H

Hand Grip, Left
Installation. 2-98
Removal. 2-98
Handlebar (FLD)
Removal. 2-97
Handlebar (FXDB, FXDBC, FXDBP, FXDF)
Installation. 2-101
Handlebar Control Module, Left
Removal. 7-78
Handlebars (FLD)
Installation. 2-97
Handlebars (FXDB, FXDBC, FXDBP, FXDF and FXDWG)
Removal. 2-99
Handlebars (FXDL)
Installation. 2-104
Removal. 2-104
Handlebar Switch Assembly, Right
Removal. 7-80
Handlebar Switches
General. 7-77
Repair Procedures. 7-77
Headlamp. 7-24
Adjustment: FXDL. 1-50
Adjustment (FLD Models). 1-50
Alignment. 1-49
Bulb Replacement (FLD Models). 7-29
Removal/Installation (FLD Models). 7-28
Removal/Installation (FXDL Models). 7-26
Headlamp: Except FLD
Bulb Installation. 7-26
Installation. 7-26
Removal. 7-26
Headlamp: Except For FLD
Bulb Removal. 7-24
Headlamp Alignment
Adjustment. 1-49
Headlamp Visor (FXDL Models). 7-27
Horn
Inspection. 7-67
Replacement. 7-67
Replacement. 7-68

I

Idle Air Control. 4-18
Installation. 4-18
Removal. 4-18
Ignition Switch. 7-14
Ignition Switch/Fork Lock. 7-14
Indicator Lamps
Installation. 7-63
Removal. 7-62
Induction Module
Installation. 4-17
Removal. 4-16
Installing Engine in Chassis
Procedure. 3-27
Instruments
Speedometer Installation: FXDF/FLD. 7-53
Speedometer Removal: FXDF/FLD. 7-53
Intake Air Temperature Sensor (IAT). 4-13
Installation. 4-13
Removal. 4-13
Intake Leak Test. 4-44

J

Jiffy Stand
Cleaning. 2-133
Installation. 2-135
Removal. 2-135
Sensor (HDI Models). 2-135

L

Laced Wheel Rim Offset. 2-32
Left Hand Control Module, Left
Installation. 7-78
License Plate Bracket and Lamp. 7-41

License Plate Lamp
FXDF 7-34
LOCTITE . . . . . i-II
Lubricants, Greases, Sealants (Table) 1-9

M

Main Drive Gear and Bearing
Cleaning and Inspection 6-23
Installation 6-25
Needle Bearing Replacement 6-24
Removal 6-22
Maintenance
Brake Line Inspection (Table) 1-37
Drive Belt 1-30
Engine Oil Change 1-14
Engine Oil Check 1-14
Headlamp Adjustment: FXDL 1-50
Headlamp Adjustment (FLD Models) 1-50
Headlamp Bulb Replacement (FLD Models) 7-29
Headlamp Bulb Replacement (Single Headlamp Models) 7-24
Recommended Engine Oils 1-7
Schedule 1-9
Transmission Lubricant Change 1-25
Turn Signal Bulb Replacement (Bullet Style) 7-36
Main Wiring Harness 7-71
Installation 7-73
Removal 7-71
Manifold Absolute Pressure Sensor (MAP) 4-19
Installation 4-19
Removal 4-19
Medallions 2-142
Metric System B-2

N

Neutral Switch
Installation 7-64
Removal 7-64

O

Oil . . . . . See Engine Oil
Oil Pan
Installation 3-97
Removal 3-97
Oil Pressure
Indicator Lamp 3-15
Testing 3-15
Oil Pressure Relief Valve
Remove, Inspect, and Install 3-74
Oil Pressure Switch
General 7-65
Installation 7-65
Removal 7-65
Oil Pump
Cleaning and Inspection 3-83
Installation 3-84
Operation 3-12
Removal 3-83
Oxygen Sensor 4-20
Installation 4-20
Removal 4-20

P

Passenger footrests
Installation 2-122
Removal 2-122
Pipe Plug and Oil Fittings
Installation 3-92
Removal 3-92
Piston
Assembly 3-58
Cleaning 3-56
Disassembly 3-56
Inspection 3-56
Preload Adjustment
Shock Absorbers 1-51
Primary Chain
Automatic Chain Adjuster 1-23
Installation 5-7
Removal 5-5
Primary Chaincase 5-3
Capacity (Table) 2-6
Change Lubricant 1-23
Installation 5-12
Mainshaft Bearing and Lip Seal 5-10
Shifter Shaft Bushing 5-12
Primary Chaincase Cover
Installation 5-3
Removal 5-3
Primary Chaincase Housing
Inspection 5-10
Mainshaft Bearing Inner Race 5-11
Removal 5-10
Protrusion, Fork Tube
FLD 2-87
Pushrods, Lifters and Covers
Assembly 3-40
Cleaning and Inspection 3-39
Disassembly 3-39
Lifter Inspection 3-40

Q

Quick Reference Chart 1-9

R

Rear Brake Caliper
Assembly 2-56
Cleaning, Inspection and Repair 2-56
Disassembly 2-54
Installation 2-57
Removal 2-54
Rear Brake Master Cylinder
Assembly 2-52
Cleaning and Inspection 2-52
Disassembly 2-51
Installation 2-52
Removal 2-49
Rear Fender
FXDB, FXDBC, FXDBP 2-111
FXDF 2-115
FXDL 2-111
FXDWG 2-112
General Procedures, All Models 2-108
Rear Fender, FLD 2-114

Rear Fork
Assembly. . . . 2-95
Cleaning and Inspection. . . . 2-95
Disassembly. . . . 2-94
Installation. . . . 2-95
Removal. . . . 2-94
Rear Shock Absorbers
General. . . . 2-93
Inspection. . . . 2-93
Installation. . . . 2-93
Removal. . . . 2-93
Rear stop lamp Switch
General. . . . 7-66
Rear Stop Lamp Switch
Installation. . . . 7-66
Removal. . . . 7-66
Rear Wheel
Assembly. . . . 2-20
Cleaning and Inspection. . . . 2-19
Disassembly. . . . 2-18
Installation. . . . 2-20
Removal. . . . 2-18
Reference
Maintenance and Torque. . . . 1-9
Removing Engine from Chassis. . . . 3-26
Repair and Replacement Procedures
Bearings. . . . 1-4
Bushings. . . . 1-4
Gaskets. . . . 1-4
Gears. . . . 1-5
Hardware and Threaded Parts. . . . 1-4
Lip Type Seals. . . . 1-4
O-Rings. . . . 1-5
Part Replacement. . . . 1-5
Shafts. . . . 1-5
Threadlocking Agents. . . . 1-4
Wiring, Hoses and Lines. . . . 1-4
Rider Footrests: Forward Controls
Installation. . . . 2-122
Removal. . . . 2-122
Rider Footrests: Mid Controls
Installation. . . . 2-121
Removal. . . . 2-121
Right Hand Control Module, Right
Installation. . . . 7-81
Rocker Arms
Install Bushings. . . . 3-37
Remove Bushings. . . . 3-37
Shaft to Bushing. . . . 3-37
Shaft to Support Plate. . . . 3-36
Rocker Arm Support Plate. . . . 3-38
Disassembly. . . . 3-36
Inspection. . . . 3-36

S

Saddlebag
Lid Repair. . . . 2-131
Remove and Install. . . . 2-128
Seal. . . . 2-130
Safe Operating Maintenance. . . . 1-3
Saree Guards
Installation. . . . 2-141
Removal. . . . 2-141
Sealed Wheel Bearings
Check End Play. . . . 2-22
Installation. . . . 2-24
Removal. . . . 2-22
Seat
Installation. . . . 2-118
Lumbar Pad. . . . 2-119
Removal. . . . 2-117
Security Siren
Installation. . . . 7-11
Removal. . . . 7-11
Security System
Fob Battery. . . . 7-83
Service Bulletins. . . . i-I
Service Intervals. . . . 1-9
Service Preparation. . . . i-I
Service Wear Limits
Engine. . . . 3-5
Transmission. . . . 6-2
Servicing a New Motorcycle. . . . 1-3
Shift Rod Linkage. . . . 6-6
Shock Absorbers
Preload Adjustment. . . . 1-51
Shop Practices. . . . 1-3
Checking Torques. . . . 1-4
Cleaning. . . . 1-3
Disassembly and Assembly. . . . 1-4
Magnetic Parts Trays. . . . 1-4
Removing Parts. . . . 1-3
Safety. . . . 1-3
Sidecar Configuration. . . . 7-86
Solenoid
Long Post Contact. . . . 7-22
Plunger. . . . 7-21
Short Post Contact. . . . 7-22
Spark Plug Cables
Inspection. . . . 7-12
Installation. . . . 7-12
Removal. . . . 7-12
Spark Plugs
Inspection. . . . 1-41
Special Tools. . . . i-II
Specifications
Capacities (Table). . . . 2-6
Chassis. . . . 2-6
Dimensions (Table). . . . 2-6
Drive. . . . 5-2
Engine. . . . 3-3
Fuel System. . . . 4-4
Octane Rating (Table). . . . 1-7
Recommended Engine Oils (Table). . . . 1-8
Tires (Table). . . . 1-19
Tires. . . . 2-7
Tires (Table). . . . 2-8
Transmission. . . . 6-2
Weight (Table). . . . 2-6
Speedometer
Installation: FXDB, FXDBC, FXDBP and FXDWG. . 7-54
Installation: FXDL. . . . 7-56
Removal: FXDB and FXDWG. . . . 7-54
Removal: FXDL. . . . 7-56
Spokes
Adjustment. . . . 1-21

Starter. 7-20
Drive Assembly. 7-20
Installation. 7-23
Removal. 7-20
Solenoid. 7-21
Steering Head
Assembly. 2-86
Disassembly. 2-86
Inspection. 2-86
Installation. 2-86
Removal. 2-85
Steering Head Bearings
Adjustment. 1-42
Lubrication. 1-43
Storage
Placing In Storage. 1-52
Removal from Storage. 1-52
Stripping Motorcycle for Service. 3-24
Switch Assembly, Handlebar, Right
Removal. 7-80

T

Tachometer
Installation: FXDL. 7-56
Removal: FXDL. 7-56
Tail Lamp. 7-31
Base Replacement: FLD. 7-31
Base Replacement: FXDL. 7-31
Base Replacement: FXDWG. 7-33
Bulb Replacement. 7-31
FXDF. 7-34
Tank Emblems. 2-142
Throttle Cables
Adjustment. 1-33
Inspection. 1-33
Lubrication. 1-33
Throttle Control
Assembly/Installation. 2-91
Cleaning and Inspection. 2-91
Removal/Disassembly. 2-91
Throttle Cable Routing. 2-92
Throttle Position Sensor (TP)
General. 4-12
Installation. 4-12
Removal. 4-12
Tires. 2-70
Checking Runout. 2-72
Cleaning, Inspection and Repair. 2-70
Installation. 2-71
Pressure (Table). 1-19
Pressure (Table). 2-8
Removal. 2-70
Size (Table). 1-19
Size (Table). 2-8
Wheel Balancing. 2-72
Tires and Wheels
Tire Replacement. 1-20
Tool Safety
Air Tools. 1-5
Hammers. 1-6
Pliers/Cutters/Pry bars. 1-6
Punches/Chisels. 1-6
Ratchets and Handles. 1-6
Screwdrivers. 1-6
Sockets. 1-6
Storage Units. 1-6
Wrenches. 1-5
Top End Overhaul
Cylinder. 3-61
Disassembly. 3-29
Pushrods, Lifters and Covers. 3-66
Top End Overhaul: Assembly. 3-60
Breather Assembly. 3-68
Piston. 3-60
Rocker Arm Support Plate. 3-67
Top End Overhaul: Disassembly
Cylinder. 3-32
Cylinder Head. 3-31
Piston. 3-33
Pushrods, Lifters and Covers. 3-31
Rocker Arm Support Plate. 3-29
Rocker Covers. 3-29
Top End Service
Engine in Chassis. 3-20
Engine Removed from Chassis. 3-21
Torque Conversion. B-3
Trademarks
Harley-Davidson. . . . . i-ii
Referenced Products. . . . . i-ii
Transmission
Assembly. 6-16
Capacity (Table). 2-6
Change Lubricant. 1-25
Check Lubricant Level. 1-25
Cleaning and Inspection. 6-16
Disassembly. 6-10
Installation. 6-19
Theory of Operation. 6-4
Transmission Assembly
Removal. 6-9
Transmission Case
Assembly. 6-31
Cleaning and Inspection. 6-30
Disassembly. 6-30
Installation. 6-29
Removal. 6-29
Transmission Sprocket
Cleaning and Inspection. 5-19
Installation. 5-19
Removal. 5-18
Troubleshooting
Brakes. 1-55
Compression Test. 3-17
Cylinder Leakdown Test. 3-18
Diagnosing Smoking Engine or High Oil Consumption. 3-18
Diagnosing Valve Train Noise. 3-17
Electrical System. 1-54
Engine. 1-53
Handling. 1-55
Lubrication System. 1-54
Transmission. 1-55
True Laced Wheels
Lateral Runout. 2-35
Radial Runout. 2-35

Turn Signals
Bulb Replacement (Bullet Style). 7-36
Turn Signals: FLD
Front. 7-40
Rear. 7-41
Turn Signals/Running Lights
Front Lamp Housing Replacement. 7-36
Turn Signals/Running Lights: All But FLD
Rear Lamp Housing Replacement. 7-38

U

Upper and Lower Nacelle
Installation: FLD. 2-124

V

Vehicle Alignment
Inspection and Adjustment. 2-37
Vehicle Identification Number (VIN). 2-9
Vehicle Speed Sensor. 7-57
Installation. 7-57
Removal. 7-57
VIN
Vehicle Identification Number. 2-9
Voltage Regulator
Installation. 7-46
Removal. 7-46

W

Weight Limits (Table). 2-6
Wheel Lacing
Angle Flange Hub. 2-26
Straight Flange Hub, Dual Hole Circle. 2-29
Straight Flange Hub, Single Hole Circle. 2-27
Wheel Runout
Lateral. 2-31
Radial. 2-31
Wheels
Balancing. 2-72
Laced Wheel Rim Offset. 2-32
Spokes. 1-21
True Laced Wheels. 2-35
Weights. 2-73
Wheel Bearings. 1-21
Wheel Speed Sensor (Front)
Installation. 7-58
Wheel Speed Sensor (Rear)
Installation. 7-60
Removal. 7-59
Windshield: FLD Models
Windshield Window. 2-125
Windshield (FLD Models)
Removal and Installation. 2-125
Winter Lubrication. 1-8
Wiring
Color Codes. A-4
Diagram Symbols. A-4
Wiring Diagram List. A-6