HONDA

SERVICE MANUAL

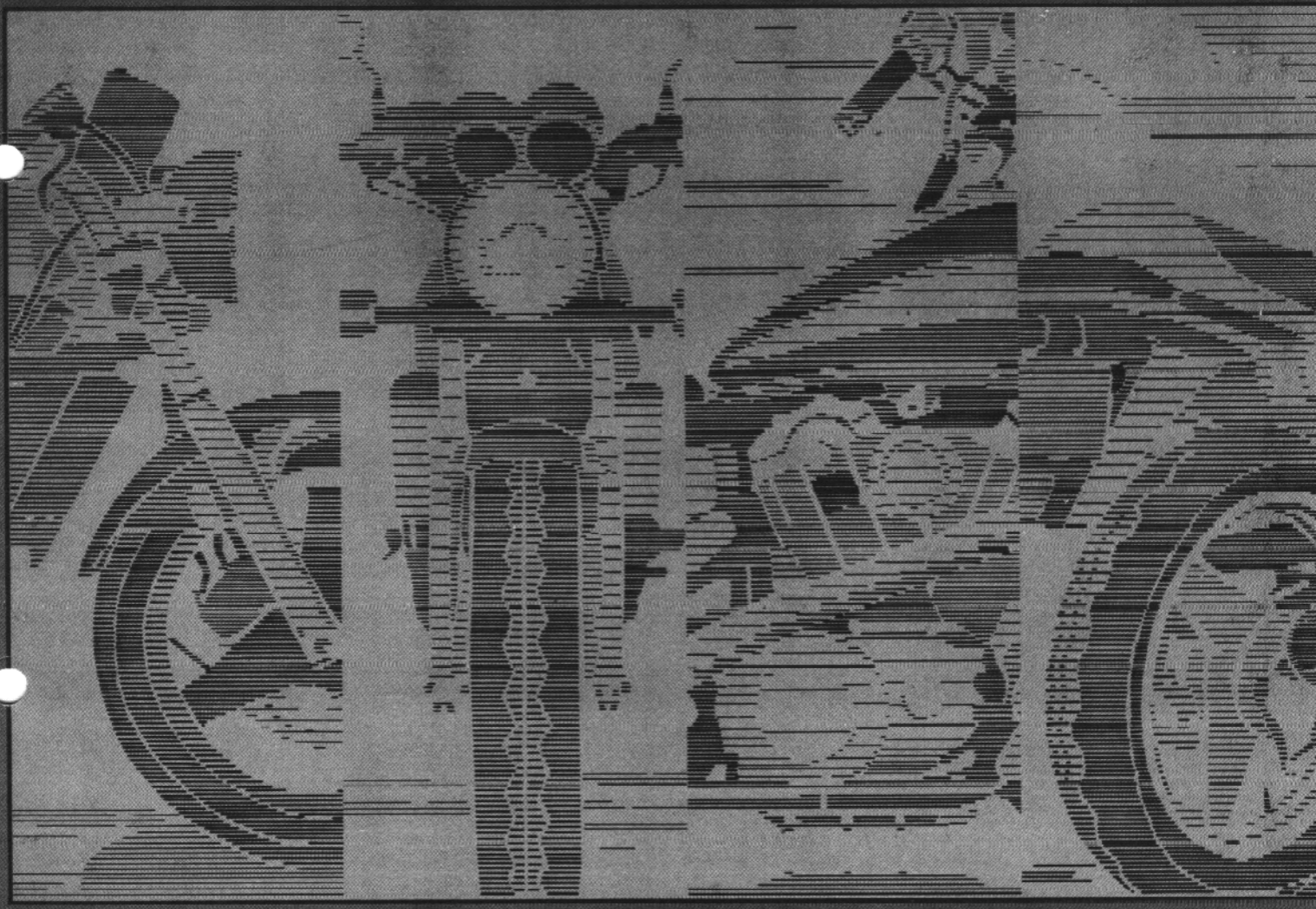

89

CB400F

CB-1

© HONDA MOTOR CO., LTD. 1989

INTRODUCTION

This service manual describes the service procedures for the CB400F.
This Model Specific Manual includes every service procedure that is of a specific nature to this particular model. Basic service procedures that are common to other Honda Motorcycles/Motor Scooters Common Service Manual. This Model Specific Service Manual should be used together with the Common Service Manual in order to provide complete service information on all aspects of this motorcycle.

Follow the Maintenance Schedule (Section 3) recommendations to ensure that the vehicle is in peak operating condition and the emission levels are within the standards set by the U.S. Environmental Protection Agency and the California Air Resources Board.
Performing the first scheduled maintenance is very important. It compensates for the initial wear that occurs during the break-in period.

Section 1 and 3 apply to the whole motorcycle, section 2 illustrates procedures for removal/installation of components that may be required to perform service described in the following sections.
While section 4 through 18 describe parts of the motorcycle, grouped according to locations.

Find the section you want on this page, then turn to the table of contents on the first page of the section.

Most sections describe the service procedure through a system illustration. Refer to the next page for details on how to use this manual.

If you don't know the source of the trouble, go to section 19, TROUBLESHOOTING.

ALL INFORMATION, ILLUSTRATIONS, DIRECTIONS AND SPECIFICATIONS INCLUDED IN THIS PUBLICATION ARE BASED ON THE LATEST PRODUCT INFORMATION AVAILABLE AT THE TIME OF APPROVAL FOR PRINTING. HONDA MOTOR CO., LTD. RESERVES THE RIGHT TO MAKE CHANGES AT ANY TIME WITHOUT NOTICE AND WITHOUT INCURRING ANY OBLIGATION WHATEVER. NO PART OF THIS PUBLICATION MAY BE REPRODUCED WITHOUT WRITTEN PERMISSION. THIS MANUAL IS WRITTEN FOR PERSONS WHO HAVE ACQUIRED BASIC KNOWLEDGE OF MAINTENANCE ON HONDA MOTORCYCLES OR MOTOR SCOOTERS.

CONTENTS

	GENERAL INFORMATION	1
	FRAME/BODY PANELS/EXHAUST SYSTEM	2
	MAINTENANCE	3
ENGINE AND DRIVE TRAIN	LUBRICATION	4
	COOLING SYSTEM	5
	FUEL SYSTEM	6
	ENGINE REMOVAL/INSTALLATION	7
	CYLINDER HEAD/CYLINDER/PISTON	8
	CLUTCH/GEARSHIFT LINKAGE	9
	CRANKSHAFT/TRANSMISSION	10
CHASSIS	FRONT WHEEL/SUSPENSION/STEERING	11
	REAR WHEEL/SUSPENSION	12
	BRAKES	13
ELECTRICAL	CHARGING SYSTEM/ALTERNATOR	14
	IGNITION SYSTEM	15
	ELECTRIC STARTER/STARTER CLUTCH	16
	LIGHTS/METERS/SWITCHES	17
	WIRING DIAGRAM	18
	TROUBLESHOOTING	19
	INDEX	20

Date of Issue: January, 1989
© HONDA MOTOR CO., LTD.

HOW TO USE THIS MANUAL

FINDING INFORMATION YOU NEED

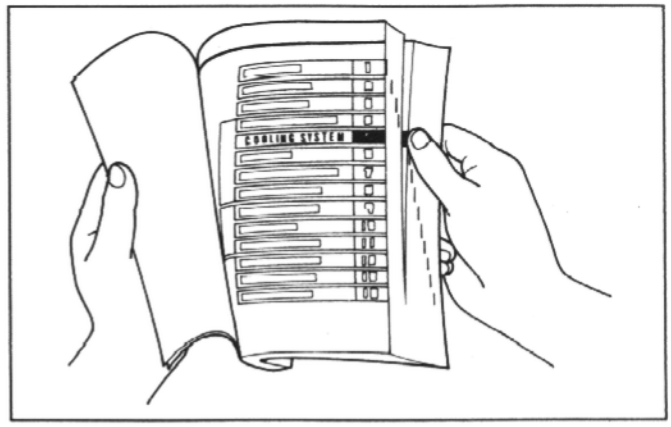

- This manual is divided into sections which cover each of the major components of the motorcycle.
  To quickly find the section you are interested in, the first page of each section is marked with a black tab that lines up with one of the thumb index tabs before this page.
  The first page of each section lists the table of contents within the section.
  Read the service information and troubleshooting related to the section before you begin working.
- An index of the entire book is provided in the last chapter to directly locate the information you need.

NOTE ON THE EXPLANATION METHOD OF THIS MANUAL

- The removal and installation of parts are for the most part illustrated by large and clear illustrations that should provide the reader with visual aid in understanding the major point for servicing.
- The system illustrations are augmented by callouts whose numbers or letters indicate the order in which the parts should be removed or installed.
- The sequence of steps represented numerically are differentiated from the ones represented alphabetically to notify the reader that they must perform these steps seperately.
  For example, if the steps prior and up to camshaft removal are performed with the engine installed, but the subsequent steps like cylinder head removal require engine removal, the callouts are grouped in numerical and alphabetical orders.
- The illustrations may contain symbol marks to indicate necessary service procedures and precautions that need to be taken. Refer to the next page for the meaning of each symbol mark.
- Also in the illustration is a chart that lists information such as the order in which the part is removed/installed, the name of the part, and some extra notes that may be needed.
- Step by step instructions are provided to supplement the illustrations when detailed explanation of the procedure is necessary or illustrations alone would not suffice.
- Service procedures required before or after the procedure described on that particular page, or inspection/adjustment procedures required following the installation of parts, are described under the title Requisite Service.
- Standard workshop procedures and knowledge covered in the Common Service Manual are abbreviated in this manual.

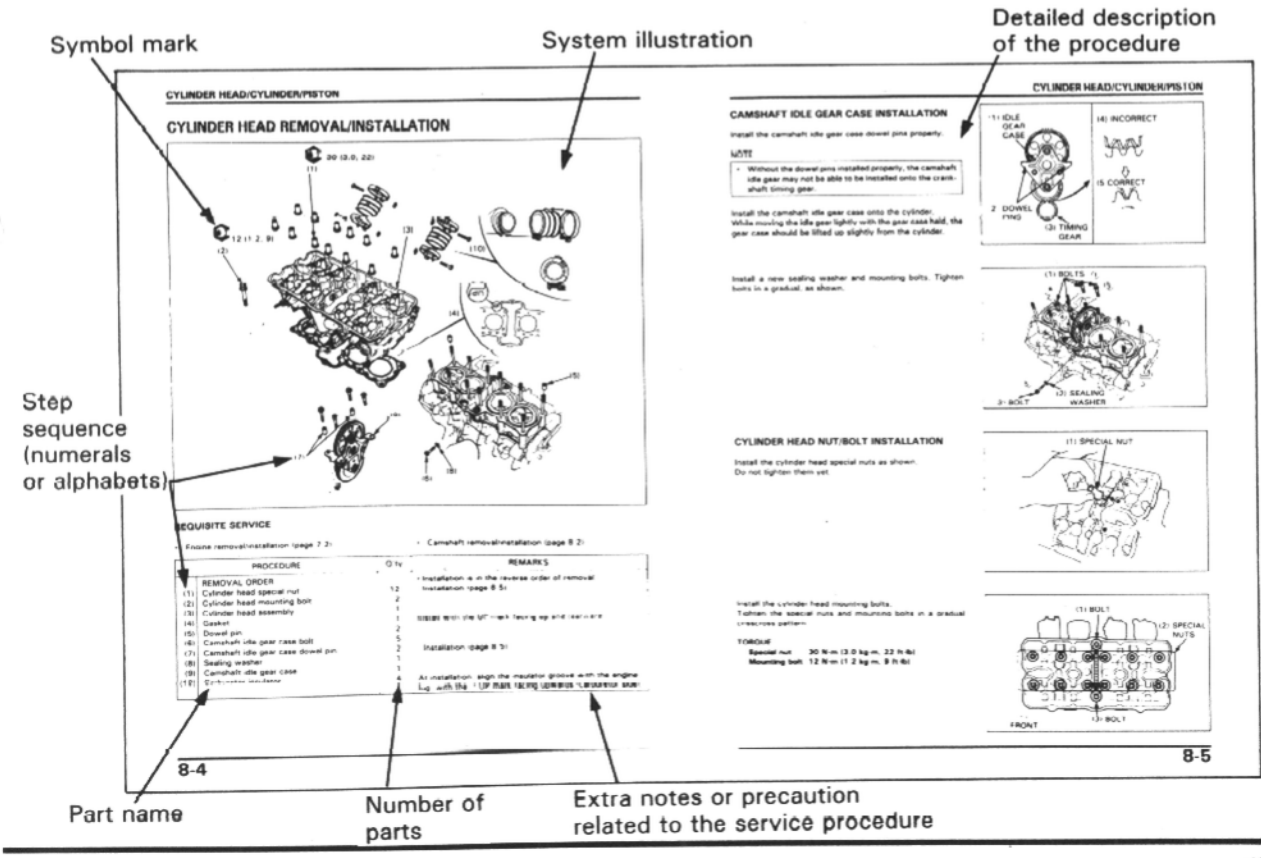

Symbols

The symbols used throughout this manual show specific service procedures. If supplementary information is required pertaining to these symbols, it would be explained specifically in the text without the use of the symbols.

NEW	Replace the part(s) with new one(s) before assembly.
S TOOL	Use special tool
O.P. TOOL	Use optional tool. These tools are obtained as you order parts.
10 (1.0, 7.2)	Torque specification. 10 N•m (1.0 kg-m, 7.2 ft-lb)
OIL	Use recommended engine oil, unless otherwise specified.
MO OIL	Use molybdenum oil solution (mixture of the engine oil and molybdenum grease with the ratio 1 : 1).
GREASE	Use multi-purpose grease (Lithium based multi-purpose grease NLGI #2 or equivalent)
M	Use molybdenum disulfide grease (containing more than 3% molybdenum disulfide, NLGI #2 or equivalent) Example: Molykote® BR-2 plus manufactured by Dow Corning, U.S.A. Multi-purpose M-2 manufactured by Mitsubishi Oil Japan
MP	Use molybdenum disulfide paste (containing more than 40% molybdenum disulfide, NLGI #2 or equivalent) Example: Molykote® G-n Paste manufactured by Dow Corning, U.S.A. Honda Moly 45 (U.S.A. only) Rocol ASP manufactured by Rocol Limited, U.K. Rocol Paste manufactured by Sumico Lubricant, Japan
S	Use silicone grease
LOCK	Apply a locking agent. Use the agent of the middle strength, unless otherwise specified.
SEAL	Apply sealant
BRAKE FLUID	Use brake fluid, DOT 3 or DOT 4. Use the recommended brake fluid, unless otherwise specified.
FORK	Use Fork or Suspension Fluid.

1. GENERAL INFORMATION

GENERAL SAFETY	1-1	LUBRICATION AND SEAL POINTS	1-18
MODEL IDENTIFICATION	1-3	CABLE AND HARNESS ROUTING	1-19
SPECIFICATIONS	1-4	EMISSION CONTROL SYSTEMS	1-25
TORQUE VALUES	1-14	EMISSION CONTROL INFORMATION LABELS (U.S.A. Only)	1-28
TOOLS	1-16		

GENERAL SAFETY

Carbon Monoxide

If the engine must be running to do some work, make sure the area is well ventilated. Never run the engine in an enclosed area.

⚠ WARNING

- **The exhaust contains poisonous carbon monoxide gas that can cause loss of consciousness and may lead to death.**

Run the engine in an open area or with an exhaust evacuation system in an enclosed area.

Gasoline

Work in a well ventilated area. Keep cigarettes, flames or sparks away from the work area or where gasoline is stored.

⚠ WARNING

- **Gasoline is extremely flammable and is explosive under certain conditions. KEEP OUT OF REACH OF CHILDREN.**

Hot Components

⚠ WARNING

- **Engine and exhaust system parts become very hot and remain hot for some time after the engine is run. Wear insulated gloves or wait until the engine and exhaust system have cooled before handling these parts.**

Used Engine/Transmission Oil

⚠ WARNING

- **Used engine oil (or transmission oil in two-strokes) may cause skin cancer if repeatedly left in contact with the skin for prolonged periods. Although this is unlikely unless you handle used oil on a daily basis, it is still advisable to thoroughly wash your hands with soap and water as soon as possible after handling used oil. KEEP OUT OF REACH OF CHILDREN.**

Brake Dust

Never use an air hose or dry brush to clean brake assemblies. Use an OSHA-approved vacuum cleaner or alternate method approved by OSHA, designed to minimize the hazard caused by airborne asbestos fibers.

⚠ WARNING

- **Inhaled asbestos fibers have been found to cause respiratory disease and cancer.**

Brake Fluid

CAUTION

- **Spilling fluid on painted, plastic or rubber parts will damage them. Place a clean shop towel over these parts whenever the system is serviced. KEEP OUT OF REACH OF CHILDREN.**

Coolant

Under some conditions, the ethylene glycol in engine coolant is combustible and its flame is not visible. If the ethylene glycol does ignite, you will not see any flame, but you can be burned.

⚠ WARNING

- **Avoid spilling engine coolant on the exhaust system or engine parts. They may be hot enough to cause the coolant to ignite and burn without a visible flame.**
- **Coolant (ethylene glycol) can cause some skin irritation and is poisonous if swallowed. KEEP OUT OF REACH OF CHILDREN.**
- **Do not remove the radiator cap when the engine is hot. The coolant is under pressure and could scald you.**
- **Keep hands and clothing away from the cooling fan, as it starts automatically.**

If it contacts your skin, wash the affected areas immediately with soap and water. If it contacts your eyes, flush them thoroughly with fresh water and get immediate medical attention. If it is swallowed, the victim must be forced to vomit then rinse mouth and throat with fresh water before obtaining medical attention. Because of these dangers, always store coolant in a safe place, away from the reach of children.

Nitrogen Pressure

For shock absorbers with a gas-filled reservoir:

⚠ WARNING

- **Use only nitrogen to pressurize the shock absorber. The use of an unstable gas can cause a fire or explosion resulting in serious injury.**
- **The shock absorber contains nitrogen under high pressure. Allowing fire or heat near the shock absorber could lead to an explosion that could result in serious injury.**
- **Failure to release the pressure from a shock absorber before disposing of it may lead to a possible explosion and serious injury if it is heated or pierced.**

To prevent the possibility of an explosion, release the nitrogen by pressing the valve core. Then remove the valve stem from the shock absorber reservoir. Dispose of the oil in a manner acceptable to the Environmental Protection Agency (EPA).

Before disposal of the shock absorber, release the nitrogen by pressing the valve core. Then remove the valve stem from the shock absorber.

Battery Hydrogen Gas & Electrolyte

⚠ WARNING

- **The battery gives off explosive gases; keep sparks, flames and cigarettes away. Provide adequate ventilation when charging.**
- **The battery contains sulfuric acid (electrolyte). Contact with skin or eyes may cause severe burns. Wear protective clothing and a face shield.**
  - **If electrolyte gets on your skin, flush with water.**
  - **If electrolyte gets in your eyes, flush with water for at least 15 minutes and call a physician.**
- **Electrolyte is poisonous.**
  - **If swallowed, drink large quantities of water or milk and follow with milk of magnesia or vegetable oil and call a physician. KEEP OUT OF REACH OF CHILDREN.**

MODEL IDENTIFICATION

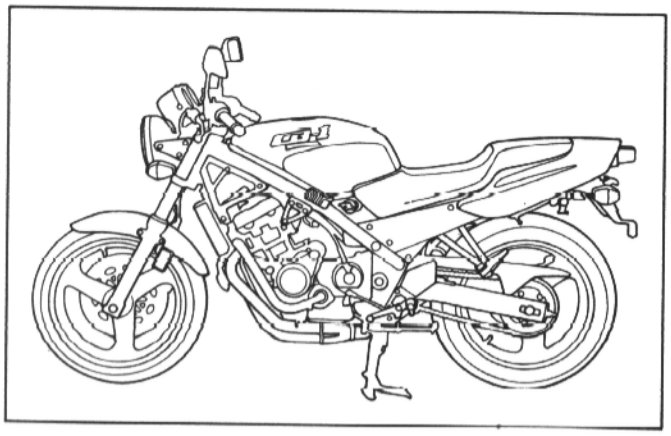

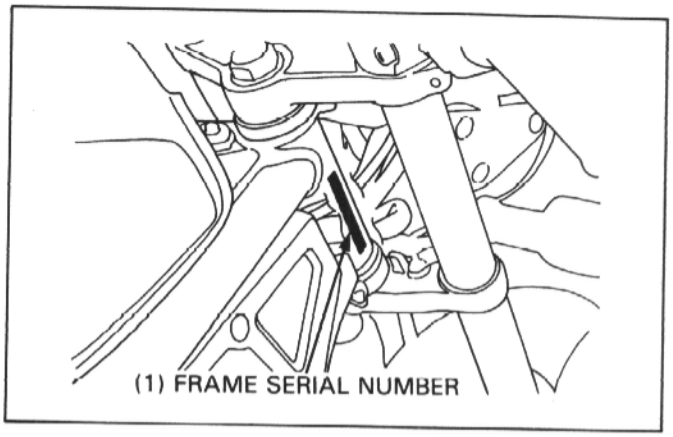

The frame serial number is stamped on the right side of the steering head.

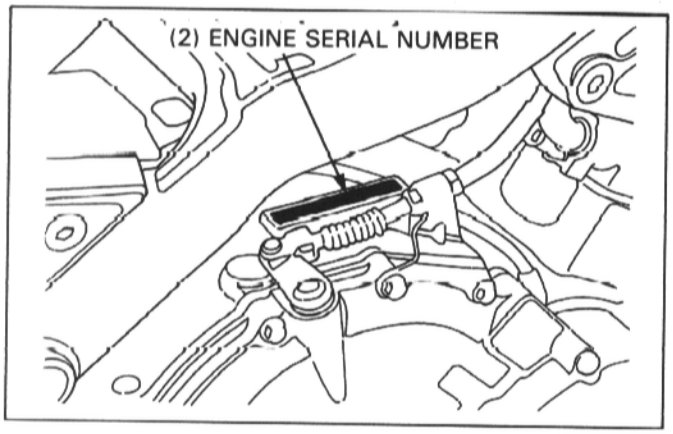

The engine serial number is stamped on the right side of the crankcase.

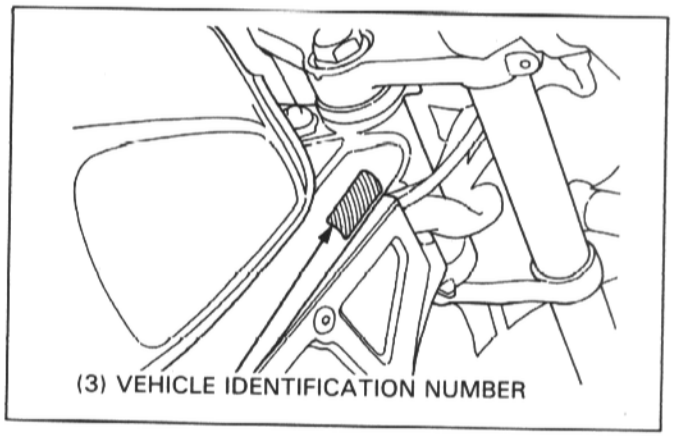

The Vehicle Identification Number (VIN) is located on the safety certification label on the right side of the frame tube.

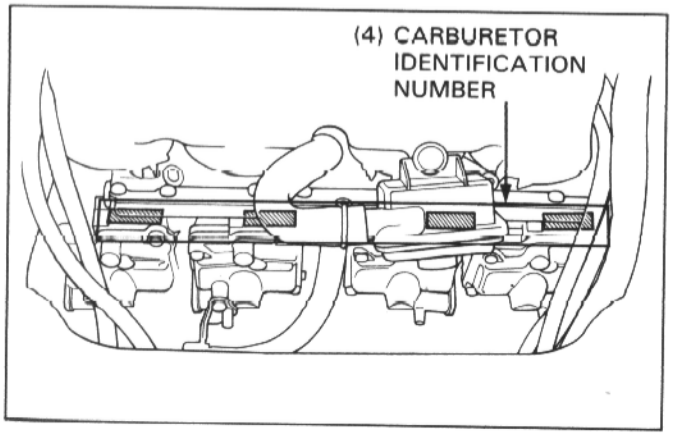

The carburetor identification number is on the rear side of each carburetor.

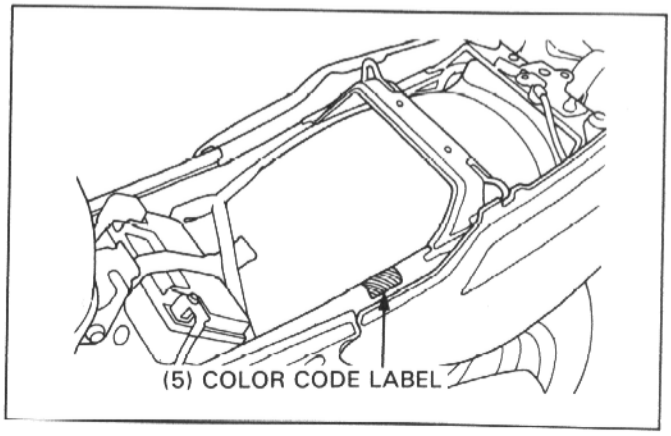

The color code label is attached on the left frame tube under the seat. When ordering a color coded part, always specify its designated color code.

SPECIFICATIONS

General

ITEM		SPECIFICATIONS
DIMENTIONS	Overall length	2,035 mm (80.1 in)
	Overall width	705 mm (27.8 in)
	Overall height	1,025 mm (40.4 in)
	Wheel base	1,370 mm (53.9 in)
	Seat height	775 mm (30.5 in)
	Foot peg height	335 mm (13.2 in)
	Ground clearance	130 mm (5.1 in)
	Dry weight	170 kg (375 lbs)
	Curb weight	183 kg (403 lbs)
	Maximum weight capacity	157 kg (347 lbs)
FRAME	Frame type	Diamond
	Front suspension	Telescopic fork
	Front wheel travel	130 mm (5.1 in)
	Rear suspension	Swingarm
	Rear wheel travel	110 mm (4.3 in)
	Rear damper	Gas-filled damper
	Front tire size	110/70—17 54H
	Rear tire size	140/70—17 66H
	Tire brand (Bridgestone) Front/Rear	G547/G548
	Tire brand (Dunlop) Front/Rear	K505F/K505
	Tire brand (Yokohama) Front/Rear	——
	Tire brand (IRC) Front/Rear	——
	Front brake	Hydraulic disc brake
	Rear brake	Hydraulic disc brake
	Caster angle	25°30'
	Trail length	99 mm (3.9 in)
	Fuel tank capacity	11.5 lit (3.04 US gal, 2.53 Imp gal)
	Fuel tank reserve capacity	3.5 lit (0.92 US gal, 0.77 Imp gal)
ENGINE	Bore and stroke	55.0 x 42.0 mm (2.17 x 1.65 in)
	Displacement	399 cm³ (24.3 cu in)
	Compression ratio	11.5 : 1
	Valve train	Gear driven DOHC, 4 valves per cylinder
	Intake valve opens at 1 mm lift	5° ATDC
	Intake valve close at 1 mm lift	33° ABDC
	Exhaust valve opens at 1 mm lift	33° BBDC, 38° BBDC (California)
	Exhaust valve close at 1 mm lift	5° BTDC, 10° BTDC (California)
	Lubrication system	Forced pressure and wet sump
	Oil pump type	Trochoid-type
	Cooling system	Liquid cooling system with cooling fan
	Air filtration	Paper filter
	Crankshaft type	Unit-type, 6 main journals
	Engine weight (dry)	57 kg (126 lbs)
	Firing order	1—2—4—3
	Cylinder arrangement	Vertical 30° in line four
	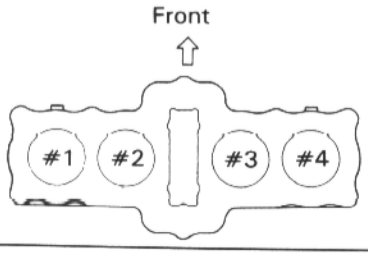	

General (Cont'd)

ITEM		SPECIFICATIONS
CARBURETOR	Carburetor type	VG06
	Throttle bore	32.5 mm (1.28 in)
DRIVE TRAIN	Clutch system	Wet, multi-plate
	Clutch operation system	Mechanical type
	Transmission	6-speed constant-mesh
	Primary reduction	2.181 (96/44)
	Secondary reduction	——
	Third reduction	——
	Final reduction	2.733 (41/15)
	Gear ratio 1st	3.307 (43/13)
	Gear ratio 2nd	2.352 (40/17)
	Gear ratio 3rd	1.875 (30/16)
	Gear ratio 4th	1.590 (35/22)
	Gear ratio 5th	1.434 (33/23)
	Gear ratio 6th	1.333 (32/24)
	Gear ratio reverse	——
	Gearshift pattern	Left foot operated return system 1—N—2—3—4—5—6
ELECTRICAL	Ignition system	Full transistor ignition
	Starting system	Starter motor
	Charging system	Triple phase output alternator
	Regulator/rectifier type	SCR shorted/triple phase full-wave rectification
	Lighting system	Battery
	AC regulator type	——

Lubrication

Unit: mm (in)

Item	Standard	Service limit
Engine oil capacity at draining	2.9 ℓ (3.06 US qt, 2.55 Imp qt)	—
at disassembly	3.5 ℓ (3.70 US qt, 3.08 Imp qt)	—
at oil filter change	3.1 ℓ (3.28 US qt, 2.73 Imp qt)	—
Recommended engine oil	HONDA 4-stroke oil or equivalent. API service classification SE or SF. The viscosities shown in the chart may be used when the average temperature in your riding area is within the indicated range.	—
Oil pressure at oil pressure switch	490 kPa (5 kg/cm², 71 psi)	—
Oil pump roter tip clearance ①	0.10 (0.004)	0.15 (0.006)
body clearance ②	0.15–0.22 (0.006–0.009)	0.35 (0.014)
end clearance ③	0.02–0.07 (0.001–0.003)	0.10 (0.004)

OIL VISCOSITIES

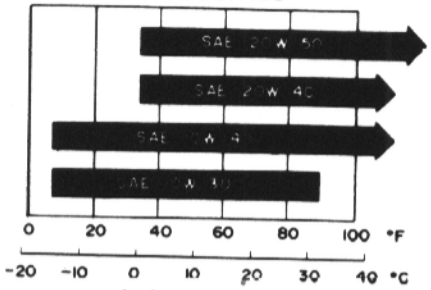

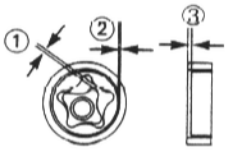

Fuel system

Carburetor identification number	VG06B	—
(California)	VG06C	—
Main jet	#105	—
(High altitude)	—	—
(2, 3)	—	—
(1, 4)	—	—
(Front)	—	—
(Rear)	—	—
Slow jet	#35	—
Jet needle crip position	—	—
Pilot screw initial opening	2-1/4 turns out	—
(California)	2-1/2 turns out	—
Pilot screw adjustment final opening	1 turn out	—
Pilot screw high altitude adjustment	1/2 turn in from initial opening	—
Air screw initial opening	—	—
(California)	—	—
Air screw high altitude adjustment	—	—
Float level	8.0 (0.31)	—
Carburetor vacuum difference	Within 30 mmHg (1.2 inHg)	—
Base carburetor (For carburetor synchronization)	No. 2 carburetor	—
Idle speed	1,300 ± 100 rpm	—
(California)	1,400 ± 100 rpm	—
Throttle grip free play	2–6 (0.08–0.24)	—
Accelerator pump clearance	—	—
Secondary air supply system	Reed valves are built into the ASV	—
Air injection control valve vacuum pressure	360 mmHg (14.2 inHg)	—

Cylinder head

Unit: mm (in)

Item	Standard	Service limit
Cylinder compression	1,280–1,320 kPa (12.8–13.2 kg/cm², 182–188 psi)/400 rpm	—
Cylinder compression difference	Within 30 mmHg (1.2 inHg) of each other	—
Valve clearance IN (cold)	0.12–0.18 (0.005–0.007)	—
EX	0.17–0.23 (0.007–0.009)	—
Cylinder head warpage	—	0.1 (0.004)
Cam lobe height ① IN	33.070–33.230 (1.3020–1.3083)	33.02 (1.300)
IN (California model)	—	—
EX	33.120–33.280 (1.3039–1.3102)	33.07 (1.302)
EX (California model)	—	—
Camshaft runout ②	—	0.05 (0.002)
Camshaft oil clearance	0.020–0.062 (0.0008–0.0024)	0.10 (0.004)

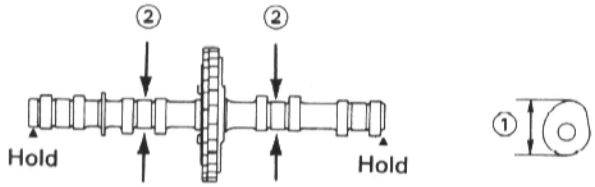

Camshaft journal O.D.	22.959–22.980 (0.9039–0.9047)	22.965 (0.9041)
Camshaft holder I.D.	—	—
Valve stem O.D. IN	3.775–3.790 (0.1486–0.1492)	3.70 (0.146)
EX	3.755–3.770 (0.1478–0.1484)	3.69 (0.145)
Valve guide I.D. IN	3.800–3.812 (0.1496–0.1253)	3.89 (0.153)
EX	3.800–3.812 (0.1496–0.1253)	3.89 (0.153)
Stem-to-guide clearance IN	—	0.04 (0.002)
EX	—	0.05 (0.002)
Valve guide projection above cylinder head (h) IN	13.37–13.77 (0.526–0.542)	—
EX	11.52–11.92 (0.454–0.469)	—

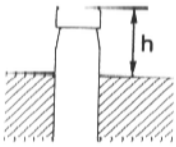

Before guide installation:
1. Chill the valve guides in the freezer section of a refrigerator for about an hour.
2. Heat the cylinder head to 100–150°C (212–300°F).

Valve seat width	0.9–1.1 (0.035–0.043)	1.5 (0.06)
Valve spring free length IN	39.40 (1.551)	38.6 (1.52)
EX	39.40 (1.551)	38.6 (1.52)
inner IN	—	—
inner EX	—	—
outer IN	—	—
outer EX	—	—
Rocker arm I.D. IN	—	—
EX	—	—
Rocker arm shaft O.D. IN	—	—
EX	—	—
Rocker arm-to-rocker arm shaft clearance	—	—
Valve lifter O.D.	—	—
Valve lifter bore I.D.	—	—
Hydraulic lash adjuster assist spring free length	—	—
Hydraulic lash adjuster compression stroke with kerosene	—	—

Unit: mm (in)

Cylinder/piston

Item	Standard	Service limit
Cylinder I.D.	55.000–55.010 (2.1654–2.1657)	55.10 (2.169)
Cylinder out of round	—	0.10 (0.004)
Cylinder taper	—	0.10 (0.004)
Cylinder warpage	—	0.10 (0.004)
Piston mark direction	With "IN" mark facing to the intake side	—
Piston O.D. (D)	54.960–54.990 (2.1638–2.1650)	54.90 (2.161)
Piston O.D. measurement point (H)	10 (0.4)	—
Piston pin hole I.D. (d)	14.002–14.008 (0.5513–0.5515)	14.05 (0.553)
Cylinder-to-piston clearance	—	0.10 (0.004)
Piston pin O.D.	13.994–14.000 (0.5509–0.5512)	13.98 (0.550)
Piston-to-piston pin clearance	0.002–0.014 (0.0001–0.0006)	0.04 (0.002)
Connecting rod-to-piston pin clearance	0.016–0.040 (0.0006–0.0016)	0.06 (0.002)
Top ring-to-ring groove clearance	0.015–0.050 (0.0006–0.0020)	0.08 (0.003)
Second ring-to-ring groove clearance	0.015–0.050 (0.0006–0.0020)	0.08 (0.003)
Top ring end gap	0.18–0.28 (0.007–0.011)	0.5 (0.02)
Second ring end gap	0.18–0.33 (0.007–0.013)	0.5 (0.02)
Oil ring (side rail) end gap	0.2–0.7 (0.01–0.03)	1.1 (0.04)
Top ring mark	Install with the marked side up	—
Second ring mark	Install with the marked side up	—

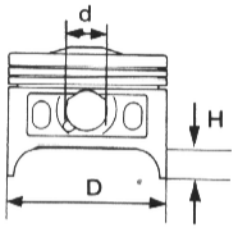

Crankshaft

Connecting rod small end I.D.	14.016–14.034 (0.5518–0.5525)	14.07 (0.554)
Connecting rod big end side clearance	0.05–0.20 (0.002–0.008)	0.30 (0.012)
radial clearance	—	—
Crankshaft runout ①	—	0.05 (0.002)
Crankpin oil clearance	0.020–0.052 (0.0008–0.0020)	0.06 (0.002)
Crankpin bearing selection	See page 10-7	—
Main journal oil clearance	0.022–0.046 (0.0009–0.0018)	0.05 (0.002)
Main journal bearing selection	See page 10-6	—

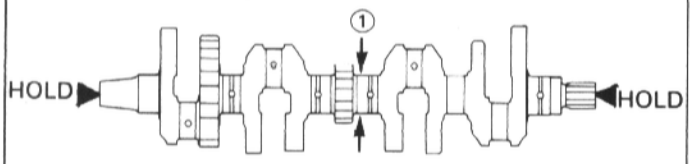

Kickstarter

Kickstarter pinion gear I.D.	—	—
Kickstarter spindle O.D.	—	—
Kickstarter idle gear I.D.	—	—
Countershaft O.D. at kickstarter idle gear	—	—
Kickstarter idle gear bushing O.D.	—	—
I.D.	—	—

Transmission

Unit: mm (in)

Item	Standard	Service limit
Transmission gear I.D. M5	25.000–25.021 (0.9843–0.9851)	25.05 (0.986)
M6	25.000–25.021 (0.9843–0.9851)	25.05 (0.986)
C2	28.000–28.021 (1.1024–1.1032)	28.05 (1.104)
C3	28.000–28.021 (1.1024–1.1032)	28.05 (1.104)
C4	28.000–28.021 (1.1024–1.1032)	28.05 (1.104)
Transmission gear bushing O.D. M5	24.959–24.980 (0.9826–0.9835)	24.92 (0.981)
M6	24.959–24.980 (0.9826–0.9835)	24.92 (0.981)
C2	27.959–27.980 (1.1007–1.1016)	27.92 (1.099)
C3	27.959–27.980 (1.1007–1.1016)	27.92 (1.099)
C4	27.959–27.980 (1.1007–1.1016)	27.92 (1.099)
Transmission gear busing I.D. M5	21.985–22.006 (0.8655–0.8664)	22.07 (0.869)
C2	24.985–25.006 (0.9837–0.9845)	25.07 (0.987)
Gear-to-bushing clearance at M5 gear	0.020–0.062 (0.0008–0.0024)	0.10 (0.004)
at M6 gear	0.020–0.062 (0.0008–0.0024)	0.10 (0.004)
at C2 gear	0.020–0.062 (0.0008–0.0024)	0.10 (0.004)
at C3 gear	0.020–0.062 (0.0008–0.0024)	0.10 (0.004)
at C4 gear	0.020–0.062 (0.0008–0.0024)	0.10 (0.004)
Mainshaft O.D. at M5 gear bushing ①	21.959–21.980 (0.8645–0.8654)	21.93 (0.863)
at clutch outer guide ②	21.967–21.980 (0.8648–0.8654)	21.93 (0.863)
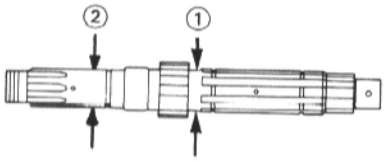	—	—
Coutershaft O.D. at C2 gear bushing ①	24.967–24.980 (0.9830–0.9835)	24.93 (0.981)
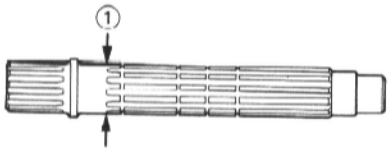		
Gear-to-shaft clearance	—	—
Gear bushing-to-shaft clearance at M5 gear	0.020–0.062 (0.0008–0.0024)	0.10 (0.004)
at C2 gear	0.005–0.039 (0.0002–0.0015)	0.06 (0.002)
Shift fork claw thickness L	5.93–6.00 (0.233–0.236)	5.60 (0.220)
C	5.93–6.00 (0.233–0.236)	5.60 (0.220)
R	5.93–6.00 (0.233–0.236)	5.60 (0.220)
Shift fork I.D. L	12.000–12.018 (0.4724–0.4731)	12.06 (0.475)
C	12.000–12.018 (0.4724–0.4731)	12.06 (0.475)
R	12.000–12.018 (0.4724–0.4731)	12.06 (0.475)
Shift fork shaft O.D.	11.969–11.980 (0.4712–0.4717)	11.90 (0.469)

Unit: mm (in)

Clutch system		
Item	**Standard**	**Service limit**
Clutch lever free play	10–20 (0.4–0.8)	—
Recommended clutch fluid	—	—
Clutch master cylinder I.D.	—	—
Clutch master piston O.D.	—	—
Clutch outer I.D.	37.005–37.030 (1.4569–1.4579)	37.08 (1.460)
Clutch outer guide O.D.	29.994–30.007 (1.1809–1.1814)	29.95 (1.179)
I.D.	21.980–22.007 (0.8654–0.8664)	22.05 (0.868)
Mainshaft O.D. at clutch outer guide	21.967–21.980 (0.8648–0.8654)	21.93 (0.863)
Oil pump drive sprocket I.D.	30.025–30.075 (1.1821–1.1841)	30.13 (1.186)
Clutch spring free height	—	—
Clutch spring free length	37.5 (1.48)	36.0 (1.42)
Clutch disc thickness A	3.22–3.38 (0.127–0.133)	2.9 (0.11)
B	3.22–3.38 (0.127–0.133)	2.9 (0.11)
C	3.42–3.58 (0.135–0.141)	3.1 (0.12)
Clutch plate warpage	—	0.3 (0.01)
Centrifugal clutch drum I.D.	—	—
bushing O.D.	—	—
Centrifugal clutch center guide I.D.	—	—
O.D.	—	—
Centrifugal clutch center guide collar height	—	—
Centrifugal clutch weight lining thickness	—	—
Centrifugal clutch spring free length	—	—
Clutch lining thickness	—	—
Crankshaft O.D. at clutch center	—	—

Cooling system		
Coolant capacity (Radiator and engine)	1.5 ℓ (0.40 US gal, 0.33 Imp gal)	—
(Reserve tank)	0.3 ℓ (0.08 US gal, 0.07 Imp gal)	—
Radiator cap relief pressure	93–123 kPa (0.95–1.25 kg/cm², 14–18 psi)	—
Thermostat begins to open	80–84°C (176–183°F)	—
Thermostat fully open	95°C (203°F)	—
Thermostat valve lift	8.0 (0.315) min.	—

Drive train		
Recommended final drive oil	—	—
Final drive gear oil capacity at disassembly	—	—
at draining	—	—
Final drive gear backlash	—	—
Ring gear-to-stop pin clearance (A)	—	—
Stop pin shim	—	—
Ring gear spacer	—	—
Pinion spacer	—	—
Output gear backlash	—	—
Output gear I.D.	—	—
Output gear bushing O.D.	—	—
I.D.	—	—
Output drive shaft O.D.	—	—
Output gear damper spring free length	—	—
Output shaft adjustment shim	—	—
Countershaft drive shaft adjustment shim	—	—

Wheels/tires

Unit: mm (in)

Item	Standard	Service limit
Minimum tire tread depth (FR)	—	1.5 (0.06)
(RR)	—	2.0 (0.08)
Cold tire pressure Up to 90kg (200lb) load (FR)	225 kPa (2.25 kg/cm², 33 psi)	—
Up to 90kg (200lb) load (RR)	225 kPa (2.25 kg/cm², 33 psi)	—
Up to maximum weight capacity (FR)	225 kPa (2.25 kg/cm², 33 psi)	—
Up to maximum weight capacity (RR)	250 kPa (2.50 kg/cm², 36 psi)	—
Front and rear axle runout	—	0.2 (0.01)
Front and rear wheel rim runout (Radial)	—	2.0 (0.08)
(Axial)	—	2.0 (0.08)
Front wheel hub-to-rim distance	—	—
Front wheel hub standard surface	—	—
Rear wheel hub-to-rim distance	—	—
Rear wheel hub standard surface	—	—
Wheel balance weight Front/Rear	—	60 g (2.1 oz)
Drive chain slack	15—25 (5/8—1)	—
Drive chain size/link (DID)	DID525V8/104	—
(RK)	RK525SM4/104	—

Front suspension

Fork spring free length	324.5 (12.78)	318 (12.5)
Fork spring free length A	—	—
B	—	—
Fork spring direction	With tightly wound coil end facing down	—
Fork tube runout	—	0.2 (0.01)
Recommended fork oil	Fork Fluid	—
Fork oil level	95 (3.7)	—
Fork oil level (R)	—	—
(L)	—	—
Fork oil capacity	510 cc (17.2 US oz, 17.9 Imp oz)	—
Fork oil capacity (R)	—	—
(L)	—	—
Fork air pressure	—	—
Steering bearing preload	1.0—1.6 kg	—

Rear suspension

Shock absorber spring free length	178.0 (7.01)	174 (6.9)
Shock absorber spring free length (A)	—	—
(B)	—	—
Damper gas pressure	—	—
Damper compressed gas	—	—
Damper rod compressed force at 10 mm (0.4 in) compressed	—	—
Damper drilling point		
Shock absorber spring installed length (Standard)	Adjuster position III	—
(Adjustable range)	Position I—VII	—
Shock absorber spring direction	With the taper end facing to adjuster	—
Recommended shock absorber oil	—	—
Shock absorber oil capacity	—	—
air pressure	—	—

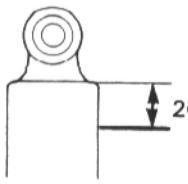

Unit: mm (in)

Brakes

Item	Standard	Service limit
Front brake fluid	DOT4	—
brake lever free play	—	—
brake pad wear indicator	—	to the groove ①
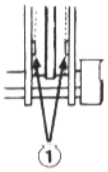		
brake disc thickness	5.6–6.0 (0.22–0.24)	5.0 (0.20)
brake disc runout	—	0.4 (0.02)
master cylinder I.D.	11.000–11.043 (0.4331–0.4348)	11.055 (0.4352)
master piston O.D.	10.957–10.984 (0.4314–0.4324)	10.945 (0.4309)
caliper cylinder I.D.	27.000–27.050 (1.0630–1.0650)	27.06 (1.065)
caliper cylinder I.D. (Upper)	—	—
(Lower)	—	—
caliper piston O.D.	26.918–26.968 (1.0598–1.0617)	26.91 (1.059)
caliper piston O.D. (Upper)	—	—
(Lower)	—	—
brake drum I.D.	—	—
brake lining thickness	—	—
Rear brake fluid	DOT4	—
brake pedal height	—	—
brake pedal free play	—	—
brake pad wear indicator	—	to the step ②
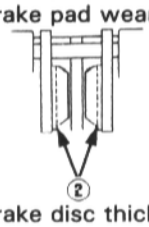		
brake disc thickness	4.8–5.2 (0.19–0.20)	4.0 (0.16)
runout	—	0.4 (0.02)
master cylinder I.D.	14.000–14.043 (0.5512–0.5529)	14.06 (0.554)
master piston O.D.	13.957–13.984 (0.5495–0.5506)	13.95 (0.549)
caliper cylinder I.D.	38.180–38.230 (1.5031–1.5051)	38.24 (1.506)
caliper piston O.D.	38.098–38.148 (1.4999–1.5019)	38.09 (1.500)
brake drum I.D.	—	—
brake lining thickness	—	—

Battery/charging system

Alternator charging coil resistance (At 20°C/68°F)	0.1–0.5 Ω	—
Regulator/rectifier regulated voltage/amperage	14.0–16.0 V/0–8 A at 5,000 rpm	—
Battery capacity	12 V–8 AH	—
Battery specific gravity (Fully charging)	—	—
(Needs charging)	—	—
Battery charging rate (Normal)	0.8 A (5–10 hours)	—
(Quick)	4 A (1 hour)	—
Battery voltage (Fully charged 20°C/68°F)	Over 12.8 V	—
(Needs charging 20°C/68°F)	Below 12.5 V	—
Alternator lighting coil resistance (At 20°C/68°F)	—	—
AC regulator regulated voltage (With analogue type)	—	—
(With digital type)	—	—

Starting system

Starter driven gear O.D.	42.175–42.200 (1.6604–1.6614)	42.12 (1.658)
Starter clutch outer I.D.	—	—
Starter motor brush spring tension	920 ± 140 g (32.4 ± 4.9 oz)	—
brush length	12.5 (0.49)	8.5 (0.33)

Unit: mm (in)

Ignition system

Item	Standard	Service limit
Spark plug (Standard NGK)	CR8EH-9	—
(Standard ND)	U24FER9	—
(For cold climate/below 5°C/41°F NGK)	—	—
(For cold climate/below 5°C/41°F ND)	—	—
(For extended high speed riding NGK)	CR9EH-9	—
(For extended high speed riding ND)	U27FER9	—
Spark plug gap	0.8–0.9 (0.031–0.035)	—
Ignition timing "F" mark	16° BTDC at idle	—
Advance start	1,700 rpm	—
stop	—	—
Full advance	—	—
Alternator exciter coil resistance (At 20°C/68°F)	—	—
Ignition coil resistance (Primary: at 20°C/68°F)	2–4 Ω	—
(Secondary with plug cap)	23–27 kΩ	—
(Secondary without plug wire)	13–17 kΩ	—
Pulse generator resistance (At 20°C/68°F)	340–420 Ω	—

Lights/meters/switches

Main fuse		30 A	—
Fuse		10 A x 4	—
Headlight (high/low beam)		12 V 60/55 W	—
Tail/brakelight		12 V 3/32 CP	—
License light		—	—
Position light bulb		—	—
Front turn signal/runing light		—	—
Front turn signal light		12 V 32 CP x 2	—
Rear turn signal light		12 V 32 CP x 2	—
Instrument lights		12 V 1.7 W x 3	—
Oil pressure warning indicator		12 V 1.7 W	—
Tail/brakelight warning indicator		—	—
Side stand indicator		12 V 1.7 W	—
Low fuel indicator		—	—
Coolant temperature indicator		—	—
Oil temperature indicator		—	—
High beam indicator		12 V 1.7 W	—
Turn signal indicator		12 V 1.7 W	—
Neutral indicator		12 V 1.7 W	—
Reverse indicator		—	—
Overdrive indicator		—	—
Oil temperature sensor resistance		—	—
Fuel unit resistance (at full level)		—	—
(at low level)		—	—
Fuel pump flow capacity (min./minute)		660 cc (22.3 US oz, 23.2 Imp oz) min.	—
Coolant temperature sensor resistance	80°C (176°F)	47–57 Ω	—
	120°C (248°F)	14–18 Ω	—
Fan motor switch	Starts to close (ON)	98–102°C (208–216°F)	—
	Stops to open (OFF)	93–97°C (199–207°F)	—

TORQUE VALUES

STANDARD TORQUE VALUES

Item	Torque N•m (kg-m, ft-lb)	Item	Torque N•m (kg-m, ft-lb)
5 mm bolt and nut	5 (0.5, 3.5)	5 mm screw	4 (0.4, 3)
6 mm bolt and nut	10 (1.0, 7)	6 mm screw	9 (0.9, 7)
8 mm bolt and nut	22 (2.2, 16)	6 mm flange bolt (8 mm head)	9 (0.9, 7)
10 mm bolt and nut	35 (3.5, 25)	6 mm flange bolt (10 mm head) and nut	12 (1.2, 9)
12 mm bolt and nut	55 (5.5, 40)	8 mm flange bolt and nut	27 (2.7, 20)
		10 mm flange bolt and nut	40 (4.0, 29)

Torque specifications listed below are for important fasteners. Others should be tightened to standard torque values listed above.

NOTES:
1. Apply a locking agent to the threads.
2. Apply sealant to the threads.
3. Stake.
4. Apply silicone grease to the sliding surface.

ENGINE

Item	Q'ty	Thread dia (mm)	Torque N•m	Torque kg-m	Torque ft-lb	Remarks
Lubrication:						
Oil pump driven sprocket bolt	1	6	15	1.5	11	NOTE 1
Oil pressure switch	1	—	12	1.2	9	NOTE 2
Oil drain bolt	1	12	35	3.5	25	
Oil filter boss	1	20	18	1.8	13	
Oil filter	1	20	10	1.0	7	
Cylinder head/cylinder/piston:						
Cylinder head cover bolt	8	6	10	1.0	7	
Camshaft holder bolt	16	6	12	1.2	9	
Cylinder head cover breather plate bolt	2	6	12	1.2	9	NOTE 1
Cylinder head special nut	12	8	30	3.0	22	
Cylinder head mounting bolt	2	6	12	1.2	9	
Cylinder mounting bolt	1	6	10	1.0	7	
Cylinder stud bolt	12	8	26	2.6	19	
Spark plug	4	10	11	1.1	8	
Clutch/gearshift linkage:						
Crankshaft hole cap	1	30	7	0.7	5	
Timing hole cap	1	14	10	1.0	7	
Clutch center lock nut	1	20	85	8.5	61	NOTE 3
Gearshift spindle return spring pin	1	8	23	2.3	17	
Crankcase/crankshaft/transmission:						
Connecting rod nut	8	7	24	2.4	17	
Crankcase bolt (8 mm)	12	8	24	2.4	17	
(8 mm x 65)	1	8	27	2.7	20	
(6 mm)	19	6	12	1.2	9	
Sealing bolt (lower crankcase)	1	20	30	3.0	22	
Special bolt (lower crankcase)	1	14	25	2.5	18	NOTE 2
Neutral switch	1	10	18	1.8	13	NOTE 2
Drive sprocket bolt	1	10	55	5.5	40	
Alternator:						
Flywheel bolt	1	10	85	8.5	61	
Starter clutch:						
Starter clutch bolt	1	10	85	8.5	61	

FRAME

Item	Q'ty	Thread dia (mm)	Torque N•m	Torque kg-m	Torque ft-lb	Remarks
Frame/exhaust system:						
Exhaust pipe joint nut	8	6	12	1.2	9	
Muffler mounting bolt	2	8	22	2.2	16	
Side stand pivot bolt	1	10	10	1.0	7	
Side stand pivot lock nut	1	10	27	2.7	20	
Side stand switch mounting bolt	1	6	30	3.0	22	
Gearshift pedal joint bolt	1	6	12	1.2	9	
Gearshift pedal mounting bolt	1	8	27	2.7	20	NOTE 1
Footpeg stay bolt	4	8	27	2.7	20	
Cooling system:						
Temperature sensor	1	—	10	1.0	7	NOTE 2
Fan motor switch	1	16	18	1.8	13	NOTE 2
Fuel system:						
Fuel valve nut	1	22	23	2.3	17	
Fuel tank cap mounting bolt	3	4	3	0.3	2	
Engine mount:						
Engine mount nut (front)	2	10	40	4.0	29	
Engine mount nut (rear/upper)	1	10	50	5.0	36	
Engine mount nut (rear/lower)	1	10	50	5.0	36	
Adjusting bolt	1	20	15	1.5	11	
Adjusting bolt lock nut	1	20	65	6.5	47	
Engine sub frame nut	4	10	45	4.5	33	
Engine bracket bolt	6	10	40	4.0	29	
Front:						
Handlebar pinch bolt	2	8	27	2.7	20	
Handlebar weight screw	2	6	10	1.0	7	NOTE 1
Axle bolt	1	14	60	6.0	43	
Axle pinch bolt	4	8	22	2.2	16	
Fork pinch bolt (upper)	2	7	11	1.1	8	
Fork pinch bolt (lower)	2	10	50	5.0	36	
Fork cap bolt	2	37	23	2.3	17	
Fork socket bolt	2	6	20	2.0	14	NOTE 1
Steering stem nut	1	24	105	10.5	76	
Steering head bearing adjustment nut	1	26	25	2.5	18	
Ignition switch mounting bolt	2	8	25	2.5	18	NOTE 1
Rear:						
Axle nut	1	16	90	9.0	65	
Driven sprocket nut	5	10	65	6.5	47	
Shock absorber mounting nut (upper)	1	10	45	4.5	33	
Shock absorber mounting nut (lower)	1	10	45	4.5	33	
Shock absorber lower joint lock nut	1	14	68	6.8	49	NOTE 1
Swingarm pivot nut	1	14	110	11.0	80	
Brake:						
Front caliper pad pin plug	1	10	2.5	0.25	1.8	
pad pin	1	10	18	1.8	13	
bracket bolt	2	8	27	2.7	20	
pin bolt	1	—	23	2.3	17	NOTE 1, 4
bracket pin bolt	1	—	13	1.3	9	NOTE 1, 4
Front master cylinder reservoir cover screw	2	4	6	0.6	4	
Front brake disc bolt	6	8	30	3.0	22	
Rear caliper pad pin plug	1	10	2.5	0.25	1.8	
pad pin	1	10	18	1.8	13	
mounting bolt	1	8	23	2.3	17	
pin bolt	1	—	23	2.3	17	NOTE 1, 4
Rear master cylinder push rod joint lock nut	1	—	17	1.7	12	
Rear brake disc bolt	4	8	40	4.0	29	
Brake hose bolt	4	10	35	3.5	25	

TOOLS

- The tools for the ball bearing removal and installation are not contained in this list. Refer to section 1, Ball Bearing Replacement, of the Common Service Manual.
- The newly designed tools are indicated with * mark in the list.

Description	Tool number	Alternative tool	Ref. section(s)
Oil filter wrench	07HAA–PJ70100		3
Vacuum gauge	07404–0030000		3
Oil pressure gauge	07506–3000000	or equivalent commercially available in U.S.A.	4
Oil pressure gauge attachment	07510–4220100		4
Rotor holder	07725–0040000		4, 14, 16
Antifreeze tester	Commercially available		5
Cooling system tester	Commercially available		5
Float level gauge	07401–0010000		6
Vacuum pump	ST–AH–260–MC7	–U.S.A. only	6
Pressure pump	ST–AH–255–MC7	–U.S.A. only	6
*Valve guide driver (guide removal/ installtion)	07JMD–KY20100		8
*Valve bucket hole protector	07JMG–KY20100		8
Valve spring compressor	07757–0010000		8
*Valve spring compressor attachment	07JME–KY20100		8
*Valve guide reamer, 3.8 mm	07JMH–KY20100	–07JMH-KY2010A (U.S.A. only)	8
Valve seat cutter, 22 mm (45° IN, EX)	07780–0010701	or equivalent commercially available in U.S.A.	8
Valve flat cutter, 22 mm (32° IN)	07780–0012601		8
Valve flat cutter, 21.5 mm (32° EX)	07780–0012800		8
Valve interior cutter, 22 mm (60° IN, EX)	07780–0014202		8
*Cutter holder	07JMH–KY20200		8
Piston ring compressor	07954–2500000	–07954–2350000	8
Piston base	07958–4130000	–07958–2500001 (U.S.A. only)	8
Compression gauge	07305–0010000	or equivalent commercially available in U.S.A.	8
*Compression gauge attachment	07JMJ–KY20100		8
*Clutch center holder	07GMB–KT80100	–Not available in U.S.A. 07HGB–001000A (U.S.A. only)	9

(Cont'd)

Description	Tool number	Alternative tool	Ref. section(s)
Bearing remover head, 20 mm	07746–0050600		11
Bearing remover shaft	07746–0050100		11
Driver	07749–0010000		11, 12
Attachment, 42 x 47 mm	07746–0010300		11, 12
Attachment, 52 x 55 mm	07746–0010400		11
Pilot, 20 mm	07746–0040500		11, 12
Fork seal driver	07947–KA50100		11
Fork seal driver attachment	07947–KF00100		11
Lock nut wrench, 30 x 32 mm	07716–0020400		11
Steering stem socket	07916–3710100		11
Ball race remover	07953–MJ10000	Attachment (07953–MJ1000A), Driver (07949–3710001) and Attachment, 37 x 40 mm (07746–0010200)	11
–attachment	07953–MJ10100		(11)
–driver	07953–MJ10200		(11)
Bearing race remover	07946–3710500		11
Driver	07949–3710001		11
Attachment, 37 x 40 mm	07746–0010200		11
Steering stem driver	07946–MB00000		11
Bearing remover head, 17 mm	07746–0050500		12
Attachment, 24 x 26 mm	07746–0010700		12
Pilot, 17 mm	07746–0040400		12
Pilot, 22 mm	07746–0041000		12
Shock absorber compressor	07GME–0010000	–Not available in U.S.A. 07959–3290001	12
–screw assembly	07GME–0010100		(12)
Shock absorber compressor attachment	07959–MB10000		12
*Driver pin	07GMD–KT80100	–Not available in U.S.A. Pilot, 22 mm (07746–0041000) and Driver (07749–0010000)	12
Driver shaft	07946–MJ00100	–Not available in U.S.A. Driver (07949–3710001)	12
*Needle bearing remover attachment	07GMD–KT70200	–Not available in U.S.A. Bushing remover (M967X–038–XXXXX)	12
Attachment, 28 x 30 mm	07946–1870100		12
Attachment, 32 x 35 mm	07746–0010100		12
Pilot, 15 mm	07746–0040300		12
Snap ring pliers	07914–3230001		12, 13
Rotor puller	07733–0020001	–07933–2160000 (U.S.A. only)	14
Christie battery charger	MC1012/2		14
Battery tester	BM–210		14
Digital multitester (KOWA)	07411–0020000	–KS–AHM–32–003 (U.S.A. only)	14, 15, 16, 17
Analogue tester	07308–0020001 (SANWA) or TH–5H (KOWA)		14, 15, 16, 17
Torx bit (T40)	07703–0010100	–or equivalent commercially available in U.S.A.	17

LUBRICATION AND SEAL POINTS

ENGINE

Point	Material	Remarks
• Intake and Exhaust valve stem sliding surface • Camshaft journal • Connecting rod small end-piston pin sliding surface • Transmission gear shifter groove • Crankshaft main journal bearing sliding surface • Connecting rod bearing sliding surface	Molybdenum solution (mixture of the engine oil and molybdenum disulfide grease with the ratio 1 : 1)	
• Upper crankcase mating surface	Liquid sealant	Do not apply sealant to the oil passages and near the main journal bearings
• Oil pressure switch • Fan motor switch • Thermo sensor • Neutral switch	Sealant	Do not apply sealant to the oil pressure switch thread head as shown.
• Gear teeth • Shaft journals • Sliding surface	Engine oil	

FRAME

Point	Material	Remarks
• Center stand pivot • Side stand pivot • Brake pedal pivot • Gearshift pedal pivot • Steering head bearings • Dust seal lips • Clutch lever pivot • Throttle cable ends • Swingarm pivot bearings • Seat locking tab • Rear wheel driven flange bearing • Wheel bearings • Speedometer gear	Multipurpose grease	
• Brake caliper seals • Caliper-piston sliding surface • Master cylinder piston cups • Master cylinder piston sliding surface	DOT 4 Brake fluid	
• Brake caliper pivots • Brake caliper pivot boots • Rear brake master cylinder push rod head	Silicone grease	
• Speedometer cable • Throttle cable • Choke cable • Clutch cable	Light weight oil	
• Handlebar grip inside surface	Honda Bond A or Honda Hand Grip Cement (U.S.A. only)	

CABLE AND HARNESS ROUTING

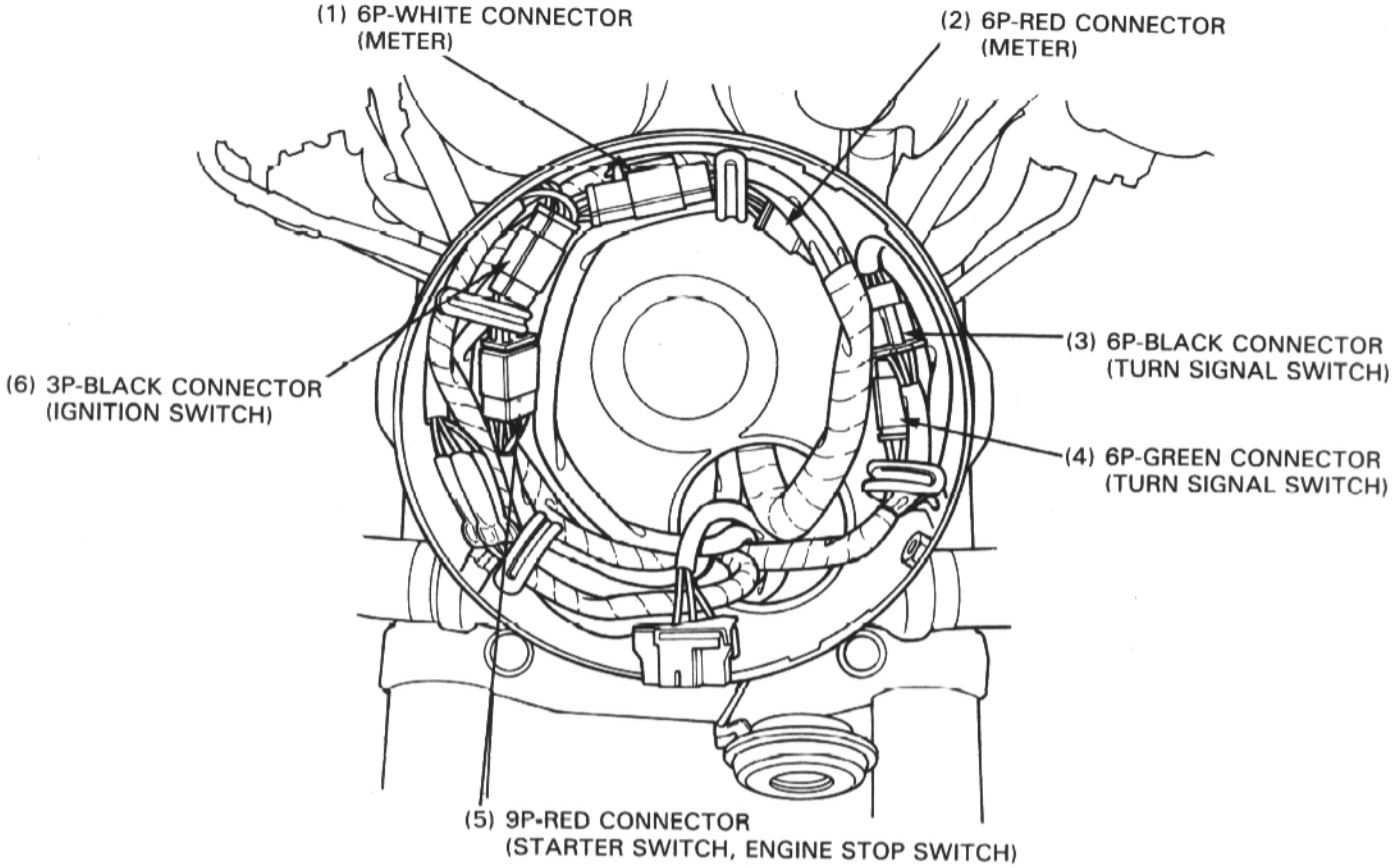

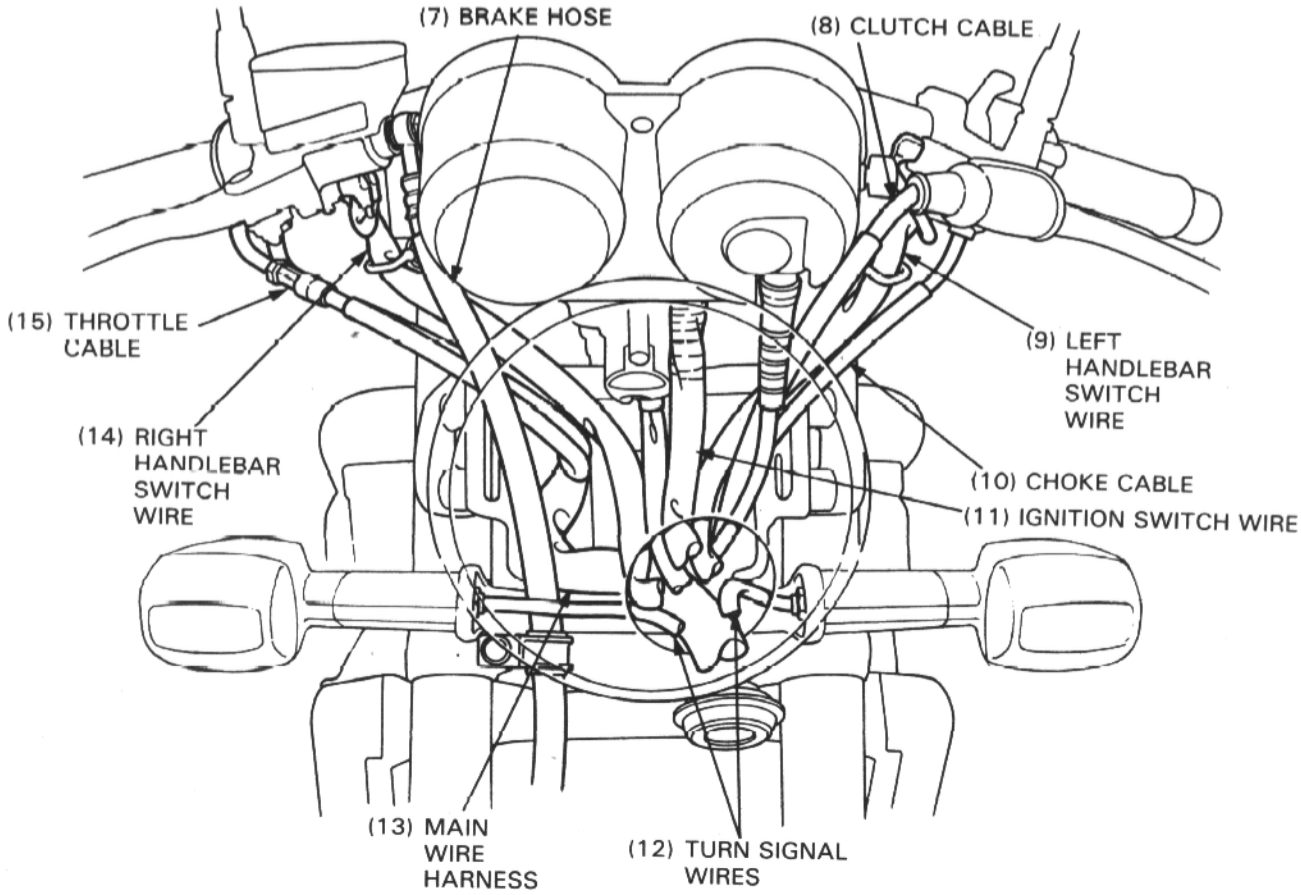

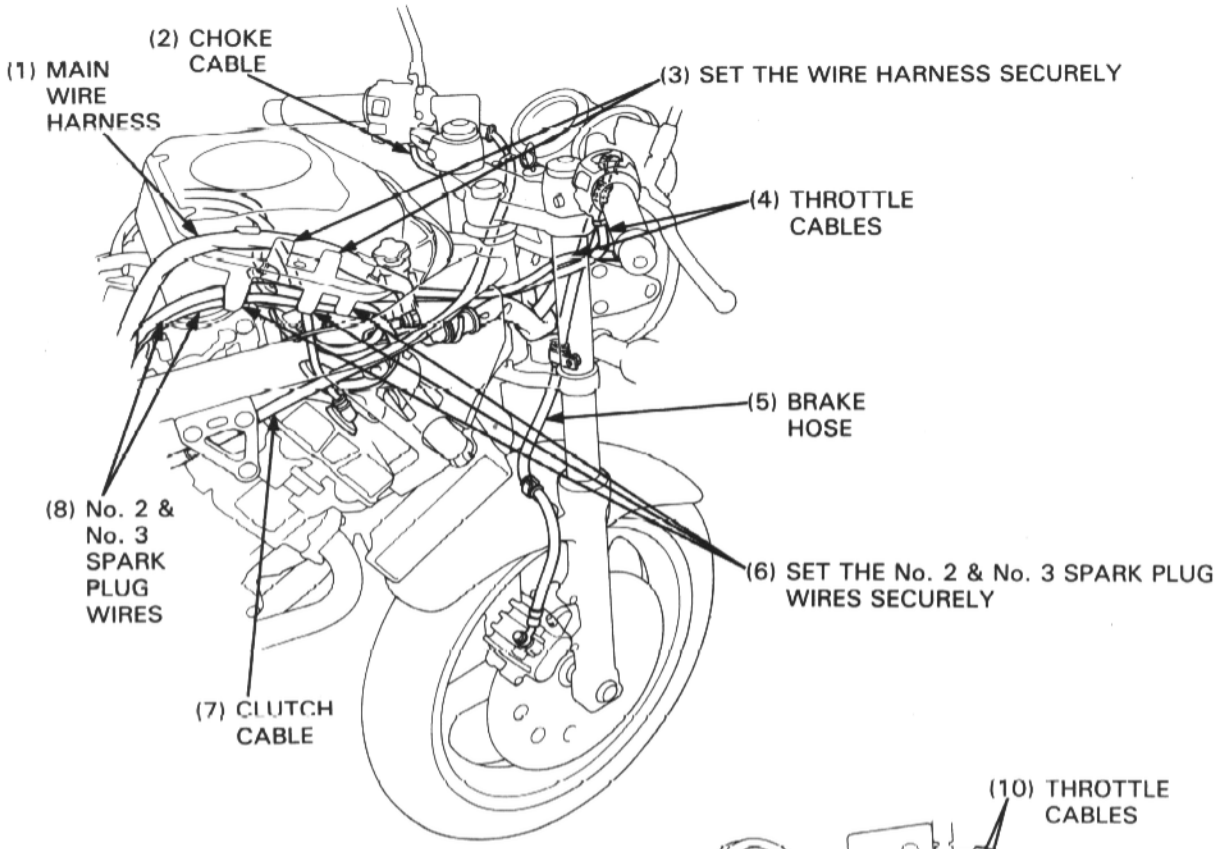
(1) MAIN WIRE HARNESS
(2) CHOKE CABLE
(3) SET THE WIRE HARNESS SECURELY
(4) THROTTLE CABLES
(5) BRAKE HOSE
(6) SET THE No. 2 & No. 3 SPARK PLUG WIRES SECURELY
(7) CLUTCH CABLE
(8) No. 2 & No. 3 SPARK PLUG WIRES

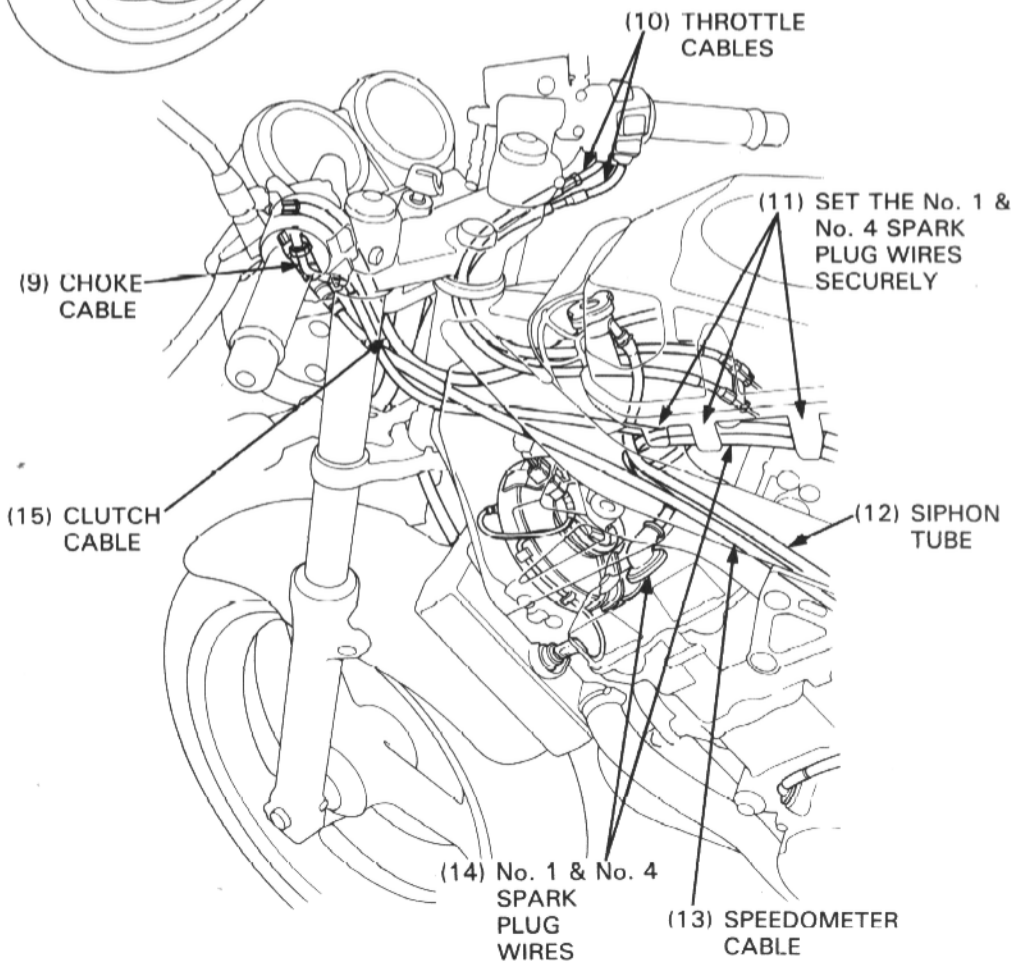
(9) CHOKE CABLE
(10) THROTTLE CABLES
(11) SET THE No. 1 & No. 4 SPARK PLUG WIRES SECURELY
(12) SIPHON TUBE
(13) SPEEDOMETER CABLE
(14) No. 1 & No. 4 SPARK PLUG WIRES
(15) CLUTCH CABLE

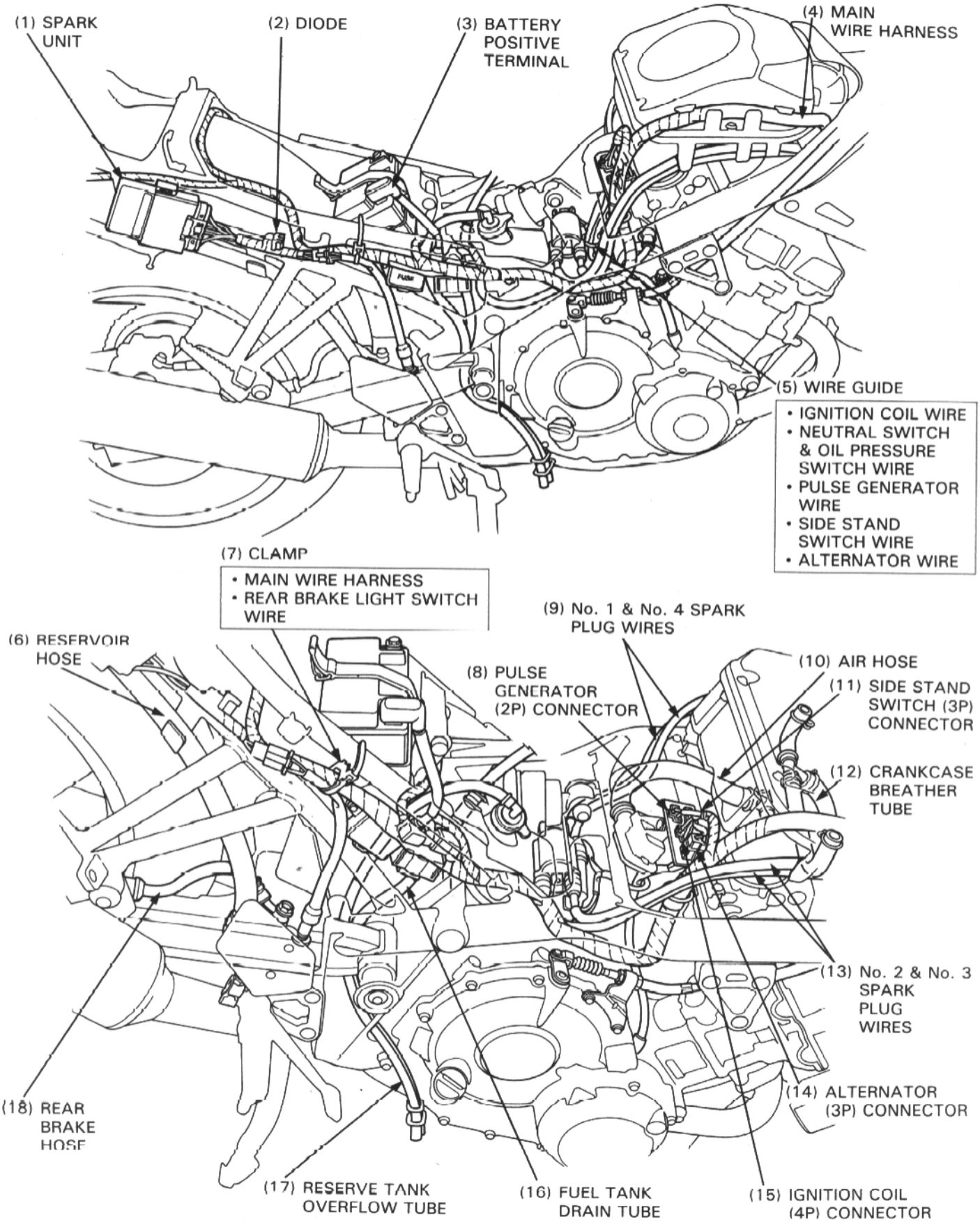
(1) SPARK UNIT
(2) DIODE
(3) BATTERY POSITIVE TERMINAL
(4) MAIN WIRE HARNESS
(5) WIRE GUIDE
• IGNITION COIL WIRE
• NEUTRAL SWITCH & OIL PRESSURE SWITCH WIRE
• PULSE GENERATOR WIRE
• SIDE STAND SWITCH WIRE
• ALTERNATOR WIRE
(7) CLAMP
• MAIN WIRE HARNESS
• REAR BRAKE LIGHT SWITCH WIRE
(6) RESERVOIR HOSE
(9) No. 1 & No. 4 SPARK PLUG WIRES
(8) PULSE GENERATOR (2P) CONNECTOR
(10) AIR HOSE
(11) SIDE STAND SWITCH (3P) CONNECTOR
(12) CRANKCASE BREATHER TUBE
(13) No. 2 & No. 3 SPARK PLUG WIRES
(14) ALTERNATOR (3P) CONNECTOR
(18) REAR BRAKE HOSE
(17) RESERVE TANK OVERFLOW TUBE
(16) FUEL TANK DRAIN TUBE
(15) IGNITION COIL (4P) CONNECTOR

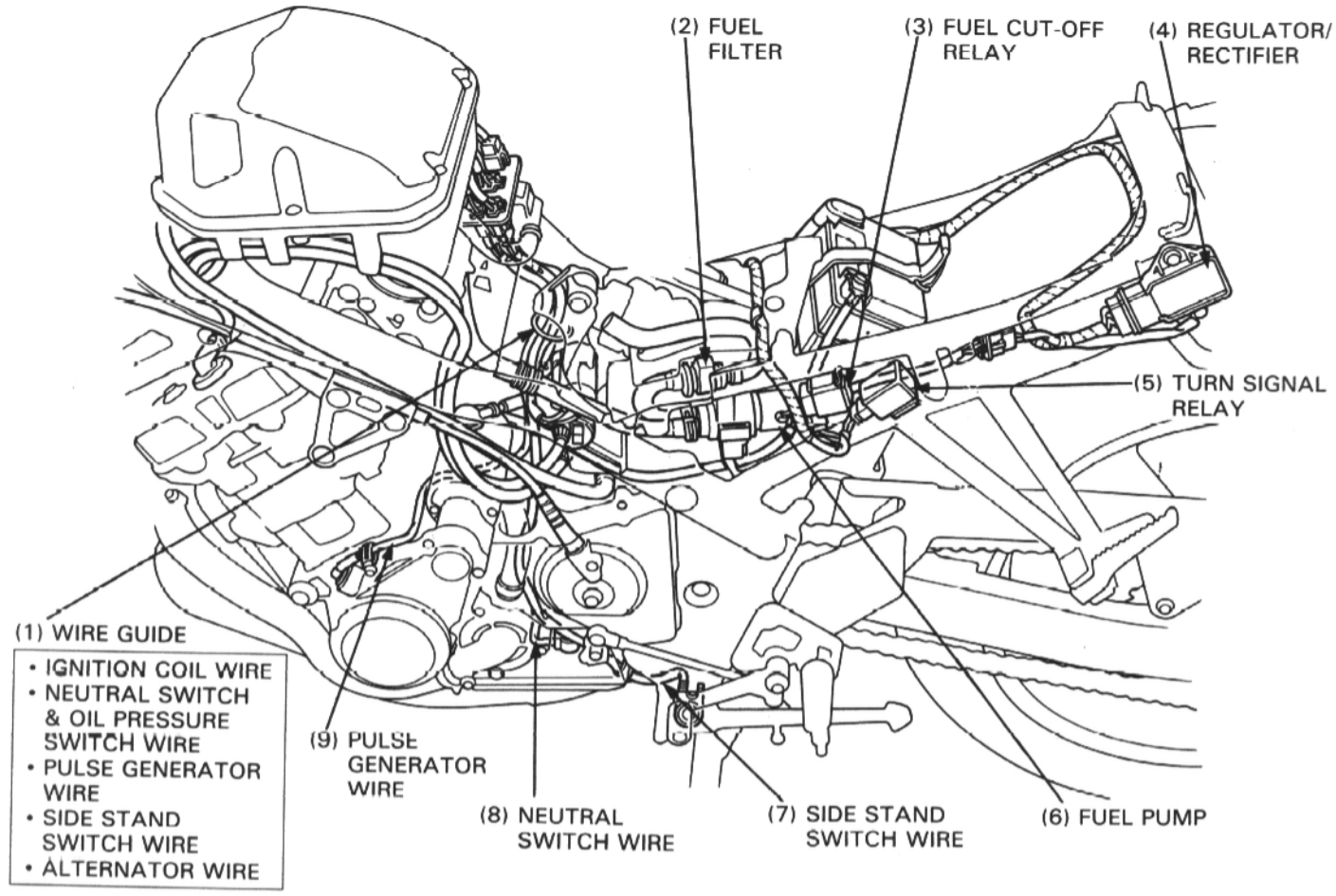
(2) FUEL FILTER
(3) FUEL CUT-OFF RELAY
(4) REGULATOR/ RECTIFIER
(5) TURN SIGNAL RELAY
(1) WIRE GUIDE
• IGNITION COIL WIRE
• NEUTRAL SWITCH & OIL PRESSURE SWITCH WIRE
• PULSE GENERATOR WIRE
• SIDE STAND SWITCH WIRE
• ALTERNATOR WIRE
(9) PULSE GENERATOR WIRE
(8) NEUTRAL SWITCH WIRE
(7) SIDE STAND SWITCH WIRE
(6) FUEL PUMP

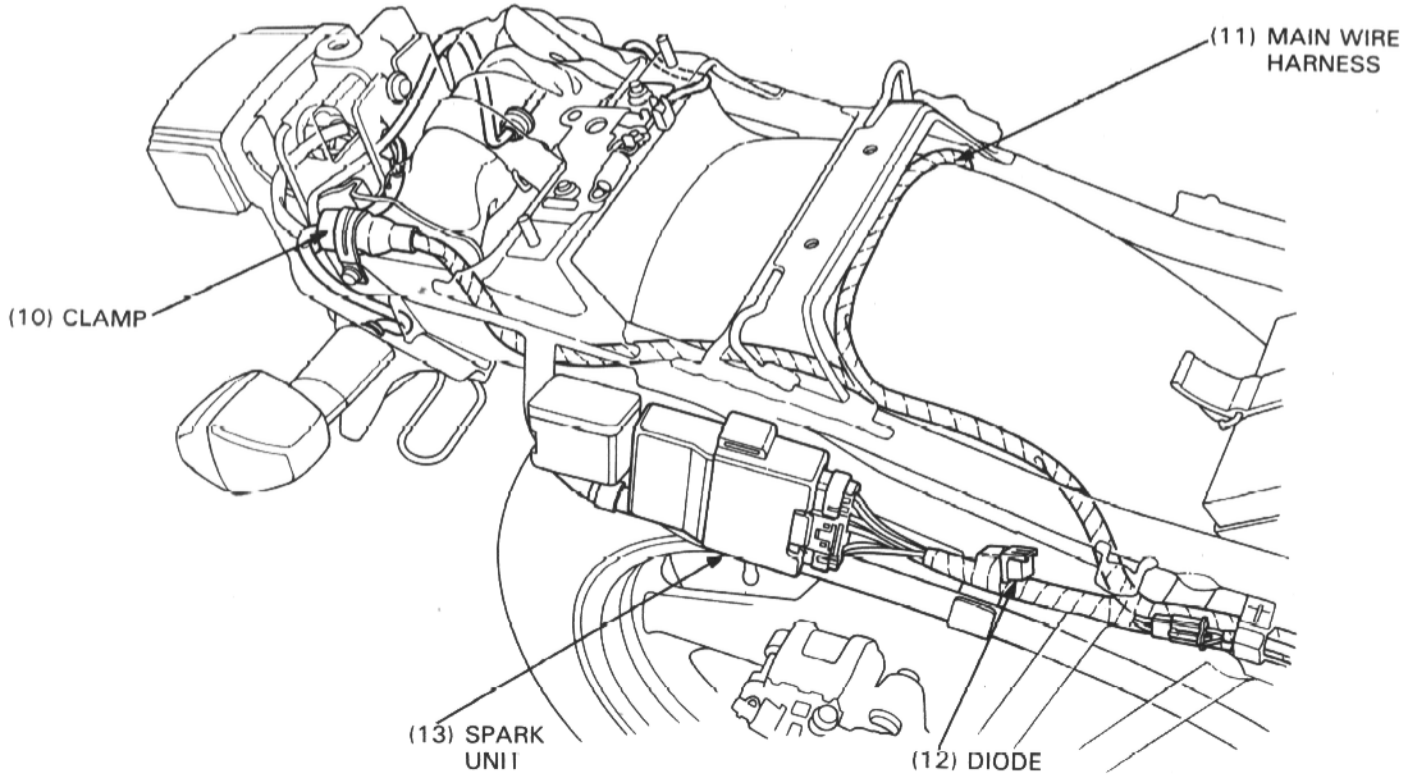
(11) MAIN WIRE HARNESS
(10) CLAMP
(13) SPARK UNIT
(12) DIODE

• California Model Only

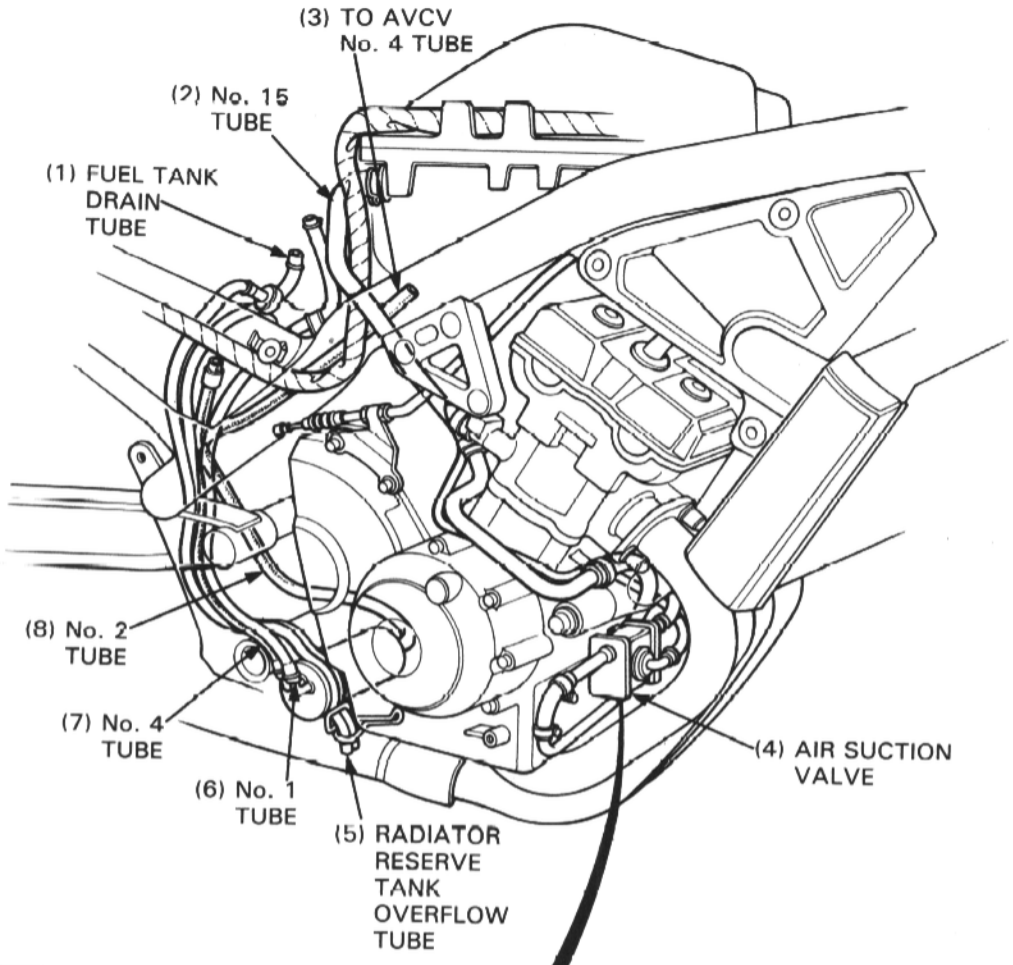

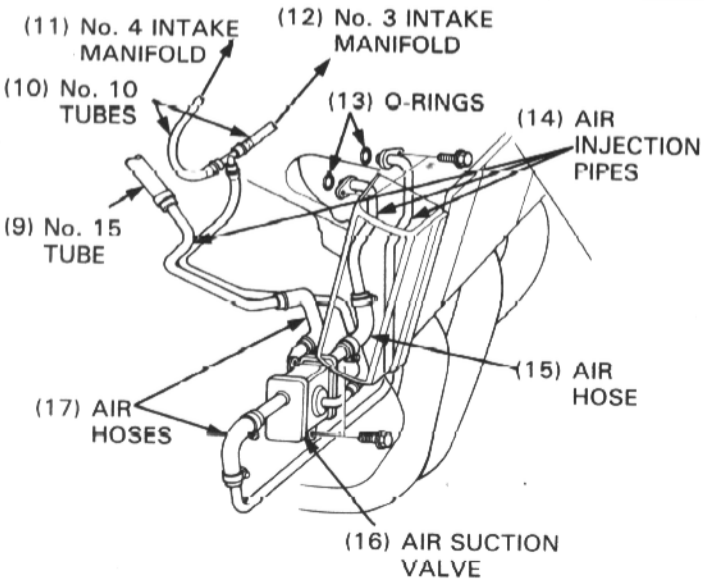

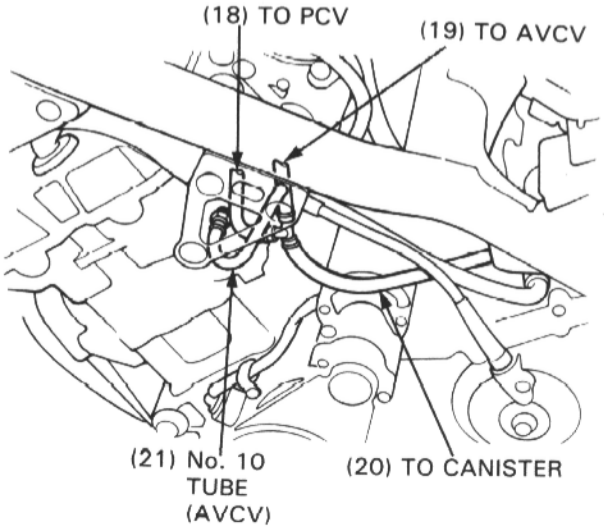

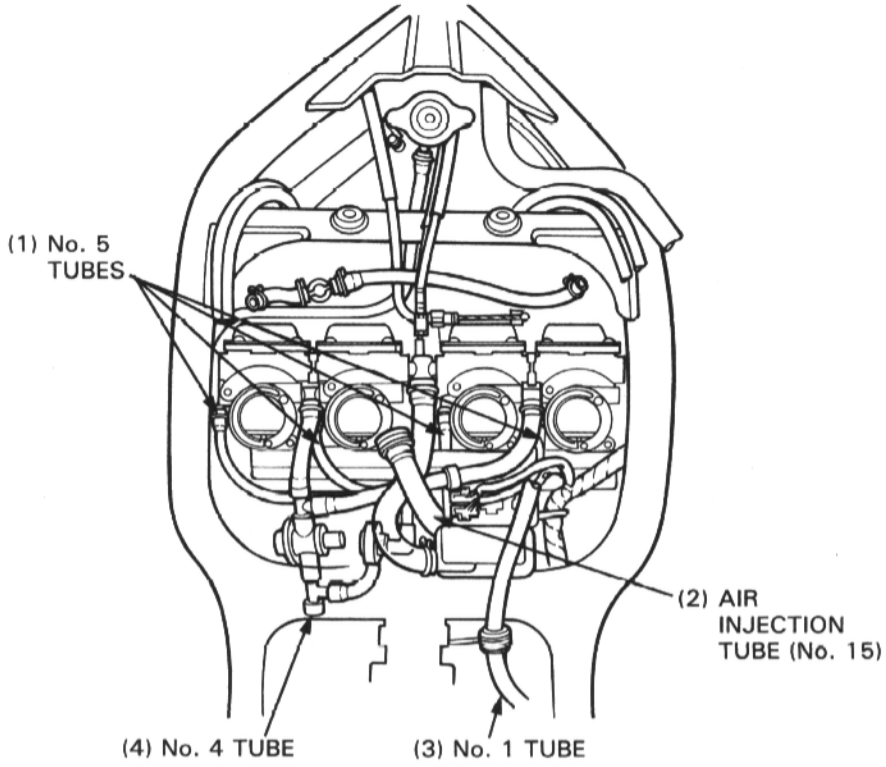
(1) No. 5
TUBES
(2) AIR
INJECTION
TUBE (No. 15)
(4) No. 4 TUBE
(3) No. 1 TUBE

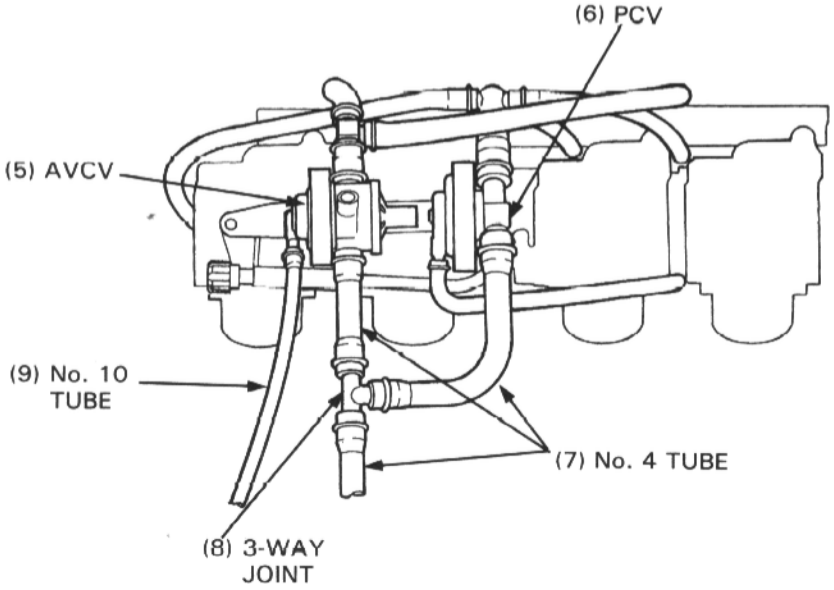
(6) PCV
(5) AVCV
(9) No. 10
TUBE
(7) No. 4 TUBE
(8) 3-WAY
JOINT

EMISSION CONTROL SYSTEMS

The U.S. Environmental Protection Agency and California Air Resources Board (CARB) require manufacturers to certify that their motorcycles comply with applicable exhaust emissions standards during their useful life, when operated and maintained according to the instructions provided, and that motorcycles built after January 1, 1983 comply with applicable noise emission standards for one year or 6,000 km (3,730 miles) after the time of sale to the ultimate purchaser, when operated and maintained according to the instructions provided. Compliance with the terms of the Distributor's Warranties for Honda Motorcycle Emission Control Systems is necessary in order to keep the emissions system warranty in effect.

SOURCE OF EMISSIONS

The combustion process produces carbon monoxide and hydrocarbons. Control of hydrocarbons is very important because, under certain conditions, they react to form photochemical smog when subjected to sunlight. Carbon monoxide does not react in the same way, but it is toxic.

Honda Motor Co., Ltd. utilized lean carburetor settings as well as other systems, to reduce carbon monoxide and hydrocarbons.

CRANKCASE EMISSION CONTROL SYSTEM

The crankcase emission control system routes crankcase emissions through the air cleaner and into the combustion chamber. Condensed crankcase vapors are accumulated in an air/oil separator and drain tube which must be emptied periodically. Refer to the Maintenance Schedule (page 3-4). The drain tube needs to be checked for oil accumulation more frequently if the machine has been ridden mostly at high speeds or in rain.

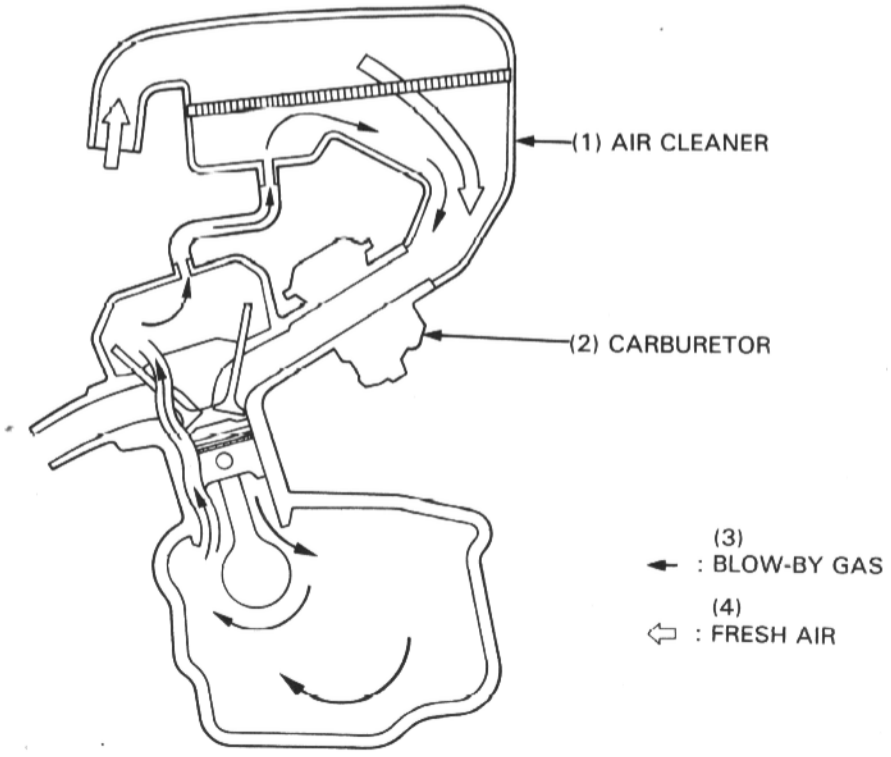

EXHAUST EMISSION CONTROL SYSTEM (SECONDARY AIR SUPPLY SYSTEM)

(Except California model)
The exhaust emission control system is composed of lean carburetor settings and no adjustment should be made except idle speed adjustment with the throttle stop screw.

(California model)
The exhaust emission control system consists of a secondary air supply system which introduces filtered air into the exhaust gases in the exhaust port. Fresh air is drawn into the exhaust port whenever there is a negative pressure pulse in the exhaust system. This charge of fresh air promotes burning of the unburned exhaust gases and changes a considerable amount of hydrocarbons and carbon monoxide into relatively harmless carbon dioxide and water vapor.
This model has the air suction valve; it consists of reed valves built into the air injection control valve.
A reed valve prevents reverse air flow through the system. The air injection control valve reacts to high intake manifold vacuum and will cut off the supply of fresh air during engine deceleration, thereby preventing afterburn in the exhaust system.

No adjustments to the secondary air supply system should be made, although periodic inspection of the components is recommended.

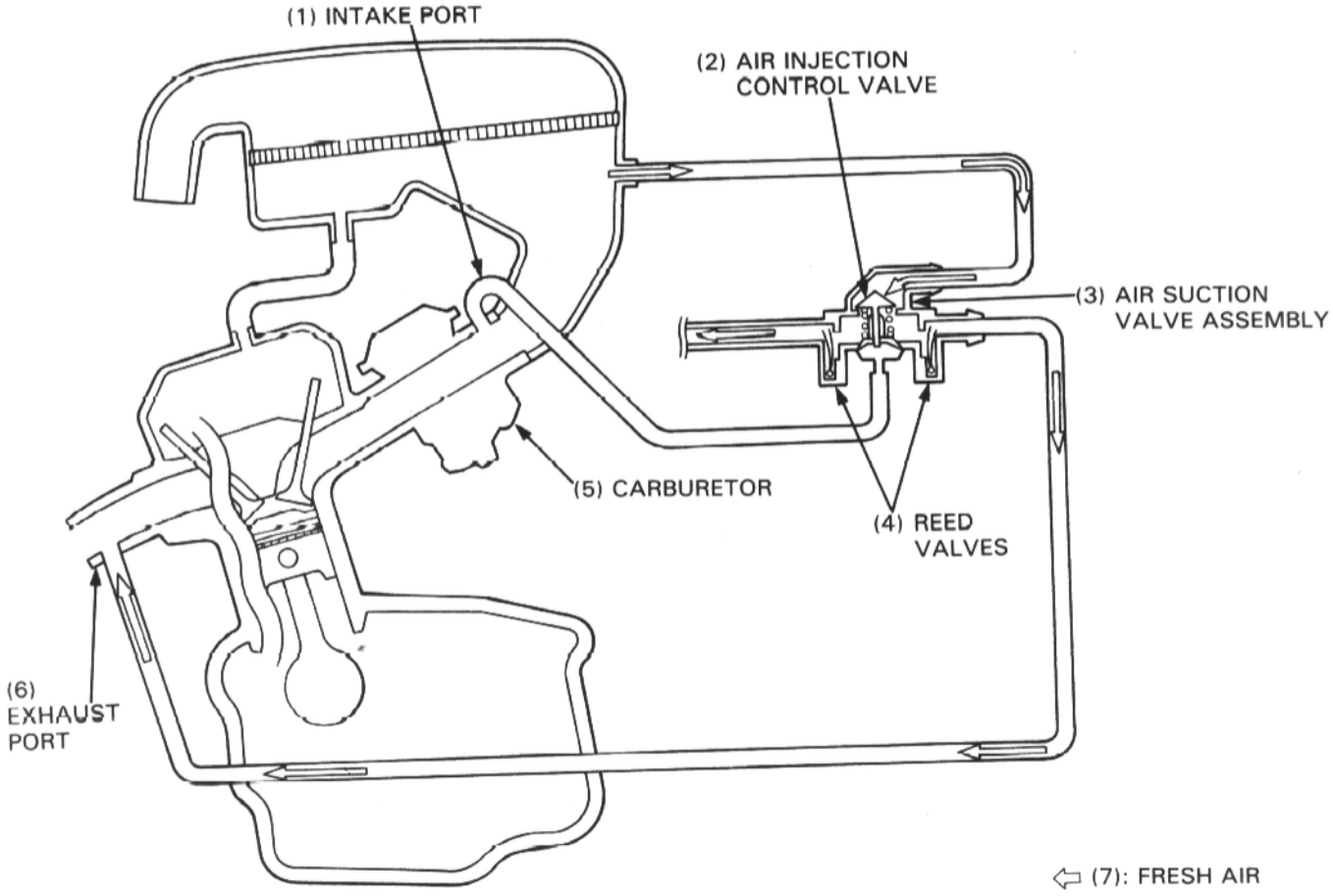

EVAPORATIVE EMISSION CONTROL SYSTEM (California model only)

This vehicle complies with the California Air Resources Board requirements for evaporative emission regulations.

Fuel vapor from the fuel tank and carburetors is routed into the charcoal canister where it is absorbed and stored while the engine is stopped. When the engine is running and the purge control diaphragm valve is open fuel vapor in the charcoal canister is drawn into the engine through the carburetor. At the same time, the air vent control valve is open and air is drawn into the carburetor through the valve.

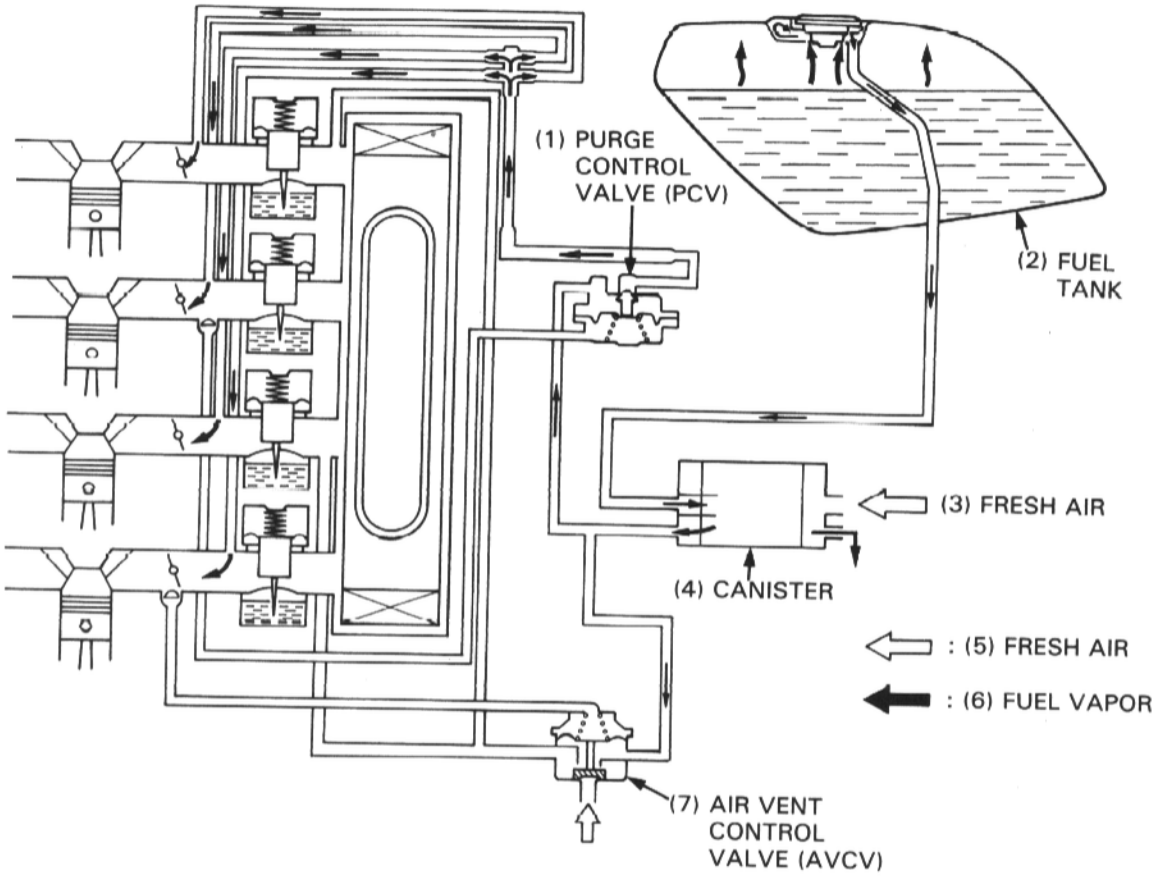

NOISE EMISSION CONTROL SYSTEM

TAMPERING WITH THE NOISE CONTROL SYSTEM IS PROHIBITED: Federal law prohibits the following acts or the causing thereof: (1) The removal or rendering inoperative by any person, other than for purposes of maintenance, repair of replacement, of any device or element of design incorporated into any new vehicle for the purpose of noise control prior to its sale or delivery to the ultimate purchaser or while it is in use; or (2) the use of the vehicle after such device or element of design has been removed or rendered inoperative by any person.

AMONG THOSE ACTS PRESUMED TO CONSTITUTE TAMPERING ARE THE ACTS LISTED BELOW:

1. Removal of, or puncturing the muffler, baffles, header pipes or any other component which conducts exhaust gases.
2. Removal of, or puncturing of any part of the intake system.
3. Lack of proper maintenance.
4. Replacing any moving parts of the vechile, or parts of the exhaust or intake system, with parts other than those specified by the manufacturer.

EMISSION CONTROL INFORMATION LABELS (U.S.A. Only)

An Emission Information Label is located on the rear fender as shown. The seat must be removed to read it.
It gives basic tune-up specifications.

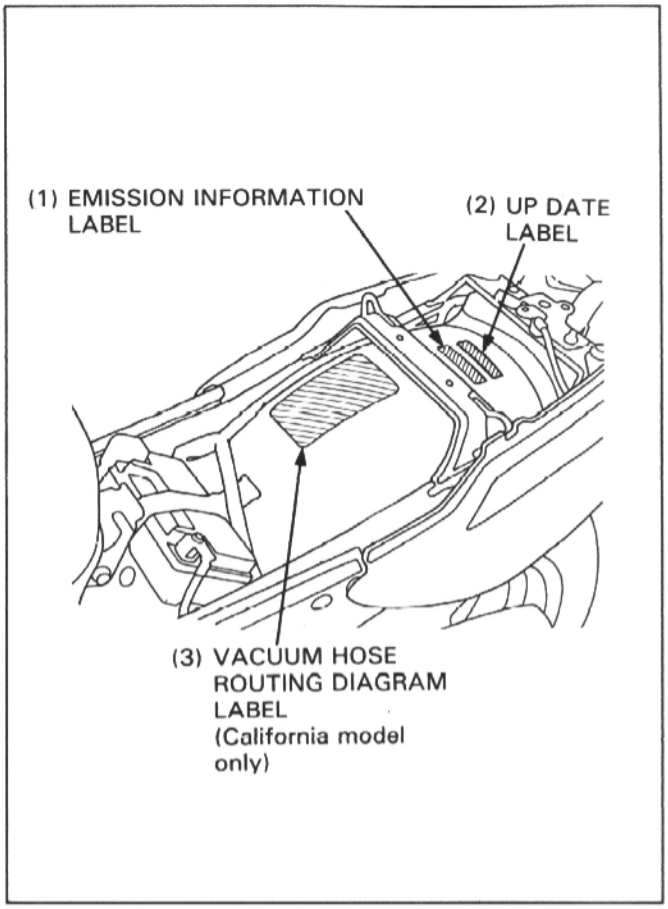

VEHICLE EMISSION CONTROL INFORMATION UPDATE LABEL

After making a high altitude carburetor adjustment, attach an update label on the rear fender as shown.

VACUUM HOSE ROUTING DIAGRAM LABEL (California model only)

The Vacuum Hose Routing Diagram Label is on the rear fender as shown. The seat must be removed to read it.

Route the vacuum hoses as shown on this label.

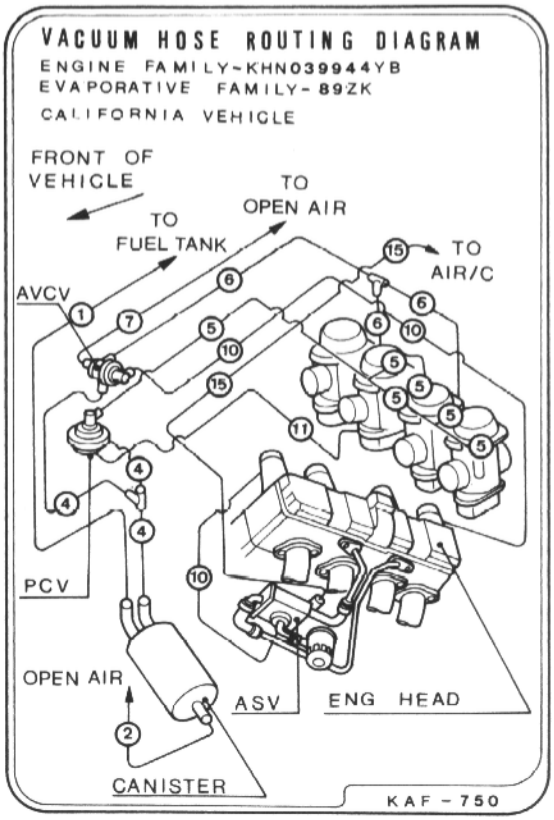

2. FRAME/BODY PANELS/EXHAUST SYSTEM

SERVICE INFORMATION	2-1	SIDE COVER REMOVAL/INSTALLATION	2-3
TROUBLESHOOTING	2-1	EXHAUST SYSTEM REMOVAL/ INSTALLATION	2-3
SEAT REMOVAL/INSTALLATION	2-2	FUEL TANK REMOVAL/INSTALLATION	2-4
REAR FAIRING REMOVAL/ INSTALLATION	2-2		

SERVICE INFORMATION

- When removing a cover, be careful not to damage any tab or groove.

⚠WARNING

- **Do not service the exhaust system while it is hot.**

NOTE

- Replace the exhaust pipe gaskets if the exhaust system is removed.
- Tighten the exhaust pipe joint nuts first, then the mounting bolts.

- Although it is possible to weld some cracked frames and straighten some frames that are slightly bent it is best to replace the frame with a new one when it is damaged.
- Generally speaking, plastic body panels cannot be repaired and therefore must be replaced.
- It is possible that a front end collosion will bend the steering head of the frame, but not the fork, wheel or even the axle.

TROUBLESHOOTING

- Failure of the front suspension, steering or rear suspension may damage the frame enough to require replacement.
- Refer to the section 18 of the Common Service Manual for front suspension and steering inspections.
- Refer to the section 19 of the Common Service Manual for rear suspension inspection.

Abnormal engine vibration
- Cracked or damaged engine mounts
- Cracked, damaged or bent welded portions
- Bent or damaged frame
- Engine problems

Abnormal noise when riding (banging or cracking)
- Damaged or bent engine mounts
- Damaged welded points
- Damaged or bent frame

Steers to one side when under acceleration or deceleration
- Bent frame
- Bent fork
- Bent swingarm

SEAT REMOVAL/INSTALLATION

Insert the ignition key into the seat lock/helmet holder and turn the key clockwise and push down the lever; release the seat locking.
Pushing the seat as shown, remove the seat rearward.

Align the seat hooks with the frame hooks and push the seat forward.
Press the rear of the seat down and lock the seat securely.

CAUTION

- **Apply grease to the seat locking.**
- **Be careful not to pinch the wire harness between the seat and the frame.**

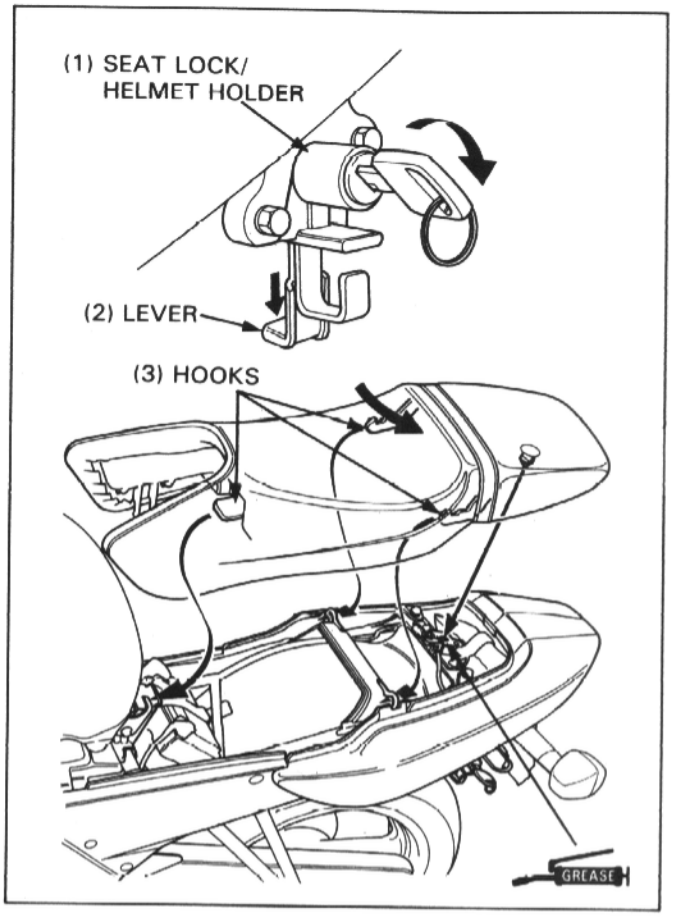

REAR FAIRING REMOVAL/ INSTALLATION

Remove the seat (above).
Remove the bolts and collars.
Release the fairing front bosses from the grommets.
Remove the rear fairing rearward.

Install the rear fairing in the reverse order of removal.

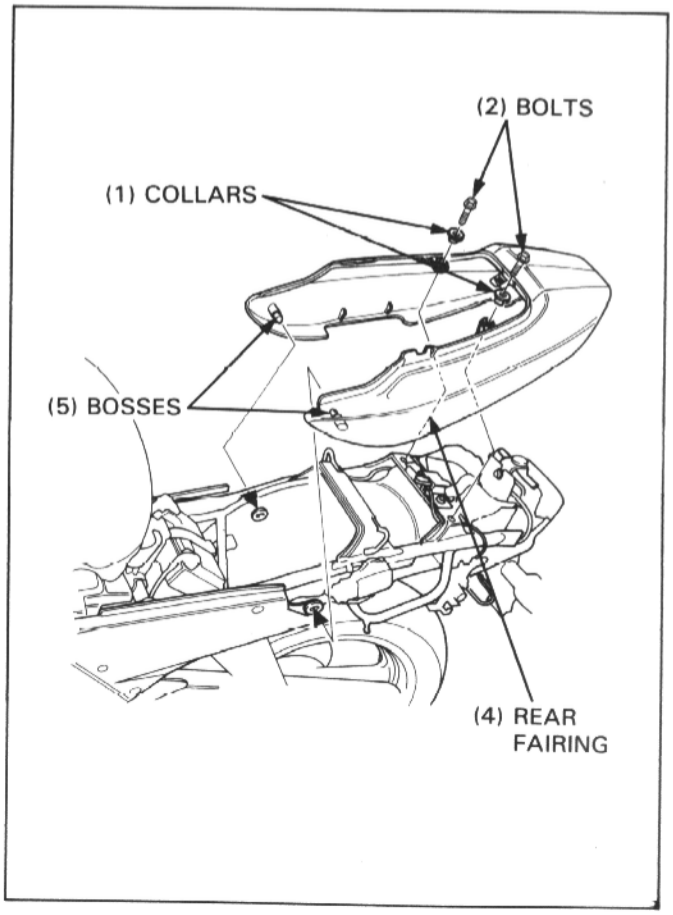

SIDE COVER REMOVAL/ INSTALLATION

FRONT SIDE COVER

Remove the bolts.
Release the boss from the frame grommet and remove the front side cover.
Install the side cover in the reverse order of removal.

NOTE

- It is not necessary to remove the bolt Ⓐ as shown.

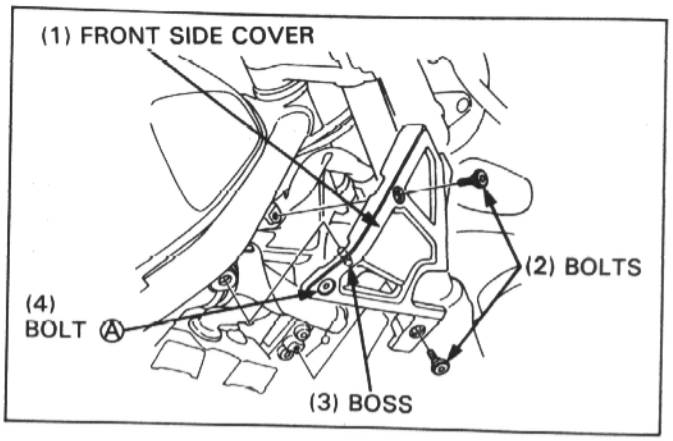

REAR SIDE COVER

Remove the following:
seat (page 2-2).
Release the rear fairing front bosses from the grommets (page 2-2).

Remove the bolts and rear side cover.

Install the side cover in the reverse order of removal.

NOTE

- It is not necessary to remove the bolt Ⓐ as shown.

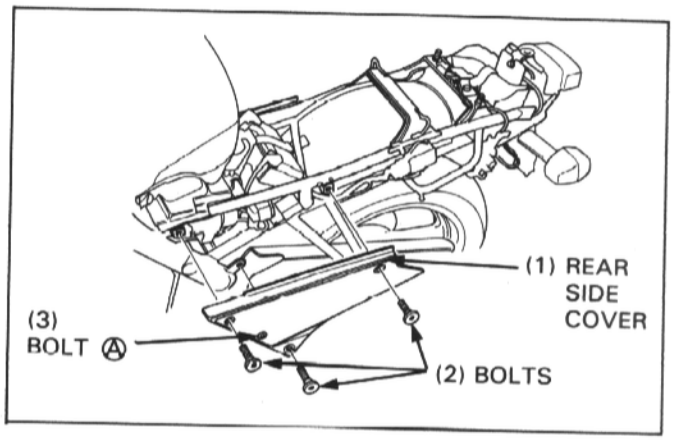

EXHAUST SYSTEM REMOVAL/ INSTALLATION

Remove the radiator lower mounting bolts and loosen the upper mounting bolt/nut (page 5-5). Swing the radiator forward.

Remove the following:
— exhaust pipe joint nuts.
— muffler mounting bolts and exhaust pipe/muffler.
— gaskets.

NOTE

- Replace the exhaust pipe gaskets if the exhaust system is removed.

Install new gaskets and exhaust pipe/muffler.
Tighten the exhaust pipe joint nuts first.

TORQUE: 12 N·m (1.2 kg-m, 9 ft-lb)

Then tighten the muffler mounting bolts.

TORQUE: 22 N·m (2.2 kg-m, 16 ft-lb)

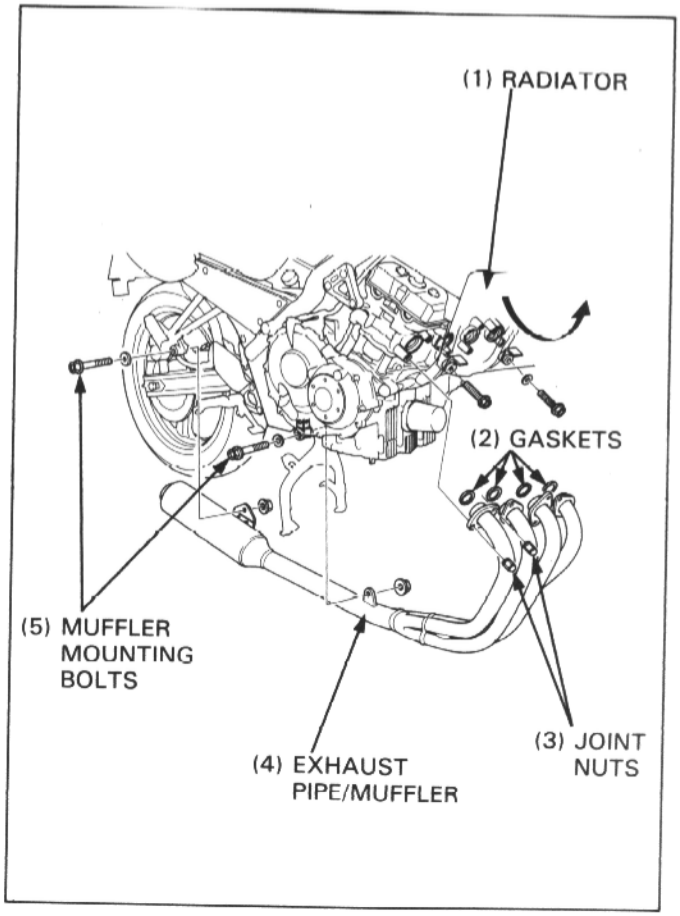

FUEL TANK REMOVAL/ INSTALLATION

⚠ WARNING

- **Gasoline is extremely flammable and is explosive under certain conditions. Work in a well ventilated area. Smoking or allowing flames or sparks in the work area or where gasoline is stored can cause a fire or explosion.**

Remove the seat (page 2-2).
Turn the fuel valve OFF.
Remove the fuel tank mounting bolts and lift the tank up.
Disconnect the tubes, and remove the fuel tank.

Install the fuel tank in the reverse order of removal.
After installation, turn the fuel valve ON and check the fuel line for leakage.

Install the seat (page 2-2).

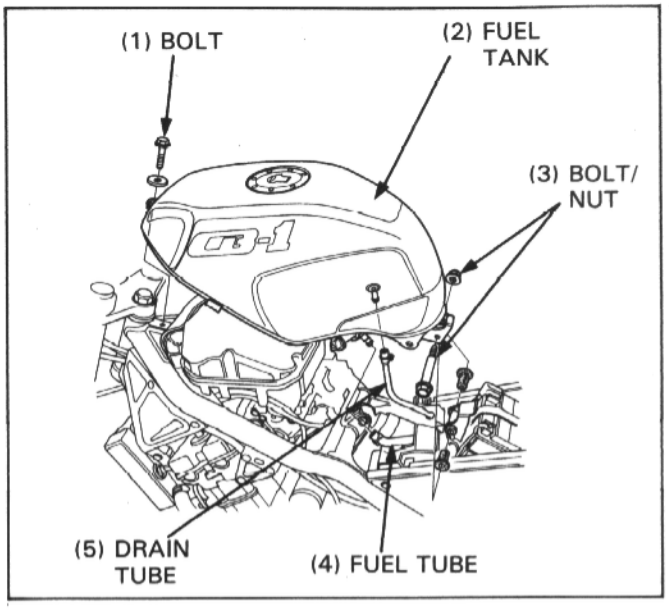

3. MAINTENANCE

SERVICE INFORMATION	3-1	SPARK PLUG	3-5
SERVICE ACCESS GUIDE	3-2	VALVE CLEARANCE	3-5
MAINTENANCE SCHEDULE	3-4	CARBURETOR SYNCHRONIZATION	3-8
AIR CLEANER	3-5	SIDE STAND	3-8

SERVICE INFORMATION

- Refer to the Common Service Manual for items not included in this manual.
- Refer to the specifications (Section 1) for maintenance service data.

SERVICE ACCESS GUIDE

- The following shows the locations of the maintenance items listed below and the parts required to be removed for that maintenance service. Refer to the Common Service Manual for items not instructed in this manual.
- Refer to section 2 (Frame/Body panels/Exhaust system), the parts required to be remove for service.
  For example: AIR CLEANER (Contamination, clogging, replacement) ——— maintenance parts (service item)
  • Fuel tank ——— parts required to be removed for service

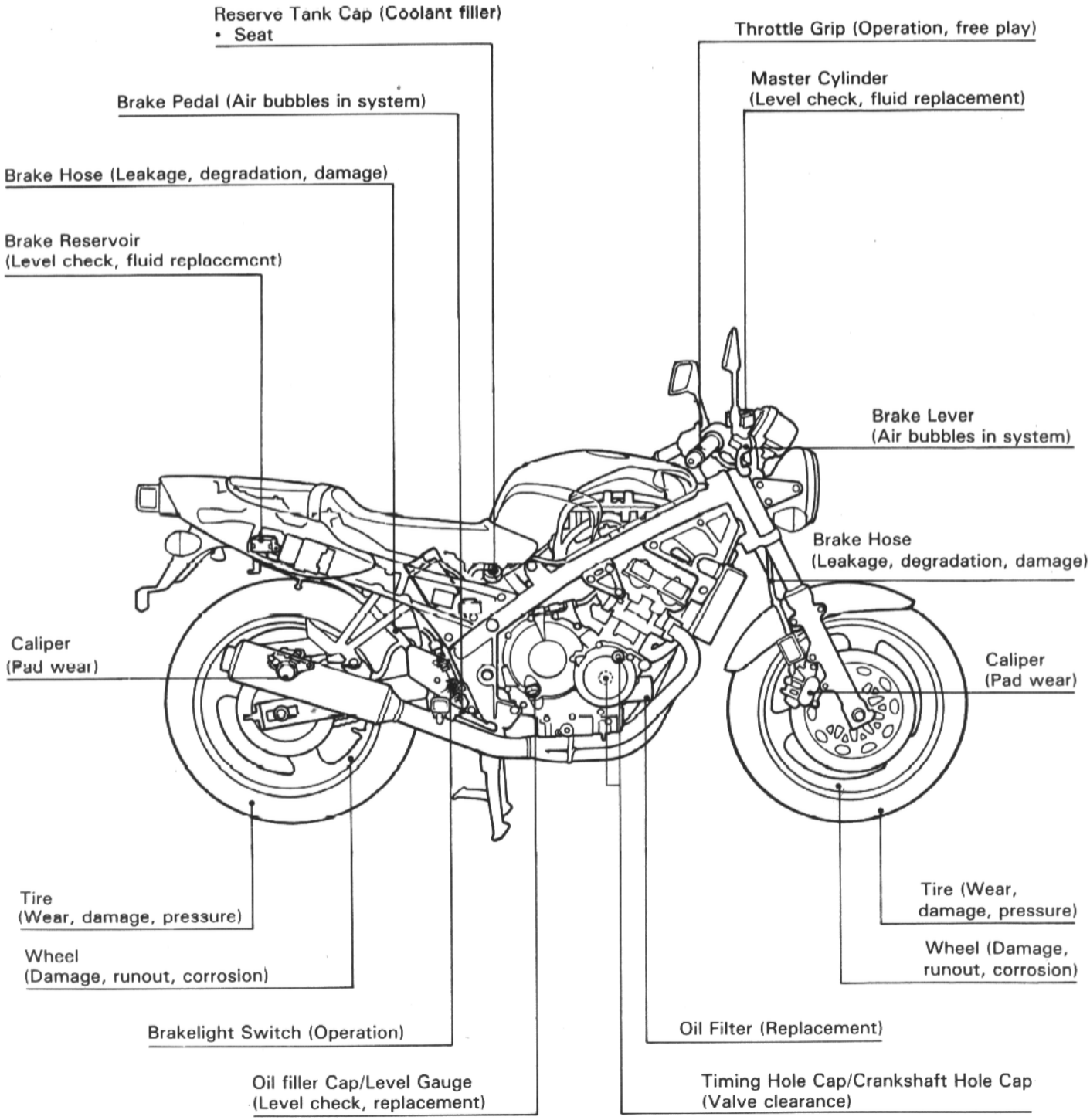

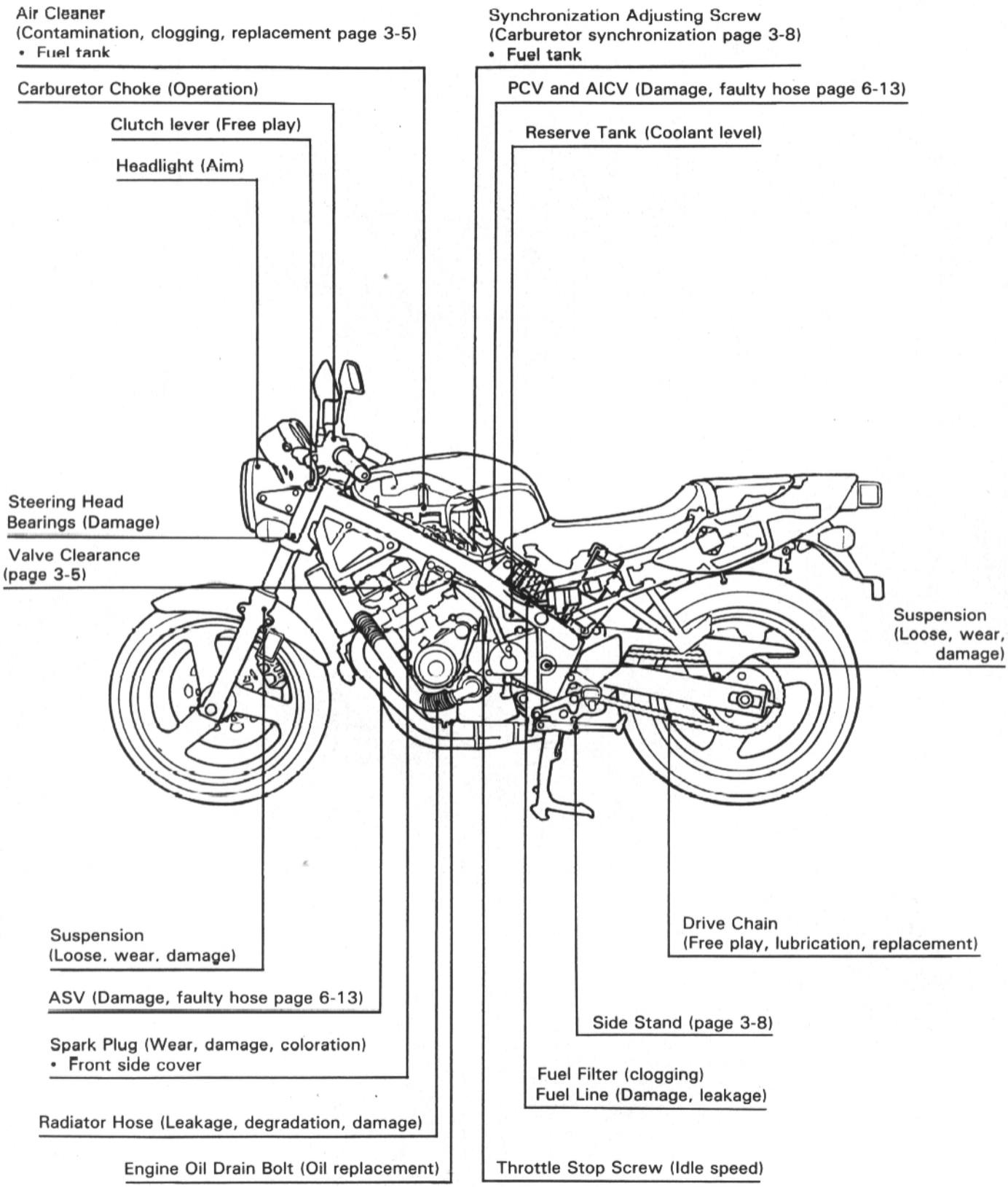
Air Cleaner
(Contamination, clogging, replacement page 3-5)
• Fuel tank
Carburetor Choke (Operation)
Clutch lever (Free play)
Headlight (Aim)
Synchronization Adjusting Screw
(Carburetor synchronization page 3-8)
• Fuel tank
PCV and AICV (Damage, faulty hose page 6-13)
Reserve Tank (Coolant level)
Steering Head
Bearings (Damage)
Valve Clearance
(page 3-5)
Suspension
(Loose, wear,
damage)
Suspension
(Loose, wear, damage)
ASV (Damage, faulty hose page 6-13)
Spark Plug (Wear, damage, coloration)
• Front side cover
Radiator Hose (Leakage, degradation, damage)
Engine Oil Drain Bolt (Oil replacement)
Drive Chain
(Free play, lubrication, replacement)
Side Stand (page 3-8)
Fuel Filter (clogging)
Fuel Line (Damage, leakage)
Throttle Stop Screw (Idle speed)

MAINTENANCE SCHEDULE

Perform the PRE-RIDE INSPECTION in the Owner's Manual at each scheduled maintenance period.
I: Inspect and Clean, Adjust, Lubricate, or Replace if necessary.
R: Replace, L: Lubricate
The following items require some mechanical knowledge. Certain items (particularly those marked * and **) may require more technical information and tools. Consult your authorized Honda dealer.

		ITEM \ FREQUENCY	WHICHEVER COMES FIRST ➡ NOTE	x 1000 km	1	6	12	18	24	30	36	Refer to page
				x 1000 mi	0.6	4	8	12	16	20	24	
EMISSION RELATED ITEMS	*	FUEL LINE					I		I		I	NOTE 5
	*	THROTTLE OPERATION					I		I		I	NOTE 5
	*	CARBURETOR CHOKE					I		I		I	NOTE 5
		AIR CLEANER	NOTE 2					R			R	3-5
		SPARK PLUG				R	R	R	R	R	R	3-5/NOTE 5
	*	VALVE CLEARANCE			I				I			3-5
		ENGINE OIL			R		R		R		R	NOTE 5
		ENGINE OIL FILTER			R		R		R		R	NOTE 5
	*	CARBURETOR SYNCHRONIZATION					I		I		I	3-8/NOTE 5
	*	CARBURETOR IDLE SPEED			I	I	I	I	I	I	I	NOTE 5
		RADIATOR COOLANT	NOTE 3				I		I		R	NOTE 5
	*	COOLING SYSTEM					I		I		I	NOTE 5
	*	SECONDARY AIR SUPPLY SYSTEM	NOTE 4				I		I		I	NOTE 5
	*	EVAPORATIVE EMISSION CONTROL SYSTEM	NOTE 4					I		I		NOTE 5
NON-EMISSION RELATED ITEMS		DRIVE CHAIN			I, L EVERY 600 mi (1,000 km)							NOTE 5
		BRAKE FLUID	NOTE 3			I	I	R	I	I	R	NOTE 5
		BRAKE PAD WEAR				I	I	I	I	I	I	NOTE 5
		BRAKE SYSTEM			I		I		I		I	NOTE 5
	*	BRAKE LIGHT SWITCH					I		I		I	NOTE 5
	*	HEADLIGHT AIM					I		I		I	NOTE 5
		CLUTCH SYSTEM			I	I	I	I	I	I	I	NOTE 5
		SIDE STAND					I		I		I	3-8
	*	SUSPENSION					I		I		I	NOTE 5
	*	NUTS, BOLTS, FASTENERS			I		I		I		I	NOTE 5
	**	WHEELS/TIRES					I		I		I	NOTE 5
	**	STEERING HEAD BEARINGS			I		I		I		I	NOTE 5

* Should be serviced by an authorized Honda dealer, unless the owner has proper tools and service data and is mechanically qualified.

** In the interest of safety, we recommend these items be serviced only by an authorized Honda dealer.

NOTES: 1. At higher odometer readings, repeat at the frequency interval established here.
2. Service more frequently when riding in unusually wet or dusty areas.
3. Replace every 2 years, or at indicated odometer interval, whichever comes first. Replacement requires mechanical skill.
4. Californial type only.
5. Refer to the Common Service Manual.

AIR CLEANER

Remove the following:
— fuel tank (page 2-4).
— air cleaner case cover (page 6-3).

Discard the air cleaner element in accordance with the maintenance schedule.
Also, replace the element any time it is excessively dirty or damaged.

Install the air cleaner element with the ⇧ mark forward and the TOP mark facing up.
Install the wire harness into the wire harness clamp on the cover securely.

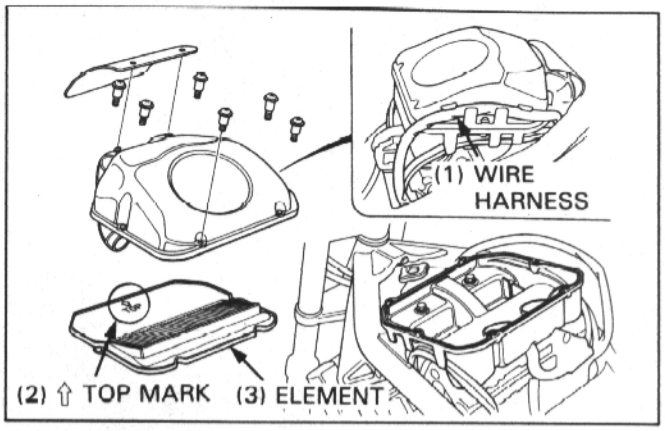

SPARK PLUG

NOTE

- For detailed instructions, refer to section 2 of the Common Service Manual. Instruction for removal/installation of only the No. 2 and No. 3 spark plugs is given here. No. 1 and No. 2 plug can be removed easily only to remove the front side cover.

Remove the front side covers (page 2-3).
The spark plug wrench is included in the tool kit.
Insert the plug wrench between the heat guard plate and cylinder head cover as shown, and set the wrench onto the spark plug.
Turn the plug wrench and remove the spark plug.

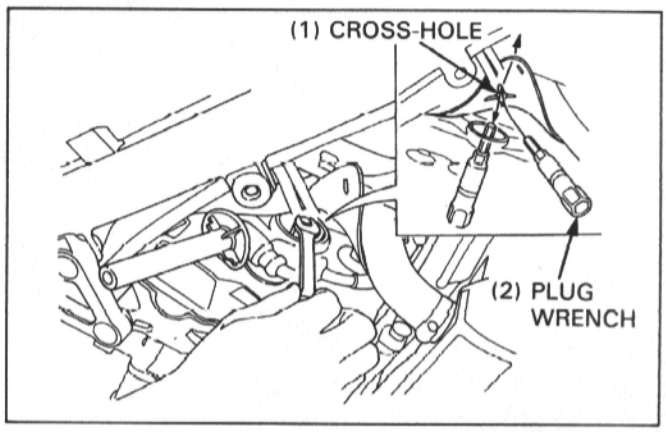

Then lift up the wrench with the plug, through the heat guard cross-hole.
Pull the wrench out of the cylinder head.
Remove the spark plug from the wrench.

Install a new spark plug into the cylinder in the reverse order of removal.
Tighten the spark plug 1/2 turn with an open end wrench to compress the plug sealing washer.

VALVE CLEARANCE

INSPECTION

NOTE

- Inspect and adjust valve clearance while the engine is cold (Below 35°C/95°F).

Remove the following:
— timing hole cap (page 9-2).
— crankshaft hole cap cover (page 9-2).
— crankshaft hole cap (page 9-2).
— air cleaner case (page 6-3).

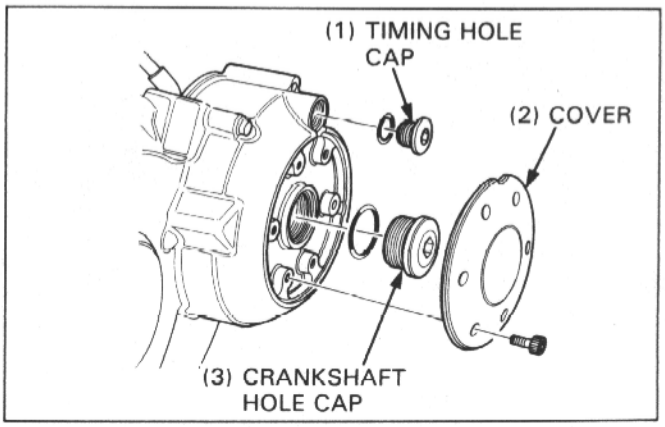

Remove the radiator lower mounting bolts and loosen the upper mounting bolt/nut.
Swing the radiator forward.

Remove the cylinder head cover (page 8-2).

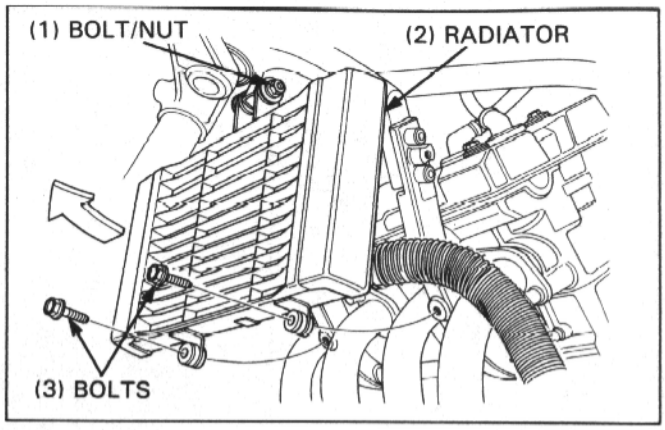

Rotate the crankshaft clockwise.
Align the T mark (Yellow colored line) on the flywheel with the index mark on the right crankcase cover. Each timing mark (EX and IN) on the camshaft gears should be aligned with the cylinder head upper surface.
If each timing mark is facing outside, No. 4 cylinder piston is at TDC (Top Dead Center) on the compression stroke, go to Step 1.
If each timing mark is facing inside, No. 1 cylinder piston is at TDC (Top Dead Center) on the compression stroke, go to Step 2.

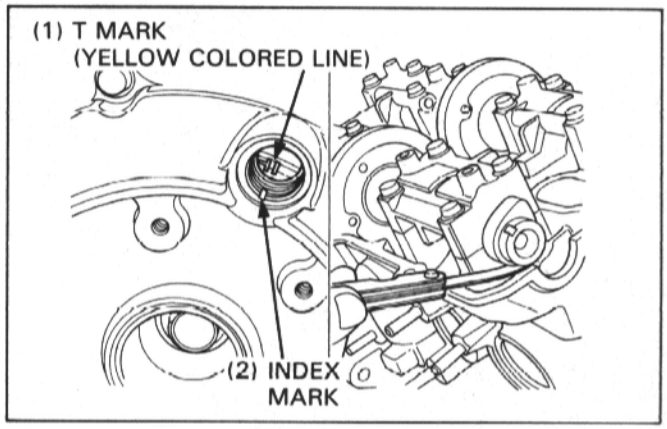

Step 1:
Insert the feeler gauge between the cam lobe and valve bucket.
Measure the valve clearance as follow:
- No. 2 (IN)
- No. 3 (EX)
- No. 4 (IN/EX)

Step 2:
Insert the feeler gauge between the cam lobe and valve bucket.
Measure the valve clearance as follow:
- No. 1 (IN/EX)
- No. 2 (EX)
- No. 3 (IN)

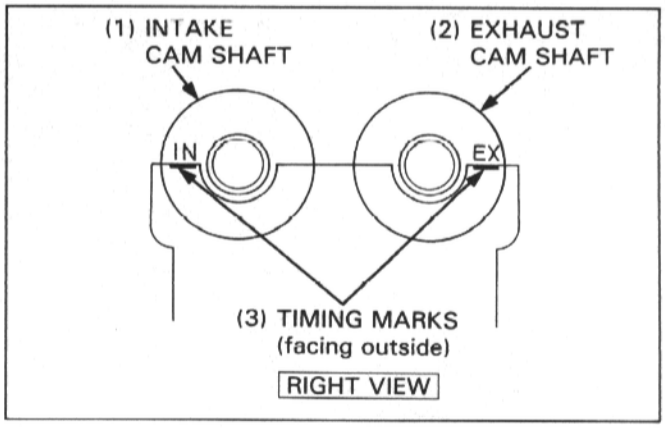

VALVE CLEARANCES:
IN: 0.12–0.18 mm (0.005–0.007 in)
EX: 0.17–0.23 mm (0.007–0.009 in)

Rotate the crankshaft 360 degrees and align the T mark with the index mark again and go to Step 2 or 1 to check other valve clearances.

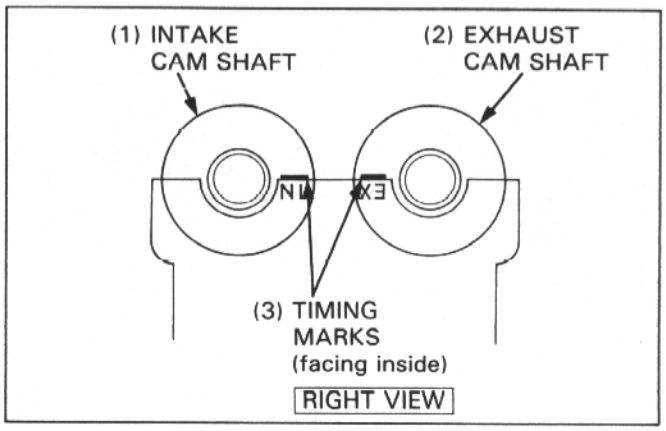

SHIM SELECTION

If the clearance is not correct:
Remove the camshafts (page 8-2).
Remove the valve buckets and shims (page 8-6).

NOTE

- Do not allow shims to fall into the crankcase. The shim(s) may occasionally stick to the bucket.
- Mark the positions of all buckets and shims to ensure correct reassembly.
- It is easy to remove the valve bucket with a valve lapping tool or magnet.
- Remove the shims with tweezers or a magnet.

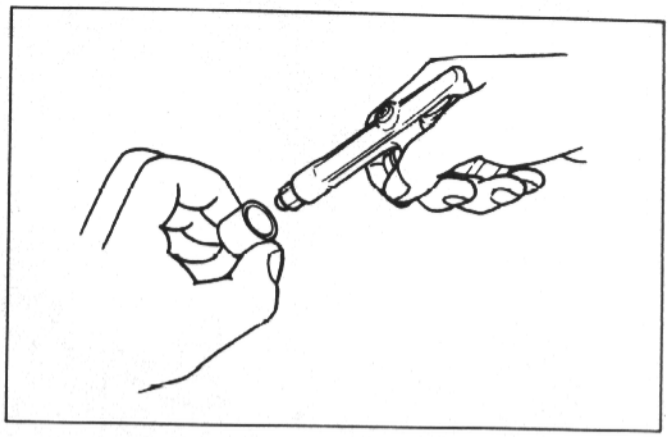

Clean the valve buckets with compressed air.

Measure the shim thickness with a micrometer and record it.

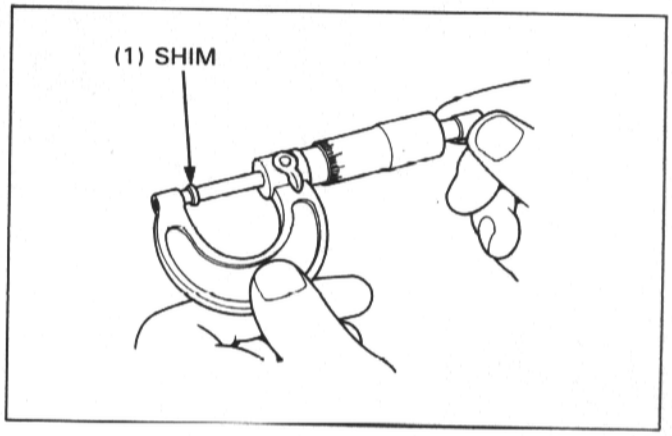

NOTE

- Sixty-five different shims are available in thickness intervals of 0.025 mm.
  The thinnest is 1.200 mm the thickest is 2.800 mm.

To confirm your shim choice, you may use the following formula:

a = (b − c) + d
a: new shim thickness
b: recorded valve clearance
c: specified valve clearance (IN: 0.15 mm EX: 0.20 mm)
d: old shim thickness

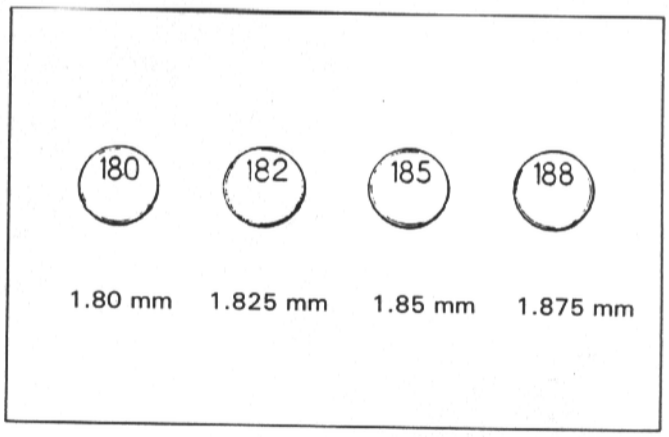

example:
b: recorded valve clearance: 0.18 mm
d: old shim thickness: 1.850 mm
c: specified valve clearance: 0.15 mm

a = (0.18 − 0.15) + 1.850
a = 1.880
new shim thickness – 1.875 mm

NOTE

- If the required thickness of the new shim is more than 2.800 mm, the valve seat is probable heavily carboned. Reface the seat, recheck valve clearance and reselect the shim.

CARBURETOR SYNCHRONIZATION

NOTE

- For detailed instuctions, refer to section 2 of the Common Service Manual. The information here only indicates locations of the plugs for the adapters and the synchronization adjusting screws.
  Before inspection, remove the fuel tank mounting bolts (page 2-4) and move the tank rearward with the fuel tube connected.

  CARBURETOR VACUUM DIFFERENCE:
  Within 30 mmHg (1.2 inHg)
  BASE CARBURETOR: No. 2 CARBURETOR

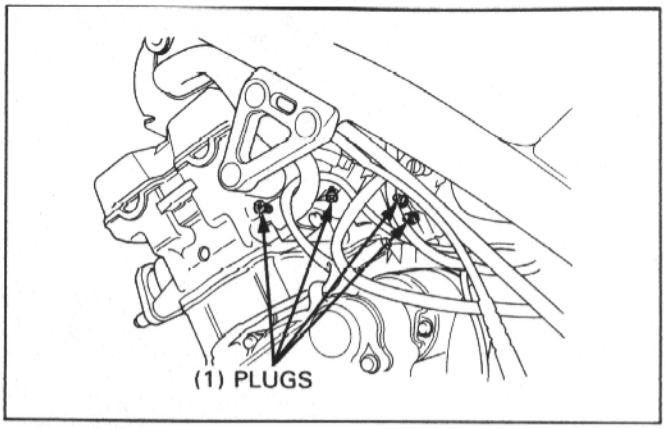

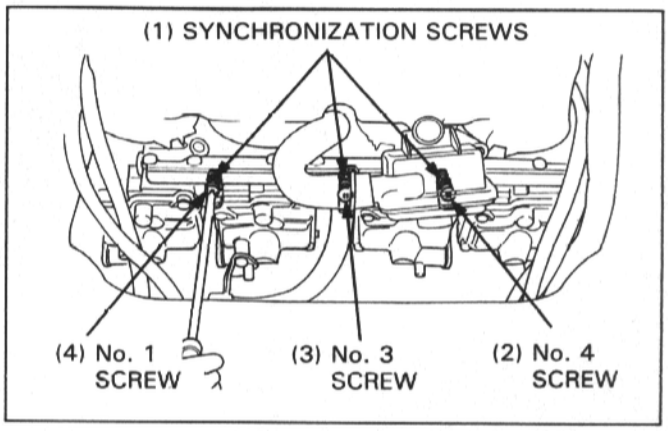

SIDE STAND

Check the side stand ignition cut-off system:
- Place the motorcycle on its center stand and raise the side stand.
- Start the engine with the transmission in neutral, then shift the transmission into gear with the clutch lever squeezed.
- Move the side stand full down.
- The engine should stop as the side stand is lowered.

If there is a problem with the system, check the side stand switch (Section 15).

Check the side stand switch mounting bolts for looseness.

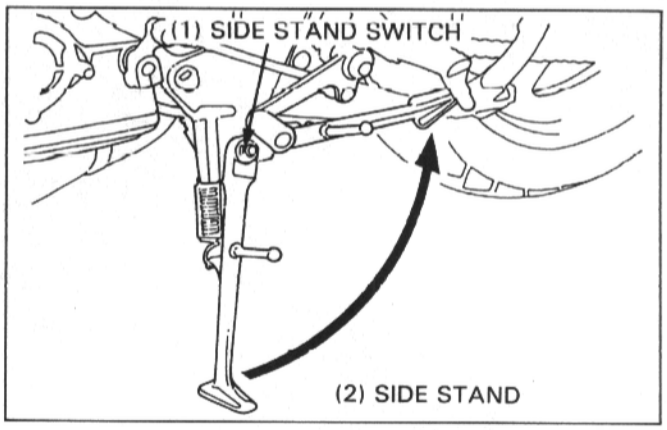

4. LUBRICATION SYSTEM

SERVICE INFORMATION	4-1	OIL PUMP REMOVAL/INSTALLATION	4-3
TROUBLESHOOTING	4-1	OIL PUMP DISASSEMBLY/ASSEMBLY	4-4
LUBRICATION SYSTEM DIAGRAM	4-2		

SERVICE INFORMATION

⚠WARNING

- **Used engine oil (or transmission oil in two-strokes) may cause skin cancer if repeatedly left in contact with the skin for prolonged periods. Although this is unlikely unless you handle used oil on a daily basis, it is still advisable to thoroughly wash your hands with soap and water as soon as possible after handling used oil. KEEP OUT OF REACH OF CHILDREN.**

- The oil pump can be serviced with the engine installed in the frame.
- Replace the oil pump as an assembly.
- For oil pressure check, refer to section 4 of the Common Service Manual; for the switch location, see page 17-2 of this manual.
- For oil pressure warning light inspection, refer to section 25 of the Common Service Manual.
- When removing and installing the oil pump use care not to allow dust or dirt to enter the engine.
- After the oil pump has been installed, check that there are no oil leaks and that oil pressure is correct.

TROUBLESHOOTING

Oil level low
- Oil consumption
- External oil leaks
- Worn piston ring or incorrect piston ring installation
- Worn valve guide or seal

Oil contamination (White appearance)
- From coolant mixing with oil
  - faulty water pump mechanical seal
  - faulty cylinder head gasket

High oil pressure
- Pressure relief valve stuck closed
- Plugged oil filter, gallery or metering orifice
- Incorrect oil being used

Low oil pressure
- Pressure relief valve stuck open
- Oil pump worn or damaged
- Internal oil leaks
- Incorrect oil being used
- Low oil level

No oil pressure
- Oil level too low
- Oil pump drive chain or oil pump drive/driven sprocket
- Oil pump damaged (pump shaft)
- Internal oil leaks

Oil pressure warning light does not work well
- Refer to section 25 of the Common Service Manual

LUBRICATION SYSTEM DIAGRAM

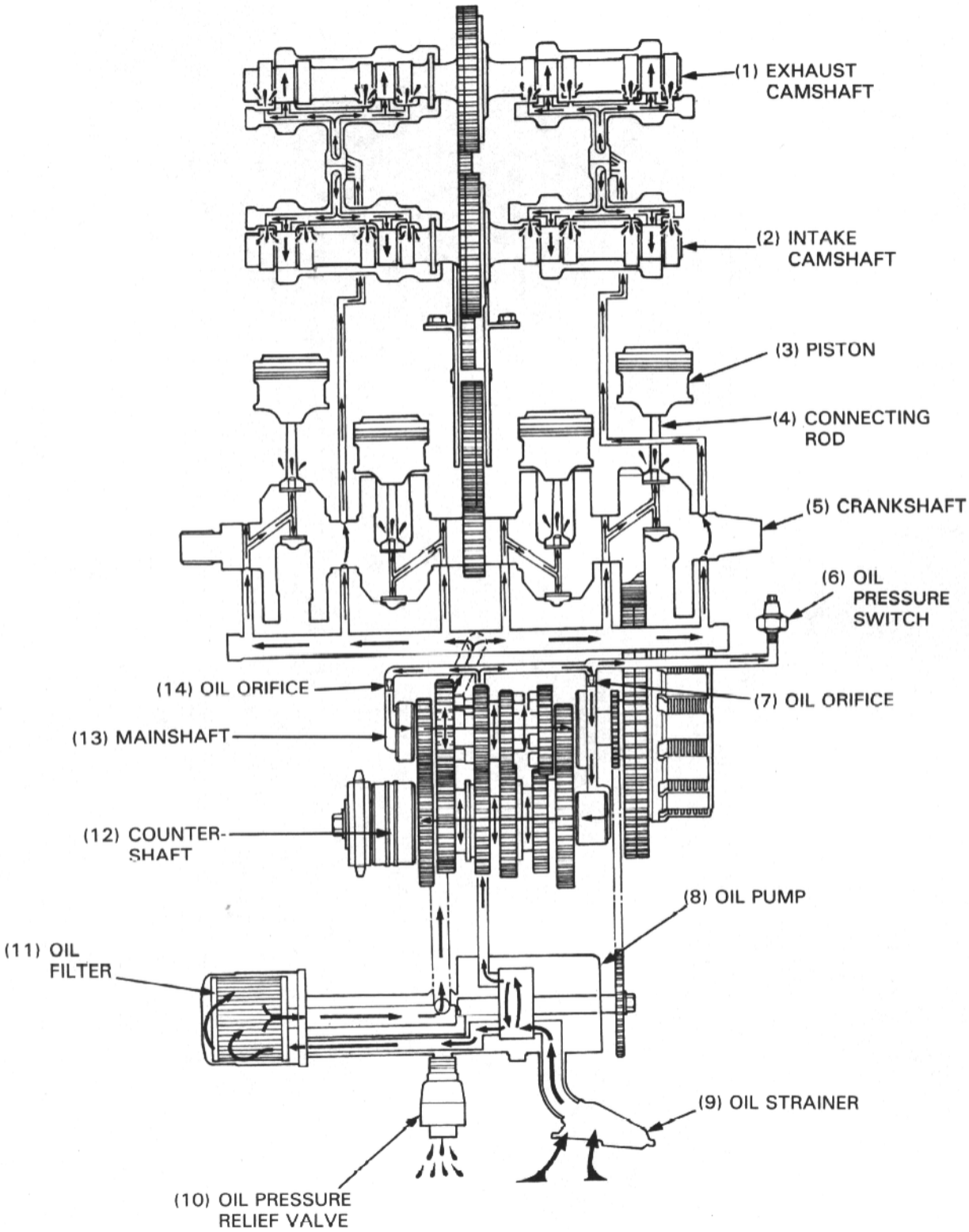

OIL PUMP REMOVAL/INSTALLATION

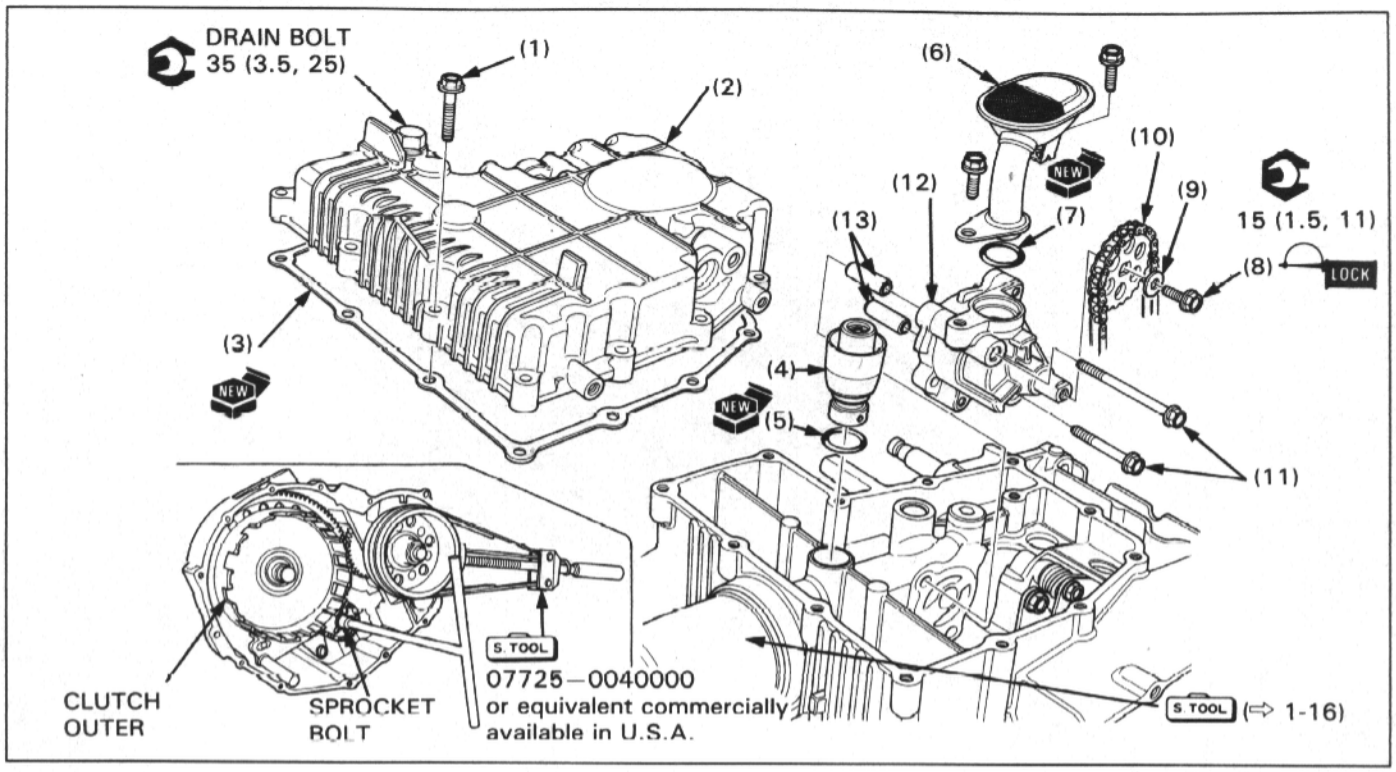

REQUISITE SERVICE

- Engine oil draining (location: page 3-3, step: section 2 of the Common Service Manual)
- Exhaust system removal/installation (page 2-3)
- Clutch disassembly (page 9-4)/assembly (page 9-8)

	PROCEDURE	Q'ty	REMARKS
	REMOVAL ORDER		• Installation is in the reverse order of removal.
(1)	Oil pan bolt	12	At installation, tighten the bolts in a gradual, crisscross pattern.
(2)	Oil pan	1	
(3)	Gasket	1	
(4)	Relief valve	1	
(5)	O-ring	1	
(6)	Oil strainer	1	Clean with the non-flammable solvent.
(7)	O-ring	1	
(8)	Oil pump driven sprocket bolt	1	NOTE: • Install the clutch outer onto the mainshaft temporarily (page 9-8), hold the flywheel with the rotor holder and remove (or torque) the bolt. • Apply a locking agent to the tip of the threads (approx. 6 mm/0.2 in)
(9)	Washer	1	
(10)	Oil pump driven sprocket	1	At installation, install with the grooves facing inside.
(11)	Oil pump mounting bolt	2	
(12)	Oil pump	1	
(13)	Dowel pin	2	

OIL PUMP DISASSEMBLY/ASSEMBLY

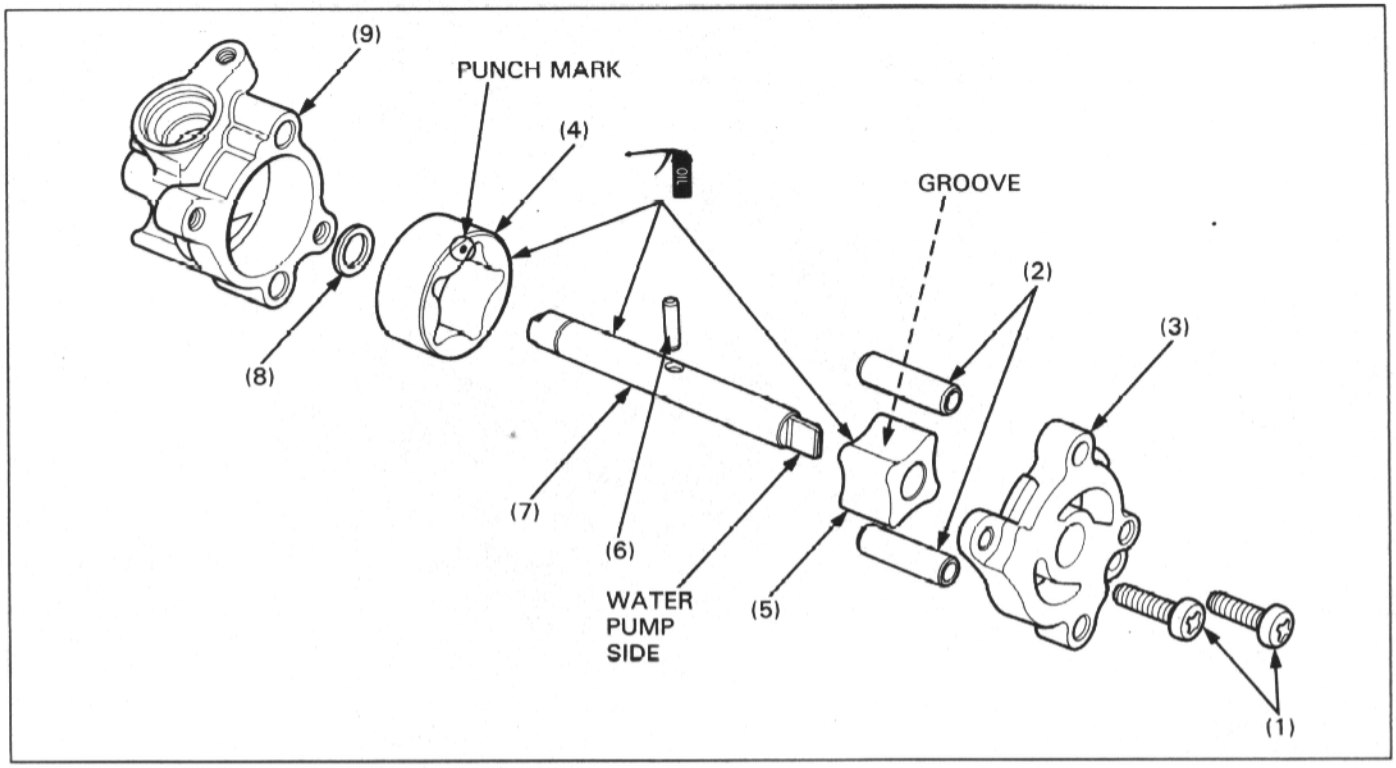

NOTE

- Before installing them, clean all removed parts thoroughly with clean engine oil.
- Refer to section 4 of the Common Service Manual for inspection information.
- Refer to page 1-6 for specification.

REQUISITE SERVICE

- Oil pump removal/installation (page 4-3)

	PROCEDURE	Q'ty	REMARKS
	DISASSEMBLY ORDER		• Assembly is in the reverse order of disassembly.
(1)	Oil pump cover attaching screw	2	NOTE: • Install the dowel pins, then tighten the screws.
(2)	Dowel pin	2	
(3)	Oil pump cover	1	
(4)	Outer rotor	1	Install with its punch mark facing the cover.
(5)	Inner rotor	1	Install the rotor, aligning its groove with the drive pin.
(6)	Drive pin	1	
(7)	Pump shaft	1	Install with the tab side facing the cover (water pump side).
(8)	Washer	1	
(9)	Oil pump body	1	

5. COOLING SYSTEM

SERVICE INFORMATION	5-1	THERMOSTAT REMOVAL/ INSTALLATION	5-4
TROUBLESHOOTING	5-1	RADIATOR REMOVAL/INSTALLATION	5-5
SYSTEM FLOW PATTERN	5-2	RADIATOR DISASSEMBLY/ ASSEMBLY	5-6
COOLANT DRAINING	5-3	WATER PUMP DISASSEMBLY/ ASSEMBLY	5-7
RESERVE TANK REMOVAL/ INSTALLATION	5-3		

SERVICE INFORMATION

⚠WARNING

- **Wait until the engine is cool before slowly removing the radiator cap. Removing the cap while the engine is hot and the coolant is under pressure may cause serious scalding.**
- **Radiator coolant is toxic. Keep it away from eyes, mouth, skin and clothes.**
  - **— If any coolant gets in your eyes, rinse them with water and consult a doctor immediately.**
  - **— If any coolant is swallowed, induce vomiting, gargle and consult a physician immediately.**
  - **— If any coolant gets on your skin or clothes, rinse thoroughly with plenty of water.**
- **KEEP OUT OF REACH OF CHILDREN**

- Add coolant at the reserve tank. Do not remove the radiator cap except to refill or drain the system.
- All cooling system service can be done with the engine in the frame.
- Avoid spilling coolant on painted surfaces.
- For coolant replacement, refer to section 5 of the Common Service Manual; in this manual, only the coolant draining procedure is described.
- After servicing the system, check for leaks with a cooling system tester.
- For fan motor switch and thermo sensor inspections, refer to section 25 of the Common Service Manual; for the switch and sensor locations, see page 17-2 of this manual.

TROUBLESHOOTING

Engine temperature too high
- Faulty temperature gauge or thermo sensor
- Thermostat stuck closed
- Faulty radiator cap
- Insufficient coolant
- Passages blocked in radiator, hoses or water jacket
- Air in system
- Faulty cooling fan motor
- Faulty fan motor switch
- Faulty water pump

Engine temperature too low
- Faulty temperature gauge or thermo sensor
- Thermostat stuck open
- Faulty fan motor switch

Coolant leaks
- Faulty oil pump mechanical seal
- Deteriorated O-ring
- Faulty radiator cap
- Damaged cylinder gasket
- Loose hose connection or clamp
- Damaged or deteriorated hoses

SYSTEM FLOW PATTERN

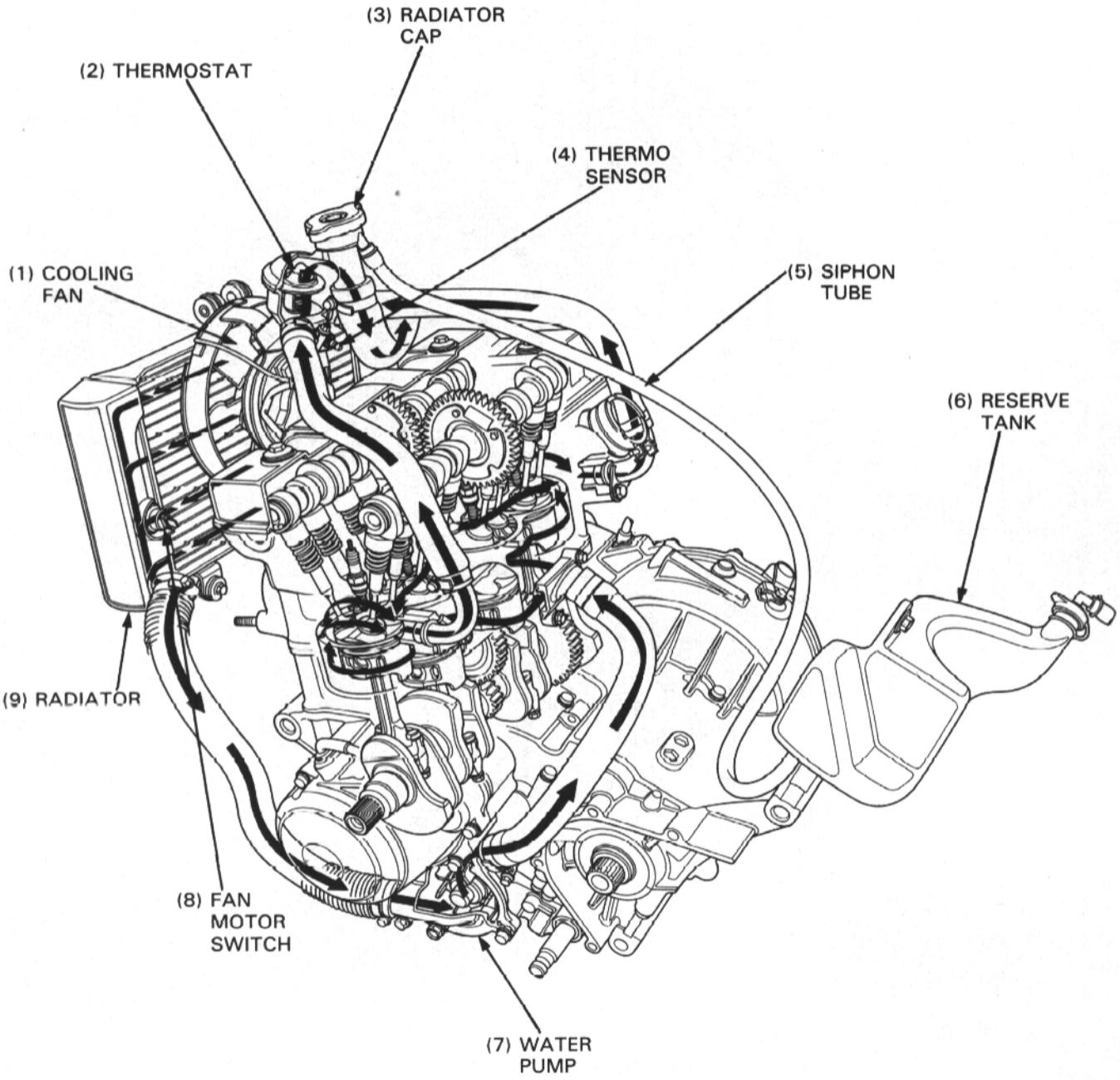

COOLANT DRAINING

NOTE

- For coolant replacement, refer to section 5 of the Common Service Manual.

CAUTION

- **Wait until the engine is cool before servicing the cooling system. Removing the radiator cap while the engine is hot and the coolant is under pressure may cause serious scalding.**

To drain the coolant, remove the following:
— fuel tank (page 2-4).
— heat rubber and radiator cap.
— water pump drain bolt and sealing washer.

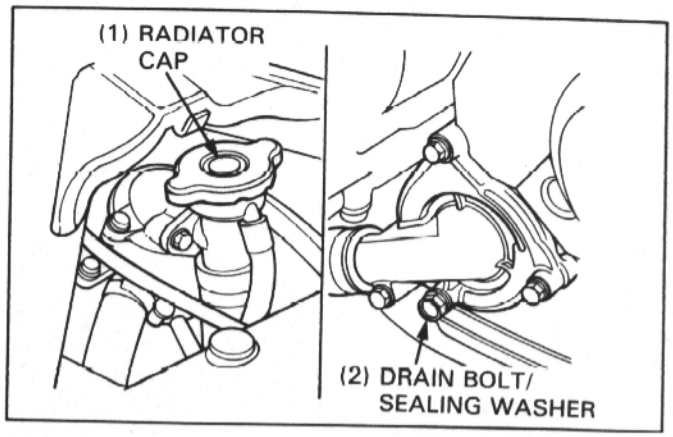

Remove the cylinder drain bolts and sealing washers and drain the coolant completely from the system.

NOTE

- California model has the only left drain bolt.

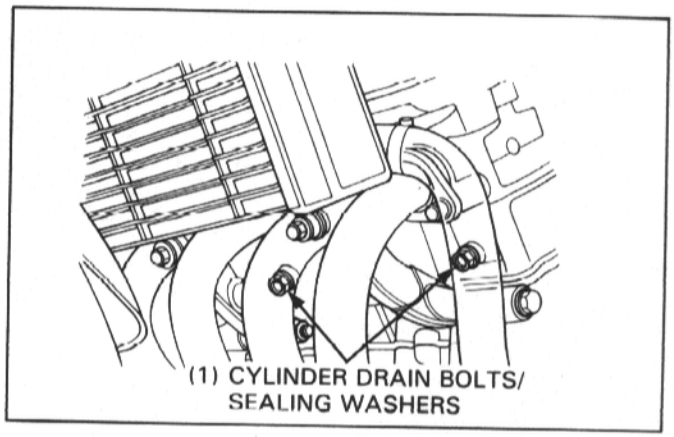

Place a suitable tray under the siphon tube joint of the reserve tank and disconnect the siphon tube from the reserve tank.
Drain the coolant from the reserve tank.

Install the water pump drain bolt and cylinder drain bolts with new sealing washers, and connect the siphon tube to the reserve tank.

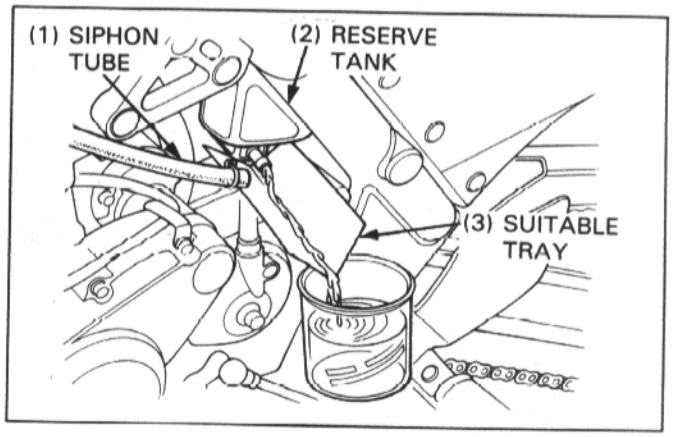

RESERVE TANK REMOVAL/ INSTALLATION

Drain the coolant from the reserve tank (see above).

Remove the following:
— shock absorber (page 12-4).
— reserve tank mounting bolt.
— collar and reserve tank.

Install the reserve tank in the reverse order of removal.

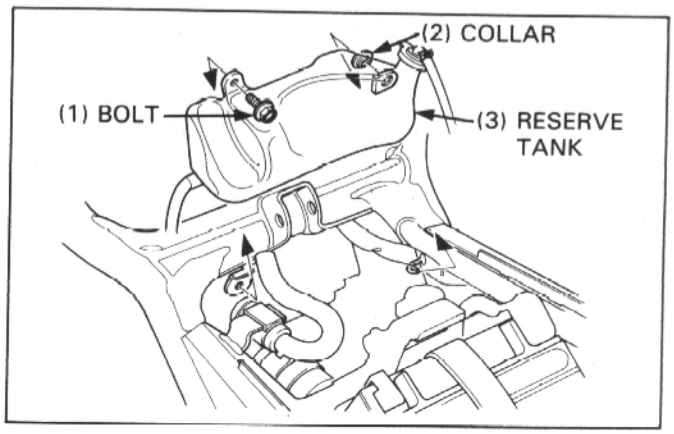

THERMOSTAT REMOVAL/INSTALLATION

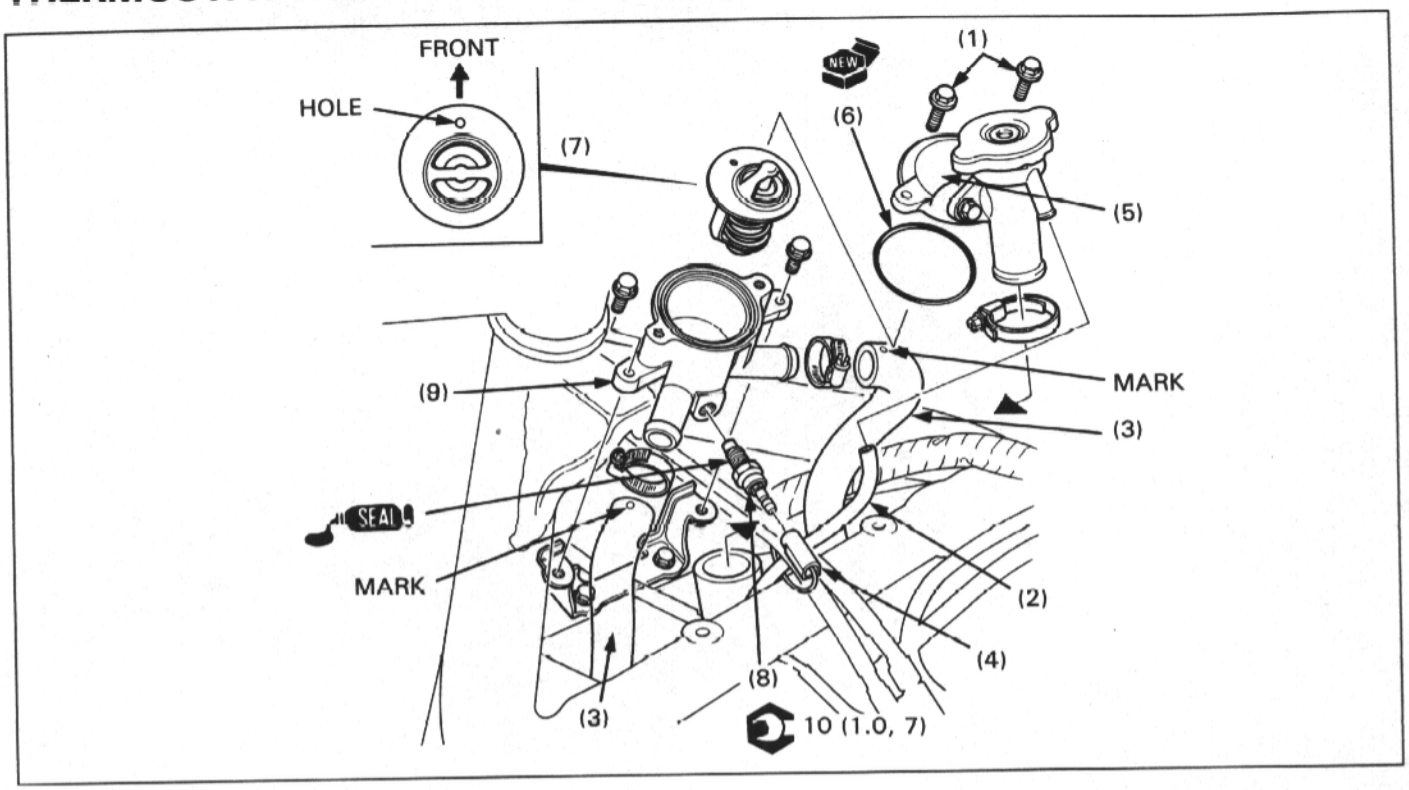

REQUISITE SERVICE

- Fuel tank removal/installation (page 2-4)
- Coolant draining (page 5-3)
- Coolant refill (section 5 of the Common Service Manual)
- Air cleaner case removal/installation (page 6-3)

	PROCEDURE	Q'ty	REMARKS
	REMOVAL ORDER		• Installation is in the reverse order of removal.
(1)	Thermostat cover mounting bolt	2	
(2)	Siphon tube	1	
(3)	Radiator hose	2	Install them with "O" marks facing up.
(4)	Thermo sensor connector	1	
(5)	Thermostat cover	1	
(6)	O-ring	1	
(7)	Thermostat	1	Install the thermostat with its hole side forwards.
(8)	Thermo sensor	1	At installation, apply sealant to the threads.
(9)	Thermostat housing	1	

RADIATOR REMOVAL/INSTALLATION

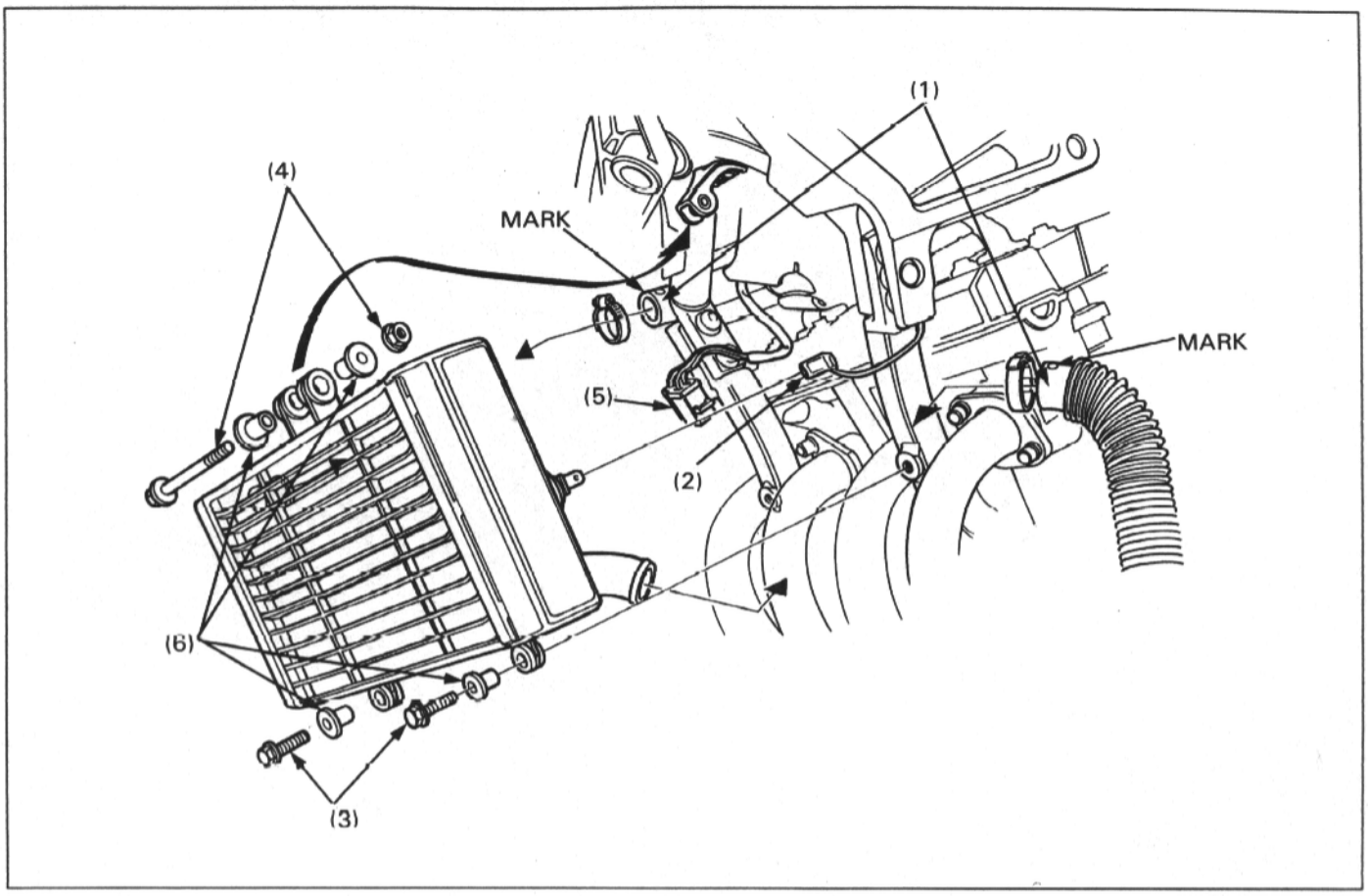

REQUISITE SERVICE

- Coolant draining (page 5-3)
- Coolant refill (section 5 of the Common Service Manual)

	PROCEDURE	Q'ty	REMARKS
	REMOVAL ORDER		• Installation is in the reverse order of removal.
(1)	Radiator hose	2	Install them with "O" marks facing up.
(2)	Fan motor switch connector	1	
(3)	Radiator lower mounting bolt	2	
(4)	Radiator upper mounting bolt/nut	1/1	
(5)	Fan motor connector	1	
(6)	Collar	4	

RADIATOR DISASSEMBLY/ASSEMBLY

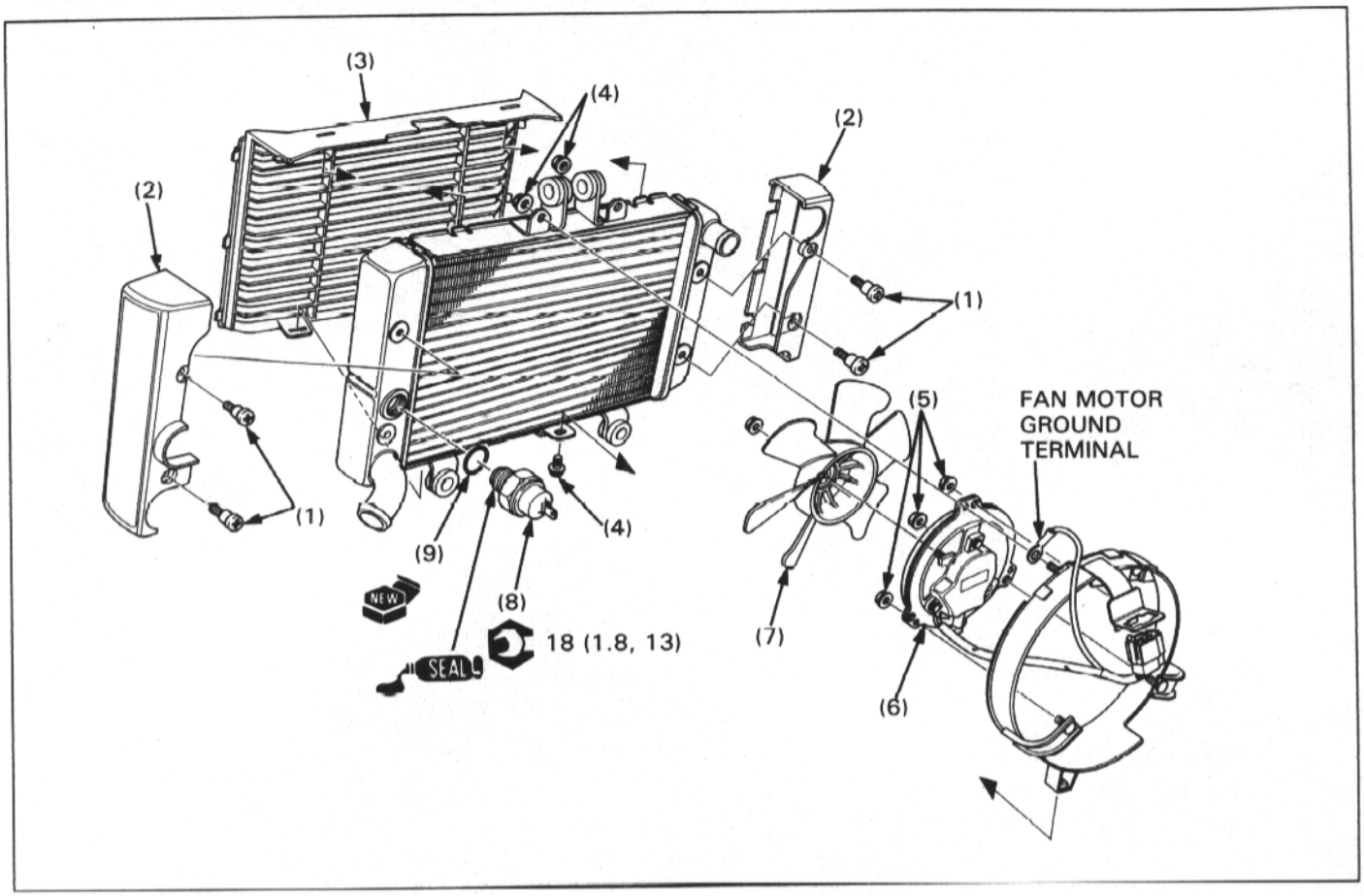

REQUISITE SERVICE

- Radiator removal/installation (page 5-5)

	PROCEDURE	Q'ty	REMARKS
	DISASSEMBLY ORDER		• Assembly is in the reverse order of disassembly.
(1)	Radiator shroud attaching screw	4	
(2)	Left and right radiator shroud	2	At installation, align the grille tabs with the shroud grooves.
(3)	Radiator grille	1	At installation, align four grille grooves with the radiator lugs.
(4)	Fan motor shroud mounting bolt/nut	1/2	At installation, install the fan motor ground wire terminal properly as shown.
(5)	Fan motor mounting nut	3	
(6)	Fan motor	1	Install the fan motor, with the motor wireharness facing down.
(7)	Cooling fan	1	At installation, align the fan groove with the motor shaft.
(8)	Fan motor switch	1	At installation, apply sealant to the threads. **CAUTION:** **• Do not over-tighten the fan motor switch, or the radiator may be damaged.**
(9)	O-ring	1	

WATER PUMP DISASSEMBLY/ASSEMBLY

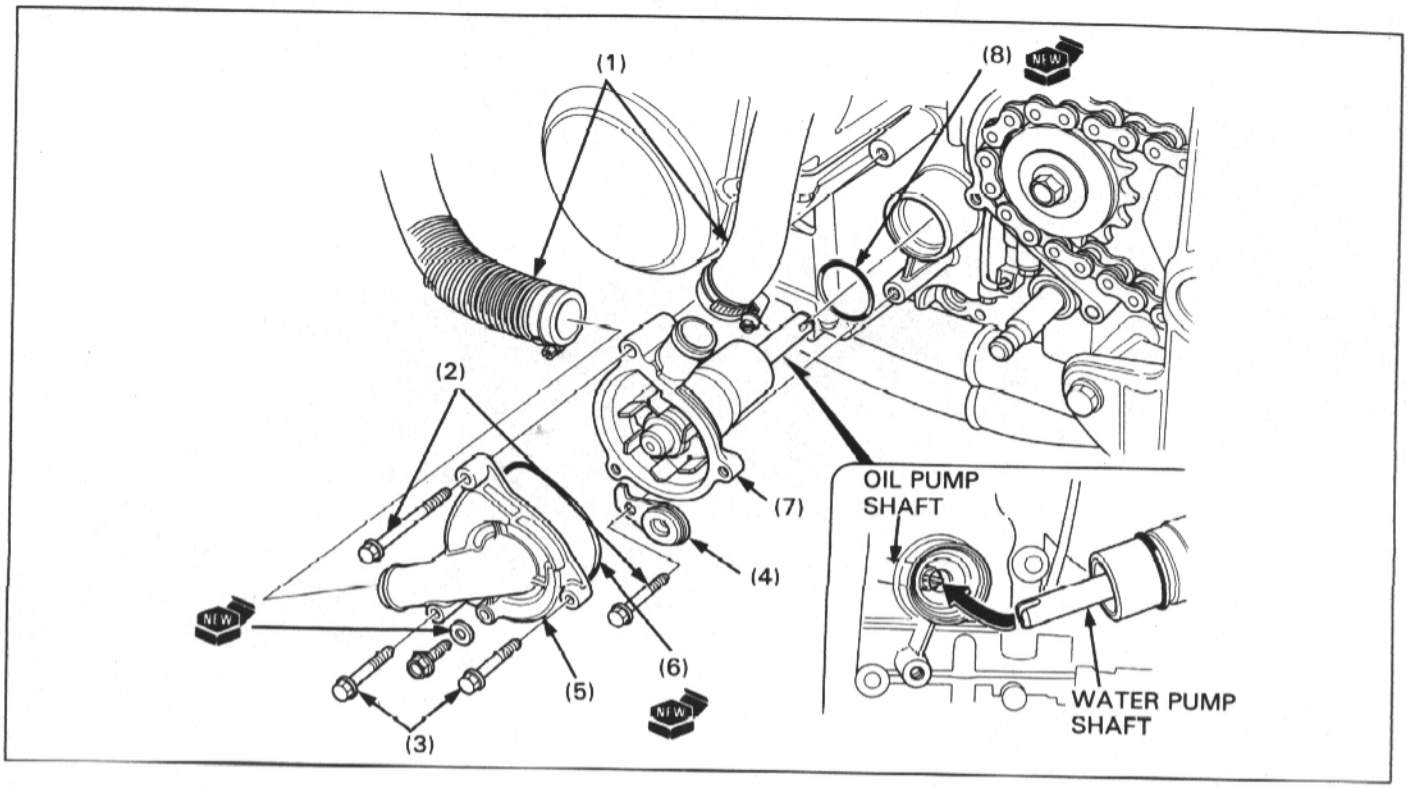

NOTE

- If the mechanical seal is damaged, the water pump must be replaced as an assembly.

REQUISITE SERVICE

- Coolant draining (page 5-3)
- Engine oil draining (drain bolt location: page 3-3, step: section 2 of the Common Service Manual)
- Coolant refill (section 5 of the Common Service Manual)
- Gearshift spindle joint removal/installation (page 9-6)
- Water pump side cover removal/installation (page 7-2)

	PROCEDURE	Q'ty	REMARKS
	DISASSEMBLY ORDER		• Assembly is in the reverse order of disassembly.
(1)	Radiator hose	2	
(2)	Water pump mounting bolt	2	NOTE: • Before removing bolts, loosen the pump cover bolts(3).
(3)	Water pump cover bolt	2	
(4)	Water pump side cover stay	1	
(5)	Water pump cover	1	
(6)	O-ring	1	
(7)	Water pump body	1	At installation, align the pump shaft slot with the oil pump shaft.
(8)	O-ring	1	

6. FUEL SYSTEM

SERVICE INFORMATION	6-1	CARBURETOR DISASSEMBLY/ ASSEMBLY	6-8
TROUBLESHOOTING	6-2	CARBURETOR COMBINATION	6-10
AIR CLEANER CASE REMOVAL/ INSTALLATION	6-3	FUEL PUMP/FILTER	6-13
CARBURETOR REMOVAL/ INSTALLATION	6-4	EMISSION CONTROL SYSTEMS (California Model Only)	6-13
CARBURETOR SEPARATION	6-6		

SERVICE INFORMATION

⚠ WARNING

- **Gasoline is extremely flammable and is explosive under certain conditions. Work in a well ventilated area. Smoking or allowing flames or sparks in the work area or where gasoline is stored can cause fire or explosion.**
- **Bending or twisting the control cables will impair smooth operation and could cause the cables to stick or bind, resulting in loss of vehicle control.**

CAUTION

- **To prevent damage, be sure to remove the diaphragms before cleaning air and fuel passages with compressed air. The diaphragms might be damaged.**

NOTE

- If vehicle is to be stored for more than one month, drain the float chambers. Fuel left in the float chambers may cause clogged jets resulting in hard starting or poor driveability.

- When disassembling fuel system parts, note the locations of the O-rings. Replace them with new ones on reassembly.
- Before removing the carburetors, place a suitable container under the carburetor drain tube, loosen the drain bolts and drain the carburetors.
- After removing the carburetors, cover the intake port of the engine with a shop towel or cover it with pieces of tape to prevent any foreign material from dropping into the engine.
- The vacuum chamber and float chamber can be serviced with the carburetors assembled.
- For fuel tank removal/installation, see page 2-4.
- California Model Only:
  All hoses used in the secondary air supply and evaporative emission control systems are numbered for identification. When connecting one of these hoses, compare the hose number with the Vacuum Hose Routing Diagram Label, page 1-29, and carburetor tubes, page 6-12.

TROUBLESHOOTING

Engine won't start
- No fuel to carburetors
  - fuel strainer clogged
  - fuel tube clogged
  - float valve stuck
  - float level misadjusted
  - fuel tank cap breather hole clogged
  - fuel pump malfunction
- Too much fuel getting to the engine
  - air cleaner clogged
  - flooded carburetors
- Intake air leak
- Fuel contaminated/deteriorated
- Slow circuit or bystarter circuit clogged
- Ignition malfunction

Engine stalls, hard to start, rough idling
- Fuel line restricted
- Ignition malfunction
- Fuel mixture too lean/rich
- Fuel contaminated/deteriorated
- Intake air leak
- Idle speed misadjusted
- Fuel pump malfunction
- Pilot screw misadjusted
- Slow circuit or bystarter circuit clogged
- Float level misadjusted
- Fuel tank breather tube clogged
- Emission control system malfunction (California Model Only)
  - air vent control valve (AVCV) faulty
  - purge control valve (PCV) faulty
  - loose, disconnected or deteriorated hoses of the emission control system

Afterburn on deceleration
- Lean mixture in slow circuit
- Emission control system malfunction (California Model Only)
  - secondary air supply system faulty
  - loose, disconnected or deteriorated hoses of the emission control system

Backfiring or misfiring during acceleration
- Ignition system faulty
- Fuel mixture too lean

Poor performance (driveability) and poor fuel economy
- Fuel system clogged
- Ignition malfunction
- Emission control system malfunction (California Model Only)
  - air vent control valve (AVCV) faulty
  - loose, disconnected or deteriorated hoses of the emission control system

Lean mixture
- Fuel jets clogged
- Float valve faulty
- Float level too low
- Fuel line restricted
- Carburetor air vent hole (or tube) clogged
- California Model Only: air vent control valve (AVCV) faulty
- Intake air leak
- Fuel pump malfunction
- Vacuum piston faulty
- Throttle valve faulty

Rich mixture
- Bystarter valve in ON position
- Float valve faulty
- Float level too high
- Air jets clogged
- Air cleaner element contaminated
- Flooded carburetors

AIR CLEANER CASE REMOVAL/INSTALLATION

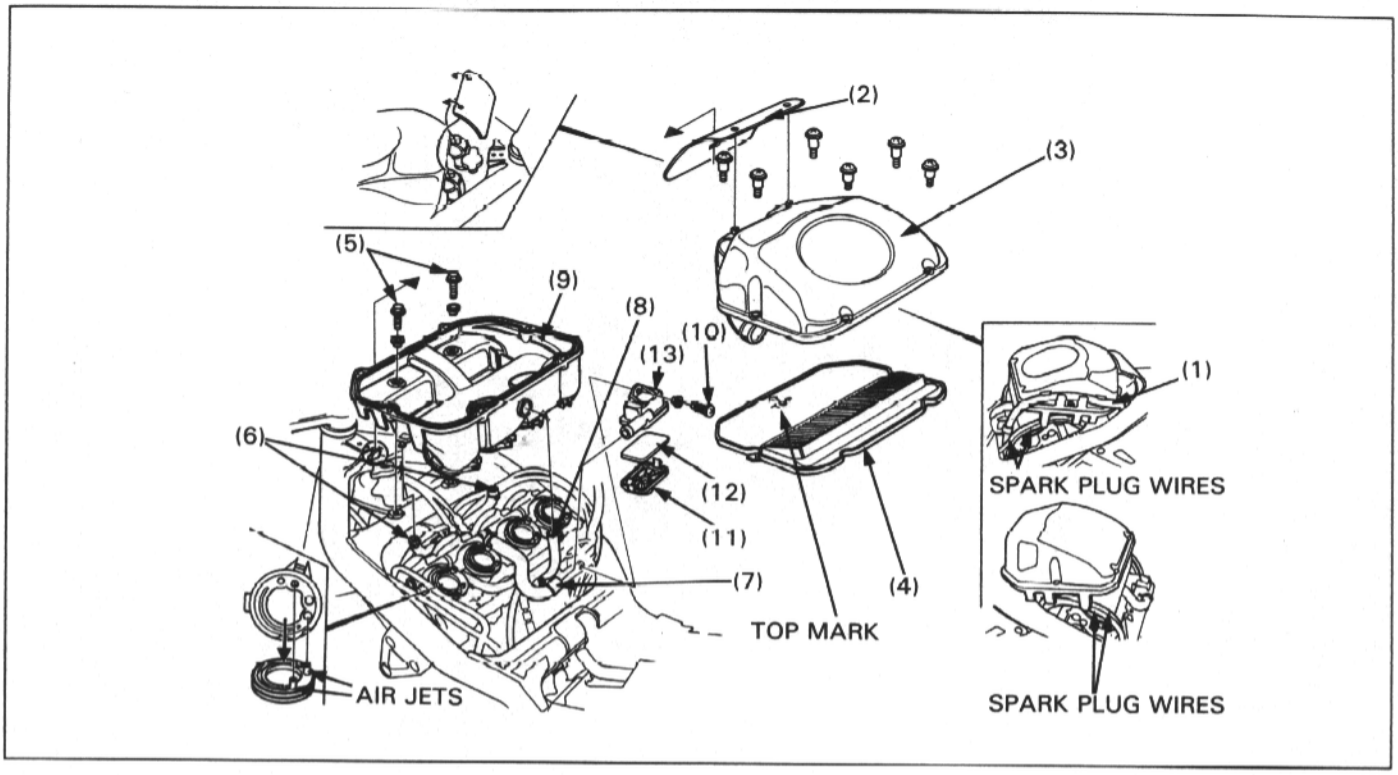

REQUISITE SERVICE

- Fuel tank removal/installation (page 2-4)

	PROCEDURE	Q'ty	REMARKS
	AIR CLEANER CASE REMOVAL ORDER		• Installation is in the reverse order of removal.
(1)	Main wire harness	1	Install it into the wire harness clamp of the case cover.
(2)	Heat guard plate	1	
(3)	Air cleaner case cover	1	
(4)	Air cleaner element	1	Install it with the ⇧ mark forwards and with the TOP mark facing up.
(5)	Air cleaner case bolt/collar	2/2	
(6)	Crankcase breather tube	2	
(7)	Air hose	1	Except California Model
(8)	Air injection tube (No. 15)	1	California Model Only
(9)	Air cleaner case	1	• Align the holes of the connecting tubes with the air jets. • Install the spark plug wires as shown.
	SUB AIR CLEANER CASE REMOVAL ORDER (Except California Model)		• Installation is in the reverse order of removal.
(10)	Attaching screw	1	
(11)	Sub air cleaner case cover	1	
(12)	Sub air cleaner element	1	NOTE: • For element cleaning, refer to section 2 (AIR CLEANER: Oiled Urethane Foam Element) of the Common Service Manual.
(13)	Sub air cleaner case	1	

CARBURETOR REMOVAL/INSTALLATION

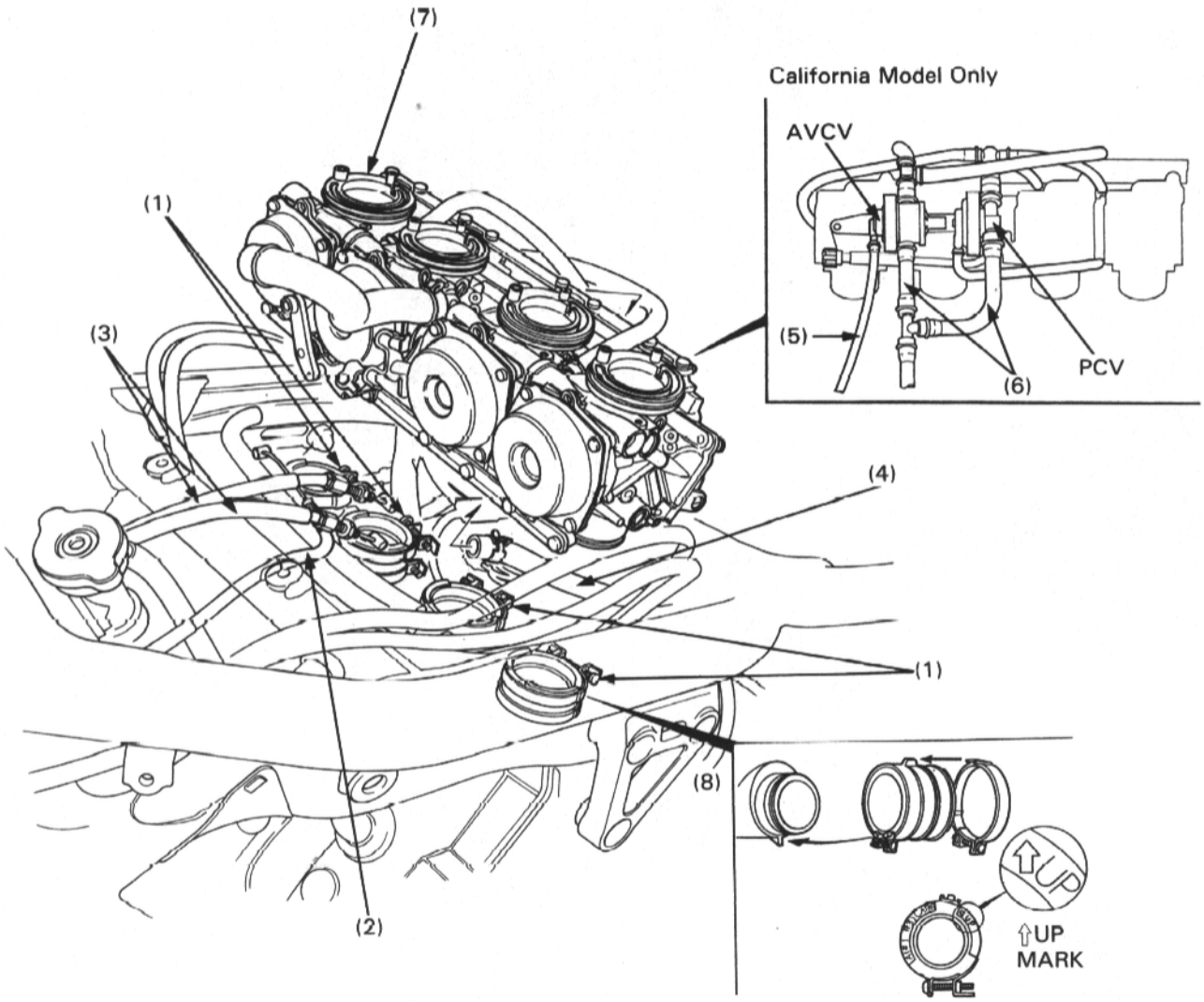

⚠WARNING

- **Gasoline is extremely flammable and is explosive under certain conditions. Work in a well ventilated area. Smoking or allowing flames or sparks in the work area or where gasoline is stored can cause a fire or explosion.**

REQUISITE SERVICE

- Fuel tank removal/installation (page 2-4)
- Air cleaner case removal/installation (page 6-3)
- Carburetors draining

	PROCEDURE	Q'ty	REMARKS
	REMOVAL ORDER		• Installation is in the reverse order of removal.
(1)	Insulator band	4	Only loosen the screws.
(2)	Choke cable	1	
(3)	Throttle cable	2	
(4)	Fuel tube	1	
(5)	No. 10 vacuum tube (from the AVCV)	1	California Model Only
(6)	No. 4 tube (from the AVCV and PCV)	2	California Model Only
(7)	Carburetors	1	
(8)	Insulator	4	Each insulator has the identification number as shown. At installation, align the insulator groove with the engine lug, with the ⇧ UP mark facing upwards (carbretor side).

CARBURETOR SEPARATION

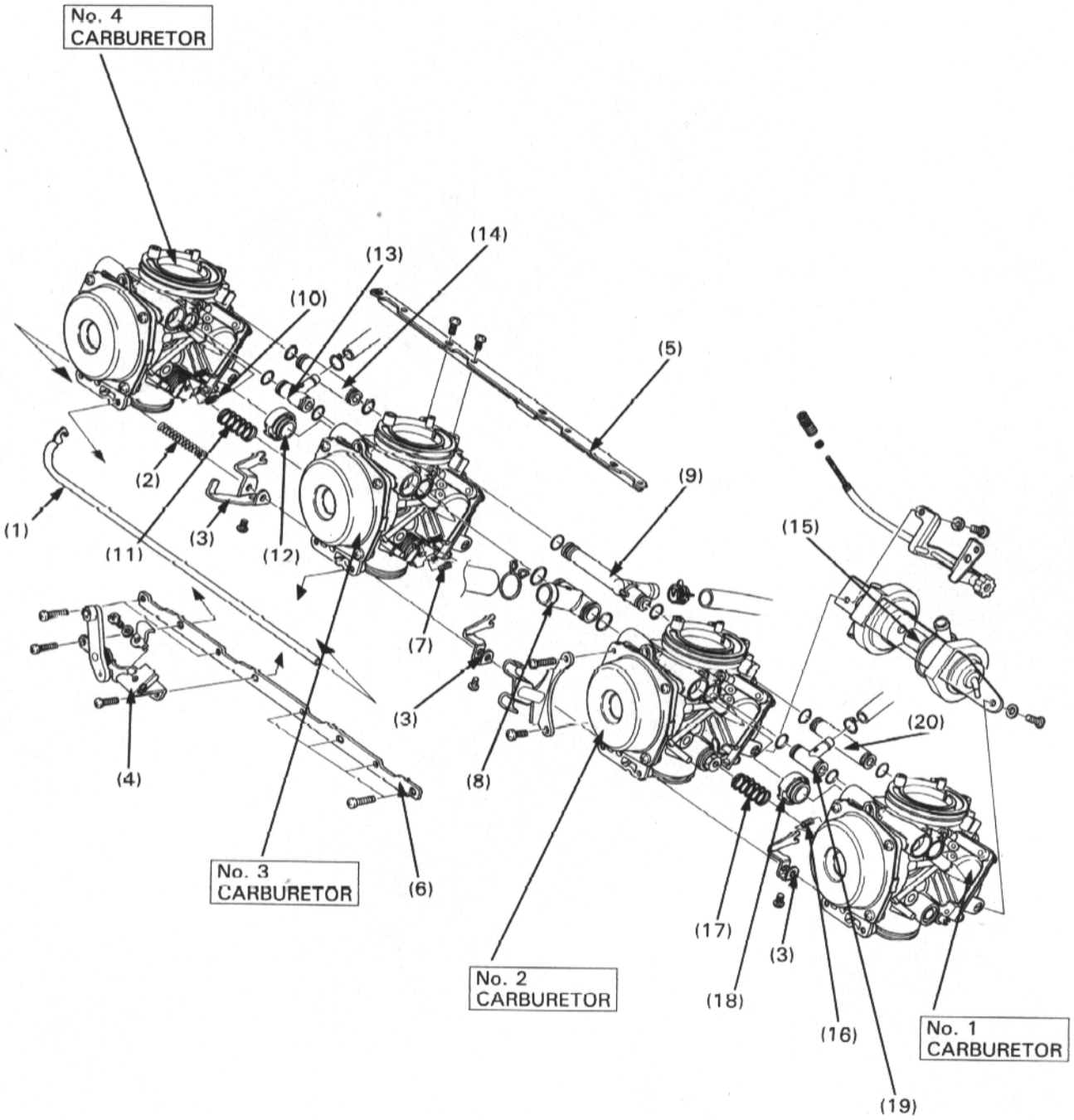

REQUISITE SERVICE

- Fuel tank removal (page 2-4)
- Air cleaner case removal (page 6-3)
- Carburetor removal (page 6-4)
- California Model Only: AVCV and PCV tubes removal from carburetors

	PROCEDURE	Q'ty	REMARKS
	Separate No. 3/No. 4 carb. from No. 1/ No. 2 carb..		
(1)	Bystarter arm shaft	1	
(2)	Spring	1	
(3)	Bystarter arm	3	
(4)	Choke cable holder	1	
(5)	Rear bracket	1	
(6)	Front bracket	1	
(7)	No. 3 carb. synchronization spring	1	
(8)	Air joint pipe (3-way)/O-ring	1/2	
(9)	Fuel joint pipe (3-way)/O-ring	1/2	
	Separate No. 3 carb. from No. 4 carb..		
(10)	No. 4 carb. synchronization spring	1	
(11)	Thrust spring	1	
(12)	Air joint pipe (rubber)	1	
(13)	Air vent pipe/O-ring	1/2	
(14)	Fuel joint pipe (2-way)/O-ring	1/2	
	Separate No. 1 carb. from No. 2 carb..		
(15)	AVCV and PCV as an assembly	1	California Model Only
(16)	No. 1 carb. synchronization spring	1	
(17)	Thrust spring	1	
(18)	Air joint pipe (rubber)	1	
(19)	Air vent pipe/O-ring	1/2	
(20)	Fuel joint pipe (2-way)/O-ring	1/2	

CARBURETOR DISASSEMBLY/ASSEMBLY

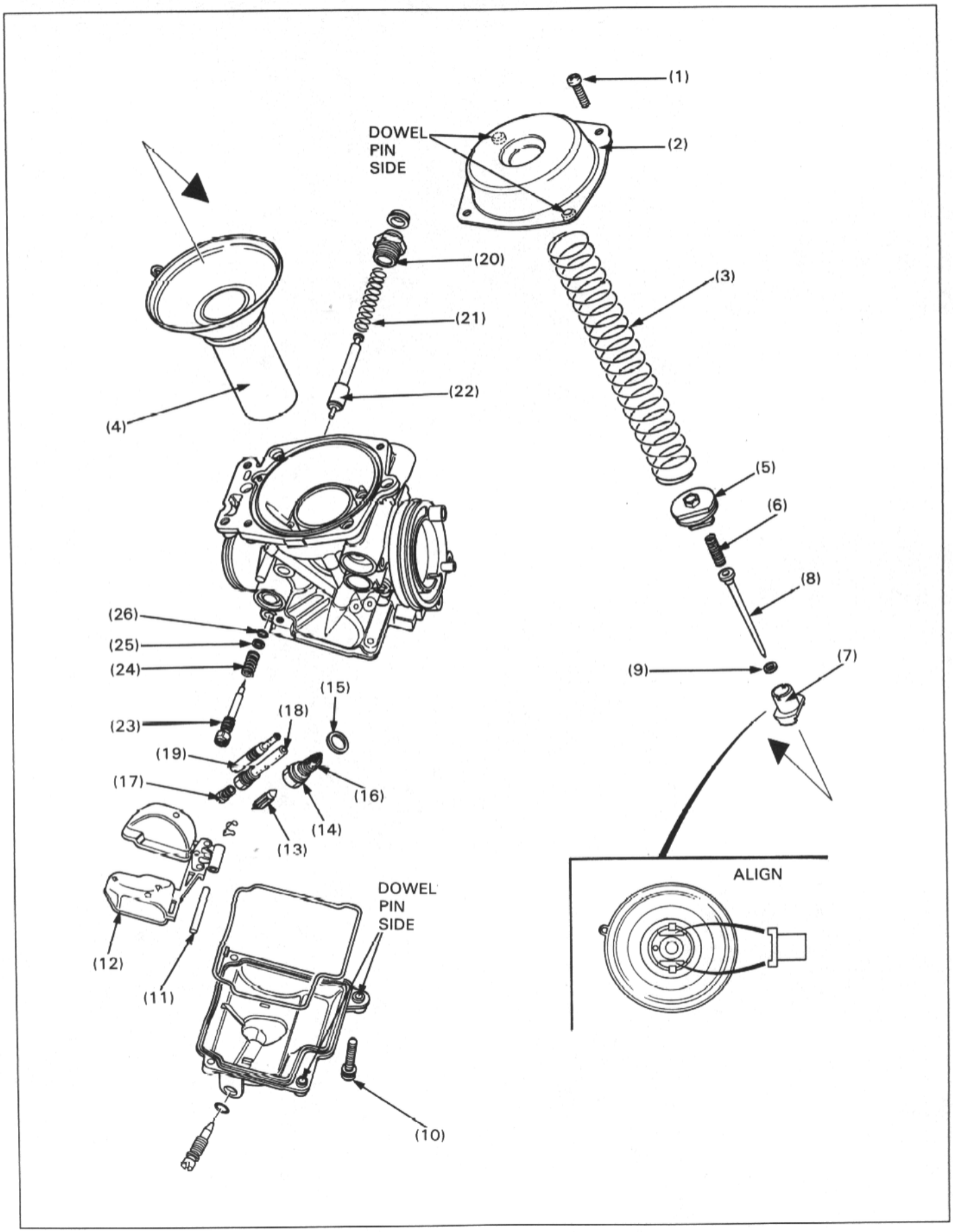

NOTE

- The vacuum chamber and float chamber can be serviced with the carburetors assembled.
- The pilot screws are factory pre-set and should not be removed unless the carburetors are overhauled. Turn each pilot screw in and carefully count the number of turns before it seats lightly. Make a note of this to use as a reference when reinstalling the pilot screws. If new pilot screws are installed, turn pilot screws out to the initial opening (page 1-6).

REQUISITE SERVICE

- Fuel tank removal/installation (page 2-4)
- Air cleaner case removal/installation (page 6-3)
- Carburetor removal/installation (page 6-4)
- Carburetor separation (page 6-6)/combination (page 6-10)
- Carburetor synchronization (page 3-8)

	PROCEDURE	Q'ty	REMARKS
	DISASSEMBLY ORDER		• Assembly is in the reverse order of disassembly.
	Vacuum Chamber		
(1)	Vacuum chamber cover screws	4	At installation, first tighten the two screws on the dowel pin side.
(2)	Vacuum chamber cover	1	
(3)	Spring	1	
(4)	Diaphragm/vacuum piston	1	
(5)	Jet needle holder	1	Turn the holder 90° counterclockwise while pushing it in and remove it.
(6)	Spring	1	
(7)	Spring holder	1	At installation, align holder claws with piston grooves.
(8)	Jet needle	1	
(9)	Washer	1	
	Float Chamber		
(10)	Float chamber cover screws	4	At installation, first tighten the two screws on the dowel pin side.
(11)	Float pin	1	NOTE: • For removal of the No. 1 (or No. 3) carburetor float pin with the carburetors assembled, first remove the No. 2 (or No. 4) carburetor float chamber.
(12)	Float	1	For float level inspection, refer to the section 8 of the Common Service Manual.
(13)	Float valve	1	
(14)	Valve seat	1	
(15)	Sealing washer	1	
(16)	Fuel filer	1	
(17)	Main jet	1	
(18)	Needle jet	1	
(19)	Slow jet	1	
	Bystarter Valve		
(20)	Valve nut	1	
(21)	Spring	1	
(22)	Bystarter valve	1	
	Pilot Screw		
(23)	Pilot screw	1	Canada model: No. 1 and No. 4 carburetor pilot screws are shorter than those for No. 2 and No. 3.
(24)	Spring	1	
(25)	Washer	1	
(26)	O-ring	1	

CARBURETOR COMBINATION

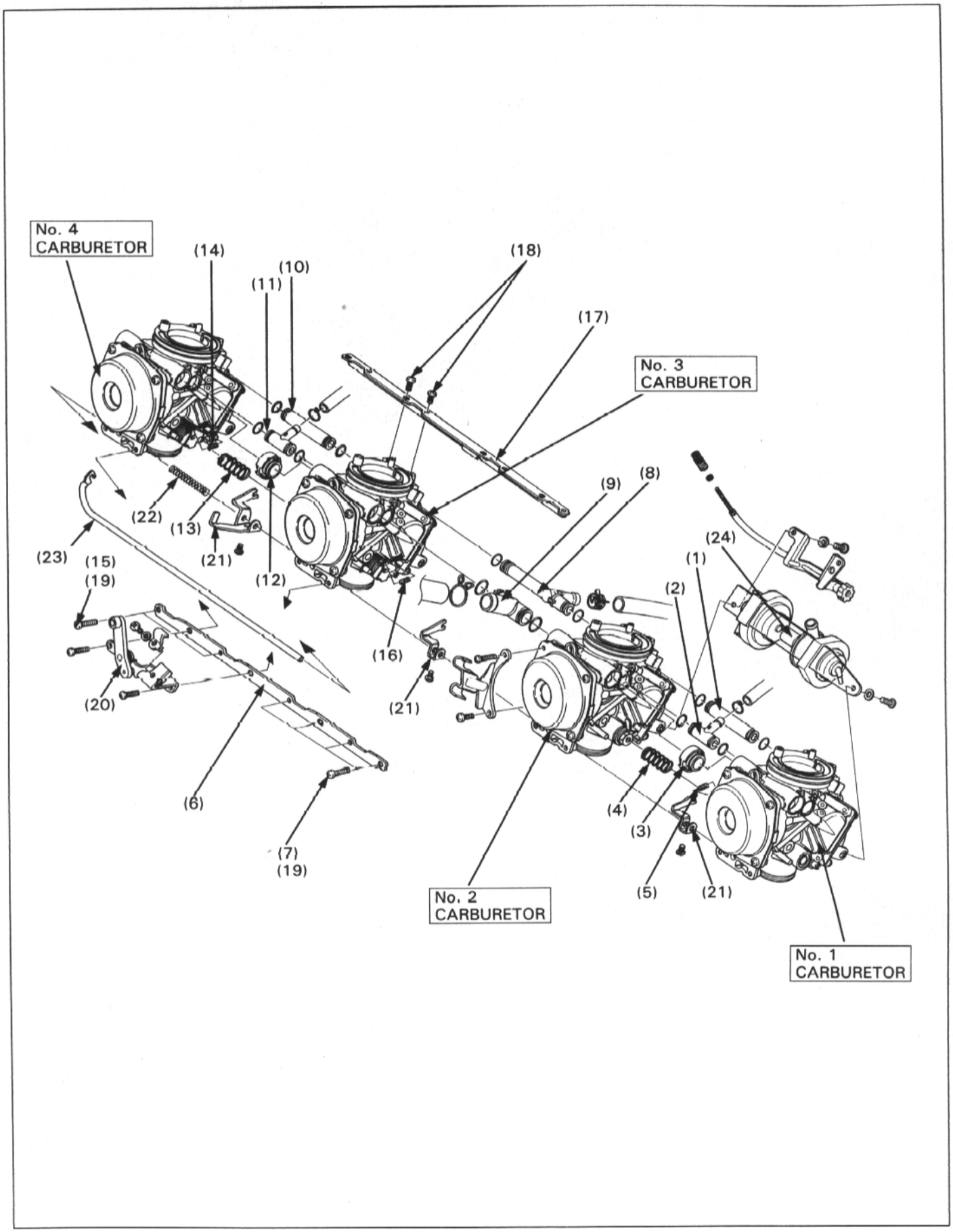

REQUISITE SERVICE

- Carburetor assembly (page 6-8)

	PROCEDURE	Q'ty	REMARKS
	Assemble No. 1 carb. with No. 2 carb..		No. 2 carburetor is the base carburetor.
(1)	Fuel joint pipe (2-way)/O-ring	1/2	
(2)	Air vent pipe (3-way)/O-ring	1/2	
(3)	Air joint pipe (rubber)	1	
(4)	Thrust spring	1	
(5)	No. 1 carb. synchronization spring	1	
(6)	Front bracket	1	
(7)	Front bracket screw	4	The shorter. Do not tighten screws yet.
(8)	Fuel joint pipe (3-way)/O-ring	1/2	Onto the No. 2 carburetor.
(9)	Air joint pipe (3-way)/O-ring	1/2	Onto the No. 2 carburetor.
	Assemble No. 3 carb. with No. 4 carb..		
(10)	Fuel joint pipe (2-way)/O-ring	1/2	
(11)	Air vent pipe (3-way)/O-ring	1/2	
(12)	Air joint pipe (rubber)	1	
(13)	Thrust spring	1	
(14)	No. 4 carb. synchronization spring	1	
(15)	Front bracket screw	2	The shorter. Do not tighten screws yet. Do not install two screws of the front bracket/choke cable holder yet.
	Assemble No. 1/No. 2 carb. with No. 3/ No. 4 carb..		
(16)	No. 3 carb. synchronization spring	1	
(17)	Rear bracket	1	
(18)	Rear bracket screw	8	Tighten them.
(19)	Front bracket screw	6	Tighten them.
(20)	Choke cable holder	1	Use two longer front bracket screws.
(21)	Bystarter arm	3	
(22)	Spring	1	
(23)	Bystarter arm shaft	1	
(24)	AVCV and PCV as an assembly	1	Callifornia Model Only
(25)	AVCV and PCV tube	—	California Model Only: page 6-12

CALIFORNIA MODEL ONLY: AVCV AND PCV TUBES ROUTING

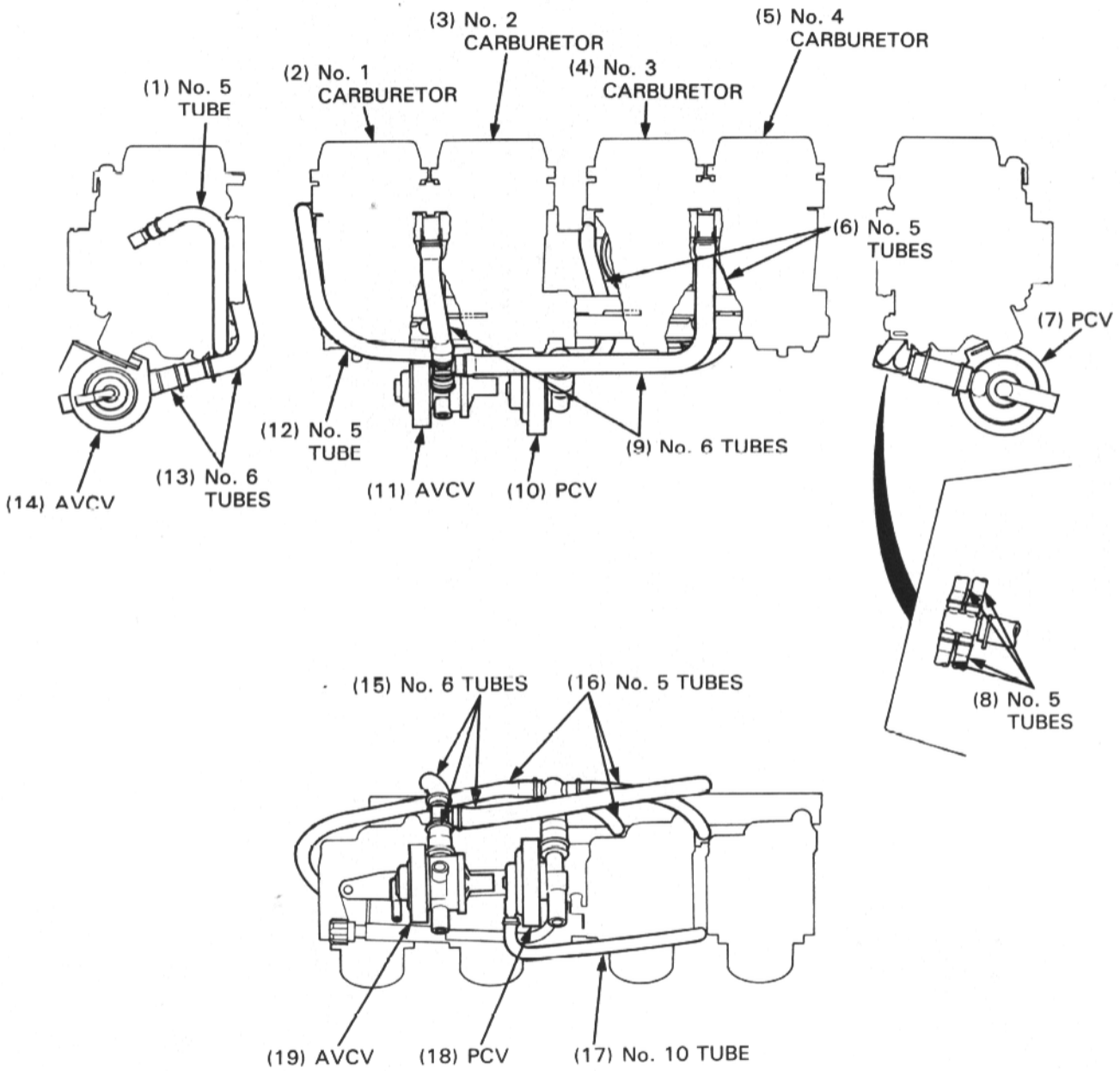

FUEL PUMP/FILTER

Turn the fuel valve OFF.
Remove the rear-left side cover (page 2-3).
Remove the fuel pump and fuel filter to the left.
Install the fuel filter and pump in the reverse order of removal.

NOTE

- Fuel filter orientation as shown.

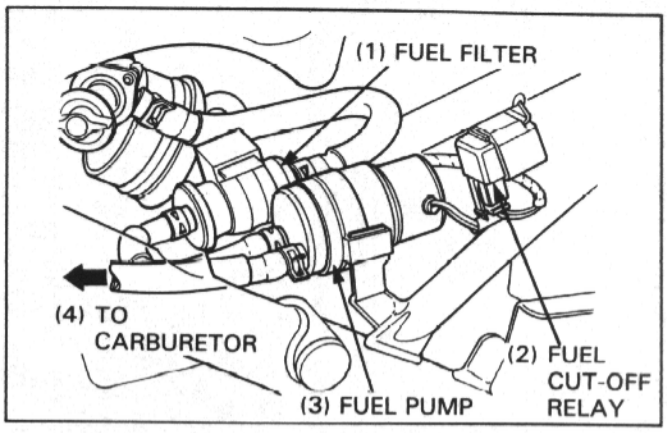

EMISSION CONTROL SYSTEMS (California Model Only)

EVAPORATIVE EMISSION CONTROL SYSTEM

PURGE CONTROL VALVE (PCV) AND AIR VENT CONTROL VALVE (AVCV) REMOVAL

Remove the following:
— fuel tank (page 2-4)
— air cleaner case (page 6-3)
— carburetors (page 6-4)

Disconnect the tubes from PCV and AVCV, and remove the set plate from the No. 1 carburetor float chamber cover.
Remove the PCV and AVCV.

Inspect the PCV and AVCV (refer to section 7 of the Common Service Manual).

Install the PCV and AVCV in the reverse order of removal.

NOTE

- For PCV and AVCV tubes routing, see previous page.

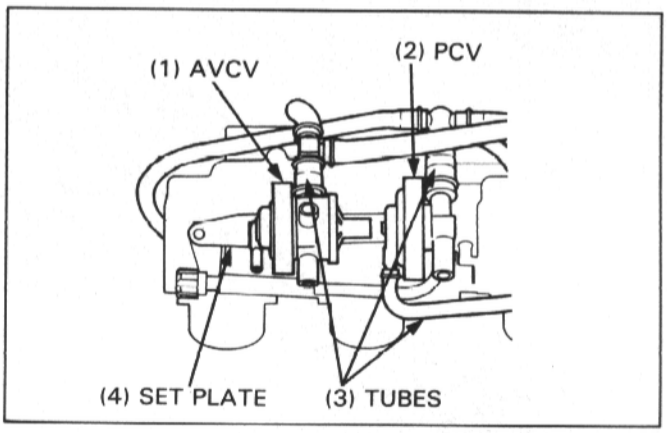

SECONDARY AIR SUPPLY SYSTEM

NOTE

- The ASV has reed valves built into the AICV.

Remove the fuel tank (page 2-4).
Disconnect the air injection tube (No. 15 tube) from the air cleaner case.
Disconnect the vacuum tube (No. 10 tube) from the ASV.
Install the plug onto the No. 10 vacuum tube and connect the vacuum pump to the ASV.

Perform the secondary air supply system (refer to section 7 of the Common Service Manual).

SPECIFIED VACUUM: 360 mmHg (14.2 inHg)

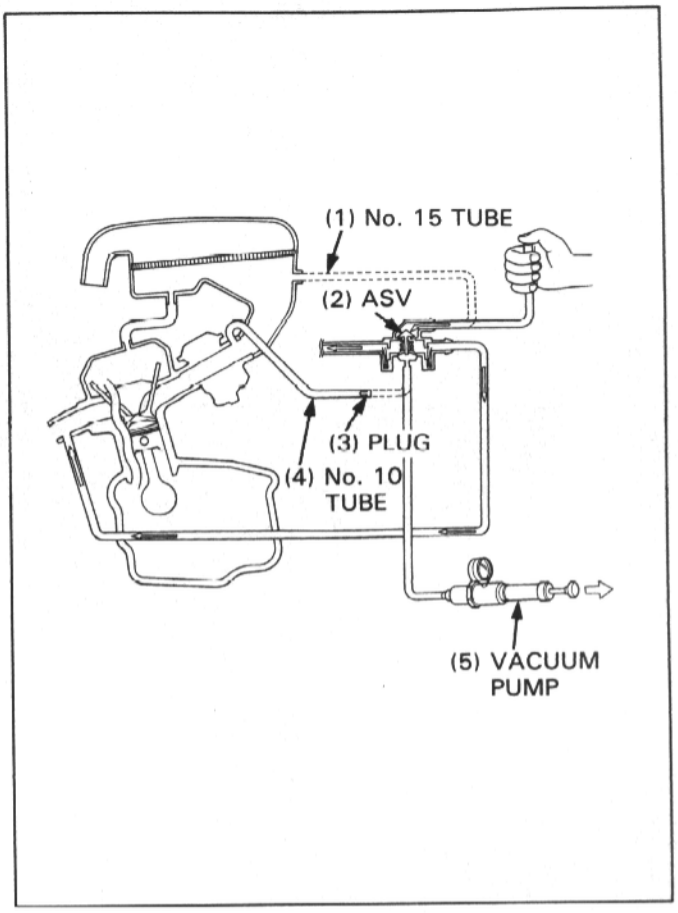

AIR SUCTION VALVE (ASV) REMOVAL
Remove two bolts and air suction valve as an assembly.
Disconnect the following from the ASV.
— No. 10 vacuum tube.
— No. 15 air injection tube.
— air supply hoses.

Remove bolts, air injection pipes and gaskets.

Remove the reed valve covers and reed valves.

Install the air suction valve in the reverse order of removal.

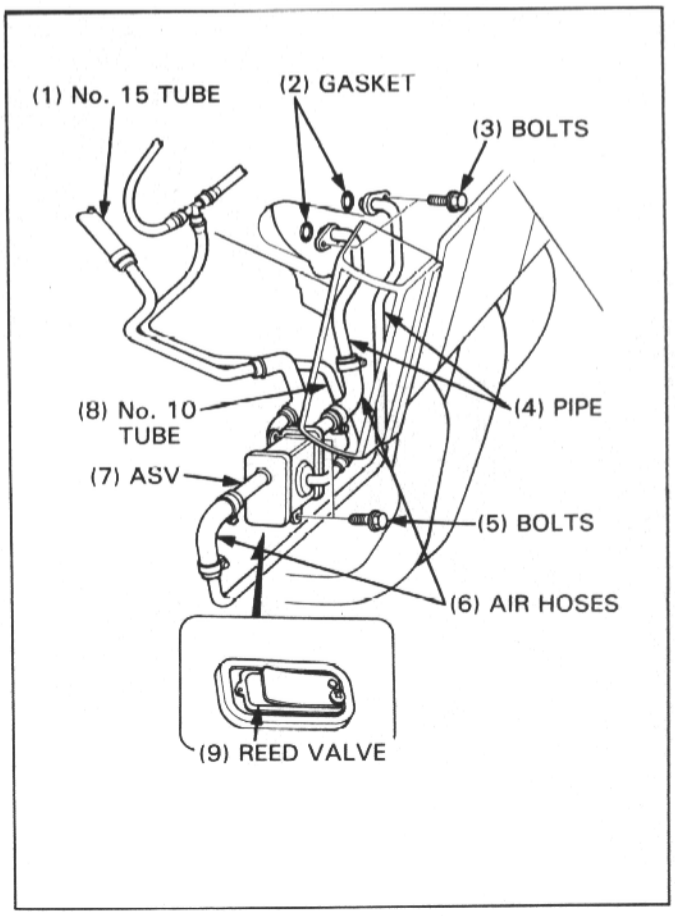

7. ENGINE REMOVAL/INSTALLATION

SERVICE INFORMATION	7-1	ENGINE REMOVAL/INSTALLATION	7-2

SERVICE INFORMATION

- A floor jack or other adjustable support is required to support and maneuver the engine.

CAUTION

- **Do not jack up the motorcycle using the oil filter.**

- The following components can be serviced with the engine installed in the frame:
  - alternator (Section 14)
  - camshaft (Section 8)
  - carburetors (Section 6)
  - clutch (Section 9)
  - gearshift linkage (Section 9)
  - oil pump (Section 4)
  - pulse generator (Section 15)
  - starter clutch (Section 16)
  - starter motor (Section 16)
  - water pump (Section 5)

- The following components require engine removal for service:
  - connecting rod (Section 10)
  - crankshaft (Section 10)
  - cylinder (Section 8)
  - cylinder head (Section 8)
  - piston (Section 8)
  - transmission (Section 10)

ENGINE REMOVAL/INSTALLATION

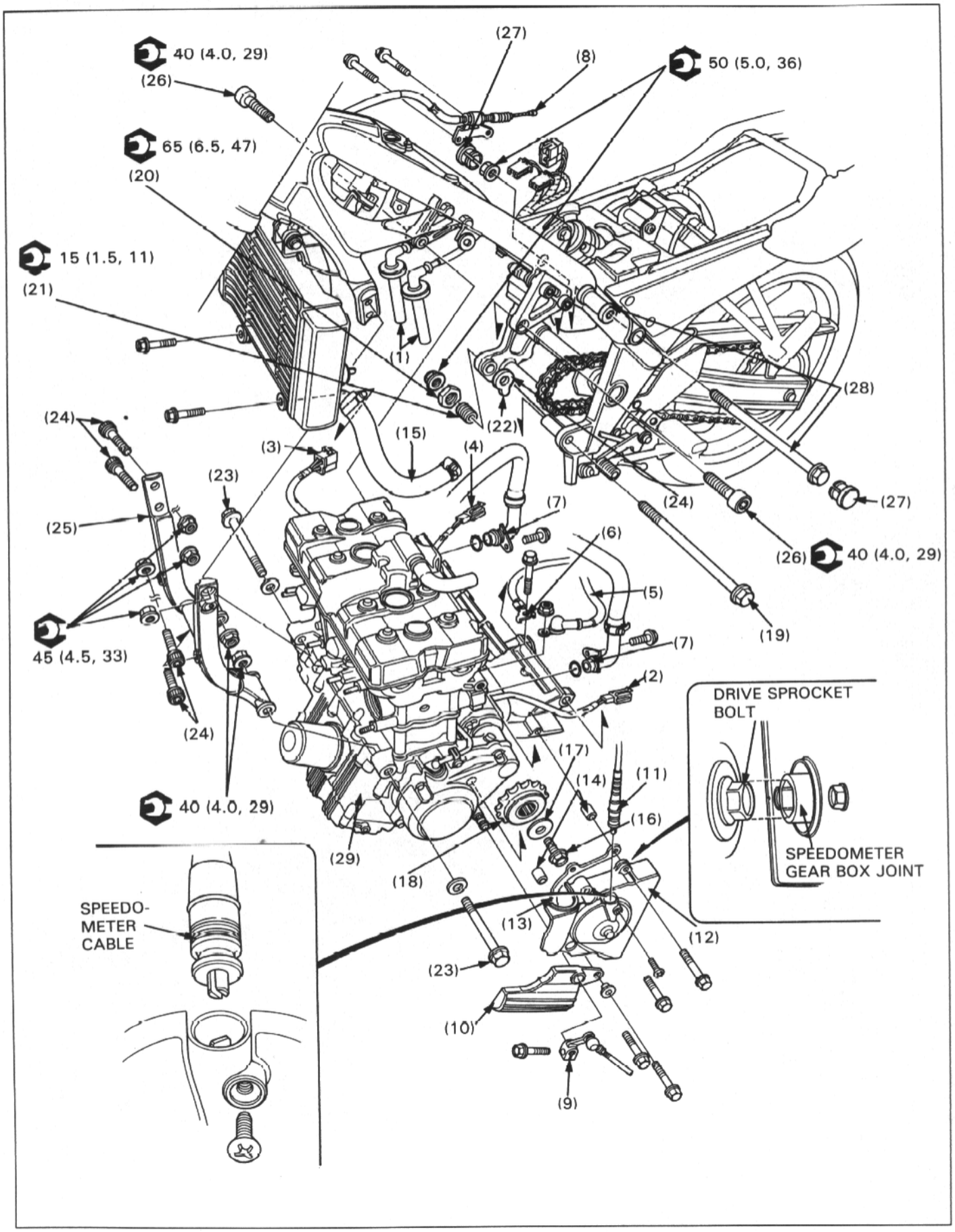

NOTE

- Turn the ignition switch OFF and disconnect the battery ground (−) cable.

CAUTION

- **Do not jack up the motorcycle using the oil filter.**

REQUISITE SERVICE

- Exhaust system removal/installation (page 2-3)
- Fuel tank removal/installation (page 2-4)
- Air cleaner case removal/installation (page 6-3)
- Carburetor removal/installation (page 6-4)
- Coolant draining (page 5-3)
- Engine oil draining (location: page 3-3, step: section 2 of the Common Service Manual)
- Remove the radiator lower mounting bolts and loosen the upper mounting bolt/nut (page 5-5). Swing the radiator forward.
- Coolant refill (section 5 of the Common Service Manual)

	PROCEDURE	Q'ty	REMARKS
	REMOVAL ORDER		• Installation is in the reverse order of removal.
(1)	Spark plug cap	4	
(2)	Pulse generator 2P mini (blue) connector	1	
(3)	Alternator 3P (black) connector	1	
(4)	Neutral switch/oil pressure switch 2P mini (black) connector	1	
(5)	Starter motor cable	1	
(6)	Engine ground cable	1	On the starter motor
(7)	Water hose joint/O-ring	2/2	
(8)	Clutch cable	1	
(9)	Gearshift spindle joint	1	At installation, align the punch marks on the joint and spindle.
(10)	Water pump side cover	1	
(11)	Speedometer cable	1	
(12)	Drive sprocket cover	1	**CAUTION:** • **Make sure the drive sprocket bolt is aligned with the speedometer gear box joint securely as shown.**
(13)	Drive chain guide	1	
(14)	Dowel pin	2	
(15)	Water hose	1	
(16)	Drive sprocket bolt	1	NOTE: • Hold the motorcycle on its side stand and shift the transmission in 6th gear. With the brake pedal applied, remove (or install) the drive sprocket bolt.
(17)	Washer	1	
(18)	Drive sprocket	1	Loosen the drive chain.
(19)	Engine mount bolt (rear/lower)	1	
(20)	Adjusting bolt lock nut	1	
(21)	Adjusting bolt	1	
(22)	Special washer	1	With its tab facing down.
(23)	Engine mount bolt (Front)/washer	2/2	
(24)	Engine sub frame bolt	4	
(25)	Engine sub frame	1	
(26)	Engine bracket bolt	2	Only remove the left/lower and right/lower bolts.
(27)	Bolt cap	2	
(28)	Engine mount bolt (rear/upper)/collar	1/1	Install the collar on the left side.
(29)	Engine assembly	1	Move the engine out of the frame to the left. **CAUTION:** • **Carefully align mounting points with the jack to prevent damage to mounting bolt threads, wire harness and cables.**

8. CYLINDER HEAD/CYLINDER/PISTON

SERVICE INFORMATION	8-1	CYLINDER HEAD DISASSEMBLY/ ASSEMBLY	8-6
TROUBLESHOOTING	8-1	CYLINDER/PISTON REMOVAL/ INSTALLATION	8-8
CAMSHAFT REMOVAL/INSTALLATION	8-2		
CYLINDER HEAD REMOVAL/ INSTALLATION	8-4		

SERVICE INFORMATION

- Camshaft service can be done with the engine in the frame.
- Camshaft lubricating oil is fed through oil passages in the cylinder head. Clean the oil passages before assembling the cylinder head. Fill the cylinder head oil pockets with the clean engine oil of the proper type and viscosity.
- Clean all disassembled parts with cleaning solvent and dry them by blowing them off with compressed air before inspection.
- Before reassembly, lubricate the camshaft journals and cam lobes with a molybdenum oil solution.
- When disassembling, mark and store the disassembled parts to ensure that they are reinstalled in their proper locations.
- Be careful not to damage the mating surfaces by using a screwdriver when removing the cylinder. Do not strike the cylinder too hard during disassembly, even with a rubber or plastic mallet, to prevent the possibility of damage to the cylinder fins.
- Take care not to damage the cylinder walls and pistons.
- Store the valve and piston components in the same order they were installed so they can be reinstalled in the original positions.

TROUBLESHOOTING

Engine top-end problems usually affect engine performance. These can be diagnosed by a compression or leak down test, or by tracing noises in the top-end with a sounding rod or stethoscope.
If performance is poor at low speeds, check for white smoke in the crankcase breather tube. If the tube is smokey, check for seized piston rings.

NOTE

- For cylinder compression and leak-down test procedures, refer to section 3 of the Common Service Manual.

Rough idle
- Low cylinder compression

Low compression
- Incorrect valve shim adjustment (page 3-5)
- Burned or bent valves
- Incorrect valve timing
- Broken valve spring
- Uneven valve seating
- Leaking or damaged head gasket
- Warped or cracked cylinder head
- Loose spark plug
- Worn, stuck or broken piston rings
- Worn or damaged cylinder and piston

Compression too high
- Excessive carbon build-up on piston top or combustion chamber

Excessive smoke
- Worn valve stem or valve guide
- Damaged stem seal
- Worn cylinder, piston or piston rings
- Improper installation of piston rings
- Scored or scratched piston or cylinder wall

Excessive noise
- Incorrect valve shim adjustment (page 3-5)
- Sticking valve or broken valve spring
- Damaged or worn camshaft
- Damaged camshaft drive gear

Abnormal noise (piston)
- Worn cylinder and piston
- Worn piston pin or piston pin hole
- Worn connecting rod big end bearing

CAMSHAFT REMOVAL/INSTALLATION

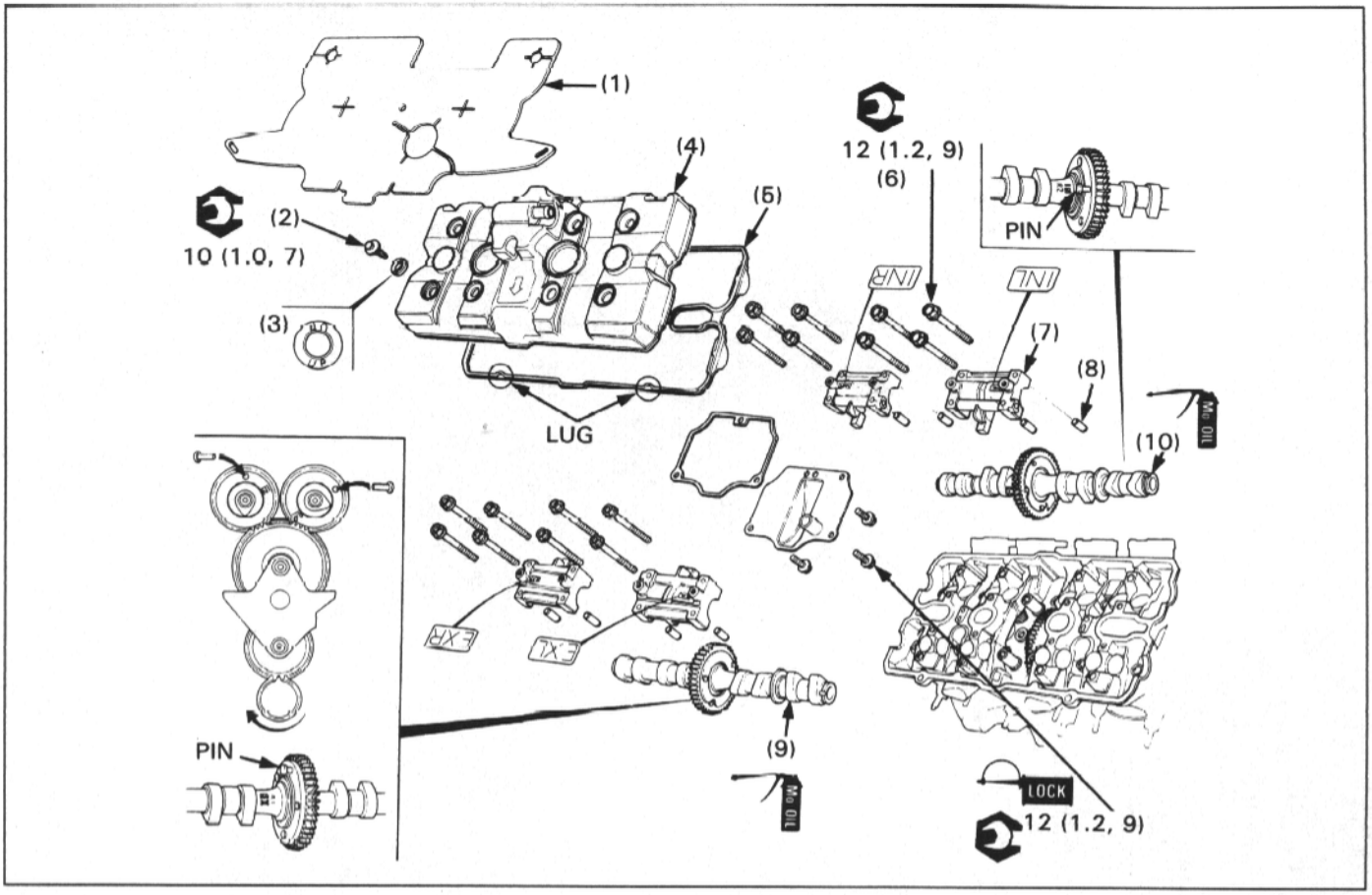

REQUISITE SERVICE

- Fuel tank removal/installation (page 2-4)
- Air cleaner case removal/installation (page 6-3)
- Remove the radiator lower mounting bolts and loosen the upper mounting bolt/nut (page 5-5). Swing the radiator forward.

	PROCEDURE	Q'ty	REMARKS
	REMOVAL ORDER		• Installation is in the reverse order of removal.
(1)	Heat guard plate	1	
(2)	Cylinder head cover bolt	8	At installation, tighten the bolts in a gradual, crisscross pattern.
(3)	Washer	8	Install them with the "UP" mark facing up.
(4)	Cylinder head cover	1	Install with the "⇦" mark forward.
(5)	Gasket	1	NOTE: • Apply Three Bond 1521 or equivalent to the head cover and install the gasket onto the cover with tabs facing forward.
(6)	Camshaft holder bolt	16	NOTE: • Before removing bolts, turn the flywheel clockwise and insert suitable pins into the cam gear holes to ease the installation of camshaft serrated gears. Take care not to drop pins into the crankcase and that the pins do not interfere with the cylinder head.
(7)	Camshaft holder	4	Camshaft installation (page 8-3)
(8)	Dowel pin	8	
(9)	Exhaust (EX) camshaft	1	
(10)	Intake (IN) camshaft	1	

CAMSHAFT INSTALLATION

Remove the following:
- crankshaft hole cap cover (page 9-2).
- crankshaft hole cap (page 9-2).
- timing mark hole cap (page 9-2).

Rotate the crankshaft clockwise and align the flywheel "T" mark (Yellow colored line) with the cover index mark.
Lubricate the camshaft journals and cam lobes with a molybdenum oil solution.
Lay the EX marked (Exhaust) camshaft onto the cylinder head with EX mark line as shown and lay the IN marked (Intake) camshaft with IN mark line as shown.
In this position, the No. 4 piston is at TDC on the compression stroke.

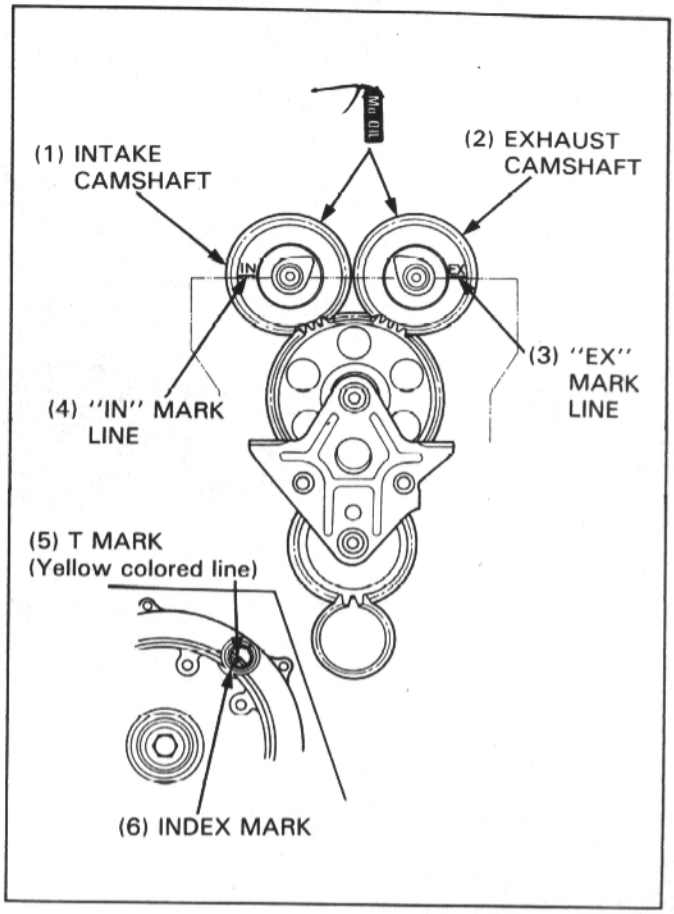

Install the dowel pins onto the camshaft holders and install the camshaft holders in their original positions.

NOTE

- Each holder has identification marks.
  EXL: Exhaust camshaft-Left
  EXR: Exhaust camshaft-Right
  INL: Intake camshaft-Left
  INR: Intake camshaft-Right

Tighten the camshaft holder bolts in a gradual, crisscross pattern.

TORQUE: 12 N·m (1.2 kg-m, 9 ft-lb)

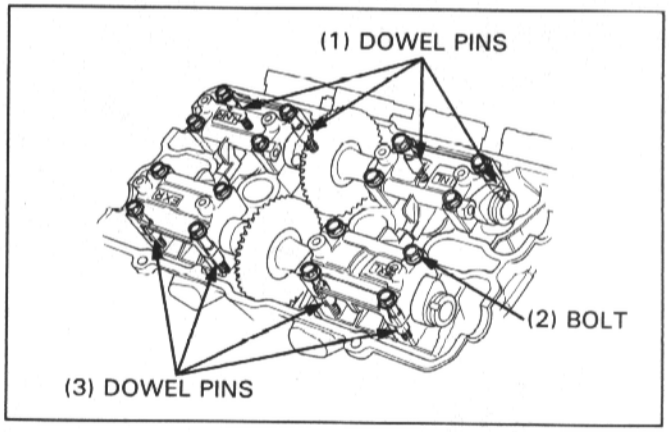

Turn the crankshaft counterclockwise so as not to interfere the camshaft serrated gear holder pins with the cylinder head. Remove the holder pins from each camshaft gear.

NOTE

- Take care not to drop the pins into the crankcase.

Recheck the valve timing.

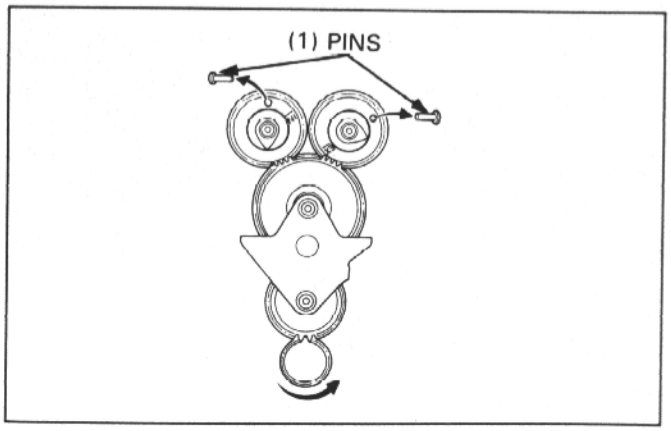

CYLINDER HEAD REMOVAL/INSTALLATION

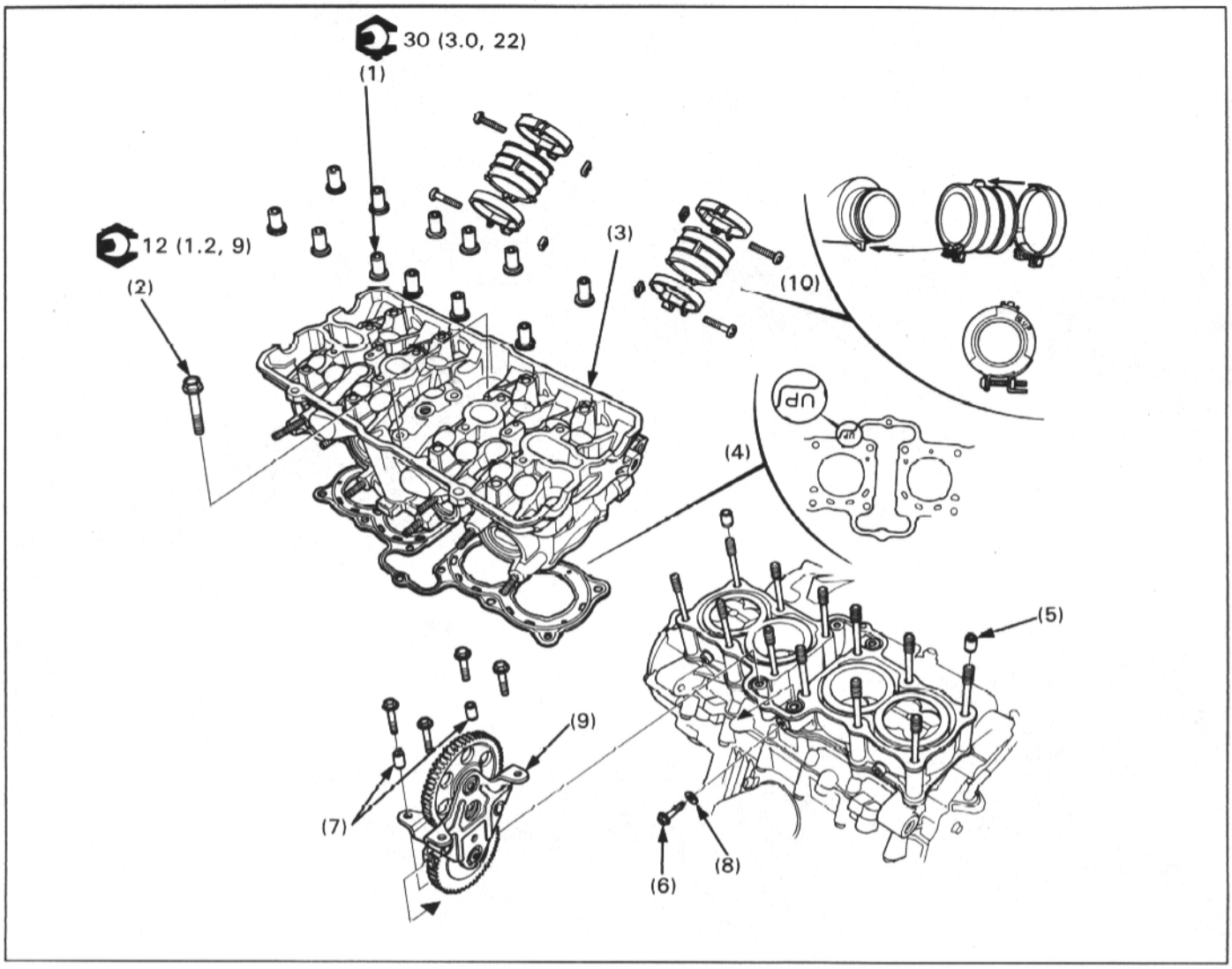

REQUISITE SERVICE

- Engine removal/installation (page 7-2)
- Camshaft removal/installation (page 8-2)

	PROCEDURE	Q'ty	REMARKS
	REMOVAL ORDER		• Installation is in the reverse order of removal.
(1)	Cylinder head special nut	12	Installation (page 8-5)
(2)	Cylinder head mounting bolt	2	
(3)	Cylinder head assembly	1	
(4)	Gasket	1	Install with the UP mark facing up and rearward.
(5)	Dowel pin	2	
(6)	Camshaft idle gear case bolt	5	
(7)	Camshaft idle gear case dowel pin	2	Installation (page 8-5)
(8)	Sealing washer	1	
(9)	Camshaft idle gear case	1	
(10)	Carburetor insulator	4	At installation, align the insulator groove with the engine lug, with the ⇧ UP mark facing upwards (carburetor side).

CAMSHAFT IDLE GEAR CASE INSTALLATION

Install the camshaft idle gear case dowel pins properly.

NOTE

- Without the dowel pins installed properly, the camshaft idle gear may not be able to be installed onto the crankshaft timing gear.

Install the camshaft idle gear case onto the cylinder.
While moving the idle gear lightly with the gear case held, the gear case should be lifted up slightly from the cylinder.

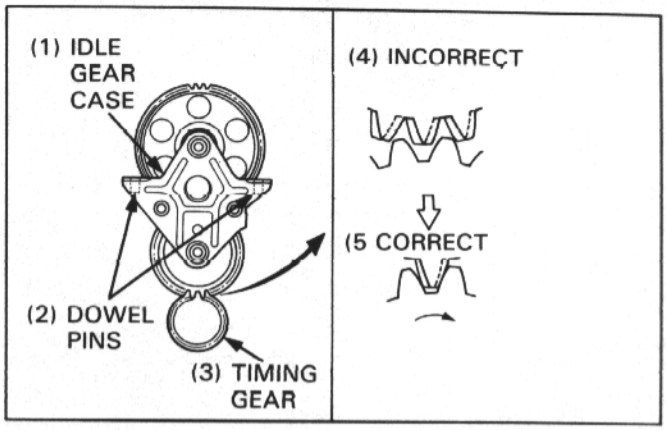

Install a new sealing washer and mounting bolts. Tighten bolts in a gradual, as shown.

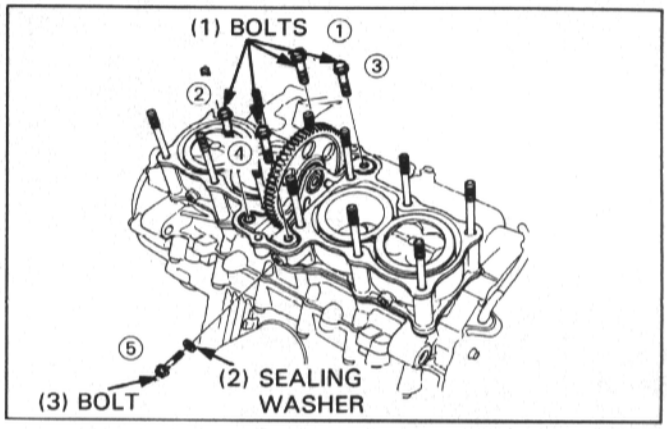

CYLINDER HEAD NUT/BOLT INSTALLATION

Install the cylinder head special nuts as shown.
Do not tighten them yet.

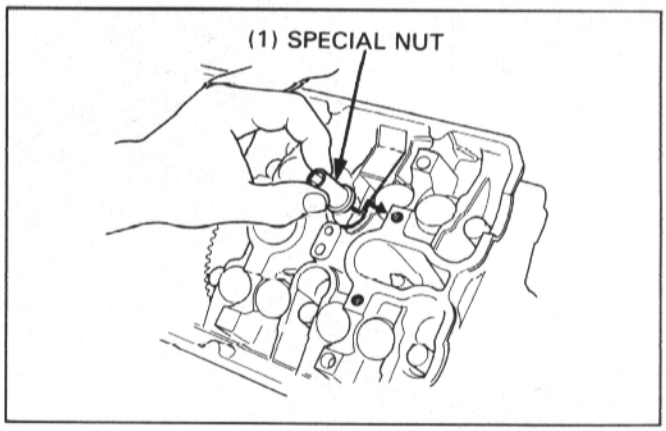

Install the cylinder head mounting bolts.
Tighten the special nuts and mounting bolts in a gradual, crisscross pattern.

TORQUE:

Special nut: 30 N·m (3.0 kg-m, 22 ft-lb)
Mounting bolt: 12 N·m (1.2 kg-m, 9 ft-lb)

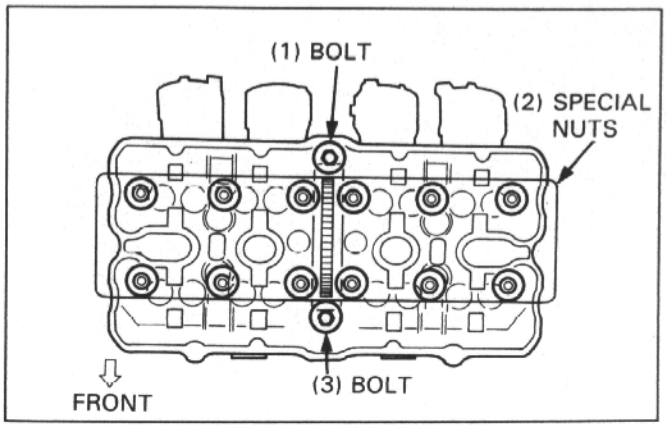

CYLINDER HEAD DISASSEMBLY/ASSEMBLY

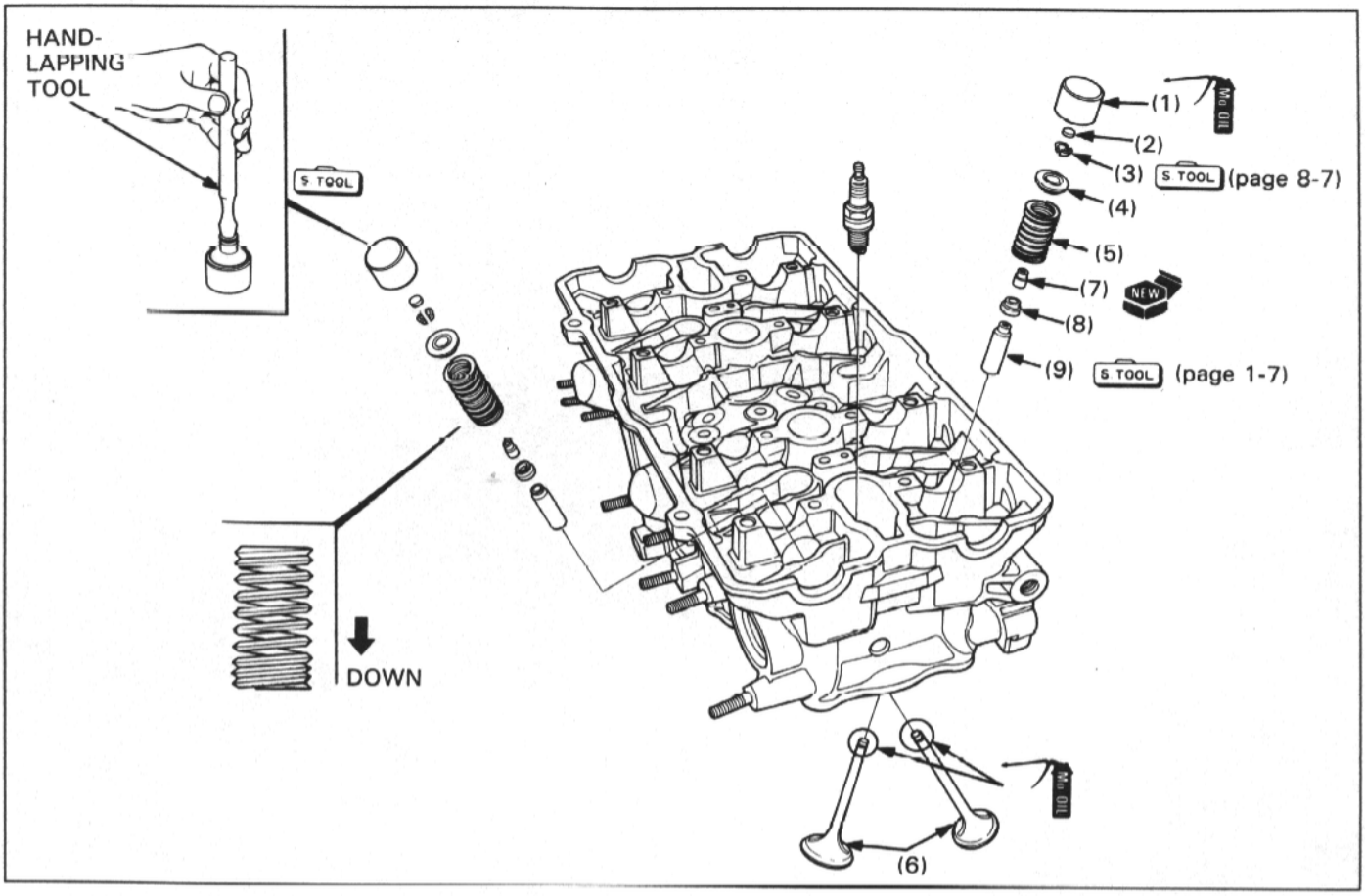

NOTE

- Store the valve components in the same order they were installed so they can be reinstalled in the original positions.
- Refer to section 9 of the Common Service Manual for valve guide inspection/replacement.

REQUISITE SERVICE

- Engine removal/installation (page 7-2)
- Camshaft removal/installation (page 8-2)
- Cylinder head removal/installation (page 8-4)

	PROCEDURE	Q'ty	REMARKS
	DISASSEMBLY ORDER		• Assembly is in the reverse order of disassembly.
(1)	Valve bucket	16	NOTE: • Remove using a handlapping tool. Do not damage the cylinder head -bucket sliding surface.
(2)	Valve shim	16	
(3)	Valve cotter	32	Removal/Installation (page 8-7)
(4)	Retainer	16	
(5)	Valve spring	16	Install them with the narrow pitch end facing down.
(6)	Valve	16	
(7)	Stem seal	16	
(8)	Spring seat	16	
(9)	Valve guide	16	Be sure to duplicate the proper valve guide installed length (page 1-7)

VALVE COTTERS REMOVAL/INSTALLATION

Remove the valve buckets and shims.
Install the cylinder head protector into the cylinder head-bucket sliding surface.

S TOOL

VALVE BUCKET HOLE PROTECTOR **07JMG–KY20100**

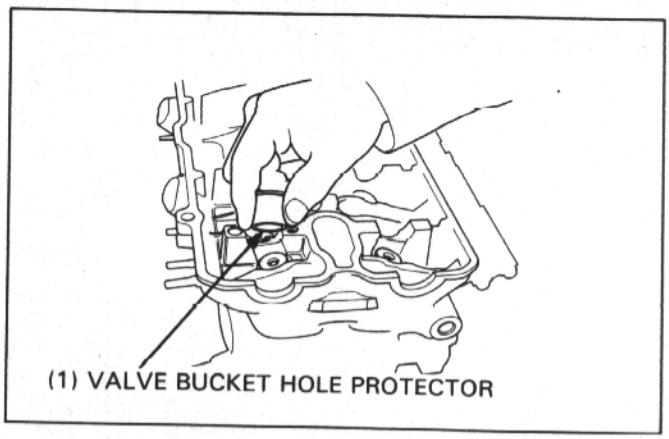

Install the valve spring compressor onto the valve and compress the valve spring.
Remove (or install) the valve cotters.

S TOOL

VALVE SPRING COMPRESSOR ATTACHMENT **07JME–KY20100**
VALVE SPRING COMPRESSOR **07757–0010000**

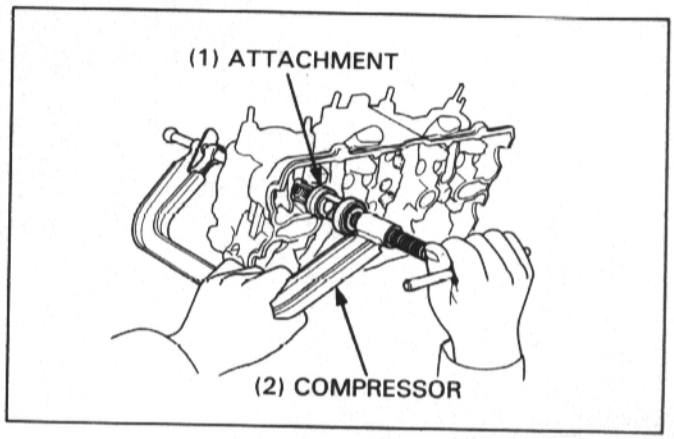

CYLINDER/PISTON REMOVAL/INSTALLATION

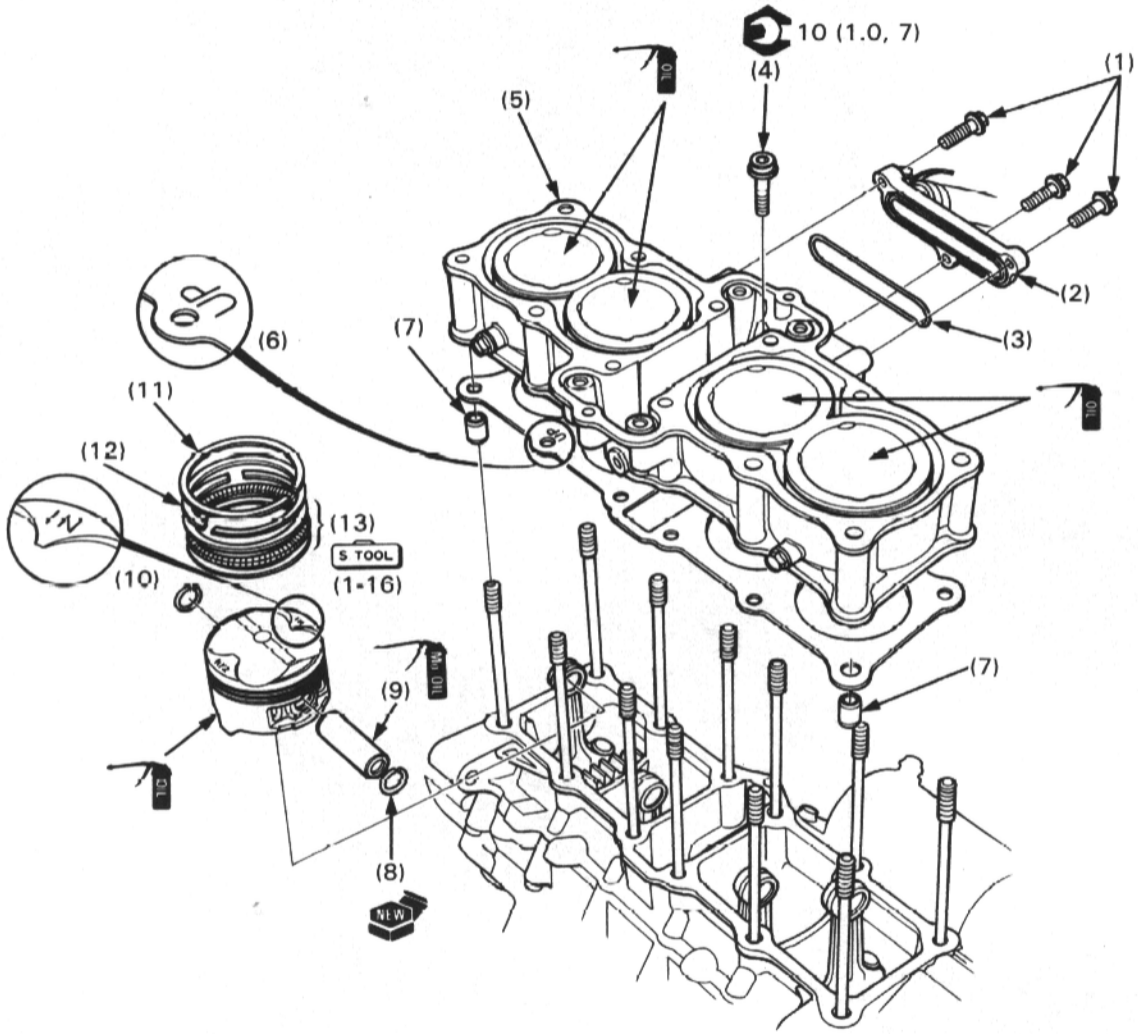

NOTE

- Refer to section 10 of the Common Service Manual for piston and piston ring inspection.

REQUISITE SERVICE

- Engine removal/installation (page 7-2)
- Camshaft removal/installation (page 8-2)
- Cylinder head removal/installation (page 8-4)

	PROCEDURE	Q'ty	REMARKS
	REMOVAL ORDER		• Installation is in the reverse order of removal.
(1)	Water joint bolt	3	
(2)	Water joint	1	
(3)	O-ring	1	
(4)	Cylinder mounting bolt	1	
(5)	Cylinder	1	
(6)	Gasket	1	Install with the UP mark facing up and forward.
(7)	Dowel pin	2	
(8)	Piston pin clip	8	
(9)	Piston pin	4	
(10)	Piston	4	Install them with the IN mark facing to the intake side.
(11)	Piston top ring	4	• Install the top and second rings with the markings facing up.
(12)	Piston second ring	4	
(13)	Piston oil ring set (side rails and spacer)	4	• Space the ring end gaps 120° apart. • Space the side rail gaps 20 mm (0.8 in) or more apart.

9. CLUTCH/GEARSHIFT LINKAGE

SERVICE INFORMATION	9-1	CLUTCH REMOVAL	9-4
TROUBLESHOOTING	9-1	GEARSHIFT LINKAGE REMOVAL/ INSTALLATION	9-6
RIGHT CRANKCASE COVER REMOVAL/ INSTALLATION	9-2	CLUTCH INSTALLATION	9-8

SERVICE INFORMATION

- Clutch and gearshift linkage maintenance can be done with the engine in the frame.
- Engine oil viscosity and level have an effect on clutch operation. When the clutch does not disengage or the vehicle creeps with clutch disengaged, inspect the engine oil and oil level before servicing the clutch system.
- Clean any gasket off the crankcase cover-crankcase mating surface.
- Do not damage the cover-case mating surface.
- Never allow foreign materials to get into the engine.
- If the shift forks, drum and transmission require servicing, remove the engine and separate the crankcase (Section 10).
- If it is no longer clear which bolt belongs in which hole, insert all bolts in the holes and check the exposed length; each should be exposed the same amount.

TROUBLESHOOTING

Clutch lever too hard
- Damaged, kinked or dirty clutch cable
- Improperly routed clutch cable
- Damaged clutch lifter mechanism
- Faulty clutch lifter plate bearing

Clutch will not disengage or motorcycle creeps with clutch disengaged
- Too much clutch lever free play
- Warped plate(s)
- Oil level too high, improper oil viscosity or oil additive used

Clutch slips
- Clutch lifter sticking
- Worn clutch discs
- Weak clutch springs
- No clutch lever free play

Hard to shift
- Misadjusted clutch cable
- Damaged or bent shift fork
- Bent shift fork shaft
- Worn gear dogs
- Incorrect engine oil viscosity
- Incorrect gearshift linkage guide plate installation

Jumps out of gear
- Damaged or bent shift fork
- Bent shift fork shaft
- Damaged stopper arm
- Worn gear engagement dogs or slots
- Damaged shift drum cam grooves

RIGHT CRANKCASE COVER REMOVAL/INSTALLATION

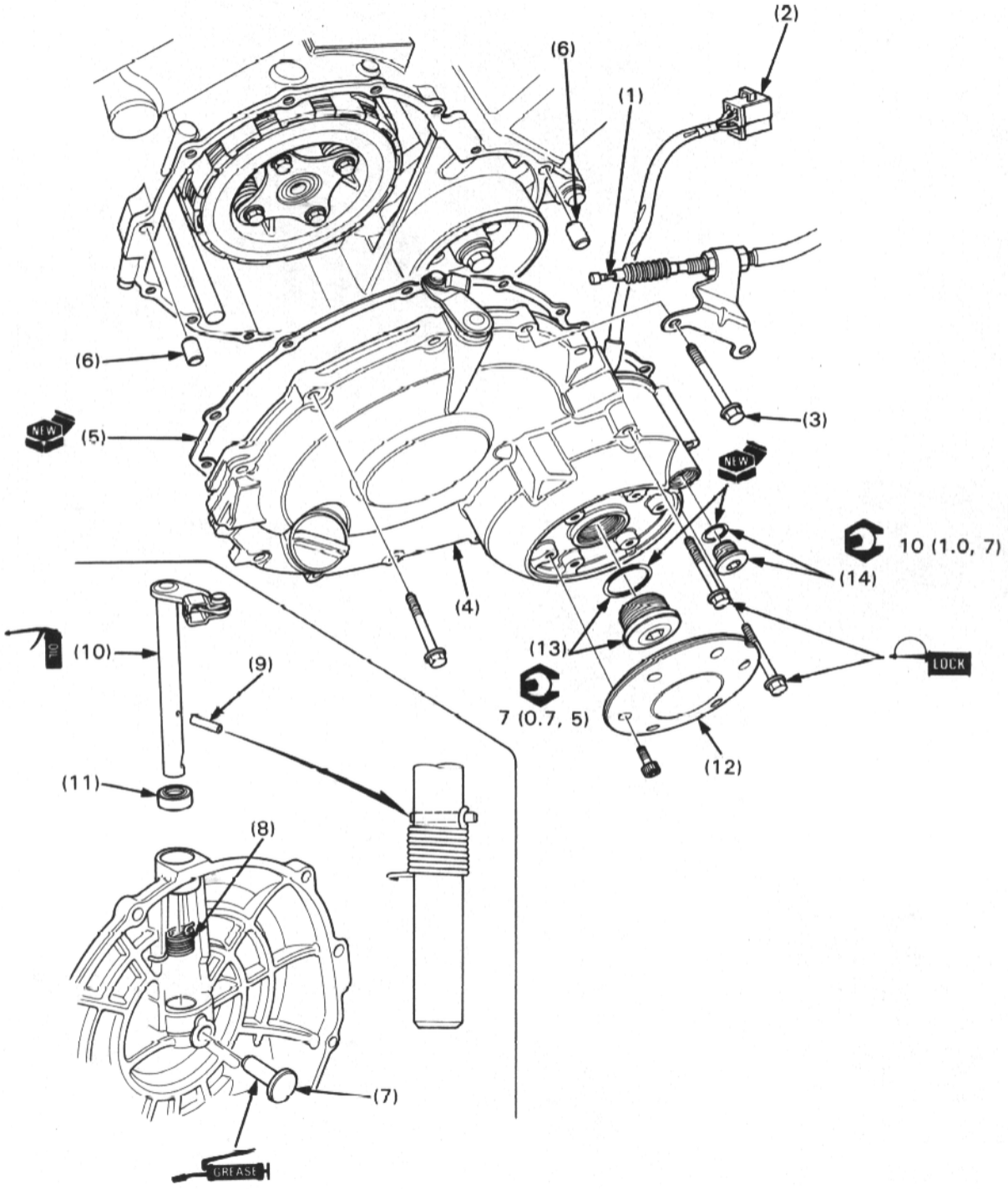

REQUISITE SERVICE

- Engine oil draining (drain bolt location: page 3-3, step: section 2 of the Common Service Manual)

	PROCEDURE	Q'ty	REMARKS
	REMOVAL ORDER		• Installation is in the reverse order of removal.
(1)	Clutch cable	1	
(2)	Alternator wire connector	1	
(3)	Right crankcase cover bolt	14	NOTE: • At installation, apply a locking agent to the two bolt threads.
(4)	Right crankcase cover	1	Disconnect (or connect) the Alternator 3P connector.
(5)	Gasket	1	
(6)	Dowel pin	2	
(7)	Clutch lifter pin	1	
(8)	Return spring	1	
(9)	Spring pin	1	NOTE: • Drive in a new spring pin using a pin driver until the pin does not interfere with the lifter arm as shown.
(10)	Clutch lifter arm	1	
(11)	Oil seal	1	
(12)	Crankshaft hole cap cover	1	
(13)	Crankshaft hole cap/O-ring	1/1	
(14)	Timing mark hole cap/O-ring	1/1	

CLUTCH REMOVAL

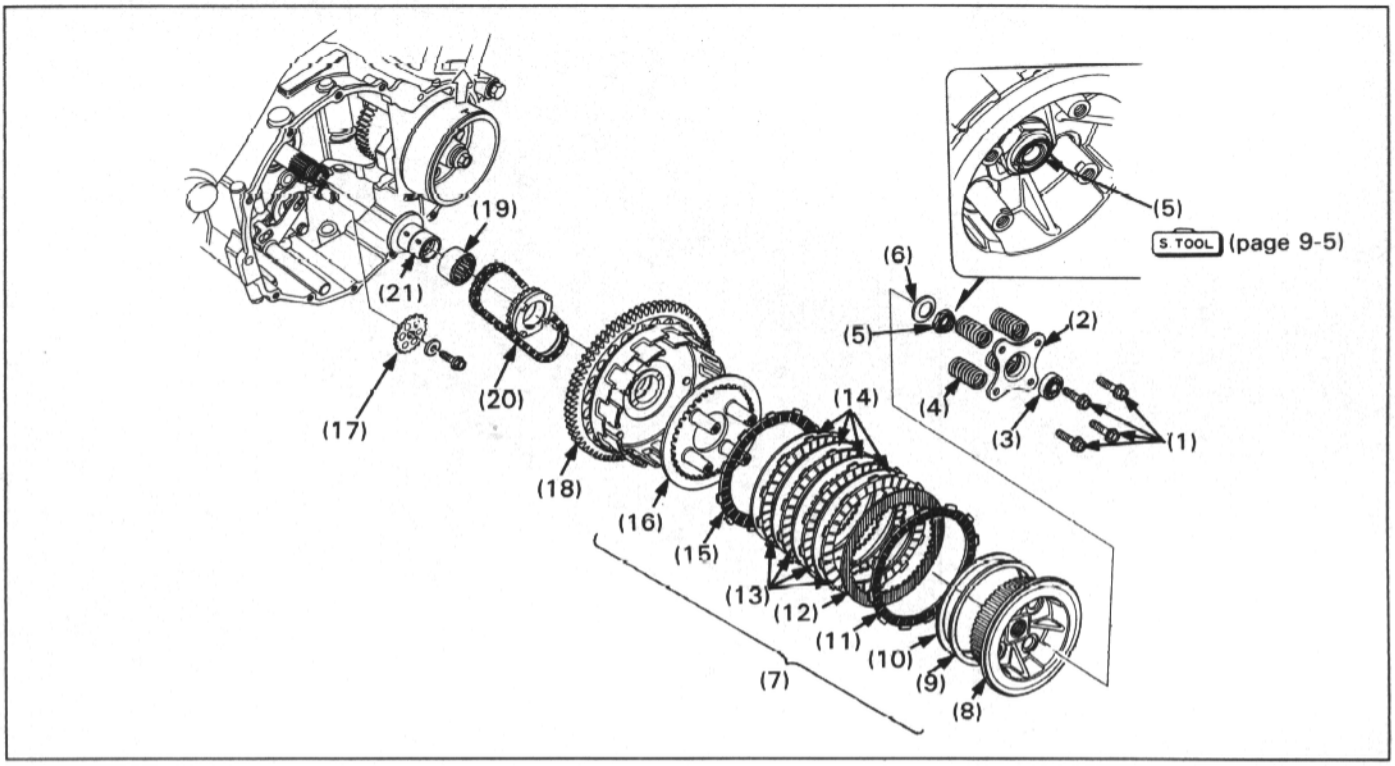

REQUISITE SERVICE

- Right crankcase cover removal (page 9-2)

	PROCEDURE	Q'ty	REMARKS
(1)	Clutch lifter plate bolt	4	Remove them in a gradual, crisscross pattern.
(2)	Clutch lifter plate	1	
(3)	Clutch lifter plate bearing	1	
(4)	Clutch spring	4	
(5)	Clutch center lock nut	1	Removal (page 9-5)
(6)	Lock washer	1	
(7)	Clutch assembly	—	Refer to page 1-10 for specification.
(8)	— clutch center	1	
(9)	— spring seat	1	
(10)	— judder spring	1	
(11)	— clutch friction disc C	1	Larger I.D. disc/Color: black
(12)	— clutch plate B	1	Color: gray
(13)	— clutch frictin disc B	4	Smaller I.D. disc
(14)	— clutch plate A	4	Color: silver
(15)	— clutch friction disc A	1	Smaller I.D. disc/Color: black
(16)	— pressure plate	1	Refer to section 11 of the Common Service Manual for inspection information.
(17)	Oil pump driven sprocket	1	Removal (page 4-3)
(18)	Clutch outer	1	NOTE: • Turn the crankshaft clockwise and face the flywheel "T" mark up so as not to interfere the primary driven gear with the crank weight. • Do not still remove the needle bearing and outer guide.
(19)	Needle bearing	1	
(20)	Oil pump drive sprocket/drive chain	1/1	
(21)	Clutch outer guide	1	

CLUTCH CENTER LOCK NUT REMOVAL

If you have the universal type of the clutch center holder, you will be able to use it.

Unstake the nut.
Set the clutch center holder to the pressure plate bosses and loosely install the nuts.

CLUTCH CENTER HOLDER **07HGB–001000A (U.S.A. only)**

Temporarily remove the tool and tighten nuts; then reinstall the clutch center holder onto the bosses. Use at least two clutch lifter plate bolts to secure the tool to the clutch.

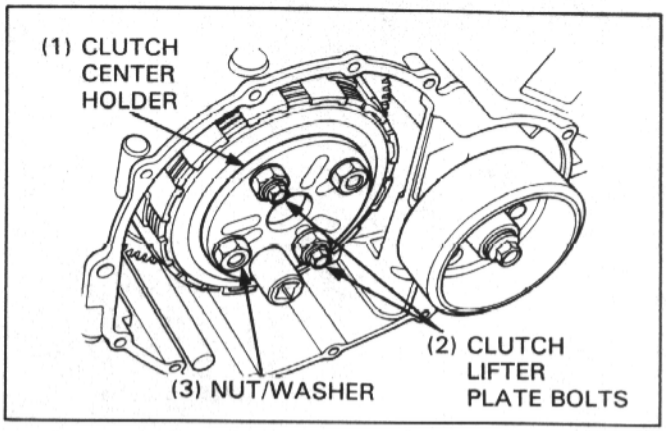

Hold the clutch center holder and remove the lock nut as shown.

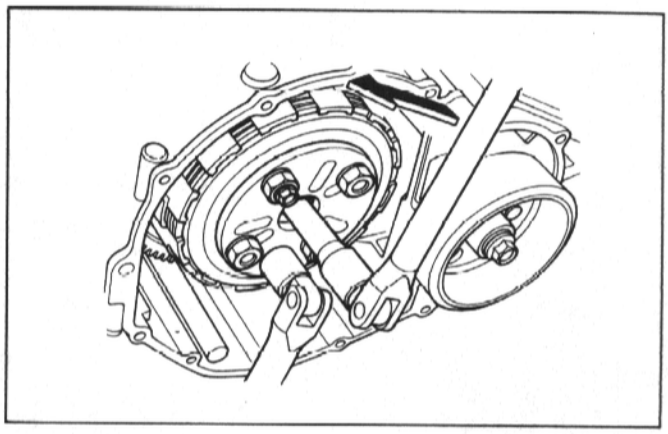

If you do not have the above holder, use the below holder.
Unstake the nut.
Remove the clutch center lock nut as shown.

CLUTCH CENTER HOLDER **07GMB–KT80100 (Not available in U.S.A.)**

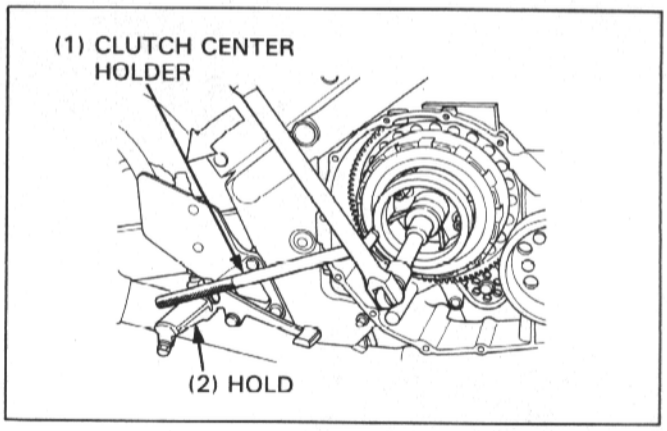

GEARSHIFT LINKAGE REMOVAL/INSTALLATION

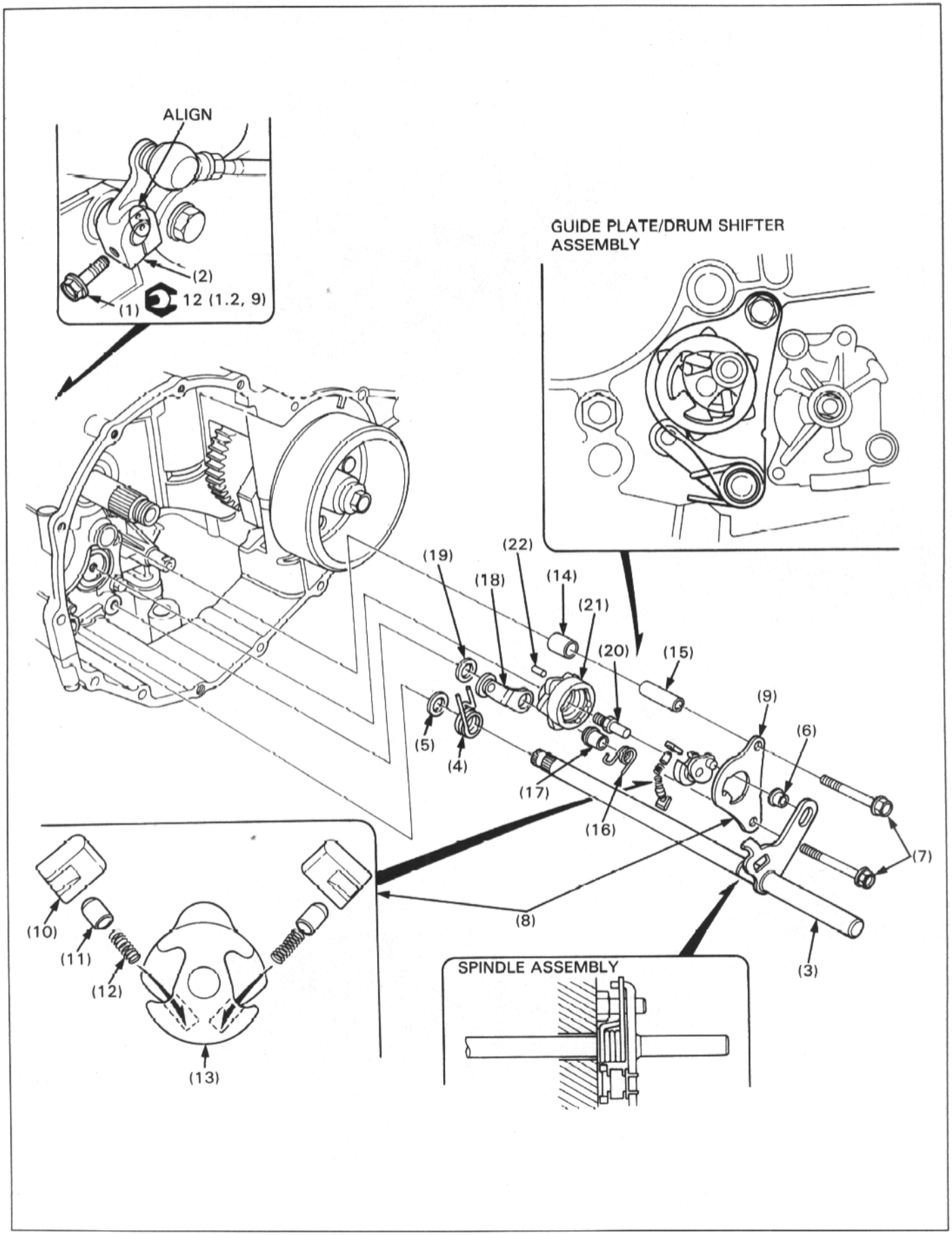

NOTE

- Make sure the gearshift linkage can be operated properly after assembly.

REQUISITE SERVICE

- Right crankcase cover removal/installation (page 9-2)
- Clutch removal/installation (page 9-4, 9-8)

	PROCEDURE	Q'ty	REMARKS
	REMOVAL ORDER		• Installation is in the reverse order of removal.
(1)	Gearshift spindle joint bolt	1	
(2)	Gearshift spindle joint	1	At installation, align the punch marks on the joint and spindle.
(3)	Gearshift spindle	1	
(4)	Spindle return spring	1	
(5)	Washer	1	
(6)	Shifter collar	1	
(7)	Guide plate mounting bolt	2	
(8)	Guide plate/drum shifter assembly	—	Assembly: as illustrated
(9)	— guide plate	1	Install onto dowel pins properly, or shift to hard.
(10)	— ratchet pawl	2	Pawl orientation as shown.
(11)	— plunger	2	
(12)	— spring	2	
(13)	— drum shifter	1	
(14)	Collar	1	
(15)	Dowel pin	1	
(16)	Stopper arm spring	1	
(17)	Spring collar	1	
(18)	Stopper arm	1	
(19)	Washer	1	
(20)	Shift drum center bolt	1	At installation, torque after applying a locking agent to bolt threads.
(21)	Shift drum center	1	At installation, align the drum center groove with the dowel pin.
(22)	Dowel pin	1	

CLUTCH INSTALLATION

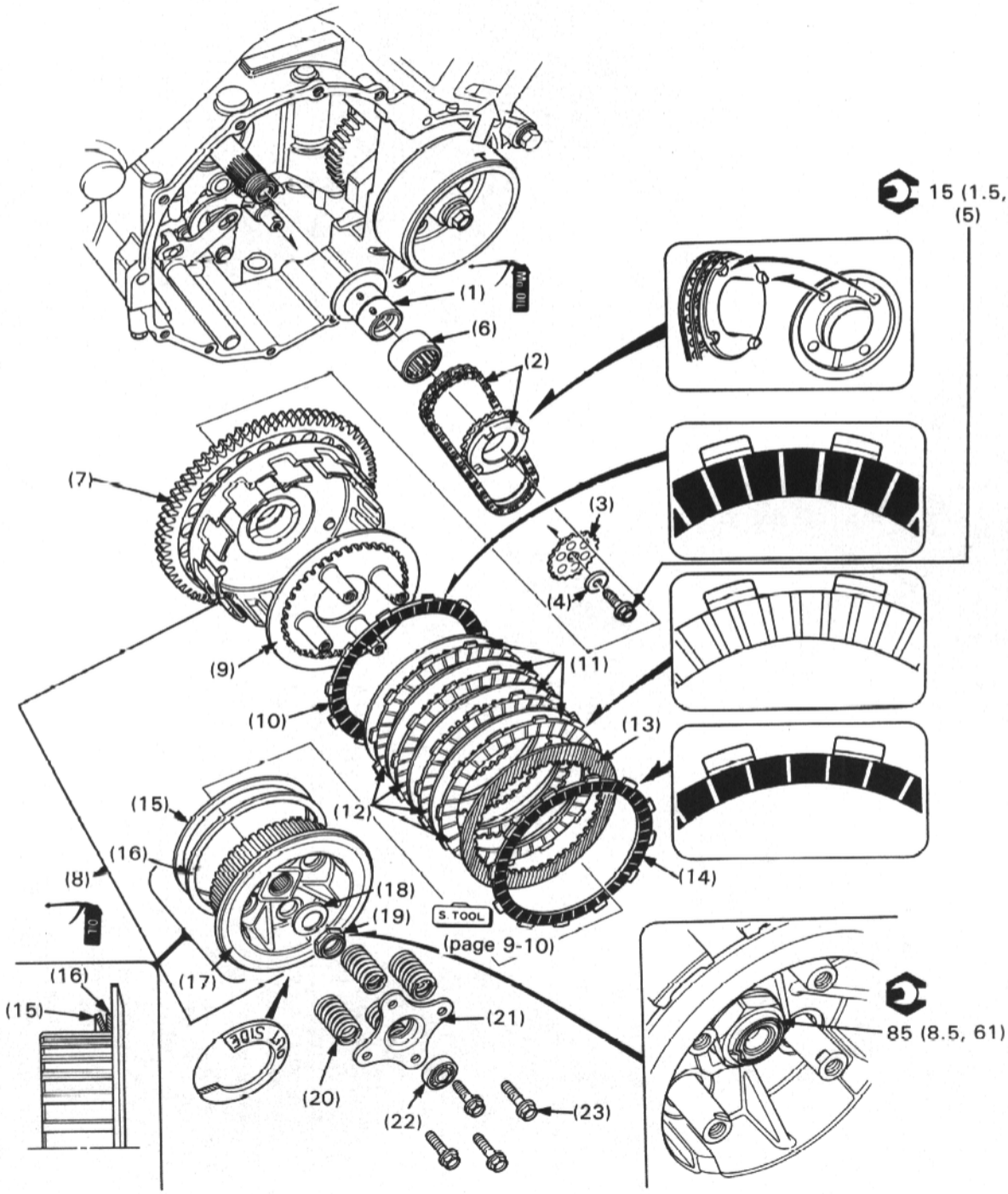

REQUISITE SERVICE

- Gearshift linkage installation (page 9-6)
- Right crankcase cover installation (page 9-2)

	PROCEDURE	Q'ty	REMARKS
(1)	Clutch outer guide	1	
(2)	Oil pump drive sprocket/drive chain	1/1	
(3)	Oil pump driven sprocket	1	At installation, install with the grooves facing inside.
(4)	Washer	1	
(5)	Oil pump drive sprocket bolt	1	Apply a locking agent to the threads. Installation (page 4-3).
(6)	Needle bearing	1	
(7)	Clutch outer	1	Installation (see below)
(8)	Clutch assembly	—	
(9)	— pressure plate	1	
(10)	— clutch friction disc A	1	Smaller I.D. disc/Color: black
(11)	— clutch plate A	4	Color: silver
(12)	— clutch friction disc B	4	Smaller I.D. disc
(13)	— clutch plate B	1	Color: gray
(14)	— clutch friction disc C	1	Larger I.D. disc/Color: black
(15)	— judder spring	1	Face the dished side of the judder spring to the outside.
(16)	— spring seat	1	
(17)	— clutch center	1	
(18)	Lock washer	1	With the OUTSIDE mark facing up.
(19)	Clutch center lock nut	1	Installation (page 9-10)
(20)	Clutch spring	4	
(21)	Clutch lifter plate	1	
(22)	Clutch lifter plate bearing	1	Install it with the marked side facing out.
(23)	Clutch lifter plate bolt	4	Install them in a gradual, crisscross pattern.

CLUTCH OUTER INSTALLATION

Turn the crankshaft clockwise and face the flywheel "T" mark up so that the primary driven gear does not interfere with the crank weight.

Align the serrated tooth of the primary driven gear with the drive gear teeth, as shown, and temporarily install the clutch outer onto the mainshaft.

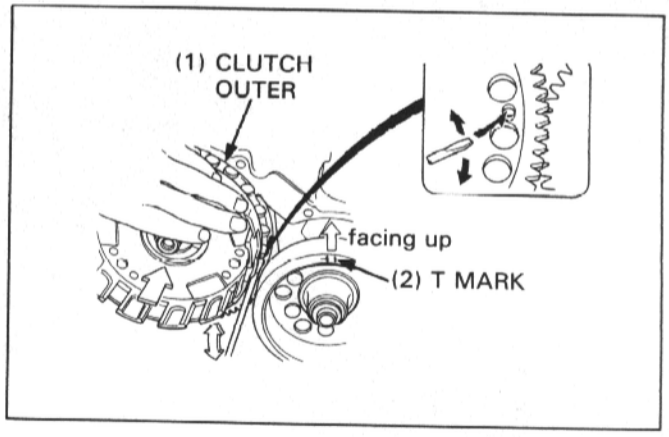

While holding the clutch outer and pushing in on it lightly, rotate the oil pump driven sprocket bolt.
Install the clutch outer properly, aligning the clutch outer holes with the oil pump drive sprocket bosses.

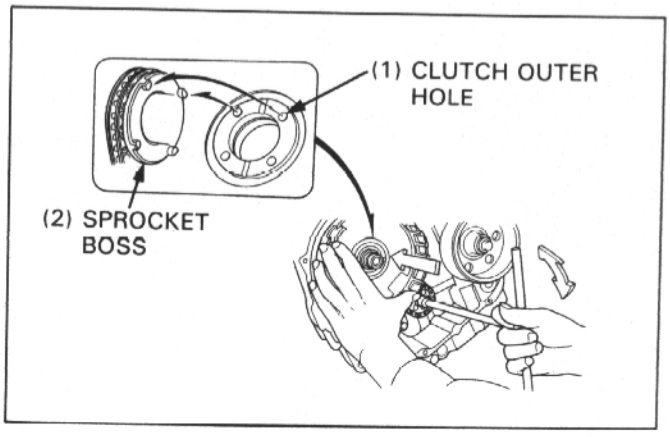

CLUTCH CENTER LOCK NUT INSTALLATION

If you have the universal type of the clutch center holder, you will be able to use it.

Position the tools as shown and use at least two clutch lifter plate bolts to secure the tool to the clutch.

S TOOL

CLUTCH CENTER HOLDER **07HGB–001000A (U.S.A. only)**

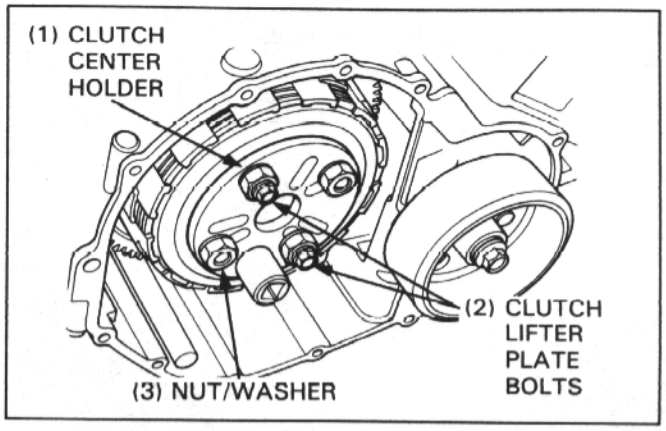

Hold the clutch center holder and torque the clutch center lock nut as shown.

TORQUE: 85 N·m (8.5 kg-m, 61 ft-lb)

Stake the lock nut onto the mainshaft.

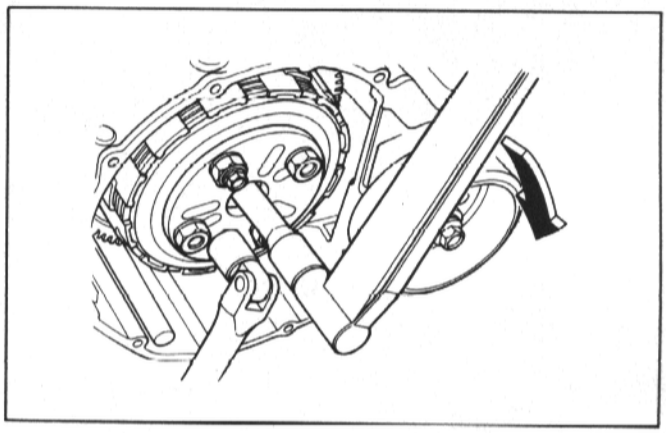

If you do not have the above holder, use the below holder. Hold the clutch center as shown and torque the clutch center lock nut.

S TOOL

CLUTCH CENTER HOLDER **07GMB–KT80100 (Not available in U.S.A.)**

TORQUE: 85 N·m (8.5 kg-m, 61 ft-lb)

Stake the lock nut onto the mainshaft.

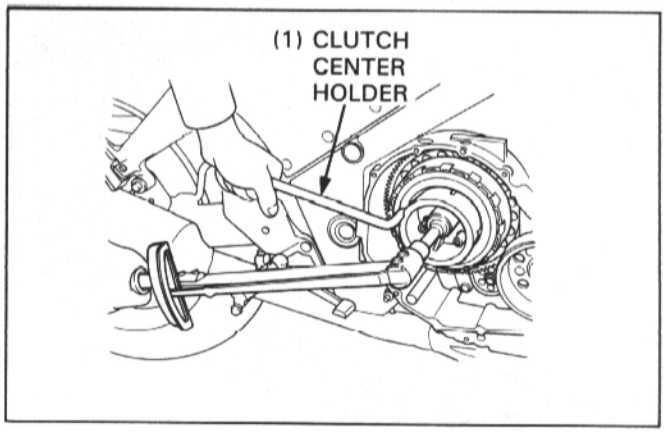

10. CRANKSHAFT/TRANSMISSION

SERVICE INFORMATION	10-1	TRANSMISSION REMOVAL/ INSTALLATION	10-8
TROUBLESHOOTING	10-1	TRANSMISSION DISASSEMBLY/ ASSEMBLY	10-10
CRANKCASE SEPARATION	10-2	CRANKCASE INSTALLATION	10-12
CRANKSHAFT/CONNECTING ROD REMOVAL/INSTALLATION	10-4		
CRANKSHAFT BEARING REPLACEMENT	10-6		

SERVICE INFORMATION

- Remove the engine and separate the crankcase to inspect the crankshaft, connecting rod and transmission.
- Service Points

Service Item	Removed Components
Connecting rod	• Cylinder head (page 8-4) • Cylinder/Piston (page 8-8) • Crankcase separation (page 10-2)
Crankshaft	• Starter clutch (page 16-8) • Flywheel (page 14-7) • Crankcase separation (page 10-2) • Connecting rod bearing cap (page 10-4)
Transmission	• Crankcase separation (page 10-2) • Gearshift linkage (page 9-6)

- Prior to assembling the crankcase halves, apply a sealant to their mating surface. Wipe off excess sealant thoroughly.
- Mark and store the bearing inserts to be sure of their correct locations for reassembly. If the inserts are improperly installed they will block the oil holes, causing insufficient lubrication and eventual engine seizure.
- If it is no longer clear which bolt belongs in which hole, insert all bolts in the holes and check the exposed lengths; each should be exposed the same amount.

TROUBLESHOOTING

Excessive noise
- Worn connecting rod bearings
- Bent connecting rod
- Worn crankshaft main bearing

Hard to shift
- Improper clutch operation
- Incorrect engine oil viscosity
- Incorrect clutch adjustment
- Bent shift forks
- Bent shift fork shaft
- Bent shift fork claw
- Damaged shift drum cam grooves
- Bent shift spindle

Transmission jumps out of gear
- Worn gear engagement dogs or slots
- Bent shift fork shaft
- Damaged shift drum stopper arm
- Damaged or bent shift fork
- Broken shift linkage return spring
- Damaged shift drum cam grooves

CRANKCASE SEPARATION

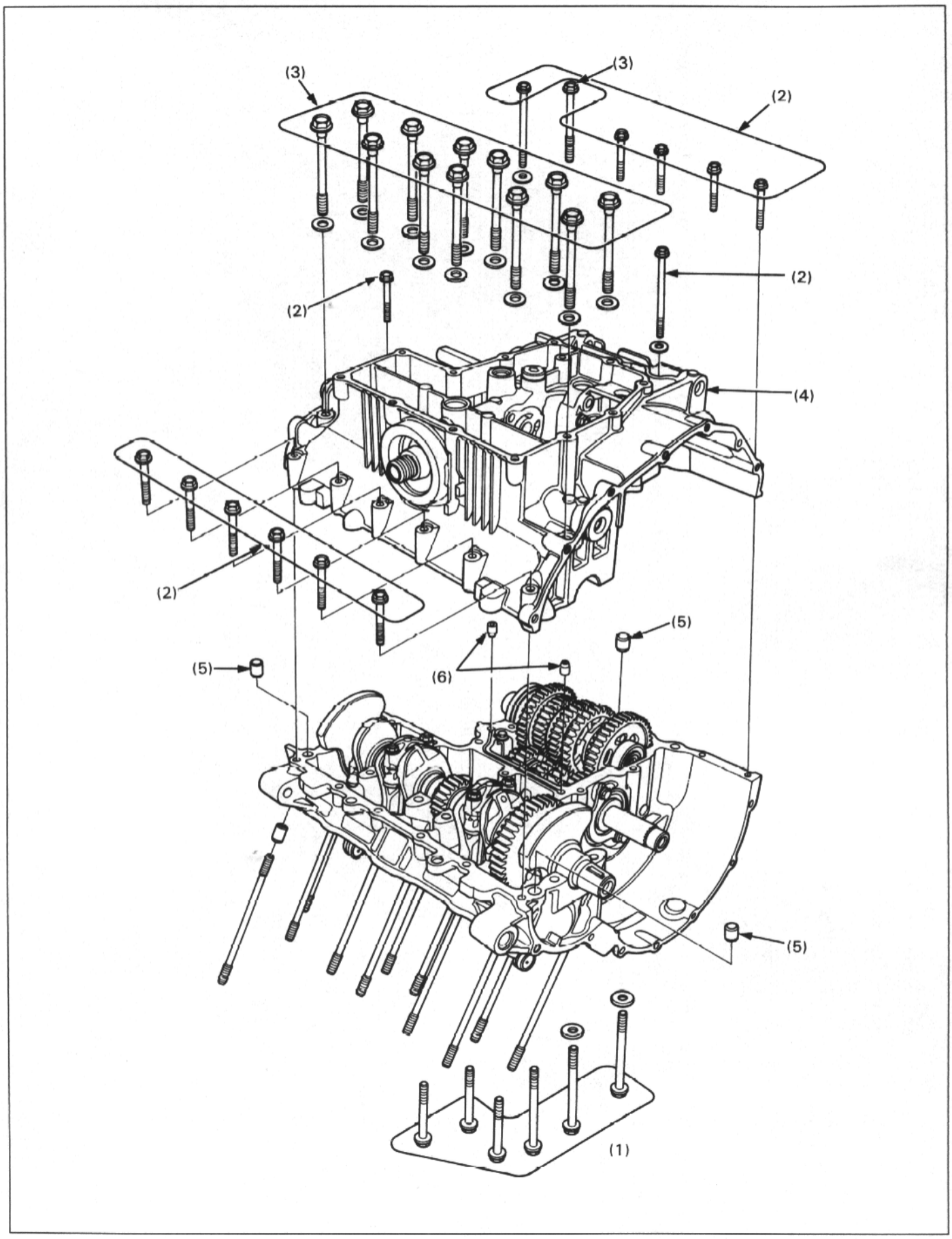

REQUISITE SERVICE

- Engine (page 7-2)
- Clutch/oil pump drive chain (page 9-4)
- Left crankcase cover (page 16-8)
- Starter motor (page 16-5)
- Oil pan (page 4-3)

	PROCEDURE	Q'ty	REMARKS
(1)	Upper crankcase bolt (6 mm)	6	Bolts (2 psc/marked △ on the crankcase) have sealing washers.
(2)	Lower crankcase bolt (6 mm)	13	Bolts (2 psc/marked △ on the crankcase) have sealing washers.
(3)	Lower crankcase bolt (8 mm)	13	Bolts (12 psc) have sealing washers.
(4)	Lower crankcase	1	
(5)	Dowel pin	3	
(6)	Oil orifice	2	

CRANKCASE BOLTS LOCATION

Loosen all bolts in a gradual, crisscross pattern.
Bolts location: as shown
▲: bolt with a sealing washer
Clean any liquid sealant off the crankcase mating surface.

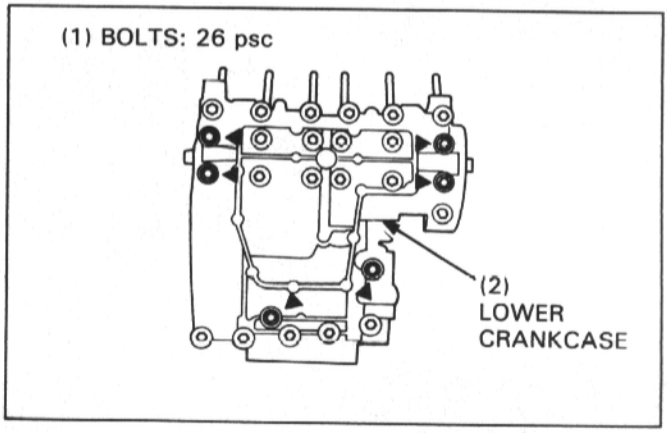

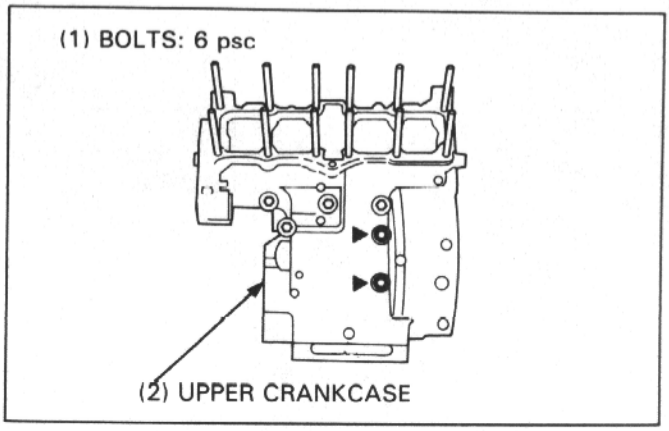

CRANKSHAFT/CONNECTING ROD REMOVAL/INSTALLATION

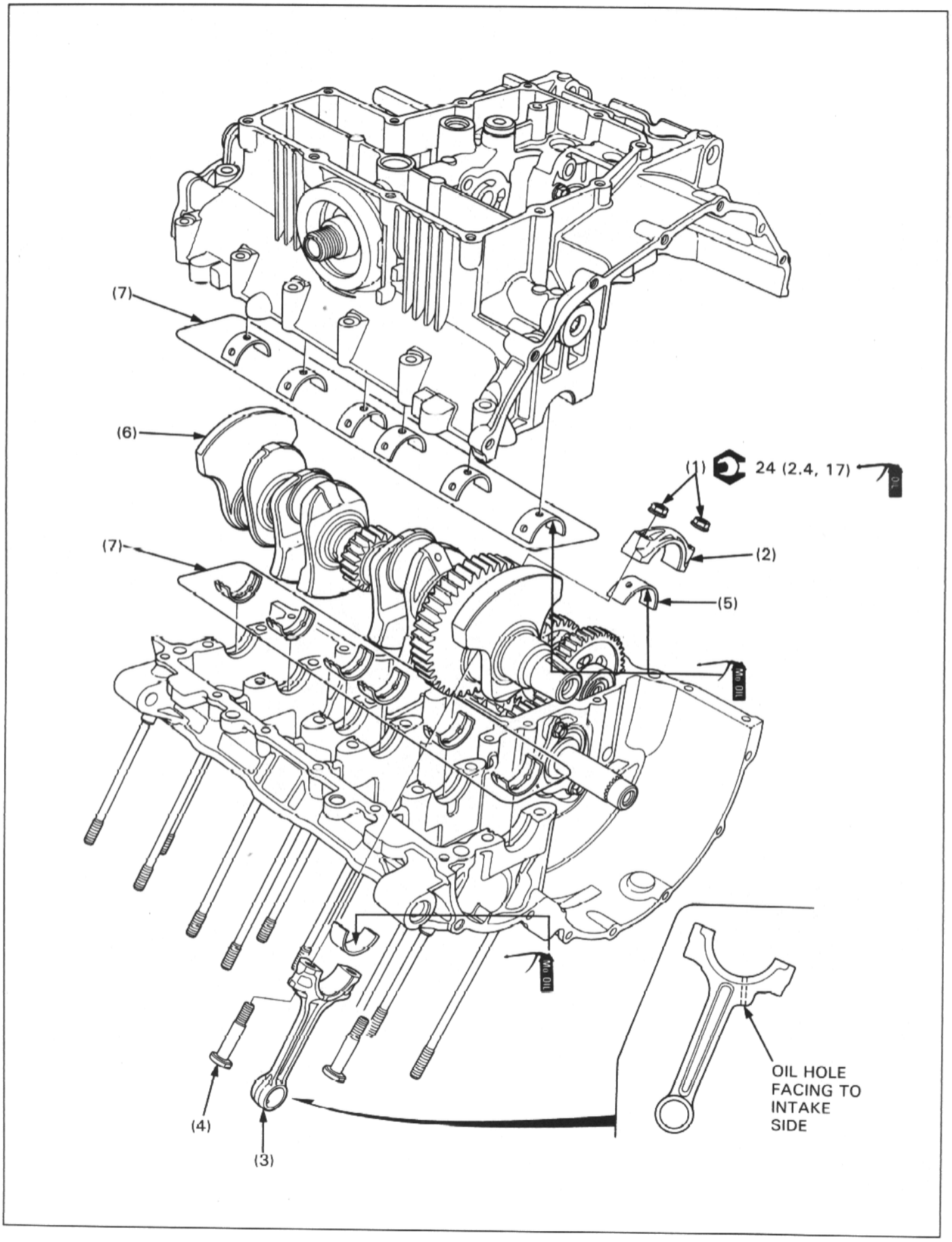

NOTE

- Determine the replacement bearing color code according to the main bearing selection table (page 10-6) or the connecting rod bearing selection table (page 10-7).
- Mark and store the bearing inserts to be sure of their correct locations for reassembly.
- At installation, apply molybdenum solution to the main journal bearing and connecting rod bearing surface.
- Refer to page 1-8 for crankshaft and rod specification.
- Refer to section 14 of the Common Service Manual for bearing inspection.

REQUISITE SERVICE

- Refer to Service Information (page 10-1)

	PROCEDURE	Q'ty	REMARKS
	REMOVAL ORDER		
(1)	Connecting rod bearing cap nut	8	
(2)	Bearing cap	4	
(3)	Connecting rod	4	
(4)	Connecting rod bolt	8	Do not remove them without necessary.
(5)	Connecting rod bearing	8	Wipe all oil from the bearing seating areas.
(6)	Crankshaft	1	
(7)	Crankshaft main journal bearing	12	Wipe all oil from the bearing seating areas.
	INSTALLATION ORDER		
(7)	Crankshaft main journal bearing	12	The bearing tabs should be aligned with the grooves in the crankcases.
(6)	Crankshaft	1	Install it onto the upper crankcase with the flywheel side facing to the clutch side.
(5)	Connecting rod bearing	8	NOTE: • The bearing oil hole should be aligned with the oil hole in the connecting rod.
(4)	Connecting rod bolt	8	
(3)	Connecting rod	4	NOTE: • Face the oil holes to the intake side.
(2)	Bearing cap	4	Install them with the code letters read properly.
(1)	Connecting rod bearing cap nut	8	Apply oil to the nut threads and torque them in gradual, crisscross pattern.

CRANKSHAFT BEARING REPLACEMENT

MAIN JOURNAL BEARING SELECTION

Record the crankcase I.D. code letters from the pad on the left side of the crankcase.

NOTE

- Letters (A, B or C) on the upper crankcase are the codes for the main journal I.D.s from the left.

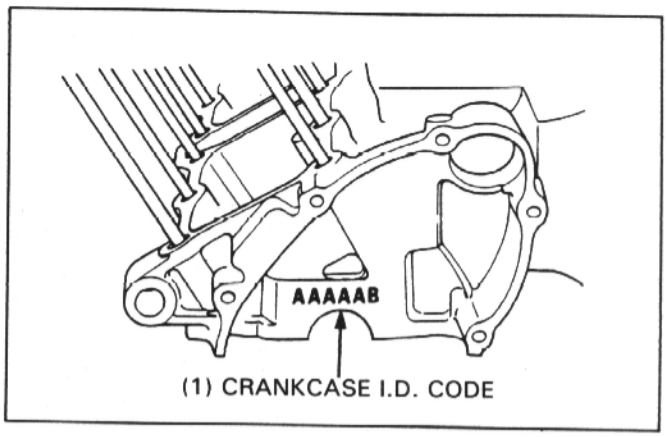

Record the corresponding main journal O.D. code numbers from the crank weight.

NOTE

- Numbers (1 or 2) on the crank weight are the codes for the main journal O.D.s from the left.

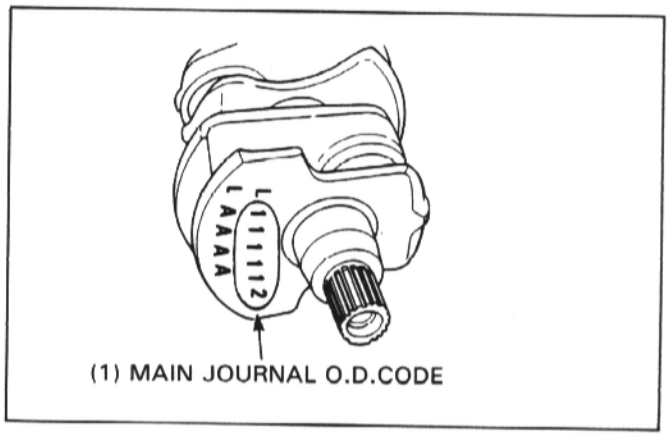

Cross reference the case and journal codes to determine the replacement bearing color code.

Main journal O.D. code \ Crankcase I.D. code		A	B	C
		33.000–33.008 mm (1.2992–1.2995 in)	33.009–33.016 mm (1.2996–1.2998 in)	33.017–33.024 mm (1.2999–1.3002 in)
1	29.992–30.000 mm (1.1808–1.1811 in)	Pink	Yellow	Green
2	29.984–29.992 mm (1.1805–1.1808 in)	Yellow	Green	Brown

Bearing thickness

Brown: Thick
Green: ↑
Yellow: ↓
Pink: Thin

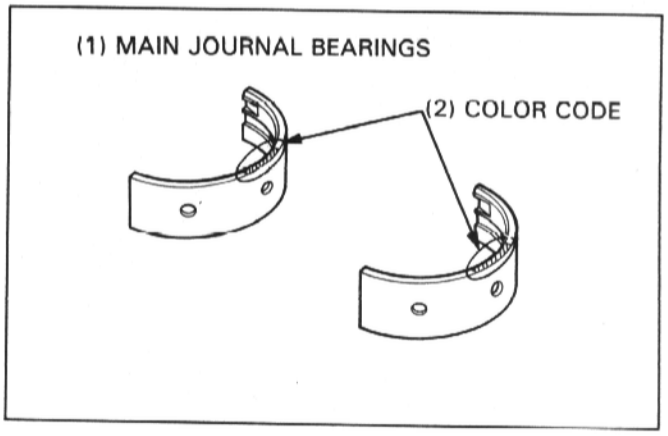

CONNECTING ROD BEARING SELECTION

Record the connecting rod I.D. code numbers on the rod.

NOTE

- Numbers (1 or 2) on the connecting rod are the codes for the connecting rod I.D.s.

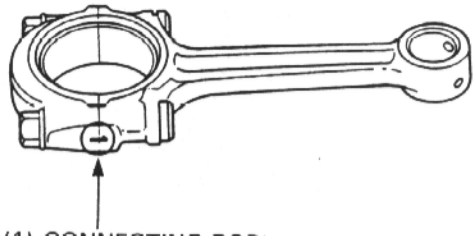

(1) CONNECTING ROD I.D. CODE

Record the crankpin O.D. code letters from the crank weight.

NOTE

- Letters (A or B) on the upper crankcase are the codes for the crankpin O.D.s from the left.

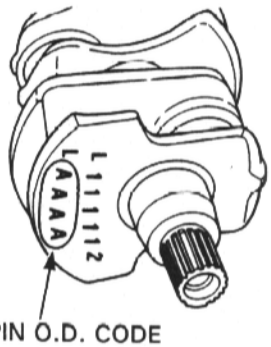

(1) CRANKPIN O.D. CODE

Cross reference the crankpin and rod codes to determine the replacement bearing color code.

Crankpin O.D. code \ Connecting rod I.D. code		1 32.992–33.000 mm (1.2989–1.2992 in)	2 33.001–33.008 mm (1.2992–1.2995 in)
A	29.992–30.000 mm (1.1808–1.1811 in)	Yellow	Green
B	29.984–29.991 mm (1.1805–1.1807 in)	Green	Brown

Bearing thickness
Brown: Thin
Black: ↕
Blue: Thick

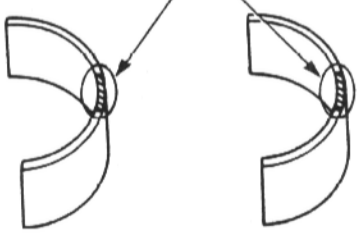

TRANSMISSION REMOVAL/INSTALLATION

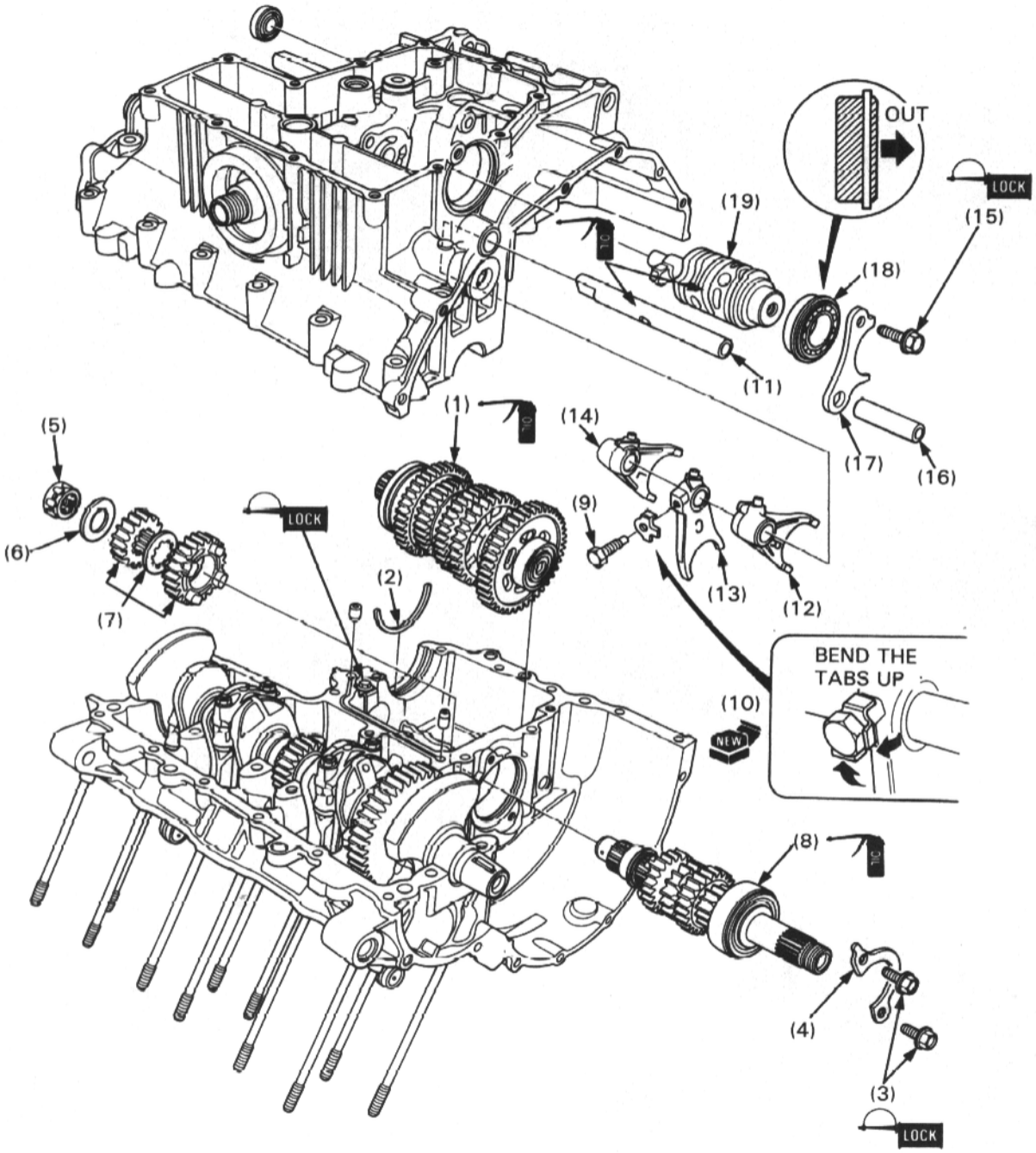

REQUISITE SERVICE

- Refer to Service Information (page 10-1)

	PROCEDURE	Q'ty	REMARKS
	REMOVAL ORDER		• Installation is in the reverse order of removal.
(1)	Countershaft assembly	1	At installation, align the bearing groove with the set ring and align the oil seal with the case groove.
(2)	Countershaft bearing set ring	1	
(3)	Mainshaft bearing set plate bolt	2	
(4)	Mainshaft bearing set plate	1	
(5)	Needle bearing	1	
(6)	Washer	1	
(7)	Mainshaft M2 gear/spline washer/M6 gear	—	At installation, face the M6 gear engagement dogs forward the M4 gear.
(8)	Mainshaft assembly	1	
(9)	Center shift fork bolt	1	Remove after bending down the lock washer tab. Install and bend new lock washer tabs as shown.
(10)	Lock washer	1	Install a new lock washer.
(11)	Shift fork shaft	1	At installation, face the shaft flatted surface side forward the drive sprocket.
(12)	Right shift fork	1	Install them with the identification marks (R: Right, C: Center, L: Left) facing forward the clutch side.
(13)	Center shift fork	1	
(14)	Left shift fork	1	
(15)	Shift drum bearing set plate bolt	1	
(16)	Dowel pin	1	
(17)	Shift drum bearing set plate	1	
(18)	Shift drum bearing	1	Install with the bearing stopper near the outside.
(19)	Shift drum	1	

TRANSMISSION DISASSEMBLY/ASSEMBLY

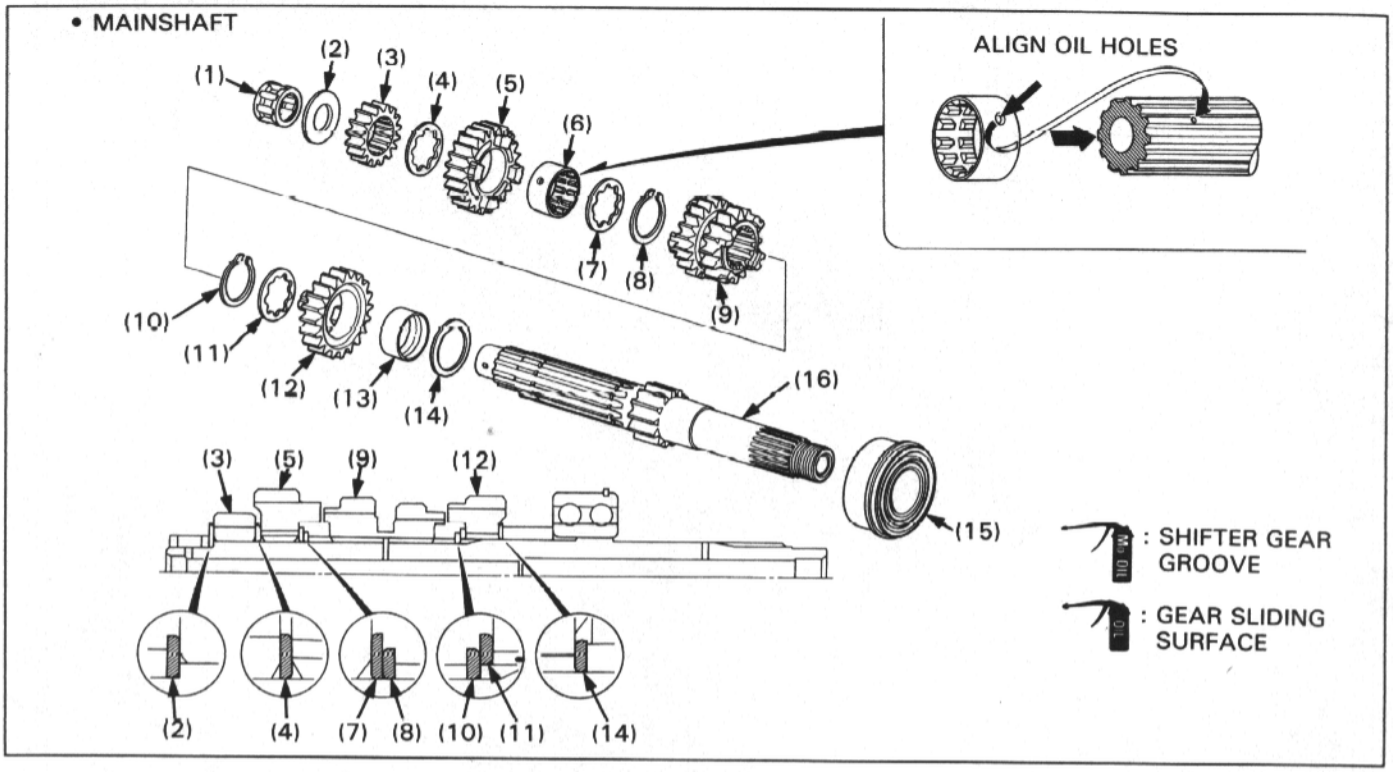

NOTE

- Apply molybdenum solution to the shifter gear grooves. Apply oil to all sliding surface of the mainshaft, countershaft and bushings.
- Install the thrust washers and snap rings with the chamfered edge facing to the thrust load side.
- Refer to section 13 of the Common Service Manual for inspection information.

REQUISITE SERVICE

- Transmission removal/installation (page 10-8)

	PROCEDURE	Q'ty	REMARKS
	MAINSHAFT DISASSEMBLY ORDER		• Assembly is in the reverse order of disassembly.
(1)	Needle bearing	1	
(2)	Thrust washer	1	
(3)	M2 gear (17T)	1	
(4)	Spline washer	1	
(5)	M6 gear (24T)	1	
(6)	M6 spline bushing	1	Align the oil holes of the bushing and mainshaft.
(7)	Spline washer	1	
(8)	Snap ring	1	
(9)	M3 (16T)/M4 (22T) shifter gear	1	
(10)	Snap ring	1	
(11)	Spline washer	1	
(12)	M5 gear (23T)	1	
(13)	M5 bushing	1	
(14)	Thrust washer	1	
(15)	Mainshaft bearing	1	Install it with the bearing stopper near the outside.
(16)	Mainshaft (M1 gear/13T)	1	

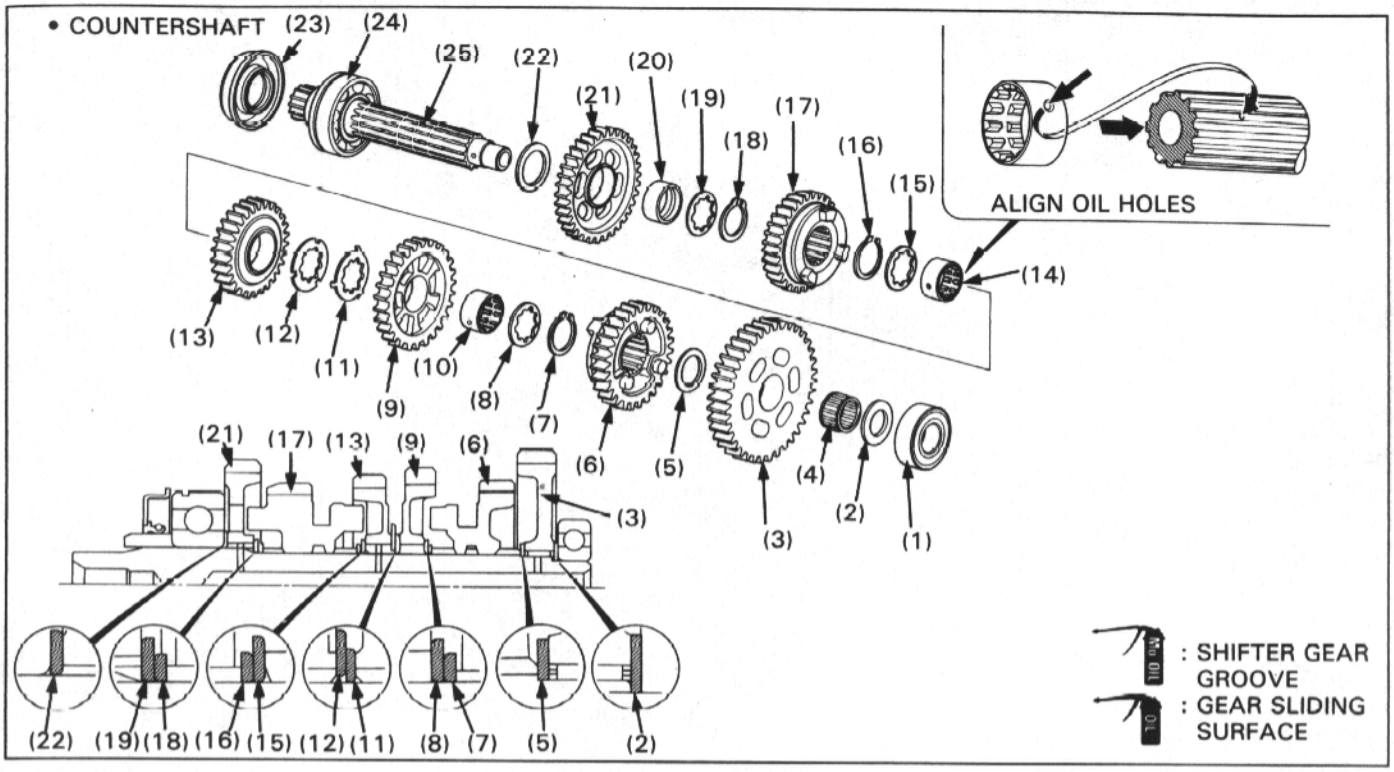

	PROCEDURE	Q'ty	REMARKS
	COUNTERSHAFT DISASSEMBLY ORDER		• Assembly is in the reverse order of disassembly.
(1)	Bearing	1	Install with the sealed side facing outside.
(2)	Thrust washer	1	
(3)	C1 gear (43T)	1	
(4)	Needle bearing	1	
(5)	Thrust washer	1	
(6)	C5 shifter gear (33T)	1	
(7)	Snap ring	1	
(8)	Spline washer	1	
(9)	C3 gear (30T)	1	
(10)	C3 spline bushing	1	Align the oil holes of the bushing and countershaft.
(11)	Lock washer	1	
(12)	Spline washer	1	
(13)	C4 gear (35T)	1	
(14)	C4 spline bushing	1	Align the oil holes of the bushing and countershaft.
(15)	Spline washer	1	
(16)	Snap ring	1	
(17)	C6 shifter gear (32T)	1	
(18)	Snap ring	1	
(19)	Spline washer	1	
(20)	C2 bushing	1	
(21)	C2 gear (40T)	1	
(22)	Thrust washer	1	
(23)	Oil seal	1	
(24)	Bearing	1	Install with the bearing stopper near the outside.
(25)	Countershaft	1	

CRANKCASE INSTALLATION

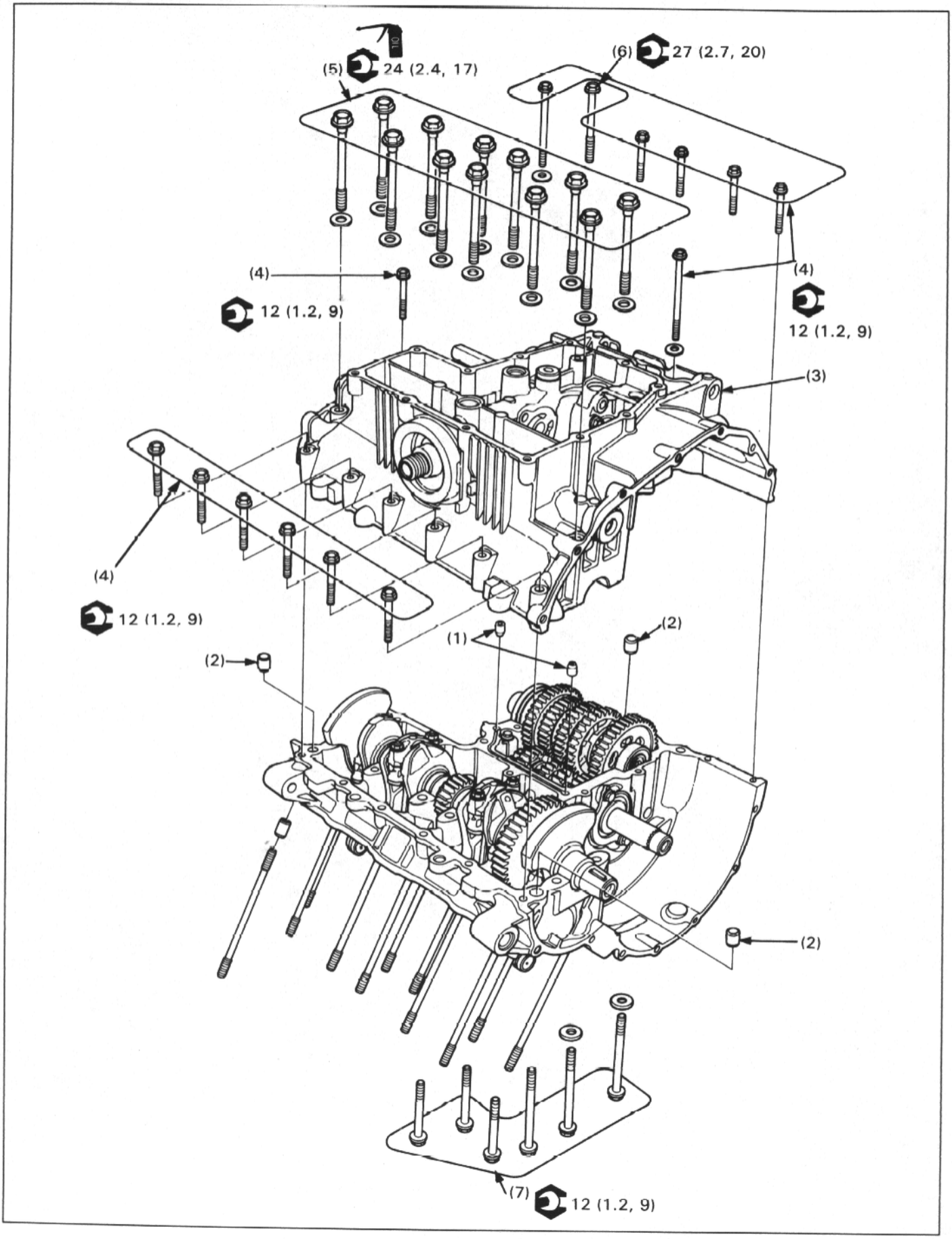

REQUISITE SERVICE

- Crankshaft/connecting rod installation (page 10-4)
- Transmission installation (page 10-8)

	PROCEDURE	Q'ty	REMARKS
(1)	Oil orifice	2	
(2)	Dowel pin	3	
(3)	Lower crankcase	1	Crankcase installation (see below)
(4)	Lower crankcase bolt (6 mm)	13	
(5)	Lower crankcase bolt (8 mm)	12	
(6)	Lower crankcase bolt (8 mm x 65)	1	
(7)	Upper crankcase bolt (6 mm)	6	

CRANKCASE INSTALLATION

Apply a light but thorough coating of sealant to the upper crankcase mating surface except to the main bearing journal bolt mating areas and the oil passage area as shown.

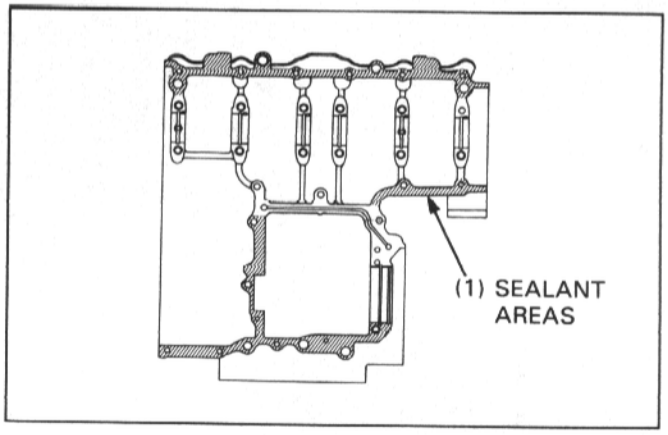

Set the mainshaft and countershaft into neutral position first, then slide the C6 shifter gear onto the C2 gear (2nd gear position) as shown, to ease upper crankcase installation.

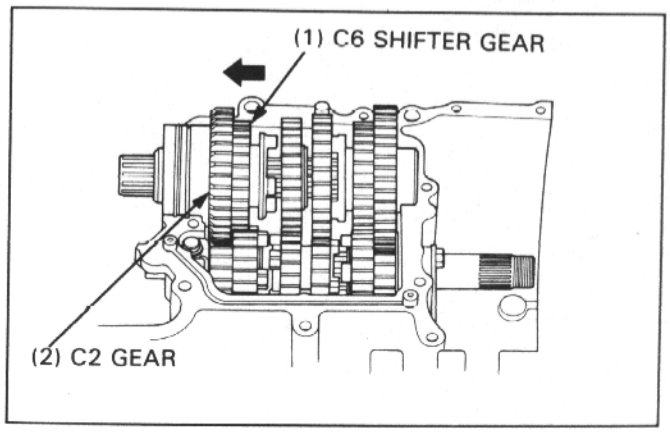

Set the shift drum in the 2nd gear position as shown.

NOTE

- The shifter-pin of the left shift fork (marked "L") should be located as shown.

Align the left shift fork (marked "L") with the C6 shifter gear, and the right shift fork (marked "R") with the C5 shifter gear first, then lowering the lower crankcase, align the center shift fork (marked "C") with the M3/M4 shifter gear.

Assemble the crankcases.

Make sure each crankcase is assembled securely.

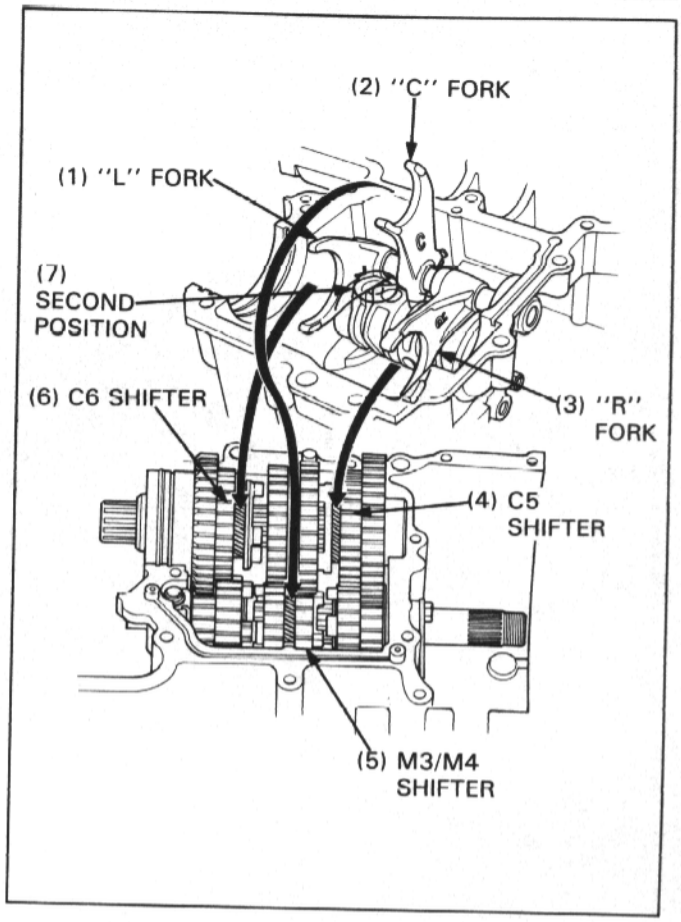

Install the crankcase bolts and sealing washers as shown.

NOTE

- Four 6 mm bolts (marked △ on the crankcase) have sealing washers.
- Twelve 8 mm bolts (for the crankshaft main journals) have sealing washers.
- Four 8 mm bolts (marked △ on the crankcase, ⑨, ⑩, ⑪ and ⑫) is black in color.

Tighten all crankcase bolts in a gradual, crisscross pattern, beginning with larger diameter bolts first as shown.

TORQUE:

8 mm crankcase bolt: 24 N·m (2.4 kg-m, 17 ft-lb)
8 mm x 65 crankcase bolt ㉒:
27 N·m (2.7 kg-m, 20 ft-lb)
6 mm crankcase bolt: 12 N·m (1.2 kg-m, 9 ft-lb)

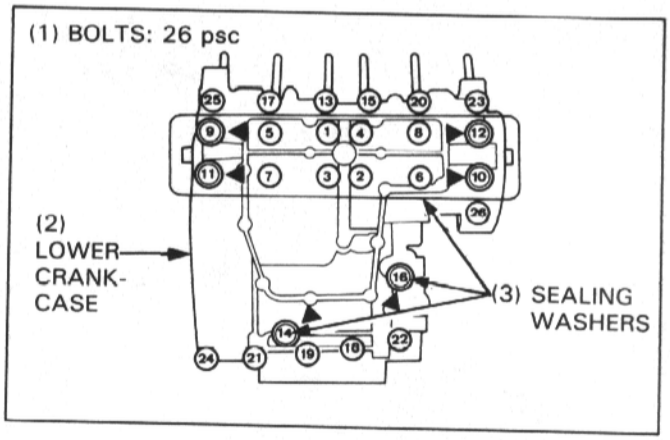

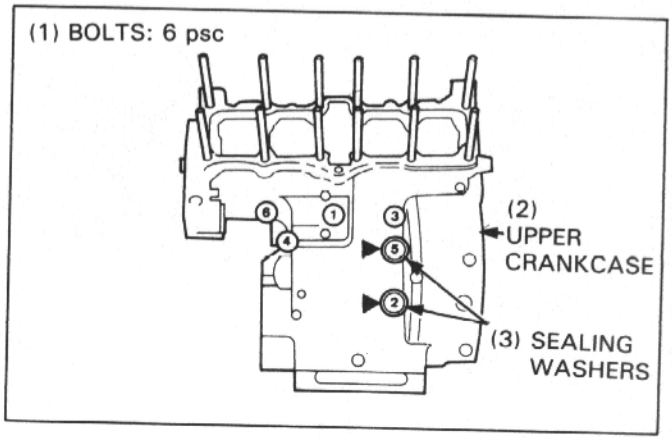

11. FRONT WHEEL/SUSPENSION/STEERING

SERVICE INFORMATION	11-1	FRONT WHEEL DISASSEMBLY/ ASSEMBLY	11-5
TROUBLESHOOTING	11-1	FORK REMOVAL/INSTALLATION	11-6
RIGHT HANDLEBAR REMOVAL/ INSTALLATION	11-2	FORK DISASSEMBLY	11-8
LEFT HANDLEBAR REMOVAL/ INSTALLATION	11-3	FORK ASSEMBLY	11-10
FRONT WHEEL REMOVAL/ INSTALLATION	11-4	STEERING STEM REMOVAL/ INSTALLATION	11-12

SERVICE INFORMATION

⚠ WARNING

- **Riding on damaged rims impairs safe operation of the vehicle.**
- **A contaminated brake disc or pad reduces stopping power. Discard contaminated pads and clean a contaminated disc with a high quality brake degreasing agent.**
- **Inhaled asbestos fibers have been found to cause respiratory disease and cancer. Never use an air hose or dry brush to clean brake assemblies. Use an OSHA-approved vacuum cleaner or alternate method approved by OSHA designed to minimize the hazard caused by airborne asbestos fibers.**

- Refer to the section 13 for brake system information.
- Refer to the section 17 for light, meter and switch information.
- Tubeless tire removal, repair, and remouting procedures are covered in the section 16 of the Common Service Manual.
- If the motorcycle has been involved in an accident, inspect the frame very carefully at the steering head and at the engine mounts.
  These are the areas most likely to suffer damage. It is possible to bend the frame steering head without bending the fork tubes or even the front axle.
- For wheel, fork or steering stem removal, a jack or other support is required to support the motorcycle. Do not use the oil filter as an jack point.

TROUBLESHOOTING

Hard steering
- Steering head bearing adjustment nut too tight
- Faulty steering head bearings
- Damaged steering stem races
- Insufficient tire pressure
- Faulty tire

Steers to one side or does not track straight
- Bent fork
- Bent front axle: wheel installed incorrectly
- Faulty steering head bearings
- Bent frame
- Worn wheel bearing
- Worn swingarm pivot

Front wheel wobbling
- Bent rim
- Worn front wheel bearings
- Faulty tire
- Unbalanced tire and wheel

Wheel turns hard
- Faulty wheel bearing
- Brake drag (page 13-1)
- Bent front axle

Soft suspension
- Weak fork spring
- Insufficient fluid in fork
- Low fluid level in fork
- Low tire pressure

Hard suspension
- Incorrect fluid weight
- Bent fork tubes
- Clogged fork fluid passage
- High tire pressure

Front suspension noisy
- Insufficient fluid in fork
- Loose fork fasteners

RIGHT HANDLEBAR REMOVAL/INSTALLATION

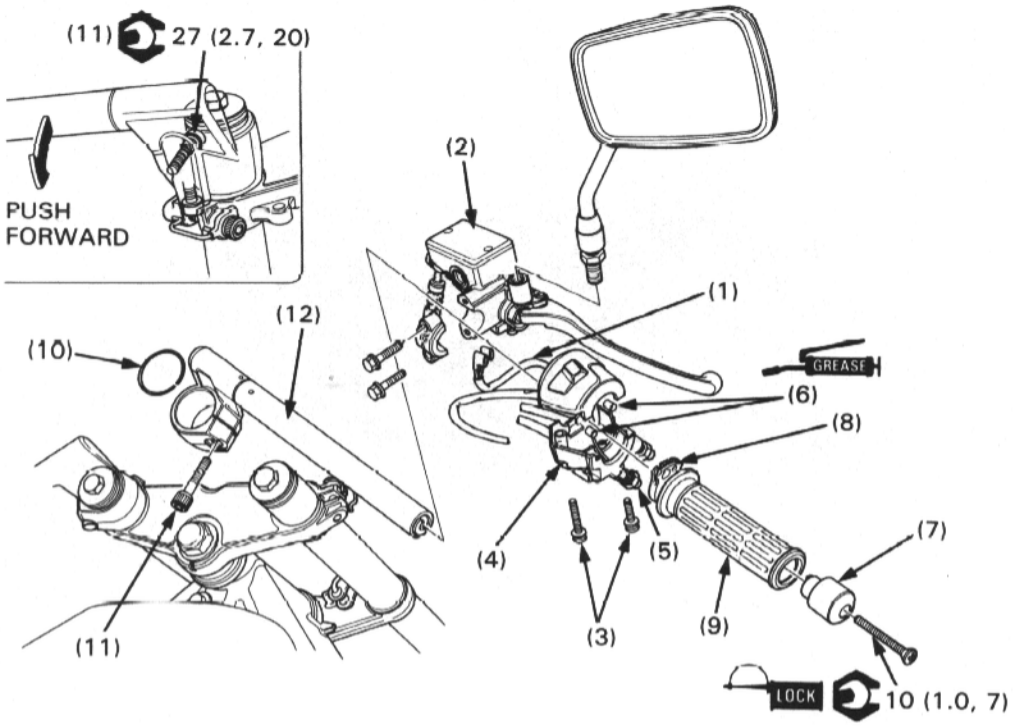

NOTE

- Using wires, hang the front brake master cylinder at least as high as the position it was originally installed at to prevent air from getting into the master cylinder. Do not twist the brake hose.
- Route the cables and wire harnesses properly (page 1-19).
- Adjust the throttle cable after installation.

	PROCEDURE	Q'ty	INSTALLATION REMARKS
	REMOVAL ORDER		• Installation is in the reverse order of removal.
(1)	Front brakelight switch connector	2	
(2)	Master cylinder	1	Align the holder end with the punch mark on the handlebar and face the holder UP mark upward. Tighten the upper bolt first, then the lower bolt.
(3)	Right handlebar switch housing screw	2	Tighten the front screw first, then the rear screw.
(4)	Right handlebar switch housing	1	
(5)	Throttle cable nut	1	
(6)	Throttle calbe	2	Don't bend or distort the cables.
(7)	Handlebar weight	1	Align its boss with the inner weight.
(8)	Throttle pipe	1	
(9)	Throttle grip	1	Apply Honda Bond A or Honda Hand Grip Cement (U.S.A. only) to the inside surface of the grip.
(10)	Stop ring	1	Install into the fork groove properly.
(11)	Handlebar pinch bolt	1	Tighten with the handlebar pushing forward.
(12)	Right handlebar	1	Align the handlebar boss with the top bridge slot.

LEFT HANDLEBAR REMOVAL/INSTALLATION

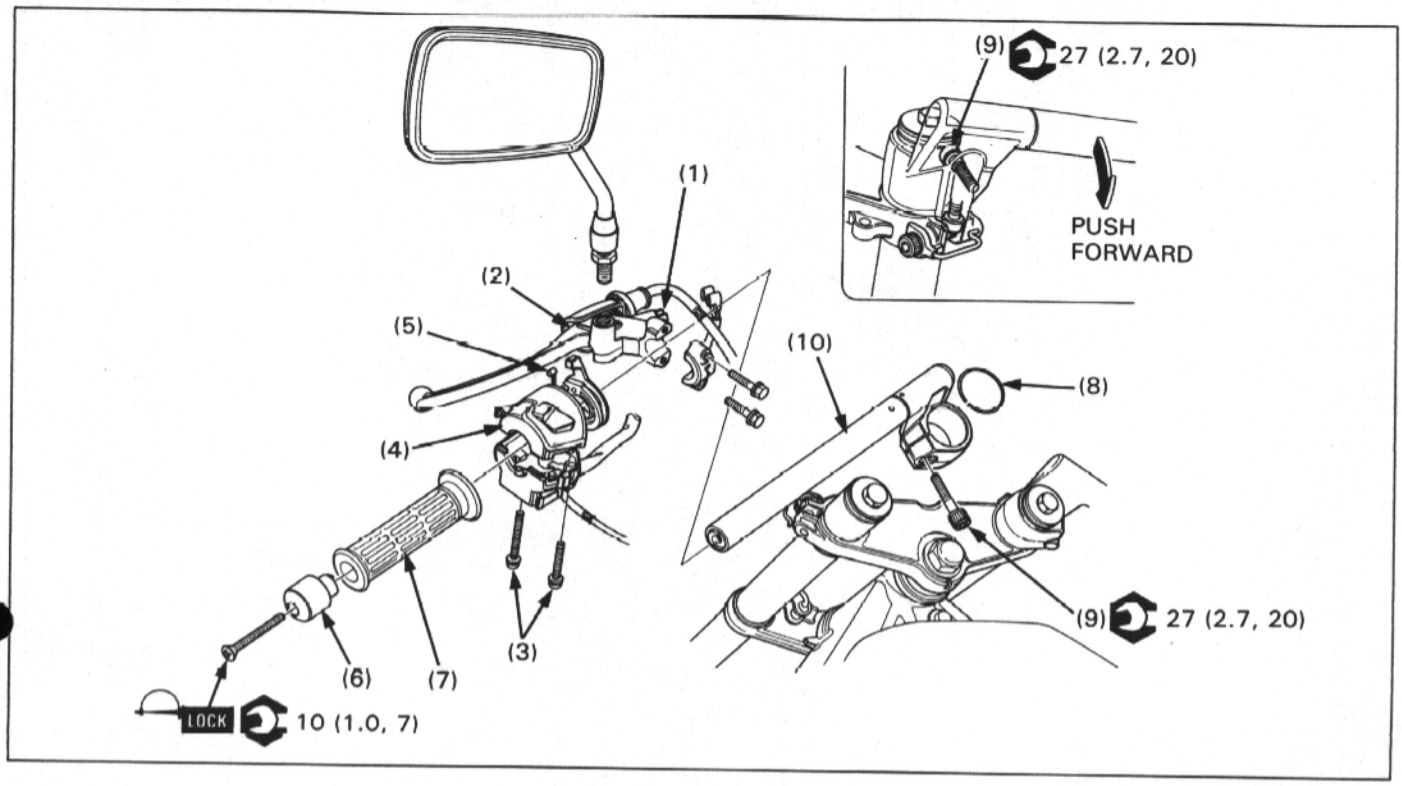

NOTE

- Route the cables and wire harnesses properly (page 1-19).
- Adjust the clutch cable after installation.

	PROCEDURE	Q'ty	INSTALLATION REMARKS
	REMOVAL ORDER		• Installation is in the reverse order of removal.
(1)	Clutch switch connector	2	
(2)	Clutch lever assembly	1	Align the holder end with the punch mark on the handlebar and face the holder UP mark upward. Tighten the upper bolt first, then the lower bolt.
(3)	Left handlebar switch housing screw	2	Tighten the front screw first, then the rear screw.
(4)	Left handlebar switch housing	1	
(5)	Choke cable	1	
(6)	Handlebar weight	1	Align its boss with the inner weight.
(7)	Handle grip	1	Apply Honda Bond A or Honda Hand Grip Cement (U.S.A. only) to the inside surface of the grip.
(8)	Stop ring	1	Install into the fork groove properly.
(9)	Handlebar pinch bolt	1	Tighten with the handlebar pushing forward.
(10)	Left handlebar	1	Align the handlebar boss with the top bridge slot.

FRONT WHEEL REMOVAL/INSTALLATION

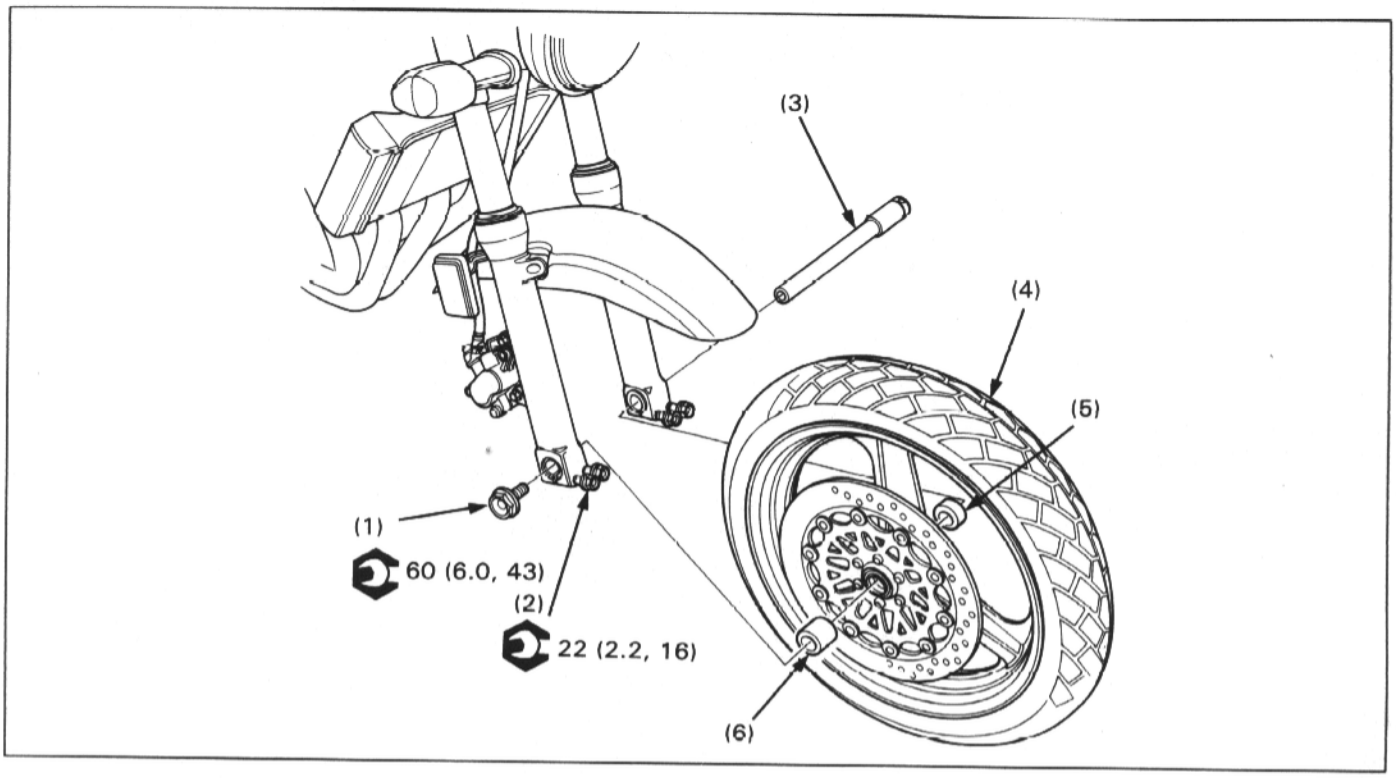

⚠ WARNING

- **A contaminated brake disc or pad reduced stopping power. Discard contaminated pads and clean a contaminated disc with a high quality brake degreasing agent.**
- **Inhaled asbestos fibers have been found to cause respiratory disease and cancer. Never use an air hose or dry brush to clean brake assemblies. Use an OSHA-approved vacuum cleaner or alternate method approved by OSHA designed to minimize the hazard caused by airborne asbestos fibers.**

CAUTION

- **Do not use the oil filter as a jack point.**

NOTE

- Do not depress the brake lever when the caliper is removed, or it will be difficult to refit the disc between the brake pads.

REQUISITE SERVICE

- Raise the front wheel off the ground by placing a jack or other support under the engine.

	PROCEDURE	Q'ty	REMARKS
	REMOVAL ORDER		• Installation is in the reverse order of removal.
(1)	Axle bolt	1	
(2)	Axle pinch bolt	4	Only loosen the bolts.
(3)	Axle shaft	1	
(4)	Front wheel assembly	1	
(5)	Left side collar	1	Shorter one
(6)	Right side collar	1	Longer one

FRONT WHEEL DISASSEMBLY/ASSEMBLY

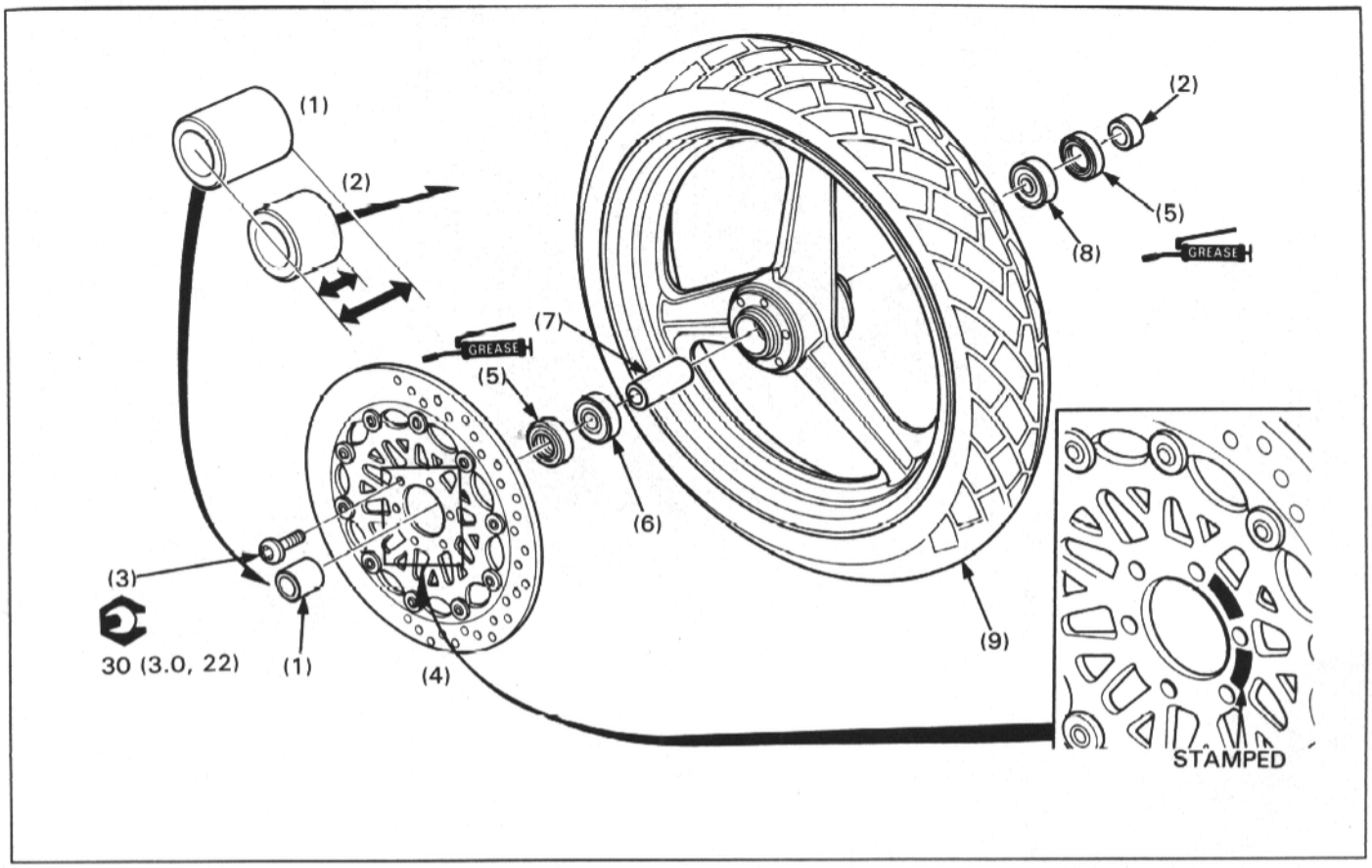

⚠ WARNING

- **A contaminated brake disc or pad reduces stopping power. Discard contaminated pads and clean a contaminated disc with a high quality brake degreasing agent.**

NOTE

- Always replace wheel bearings as a set.
- For wheel bearing replacement, refer to the section 1 of the Common Service Manual.

REQUISITE SERVICE

- Front wheel removal/installation (page 11-4)

	PROCEDURE	Q'ty	ASSEMBLY REMARKS
	DISASSEMBLY ORDER		• Assembly is in the reverse order of disassembly.
(1)	Right side collar	1	Longer collar
(2)	Left side collar	1	Shorter collar
(3)	Brake disc bolt	6	Wipe off all the grease on the bolt surface.
(4)	Brake disc	1	Install with the stamped side outward as shown.
(5)	Dust seal	2	Apply grease to the dust seal lips and install them with the lip side facing inside.
(6)	Right wheel bearing (6004 UU)	1	
(7)	Distance collar	1	
(8)	Left wheel bearing (6004 UU)	1	NOTE: • Drive in the left side bearing first, then the right side bearing.
(9)	Front wheel/tire	1/1	

FORK REMOVAL/INSTALLATION

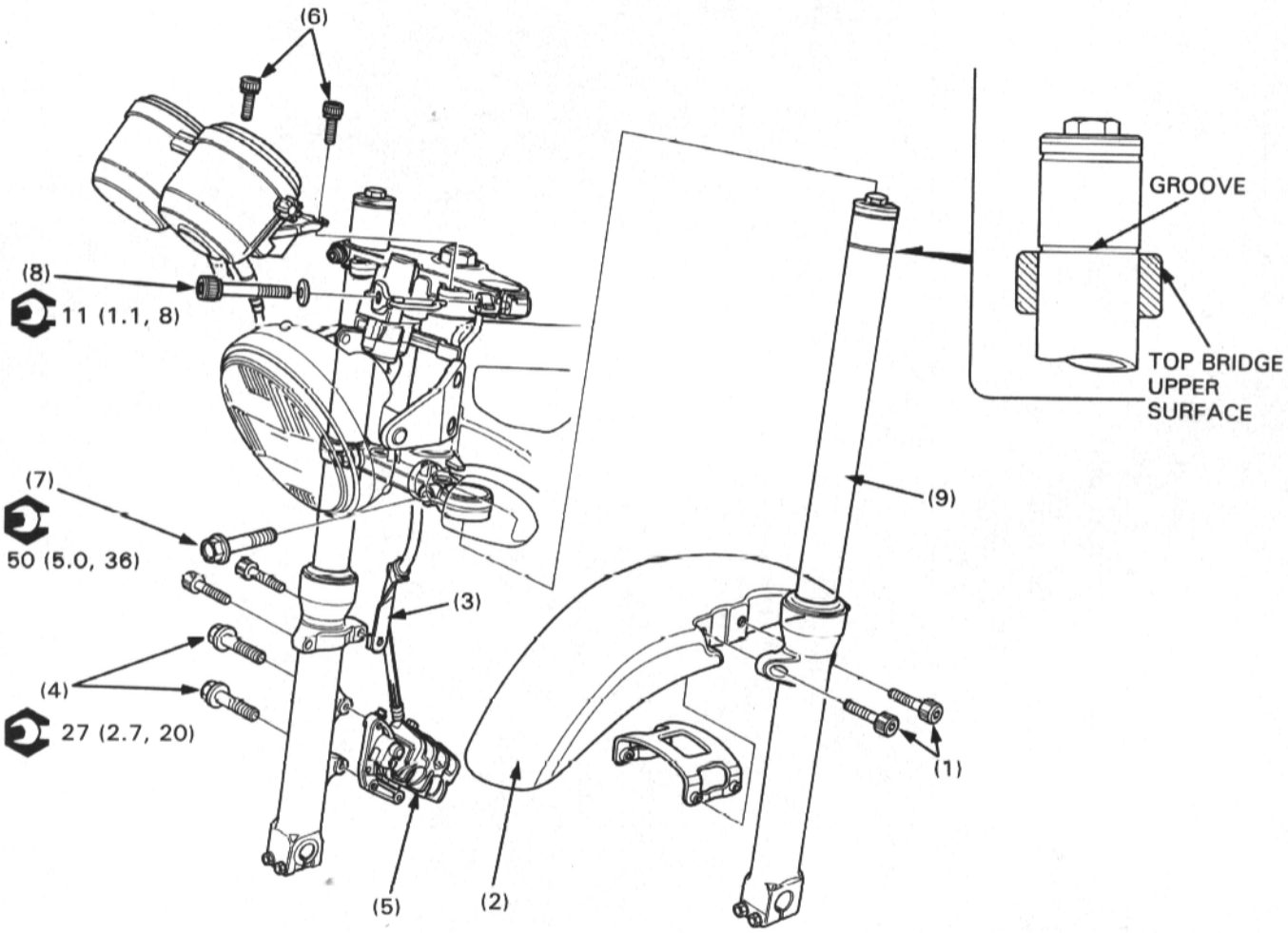

CAUTION

- **Support the removed caliper with a piece of wire so that it does not hang from the brake hose. Do not twist the brake hose.**

NOTE

- Do not depress the brake lever when the caliper is removed, or it will be difficult to refit the disc between the brake pads.
- Before removing the fork, loosen the fork cap bolt; but still do not remove it.

REQUISITE SERVICE

- Right handlebar removal/installation (page 11-2)
- Left handlebar removal installation (page 11-3)
- Front wheel removal/installation (page 11-4)

	PROCEDURE	Q'ty	REMARKS
	REMOVAL ORDER		• Installation is in the reverse order of removal.
(1)	Front fender bolt	4	
(2)	Front fender	1	
(3)	Brake hose clamp	1	Install it with the front fender as shown.
(4)	Caliper bracket bolt	2	
(5)	Caliper assembly	1	
(6)	Meter mounting bolt	2	Move the meter assembly forward.
(7)	Fork pinch bolt (lower)	2	Only loosen the bolts.
(8)	Fork pinch bolt (upper)	2	Only loosen the bolts. NOTE: • Be careful not to let the fork leg drop when loosening the pinch bolt.
(9)	Fork assembly	2	At installation, align the fork grooves with the top bridge upper surfaces.

FORK DISASSEMBLY

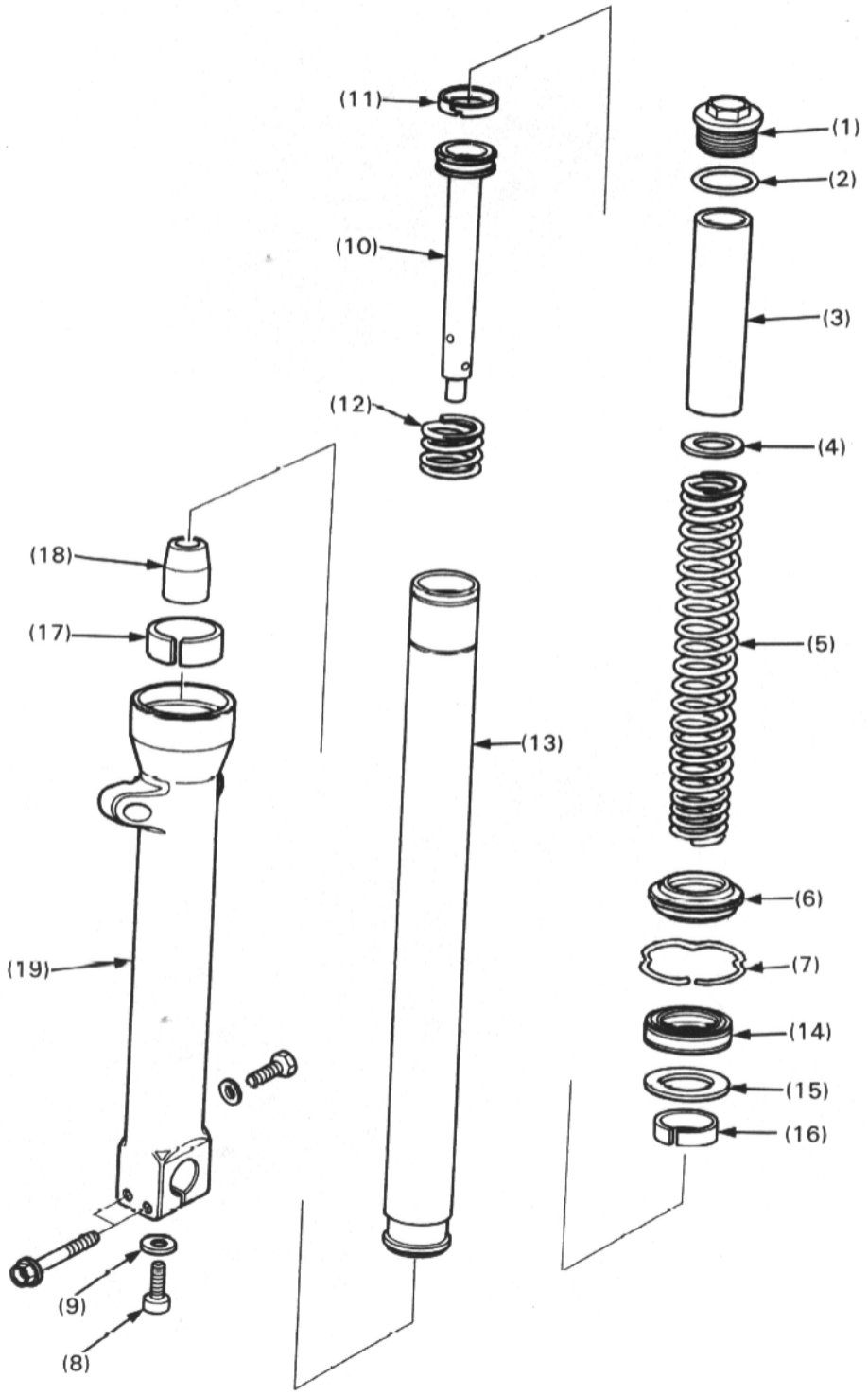

REQUISITE SERVICE

- Fork removal (page 11-6)

	PROCEDURE	Q'ty	REMARKS
(1)	Fork cap bolt	1	⚠WARNING • **The fork cap bolt is under high pressure. Use care when loosening the bolt.**
(2)	O-ring	1	
(3)	Spacer	1	
(4)	Spring seat	1	
(5)	Fork sping	1	After removing, pour out any remaining fork oil.
(6)	Dust seal	1	When removing them, do not damage the fork tube.
(7)	Stopper ring	1	
(8)	Fork socket bolt	1	NOTE: • Temporarily install the spring and fork cap bolt if difficulty is encountered in removing the socket bolt.
(9)	Sealing washer	1	
(10)	Fork piston	1	
(11)	Fork piston ring	1	NOTE: • Do not remove it unless it is necessary to replace.
(12)	Rebound spring	1	
(13)	Fork tube	1	
(14)	Oil seal	1	
(15)	Back up ring	1	
(16)	Slider bushing	1	
(17)	Fork tube bushing	1	NOTE: • Do not remove it unless it is necessary to replace.
(18)	Oil lock piece	1	
(19)	Fork slider	1	

FORK ASSEMBLY

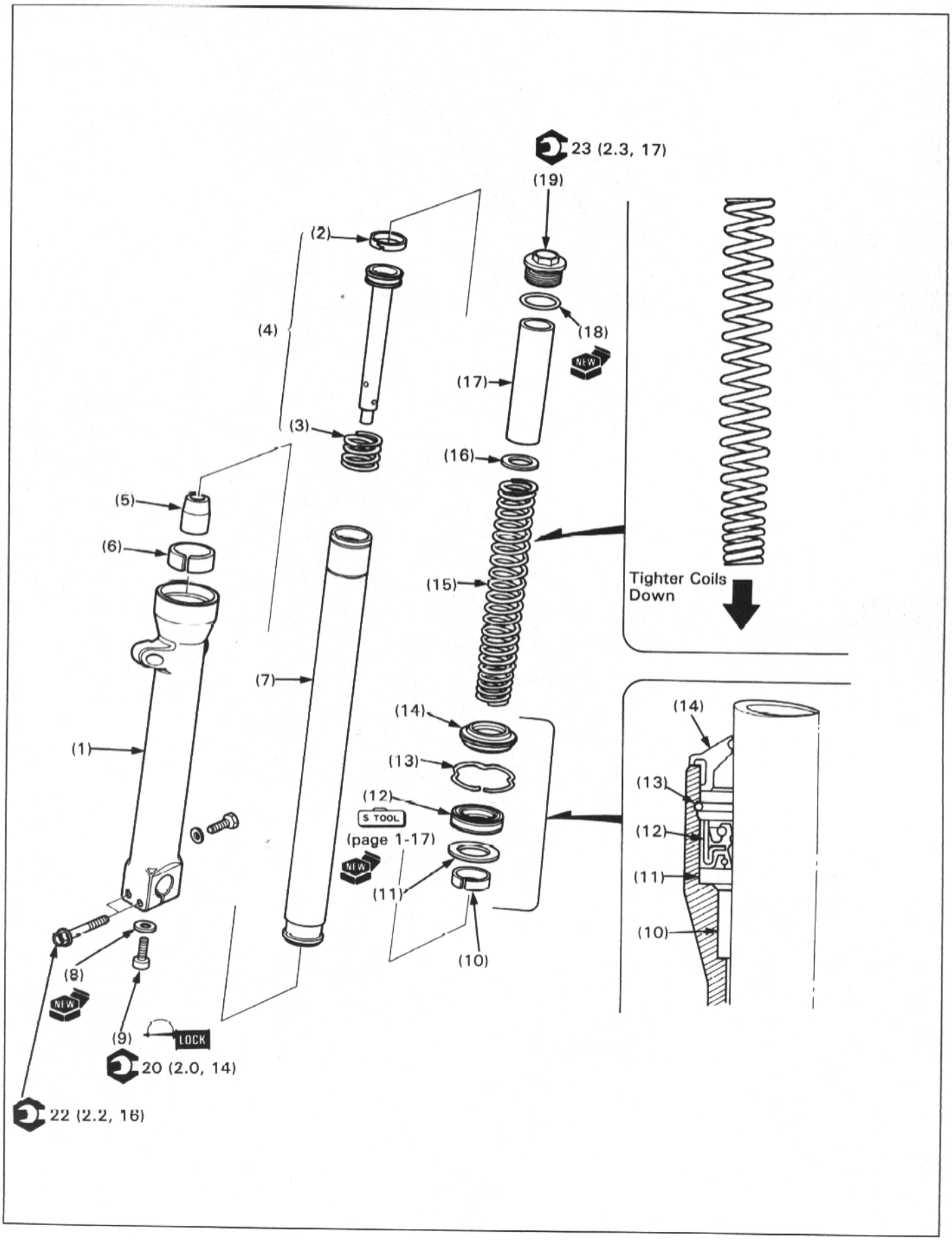

NOTE

- Clean all disassembled parts.

REQUISITE SERVICE

- Fork installation (page 11-6)

	PROCEDURE	Q'ty	REMARKS
(1)	Fork slider	1	
(2)	Fork piston ring	1	Replace with a new one if it was removed from the piston.
(3)	Rebound spring	1	
(4)	Fork piston assembly	1	Insert into the fork tube (10).
(5)	Oil lock piece	1	Install onto the piston (4).
(6)	Fork tube bushing	1	Replace with a new one if it was removed from the fork tube.
(7)	Fork tube	1	
(8)	Sealing washer	1	
(9)	Fork socket bolt	1	NOTE: • Temporarily install the fork spring and fork cap bolt so that the piston is held in place when the socket bolt is tightened.
(10)	Slider bushing	1	
(11)	Back up ring	1	
(12)	Oil seal	1	NOTE: • Wrap vinyl tape around the fork tube top end to avoid damaging the oil seal during the oil seal installation. • Drive in it securely, using fork seal driver (07947—KA50100) and attachment (07947—KF00100).
(13)	Stopper ring	1	Install into the slider groove securely.
(14)	Dust seal	1	NOTE: • After installing it, compress the fork tube fully and pour the specified amount of fork fluid (page 1-11) into the fork tube.
(15)	Fork spring	1	NOTE: • Wipe oil off the spring thoroughly using a clean lint free cloth and install with tightly wound coil end facing down.
(16)	Spring seat	1	
(17)	Spacer	1	
(18)	O-ring	1	
(19)	Fork cap bolt	1	Tighten lightly, being careful not to cross-thread the bolt; after installing the fork into the steering stem, torque the bolt.

STEERING STEM REMOVAL/INSTALLATION

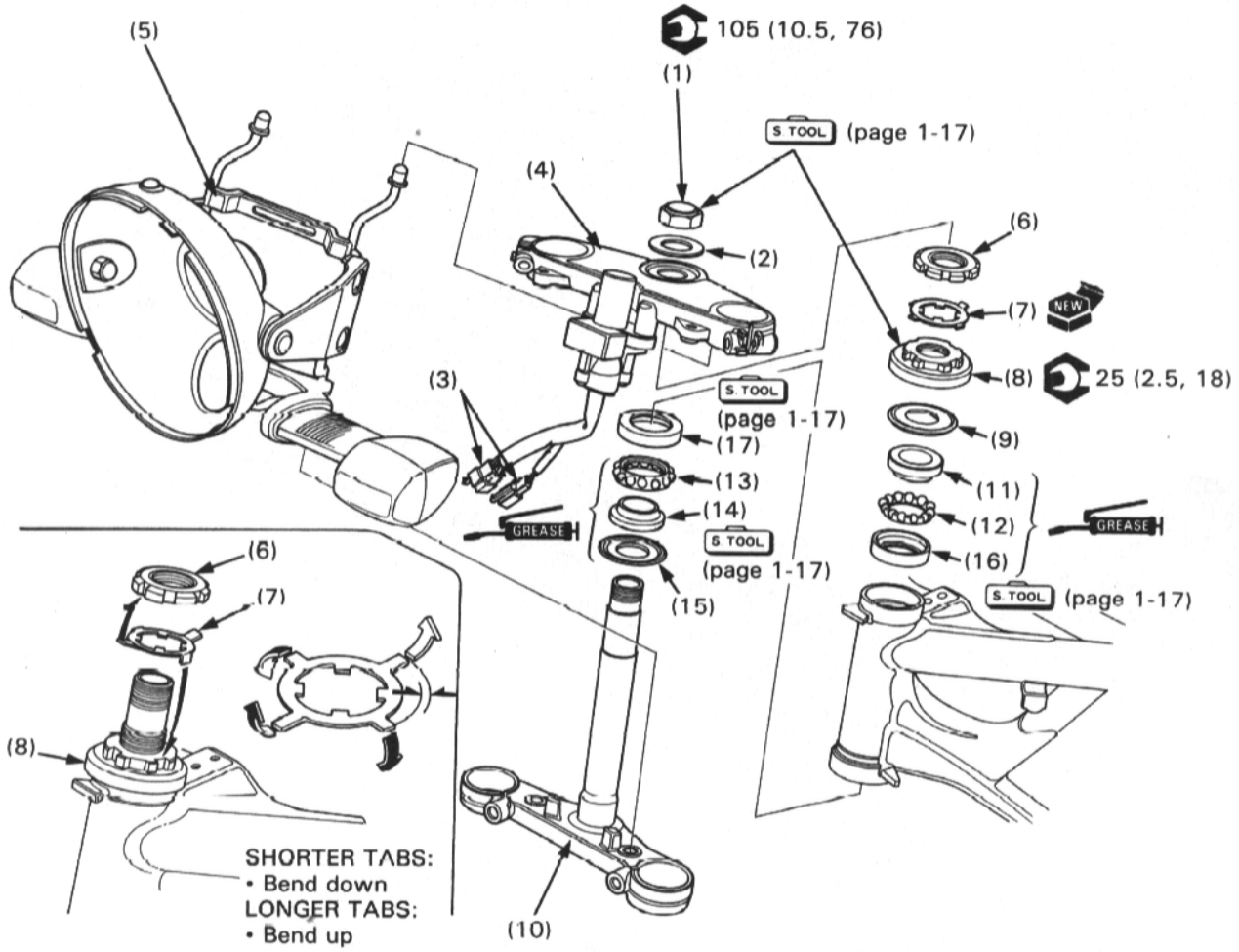

NOTE

- Bearings should always be replaced as a set- inner and outer races.
- Remove the fork, after loosening the steering stem nut.
- Check the steering head bearing preload (page 1-11) after torquing the stem nut.

REQUISITE SERVICE

- Front wheel removal/installation (page 11-4)
- Fork removal/installation (page 11-6)

	PROCEDURE	Q'ty	REMARKS
	REMOVAL ORDER		
(1)	Steering stem nut	1	After removing, remove the fork.
(2)	Washer	1	
(3)	Ignition switch connector	2	Disconnect inside the headlight case (page 1-19).
(4)	Top bridge	1	
(5)	Headlight/Stay assembly	1	Support with a piece of wire so that they do not hang from the cables or wire harnesses.
(6)	Lock nut	1	NOTE: • Remove, after straightening the lock washer tabs.
(7)	Lock washer	1	
(8)	Steering head bearing adjustment nut	1	
(9)	Dust seal	1	
(10)	Steering stem	1	
(11)	Upper inner race	1	
(12)	Upper bearing	1	
(13)	Lower bearing	1	
(14)	Lower inner race	1	Replace if they were removed. • Use race remover attachment (07953—MJ1000A) with driver (07949—3710001) and attachment, 37 x 40 mm (07746—0010200) for upper outer race removal. • Use race remover (07946—3710500) with driver (07949—3710001) and attachment, 37 x 40 mm (07746—0010200) for lower outer race removal.
(15)	Dust seal	1	
(16)	Upper outer race	1	
(17)	Lower outer race	1	
	INSTALLATION ORDER		
(17)	Lower outer race	1	Replace as a set, if necessary. • Use attachment, 52 x 55 mm (07746—0010400) and driver (07749—0010000) for lower outer race installation. • Use attachment, 42 x 47 mm (07746—0010300) and driver (07749—0010000) for upper outer race installation. • Use steering stem driver (07946—MB00000) for lower inner race installation.
(16)	Upper outer race	1	
(15)	Dust seal	1	
(14)	Lower inner race	1	
(13)	Lower bearing	1	
(12)	Upper bearing	1	
(11)	Upper inner race	1	
(10)	Steering stem	1	
(9)	Dust seal	1	
(8)	Steering head bearing adjustment nut	1	Installation: refer to section 18 of the Common Service Manual (Retainer-Type Ball Bearings).
(7)	Lock washer	1	
(6)	Lock nut	1	
(5)	Headlight Stay assembly	1	
(4)	Top bridge	1	
(3)	Ignition switch connector	2	Connect them (page 1-19).
(2)	Washer	1	
(1)	Steering stem nut	1	Temporarily install fork and torque the nut.

12. REAR WHEEL/SUSPENSION

SERVICE INFORMATION	12-1
TROUBLESHOOTING	12-1
REAR WHEEL REMOVAL/ INSTALLATION	12-2
REAR WHEEL DISASSEMBLY/ ASSEMBLY	12-3
SHOCK ABSORBER REMOVAL/ INSTALLATION	12-4
SHOCK ABSORBER DISASSEMBLY/ ASSEMBLY	12-5
SWINGARM REMOVAL/ INSTALLATION	12-7
SWINGARM DISASSEMBLY/ ASSEMBLY	12-8

SERVICE INFORMATION

⚠WARNING

- **The shock absorber contains nitrogen under high pressure. Do not allow fire or heat near the shock absorber.**
- **Before disposal of the shock absorber, release the nitrogen (Step: section 19 of the Common Service Manual; Drilling point: page 1-11)**
- **A contaminated brake disc or pad reduces stopping power. Discard contaminated pads and clean a contaminated disc with a high quality brake degreasing agent.**
- **Inhaled asbestos fibers have been found to cause respiratory disease and cancer. Never use an air hose or dry brush to clean brake assemblies. Use an OSHA-approved vacuum cleaner or alternate method approved by OSHA designed to minimize the hazard caused by airborne asbestos fibers.**
- **Riding on damaged rims impairs safe operation of the vehicle.**

- Refer to the section 13 for brake system information.
- Tubeless tire removal, repair, and remounting procedures are covered in the section 16 of the Common Service Manual.

TROUBLESHOOTING

Rear wheel wobbling
- Bent rim
- Worn rear wheel bearings
- Faulty tire
- Unbalanced tire and wheel
- Low tire pressure
- Faulty swingarm pivot bearing(s)

Wheel turns hard
- Faulty wheel bearing(s)
- Brake drag (page 13-1)
- Bent rear axle

Soft suspension
- Weak spring
- Incorrect suspension adjustment
- Oil leakage from damper unit
- Low tire pressure

Hard suspension
- Damaged shock absorber upper or lower bearings
- Incorrect suspension adjustment
- Bent damper rod
- Damaged swingarm pivot bearing
- High tire pressure

Rear suspension noisy
- Loose fasteners

REAR WHEEL REMOVAL/INSTALLATION

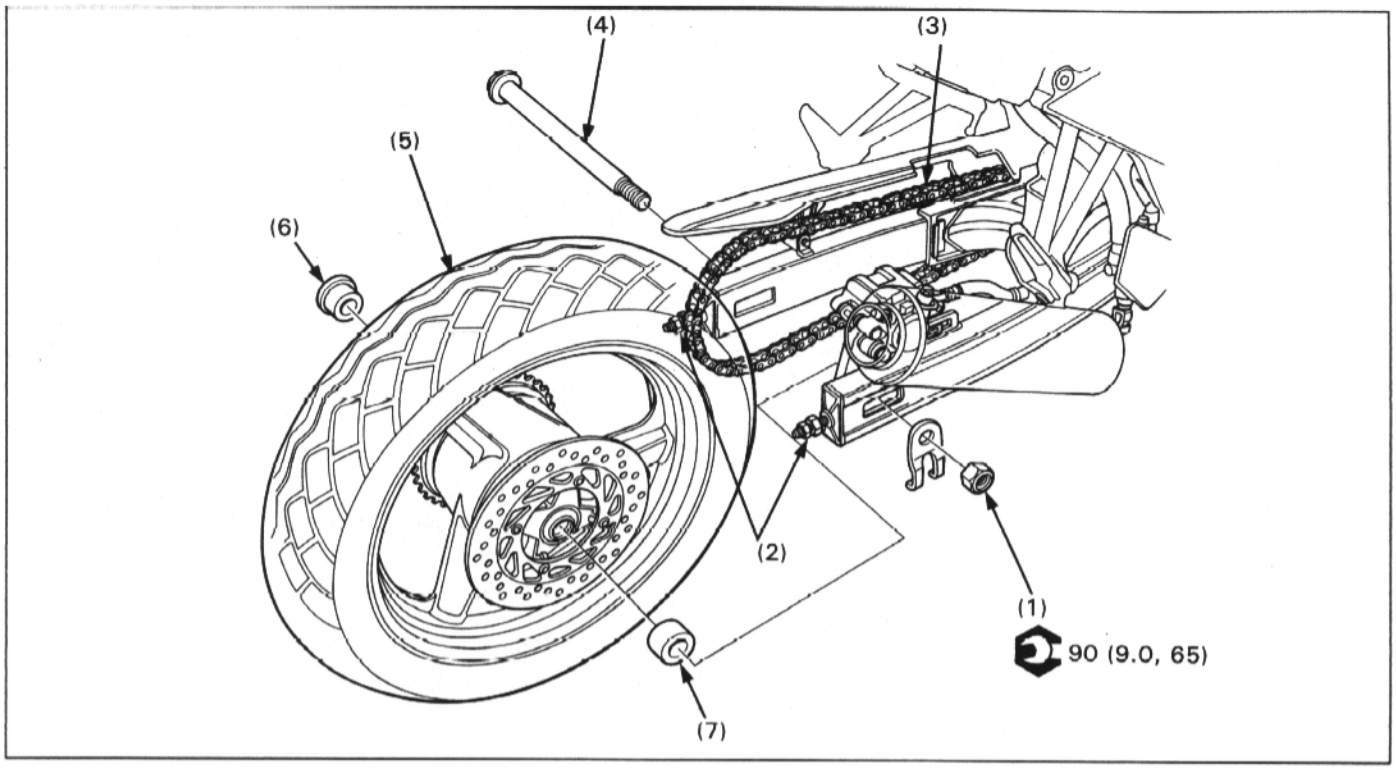

⚠WARNING

- **A contaminated brake disc or pad reduces stopping power. Discard contaminated pads and clean a contaminated disc with a high quality brake degreasing agent.**
- **Inhaled asbestos fibers have been found to cause respiratory disease and cancer. Never use an air hose or dry brush to clean brake assemblies. Use an OSHA-approved vacuum cleaner or alternate method approved by OSHA designed to minimize the hazard caused by airborne asbestos fibers.**

NOTE

- Put the motorcycle on its center stand.
- Do not depress the brake pedal when the caliper is removed, or it will be difficult to refit the disc between the brake pads.
- Support the removed caliper with a piece of wire so that it does not hang from the brake hose. Do not twist the brake hose.
- Adjust the drive chain free play adjustment after installing the wheel.

	PROCEDURE	Q'ty	REMARKS
	REMOVAL ORDER		• Installation is in the reverse order of removal.
(1)	Rear axle nut	1	
(2)	Drive chain adjusting nut	2	Loosen the lock nuts and loosen the adjusting nut fully.
(3)	Drive chain	1	Move the rear wheel forward, and disengage the drive chain from the driven sprocket.
(4)	Rear axle	1	
(5)	Rear wheel assembly	1	
(6)	Left side collar		
(7)	Right side collar		

REAR WHEEL DISASSEMBLY/ASSEMBLY

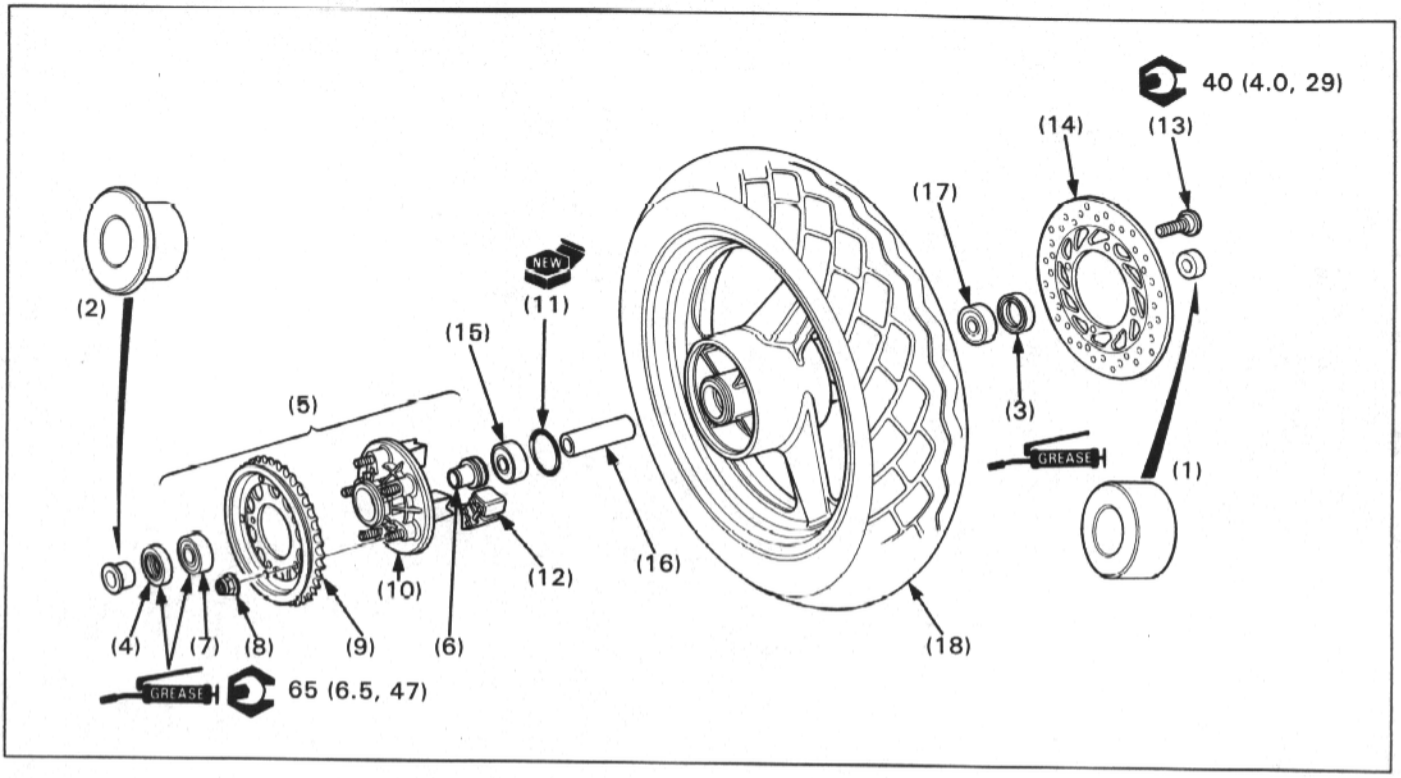

⚠ WARNING

- **A contaminated brake disc or pad reduces stopping power. Discard contaminated pads and clean a contaminated disc with a high quality brake degreasing agent.**

NOTE

- For driven sprocket removal, loosen the sprocket nuts with the driven flange installed into the wheel hub.
- Replace wheel bearings as a set.
- For wheel bearing replacement, refer to the section 1 of the Common Service Manual.

REQUISITE SERVICE

- Rear wheel removal/installation (page 12-2)

	PROCEDURE	Q'ty	ASSEMBLY REMARKS
	DISASSEMBLY ORDER		• Assembly is in the reverse order of disassembly.
(1)	Right side collar	1	
(2)	Left side collar	1	
(3)	Right dust seal	1	Apply grease to the dust seal lips and install them with the lip side facing inside.
(4)	Left dust seal	1	
(5)	Driven flange assembly	1	
(6)	— driven flange collar	1	
(7)	— driven flange bearing (6204 U)	1	Install with the sealed side facing out.
(8)	— driven sprocket nut	5	
(9)	— driven sprocket	1	
(10)	— driven flange	1	
(11)	O-ring	1	
(12)	Rear wheel damper	4	
(13)	Brake disc bolt	4	
(14)	Brake disc	1	
(15)	Left wheel bearing (6303 UU)	1	
(16)	Distance collar	1	
(17)	Right wheel bearing (6303 UU)	1	NOTE: • Drive in the right side bearing first, then the left side bearing.
(18)	Rear wheel/tire	1/1	

SHOCK ABSORBER REMOVAL/INSTALLATION

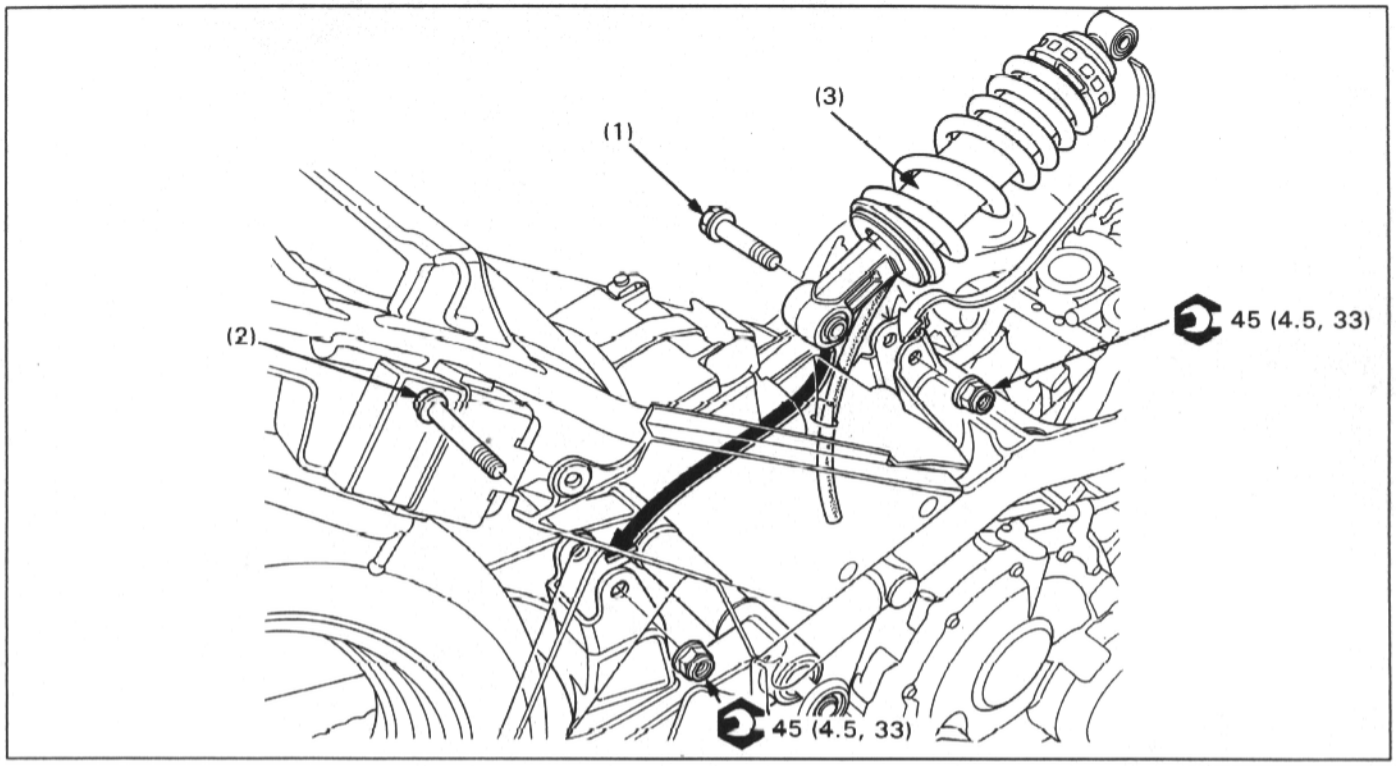

NOTE

- Put the motorcycle on it center stand.
- Before removing the shock absorber for disassembly, adjust the shock absorber to position I (for lightest loads) before removing the shock absorber from the frame.

REQUISITE SERVICE

- Fuel tank removal/installation (page 2-4)

	PROCEDURE	Q'ty	REMARKS
	REMOVAL ORDER		• Installation is in the reverse order of removal.
(1)	Shock absorber mounting bolt (upper)	1	At installation, install them from the left side.
(2)	Shock absorber mounting bolt (lower)	1	
(3)	Shock absorber assembly	1	NOTE: • Remove it upwards from the frame. • Install with the drain tube forward.

SHOCK ABSORBER DISASSEMBLY/ASSEMBLY

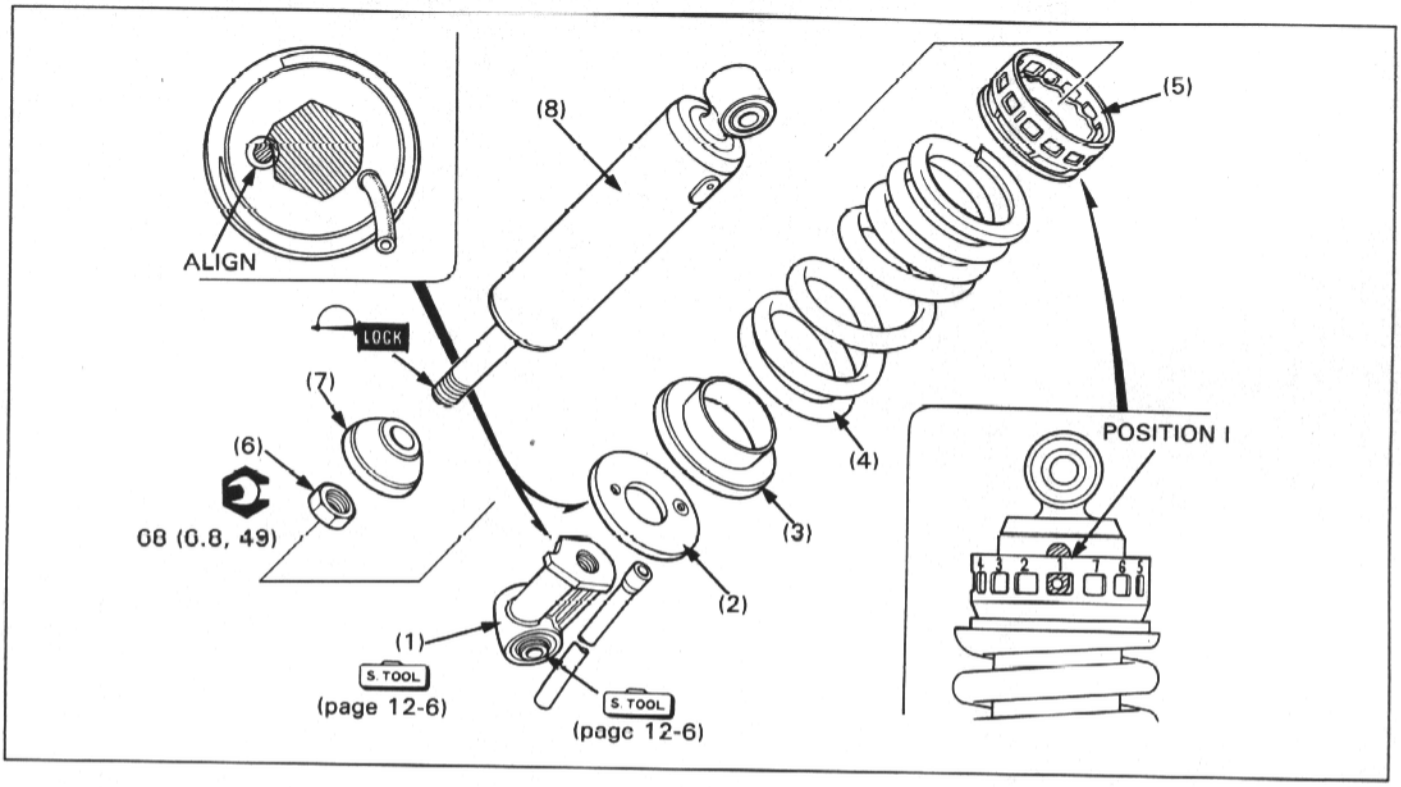

⚠ WARNING

- **The shock absorber contains nitrogen under high pressure. Do not allow fire or heat near the shock absorber.**
- **Before disposal of the shock absorber, release the nitrogen (Step: section 19 of the Common Service Manual; Drilling point: page 1-11)**

NOTE

- Adjust the shock absorber to position I (for lightest loads) before removing the shock absorber from the frame.
- For lower joint needle bearing replacement, see next page.

REQUISITE SERVICE

- Shock absorber removal/installation (page 12-4)

	PROCEDURE	Q'ty	REMARKS
	DISASSEMBLY ORDER		• Assembly is in the reverse order of disassembly.
(1)	Lower joint	1	NOTE: • Removal/Installation (page 12-6) • At installation, align the lower joint with the seat stopper pin.
(2)	Seat stopper	1	
(3)	Spring seat	1	
(4)	Spring	1	Install with the taper end facing to the adjuster.
(5)	Adjuster	1	
(6)	Lower joint lock nut	1	
(7)	Damper rubber	1	
(8)	Damper	1	

LOWER JOINT REMOVAL/INSTALLATION

Install the shock absorber compressor and attachment on the rear shock absorber as shown.

S TOOL

SHOCK ABSORBER COMPRESSOR	**07GME–0010000 (Not available in U.S.A.) or 07959–3290001**
– screw assembly	**07GME–0010100**
ATTACHMENT	**07959–MB10000**

Turn the compressor handle and slowly compress the spring.

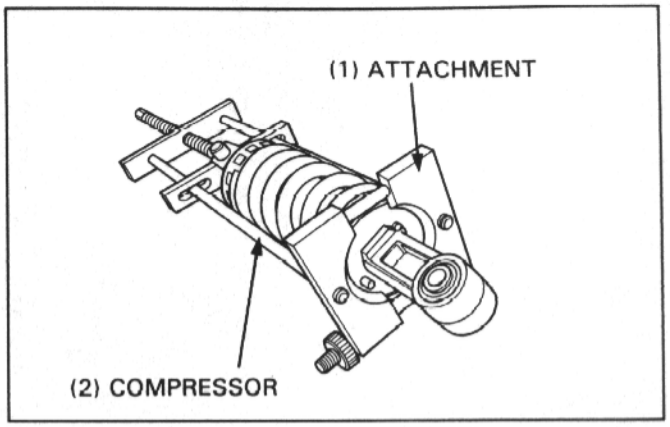

Hold the lower joint and loosen the lock nut (turn the nut clockwise).
Remove the lower joint and clean off any locking agent from the threads.

Installation:
Apply a locking agent to the damper threads.
Install the lower joint securely onto the damper rod.
Hole the lower joint and torque the lock nut.

TORQUE: 68 N·m (6.8 kg-m, 49 ft-lb)

Make sure the Lower joint is aligned with the seat stopper pin and remove the compressor.

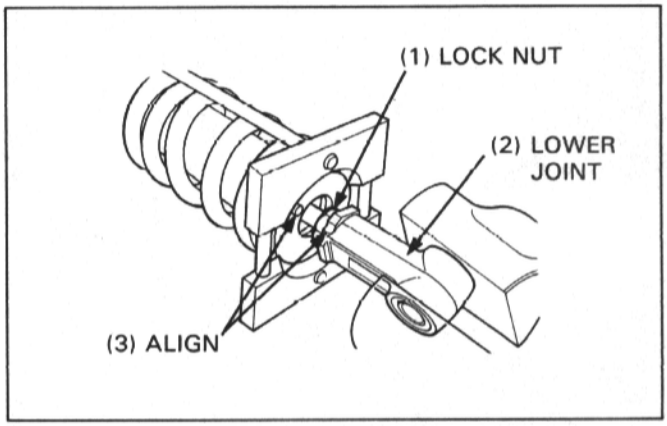

LOWER JOINTS NEEDLE BEARING REPLACEMENT

Remove the dust seals.
Hold the joint with a suitable tool.
Press the needle bearing out of the joint.

S TOOL

DRIVER PIN	**07GMD–KT80100 (Not available in U.S.A.)**
or	
PILOT, 22 mm	**07746–0041000**
DRIVER	**07749–0010000**

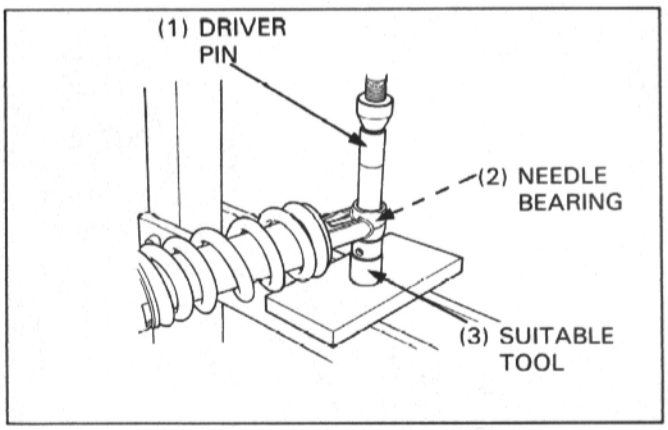

Pack a new bearing with grease.
Press the bearing into the joint until the bearing surface flushes with the joint surface as shown.

S TOOL

DRIVER	**07749–0010000**
ATTACHMENT, 24 x 26 mm	**07746–0010700**
PILOT, 17 mm	**07746–0040400**

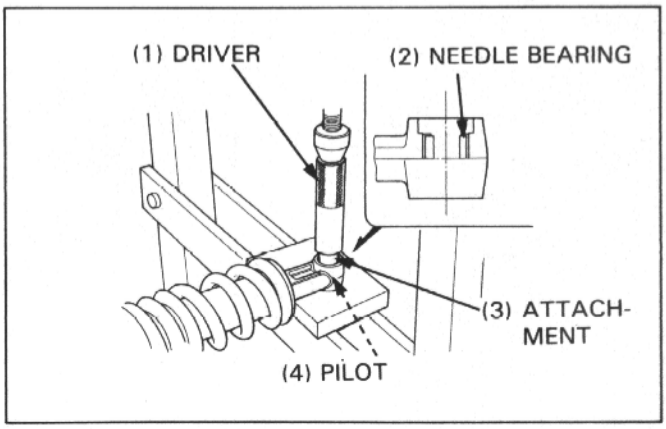

SWINGARM REMOVAL/INSTALLATION

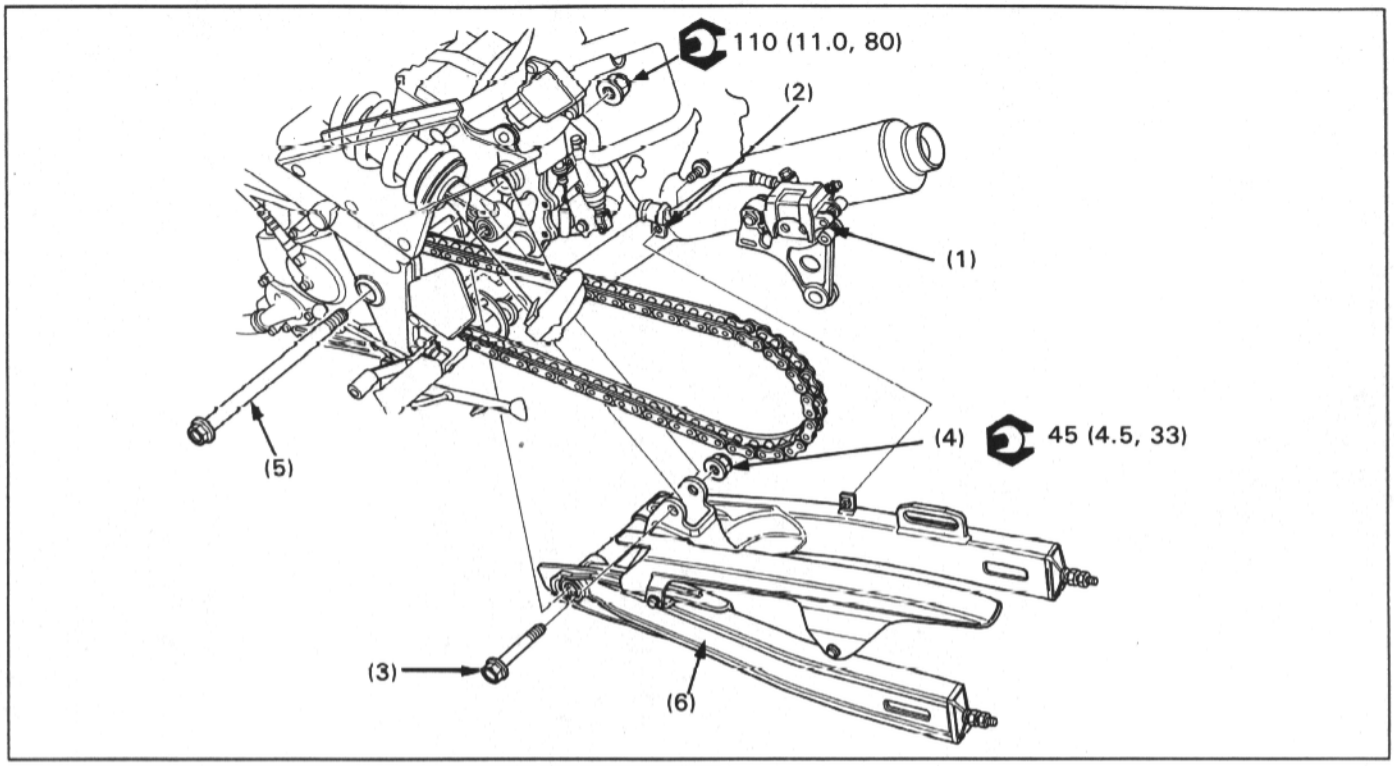

NOTE

- Put the motorcycle on its center stand.
- Do not depress the brake pedal when the caliper is removed, or it will be difficult to refit the disc between the brake pads.
- Support the removed caliper with a piece of wire so that it does not hang from the brake hose. Do not twist the brake hose.
- If necessary, loosen the rear engine mounting nut near the swingarm pivot to ease the swingarm removal/installation.

REQUISITE SERVICE

- Rear wheel removal/installation (page 12-2)

	PROCEDURE	Q'ty	REMARKS
	REMOVAL ORDER		• Installation is in the reverse order of removal.
(1)	Rear brake caliper	1	
(2)	Brake hose clamp	1	
(3)	Shock absorber lower mounting bolt	1	
(4)	Swingarm pivot nut	1	
(5)	Swingarm pivot shaft	1	
(6)	Swingarm assembly	1	

SWINGARM DISASSEMBLY/ASSEMBLY

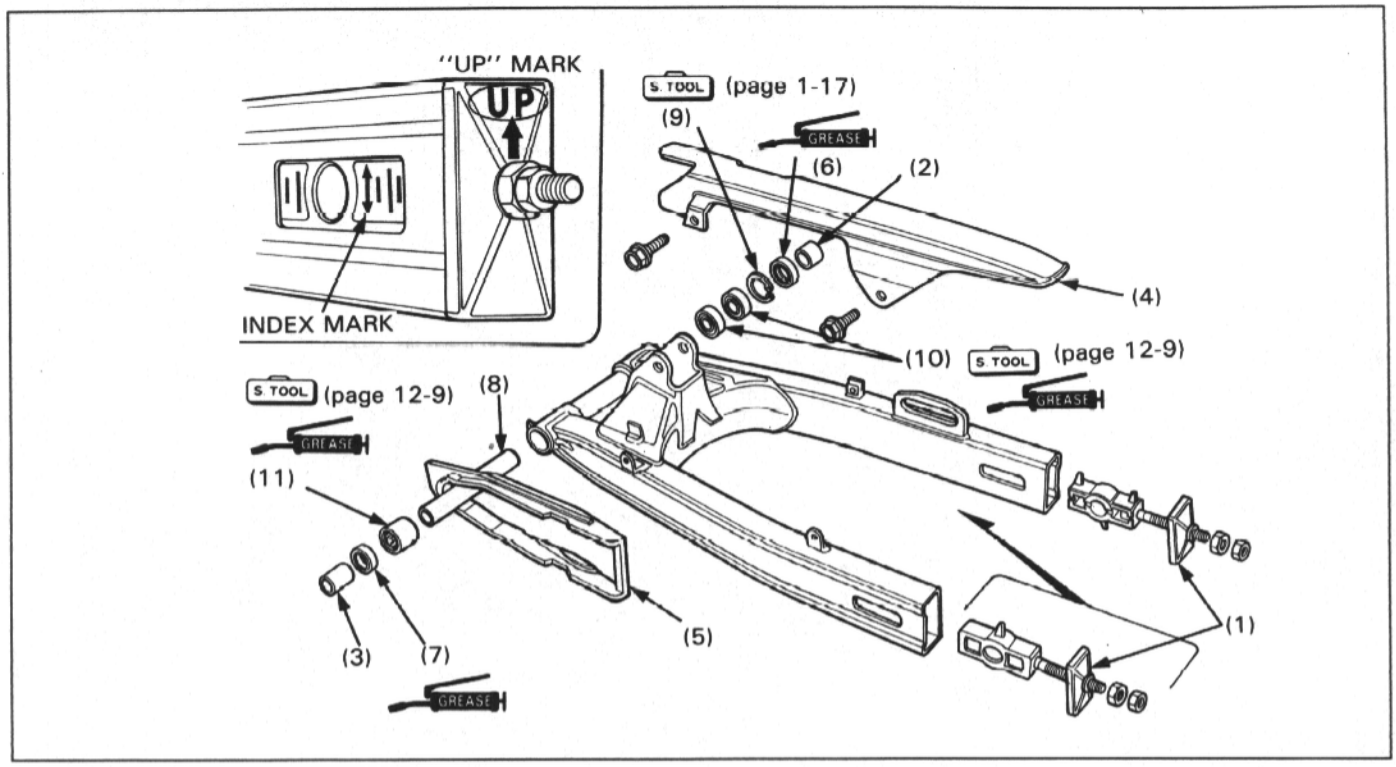

NOTE

- For pivot bearing replacement, see next page.

REQUISITE SERVICE

- Rear wheel removal/installation (page 12-2)
- Swingarm removal/installation (page 12-7)

	PROCEDURE	Q'ty	ASSEMBLY REMARKS
	DISASSEMBLY ORDER		• Assembly is in the reverse order of disassembly.
(1)	Drive chain adjuster	2	Install them with the UP mark facing up and the index mark facing out.
(2)	Right pivot collar	1	
(3)	Left pivot collar	1	
(4)	Drive chain cover	1	
(5)	Drive chain slider	1	
(6)	Right dust seal	1	Apply grease to the lip.
(7)	Left dust seal	1	
(8)	Distance collar	1	
(9)	Snap ring	1	Install it into the groove securely.
(10)	Ball bearing	2	Replacement (page 12-9)
(11)	Needle bearing	1	

SWINGARM PIVOT BEARING REPLACEMENT

Press the right pivot bearings (ball bearings) out of the swingarm.

S TOOL

DRIVER SHAFT	**07946–MJ00100 (Not available in U.S.A.)**
or	
DRIVER	**07949–3710001**

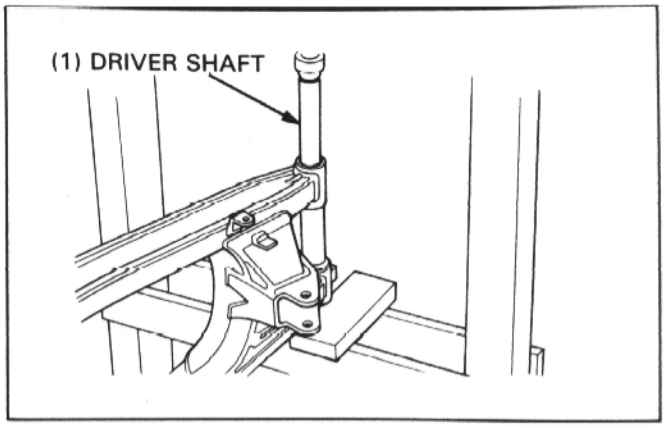

Set the needle bearing remover onto the left pivot bearing (needle bearing) as shown.
Press the bearing out of the swingarm.

S TOOL

NEEDLE BEARING REMOVER ATTACHMENT		
	07GMD–KT70200	**(Not available in U.S.A.)**
DRIVER SHAFT	**07946–MJ00100**	
or		
BUSHING REMOVER	**M967X–038–XXXXX**	
DRIVER	**07949–3710001**	

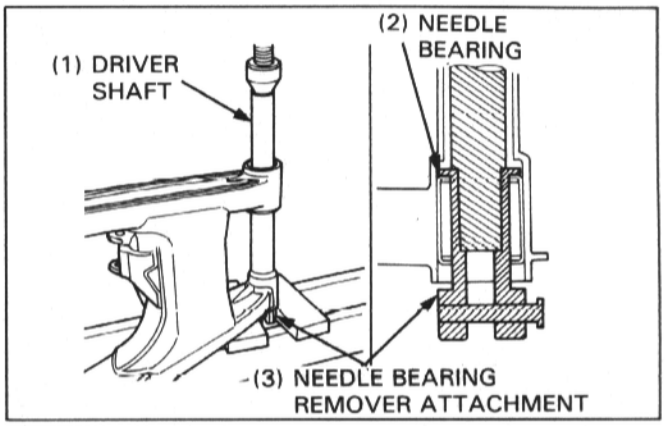

Press the needle bearing into the swingarm with the marked side facing out.

NOTE

- The bearing surface should flush with the pivot inside surface as shown.

S TOOL

DRIVER	**07749–0010000**
ATTACHMENT, 28 x 30 mm	**07946–1870100**
PILOT, 22 mm	**07746–0041000**

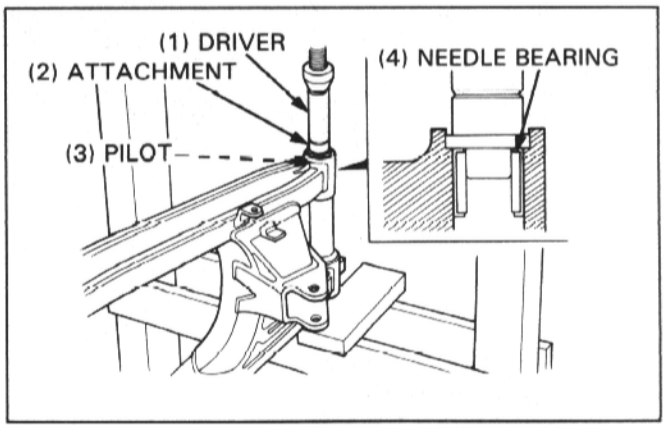

Press one ball bearing (inner bearing) into the swingarm first, then press in another on top of it (outer bearing).

S TOOL

DRIVER	**07749–0010000**
ATTACHMENT, 32 x 35 mm	**07746–0010100**
PILOT, 15 mm	**07746–0040300**

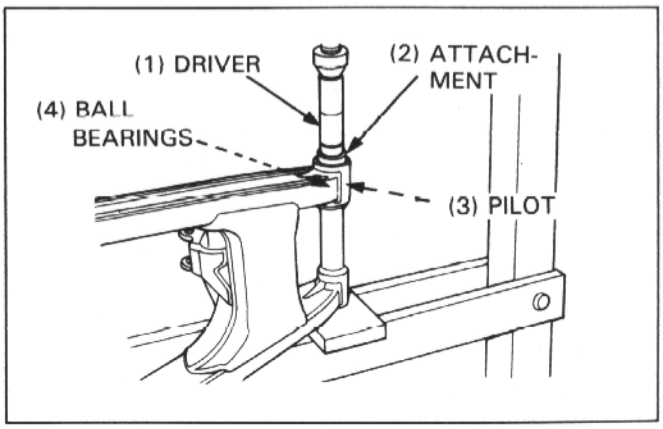

13. BRAKES

SERVICE INFORMATION	13-1
TROUBLESHOOTING	13-1
FRONT BRAKE PAD REPLACEMENT	13-2
REAR BRAKE PAD REPLACEMENT	13-3
FRONT BRAKE CALIPER REMOVAL/ INSTALLATION	13-4
REAR BRAKE CALIPER REMOVAL/ INSTALLATION	13-5
FRONT BRAKE CALIPER DISASSEMBLY/ASSEMBLY	13-6
REAR BRAKE CALIPER DISASSEMBLY/ ASSEMBLY	13-7
FRONT MASTER CYLINDER REMOVAL/INSTALLATION	13-8
REAR MASTER CYLINDER REMOVAL/INSTALLATION	13-9
FRONT MASTER CYLINDER DISASSEMBLY/ASSEMBLY	13-10
REAR MASTER CYLINDER DISASSEMBLY/ASSEMBLY	13-11
BRAKE PEDAL REMOVAL/ INSTALLATION	13-12

SERVICE INFORMATION

⚠ WARNING

- **A contaminated brake disc or pad reduces stopping power. Discard contaminated pads and clean a contaminated disc with a high quality brake degreasing agent.**
- **Inhaled asbestos fibers have been found to cause respiratory disease and cancer. Never use an air hose or dry brush to clean brake assemblies. Use an OSHA-approved vacuum cleaner or alternate method approved by OSHA designed to minimize the hazard caused by airborne asbestos fibers.**

- Spilled brake fluid will severely damage instrument lenses and painted surfaces. It is also harmful to some rubber parts. Be very careful whenever you remove the reservoir cap: make sure the front reservoir is horizontal first.
- Never allow contaminants (dirt, water, etc.) to get into an open reservoir.
- Once the hydraulic system has been opened, or if the brakes feel spongy, the system must be bled.
- Always use fresh DOT 4 brake fluid from a sealed container when servicing the system. Do not mix different types of fluid as they may not be compatible.
- Always check brake operation before riding the motorcycle.

TROUBLESHOOTING

Brake lever/pedal soft or spongy
- Air bubbles in the hydraulic system
- Leaking hydraulic system
- Contaminated brake pad/disc
- Worn caliper piston seal
- Worn master cylinder piston cups
- Worn brake pad
- Contaminated caliper
- Caliper not sliding properly
- Worn brake pad/disc
- Low fluid level
- Clogged fluid passage
- Warped/deformed brake disc
- Sticking/worn caliper piston
- Sticking/worn master cylinder piston
- Worn brake disc
- Contaminated master cylinder
- Bent brake lever/pedal

Brake lever/pedal hard
- Clogged/restricted brake system
- Sticking/worn caliper piston
- Caliper not sliding properly
- Clogged/restricted fluid passage
- Worn caliper piston seal
- Sticking/worn master cylinder piston
- Bent brake lever/pedal

Brakes drag
- Contaminated brake pad/disc
- Misaligned wheel
- Worn brake pad/disc
- Warped/deformed brake disc
- Caliper not sliding properly

FRONT BRAKE PAD REPLACEMENT

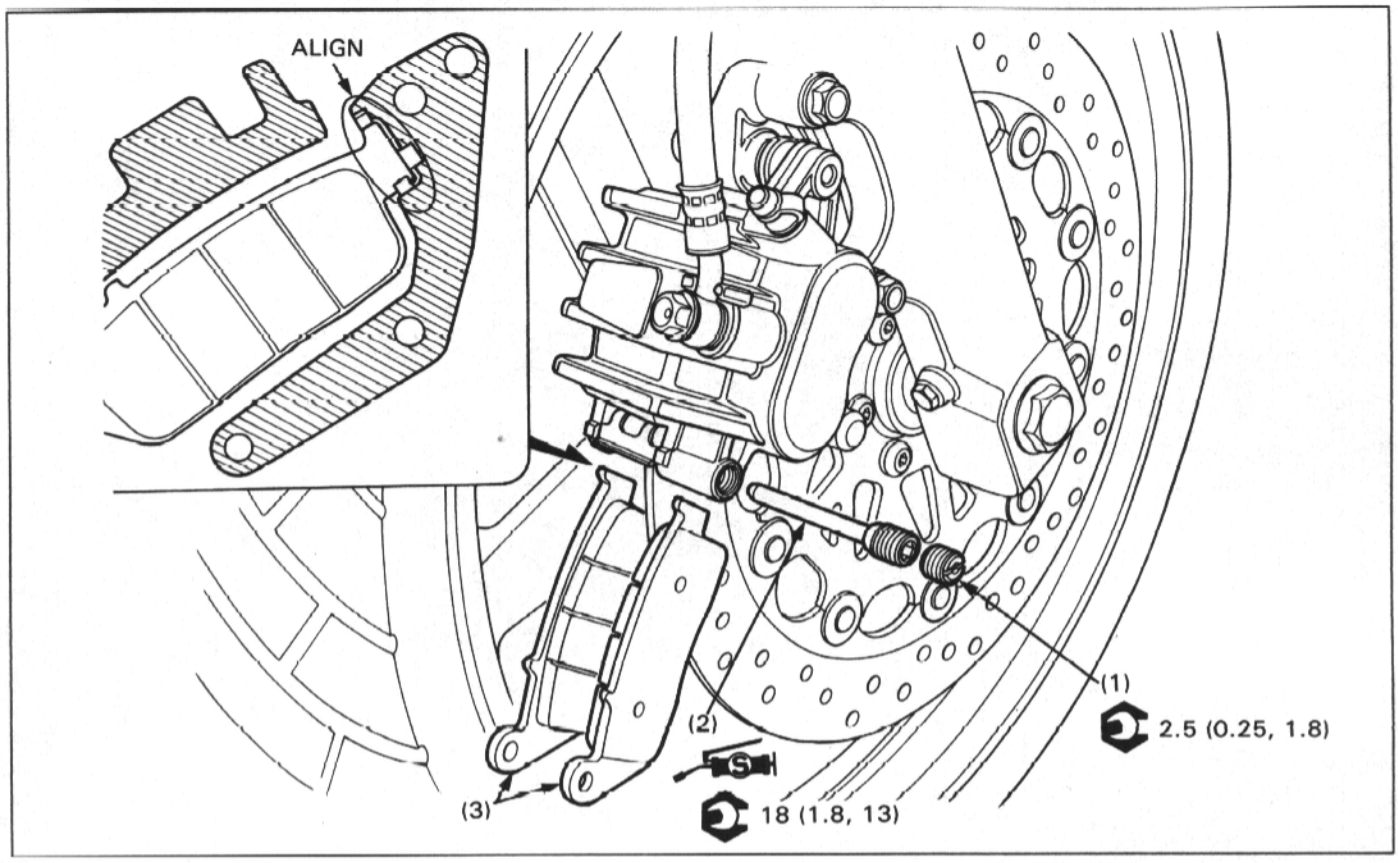

⚠WARNING

- **A contaminated brake disc or pad reduces stopping power. Discard contaminated pads and clean a contaminated disc with a high quality brake degreasing agent.**
- **Inhaled asbestos fibers have been found to cause respiratory disease and cancer. Never use an air hose or dry brush to clean brake assemblies. Use an OSHA-approved vacuum cleaner or alternate method approved by OSHA designed to minimize the hazard caused by airborne asbestos fibers.**
- **After replacement, operate the brake lever to seat the caliper pistons against the pads.**

NOTE

- Do not depress the brake lever when the caliper is removed, or it will be difficult to refit the disc between the brake pads.
- Replace brake pads as a set.
- Apply a thin of silicone grease onto the pad pin so as not to rust it.

REQUISITE SERVICE

- Pushing the caliper against the disc, push the caliper pistons all the way in to allow the installation of new brake pads.

	PROCEDURE	Q'ty	INSTALLATION REMARKS
	REMOVAL ORDER		• Installation is in the reverse order of removal.
(1)	Pad pin plug	1	
(2)	Pad pin	1	Insert the pin, pushing the pads against the pad spring.
(3)	Brake pad	2	Align the pad lug with the pad retainer as shown.

REAR BRAKE PAD REPLACEMENT

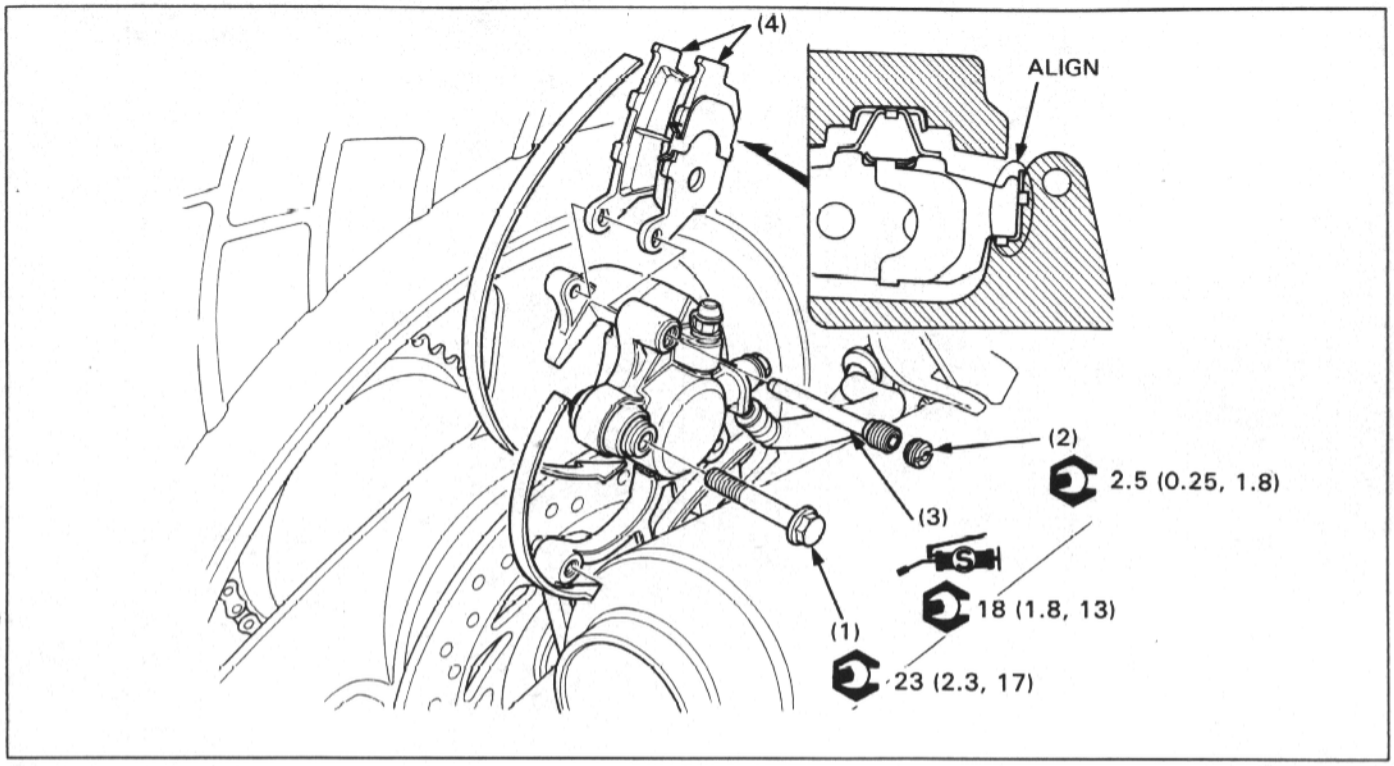

⚠ WARNING

- **A contaminated brake disc or pad reduces stopping power. Discard contaminated pads and clean a contaminated disc with a high quality brake degreasing agent.**
- **Inhaled asbestos fibers have been found to cause respiratory disease and cancer. Never use an air hose or dry brush to clean brake assemblies. Use an OSHA-approved vacuum cleaner or alternate method approved by OSHA designed to minimize the hazard caused by airborne asbestos fibers.**
- **After replacement, operate the brake pedal to seat the caliper pistons against the pads.**

NOTE

- Do not depress the brake pedal when the caliper is removed, or it will be difficult to refit the disc between the brake pads.
- Replace brake pads as a set.
- Apply a thin coating of silicone grease onto the pad pins to prevent rust and allow easy pad movement.

REQUISITE SERVICE

- Pushing the caliper against the disc, push the caliper piston all the way in to allow the installation of new brake pads.

	PROCEDURE	Q'ty	REMARKS
	REMOVAL ORDER		
(1)	Caliper mounting bolt	1	Remove the bolt and swing the caliper upward.
(2)	Pad pin plug	1	
(3)	Pad pin	1	
(4)	Brake pad	2	
	INSTALLATION ORDER		
(1)	Brake pad	2	Align the pad lug with the pad retainer as shown.
(2)	Pad pin	1	Insert the pin, pushing the pads against the pad spring.
(3)	Pad pin plug	1	
(4)	Caliper mounting bolt	1	

FRONT BRAKE CALIPER REMOVAL/INSTALLATION

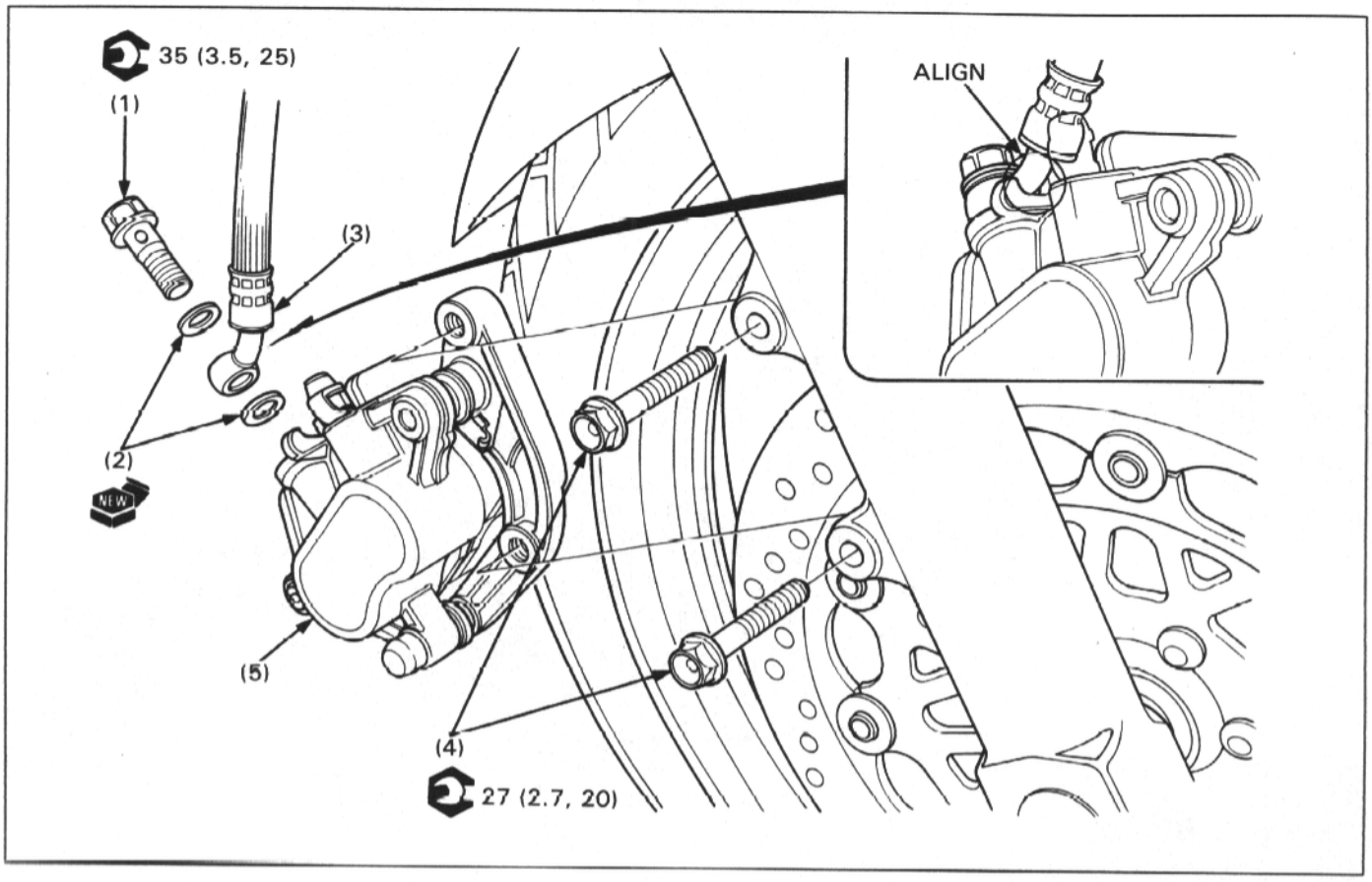

⚠ WARNING

- **A contaminated brake disc or pad reduces stopping power. Discard contaminated pads and clean a contaminated disc with a high quality brake degreasing agent.**
- **Inhaled asbestos fibers have been found to cause respiratory disease and cancer. Never use an air hose or dry brush to clean brake assemblies. Use an OSHA-approved vacuum cleaner or alternate method approved by OSHA designed to minimize the hazard caused by airborne asbestos fibers.**

NOTE

- If you remove the caliper pistons, remove the caliper bracket bolts (4) before disconnecting the brake hose (3); and place a pan under the caliper to catch the draining fluid and squeeze the brake lever slowly to push out the pistons.

REQUISITE SERVICE

- Brake pad removal/installation (page 13-2)
- Brake fluid replacement/air bleeding (section 17 of the Common Service Manual)

	PROCEDURE	Q'ty	REMARKS
	REMOVAL ORDER		• Installation is in the reverse order of removal.
(1)	Brake hose bolt	1	
(2)	Sealing washer	2	
(3)	Brake hose	1	At installation, press the hose end against the stopper while tightening the hose bolt.
(4)	Caliper bracket bolt	2	
(5)	Front brake caliper assembly	1	

REAR BRAKE CALIPER REMOVAL/INSTALLATION

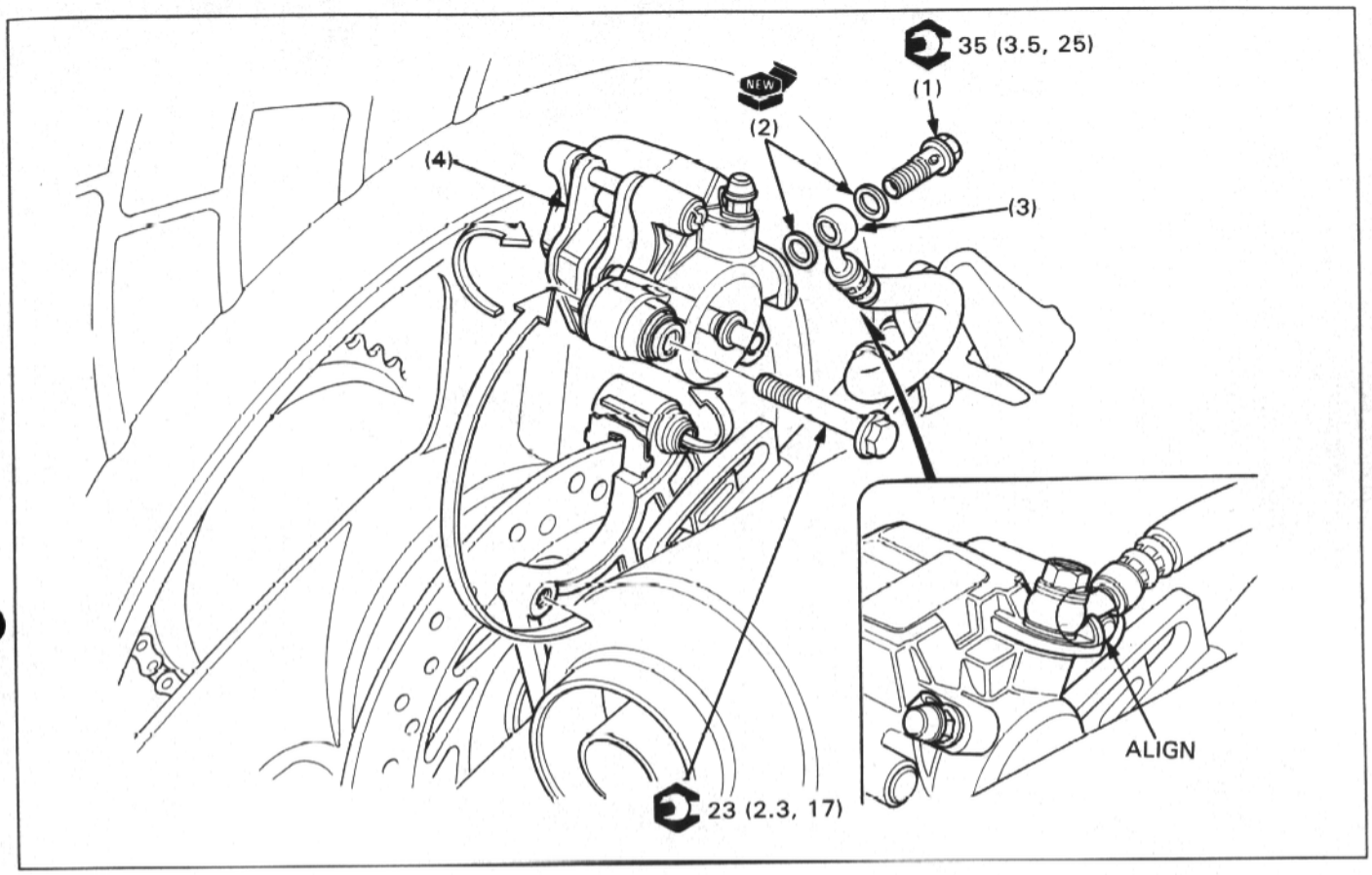

⚠ WARNING

- **A contaminated brake disc or pad reduces stopping power. Discard contaminated pads and clean a contaminated disc with a high quality brake degreasing agent.**
- **Inhaled asbestos fibers have been found to cause respiratory disease and cancer. Never use an air hose or dry brush to clean brake assemblies. Use an OSHA-approved vacuum cleaner or alternate method approved by OSHA designed to minimize the hazard caused by airborne asbestos fibers.**

NOTE

- Before disconnecting the brake hose (1), place a pan under the caliper to catch the draining fluid and squeeze the brake lever slowly to push out the piston.

REQUISITE SERVICE

- Brake pad removal/installation (page 13-3)
- Brake fluid replacement/air bleeding (section 17 of the Common Service Manual)

	PROCEDURE	Q'ty	REMARKS
	REMOVAL ORDER		• Installation is in the reverse order of removal.
(1)	Brake hose bolt	1	Temporarily install the caliper onto the bracket.
(2)	Sealing washer	2	
(3)	Brake hose	1	At installation, press the hose end against the stopper while tightening the hose bolt.
(4)	Rear brake caliper assembly	1	

FRONT BRAKE CALIPER DISASSEMBLY/ASSEMBLY

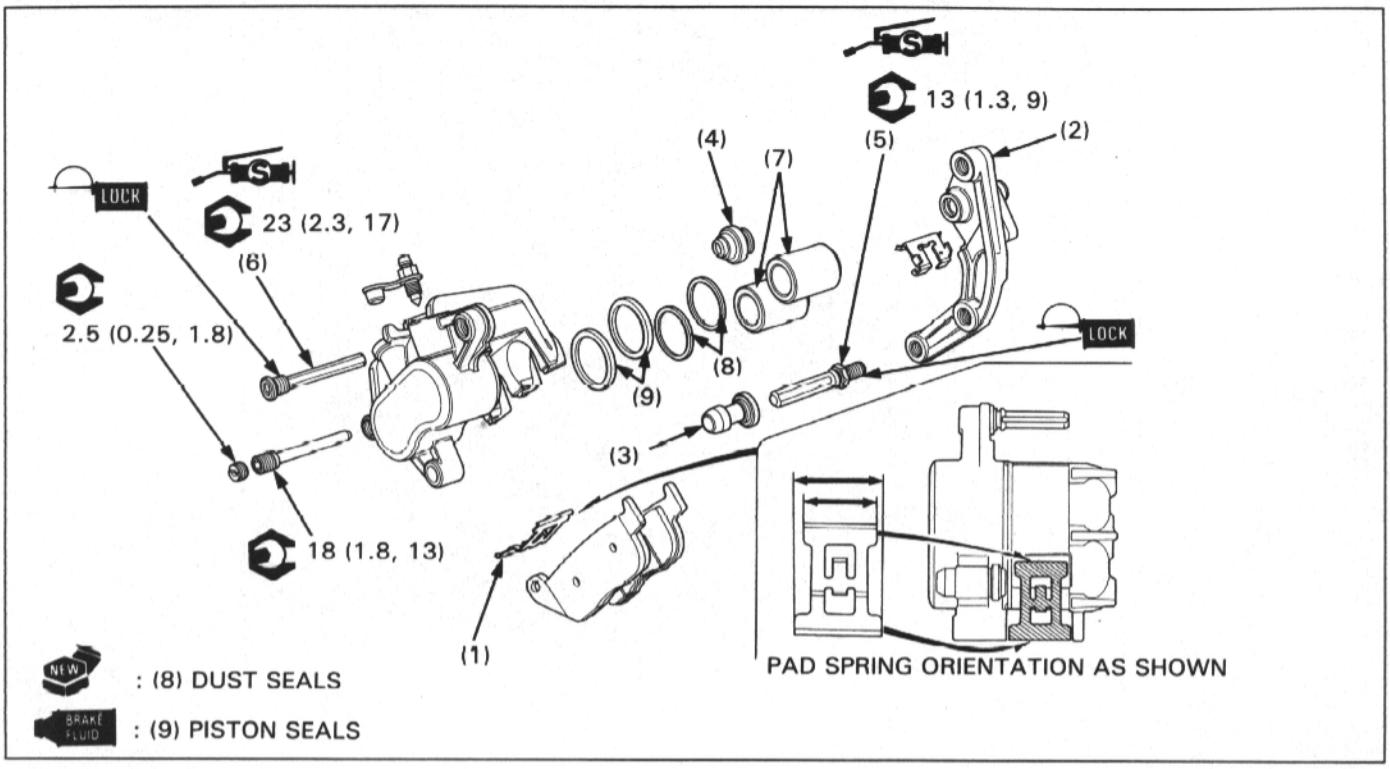

⚠ WARNING

- **Inhaled asbestos fibers have been found to cause respiratory disease and cancer. Never use an air hose or dry brush to clean brake assemblies. Use an OSHA-approved vacuum cleaner or alternate method approved by OSHA designed to minimize the hazard caused by airborne asbestos fibers.**

REQUISITE SERVICE

- Front brake pad removal/installation (page 13-2)
- Brake fluid replacement/air bleeding (section 17 of the Common Service Manual)
- Front brake caliper removal/installation (page 13-4)

	PROCEDURE	Q'ty	REMARKS
	DISASSEMBLY ORDER		• Assembly is in the reverse order of disassembly.
(1)	Pad spring	1	Note the spring direction as shown.
(2)	Caliper bracket	1	
(3)	Bracket pin bolt boot	1	
(4)	Caliper pin bolt boot	1	Install into the bracket groove securely.
(5)	Bracket pin bolt	1	Apply a locking agent to the threads and torque it. Apply silicone grease to the pin.
(6)	Caliper pin bolt	1	
(7)	Caliper piston	2	Install them with the concaved side away from the pad.
(8)	Dust seal	2	**CAUTION:**
(9)	Piston seal	2	• **Be careful not to damage the piston sliding surface when removing seals.**

REAR BRAKE CALIPER DISASSEMBLY/ASSEMBLY

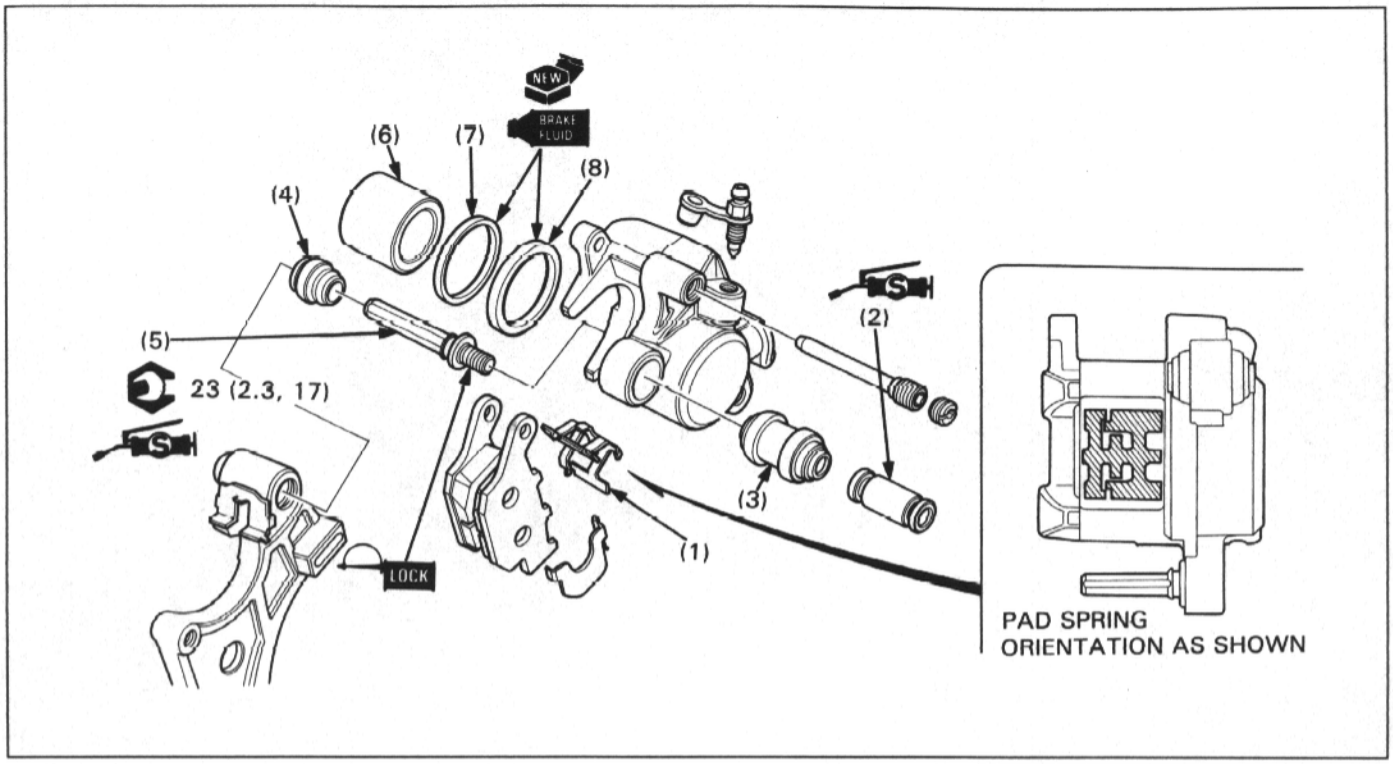

⚠WARNING

- **Inhaled asbestos fibers have been found to cause respiratory disease and cancer. Never use an air hose or dry brush to clean brake assemblies. Use an OSHA-approved vacuum cleaner or alternate method approved by OSAH designed to minimize the hazard caused by airborne asbestos fibers.**

REQUISITE SERVICE

- Rear brake pad removal/installation (page 13-3)
- Brake fluid replacement/air bleeding (section 17 of the Common Service Manual)
- Rear brake caliper removal/installation (page 13-5)

	PROCEDURE	Q'ty	REMARKS
	DISASSEMBLY ORDER		• Assembly is in the reverse order of disassembly.
(1)	Pad spring	1	Note the spring direction as shown.
(2)	Pivot collar	1	Apply silicone grease to the sliding surface.
(3)	Pivot boot	1	
(4)	Caliper pin bolt boot	1	Install into the bracket groove securely.
(5)	Caliper pin bolt	1	Apply a locking agent to the threads and torque it. Apply silicone grease to the pin.
(6)	Caliper piston	1	Install it with the opening toward the pad.
(7)	Dust seal	1	**CAUTION:**
(8)	Piston seal	1	• **Be careful not to damage the piston sliding surface when removing seals.**

FRONT MASTER CYLINDER REMOVAL/INSTALLATION

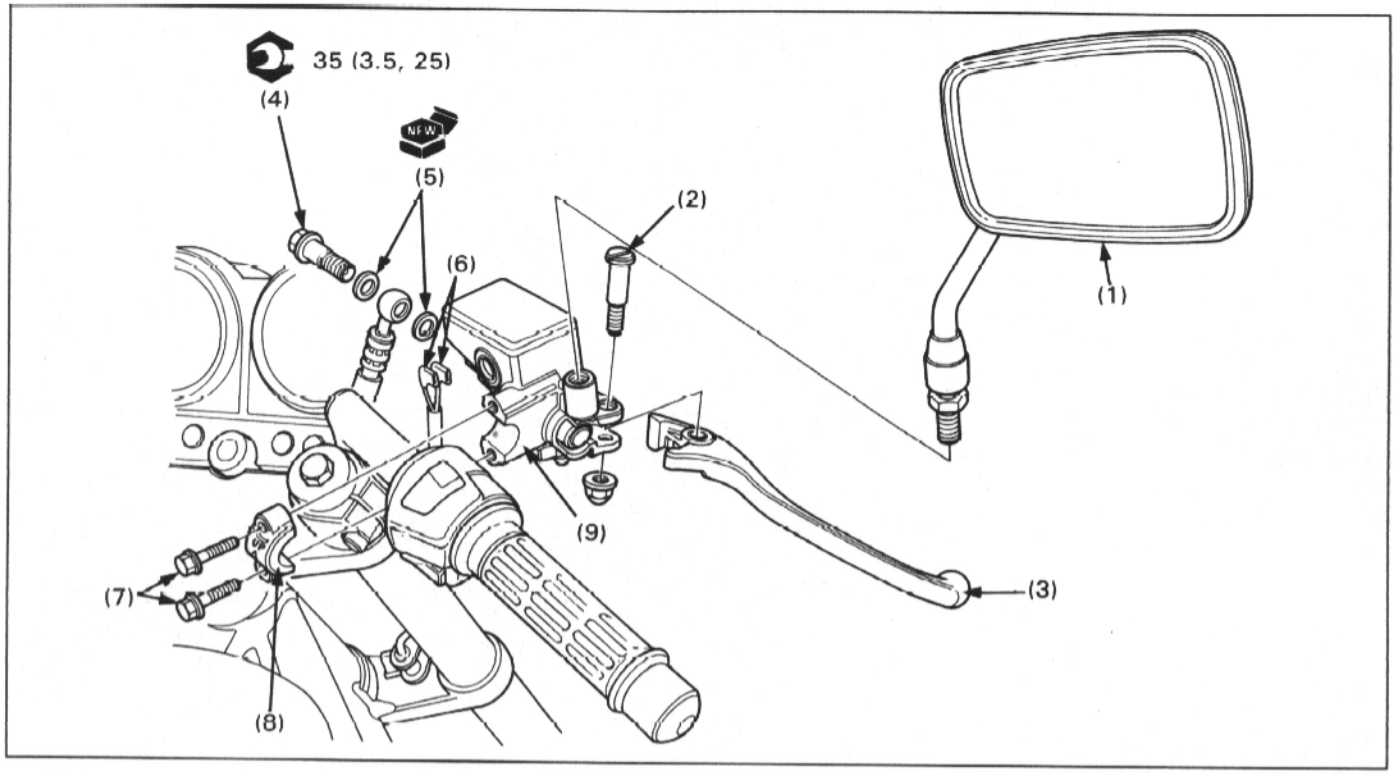

REQUISITE SERVICE

- Air bleeding (section 17 of the Common Service Manual)

	PROCEDURE	Q'ty	INSTALLATION REMARKS
	REMOVAL ORDER		• Installation is in the reverse order of removal.
(1)	Right rearview mirror	1	
(2)	Brake lever pivot bolt	1	
(3)	Brake lever	1	
(4)	Brake hose bolt	1	
(5)	Sealing washer	2	
(6)	Front brake light switch connector	2	
(7)	Master cylinder holder bolt	2	Thighten the upper bolt first, then the lower bolt.
(8)	Master cylinder holder	1	Face the UP mark upward.
(9)	Master cylinder assembly	1	Align the holder end with the punch mark no the handle-bar.

REAR MASTER CYLINDER REMOVAL/INSTALLATION

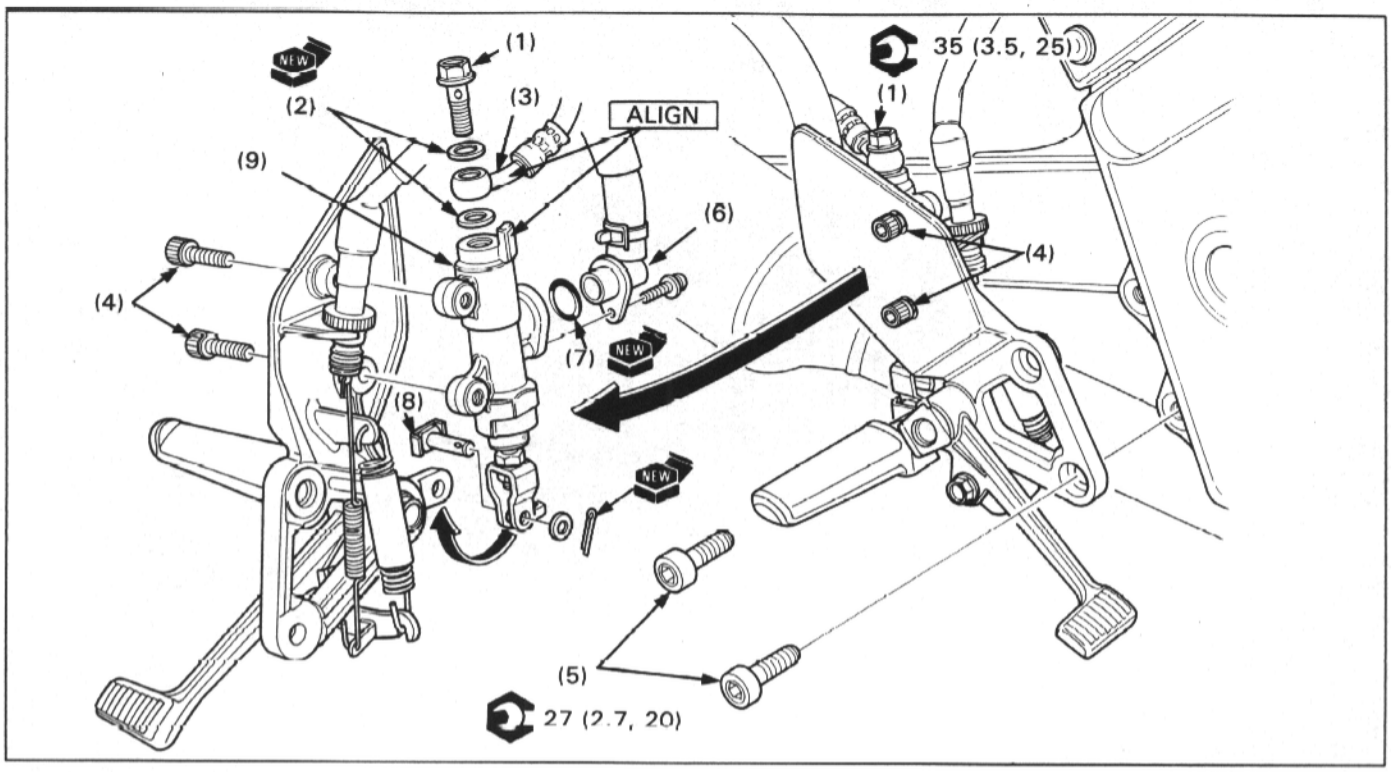

REQUISITE SERVICE

- Brake fluid replacement/air bleeding (section 17 of the Common Service Manual)

	PROCEDURE	Q'ty	REMARKS
	REMOVAL ORDER		• Installation is in the reverse order of removal.
(1)	Brake hose bolt	1	
(2)	Sealing washer	2	
(3)	Brake hose	1	
(4)	Master cylinder mounting bolt	2	Only loosen the bolts.
(5)	Footpeg bracket bolt	2	
(6)	Reservoir hose joint	1	
(7)	O-ring	1	
(8)	Push rod joint	1	Install it from the footpeg side with a new cotter pin.
(9)	Master cylinder assembly	1	Remove the mounting bolts (4) and master cylinder.

FRONT MASTER CYLINDER DISASSEMBLY/ASSEMBLY

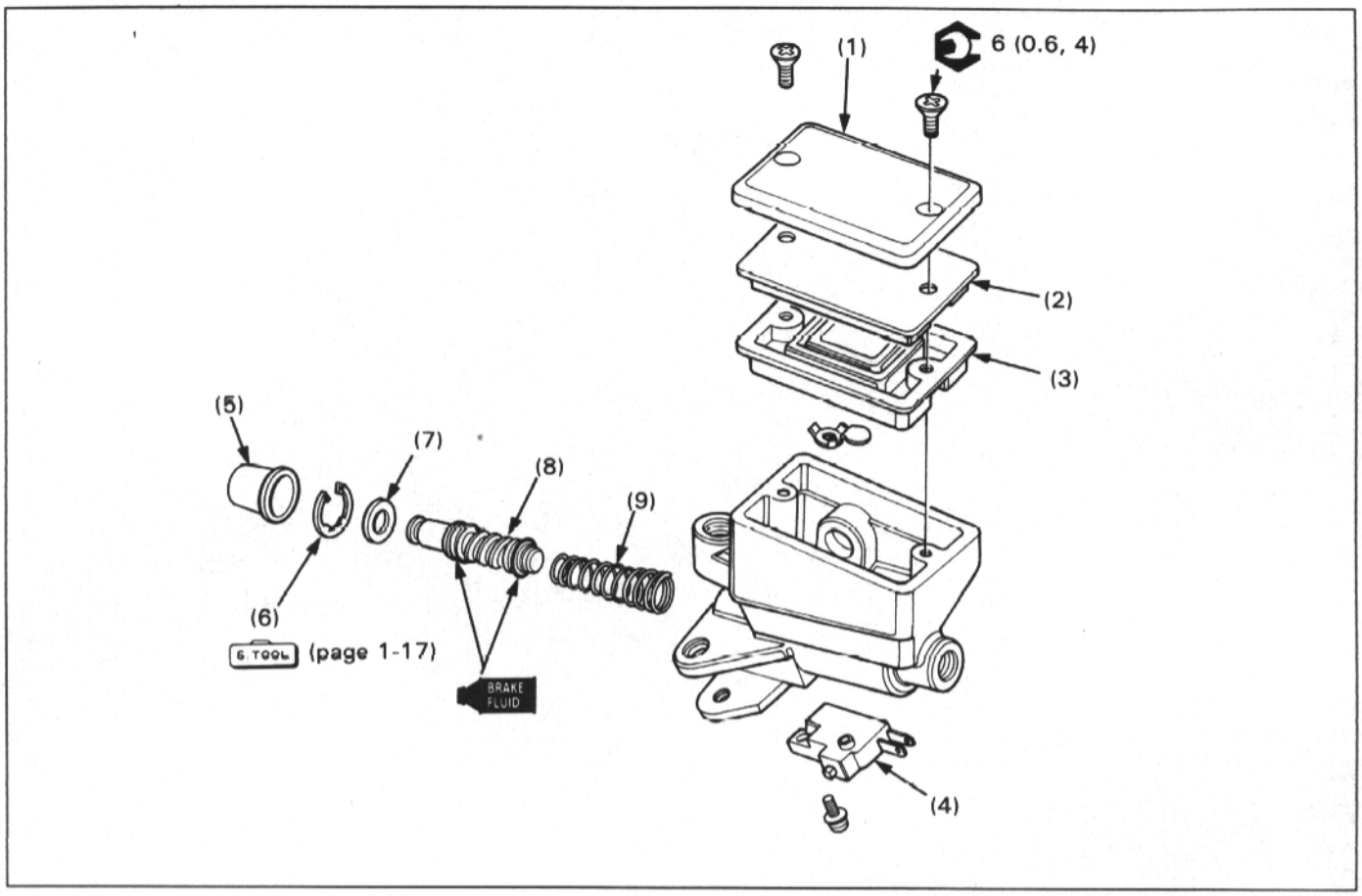

NOTE

- Replace the master piston, spring, cups, stopper plate, snap ring and boot as a set.
- The master cylinder piston, cups and spring must be installed as a set.

REQUISITE SERVICE

- Air bleeding (section 17 of the Common Service Manual)
- Front master cylinder removal/installation (page 13-8)

	PROCEDURE	Q'ty	ASSEMBLY REMARKS
	DISASSEMBLY ORDER		• Assembly is in the reverse order of disassembly.
(1)	Reservoir cover	1	
(2)	Diaphragm plate	1	
(3)	Diaphragm	1	
(4)	Front brakelight switch	1	
(5)	Boot	1	
(6)	Snap ring	1	**CAUTION:** **• Be certain the snap ring is fully seated in the groove.**
(7)	Stopper plate	1	
(8)	Master piston assembly	1	
(9)	Spring	1	Install it with its small coil end toward the piston.

REAR MASTER CYLINDER DISASSEMBLY/ASSEMBLY

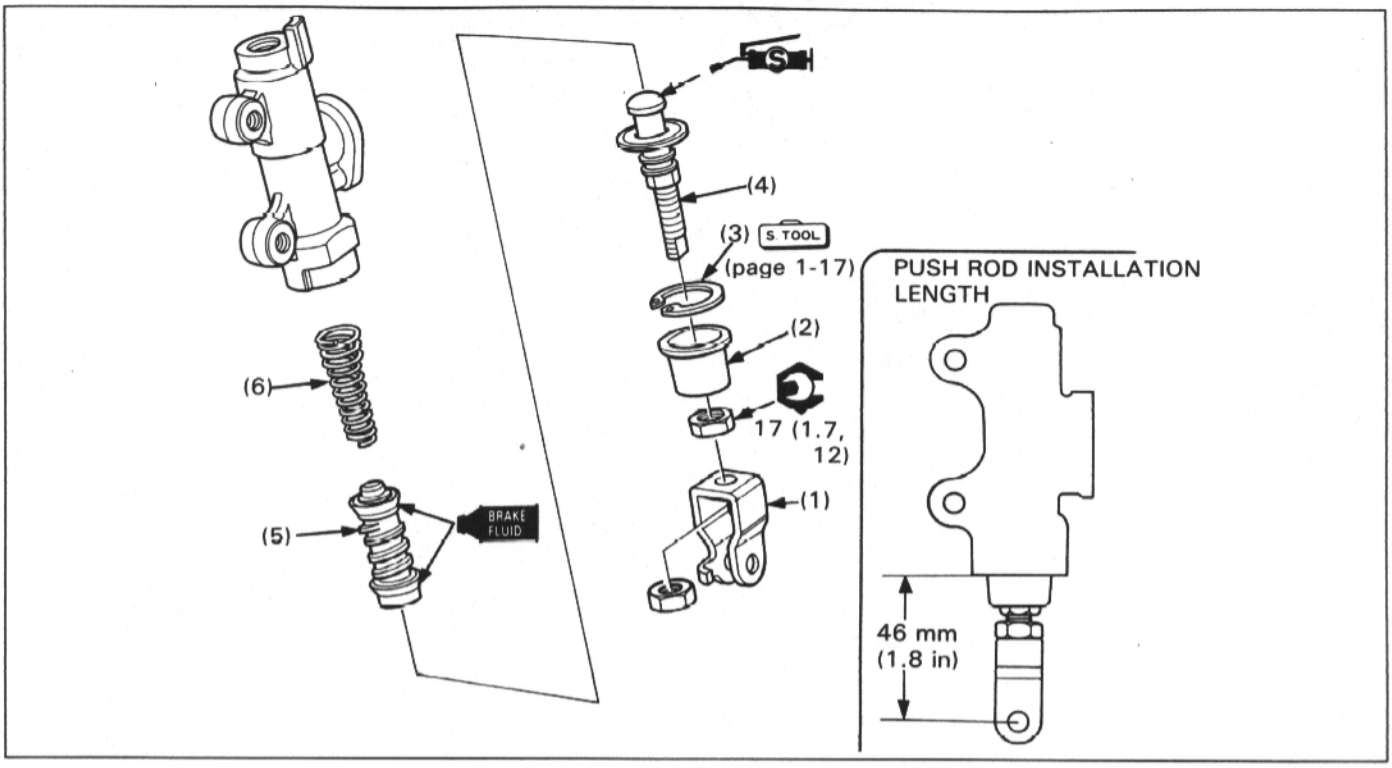

NOTE

- Replace the master piston, spring, cups, snap ring and boot as a set.
- The master cylinder piston, cups and spring must be installed as a set.

REQUISITE SERVICE

- Brake fluid replacement/air bleeding (section 17 of the Common Service Manual)
- Rear master cylinder removal/installation (page 13-9)

	PROCEDURE	Q'ty	ASSEMBLY REMARKS
	DISASSEMBLY ORDER		• Assembly is in the reverse order of disassembly.
(1)	Push rod joint	1	Adjust the joint installed length as shown. Face the joint tab side as shown.
(2)	Boot	1	
(3)	Snap ring	1	**CAUTION:** **• Be certain the snap ring is fully seated in the groove.**
(4)	Push rod	1	Apply silicone grease to the rod head.
(5)	Master piston assembly	1	
(6)	Spring	1	Install it with its small coil end toward the piston.

BRAKE PEDAL REMOVAL/INSTALLATION

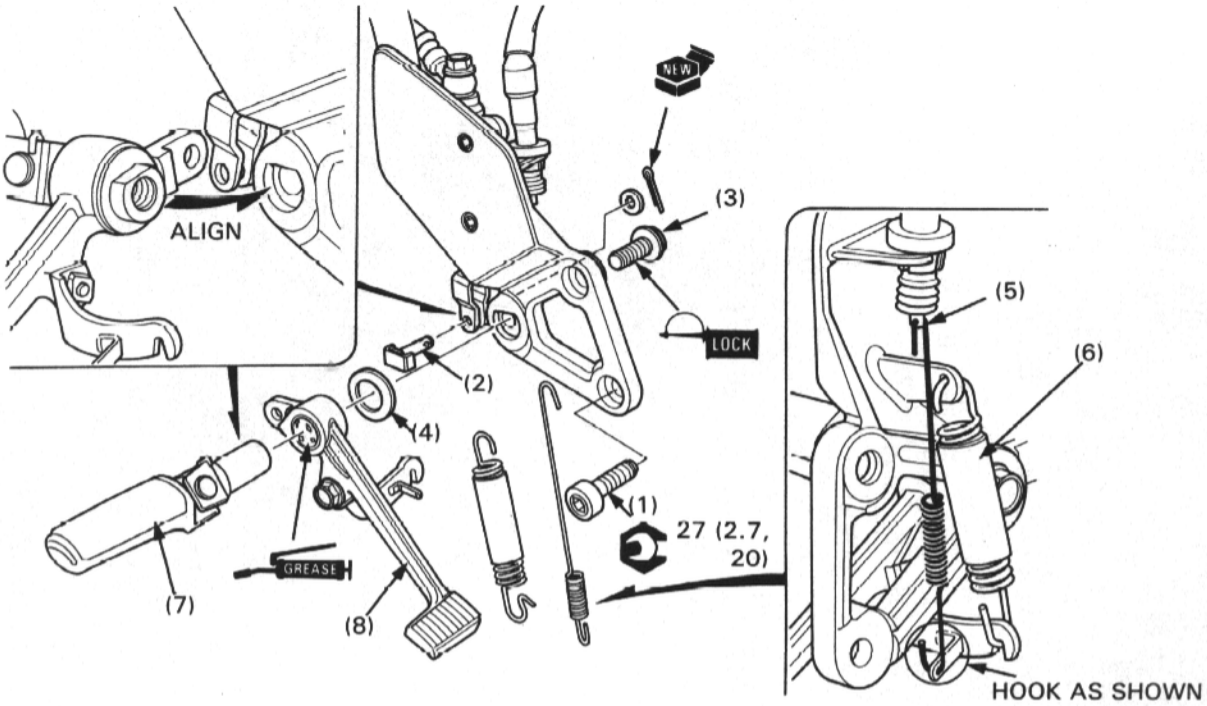

NOTE

- Adjust the brake pedal height after installation.

	PROCEDURE	Q'ty	REMARKS
	REMOVAL ORDER		• Installation is in the reverse order of removal.
(1)	Footpeg stay bolt	2	
(2)	Push rod joint	1	Install it from the footpeg side with a new cotter pin.
(3)	Footpeg mounting bolt	1	Apply a locking agent to the bolt threads.
(4)	Wave washer	1	
(5)	Rear brakelight switch spring	1	
(6)	Brake pedal return spring	1	
(7)	Right footpeg	1	Align the footpeg with the stay groove.
(8)	Brake pedal	1	Apply grease to the pedal pivot.

14. CHARGING SYSTEM/ALTERNATOR

SERVICE INFORMATION	14-1	CHARGING SYSTEM INSPECTION	14-4
SYSTEM LOCATION	14-2	REGULATOR/RECTIFIER	14-5
CIRCUIT DIAGRAM	14-2	ALTERNATOR	14-7
TROUBLESHOOTING	14-3		

SERVICE INFORMATION

⚠WARNING

- **The battery gives off explosive gases; keep sparks, flames, and cigarettes away. Provide adequate ventilation when charging or using the battery in an enclosed space.**
- **The battery contains sulfuric acid (electrolyte). Contact with skin or eyes may cause severe burns. Wear protective clothing and a face shield.**
  - **— If electrolyte gets on your skin, flush with water.**
  - **— If electrolyte gets in your eyes, flush with water for at least 15 minutes and call a physician immediately.**
- **Electrolyte is poisonous. If swallowed, drink large quantities of water or milk and follow with milk of magnesia or vegetable oil and call a physician.**
- **KEEP OUT OF REACH OF CHILDREN.**

- Always turn off the ignition switch before disconnecting any electrical component.

CAUTION

- **Some electrical components may be damaged if terminals or connectors are connected or disconnected while the ignition switch is ON and current is present.**

- For extended storage, remove the battery, give it a full charge, and store it in a cool, dry place.
- For battery remaining in a stored motorcycle, disconnect the negative battery cable from the battery terminal.

NOTE

- The maintenance free battery must be replaced when it reaches the end of its service life.

CAUTION

- **The battery caps should not be removed. Attempting to remove the sealing caps from the cells may damage the battery.**

- Battery can be damaged if overcharged or undercharged, or if left to discharge for long periods. These same conditions contribute to shortening the "life span" of the battery. Even under normal use, the performance of battery deteriorates after 2—3 years.
- Battery voltage may recover after battery charging, but under heavy load, battery voltage will drop quickly and eventually die out. For this reason, the charging system is often suspected to be the problem. Battery overcharge often results from problems in the battery itself, which may appear to be an overcharge symptom. If one of the battery cells is shorted and battery voltage does not increase, the regulator/rectifier supplies excess voltage to the battery. Under these conditions, the electrolyte level goes down quickly.
- Before troubleshooting the charging system, check for proper use and maintenance of the battery. Check if the battery is frequently under heavy load, such as having the headlight and taillight ON for long periods of time without riding the motorcycle.
- The battery will self-discharge when the motorcycle is not in use. For this reason, charge the battery every two weeks to prevent sulfation from forming.
- Filling a new battery with electrolyte will produce some voltage, but in order to achieve its maximum performance, always charge the battery. Also, the battery life is lengthened when it is initial-charged.
- When checking the charging system, always follow the steps in the troubleshooting flow chart (page 14-3).
- For battery testing/charging, refer to section 22 of the Common Service Manual.
- For charging system location, see page 14-2.

SYSTEM LOCATION

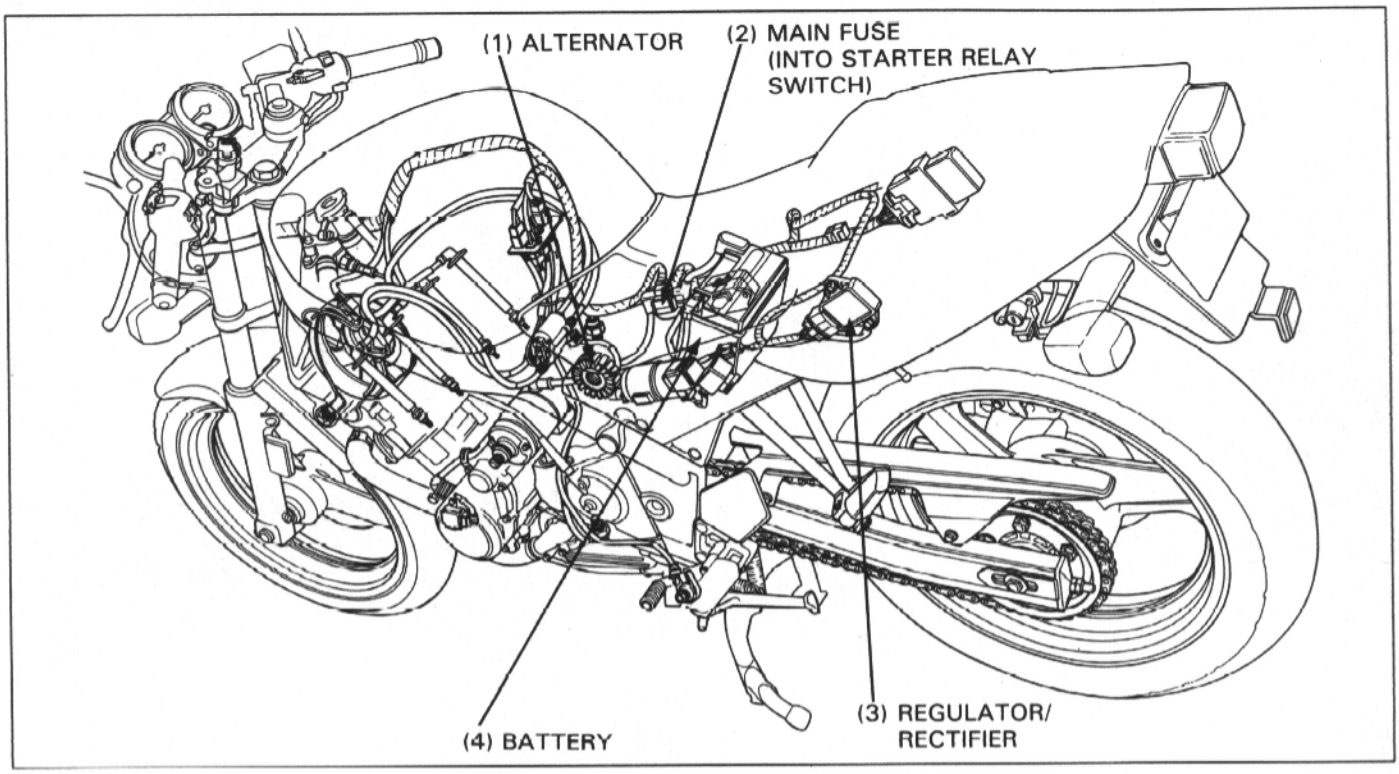

CIRCUIT DIAGRAM

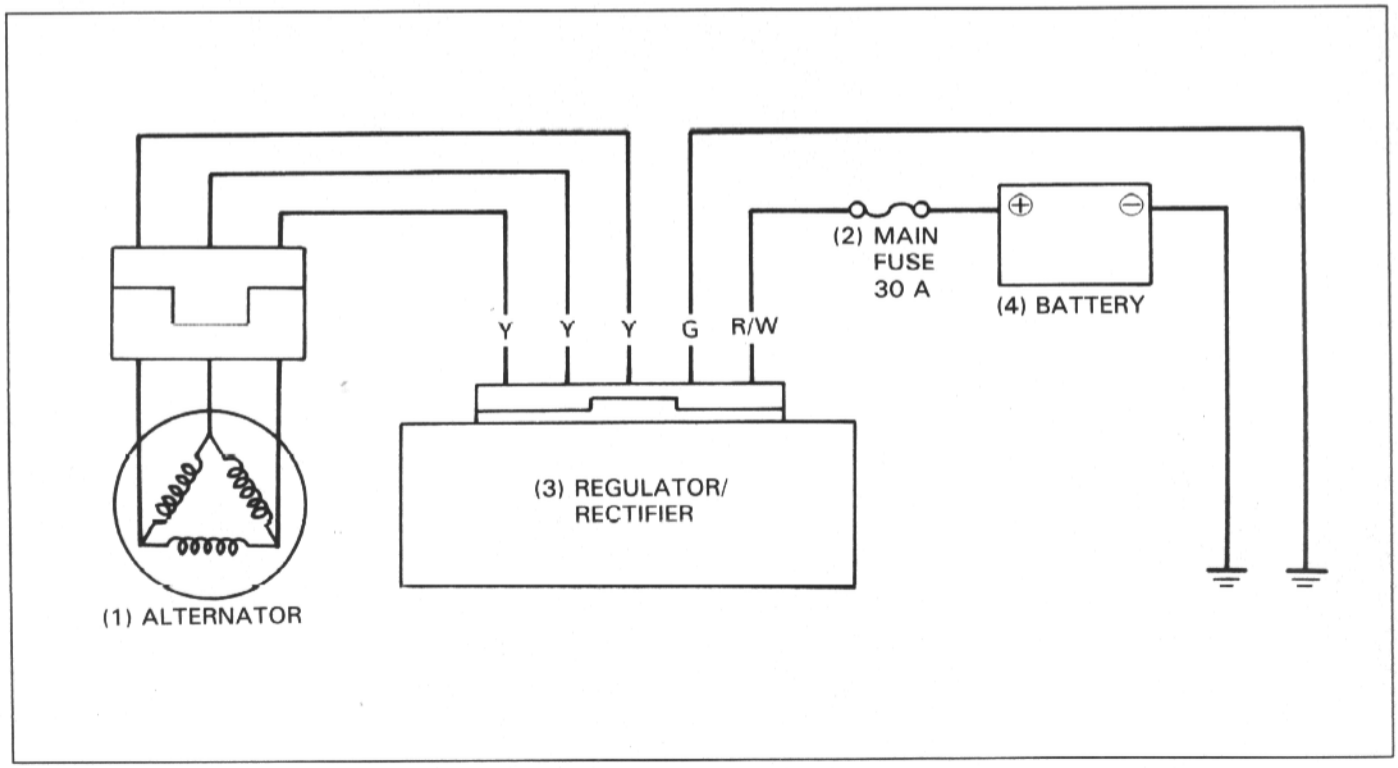

TROUBLESHOOTING

Battery overcharging

- Faulty regulator/rectifier

Battery undercharging

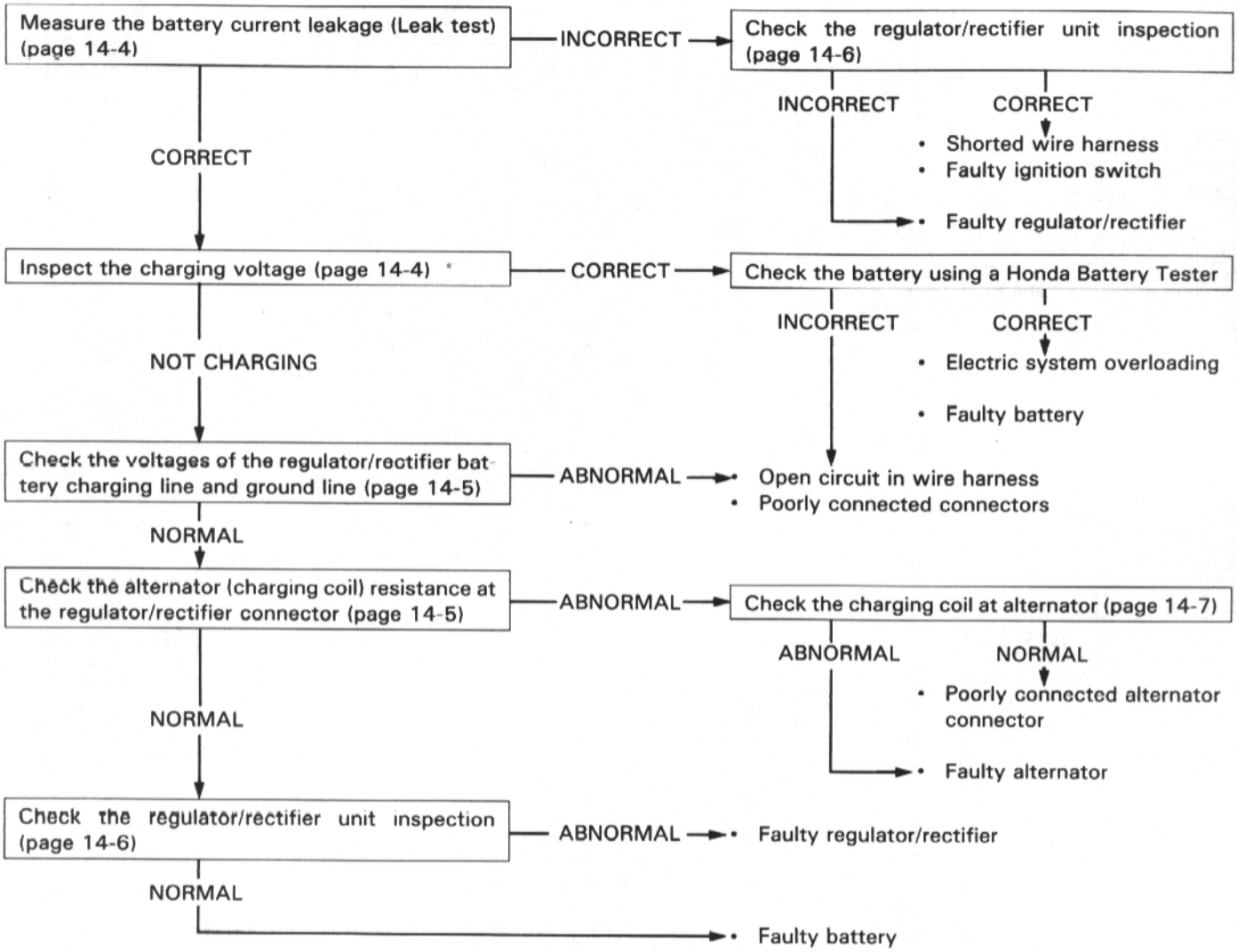

CHARGING SYSTEM INSPECTION

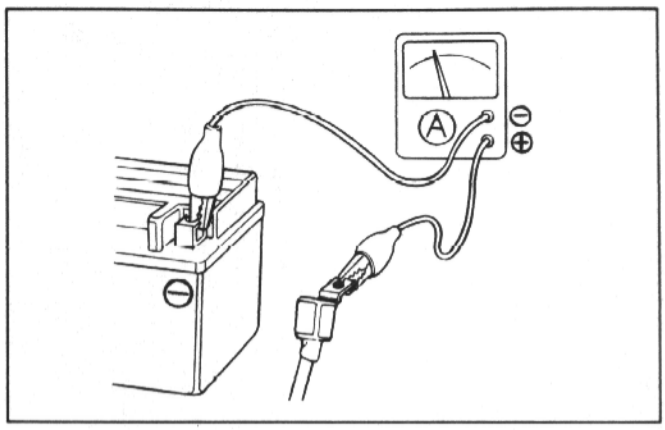

LEAK TEST

Turn off the ignition switch, and disconnect the ground (−) cable from the battery.

Connect the ammeter (+) probe to the ground cable and the ammeter (−) probe to the battery (−) terminal.

With the ignition switch off, measure the leakage current.

NOTE

- When measuring current using a tester, set it to a high range, and then bring the range down to an appropriate level. Current flow larger than the range selected may blow out the fuse in the tester.
- While measuring current, do not turn the ignition on. A sudden surge of current may blow out the fuse in the tester.

SPECIFIED CURRENT LEAKAGE: 0.01 mA max.

If current leakage exceeds the specified value, a shorted circuit is likely.
Locate the short by disconnecting connections one by one and measuring the current.

CHARGING VOLTAGE INSPECTION

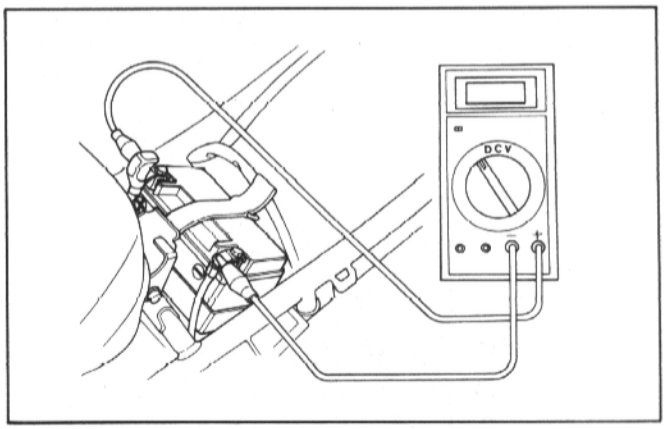

NOTE

- Before performing this test, be sure that the battery is fully charged whose voltage between its terminals is greater than 12.8 V.

Start the engine and warm it up to operating temperature, then turn the ignition switch OFF.

Connect a multitester between the battery terminals.

S. TOOL

DIGITAL MULTITESTER	**07411−0020000 or KS−AHM−32−003 (U.S.A. only)**

Disconnect the starter relay switch connector and remove the main fuse (30 A). Reconnect the connector onto the relay switch.

Connect the ammeter as shown.

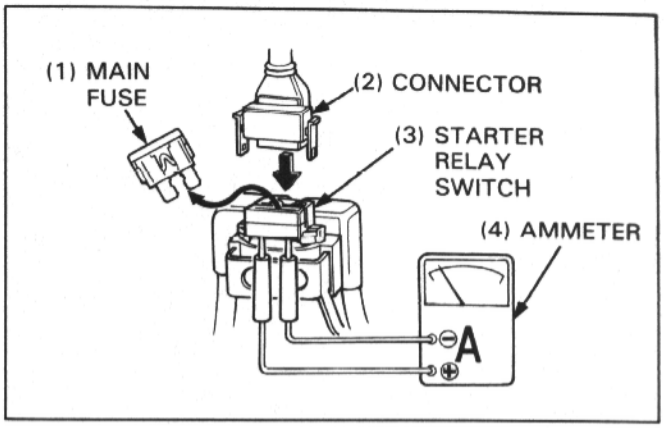

CAUTION

- **Be careful not to short any tester probes.**
- **Although the current could be measured when the ammeter is connected between the battery positive terminal and the positive cable, a sudden surge of current to the starter motor could damage the ammeter.**
- **Always turn the ignition off when conducting the test. Disconnecting the ammeter or wires when current is flowing may damage the ammeter.**

Start the engine and increase the engine speed gradually.

REGULATED VOLTAGE: 14.0—16.0 V/5,000 rpm
CHARGING CURRENT: 0—8 A/5,000 rpm

REGULATOR/RECTIFIER

WIRE HARNESS INSPECTION

Remove the rear fairing (page 2-2).
Disconnect the regulator/rectifier connector and measure the following between connector terminals of the wire harness side.

Item	Terminals	Specification
Battery charging line	Red/White (+) and ground (−)	Battery voltage should resister.
Ground line	Green and ground	Continuity exist.
Charging coil line	Yellow and Yellow	0.1—0.5 Ω (20°C/68°F)

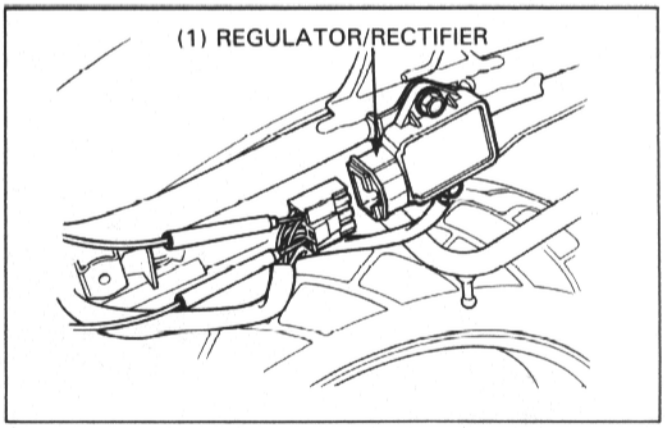

UNIT INSPECTION

Remove the regulator/rectifier.

Inspect the regulator/rectifier unit by measuring the resistance between the terminals.

NOTE

- There are two types of the regulator/rectifier as shown. Select the proper resistance chart.
- Resistance value will not be accurate if the probes touch your finger.
- Use the following recommended multitester. Using another manufacturer's equipment may not allow you to obtain the specified values. This is due to the characteristic of semiconductors, which have different resistance value depending on the applied voltage.

  SPECIFIC MULTITESTER:
  — 07411—0020000 (KOWA Digital type)
  — KS—AHM—32—003 (KOWA Digital type; U.S.A. only)
  — 07308—0020001 (SANWA Analogue type)
  — TH—5H (KOWA Analogue type)
  - Select the following range.
    SANWA tester: x kΩ
    KOWA tester: x 100 Ω

- When using the KOWA multitester, remember that all readings should be multiplied by 100.
- An old, weak multitester battery could cause inaccurate readings. Check the battery if the multitester registers incorrectly.

Replace the regulator/rectifier unit if the resistance value between the terminals is abnormal.

Install the regulator/rectifier in the reverse order of removal.

NOTE

- Install the ground wire onto the regulator/rectifier lower mounting bolt properly as shown.

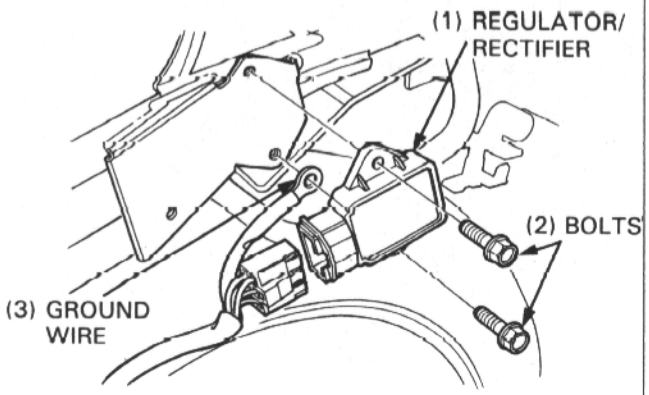

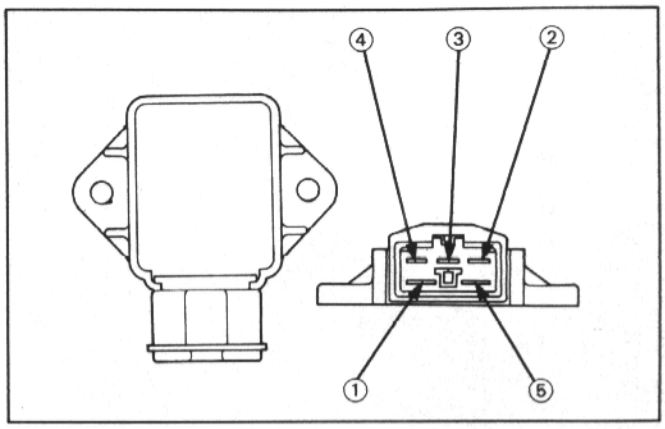

Unit: kΩ

+ / −	①	②	③	④	⑤
①		∞	∞	∞	∞
②	0.5—10		30—500	30—500	10—200
③	0.5—10	30—500		30—500	10—200
④	0.5—10	30—500	30—500		10—200
⑤	1—20	0.5—10	0.5—10	0.5—10	

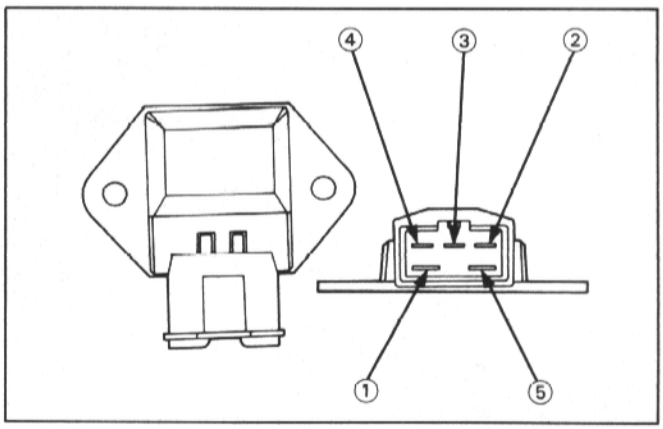

Unit: kΩ

+ / −	①	②	③	④	⑤
①		∞	∞	∞	∞
②	0.5—10		30—500	30—500	10—200
③	0.5—10	∞		∞	∞
④	0.5—10	∞	∞		∞
⑤	1—20	0.5—10	0.5—10	0.5—10	

ALTERNATOR

CHARGING COIL INSPECTION

NOTE

- It is not necessary to remove the alternator from the engine.

Disconnect the alternator 3P black connector and measure the resistance between connector terminals (Yellow and Yellow).

STANDARD: 0.1—0.5 Ω (20°C/68°F)

Check for continuity between the Yellow wire terminal and ground. There should be no continuity.

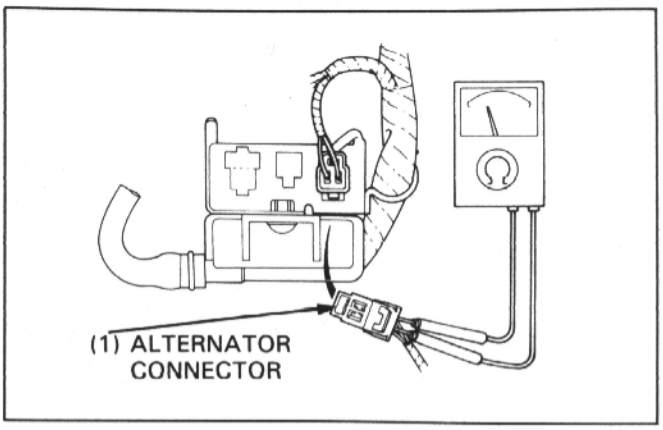

STATOR COIL/FLYWHEEL REMOVAL/ INSTALLATION

Remove the following:
- right crankcase cover (page 9-2).
- flywheel bolt.
- washer.
- flywheel.
- woodruff key.

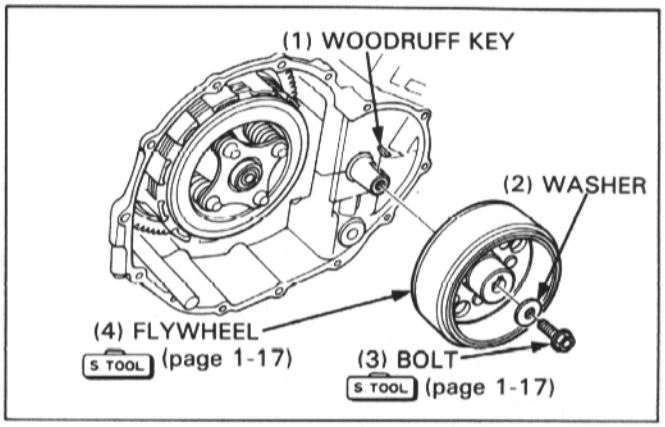

Remove the bolt and stator wire harness clamp.
Remove the bolts and stator.

Apply a locking agent to the stator mounting bolt threads.
Install the stator and tighten the bolts securely.
Set the wire harness grommet into the cover groove and install the clamp.

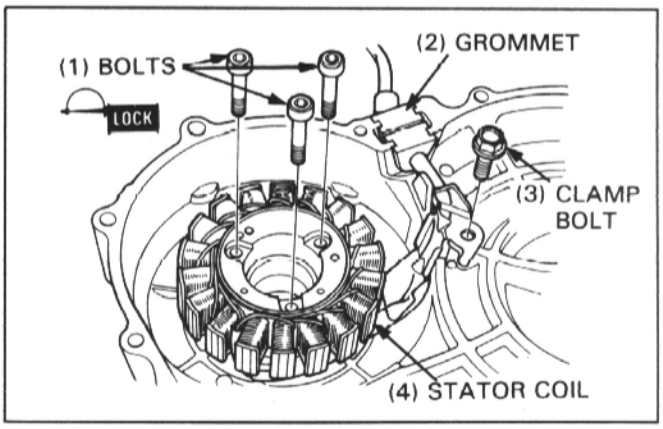

Clean any material off the crankshaft.

Install the following:
- woodruff key.
- flywheel.
- washer.
- flywheel bolt.

TURQUE: 85 N·m (8.5 kg-m, 61 ft-lb)

- right crankcase cover (page 9-2)

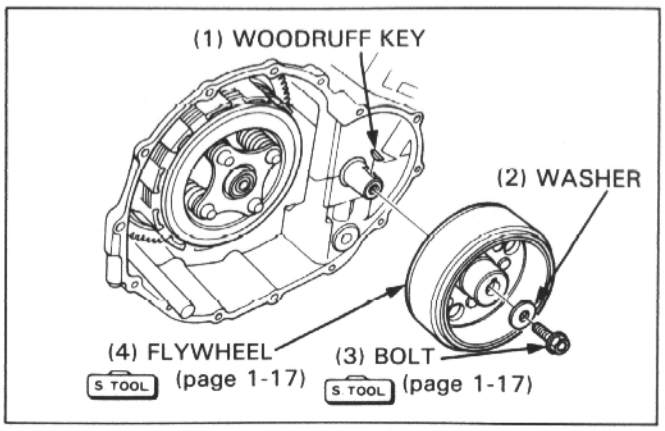

15. IGNITION SYSTEM

SERVICE INFORMATION	15-1	IGNITION COIL	15-6
SYSTEM LOCATION	15-2	PULSE GENERATOR	15-8
CIRCUIT DIAGRAM	15-2	SIDE STAND SWITCH	15-8
TROUBLESHOOTING	15-3	IGNITION TIMING	15-9
IGNITION SYSTEM INSPECTION	15-6		

SERVICE INFORMATION

- When checking the ignition system, always follow the steps in the troubleshooting flow chart (page 15-3).
- The transistorized ignition system use an electrically controlled ignition timing system. No adjustments can be made to the ignition timing.
- A rough diagnosis can be made by identifying the cylinder whose spark timing is incorrect.
- The spark unit may be damaged if dropped. Also, if the connector is disconnected when current is flowing, the excessive voltage may damage the unit. Always turn off the ignition switch before servicing.
- A faulty ignition system is often related to poorly connected connectors. Check those connections before proceeding.
- Make sure the battery is adequately charged. Using the starter motor with a weak battery results in a slower engine cranking speed as well as no spark at the spark plugs.
- Use spark plugs of the correct heat range. Using spark plugs with an incorrect heat range can damage the engine. Refer to section 2 of the Common Service Manual.
- For neutral switch inspection, refer to section 25 of the Common Service Manual; for switch location, see page 15-2 of this manual (SYSTEM LOCATION).
- For the ignition switch and engine stop switch inspection, check for continuity on the continuity chart of the WIRING DIAGRAM, page 18-1. Disconnect each switch connector inside the headlight case (page 1-19) and check it.
- For side stand inhibitor system instructions, see page 15-5 "NOTE" of the troubleshooting.

SYSTEM LOCATION

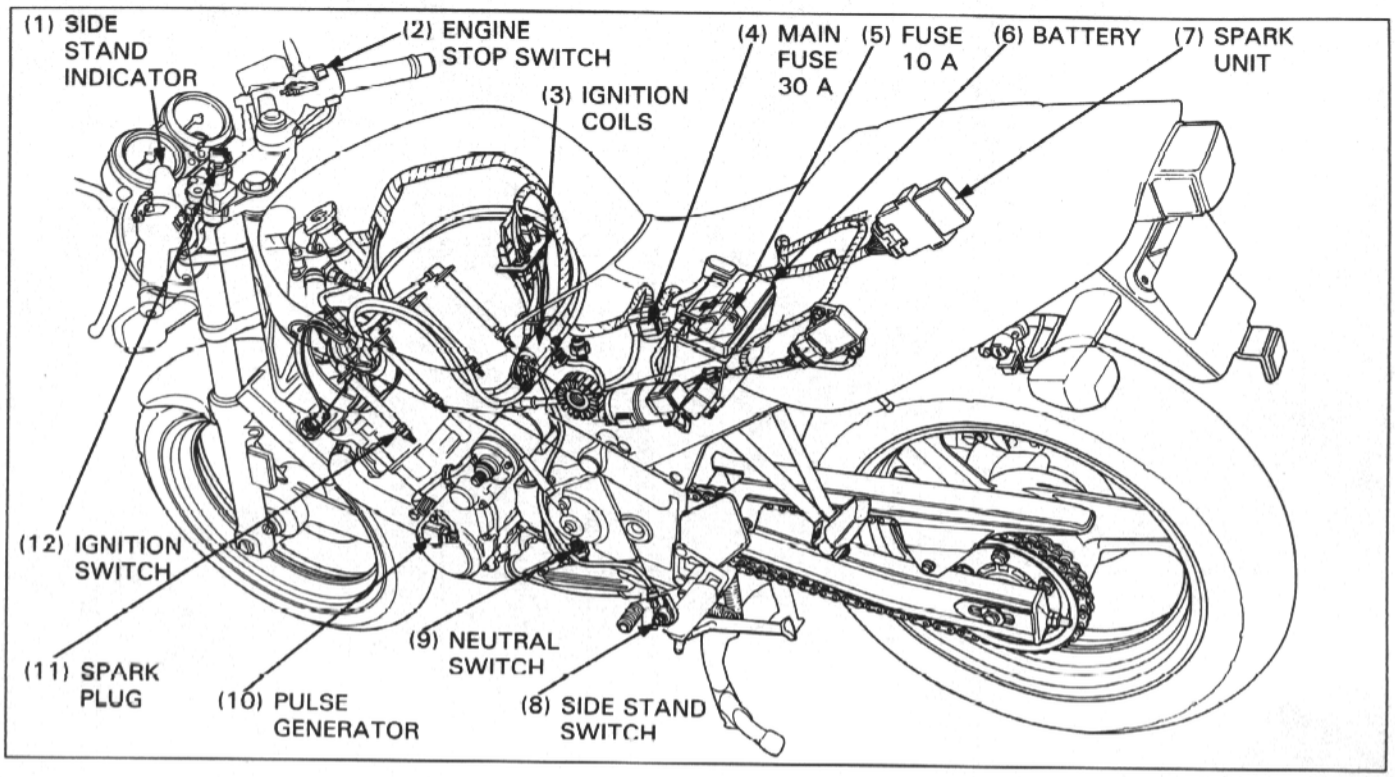

CIRCUIT DIAGRAM

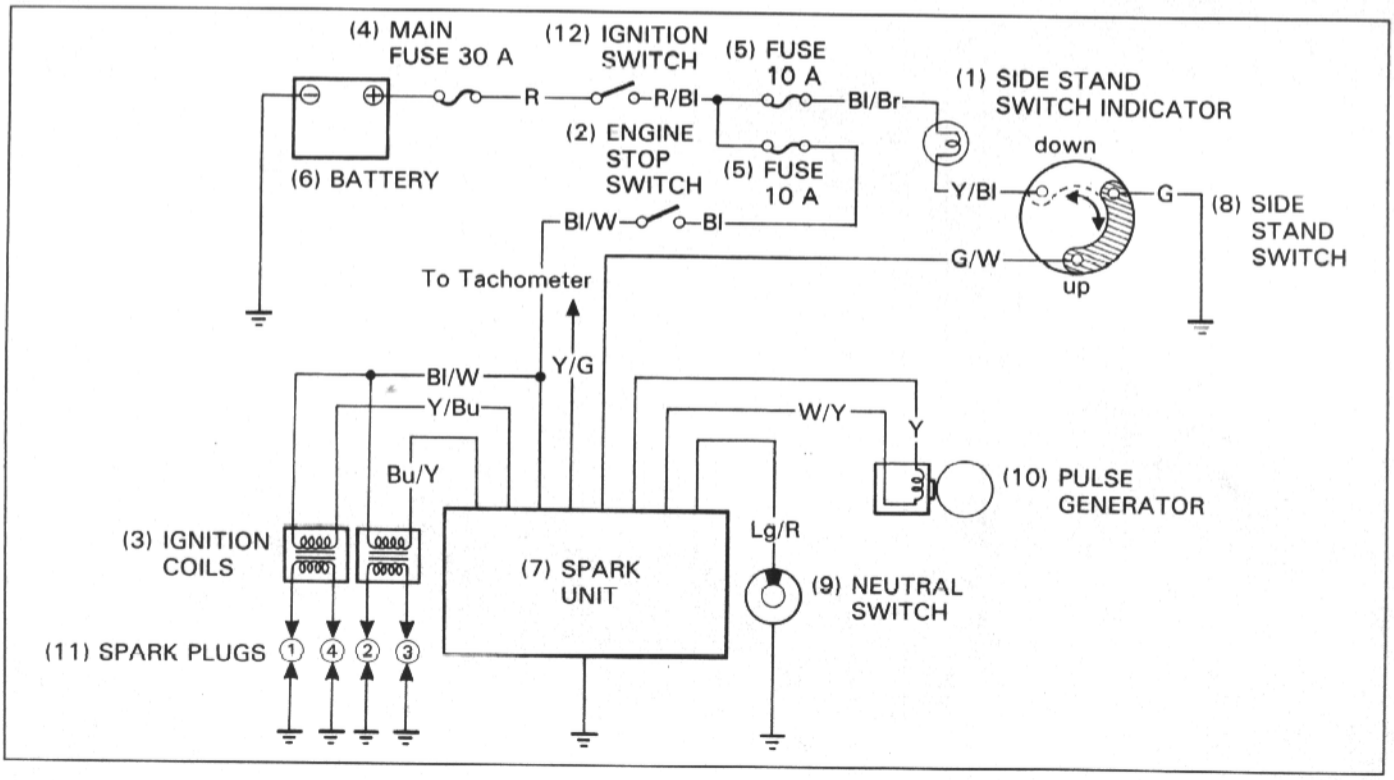

TROUBLESHOOTING

No spark at all plugs (Faulty input system)

- If there is no spark at all plugs, the problem could be at the input of the ignition system (pulse generator, power input circuit of the spark unit, neutral switch, side stand switch or spark unit).

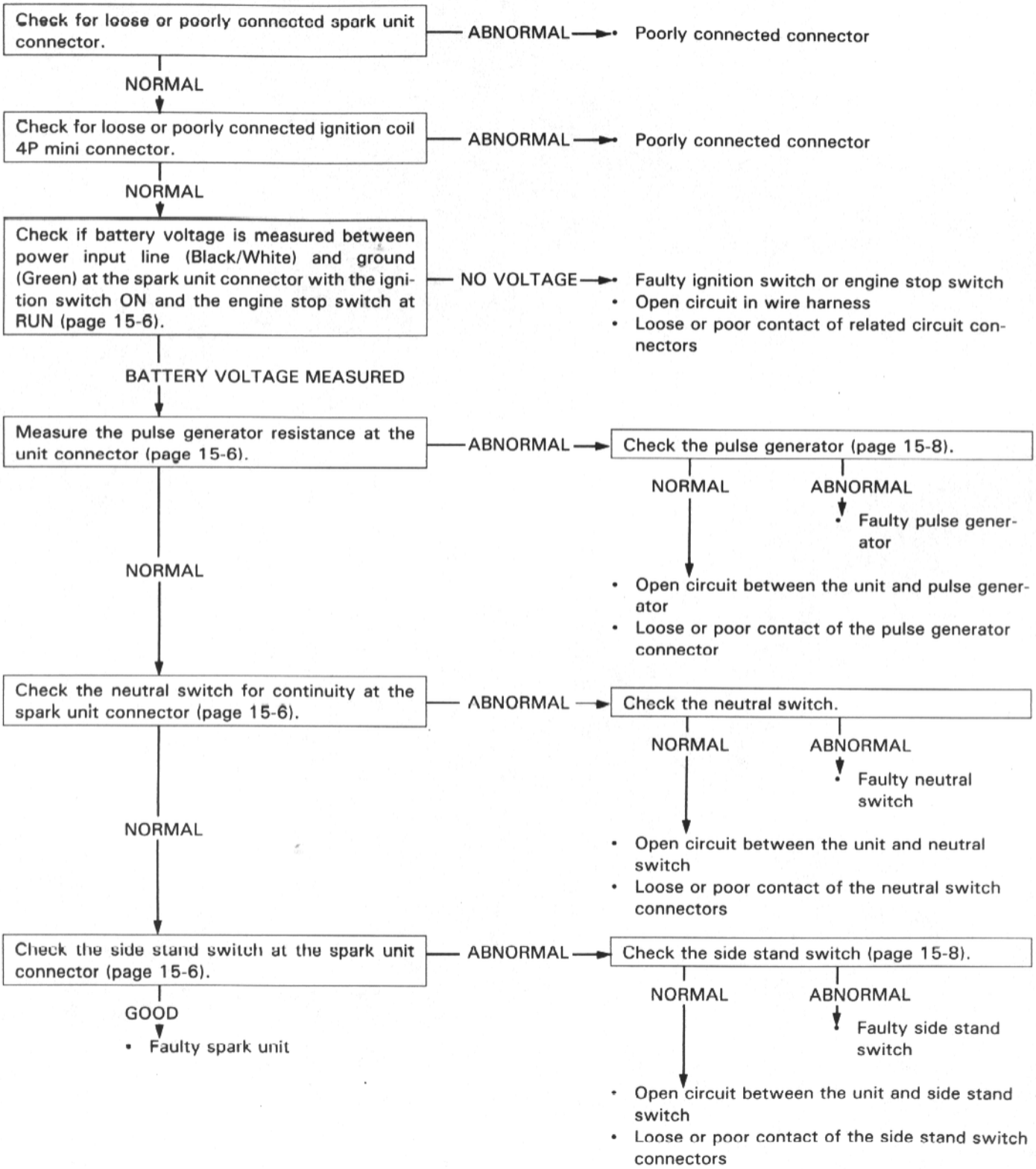

No spark at either ignition group

- If there is no spark at either group, the problem is suspected in the primary coil side of the ignition system (ignition coil, or unit and ignition coil circuit).

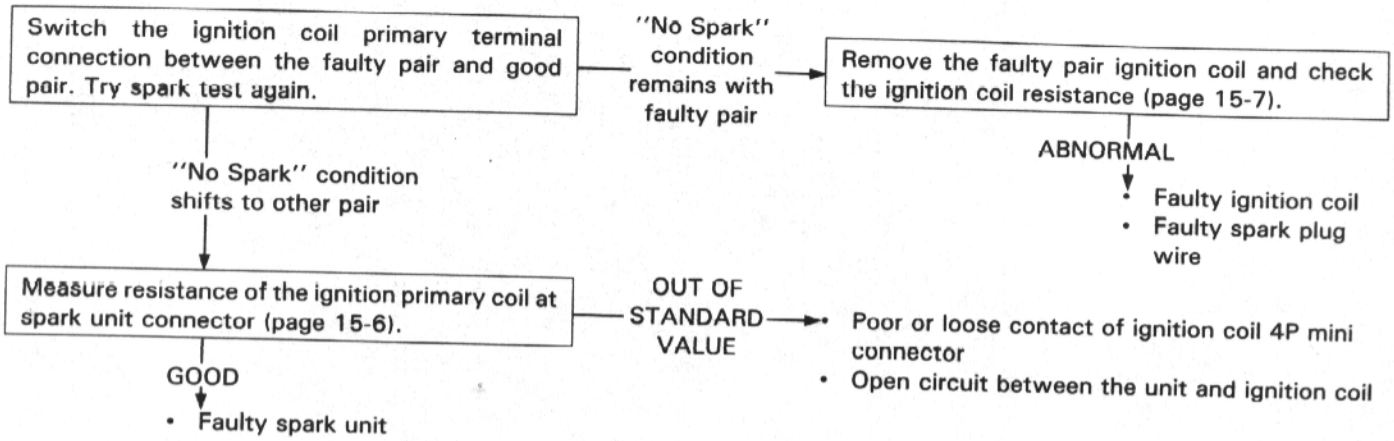

No spark at one plug (Trouble in secondary coil side)

- Faulty spark plug is most likely.

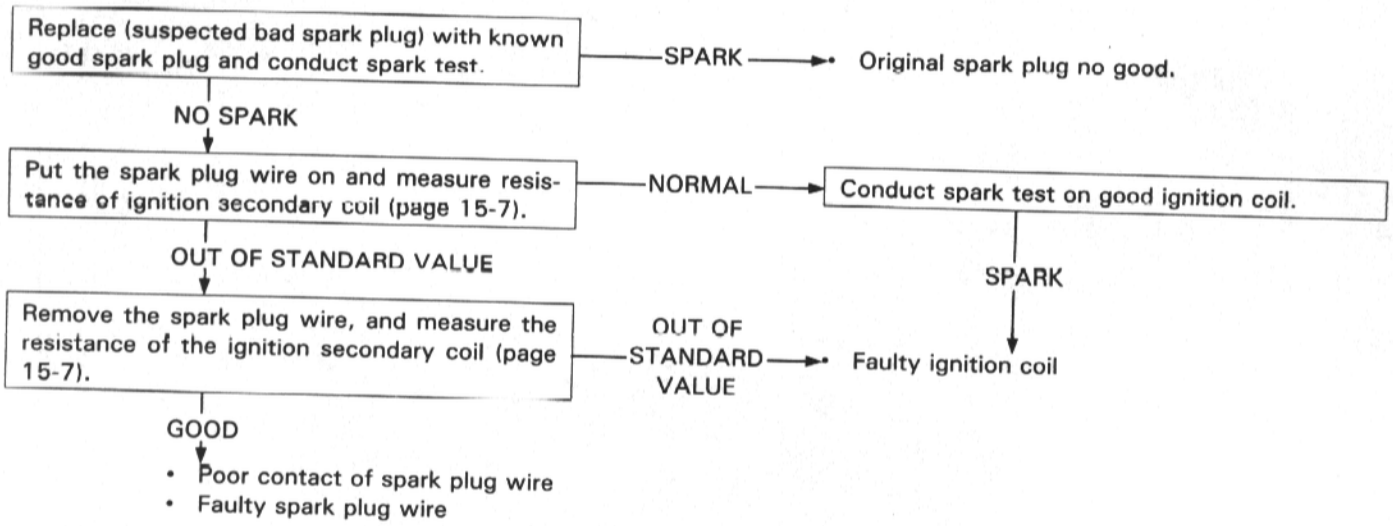

Engine starts, but side stand switch does not function at all.

NOTE

The side stand switch should function as follows:
- When the transmission is shifted into a gear from neutral with the side stand down, the ignition shuts off and the engine will stop.
- When in neutral, the neutral switch line (a) of the spark unit is connected to ground via the side stand switch. When the side stand is up, the side stand switch line (b) of the spark unit passes to ground via the side stand switch. The spark unit monitors lines (a) and (b), and provides spark only when one or both of those lines is connected to ground via the neutral switch or the side stand switch.

Check the side stand indicator for function. — NORMAL → • Open circuit in Green/White wire

ABNORMAL ↓

Check the side stand switch (page 15-8). — NORMAL →
- Loose or poor contact of related connectors
- Open circuit in Green/White wire
- Burnt indicator bulb

ABNORMAL ↓
- Faulty side stand switch

IGNITION SYSTEM INSPECTION

CIRCUIT INSPECTION

NOTE

- Follow the steps in the troubleshooting flow chart for servicing.

Remove the seat.
Disconnect the connector from the spark unit and conduct these tests at the connector.

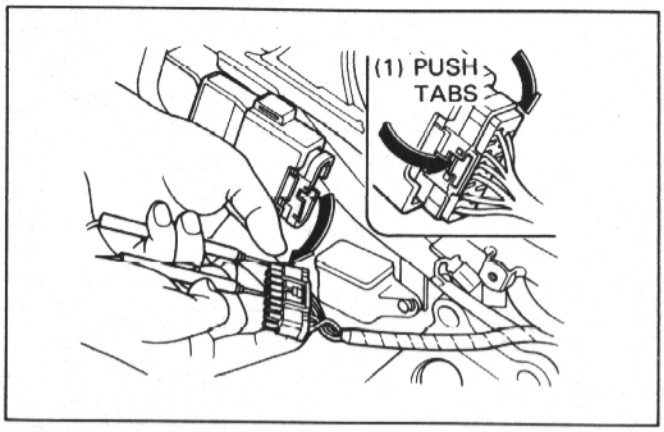

Item	Terminals	Specification
Power source input line	Black/White (+) and ground (−)	Battery voltage should resister with the ignition switch ON and the engine stop switch at RUN.
Pulse generator coil	Yellow and White/Yellow	340−420 Ω (20°C/68°F)
Ignition primary coil	No. 1−4: Black/White and Yellow/Blue No. 2−3: Black/White and Blue/Yellow	2−4 Ω (20°C/68°F)
Neutral switch line	Light Green/Red and ground	Continuity into neutral No continuity in any gear except neutral
Side stand switch line	Green/White and ground	Continuity with the side stand up No continuity with the side stand down
Ground line	Green and ground	Continuity

IGNITION COIL

INSPECTION

Disconnect the ignition coil 4P mini connector under the fuel tank and measure the primary coil resistance between the terminals below.

- No. 1−4 primary coil: Black/White and Yellow/Blue
- No. 2−3 primary coil: Black/White and Blue/Yellow

STANDARD: 2−4 Ω (20°C/68°F)

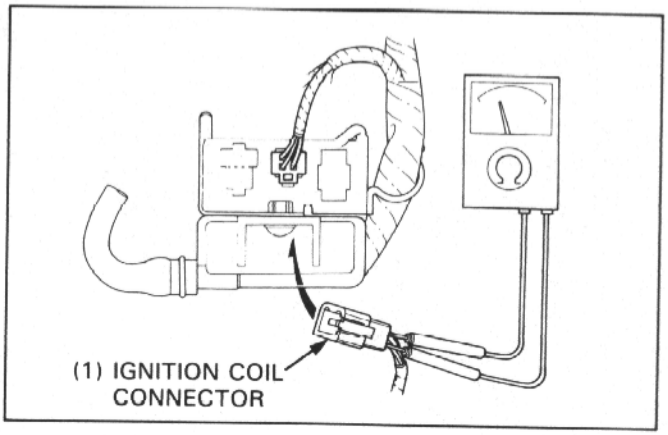

Disconnect the spark plug caps from the spark plugs and measure the secondary coil resistance with the spark plug wire at each ignition pair:

No. 1—4 secondary coil: between ENG 1 and ENG 4 wire
No. 2—3 secondary coil: between ENG 2 and ENG 3 wire

STANDARD: 23—27 kΩ (20°C/68°F)

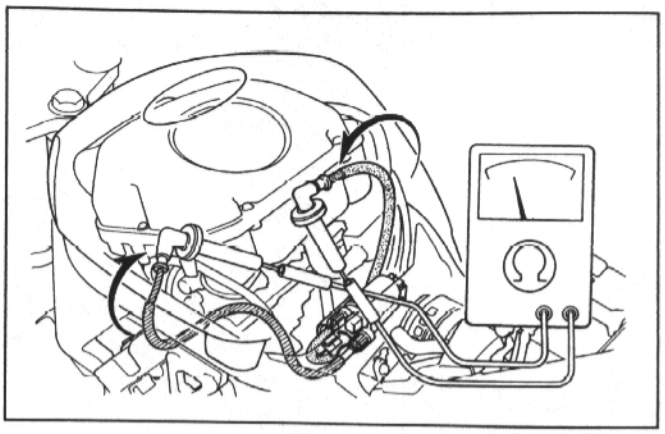

Remove the ignition coil, disconnect the spark plug wires and measure the primary and secondary coil resistances as shown.

STANDARDS:
Primary coil: 2—4 Ω (20°C/68°F)
Secondary coil: 13—17 kΩ (20°C/68°F)

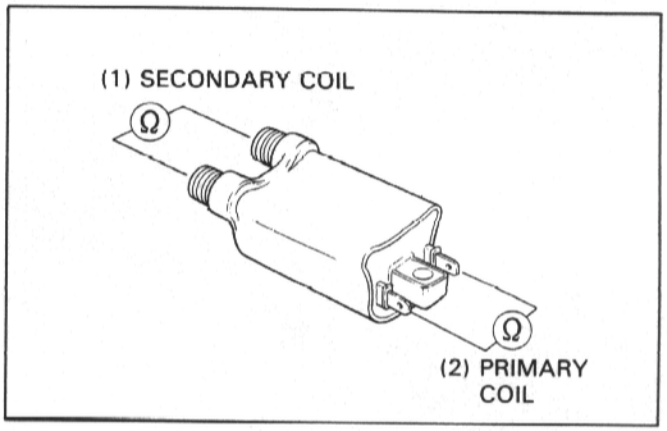

REMOVAL/INSTALLATION

Disconnect the ignition coil 4P mini connector under the fuel tank.
Remove the bolts and collars.

Disconnect the ignition primary terminals from the coils and remove the ignition coil as an assembly.

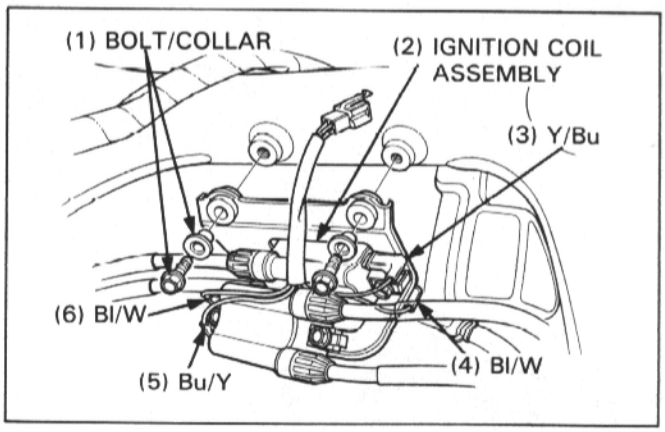

Remove bolts and No. 2—3 ignition coil first, then remove bolts and No. 1—4 ignition coil.

Install the ignition coils in the reverse order of removal.

NOTE

- Connect the spark plug wire properly as shown (right).
- Connect the ignition coil primary terminals properly as shown above.

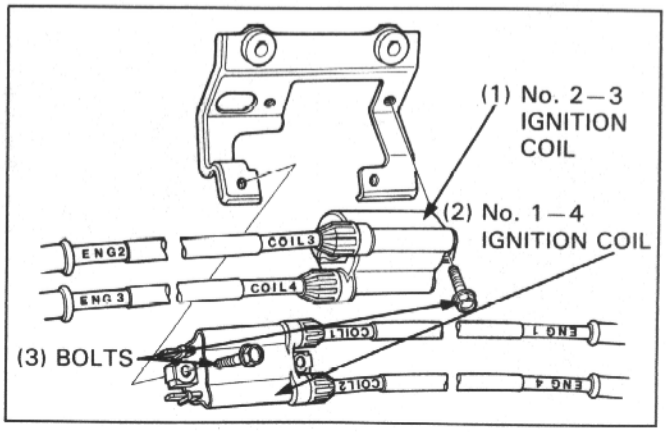

PULSE GENERATOR

INSPECTION

NOTE

- It is not necessary to remove the pulse generator from the engine.

Disconnect the pulse generator 2P mini blue connector under the fuel tank and measure the resistance between White/Yellow and Yellow terminals.

STANDARD: 340—420 Ω (20°C/68°F)

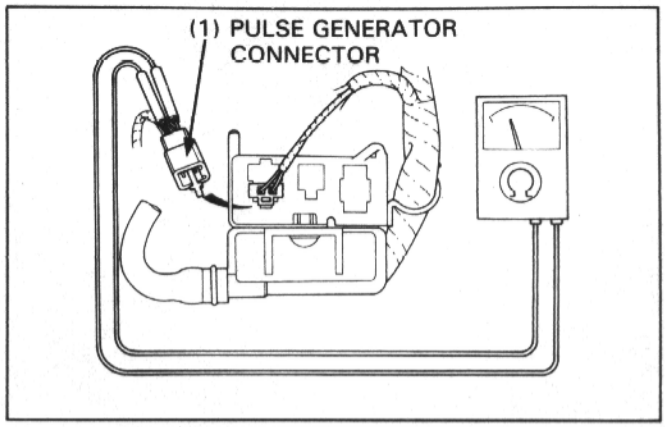

REMOVAL/INSTALLATION

Remove the left crankcase cover (page 16-8).
Remove the bolts and pulse generator.

Install the pulse generator and wire clamp, and tighten the bolts securely.
Set the wire harness grommet into the cover groove.

Install the left crankcase cover (page 16-8).

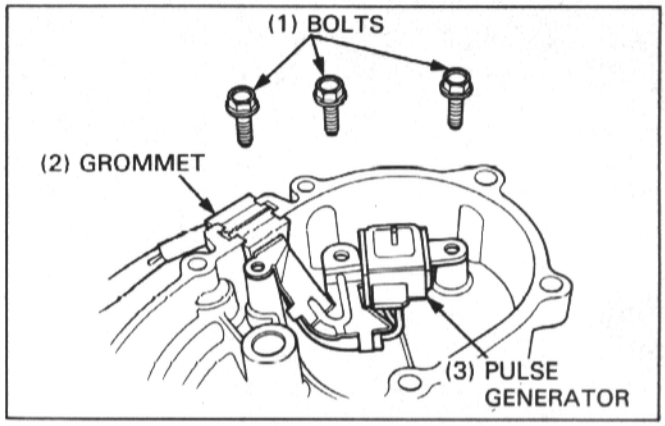

SIDE STAND SWITCH

INSPECTION

Disconnect the side stand 3P mini green connector under the fuel tank and check for continuity between each terminals as below.
There should be continuity between the O——O positions on the continuity chart.

	Green/White	Yellow/Black	Green
Side stand down		O———	———O
Side stand up	O———	———	———O

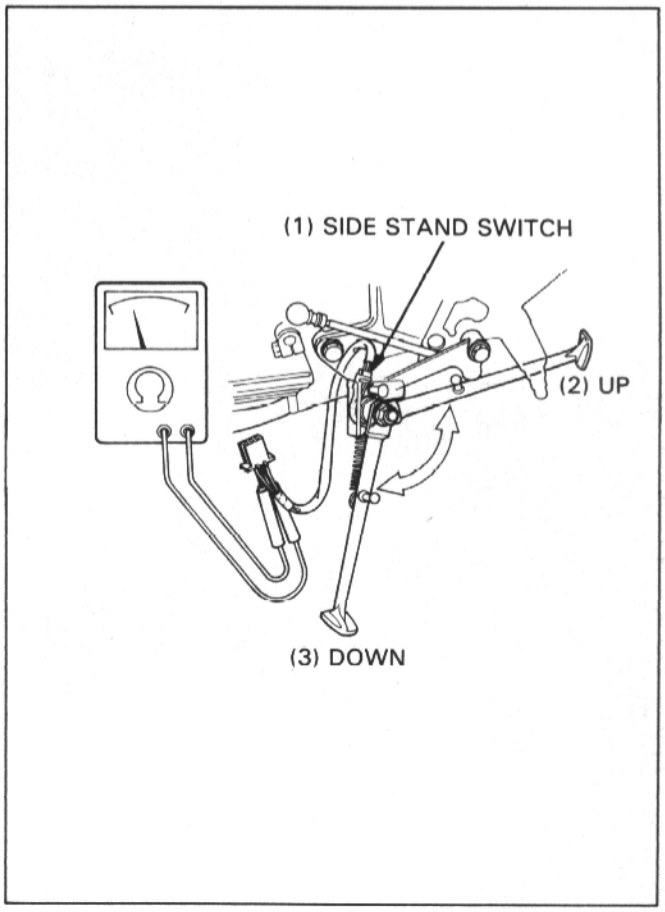

REMOVAL/INSTALLATION

Disconnect the side stand connector.
Remove the water pump side cover.
With the side stand up, remove the side stand switch mounting bolt and side stand switch.

Install the switch in the reverse order of removal.

TORQUE:
Side stand switch mounting bolt:
30 N·m (3.0 kg-m, 22 ft-lb)

NOTE

- Align the switch pin with the side stand hole and align the switch groove with the side stand return spring holding pin.

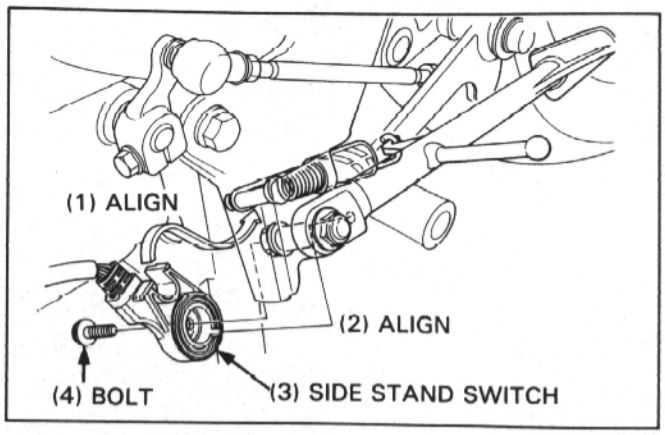

Route the side stand switch wire harness properly as shown.

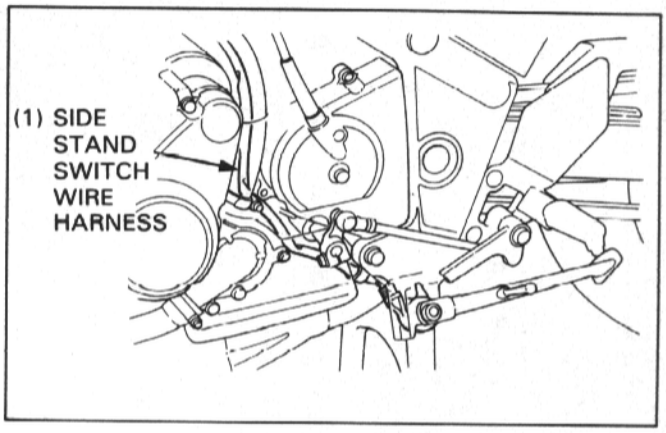

IGNITION TIMING

Warm up the engine.
Stop the engine and connect a timing light to the No. 3 cylinder spark plug wire.

NOTE

- Read the instructions for timing light for operating.

Remove the following:
— crankshaft hole cap cover (page 9-2).
— crankshaft hole cap (page 9-2).
— timing mark hole cap (page 9-2).

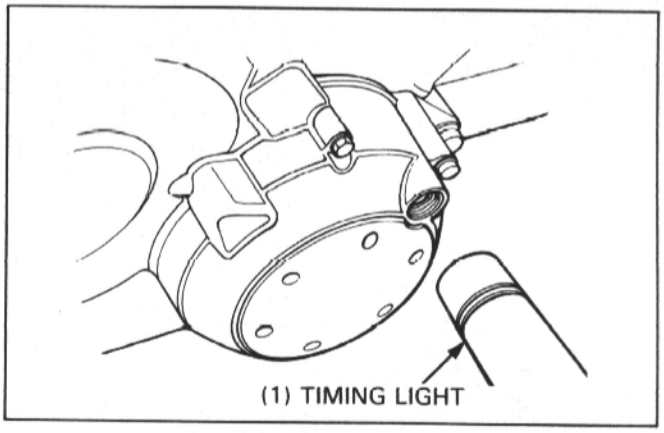

Start the engine and let it idle.
The timing is correct if the F mark aligns with the crankcase cover index mark.

NOTE

- If the correct timing could not be observed, connect a timing light to the No. 2 cylinder spark plug wire and recheck the ignition timing.

Increase the engine speed by rotating the throttle stop screw on the carburetor, make sure the F mark begins to move counterclockwise at approximately 1,700 rpm.

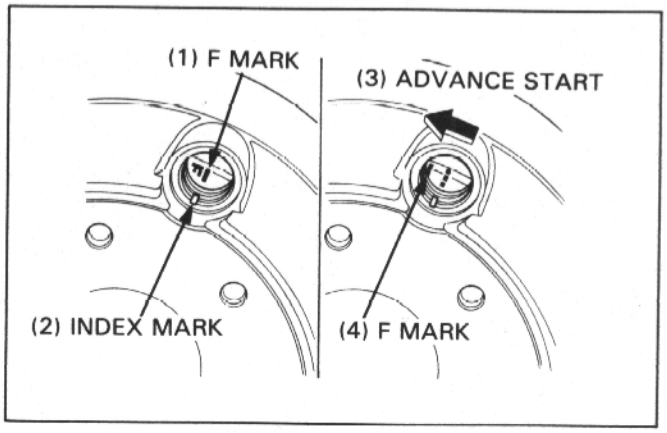

16. ELECTRIC STARTER/STARTER CLUTCH

SERVICE INFORMATION	16-1	STARTER MOTOR DISASSEMBLY/ ASSEMBLY	16-6
SYSTEM LOCATION	16-2	STARTER CLUTCH REMOVAL/ INSTALLATION	16-8
CIRCUIT DIAGRAM	16-2		
TROUBLESHOOTING	16-3		
STARTER MOTOR REMOVAL/ INSTALLATION	16-5		

SERVICE INFORMATION

⚠ WARNING

- **Always turn the ignition switch OFF before servicing the starter motor. The motor could suddenly start, causing serious injury.**

- A weak battery may be unable to turn the starter motor quickly enough, or supply adequate ignition current.
- If the current is kept flowing through the starter motor to turn it while the engine is not cranking over, the starter motor may be damaged.
- For the following component inspections, refer to the following pages; for the parts locations, see page 16-2 of this manual (SYSTEM LOCATION).

Clutch switch diode	Section 24 of the Common Service Manual.
Starter motor	Section 24 of the Common Service Manual.
Starter relay switch	Section 24 of the Common Service Manual (''A'' circuit type).
Clutch switch	Section 25 of the Common Service Manual.
Neutral switch	Section 25 of the Common Service Manual.
Ignition switch	Check for continuity on the continuity chart of the WIRING DIAGRAM, page 18-1. Disconnect the switch connector inside the headlight case (page 1-19) and check it.
Side stand switch	(page 15-8)

SYSTEM LOCATION

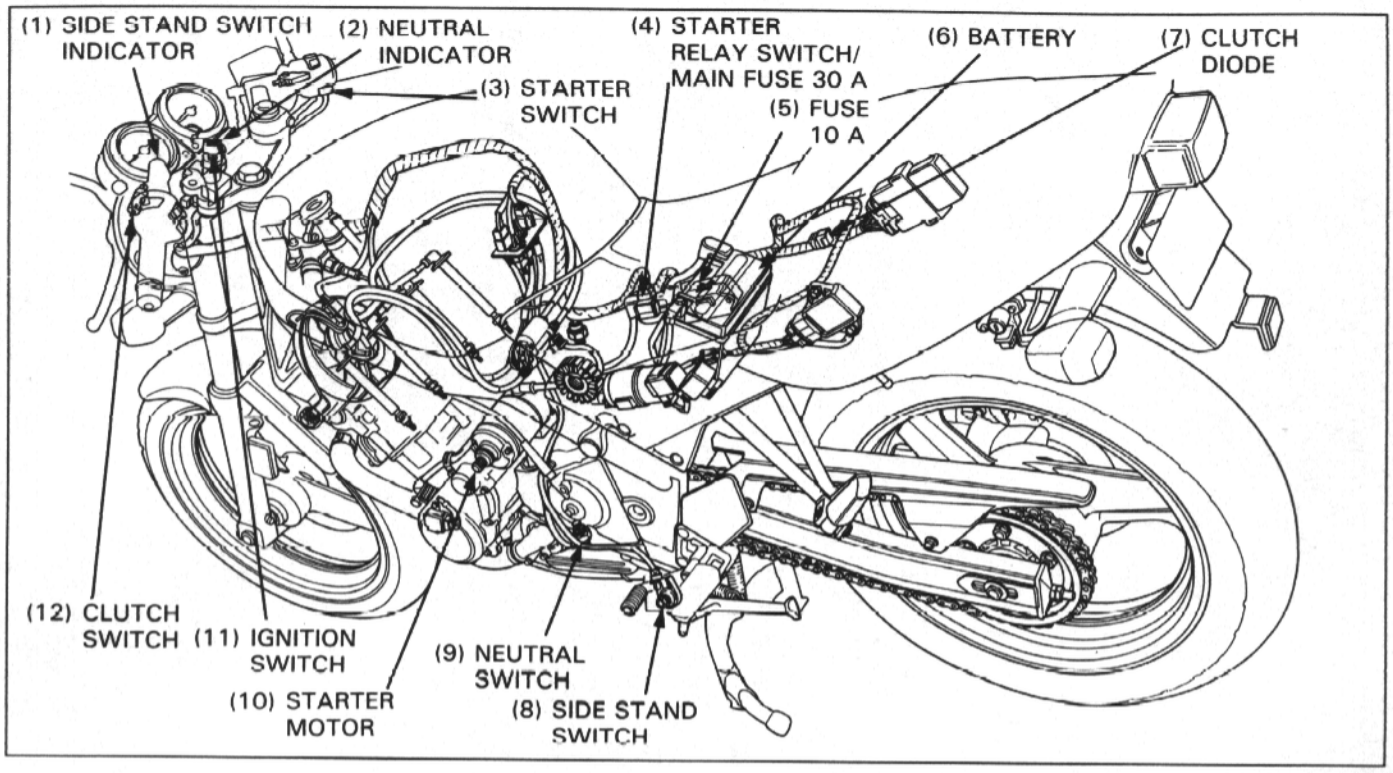

CIRCUIT DIAGRAM

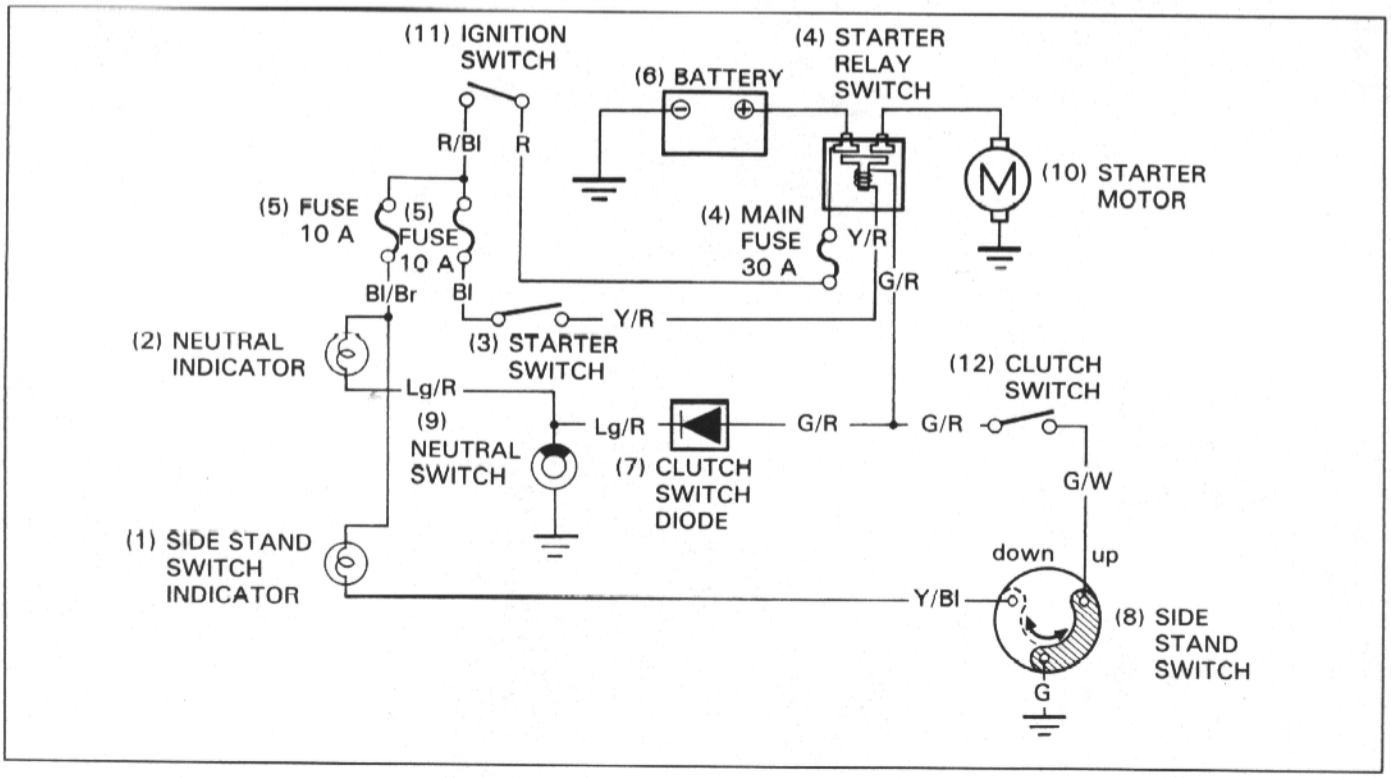

TROUBLESHOOTING

Starter motor will not turn

- Check for a blown out main or sub fuses before servicing.
- Make sure the battery is fully charged and in good condition.

Check for loose or poorly connected battery terminals, and opened or shorted battery cable.
- ABNORMAL →
  - Poorly connected battery terminals
  - Open or short circuit in battery cable
- NORMAL ↓

Check for loose or poorly connected starter relay switch terminals and 4P connector.
- ABNORMAL →
  - Poorly connected terminals or 4P connector
- NORMAL ↓

Check for loose or poorly connected starter motor cable, and opened cable.
- ABNORMAL →
  - Poorly connected motor cable
  - Open circuit in motor cable
- NORMAL ↓

With the ignition switch "ON", push the starter switch and check for a "click" sound from the starter relay switch.
- CLICKS →

Connect the starter motor terminal to the battery positive terminal directly. (Because a large amount of current flows, do not use thin wires)
- Starter motor turns ↓
  - Loose or disconnected starter motor cable
  - Faulty starter relay switch
- Starter motor does not turn ↓
  - Faulty starter motor

- NO CLICK ↓

Disconnect starter relay switch connector, and check the relay coil ground wire lines as below for continuity:
1. Green/Red terminal-clutch switch diode-neutral switch line (with transmission into neutral and clutch lever released.)
2. Green/Red terminal-clutch switch-side stand switch line (in any gear except neutral, and with the clutch lever pulled in and the side stand up.)

- NO CONTINUITY →
  - Faulty neutral switch
  - Faulty clutch switch diode
  - Faulty clutch switch
  - Faulty side stand switch
  - Loose or poor contact of connector
  - Open circuit in wire harness
- CONTINUITY ↓

Connect the starter relay switch connector. With the ignition switch ON and the starter switch pushed, measure the starter relay voltage at the starter switch connector (between Yellow/Red (+) and ground (−)).
- NO VOLTAGE →
  - Faulty ignition switch
  - Faulty starter switch
  - Blown out main or sub fuses
  - Loose or poor contact of connector
  - Open circuit in wire harness
- VOLTAGE APPEARED ↓

Check the starter relay switch operation.
- NORMAL →
  - Loose or poor contact of the starter relay switch connector
- ABNORMAL →
  - Faulty starter relay switch

The starter motor turns when the transmission is in neutral, but does not turn with the transmission in any position except neutral, with the side stand up and the clutch lever pulled in.

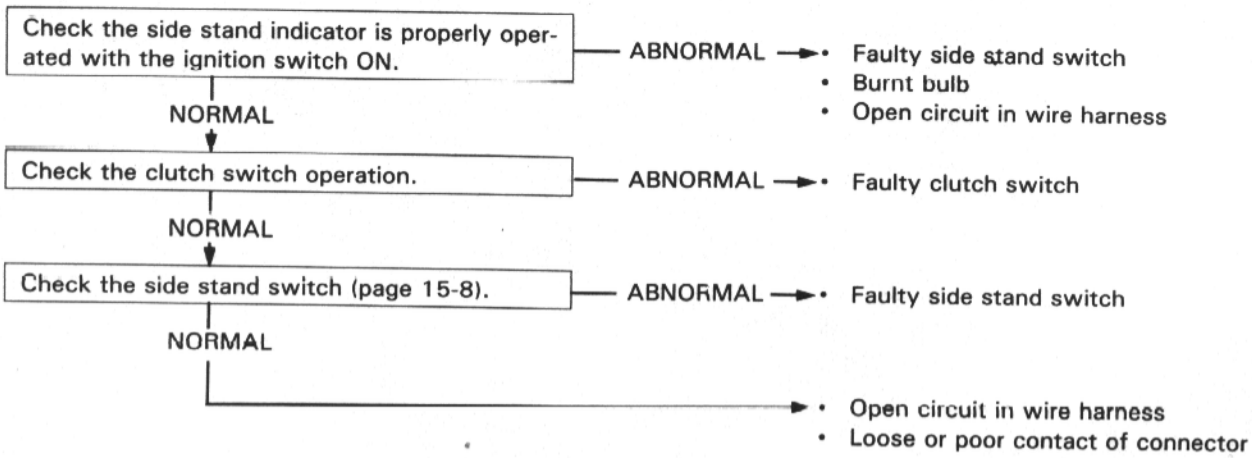

Starter motor turns slowly
- Low specific gravity in battery (or Dead battery)
- Poorly connected battery terminal cable
- Poorly connected starter motor cable
- Faulty starter motor
- Poorly connected battery ground cable

Starter motor turns, but engine does not turn
- Starter motor is running backwards
  - Case assembled improperly
  - Terminals connected improperly
- Faulty starter clutch
- Damaged or faulty starter pinion
- Damaged reduction gears

Starter relay switch "click", but engine does not turn over
- Crankshaft does not turn due to engine problems
- Excessive reduction gear friction

STARTER MOTOR REMOVAL/INSTALLATION

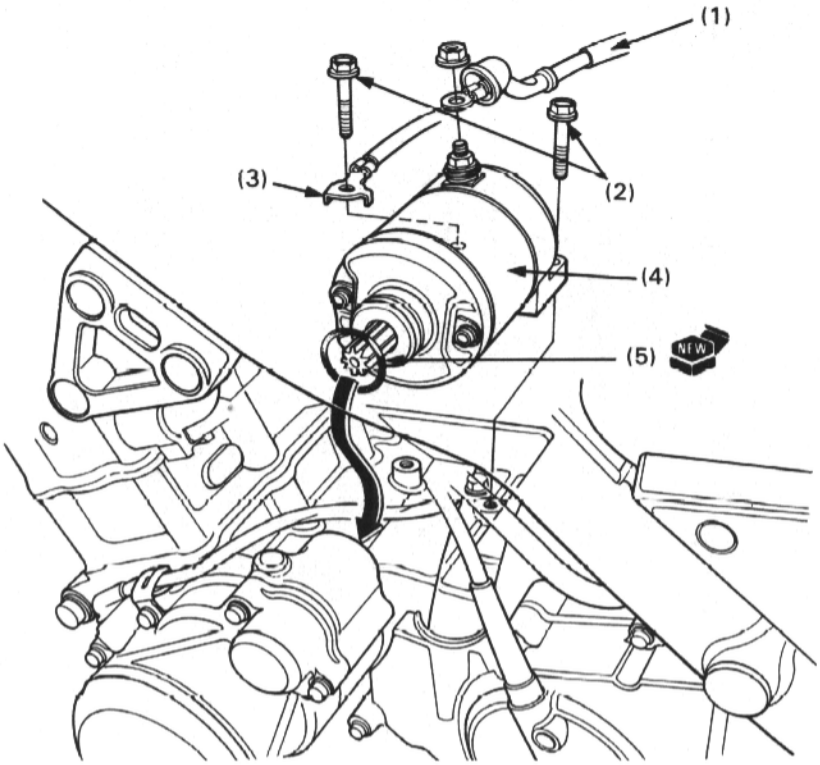

WARNING

- **Turn the ignition switch OFF.**

REQUISITE SERVICE

- Fuel tank removal/installation (page 2-4)

	PROCEDURE	Q'ty	REMARKS
	REMOVAL ORDER		• Installation is in the reverse order of removal.
(1)	Starter motor cable	1	
(2)	Starter motor mounting bolt	2	
(3)	Ground cable on engine	1	
(4)	Starter motor	1	
(5)	O-ring	1	

STARTER MOTOR DISASSEMBLY/ASSEMBLY

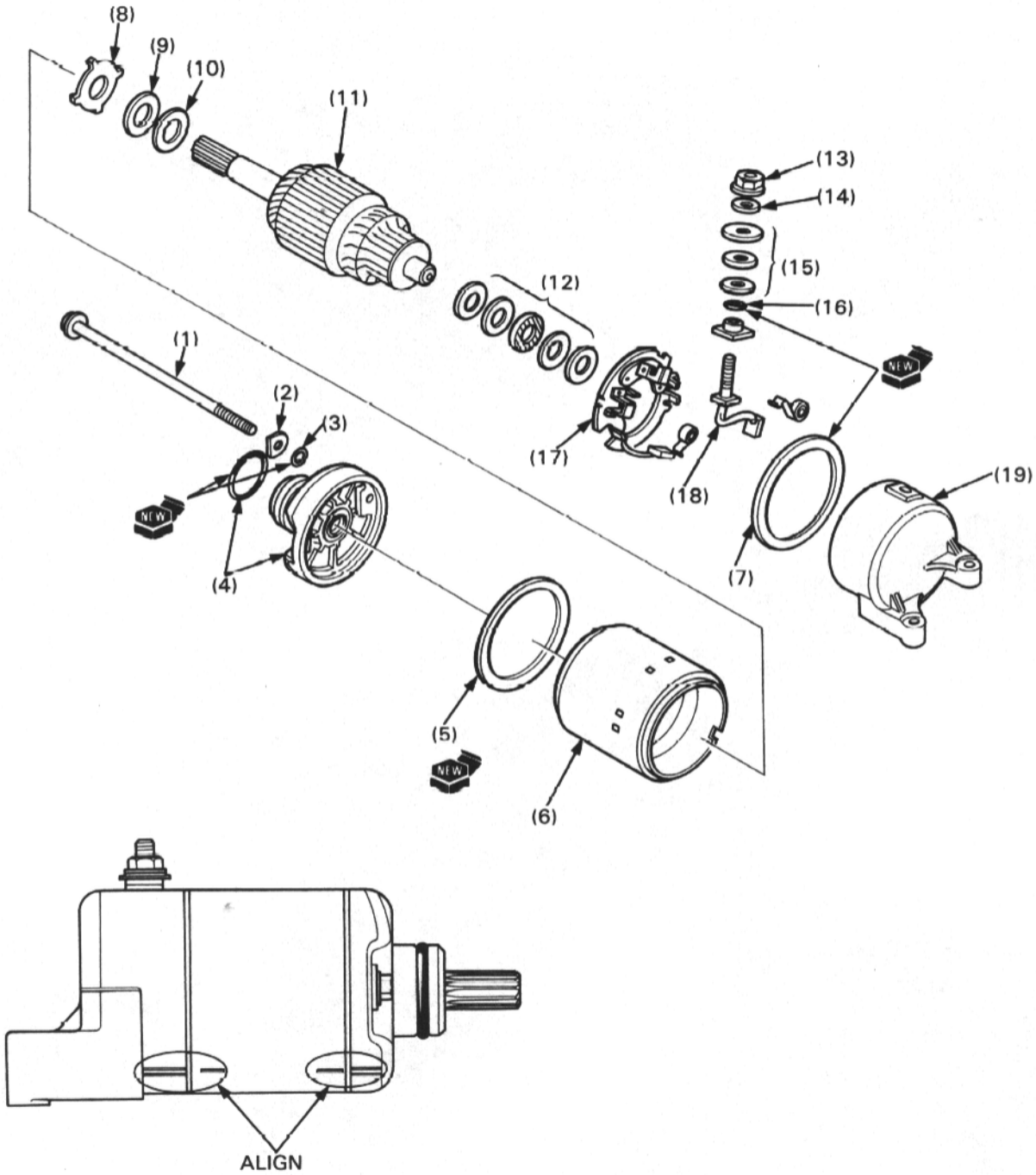

REQUISITE SERVICE

- Starter motor removal/installation (page 16-5)

	PROCEDURE	Q'ty	ASSEMBLY REMARKS
	DISASSEMBLY ORDER		• Assembly is in the reverse order of disassembly.
(1)	Set screw	2	
(2)	Set plate	2	
(3)	O-ring	2	
(4)	Front cover/O-ring	1/1	Align the index marks on the cover and case.
(5)	O-ring	1	
(6)	Motor case	1	NOTE: • Intall with the groove side facing to the brushes. • Align the index marks on the rear cover and case.
(7)	O-ring	1	
(8)	Lock washer	1	
(9)	Insulated washer	1	
(10)	Washer	1	
(11)	Armature	1	
(12)	Shims	—	Record and store the shims in the seme order they were installed so they can be reinstalled in the original positions.
(13)	Brush terminal holding nut	1	
(14)	Washer	1	
(15)	Insulated washer	3	
	— bigger	(1)	
	— smaller	(1)	
	— smaller	(1)	
(16)	O-ring	1	
(17)	Brush holder assembly	1	Align the holder tab with the rear cover groove.
(18)	Brush and terminal	1	
(19)	Rear cover	1	

STARTER CLUTCH REMOVAL/INSTALLATION

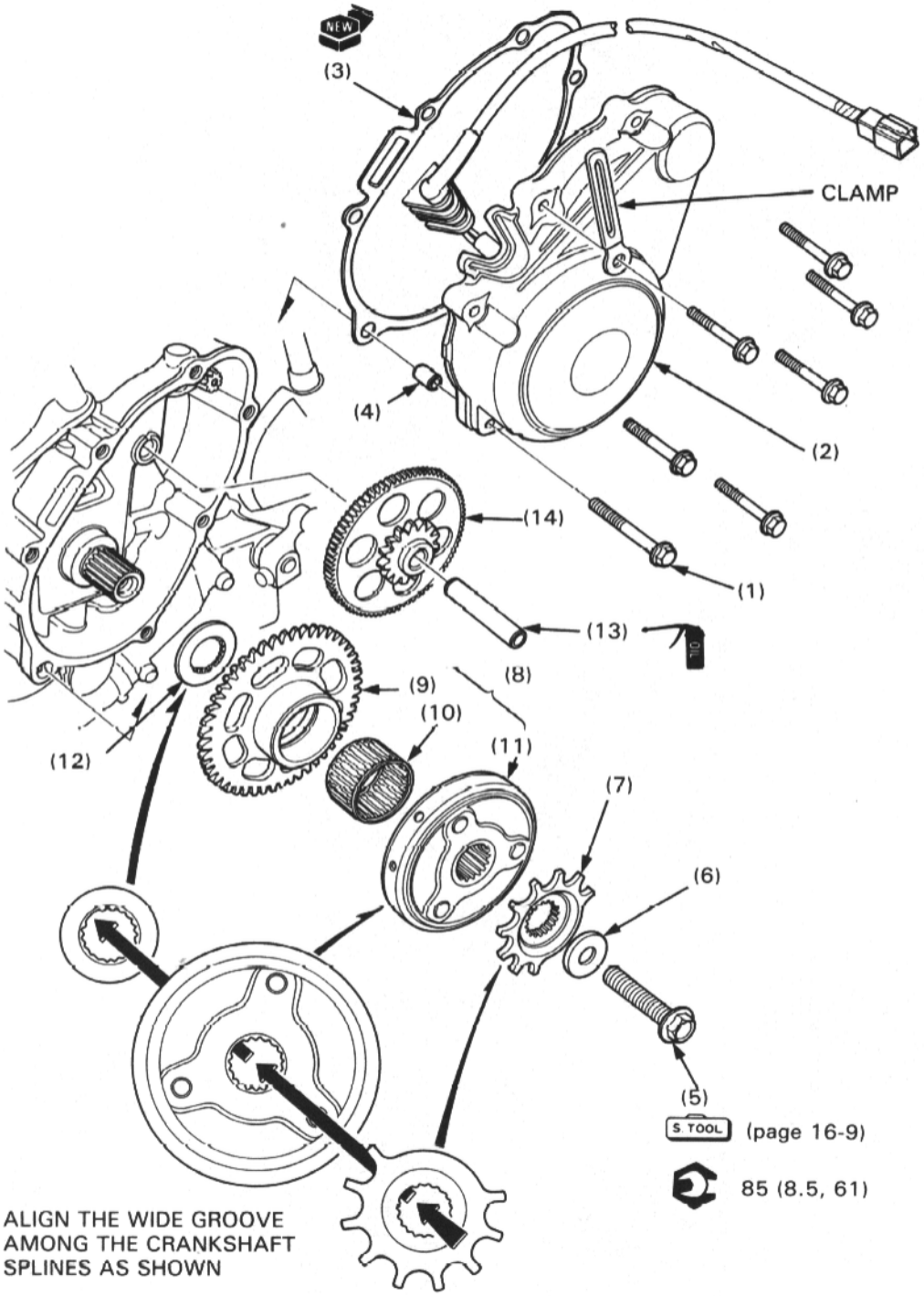

REQUISITE SERVICE

- Right crankcase cover removal/installation (page 9-2)

	PROCEDURE	Q'ty	REMARKS
	REMOVAL ORDER		• Installation is in the reverse order of removal.
(1)	Left crankcase cover bolt	7	Install the pulse generator wire clamp properly as shown.
(2)	Left crankcase cover	1	
(3)	Gasket	1	
(4)	Dowel pin	1	
(5)	Starter clutch bolt	1	Removal and installation (page 16-9).
(6)	Washer	1	
(7)	Pulse rotor	1	Install it with the marked side facing out.
(8)	Starter clutch assembly	—	
(9)	— starter driven gear	1	
(10)	— needle bearing	1	
(11)	— starter clutch	1	At installation, make sure the starter clutch roller is installed properly into the clutch housing.
(12)	Spline washer	1	
(13)	Starter drive gear shaft	1	
(14)	Starter drive gear	1	

STARTER CLUTCH BOLT REMOVAL/ INSTALLATION

CAUTION

- **Do not hold the pulse rotor.**

Set the rotor holder onto the flywheel.

S TOOL

ROTOR HOLDER — **07725—0040000 or equivalent commercially available in U.S.A.**

Hold the rotor holder and remove the starter clutch bolt with a helper.

Set the rotor holder and hold it onto the engine bracket as shown.

Tighten the starter clutch bolt to the specified torque.

TORQUE: 85 N·m (8.5 kg-m, 61 ft-lb)

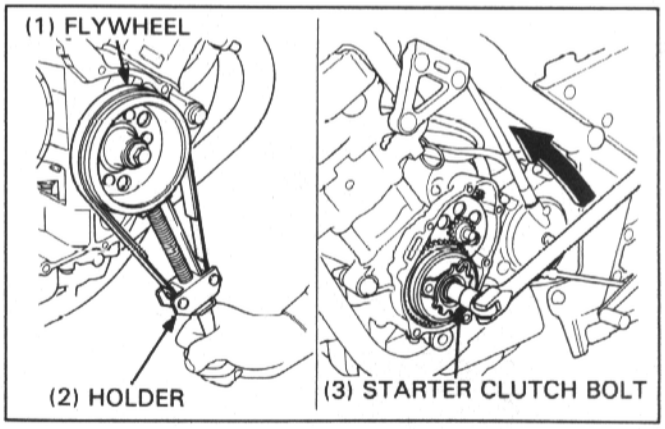

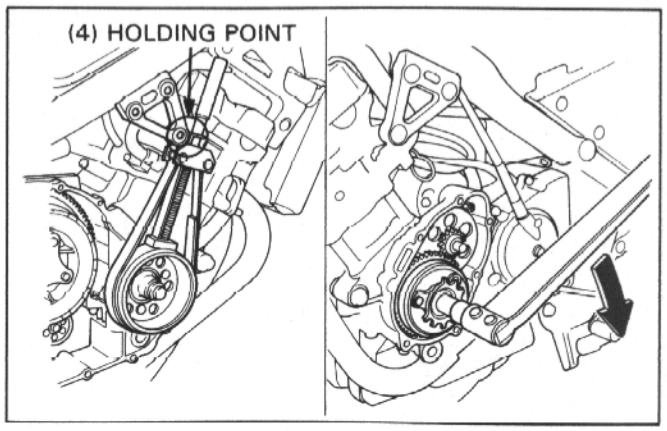

17. LIGHTS/METERS/SWITCHES

SERVICE INFORMATION	17-1	METER REMOVAL/INSTALLATION	17-5
SYSTEM LOCATION	17-2	METER DISASSEMBLY/ASSEMBLY	17-6
HEADLIGHT REMOVAL/ INSTALLATION	17-3	TACHOMETER INSPECTION	17-7
TURN SIGNAL LIGHT	17-4	IGNITION SWITCH REMOVAL/ INSTALLATION	17-7
TAILLIGHT	17-4		

SERVICE INFORMATION

⚠WARNING

- **Halogen headlight bulb becomes very hot while the headlight is ON, and remain hot for a while after it is turned OFF. Be sure to let it cool down before servicing.**
- **Use a flame and heated water/coolant mixture for the thermo sensor inspection. Keep all flammable materials away from the burner. Wear protective clothing, gloves and eye protection.**

- Note the followings when replacing the halogen headlight bulb.
  - Wear clean gloves while replacing the bulb. Do not put finger prints on the headlight bulb, as they may create hot spots on the bulb and cause it to break.
  - If you touch the bulb with your bare hands, clean it with a cloth moistened with alcohol to prevent its early failure.
  - Be sure to install the dust cover after replacing the bulb.
- Check the battery condition before performing any inspection that requires proper battery voltage.
- A continuity test can be made with the switches installed on the motorcycle.
  For the following component locations, see page 17-2 of this manual (SYSTEM LOCATION); for inspections, refer to the applicable pages.

Component	Inspection method	Remarks
Clutch switch	Section 25 of the Common Service Manual	
Coolant temperature gauge/ Thermo sensor	Section 25 of the Common Service Manual	Temperature gauge removal (page 17-6). Thermo sensor removal (page 5-4).
Fan motor switch	Section 25 of the Common Service Manual	Removal (page 5-6).
Front brakelight switch	Section 25 of the Common Service Manual	
Fuel pump/Fuel cut-off relay	Section 25 of the Common Service Manual	Removal (page 6-13).
Horn	Section 25 of the Common Service Manual	
Handlebar switches	Check for continuity on the continuity chart of the WIRING DIAGRAM, page 18-1.	Switch connectors are located inside the headlight case (page 1-19).
Ignition switch		
Neutral switch	Section 25 of the Common Service Manual	TORQUE: 18 N·m (1.8 kg-m, 13 ft-lb) Apply sealant to the threads.
Oil pressure switch/warning light	Section 25 of the Common Service Manual	Oil pressure check: Section 4 of the Common Service Manual Oil pressure switch torque: 12 N·m (1.2 kg-m, 9 ft-lb)
Rear brakelight switch	Section 25 of the Common Service Manual	
Turn signal lights	Section 25 of the Common Service Manual	3 terminals relay.

SYSTEM LOCATION

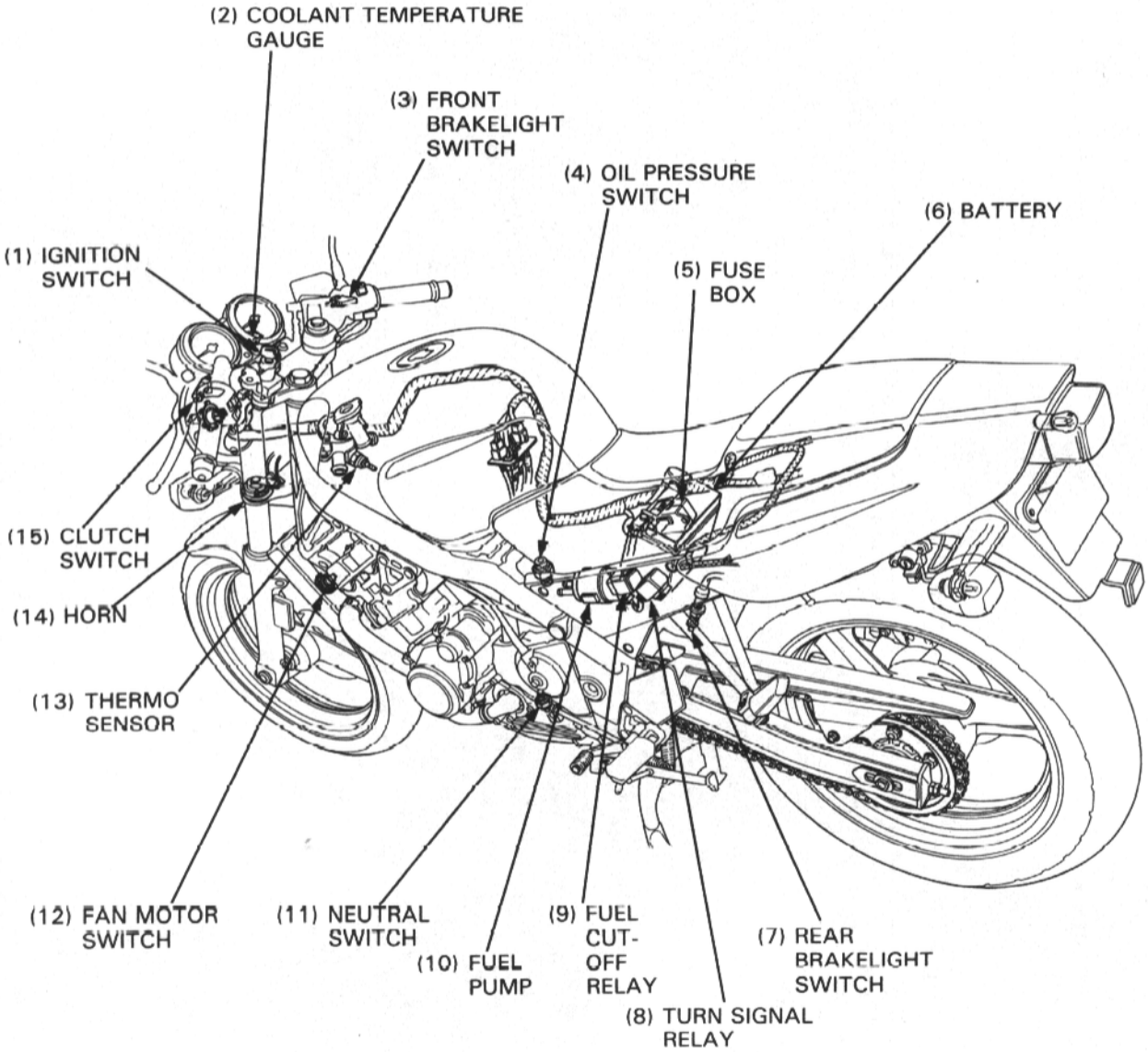

HEADLIGHT REMOVAL/INSTALLATION

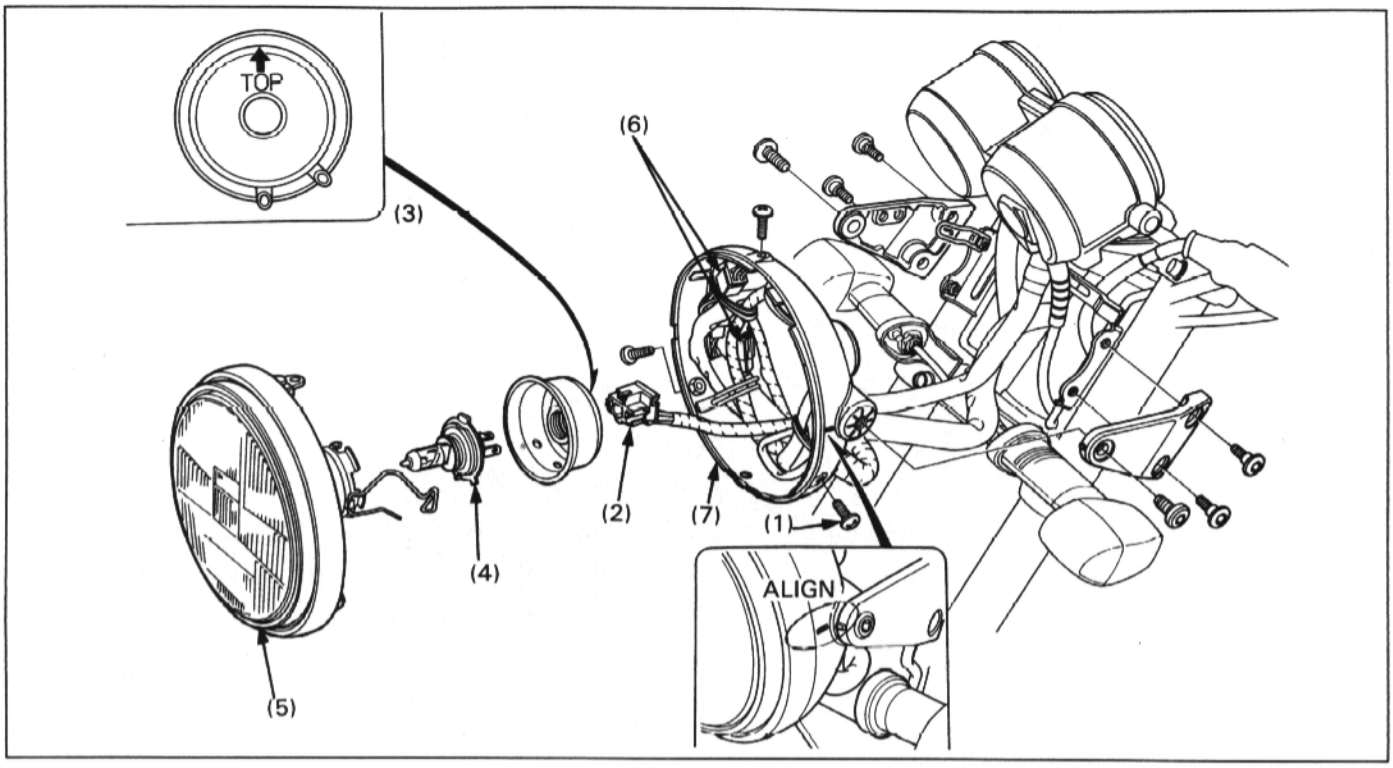

⚠ WARNING

- **Halogen headlight bulb becomes very hot while the headlight is ON, and remain hot for a while after it is turned OFF. Be sure to let it cool down before servicing.**

CAUTION

- **Wear clean gloves while replacing the bulb. Do not put finger prints on the headlight bulb, as they may create hot spots on the bulb and cause it to break.**
- **If you touch the bulb with your bare hands, clean it with a cloth moistened with alcohol to prevent its early failure.**
- **Be sure to install the dust cover after replacing the bulb.**

	PROCEDURE	Q'ty	REMARKS
	REMOVAL ORDER		• Installation is in the reverse order of removal.
(1)	Screw	3	
(2)	Headlight bulb socket	1	
(3)	Dust cover	1	Install it with the TOP mark facing up.
(4)	Headlight bulb	1	
(5)	Headlight assembly	1	
(6)	Connectors	—	Connection (page 1-19)
(7)	Headlight case	1	Align the index marks on the case and bracket.

TURN SIGNAL LIGHT

BULB REPLACEMENT

Remove the screw and lens from the turn signal case.
Turn the bulb socket counterclockwise and remove it.
Turn the bulb counterclockwise and remove it.

Install a new bulb in the reverse order of removal.

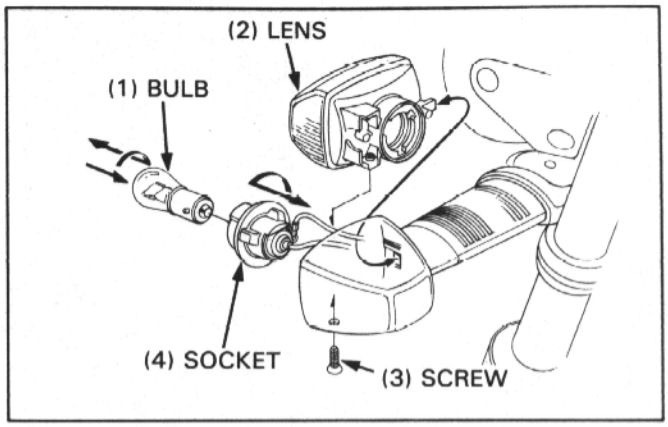

TAILLIGHT

BULB REPLACEMENT

Remove the screws and lens from the taillight case.
Turn the bulb counterclockwise and remove it.

Install a new bulb in the reverse order of removal.

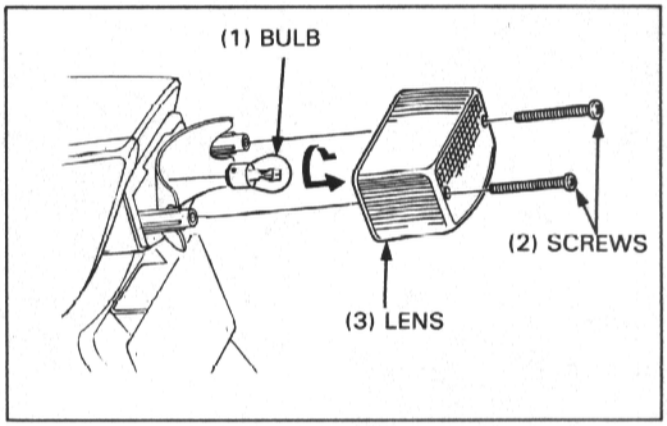

METER REMOVAL/INSTALLATION

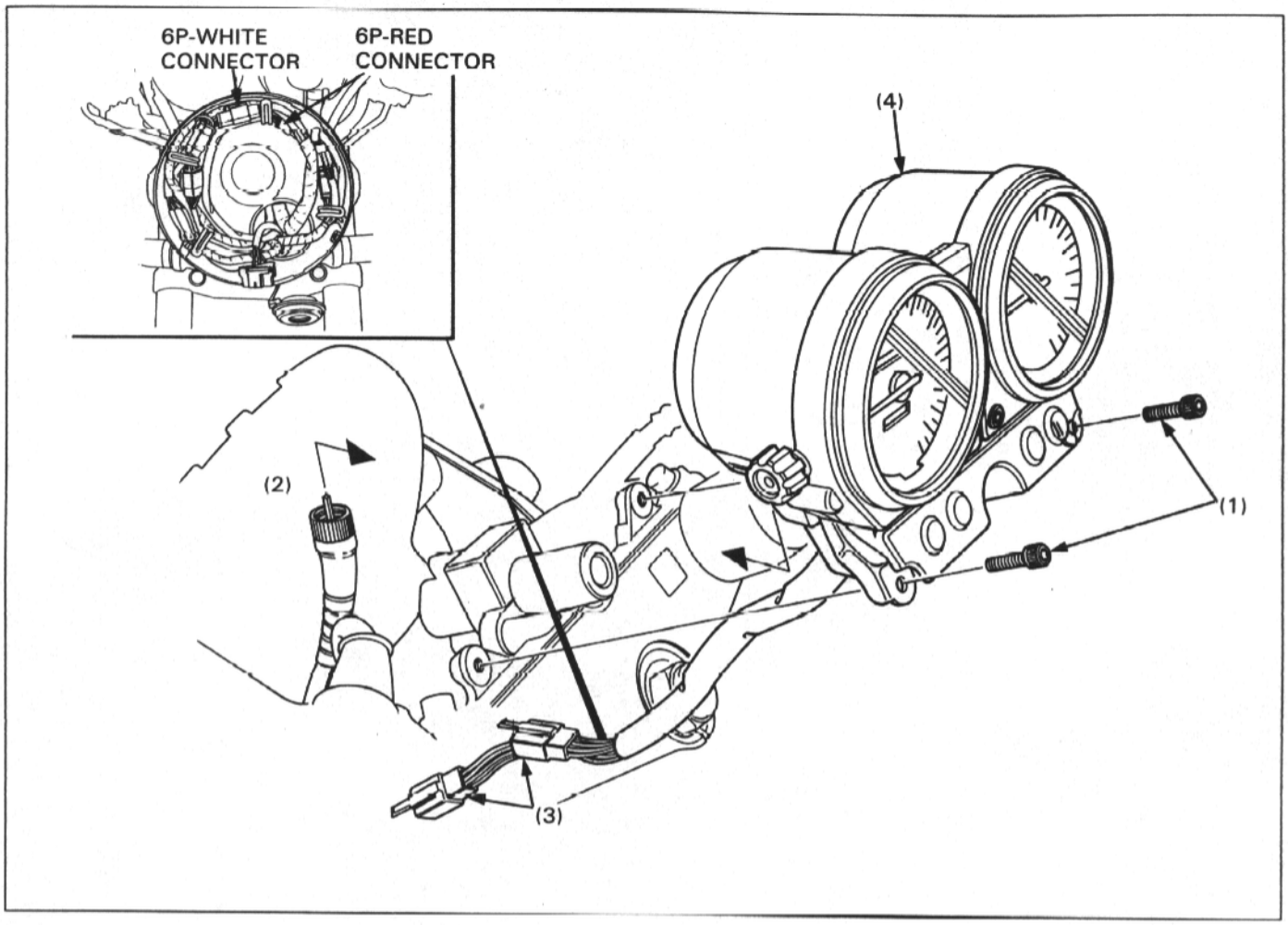

REQUISITE SERVICE

- Headlight assembly removal (page 17-3)

	PROCEDURE	Q'ty	REMARKS
	REMOVAL ORDER		• Installation is in the reverse order of removal.
(1)	Meter mounting bolt	2	
(2)	Speedometer cable	1	
(3)	Meter connector	2	6P mini White connector and 6P mini Red connector
(4)	Meter assembley	1	

METER DISASSEMBLY/ASSEMBLY

Remove the five screws and the meter rear cover.

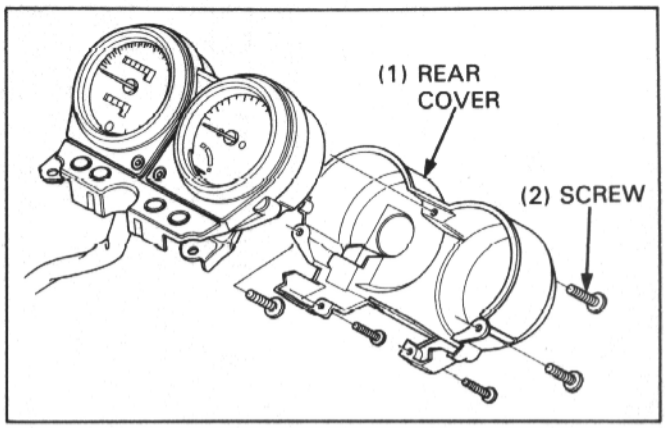

Pull all indicator bulbs out of the meter housing.
Remove the wire harness clamps, and remove the nuts, washers and meter stay.

Disconnect the meter terminals, and remove the wire harness.

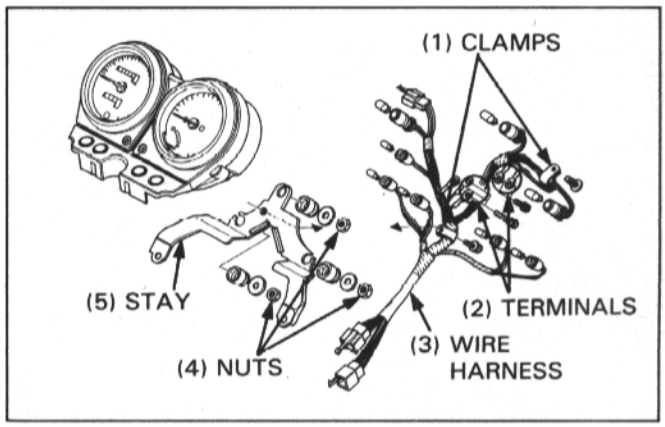

Remove the screw and meter front cover.

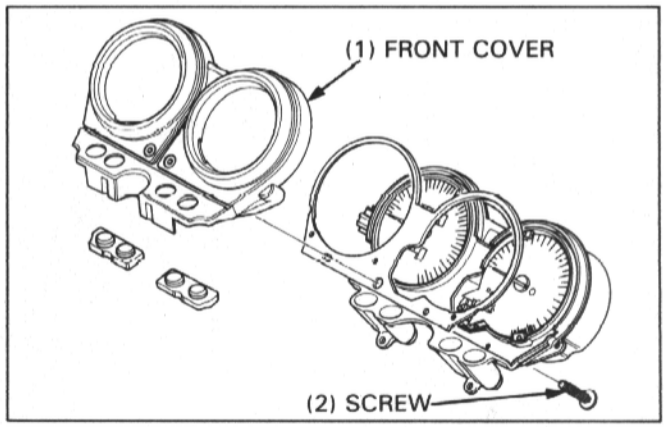

Remove the following:
- two screws and tachometer.
- trip meter reset knob.
  four screws, speedometer gear joint and O-ring.
- speedometer.

Assemble the meter in the reverse order of disassembly.

NOTE

- Connect the proper color wire to the meter terminals.

Y/G:	Yellow/Green	G:	Green
B/BR:	Black/Brown	G/B:	Green/Black
G/L:	Green/Blue		

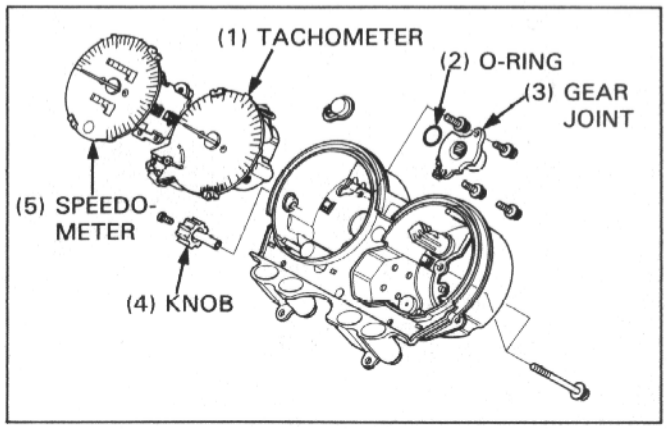

TACHOMETER INSPECTION

Remove the headlight assembly (page 17-3), and disconnect the 6P mini Red connector and 6P mini White connector.

Connect a voltmeter across the Black/Brown (+) and Green (−) terminals of the main wire harness side.

Turn the ignition switch ON and battery voltage should resister.
If there is not O.K., the electric tachometer do not catch power from the battery. Trace and repair the related wiring, sub fuse and/or connectors.

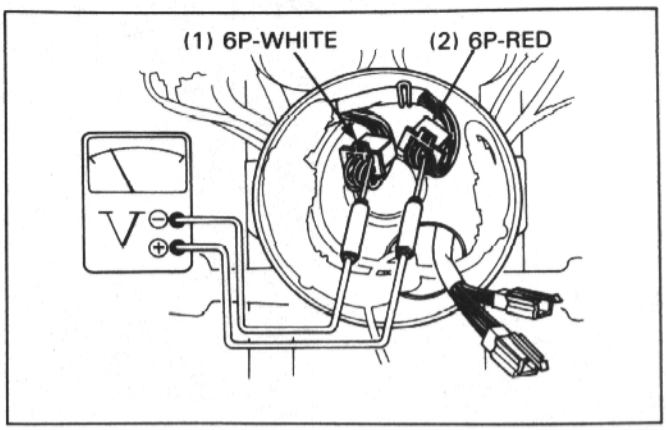

Disconnect the spark unit connector (page 15-6).
Check for continuity between the Yellow/Green wire terminals of the 6P mini White connector and spark unit connector.
Continuity exists at all times.
If there is no continuity, replace the main wire harness.

If all checks are O.K., replace the tachometer.

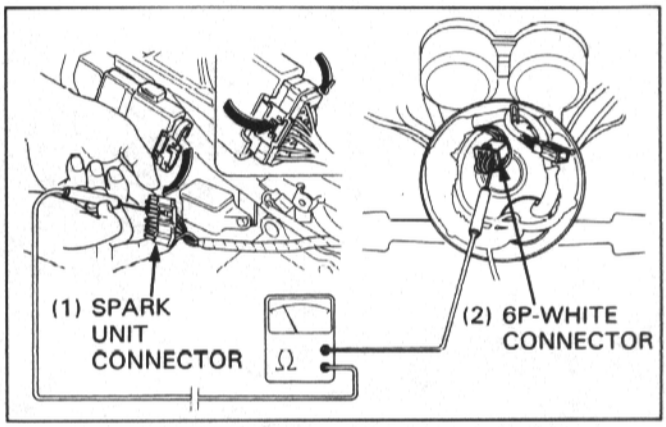

IGNITION SWITCH REMOVAL/ INSTALLATION

Remove the meter as an assembly (page 17-5).
Disconnect the 3P Black connector and 2P mini connector inside the headlight case.
Remove the bolts using the torx bit (T40) (07703-0010100) and ignition switch.

Remove the screws and separate the contact base from the cylinder.

NOTE

- You can separate the switch in all key position.

Apply a locking agent to the threads and install the ignition switch in the reverse order of removal.

TORQUE:
Switch mounting bolt: 25 N·m (2.5 kg-m, 18 ft-lb)

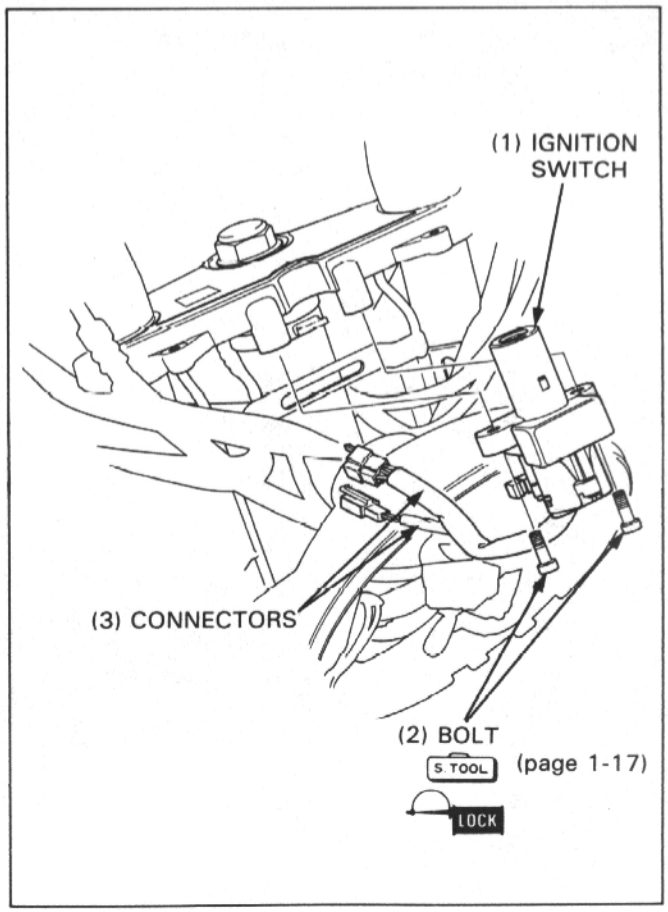

18. WIRING DIAGRAM

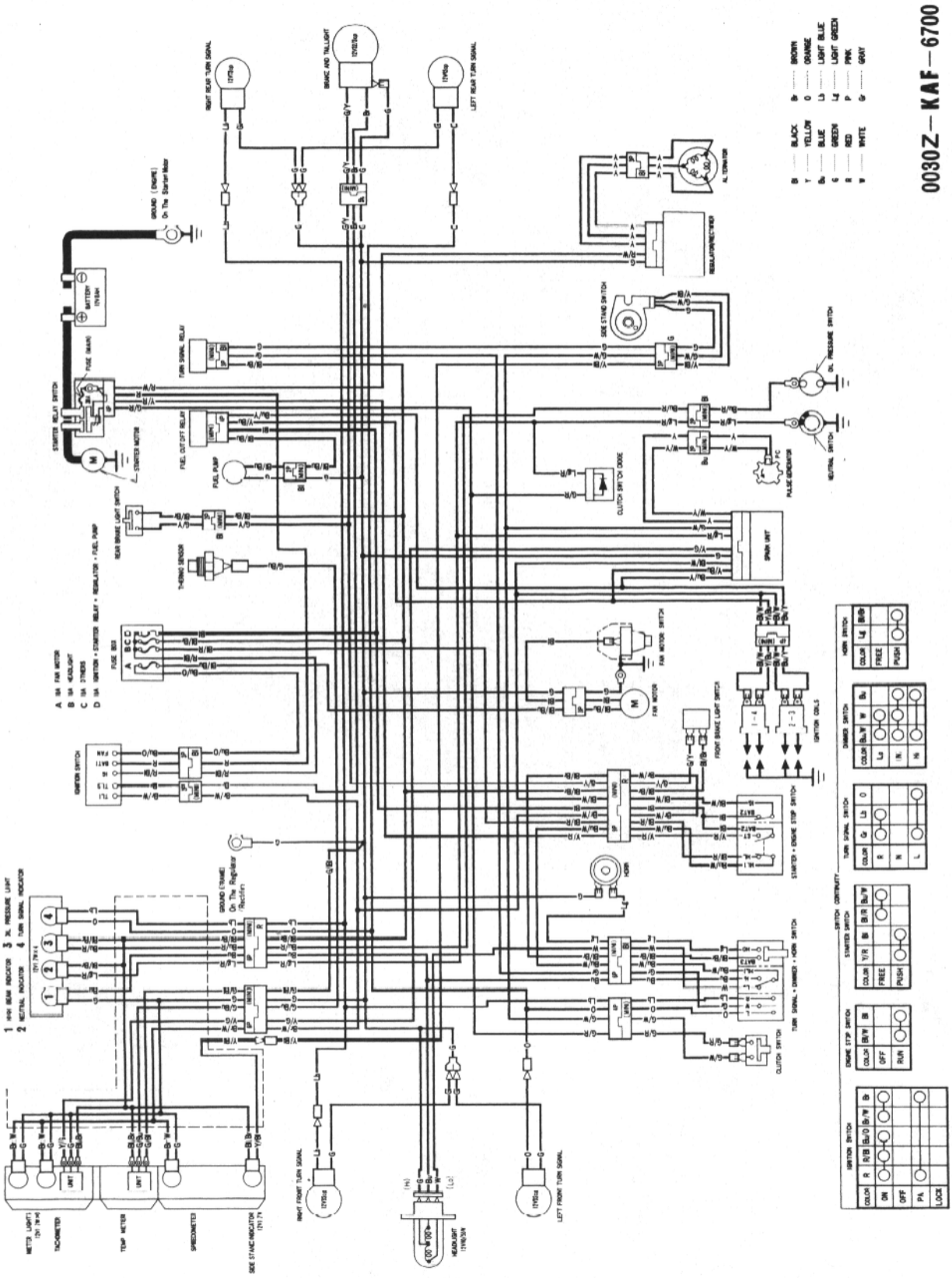

18

19. TROUBLESHOOTING

ENGINE DOES NOT START OR IS HARD TO START	19-1	POOR PERFORMANCE AT HIGH SPEED	19-4
ENGINE LACKS POWER	19-2	POOR HANDLING	19-4
POOR PERFORMANCE AT LOW AND IDLE SPEEDS	19-3		

ENGINE DOES NOT START OR IS HARD TO START

		POSSIBLE CAUSE
1. Check fuel flow to carburetor	NOT REACHING CARBURETOR →	• Clogged fuel line or fuel filter • Sticking float valve • Faulty fuel pump • Faulty fuel pump relay • Clogged fuel tank vent hole • Loose or disconnected fuel pump relay wire
REACHING CARBURETOR ↓		
2. Perform spark test	WEAK OR NO SPARK →	• Faulty following (page 15-3): — ignition coil — pulse generator — neutral switch — spark unit — side stand switch — engine stop switch
GOOD SPARK ↓		
3. Remove and inspect spark plug	WET PLUG →	• Mixture too rich • Carburetor flooded • Carburetor choke excessively closed • Cylinder flooded • Air cleaner dirty • Faulty Purge Control Valve (California model only)
SPARKS ↓		
4. Test cylinder compression	LOW COMPRESSION →	• Improper valve clearance (shim too thick) • Valve stuck open • Worn cylinder and piston rings • Damaged cylinder head gasket • Seized valve • Improper valve timing • Improper valve and seat contact
COMPRESSION NORMAL ↓		
5. Start by following normal procedure	ENGINE STARTS BUT STOPS →	• Improper choke operation • Carburetor incorrectly adjusted • Intake pipe leaking • Improper ignition timing (Faulty spark unit or pulse generator) • Fuel contaminated
ENGINE DOES NOT FIRE ↓		
6. Start with choke on		

19

ENGINE LACKS POWER

		POSSIBLE CAUSE
1. Raise wheels off ground and spin by hand	WHEELS DO NOT SPIN FREELY →	• Brake dragging • Worn or damaged wheel bearings • Wheel bearing needs lubrication • Drive chain too tight • Axle nut excessively tight
WHEEL SPINS FREELY ↓		
2. Check tire pressure	PRESSURE LOW →	• Faulty tire valve
PRESSURE NORMAL ↓		
3. Check for clutch slippage	CLUTCH SLIPS →	• Faulty clutch lifter system • Worn clutch disc/plate • Warped clutch disc/plate • Weak clutch spring
CLUTCH ENGAGED PROPERLY ↓		
4. Accelerate lightly	ENGINE SPEED DOES NOT INCREASE →	• Carburetor choke closed • Clogged air cleaner • Restricted fuel flow • Clogged muffler • Clogged fuel cap vent hole • Faulty fuel pump • Faulty fuel pump relay • Loose, broken or shorted wire or connection of pump relay
ENGINE SPEED INCREASES ↓		
5. Check ignition timing	INCORRECT →	• Faulty spark unit • Faulty pulse generator
CORRECT ↓		
6. Check valve clearance	INCORRECT →	• Improper valve adjustment • Worn valve seat
CORRECT ↓		
7. Test cylinder compression	TOO LOW →	• Valve stuck open • Worn cylinder and piston rings • Improper valve timing • Seized valve • Improper valve and seat contact
NORMAL ↓		
8. Check carburetor for clogging	CLOGGED →	• Carburetor not serviced frequently enough
NOT CLOGGED ↓		
9. Check spark plug condition	FOULED OR DISCOLORED →	• Plugs not serviced frequently enough • Spark with incorrect heat range
NOT FOULED OR DISCOLORED ↓		
10. Check oil level and condition	INCORRECT →	• Oil level too high • Oil level too low • Contaminated oil
CORRECT ↓		

		POSSIBLE CAUSE
11. Remove cylinder head cover and inspect lubrication	VALVE TRAIN NOT LUBRICATED PROPERLY →	• Clogged oil passage • Clogged oil control orifice • Contaminated oil • Faulty oil pump
VALVE TRAIN LUBRICATED PROPERLY ↓		
12. Check for engine overheating	OVERHEATING →	• Coolant level low • Fan motor not working (Faulty fan motor switch) • Thermostat stuck closed • Excessive carbon build-up in combustion chamber • Use of poor quality fuel • Clutch slipping • Lean fuel mixture
NOT OVERHEATING ↓		
13. Accelerate or run at high speed	ENGINE KNOCKS →	• Worn piston and cylinder • Wrong type of fuel • Excessive carbon build-up in combustion chamber • Ignition timing too advanced (Faulty spark unit) • Lean fuel mixture
ENGINE DOES NOT KNOCK		

POOR PERFORMANCE AT LOW AND IDLE SPEEDS

		POSSIBLE CAUSE
1. Check ignition timing and valve clearance	INCORRECT →	• Improper valve clearance • Improper ignition timing — Faulty spark unit — Faulty pulse generator
CORRECT ↓		
2. Check carburetor pilot screw adjustment	INCORRECT →	• See Fuel System (Section 8) of the Common Service Manual
CORRECT ↓		
3. Check for leaking intake pipe	LEAKING →	• Loose carburetor • Damaged insulator
NO LEAKAGE ↓		
4. Perform the spark test	WEAK OR INTERMITTENT SPARK →	• Faulty, carbon or wet fouled spark plug • Faulty following (page 15-3): — ignition coil — pulse generator — neutral switch — spark unit — side stand switch — engine stop switch
GOOD SPARK		

POOR PERFORMANCE AT HIGH SPEED

		POSSIBLE CAUSE
1. Check ignition timing and valve clearance	INCORRECT →	• Improper valve clearance • Improper ignition timing — Faulty spark unit — Faulty pulse generator
CORRECT ↓		
2. Disconnect fuel line at carburetor	FUEL FLOW RESTRICTED →	• Fuel tank empty • Clogged fuel line • Clogged fuel cap vent hole • Clogged fuel valve • Faulty fuel pump or relay • Clogged fuel filter
FUEL FLOWS FREELY ↓		
3. Remove carburetors and check for clogged jets	CLOGGED →	• Clogged jets
NO COLGGED JETS ↓		
4. Check valve timing	INCORRECT →	• Camshaft not installed properly
CORRECT ↓		
5. Check valve spring tension	WEAK →	• Faulty valve spring

POOR HANDLING → Check tire and suspension pressure

	POSSIBLE CAUSE
1. If steering is heavy →	• Steering head bearing adjustment nut too tight • Damaged steering head bearings • Bent steering stem
2. If either wheel is wobbling →	• Excessive wheel bearing play • Bent rim • Improperly installed wheel hub • Swingarm pivot bearing excessively worn • Bent frame
3. If the motorcycle pulls to one side →	• Incorrect drive chain adjustment • Front and rear wheels not aligned • Bent fork legs • Bent swingarm • Bent frame

20. INDEX

Air Cleaner 3-5
Case Removal/Installation 6-3
Alternator 14-7
Brake Pedal Removal/Installation 13-12
Brakes 13-1
Cable and Harness Routing 1-19
Camshaft Removal/Installation 8-2
Carburetor Combination 6-10
Disassembly/assembly 6-8
Removal/Installation 6-4
Separation 6-6
Synchronization 3-8
Charging System/Alternator 14-1
Circuit Diagram 14-2
Inspection 14-4
Location 14-2
Clutch Installation 9-8
Removal 9-4
Clutch/Gearshift Linkage 9-1
Coolant Draining 5-3
Cooling System 5-1
Flow Pattern 5-2
Crankcase Installation 10-12
Separation 10-2
Crankshaft Bearing Replacement 10-6
Crankshaft/Connecting Rod Removal/
Installation 10-4
Crankshaft/Transmission 10-1
Cylinder Head disassembly/assembly 8-6
Removal/Installation 8-4
Cylinder Head/Cylinder/Piston 8-1
Cylinder/Piston Removal/Installation 8-8
Electric Starter Circuit diagram 16-2
System Location 16-2
Electric Starter/Starter Clutch 16-1
Emission Control Information Labels
(U.S.A. only) 1-28
Systems 1-25
Systems (California Model Only) 6-13
Engine Removal/Installation 7-1, 2
Exhaust System Removal/Installation 2-3
Fork Assembly 11-10
Disassembly 11-8
Removal/Installation 11-6
Frame/Body Panels/Exhaust System 2-1
Front Brake Caliper disassembly/assembly 13-6
Removal/Installation 13-4
Pad Replacement 13-2
Front Master Cylinder disassembly/assembly 13-10
Removal/Installation 13-8
Front Wheel disassembly/assembly 11-5
Removal/Installation 11-4
Front Wheel/Suspension/Steering 11-1
Fuel Pump/Filter 6-13
Fuel System 6-1
Fuel Tank Removal/Installation 2-4
Gearshift Linkage Removal/Installation 9-6
General Information 1-1
General Safety 1-1
Headlight Removal/Installation 17-3
Ignition Coil 15-6
Ignition Switch Removal/Installation 17-7
Ignition System 15-1
Circuit Diagram 15-2
Inspection 15-6
Location 15-2
Ignition Timing 15-9
Left Handlebar Removal/Installation 11-3
Lights/Meters/Switches 17-1
System Location 17-2
Lubrication and Seal Points 1-18
Lubrication System 4-1
Diagram 4-2
Maintenance 3-1
Schedule 3-4
Meter disassembly/assembly 17-6
Removal/Installation 17-5
Model Identification 1-3
Oil Pump disassembly/assembly 4-4
Removal/Installation 4-3
Pulse Generator 15-8
Radiator disassembly/assembly 5-6
Removal/Installation 5-5
Rear Brake Caliper disassembly/assembly 13-7
Removal/Installation 13-5
Pad Replacement 13-3
Rear Fairing Removal/Installation 2-2
Rear Master Cylinder disassembly/assembly 13-11
Removal/Installation 13-9
Rear Wheel disassembly/assembly 12-3
Removal/Installation 12-2
Rear Wheel/Suspension 12-1
Regulator/rectifier 14-5
Reserve Tank Removal/Installation 5-3
Right Crankcase Cover Removal/Installation 9-2
Right Handlebar Removal/Installation 11-2
Seat Removal/Installation 2-2
Service Access Guide 3-2
Service Information Brakes 13-1
Charging System/Alternator 14-1
Clutch/Gearshift Linkage 9-1
Cooling System 5-1
Crankshaft/Transmission 10-1
Cylinder Head/Cylinder/Piston 8-1
Electric Starter/Starter Clutch 16-1
Engine Removal/Installation 7-1
Frame/Body Panels/Exhaust System 2-1
Front wheel/Suspension/Steering 11-1
Fuel System 6-1
Ignition System 15-1
Lights/Meters/Switches 17-1
Lubrication System 4-1
Maintenance 3-1
Rear Wheel/Suspension 12-1
Shock Absorber disassembly/assembly 12-5
Removal/Installation 12-4
Side Cover Removal/Installation 2-3
Side Stand 3-8
Switch 15-8
Spark Plug 3-5
Specifications 1-4
Starter Clutch Removal/Installation 16-8

2

Starter Motor disassembly/assembly 16-6
Removal/Installation 16-5
Steering Stem Removal/Installation 11-12
Swingarm disassembly/assembly 12-8
Removal/Installation 12-7
Tachometer Inspection 17-7
Taillight 17-4
Thermostat Removal/Installation 5-4
Tools 1-16
Torque Values 1-14
Transmission disassembly/assembly 10-10
Removal/Installation 10-8
Troubleshooting 19-1
Brakes 13-1
Charging System/Alternator 14-3
Clutch/Gearshift Linkage 9-1
Cooling System 5-1
Crankshaft/Transmission 10-1
Cylinder Head/Cylinder/Piston 8-1
Electric Starter/Starter Clutch 16-3
Frame/Body Panels/Exhaust system 2-1
Front Wheel/Suspension/Steering 11-1
Fuel System 6-2
Ignition System 15-3
Lubrication System 4-1
Rear Wheel/Suspension 12-1
Turn Signal Light 17-4
Valve Clearance 3-5
Water Pump disassembly/assembly 5-7
Wiring Diagram 18-1