

SUZUKI

TL1000S

SERVICE MANUAL

99500-39144-03E
(英)

SUZUKI MOTOR CORPORATION PRINTED IN JAPAN MARCH, '97 (TK)

FOREWORD

This manual contains an introductory description on the SUZUKI TL1000S and procedures for its inspection/service and overhaul of its main components. Other information considered as generally known is not included.

Read the GENERAL INFORMATION section to familiarize yourself with the motorcycle and its maintenance. Use this section as well as other sections to use as a guide for proper inspection and service.

This manual will help you know the motorcycle better so that you can assure your customers of fast and reliable service.

- *This manual has been prepared on the basis of the latest specifications at the time of publication. If modifications have been made since then, differences may exist between the content of this manual and the actual motorcycle.*
- *Illustrations in this manual are used to show the basic principles of operation and work procedures. They may not represent the actual motorcycle exactly in detail.*
- *This manual is written for persons who have enough knowledge, skills and tools, including special tools, for servicing SUZUKI motorcycles. If you do not have the proper knowledge and tools, ask your authorized SUZUKI motorcycle dealer to help you.*

⚠WARNING

Inexperienced mechanics or mechanics without the proper tools and equipment may not be able to properly perform the services described in this manual. Improper repair may result in injury to the mechanic and may render the motorcycle unsafe for the rider and passenger.

IMPORTANT

All street-legal Suzuki motorcycles with engine displacement of 50 cc or greater are subject to Environmental Protection agency emission regulations. These regulations set specific standards for exhaust emission output levels as well as particular servicing requirements. This manual includes specific information required to properly inspect and service TL1000S in accordance with all EPA regulations. It is strongly recommended that the chapter on Emission Control, Periodic Servicing and Carburetion be thoroughly reviewed before any type of service work is performed.

Further information concerning the EPA emission regulations and U.S. Suzuki's emission control program can be found in the U.S. SUZUKI EMISSION CONTROL PROGRAM MANUAL/SERVICE BULLETIN.

GROUP INDEX

GENERAL INFORMATION	1
PERIODIC MAINTENANCE	2
ENGINE	3
FI SYSTEM AND INTAKE AIR SYSTEM	4
COOLING SYSTEM	5
CHASSIS	6
ELECTRICAL SYSTEM	7
SERVICING INFORMATION	8
EMISSION CONTROL INFORMATION	9
TL1000SW ('98-MODEL)	10
TL1000SX ('99-MODEL)	11
TL1000SY ('00-MODEL)	12
TL1000SK1 ('01-MODEL)	13

SUZUKI MOTOR CORPORATION

Motorcycle Service Department

© COPYRIGHT SUZUKI MOTOR CORPORATION 1997

HOW TO USE THIS MANUAL

TO LOCATE WHAT YOU ARE LOOKING FOR:

1. The text of this manual is divided into sections.
2. The section titles are listed in the GROUP INDEX.
3. Holding the manual as shown at the right will allow you to find the first page of the section easily.
4. The contents are listed on the first page of each section to help find the item and page you need.

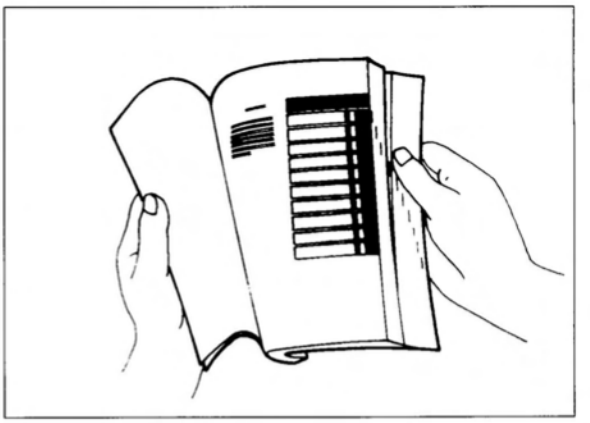

COMPONENT PARTS AND WORK TO BE DONE

Under the name of each system or unit, is its exploded view. Work instructions and other service information such as the tightening torque, lubricating points and locking agent points, are provided.

Example: Front wheel

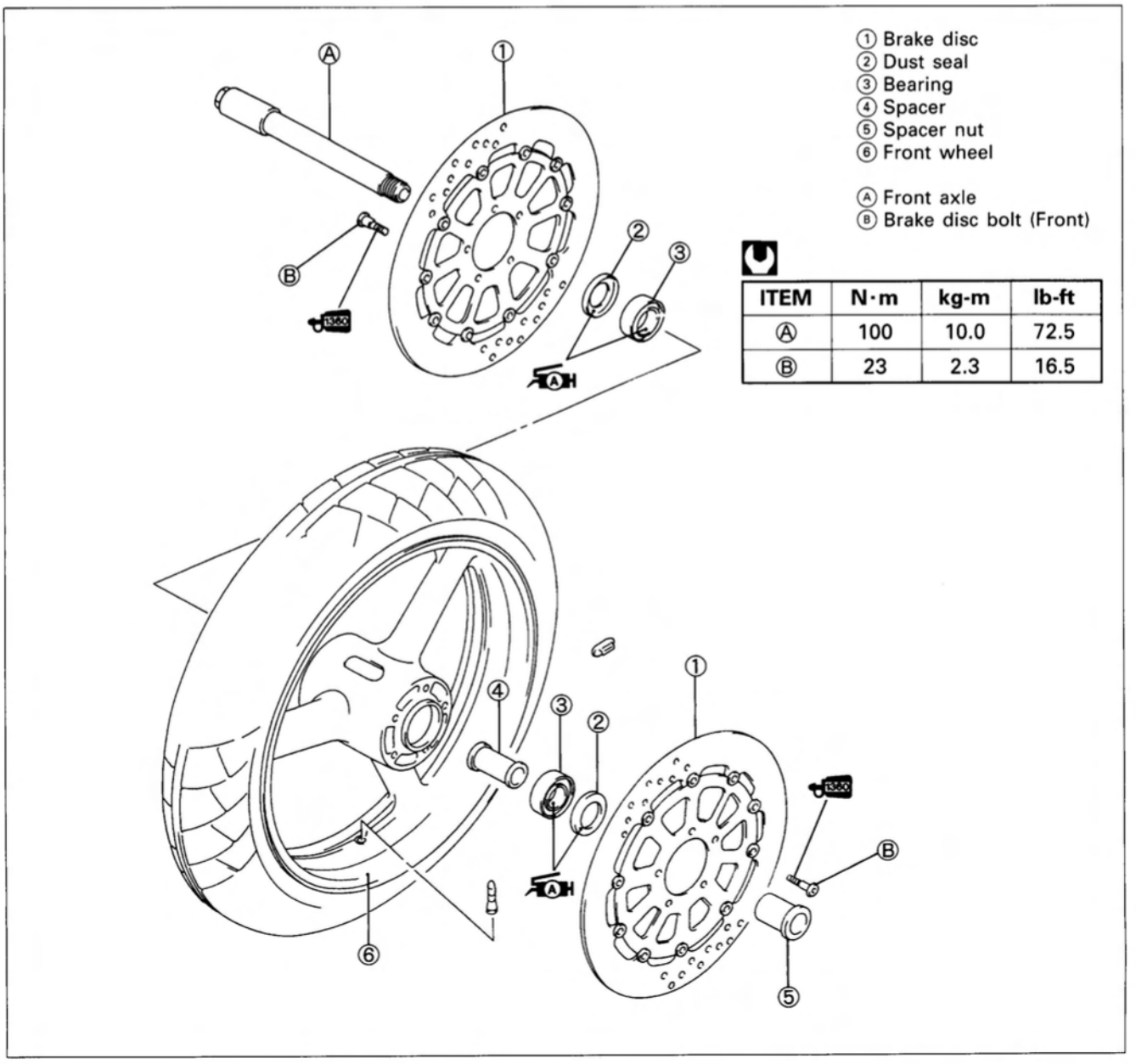

① Brake disc
② Dust seal
③ Bearing
④ Spacer
⑤ Spacer nut
⑥ Front wheel

Ⓐ Front axle
Ⓑ Brake disc bolt (Front)

ITEM	N·m	kg-m	lb-ft
Ⓐ	100	10.0	72.5
Ⓑ	23	2.3	16.5

SYMBOL

Listed in the table below are the symbols indicating instructions and other information necessary for servicing and meaning associated with them respectively.

SYMBOL	DEFINITION	SYMBOL	DEFINITION
	Torque control required. Data beside it indicates specified torque.		Measure in voltage range.
	Apply oil. Use engine oil unless otherwise specified.		Measure in resistance range.
	Apply SUZUKI SUPER GREASE "A". 99000-25030		Measure in current range.
	Apply SUZUKI MOLY PASTE. 99000-25140		Measure in diode test range.
	Apply SUZUKI BOND "1207B". 99104-31140		Measure in continuity test range.
	Apply THREAD LOCK SUPER "1303". 99000-32030		Use special tool.
	Apply THREAD LOCK "1342". 99000-32050		Use engine coolant.
	Apply THREAD LOCK SUPER "1360". 99000-32130		Use fork oil. 99000-99044-L01
	Apply or use brake fluid.		

ABBREVIATIONS MAY BE USED IN THIS MANUAL

A

- ACL : Air Cleaner, Air Cleaner Box
- ATDC : After Top Dead Center
- ATM Pressure : Atmospheric Pressure Atmospheric Pressure Sensor (APS)
- API : American Petroleum Institute
- AC : Alternating Current
- ABDC : After Bottom Dead Center
- A/F : Air Fuel Mixture

B

- B+ : Battery Positive Voltage
- BTDC : Before Top Dead Center
- BBDC : Before Bottom Dead Center

C

- CKT : Circuit
- CKP Sensor : Crankshaft Position Sensor (CKPS)
- CMP Sensor : Camshaft Position Sensor (CMPS)
- CO : Carbon Monoxide
- CLP Switch : Clutch Lever Position Switch (Clutch Switch)
- CPU : Central Processing Unit

D

- DC : Direct Current
- DMC : Dealer Mode Coupler
- DOHC : Double Over Head Camshaft
- DRL : Daytime Running Light

E

- ECM : Engine Control Module Engine Control Unit (ECU) (FI Control Unit)
- ECT Sensor : Engine Coolant Temperature Sensor (ECTS), Water Temp. Sensor (WTS)
- EVAP : Evaporative Emission
- EVAP Canister : Evaporative Emission Canister (Canister)

F

- FI : Fuel Injection, Fuel Injector
- FP : Fuel Pump
- FP Relay : Fuel Pump Relay
- FPR : Fuel Pressure Regulator

G

- GEN : Generator
- GND : Ground
- GP Switch : Gear Position Switch

H

- HC : Hydrocarbons

I

- IAC Valve Actuator : Intake Air Control Valve Actuator
- IAT Sensor : Intake Air Temperature Sensor (IATS)
- IAP Sensor : Intake Air Pressure Sensor (IAPS)
- IG : Ignition

L

- LCD : Liquid Crystal Display
- LED : Light Emitting Diode (Malfunction Indicator Lamp)
- LH : Left Hand

M

- MAL-Code : Malfunction Code (Diagnostic Code)
- Max : Maximum
- Min : Minimum
- MIL : Malfunction Indicator Lamp (LED)

N

- NOx : Nitrogen Oxides

O

- OHC : Over Head Camshaft
- OPS : Oil Pressure Switch

P

- PCV : Positive Crankcase Ventilation (Crankcase Breather)

R

- RH : Right Hand
- ROM : Read Only Memory

S

- SAE : Society of Automotive Engineers

T

- TO Sensor : Tip Over Sensor (TOS)
- TP Sensor : Throttle Position Sensor (TPS)

V

- VCSV : Vacuum Control Solenoid Valve
- VD : Vacuum Damper
- VTV : Vacuum Transmitting Valve

SAE-TO-FORMER SUZUKI TERM (ONLY FOR U.S.A.)

This table lists SAE (Society of Automotive Engineers) J1930 terms and abbreviations which may be used in this manual in compliance with SAE recommendations, as well as their former SUZUKI names.

SAE TERM		FORMER SUZUKI TERM
FULL TERM	ABBREVIATION	
A		
Air Cleaner	ACL	Air Cleaner, Air Cleaner Box
B		
Barometric Pressure	BARO	Barometric Pressure, Atmospheric Pressure
Battery Positive Voltage	B+	Battery Voltage, +B
C		
Camshaft Position Sensor	CMP Sensor	Camshaft Position Sensor (CMPS)
Crankshaft Position Sensor	CKP Sensor	Crankshaft Position Sensor (CKPS), Crank Angle
D		
Data Link Connector	DLC	Dealer Mode Coupler
Diagnostic Test Mode	DTM	———
Diagnostic Trouble Code	DTC	Diagnostic Code, Malfunction Code
E		
Electronic Ignition	EI	———
Engine Control Module	ECM	Engine Control Module (ECM) FI Control Unit, Engine Control Unit (ECU)
Engine Coolant Level	ECL	Coolant Level
Engine Coolant Temperature	ECT	Coolant Temperature, Engine Coolant Temperature Water Temperature
Engine Speed	RPM	Engine Speed (RPM)
Evaporative Emission	EVAP	Evaporative Emission
Evaporative Emission Canister	EVAP Canister	——— (Canister)
Purge Valve	Purge Valve	Purge Valve (SP Valve)
F		
Fan Control	FC	———
Fuel Level Sensor	———	Fuel Level Sensor, Fuel Level Gauge
Fuel Pump	FP	Fuel Pump (FP)
G		
Generator	GEN	Generator
Ground	GND	Ground (GND, GRD)

SAE TERMS		FORMER SUZUKI TERM
FULL TERM	ABBREVIATION	
I		
Idle Speed Control	ISC	———
Ignition Control	IC	Electronic Spark Advance (ESA)
Ignition Control Module	ICM	———
Intake Air Temperature	IAT	Intake Air Temperature (IAT), Air Temperature
M		
Malfunction Indicator Lamp	MIL	LED Lamp Malfunction Indicator Lamp (MIL)
Manifold Absolute Pressure	MAP	Intake Air Pressure, Intake Vacuum
Mass Air Flow	MAF	Air Flow
O		
On-Board Diagnostic	ODB	Self-Diagnosis Function Diagnostic
Open Loop	OL	———
P		
Programmable Read Only Memory	PROM	———
Pulsed Secondary Air Injection	PAIR	Pulse Air Control (PAIR)
R		
Random Access Memory	RAM	———
Read Only Memory	ROM	ROM
S		
Secondary Air Injection	AIR	———
T		
Throttle Body	TB	Throttle Body (TB)
Throttle Body Fuel Injection	TBI	Throttle Body Fuel Injection (TBI)
Throttle Position Sensor	TP Sensor	TP Sensor (TPS)
V		
Voltage Regulator	VR	Voltage Regulator
Volume Air Flow	VAF	Air Flow

GENERAL INFORMATION

1

CONTENTS

WARNING/CAUTION/NOTE 1- 1
GENERAL PRECAUTIONS 1- 1
SUZUKI TL1000SV ('97-MODEL) 1- 3
SERIAL NUMBER LOCATION 1- 3
FUEL, OIL AND ENGINE COOLANT RECOMMENDATION 1- 3
FUEL 1- 3
ENGINE OIL 1- 4
BRAKE FLUID 1- 4
FRONT FORK OIL 1- 4
ENGINE COOLANT 1- 4
WATER FOR MIXING 1- 4
ANTI-FREEZE/ENGINE COOLANT 1- 4
LIQUID AMOUNT OF WATER/ENGINE COOLANT 1- 4
BREAK-IN PROCEDURES 1- 5
CYLINDER IDENTIFICATION 1- 5
INFORMATION LABELS 1- 6
SPECIFICATIONS 1- 7
COUNTRY OR AREA 1- 9

WARNING/CAUTION/NOTE

Please read this manual and follow its instructions carefully. To emphasize special information, the symbol and the words WARNING, CAUTION and NOTE have special meanings. Pay special attention to the messages highlighted by these signal words.

⚠ WARNING

Indicates a potential hazard that could result in death or injury.

⚠ CAUTION

Indicates a potential hazard that could result in motorcycle damage.

NOTE:
Indicates special information to make maintenance easier or instructions clearer.

Please note, however, that the warnings and cautions contained in this manual cannot possibly cover all potential hazards relating to the servicing, or lack of servicing, of the motorcycle. In addition to the WARNINGS and CAUTIONS stated, you must use good judgement and basic mechanical safety principles. If you are unsure about how to perform a particular service operation, ask a more experienced mechanic for advice.

GENERAL PRECAUTIONS

⚠ WARNING

- **Proper service and repair procedures are important for the safety of the service mechanic and the safety and reliability of the motorcycle.**
- **When 2 or more persons work together, pay attention to the safety of each other.**
- **When it is necessary to run the engine indoors, make sure that exhaust gas is forced outdoors.**
- **When working with toxic or flammable materials, make sure that the area you work in is well-ventilated and that you follow all of the material manufacturer's instructions.**
- **Never use gasoline as a cleaning solvent.**
- **To avoid getting burned, do not touch the engine, engine oil, radiator and exhaust system until they have cooled.**
- **After servicing the fuel, oil, water, exhaust or brake systems, check all lines and fittings related to the system for leaks.**

⚠ CAUTION

* If parts replacement is necessary, replace the parts with Suzuki Genuine Parts or their equivalent.
* When removing parts that are to be reused, keep them arranged in an orderly manner so that they may be reinstalled in the proper order and orientation.
* Be sure to use special tools when instructed.
* Make sure that all parts used in reassembly are clean. Lubricate them when specified.
* Use the specified lubricant, bond, or sealant.
* When removing the battery, disconnect the negative cable first and then the positive cable. When reconnecting the battery, connect the positive cable first and then the negative cable, and replace the terminal cover on the positive terminal.
* When performing service to electrical parts, if the service procedures not require use of battery power, disconnect the negative cable the battery.
* When tightening the cylinder head and case bolts and nuts, tighten the larger sizes first. Always tighten the bolts and nuts from the inside working out, in a crisscross manner.
* Whenever you remove oil seals, gaskets, packing, O-rings, locking washers, self-locking nuts, cotter pins, circlips and certain other parts as specified, be sure to replace them with new ones. Also, before installing these new parts, be sure to remove any left over material from the mating surfaces.
* Never reuse a circlip. When installing a new circlip, take care not to expand the end gap larger than required to slip the circlip over the shaft. After installing a circlip, always ensure that it is completely seated in its groove and securely fitted.
* Use a torque wrench to tighten fasteners to the specified torque. Wipe off grease and oil if a thread is smeared with them.
* After reassembling, check parts for tightness and proper operation.

* To protect the environment, do not unlawfully dispose of used motor oil, engine coolant and other fluids: batteries, and tires.
* To protect Earth's natural resources, properly dispose of used motorcycle and parts.

SUZUKI TL1000SV ('97-MODEL)



RIGHT SIDE



LEFT SIDE

*Difference between photographs and actual motorcycles depends on the markets.

SERIAL NUMBER LOCATION

The frame serial number or V.I.N. (Vehicle Identification Number) ① is stamped on the right side of the steering head pipe. The engine serial number ② is located on the right side of the crankcase. These numbers are required especially for registering the machine and ordering spare parts.

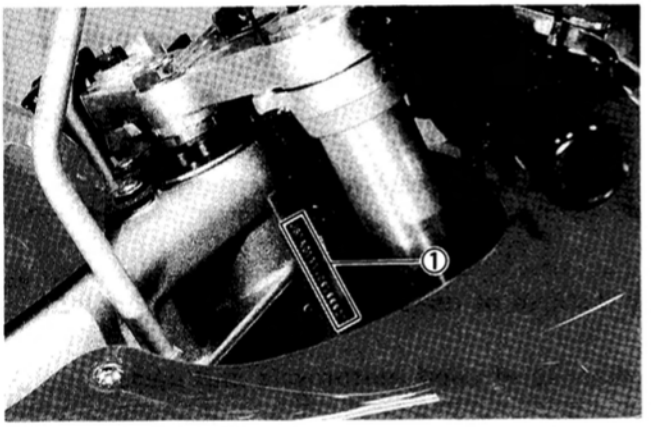

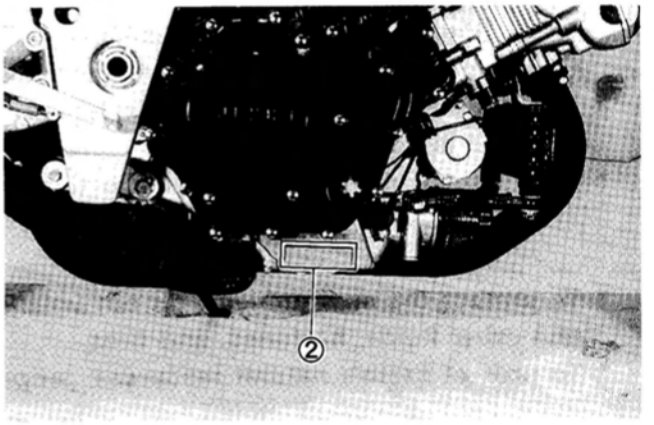

FUEL, OIL AND ENGINE COOLANT RECOMMENDATION

FUEL

1. Use only unleaded gasoline of at least 87 pump octane ($\frac{R+M}{2}$) method or 91 octane or higher rated by the research method.
2. Suzuki recommends that customers use alcohol free, unleaded gasoline whenever possible.
3. Use of blended gasoline containing MTBE (Methyl Tertiary Butyl Ether) is permitted.
4. Use of blended gasoline/alcohol fuel is permitted, provided that the fuel contains not more than 10% ethanol. Gasoline/alcohol fuel may contain up to 5% methanol if appropriate cosolvents and corrosion inhibitors are present in it.
5. If the performance of the vehicle is unsatisfactory while using blended gasoline/alcohol fuel, you should switch to alcohol–free unleaded gasoline.
6. Failure to follow these guideline could possibly void applicable warranty coverage. Check with your fuel supplier to make sure that the fuel you intend to use meets the requirements listed above.

ENGINE OIL

SUZUKI recommends the use of SUZUKI PERFORMANCE 4 MOTOR OIL or an oil which is rated SF or SG under the API (American Petroleum Institute) service classification. The recommended viscosity is SAE 10W/40. If an SAE 10W/40 oil is not available, select an alternative according to the right chart.

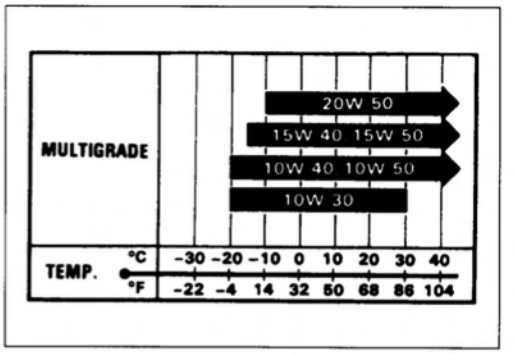

BRAKE FLUID

Specification and classification: DOT 4

⚠WARNING

Since the brake system of this motorcycle is filled with a glycol-based brake fluid by the manufacturer, do not use or mix different types of fluid such as silicone-based and petroleum-based fluid for refilling the system, otherwise serious damage will result.
Do not use any brake fluid taken from old or used or unsealed containers.
Never re-use brake fluid left over from a previous servicing, which has been stored for a long period.

FRONT FORK OIL

Use fork oil L01.

ENGINE COOLANT

Use an anti-freeze/engine coolant compatible with an aluminum radiator, mixed with distilled water only.

WATER FOR MIXING

Use distilled water only. Water other than distilled water can corrode and clog the aluminum radiator.

ANTI-FREEZE/ENGINE COOLANT

The engine coolant perform as a corrosion and rust inhabit as well as anti-freeze. Therefore, the engine coolant should be used at all times even though the atmospheric temperature in your area does not go down to freezing point.

LIQUID AMOUNT OF WATER/ENGINE COOLANT

Solution capacity (total): 2 200 ml (2.3/1.9 US/Imp qt)

For engine coolant mixture information, refer to cooling system section, page 5-3.

⚠ CAUTION

Mixing of anti-freeze/engine coolant should be limited to 60%. Mixing beyond it would reduce its efficiency. If the anti-freeze/engine coolant mixing ratio is below 50%, rust inhabiting performance is greatly reduced. Be sure to mix it above 50% even though the atmospheric temperature does not go down to the freezing point.

BREAK-IN PROCEDURES

During manufacture only the best possible materials are used and all machined parts are finished to a very high standard but it is still necessary to allow the moving parts to "BREAK-IN" before subjecting the engine to maximum stresses. The future performance and reliability of the engine depends on the care and restraint exercised during its early life. The general rules are as follows.

- Keep to these break-in engine speed limits:

Initial 800 km (500 miles): Below 5 000 r/min
Up to 1 600 km (1 000 miles): Below 7 500 r/min
Over 1 600 km (1 000 miles): Below 10 500 r/min

- Upon reaching an odometer reading of 1 600 km (1 000 miles) you can subject the motorcycle to full throttle operation. However, do not exceed 10 500 r/min at any time.

CYLINDER IDENTIFICATION

The two cylinders of this engine are identified as No.1 and No.2 cylinder, as counted from front to rear (as viewed by the rider on the seat).

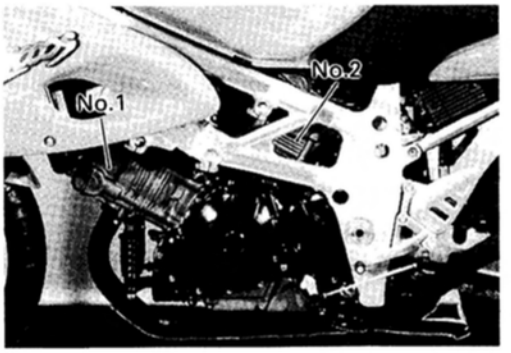

①	Noise label (For E-03,24,33,34)
②	Information label (For E-03,28,33)
③	Fuel caution label (For E-02,24)
④	Manual notice label (For E-03,33)
⑤	Frame caution labe
⑥	Screen warning label
⑦	Steering warning label (For E-03,33,34)
⑧	Tire pressure label
⑨	Warning safety labe
⑩	ICES Canada label (For E-28)
⑪	ID label (Except for E-03,28,33)
⑫	ID label (For E-39)
⑬	Safety label (For E-03,28,33)

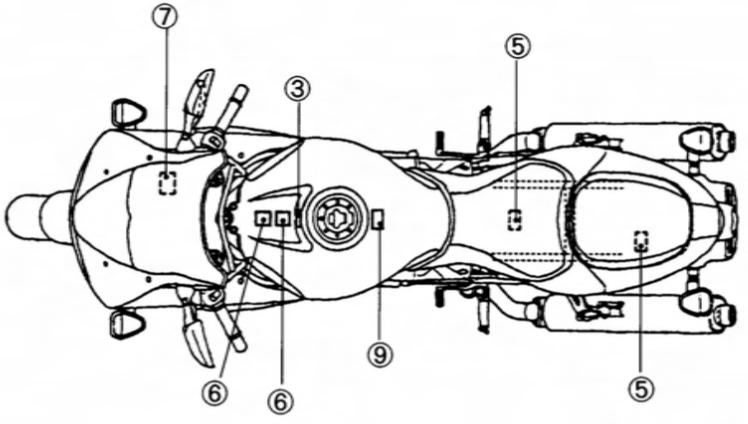

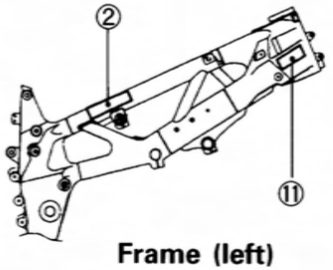

Frame (left)

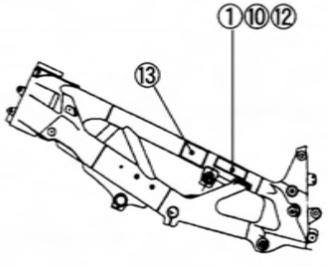

Frame (right)

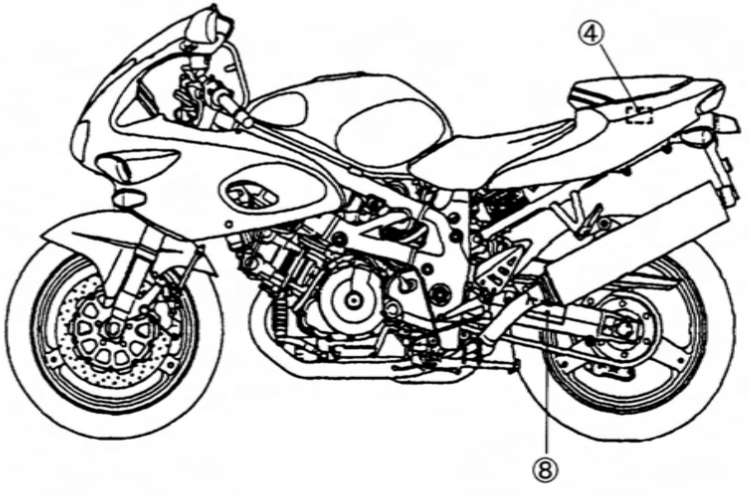

SPECIFICATIONS

DIMENSIONS AND DRY MASS

Overall length	2 045 mm (80.5 in) E-02,03,04,25,28,33,34,37
	2 065 mm (81.3 in) E-18,22,24
	2 085 mm (82.1 in) E-39
Overall width	715 mm (28.1 in)
Overall height	1 175 mm (46.3 in)
Wheelbase	1 415 mm (55.7 in)
Ground clearance	140 mm (5.5 in)
Seat height	835 mm (32.9 in)
Dry mass	187 kg (412 lbs)

ENGINE

Type	Four-stroke, Liquid-cooled, DOHC, TSCC, 90-degree V-twin
Number of cylinders	2
Bore	98.0 mm (3.858 in)
Stroke	66.0 mm (2.598 in)
Piston displacement	996 cm^3 (60.8 cu. in)
Compression ratio	11.3 : 1
Fuel system	Fuel injection
Air cleaner	Non-woven fabric element
Starter system	Electric starter
Lubrication system	Wet sump

TRANSMISSION

Clutch	Wet multi-plate type
Transmission	6-speed constant mesh
Gearshift pattern	1-down, 5-up
Primary reduction ratio	1.838 (57/31)
Final reduction ratio	2.235 (38/17)
Gear ratios, Low	2.666 (32/12)
2nd	1.933 (29/15)
3rd	1.500 (27/18)
4th	1.227 (27/22)
5th	1.086 (25/23)
Top	1.000 (24/24)
Drive chain	RK50 GSVZ1, 104 links

CHASSIS

Front suspension	Inverted telescopic, coil spring, oil damped, spring pre-load fully adjustable, compression damping force fully adjustable, rebound damping force fully adjustable.
Rear suspension	Swingarm, coil spring, rotary damper, spring pre-road fully adjustable, compression damping force fully adjustable, rebound damping force fully adjustable.
Steering angle	30° (right & left)
Caster	23° 42′
Trail	94.5 mm (3.7 in)
Turning radius	3.1 m (10.2 ft)
Front brake	Disc brake, twin
Rear brake	Disc brake
Front tire size	120/70 ZR17, (58W)
Rear tire size	190/50 ZR17, (73W)
Front fork stroke	120 mm (4.7 in)
Rear wheel travel	128 mm (5.0 in)

ELECTRICAL

Ignition type	Electronic ignition (Transistorized)
Ignition timing	3° B.T.D.C. at 1 200 r/min
Spark plug	NGK: CR8EK or ND: U24ETR ..... E-03,28,33 NGK: CR8E or ND: U24ESR-N ..... Others
Battery	12V 36.0 kC (10 Ah)/10HR
Generator	Three-phase A.C. Generator
Fuse	30/15/15/15/10/10A
Headlight	12V 60/55W × 2 ..... E-02,03,24,28,33 12V 55W + 12V 55W ..... Others
Position light	12V 5W ..... Except for E-03,24,28,33
Turn signal light	12V 21W
License light	12V 5W
Brake light/Taillight	12V 21/5W × 2
Speedometer/Tachometer light	12V 0.84W × 3
Neutral indicator light	12V 1.7W
High beam indicator light	12V 1.7W
Turn signal indicator light	12V 3W
Fuel indicator light	12V 1.7W
Engine coolant temp. indicator light	LED

CAPACITIES

Fuel tank	17 L (4.5/3.7 US/Imp gal)
Engine oil, oil change	3 100 ml (3.3/2.7 US/Imp qt)
with filter change	3 300 ml (3.5/2.9 US/Imp qt)
overhaul	3 600 ml (3.8/3.2 US/Imp qt)
Engine coolant, including reserve	2 200 ml (2.3/1.9 US/Imp qt)
Front fork oil (each leg)	488 ml (16.5/17.2 US/Imp oz)

These specifications are subject to change without notice.

COUNTRY OR AREA

The series of symbols on the left stand for the countries or area on the right.

SYMBOL	COUNTRY or AREA
E-02	U.K.
E-03	U.S.A.
E-04	France
E-18	Switzerland
E-21	Belgium
E-22	Germany
E-24	Australia
E-25	Netherlands
E-28	Canada
E-33	California (U.S.A.)
E-34	Italy
E-37	Brazil
E-39	Austria
E-53	Spain

(E-21 and 53 countries are included in E-34.)

PERIODIC MAINTENANCE

CONTENTS

PERIODIC MAINTENANCE SCHEDULE 2- 1
- PERIODIC MAINTENANCE CHART 2- 1
- LUBRICATION POINTS 2- 2

MAINTENANCE AND TUNE-UP PROCEDURES 2- 3
- AIR CLEANER 2- 3
- SPARK PLUG 2- 4
- TAPPET CLEARANCE 2- 6
- FUEL HOSE 2-11
- ENGINE OIL AND OIL FILTER 2-11
- ENGINE IDLE SPEED 2-12
- THROTTLE CABLE PLAY 2-13
- THROTTLE VALVE SYNCHRONIZATION 2-13
- CLUTCH 2-14
- COOLING SYSTEM 2-14
- DRIVE CHAIN 2-16
- BRAKE 2-18
- TIRE 2-21
- STEERING 2-21
- FRONT FORK 2-22
- REAR SUSPENSION 2-22
- EXHAUST PIPE BOLTS 2-22
- CHASSIS BOLTS AND NUTS 2-23

COMPRESSION PRESSURE CHECK 2-25

OIL PRESSURE CHECK 2-26

PERIODIC MAINTENANCE SCHEDULE

IMPORTANT: The periodic maintenance intervals and service requirements have been established in accordance with EPA regulations. Following these instructions will ensure that the motorcycle will not exceed emission standards and it will also ensure the reliability and performance of the motorcycle.

The chart below lists the recommended intervals for all the required periodic service work necessary to keep the motorcycle operating at peak performance and economy. Mileages are expressed in terms of kilometer, miles and time for your convenience.

NOTE:

More frequent servicing may be performed on motorcycles that are used under severe conditions.

PERIODIC MAINTENANCE CHART

Interval / Item	km	1 000	6 000	12 000	18 000	24 000
	miles	600	4 000	7 500	11 000	15 000
	months	1	6	12	18	24
Air cleaner element		–	I	I	R	I
Spark plugs		–	I	R	I	R
Tappet clearance		–	–	–	–	I
Fuel hoses		–	I	I	I	I
		Replace every four years.				
Engine oil		R	R	R	R	R
Engine oil filter		R	–	–	R	–
Engine idle speed		I	I	I	I	I
Throttle cable play		I	I	I	I	I
Throttle valve synchronization		*I	–	I	–	I
*Evaporative emission control system (California model only)		–	–	I	–	I
		Replace vaper hoses every four years.				
Clutch		–	I	I	I	I
Radiator hose		–	I	I	I	I
Engine coolant		Replace every two years.				
Drive chain		I	I	I	I	I
		Clean and lubricate every 1000 km (600 miles).				
Brakes		I	I	I	I	I
Brake hose		–	I	I	I	I
		Replace every four years.				
Brake fluid		–	I	I	I	I
		Replace every two years.				
Tires		–	I	I	I	I
Steering		I	–	I	–	I
Front forks		–	–	I	–	I
Rear suspension		–	–	I	–	I
Exhaust pipe bolts and muffler bolts		T	–	T	–	T
Chassis bolts and nuts		T	T	T	T	T

NOTE: I=Inspect and clean, adjust, replace or lubricate as necessary;
R=Replace; T=Tighten

Asterisk mark (*) indicates the California model only.

LUBRICATION POINTS

Proper lubrication is important for smooth operation and long life of each working part of the motorcycle.

Major lubrication points are indicated below.

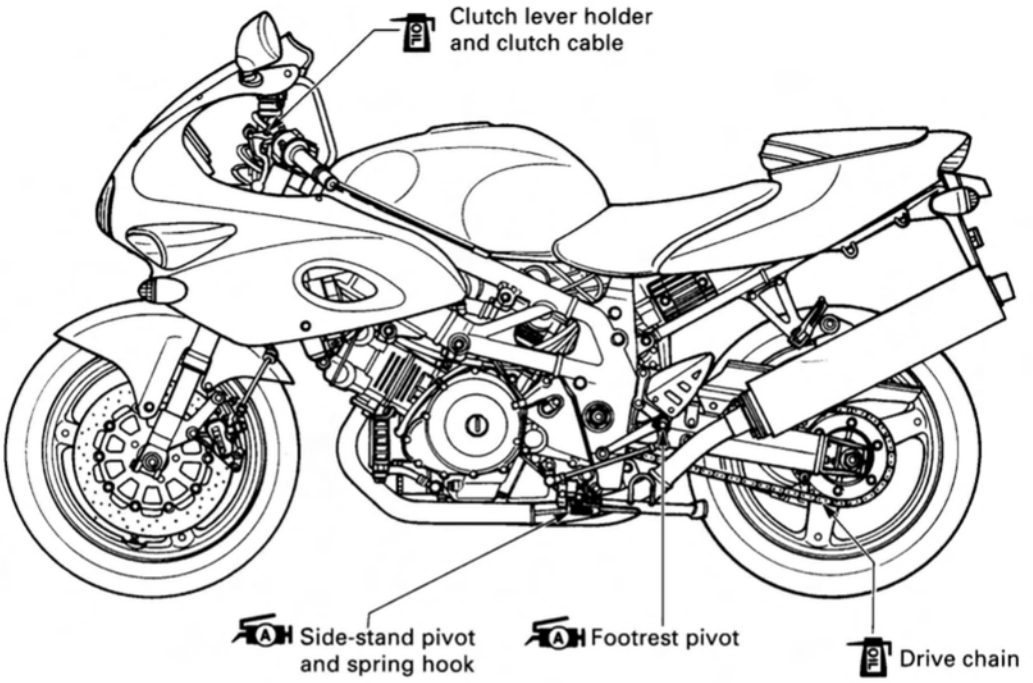

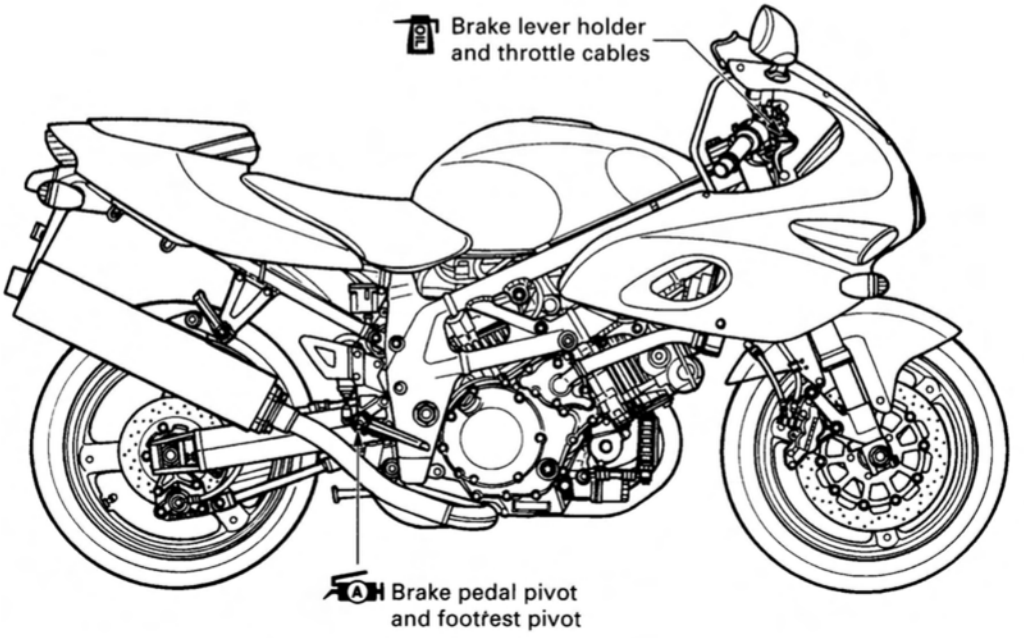

NOTE:

* *Before lubricating each part, clean off any rusty spots and wipe off any grease, oil, dirt or grime.*
* *Lubricate exposed parts which are subject to rust, with a rust preventative spray whenever the motorcycle has been operated under wet or rainy conditions.*

MAINTENANCE AND TUNE-UP PROCEDURES

This section describes the servicing procedures for each item of the Periodic Maintenance requirements.

AIR CLEANER

Inspect Every 6 000 km (4 000 miles, 6 months) and Replace Every 18 000 km (11 000 miles, 18 months).

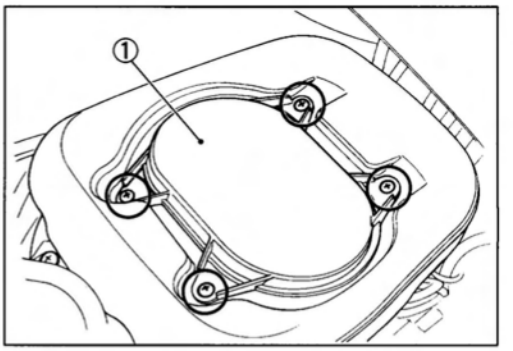

- Remove the front seat. (Refer to page 6-4.)
- Lift and support the fuel tank. (Refer to page 4-49.)
- Remove the air cleaner cover ① by removing the screws.
- Remove the air cleaner element ②.

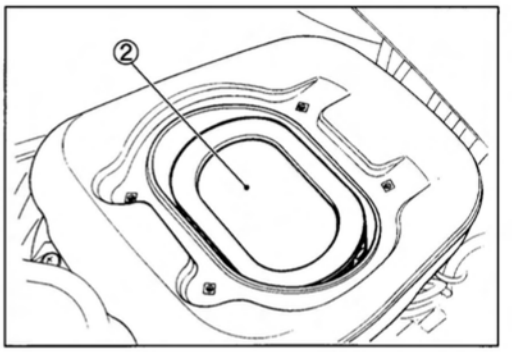

- Carefully use air hose to blow the dust from the cleaner element.

⚠ CAUTION

Always use air pressure on the outside of the air cleaner element. If air pressure is used on the inside, dirt will be forced into the pores of the air cleaner element thus restricting air flow through the air cleaner element.

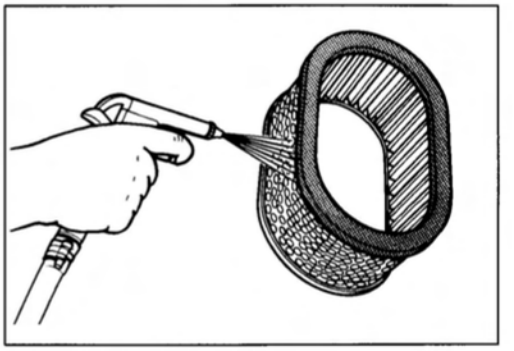

- Reinstall the cleaned or new air cleaner element in the reverse order of removal.

⚠ CAUTION

If driving under dusty condition, clean the air cleaner element more frequently. The surest way to accelerate engine wear is to use the engine without the element or to use a ruptured element. Make sure that the air cleaner is in good condition at all times. Life of the engine depends largely on this component!

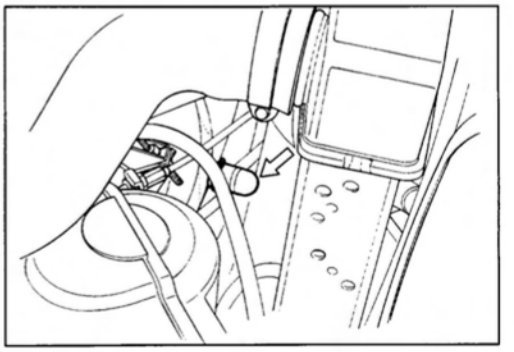

NOTE:
When cleaning the air cleaner element, drain water from the air cleaner by removing the drain plugs.

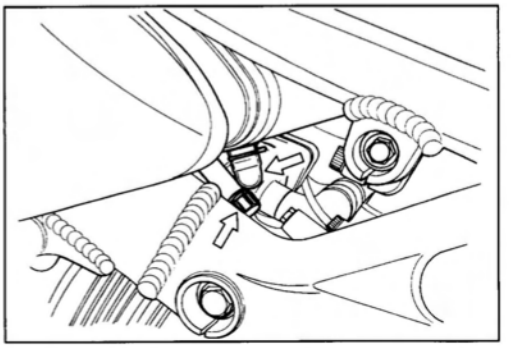

SPARK PLUG

Inspect Every 6 000 km (4 000 miles, 6 months) and Replace Every 12 000 km (7 500 miles, 12 months).

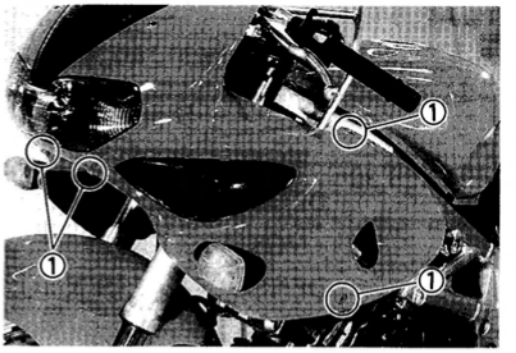

NO.1 (FRONT) SPARK PLUG REMOVAL

- Remove the fairing bolts ①, left and right.
- Open the lower sides of fairing, left and right.

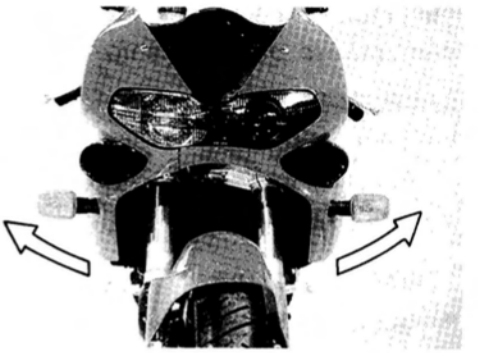

- Remove the radiator mounting bolt ② (lower side).
- Move the radiator lower side forward.

NOTE:
To keep the radiator lower side at the forward position, insert a wooden block or a appropriate block between the radiator and the cylinder head.

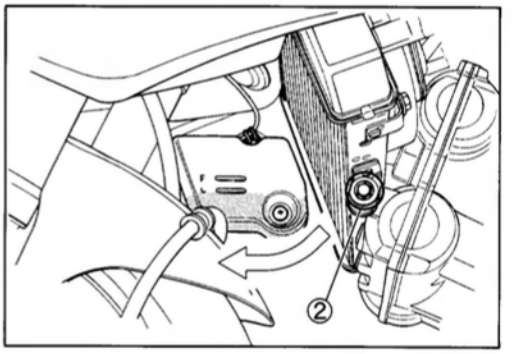

- Remove the spark plug cap.
- Remove the spark plug with a spark plug wrench.

NOTE:
Be careful not to damage the radiator fins.

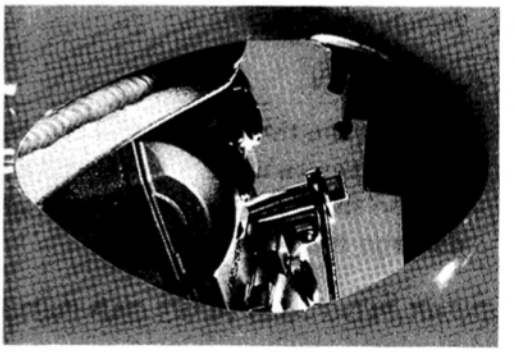

⚠WARNING

The hot radiator and the hot engine can burn you. Wait until the radiator and the engine are cool enough to touch.

NO.2 (REAR) SPARK PLUG REMOVAL

- Remove the front seat. (Refer to page 6-4.)
- Lift and support the fuel tank. (Refer to page 4-49.)
- Remove the spark plug cap.
- Remove the spark plug with a spark plug wrench.



HEAT RANGE

- Check to see the heat range of the plug.

		Standard	Cold type
E-03,28,33	NGK	CR8EK	CR9EK or CR10EK
	DENSO	U24ETR	U27ETR or U31ETR
Others	NGK	CR8E	CR9E or CR10E
	DENSO	U24ESR-N	U27ESR-N or U31ESR-N

NOTE:
"R" type spark plug has a resistor located at the center electrode to prevent radio noise.

CARBON DEPOSIT

- Check to see if there are carbons deposit on the plugs. If carbon is deposited, remove it with a spark plug cleaner machine or carefully using a tool with a pointed end.

SPARK PLUG GAP

- Measure the plug gap with a thickness gauge. If out of specification, adjust it to the following gap.

TOOL 09900-20803: Thickness gauge

Standard
Spark plug gap Ⓐ: 0.7–0.8 mm (0.028–0.031 in)
Ⓑ: 0.6–0.7 mm (0.024–0.028 in)

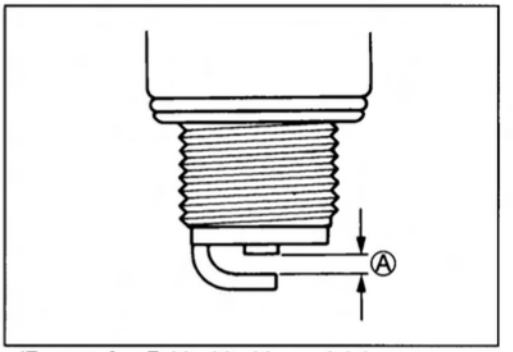

(Except for E-03, 28, 33 models)

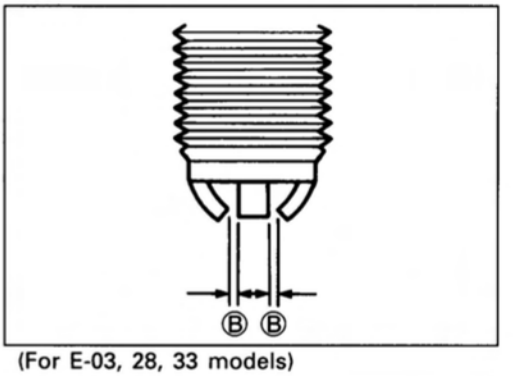

(For E-03, 28, 33 models)

ELECTRODES CONDITION

- Check to see the worn or burnt condition of the electrodes. If it is extremely worn or burnt, replace the plug. And also replace the plug if it has a broken insulator, damaged thread.

⚠ CAUTION

Confirm the thread size and reach when replacing the plug. If the reach is too short, carbon will be deposited on the screw portion of the plug hole and engine damage may result.

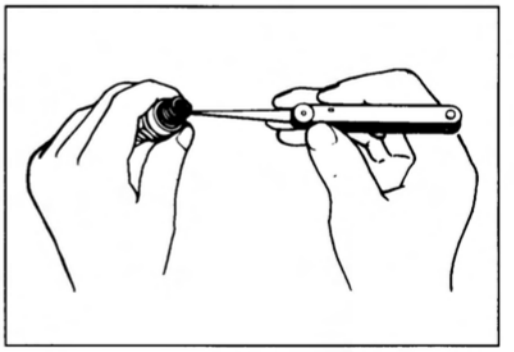

SPARK PLUG AND PLUG CAP INSTALLATION

⚠ CAUTION

Before using a spark plug wrench, carefully turn the spark plug by finger into the threads of the cylinder head to prevent damage the aluminum threads.

- Install the spark plugs to the cylinder heads by finger tight, and then tighten them to the specified torque.

Spark plug: 11 N·m (1.1 kg-m, 8.0 lb-ft)

NOTE:
When fitting the spark plug caps, front and rear, face the triangle marks on the water-proof covers Ⓐ to each cylinder exhaust side.



TAPPET CLEARANCE

Inspect Every 24 000 km (15 000 miles, 24 months).

- Remove the front seat. (Refer to page 6-4.)
- Lift and support the fuel tank. (Refer to page 4-49.)
- Remove the spark plugs, front and rear. (Refer to page 2-4.)
- Disconnect the camshaft position sensor coupler from the rear cylinder.
- Remove the cylinder head covers, front and rear.

The tappet clearance specification is different for intake and exhaust valves.
Tappet clearance must be checked and adjusted, 1) at the time of periodic inspection, 2) when the valve mechanism is serviced, and 3) when the camshafts are disturbed by removing them for servicing.

Tappet clearance (when cold):
IN. : 0.10–0.20 mm (0.004–0.008 in)
EX.: 0.20–0.30 mm (0.008–0.012 in)

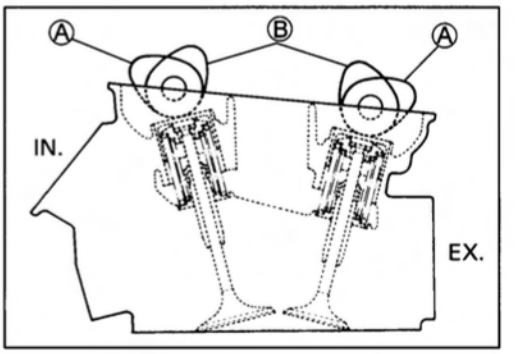

NOTE:
** The tappet clearance should be taken when each cylinder is at Top Dead Center (TDC) of compression stroke.*
** The cams (IN & EX) on the front cylinder at position Ⓐ show the front cylinder at TDC of compression stroke.*
** The cams (IN & EX) on the rear cylinder at position Ⓑ show the rear cylinder at TDC of compression stroke.*
** The clearance specification is for COLD state.*
** To turn the crankshaft for clearance checking, be sure to use a 17-mm wrench, and rotate in the normal running direction. All spark plugs should be removed.*

- Remove the generator cover plug ① and the timing inspection plug ②.



- Turn the crankshaft to set the No.1 (Front) cylinder at TDC of compression stroke. (Align the "F|T" line on the generator rotor to the index mark of valve timing inspection hole and also bring the camshafts to the position as shown in page 2-6.)

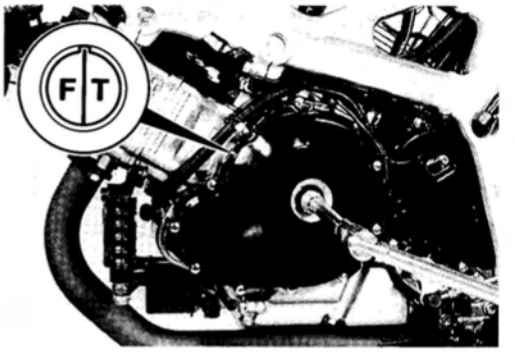

- To inspect the No.1 (Front) cylinder tappet clearance, use a thickness gauge between the tappet and the cam. If the clearance is out of specification, adjust it into the specified range.

TOOL **09900-20803: Thickness gauge**



- Turn the crankshaft 270 degrees (¾ turns) to set the No.2 (Rear) cylinder at TDC of compression stroke. (Align the "R|T" line on the generator rotor to the index mark of valve timing inspection hole and also bring the camshafts to the position as shown in page 2-6.)

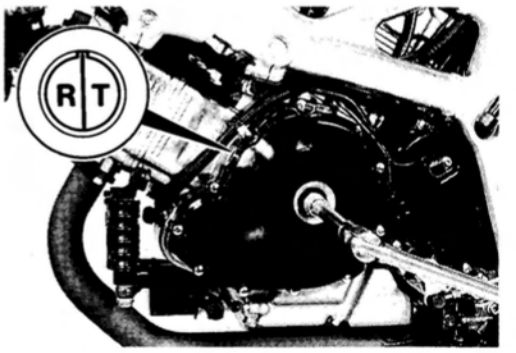

- Inspect the No.2 (Rear) cylinder tappet clearance as the same manner of No.1 (Front) cylinder and adjust the clearance if necessary.

TOOL **09900-20803: Thickness gauge**

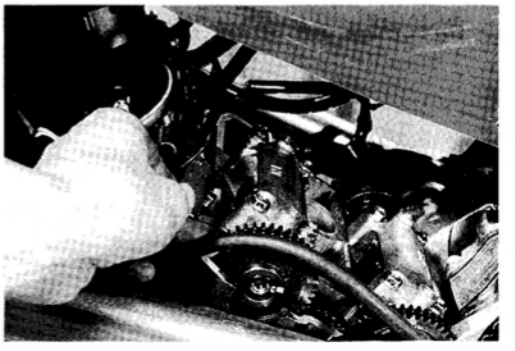

TAPPET CLEARANCE ADJUSTMENT

The clearance is adjusted by replacing the existing tappet shim by a thicker or thinner shim.

- Remove the intake or exhaust camshafts. (Refer to pages 3A-6 and -7.)
- Remove the tappet and shim by fingers or magnetic hand.
- Check the figures printed on the shim. These figures indicate the thickness of the shim, as illustrated.
- Select a replacement shim that will provide a clearance within the specified range. For the purpose of this adjustment, a total of 25 sizes of tappet shim are available ranging from 2.30 to 3.50 mm in steps of 0.05 mm. Fit the selected shim to the valve stem end, with numbers toward tappet. Be sure to check shim size with micrometer to ensure its size.
  Refer to the tappet shim selection table (Pages 2-9 and -10) for details.

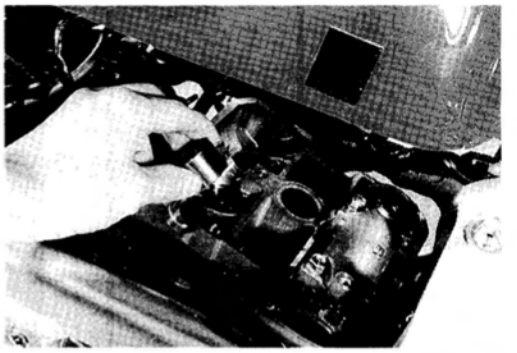

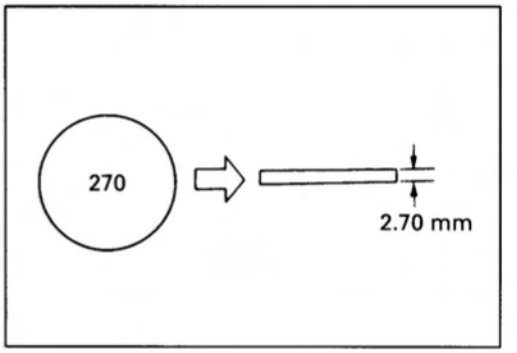

NOTE:

* *Be sure to apply engine oil to tappet shim top and bottom faces.*
* *When seating the tappet shim, be sure to face figure printed surface to the tappet.*

⚠ CAUTION

Reinstall the camshafts as the specified manner. (Refer to pages 3-70 through -75.)

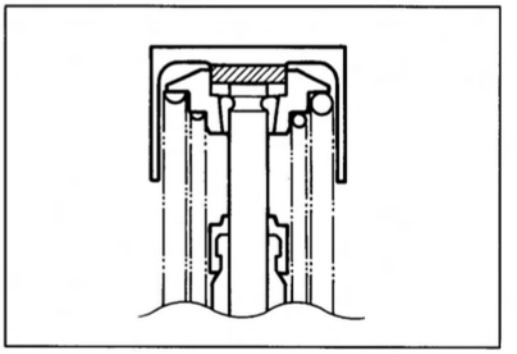

- After replacing the tappet shim and camshafts, rotate the engine so that the tappet is depressed fully. This will squeeze out oil trapped between the shim and the tappet that could cause an incorrect measurement, then check the clearance again to confirm that it is within the specified range.

- After finishing the tappet clearance adjustment, reinstall the following items.

	Page
* Cylinder head cover	3-76
* Spark plug and plug cap	2-5 and -6
* Valve timing inspection plug	3-77
* Generator cover plug	3-77

(INTAKE SIDE)

TAPPET SHIM SELECTION TABLE [INTAKE]

TAPPET SHIM NO. (12892-41C00-XXX)

OPTION

TAPPET SHIM SET (12800–41810)

MEASURED TAPPET CLEARANCE (mm) \ SUFFIX NO.	230	235	240	245	250	255	260	265	270	275	280	285	290	295	300	305	310	315	320	325	330	335	340	345	350
PRESENT SHIM SIZE (mm)	2.30	2.35	2.40	2.45	2.50	2.55	2.60	2.65	2.70	2.75	2.80	2.85	2.90	2.95	3.00	3.05	3.10	3.15	3.20	3.25	3.30	3.35	3.40	3.45	3.50
0.00–0.04			2.30	2.35	2.40	2.45	2.50	2.55	2.60	2.65	2.70	2.75	2.80	2.85	2.90	2.95	3.00	3.05	3.10	3.15	3.20	3.25	3.30	3.35	3.40
0.05–0.09		2.30	2.35	2.40	2.45	2.50	2.55	2.60	2.65	2.70	2.75	2.80	2.85	2.90	2.95	3.00	3.05	3.10	3.15	3.20	3.25	3.30	3.35	3.40	3.45
0.10–0.20	SPECIFIED CLEARANCE NO ADJUSTMENT REQUIRED																								
0.21–0.25	2.40	2.45	2.50	2.55	2.60	2.65	2.70	2.75	2.80	2.85	2.90	2.95	3.00	3.05	3.10	3.15	3.20	3.25	3.30	3.35	3.40	3.45	3.50	3.50	
0.26–0.30	2.45	2.50	2.55	2.60	2.65	2.70	2.75	2.80	2.85	2.90	2.95	3.00	3.05	3.10	3.15	3.20	3.25	3.30	3.35	3.40	3.45	3.50	3.50		
0.31–0.35	2.50	2.55	2.60	2.65	2.70	2.75	2.80	2.85	2.90	2.95	3.00	3.05	3.10	3.15	3.20	3.25	3.30	3.35	3.40	3.45	3.50	3.50			
0.36–0.40	2.55	2.60	2.65	2.70	2.75	2.80	2.85	2.90	2.95	3.00	3.05	3.10	3.15	3.20	3.25	3.30	3.35	3.40	3.45	3.50	3.50				
0.41–0.45	2.60	2.65	2.70	2.75	2.80	2.85	2.90	2.95	3.00	3.05	3.10	3.15	3.20	3.25	3.30	3.35	3.40	3.45	3.50	3.50					
0.46–0.50	2.65	2.70	2.75	2.80	2.85	2.90	2.95	3.00	3.05	3.10	3.15	3.20	3.25	3.30	3.35	3.40	3.45	3.50	3.50						
0.51–0.55	2.70	2.75	2.80	2.85	2.90	2.95	3.00	3.05	3.10	3.15	3.20	3.25	3.30	3.35	3.40	3.45	3.50	3.50							
0.56–0.60	2.75	2.80	2.85	2.90	2.95	3.00	3.05	3.10	3.15	3.20	3.25	3.30	3.35	3.40	3.45	3.50	3.50								
0.61–0.65	2.80	2.85	2.90	2.95	3.00	3.05	3.10	3.15	3.20	3.25	3.30	3.35	3.40	3.45	3.50	3.50									
0.66–0.70	2.85	2.90	2.95	3.00	3.05	3.10	3.15	3.20	3.25	3.30	3.35	3.40	3.45	3.50	3.50										
0.71–0.75	2.90	2.95	3.00	3.05	3.10	3.15	3.20	3.25	3.30	3.35	3.40	3.45	3.50	3.50											
0.76–0.80	2.95	3.00	3.05	3.10	3.15	3.20	3.25	3.30	3.35	3.40	3.45	3.50	3.50												
0.81–0.85	3.00	3.05	3.10	3.15	3.20	3.25	3.30	3.35	3.40	3.45	3.50	3.50													
0.86–0.90	3.05	3.10	3.15	3.20	3.25	3.30	3.35	3.40	3.45	3.50	3.50														
0.91–0.95	3.10	3.15	3.20	3.25	3.30	3.35	3.40	3.45	3.50	3.50															
0.96–1.00	3.15	3.20	3.25	3.30	3.35	3.40	3.45	3.50	3.50																
1.01–1.05	3.20	3.25	3.30	3.35	3.40	3.45	3.50	3.50																	
1.06–1.10	3.25	3.30	3.35	3.40	3.45	3.50	3.50																		
1.11–1.15	3.30	3.35	3.40	3.45	3.50	3.50																			
1.16–1.20	3.35	3.40	3.45	3.50	3.50																				
1.21–1.25	3.40	3.45	3.50	3.50																					
1.26–1.30	3.45	3.50	3.50																						
1.31–1.35	3.50	3.50																							
1.36–1.40	3.50																								

HOW TO USE THIS CHART:

I. Measure tappet clearance. "ENGINE IS COLD"

II. Measure present shim size.

III. Match clearance in vertical column with present shim size in horizontal column.

EXAMPLE

Tappet clearance is	0.23 mm
Present shim size	2.70 mm
Shim size to be used	2.80 mm

TAPPET SHIM SELECTION TABLE [EXHAUST]

TAPPET SHIM NO. (12892-41C00-XXX)

OPTION

TAPPET SHIM SET (12800–41810)

MEASURED TAPPET CLEARANCE (mm) \ SUFFIX NO.	230	235	240	245	250	255	260	265	270	275	280	285	290	295	300	305	310	315	320	325	330	335	340	345	350
PRESENT SHIM SIZE (mm)	2.30	2.35	2.40	2.45	2.50	2.550	2.60	2.65	2.70	2.75	2.80	2.85	2.90	2.95	3.00	3.05	3.10	3.15	3.20	3.25	3.30	3.35	3.40	3.45	3.50
0.00 – 0.04					2.30	2.35	2.40	2.45	2.50	2.55	2.60	2.65	2.70	2.75	2.80	2.85	2.90	2.95	3.00	3.05	3.10	3.15	3.20	3.25	3.30
0.05 – 0.09				2.30	2.35	2.40	2.45	2.50	2.55	2.60	2.65	2.70	2.75	2.80	2.85	2.90	2.95	3.00	3.05	3.10	3.15	3.20	3.25	3.30	3.35
0.10 – 0.14			2.30	2.35	2.40	2.45	2.50	2.55	2.60	2.65	2.70	2.75	2.80	2.85	2.90	2.95	3.00	3.05	3.10	3.15	3.20	3.25	3.30	3.35	3.40
0.15 – 0.19		2.30	2.35	2.40	2.45	2.50	2.55	2.60	2.65	2.70	2.75	2.80	2.85	2.90	2.95	3.00	3.05	3.10	3.15	3.20	3.25	3.30	3.35	3.40	3.45
0.20 – 0.30	SPECIFIED CLEARANCE NO ADJUSTMENT REQUIRED																								
0.31 – 0.35	2.40	2.45	2.50	2.55	2.60	2.65	2.70	2.75	2.80	2.85	2.90	2.95	3.00	3.05	3.10	3.15	3.20	3.25	3.30	3.35	3.40	3.45	3.50	3.50	
0.36 – 0.40	2.45	2.50	2.55	2.60	2.65	2.70	2.75	2.80	2.85	2.90	2.95	3.00	3.05	3.10	3.15	3.20	3.25	3.30	3.35	3.40	3.45	3.50	3.50		
0.41 – 0.45	2.50	2.55	2.60	2.65	2.70	2.75	2.80	2.85	2.90	2.95	3.00	3.05	3.10	3.15	3.20	3.25	3.30	3.35	3.40	3.45	3.50	3.50			
0.46 – 0.50	2.55	2.60	2.65	2.70	2.75	2.80	2.85	2.90	2.95	3.00	3.05	3.10	3.15	3.20	3.25	3.30	3.35	3.40	3.45	3.50	3.50				
0.51 – 0.55	2.60	2.65	2.70	2.75	2.80	2.85	2.90	2.95	3.00	3.05	3.10	3.15	3.20	3.25	3.30	3.35	3.40	3.45	3.50	3.50					
0.56 – 0.60	2.65	2.70	2.75	2.80	2.85	2.90	2.95	3.00	3.05	3.10	3.15	3.20	3.25	3.30	3.35	3.40	3.45	3.50	3.50						
0.61 – 0.65	2.70	2.75	2.80	2.85	2.90	2.95	3.00	3.05	3.10	3.15	3.20	3.25	3.30	3.35	3.40	3.45	3.50	3.50							
0.66 – 0.70	2.75	2.80	2.85	2.90	2.95	3.00	3.05	3.10	3.15	3.20	3.25	3.30	3.35	3.40	3.45	3.50	3.50								
0.71 – 0.75	2.80	2.85	2.90	2.95	3.00	3.05	3.10	3.15	3.20	3.25	3.30	3.35	3.40	3.45	3.50	3.50									
0.76 – 0.80	2.85	2.90	2.95	3.00	3.05	3.10	3.15	3.20	3.25	3.30	3.35	3.40	3.45	3.50	3.50										
0.81 – 0.85	2.90	2.95	3.00	3.05	3.10	3.15	3.20	3.25	3.30	3.35	3.40	3.45	3.50	3.50											
0.86 – 0.90	2.95	3.00	3.05	3.10	3.15	3.20	3.25	3.30	3.35	3.40	3.45	3.50	3.50												
0.91 – 0.95	3.00	3.05	3.10	3.15	3.20	3.25	3.30	3.35	3.40	3.45	3.50	3.50													
0.96 – 1.00	3.05	3.10	3.15	3.20	3.25	3.30	3.35	3.40	3.45	3.50	3.50														
1.01 – 1.05	3.10	3.15	3.20	3.25	3.30	3.35	3.40	3.45	3.50	3.50															
1.06 – 1.10	3.15	3.20	3.25	3.30	3.35	3.40	3.45	3.50	3.50																
1.11 – 1.15	3.20	3.25	3.30	3.35	3.40	3.45	3.50	3.50																	
1.16 – 1.20	3.25	3.30	3.35	3.40	3.45	3.50	3.50																		
1.21 – 1.25	3.30	3.35	3.40	3.45	3.50	3.50																			
1.26 – 1.30	3.35	3.40	3.45	3.50	3.50																				
1.31 – 1.35	3.40	3.45	3.50	3.50																					
1.36 – 1.40	3.45	3.50	3.50																						
1.41 – 1.45	3.50	3.50																							
1.46 – 1.50	3.50																								

HOW TO USE THIS CHART:

I. Measure tappet clearance. "ENGINE IS COLD"

II. Measure present shim size.

III. Match clearance in vertical column with present shim size in horizontal column.

EXAMPLE

Tappet clearance is	0.38 mm
Present shim size	2.90 mm
Shim size to be used	3.05 mm

FUEL HOSE

Inspect Every 6 000 km (4 000 miles, 6 months).
Replace Every 4 years.

Inspect the fuel feed hose ① and the fuel return hose ② for damage and fuel leakage. If any defects are found, the fuel hoses must be replaced.

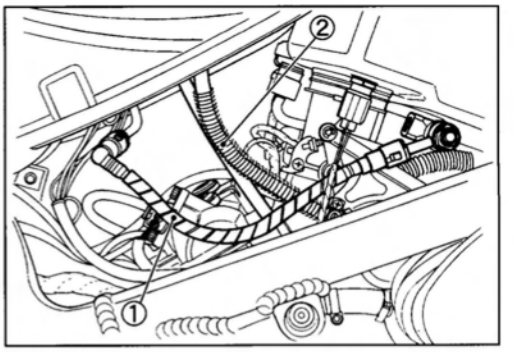

ENGINE OIL AND OIL FILTER

(ENGINE OIL)
Replace Initially at 1 000 km (600 miles, 1 month) and Every 6 000 km (4 000 miles, 6 months) thereafter.

(OIL FILTER)
Replace Initially at 1 000 km (600 miles, 1 month) and Every 18 000 km (11 000 miles, 18 months) thereafter.

Oil should be changed while the engine is warm. Oil filter replacement at the above intervals, should be done together with the engine oil change.

ENGINE OIL REPLACEMENT

- Keep the motorcycle upright.
- Place an oil pan below the engine, and drain oil by removing the drain plug ① and filler cap ②.

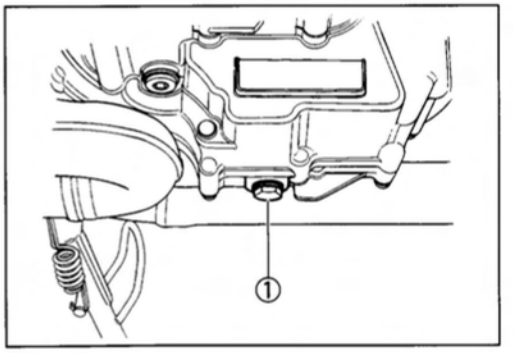

- Tighten the drain plug ① to the specified torque, and pour fresh oil through the oil filler. The engine will hold about 3.1 L (3.3/2.7 US/Imp qt) of oil. Use an API classification of SF or SG oil with SAE 10W/40 viscosity.

Oil drain plug: 23 N·m (2.3 kg-m, 16.5 lb-ft)

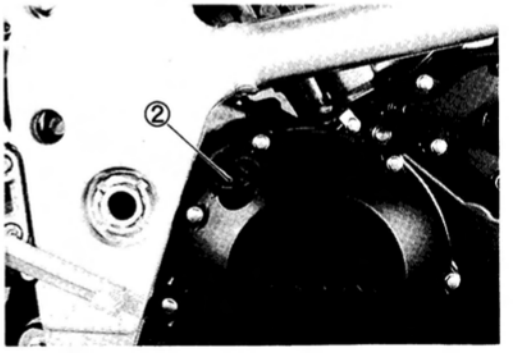

- Start up the engine and allow it to run for several minutes at idling speed.
- Turn off the engine and wait about one minute, then check the oil level through the inspection window ③. If the level is below mark "L", add oil to "F" level. If the level is above mark "F", drain oil to "F" level.

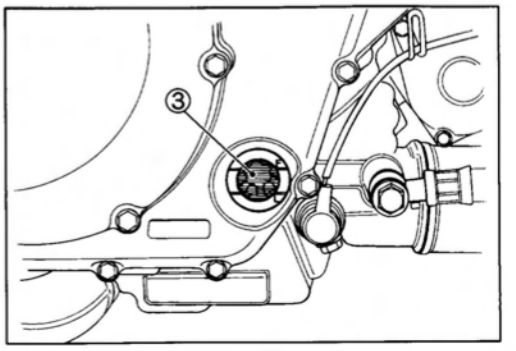

OIL FILTER REPLACEMENT

- Drain engine oil in the same manner of engine oil replacement procedure.
- Remove the oil filter ① by using the oil filter wrench. (Special tool)
- Apply engine oil lightly to the gasket of the new filter before installation.
- Install the new filter turning it by hand until you feel that the filter gasket contacts the mounting surface. Then tighten it 2 turns using the oil filter wrench. (Special tool)

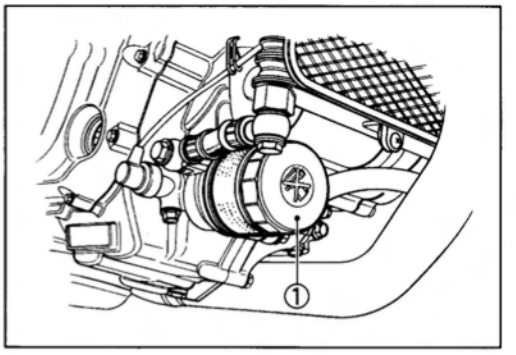

09915-40610: Oil filter wrench

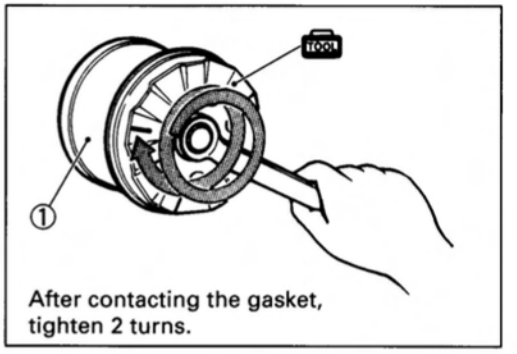

After contacting the gasket, tighten 2 turns.

NOTE:
To properly tighten the filter, use the special tool. Never tighten the filter by hand.

- Pour fresh engine oil and check the oil level in the same manner of engine oil replacement procedure.

NECESSARY AMOUNT OF ENGINE OIL
Oil change: 3.1 L (3.3/2.7 US/Imp qt)
Filter change: 3.3 L (3.5/2.9 US/Imp qt)
Overhaul engine: 3.6 L (3.8/3.2 US/Imp qt)

⚠ CAUTION

Use SUZUKI MOTORCYCLE GENUINE OIL FILTER only, since the other make's genuine filters and aftermarket parts may differ in thread specifications (thread diameter and pitch), filtering performance and durability, which could cause engine damage or oil leaks. Suzuki automobile genuine oil filter is also not usable for the motorcycles.

ENGINE IDLE SPEED

Inspect Initially at 1 000 km (600 miles, 1 month) and Every 6 000 km (4 000 miles, 6 months) thereafter.

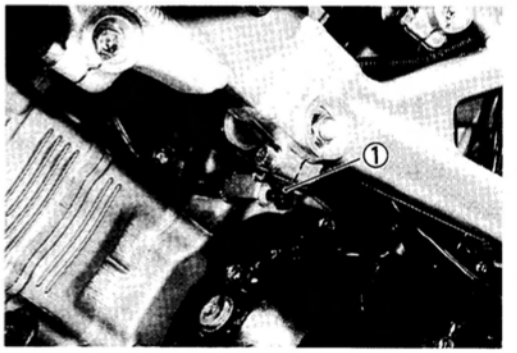

NOTE:
Make this adjustment when the engine is hot.

- Start up the engine and set its idle speed to the specified range by turning the throttle stop screw ①.

Engine idle speed:
1 200 ± 50 r/min ..... For E-18 model
1 200 ± 100 r/min ..... For the other models

THROTTLE CABLE PLAY

Inspect Initially at 1 000 km (600 miles, 1 month) and Every 6 000 km (4 000 miles, 6 months) thereafter.

Adjust the throttle cable play Ⓐ with the following three steps.

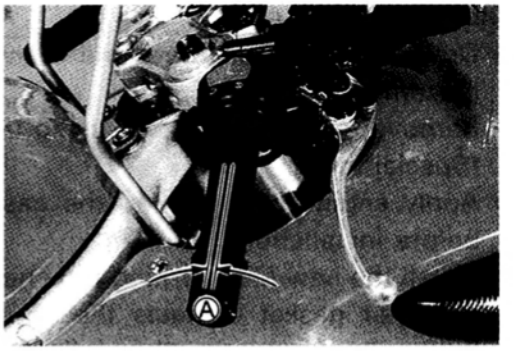

First step:
- Loosen the lock nut ③ of the throttle returning cable ① and turn in the adjuster ④ fully into the threads.

Second step:
- Loosen the lock nut ⑤ of the throttle pulling cable ②.
- Turn the adjuster ⑥ in or out until the throttle cable play Ⓐ should be 2.0–4.0 mm (0.08–0.16 in) at the throttle grip.
- Tighten the lock nut ⑤ while holding the adjuster ⑥.

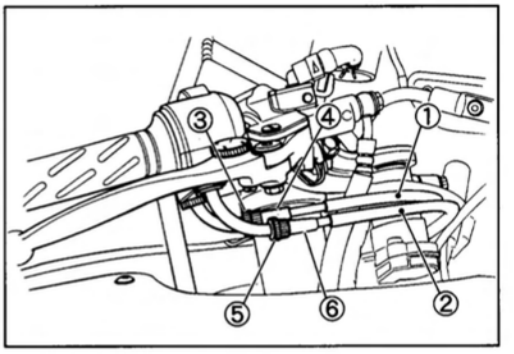

Third step:
- While holding the throttle grip at the fully closed position, slowly turn out the adjuster ④ of the throttle returning cable ① to feel resistance.
- Tighten the lock nut ③ while holding the adjuster ④.

Throttle cable play Ⓐ: 2.0–4.0 mm (0.08–0.16 in)

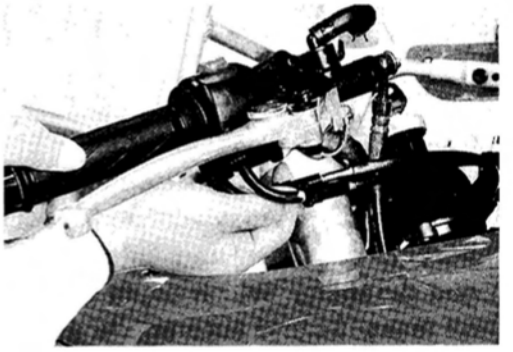

⚠WARNING

After the adjustment is completed, check that handlebar movement does not raise the engine idle speed and that the throttle grip returns smoothly and automatically.

NOTE:
Major adjustment can be made by the throttle body side adjuster.

THROTTLE VALVE SYNCHRONIZATION

(California model only)
Inspect Initially at 1 000 km (600 miles, 1 month) and Every 12 000 km (7 500 miles, 12 months) thereafter.
(Other models)
Inspect Every 12 000 km (7 500 miles, 12 months).

(Refer to pages 4-71 through -75.)

EVAPORATIVE EMISSION CONTROL SYSTEM (CALIFORNIA MODEL ONLY)

Inspect Every 12 000 km (7 500 miles, 12 months).
Replace vapor hoses every 4 years.

(Refer to page 9-2.)

CLUTCH

Inspect Every 6 000 km (4 000 miles, 6 months).

- Remove the speed sensor ①.
- Remove the engine sprocket cover ②.

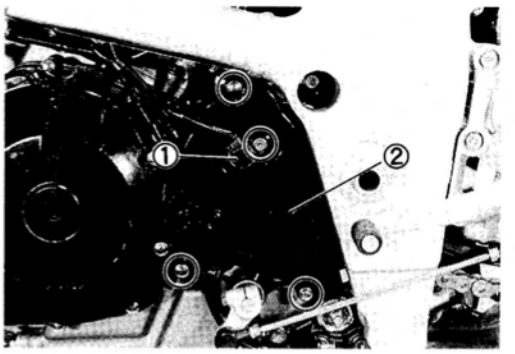

- Turn in the adjuster ③ into the clutch lever assembly.
- Loosen the lock nut ④ and turn out the adjusting screw ⑤ fully.
- Loosen the lock nuts ⑥, and turn the adjuster ⑦ to position 5–10 degrees lower to the right angle line at the clutch release lever end.
- Tighten the lock nuts ⑥.
- Slowly turn in the adjusting screw ⑤ to feel resistance.
- From this position, turn out the adjusting screw ⑤ 1/4 rotation and tighten the lock nut ④.
- Turn in or out the adjuster ③ to obtain 10–15 mm (0.4–0.6 in) of free play Ⓐ at the clutch lever end.

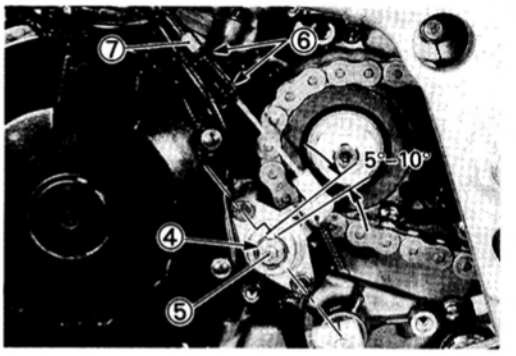

Clutch lever play Ⓐ: 10–15 mm (0.4–0.6 in)

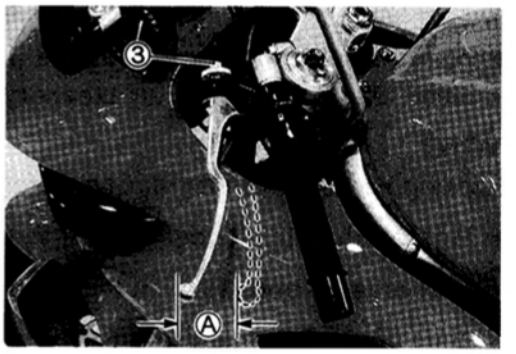

COOLING SYSTEM

Inspect Every 6 000 km (4 000 miles, 6 months).
Replace engine coolant Every 2 years.

ENGINE COOLANT LEVEL CHECK

- Keep the motorcycle upright.
- Check the engine coolant level by observing the full and lower lines on the engine coolant reserve tank.

Ⓑ Full line Ⓒ Lower line

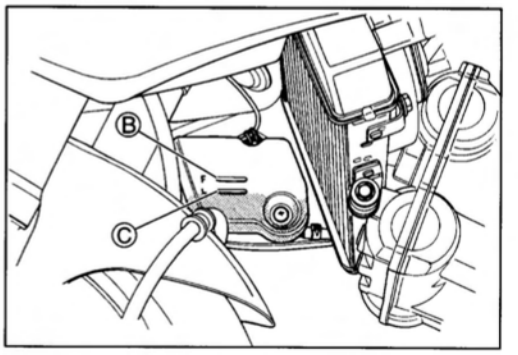

- If the level is below the lower line, remove the right side center fairing (Refer to pages 6-1 and -2.) and add engine coolant to the full line from the engine coolant reserve tank filler.

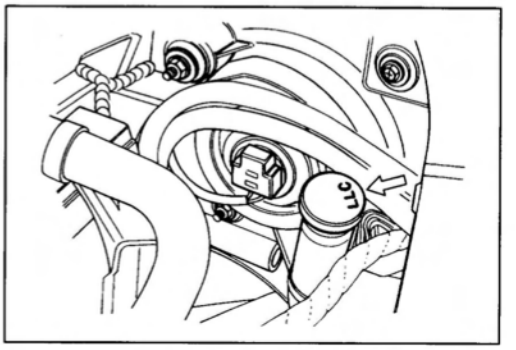

ENGINE COOLANT CHANGE

- Remove the right side upper fairing. (Refer to pages 6-1 and -2.)
- Remove the radiator cap ① and the drain bolts ②, ③ then drain engine coolant.

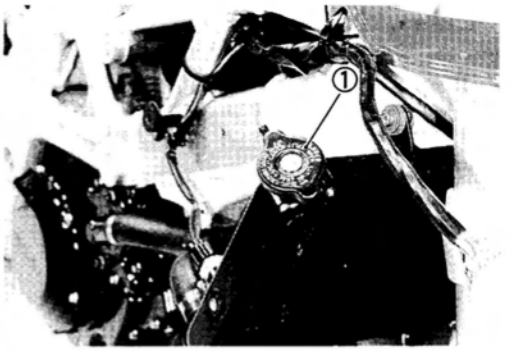

⚠ WARNING

*** Do not open the radiator cap when the engine is hot, as you may be injured by escaping hot liquid or vapor.**
*** Engine coolant may be harmful if swallowed or if it comes in contact with skin or eyes. If engine coolant gets into the eyes or in contact with the skin, flush thoroughly with plenty of water. If swallowed, induce vomiting and call physician immediately!**

- Flush the radiator with fresh water if necessary.
- Tighten the water drain bolts ②, ③ to the specified torque.

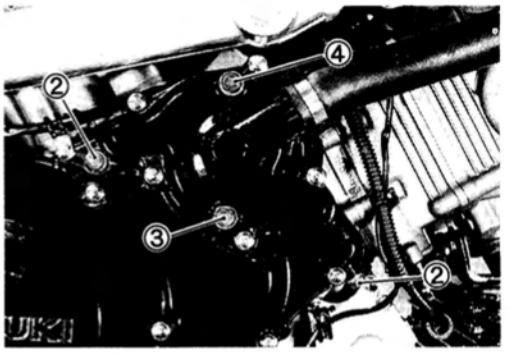

Water drain bolt ②: 5.5 N·m (0.55 kg-m, 4.0 lb-ft)
③: 13 N·m (1.3 kg-m, 9.5 lb-ft)

- Pour the specified engine coolant up to the radiator inlet.
- Bleed the air from the air bleeder bolt ④.

NOTE:
For engine coolant information, refer to page 5-3.

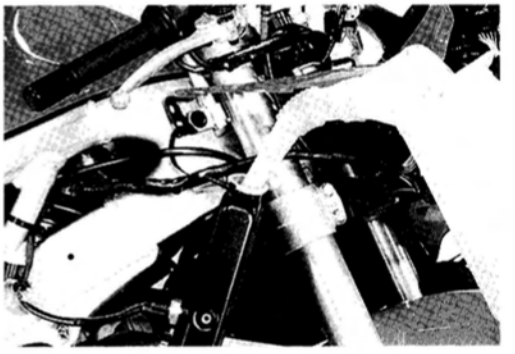

- Tighten the air bleeder bolt to the specified torque.

Air bleeder bolt: 13 N·m (1.3 kg-m, 9.5 lb-ft)

- Start up the engine and bleed air from the radiator inlet completely.
- Add engine coolant up to the radiator inlet.
- Close the radiator cap ① securely.
- Remount the right side upper fairing.
- After warming up and cooling down the engine, add the engine coolant up to the full level of the reserve tank.

⚠ CAUTION

Repeat the above procedure several times and make sure that the radiator is filled with engine coolant up to the reserve tank full level.

Engine coolant capacity:
2 200 ml (2.3/1.9 US/Imp qt)

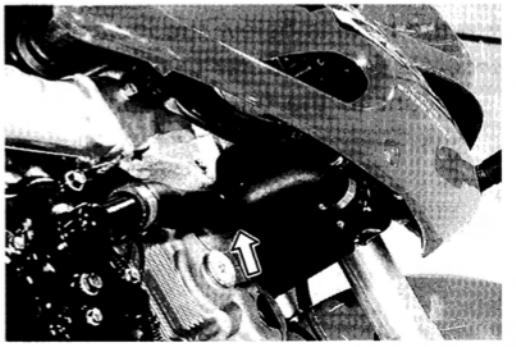

RADIATOR HOSES

Check to see the radiator hoses for crack, damage or engine coolant leakage.
If any defects are found, replace the radiator hoses with new ones.

DRIVE CHAIN

Inspect Initially at 1 000 km (600 miles, 1 month) and Every 6 000 km (4 000 miles, 6 months) thereafter. Clean and Lubricate Every 1 000 km (600 miles).

Visually check the drive chain for the possible defects listed below. (Support the motorcycle by a jack and a wooden block, turn the rear wheel slowly by hand with the transmission shifted to Neutral.)

* Loose pins
* Damaged rollers
* Dry or rusted links
* Kinked or binding links
* Excessive wear
* Improper chain adjustment
* Missing O-ring seals

If any defects are found, the drive chain must be replaced.

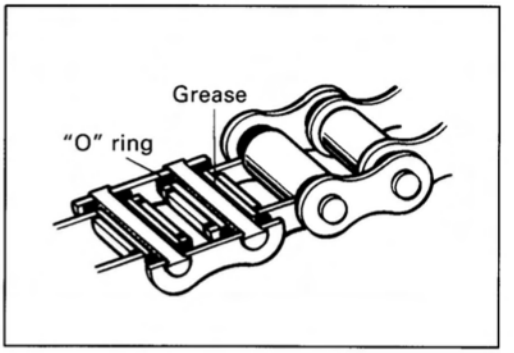

NOTE:
When replacing the drive chain, replace the drive chain and sprockets as a set.

CHECKING

- Remove the axle cotter pin. (For E-03, 28 and 33 models)
- Loosen the axle nut ①.
- Loosen the torque link nut (Rear) ②.
- Loosen the chain adjuster lock nuts ③.
- Tense the drive chain fully by turning both chain adjusters ④.

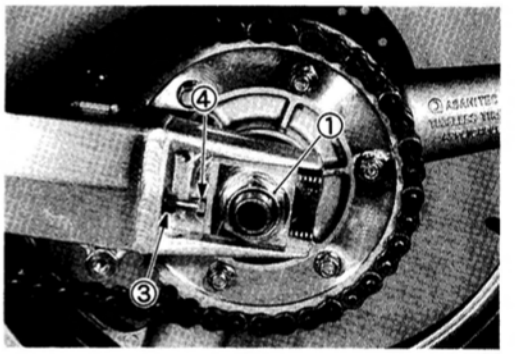

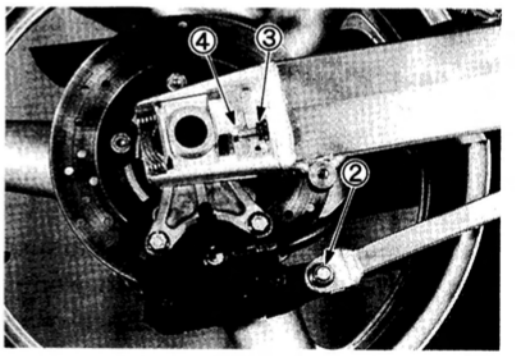

- Count out 21 pins (20 pitches) on the chain and measure the distance between the two points. If the distance exceeds the service limit, the chain must be replaced.

Service Limit (Drive chain 20-pitch length):
319.4 mm (12.6 in)

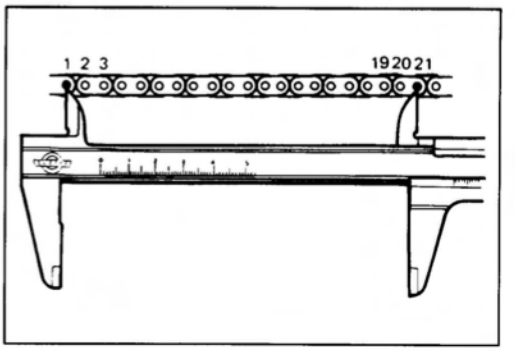

ADJUSTING

- Loosen or tighten both chain adjusters ① until the chain has 25–35 mm (1.0–1.4 in) of slack in the middle between engine and rear sprockets. The mark Ⓐ on both chain adjusters must be at the same position on the scale to ensure that the front and rear wheels are correctly aligned.
- Place the motorcycle on its side-stand for accurate adjustment.
- After adjusting the drive chain, tighten the axle nut ② and the torque link nut (Rear) ③ to the specified torque.
- Recheck the drive chain slack after tightening the axle nut ①.
- Tighten both chain adjuster lock nuts ④ securely.

Rear axle nut: 100 N·m (10.0 kg-m, 72.5 lb-ft)
Torque link nut (Rear): 35 N·m (3.5 kg-m, 25.5 lb-ft)

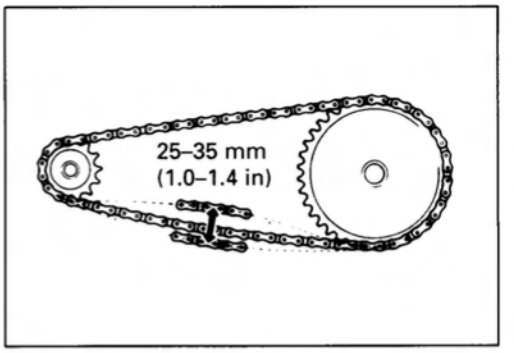

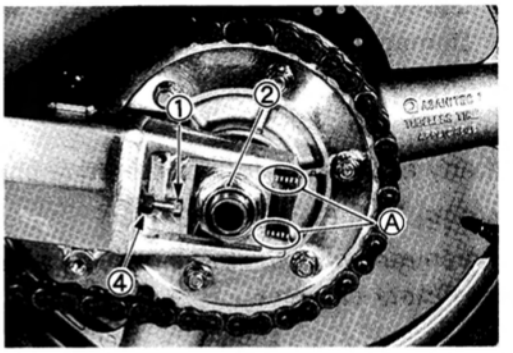

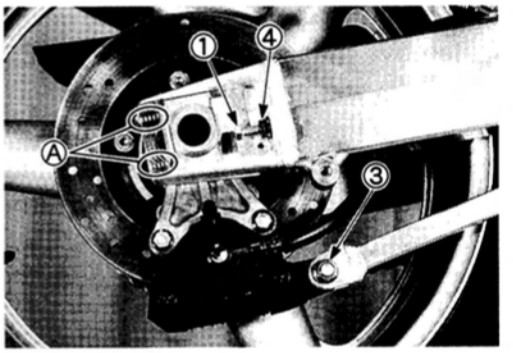

CLEANING AND LUBRICATING

- Wash the chain with kerosene. If the chain tends to rust quickly, the intervals must be shortened.

⚠ CAUTION

Do not use trichlene, gasoline or any similar fluids: These fluids have too great a dissolving power for this chain and, what is more important, they can damage the "O"-rings (or seals) confining the grease in the bush to pin clearance. Remember, high durability comes from the presence of grease in that clearance.

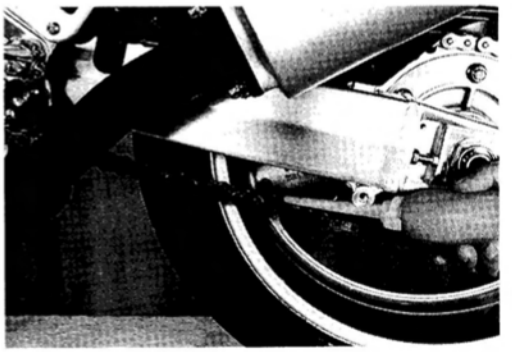

- After washing and drying the chain, oil it with a heavyweight motor oil.

⚠ CAUTION

*** Do not use any oil sold commercially as "drive chain oil". Such oil can damage the "O"-rings (or seals).**
*** The standard drive chain is TAKASAGO RK50GSVZ1. SUZUKI recommends that this standard drive chain should be used for the replacement.**

BRAKE

(BRAKE)
Inspect Initially at 1 000 km (600 miles, 1 month) and Every 6 000 km (4 000 miles, 6 months) thereafter.

(BRAKE HOSE AND BRAKE FLUID)
Inspect Every 6 000 km (4 000 miles, 6 months). Replace hoses Every 4 years. Replace fluid Every 2 years.

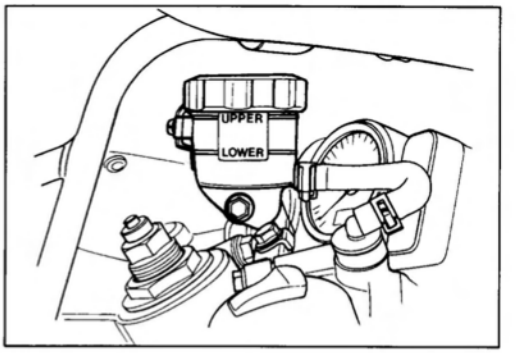

BRAKE FLUID LEVEL CHECK

- Keep the motorcycle upright and place the handlebars straight.
- Check the brake fluid level by observing the lower limit lines on the front and rear brake fluid reservoirs.
- When the level is below the lower limit line, replenish with brake fluid that meets the following specification.

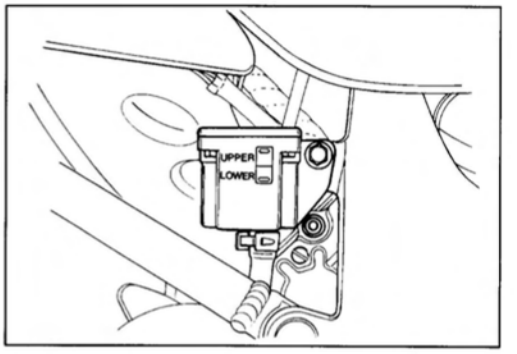

Specification and Classification: DOT4

⚠WARNING

The brake system of this motorcycle is filled with a glycol-based brake fluid. Do not use or mix different types of fluid such as silicone-based or petroleum-based. Do not use any brake fluid taken from old, used or unsealed containers. Never re-use brake fluid left over from the last servicing or stored for a long period.

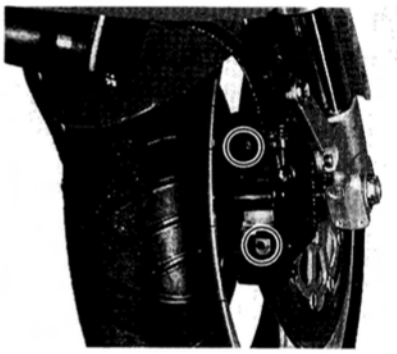

⚠WARNING

Brake fluid, if it leaks, will interfere with safe running and immediately discolor painted surfaces. Check the brake hoses and hose joints for cracks and oil leakage before riding.

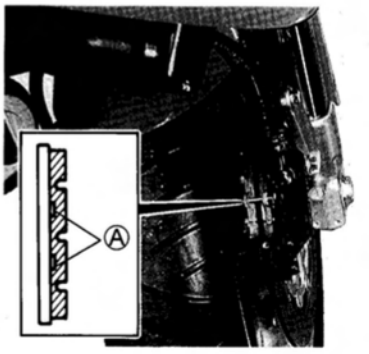

BRAKE PADS

- Remove the brake pad spring by removing bolts (Front brake).

The extent of brake pad wear can be checked by observing the grooved limit Ⓐ on the pad. When the wear exceeds the grooved limit, replace the pads with new ones. (Refer to pages 6-49 and -57.)

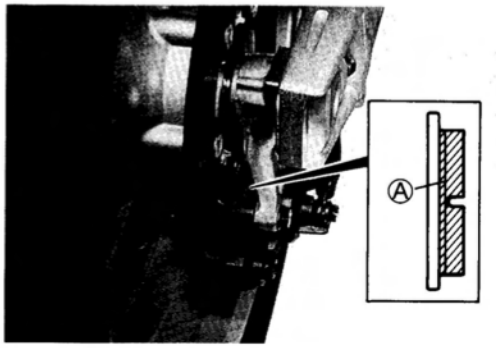

⚠ CAUTION

Replace the brake pad as a set, otherwise braking performance will be adversely affected.

BRAKE PEDAL HEIGHT

- Loosen the lock nut ① and rotate the push rod ② to locate brake pedal 60 mm (2.4 in) Ⓐ below the top face of the footrest.
- Retighten the lock nut ① to secure the push rod ② in the proper position.

Brake pedal height Ⓐ: 60 mm (2.4 in)

Rear brake master cylinder rod lock nut ①:
18 N·m (1.8 kg-m, 13.0 lb-ft)

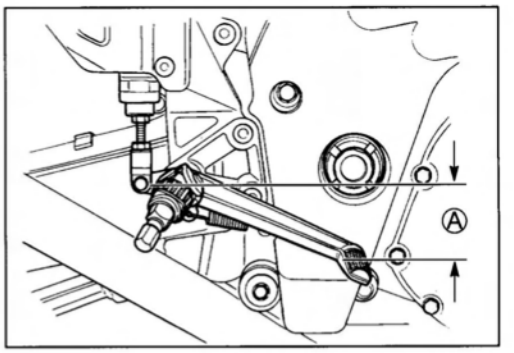

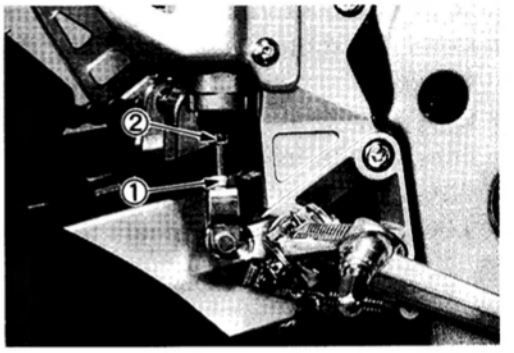

BRAKE LIGHT SWITCH

Adjust the rear brake light switch so that the brake light will come on just before pressure is felt when the brake pedal is depressed.

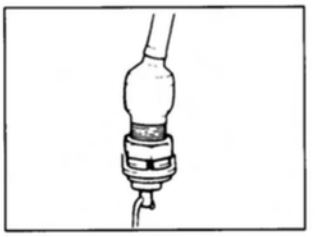

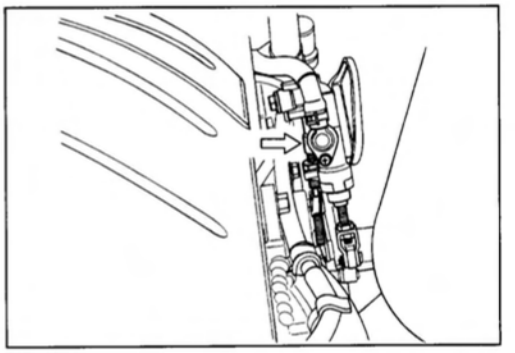

AIR BLEEDING THE BRAKE FLUID CIRCUIT

Air trapped in the fluid circuit acts like a cushion to absorb a large proportion of the pressure developed by the master cylinder and thus interferes with the full braking performance of the brake caliper. The presence of air is indicated by "sponginess" of the brake lever and also by lack of braking force. Considering the danger to which such trapped air exposes the machine and rider, it is essential that, after remounting the brake and restoring the brake system to the normal condition, the brake fluid circuit be purged of air in the following manner:

- Fill up the master cylinder reservoir to the "UPPER" line. Place the reservoir cap to prevent entry of dirt.
- Attach a pipe to the air bleeder valve, and insert the free end of the pipe into a receptacle.

Air bleeder valve: 7.5 N·m (0.75 kg-m, 5.5 lb-ft)

- Front brake: Bleed the air from the air bleeder valve.
- Squeeze and release the brake lever several times in rapid succession and squeeze the lever fully without releasing it. Loosen the bleeder valve by turning it a quarter of a turn so that the brake fluid runs into the receptacle; this will remove the tension of the brake lever causing it to touch the handlebar grip. Then, close the valve, pump and squeeze the lever, and open the valve. Repeat this process until the fluid flowing into the receptacle no longer contains air bubbles.

NOTE:
Replenish the brake fluid in the reservoir as necessary while bleeding the brake system. Make sure that there is always some fluid visible in the reservoir.

- Close the bleeder valve, and disconnect the pipe. Fill the reservoir with brake fluid to the "UPPER" line.

⚠ CAUTION

Handle brake fluid with care: the fluid reacts chemically with paint, plastics, rubber materials and so on.

- The only difference between bleeding the front and rear brakes is that the rear master cylinder is actuated by a pedal.

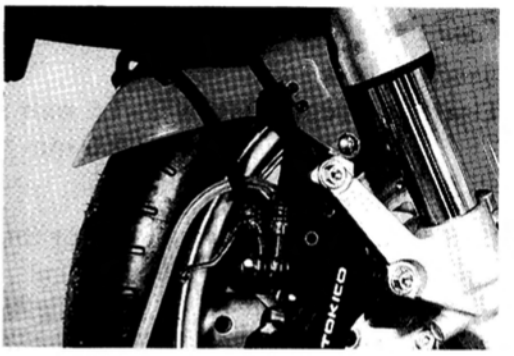

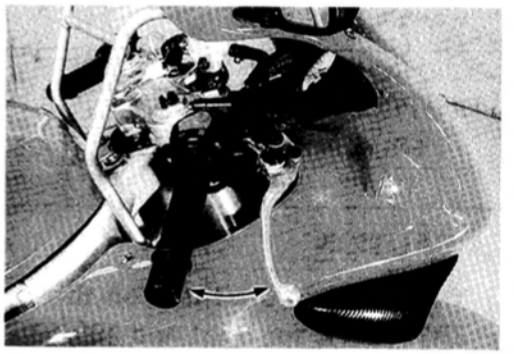

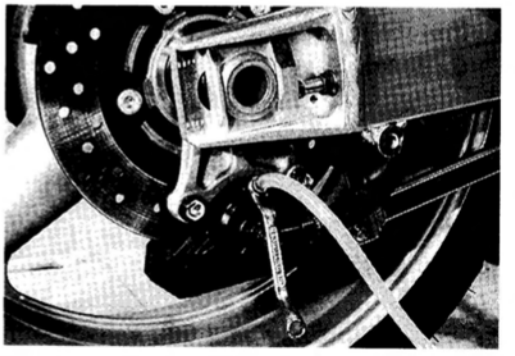

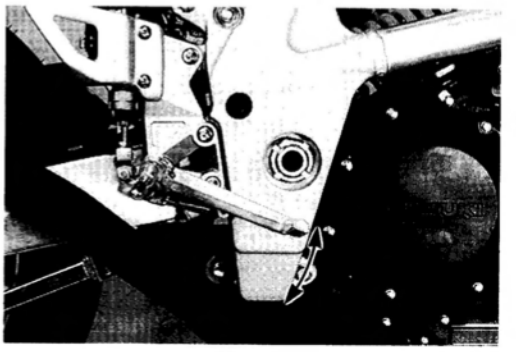

TIRE

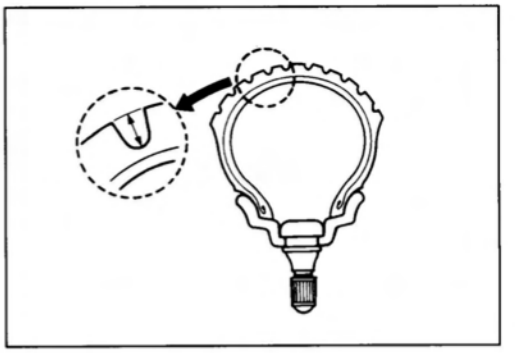

Inspect Every 6 000 km (4 000 miles, 6 months).

TIRE TREAD CONDITION

Operating the motorcycle with excessively worn tires will decrease riding stability and consequently invite a dangerous situation. It is highly recommended to replace a tire when the remaining depth of tire tread reaches the following specification.

09900-20805: Tire depth gauge

Service Limit
Tire tread depth (FRONT): 1.6 mm (0.06 in)
(REAR) : 2.0 mm (0.08 in)

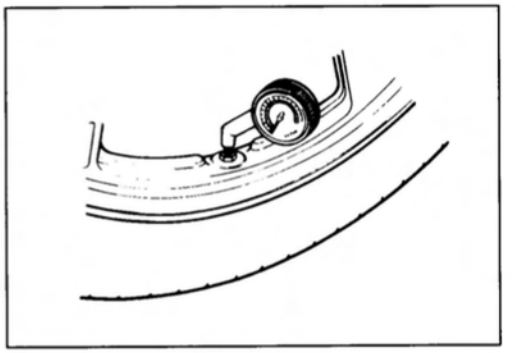

TIRE PRESSURE

If the tire pressure is too high or too low, steering will be adversely affected and tire wear increased. Therefore, maintain the correct tire pressure for good roadability or shorter tire life will result. Cold inflation tire pressure is as follows.

COLD INFLATION TIRE PRESSURE	SOLO RIDING			DUAL RIDING		
	kPa	kg/cm^2	psi	kPa	kg/cm^2	psi
FRONT	250	2.50	36	250	2.50	36
REAR	250	2.50	36	250	2.50	36

⚠ CAUTION

The standard tire fitted on this motorcycle is 120/70 ZR17 (58W) for front and 190/50 ZR17 (73W) for rear. The use of tires other than those specified may cause instability. It is highly recommended to use a SUZUKI Genuine Tire.

TIRE TYPE

METZELER (front ... MEZ1A Front RACING, rear ... MEZ1 RACING)

STEERING

Inspect Initially at 1 000 km (600 miles, 1 month) and Every 12 000 km (7 500 miles, 12 months) thereafter.

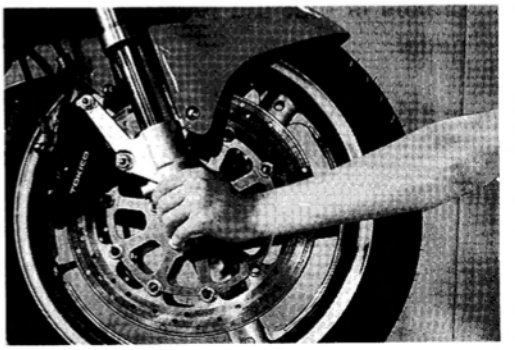

Steering should be adjusted properly for smooth turning of handlebars and safe running. Overtight steering prevents smooth turning of the handlebars and too loose steering will cause poor stability. Check that there is no play in the steering stem while grasping the lower fork tubes by supporting the machine so that the front wheel is off the ground, with the wheel straight ahead, and pull forward. If play is found, perform steering bearing adjustment as described in page 6-26 of this manual.

FRONT FORK

Inspect Every 12 000 km (7 500 miles, 12 months).

Inspect the front forks for oil leakage, scoring or scratches on the outer surface of the inner tubes. Replace any defective parts, if necessary. (Refer to pages 6-11 through -19.)

REAR SUSPENSION

Inspect Every 12 000 km (7 500 miles, 12 months).

Inspect the rotary damper for oil leakage and the spring unit for damage. Check that there is no play in the swingarm assembly. Replace any defective parts, if necessary. (Refer to pages 6-35 through -47.)

EXHAUST PIPE BOLTS

Tighten initially at 1 000 km (600 miles, 1 month) and Every 12 000 km (7 500 miles, 12 months) thereafter.

- Tighten the exhaust pipe bolts and muffler mounting bolts to the specified torque.

Exhaust pipe bolt ①: 23 N·m (2.3 kg-m, 16.5 lb-ft)
Muffler mounting bolt/nut ②: 23 N·m (2.3 kg-m, 16.5 lb-ft)
Muffler joint nut ③: 25 N·m (2.5 kg-m, 18.0 lb-ft)

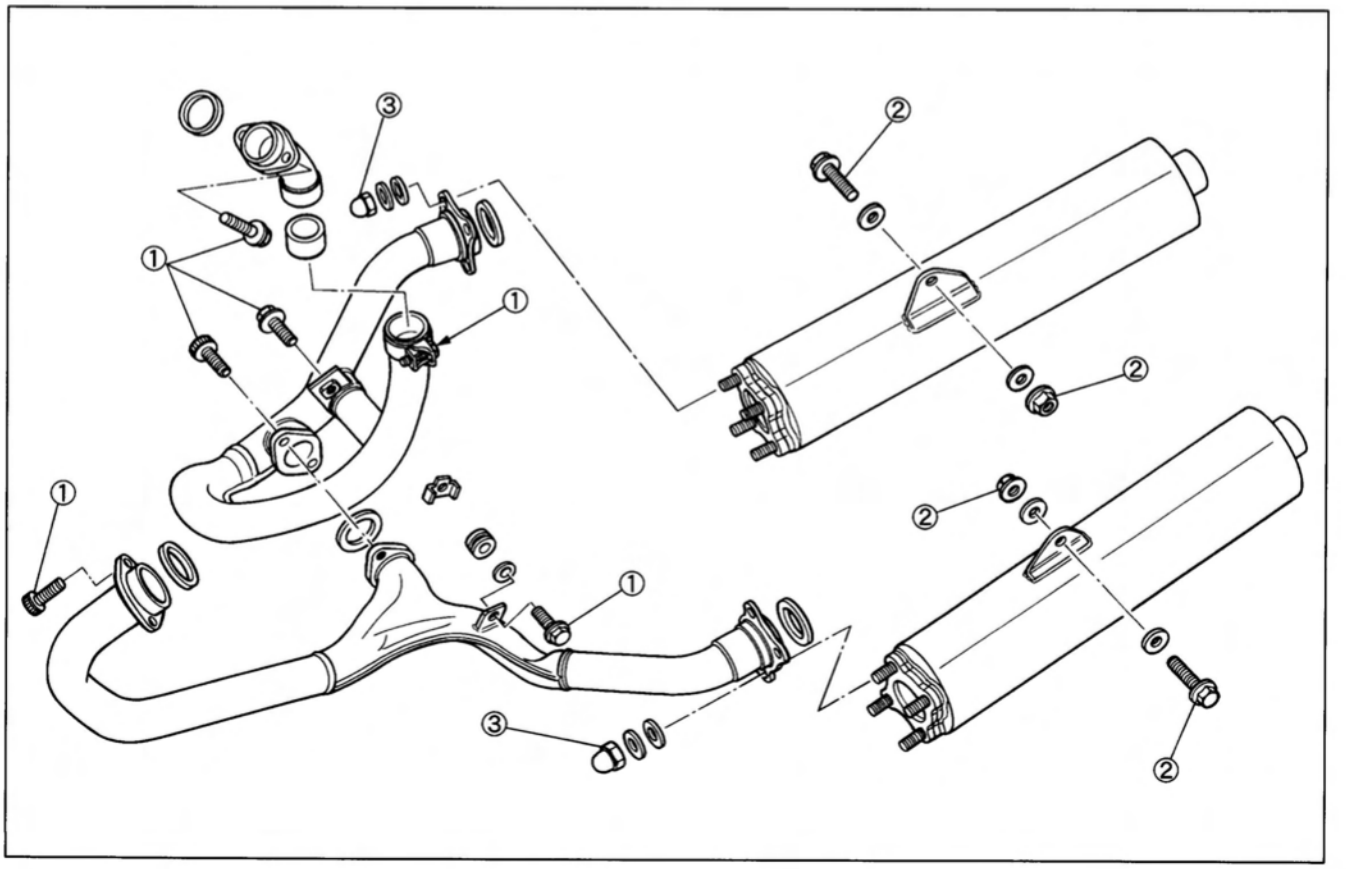

CHASSIS BOLTS AND NUTS

Tighten Initially at 1 000 km (600 miles, 1 month) and Every 6 000 km (4 000 miles, 6 months) thereafter.

Check that all chassis bolts and nuts are tightened to their specified torque. (Refer to page 2-24 for the locations of the following nuts and bolts on the motorcycle.)

Item	N·m	kg-m	lb-ft
① Steering stem head nut	90	9.0	65.0
② Steering stem lock nut	80	8.0	58.0
③ Front fork upper clamp bolt	23	2.3	16.5
④ Front fork lower clamp bolt	23	2.3	16.5
⑤ Front fork cap bolt	23	2.3	16.5
⑥ Front axle	100	10.0	72.5
⑦ Front axle pinch bolt	23	2.3	16.5
⑧ Handlebar set bolt	10	1.0	7.0
⑨ Handlebar clamp bolt	23	2.3	16.5
⑩ Front brake master cylinder mounting bolt	10	1.0	7.0
⑪ Front brake caliper mounting bolt	39	3.9	28.0
⑫ Front brake caliper housing bolt	21	2.1	15.0
⑬ Brake hose union bolt (Front & Rear)	23	2.3	16.5
⑭ Caliper air bleeder valve (Front & Rear)	7.5	0.75	5.5
⑮ Brake disc bolt (Front)	23	2.3	16.5
⑯ Brake disc bolt (Rear)	35	3.5	25.5
⑰ Rear brake caliper mounting bolt	26	2.6	19.0
⑱ Rear brake caliper housing bolt	30	3.0	21.5
⑲ Rear brake master cylinder mounting bolt	10	1.0	7.0
⑳ Rear brake master cylinder rod lock nut	18	1.8	13.0
㉑ Front footrest bracket mounting bolt	23	2.3	16.5
㉒ Front footrest bolt	39	3.9	28.0
㉓ Swingarm pivot nut	100	10.0	72.5
㉔ Swingarm pivot shaft lock nut	90	9.0	65.0
㉕ Torque link nut (Front)	28	2.8	20.0
㉖ Torque link nut (Rear)	35	3.5	25.5
㉗ Rear suspension rotary damper mounting bolt	50	5.0	36.0
㉘ Rear suspension rotary damper lever bolt	23	2.3	16.5
㉙ Rear suspension rotary damper cushion rod bolt/nut	50	5.0	36.0
㉚ Rear suspension spring unit mounting bolt	50	5.0	36.0
㉛ Rear suspension spring unit cushion lever bolt	65	6.5	47.0
㉜ Rear suspension spring unit cushion rod bolt	65	6.5	47.0
㉝ Rear suspension spring unit cushion rod nut	80	8.0	58.0
㉞ Rear axle nut	100	10.0	72.5
㉟ Rear sprocket nut	60	6.0	43.5

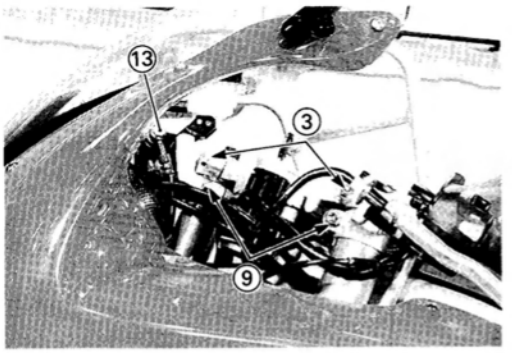

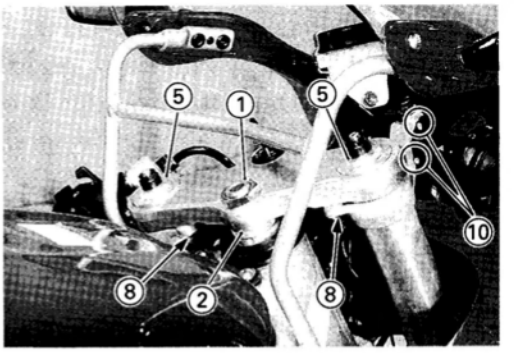

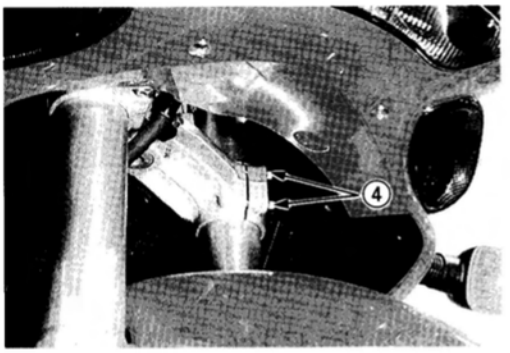

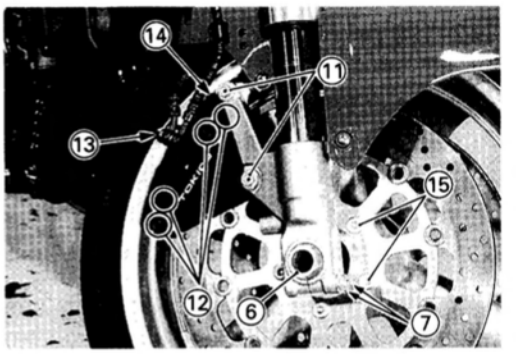

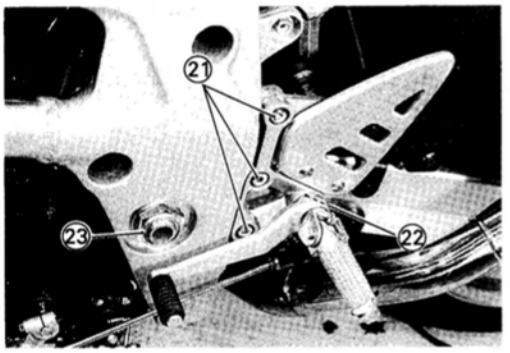

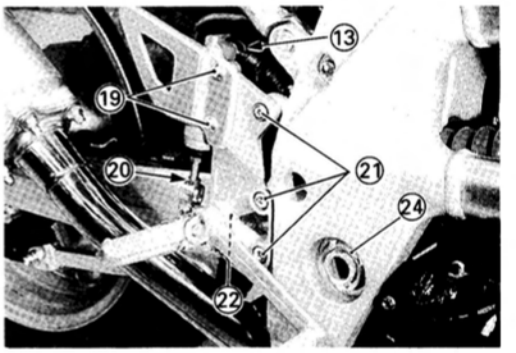

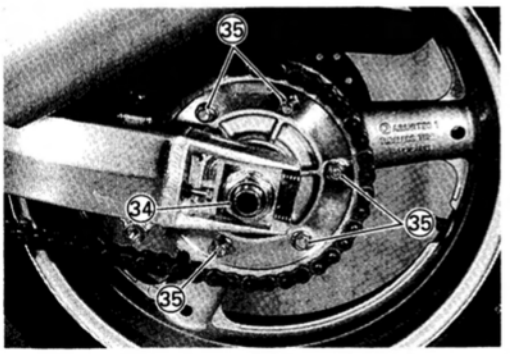

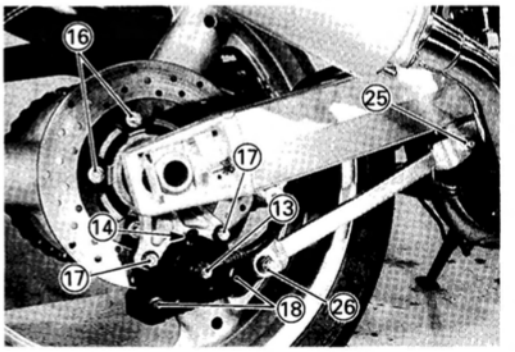

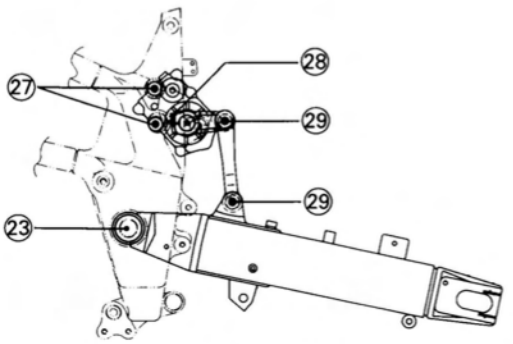

Left side

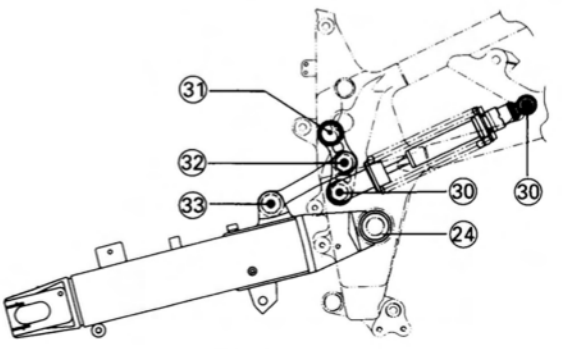

Right side

COMPRESSION PRESSURE CHECK

The compression of a cylinder is a good indicator of its internal condition.
The decision to overhaul the cylinder is often based on the results of a compression test. Periodic maintenance records kept at your dealership should include compression readings for each maintenance service.

COMPRESSION PRESSURE SPECIFICATION (Automatic de-comp. actuated)

Standard	Limit	Difference
1 000–1 400 kPa (10–14 kg/cm^2) 142–199 psi	700 kPa (7 kg/cm^2) 128 psi	200 kPa (2 kg/cm^2) 28 psi

Low compression pressure can indicate any of the following conditions:
* Worn-down piston or piston rings
* Piston rings stuck in grooves
* Poor seating of valves
* Ruptured or otherwise defective cylinder head gasket

Overhaul the engine in the following cases:
* Compression pressure in one of the cylinders is less than 700 kPa (7 kg/cm^2, 128 psi).
* Difference in compression pressure between two cylinders is more than 200 kPa (2 kg/cm^2, 28 psi).
* All compression pressure are below 1 000 kPa (10 kg/cm^2, 142 psi) even when they measure more than 700 kPa (7 kg/cm^2, 128 psi).

COMPRESSION TEST PROCEDURE

NOTE:
* *Before testing the engine for compression pressure, make sure that the cylinder head bolts are tightened to the specified torque values and valves are properly adjusted.*
* *Have the engine warmed up by idling before testing.*
* *Be sure that the battery used is in fully-charged condition.*

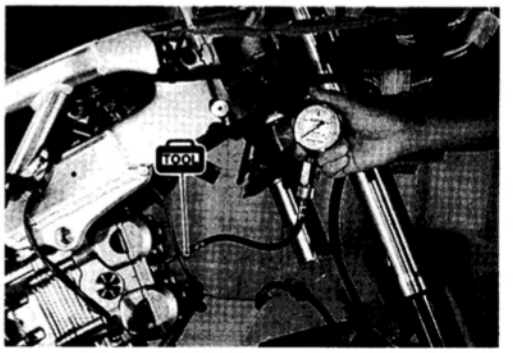

Remove the parts concerned and test the compression pressure in the following manner.
- Remove the seat and fuel tank. (Refer to pages 6-4, 4-49 and 4-50.)
- Remove the upper fairing. (Refer to pages 6-1 and -2.)
- Remove the radiator. (Refer to page 5-4.)
- Remove all the spark plugs. (Refer to page 2-4.)
- Fit the compression gauge in one of the plug holes, while taking care of the tight connection.
- Keep the throttle grip in full-open position.
- While cranking the engine a few seconds with the starter, and record the maximum gauge reading as the compression of that cylinder.
- Repeat this procedure with an other cylinder.



TOOL **09915-64510: Compression gauge**
09913-10750: Adaptor

OIL PRESSURE CHECK

Check periodically the oil pressure in the engine to judge roughly the condition of the moving parts.

OIL PRESSURE SPECIFICATION

Above 300 kPa (3.0 kg/cm^2, 43 psi) **Below 600 kPa (6.0 kg/cm^2, 85 psi)**	**at 3 000 r/min., Oil temp. at 60°C (140°F)**

If the oil pressure is lower or higher than the specification, the following causes may be considered.

LOW OIL PRESSURE

* Clogged oil filter
* Oil leakage from the oil passage way
* Damaged O-ring
* Defective oil pump
* Combination of the above items

HIGH OIL PRESSURE

* Used of high viscosity engine oil
* Clogged oil passage way
* Combination of the above items

OIL PRESSURE TEST PROCEDURE

Start the engine and check if the oil pressure indicator light is turned on. If it keeps on lighting, check the oil pressure indicator light circuit. If it is in good condition, check the oil pressure in the following manner.

- Remove the main oil gallery plug.
- Install the oil pressure gauge with attachment in the position shown in the figure.
- Warm up the engine as follows:
  Summer 10 min. at 2 000 r/min.
  Winter 20 min. at 2 000 r/min.
- After warming up, increase the engine speed to 3 000 r/min. (with the engine tachometer), and read the oil pressure gauge.

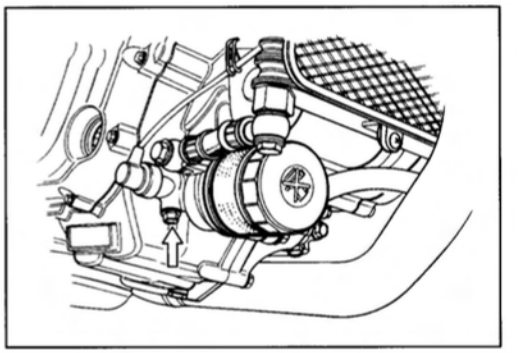

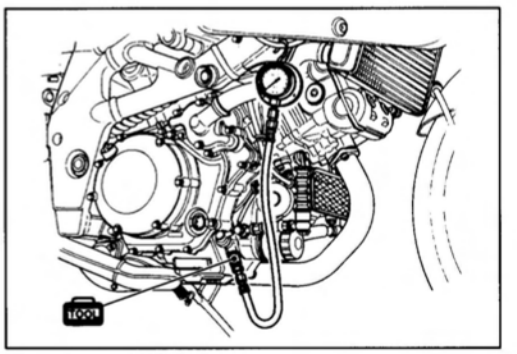

09915-74520: Oil pressure gauge hose
09915-74531: Oil pressure gauge attachment
09915-77330: Meter (for high pressure)

Main oil gallery plug: 10 N·m (1.0 kg-m, 7.0 lb-ft)

ENGINE

CONTENTS

ENGINE COMPONENTS REMOVABLE WITH ENGINE IN PLACE 3- 1

ENGINE REMOVAL AND INSTALLATION 3- 2

ENGINE DISASSEMBLY AND REASSEMBLY 3-18

3

CAMSHAFT/CYLINDER HEAD 3A

CYLINDER/PISTON 3B

CLUTCH 3C

WATER PUMP/CLUTCH COVER 3D

PRIMARY DRIVE GEAR/NO.1 CAM DRIVE IDLE GEAR SHAFT/SPROCKET 3E

STARTER SYSTEM/GENERATOR/CRANKSHAFT POSITION SENSOR 3F

GEARSHIFT LINKAGE 3G

CRANKCASE/TRANSMISSION/CRANKSHAFT/CONROD 3H

ENGINE LUBRICATION SYSTEM 3I

ENGINE COMPONENTS REMOVABLE WITH ENGINE IN PLACE

The parts listed below can be removed and reinstalled without removing the engine from the frame. Refer to the page listed in this section for removal and reinstallation instructions.

ENGINE LEFT SIDE

PARTS	REMOVAL	INSTALLATION
Gearshift lever and linkage	3G-1	3G-5
Engine sprocket	3-6	3-15
Speed sensor rotor	3-5	3-15
Clutch release	3-5	3-15
Generator	3F-1	3F-6

ENGINE RIGHT SIDE

PARTS	REMOVAL	INSTALLATION
Clutch	3C-1	3C-5
Primary driven gear	3C-1	3C-5
Oil pump drive and driven gear	3-30	3-49, 50
Water pump	3D-1	3D-4
Primary drive gear	3E-1	3E-4
No.1 cam drive idle gear/sprocket	3E-1	3E-4
Gear position switch	3-30	3-48
Oil sump filter	3I-3	3I-5
Oil pressure regulator	3I-3	3I-5
Oil pressure switch	3I-6	3I-7

ENGINE CENTER

PARTS	REMOVAL	INSTALLATION
Throttle body	4-54	4-65
Cylinder head covers	3-19, 22	3-76
Camshafts	3A-6, 7	3A-34, 35
Cylinder heads	3A-8, 12	3A-27, 31
Cylinders	3B-1, 2	3B-7, 8
Pistons	3B-1, 2	3B-7, 8
Cam chain tension adjusters	3-20, 23	3-66, 69
Cam chain tensioners	3-20, 24	3-63
Cam chain guides	3-21, 25	3-60
Thermostat	5-11	5-12
Oil filter	2-12	2-12
Oil cooler	3I-6	3I-7
Starter motor	3F-8	3F-8

ENGINE REMOVAL AND INSTALLATION

ENGINE REMOVAL

Before taking the engine out of the frame, wash the engine with a steam cleaner. The procedure of engine removal is sequentially explained in the following steps, and engine installation is effected by reversing the removal procedure.

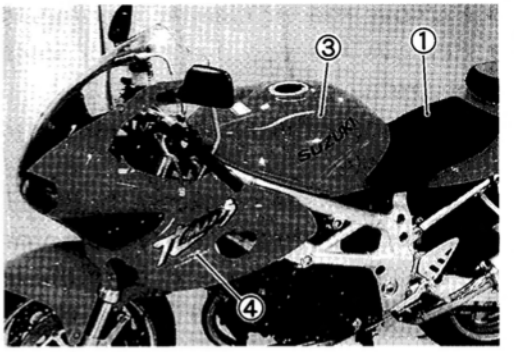

- Remove front seat ①. (Refer to page 6-4.)
- Remove the battery holder ② and disconnect the battery ⊖ lead wire terminal.





- Remove the fuel tank ③. (Refer to pages 4-49 and -50.)
- Remove the upper fairing ④. (Refer to pages 6-1 and -2.)
- Remove the oil drain plug ⑤ to drain out engine oil. (Refer to page 2-11.)

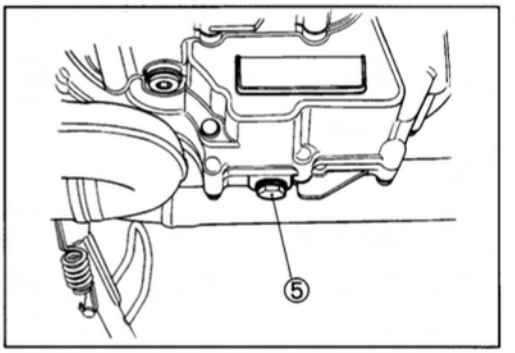

- Remove the radiator cap ⑥ and the water drain bolts ⑦, ⑧ and then drain out engine coolant.

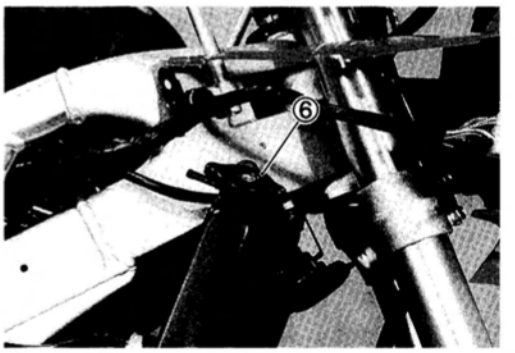

⚠WARNING

*** Do not open the radiator cap when the engine is hot, as you may be injured by escaping hot liquid or vapor.**

*** Engine coolant may be harmful if swallowed or if it comes in contact with skin or eyes. If engine coolant gets into the eyes or in contact with the skin, flush thoroughly with plenty of water. If swallowed, induce vomiting and call physician immediately!**

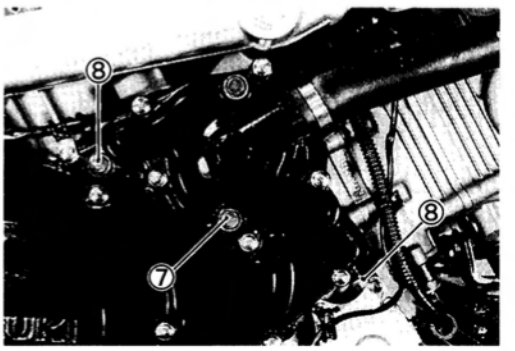

- Remove the air cleaner box mounting bolt ①.
- Remove the vacuum control solenoid valve ② and the intake air pressure sensor ③.
- Disconnect the intake air temperature sensor lead wire coupler ④.
- Disconnect the crankcase breather hose ⑤.
- Loosen the throttle body clamp bolts (Air cleaner side).
- Disconnect the hose ⑥ from the intake air control valve actuator and remove the air cleaner box.

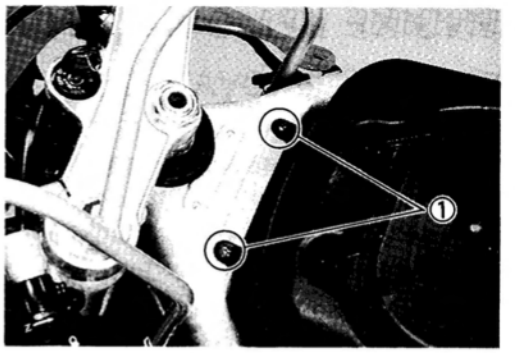

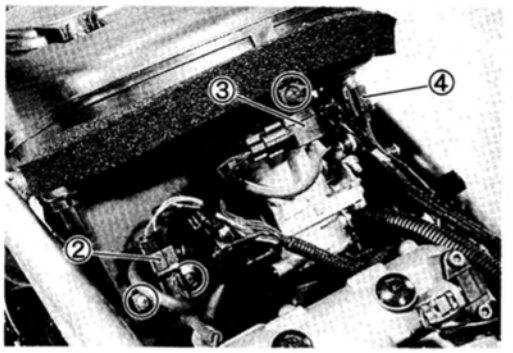

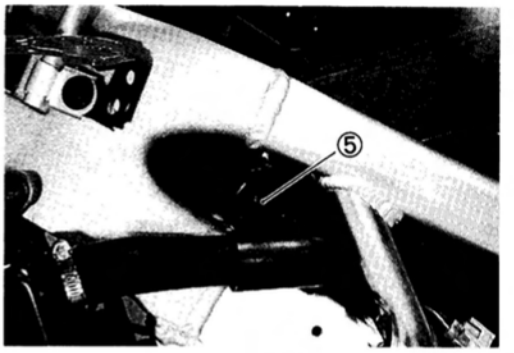

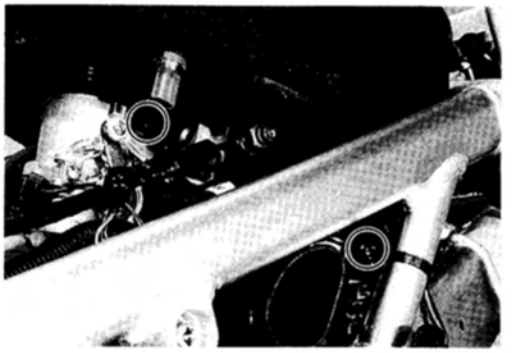

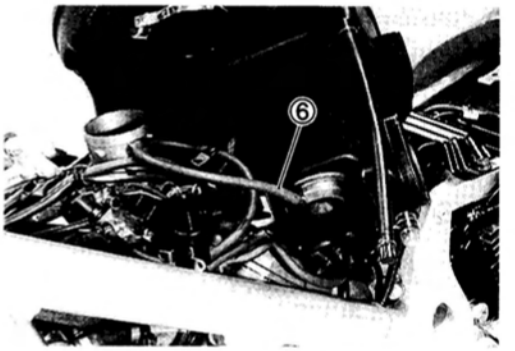

- Disconnect the cooling fan lead wire coupler.
- Disconnect the engine coolant temperature sensor ⑦ and the cooling fan thermo-switch ⑧ lead wire couplers.
- Disconnect the water hoses from the water pump and thermostat case.
- Remove the radiator mounting bolts.
- Remove the radiator.

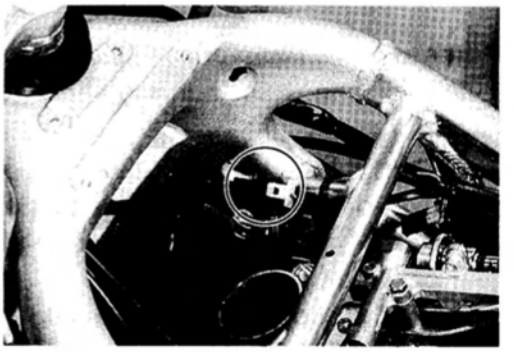

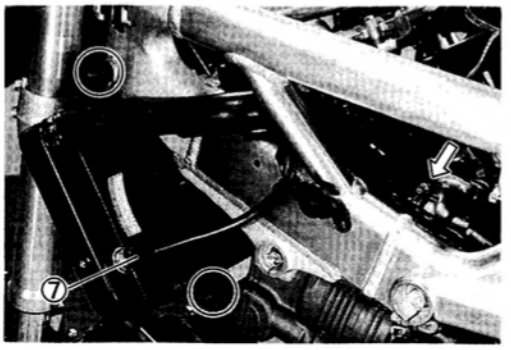

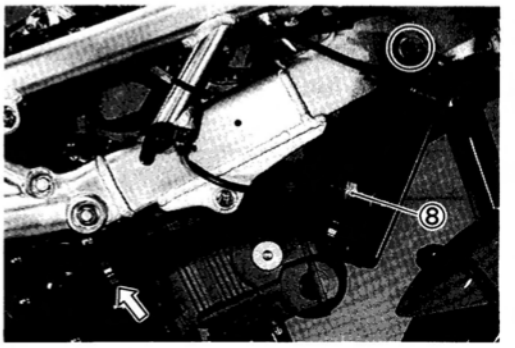

- Remove the No.2 (Rear) cylinder exhaust pipe bolt ①.
- Remove the muffler mounting bolts ②.
- Remove the No.2 (Rear) cylinder exhaust pipe/muffler.

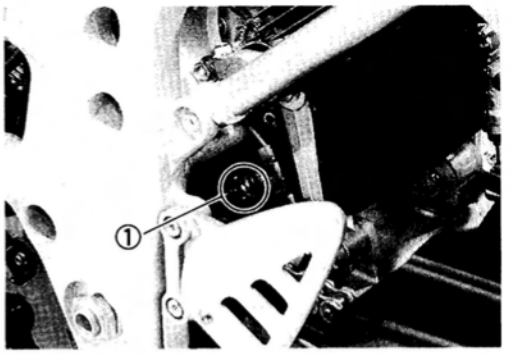

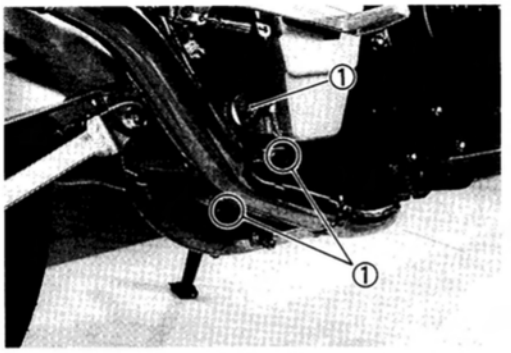

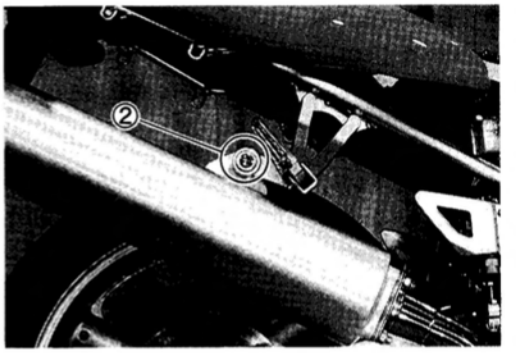

- Remove the No.1 (Front) cylinder exhaust pipe bolts ③ and the muffler mounting bolts/nut ④.
- Remove the No.1 (Front) cylinder exhaust pipe/muffler.

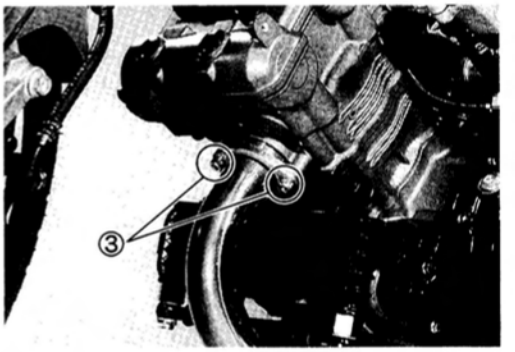

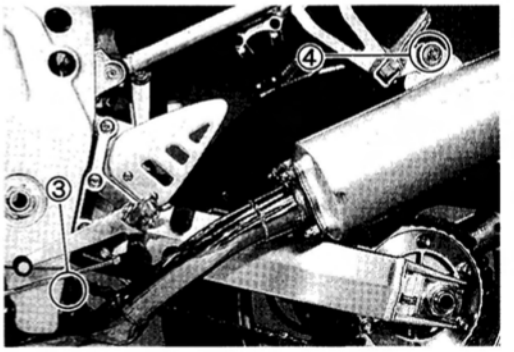

- Disconnect the speed sensor lead wire coupler ⑤ and remove the engine sprocket cover ⑥ with the dowel pin.

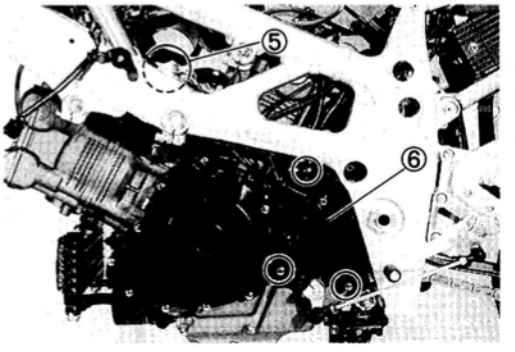

- Remove the gearshift lever ①.

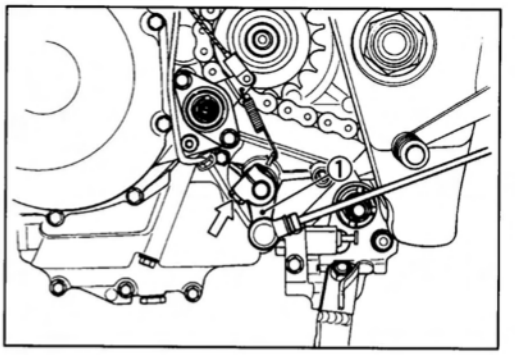

- Remove the clutch release return spring ②, clutch release mounting bolts and spacer.
- Remove the clutch release assembly ③.

NOTE:
Slightly loosen the lock nut and the adjusting screw before removing the clutch release mounting bolts to facilitate subsequent installation.

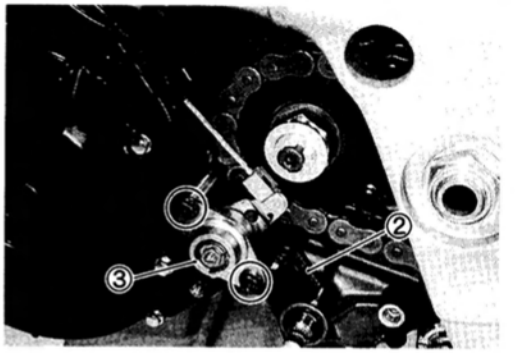

NOTE:
If it is necessary to replace the clutch cable or clutch release lever, pry up and bend down the stopper Ⓐ of the clutch release lever ④.

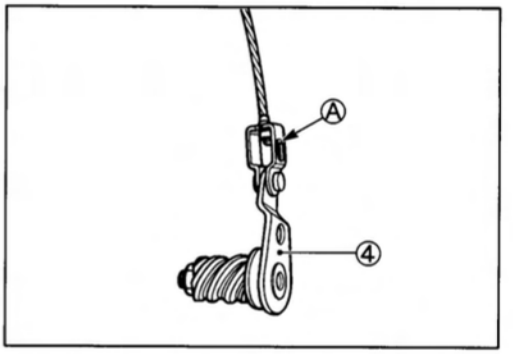

- Remove the clutch push rod ⑤.
- Cut the clamp ⑥ and remove the clutch cable from the generator cover.

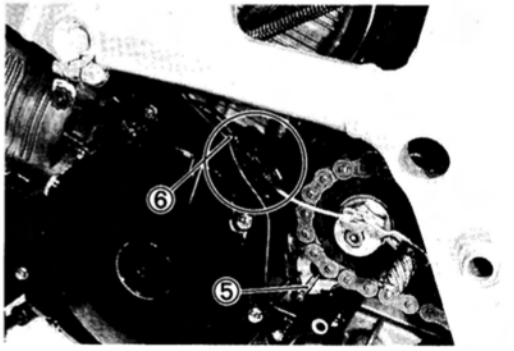

- Remove the speed sensor rotor ⑦.

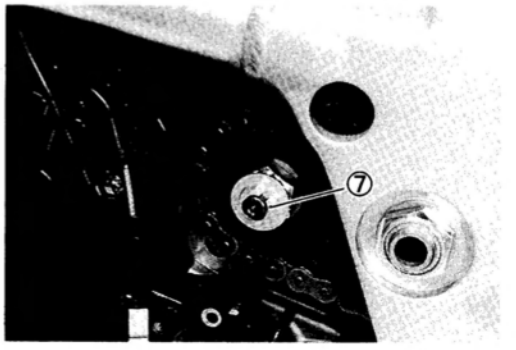

- Remove the engine sprocket nut ① and washer.

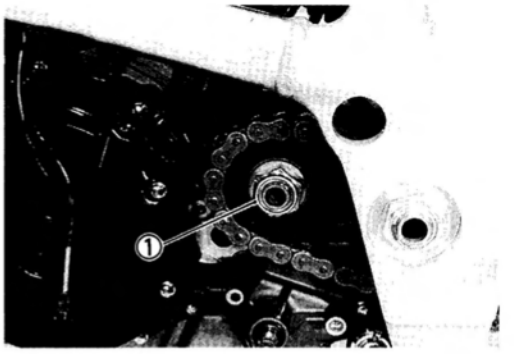

- Loosen the rear axle nut ② and the torque link nut (Rear).
- Loosen the lock nuts ③ and the chain adjusters ④, left and right, then slack the drive chain fully.

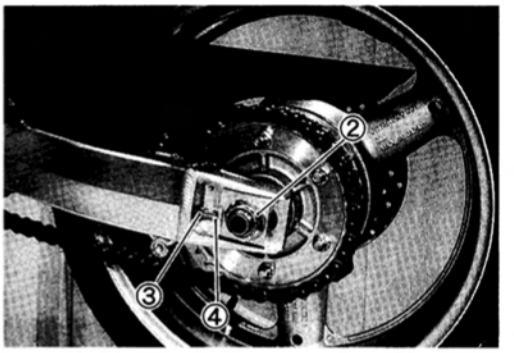

- Take the drive chain off the rear sprocket.

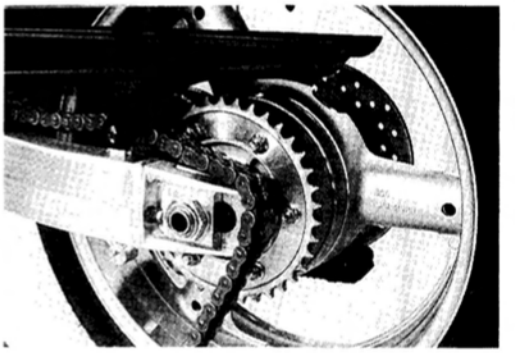

- Remove the engine sprocket ⑤.

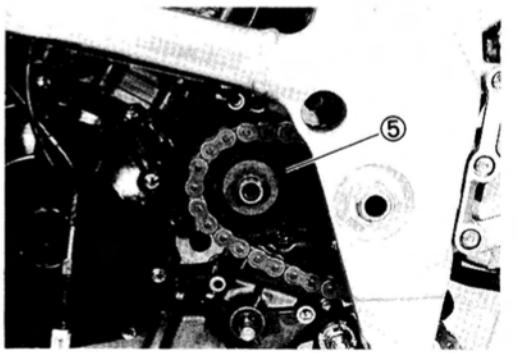

- Remove the oil cooler ⑥ by removing its mounting bolts and the oil hose union bolts.

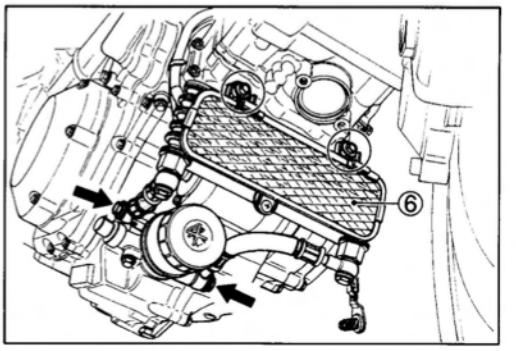

- Disconnect the throttle position sensor lead wire coupler ①, the fuel injector lead wire couplers ② and the intake air pressure sensor lead wire coupler ③.
- Disconnect the hose ④ from the V.T.V. ⑤.

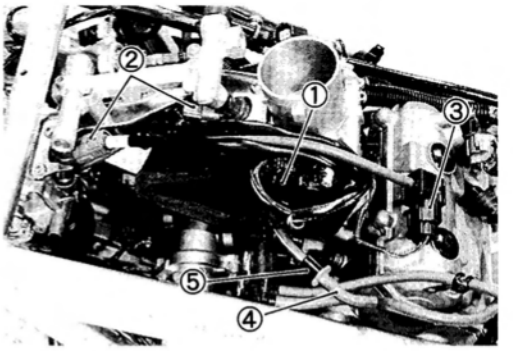

- Remove the throttle stop screw ⑥.

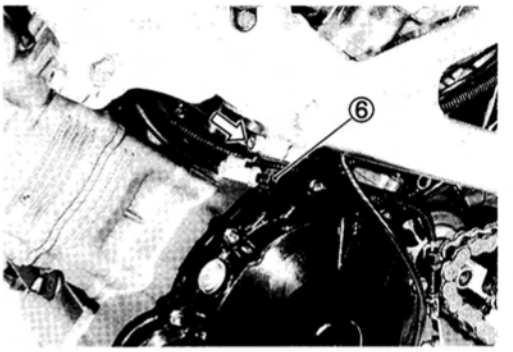

- Remove the throttle pulling ⑦ and returning ⑧ cables.
- Remove the fast idle cable ⑨.

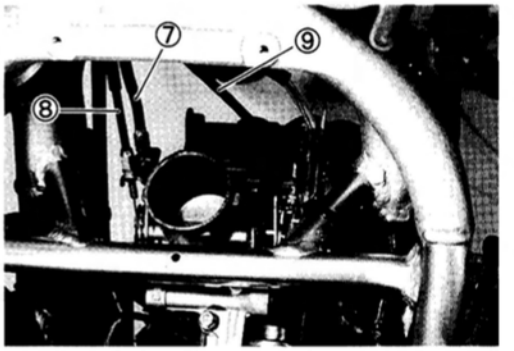

- Remove the throttle body assembly by loosening its clamp bolts (Engine side).

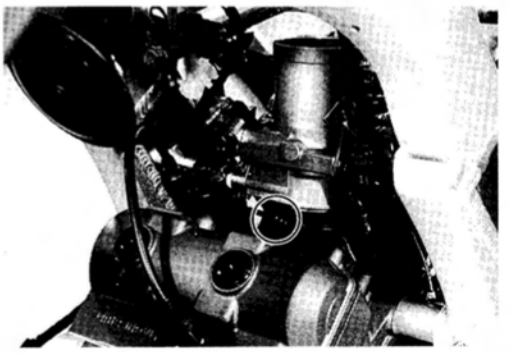

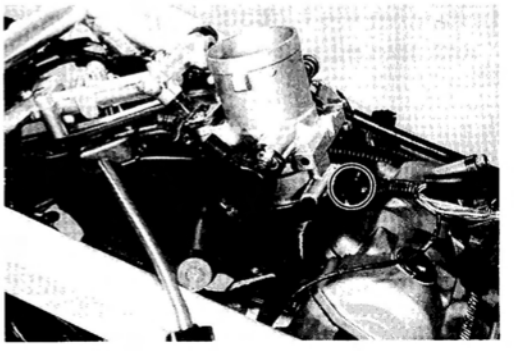

- Remove the air cleaner duct ①.

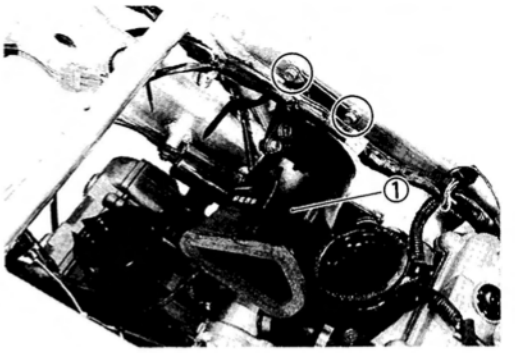

- Remove the No.2 (Rear) spark plug cap ② and disconnect the camshaft position sensor lead wire coupler ③.

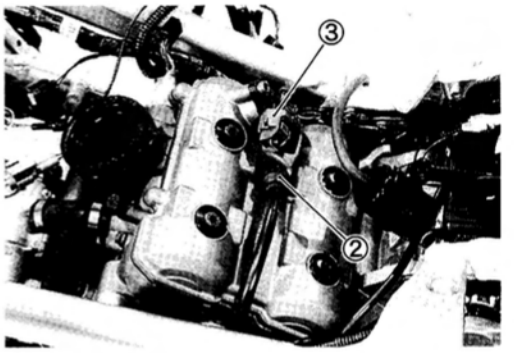

- Remove the No1 (Front) spark plug cap ④.
- Disconnect the starter motor lead wire ⑤ and the oil pressure switch lead wire ⑥.

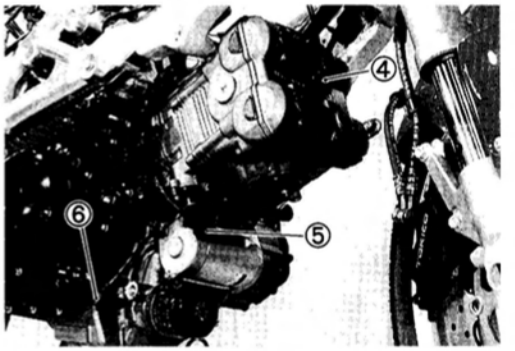

- Remove the ignition coils ⑦.
- Disconnect the side-stand switch lead wire coupler ⑧ and the gear position switch lead wire coupler ⑨.

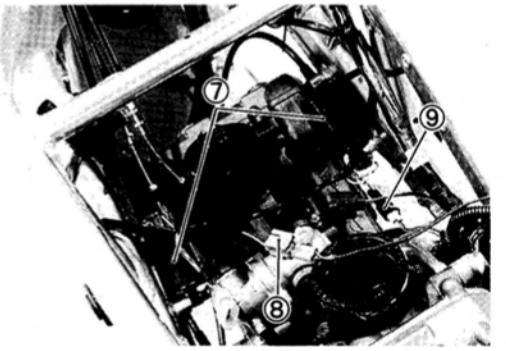

- Remove the ground lead wire.

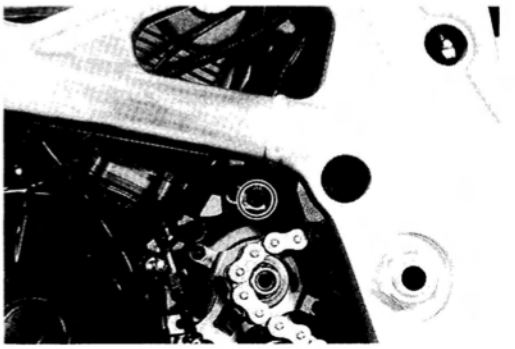

- Disconnect the generator lead wire coupler ① and the crankshaft position sensor lead wire coupler ②.

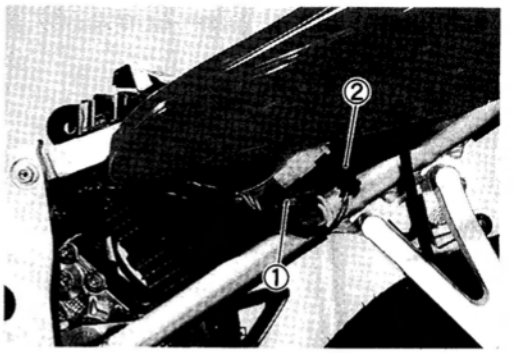

- Support the engine with a proper engine jack.

NOTE:
To remove the engine easily and safely, lift up the frame by using a hoist for safety.

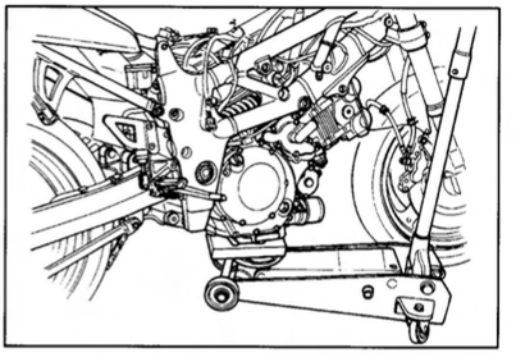

- Remove the side-stand switch ③.
- Remove the rear lower engine mounting nut ④.

NOTE:
Do not remove the rear lower engine mounting bolt ⑤ at this stage.

- Remove the engine mounting thrust adjuster lock nut ⑥ with the special tool and loosen the engine mounting thrust adjuster ⑦ fully with the special tool.

09940-14980: Engine mounting thrust adjuster socket wrench

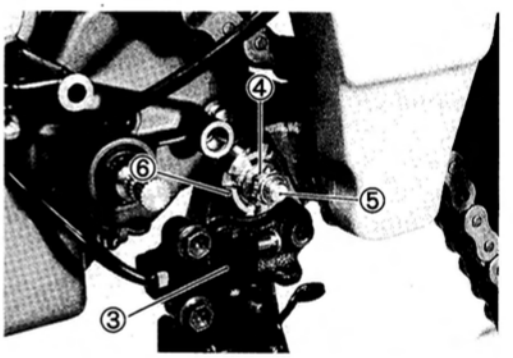

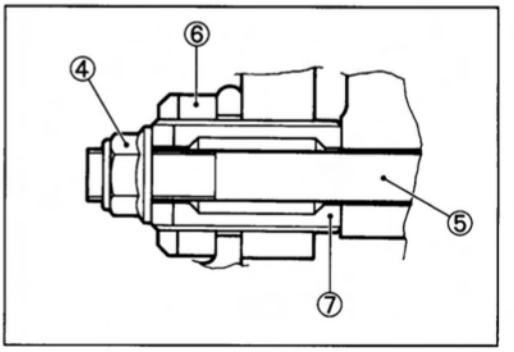

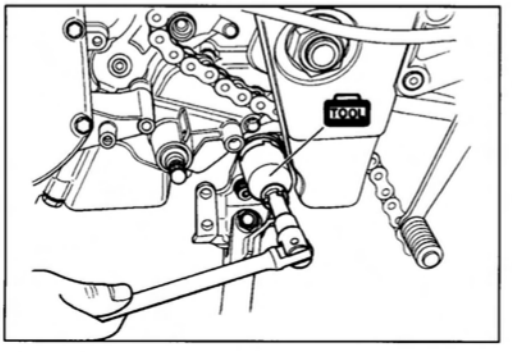

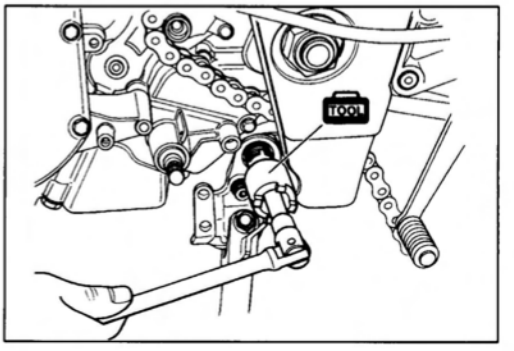

- After loosening the pinch bolt ①, remove the rear upper engine mounting bolt ②.

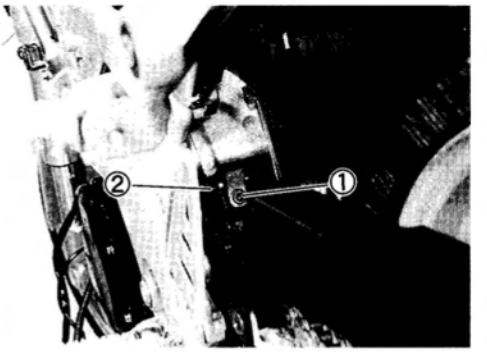

- After loosening the pinch bolts ③, remove the left front and rear cylinder engine mounting bolts ④ with the two spacers.
- Remove the right front and rear cylinder engine mounting bolts ⑤ with the spacer.
- Remove the center engine mounting bolt/nut ⑥.

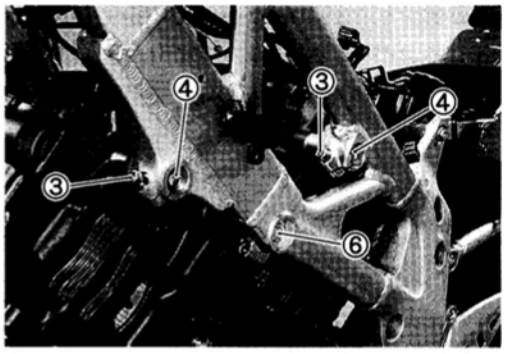

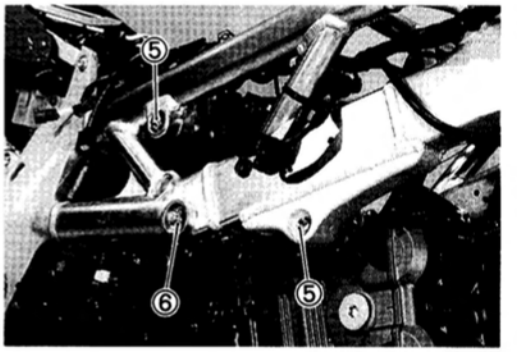

- Before removing the rear lower engine mounting bolt ⑧, gradually lower the front side of the engine assembly to prevent the exhaust pipe ⑦ from contacting the frame and the swingarm.

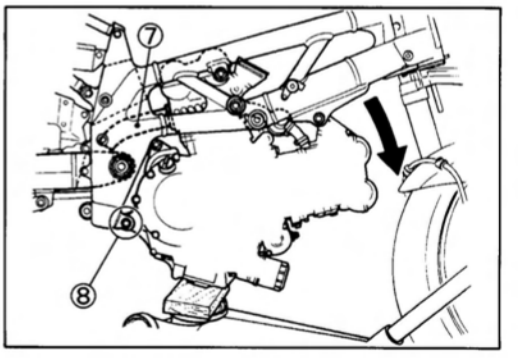

- Remove the rear lower engine mounting bolt ⑧ and gradually lower the engine assembly.

⚠ CAUTION

Be careful not to damage the frame and engine when removing the engine from the frame.

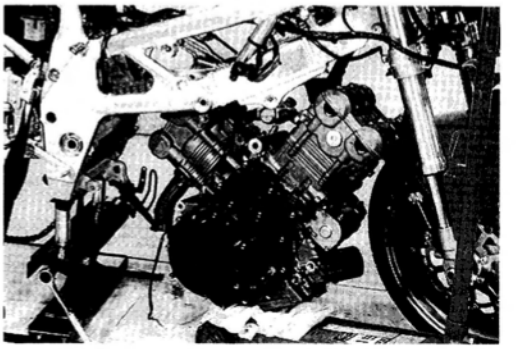

ENGINE INSTALLATION

Install the engine in the reverse order of engine removal.

- Before installing the engine, lift up the frame by using a hoist for safety.

- Before installing the engine assembly, install the engine mounting bolt spacer (rear upper ① and center ②) and the engine mounting thrust adjuster ③.

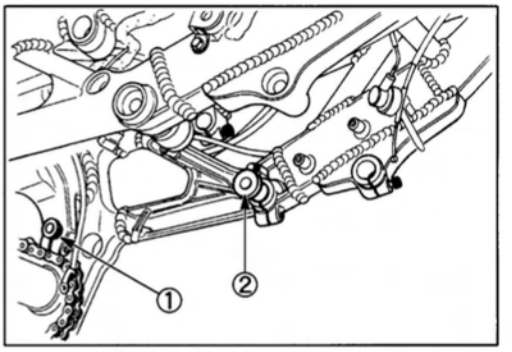

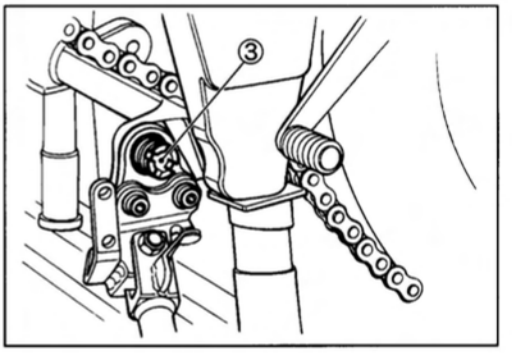

- Gradually raise the rear side of the engine assembly, and then put the drive chain on the driveshaft.

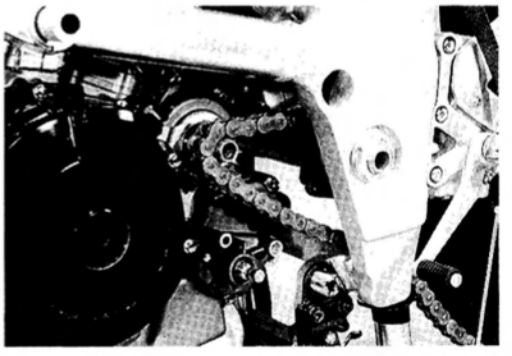

- First install the rear lower engine mounting bolt ④ with the bolt holes in the frame and the engine aligned.

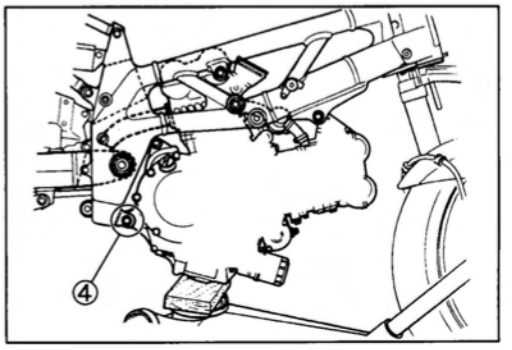

- Gradually raise the engine assembly and align all the bolt holes in the frame and engine.
- Install the engine mounting bolts, nuts and the spacers and tighten them temporarily. (Refer to page 3-13.)

NOTE:
The engine mounting nuts are self-locking. Once the nut has been removed, it is no longer of any use. Be sure to use new nuts and tighten them to the specified torque.

- Tighten the engine mounting thrust adjuster and its lock nut to the specified torque with the special tool.

09940-14980: Engine mounting thrust adjuster socket wrench

Engine mounting thrust adjuster: 10 N·m (1.0 kg-m, 7.0 lb-ft)
Engine mounting thrust adjuster lock nut: 45 N·m (4.5 kg-m, 32.5 lb-ft)

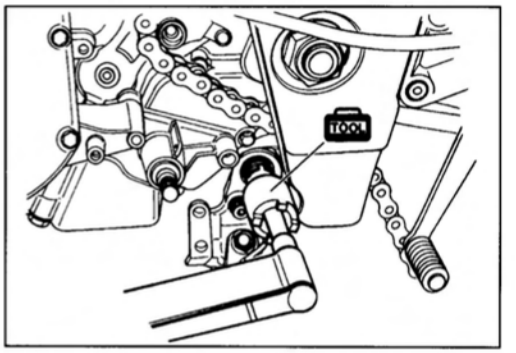

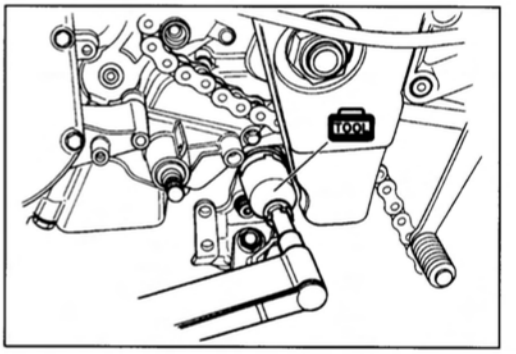

- After tightening the engine mounting thrust adjuster lock nut, tighten all the engine mounting bolts and nuts to the specified torque.

Rear (lower and upper) engine mounting bolt/nut: 55 N·m (5.5 kg-m, 40.0 lb-ft)
Center engine mounting bolt/nut: 93 N·m (9.3 kg-m, 67.5 lb-ft)
Front and rear cylinder engine mounting bolt: (left and right) 55 N·m (5.5 kg-m, 40.0 lb-ft)

- After tightening the engine mounting bolts, tighten the pinch bolts to the specified torque.

Engine mounting pinch bolt: 23 N·m (2.3 kg-m, 16.5 lb-ft)

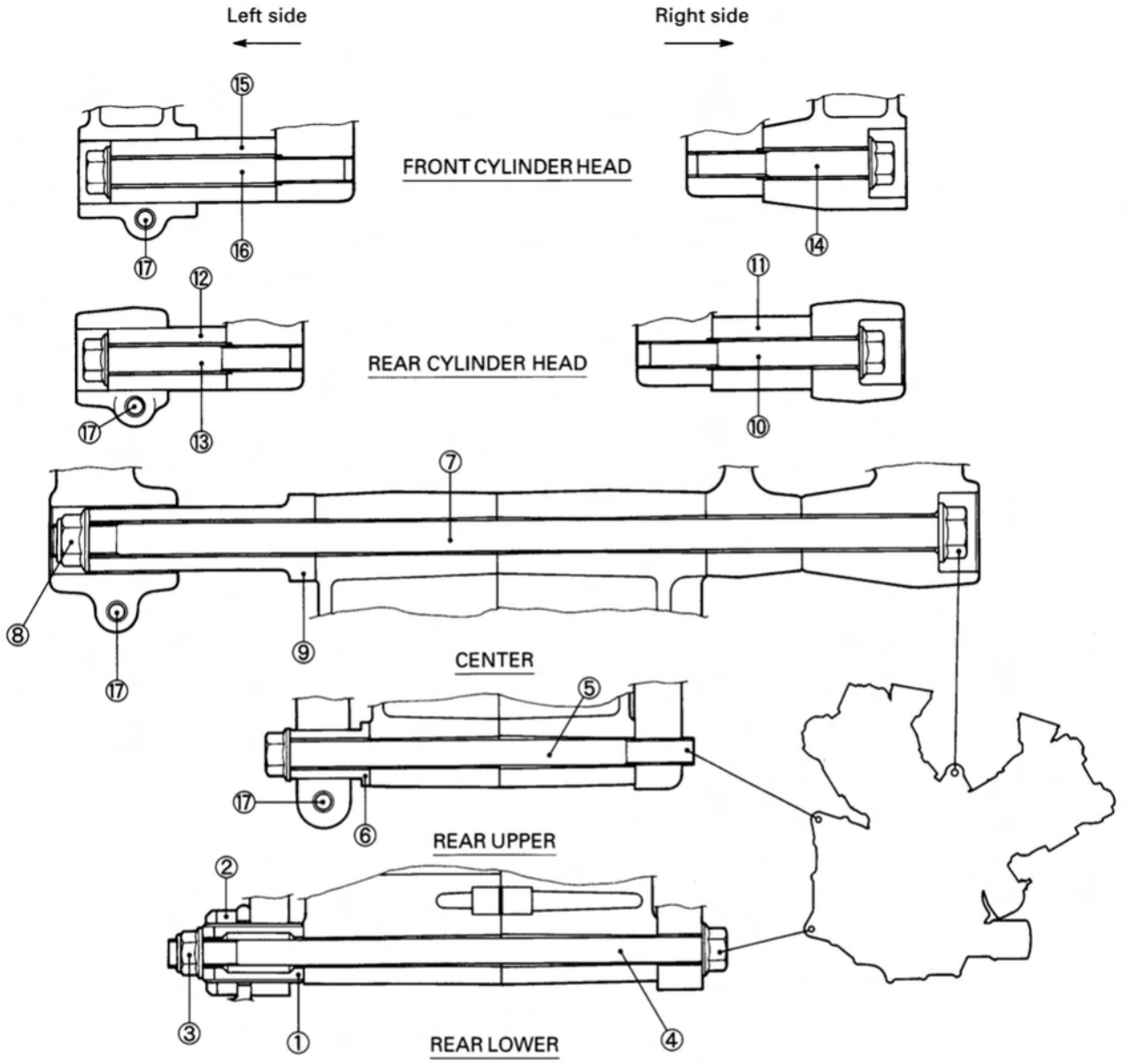

ITEM	N·m	kg-m	lb-ft
①	10	1.0	7.0
②	45	4.5	32.5
③ ⑤ ⑩ ⑬ ⑭ ⑯	55	5.5	40.0
⑧	93	9.3	67.5
⑰	23	2.3	16.5

LENGTH

ITEM		mm	in
Bolt	④	205	8.1
	⑤	155	6.1
	⑦	340	13.4
	⑩	80	3.1
	⑬	70	2.8
	⑭	65	2.6
	⑯	90	3.5
	⑰	30	1.2
Spacer	⑥	30.5	1.2
	⑨	87	3.4
	⑪	33	1.3
	⑫	46	1.8
	⑮	64	2.5

- After remounting the engine, route wiring harness, cables and hoses properly referring to the sections for wire routing, cable routing and hose routing. (Refer to pages 8-19 through -22.)
- Tighten the ground lead wire by the crankcase bolt as shown.

Crankcase bolt (M6): 11 N·m (1.1 kg-m, 8.0 lb-ft)

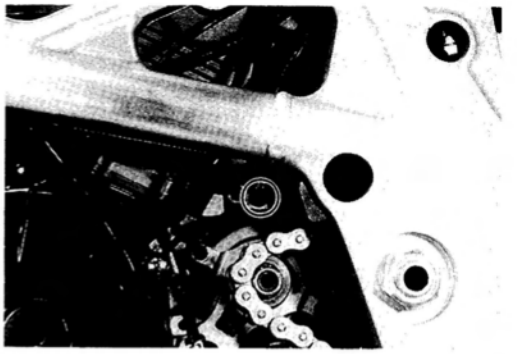

- When fitting the spark plug caps, the triangle marks Ⓐ on the water-proof covers ① should be faced to each cylinder exhaust side.

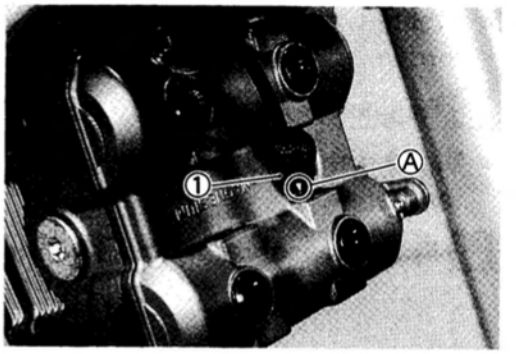

- Install the throttle body, the FI system components and the air cleaner box.

NOTE:

* *Refer to pages 4-65 through-68 for the throttle body and the air cleaner box installation.*
* *Refer to pages 8-22, -24 and -25 for the cable and hose routing.*

- Install the oil cooler and tighten oil hose union bolts ① to the specified torque.

Oil hose union bolt: 23 N·m (2.3 kg-m, 16.5 lb-ft)

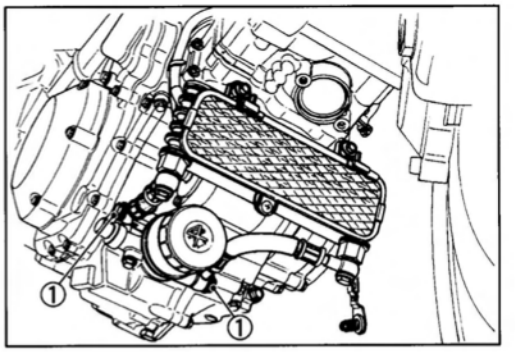

- Tighten the engine sprocket nut ② to the specified torque.

Engine sprocket nut: 115 N·m (11.5 kg-m, 83.0 lb-ft)

- Tighten the speed sensor rotor bolt ③ to the specified torque.

Speed sensor rotor bolt: 13 N·m (1.3 kg-m, 9.5 lb-ft)

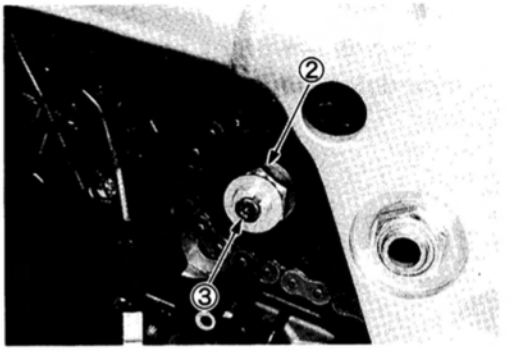

- After adjusting the drive chain slack, tighten the axle nut ④ and the torque link nut (Rear) to the specified torque.

Rear axle nut: 100 N·m (10.0 kg-m, 72.5 lb-ft)
Torque link nut (Rear): 35 N·m (3.5 kg-m, 25.5 lb-ft)

NOTE:
Refer to page 2-17 for the drive chain slack adjustment.

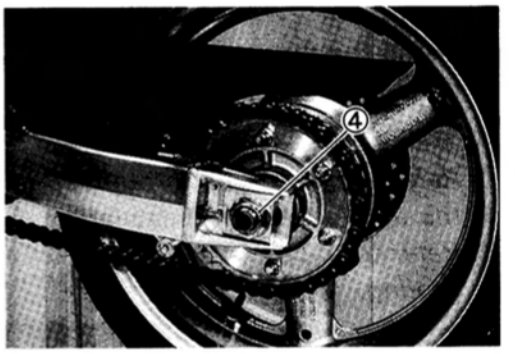

- Install the clutch release in the following procedure.
- Turn the adjuster ⑤ into the clutch lever assembly.

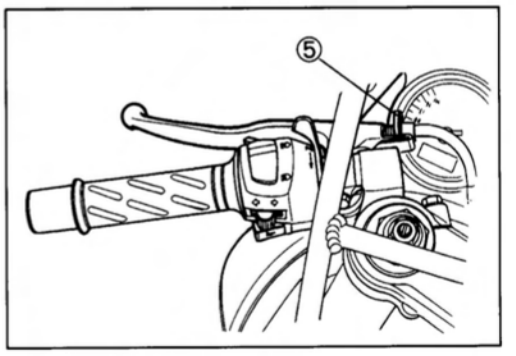

- Install the clutch push rod.

NOTE:
Apply grease to the clutch push rod, when installing it.

99000-25030: SUZUKI SUPER GREASE "A"

- Loosen the lock nut ⑥ and turn out the adjusting screw ⑦ fully.

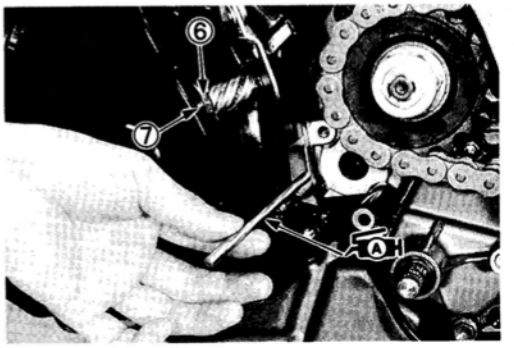

- Install the cable to the generator cover and put the clutch release lever ① onto the push rod temporarily.
- While pulling the cable, adjust the clutch release lever end angle to obtain 5–10 degree lower by turning the adjuster ②.
- Tighten the lock nuts ③.

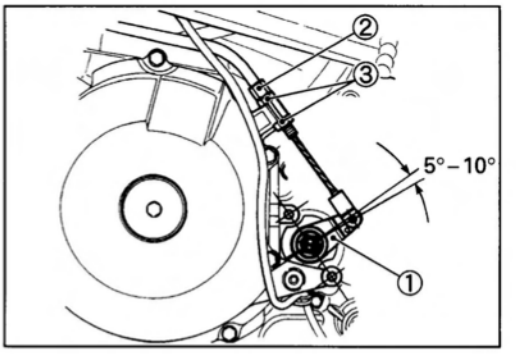

NOTE:
Refer to page 8-22 for the clutch cable routing.

- Turn in the clutch release body ④ onto the clutch release lever completely and put them onto the push rod.

NOTE:
Apply grease to the seal lip and circular balls of the clutch release body.

99000-25030: SUZUKI SUPER GREASE "A"

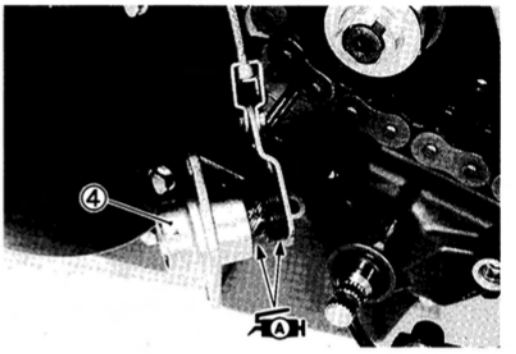

NOTE:
Position the clutch release body as shown in the right illustration finally.

- Tighten the clutch release mounting bolts securely.

NOTE:
Apply a small quantity of THREAD LOCK "1342" to the clutch release mounting bolts.

99000-32050: THREAD LOCK "1342"

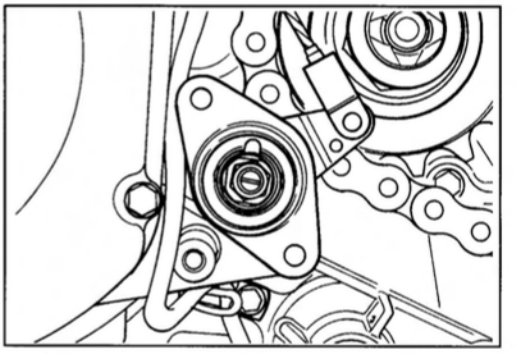

- Install the clutch release return spring ⑤.
- Slowly turn in the adjusting screw ⑥ until resistance is felt.
- From this position, turn out the adjusting screw ⑥ 1/4 rotation and tighten the lock nut ⑦.

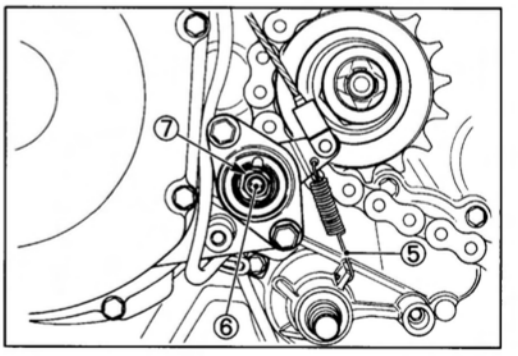

- Turn in or out the adjuster ⑧ to obtain 10–15 mm (0.4–0.6 in) of free play Ⓐ at the clutch lever end.

Clutch lever play Ⓐ: 10–15 mm (0.4–0.6 in)

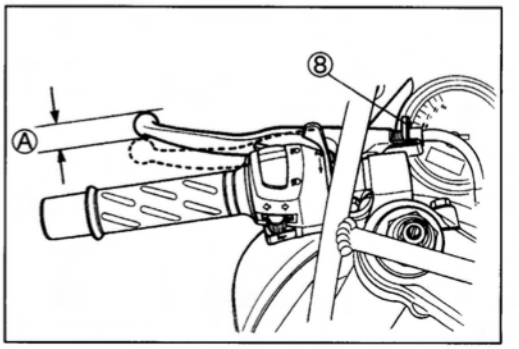

- Apply gas sealer to the inside and outside of the exhaust pipe connector.

EXHAUST GAS SEALER: PERMATEX 1372

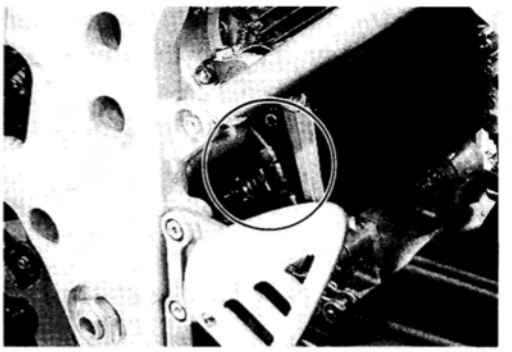

- Tighten the exhaust pipe bolts and muffler mounting bolts to the specified torque.

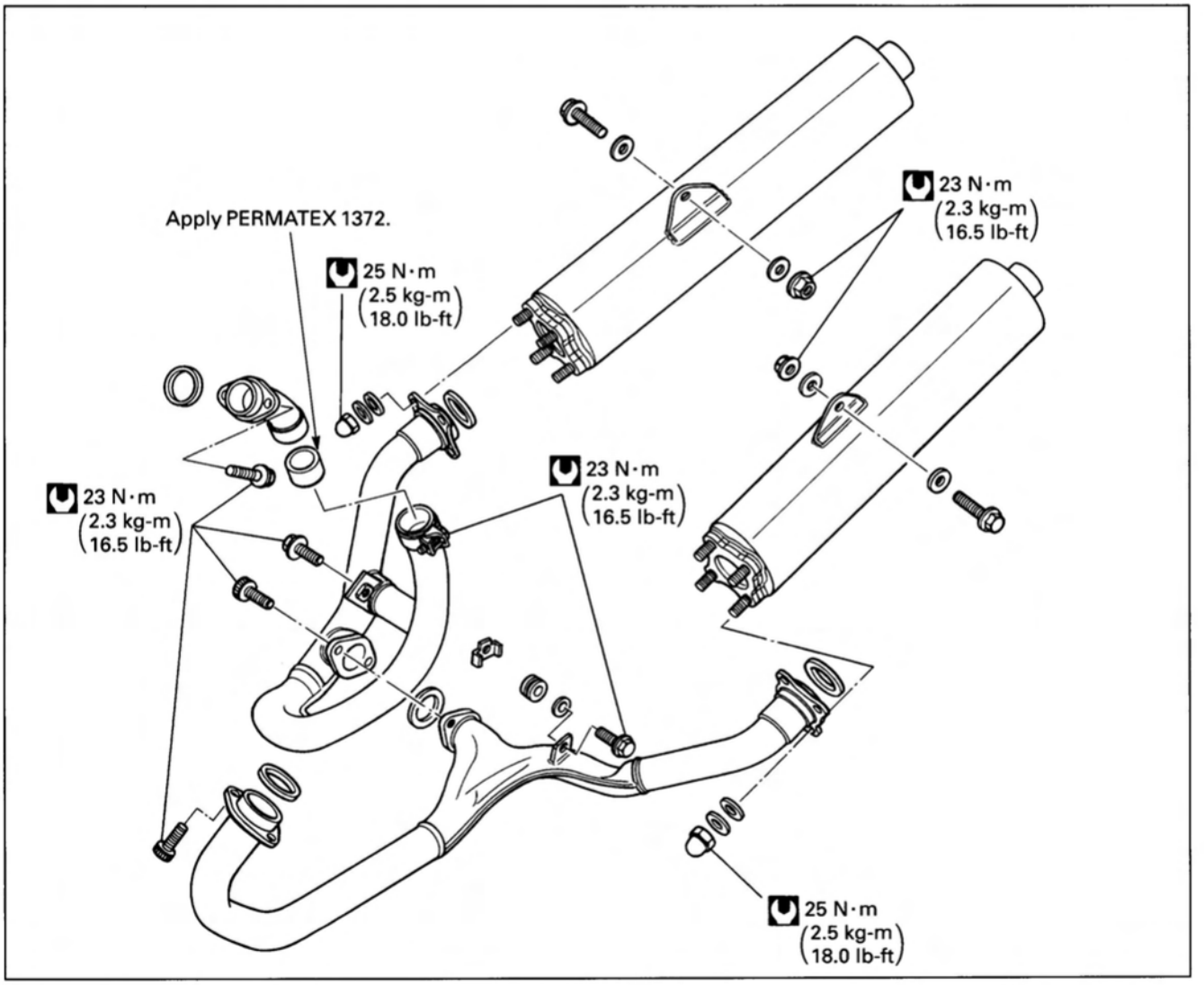

- Adjust the following items.

	Page
* Engine coolant	2-15
* Engine oil	2-11
* Throttle valve synchronization	4-71 through -74
* Idling adjustment	2-12
* Drive chain slack	2-17
* Throttle cable play	2-13

ENGINE DISASSEMBLY AND REASSEMBLY

ENGINE DISASSEMBLY

⚠ CAUTION

Be sure to identify each removed part such as intake pipe, camshaft, cylinder head, piston, conrod etc. as to its location and lay the parts out in groups so that each will be restored to the original location during assembly.

- Remove the spark plugs, front and rear.
- Remove the No.2 (Rear) cylinder exhaust pipe ①.

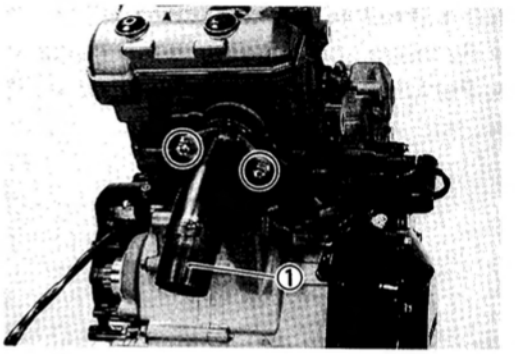

- Remove the crankcase breather hose ②.

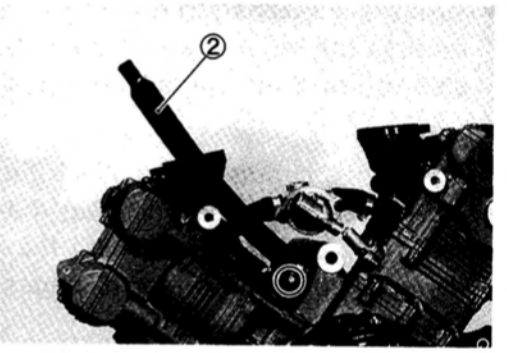

- Remove the thermostat case ③ with the hoses ④.

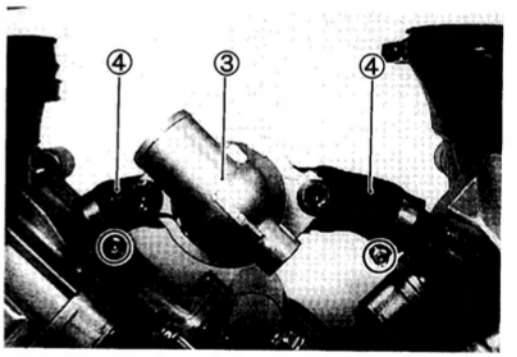

- Remove the water unions ⑤ and the O-rings ⑥ from each cylinder head.

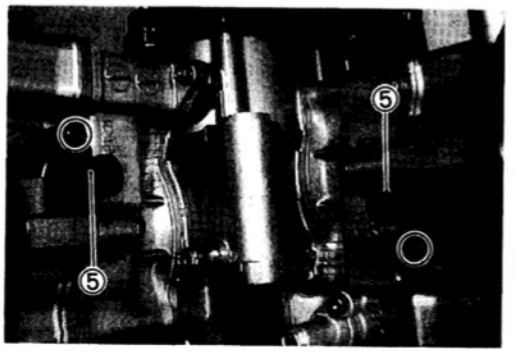

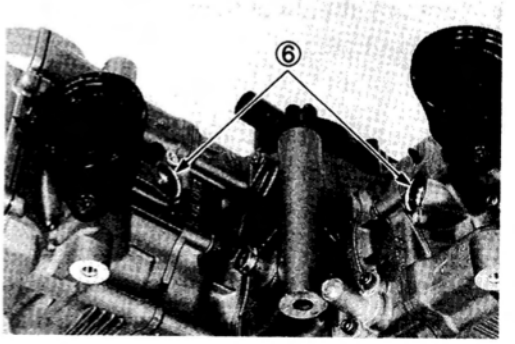

- Remove the valve timing inspection plug ① and the generator cover plug ②.

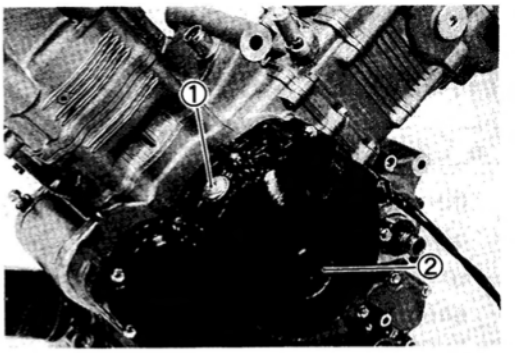

NO.1 (FRONT) CYLINDER

- Remove the cylinder head cover bolts and the gaskets.
- Remove the cylinder head cover ③ and the gaskets.
- Remove the dowel pins.

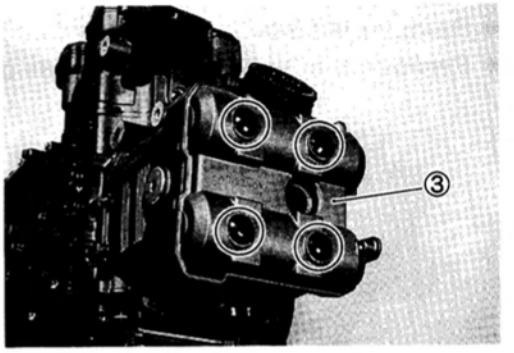

- Turn the crankshaft to bring the "F | T" line on generator rotor to the index mark of the valve inspection hole and also to bring the cams to the position as shown.

NOTE:
At the above condition, the No.1 (Front) cylinder is at TDC of compression stroke and also the engraved lines Ⓐ on the camshafts are parallel with the mating surface of the cylinder head cover. (Refer to pages 3A-4 and -5.)

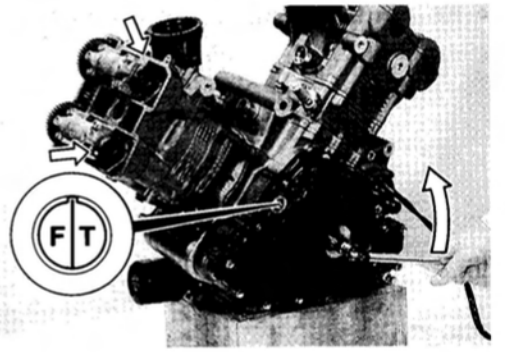

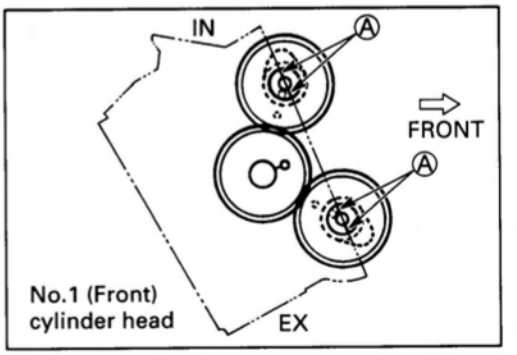

- Remove the two camshaft journal holders ④ by removing the bolts.

NOTE:
The two camshaft journal holders should be put ID marks, Front IN and Front EX.

⚠ CAUTION

Be sure to loosen the camshaft journal holder bolts evenly by shifting the wrench diagonally.

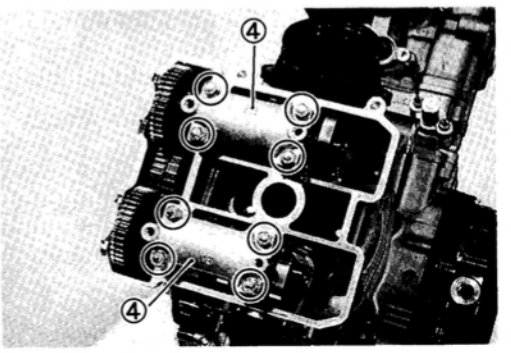

- Remove the two camshafts, intake ① and exhaust ②.
- Remove the camshaft C-rings ③.
- Remove the dowel pins ④.

NOTE:
Do not drop the C-rings ③ and the dowel pins ④ into the crankcase.

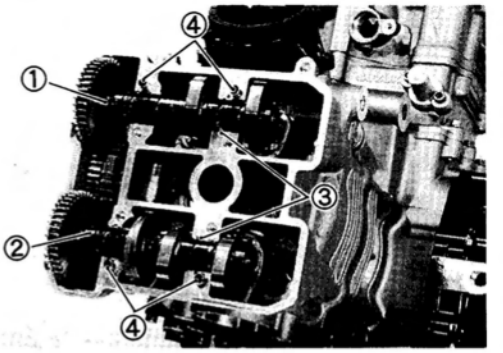

- Remove the front cam chain tension adjuster ⑤ and the gasket.

NOTE:
Slightly loosen the front cam chain tension adjuster bolt ⑥ before removing to facilitate subsequent installation.

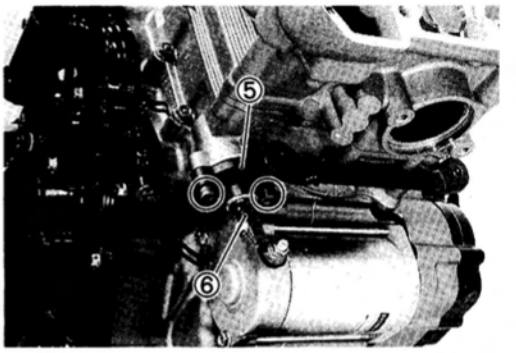

- Remove the No.2 cam drive idle gear/sprocket ⑦ by removing its shaft ⑧ with the copper washer ⑨ and the thrust washer ⑩.

NOTE:
Do not drop the thrust washer ⑩ into the crankcase.

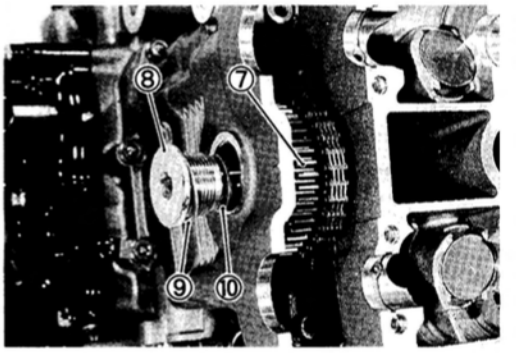

- Remove the cylinder head bolts (M6) ⑪ and the cam chain tensioner mounting bolt ⑫.
- Remove the cam chain tensioner.

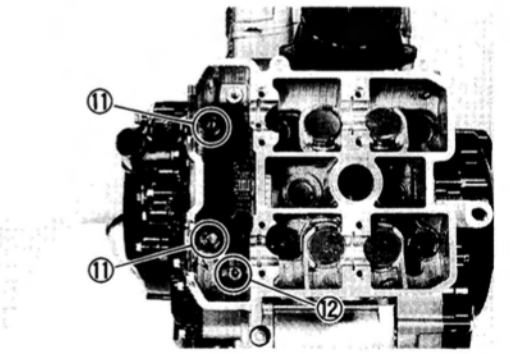

- Remove the oil cooler mounting bracket ⑬ by removing the cylinder head nuts (M6).

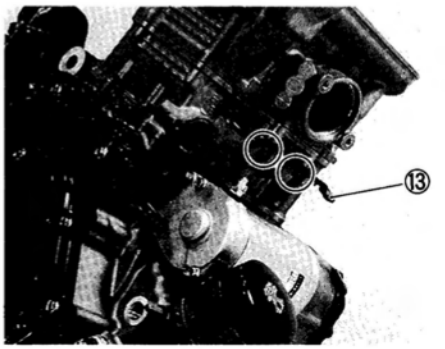

- Remove the cylinder head nut (M8) ①.
- Loosen the cylinder nuts ②.

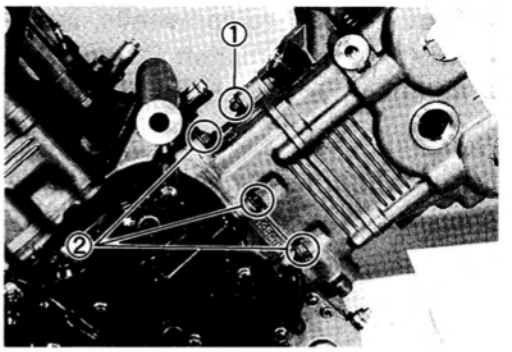

- Remove the cylinder head bolts (M10) with the washers.
- Remove the cylinder head assembly.

NOTE:
When loosening the cylinder head bolts, loosen each bolt little by little diagonally.

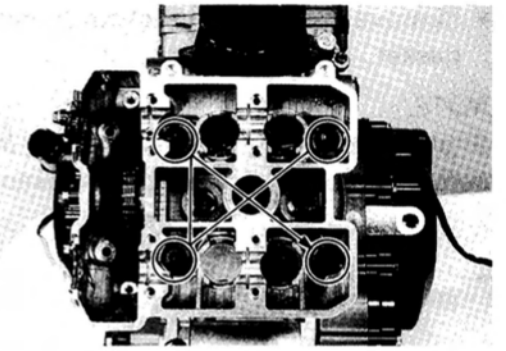

⚠ CAUTION

Be careful not to damage the cylinder when removing or handling it.

NOTE:
* *To identify each cylinder head, mark the cylinder as the front and rear.*
* *The front and rear cylinder heads use the same parts.*
* *Refer to the section 3A for the cylinder head servicing.*

- Remove the cylinder head gasket ③, the dowel pins ④, the cam chain guide ⑤, cylinder nuts ⑥ and the clamp ⑦.
- Remove the cylinder.

NOTE:
Firmly grip the cylinder at both ends, and lift it straight up. If the cylinder does not come off, lightly tap on the finless portions of the cylinder with a plastic mallet to make the gasketed joint loose.

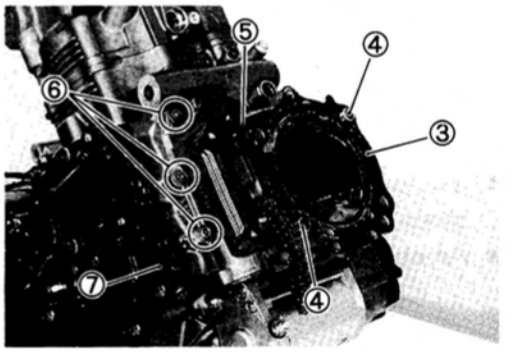

- Remove the cylinder base gasket ⑧ and the dowel pins ⑨.
- Remove the oil jet ⑩.

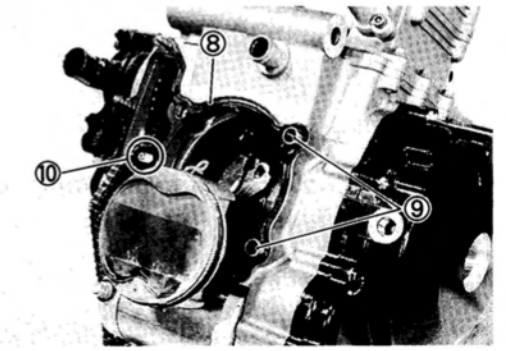

- Place a clean rag over the cylinder base so as not to drop the piston pin circlip into the crankcase.
- Remove the piston pin circlip.
- Remove the piston by driving out the piston pin.

NOTE:
** Scribe the cylinder number on the head of the piston.*
** Refer to the section 3B for the piston and the cylinder inspection.*

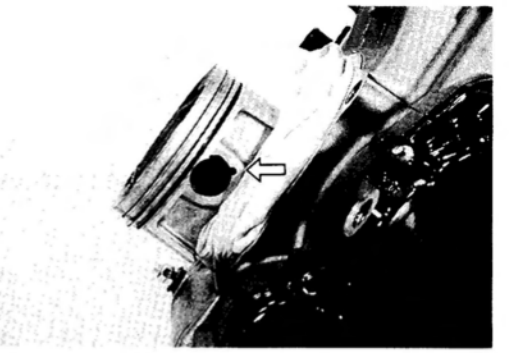

NO.2 (REAR) CYLINDER

- Remove the camshaft position sensor ① and the gasket.
- Remove the cylinder head cover bolts and the gaskets.
- Remove the cylinder head cover ② and the gaskets.
- Remove the dowel pins.

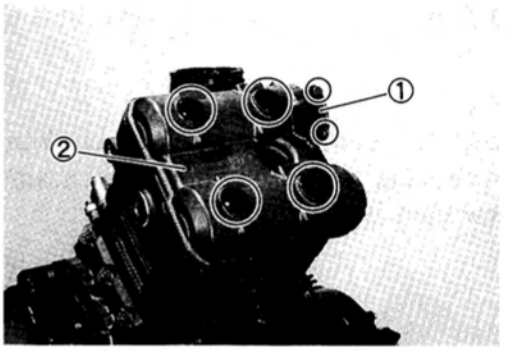

- Turn the crankshaft to bring the "F | T" line mark on generator rotor to the index mark of the valve inspection hole and also to bring the cams to the position as shown.

NOTE:
At the above condition, the No.2 (Rear) cylinder is at ATDC 90° on expansion stroke and also the engraved lines Ⓐ on the camshafts are parallel with the mating surface of the cylinder head cover. (Refer to pages 3A-4 and -5.)

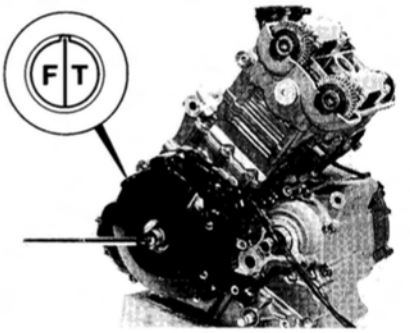

⚠ CAUTION

Pull the front cam chain upward, or the chain will be caught between the crankcase and the No.1 cam drive idle gear/sprocket when turning the crankshaft.

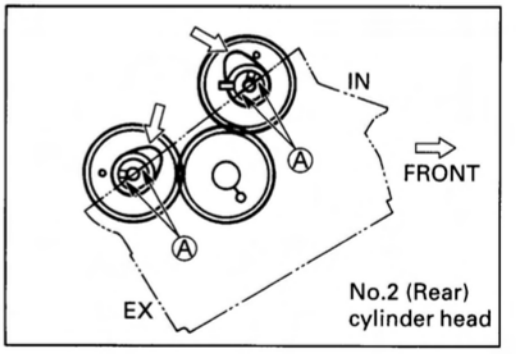

- Remove the two camshaft journal holders ③ by removing the bolts.

NOTE:
The two camshaft journal holders should be put ID marks, Rear IN and Rear EX.

⚠ CAUTION

Be sure to loosen the camshaft journal holder bolts evenly by shifting the wrench diagonally.



- Remove the two camshafts, intake ① and exhaust ②.
- Remove the crankshaft C-rings ③.
- Remove the dowel pins ④.

NOTE:
Do not drop the C-rings ③ and the dowel pins ④ into the crankcase.

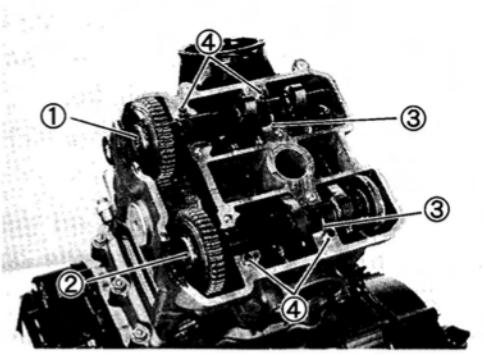

- Remove the rear cam chain tension adjuster ⑤ and the gasket.

NOTE:
Slightly loosen the rear cam chain adjuster bolt ⑥ before removing the cam chain tension adjuster to facilitate subsequent installation.

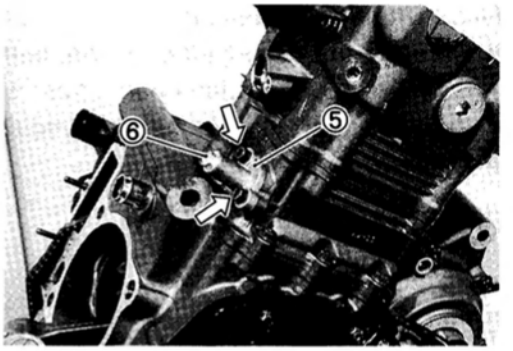

- Remove the No.2 cam drive idle gear/sprocket ⑦ by removing its shaft ⑧, the copper washer ⑨ and the thrust washer ⑩.

NOTE:
Do not drop the thrust washer ⑩ into the crankcase.

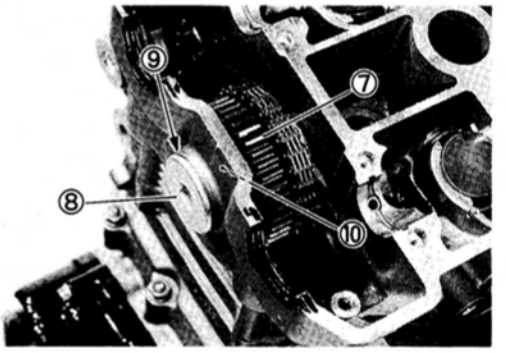

- Remove the cylinder head bolts (M6) ① and cam chain tensioner mounting bolt ②.
- Remove the cam chain tensioner ③.

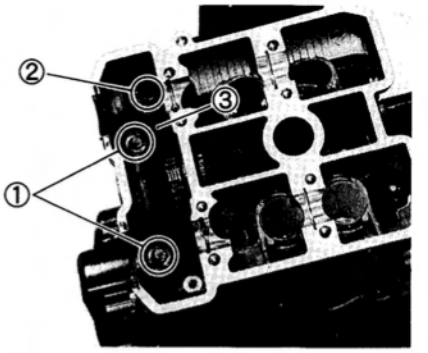

- Remove the cylinder head nuts (M6) ④.

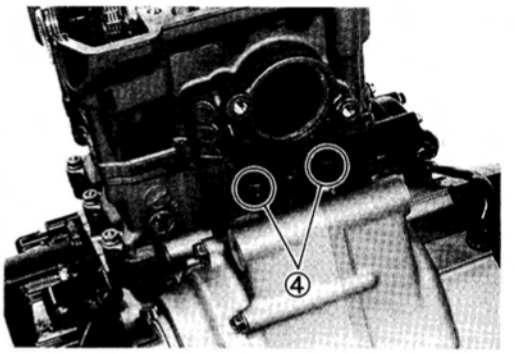

- Remove the cylinder head nut (M8) ⑤.
- Loosen the cylinder nuts ⑥.

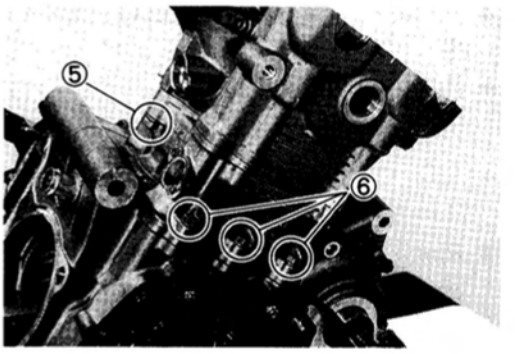

- Remove the cylinder head bolts (M10) with the washers.
- Remove the cylinder head assembly.

NOTE:
When loosening the cylinder head bolts, loosen each bolt little by little diagonally.

⚠ CAUTION

Be careful not to damage the cylinder when removing or handling it.

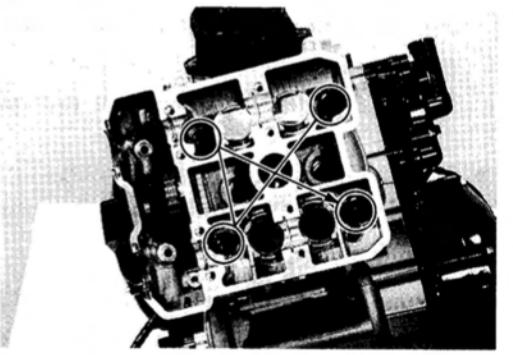

NOTE:
* *To identify each cylinder head, mark the cylinder as the front and rear.*
* *Refer to the section 3A for the cylinder head servicing.*

- Remove the cylinder head gasket ①, the dowel pins ②, the cam chain guide ③ and the cylinder nuts ④.
- Remove the cylinder.

NOTE:
Firmly grip the cylinder at both ends, and lift it straight up. If the cylinder does not come off, lightly tap on the finless portions of the cylinder with a plastic mallet to make the gasketed joint loose.

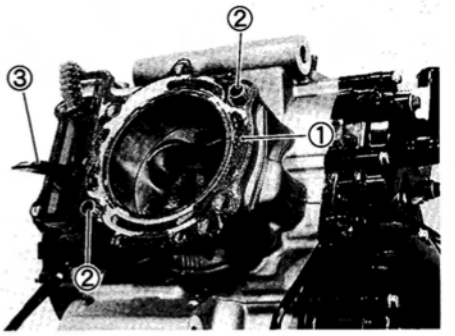



- Remove the cylinder base gasket ⑤ and the dowel pins ⑥.
- Remove the oil jet ⑦.

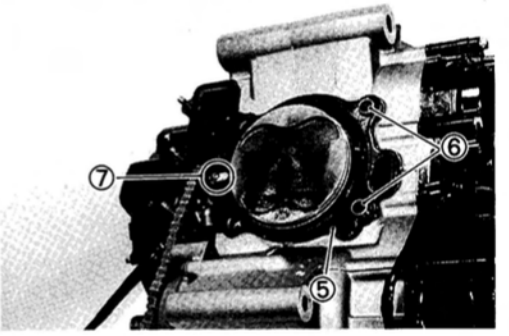

- Place a clean rag over the cylinder base so as not to drop the piston pin circlip into the crankcase.

⚠ CAUTION

Pull the cam chains upward, or the chains will be caught between the crankcase and the cam drive sprocket when turning the crankshaft.



- Remove the piston pin circlip.
- Remove the piston by driving out the piston pin.

NOTE:
** Scribe the cylinder number on the head of the piston.*
** Refer to the section 3B for the piston and the cylinder inspection.*

- Remove the starter motor ⑧.

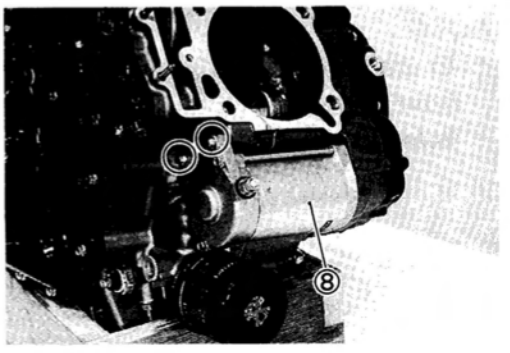

- Remove the generator cover ①.

NOTE:
Refer to the section 3F for the generator cover servicing.

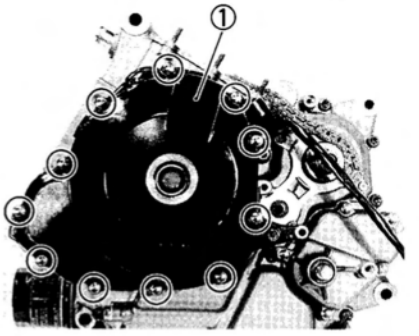

- Remove the dowel pin ② and the gasket ③.

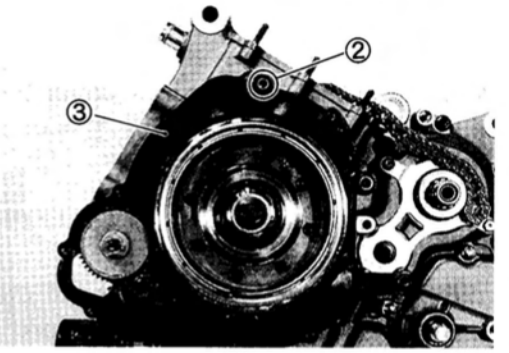

- Remove the starter torque limiter ④ and the washers ⑤.
- Remove the starter idle gear ⑥, the spacer ⑦ and the shaft ⑧.

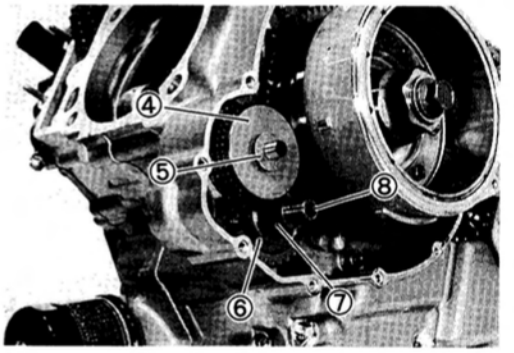

- Remove the bushings ⑨ from the crankcase and the generator cover.

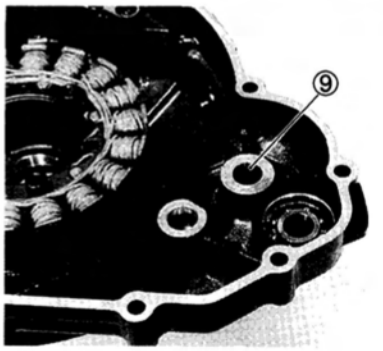

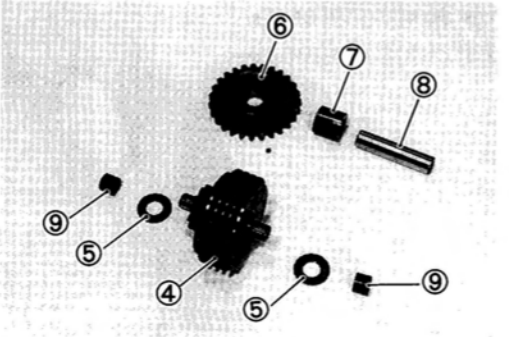

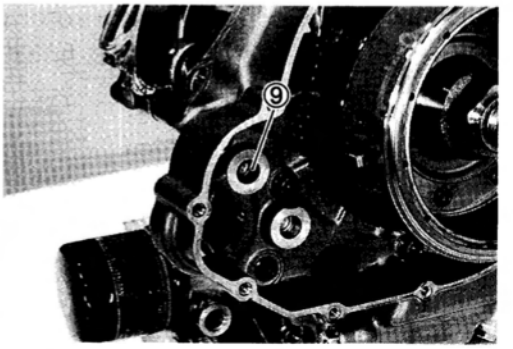

- Remove the water pump case ① with the O-ring.

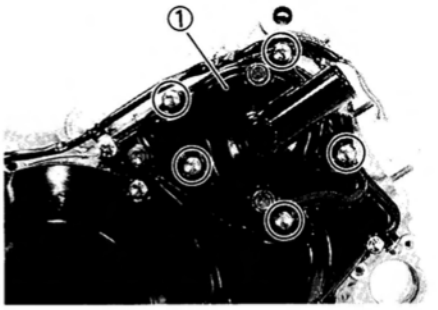

- Remove the dowel pin ②.
- Remove the impeller ③.
- Remove the clutch outer cover ④.
- Remove the clutch cover ⑤ and the clamps.

NOTE:

* *Pull the clutch cover straight to prevent the water pump oil seal damage.*

* *Refer to the section 3D for the mechanical seal and the oil seal removal and installation.*



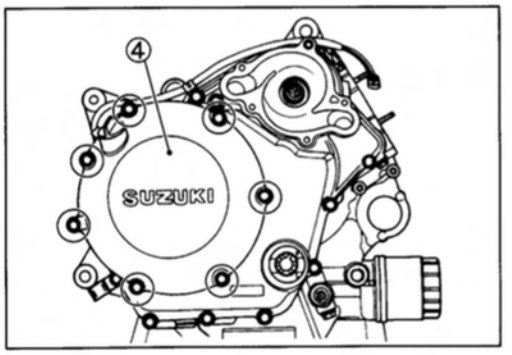

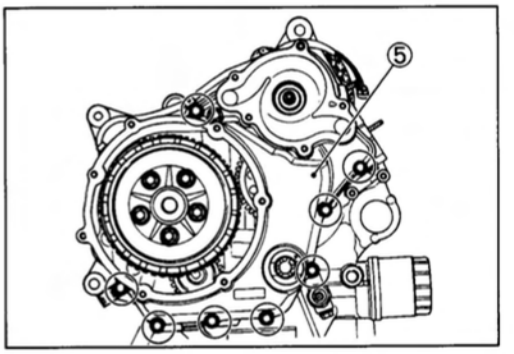

- Remove the gasket ⑥ and the dowel pins ⑦.

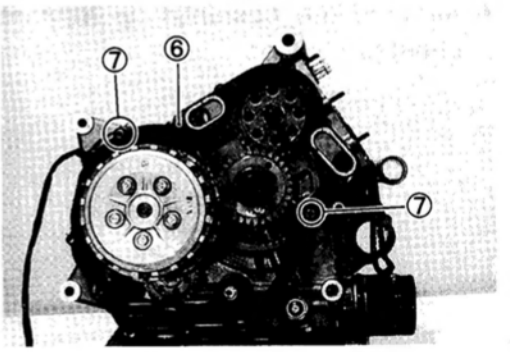

- While holding the generator rotor with a 36-mm wrench, remove the clutch spring set bolts and springs diagonally.

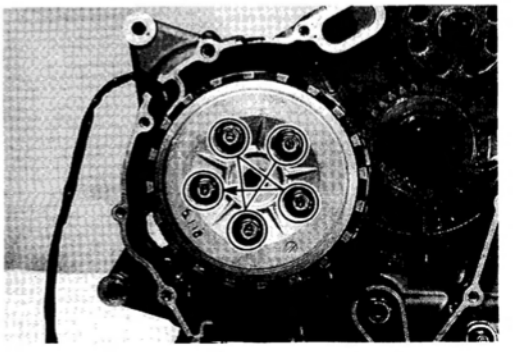

- Remove the pressure plate ①.

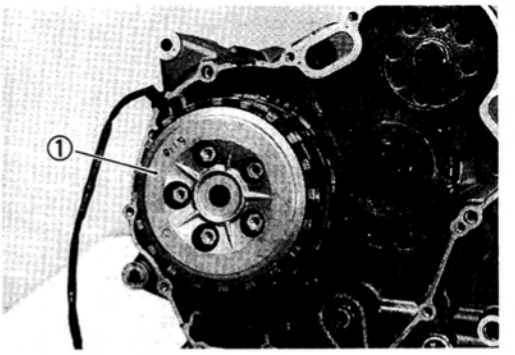

- Remove the clutch push piece ②, the bearing ③ and the thrust washer ④.

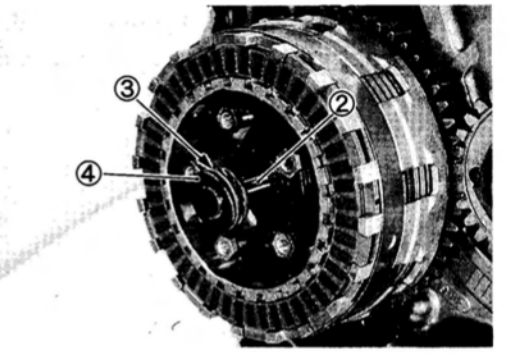

- Remove the clutch push rod ⑤.

NOTE:
If it is difficult to pull out the push rod ⑤, use a magnetic hand or a wire.

- Remove the clutch drive and driven plates.

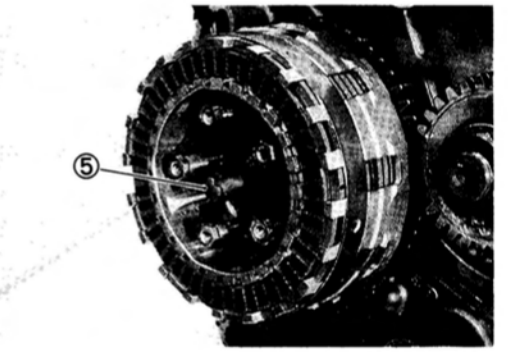

- Remove the wave washer ⑥ and the wave washer seat ⑦.

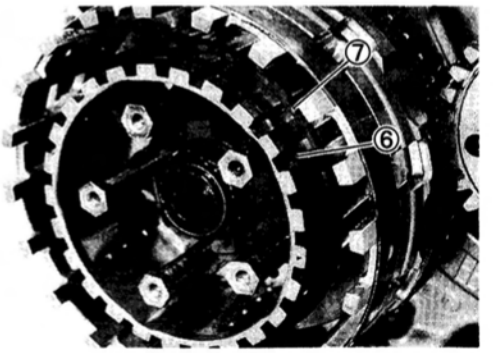

- Unlock the clutch sleeve hub nut ⑧.
- While holding the clutch sleeve hub with the special tool, remove the clutch sleeve hub nut ⑧.

TOOL 09920-53740: Clutch sleeve hub holder

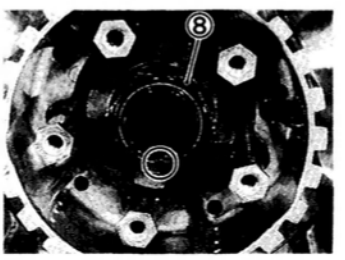

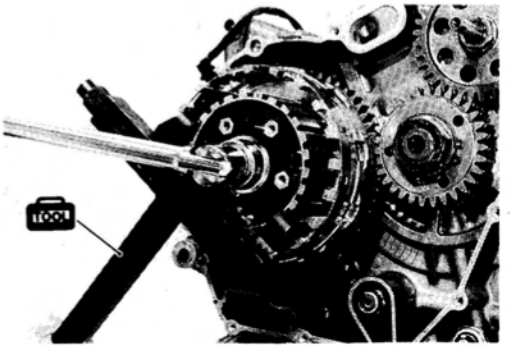

- Remove the washer ①.

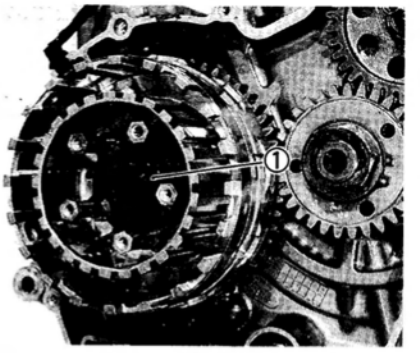

- Remove the clutch sleeve hub ② along with the clutch drive cam ③ and the clutch driven cam ④.

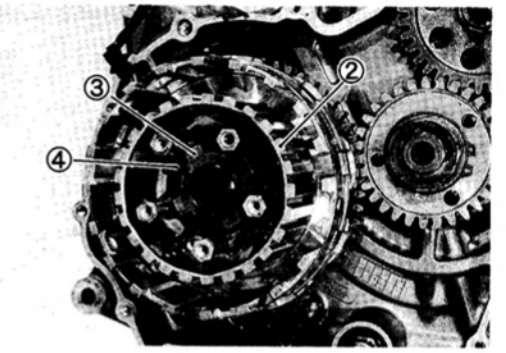

- Remove the clutch drive cam ③ and the clutch driven cam ④ from the clutch sleeve hub ②.

NOTE:
These three parts should be replaced as a set.

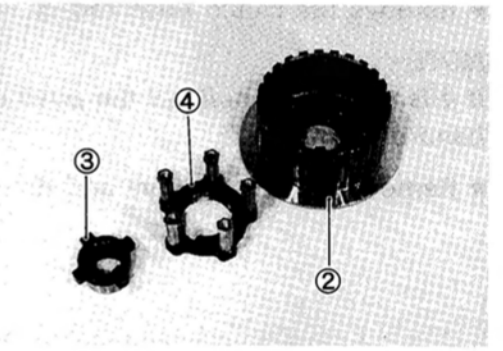

- Remove the thrust washer ⑤.
- Remove the primary driven gear assembly ⑥.

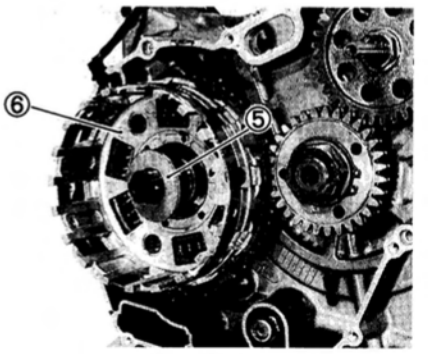

- Remove the needle roller bearing ①, the collar ② and the thrust washer ③.

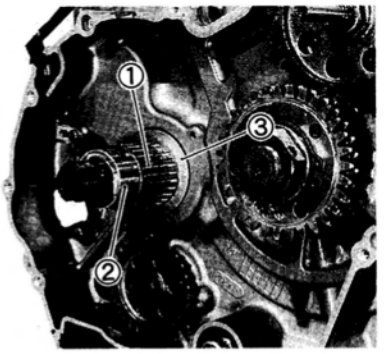

- Remove the oil pump driven gear ④ by removing the circlip.

TOOL 09900-06107: Snap ring pliers

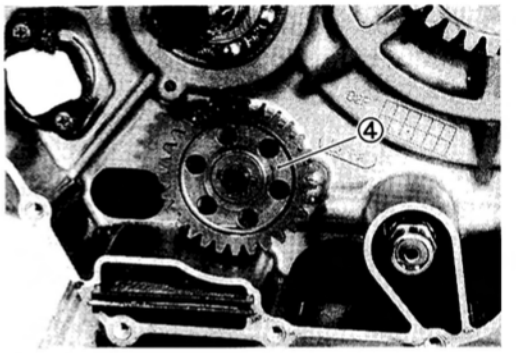

- Remove the pin ⑤ and the washer ⑥.

NOTE:
Do not drop the circlip, the pin ⑤ and the washer ⑥ into the crankcase.

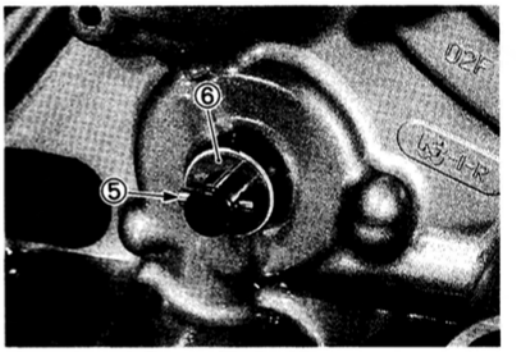

- Remove the oil pressure regulator ⑦ and the oil sump filter ⑧.

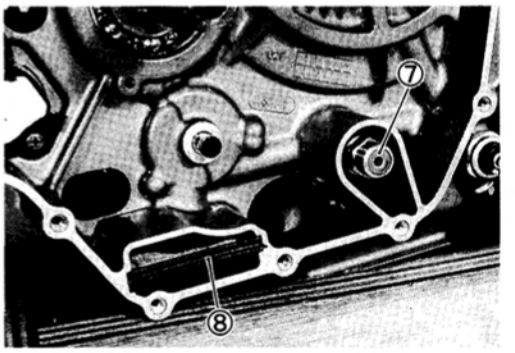

- Remove the gear position switch ⑨ and the cable guide ⑩ by removing their screws.

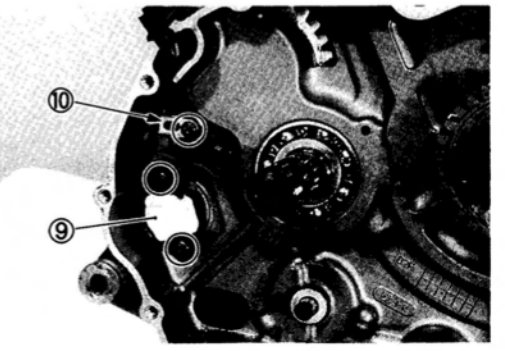

- Remove the gear position switch contact ① and its spring ②.

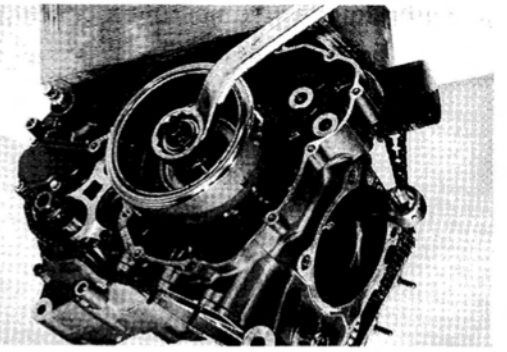

- While holding the generator rotor with a 36-mm wrench, remove the No.1 cam drive idle gear/sprocket nut ③ with the washer.

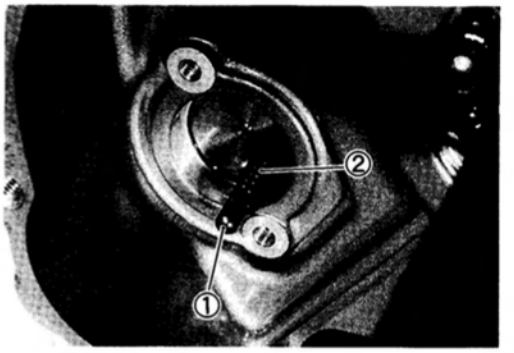

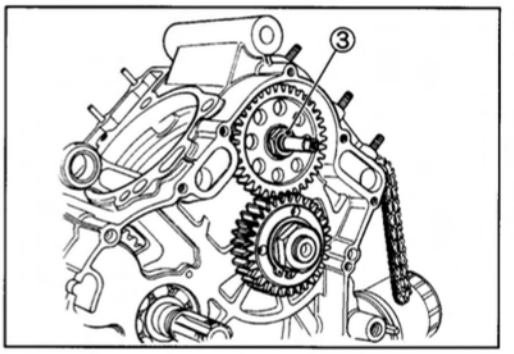

- Insert a suitable bar into the holes of primary drive gears to align the teeth of scissors gears.
- Remove the No.1 cam drive idle gear/sprocket ④ and the cam chain ⑤.

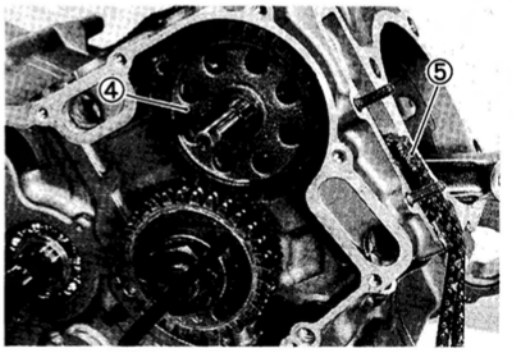

- Remove the key ⑥.

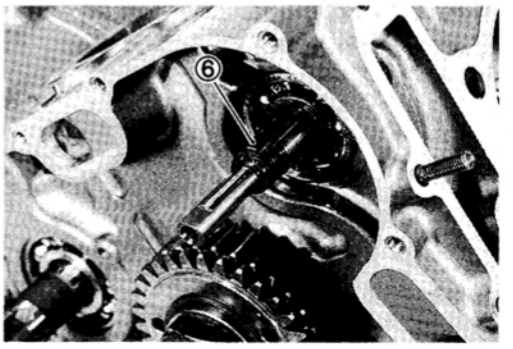

- While holding the generator rotor with a 36-mm wrench, remove the primary drive gear nut ①.

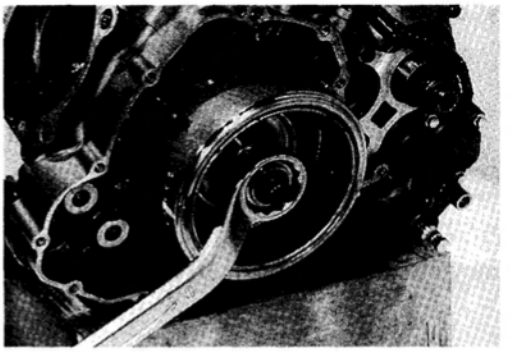

⚠ CAUTION

This bolt has left-hand thread. Turning it counter-clockwise may cause damage.

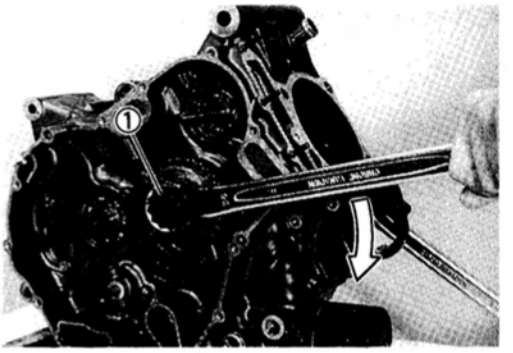

- Remove the washer ②.
- Remove the primary drive gear assembly ③.

NOTE:
Refer to the section 3E for the primary drive gear disassembly and reassembly.

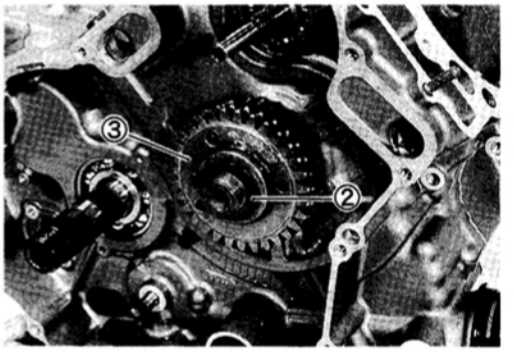

- Remove the key ④ and the thrust washer ⑤.

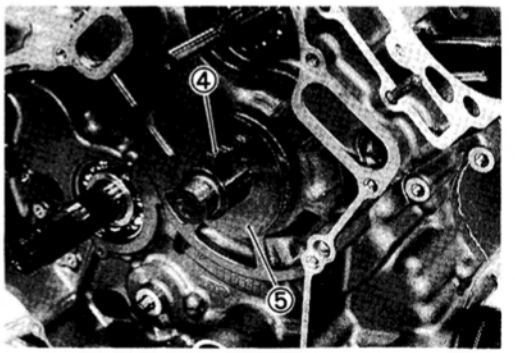

- While holding the generator rotor with a 36-mm wrench, remove its bolt with the washer.

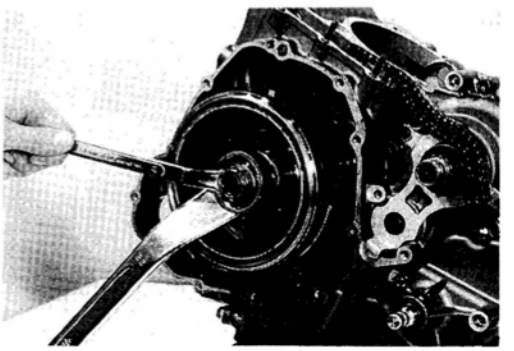

- After removing the generator rotor bolt, install the special tool to the boss and remove the generator rotor assembly ① by turning the special tool while holding the generator rotor with a 36-mm wrench.

09930-30450: Generator remover

NOTE:
Refer to the section 3F for the starter clutch servicing.

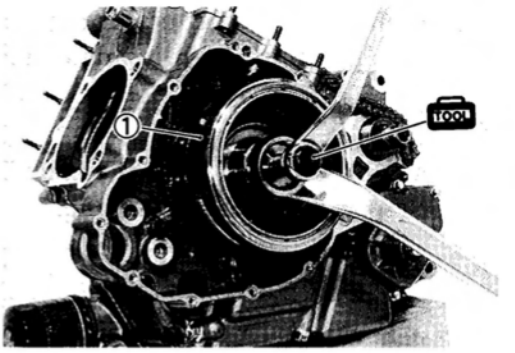

- Remove the key ② and the starter driven gear ③.

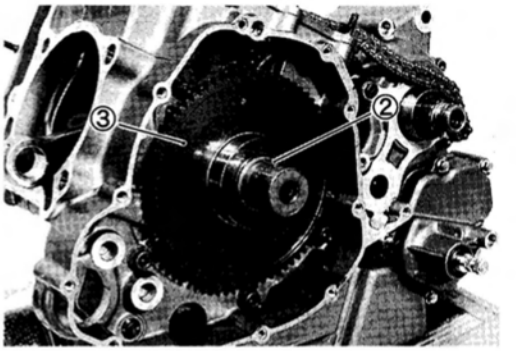

- Remove the No.1 cam drive idle gear shaft/sprocket ④ and the cam chain ⑤.

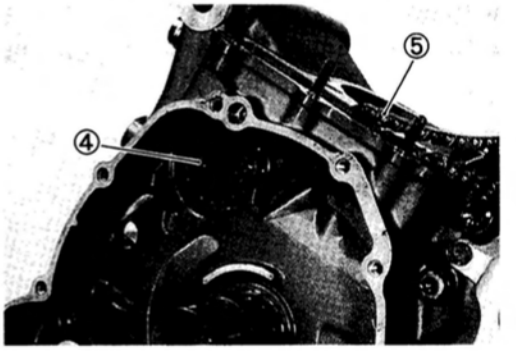

- Remove the gearshift cover bolts and the clamp ⑥.
- Remove the gearshift cover ⑦.

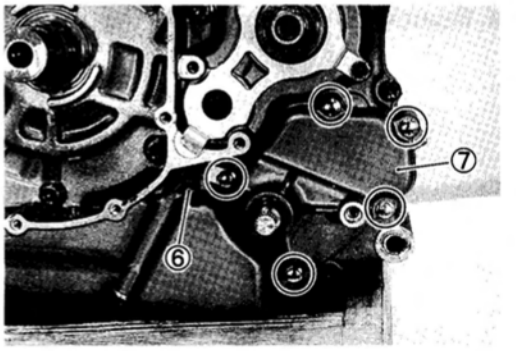

- Remove the dowel pins ⑧ and the gasket ⑨.

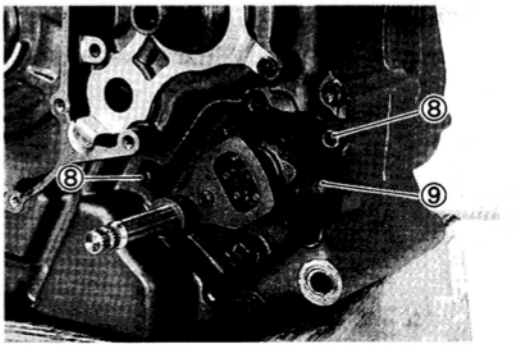

- Draw out the gearshift shaft/gearshift arm ① with the washers ②.

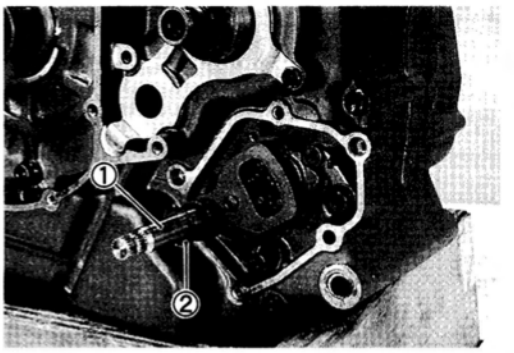

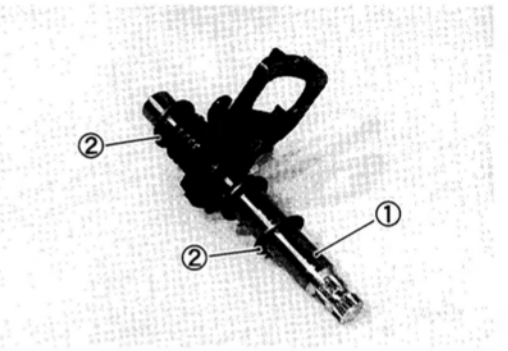

- Remove the gearshift cam plate ③.
- Remove the gearshift cam stopper ④ with the spring and washer.
- Remove the gearshift arm stopper bolt ⑤.

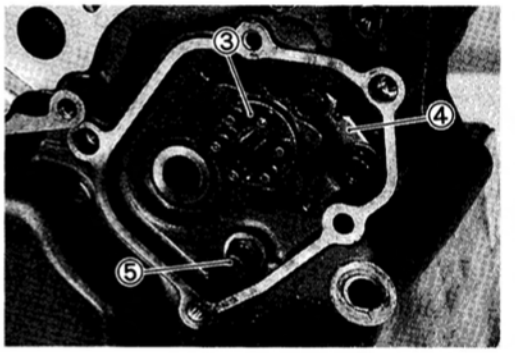

- Remove the oil seal retainer ⑥ and the engine sprocket spacer ⑦ with the O-ring.

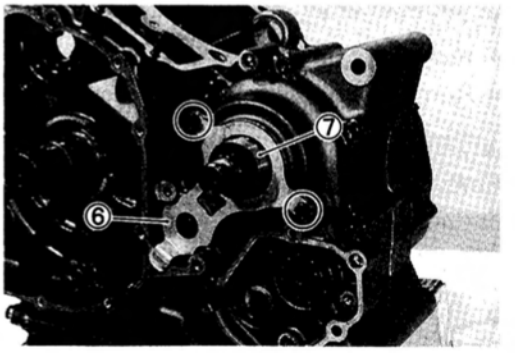

- Remove the oil filter ⑧ and the oil pressure switch ⑨.

09915-40610: Oil filter wrench

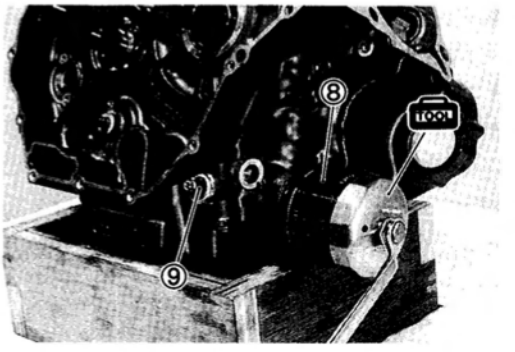

- Remove the crankcase bolts.

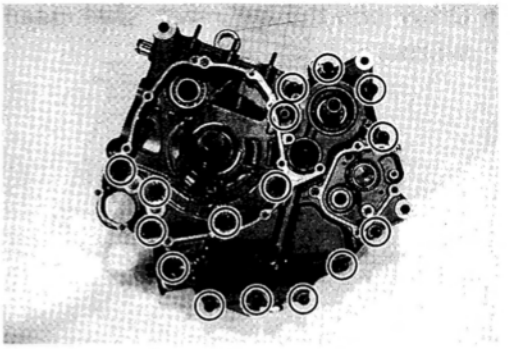

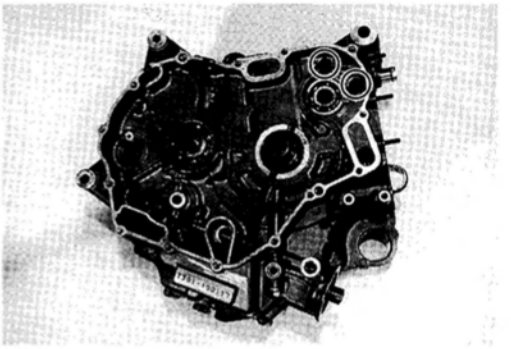

- Separate the crankcase into 2 parts, right and left with the crankcase separating tool.

TOOL 09920-13120: Crankcase separating tool

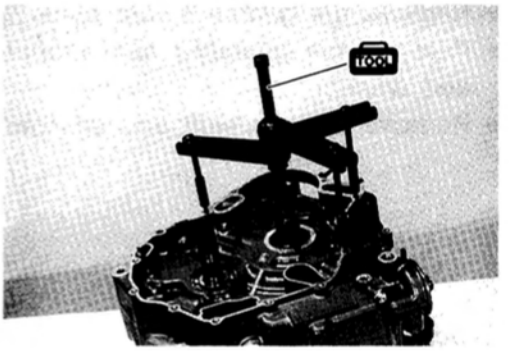

NOTE:

* *Fit the crankcase separating tool, so that the tool arms are in parallel with the side of crankcase.*
* *The crankshaft and transmission components should remain in the left crankcase half.*
* *When separating the crankcase, tap the end of the countershaft with a plastic hammer.*

- Remove the dowel pins ①.
- Remove the crankshaft ② with the thrust shim ③.

NOTE:

Refer to the section 3H for the crankshaft and the conrods servicing.

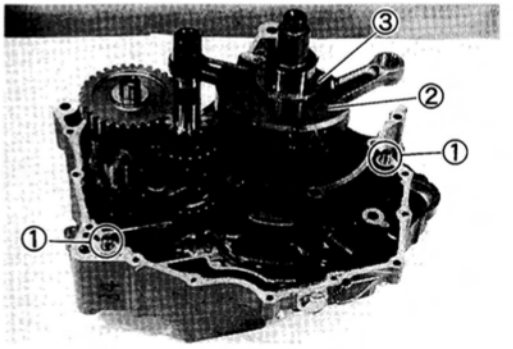

- Remove the gearshift fork shafts ④ and the gearshift forks ⑤.
- Remove the gearshift cam ⑥.
- Remove the driveshaft assembly ⑦ and the countershaft assembly ⑧.

NOTE:

Refer to the section 3H for the driveshaft and the countershaft servicing.

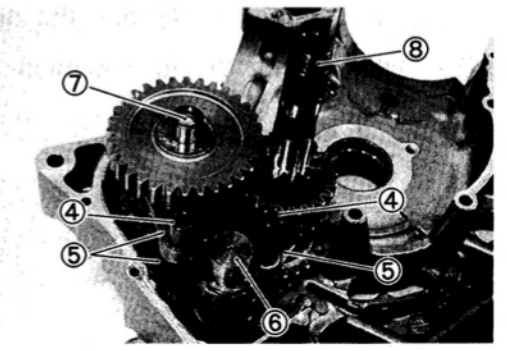

- Remove the O-ring ①, the oil pump ②, and the plate ③.

NOTE:
Refer to the section 3I for the oil pump inspection.

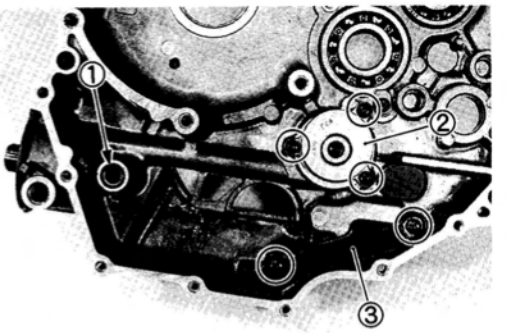

- Remove the reed valve ④.

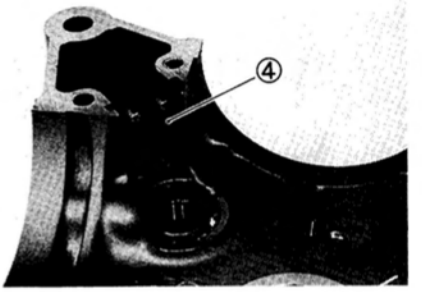

- Remove the piston cooling oil nozzles ⑤ from the right and left crankcase halves.

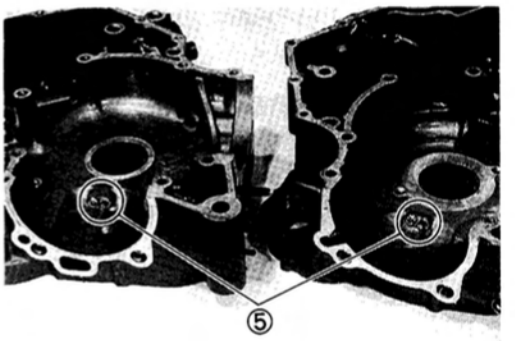

- Remove the oil seals by using the special tool.

TOOL **09913-50121: Oil seal remover**

⚠ CAUTION

The removed oil seal must be replaced with a new one.

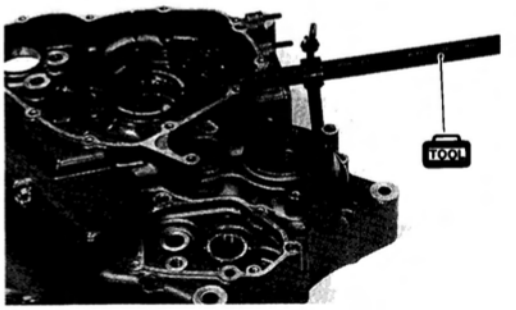

- Remove the oil jet from the left crankcase half.

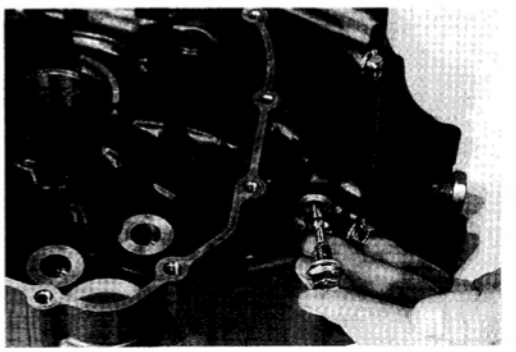

- Remove the bearing retainer screws.

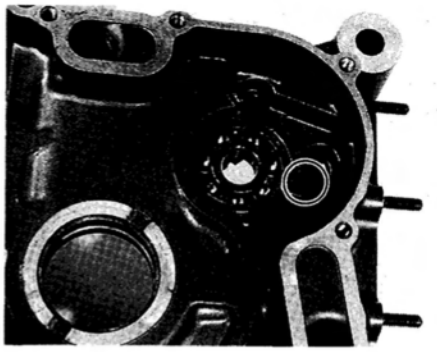

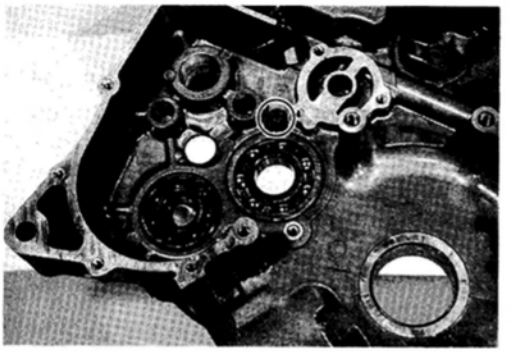

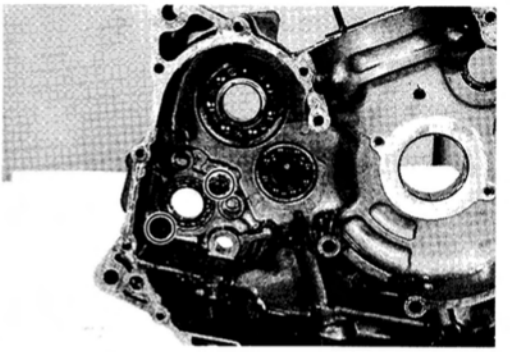

- Remove the bearings ①, ②, ③, ④, ⑤ and ⑥ by using the special tools.

TOOL 09923-74510: Bearing remover (For ①)
09930-30102: Sliding hammer (For ①)
09913-75821: Bearing remover (For ②, ④, ⑤)
09913-75830: Bearing remover (For ③, ⑥)

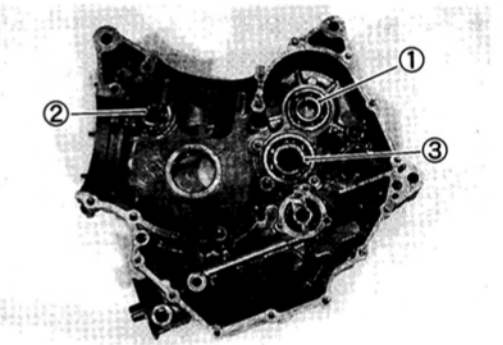

⚠ CAUTION

The removed bearings must be replaced with new ones.

- Remove the bearing ⑦.

NOTE:
Refer to pages 3H-11 through -15 for the crankshaft bearing removal and installation.

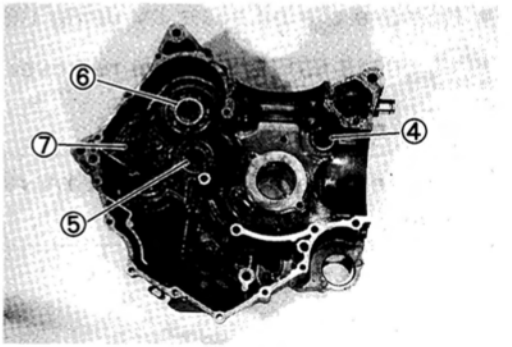

ENGINE REASSEMBLY

This engine is reassembled by carrying out the steps of disassembly in the reverse order, but there are a number of steps which demand special descriptions or precautionary measures.

NOTE:
Apply engine oil to each running and sliding part before reassembling.

- Install the bearings ①, ②, ④, ⑤, ⑥ and ⑦, to the crankcase by using the special tools.

TOOL 09913-85210: Bearing installer (For ①, ⑥, ⑦)
09913-76010: Bearing installer (For ②, ④, ⑤)

- Install the bearing ③ to the crankcase by hand.

NOTE:
The sealed side of the bearing ① and ② faces outside.

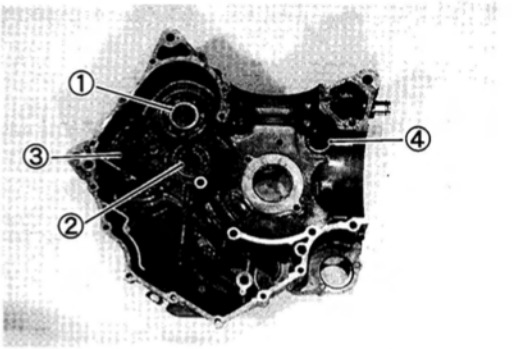

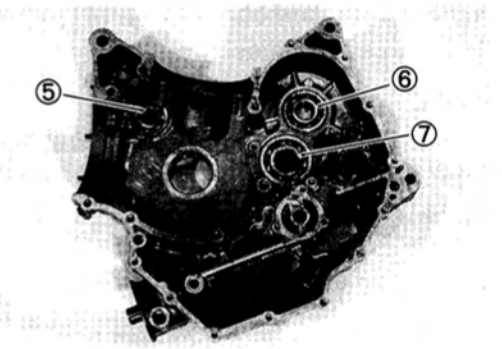

- Install the bearing retainers.

NOTE:
Apply a small quantity of THREAD LOCK "1342" to the bearing retainer screws and tighten them to the specified torque.

1342 99000-32050: THREAD LOCK "1342"

Bearing retainer screw: 8 N·m (0.8 kg-m, 6.0 lb-ft)

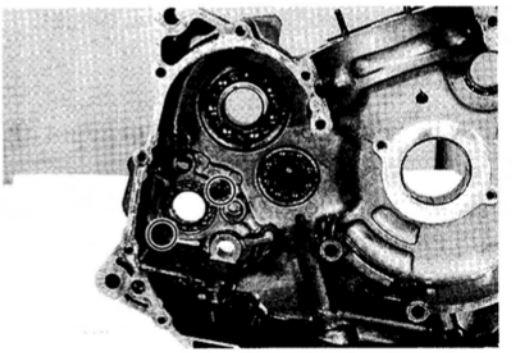

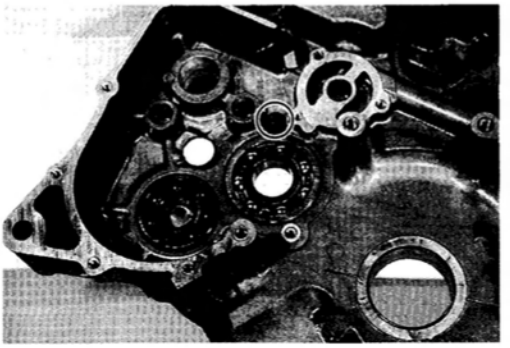

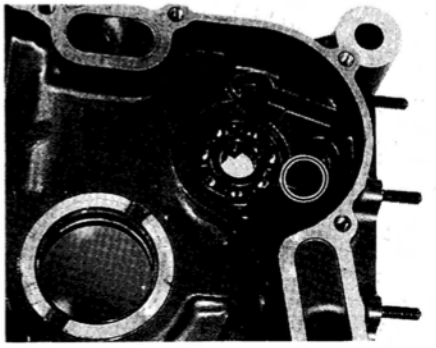

- Install the oil seals (①, ②) into the crankcase by using the special tools.
- Apply grease to the oil seal lip.

TOOL **09913-85210: Bearing installer (For ①)**
09913-76010: Bearing installer (For ②)

A H **99000-25030: SUZUKI SUPER GREASE "A"**

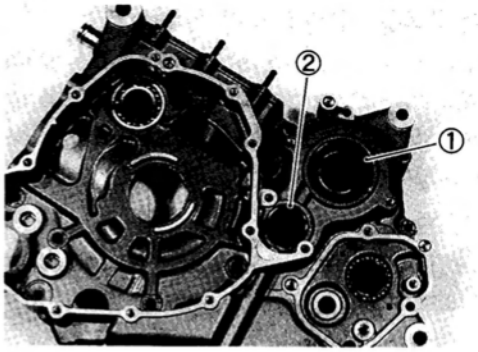

- Fit the new O-rings to each piston cooling oil nozzle.

⚠ CAUTION

Use new O-rings to prevent oil leakage.

NOTE:
Apply engine oil to the O-rings when installing the piston cooling oil nozzles.

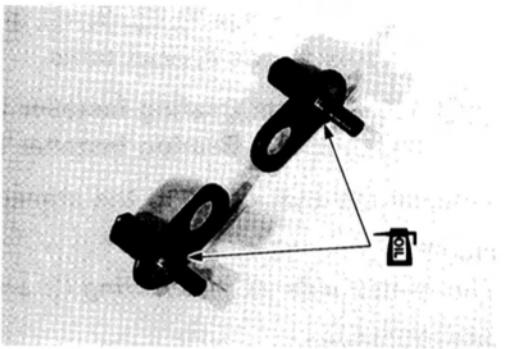

- Install the piston cooling oil nozzles to the left and right crankcase halves.

NOTE:
Apply a small quantity of THREAD LOCK "1342" to the bolts and tighten them to the specified torque.

1342 **99000-32050: THREAD LOCK "1342"**

Piston cooling oil nozzle bolt: 8 N·m (0.8 kg-m, 6.0 lb-ft)

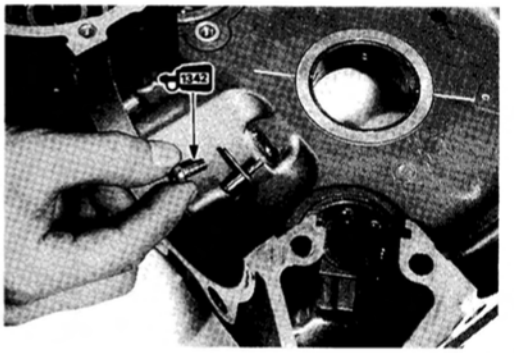

- Fit the new O-ring to the oil jet.

⚠ CAUTION

Use the new O-ring to prevent the oil leakage.

NOTE:
Apply engine oil to the O-ring when installing the oil jet.

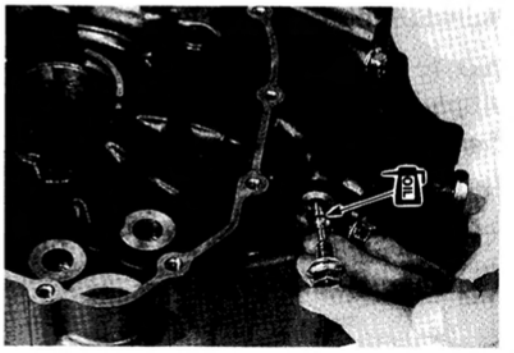

- Install the oil jet to the left crankcase half.
- Tighten the oil gallery plug to the specified torque.

Oil gallery plug (M8): 10 N·m (1.0 kg-m, 7.0 lb-ft)

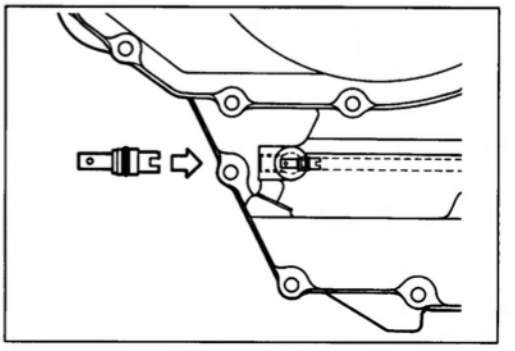

- Install the thrust shim ① on the crankshaft.

NOTE:
* *The grooved face Ⓐ of thrust shim ① faces to crankshaft web side.*
* *The thrust shim is selected according to the crankshaft thrust clearance. (Refer to pages 3H-15 and -16.)*

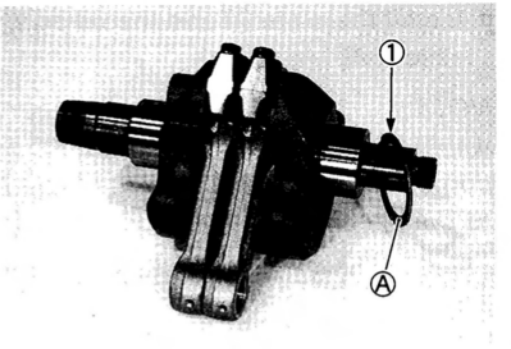

- Install the crankshaft into the left crankcase half.

NOTE:
Coat lightly moly paste to the crankshaft journal bearings and the thrust shim.

99000-25140: SUZUKI MOLY PASTE

⚠ CAUTION

Never strike the crankshaft with a plastic hammer when inserting it into the crankcase. It will be easy to install the crankshaft to left crankcase.

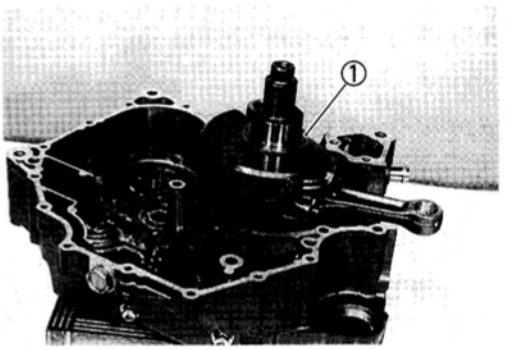

- Install the countershaft assembly ② and driveshaft assembly ③.
- Install the washer ④ to the driveshaft.

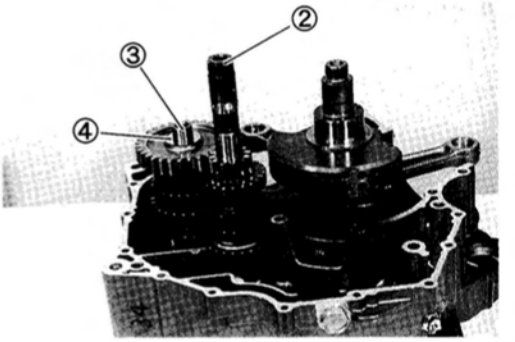

- Install the gearshift forks (⑤, ⑥, ⑦), gearshift fork shafts (⑧, ⑨) and gearshift cam ⑩.

⑤ For 5th driven gear
⑥ For Top driven gear
⑦ For 3rd/4th drive gear

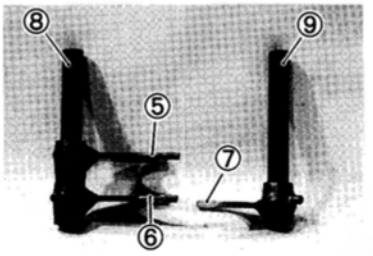

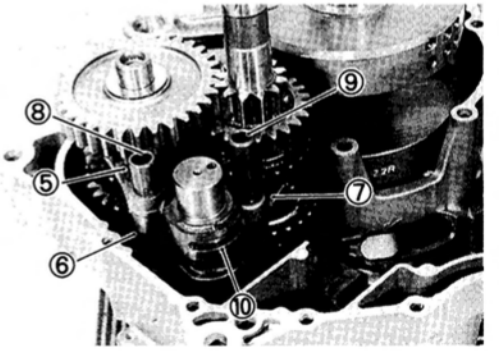

- Fit the dowel pins ⑪ on the left crankcase half.

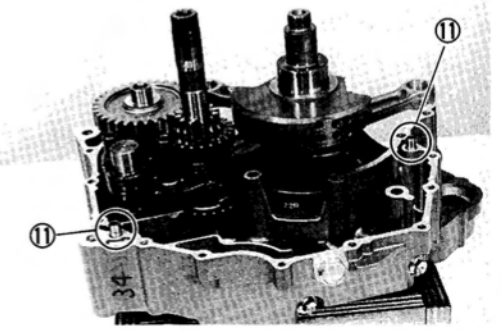

- Install the plate ① and the oil pump ② to the right crankcase half.

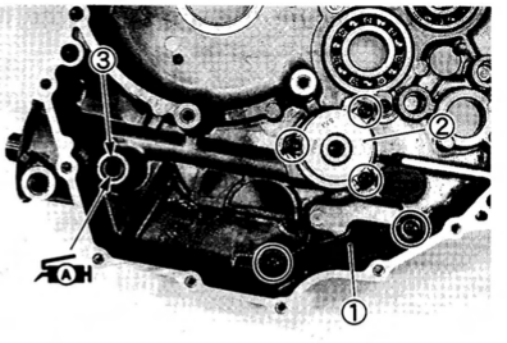

NOTE:
Apply a small quantity of THREAD LOCK "1342" to the oil pump mounting bolts and the plate bolts and tighten them to the specified torque.

1342 99000-32050: THREAD LOCK "1342"

Oil pump mounting bolt: 10 N·m (1.0 kg-m, 7.0 lb-ft)
Plate bolt: 10 N·m (1.0 kg-m, 7.0 lb-ft)

- Install the new O-ring ③.

NOTE:
Apply grease to the O-ring.

A 99000-25030: SUZUKI SUPER GREASE "A"

⚠ CAUTION

Use the new O-ring to prevent oil leakage.

- Install the reed valve ④ as shown.

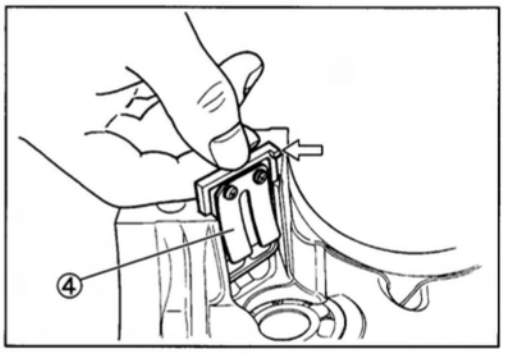

- Clean the mating surfaces of the left and right crankcase halves.
- Apply SUZUKI BOND "1207B" to the mating surface of the left crankcase. (See next page 3-42.)

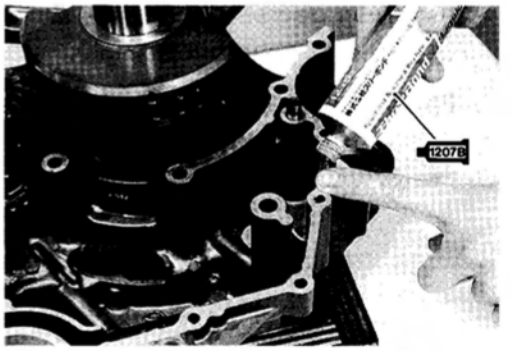

1207B 99104-31140: SUZUKI BOND "1207B"

NOTE:
Use of SUZUKI BOND "1207B" is as follows:

* *Make surfaces free from moisture, oil, dust and other foreign materials.*
* *Spread on surfaces thinly to form an even layer, and assemble the crankcases within few minutes.*
* *Take extreme care not to apply any BOND "1207B" to the oil hole, oil groove and bearing.*
* *Apply to distorted surfaces as it forms a comparatively thick film.*

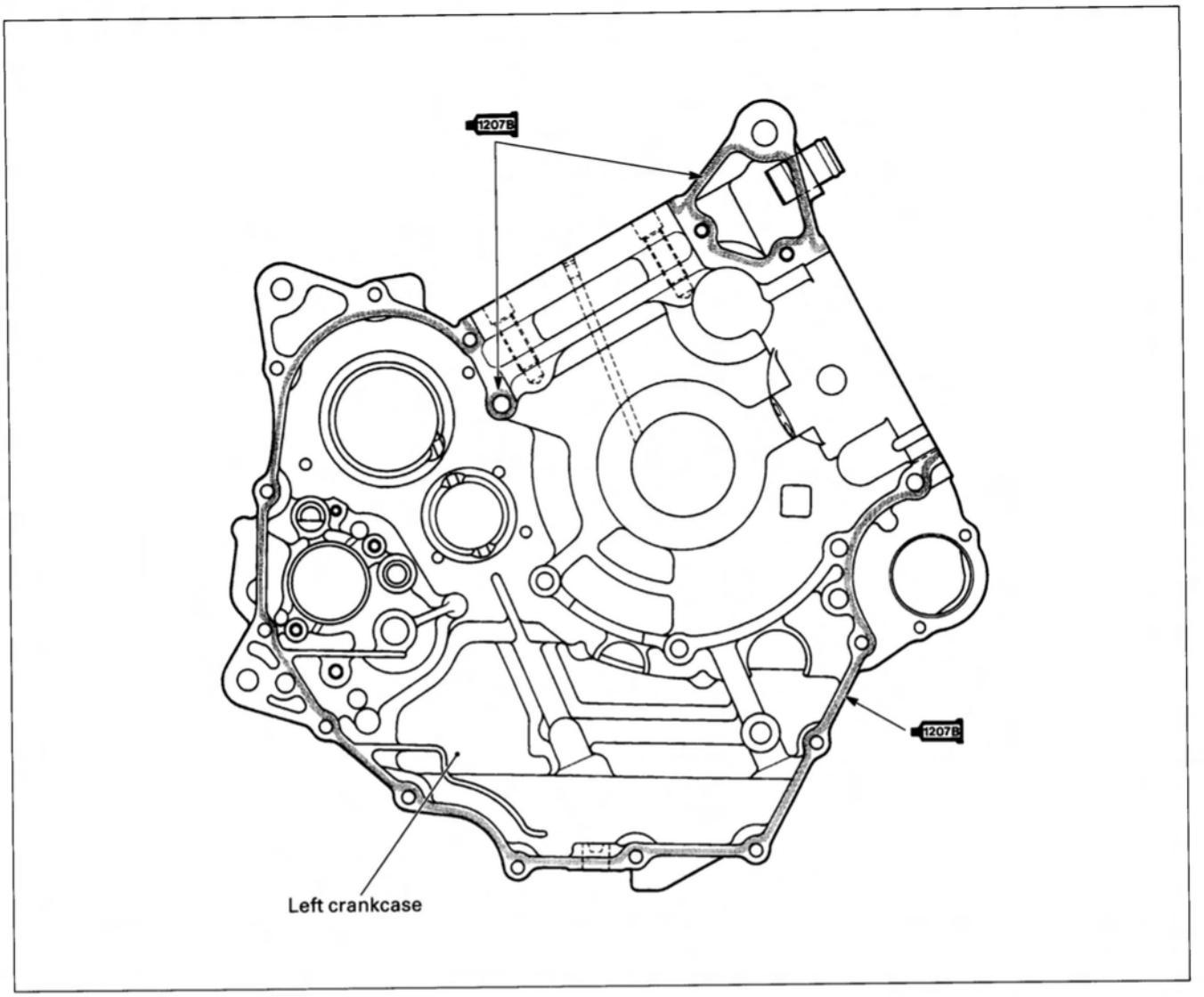

- When securing the right and left crankcase halves, tighten each bolt a little at a time to equalize the pressure. Tighten all the securing bolts to the specified torque values.

Crankcase bolt: (M8) 22 N·m (2.2 kg-m, 16.0 lb-ft)
(M6) 11 N·m (1.1 kg-m, 8.0 lb-ft)

⚠ CAUTION

Do not drop the O-ring into the crankcase when assembling the right and left crankcase halves.

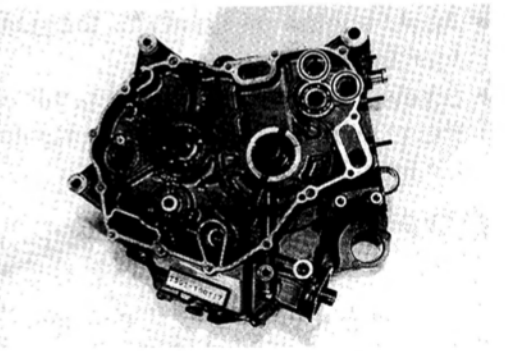

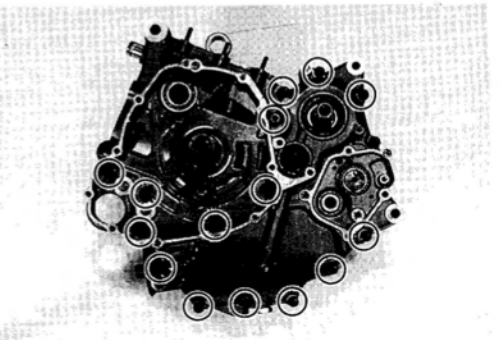

NOTE:
After the crankcase bolts have been tightened, check if the crankshaft, the driveshaft and the countershaft rotate smoothly.

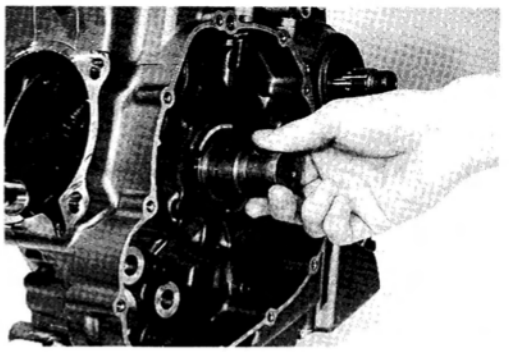

- Install the new O-ring into the engine sprocket spacer ①.

⚠ CAUTION

Use the new O-ring to prevent oil leakage.

- Install the engine sprocket spacer ① onto the driveshaft.

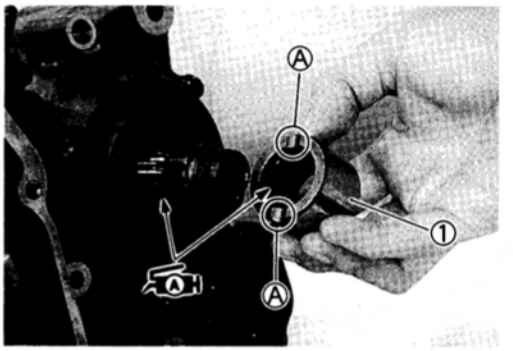

NOTE:
* *The grooved Ⓐ side of the engine sprocket spacer faces crankcase side.*
* *Apply grease to the oil seal lip and O-ring.*

99000-25030: SUZUKI SUPER GREASE "A"

- Apply SUZUKI BOND "1207B" to the thread part of the oil pressure switch ② and tighten it to the specified torque.

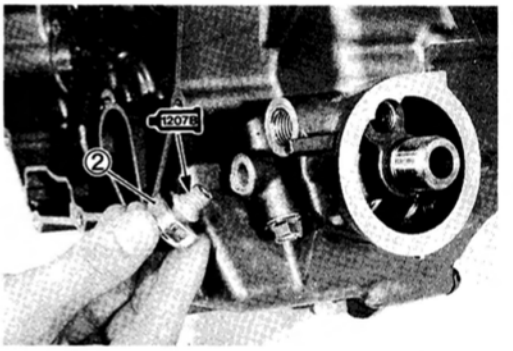

99104-31140: SUZUKI BOND "1207B"

Oil pressure switch: 14 N·m (1.4 kg-m, 10.0 lb-ft)

- Apply engine oil lightly to the gasket of the oil filter before installation.
- Screw the oil filter by hand until the filter gasket contacts the mounting surface. Then tighten it 2 turns using the oil filter wrench.

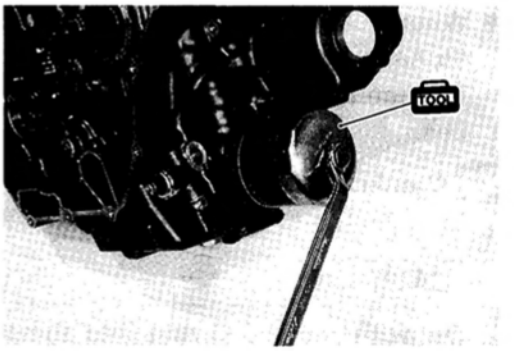

09915-40610: Oil filter wrench

NOTE:
To properly tighten the filter, use the special tool. Never tighten the filter by hand.

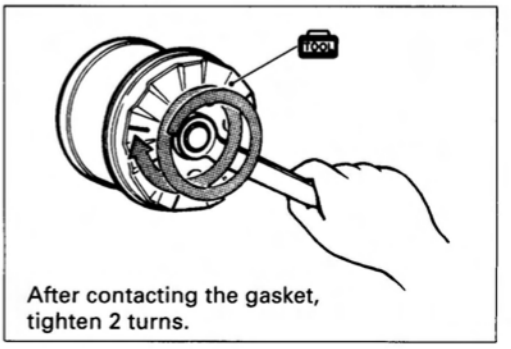

After contacting the gasket, tighten 2 turns.

- Apply a small quantity of THREAD LOCK SUPER "1303" to the gearshift arm stopper bolt ① and tighten it to the specified torque.

1303 99000-32030: THREAD LOCK SUPER "1303"

Gearshift arm stopper bolt: 23 N·m (2.3 kg-m, 16.5 lb-ft)

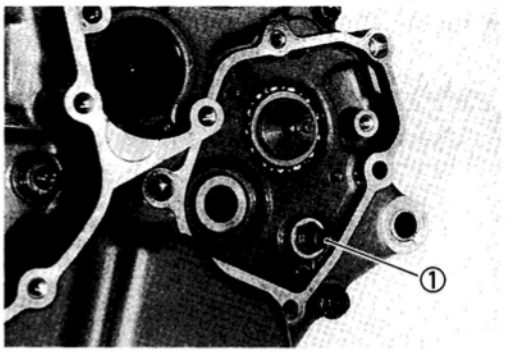

- Install the gearshift cam stopper ②, its bolt ③, the washer ④ and the return spring ⑤.

NOTE:
Apply a small quantity of THREAD LOCK "1342" to the gearshift cam stopper bolt ③ and tighten it to the specified torque.

1342 99000-32050: THREAD LOCK "1342"

Gearshift cam stopper bolt: 10 N·m (1.0 kg-m, 7.0 lb-ft)

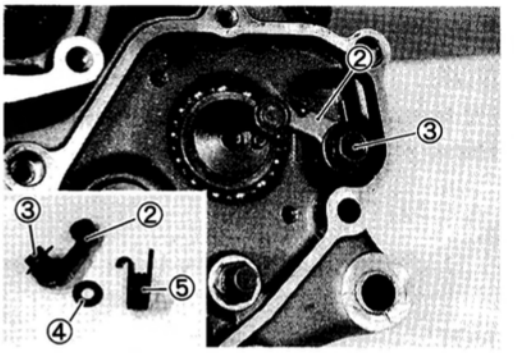

- Confirm the gearshift cam stopper movement.
- Check the neutral position.
- Install the gearshift cam stopper plate after aligning the gearshift cam pin Ⓐ with the gearshift cam stopper plate hole Ⓑ.

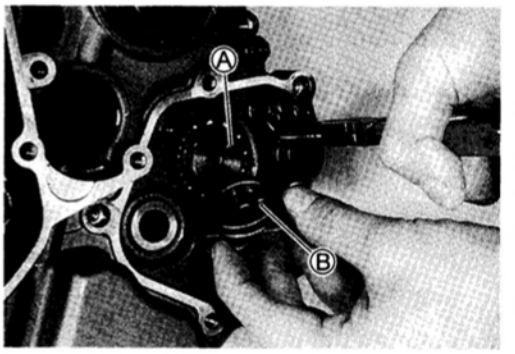

- Apply a small quantity of THREAD LOCK "1342" to the gearshift cam stopper plate bolt ⑥ and tighten it to the specified torque.

1342 99000-32050: THREAD LOCK "1342"

Gearshift cam stopper plate bolt: 10 N·m (1.0 kg-m, 7.0 lb-ft)

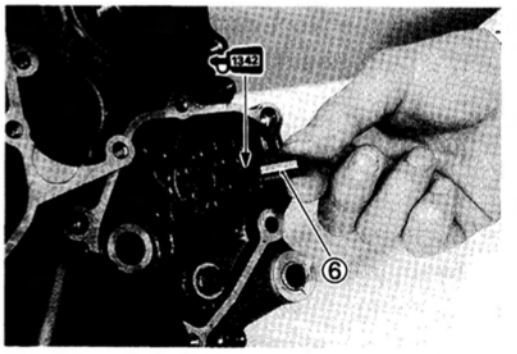

- Install the gearshift shaft/gearshift arm ⑦ with the washers ⑧ as shown in the photograph.

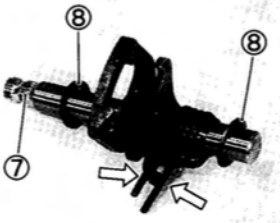

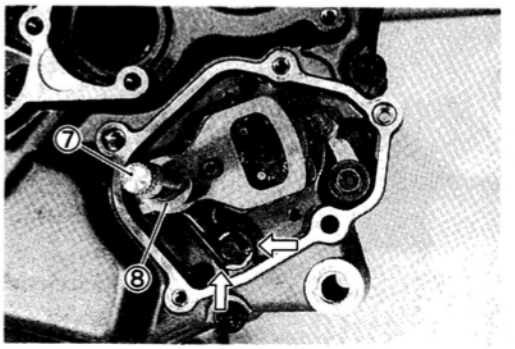

- Install the dowel pins ① and the gasket ②.

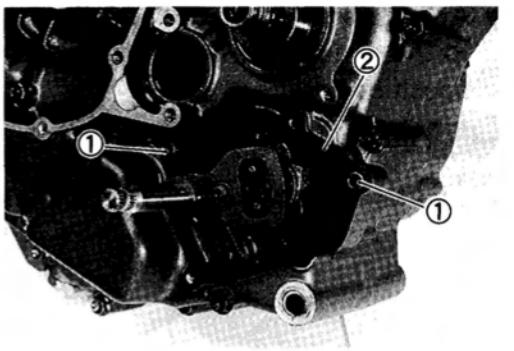

⚠ CAUTION

Use new gasket to prevent oil leakage.

- Install the gearshift cover.

NOTE:
Fit the new gasket washer to the bolt ③ and the clamp to the bolt ④ as shown.

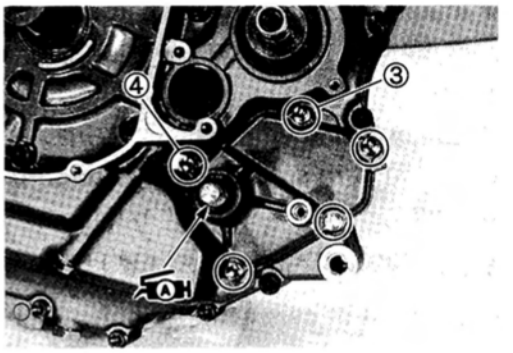

⚠ CAUTION

Use new gasket washer to prevent oil leakage.

NOTE:
Apply grease to the oil seal lip before installing the gearshift cover.

A H 99000-25030: SUZUKI SUPER GREASE "A"

- Install the oil seal retainer ⑤.

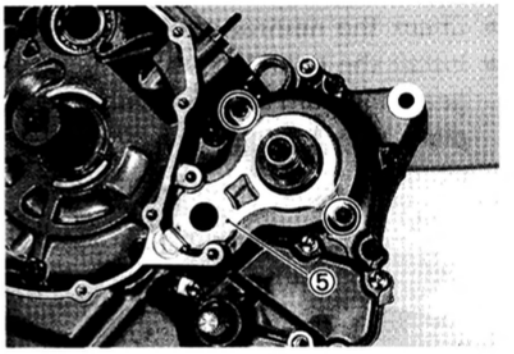

- Install the No.1 cam drive idle gear shaft/sprocket ⑥ and the cam chain ⑦.

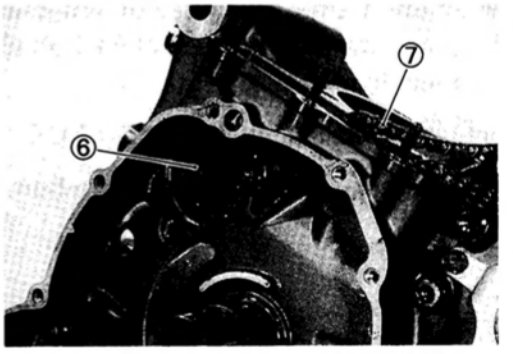

- Degrease the tapered portion of the generator rotor assembly and also the crankshaft. Use nonflammable cleaning solvent to wipe off oily or greasy matter and make these surfaces completely dry.

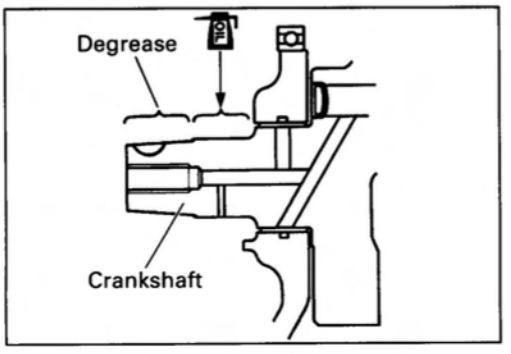

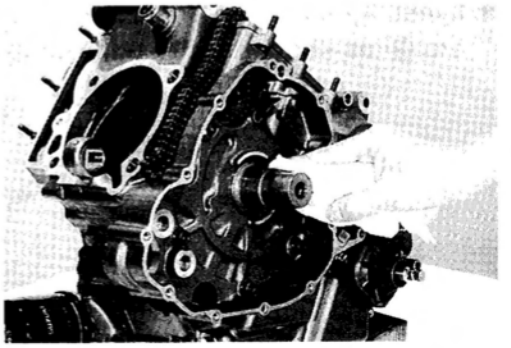

- Fit the key ① in the key slot on the crankshaft completely.

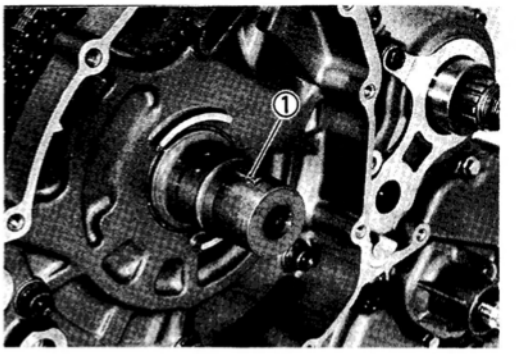

- Install the generator rotor assembly ② with the starter driven gear ③ onto the crankshaft.
- Apply THREAD LOCK SUPER "1303" to the rotor bolt ④ and install it.

1303 99000-32030: THREAD LOCK SUPER "1303"

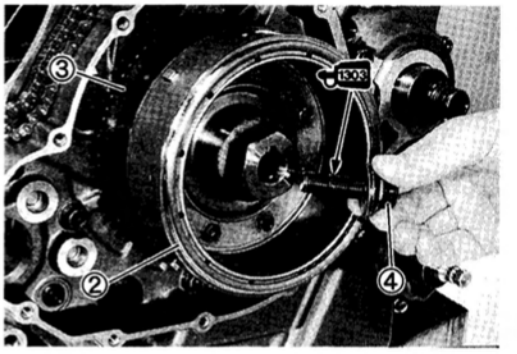

- While holding the generator rotor with a 36-mm wrench, tighten its bolt ④ to the specified torque.

Generator rotor bolt: 160 N·m (16.0 kg-m, 115.5 lb-ft)

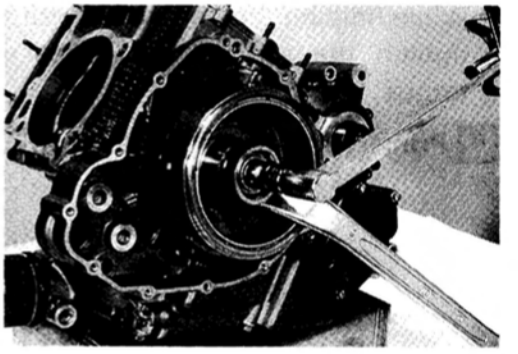

- Install the thrust washer ⑤ onto the crankshaft.

NOTE:
The chamfer side Ⓐ of the thrust washer ⑤ faces the crankcase side.

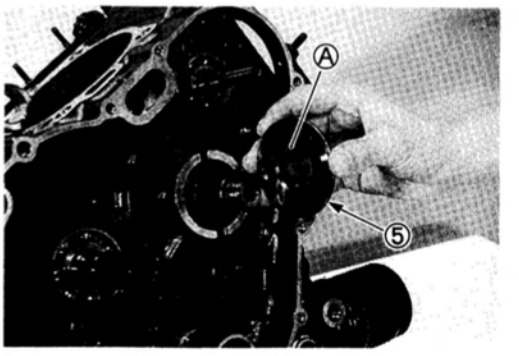

- Fit the key ⑥ in the key slot on the crankshaft completely.



- Install the primary drive gear assembly ① and the washer ②.

NOTE:
The convex side of the washer ② faces outside.

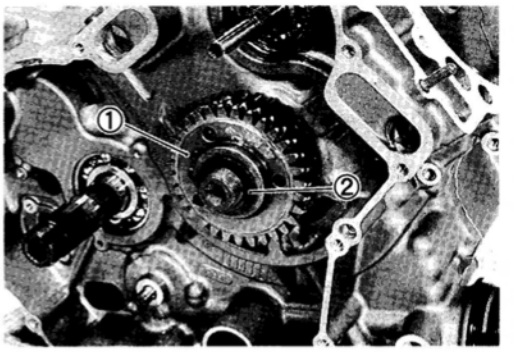

- Install the primary drive gear nut.

NOTE:
* *This nut has left-hand thread.*
* *The "L" mark Ⓐ on the nut faces outside.*

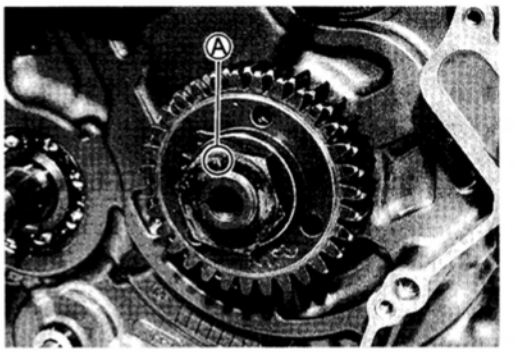

- While holding the generator rotor with a 36-mm wrench, tighten the primary drive gear nut to the specified torque.

Primary drive gear nut: 95 N·m (9.5 kg-m, 68.5 lb-ft)

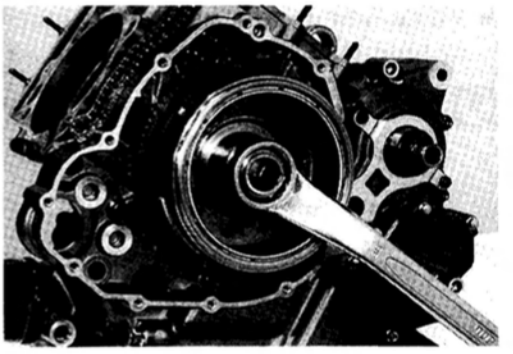

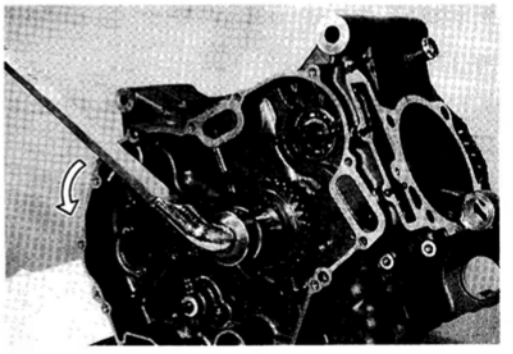

- Insert a suitable bar to the holes of the primary drive gears and align the two gears.
- Install the cam chain ③ and No.1 cam drive idle gear/sprocket ④.

NOTE:
Align the punched marks Ⓑ on the No.1 cam drive idle gear/sprocket and primary drive gear to facilitate the subsequent installation of No.2 cam drive idle gears/sprockets. (Refer to pages 3A-1 through -5.)

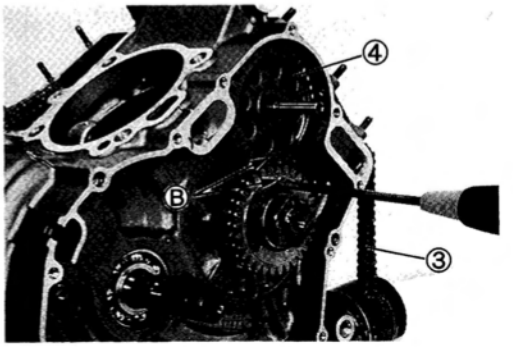

- Insert the key ① as shown.

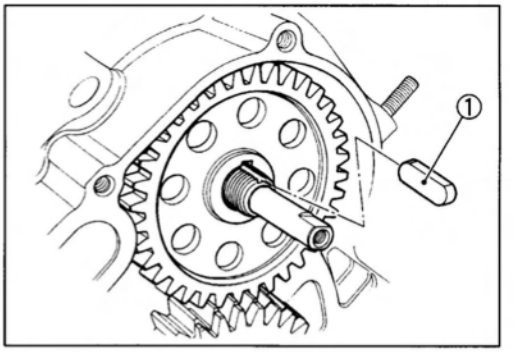

- Install the No.1 cam drive idle gear/sprocket nut ② with the washer.
- While holding the crankshaft at the generator rotor, tighten the No.1 cam drive idle gear/sprocket nut ② to the specified torque.

No.1 cam drive idle gear/sprocket nut:
70 N·m (7.0 kg-m, 50.5 lb-ft)

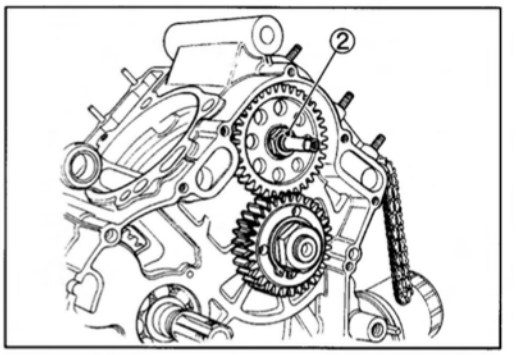

⚠ CAUTION

Before tightening the No.1 cam drive idle gear/sprocket nut, be sure to engage the front and rear cam chains to each sprocket.

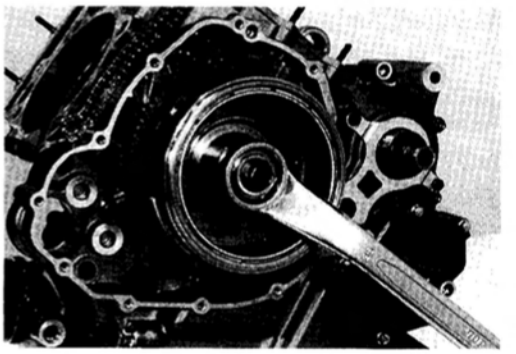

- Install the spring ③ and the gear position switch contact ④.

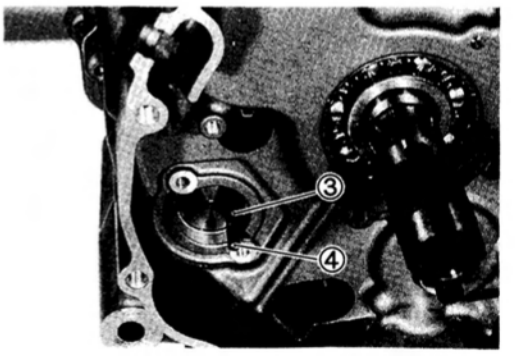

- Install the gear position switch assembly ⑤ and the cable guide ⑥ as shown.

NOTE:
Apply a small quantity of THREAD LOCK "1342" to the gear position switch screws and cable guide screw.

1342 99000-32050: THREAD LOCK "1342"

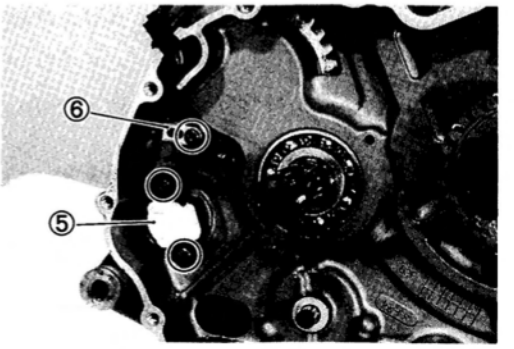

- Install the oil sump filter ① and the oil pressure regulator ②.

NOTE:
The projection Ⓐ of the oil sump filter faces to the bottom.

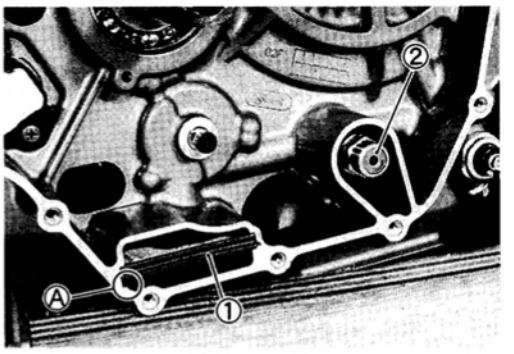

- Tighten the oil pressure regulator ② to the specified torque.

Oil pressure regulator: 28 N·m (2.8 kg-m, 20.0 lb-ft)

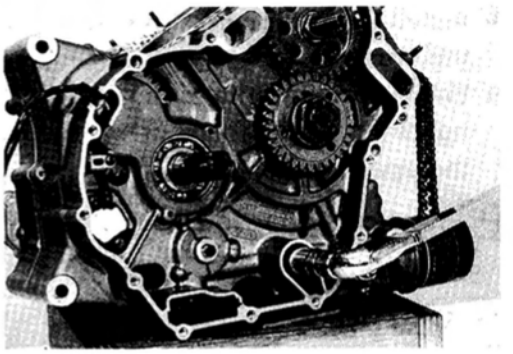

- Install the washer ③, the pin ④, the oil pump driven gear ⑤ and the circlip ⑥ to the oil pump shaft.

09900-06107: Snap ring pliers

NOTE:
The boss Ⓑ of the oil pump driven gear ⑤ faces crankcase side.

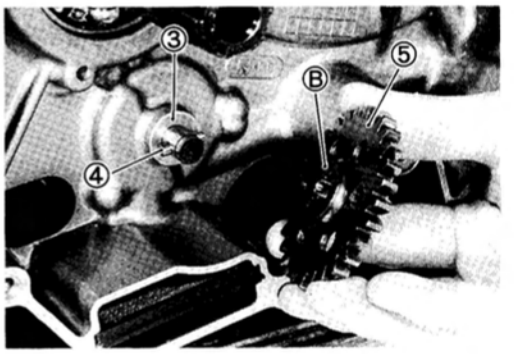

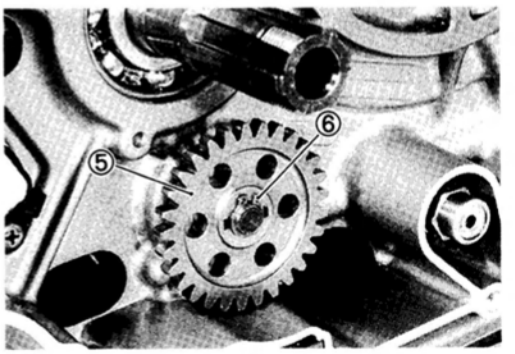

- Install the thrust washer onto the countershaft.

NOTE:
The chamfer side Ⓒ of thrust washer faces crankcase side.

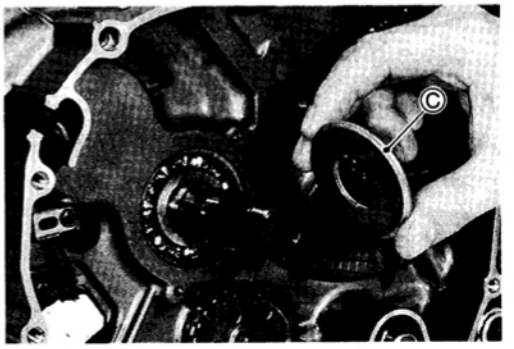

- Install the needle bearing ① and collar ② onto the countershaft and apply engine oil to them.

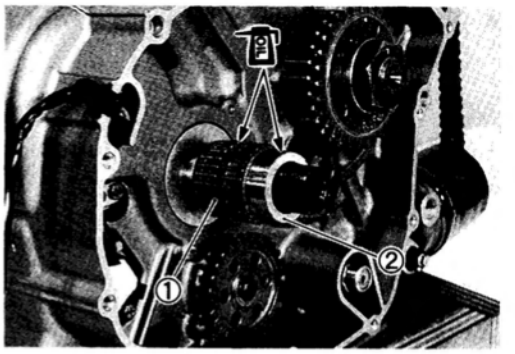

- Install the primary driven gear assembly ③ onto the countershaft.

NOTE:

* *When installing the primary driven gear assembly ③, align the teeth of the primary drive gears by inserting a suitable bar to the holes of them.*
* *Be sure to engage the oil pump drive and driven gears, primary drive and driven gears.*
* *When installing the oil pump drive gear, align the pin Ⓐ with the slot Ⓑ with the flange side Ⓒ of the oil pump drive gear facing the primary drive gear.*

TOOL 09900-06107: Snap ring pliers

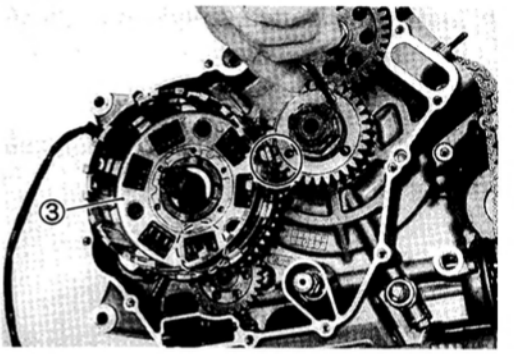

- Install the thrust washer ④.

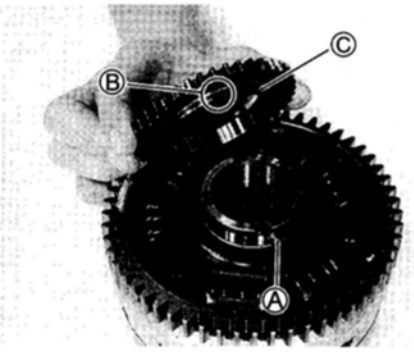

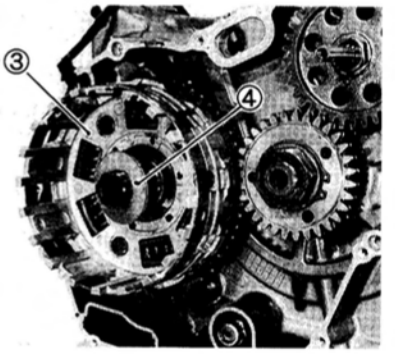

- Install the clutch driven cam ⑤ onto the clutch sleeve hub ⑥.

NOTE:

Align the punched mark Ⓓ on the clutch driven cam with the punched mark Ⓔ on the clutch sleeve hub.

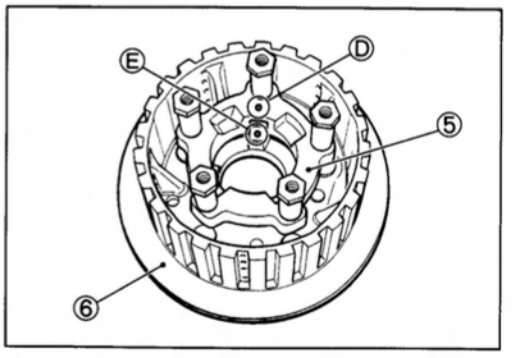

NOTE:

When replacing the clutch spring support bolts, apply THREAD LOCK SUPER "1303" and tighten them to the specified torque.

1303 99000-32030: THREAD LOCK SUPER "1303"

Clutch spring support bolt: 11 N·m (1.1 kg-m, 8.0 lb-ft)

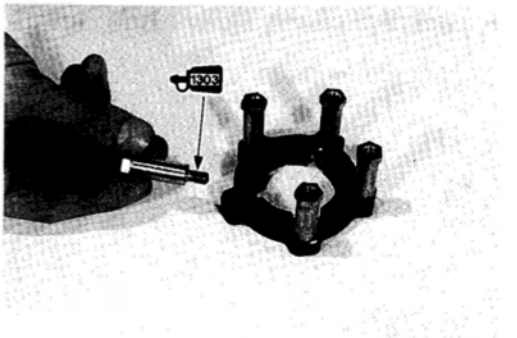

- Install the clutch drive cam ① onto the clutch sleeve hub ②.

NOTE:
Align the "I" mark Ⓐ on the clutch drive cam with "I" mark Ⓐ on the clutch driven cam ③.

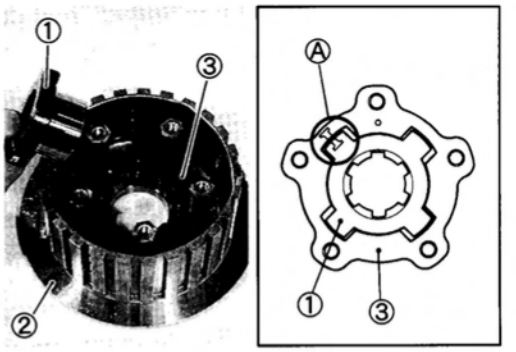

- Install the clutch sleeve hub ② with the clutch drive ① and driven ③ cams onto the countershaft.

NOTE:
These three parts should be replaced as a set.

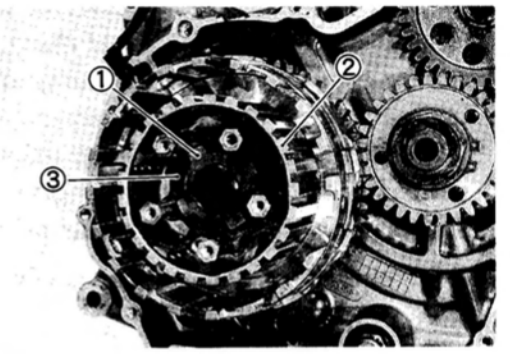

- Install the washer ④ onto the countershaft.

NOTE:
The convex side of the washer faces outside.

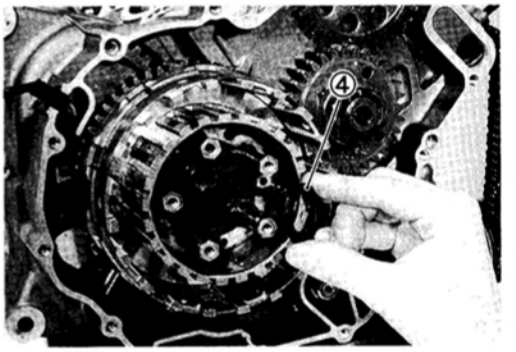

- Tighten the clutch sleeve hub nut ⑤ to the specified torque by using the special tool.

Clutch sleeve hub nut: 100 N·m (10.0 kg-m, 72.5 lb-ft)

09920-53740: Clutch sleeve hub holder

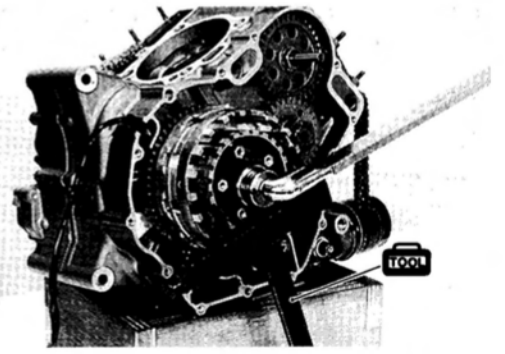

- Lock the clutch sleeve hub nut ⑤ with a center punch.

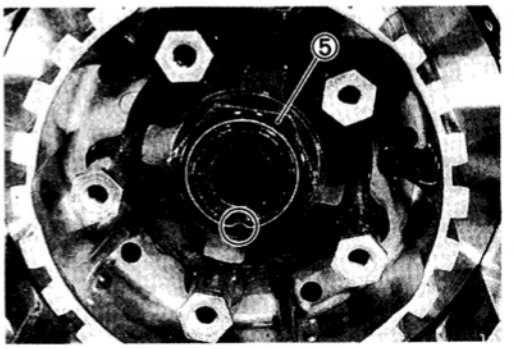

- Install the spring washer seat ① and spring washer ② onto the clutch sleeve hub correctly.

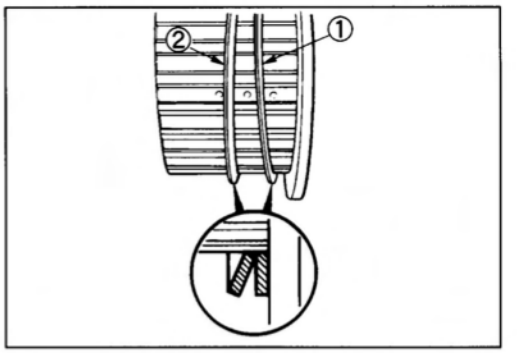

- Insert the clutch drive plates and driven plates one by one into the clutch sleeve hub in the prescribed order, No.2 drive plate Ⓑ being inserted first. (Two kinds of drive plate No.1 and No.2 are equipped, they can be distinguished by the inside diameter.)

NOTE:
Insert the outermost No.1 drive plate to the other slits of clutch housing as shown.

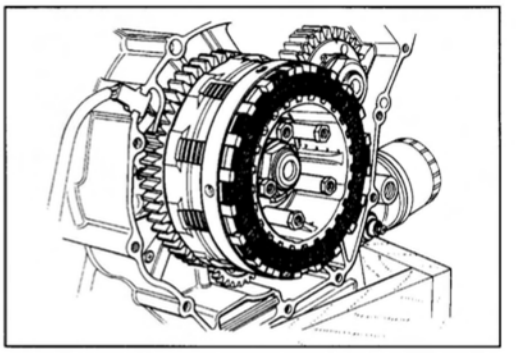

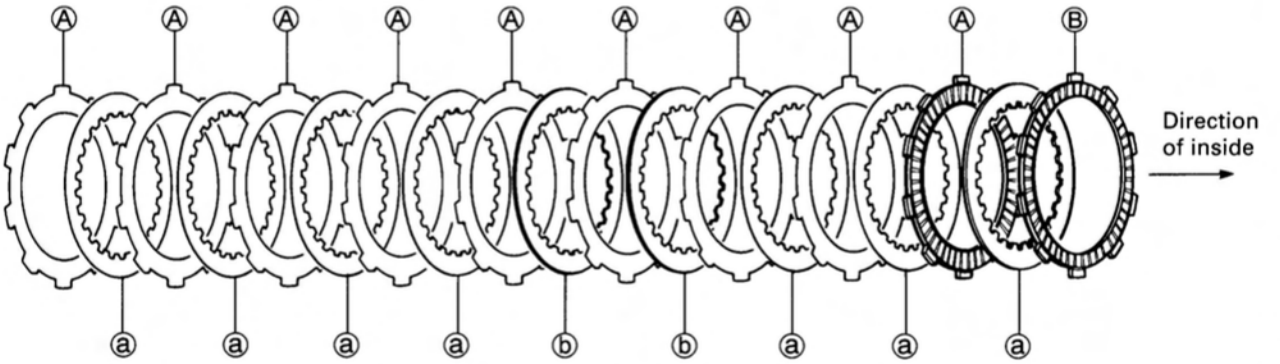

DRIVE PLATE:
Ⓐ No.1 Drive Plate (Inside Diameter): 101 mm (3.98 in) ... 9 pcs
Ⓑ No.2 Drive Plate (Inside Diameter): 108 mm (4.25 in) ... 1 pc

DRIVEN PLATE:
Two kinds of the driven plate No.1 and No.2 are equipped in the clutch system, they can be distinguished by the thickness.
ⓐ No.1 Driven Plate (Thickness): 1.6 mm (0.06 in) ... 7 pcs
ⓑ No.2 Driven Plate (Thickness): 2.0 mm (0.08 in) ... 2 pcs

- Install the clutch push rod ① into the countershaft.

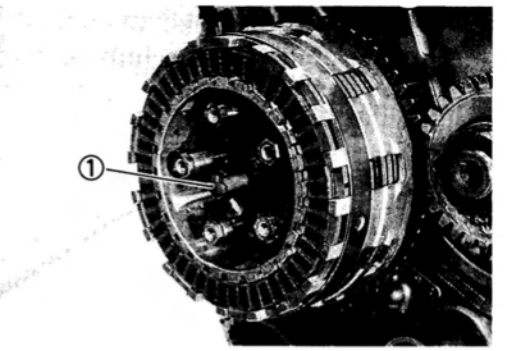

- Install the clutch push piece ②, the bearing ③ and the thrust washer ④ to the countershaft.

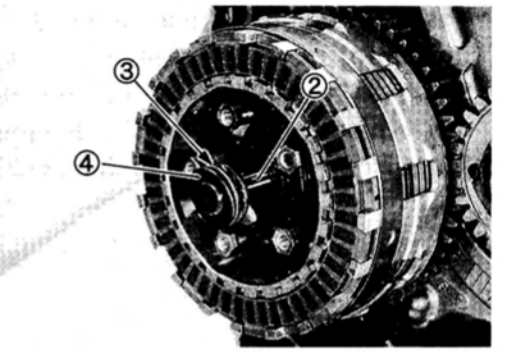

- Put the pressure plate ⑤ onto the clutch sleeve hub securely.
- Tighten the clutch spring set bolts diagonally to the specified torque while holding the generator rotor with a 36-mm wrench.

Clutch spring set bolts: 10 N·m (1.0 kg-m, 7.0 lb-ft)

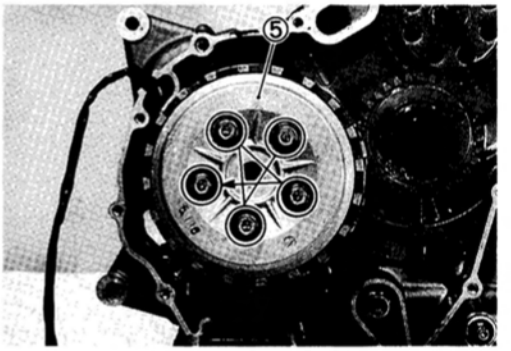

- Install the gasket ⑥ and the dowel pins ⑦.

⚠ CAUTION

Use the new gasket to prevent oil leakage.

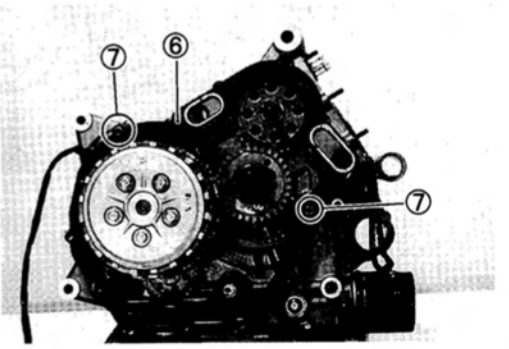

- Apply grease to the lip of the oil seal on the clutch cover.

99000-25030: SUZUKI SUPER GREASE "A"

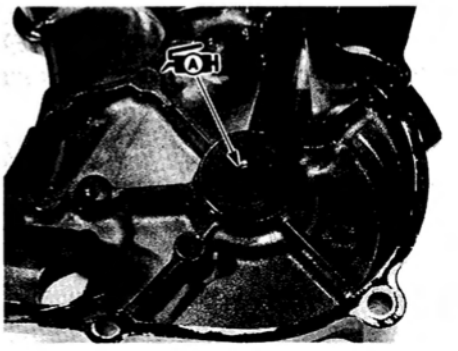

- Install the clutch cover.

⚠ CAUTION

- **To protect the oil seal lip from damage, cover the edge of the No.1 cam drive idle gear shaft with a vinyl film or tape Ⓐ before installing the clutch cover.**
- **Install the clutch cover straight to prevent the oil seal lip from damage.**

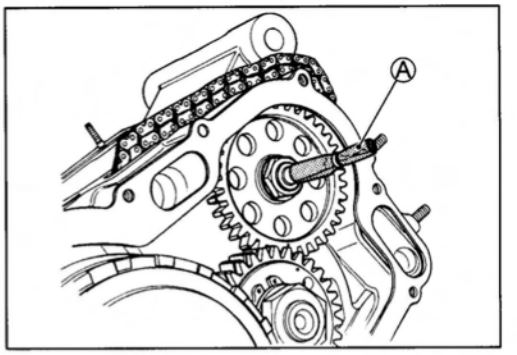

- Remove the vinyl film or tape Ⓐ after installing the clutch cover.
- Tighten the clutch cover bolts temporarily.

NOTE:
Fit the gasket washer to the bolt Ⓑ and the clamps to the bolts Ⓒ as shown.

⚠ CAUTION

Use the new gasket washer to prevent oil leakage.

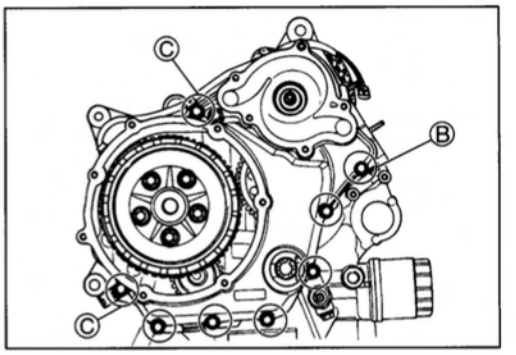

- Install the new O-ring onto the clutch outer cover ①.

⚠ CAUTION

Use the new O-ring to prevent oil leakage.

NOTE:
* *After degreasing the groove Ⓓ of the clutch outer cover ①, place the tab of the O-ring to the groove Ⓓ properly.*
* *Apply SUZUKI BOND "1207B" to the tab of the O-ring and the groove Ⓓ of the clutch outer cover.*

1207B 99104-31140: SUZUKI BOND "1207B"

- Apply grease to the O-ring.

A H 99000-25030: SUZUKI SUPER GREASE "A"

- Install the clutch outer cover ①.
- Tighten the clutch outer cover bolts temporarily.

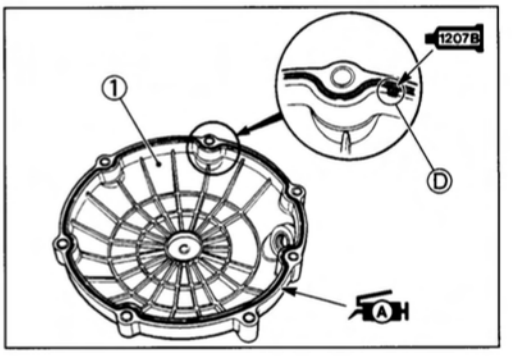

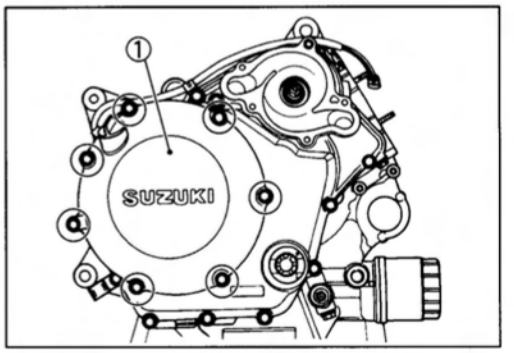

- Install the washer ② and the rubber seal ③ into the impeller.
- After wiping off the oily or greasy matter from the mechanical seal ring ④, install it into the impeller.

NOTE:
The marked side Ⓔ of the mechanical seal ring faces the impeller.

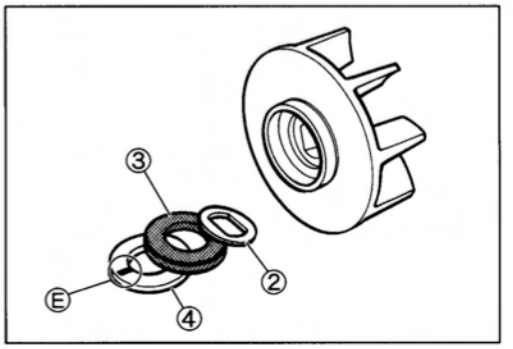

- Install the seal washer and the washer onto the impeller securing bolt ①.

NOTE:
The metal side Ⓔ of the seal washer and the convex side Ⓕ of the washer face the impeller securing bolt head.

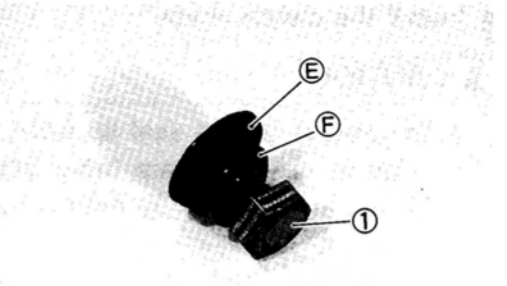

- Install the impeller ② and its securing bolt ① onto the shaft.
- Tighten the impeller securing bolt ① to the specified torque.

Impeller securing bolt: 8 N·m (0.8 kg-m, 6.0 lb-ft)

- Install the dowel pin ③.

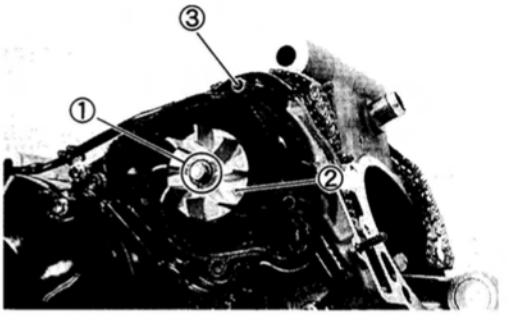

- Install the new O-ring onto the water pump case ④.

⚠ CAUTION

Use the new O-ring to prevent engine coolant leakage.

NOTE:
** Apply grease to the O-ring.*

99000-25030: SUZUKI SUPER GREASE "A"

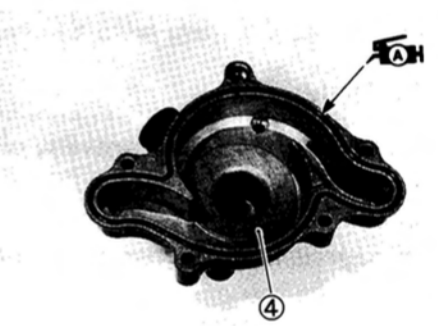

- Install the water pump case ④.
- Tighten the water pump case bolts temporarily.



- Tighten the clutch outer cover bolts, the water pump case bolts and the clutch cover bolts securely.

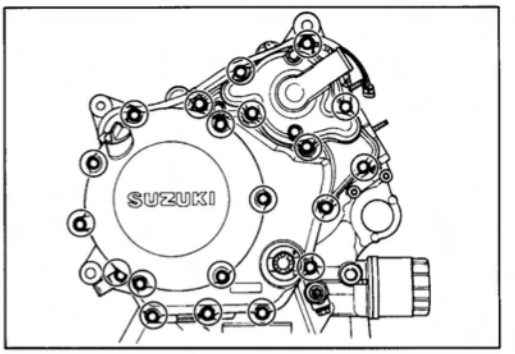

- Install the starter idle gear ①, the spacer ② and the shaft ③.

NOTE:
Apply engine oil and the SUZUKI MOLY PASTE to the shaft ③.

99000-25140: SUZUKI MOLY PASTE

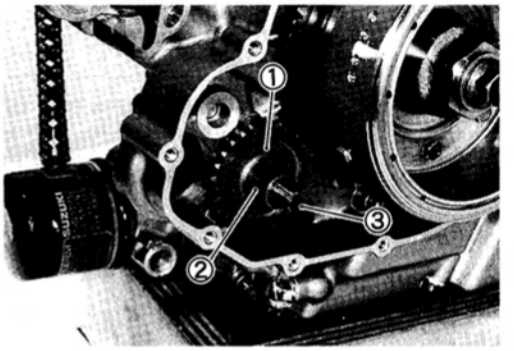

- Install the bushings ④ into the crankcase and the generator cover.

NOTE:
Apply engine oil and the SUZUKI MOLY PASTE to the inside of the bushings.

99000-25140: SUZUKI MOLY PASTE

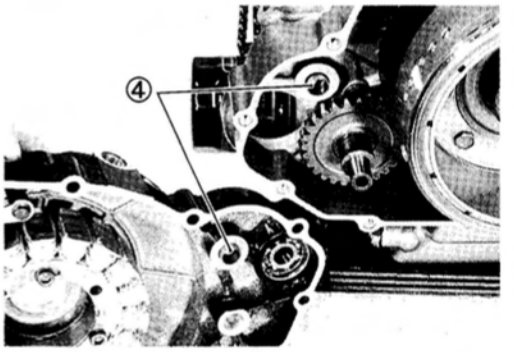

- Install the starter torque limiter ⑤ with the washers ⑥.

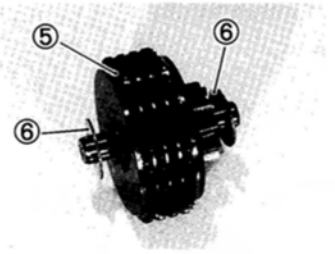

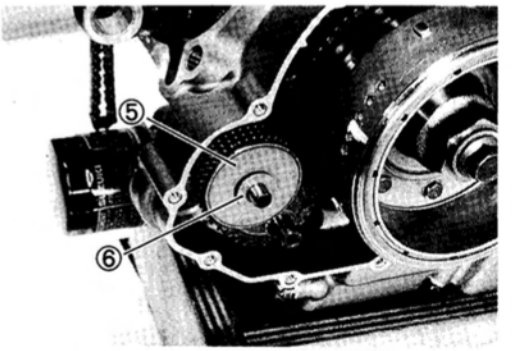

- Install the dowel pin ⑦ and the gasket ⑧.

⚠ CAUTION

Use the new gasket to prevent oil leakage.

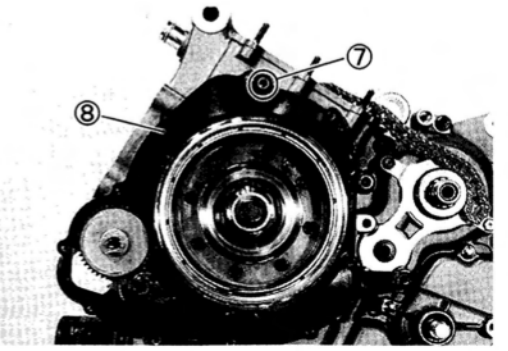

- Install the generator cover and tighten the generator cover bolts securely.

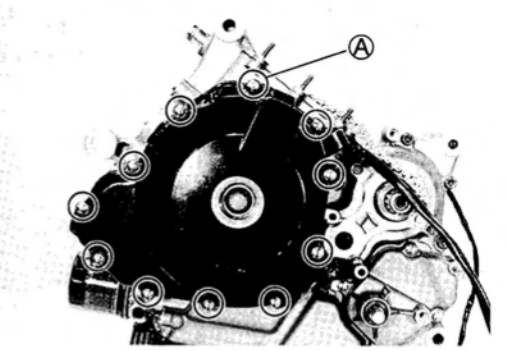

NOTE:
Fit the gasket washer to the generator cover bolt Ⓐ correctly as shown.

⚠ CAUTION

Use the new gasket washer to prevent oil leakage.

- Install the new O-ring to the starter motor.

⚠ CAUTION

Use the new O-ring to prevent oil leakage.

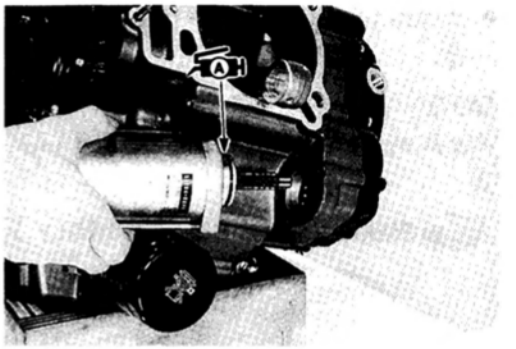

- Apply grease to the O-ring.

Ⓐ 99000-25030: SUZUKI SUPER GREASE "A"

- Install the starter motor.

- Tighten the starter motor mounting bolts with the clamp ① securely.

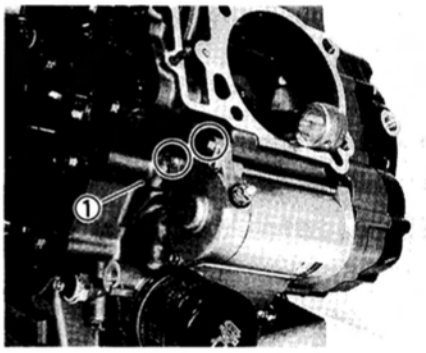

- Install the piston rings in the order of oil ring, 2nd ring and 1st ring.

NOTE:
1st ring and 2nd ring differ in the shape.

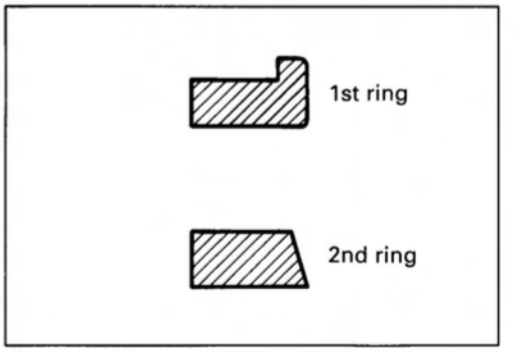

- Be sure to bring the concave side of 1st ring to top when fitting it to the piston.
- 2nd (middle) ring has letters "RN" marked on the side. Be sure to bring the marked side of the 2nd ring to top when fitting it to the piston.

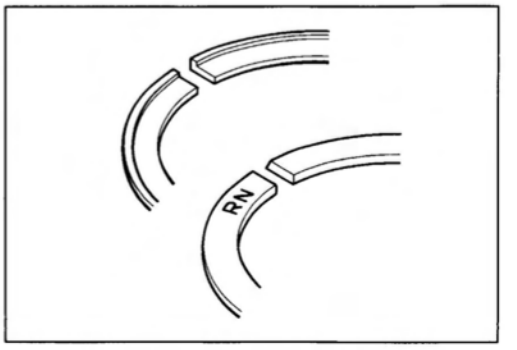

- The first member to go into the ring groove is spacer ①. After placing the spacer, fit the two side rails ②. Side designations, top and bottom, are not applied to the spacer and side rails: you can position each either way.

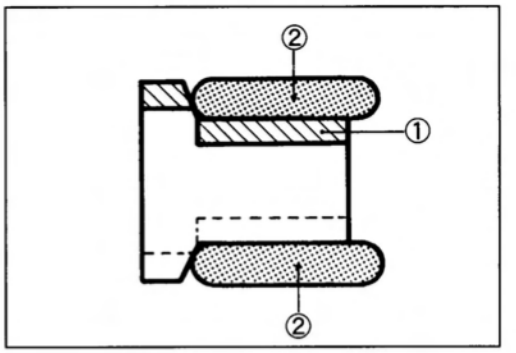

- Position the gaps of the three rings as shown. Before inserting each piston into the cylinder, check that the gaps are so located.

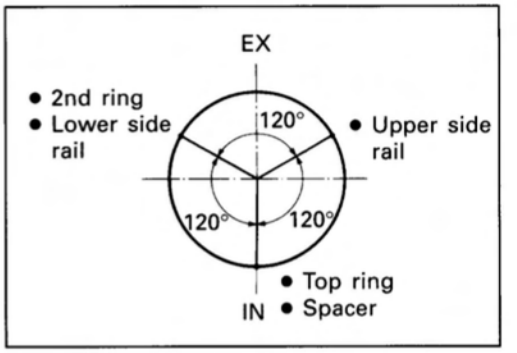

- Rub a small quantity of SUZUKI MOLY PASTE onto each piston pin.

99000-25140: SUZUKI MOLY PASTE

NOTE:
When installing the pistons, front and rear, the triangle marks Ⓐ on the piston heads must be located to each exhaust side.

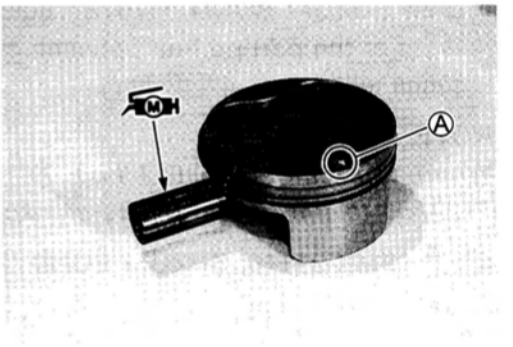

- Place a clean rag over the cylinder base so as not to drop the piston pin circlips into the crankcase.
- Install the pistons, front and rear.

⚠ CAUTION

When turning the crankshaft, pull the cam chains upward, or the chains will be caught between the crankcase and the cam drive sprocket.

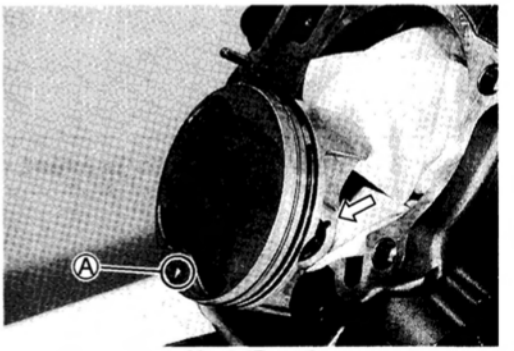

No.1 (Front)

- Install the piston pin circlips.

⚠ CAUTION

Use new piston pin circlips to prevent circlip failure which will occur with a bend one.

NOTE:
End gap of the circlip should not be aligned with the cutaway in the piston pin bore.

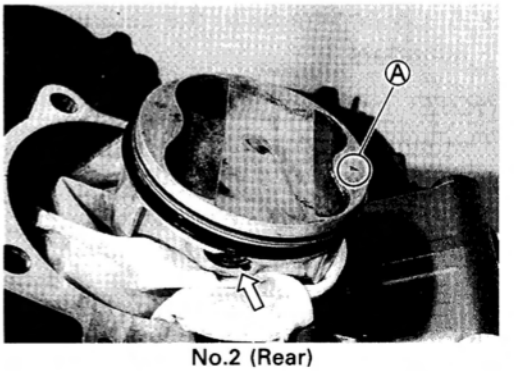

No.2 (Rear)

- Apply engine oil to the new O-rings.
- Install each oil jet ① as shown in the photograph, front and rear.

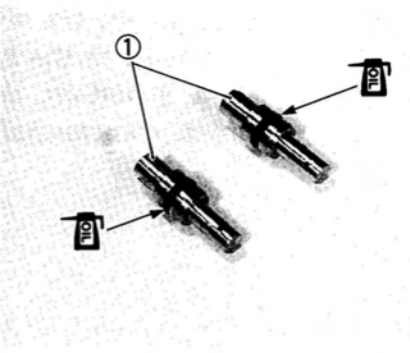

⚠ CAUTION

Use the new O-rings to prevent oil leakage.

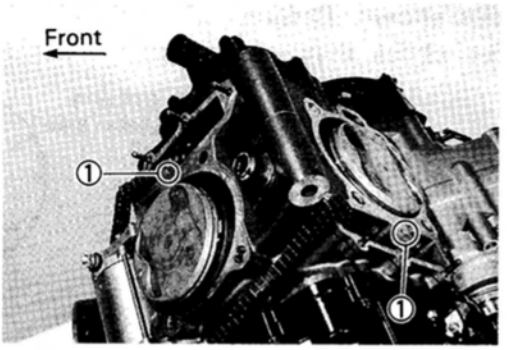

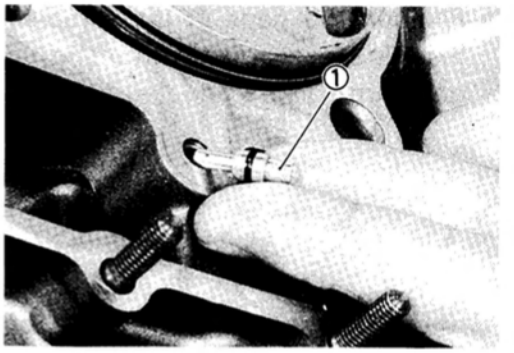

- Coat SUZUKI BOND "1207B" lightly to the mating surfaces at the parting line between the right and left crankcases as shown.

NOTE:
When replacing the stud bolt Ⓐ, apply SUZUKI BOND "1207B" to the thread of the crankcase side.

1207B 99104-31140: SUZUKI BOND "1207B"

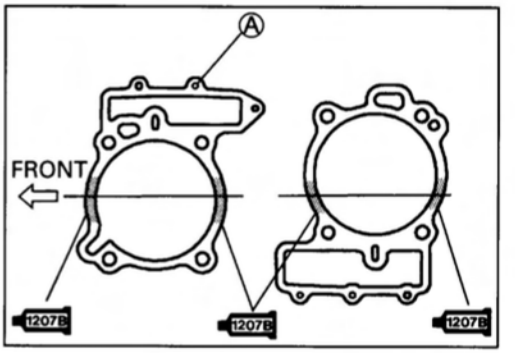

- Fit the dowel pins ② and new gaskets ③ to the crankcase.

⚠ CAUTION

Use the new gaskets to prevent oil leakage.

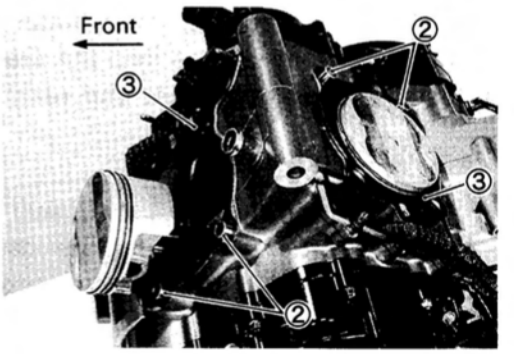

- Apply engine oil to the sliding surface of the pistons and cylinders.

NOTE:
The cylinders can be distinguished by the embossed-letters, "F" and "R".
"F": Front (No.1) cylinder
"R": Rear (No.2) cylinder

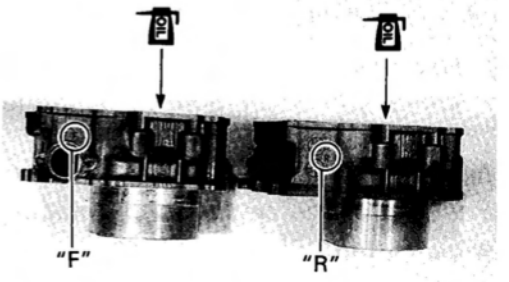

- Hold the piston rings in proper position, and insert each of the pistons into the respective cylinders, front and rear.

NOTE:
When installing the cylinders, keep the cam chains taut. The cam chain must not be caught between cam drive sprocket and crankcase when turning the crankshaft.

- Tighten the cylinder nuts (M6) ① temporarily.

NOTE:
Fit the clamp Ⓐ to the front cylinder nut as shown.

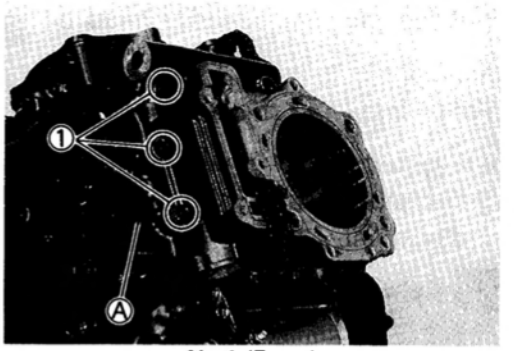

No.1 (Front)

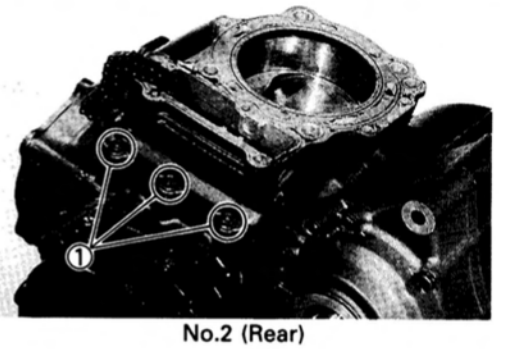

No.2 (Rear)

- Pull the cam chains out of the cylinders and install the cam chain guides ②.

NOTE:
There are the guide holders for the bottom ends of each cam chain guide ② cast in the crankcase. Be sure that the cam chain guides ② are inserted properly.

- Fit the dowel pins ③ and the new cylinder head gaskets ④ to the cylinders, front and rear.

⚠ CAUTION

Use the new gaskets to prevent gas leakage.

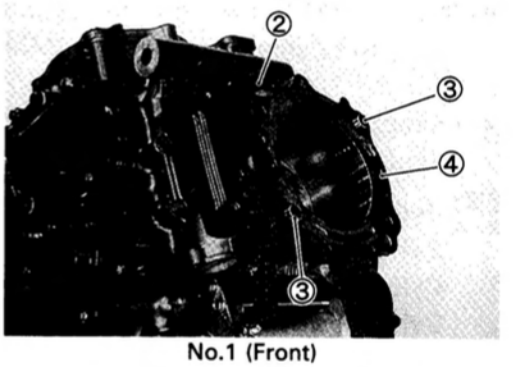

No.1 (Front)

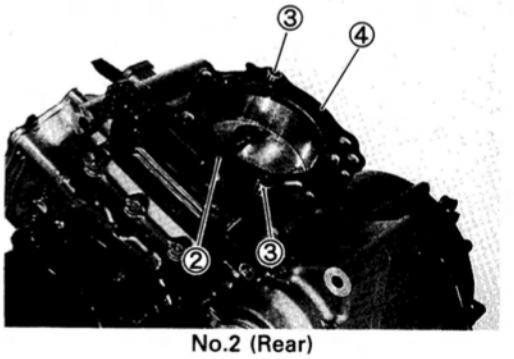

No.2 (Rear)

- Place the rear cylinder head on the cylinder.

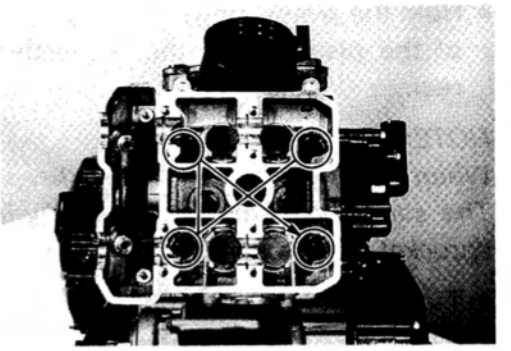

NOTE:
When installing the cylinder head, keep the cam chain taut.

- Tighten the cylinder head bolts (M10) to the specified two-step torque with a torque wrench sequentially and diagonally.

Cylinder head bolt (M10): Initial 25 N·m (2.5 kg-m, 18.0 lb-ft)
Final 42 N·m (4.2 kg-m, 30.5 lb-ft)

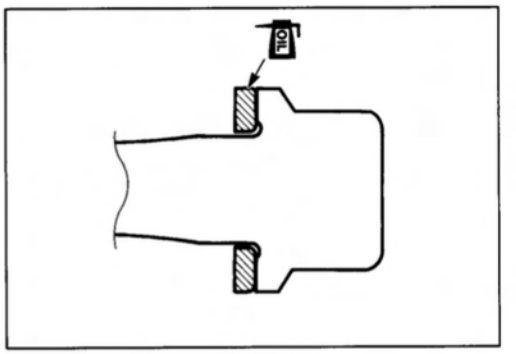

NOTE:
* *Install the washers to the cylinder head bolts (M10) as shown.*
* *Apply engine oil to the washers before installing the cylinder head bolts.*

- After firmly tightening the cylinder head bolts (M10), install the cylinder head nuts (M8) ①, (M6) ② and bolts (M6) ③.
- Tighten the cylinder head nuts ①, ②, bolts ③ and the cylinder nuts ④.

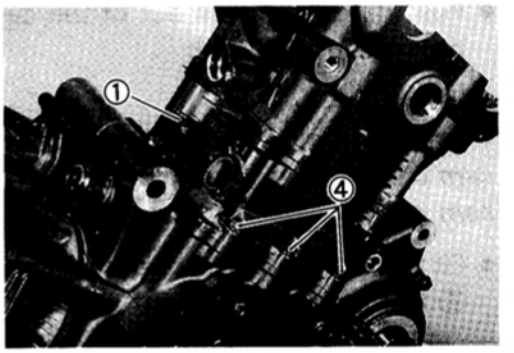

Cylinder head nut (M8) ①: 25 N·m (2.5 kg-m, 18.0 lb-ft)
Cylinder head nut (M6) ②: 10 N·m (1.0 kg-m, 7.0 lb-ft)
Cylinder head bolt (M6) ③: 10 N·m (1.0 kg-m, 7.0 lb-ft)
Cylinder nut (M6) ④: 10 N·m (1.0 kg-m, 7.0 lb-ft)

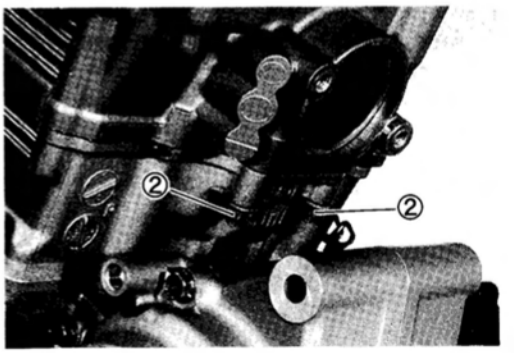

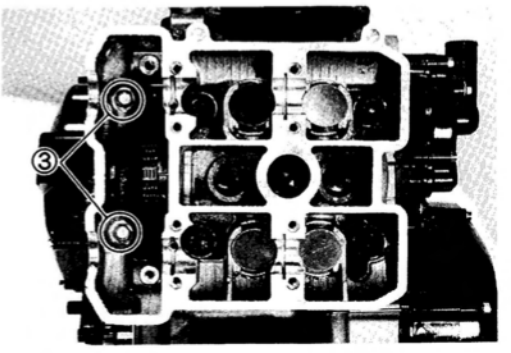

- Place the front cylinder head on the cylinder.

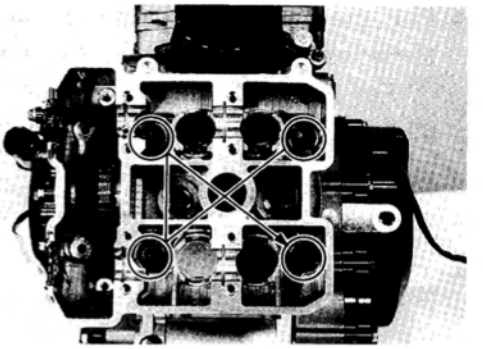

NOTE:
When installing the cylinder head, keep the cam chain taut.

- Tighten the cylinder head bolts (M10) to the specified two-step torque with a torque wrench sequentially and diagonally.

Cylinder head bolt (M10): Initial 25 N·m (2.5 kg-m, 18.0 lb-ft)
Final 42 N·m (4.2 kg-m, 30.5 lb-ft)

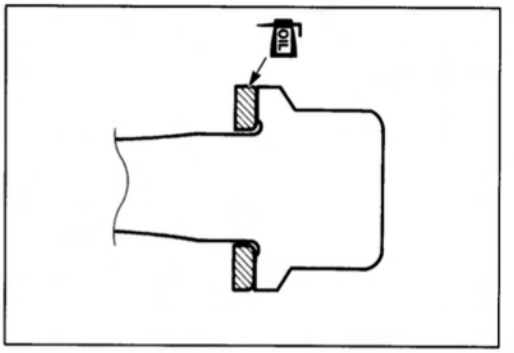

NOTE:
* *Install the washers to the cylinder head bolts (M10) as shown.*
* *Apply engine oil to the washers before installing the cylinder head bolts.*

- After firmly tightening the cylinder head bolts (M10), install the cylinder head nuts (M8) ①, (M6) ②, bolts (M6) ③ and oil cooler mounting bracket ④.
- Tighten the cylinder head nuts ①, ②, bolts ③ and the cylinder nuts ⑤.

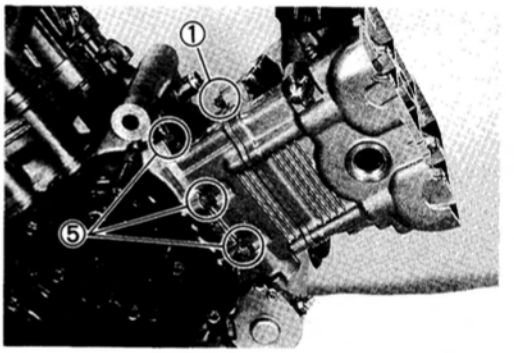

Cylinder head nut (M8) ①: 25 N·m (2.5 kg-m, 18.0 lb-ft)
Cylinder head nut (M6) ②: 10 N·m (1.0 kg-m, 7.0 lb-ft)
Cylinder head bolt (M6) ③: 10 N·m (1.0 kg-m, 7.0 lb-ft)
Cylinder nut (M6) ⑤: 10 N·m (1.0 kg-m, 7.0 lb-ft)

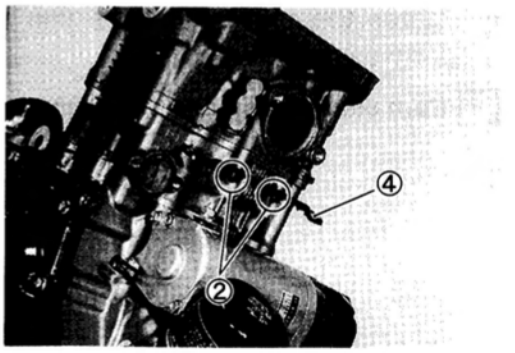

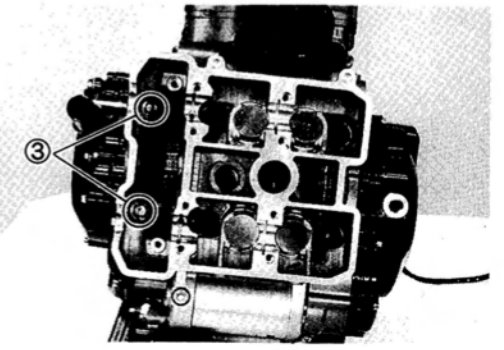

- Pull the cam chains upward and install the cam chain tensioners into each cylinder head.
  ① For No.1 (Front) cylinder head
  ② For No.2 (Rear) cylinder head

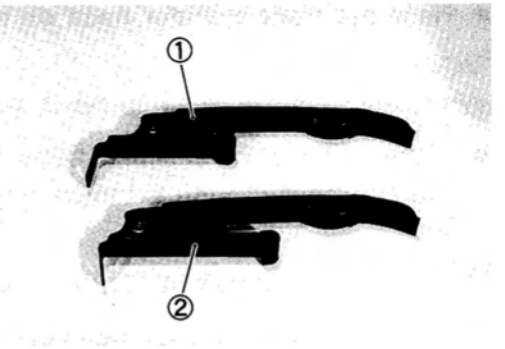

NOTE:

* *When installing the cam chain tensioners, insert the their holder ends Ⓐ into each guide cast on the cylinder.*
* *When installing the No.1 (Front) cam chain tensioner, through it rear side of the rib Ⓑ.*

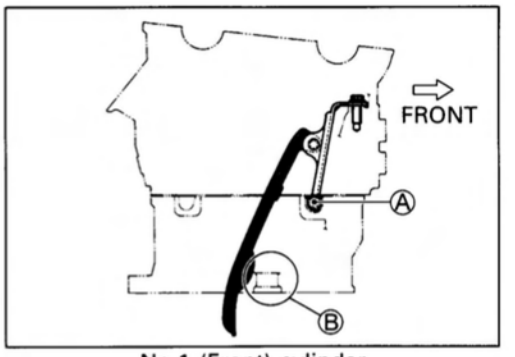

No.1 (Front) cylinder

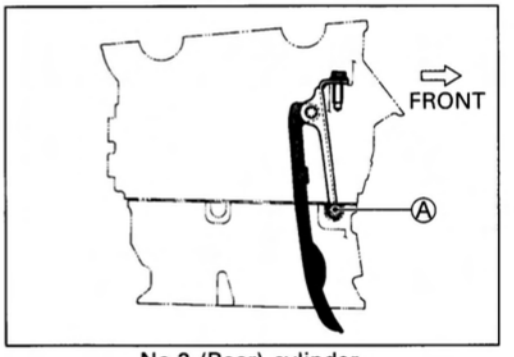

No.2 (Rear) cylinder

- Tighten the cam chain tensioner mounting bolts to the specified torque.

Cam chain tensioner mounting bolt: 10 N·m (1.0 kg-m, 7.0 lb-ft)

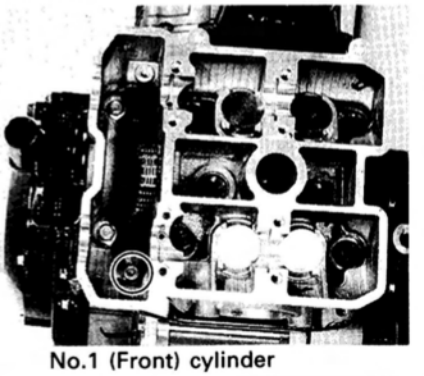

No.1 (Front) cylinder

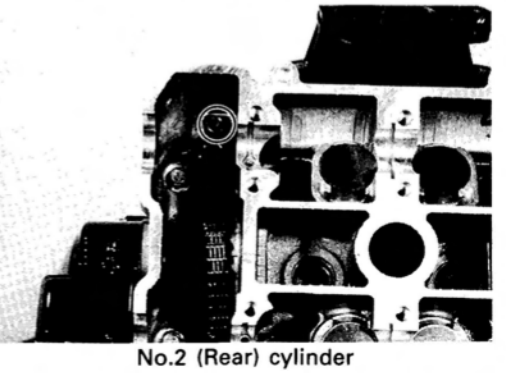

No.2 (Rear) cylinder

FRONT NO.2 CAM DRIVE IDLE GEAR/SPROCKET

- Turn the crankshaft counterclockwise with the box wrench and align "F | T" line Ⓐ on the generator rotor with the index mark Ⓑ of the valve timing inspection hole while keeping the camshaft drive chain pulled upward.

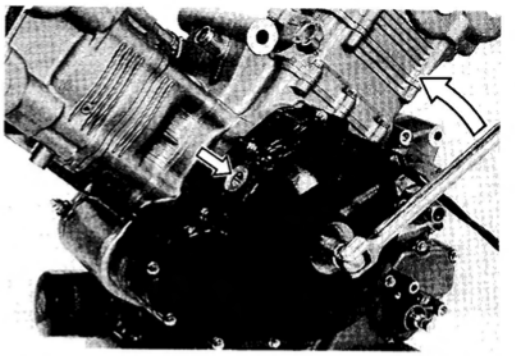

⚠ CAUTION

Pull the cam chains upward, or the chain will be caught between crankcase and cam drive sprocket.

⚠ CAUTION

To adjust the camshaft timing correctly, be sure to align "F | T" line Ⓐ with the index mark Ⓑ and hold this position when installing the No.2 cam drive idle gears/sprockets, front and rear.

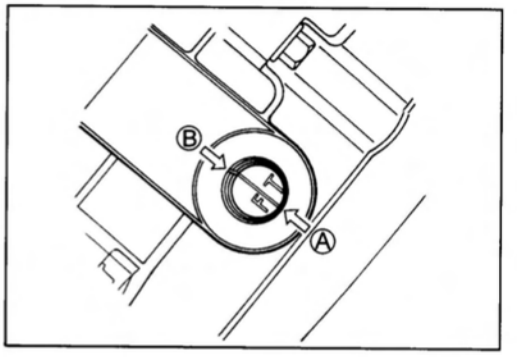

- Apply moly paste oiled to the No.2 cam drive idle gear/sprocket bearing, its shaft ①, and the thrust washer ②.

M 99000-25140: SUZUKI MOLY PASTE

NOTE:

* *The thickness of thrust washer ② must be selected for each cylinder head. Refer to page 3A-24 for the thrust washer selection.*

* *Paint the engraved line Ⓒ on the No.2 cam drive idle gear/sprocket.*

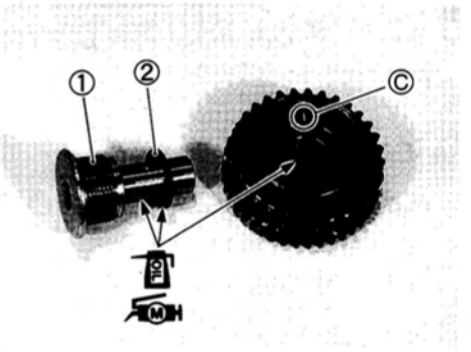

- Install the No.2 cam drive idle gear/sprocket onto the front cylinder head and engage the cam chain on it.
- Align the engraved line Ⓒ on the No.2 cam drive idle gear/sprocket with the embossed line Ⓓ on the cylinder head.

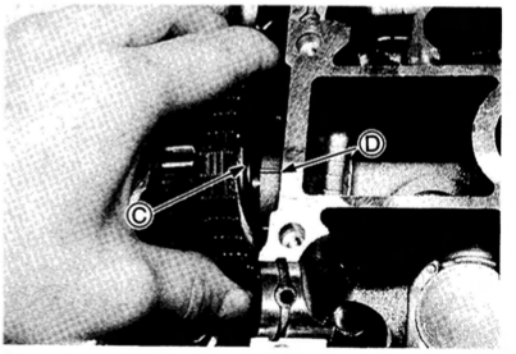

- Install the No.2 cam drive idle gear/sprocket shaft ①, the copper washer ③ and the thrust washer ②.

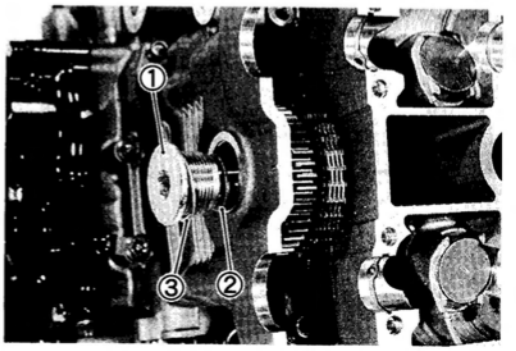

- Check and correct the positions of the "F | T" line on the generator rotor and the No.2 cam drive idle gear/sprocket ①.

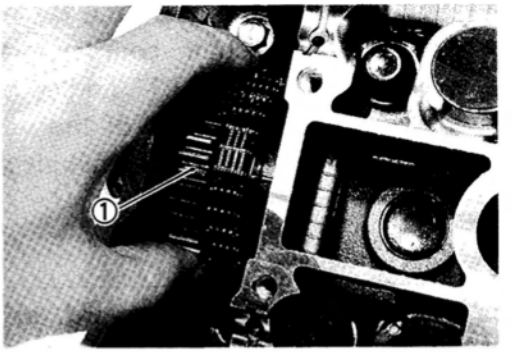

⚠ CAUTION

When checking the positions, remove the cam chain slack at the cam chain guide ② side by holding the No.2 cam drive idle gear/sprocket by hand.

NOTE:
Due to special valve train mechanism, aligning of the three elements; the engraved line Ⓐ, embossed line Ⓑ and the gear tooth root on the No.2 cam drive idle gear/sprocket; can occur once every other rotation of crankshaft.

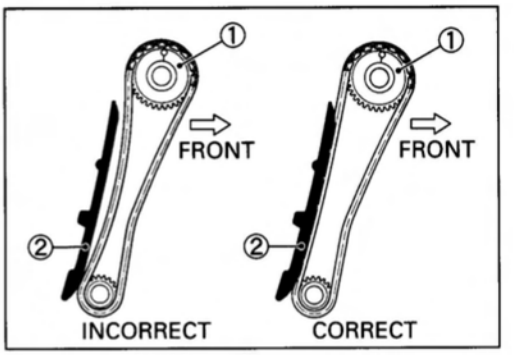

⚠ CAUTION

If the engraved line Ⓐ does not align the embossed line Ⓑ, turn the crankshaft 360° (1 turn) to bring the "F | T" line on the generator rotor to the index mark of the valve timing inspection hole again and reinstall the No.2 cam drive idle gear/sprocket to the correct position as shown.

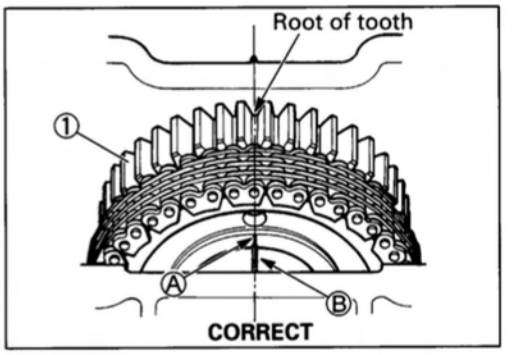

⚠ CAUTION

Pull the cam chains upward, or the chain will be caught between crankcase and cam drive sprocket when turning the crankshaft.

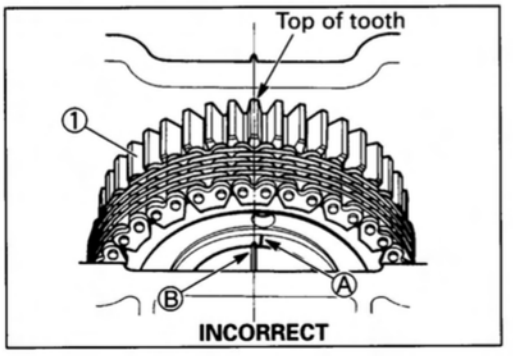

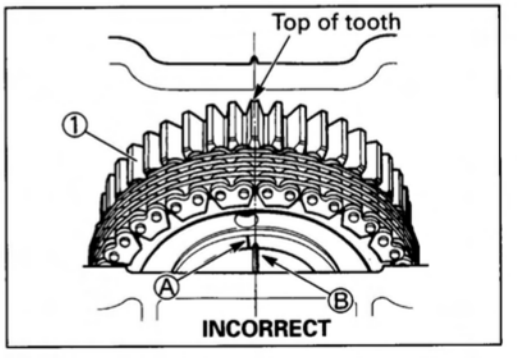

NOTE:
When checking the No.2 cam drive idle gear/sprocket ① position at its gear tooth, top or root, bring the eye level as shown in right illustration.

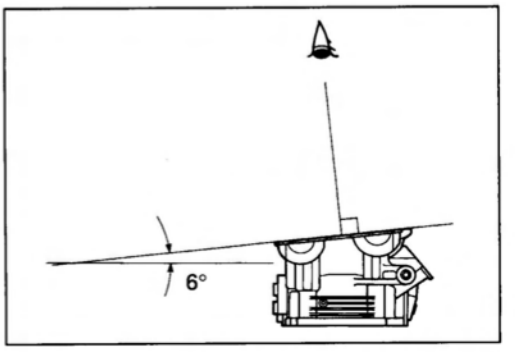

- Tighten the No.2 cam drive idle gear/sprocket shaft to the specified torque.

No.2 cam drive idle gear/sprocket shaft:
40 N·m (4.0 kg-m, 29.0 lb-ft)

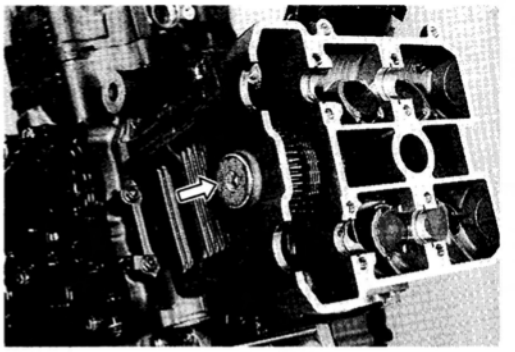

NO.1 (FRONT) CAM CHAIN TENSION ADJUSTER

- Install the front cam chain tension adjuster to the following procedure.

NOTE:
The cam chain tension adjusters are distinguished by the shapes.
① For No.1 (Front) cylinder
② For No.2 (Rear) cylinder

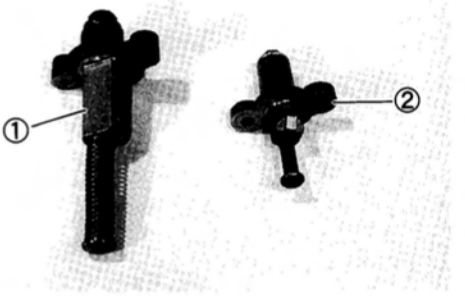

- Turn in the cam chain tension adjuster bolt ③ fully.

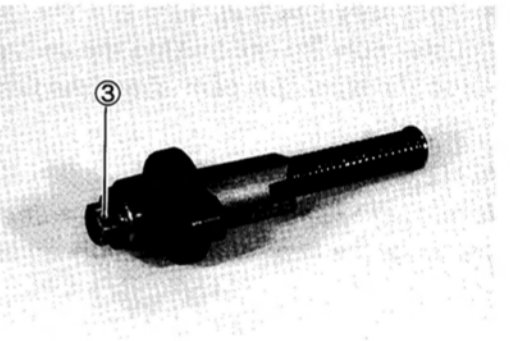

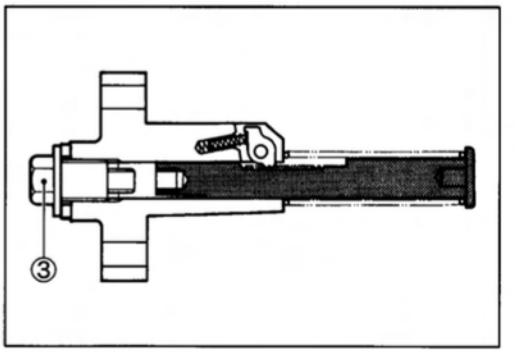

- Compress the cam chain tension adjuster rod ① fully by releasing the ratchet ②.

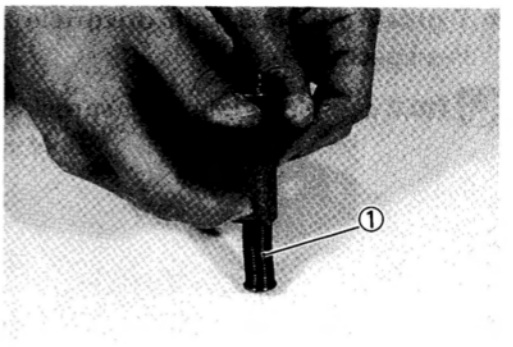

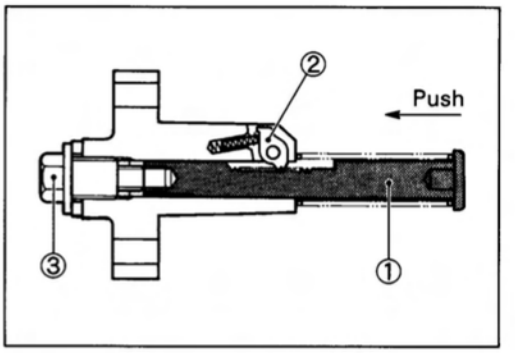

- From this position, turn out the cam chain tension adjuster bolt ③ until locking the cam chain tension adjuster rod ①. Now the cam chain tension adjuster is ready to install.

NOTE:
Turn out the cam chain tension adjuster bolt ③ while compressing the cam chain tension adjuster rod.

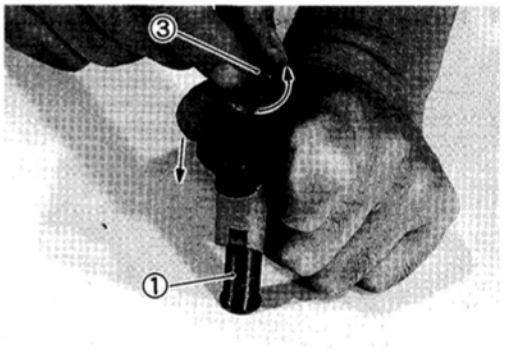



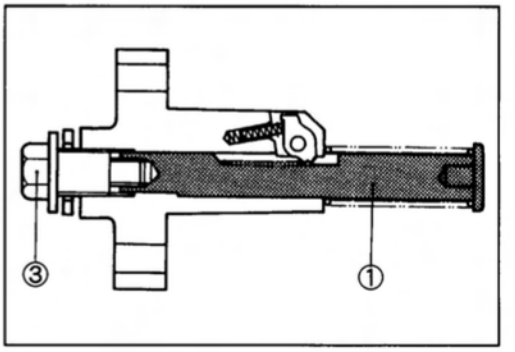

- Install the new gasket ④.

⚠ CAUTION

Use the new gasket to prevent oil leakage.

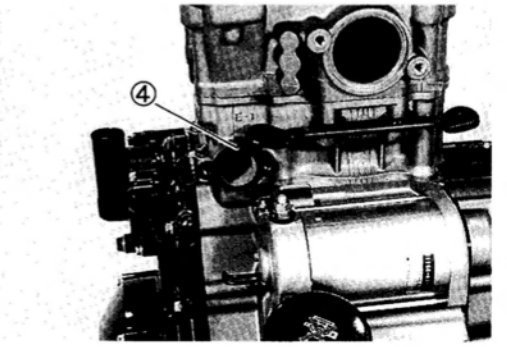

- Install the cam chain tension adjuster as shown and tighten its mounting bolts to the specified torque.

Cam chain tension adjuster mounting bolt:
10 N·m (1.0 kg-m, 7.0 lb-ft)

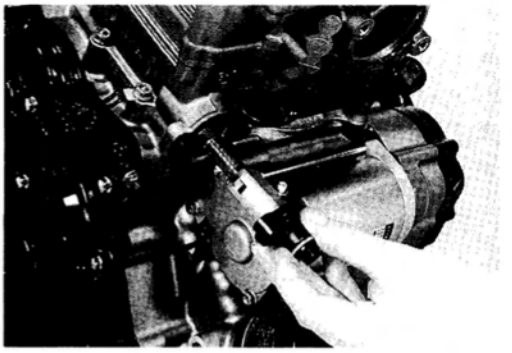

- Release the cam chain tension adjuster by turning in its bolt ①.

NOTE:
Click sound is heard when the cam chain tension adjuster rod is released.

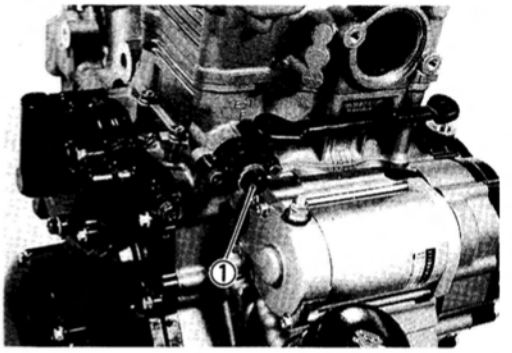

- Tighten the cam chain tension adjuster bolt ① to the specified torque.

Cam chain tension adjuster bolt (Front):
23 N·m (2.3 kg-m, 16.5 lb-ft)

⚠ CAUTION

After installing the cam chain tension adjuster, check to be sure that the adjuster work properly by checking the slack of cam chain.

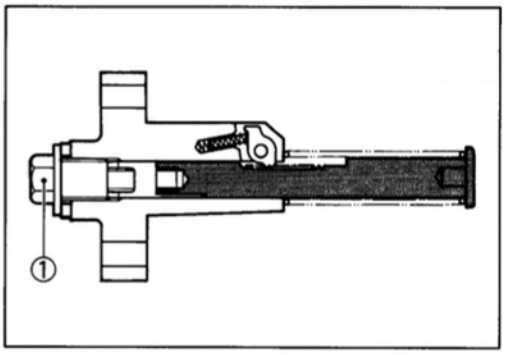

REAR NO.2 CAM DRIVE IDLE GEAR/SPROCKET

- For the rear No.2 cam drive idle gear/sprocket installation, the crankshaft setting position must be set at the same position (TDC of compression stroke) as the front one.
- The procedures are also the same as the front No.2 cam drive idle gear/sprocket installation.

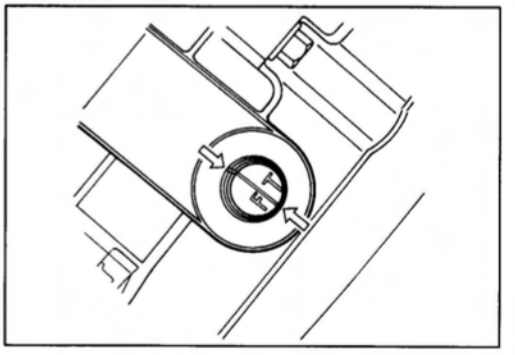

⚠ CAUTION

When checking the No.2 cam drive idle gear/sprocket position, remove the cam chain slack at the cam chain guide ② side by holding it by hand.

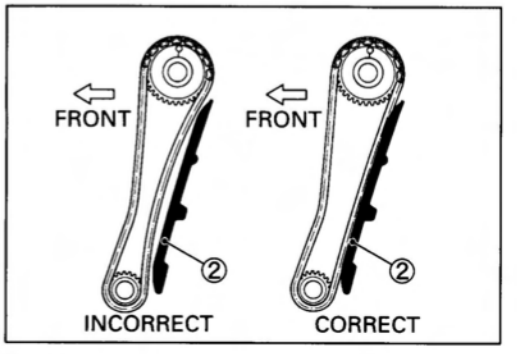

NO.2 (REAR) CAM CHAIN TENSION ADJUSTER

- Install the rear cam chain tension adjuster to the following procedure.
- Disassemble the No.2 (Rear) cam chain tension adjuster.

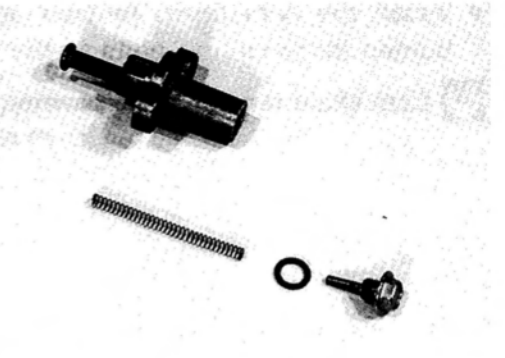

- Install the new gasket ①.

⚠ CAUTION

Use the new gasket to prevent oil leakage.

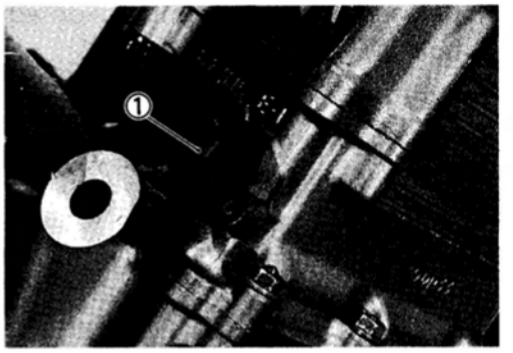

- Compress the cam chain tension adjuster rod by releasing ratchet.

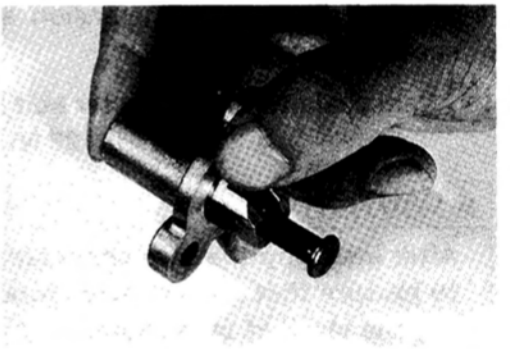

- Install the cam chain tension adjuster as shown and tighten its mounting bolts to the specified torque.

Cam chain tension adjuster mounting bolt:
10 N·m (1.0 kg-m, 7.0 lb-ft)

- Install a new O-ring ②, the spring ③ and the cam chain tension adjuster bolt (Rear) ④ and tighten it to the specified torque.

NOTE:
Apply grease to the O-ring ② before installing.

99000-25030: SUZUKI SUPER GREASE "A"

Cam chain tension adjuster bolt (Rear) ④:
7 N·m (0.7 kg-m, 5.0 lb-ft)

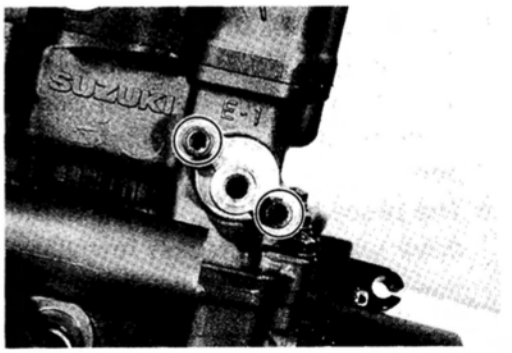

NOTE:
Click sound is heard when extending the cam chain tension adjuster rod.

⚠ CAUTION

After installing the cam chain tension adjuster, check to be sure that the adjuster work properly by checking the slack of cam chain.

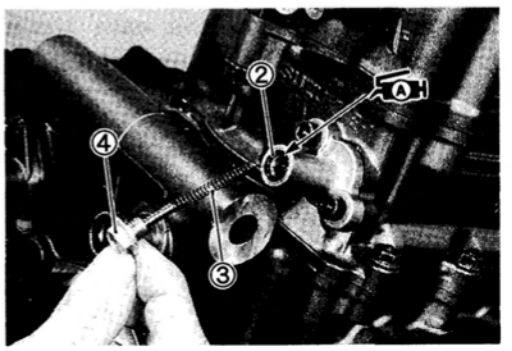

- Rotate the generator rotor 720 degrees (2 turns) and align the "F | T" line on the generator rotor with the index mark of the valve timing inspection hole.
- Recheck the position of the engraved lines Ⓐ on the front and rear No.2 cam drive idle gears/sprockets.

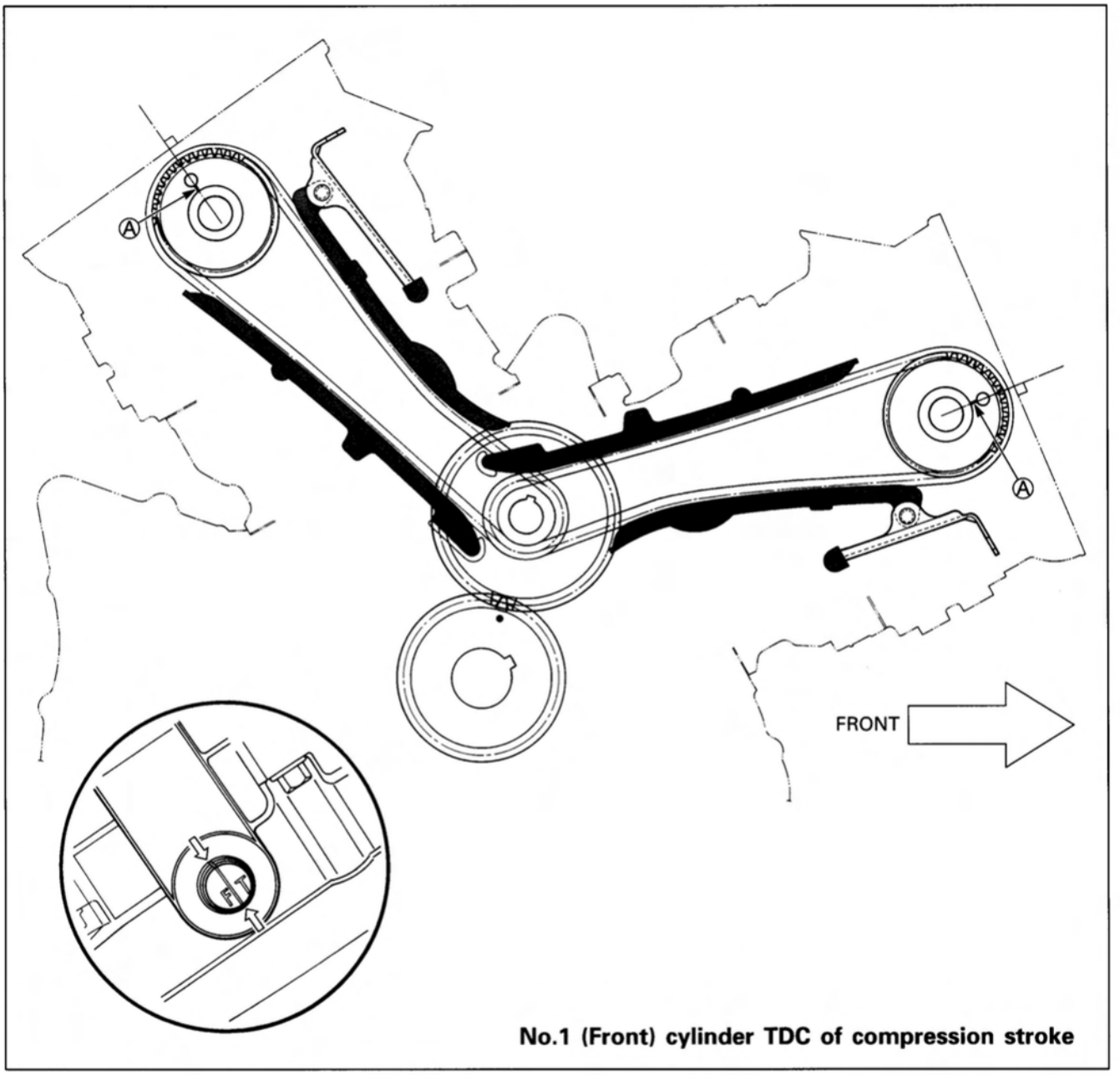

No.1 (Front) cylinder TDC of compression stroke

NO.1 (FRONT) CAMSHAFTS

- At the above condition, install the No.1 (Front) camshafts, intake and exhaust, in the following procedure.

NOTE:
The cam shafts are identified by the engraved letters and the shapes.
① No.1 (Front) exhaust camshaft
② No.1 (Front) intake camshaft
③ No.2 (Rear) intake camshaft
④ No.2 (Rear) exhaust camshaft

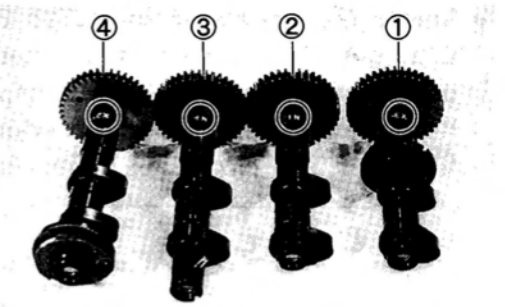

NOTE:
Before placing the camshafts on cylinder head, apply SUZUKI MOLY PASTE to their journals.
Apply engine oil to the camshaft journal holders.

99000-25140: SUZUKI MOLY PASTE

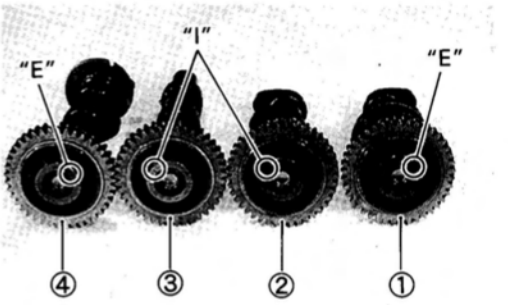

- Place the No.1 (front) camshafts, intake and exhaust.
- Align the engraved lines Ⓐ on the camshafts so it is parallel with the mating surface of the cylinder head cover. Check that the cam faces are located as shown.

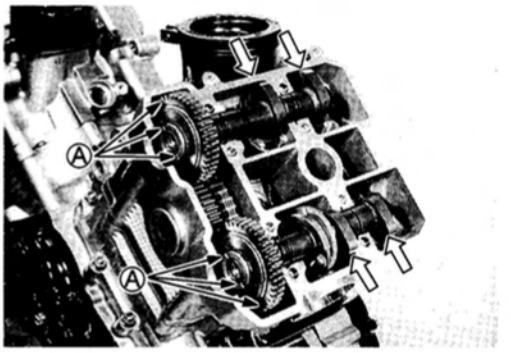

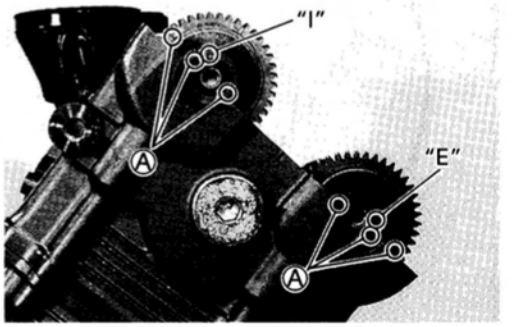

- Insert the C-rings ⑤ into each camshaft ring groove correctly.
- Install the dowel pins ⑥.

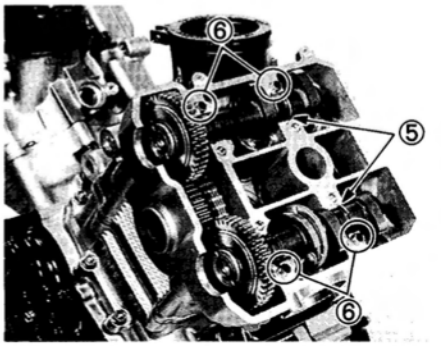

- Install the camshaft journal holders, intake and exhaust.
- Fasten the camshaft journal holders evenly by tightening the camshaft journal holder bolts sequentially and diagonally. (Try to equalize the pressure by shifting the wrench in the above manner, to fasten the shafts evenly.)

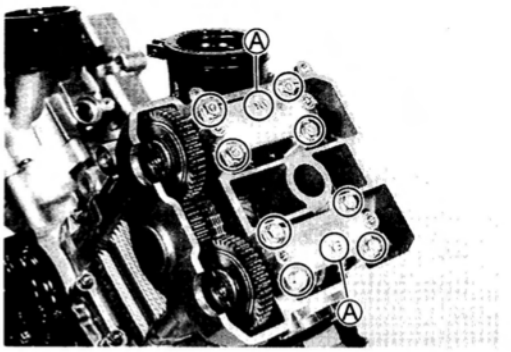

NOTE:

* *Damage to head or camshaft journal holder thrust surfaces may result if the camshaft journal holders are not drawn down evenly.*

* *Each camshaft journal holder is identified with a cast-on letters Ⓐ.*

- Tighten the camshaft journal holder bolts to the specified torque.

Camshaft journal holder bolt: 10 N·m (1.0 kg-m, 7.0 lb-ft)

⚠ CAUTION

The camshaft journal holder bolts are made of a special material and much superior in strength, compared with other types of high strength bolts. Take special care not to use other types of bolts instead of these special bolts. To identify these bolts, each of them has a figure "9" on its head.

- Recheck the No.1 (Front) camshaft positions, intake and exhaust.

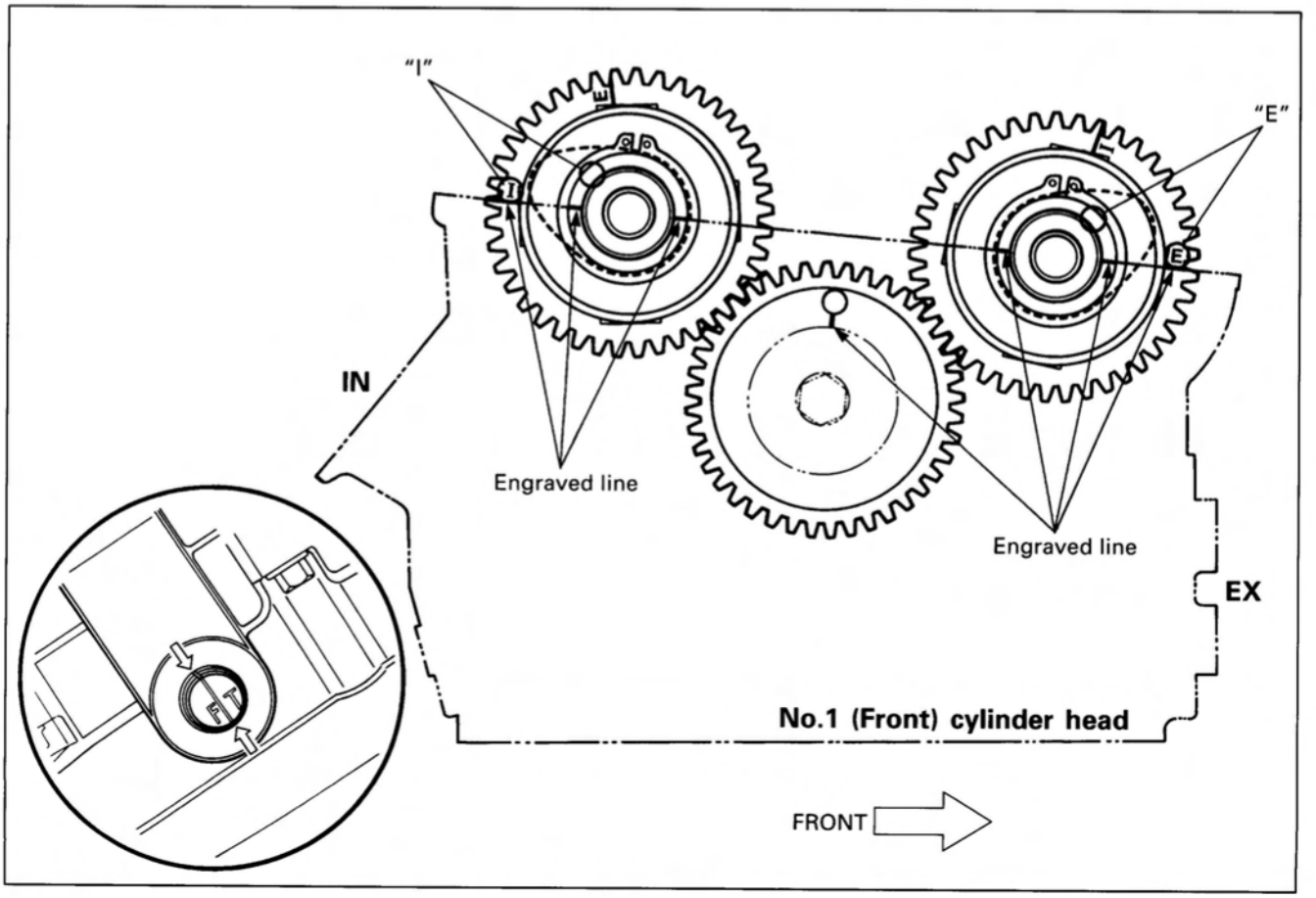

NO.2 (REAR) CAMSHAFTS

- Install the No.2 (Rear) camshafts, intake and exhaust, in the following procedure.
- From the position where the No.1 (Front) camshafts, have now been installed, rotate the generator rotor 360 degrees (1 turn) and align the "F | T" line on the generator rotor with the index mark of the valve timing inspection hole.

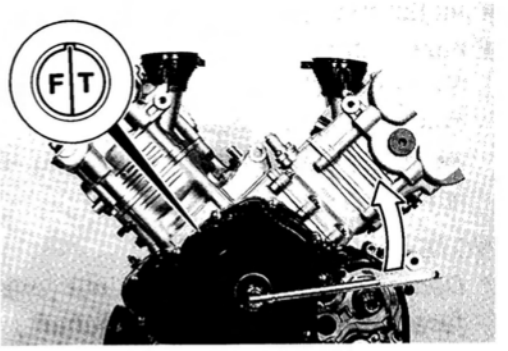

NOTE:
At this position, the engraved line Ⓐ on the No.2 cam drive idle gear/sprocket is inside the cylinder head and not visible.

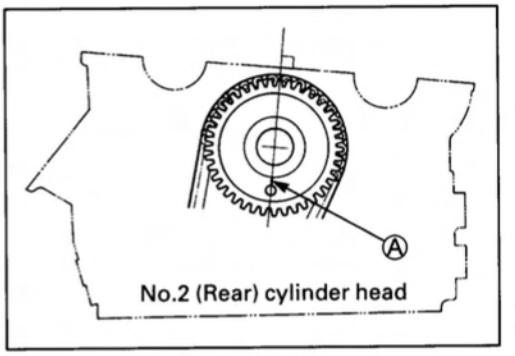

- Place the No.2 (Rear) camshafts, intake ① and exhaust ②.
- Align the engraved lines Ⓑ on the camshafts so that it is parallel with mating surface of the cylinder head cover. Check that the cam faces are located as shown.

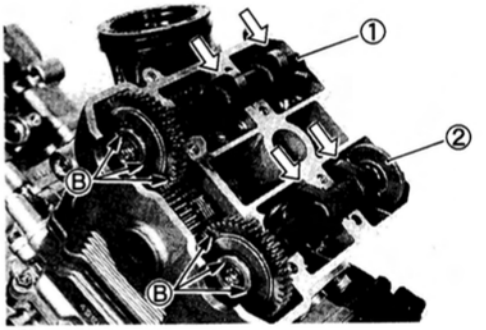

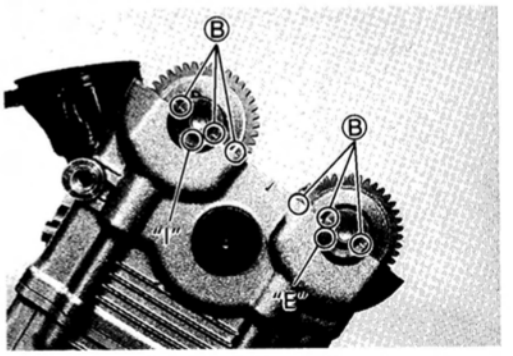

- Insert the C-rings ③ into each camshaft ring groove correctly.
- Install the dowel pins ④.

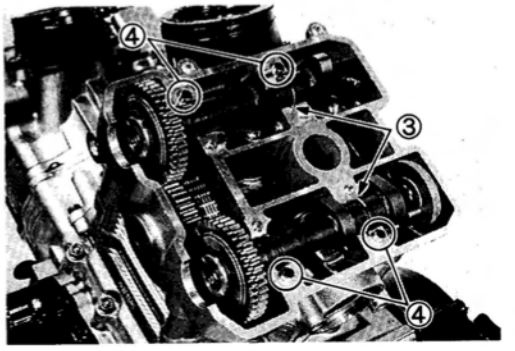

- Install the camshaft journal holders, intake and exhaust.
- Fasten the camshaft journal holders evenly by tightening the camshaft journal holder bolts sequentially and diagonally. (Try to equalize the pressure by shifting the wrench in the above manner, to fasten the shafts evenly.)

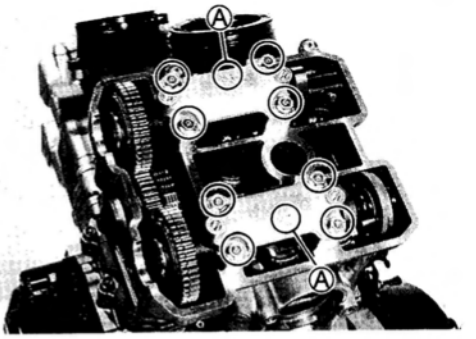

NOTE:

* *Damage to head or camshaft journal holder thrust surfaces may result if the camshaft journal holders are not drawn down evenly.*
* *Each camshaft journal holder is identified with a cast-on letter Ⓐ.*

- Tighten the camshaft journal holder bolts to the specified torque.

Camshaft journal holder bolt: 10 N·m (1.0 kg-m, 7.0 lb-ft)

⚠ CAUTION

The camshaft journal holder bolts are made of a special material and much superior in strength, compared with other types of high strength bolts. Take special care not to use other types of bolts instead of these special bolts. To identify these bolts, each of them has a figure "9" on its head.

- Recheck the No.2 (Rear) camshaft positions, intake and exhaust.

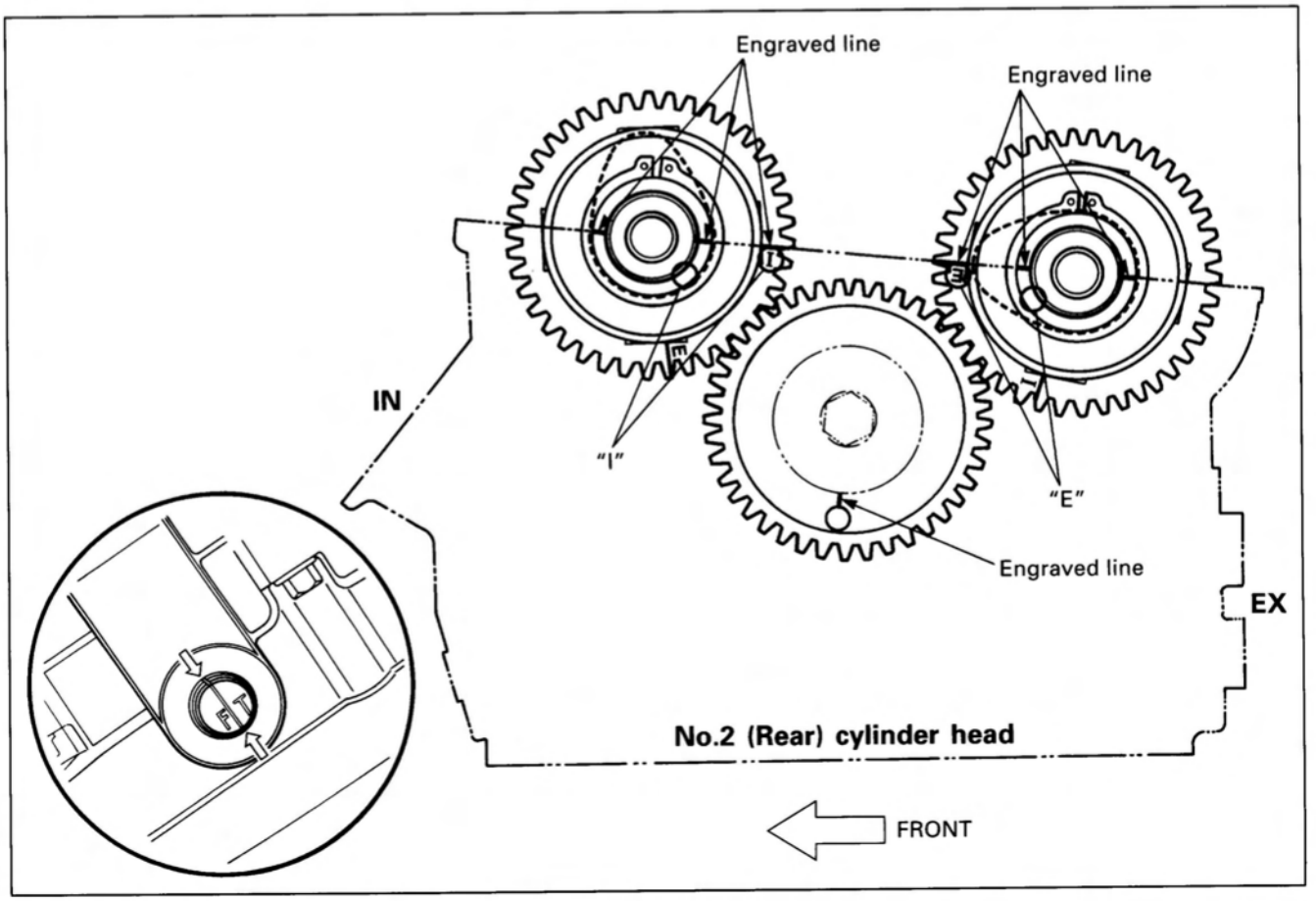

- After installing the No.2 (Rear) camshafts, rotate the generator rotor 360 degrees (1 turn), and recheck the positions of the camshafts.

⚠ CAUTION

Be sure to check the positions of the "F | T" line Ⓐ on the generator rotor, engraved line Ⓑ on the No.2 cam drive idle gears/sprockets and the engraved line Ⓒ on the camshafts.

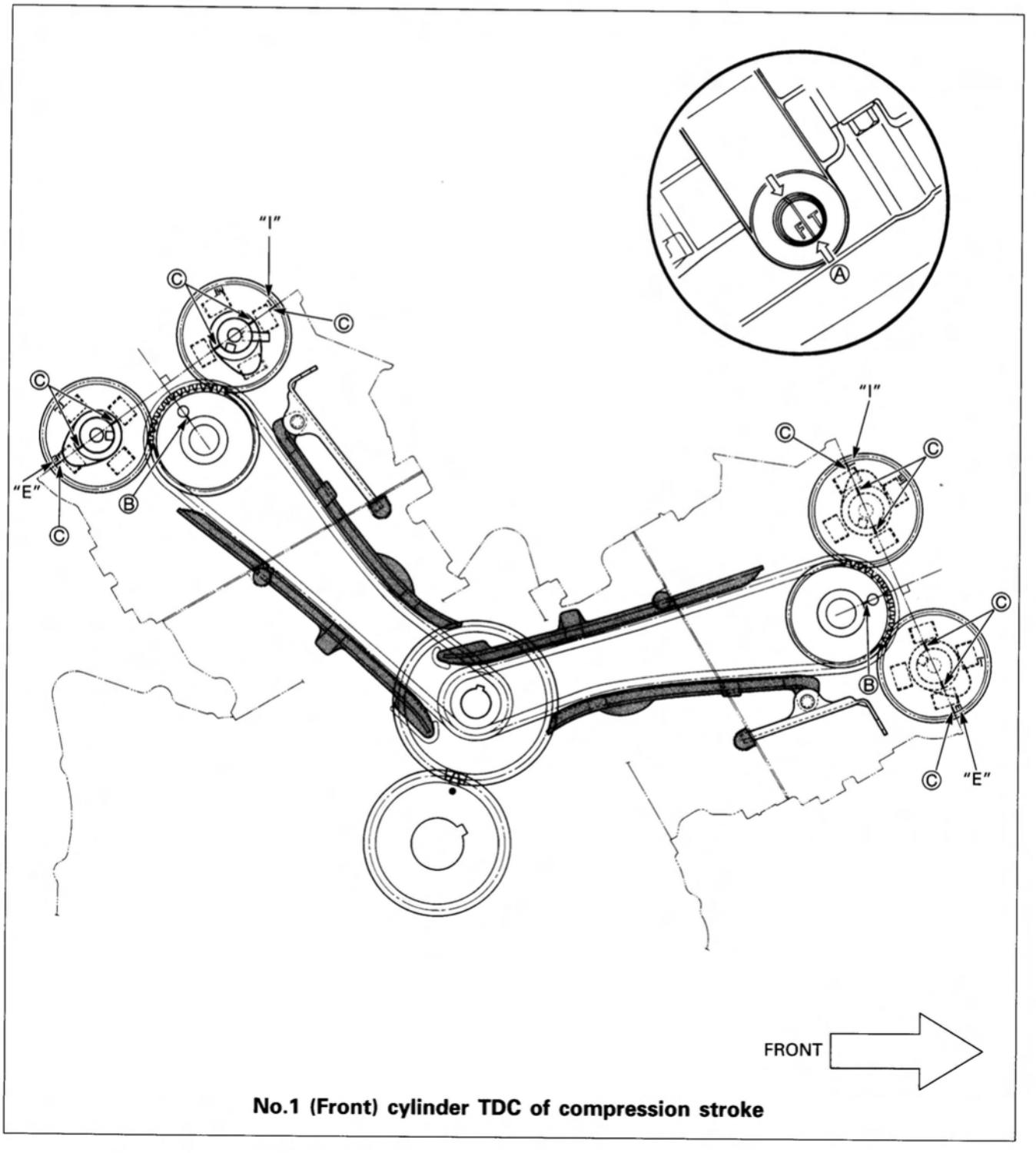

No.1 (Front) cylinder TDC of compression stroke

- Pour engine oil in each oil pocket in the front and rear cylinder heads.

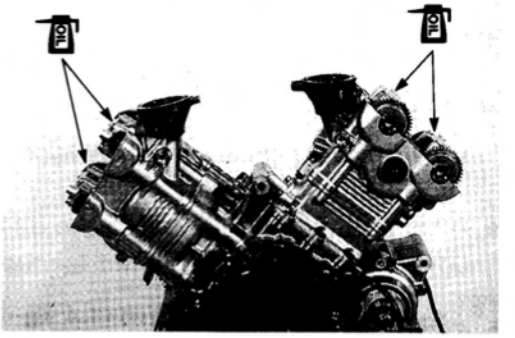

⚠ CAUTION

Be sure to check the tappet clearance. (Refer to pages 2-6 through -10.)

- Install the camshaft position sensor ① and tighten its mounting bolts to the specified torque.

Camshaft position sensor mounting bolt:
8 N·m (0.8 kg-m, 6.0 lb-ft)

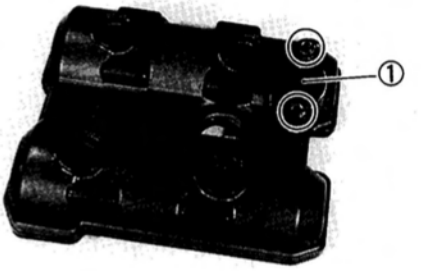

⚠ CAUTION

Use the new gasket to prevent oil leakage.
Do not over-tighten the bolts, as the head cover is made of magnesium.

- Install the new gaskets (②, ③) to each cylinder head cover.
- Apply SUZUKI BOND "1207B" to the cam end caps of the gaskets as shown.

1207B 99104-31140: SUZUKI BOND "1207B"

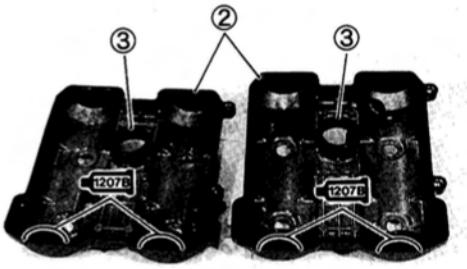

⚠ CAUTION

Use the new gaskets to prevent oil leakage.

- Install the dowel pins ④ to the front and rear cylinder heads.

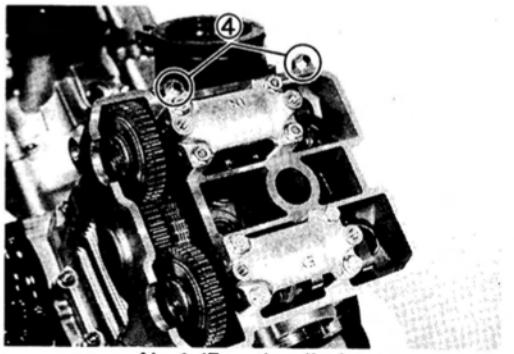

No.1 (Front) cylinder

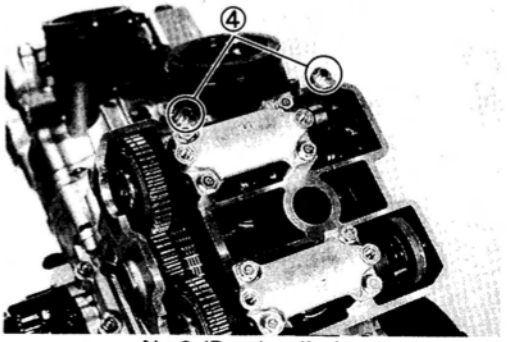

No.2 (Rear) cylinder

- Place the cylinder head covers on each cylinder head.
- Fit the gaskets to each head cover bolt.

⚠ CAUTION

Use the new gaskets to prevent oil leakage.

- After applying engine oil to the gaskets, tighten the head cover bolts to the specified torque.

Head cover bolt: 14 N·m (1.4 kg-m, 10.0 lb-ft)

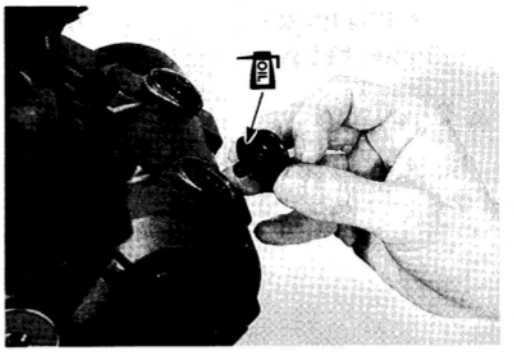

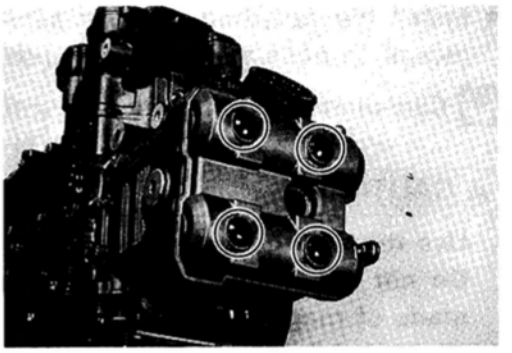

- Install the exhaust pipe ① with the gasket and tighten its bolts to the specified torque.

Exhaust pipe bolt: 23 N·m (2.3 kg-m, 16.5 lb-ft)

⚠ CAUTION

Use the new gasket to prevent gas leakage.

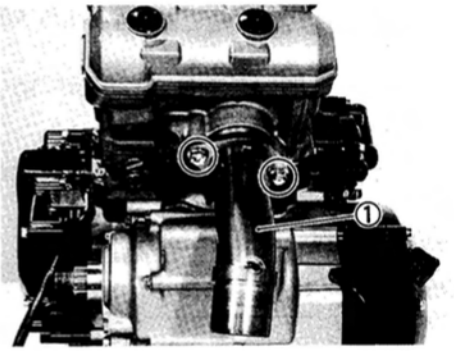

- Tighten the valve timing inspection plug ② and the generator cover plug ③ to the specified torque.

Valve timing inspection plug: 23 N·m (2.3 kg-m, 16.5 lb-ft)

Generator cover plug: 15 N·m (1.5 kg-m, 11.0 lb-ft)

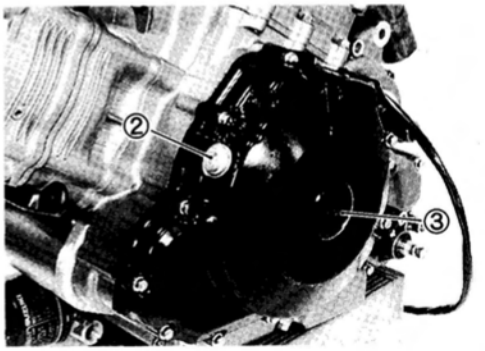

- Install the new O-rings to the water union and apply grease to them.

99000-25030: SUZUKI SUPER GREASE "A"

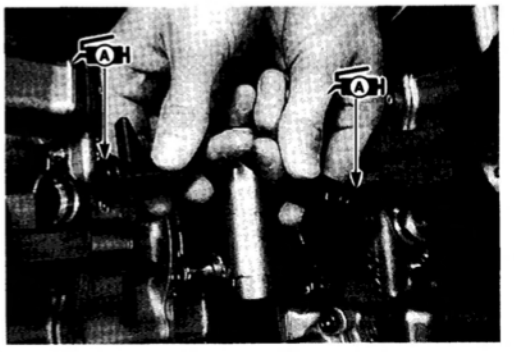

- Tighten the water union bolts securely.

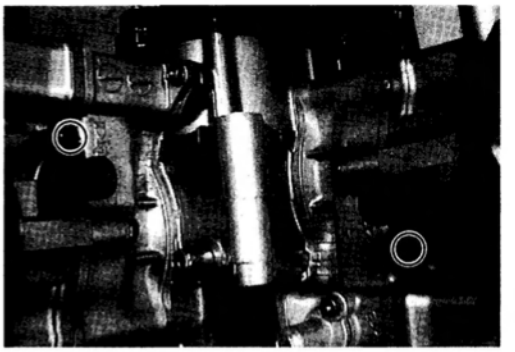

- Install the thermostat case with the water hoses and tighten the clamp screws securely.

NOTE:
The clamp screw heads must be faced to the left side.

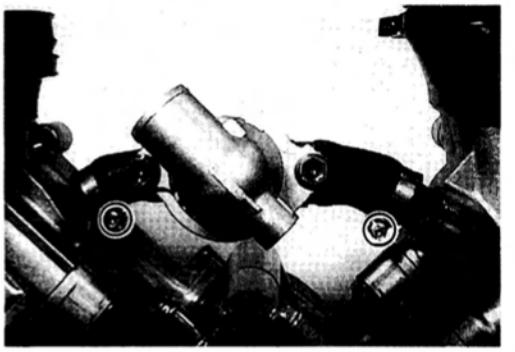

- Install the crankcase breather hose ①.

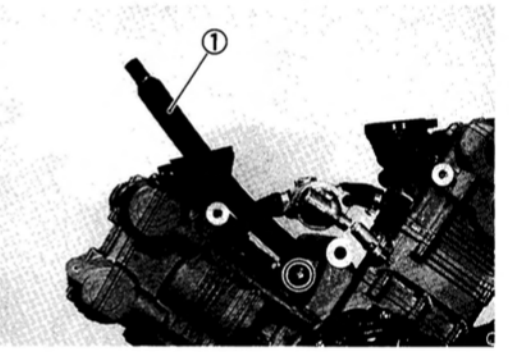

- Install the spark plugs to each cylinder head by finger tight, and then tighten them to the specified torque. (Refer to page 2-5.)

Spark plug: 11 N·m (1.1 kg-m, 8.0 lb-ft)

⚠ CAUTION

Before using a spark plug wrench, carefully turn the spark plug by finger into the threads of the cylinder head to prevent the aluminum threads from damage.

CAMSHAFT/CYLINDER HEAD

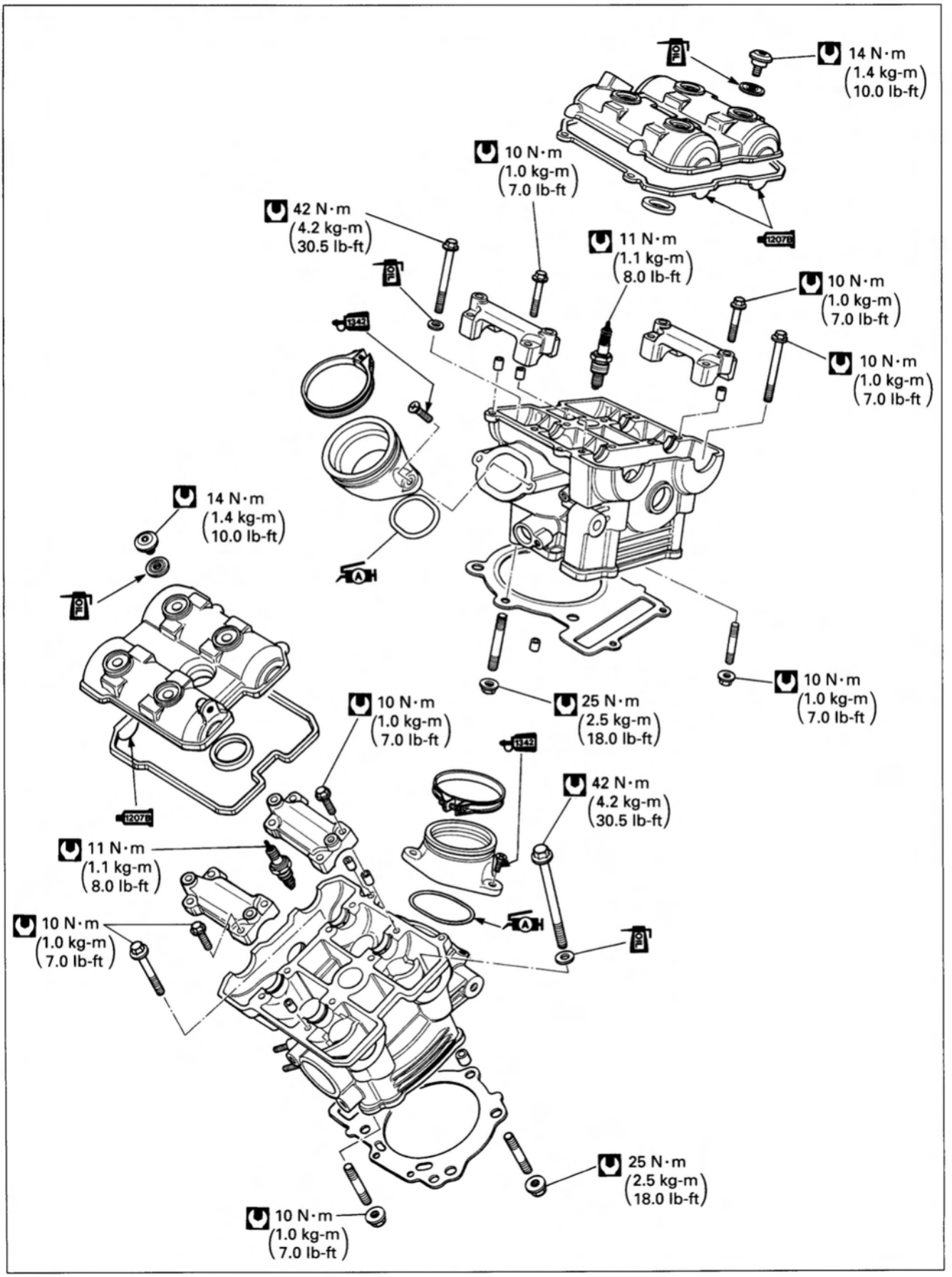

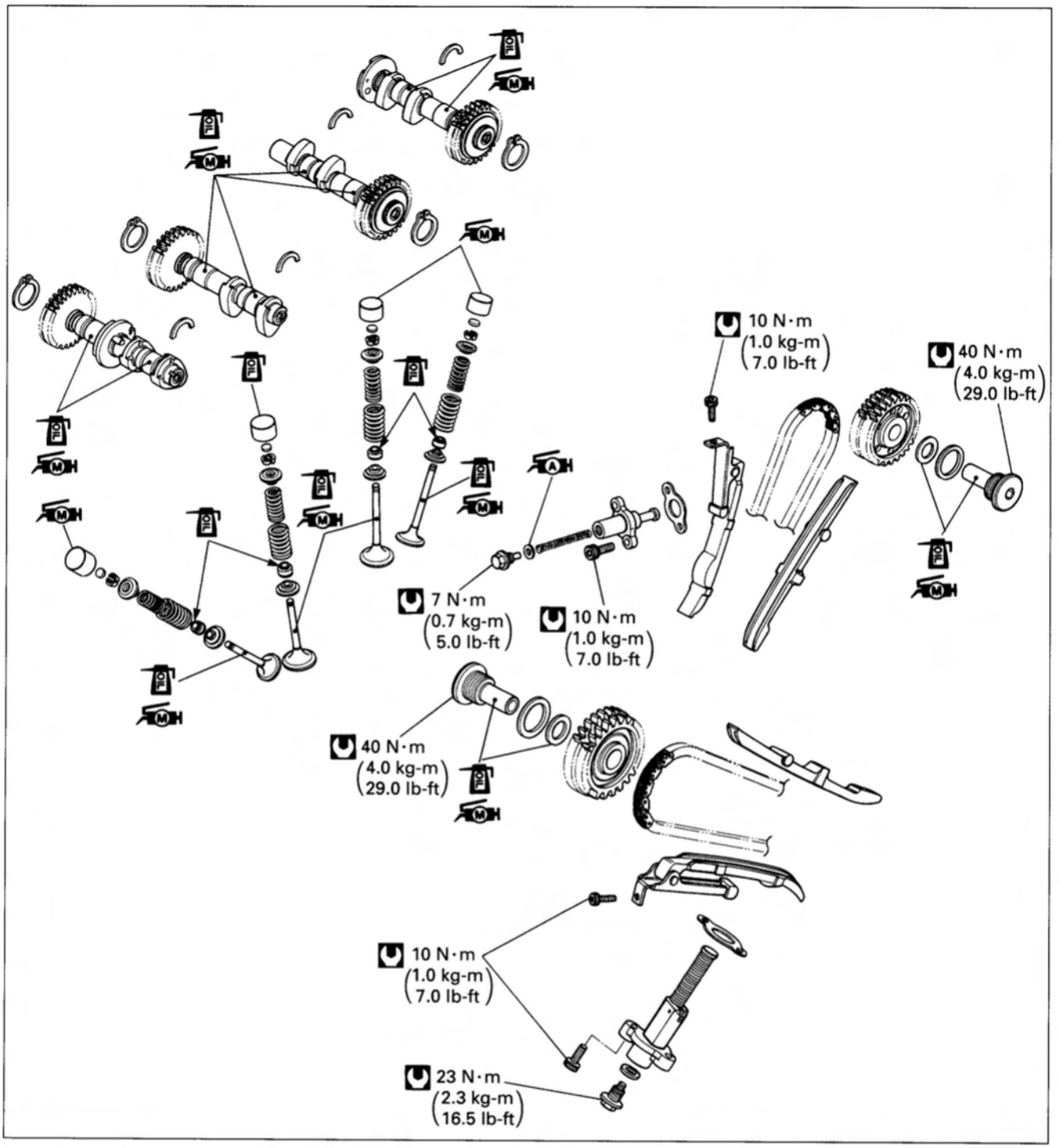

3A

CONTENTS

CAM DRIVE SYSTEM DESCRIPTION 3A- 1
CAMSHAFT REMOVAL 3A- 6
CYLINDER HEAD REMOVAL 3A- 8
CAMSHAFT/CYLINDER HEAD INSPECTION AND SERVICE 3A-15
CYLINDER HEAD INSTALLATION 3A-27
CAMSHAFT INSTALLATION 3A-34

CAM DRIVE SYSTEM DESCRIPTION

The TL1000SV cam drive system consists of the crankshaft, the primary drive gear, the No.1 cam drive idle gear/sprocket, the No.1 cam drive idle gear shaft/sprocket, the cam chains, the No.2 cam drive idle gears/sprockets and the camshafts.

This system allows the cam drive gear diameter is much smaller than a conventional cam drive sprocket system. And the cam drive gears are smaller so that overall cylinder height can be reduced. The primary drive gear and the cam drive gears use scissors gears to eliminate backlash and reduce mechanical noise.

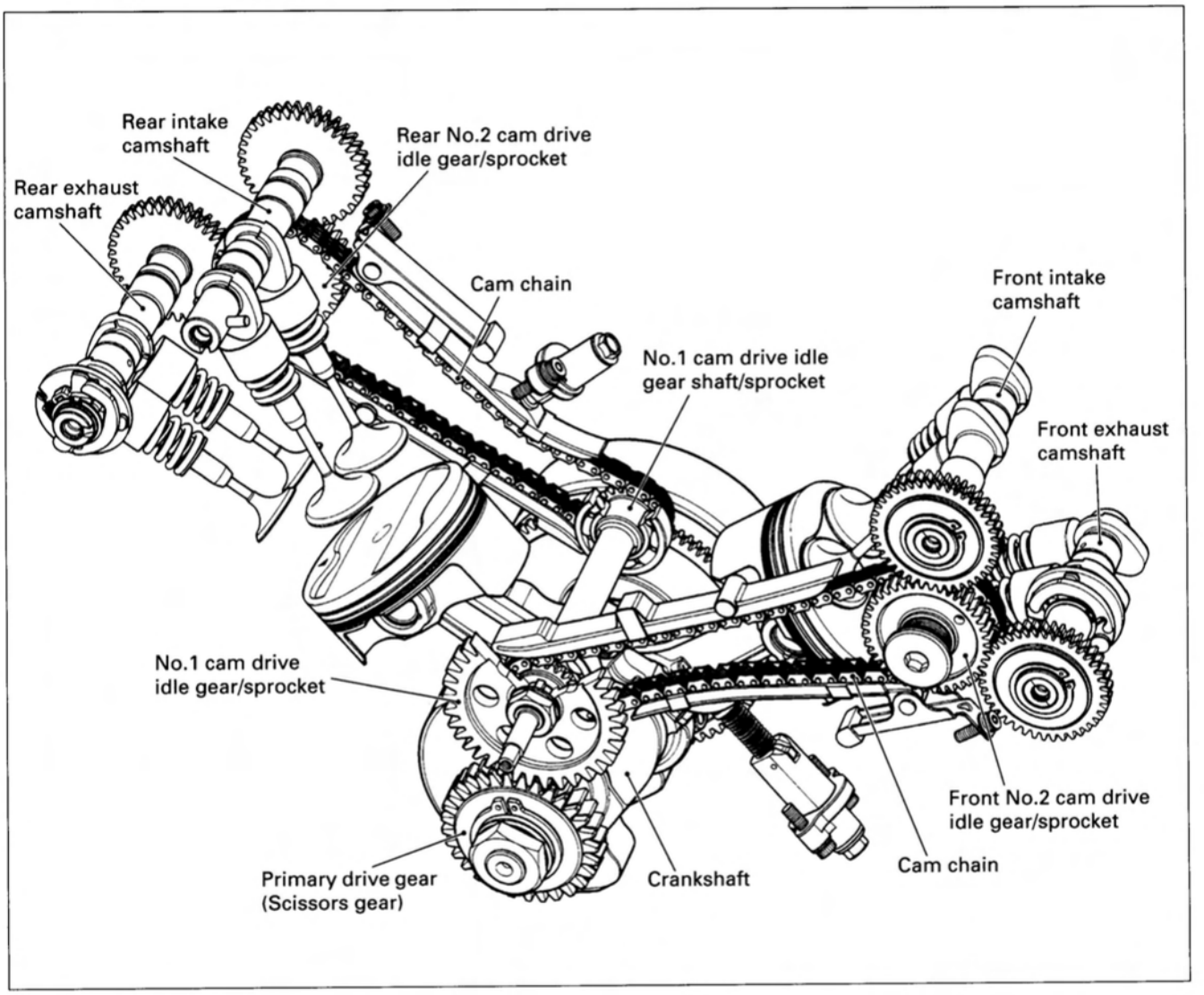

In this system, the angular position of the sprocket teeth on the No.1 cam drive idle gear/sprocket relative to the primary drive gear varies between the compression and the exhaust top dead centers.

The illustration below shows the positions of both the primary drive gear and the No.1 cam drive idle gear/sprocket when the front cylinder is at each of the two top dead centers. The difference between the compression and the exhaust top dead centers is in the position of the No.1 cam drive idle gear/sprocket. While the meshing teeth on the No.1 cam drive idle gear continuously change as crankshaft turns each rotation because of the number of gear teeth being slightly different between the primary drive gear and the No.1 cam drive idle gear/sprocket, the sprocket teeth will take either of the two positions relative to the primary drive gear as shown in the illustration below. Each of these two positions occurs alternately in every crankshaft rotation.

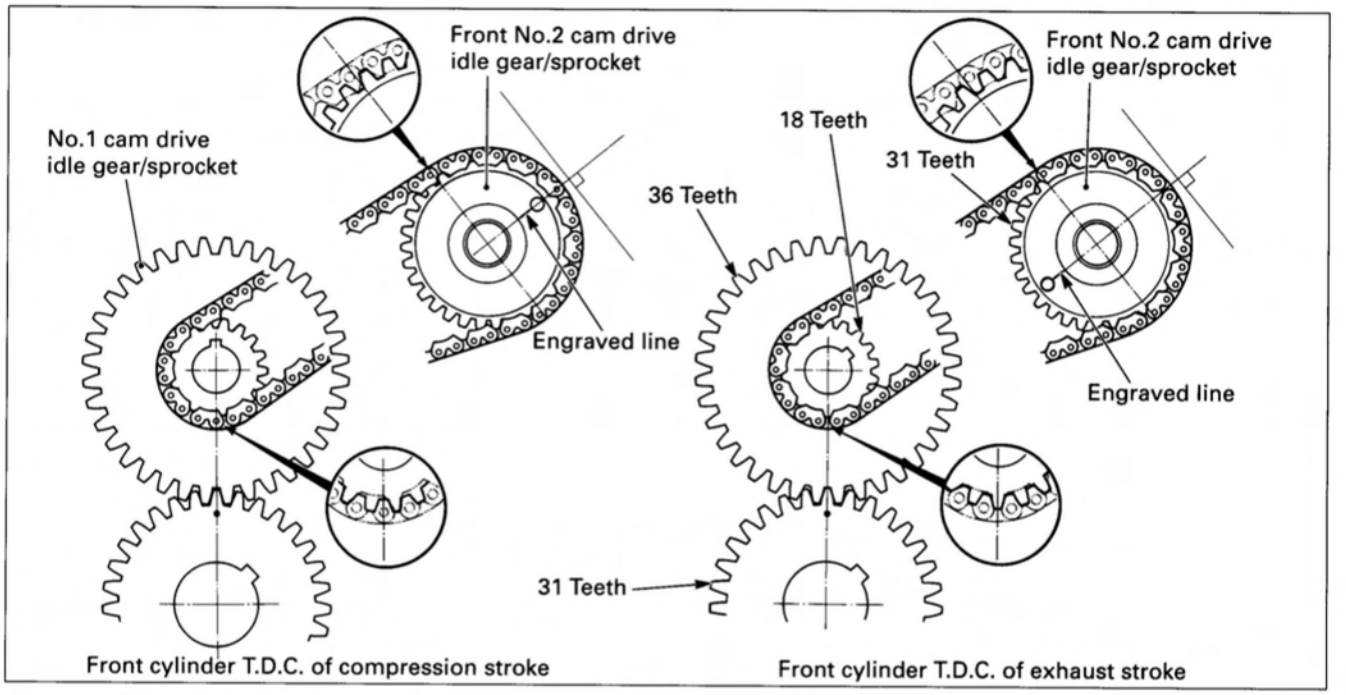

The two top dead centers, one on compression stroke and the other on exhaust stroke, can be each identified by the position of punched mark on the No.1 cam drive idle gear/sprocket relative to the punched mark on the primary drive gear. They can be also inspected by the position of the engraved line as well as a hole on the No.2 cam drive idle gear/sprocket. If the engraved line is pointing perpendicularly to the cylinder head cover mating surface, the front cylinder is at the compression top dead center. If the engraved line is pointing the opposite direction, the front cylinder is at the exhaust top dead center.

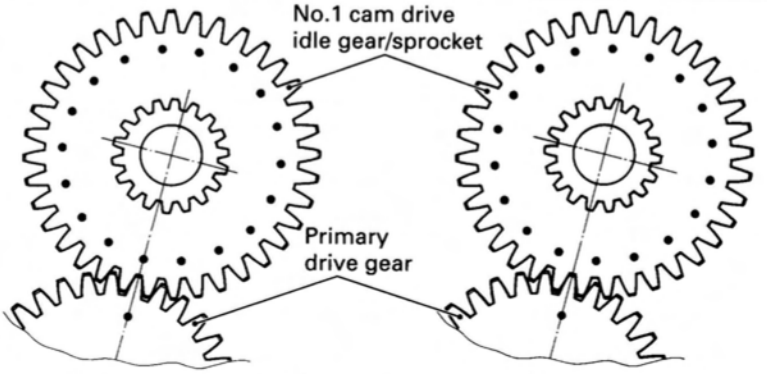

NOTE:
In the actual No.1 cam drive idle gear/sprocket, only one punched mark exists. This punched mark should be located in either of the illustrated two positions appropriate for the respective top dead centers.

When reassembling the engine, both the No.1 and the No.2 cam drive idle gears/sprockets should be positioned at their top dead centers. Wrong assembly such as positioning the No.2 cam drive idle gear/sprocket at the compression top dead center with the No.1 cam drive idle gear/sprocket in the position designated for exhaust top dead center will cause the cam chain pin to be located off the specified position. This will also bring the engraved line off the direction perpendicular to the cylinder head cover mating surface resulting in an improper cam timing. Therefore, care must be used in this assembly.

PRECAUTIONS OF INSTALLATION

No.2 cam drive idle gear/sprocket

- When installing either the front or the rear No.2 cam drive idle gear/sprocket, the front cylinder must be at TDC of compression stroke.
- If the relative position between the primary drive gear and the No.1 cam drive idle gear/sprocket can not be checked because the clutch cover remains installed on the engine, attempt to assemble the No.2 cam drive idle gear/sprocket temporarily so that the engraved line points perpendicularly to the cylinder head cover mating surface accurately with the crankshaft at the top dead center. If the line is accurately perpendicular, assemble the gear/sprocket in that position and if not accurate, turn the crankshaft another 360 degrees (1 turn) and try assembly again. (Refer to pages 3-64, -65 and -66.)

Front camshaft

- When installing the front camshafts, intake and exhaust, the front cylinder must be at TDC of compression stroke.

Rear camshaft

- When installing the rear camshafts, intake and exhaust, the front cylinder must be at TDC of exhaust stroke.

CAM TIMING DIAGRAM

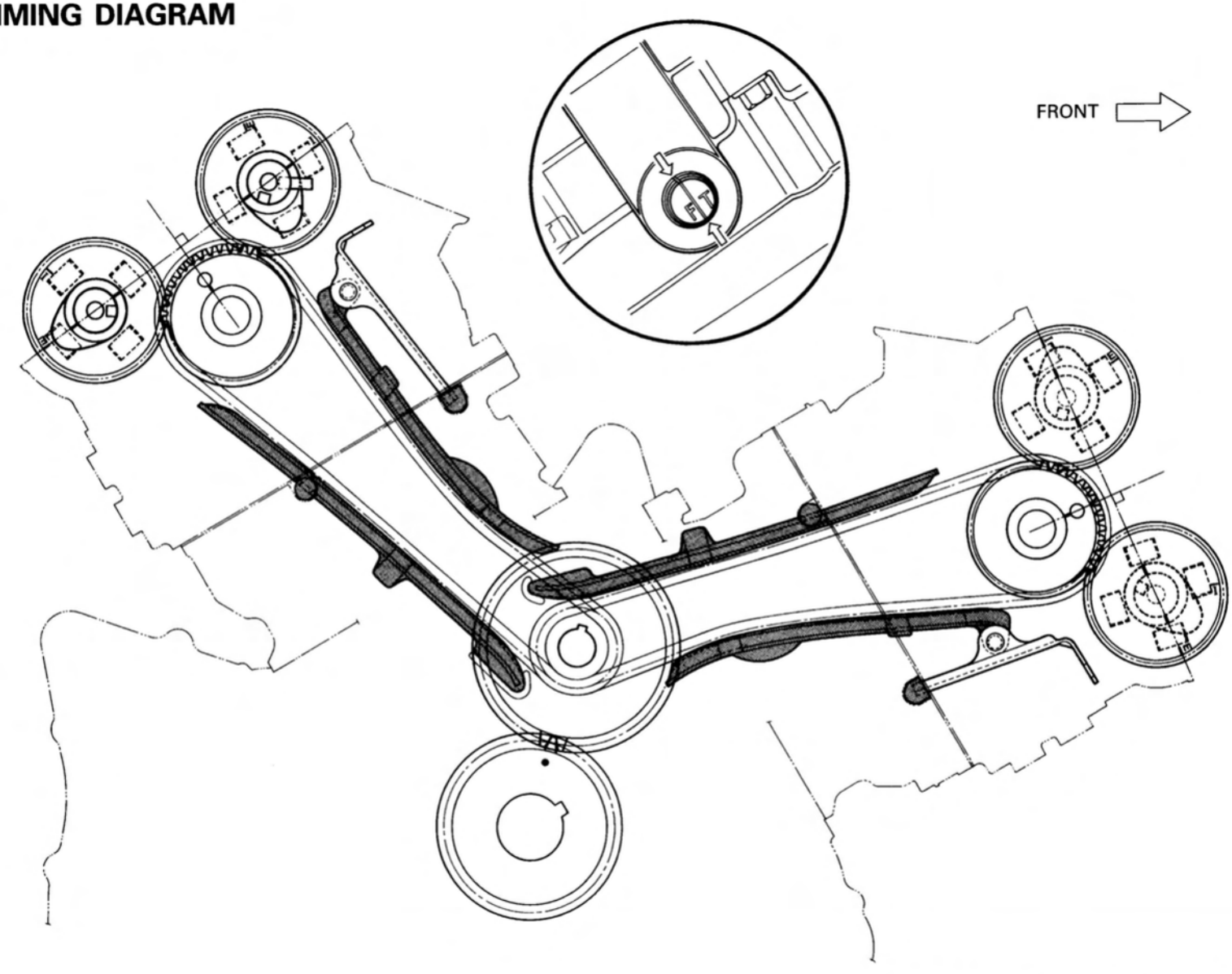

Front cylinder TDC of compression stroke

CAM TIMING TABLE

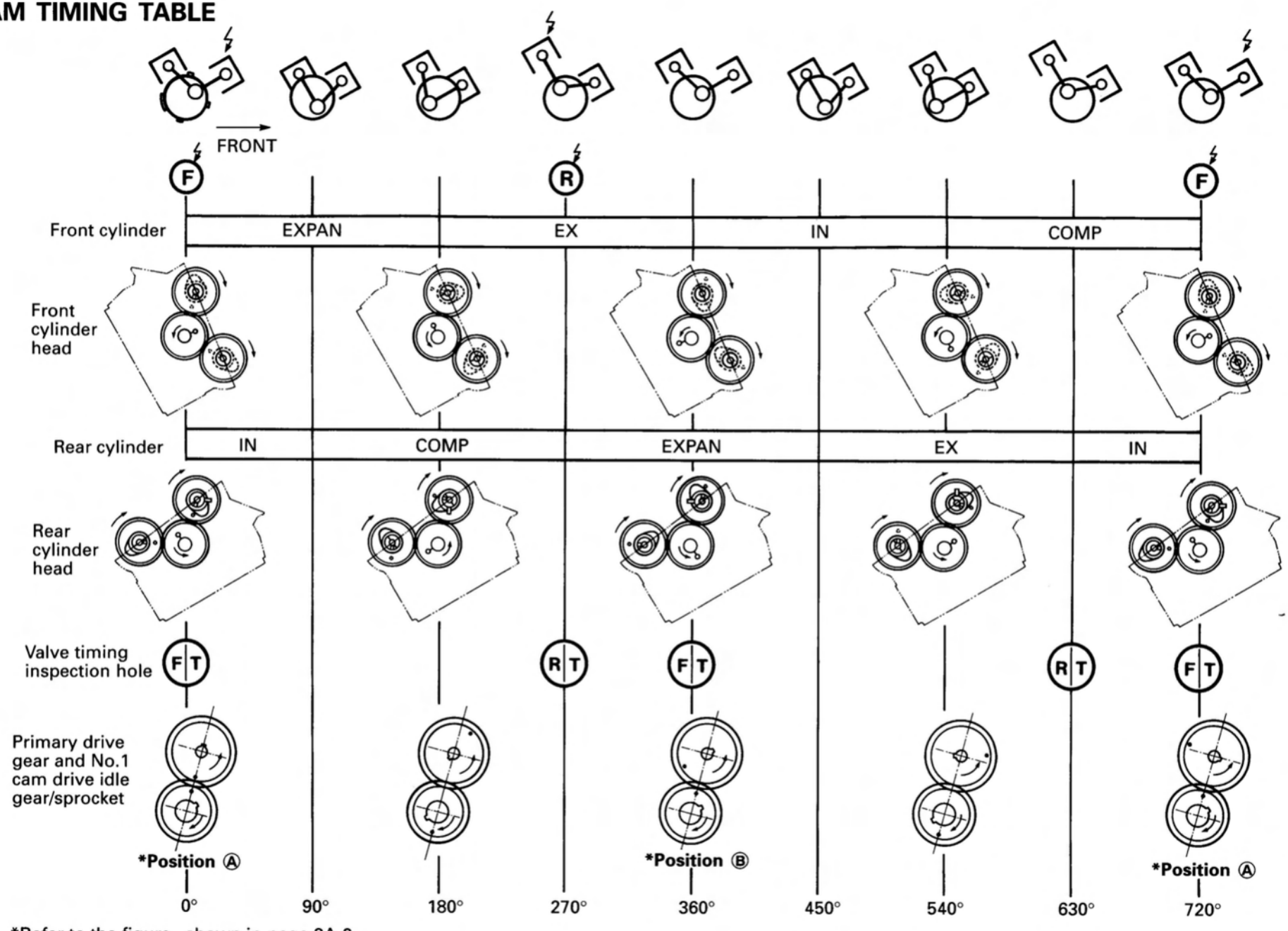

*Refer to the figure shown in page 3A-2.

CAMSHAFT REMOVAL

NO.1 (FRONT) CAMSHAFT

The following component parts must be removed in the described order before removing the No.1 (Front) camshafts.

NOTE:
Refer to the following pages for the details of each step.

Remove:

- Spark plug (See page 2-4.)
- Cylinder head cover (See page 3-19.)



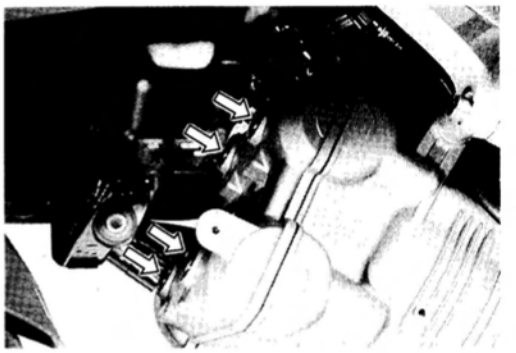

- Valve timing inspection plug
- Generator cover plug (See page 3-19.)

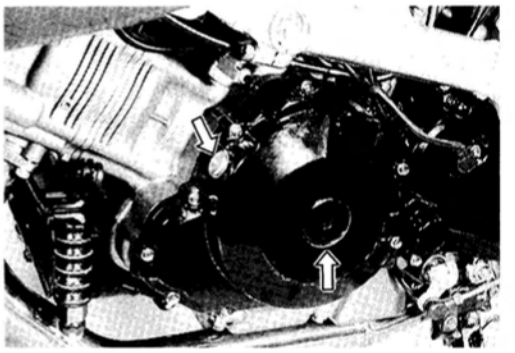

- Camshaft journal holders (See page 3-19.)

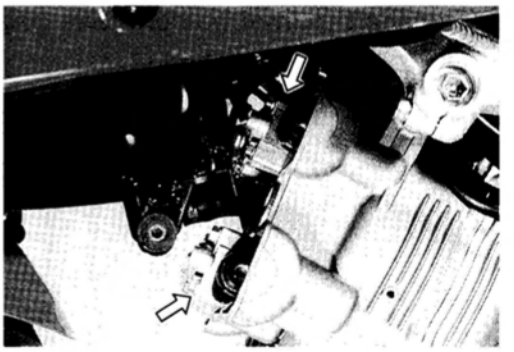

- Intake camshaft
- Exhaust camshaft (See page 3-20.)

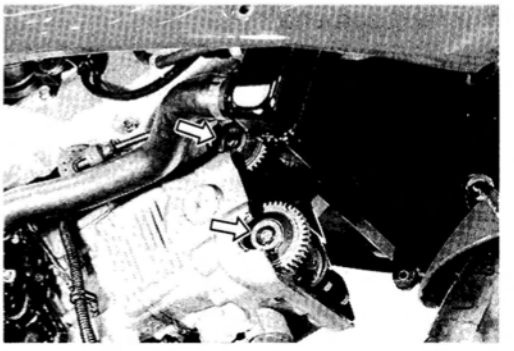

NO.2 (REAR) CAMSHAFT

The following component parts must be removed in the described order before removing the No.2 (Rear) camshafts.

NOTE:
Refer to the following pages for the details of each step.

Remove:

- Spark plug (See page 2-4.)

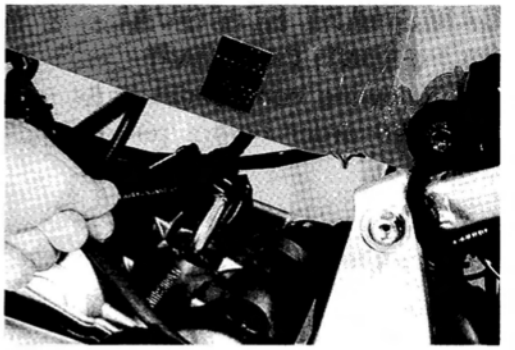

- Cylinder head cover (See page 3-22.)

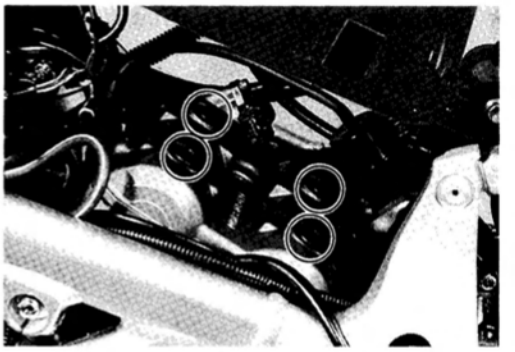

- Valve timing inspection plug
- Generator cover plug (See page 3-19.)

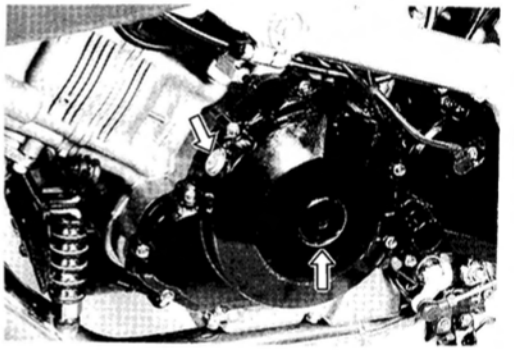

- Camshaft journal holders (See page 3-22.)

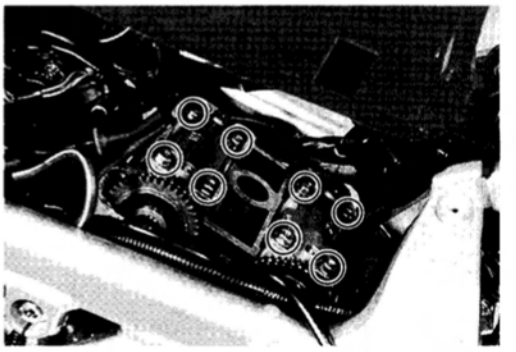

- Intake camshaft
- Exhaust camshaft (See page 3-23.)

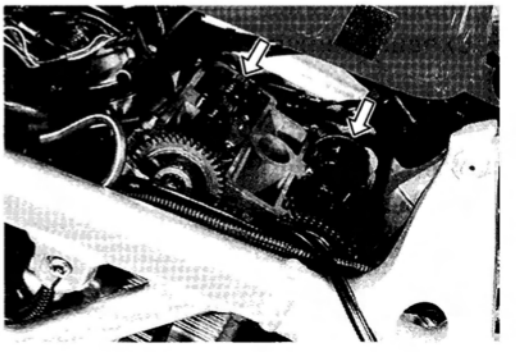

CYLINDER HEAD REMOVAL

NO.1 (FRONT) CYLINDER HEAD

After draining engine oil and engine coolant, the following component parts must be removed in the described order before removing the No.1 (Front) cylinder head.

NOTE:
Refer to the following pages for the details of each step.

Drain:
- Engine oil (See page 2-11.)
- Engine coolant (See page 2-15.)

Remove:
- Front seat (See page 6-4.)
- Fuel tank (See pages 4-49 and -50.)
- Upper fairing (See pages 6-1 and -2.)

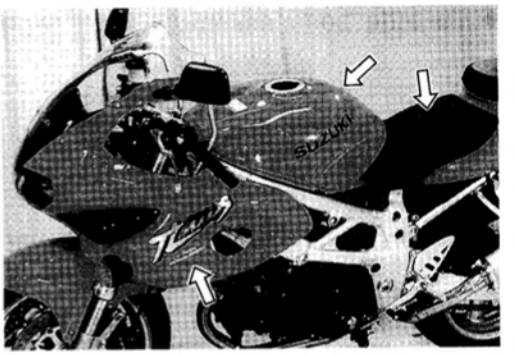

- Air cleaner box (See page 3-3.)



- Radiator (See page 3-3.)

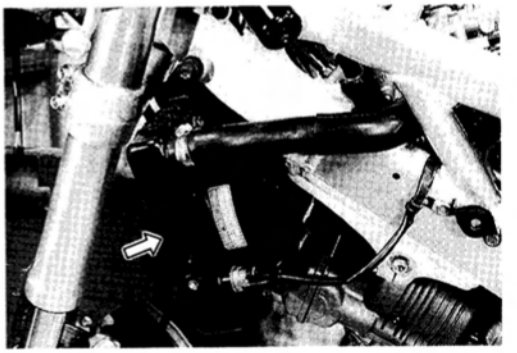

- Exhaust pipe/Muffler (See page 3-4.)

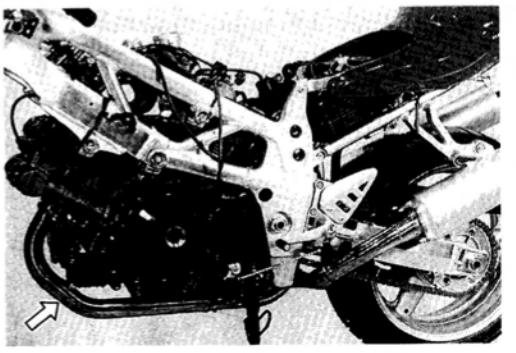

- Oil cooler (See page 3-6.)

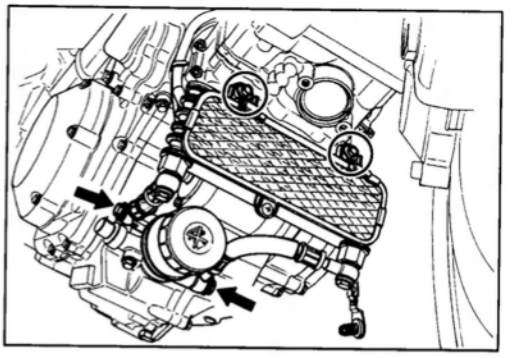

- Throttle body assembly (See page 3-7.)

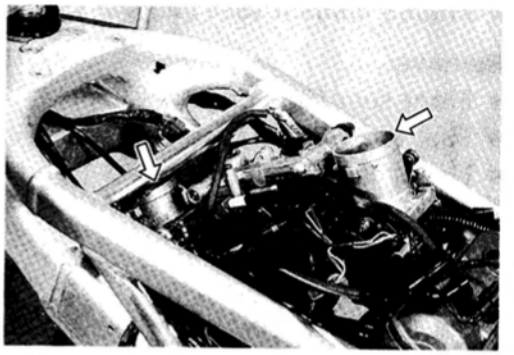

- Air cleaner duct (See page 3-8.)



- Thermostat case (See page 3-18.)

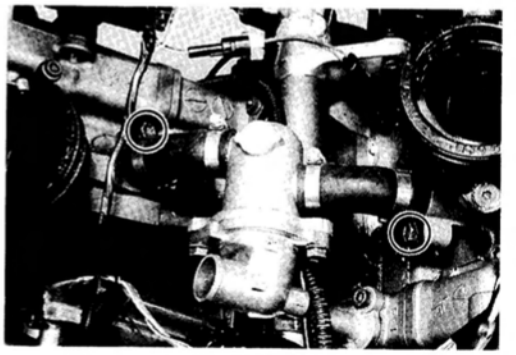

- Front cylinder head mounting bolts (See page 3-10.)

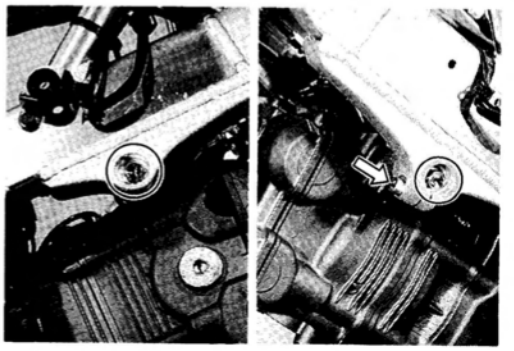

- Spark plug (See page 2-4.)
- Cylinder head cover (See page 3-19.)

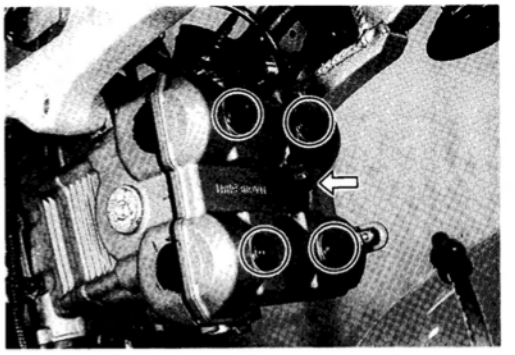

- Valve timing inspection plug
- Generator cover plug (See page 3-19.)

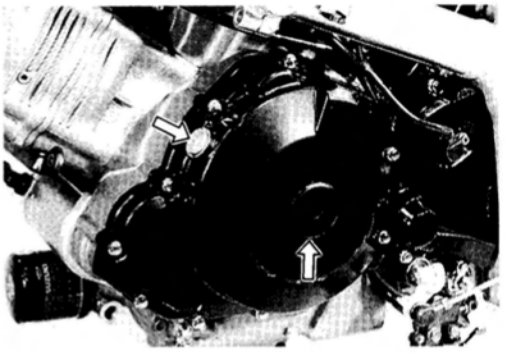

- Camshaft journal holders (See page 3-19.)

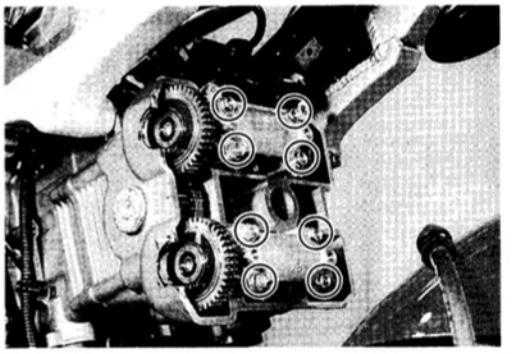

- Camshafts
- Dowel pins
- C-rings (See page 3-20.)

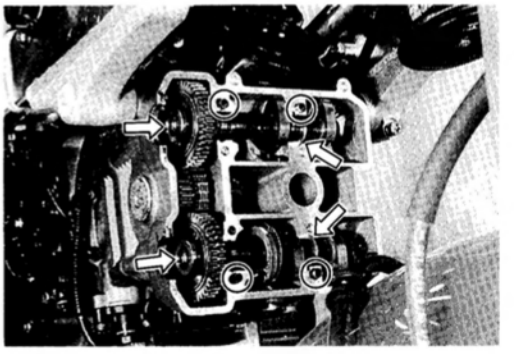

- Cam chain tension adjuster (See page 3-20.)

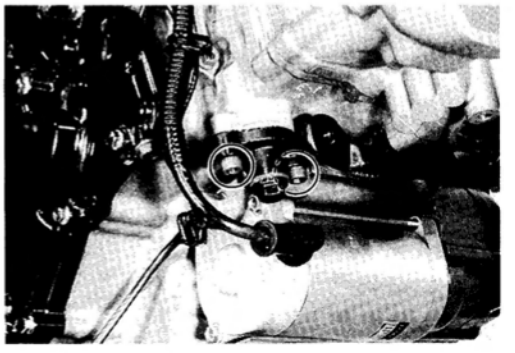

- No.2 cam drive idle gear/sprocket (See page 3-20.)

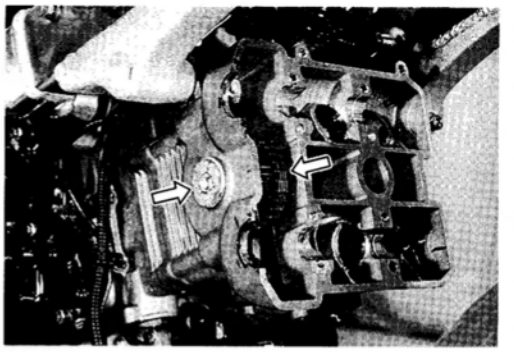

- Cam chain tensioner (See page 3-20.)

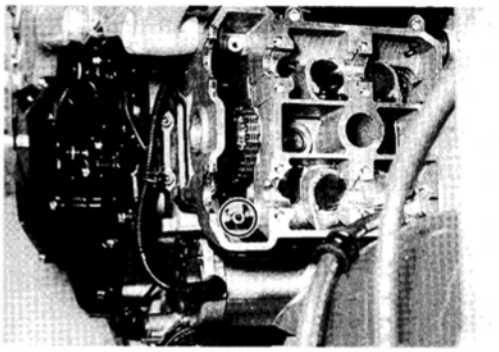

- Oil cooler mounting bracket
- Cylinder head (See pages 3-20 and -21.)

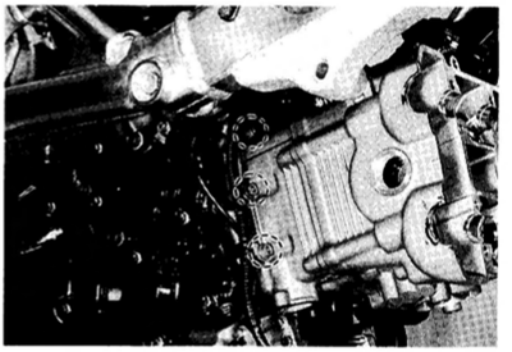

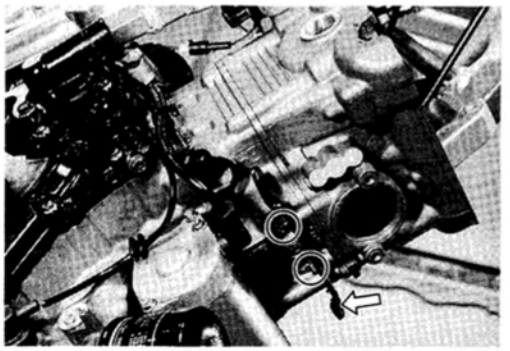

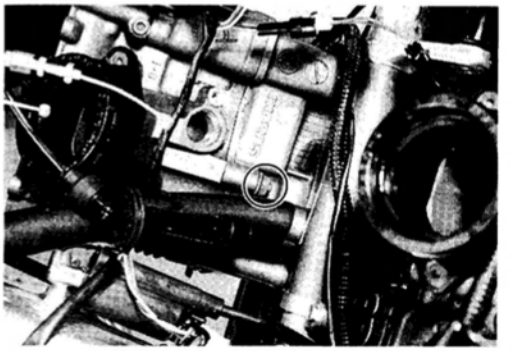

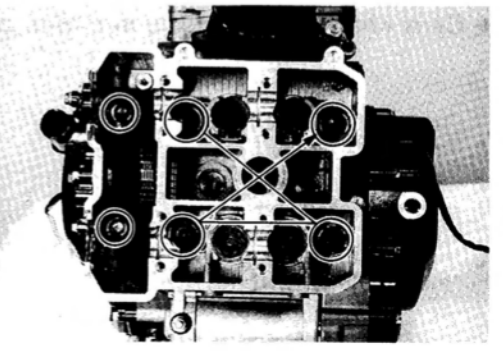

NO.2 (REAR) CYLINDER HEAD

The No.2 cylinder head can be removed while holding the engine assembly with a proper engine jack as shown. To make above condition, refer to the engine removal section.

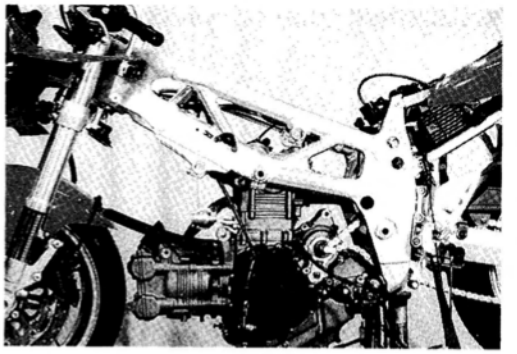

ENGINE REMOVAL ..... See pages 3-2 through -10.

The following component parts must be removed in the described order before removing the No.2 (Rear) cylinder head.

NOTE:
Refer to the following pages for the details of each step.

Remove:

- Side-stand bracket

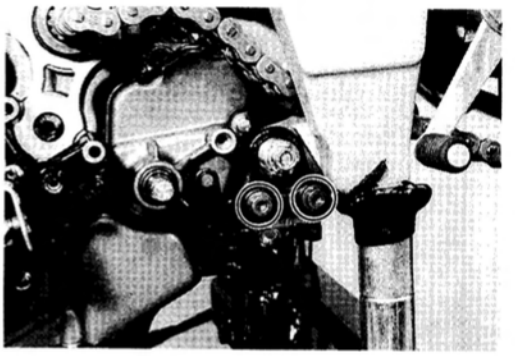

- Thermostat case (See page 3-18.)

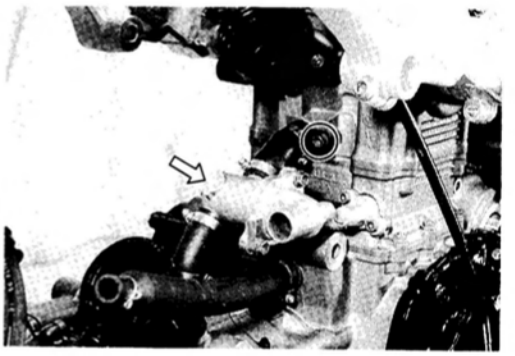

- Spark plug (See page 2-4.)
- Cylinder head cover (See page 3-22.)

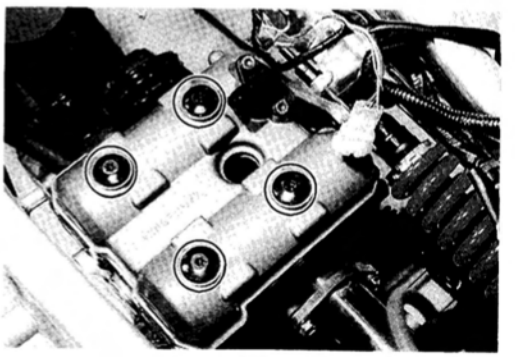

- Valve timing inspection plug
- Generator cover plug (See page 3-19.)

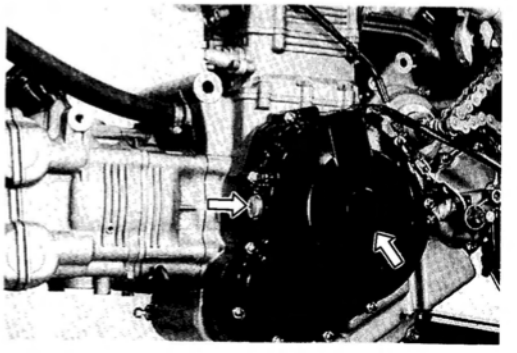

- Camshaft journal holders (See page 3-22.)

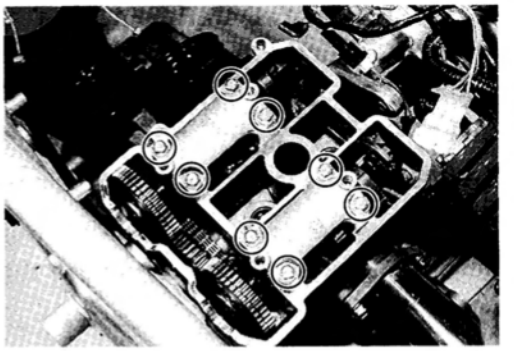

- Camshafts
- Dowel pins
- C-rings (See page 3-23.)

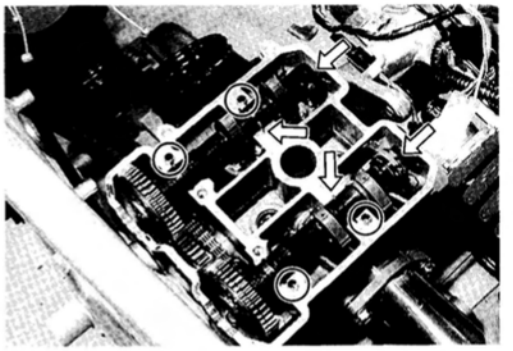

- Cam chain tension adjuster (See page 3-23.)

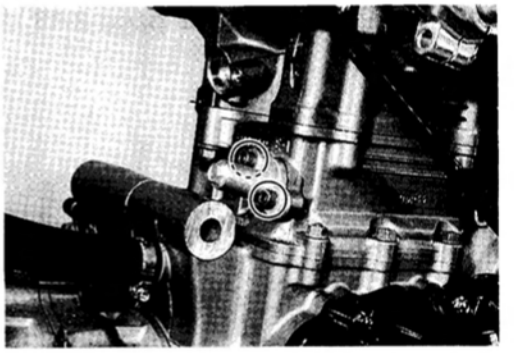

- No.2 cam drive idle gear/sprocket (See page 3-23.)

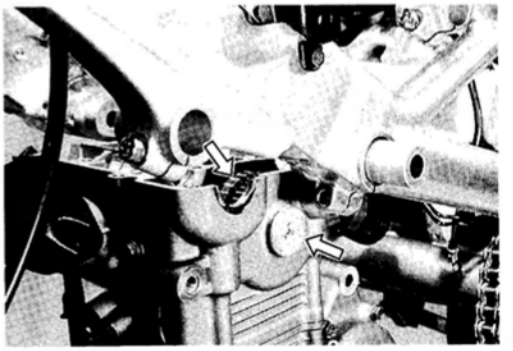

- Cam chain tensioner (See page 3-24.)

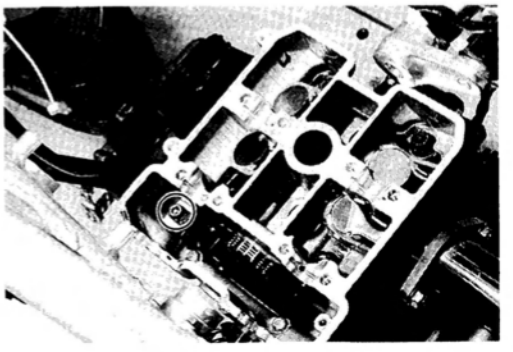

- Cylinder head (See page 3-24.)

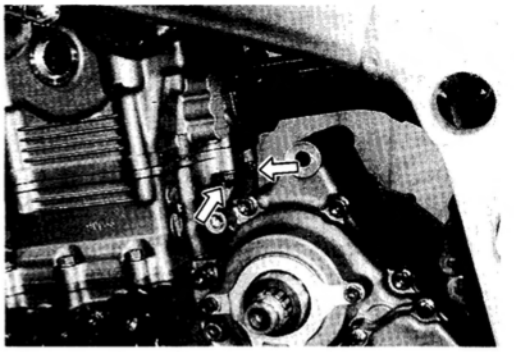

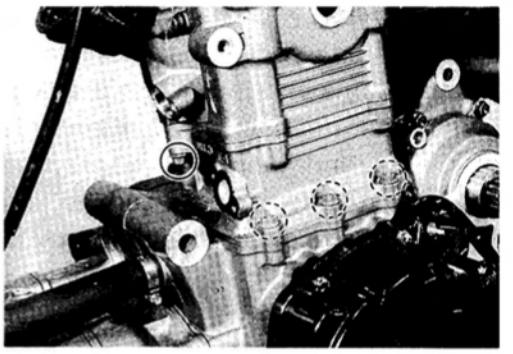

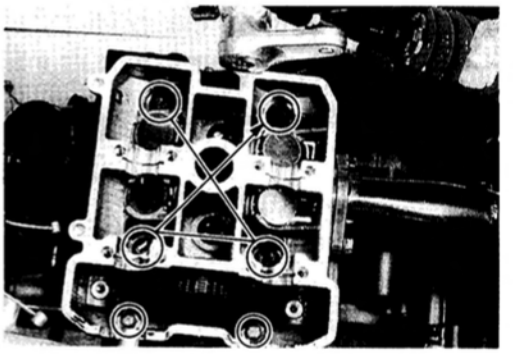

CAMSHAFT/CYLINDER HEAD INSPECTION AND SERVICE

⚠ CAUTION

Be sure to identify each removed part as to its location, and lay the parts out in groups designated as "No.1", "No.2", "Exhaust", "Inlet", so that each will be restored to the original location during assembly.

CAMSHAFT

All camshafts should be checked for runout and also for wear of cams and journals if the engine has been noted as giving abnormal noise, vibration or lack power output. Any of these conditions may be caused by camshafts worn down or distorted to the service limit.
The camshafts can be identified by the engraved letter and the shape.

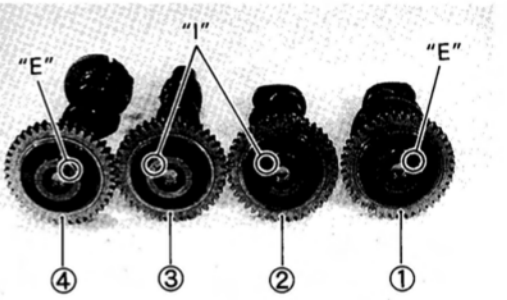

① No.1 (Front) exhaust camshaft ("E": Exhaust)
② No.1 (Front) intake camshaft ("I": Intake)
③ No.2 (Rear) intake camshaft ("I": Intake)
④ No.2 (Rear) exhaust camshaft ("E": Exhaust)

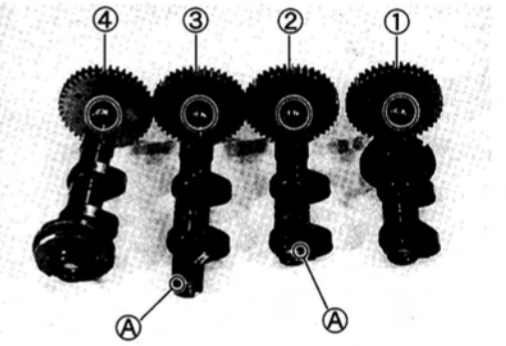

The stamped code Ⓐ on the intake camshafts shows the country.

Country	Stamped
France	Ⓐ
Other countries	no stamped

CAM WEAR

Worn-down cams are often the cause of mistimed valve operation resulting in reduced power output.
The limit of cam wear is specified for both intake and exhaust cams in terms of cam height Ⓗ, which is to be measured with a micrometer. Replace camshaft if it wears worn down to the limit.

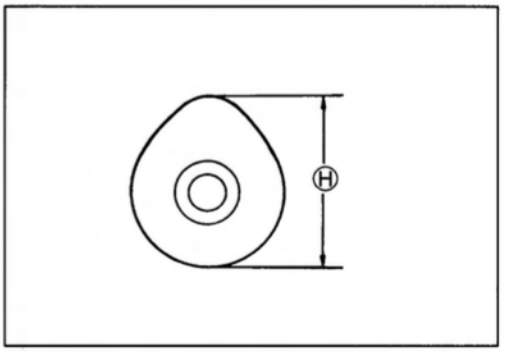

TOOL 09900-20202: Micrometer (25–50 mm)

Service Limit
Cam height Ⓗ

Country	Intake cams	Exhaust cams
E04	34.47 mm (1.357 in)	36.08 mm (1.420 in)
Others	37.47 mm (1.475 in)	36.08 mm (1.420 in)

CAMSHAFT JOURNAL WEAR

Determine whether or not each journal is worn down to the limit by measuring the oil clearance with the camshaft installed in place. Use the plastigauge ① to read the clearance at the widest portion, which is specified as follows:

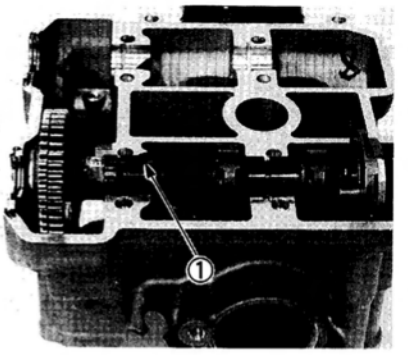

Service Limit
Camshaft journal oil clearance (IN & EX):
0.150 mm (0.0059 in)

09900-22301: Plastigauge
09900-22302: Plastigauge

NOTE:
Install camshaft journal holder to their original positions. (pages 3-71 through -74.)

Tighten the camshaft journal holder bolts evenly and diagonally to the specified torque.

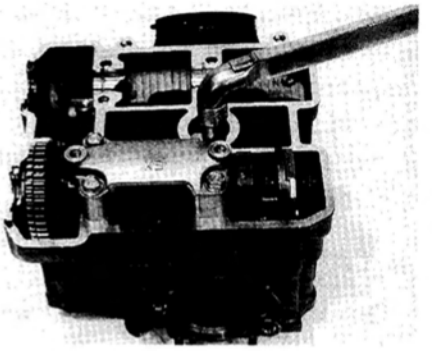

Camshaft journal holder bolt:
10 N·m (1.0 kg-m, 7.0 lb-ft)

NOTE:
Do not rotate the camshaft with the plastigauge in place.

Remove the camshaft holders, and read the width of the compressed plastigauge with envelope scale. This measurement should be taken at the widest part.

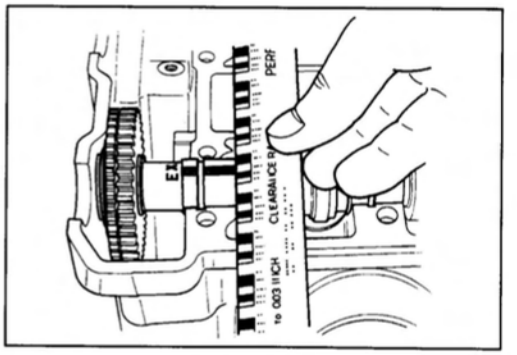

If the camshaft journal oil clearance measured exceeds the limit, measure the inside diameter of the camshaft journal holder and outside diameter of the camshaft journal. Replace the camshaft or the cylinder head depending upon which one exceeds the specification.

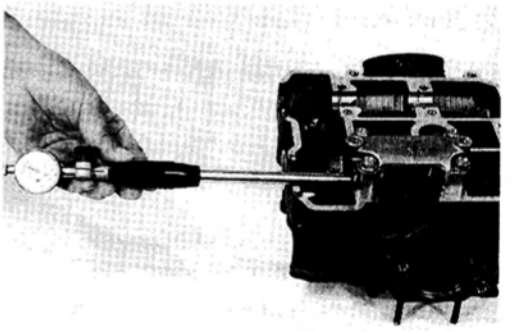

Standard
Journal holder I.D. (IN & EX): 22.012–22.025 mm
(0.8666–0.8671 in)

09900-20602: Dial gauge (1/1000, 1 mm)
09900-22403: Small bore gauge (18–35 mm)

Standard
Camshaft journal O.D. (IN & EX): 21.972–21.993 mm
(0.8650–0.8659 in)

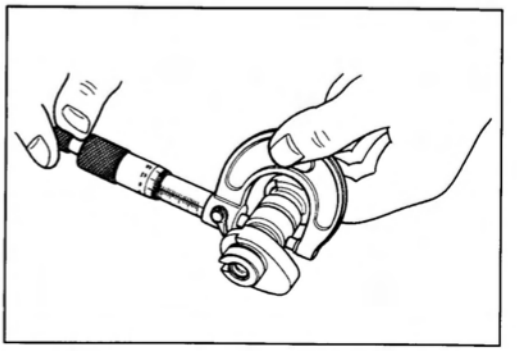

09900-20205: Micrometer (0–25 mm)

CAMSHAFT RUNOUT

Measure the runout with a dial gauge. Replace the camshaft if the runout exceeds the limit.

Service Limit
Camshaft runout (IN & EX): 0.1 mm (0.004 in)

09900-20606: Dial gauge (1/100 mm, 10 mm)
09900-20701: Magnetic stand
09900-21304: V-block (100 mm)

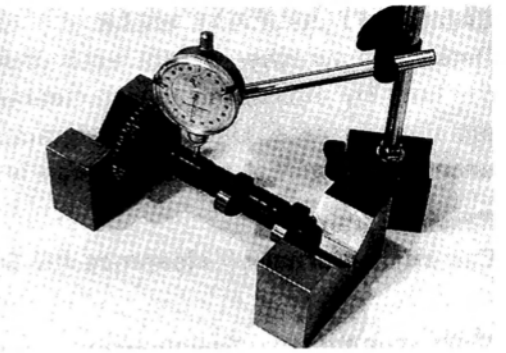

CAM GEAR AND AUTOMATIC-DECOMP.

Inspect the cam gear teeth for wear and damage.
Inspect the automatic-decomp. for damage and smooth operation.
If there are unusual, replace the camshaft assembly and cam chain as a set.

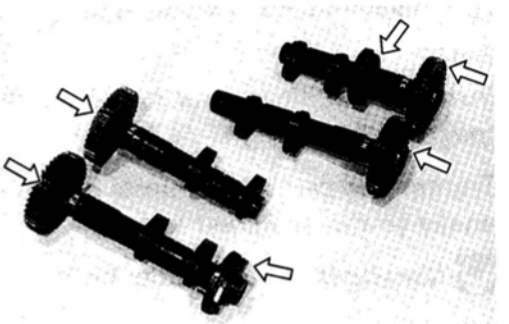

⚠ CAUTION

Do not attempt to disassemble the cam gears and automatic-decomp. assembly. They are unserviceable.

CAM CHAIN TENSION ADJUSTER

The cam chain tension adjusters are maintained at the proper cam chain tension automatically.
Unlock the ratchet Ⓐ, and move the push rod Ⓑ in place to see if it slides smoothly. If any stickiness is noted or ratchet mechanism is faulty, replace the cam chain tension adjuster assembly with a new one.

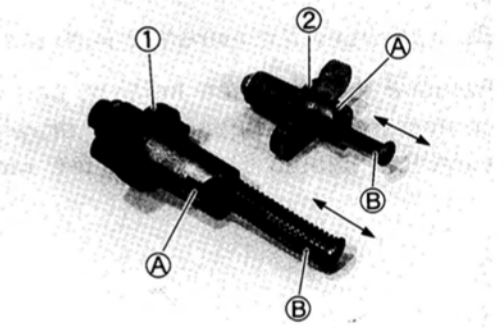

① Front cam chain tension adjuster
② Rear cam chain tension adjuster

CAM CHAIN GUIDE AND CAM CHAIN TENSIONER

Check the cam chain guide and tensioner for wear and damage. If they are found to be damaged, replace them with the new ones.

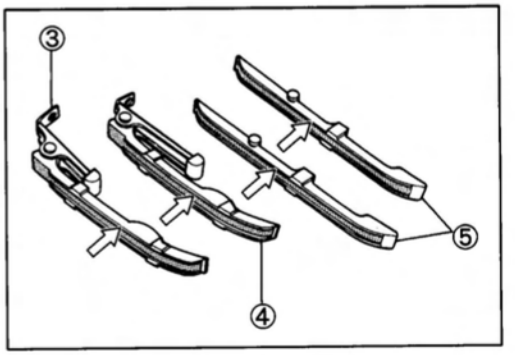

③ Front cam chain tensioner
④ Rear cam chain tensioner
⑤ Front and Rear cam chain guide

CYLINDER HEAD

- Remove the tappets and shims ① by fingers or magnetic hand.

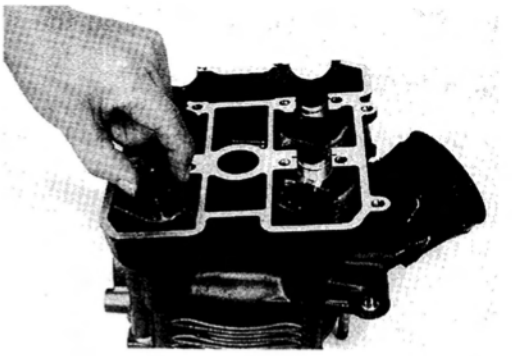

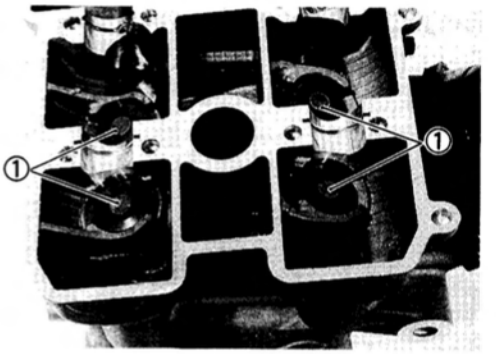

- Using special tools, compress the valve springs and remove the two cotter halves ② from valve stem.

09916-14510: Valve lifter
09916-14910: Valve lifter attachment
09916-84511: Tweezers

- Remove the valve spring retainer ③ and valve springs ④.

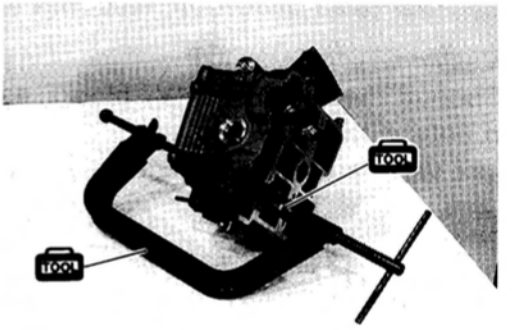

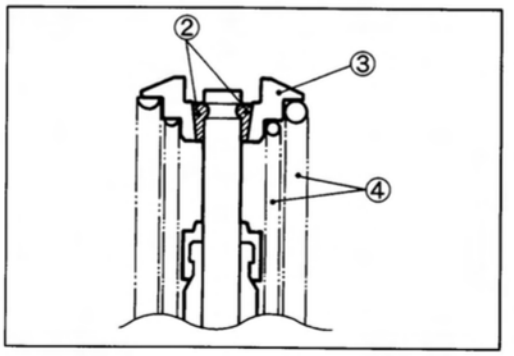

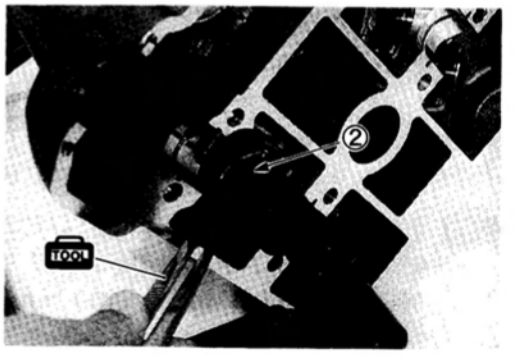

- Pull out the valve from the other side.

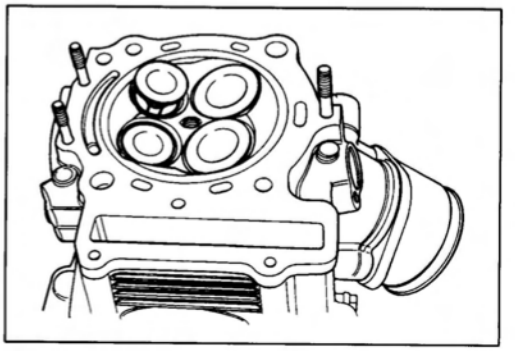

- Remove the oil seals ① and the spring seats ②.

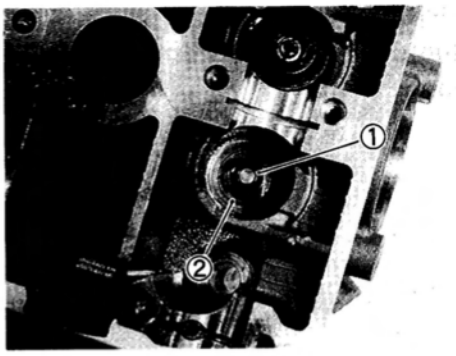

⚠ CAUTION

Do not reuse the removed oil seals.

CYLINDER HEAD DISTORTION

Decarbonize the combustion chambers.
Check the gasketed surface of the cylinder head for distortion with a straightedge and thickness gauge, taking a clearance reading at several places indicated. If the largest reading at any position of the straightedge exceeds the limit, replace the cylinder head.

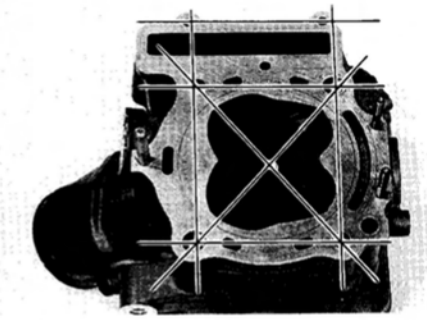

09900-20803: Thickness gauge

Service Limit
Cylinder head distortion: 0.05 mm (0.002 in)

VALVE STEM RUNOUT

Support the valve with "V" blocks, as shown, and check its runout with a dial gauge.
The valve must be replaced if the runout exceeds the limit.

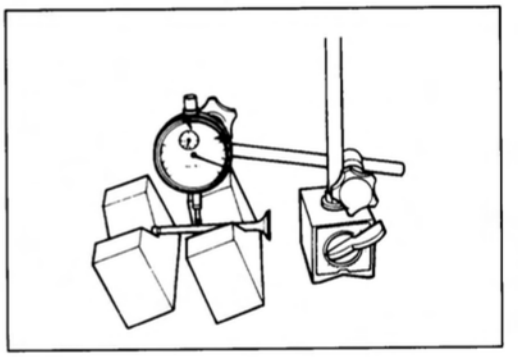

09900-20606: Dial gauge (1/100 mm)
09900-20701: Magnetic stand
09900-21304: V-block (100 mm)

Service Limit
Valve stem runout: 0.05 mm (0.002 in)

VALVE HEAD RADIAL RUNOUT

Place the dial gauge at right angles to the valve head face, and measure the valve head radial runout.
If it measures more than the limit, replace the valve.

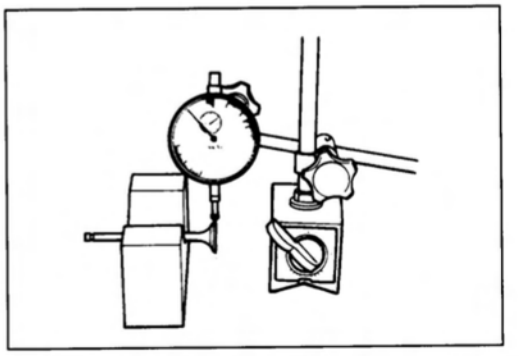

09900-20606: Dial gauge (1/100 mm)
09900-20701: Magnetic stand
09900-21304: V-block (100 mm)

Service Limit: 0.03 mm (0.001 in)

VALVE FACE WEAR

Visually inspect each valve for wear of its seating face. Replace any valve with an abnormally worn face. The thickness Ⓣ decreases as the wear of the face advances.
Measure the thickness and, if the thickness is found to have been reduced to the limit, replace it.

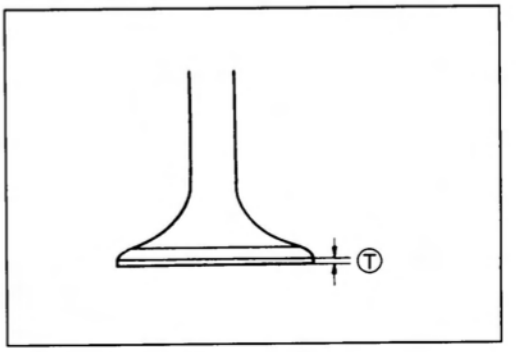

09900-20101: Vernier calipers

Service Limit
Valve head thickness Ⓣ: 0.5 mm (0.02 in)

VALVE STEM DEFLECTION

Lift the valve about 10 mm (0.39 in) from the valve seat. Measure the valve stem deflection in two directions, "X" and "Y", perpendicular to each other, by positioning the dial gauge as shown. If the deflection measured exceeds the limit, (see below) then determine whether the valve or the guide should be replaced with a new one.

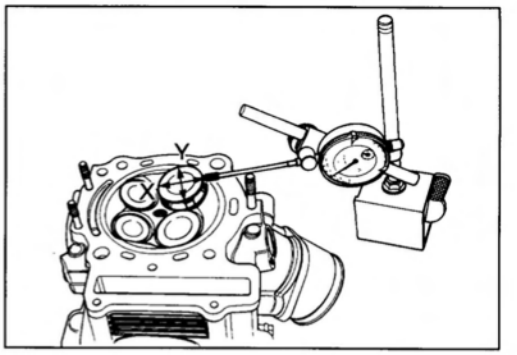

09900-20606: Dial gauge (1/100 mm)
09900-20701: Magnetic stand

Service Limit
Valve stem deflection (IN & EX): 0.35 mm (0.014 in)

VALVE STEM WEAR

If the valve stem is worn down to the limit, as measured with a micrometer, where the clearance is found to be in excess of the limit indicated, replace the valve; if the stem is within the limit, then replace the guide. After replacing valve or guide, be sure to recheck the clearance.

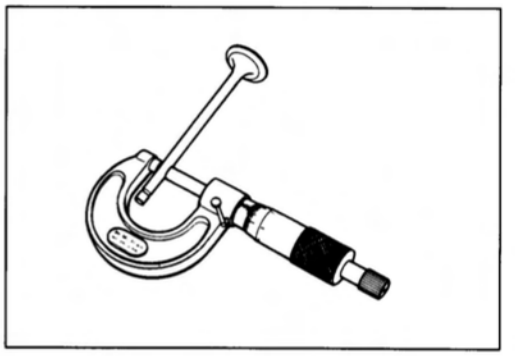

09900-20205: Micrometer (0–25 mm)

Standard
Valve stem O.D (IN) : 5.475–5.490 mm (0.2156–0.2161 in)
(EX) : 5.455–5.470 mm (0.2148–0.2154 in)

NOTE:
If valve guides have to be removed for replacement after inspecting related parts, carry out the steps shown in valve guide servicing.

VALVE GUIDE SERVICING

- Using the valve guide remover, drive the valve guide out toward the intake or exhaust camshaft side.

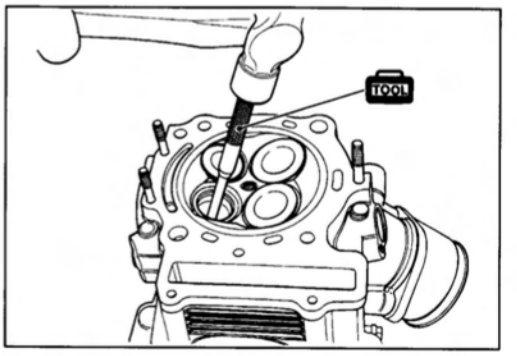

09916-44910: Valve guide remover/installer

NOTE:
* *Discard the removed valve guide subassemblies.*
* *Only oversized valve guides are available as replacement parts. (Part No. 11115-32E70)*

- Re-finish the valve guide holes in cylinder head with the reamer and handle.

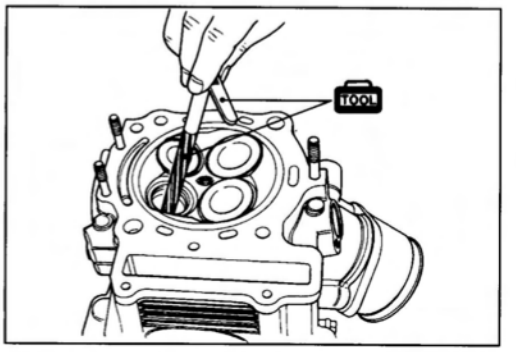

09916-34580: Valve guide reamer
09916-34542: Reamer handle

- Oil the stem hole, too, of each valve guide and drive the guide into the guide hole with the valve guide installer and attachment.

09916-44910: Valve guide remover/installer
09916-53340: Attachment

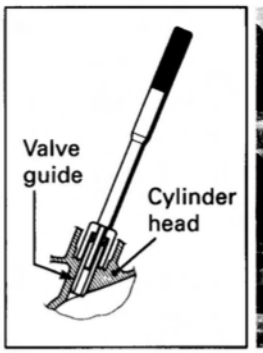



⚠ CAUTION

Failure to oil the valve guide hole before driving the new guide into place may result in a damaged guide or head.

- After fitting the valve guides, re-finish their guiding bores with the reamer. Be sure to clean and oil the guides after reaming.

09916-34550: Valve guide reamer
09916-34542: Reamer handle

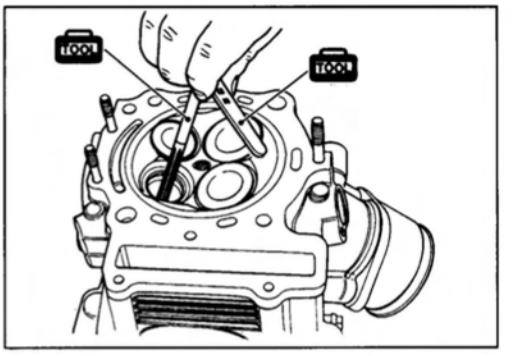

NOTE:
Insert the reamer from the combustion chamber and always turn the reamer handle clockwise.

VALVE SEAT WIDTH

- Coat the valve seat uniformly with Prussian blue. Fit the valve and tap the coated seat with the valve face in a rotating manner, in order to obtain a clear impression of the seating contact. In this operation, use the valve lapper to hold the valve head.
- The ring-like dye impression left on the valve face must be continuous without any break. In addition, the width of the dye ring, which is the visualized seat "width", must be within the following specification:

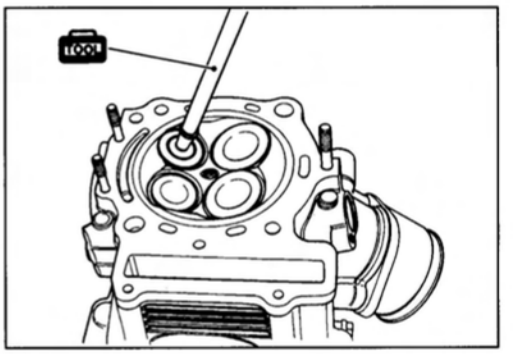

09916-10911: Valve lapper set

Standard
Valve seat width Ⓦ: 0.9–1.1 mm (0.035–0.043 in)

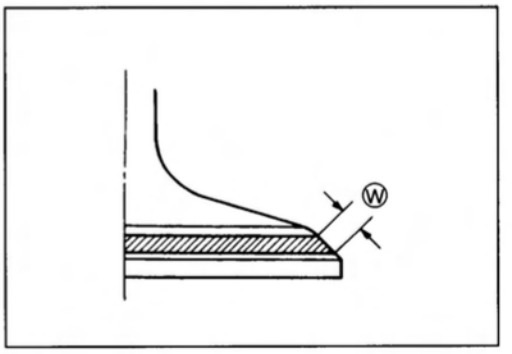

If either requirement is not met, correct the seat by servicing is as follows:

VALVE SEAT SERVICING

The valve seats for both intake and exhaust valves are machined to four different angles. (The seat contact surface is cut 45°.)

	INTAKE	EXHAUST
45°	N-615 or N-626	N-615 or N-626
60°	N-211	N-211
15°		N-615
30°	N-626	

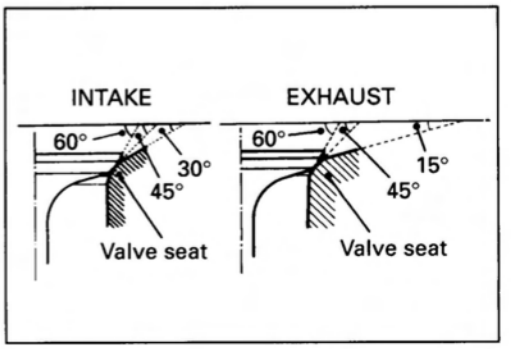

Valve seat cutter: (N-615), (N-211) and (N-626)
Solid pilot: (N-140-5.5)

NOTE:
The valve seat contact area must be inspected after each cut.

09916-24810: Valve seat cutter (N-626)
09916-24480: Solid pilot (N-140-5.5)
09916-21110: Valve seat cutter set

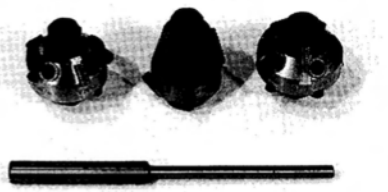

- Insert the solid pilot with a slight rotation. Seat the pilot snugly. Install the 45° cutter, attachment and T-handle.
- Using the 45° cutter, descale and clean up the seat with one or two turns.
- Inspect the seat by the previously described seat width measurement procedure. If the seat is pitted or burned, additional seat conditioning with the 45° cutter is required.

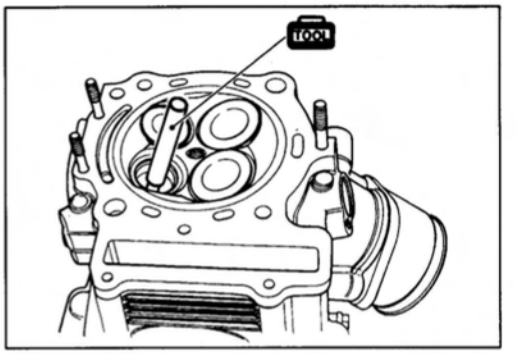

NOTE:
Cut only the minimum amount necessary from the seat to prevent the possibility of the tappet shim replacement.

If the contact area is too high on the valve, or if it is too wide, use the 15°/60° cutters (for exhaust side) and 30°/60° cutters (for intake side) to lower and narrow the contact area.

Contact area too high and too wide on face of valve

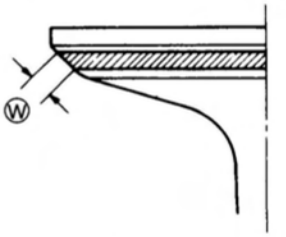

If the contact area is too low or too narrow, use the 45° cutter to raise and widen the contact area.

Contact area too low and too narrow on face of valve

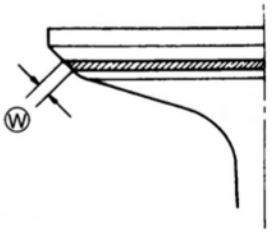

- After the desired seat position and width is achieved, use the 45° cutter very lightly to clean up any burrs caused by the previous cutting operations.

⚠ CAUTION

DO NOT use lapping compound after the final cut is made. The finished valve seat should have a velvety smooth finish and not a highly polished or shiny finish.
This will provide a soft surface for the final seating of the valve which will occur during the first few seconds of engine operation.

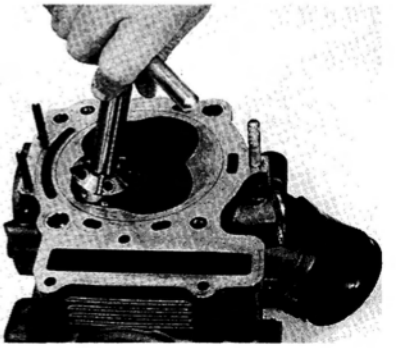

- Clean and assemble the head and valve components. Fill the intake and exhaust ports with gasoline to check for leaks. If any leaks occur, inspect the valve seat and face for burrs or other things that could prevent the valve from sealing.



⚠ WARNING

Always use extreme caution when handling gasoline.

NOTE:
After servicing the valve seats, be sure to check the tappet clearance after the cylinder head has been reinstalled. (See pages 2-6 through -10.)

VALVE SPRING

The force of the coil springs keeps the valve seat tight. Weakened springs result in reduced engine power output, and often account for the chattering noise coming from the valve mechanism.

Check the valve springs for proper strength by measuring their free length and also by the force required to compress them. If the spring length is less than the service limit, or if the force required to compress the spring does not fall within the range specified, replace both the inner and outer springs as a set.

TOOL 09900-20102: Vernier calipers

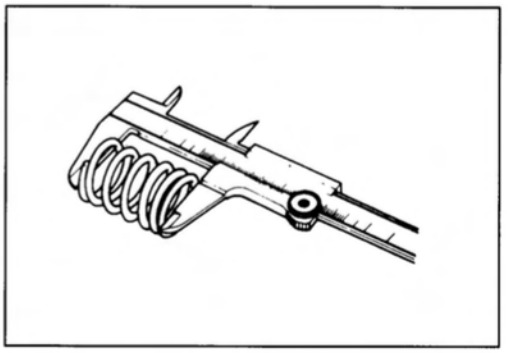

Service limit

Valve spring free length (IN & EX)

INNER : 37.0 mm (1.46 in)
OUTER: 40.7 mm (1.60 in)

Standard

Valve spring tension (IN & EX) INNER : 6.2 kg/33.1 mm (13.7 lbs/1.30 in)
OUTER: 15.4 kg/36.6 mm (33.95 lbs/1.44 in)

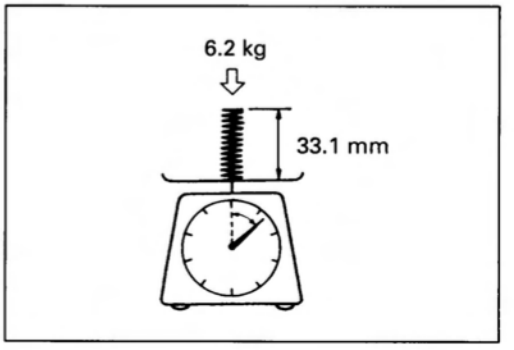

NO.2 CAM DRIVE IDLE GEAR/SPROCKET THRUST CLEARANCE

Install the No.2 cam drive idle gear/sprocket ①, its shaft ②, the copper washer ③ and the thrust washer ④ to each cylinder head. Tighten the shaft ② to the specified torque. Use a thickness gauge to measure the thrust clearance between the cylinder head and the thrust washer ④.

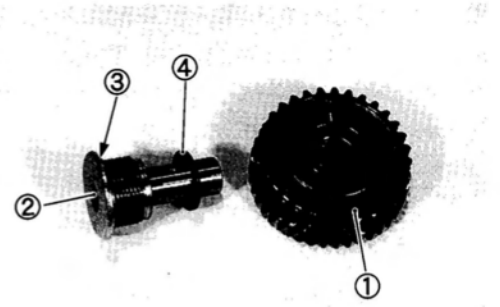

No.2 cam drive idle gear/sprocket shaft:
40 N·m (4.0 kg-m, 29.0 lb-ft)

09900-20803: Thickness gauge

Standard
No.2 cam drive idle gear/sprocket thrust clearance:
0.15–0.29 mm (0.006–0.011)

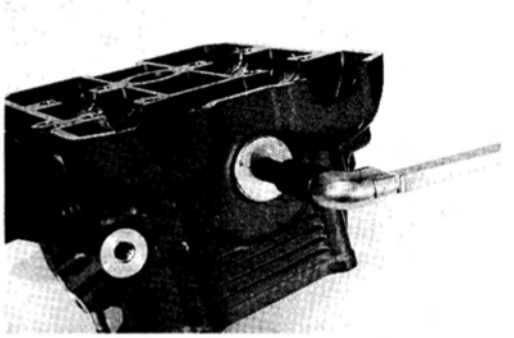

If the thrust clearance exceeds the standard range, adjust the thrust clearance by the following procedures:

- Remove the thrust washer, and measure its thickness with a micrometer.
- Change the thrust washer with the other washer if the thrust clearance is incorrect.
- Perform the thrust clearance measurement described above once again checking to make sure it is within standard.

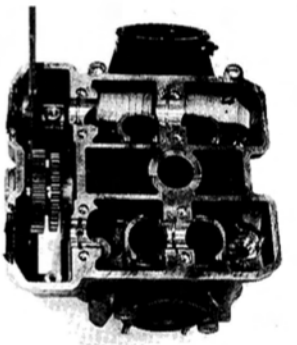

09900-20205: Micrometer (0–25 mm)

Unit: mm (in)

Color/Mark (Part No.)	Thrust washer thickness Ⓐ
Blue (09181–15182)	1.38–1.42 (0.054–0.056)
Yellow (09181–15181)	1.28–1.32 (0.050–0.052)
Light blue (09181–15176)	1.18–1.22 (0.046–0.048)
Light green (09181–15172)	1.08–1.12 (0.043–0.044)
Brown (09181–15166)	0.98–1.02 (0.039–0.040)
"J" mark (09181–15164)	0.88–0.92 (0.035–0.036)



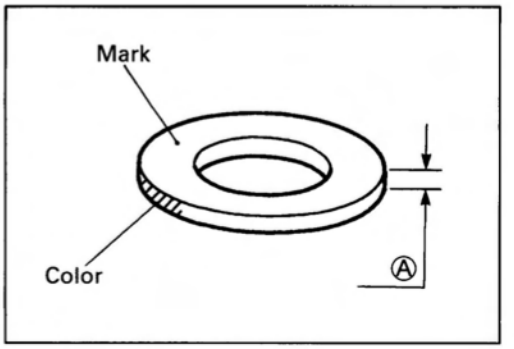

CYLINDER HEAD REASSEMBLY

- Install the valve spring seats.
- Oil each oil seal, and press-fit them into position with the valve guide installer.

09916-44910: Valve guide remover/installer

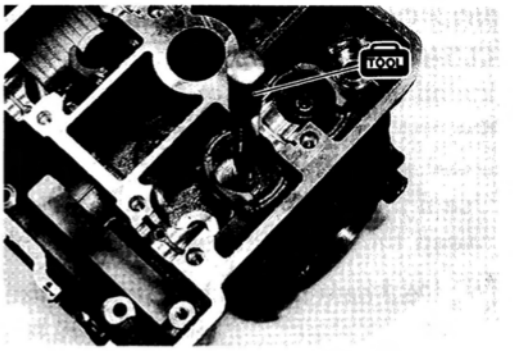

⚠ CAUTION

Do not reuse the removed oil seals.

- Insert the valves, with their stems coated with high quality molybdenum disulfide lubricant (SUZUKI MOLY PASTE) all around and along the full stem length without any break.

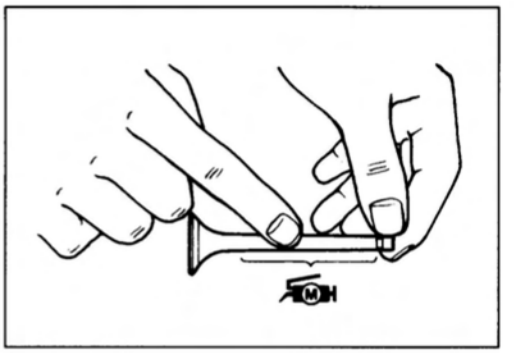

⚠ CAUTION

When inserting each valve, take care not to damage the lip of the oil seal.

99000-25140: SUZUKI MOLY PASTE

- Install the valve springs with the small-pitch portion Ⓐ facing cylinder head.

Ⓑ: Large-pitch portion

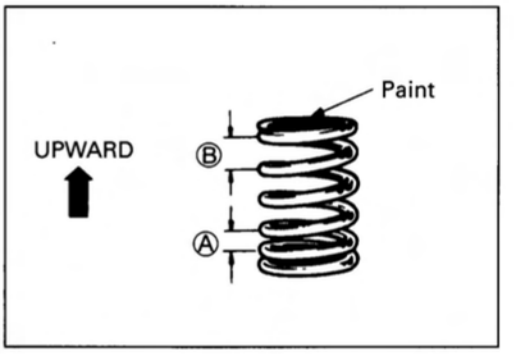

- Put on the valve spring retainer, and using the valve lifter, press down the springs, fit the cotter halves to the stem end, and release the lifter to allow the cotter ① to wedge in between retainer and stem. Be sure that the rounded lip Ⓒ of the cotter fits snugly into the groove Ⓓ in the stem end.

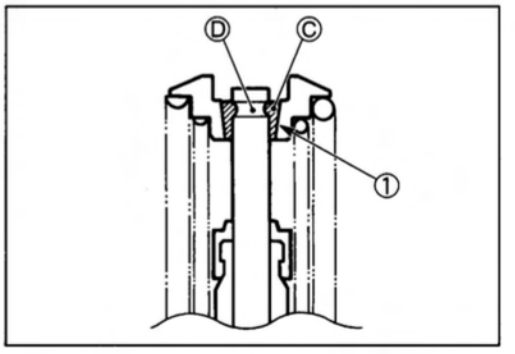

09916-14510: Valve lifter
09916-14910: Valve lifter attachment
09916-84511: Tweezers

⚠ CAUTION

Be sure to restore each spring and valve to their original positions.

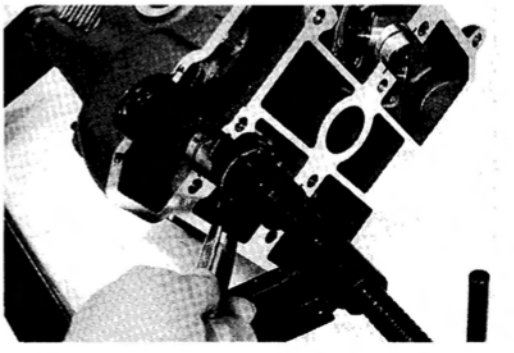

- Install the tappet shim and the tappet to their original position.

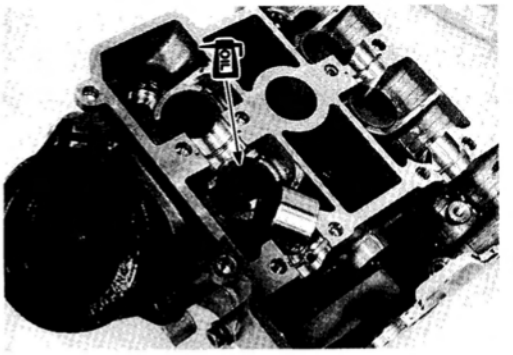

NOTE:
* *Apply engine oil to the shim and tappet before fitting them.*
* *When seating the tappet shim, be sure the figure printed surface faces the tappet.*

INTAKE PIPE

- When installing the intake pipe, apply grease to the O-ring.

99000-25030: SUZUKI SUPER GREASE "A"

- When installing the intake pipe screws, apply a small quantity of THREAD LOCK "1342" to the screws.

99000-32050: THREAD LOCK "1342"

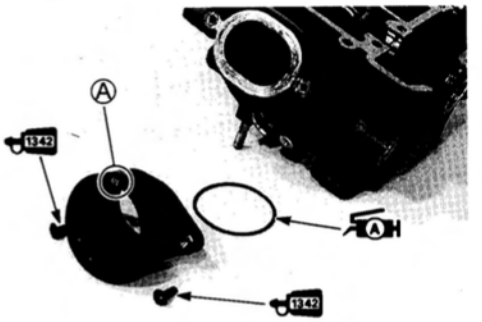

NOTE:
Make sure that the "UP" mark Ⓐ comes upward.

⚠ CAUTION

Use the new O-ring to prevent air from sucking through the joint.

EXHAUST PIPE

- When installing the rear exhaust pipe, tighten its bolts to the specified torque.

Exhaust pipe bolt: 23 N·m (2.3 kg-m, 16.5 lb-ft)

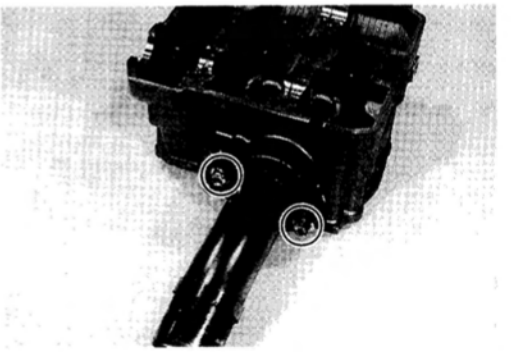

⚠ CAUTION

Use the new gasket to prevent exhaust gas leakage.

CAMSHAFT POSITION SENSOR

- When replacing the camshaft position sensor, tighten its mounting bolt to the specified torque.

Camshaft position sensor mounting bolt: 8 N·m (0.8 kg-m, 6.0 lb-ft)

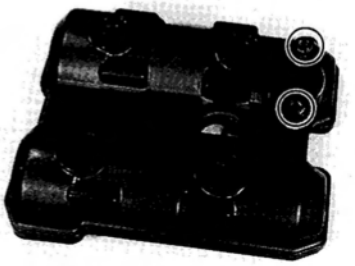

⚠ CAUTION

Use the new seal washer to prevent oil leakage.
Do not over-tighten the bolts, as the head cover is made of magnesium.

CYLINDER HEAD INSTALLATION

NO.1 (FRONT) CYLINDER HEAD

Installation is in the reverse order of removal.

NOTE:
Refer to the following pages for the details of each step.

Install:
- Cam chain guide
- Cylinder head gasket
- Dowel pins (See page 3-60.)

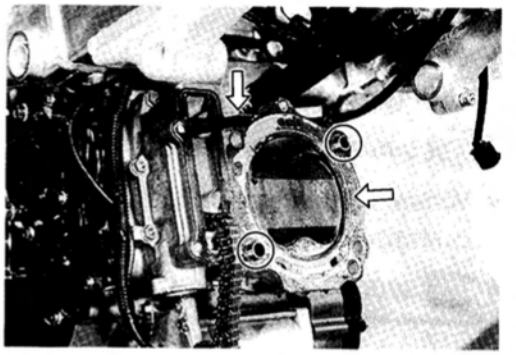

- Cylinder head
- Oil cooler mounting bracket (See page 3-62.)

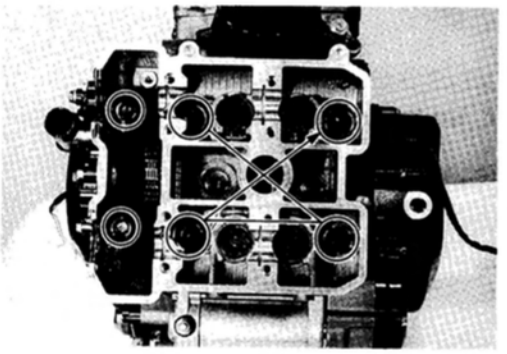

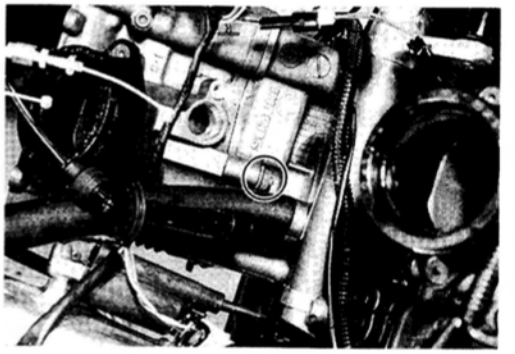

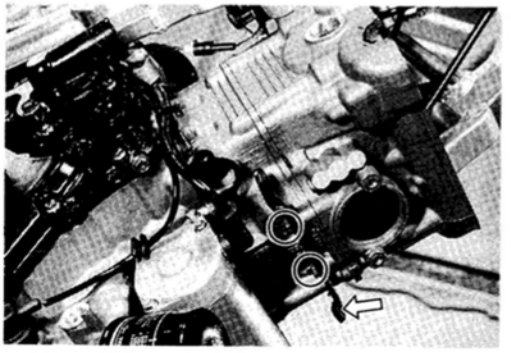

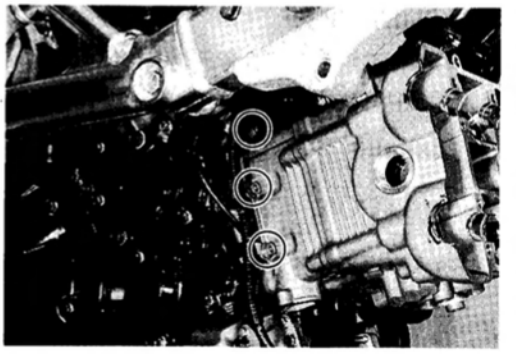

- Cam chain tensioner (See page 3-63.)

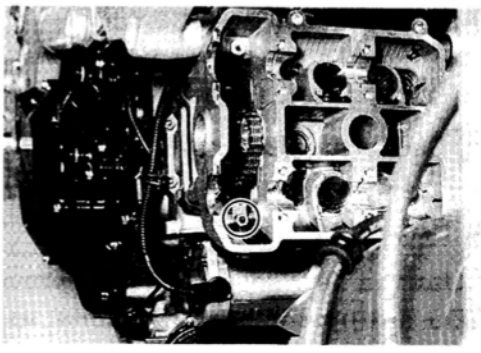

- No.2 cam drive idle gear/sprocket (See pages 3-64 through -66.)

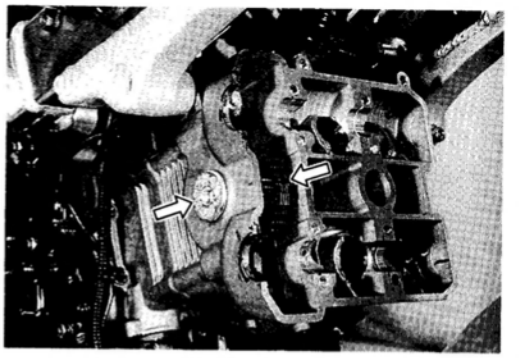

- Cam chain tension adjuster (See pages 3-66 through -68.)

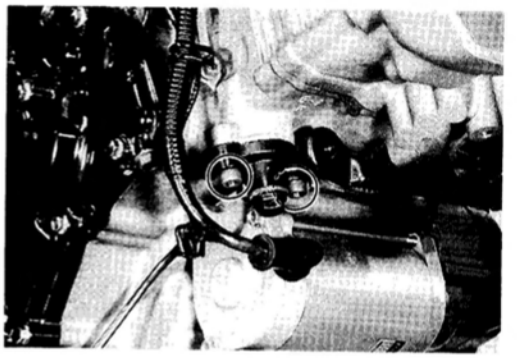

- Camshafts
- Dowel pins
- C-rings (See pages 3-70 and -71.)

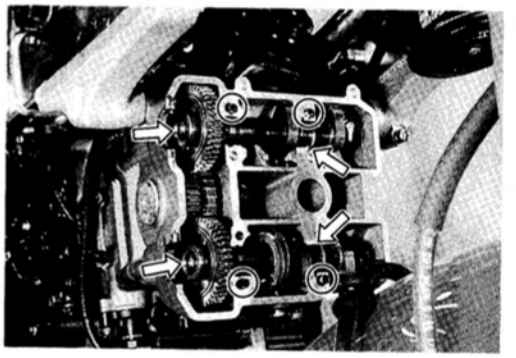

- Camshaft journal holders (See page 3-72.)

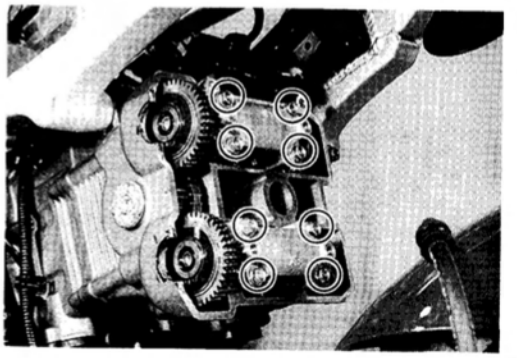

- Generator cover plug
- Valve timing inspection plug (See page 3-77.)

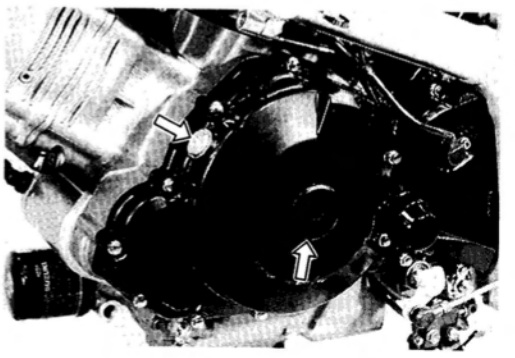

- Spark plug (See pages 2-5 and -6.)
- Cylinder head cover (See pages 3-76 and -77.)

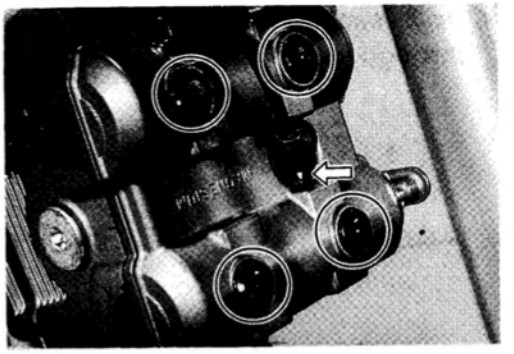

- Front engine mounting bolt (See pages 3-12 and -13.)

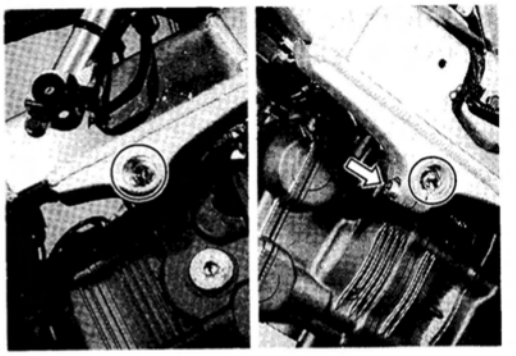

- Thermostat case (See pages 3-77 and -78.)

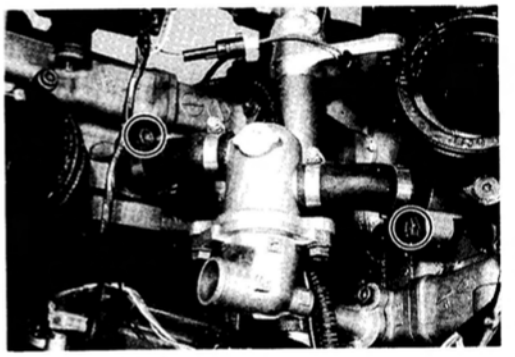

- Air cleaner duct

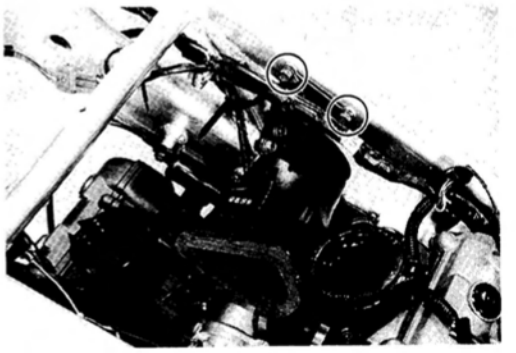

- Throttle body assembly (See pages 4-65, -66 and -67.)

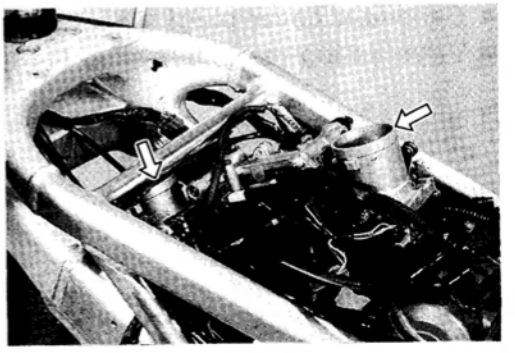

- Oil cooler (See page 3-15.)

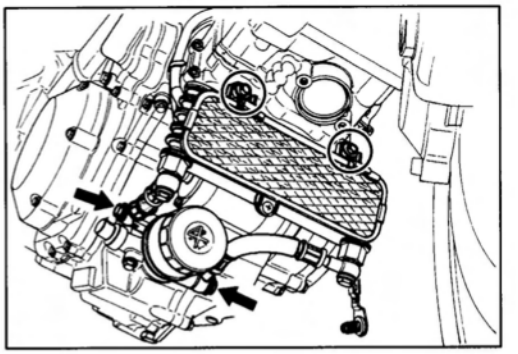

- Exhaust pipe/Muffler (See page 3-17.)

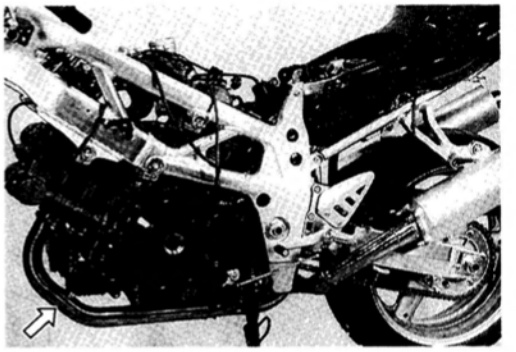

- Radiator (See page 5-6.)

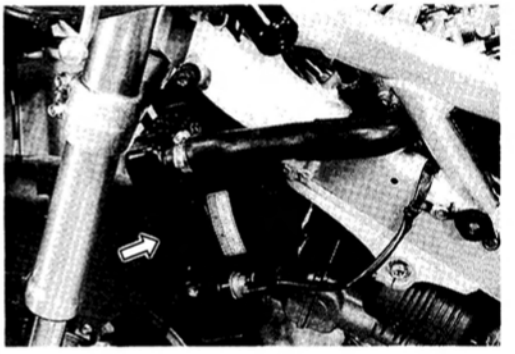

- Air cleaner box (See pages 4-67 and -68.)



- Fuel tank (See pages 4-49 and -50.)
- Front seat (See page 6-4.)

Adjust the following items to the specification.

	Page
* Engine coolant	2-15
* Engine oil	2-11
* Throttle cable play	2-13
* Throttle valve synchronization	4-71 through -75
* Idling adjustment	2-12

NO.2 (REAR) CYLINDER HEAD

Installation is in the reverse order of removal.

NOTE:
Refer to the following pages for the details of each step.

Install:
- Cam chain guide
- Cylinder head gasket
- Dowel pins (See page 3-60.)

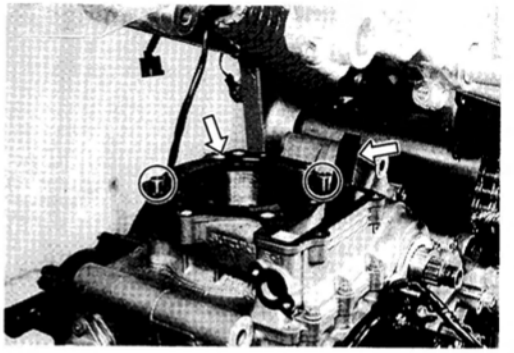

- Cylinder head (See page 3-61.)

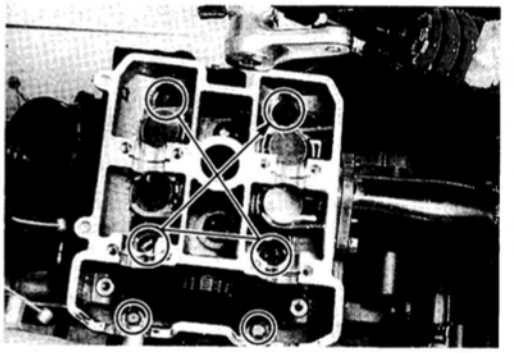

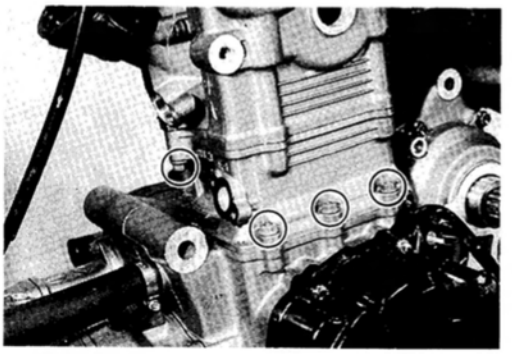

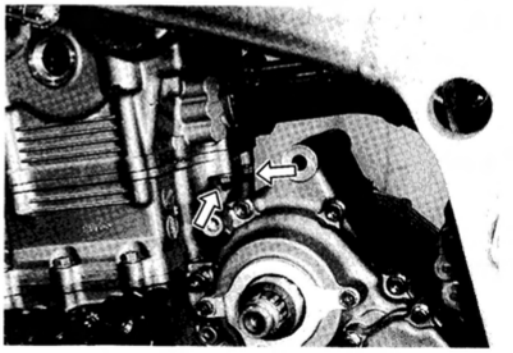

- Cam chain tensioner (See page 3-63.)

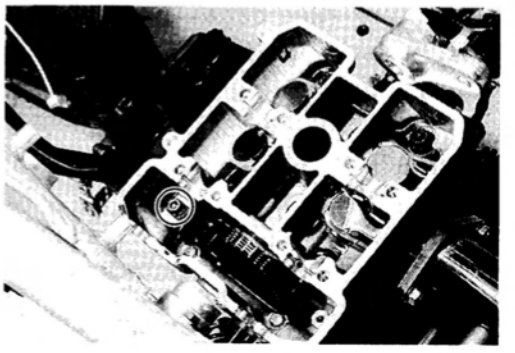

- No.2 cam drive idle gear/sprocket (See pages 3-64, -65, -66 and -68.)

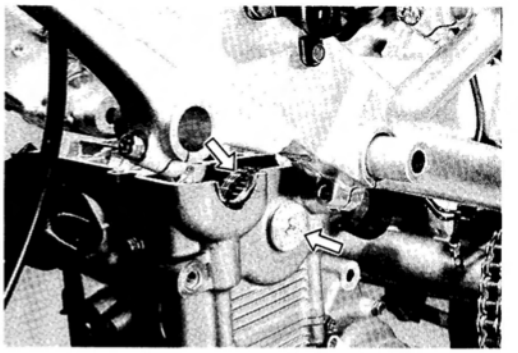

- Cam chain tension adjuster (See page 3-69.)

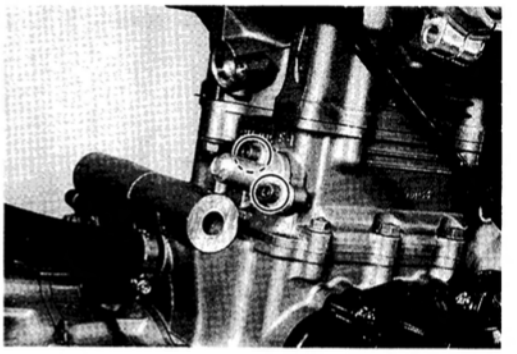

- Camshafts
- Dowel pins
- C-rings (See page 3-73.)

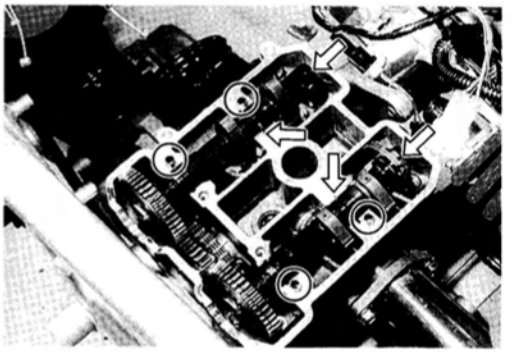

- Camshaft journal holders (See page 3-74.)

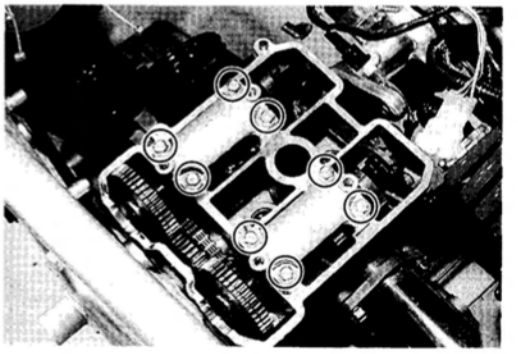

- Generator cover plug
- Valve timing inspection plug (See page 3-77.)

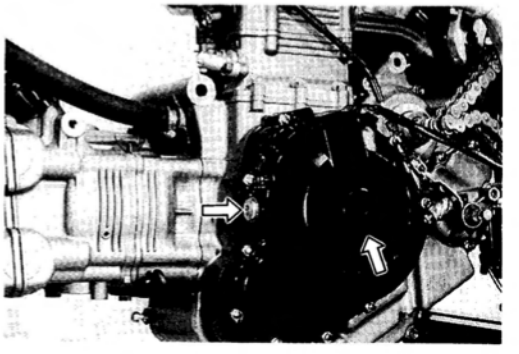

- Spark plug (See pages 2-5 and -6.)
- Cylinder head cover (See pages 3-76 and -77.)

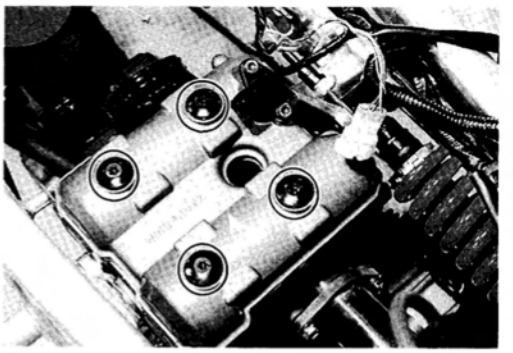

- Thermostat case (See pages 3-77 and -78.)

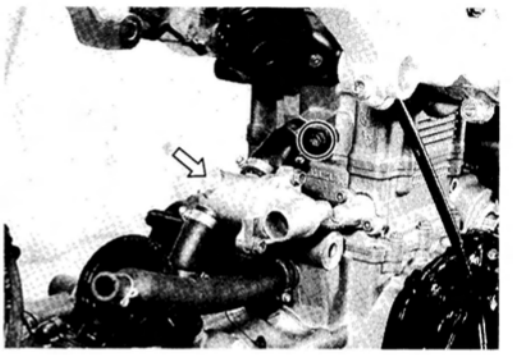

- Side-stand bracket

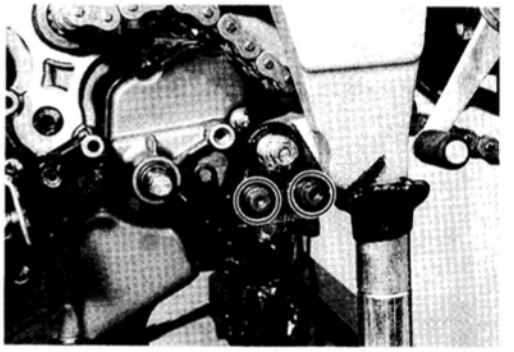

When reinstalling the engine assembly to the frame, refer to the engine installation section.

ENGINE INSTALLATION .... See pages 3-11 through -17.

After installing the engine assembly, adjust the following items to the specification.

	Page
* Engine coolant	2-15
* Engine oil	2-11
* Throttle cable play	2-13
* Throttle valve synchronization	4-71 through -75
* Idling adjustment	2-12
* Drive chain slack	2-17

CAMSHAFT INSTALLATION

NO.1 (FRONT) CAMSHAFT

Installation is in the reverse order of removal.

NOTE:
Refer to the following pages for the details of each step.

Install:
- Camshafts
- Dowel pins
- C-rings (See pages 3-70 and -71.)

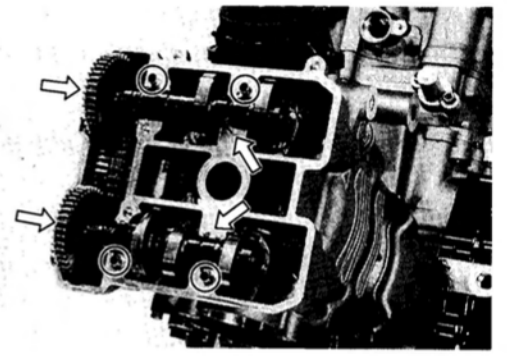

- Camshaft journal holders (See page 3-72.)

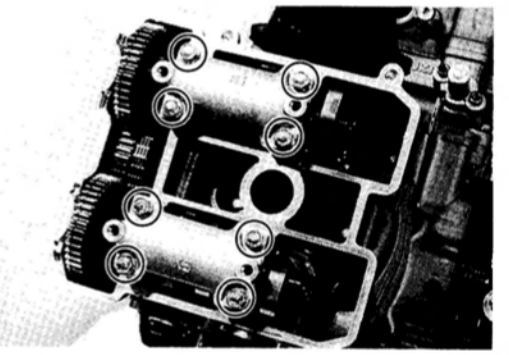

- Generator cover plug
- Valve timing inspection plug (See page 3-77.)

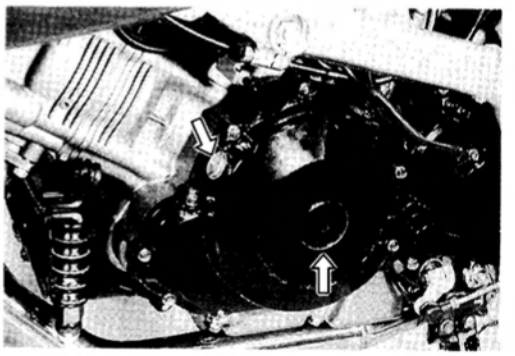

- Cylinder head cover (See pages 3-76 and -77.)



- Spark plug (See pages 2-5 and -6.)
- Radiator (See page 5-6.)
- Upper fairing (See pages 6-1, -2 and -4.)

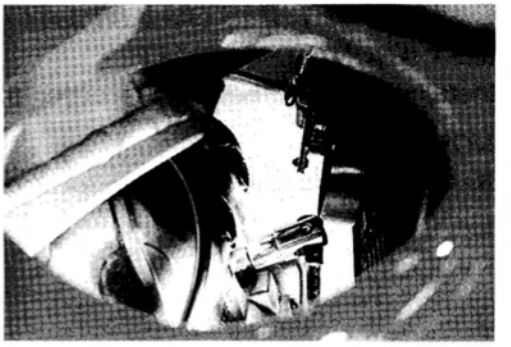

NO.2 (REAR) CAMSHAFT

Installation is in the reverse order of removal.

NOTE:

Refer to the following pages for the details of each step.

Install:

- Camshafts
- Dowel pins
- C-rings (See page 3-73.)

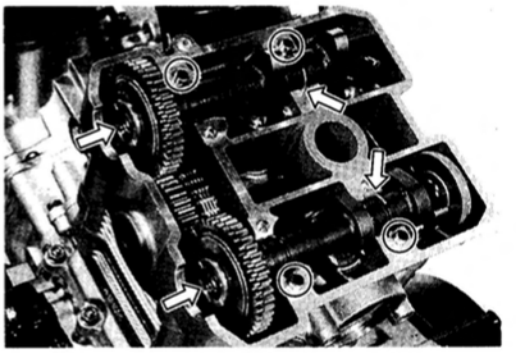

- Camshaft journal holders (See page 3-74.)

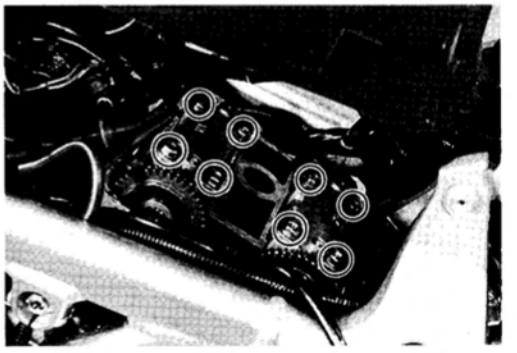

- Generator cover plug
- Valve timing inspection plug (See page 3-77.)

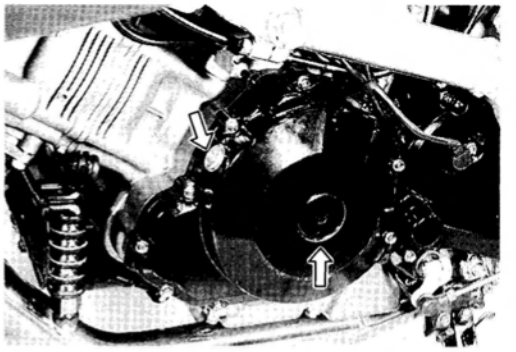

- Cylinder head cover (See pages 3-76 and -77.)
- Spark plug (See pages 2-5 and -6.)

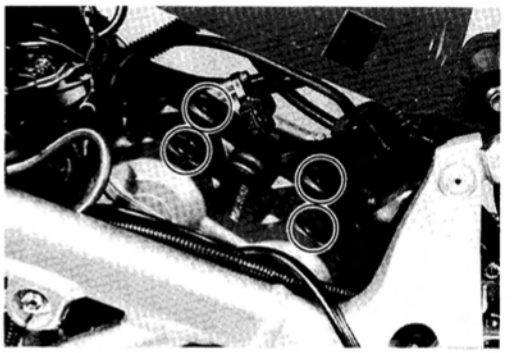

CYLINDER/PISTON

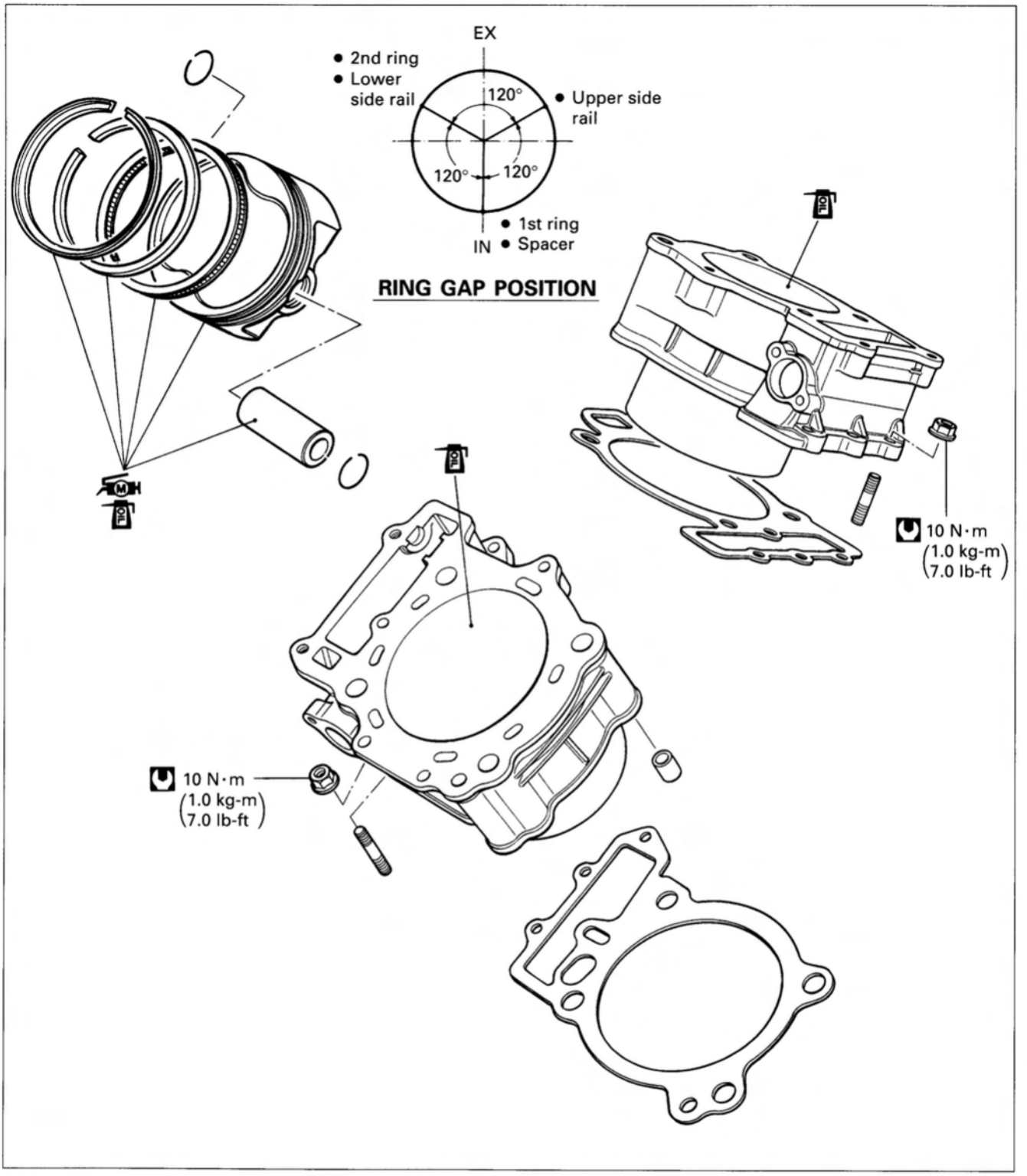

CONTENTS

CYLINDER/PISTON REMOVAL 3B- 1
CYLINDER/PISTON INSPECTION 3B- 3
PISTON/CYLINDER INSTALLATION 3B- 6

CYLINDER/PISTON REMOVAL

NO.1 (FRONT) CYLINDER/PISTON

The following component parts must be removed in the described order before removing the No.1 (Front) cylinder and piston.

NOTE:
Refer to the following pages for the details of each step.

Remove:

- Cylinder head (See pages 3A-8 through -11.)

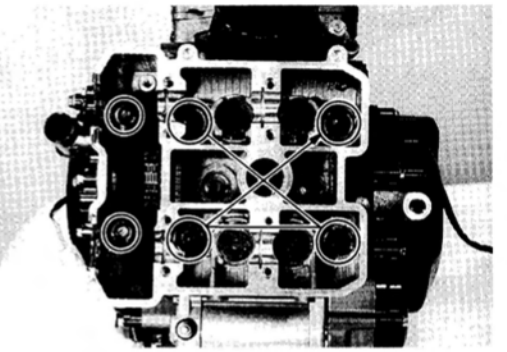

- Cam chain guide
- Cylinder head gasket
- Dowel pins (See page 3-21.)

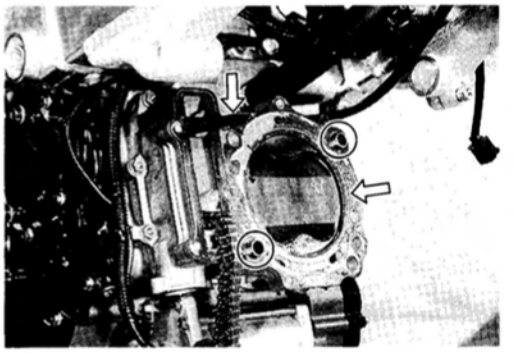

- Cylinder (See page 3-21.)

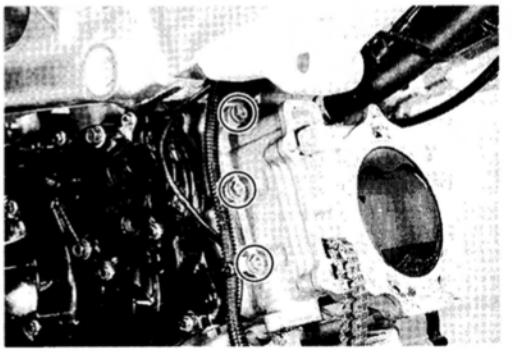

- Piston pin
- Piston (See page 3-22.)

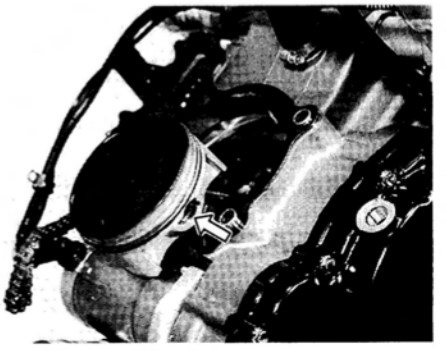

NO.2 (REAR) CYLINDER/PISTON

The following component parts must be removed in the described order before removing the No.2 (Rear) cylinder and piston.

NOTE:
Refer to the following pages for the details of each step.

Remove:

- Cylinder head (See pages 3A-12 through -14.)

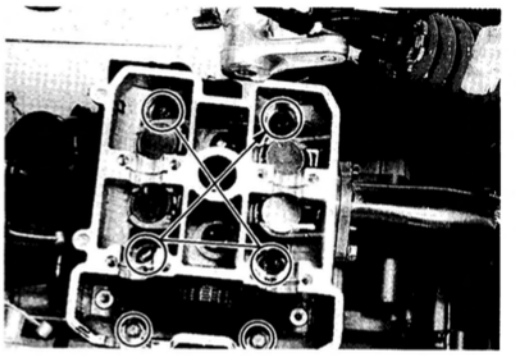

- Cam chain guide
- Cylinder head gasket
- Dowel pins (See page 3-25.)

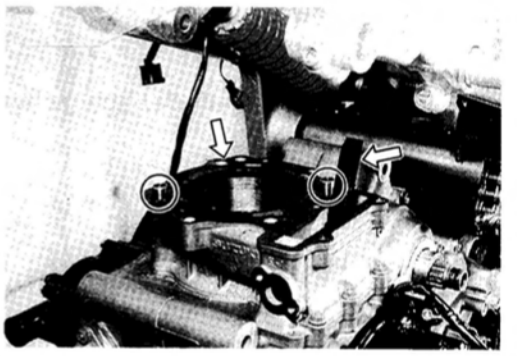

- Cylinder (See page 3-25.)

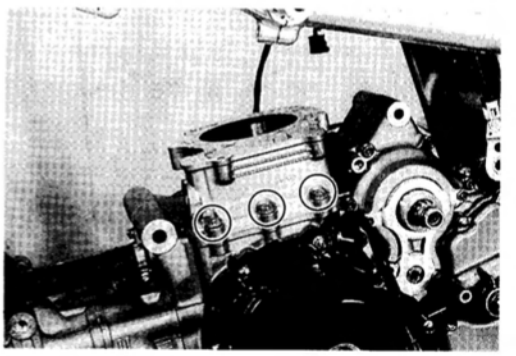

- Piston pin
- Piston (See page 3-25.)

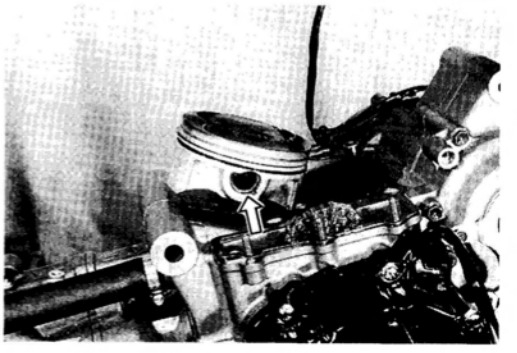

CYLINDER/PISTON INSPECTION

CYLINDER BLOCK DISTORTION

Check the gasketed surface of the cylinder block for distortion with a straightedge and thickness gauge, taking a clearance reading at several places as indicated. If the largest reading at any position of the straightedge exceeds the limit, replace the cylinder block.

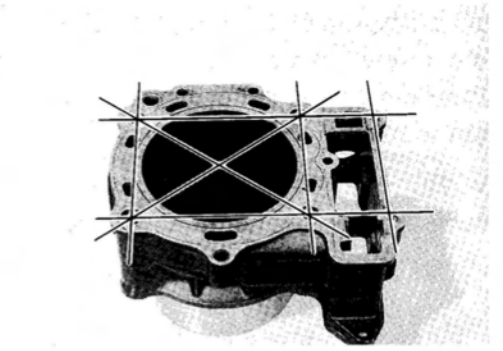

TOOL 09900-20803: Thickness gauge

Service Limit
Cylinder distortion: 0.05 mm (0.002 in)

CYLINDER BORE

Inspect the cylinder wall for any scratches, nicks or other damage. Measure the cylinder bore diameter at six places.

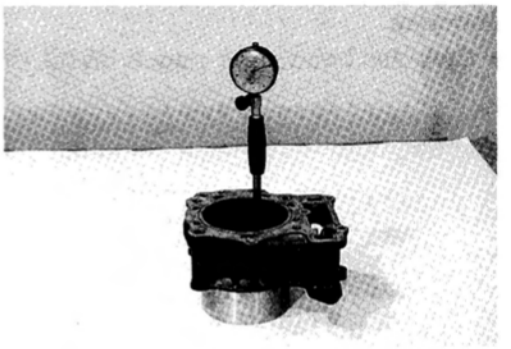

Standard
Cylinder bore: 98.000–98.015 mm (3.8583–3.8589 in)

TOOL 09900-20508: Cylinder gauge set

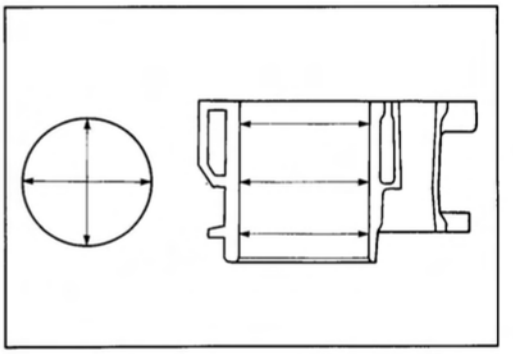

PISTON DIAMETER

Using a micrometer, measure the piston's outside diameter at the place shown. If the measurement is less than the limit, replace the piston.

Service Limit
Piston diameter: 97.880 mm (3.8535 in)

TOOL 09900-20204: Micrometer (75–100 mm)

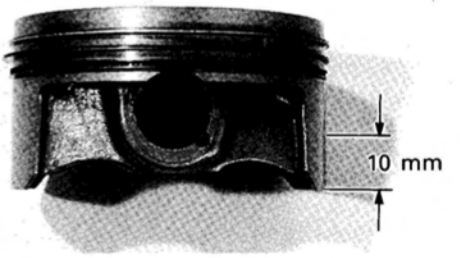

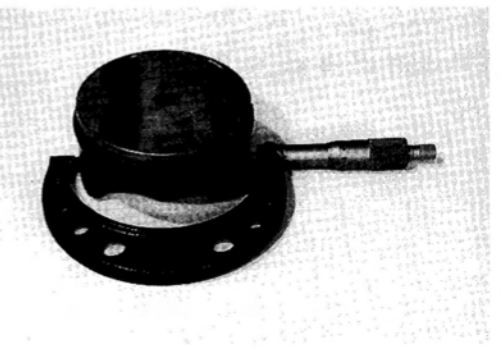

PISTON TO CYLINDER CLEARANCE

As a result of the previous measurement, if the piston to cylinder clearance exceeds the following limit, replace both cylinder and piston.

Service Limit
Piston to cylinder clearance: 0.12 mm (0.0047 in)

PISTON RING TO GROOVE CLEARANCE

Using a thickness gauge, measure the side clearances of the 1st and 2nd rings. If any of the clearances exceeds the limit, replace both piston and piston rings.

TOOL 09900-20803: Thickness gauge
09900-20205: Micrometer (0–25 mm)



Service Limit
Piston ring to groove clearance
(1st) : 0.18 mm (0.0071 in)
(2nd): 0.15 mm (0.0059 in)

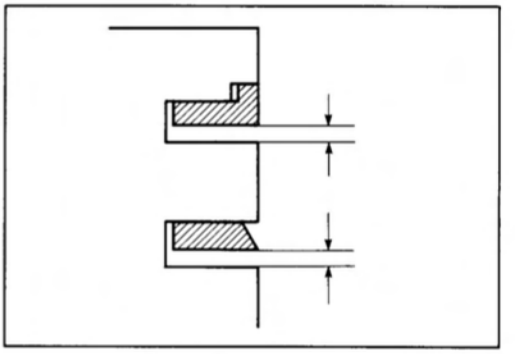

Standard
Piston ring groove width
(1st) : 0.93–0.95 mm (0.0366–0.0374 in)
1.55–1.57 mm (0.0610–0.0618 in)
(2nd): 1.01–1.03 mm (0.0398–0.0406 in)
(Oil) : 2.51–2.53 mm (0.0988–0.0996 in)

Standard
Piston ring thickness
(1st) : 0.84–0.89 mm (0.033–0.035 in)
1.40–1.42 mm (0.055–0.056 in)
(2nd): 0.97–0.99 mm (0.038–0.039 in)



PISTON RING FREE END GAP AND PISTON RING END GAP

Before installing piston rings, measure the free end gap of each ring using vernier calipers. Next, fit the ring in the cylinder, and measure each ring end gap using a thickness gauge.
If any ring has an excess end gap, replace the ring.

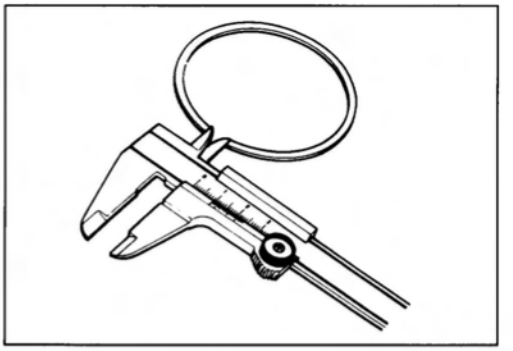

Service Limit
Piston ring free end gap (1st) : 5.4 mm (0.21 in)
(2nd): 7.9 mm (0.31 in)

09900-20101: Vernier calipers

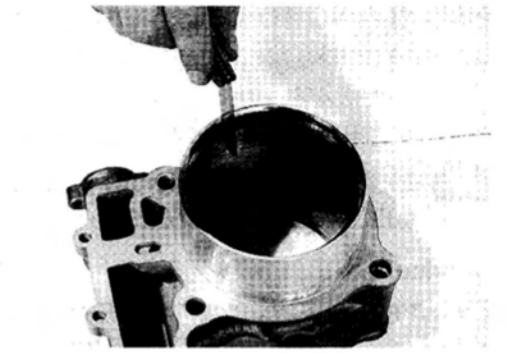

Service Limit
Piston ring end gap (1st) : 0.5 mm (0.02 in)
(2nd): 0.5 mm (0.02 in)

09900-20803: Thickness gauge

PISTON PIN AND PIN BORE

Using a small bore gauge, measure the piston pin bore inside diameter, and using a micrometer, measure the piston pin outside diameter. If the difference between these two measurements is more than the limits, replace both piston and piston pin.

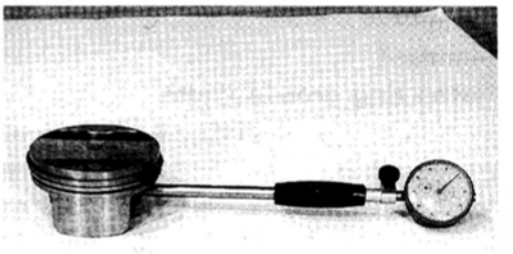

Service Limit
Piston pin bore I.D.: 22.030 mm (0.8673 in)

09900-20602: Dial gauge (1/1000 mm, 1 mm)
09900-22403: Small bore gauge (18–35 mm)

Using a micrometer, measure the piston pin outside diameter at three positions.

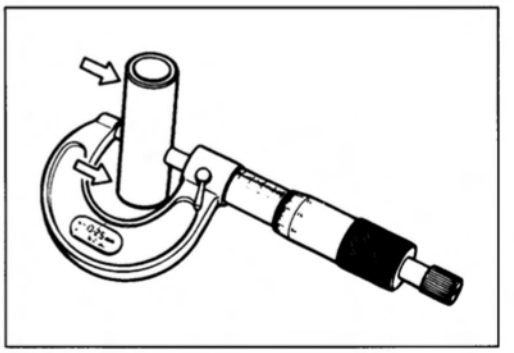

Service Limit
Piston pin O.D.: 21.980 mm (0.8654 in)

09900-20205: Micrometer (0–25 mm)

PISTON/CYLINDER INSTALLATION

- Install the piston rings in the order of oil ring, 2nd ring and 1st ring.

NOTE:
1st ring and 2nd ring differ in shape.

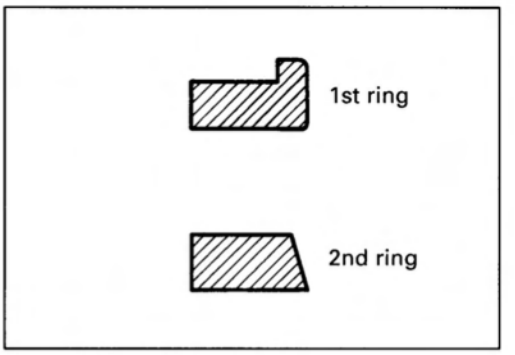

- Be sure to bring to the concave side of 1st ring to the top when fitting it to the piston.
- 2nd ring has letters "RN" marked on the side. Be sure to bring the marked side to the top when fitting it to the piston.

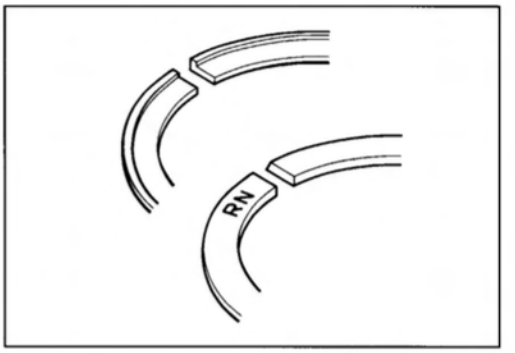

- The first member to go into the oil ring groove is a spacer ①. After placing the spacer, fit the two side rails ②.
  Side designations, top and bottom, are not applied to the spacer and side rails: you can position each either way.

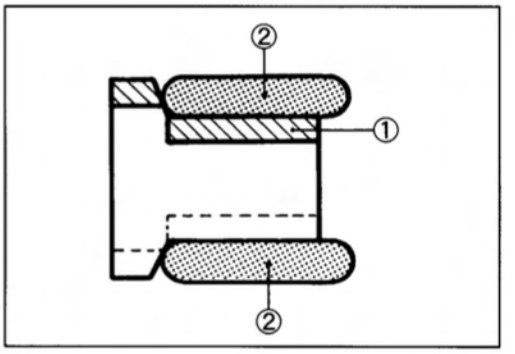

- Position the gaps of the three rings as shown. Before inserting each piston into the cylinder, check that the gaps are so located.

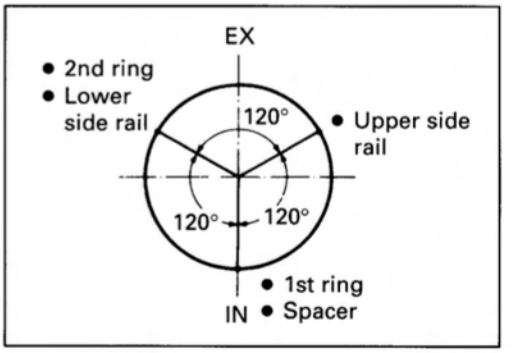

NOTE:
When fitting the pistons, turn the triangle mark on the piston heads to each exhaust side.



NO.1 (FRONT) PISTON/CYLINDER

Installation is in the reverse order of removal.

NOTE:
Refer to the following pages for the details of each step.

Install:
- Piston pin
- Piston
- Oil jet
- Dowel pins
- Gasket (See pages 3-57, -58 and -59.)

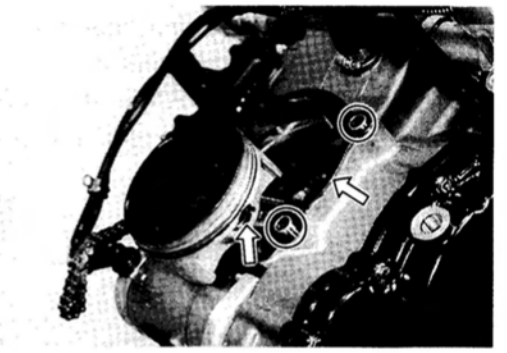

- Cylinder (See pages 3-59 and -60.)

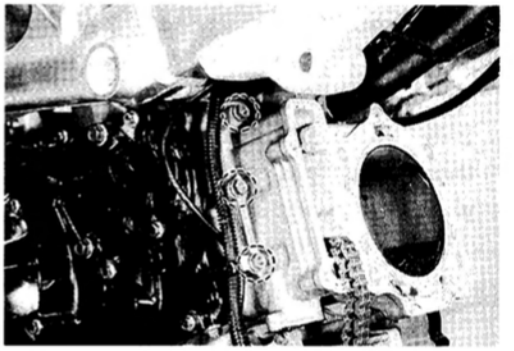

- Cylinder head (See pages 3A-27 through -30.)

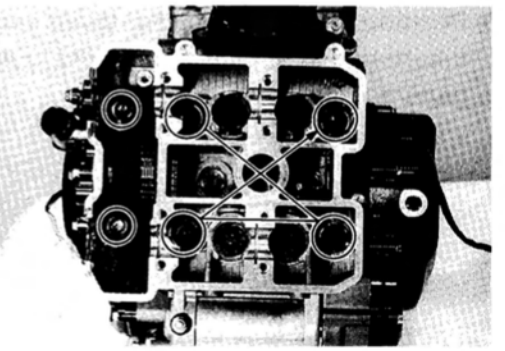

NO.2 (REAR) PISTON/CYLINDER

Installation is in the reverse order of removal.

NOTE:
Refer to the following pages for the details of each step.

Install:

- Piston pin
- Piston
- Oil jet
- Dowel pins
- Gasket (See pages 3-57, -58 and -59.)

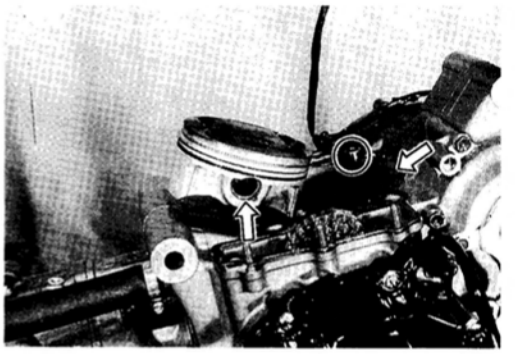

- Cylinder (See pages 3-59 and -60.)

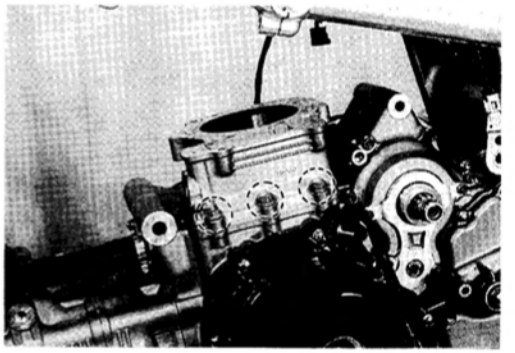

- Cylinder head (See pages 3A-31, -32 and -33.)

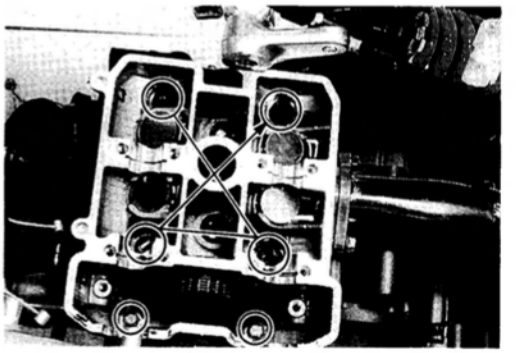

CLUTCH

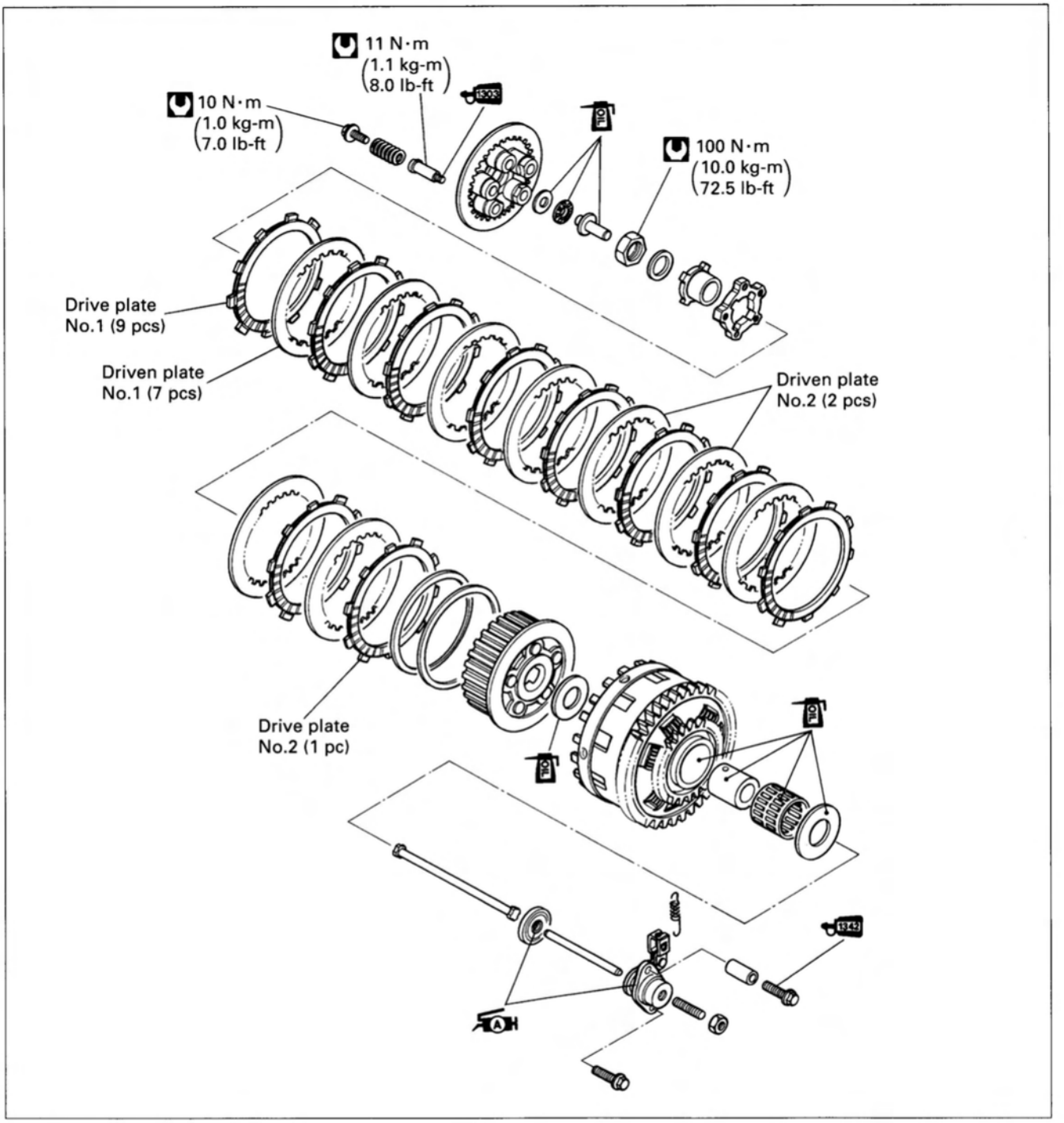

CONTENTS

CLUTCH REMOVAL 3C- 1
CLUTCH RELEASE REMOVAL 3C- 2
CLUTCH/CLUTCH RELEASE INSPECTION 3C- 3
CLUTCH INSTALLATION 3C- 5
CLUTCH RELEASE INSTALLATION 3C- 8

CLUTCH REMOVAL

After draining engine oil, the following component parts must be removed in the described order before removing the clutch components.

NOTE:
Refer to the following pages for the details of each step.

Drain:
- Engine oil (See page 2-11.)

Remove:
- Clutch outer cover (See page 3-27.)

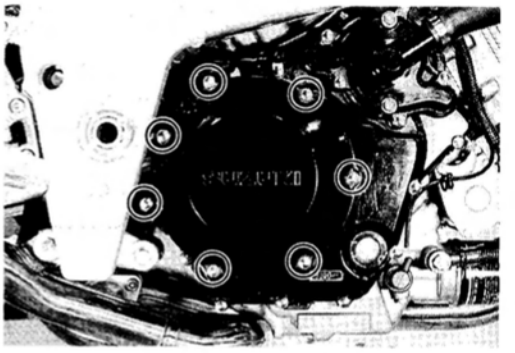

- Clutch spring
- Pressure plate (See pages 3-27 and -28.)

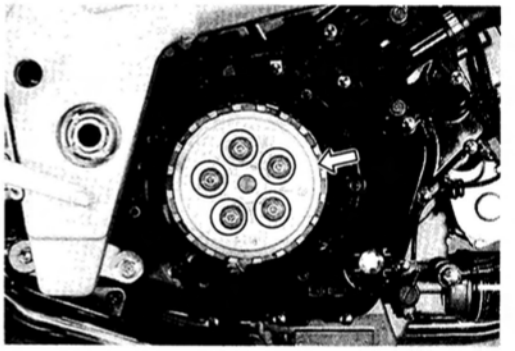

- Clutch push piece
- Bearing
- Washer (See page 3-28.)

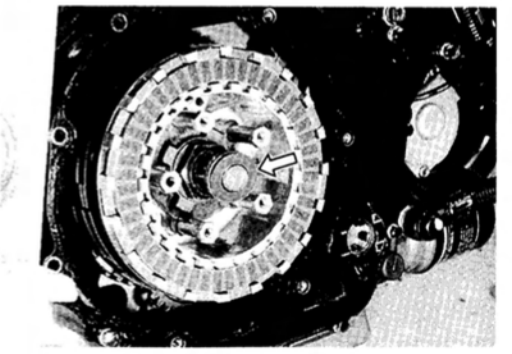

- Clutch push rod
- Clutch plates
- Wave washer
- Washer seat (See page 3-28.)

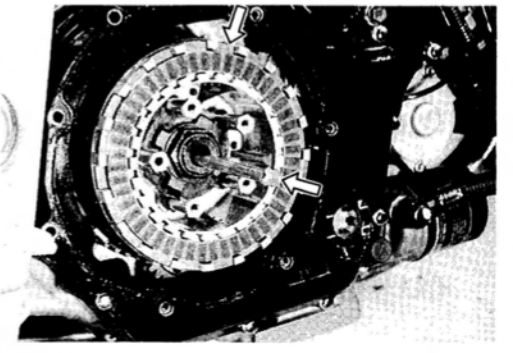

- Clutch sleeve hub
- Clutch drive cam
- Clutch driven cam (See pages 3-28 and -29.)

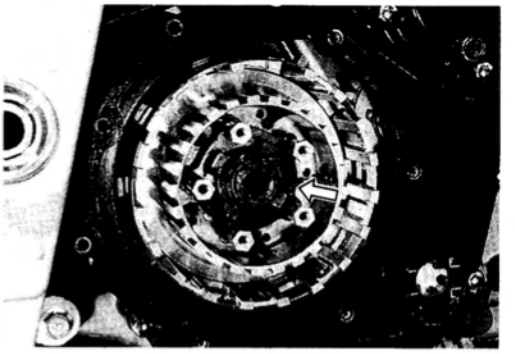

- Thrust washer
- Primary driven gear assembly (See page 3-29.)

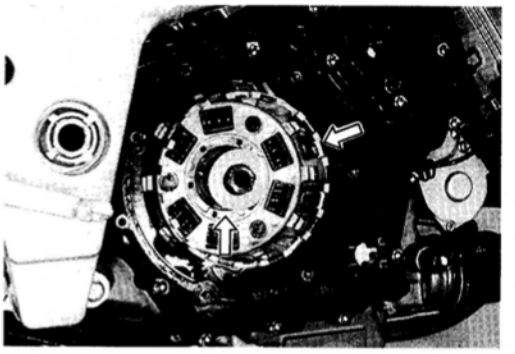

- Needle roller bearing
- Collar
- Thrust washer (See page 3-30.)

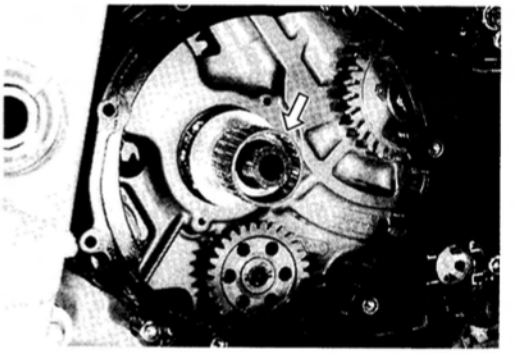

CLUTCH RELEASE REMOVAL

Remove the clutch release parts as follows.

NOTE:
Refer to the following pages for the details of each step.

Remove:

- Engine sprocket cover

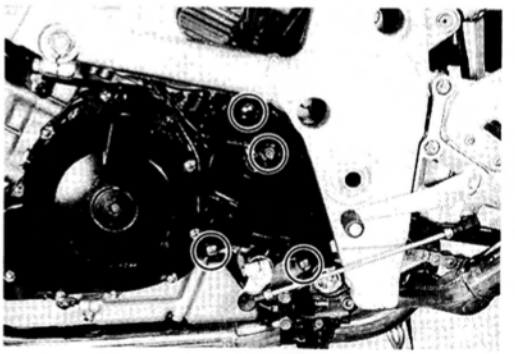

- Clutch release return spring (See page 3-5.)

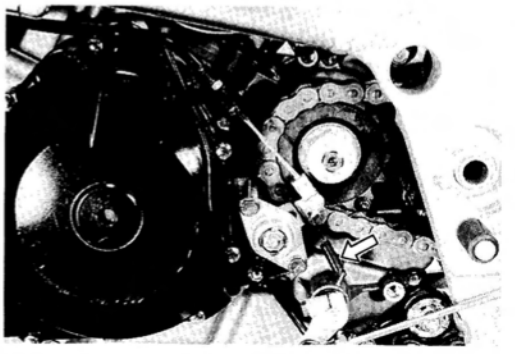

- Clutch release assembly (See page 3-5.)

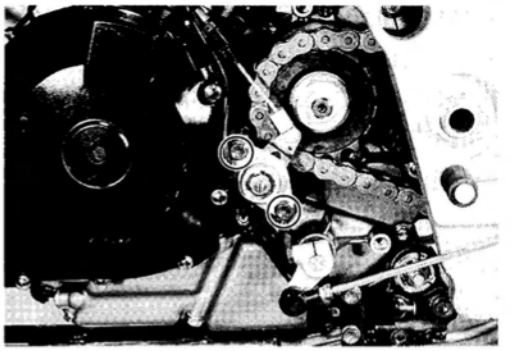

- Clutch push rod (See page 3-5.)

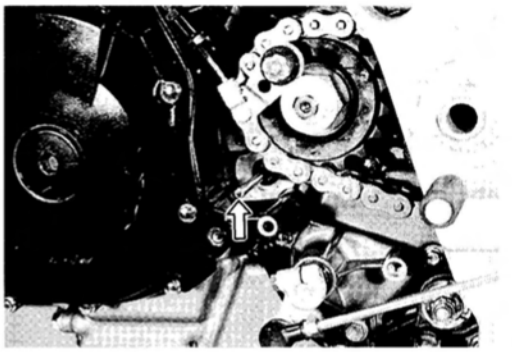

CLUTCH/CLUTCH RELEASE INSPECTION

CLUTCH DRIVE PLATES

NOTE:
Wipe off engine oil from the clutch drive plates with a clean rag.

Measure the thickness of drive plates with a vernier calipers.
If each drive plate is not within the standard range, replace it with a new one.

Standard
Drive plate thickness (No.1 and No.2): 2.92–3.08 mm (0.115–0.121 in)

09900-20102: Vernier calipers

Measure the claw width of drive plates with a vernier calipers. Replace the drive plates found to have worn down to the limit.

Service Limit
Drive plate claw width (No.1 and No.2): 12.9 mm (0.51 in)

09900-20102: Vernier calipers

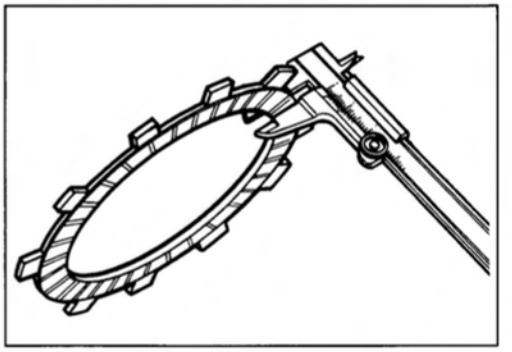

Measuring thickness

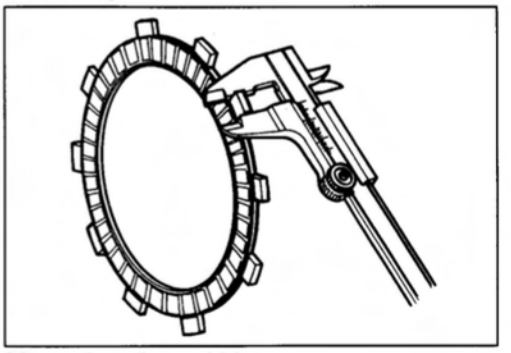

Measuring claw width

CLUTCH DRIVEN PLATES

NOTE:
Wipe off engine oil from the clutch driven plates with a clean rag.

Measure each driven plate for distortion with a thickness gauge and surface plate.
Replace driven plates which exceed the limit.

Service Limit
Driven plate distortion (No.1 and No.2): 0.1 mm (0.004 in)

09900-20803: Thickness gauge

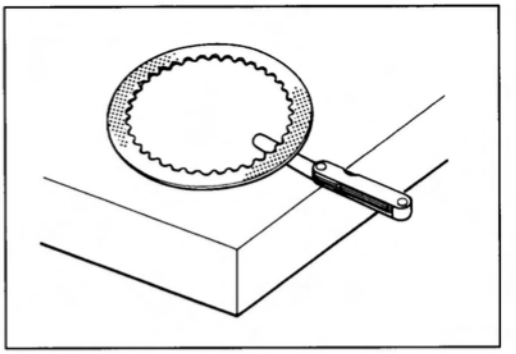
Measuring distortion

CLUTCH SPRING FREE LENGTH

Measure the free length of each coil spring with a vernier calipers, and compare the length with the specified limit. Replace all the springs if any spring is not within the limit.

Service Limit
Clutch spring free length: 29.6 mm (1.17 in)

09900-20102: Vernier calipers

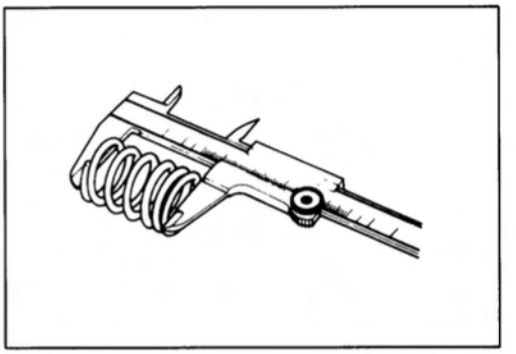

CLUTCH BEARING

Inspect the clutch release bearing for any abnormality, particularly cracks, to decide whether it can be reused or should be replaced.
Smooth engagement and disengagement of the clutch depends on the condition of this bearing.

NOTE:
Thrust washer is located between the pressure plate and the bearing.

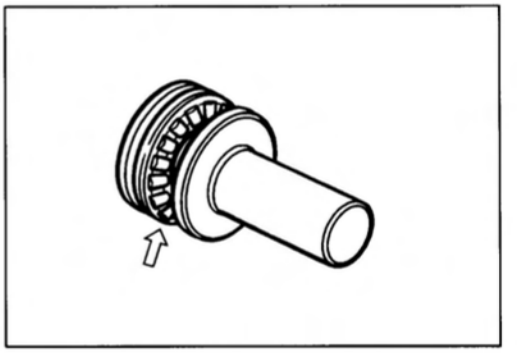

CLUTCH RELEASE

Before removing the clutch release assembly, operate the clutch lever by hand to inspect it for a smooth movement and abnormal noise. If a large resistance is felt, clean and apply a grease or oil to the clutch release.

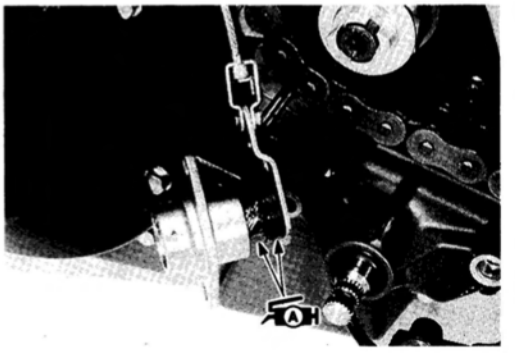

CLUTCH INSTALLATION

Installation is in the reverse order of removal.

NOTE:
Refer to the following pages for the details of each step.

Install:
- Thrust washer
- Collar
- Needle roller bearing (See page 3-50.)

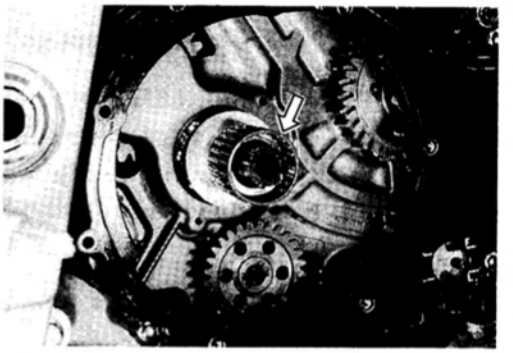

- Primary driven gear assembly
- Thrust washer (See page 3-50.)

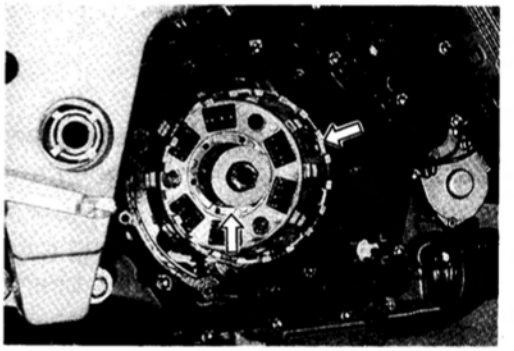

- Clutch driven cam
- Clutch drive cam
- Clutch sleeve hub (See pages 3-50 and -51.)

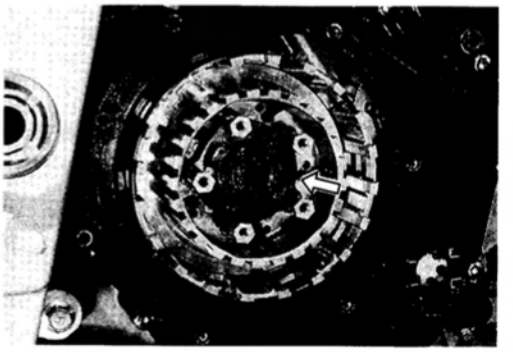

- Washer seat ①
- Wave washer ② (See page 3-52.)

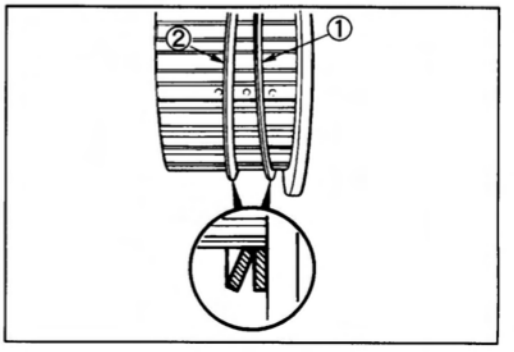

- Clutch plates
- Clutch push rod (See pages 3-52 and -53.)

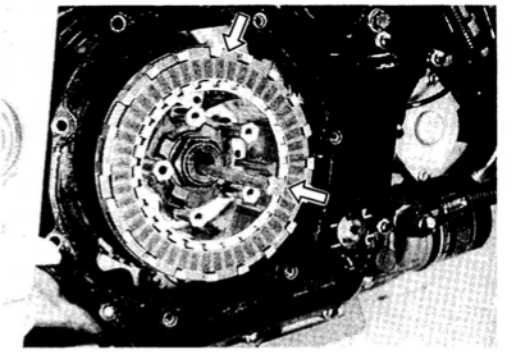

- Clutch push piece
- Bearing
- Washer (See page 3-53.)

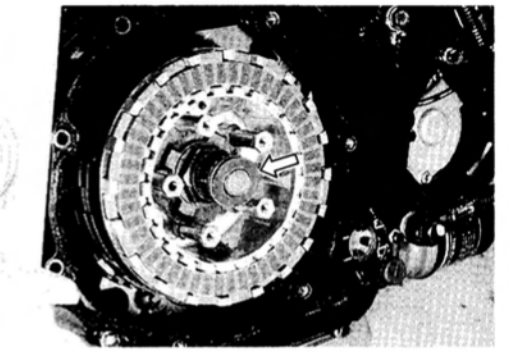

- Pressure plate
- Clutch spring (See page 3-53.)

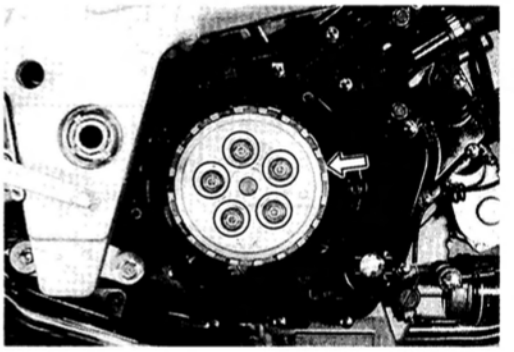

- Clutch outer cover (See page 3-54.)

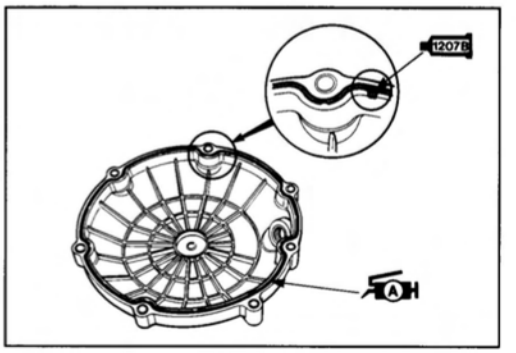

Adjust the following items to the specification.

	Page
* Engine oil	2-11
* Clutch lever play	2-14

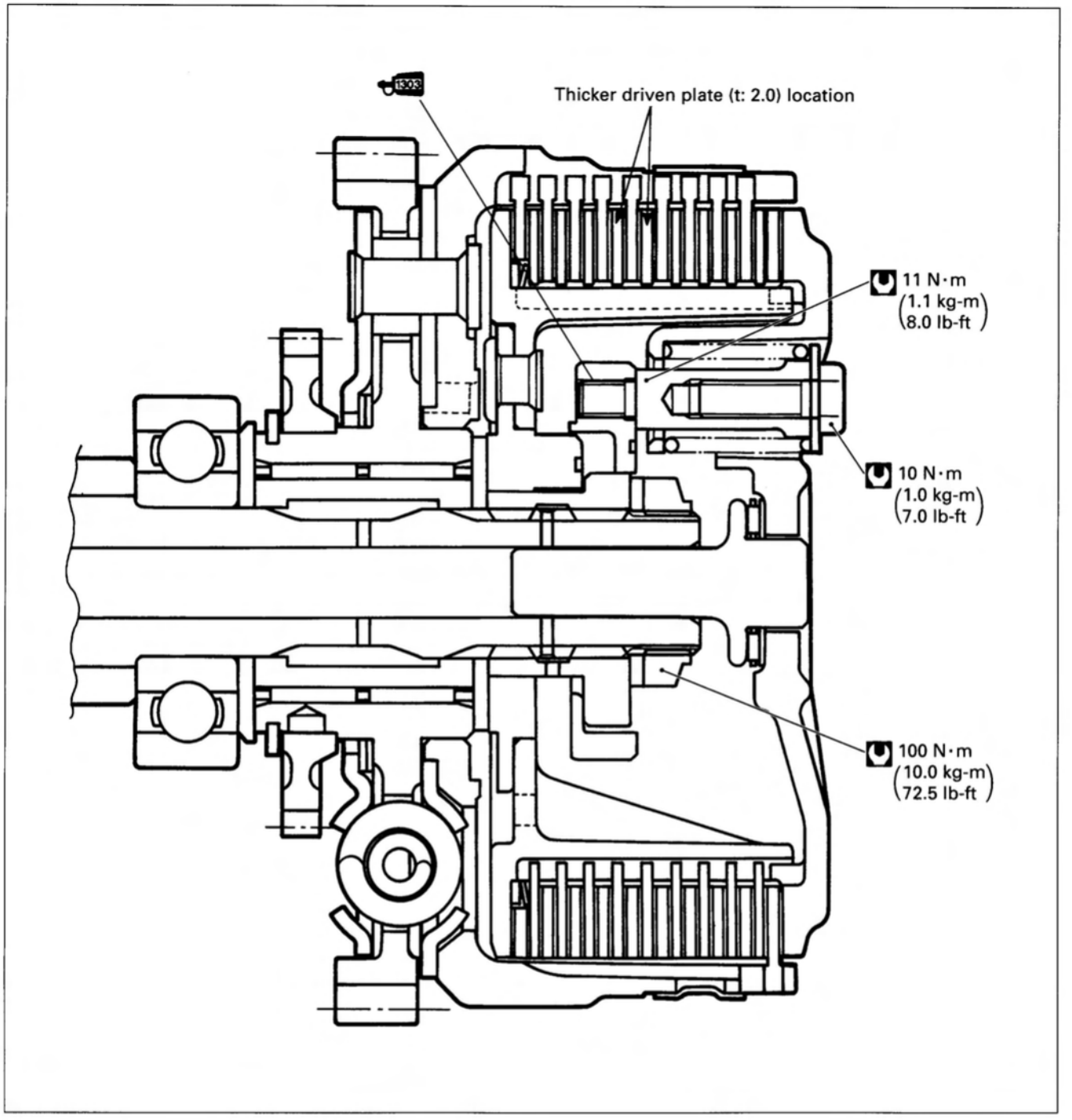
Thicker driven plate (t: 2.0) location
11 N·m
(1.1 kg-m
8.0 lb-ft)
10 N·m
(1.0 kg-m
7.0 lb-ft)
100 N·m
(10.0 kg-m
72.5 lb-ft)

CLUTCH RELEASE INSTALLATION

Installation is in the reverse order of removal.

NOTE:
Refer to the following pages for the details of each step.

Install:

- Clutch push rod. (See page 3-15.)

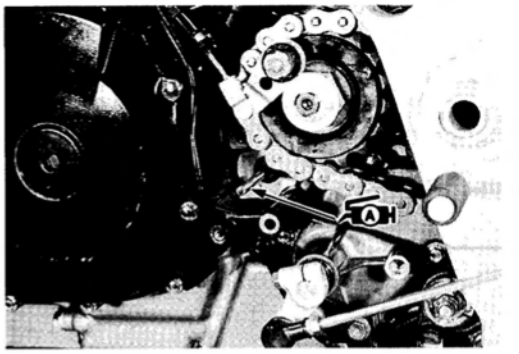

- Clutch release assembly (See page 3-16.)

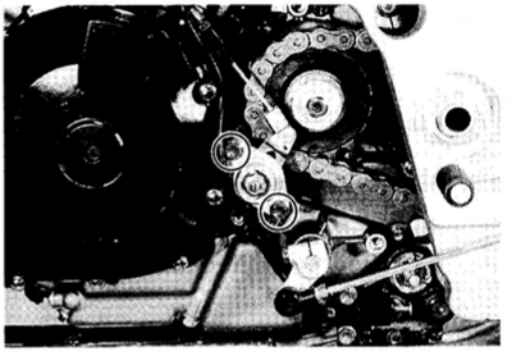

- Clutch release return spring (See page 3-16.)

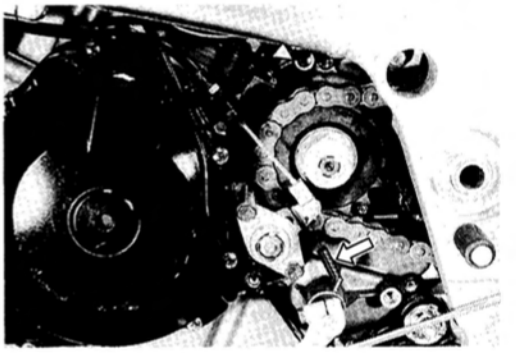

- Engine sprocket cover
- Speed sensor

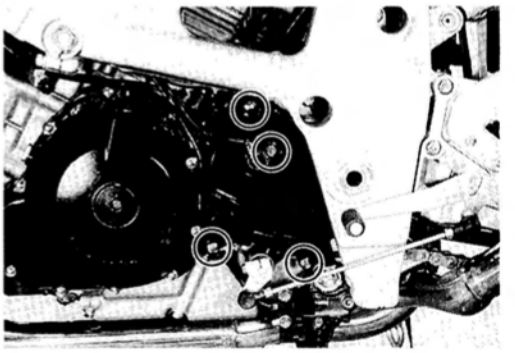

Adjust the following items to the specification.

	Page
* Clutch lever play	2-14

WATER PUMP/CLUTCH COVER

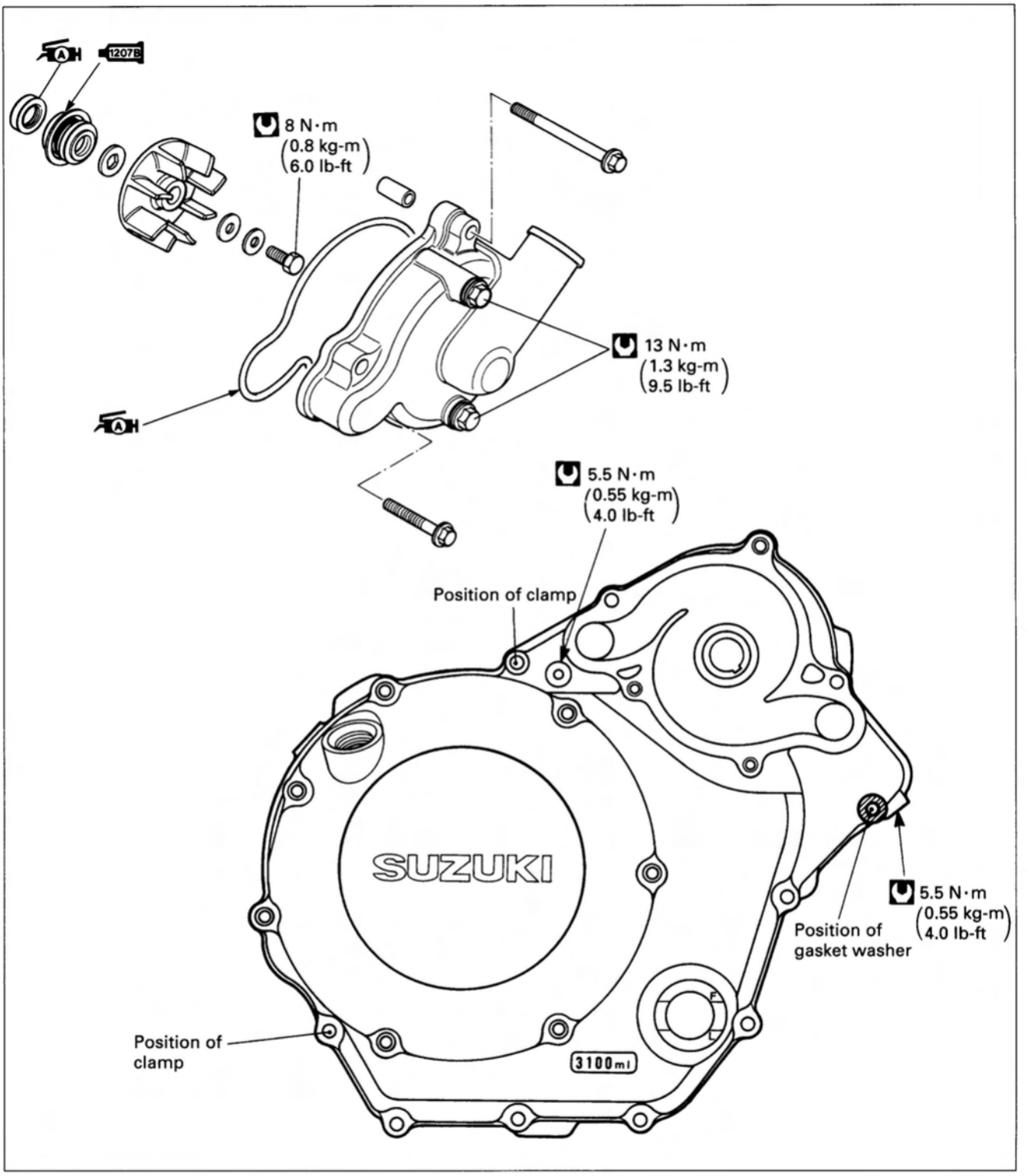

3D

CONTENTS

WATER PUMP/CLUTCH COVER REMOVAL 3D- 1
WATER PUMP/CLUTCH COVER INSPECTION AND SERVICE 3D- 2
WATER PUMP/CLUTCH COVER INSTALLATION 3D- 4

WATER PUMP/CLUTCH COVER REMOVAL

After draining engine oil and engine coolant, the following component parts must be removed in the described order before removing the water pump and the clutch cover.

NOTE:
Refer to the following pages for the details of each step.

Drain:
- Engine oil (See page 2-11.)
- Engine coolant (See page 2-15.)

Remove:
- Water hose
- Water pump case (See page 3-27.)

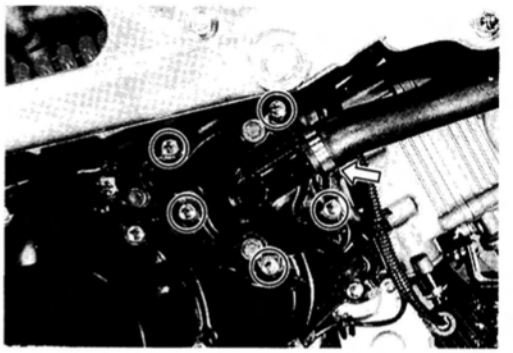

- Dowel pin
- Impeller (See page 3-27.)



- Clutch cover (See page 3-27.)

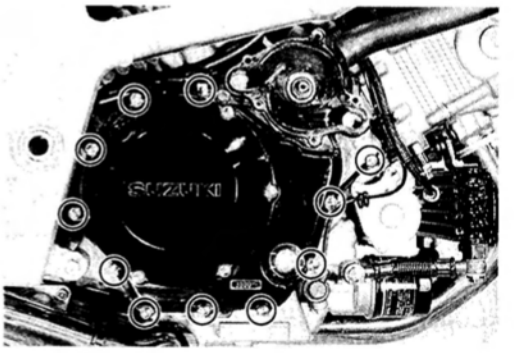

- Dowel pin
- Gasket

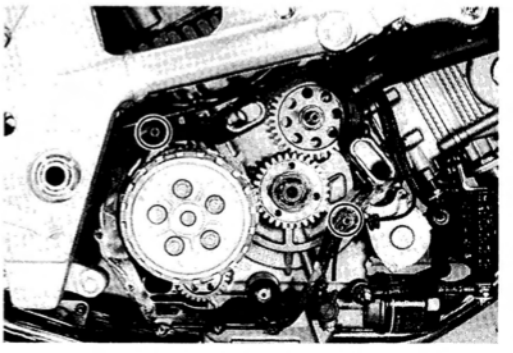

WATER PUMP/CLUTCH COVER INSPECTION AND SERVICE

MECHANICAL SEAL AND SEAL WASHER INSPECTION

Before removing the water pump and draining engine coolant, inspect the drain hole of the clutch cover for engine coolant leakage. If engine coolant is leaking, remove the clutch cover and visually inspect the mechanical seal and seal washer for damage.

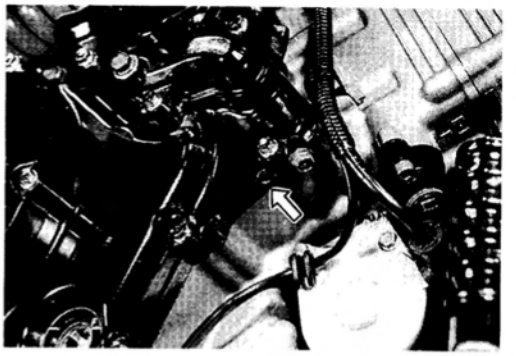

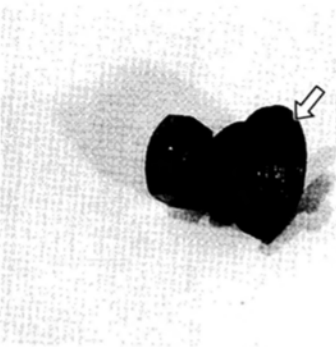

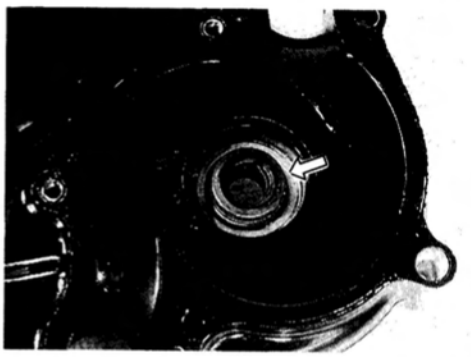

OIL SEAL INSPECTION

Before removing the clutch cover and draining engine oil, inspect the drain hole of the clutch cover for engine oil leakage. If engine oil is leaking, remove the clutch cover and visually inspect the oil seal lip for damage.

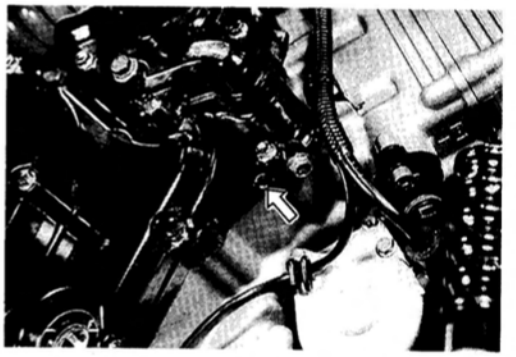

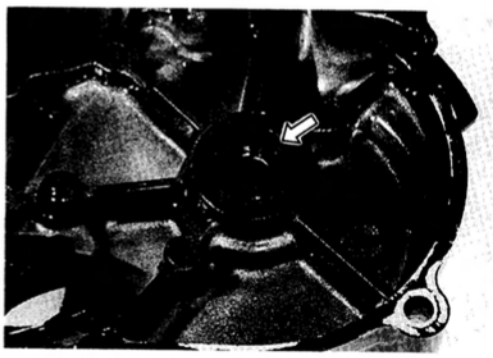

OIL SEAL AND MECHANICAL SEAL REMOVAL

- Remove the oil seal ① from the clutch cover with a suitable screwdriver or the like.

⚠ CAUTION

The removed oil seal must be replaced with a new one.

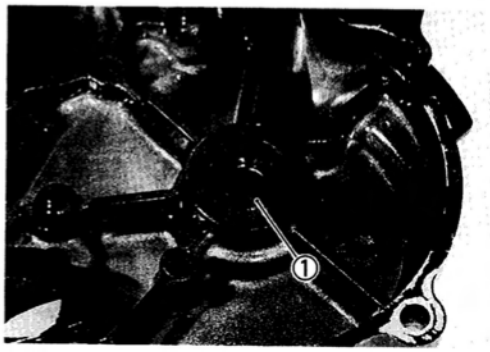

- Drive out the mechanical seal by using a suitable size socket wrench or the like.

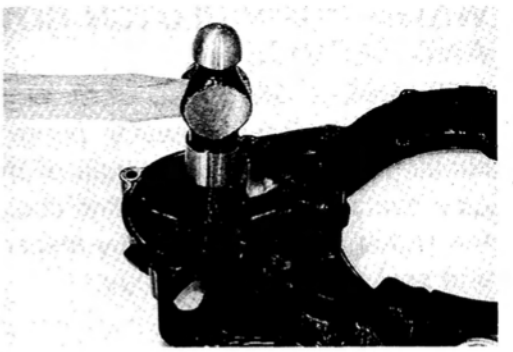

⚠ CAUTION

The removed mechanical seal must be replaced with a new one.

NOTE:
If no engine coolant or oil leakage from the drain hole is found, removal of mechanical seal and oil seal is not necessary.

OIL SEAL AND MECHANICAL SEAL INSTALLATION

- Press fit the new mechanical seal into the clutch cover with a suitable size socket wrench or the like.

NOTE:
When installing the mechanical seal, apply SUZUKI BOND "1207B" to its outer surface.

1207B 99104-31140: SUZUKI BOND "1207B"



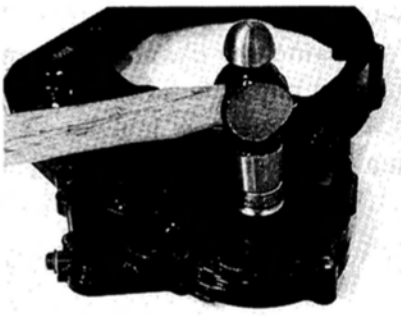

- Press the new oil seal into the clutch cover with a suitable size socket wrench or the like.

NOTE:
The outside Ⓐ of oil seal faces clutch cover side.



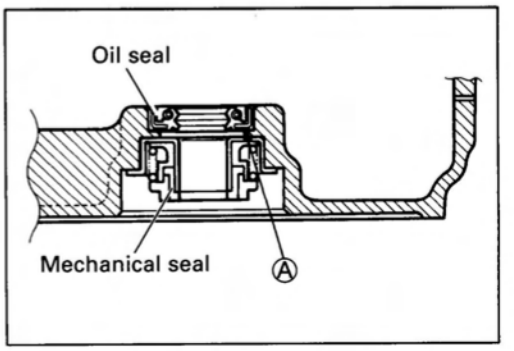

WATER PUMP/CLUTCH COVER INSTALLATION

Installation is in the reverse order of removal.

NOTE:
Refer to the following pages for the details of each step.

Install:
- Gasket
- Dowel pin (See page 3-53.)

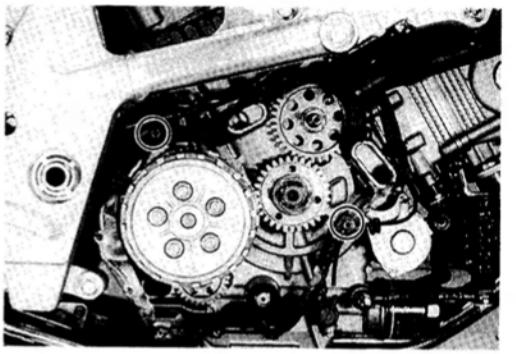

- Clutch cover (See pages 3-53 and -54.)

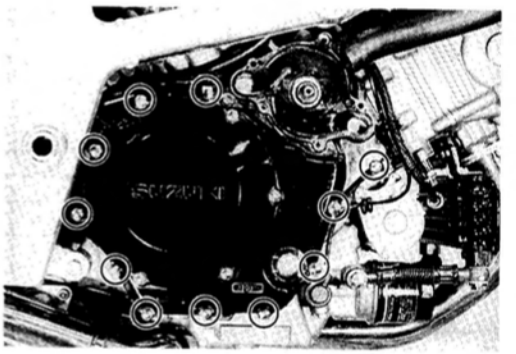

- Impeller (See page 3-54.)

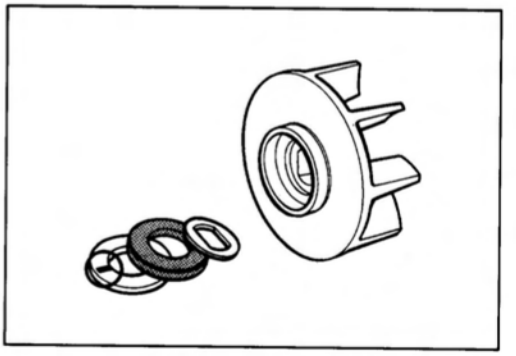

- Impeller securing bolt (See page 3-55.)
- Dowel pin

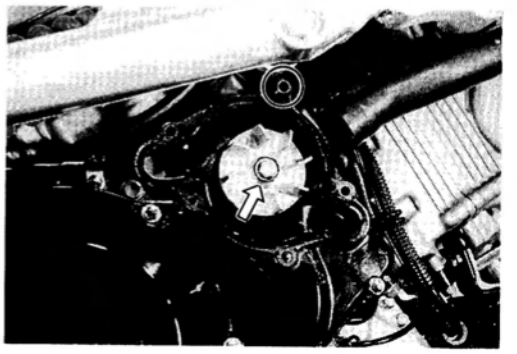

- Water pump case (See pages 3-55 and -56.)
- Water hose

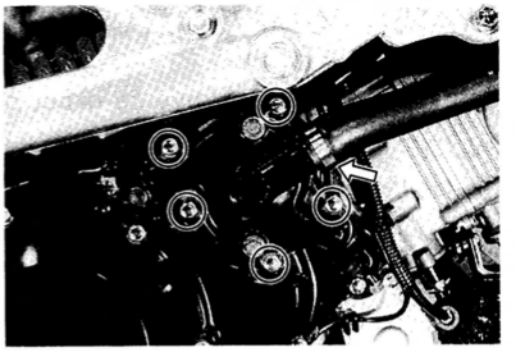

Adjust the following items to the specification.

	Page
* Engine coolant	2-15
* Engine oil	2-11

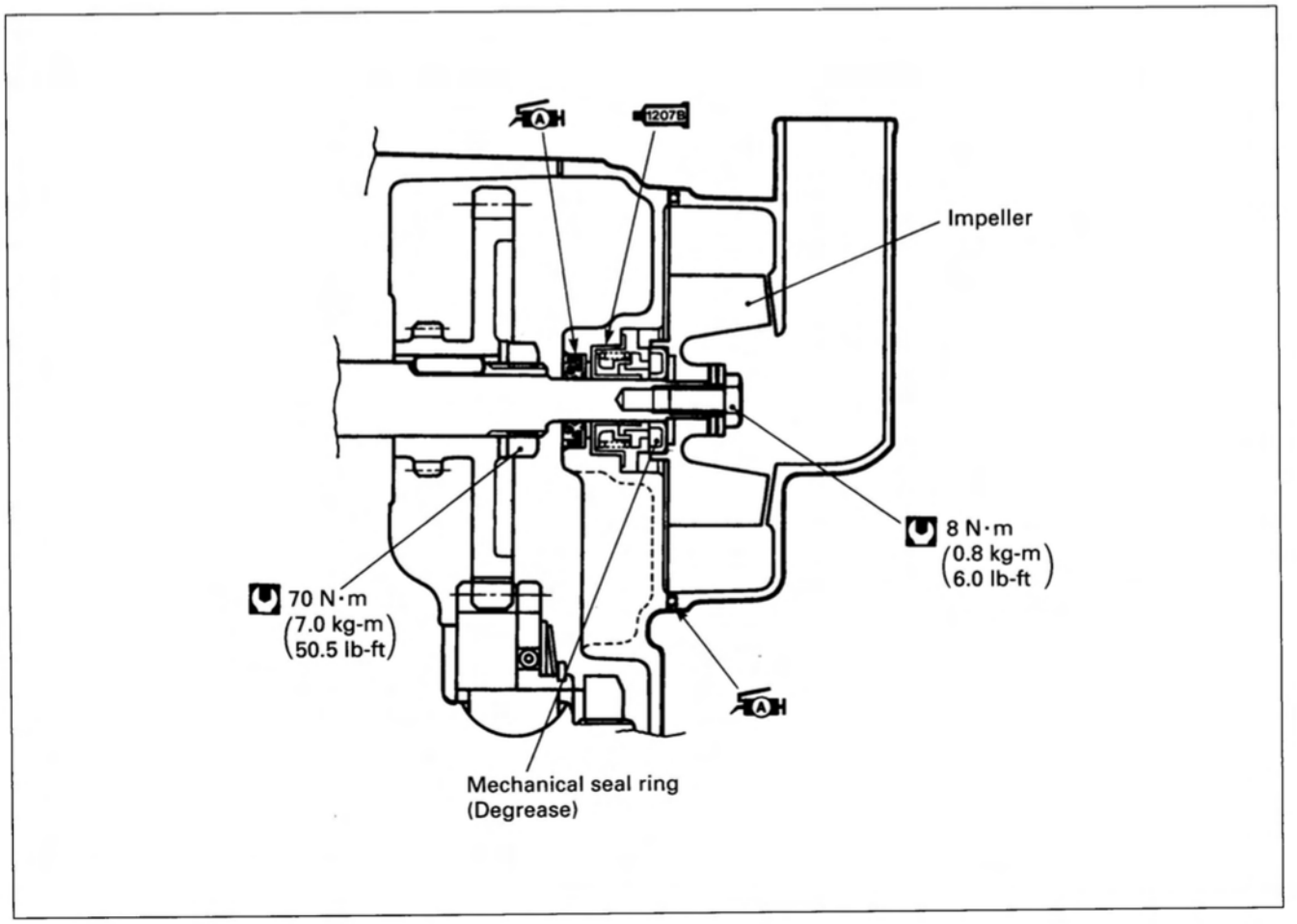

PRIMARY DRIVE GEAR/NO.1 CAM DRIVE IDLE GEAR SHAFT/SPROCKET

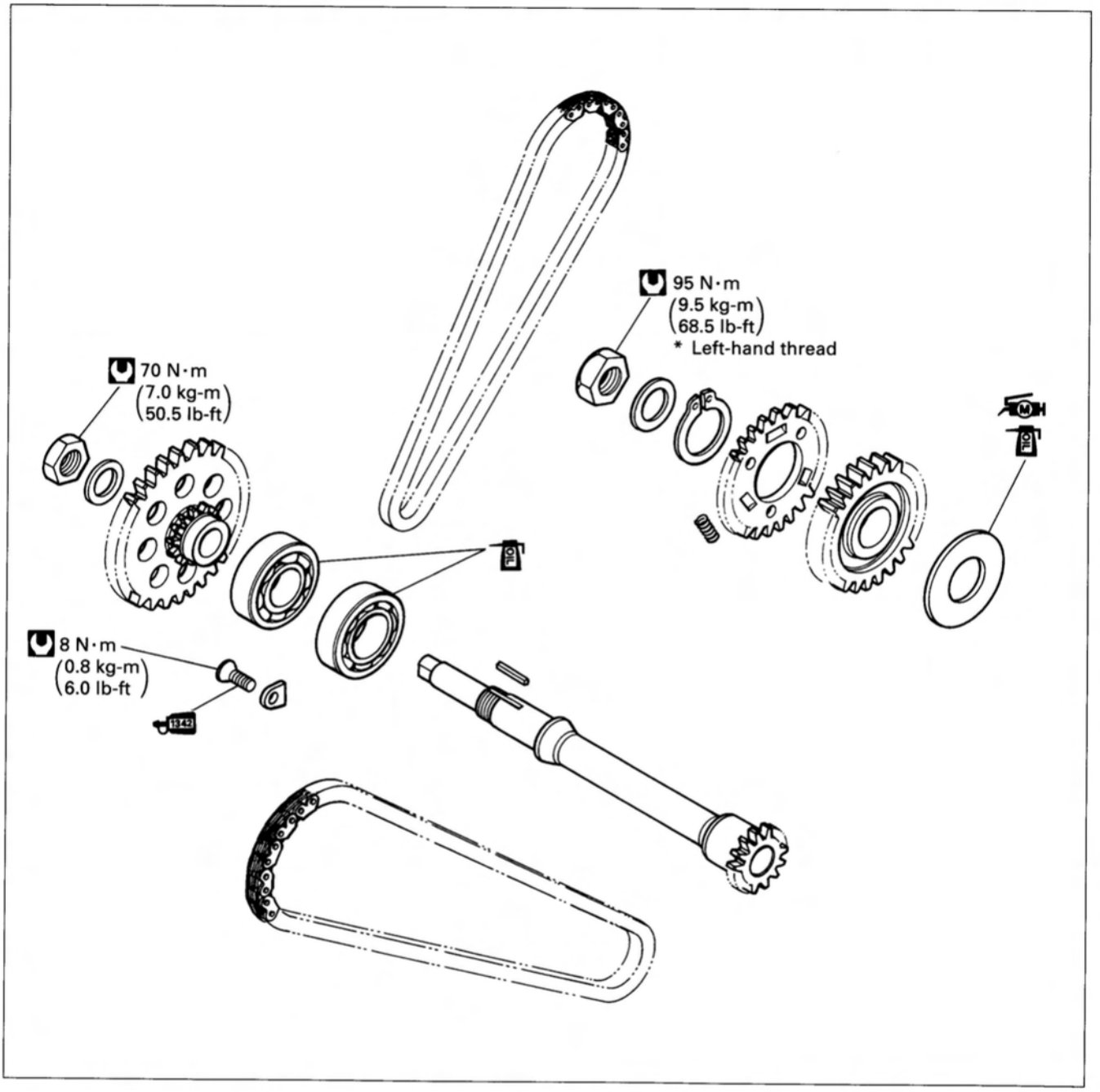

CONTENTS

PRIMARY DRIVE GEAR/NO.1 CAM DRIVE IDLE GEAR SHAFT/SPROCKET REMOVAL 3E- 1

NO.1 CAM DRIVE IDLE GEAR/SPROCKET AND NO.1 CAM DRIVE IDLE GEAR SHAFT/SPROCKET INSPECTION 3E- 3

PRIMARY DRIVE GEAR INSPECTION AND SERVICE 3E- 3

PRIMARY DRIVE GEAR/NO.1 CAM DRIVE IDLE GEAR SHAFT/SPROCKET INSTALLATION 3E- 4

PRIMARY DRIVE GEAR/NO.1 CAM DRIVE IDLE GEAR SHAFT/SPROCKET REMOVAL

The above items can be removed while holding the engine assembly with a proper engine jack as shown. To make above condition, refer to the engine removal section.

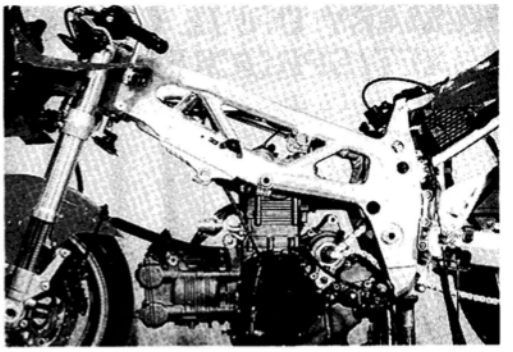

ENGINE REMOVAL ..... See pages 3-2 through -10.

The following component parts must be removed in the described order before removing the primary drive gear, the No.1 cam drive idle gear/sprocket and the No.1 cam drive idle gear shaft/sprocket.

NOTE:
Refer to the following pages for the details of each step.

Remove:
- Camshafts
- Cam chain tension adjusters
- No.2 cam drive idle gears/sprockets (See pages 3A-6 through -13.)



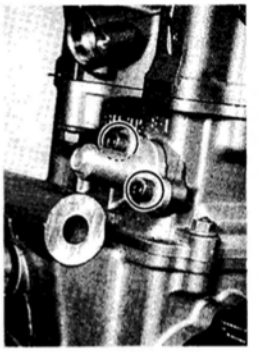

NOTE:
The following parts can be removed without removing the cylinder heads and cylinders.

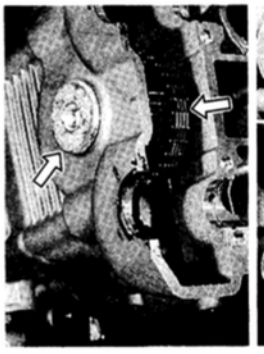

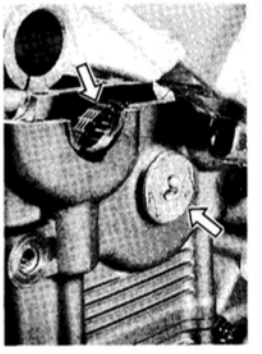

- Water pump
- Clutch cover (See page 3-27.)

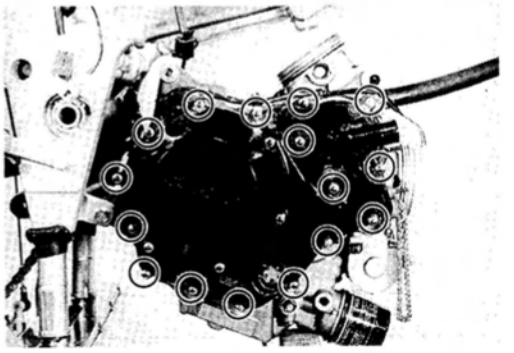

- Clutch assembly (See pages 3-27 through -30.)

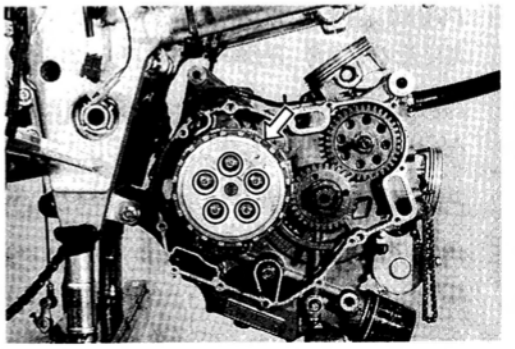

- Generator cover (See page 3-26.)

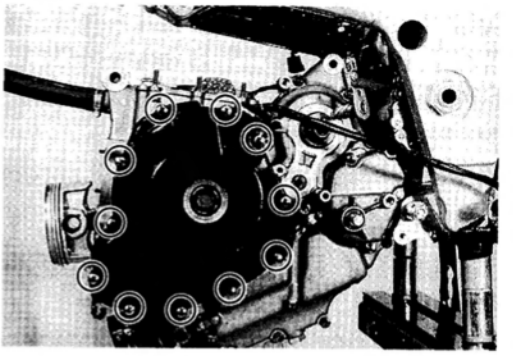

- No.1 cam drive idle gear/sprocket
- Cam chain (See page 3-31.)

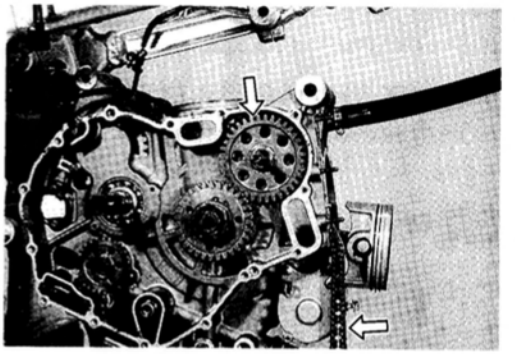

- Primary drive gear (See page 3-32.)

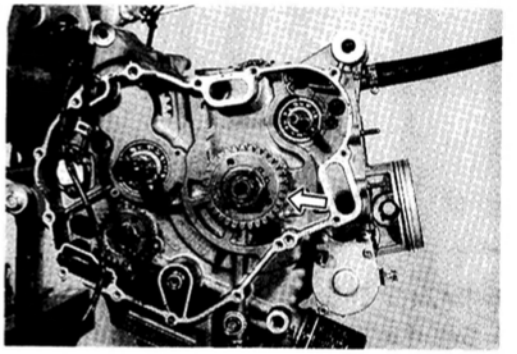

- Generator rotor (See pages 3-32 and -33.)

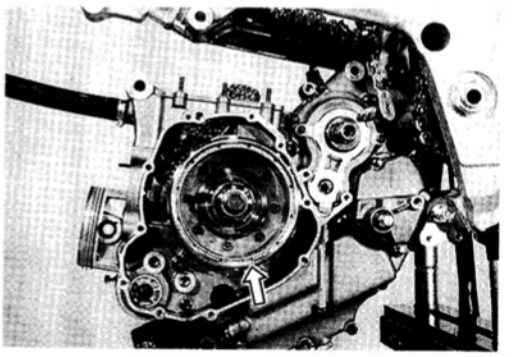

- No.1 cam drive idle gear shaft/sprocket
- Cam chain (See page 3-33.)

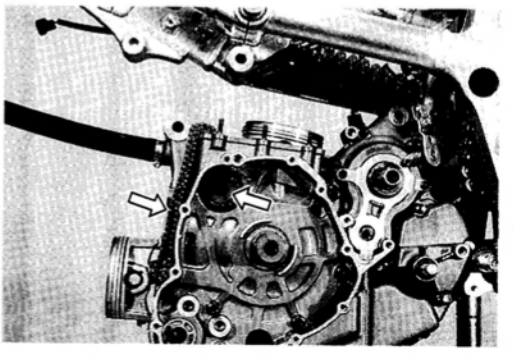

NO.1 CAM DRIVE IDLE GEAR/SPROCKET AND NO.1 CAM DRIVE IDLE GEAR SHAFT/ SPROCKET INSPECTION

INSPECTION

Visually inspect the gear and sprocket teeth for wear. If they are worn, replace them with new ones.

PRIMARY DRIVE GEAR INSPECTION AND SERVICE

PRIMARY DRIVE GEAR INSPECTION

Visually inspect the gear teeth for wear and damage. If they are worn, replace the gear with a new one.

PRIMARY DRIVE GEAR DISASSEMBLY

- Disassemble the primary drive gear by removing the circlip.

TOOL **09900-06107: Snap ring pliers**

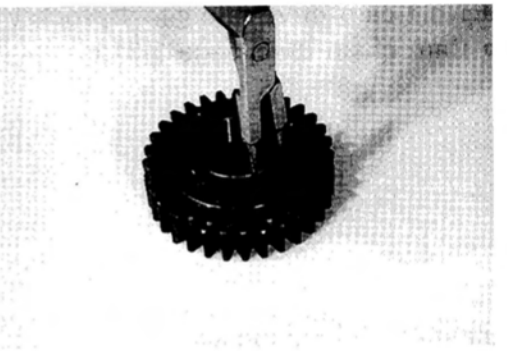

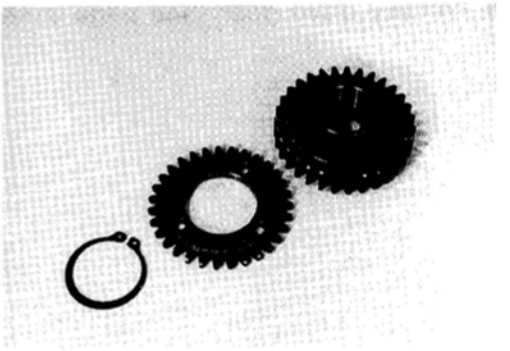

PRIMARY DRIVE GEAR REASSEMBLY

- Set the springs between the gears as shown.



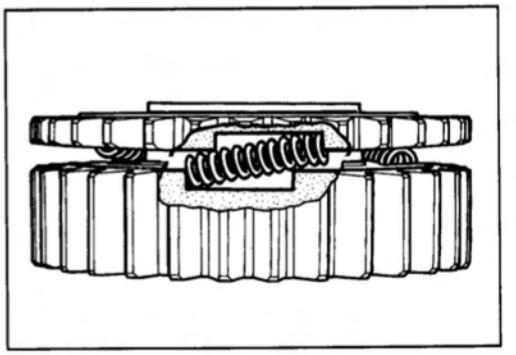

- While turning the gear ① clockwise, push in it completely.

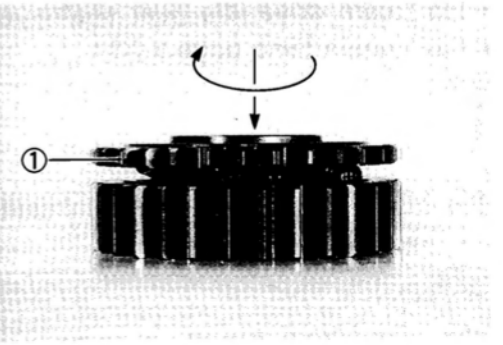

- Install the circlip completely by using the snap ring pliers.

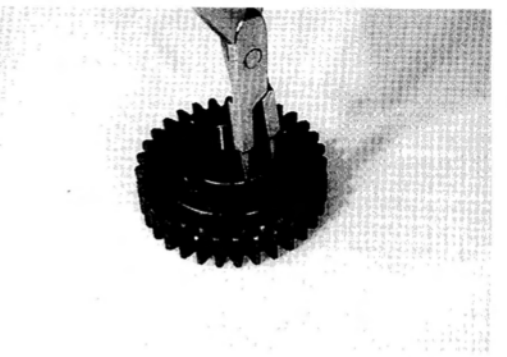

TOOL **09900-06107: Snap ring pliers**

⚠ CAUTION

*** Never reuse the circlip. After the circlip has been removed from the gear, it should be discarded, a new circlip must be installed.**
*** When installing a new circlip, care must be taken not to expand the end gap larger than required to slip the circlip over the gear.**
*** After installing the circlip, always insure that it is completely seated in its groove and securely fitted.**

PRIMARY DRIVE GEAR/NO.1 CAM DRIVE IDLE GEAR SHAFT/SPROCKET INSTALLATION

Refer to the engine reassembly section and engine installation section to install the primary drive gear, the No.1 cam drive idle gear/sprocket and the No.1 cam drive idle gear shaft/sprocket.

ENGINE REASSEMBLY ..... See pages 3-45 through -78.

ENGINE INSTALLATION .... See pages 3-11 through -17.

After installing the engine assembly, adjust the following items to the specification.

Page
* Engine coolant 2-15
* Engine oil 2-11
* Throttle cable play 2-13
* Throttle valve synchronization ..... 4-71 through -75
* Idling adjustment 2-12
* Clutch lever play 2-14
* Drive chain slack 2-17

STARTER SYSTEM/GENERATOR/CRANKSHAFT POSITION SENSOR

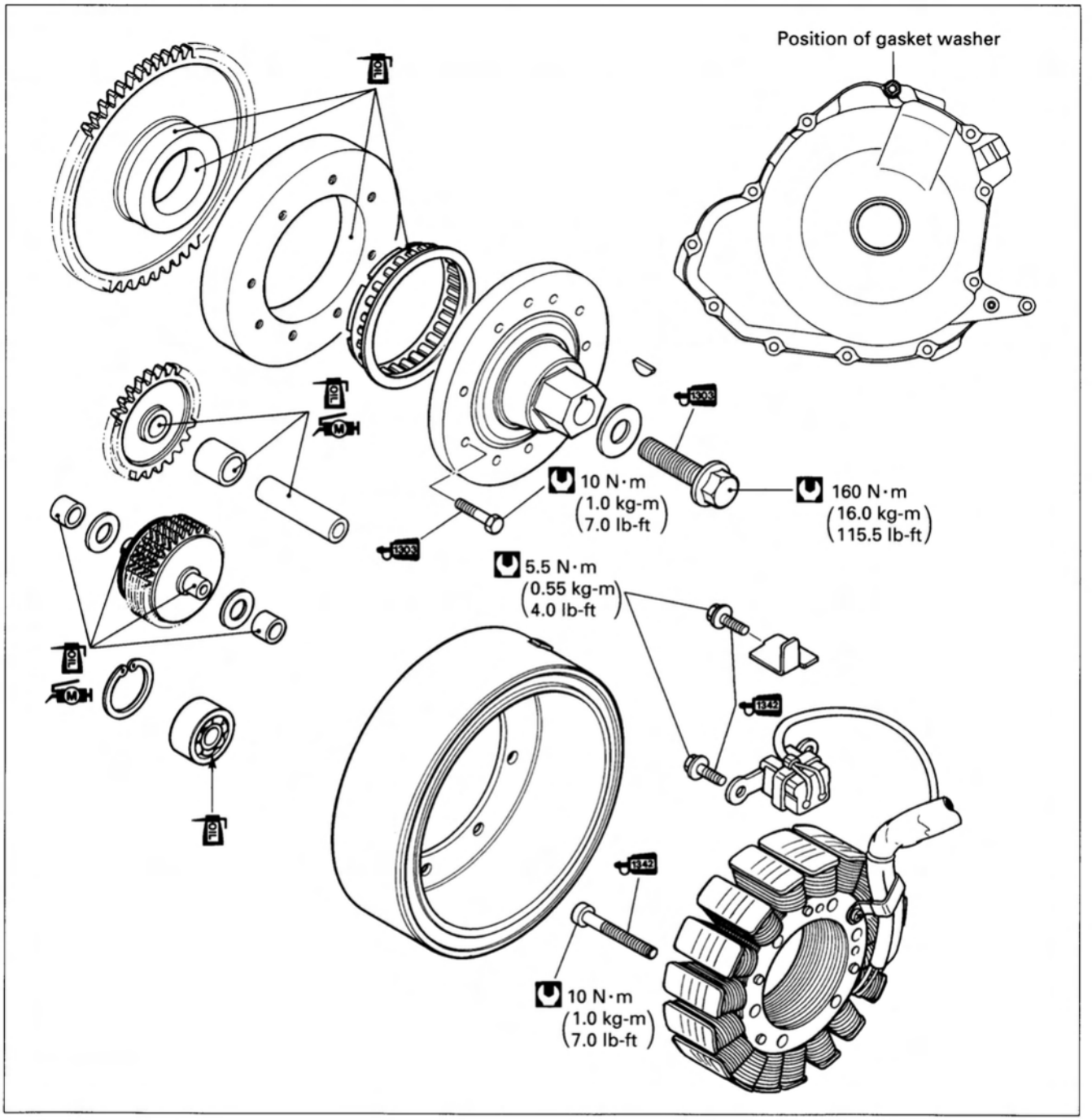

CONTENTS

STARTER TORQUE LIMITER/GENERATOR/CRANKSHAFT POSITION SENSOR REMOVAL *3F-1*
STARTER TORQUE LIMITER/GENERATOR/CRANKSHAFT POSITION SENSOR INSPECTION AND SERVICE *3F-3*
STARTER TORQUE LIMITER/GENERATOR/CRANKSHAFT POSITION SENSOR INSTALLATION *3F-6*
STARTER MOTOR REMOVAL *3F-8*
STARTER MOTOR INSPECTION AND SERVICING *3F-8*
STARTER MOTOR INSTALLATION *3F-8*

STARTER TORQUE LIMITER/GENERATOR/ CRANKSHAFT POSITION SENSOR REMOVAL

After draining engine oil, the following component parts must be removed in the described order before removing the starter torque limiter, the generator and the crankshaft position sensor.

NOTE:
Refer to the following pages for the details of each step.

Drain:
- Engine oil (See page 2-11.)

Remove:
- Engine sprocket cover

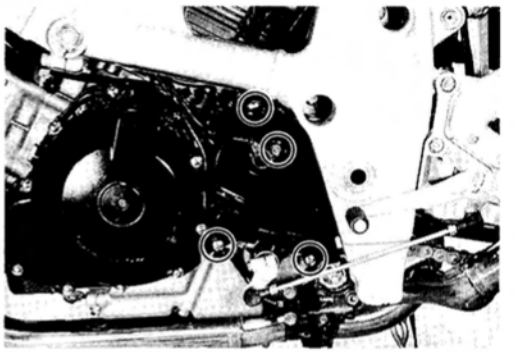

- Clutch release assembly
- Clutch cable (See page 3-5.)

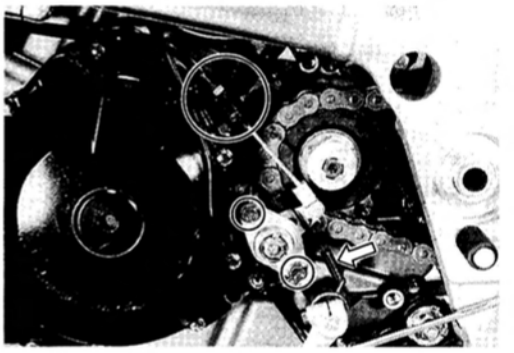

- Generator lead wire
- Crankshaft position sensor lead wire (See page 3-9.)

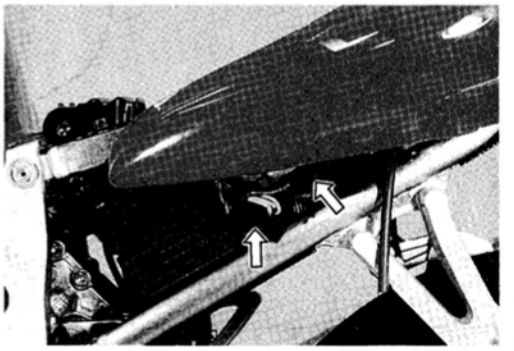

- Generator cover (See page 3-26.)

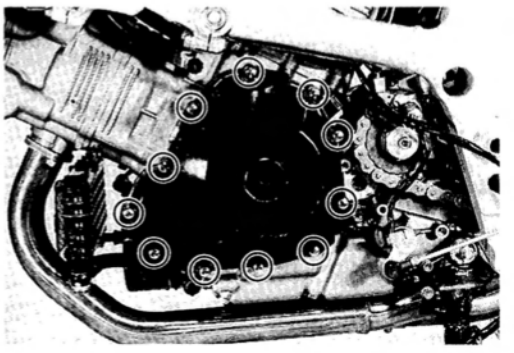

- Dowel pin
- Gasket (See page 3-26.)

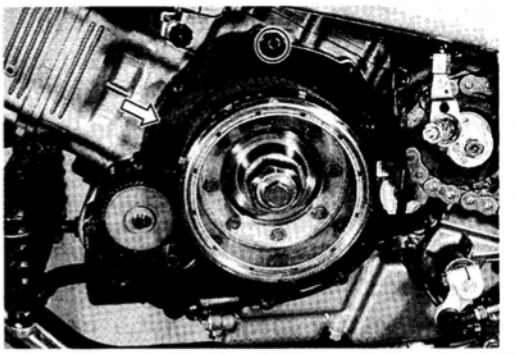

- Starter torque limiter (See page 3-26.)

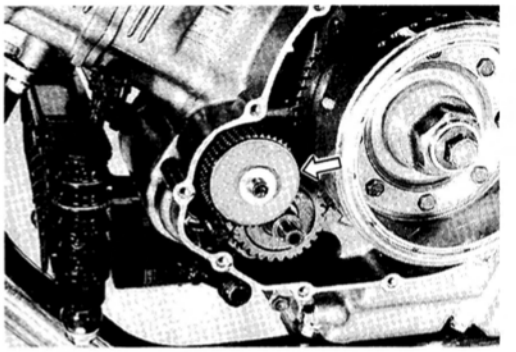

- Starter idle gear
- Shaft
- Spacer
- Bushings (See page 3-26.)

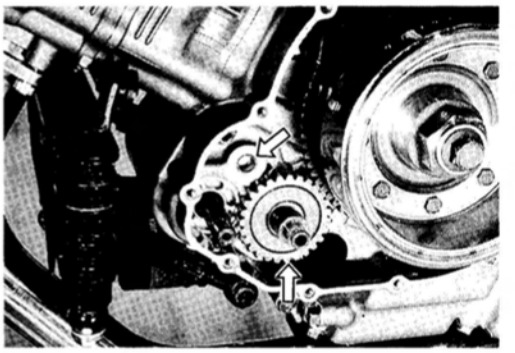

- Generator rotor assembly (See pages 3-32 and -33.)

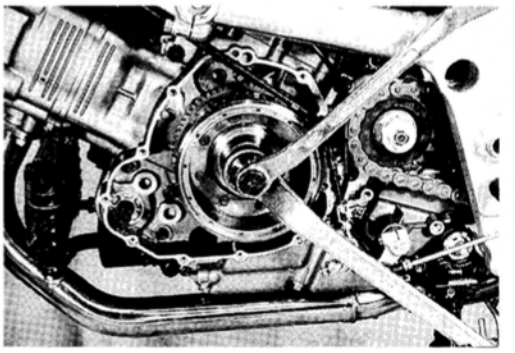

- Starter driven gear (See page 3-33.)

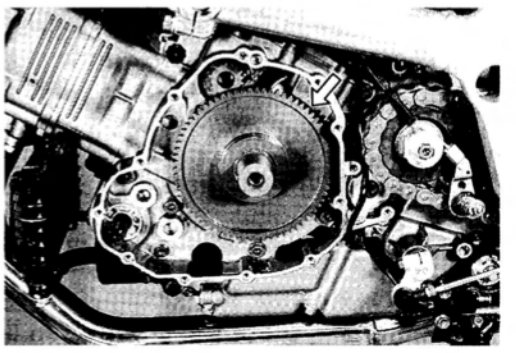

STARTER TORQUE LIMITER/GENERATOR/ CRANKSHAFT POSITION SENSOR INSPECTION AND SERVICE

STARTER TORQUE LIMITER INSPECTION



⚠ CAUTION

Do not attempt to disassemble the starter torque limiter.
The starter torque limiter is available only as an assembly.

- Check the slip torque with the special tools.

TOOL 09930-73110: Starter torque limiter holder ①
09930-73120: Starter torque limiter socket ②

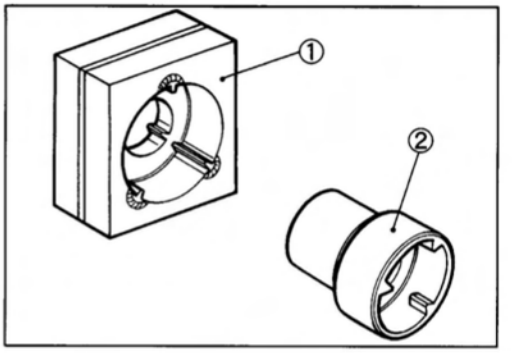

Standard
Slip torque: 42–64 N·m (4.2–6.4 kg-m, 30.5–46.5 lb-ft)

- Set the starter torque limiter to the special tools and vise as shown in the illustration.
- If the slip torque is not within the specification, replace the starter torque limiter with a new one.

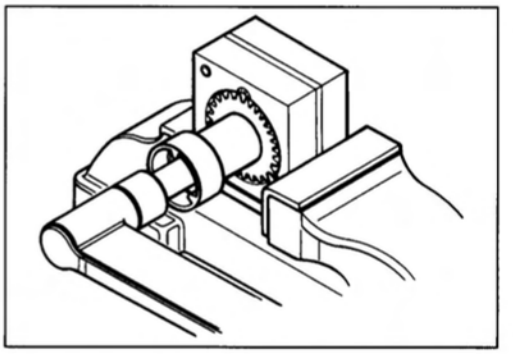

STARTER TORQUE LIMITER SHAFT BUSHING INSPECTION

- Inspect the bushings for wear or damage. If there is anything unusual, replace the bushings with new ones.

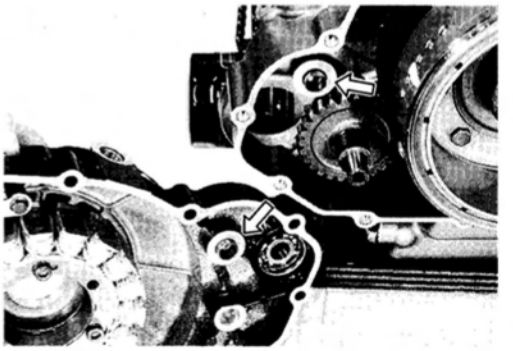

STARTER MOTOR SHAFT BEARING INSPECTION

- Inspect the bearing for abnormal noise and smooth rotation. If there is anything unusual, replace the bearing with a new one by using the special tool.

TOOL 09900-06108: Snap ring pliers

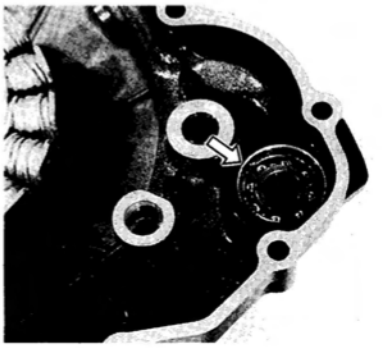

⚠ CAUTION

After installing the circlip, always insure that it is completely seated in its groove and securely fitted.

GENERATOR STATOR AND CRANKSHAFT POSITION SENSOR INSPECTION

Refer to pages 7-9, -24 and -25.

GENERATOR STATOR AND CRANKSHAFT POSITION SENSOR SERVICING

When replacing the generator stator or crankshaft position sensor, apply THREAD LOCK "1342" to the generator stator set bolts ①, clamp bolt ② and crankshaft position sensor set bolt ③ and tighten them to the specified torque.

99000-32050: THREAD LOCK "1342"

Generator stator set bolt ①: 10 N·m (1.0 kg-m, 7.0 lb-ft)
Generator stator clamp bolt ②: 5.5 N·m (0.55 kg-m, 4.0 lb-ft)
Crankshaft position sensor set bolt ③: 5.5 N·m (0.55 kg-m, 4.0 lb-ft)

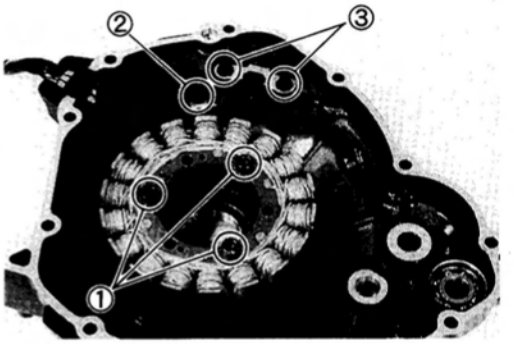

STARTER CLUTCH INSPECTION

Install the starter driven gear onto the starter clutch and turn the starter driven gear by hand to inspect the starter clutch for a smooth movement. The gear turns in one direction only. If a large resistance is felt for rotation, inspect the starter clutch or the starter clutch contacting surface on the starter driven gear for wear and damage. If they are found to be damaged, replace them with new ones.



STARTER DRIVEN GEAR BEARING INSPECTION

Inspect the starter driven gear bearing for wear of any damages.



STARTER CLUTCH SERVICING

- Remove the starter clutch securing bolts.
- Remove the one way clutch ④, guide ⑤ and starter clutch housing ⑥ from the generator rotor ⑦.



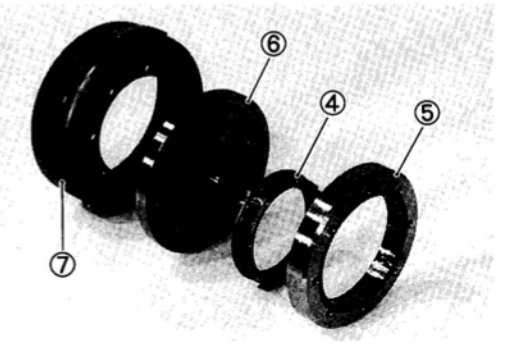

- When fitting the one way clutch ② to the guide ①, position flange side Ⓐ of one way clutch to the starter clutch housing ③ side.

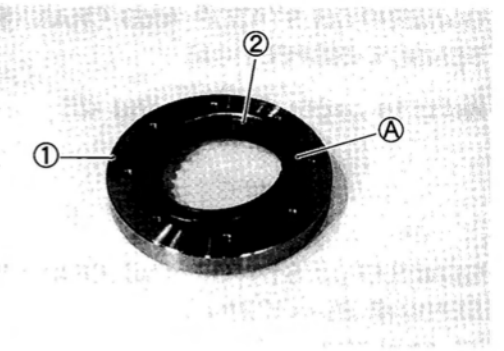

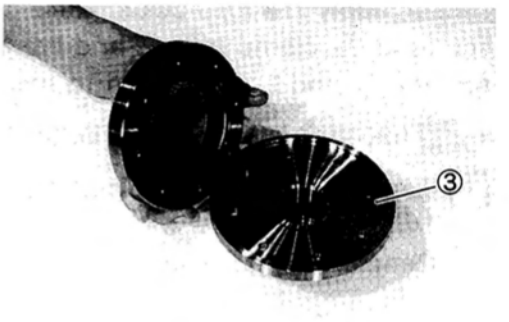

- When installing the starter clutch housing ③ to the generator rotor, align the hole Ⓑ of the starter clutch housing with the boss Ⓒ of the generator rotor.

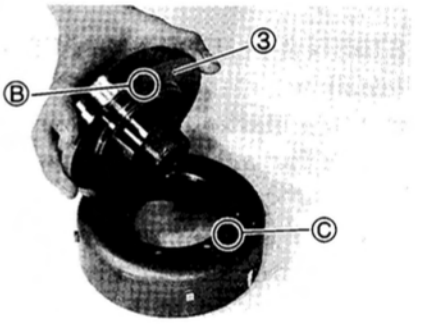

- Apply THREAD LOCK SUPER "1303" to the bolts and tighten them to the specified torque.

1303 99000-32030: THREAD LOCK SUPER "1303"

Starter clutch bolt: 10 N·m (1.0 kg-m, 7.0 lb-ft)



STARTER TORQUE LIMITER/GENERATOR/ CRANKSHAFT POSITION SENSOR INSTALLATION

Installation is in the reverse order of removal.

NOTE:
Refer to the following pages for the details of each step.

Install:
- Starter driven gear
- Generator rotor assembly (See pages 3-45 and -46.)

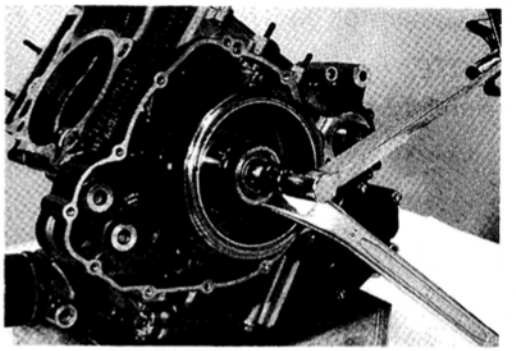

- Starter idle gear
- Shaft
- Spacer (See page 3-56.)

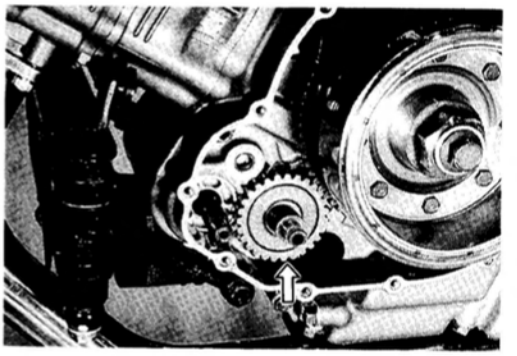

- Bushings (See page 3-56.)

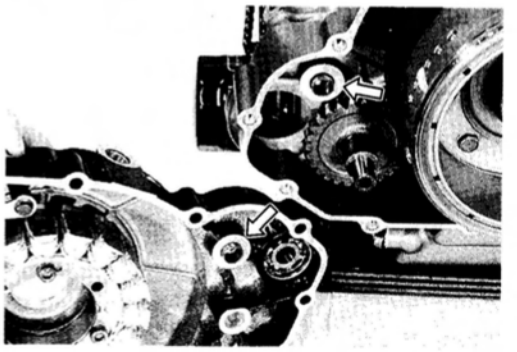

- Starter torque limiter (See page 3-56.)

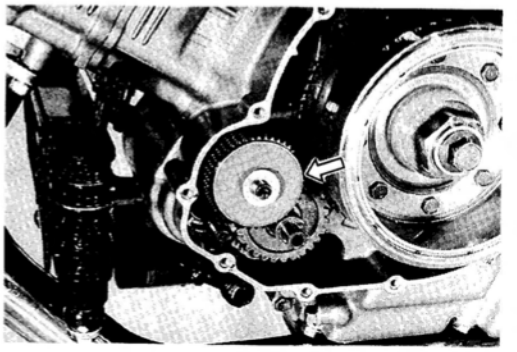

- Gasket
- Dowel pin (See page 3-56.)

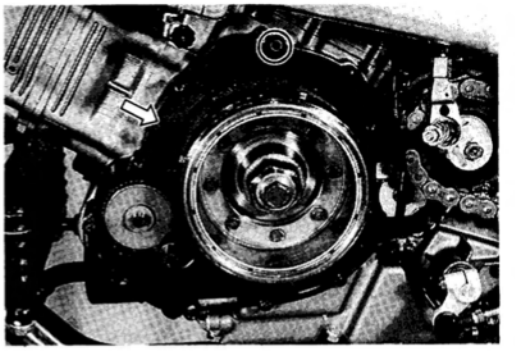

- Generator cover (See page 3-57.)

NOTE:
Refer to page 8-20 for wire routing.

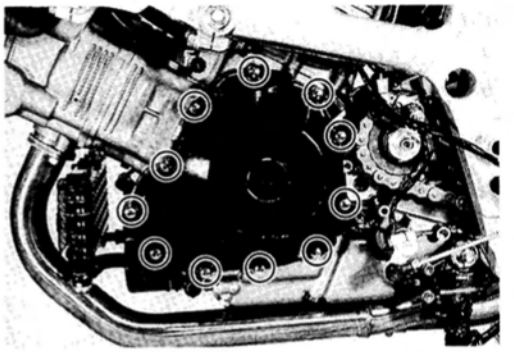

- Clutch release assembly (See pages 3-15 and -16.)

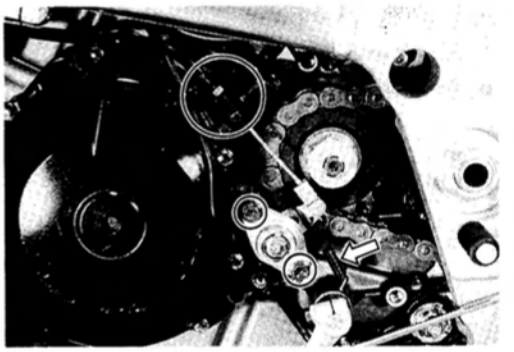

- Engine sprocket cover

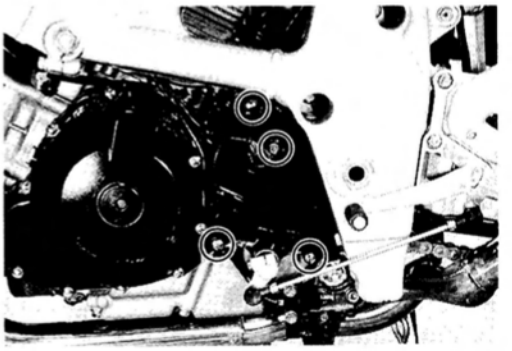

Adjust the following items to the specification.

	Page
* Engine oil	2-11
* Clutch lever play	2-14

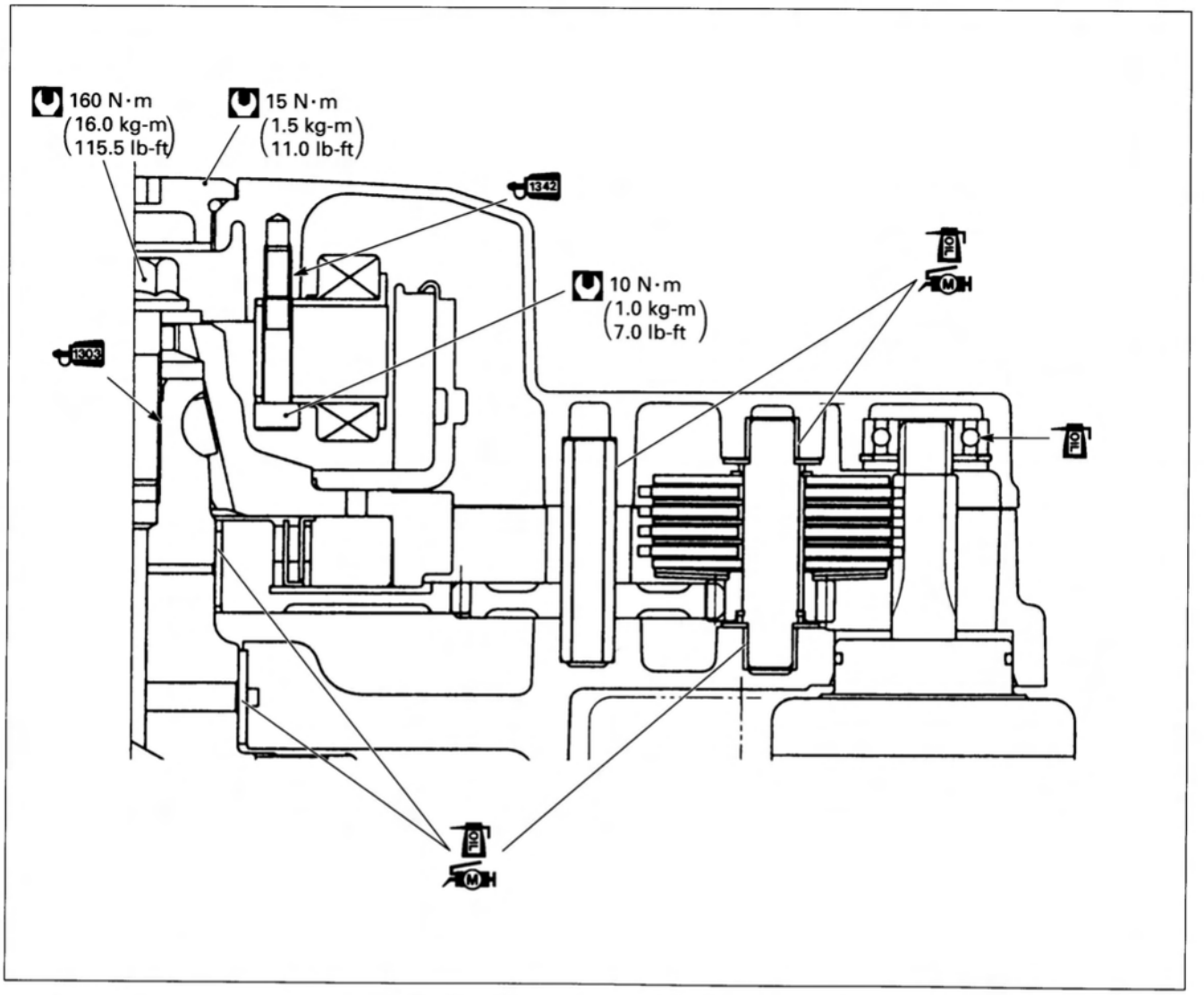

STARTER MOTOR REMOVAL

- Disconnect the starter motor lead wire and remove the starter motor by removing the mounting bolts.

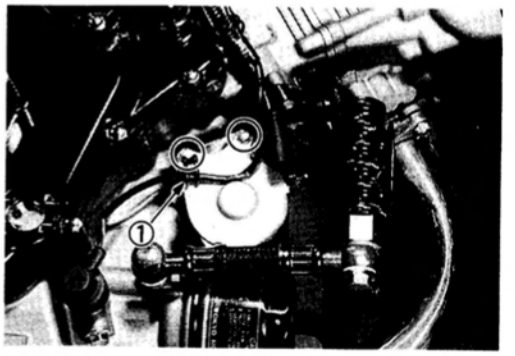

STARTER MOTOR INSPECTION AND SERVICING

Refer to pages 8-13, -14 and -15.

STARTER MOTOR INSTALLATION

- Install the starter motor with two bolts.

NOTE:

** Fit the clamp ① to the bolt as shown.*

** Apply SUZUKI SUPER GREASE "A" to the starter motor O-ring.*

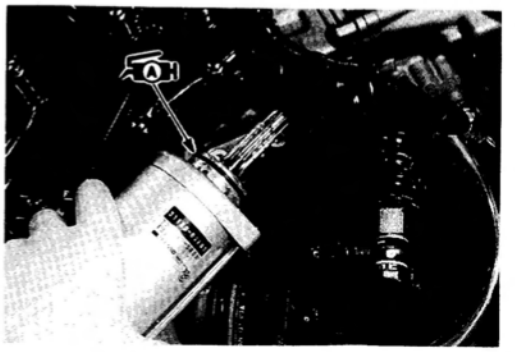

A H 99000-25030: SUZUKI SUPER GREASE "A"

⚠ CAUTION

Use a new O-ring to prevent oil leakage.

GEARSHIFT LINKAGE

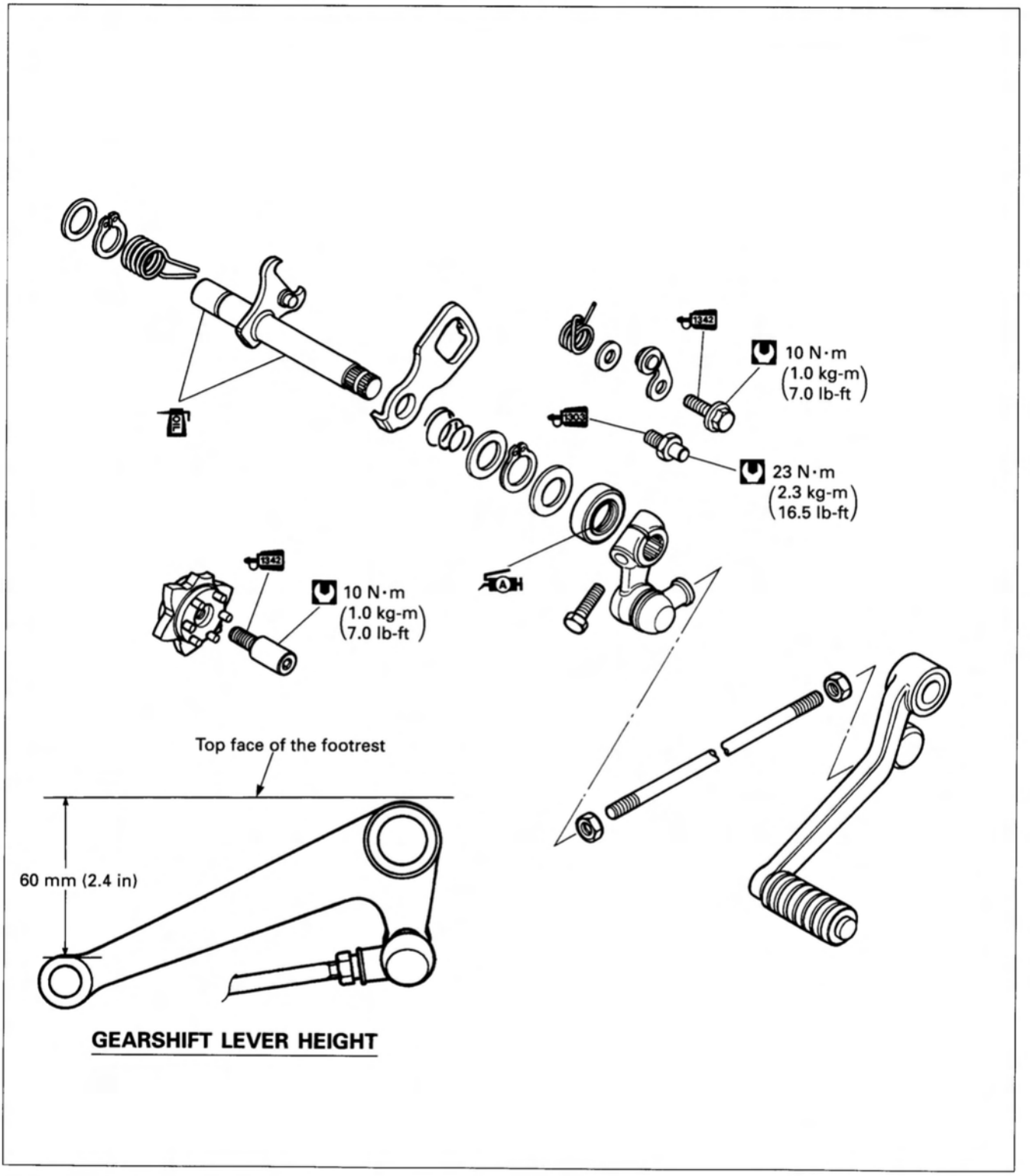

GEARSHIFT LEVER HEIGHT

CONTENTS

GEARSHIFT LINKAGE REMOVAL 3G-1
GEARSHIFT LINKAGE INSPECTION AND SERVICE 3G-3
GEARSHIFT LINKAGE INSTALLATION 3G-5

GEARSHIFT LINKAGE REMOVAL

After draining engine oil, the following component parts must be removed in the described order before removing the gearshift linkage.

NOTE:
Refer to the following pages for the details of each step.

Drain:
- Engine oil (See page 2-11.)

Remove:
- Engine sprocket cover

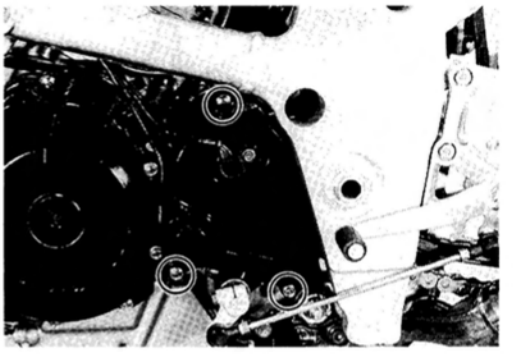

- Gearshift lever
- Speed sensor rotor (See page 3-5.)

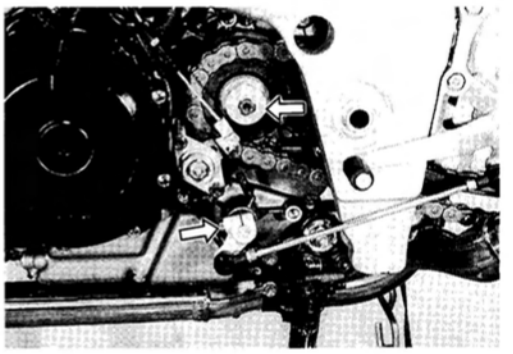

- Side-Stand switch
- Clutch release assembly (See page 3-5.)

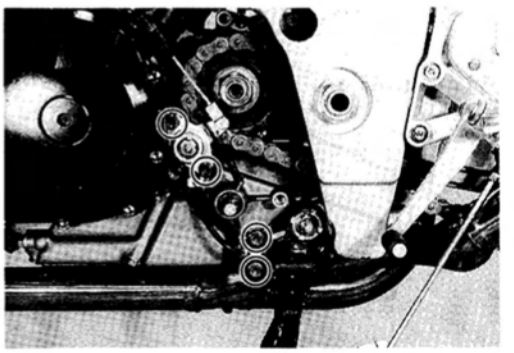

- Engine sprocket (See page 3-6.)

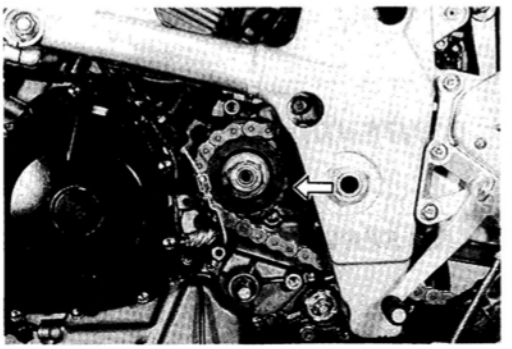

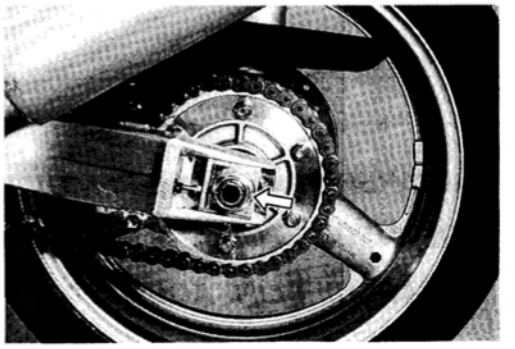

- Gearshift cover (See page 3-33.)

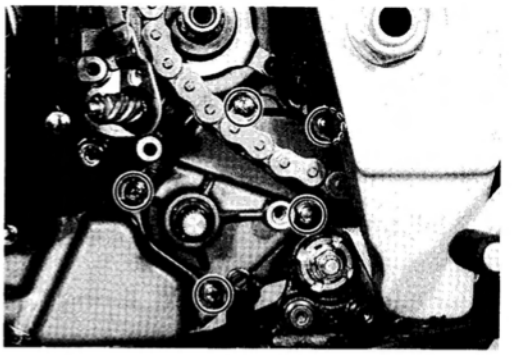

- Dowel pins
- Gasket (See page 3-33.)

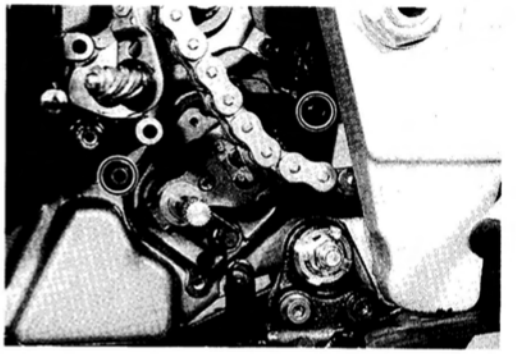

- Gearshift shaft/gearshift arm (See page 3-34.)

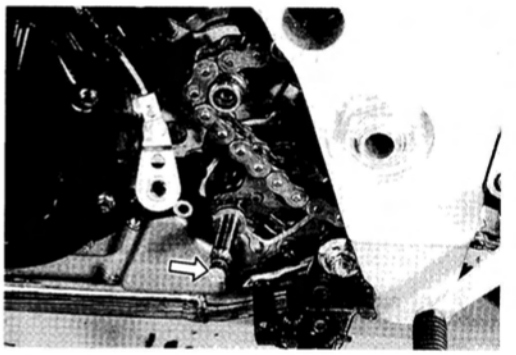

- Gearshift cam plate
- Gearshift cam stopper
- Gearshift arm stopper bolt (See page 3-34.)

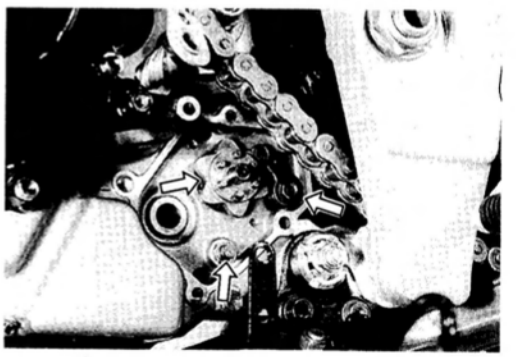

GEARSHIFT LINKAGE INSPECTION AND SERVICE

GEARSHIFT SHAFT/GEARSHIFT ARM DISASSEMBLY

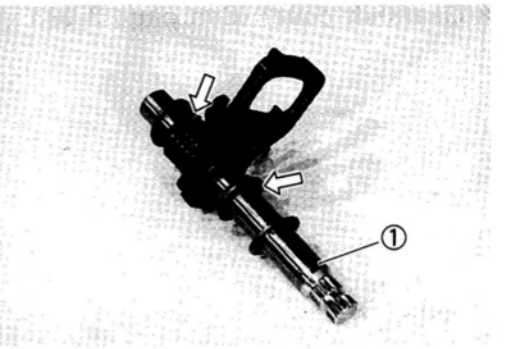

- Remove the following parts from the gearshift shaft/gearshift arm ①.

②Washer	⑥Plate return spring
③Circlip	⑦Washer
④Gearshift shaft return spring	⑧Circlip
⑤Gearshift cam drive plate	⑨Washer

TOOL 09900-06107: Snap ring pliers

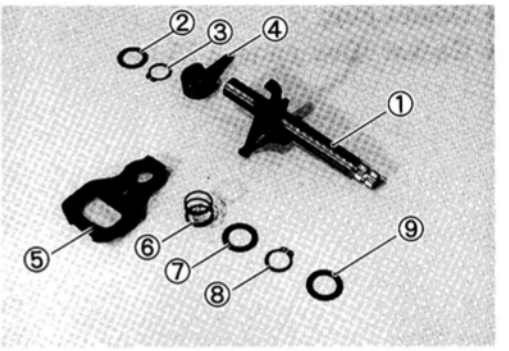

GEARSHIFT SHAFT/GEARSHIFT ARM INSPECTION

Check the gearshift shaft/gearshift arm ① for wear or bend.

RETURN SPRINGS INSPECTION

Check the return springs, ④ and ⑥, for damage or fatigue.

GEARSHIFT SHAFT/GEARSHIFT ARM REASSEMBLY

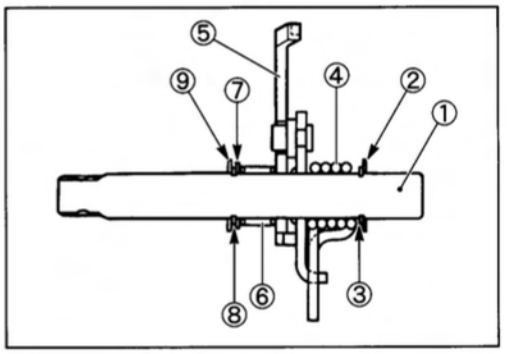

- Install the following parts to the gearshift shaft/gearshift arm ① as shown in the right illustration.

②Washer	⑥Plate return spring
③Circlip	⑦Washer
④Gearshift shaft return spring	⑧Circlip
⑤Gearshift cam drive plate	⑨Washer

TOOL 09900-06107: Snap ring pliers

NOTE:
When installing the gearshift shaft return spring ④, position the stopper Ⓐ of the gearshift arm between the shaft return spring ends Ⓑ.

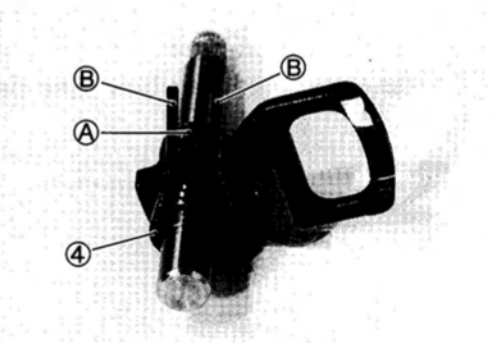

OIL SEAL INSPECTION

Inspect the gearshift shaft oil seal for damage or wear on the lip.
If any defects are found, replace the oil seal with a new one.

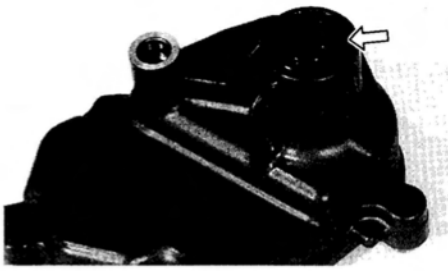

OIL SEAL REPLACEMENT

- Remove the gearshift shaft oil seal from the gearshift cover.
- Install the new oil seal.

⚠ CAUTION

The removed oil seal must be replaced with a new one.

NOTE:
Apply grease to the oil seal lip to prevent damage when installing the gearshift cover.

99000-25030: SUZUKI SUPER GREASE "A"

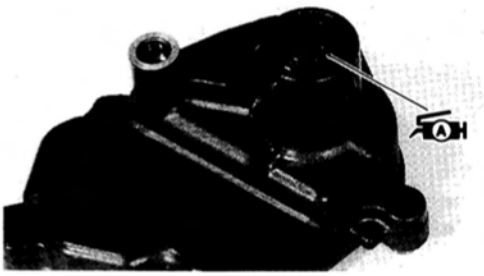

GEARSHIFT SHAFT HOLE INSPECTION

Check the gearshift shaft holes for damage or wear.

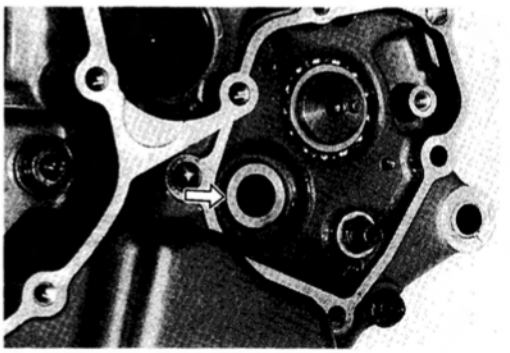

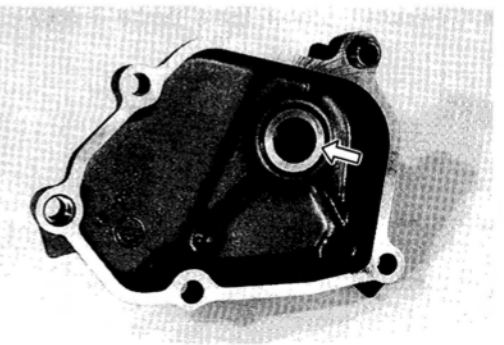

GEARSHIFT LINKAGE INSTALLATION

Installation is in the reverse order of removal.

NOTE:
Refer to the following pages for the details of each step.

Install:
- Gearshift arm stopper bolt
- Gearshift cam stopper
- Gearshift cam plate (See page 3-44.)



- Gearshift shaft/gearshift arm (See page 3-44.)

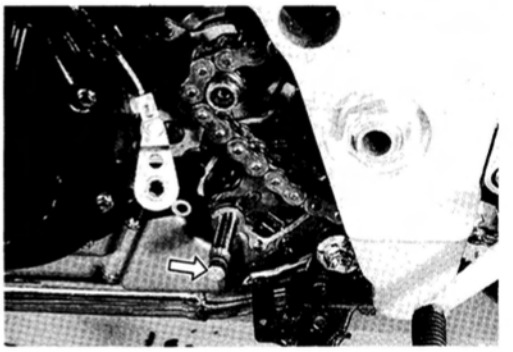

- Gasket
- Dowel pins (See page 3-45.)

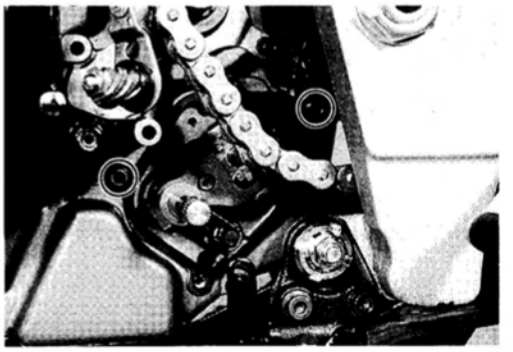

- Gearshift cover (See page 3-45.)

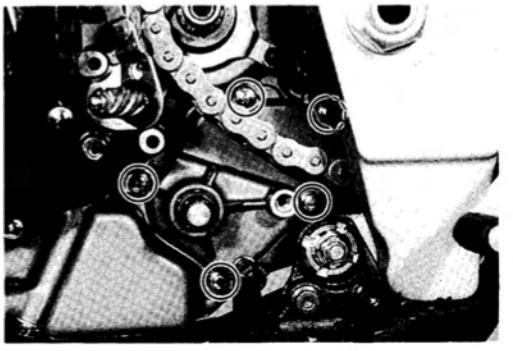

- Engine sprocket (See page 3-15.)

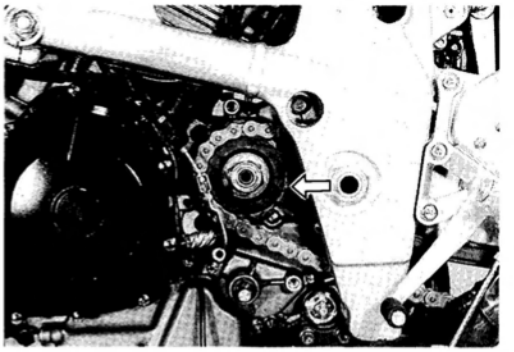

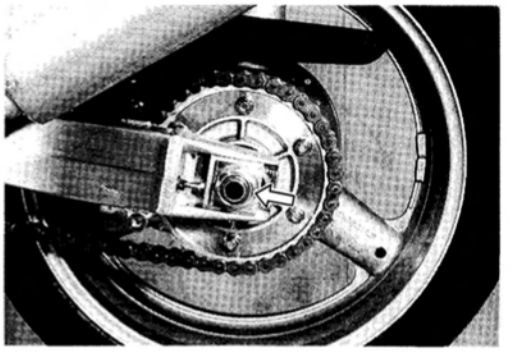

- Clutch release assembly (See pages 3-15 and -16.)
- Side-stand switch

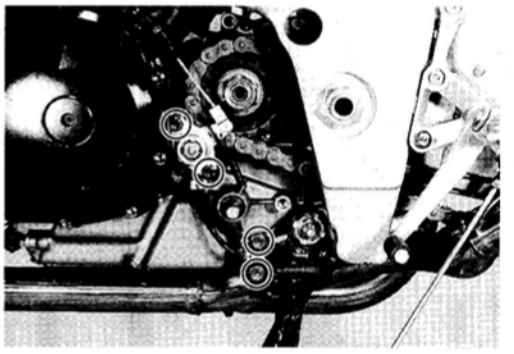

- Gearshift lever
- Speed sensor rotor (See page 3-15.)

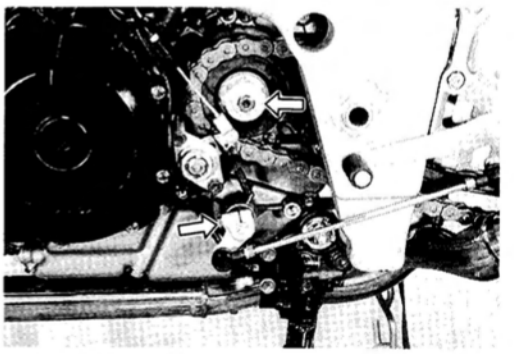

- Engine sprocket cover

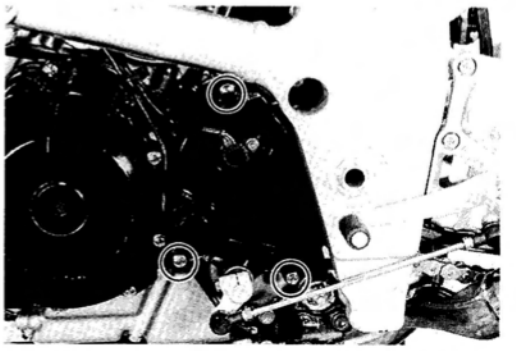

Adjust the following items to the specification.

	Page
* Engine oil	2-11
* Clutch lever play	2-14
* Drive chain slack	2-17

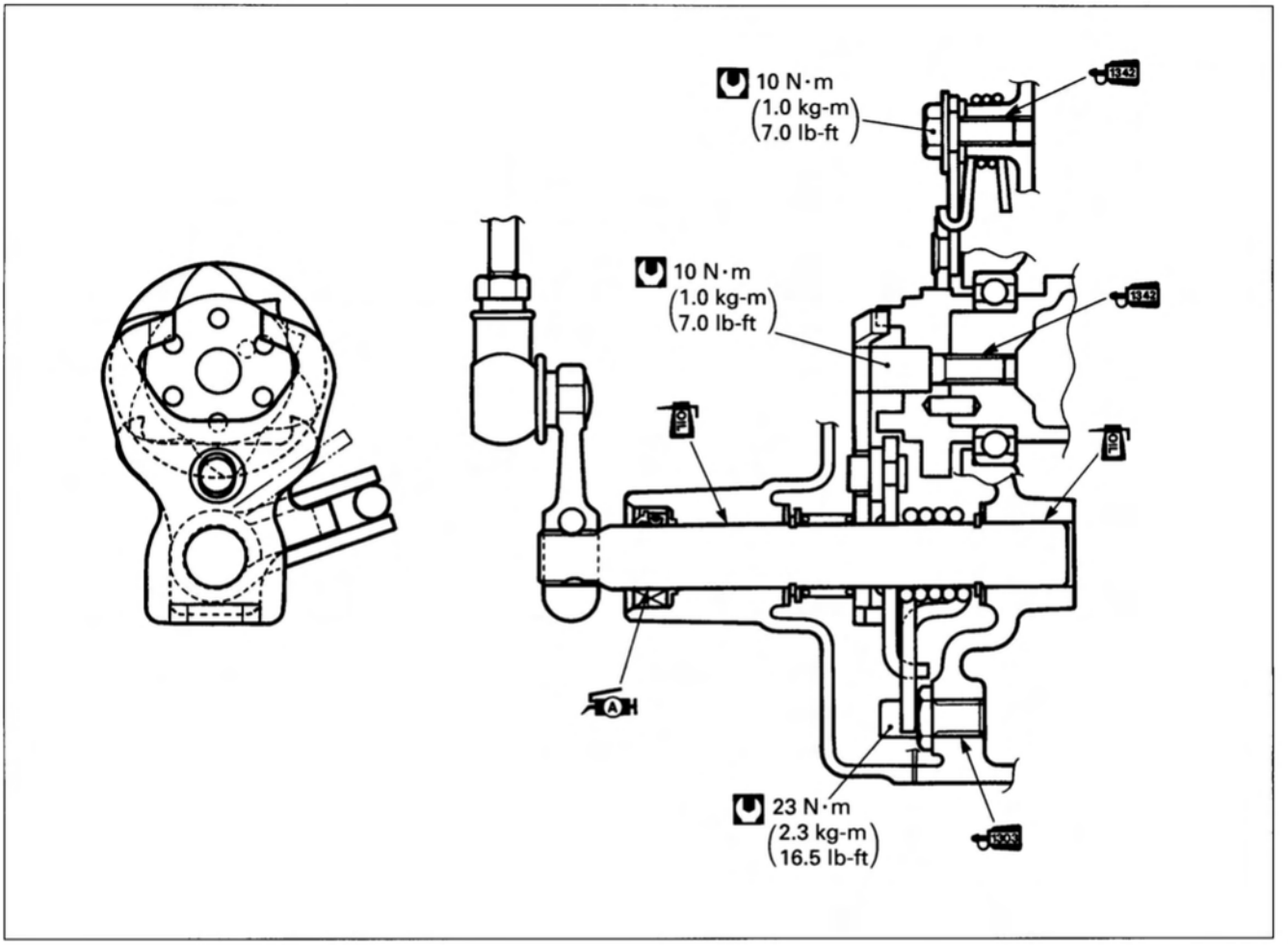

CRANKCASE/TRANSMISSION/CRANKSHAFT/CONROD

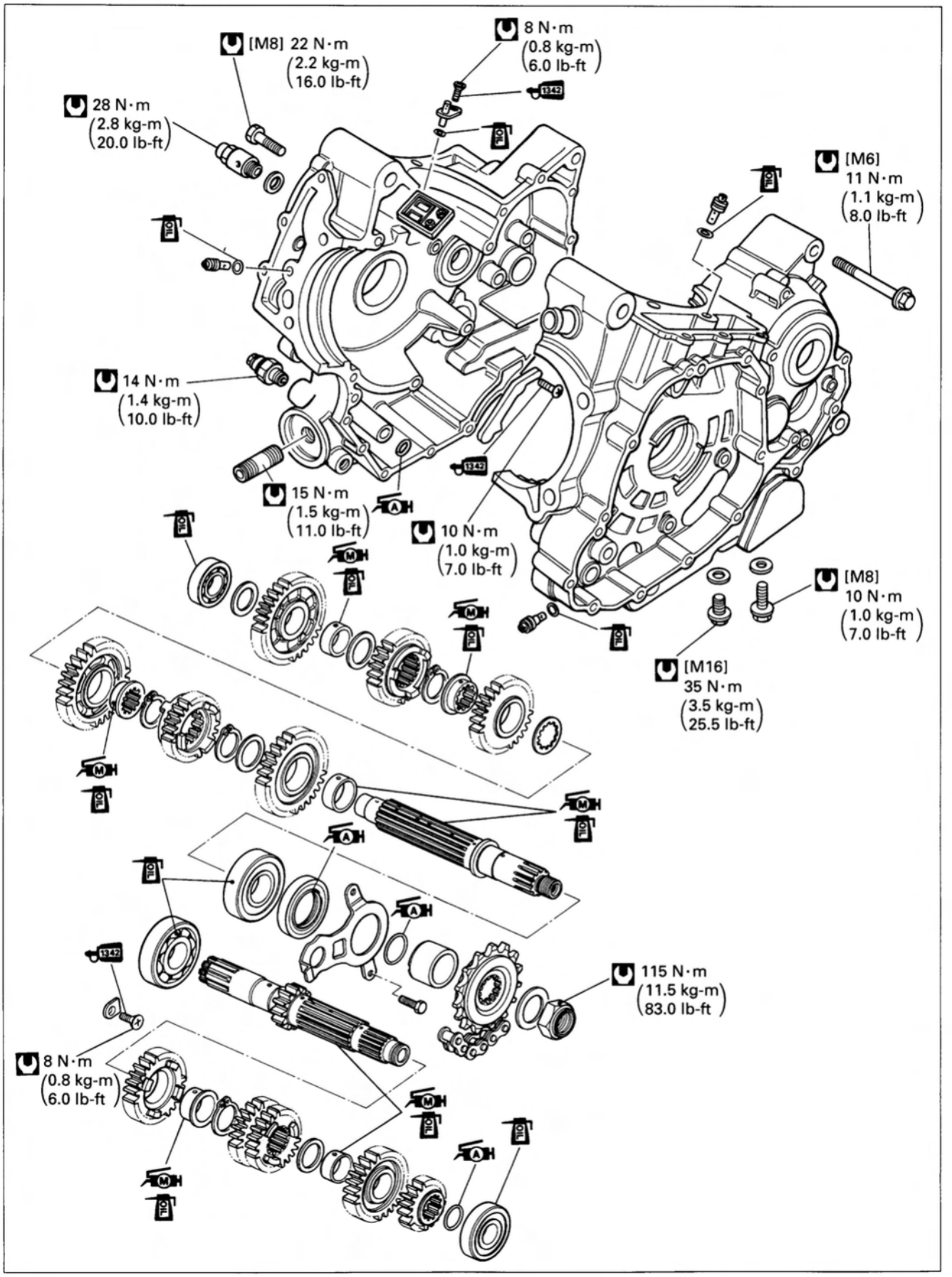

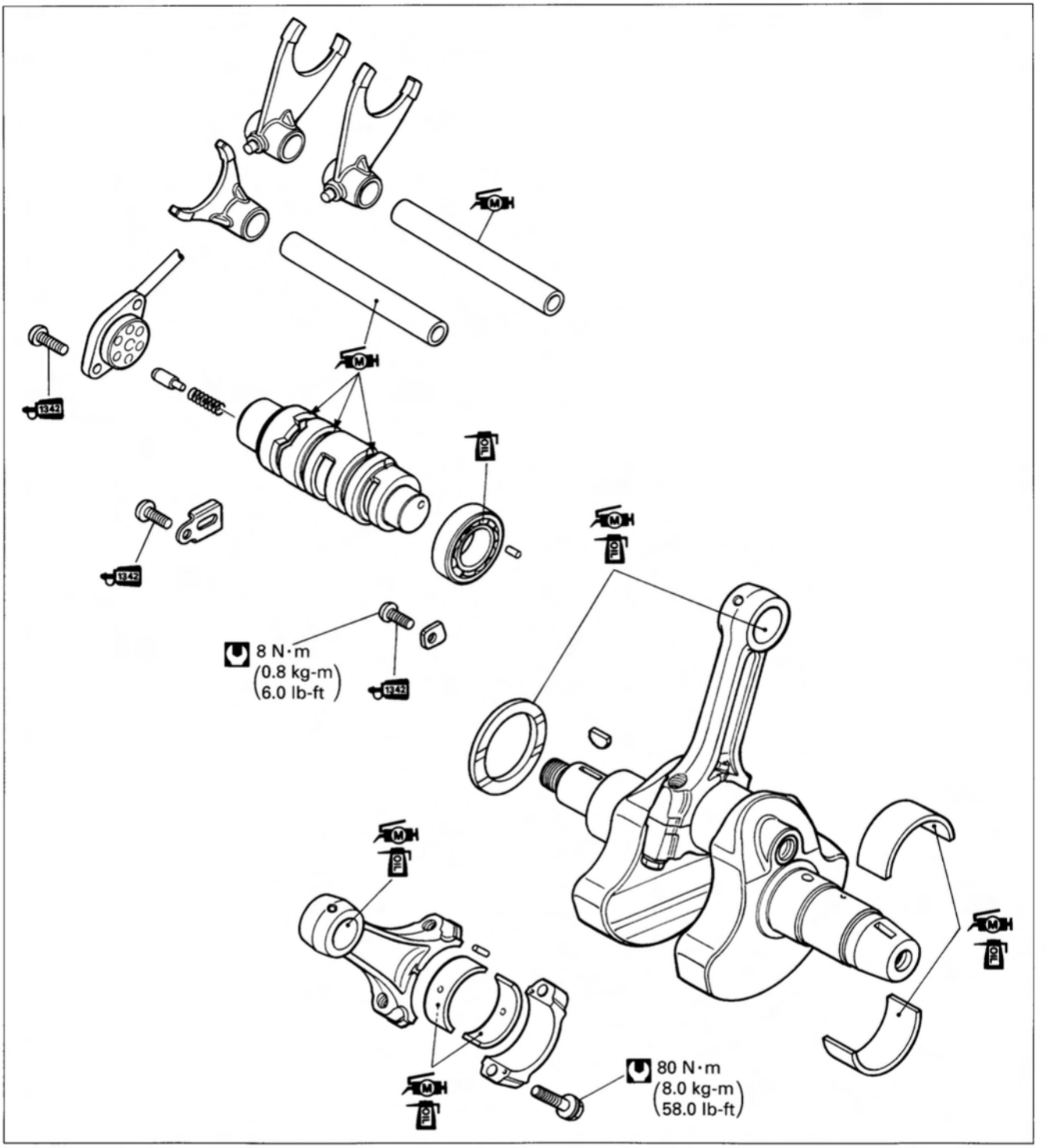

3H

CONTENTS

TRANSMISSION/CRANKSHAFT/CONROD REMOVAL 3H- 1
TRANSMISSION INSPECTION AND SERVICE 3H- 1
CONROD/CRANKSHAFT INSPECTION 3H- 8
CONROD-CRANK PIN BEARING INSPECTION AND SERVICE 3H- 8
CRANKCASE-CRANKSHAFT BEARING INSPECTION AND SERVICE 3H-11
CRANKSHAFT THRUST CLEARANCE ADJUSTMENT 3H-15
TRANSMISSION/CRANKSHAFT/CONROD INSTALLATION 3H-16

TRANSMISSION/CRANKSHAFT/CONROD REMOVAL

The crankcase must be separated to service the transmission, the crankshaft and the conrod. These engine components require engine removal and disassembly. Refer to the engine removal and the engine disassembly sections for these engine components removal.

* **ENGINE REMOVAL ..... See pages 3- 2 through -10.**
* **ENGINE DISASSEMBLY . See pages 3-18 through -37.**

TRANSMISSION INSPECTION AND SERVICE

⚠ CAUTION

Be sure to identify each removed part as to its location, and lay the parts out in groups designated as "Drive" and "Driven", so that each will be restored to the original location during assembly.

GEARSHIFT FORK–TO–GROOVE CLEARANCE

Using a thickness gauge, check the gearshift fork clearance in the groove of its gear.

The clearance for each gearshift fork plays an important role in the smoothness and positiveness of the shifting action.

Service Limit

Gearshift fork–to–Groove clearance: 0.50 mm (0.020 in)

If the clearance checked is noted to exceed the limit specified, replace the fork or its gear, or both.

TOOL 09900-20803: Thickness gauge
09900-20102: Vernier calipers

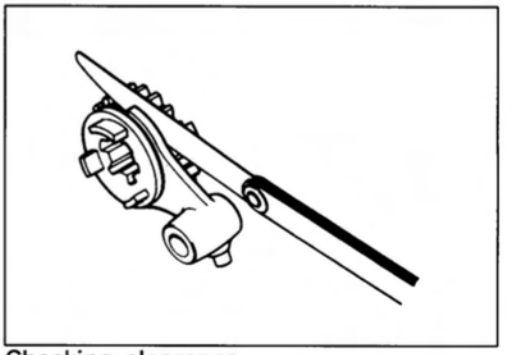

Checking clearance

Standard

Shift fork groove width: 5.0–5.1 mm (0.197–0.201 in)

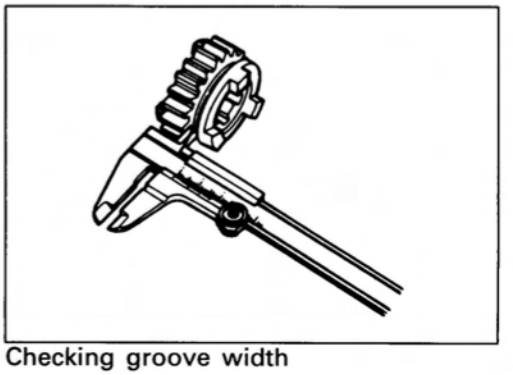

Checking groove width

Standard
Shift fork thickness: 4.8–4.9 mm (0.189–0.193 in)

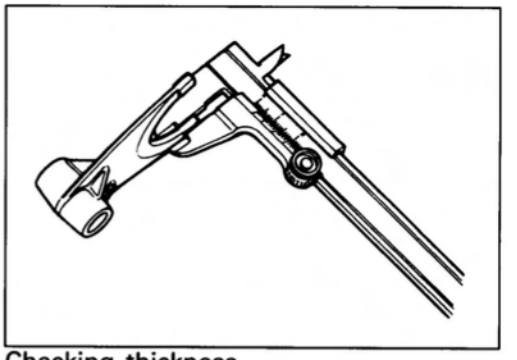
Checking thickness

DISASSEMBLY

Countershaft

- Remove the O-ring ①, the 2nd drive gear ② and top drive gear ③.

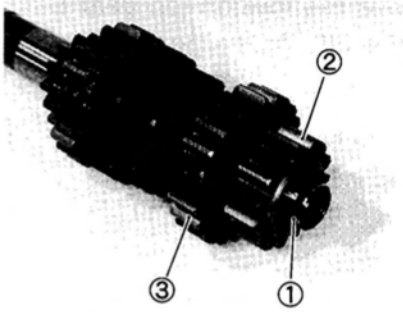

⚠ CAUTION

The removed O-ring must be replaced with a new one.

- Remove the top drive gear bushing ④, the washer ⑤, and the 3rd/4th drive gears ⑥.

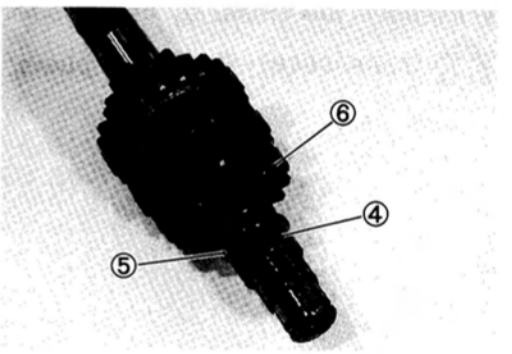

- Remove the circlip by using the special tool.

TOOL 09900-06107: Snap ring pliers



- Remove the 5th drive gear ⑦ and its bushing ⑧.

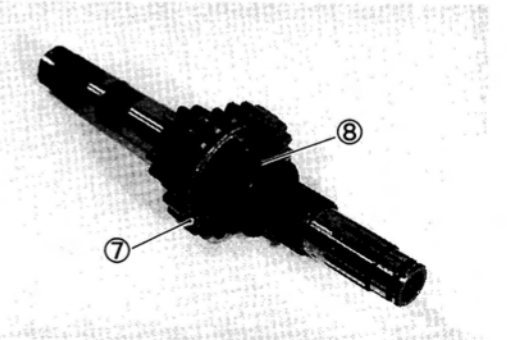

Driveshaft

- Remove the low driven gear ① and the washer ②.

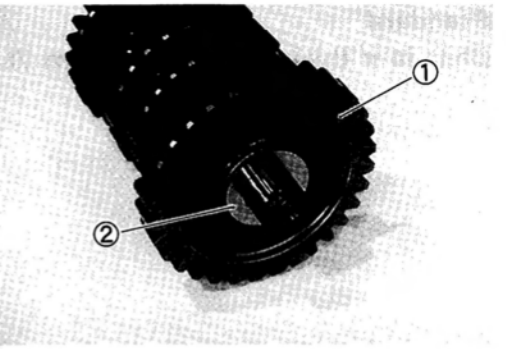

- Remove the low driven gear bushing ③, the washer ④ and the 5th driven gear ⑤.

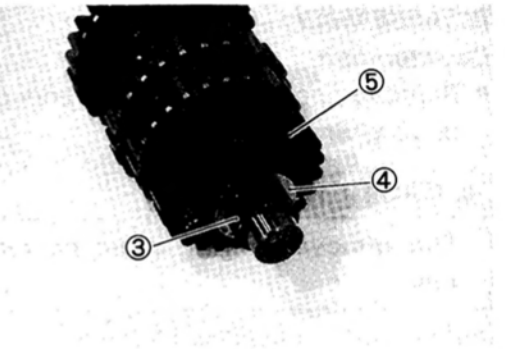

- Remove the circlip by using the special tool.

TOOL **09900-06107: Snap ring pliers**



- Remove the 4th driven gear ⑥ and its bushing ⑦.

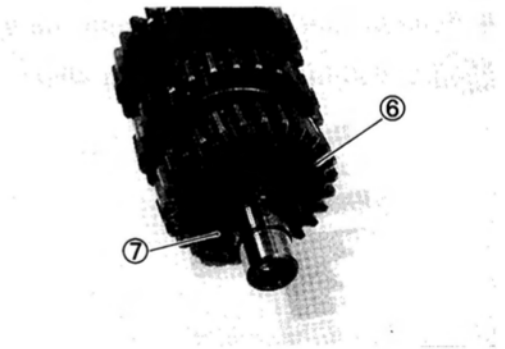

- Remove the washer ⑧ and the 3rd driven gear ⑨.

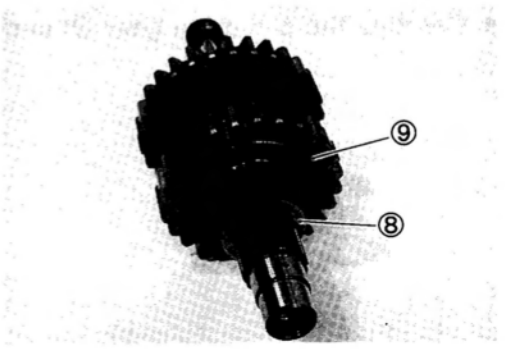

- Remove the 3rd driven gear bushing ①.
- Remove the top driven gear ② by removing the circlip.

09900-06107: Snap ring pliers

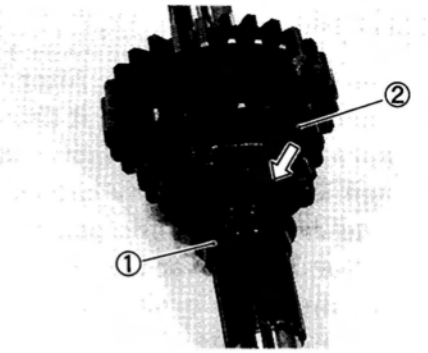

- Remove the circlip by using the special tool.

09900-06107: Snap ring pliers



- Remove the 2nd driven gear ③, its bushing ④ and the washer ⑤.

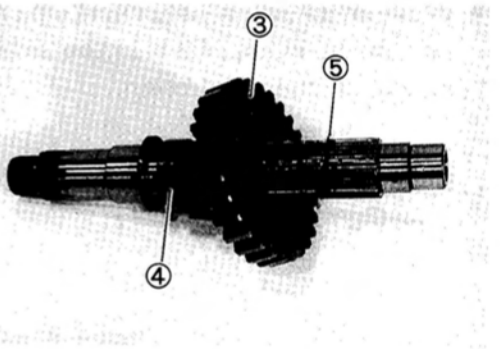

REASSEMBLY

Assemble the countershaft and driveshaft in the reverse order of disassembly. Pay attention to the following points:

NOTE:

* *Rotate the bushings by hand to inspect for smooth rotation. Replace the bushings if there is anything unusual.*
* *Before installing the gears, lightly coat moly paste or engine oil to the driveshaft and countershaft.*
* *Before installing the O-ring, apply grease to it.*

99000-25140: SUZUKI MOLY PASTE

99000-25030: SUZUKI SUPER GREASE "A"

⚠ CAUTION

*** Never reuse the circlip. After the circlip has been removed from the shaft, it should be discarded and a new circlip must be installed.**
*** When installing a new circlip, care must be taken not to expand the end gap larger than required to slip the circlip over the shaft.**
*** After installing a circlip, always insure that it is completely seated in its groove and securely fitted.**

NOTE:
In reassembling the transmission, attention must be given to the locations and positions of washers and circlips. The cross sectional view (Refer to pages 3H-6 and -7.) will serve as a reference for correctly mounting the gears, washers and circlips.

- When installing a new circlip, pay attention to the direction of the circlip. Fit it to the side where the thrust is as shown in the illustration.

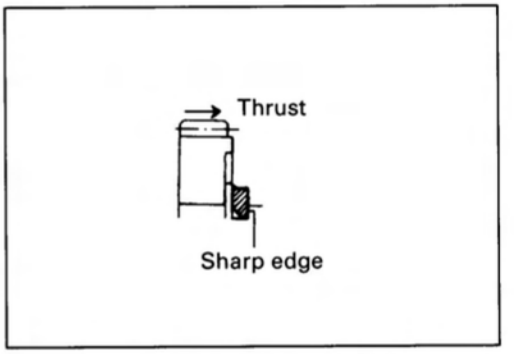

⚠ CAUTION

When installing the 3rd and 4th driven gear bushings on to the driveshaft, align the shaft oil holes Ⓐ with the bushing oil holes Ⓑ.

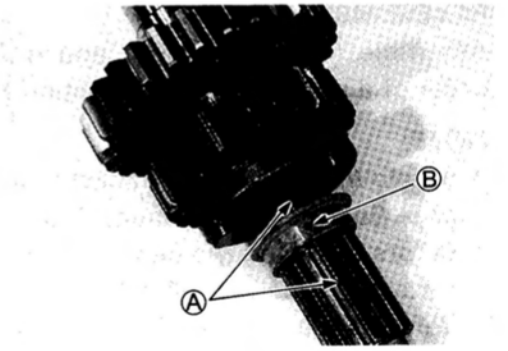

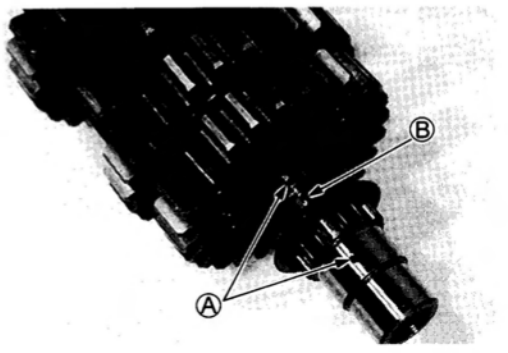

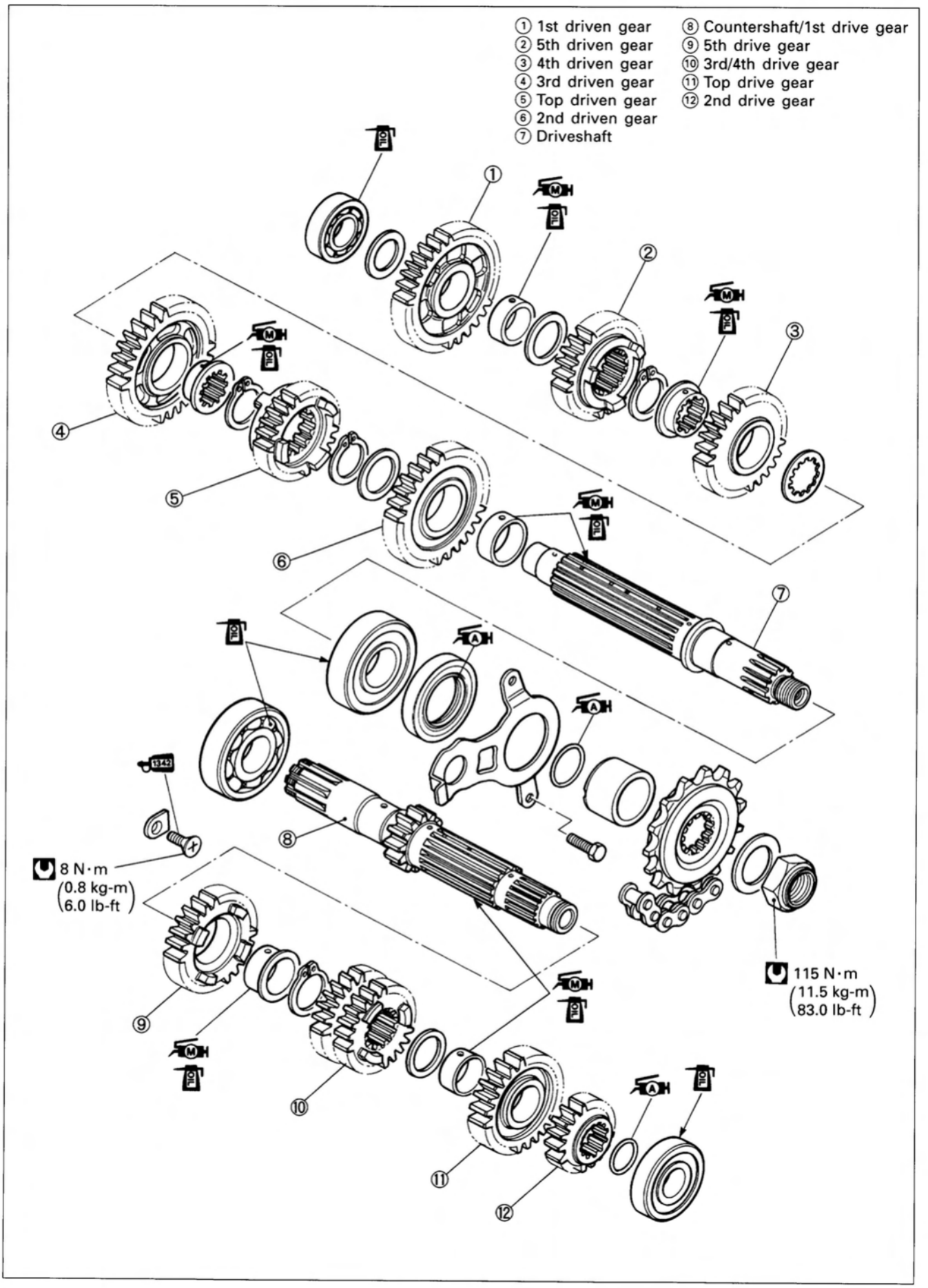
① 1st driven gear
② 5th driven gear
③ 4th driven gear
④ 3rd driven gear
⑤ Top driven gear
⑥ 2nd driven gear
⑦ Driveshaft
⑧ Countershaft/1st drive gear
⑨ 5th drive gear
⑩ 3rd/4th drive gear
⑪ Top drive gear
⑫ 2nd drive gear
8 N·m (0.8 kg-m) (6.0 lb-ft)
115 N·m (11.5 kg-m) (83.0 lb-ft)

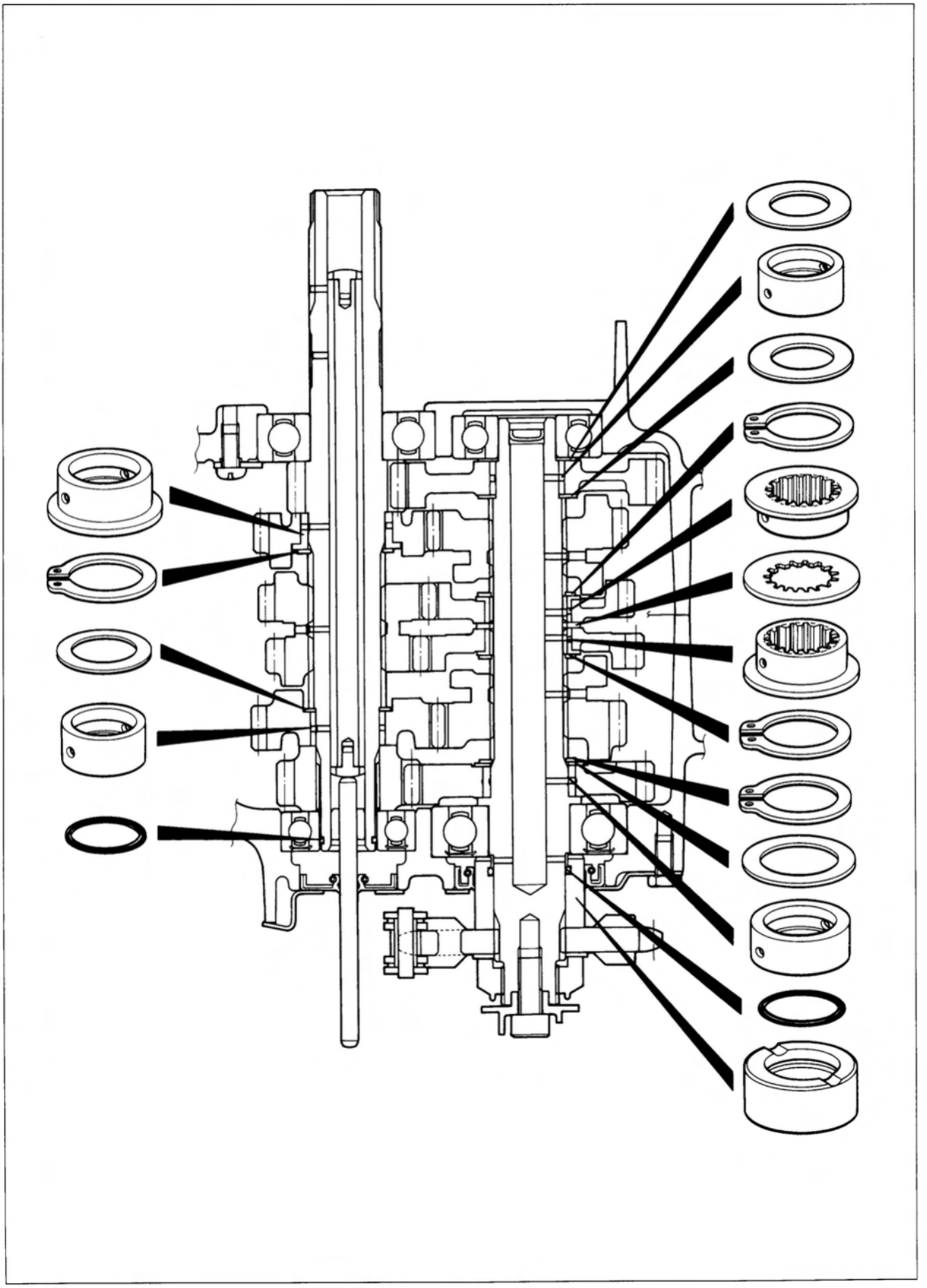

CONROD/CRANKSHAFT INSPECTION

CONROD SMALL END I.D.

Using a small bore gauge, measure the inside diameter of the conrod small end.

09900-20602: Dial gauge (1/1000 mm, 1 mm)
09900-22403: Small bore gauge (18–35 mm)

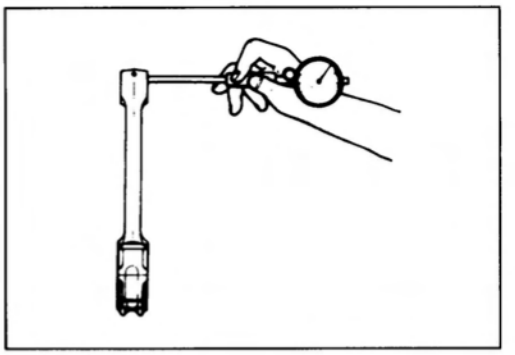

Service Limit
Conrod small end I.D.: 22.040 mm (0.8677 in)

If the inside diameter of the conrod small end exceeds the above-mentioned limit, replace the conrod.

CONROD BIG END SIDE CLEARANCE

Check the conrod side clearance by using a thickness gauge. If the clearance exceeds the limit, replace conrod or crankshaft.

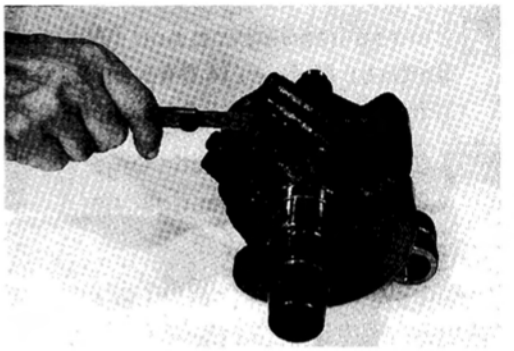

Service Limit
Conrod big end side clearance: 0.5 mm (0.02 in)

09900-20803: Thickness gauge

Standard
Big end width: 21.95–22.00 mm (0.864–0.866 in)
Crank pin width: 44.17–44.22 mm (1.739–1.741 in)

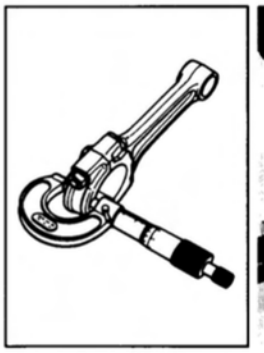



09900-20205: Micrometer (0–25 mm)

CONROD-CRANK PIN BEARING INSPECTION AND SERVICE

CONROD-CRANK PIN BEARING INSPECTION

- Loosen the bearing cap bolts, and tap the bearing cap bolt lightly with plastic hammer to remove the bearing cap.



- Remove the conrods, and mark them to identify the cylinder position.
- Inspect the bearing surfaces for any sign of fusion, pitting, burn, or flaws. If any, replace them with a specified set of bearings.



CONROD-CRANK PIN BEARING SELECTION

- Place plastigauge axially on the crank pin avoiding the oil hole, at TDC or BDC side as shown.
- Tighten the bearing cap bolts with two-step torque values.

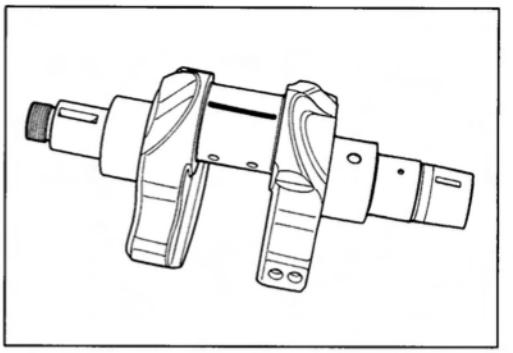

NOTE:
When fitting bearing cap to crank pin, be sure to discriminate between its two ends, I.D. code Ⓑ side and the other. I.D. code always faces each cylinder intake valve sides and also the oil hole Ⓐ faces inside.

Conrod bearing cap bolt (Wet torque)
(Initial): 40 N·m (4.0 kg-m, 29.0 lb-ft)
(Final) : 80 N·m (8.0 kg-m, 58.0 lb-ft)

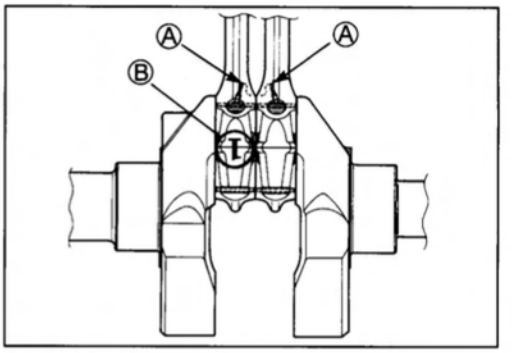

09900-22301: Plastigauge
09900-22302: Plastigauge

NOTE:
Never rotate the crankshaft or conrod when a piece of plastigauge is in the clearance.

- Remove the caps and measure the width of compressed plastigauge with envelope scale. This measurement should be taken at the widest part.

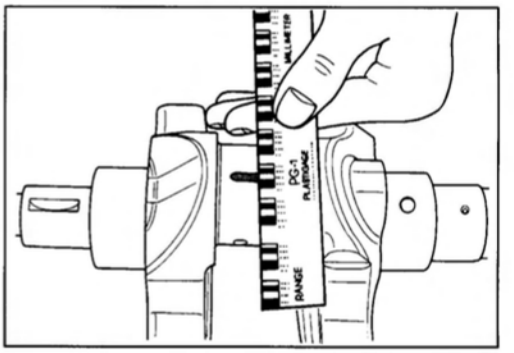

Service Limit
Conrod big end oil clearance: 0.080 mm (0.0031 in)

- If oil clearance exceeds the service limit, select the specified bearings from the bearing selection table.
- Check the corresponding conrod I.D. code number Ⓑ, "1" or "2".
- Check the corresponding crank pin O.D. code number Ⓒ, "1", "2" or "3", stamped on the left crank web.

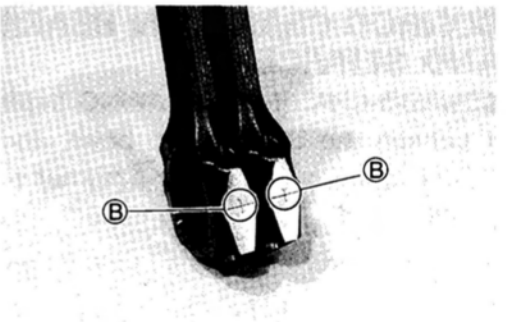

Bearing selection table

		Crank pin O.D. Ⓒ		
	Code	1	2	3
Conrod I.D. code Ⓑ	1	Green	Black	Brown
	2	Black	Brown	Yellow

Standard
Conrod big end oil clearance:
0.032–0.056 mm (0.0013–0.0022 in)

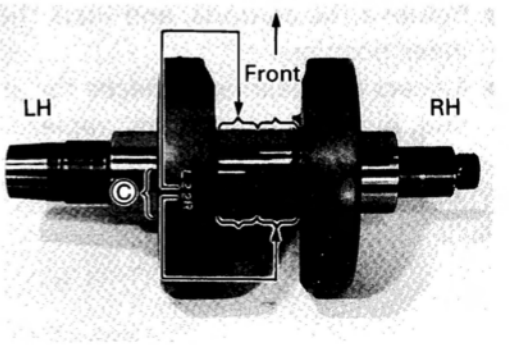

Conrod I.D. specification

Code Ⓑ	I.D. specification
1	48.000–48.008 mm (1.8898–1.8900 in)
2	48.008–48.016 mm (1.8900–1.8904 in)

Crank pin O.D. specification

Code Ⓒ	O.D. specification
1	44.992–45.000 mm (1.7713–1.7717 in)
2	44.984–44.992 mm (1.7710–1.7713 in)
3	44.976–47.984 mm (1.7707–1.7710 in)



TOOL **09900-20202: Micrometer (25–50 mm)**

Bearing thickness

Color (Part No.)	Thickness
Green (12164-02F00-0A0)	1.480–1.484 mm (0.0583–0.0584 in)
Black (12164-02F00-0B0)	1.484–1.488 mm (0.0584–0.0586 in)
Brown (12164-02F00-0C0)	1.488–1.492 mm (0.0586–0.0587 in)
Yellow (12164-02F00-0D0)	1.492–1.496 mm (0.0587–0.0589 in)

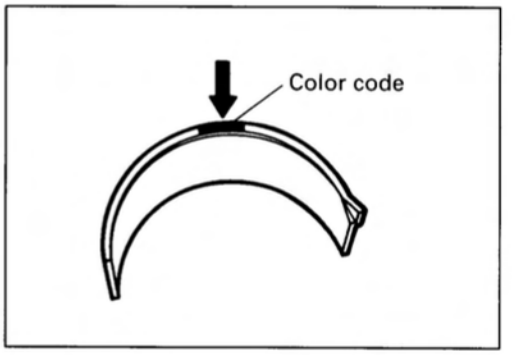

⚠ CAUTION

Bearing must be replaced as a set.

BEARING ASSEMBLY

- When fitting the bearings to the bearing cap and conrod, be sure to fix the stopper part Ⓓ first, and press in the other end.

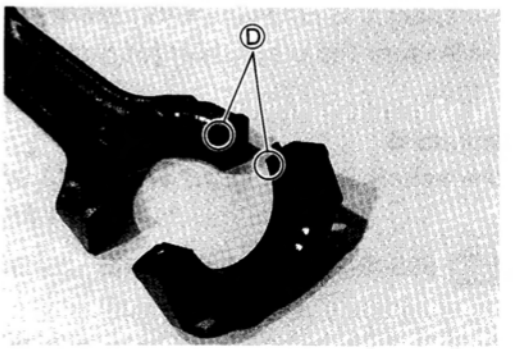

- Apply engine oil and SUZUKI MOLY PASTE to the crank pin and bearing surface.

99000-25140: SUZUKI MOLY PASTE

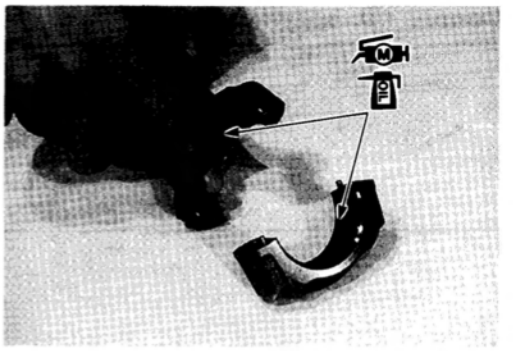

- When fitting the conrods on the crankshaft, make sure that I.D. codes Ⓐ of the conrods face each cylinder intake valve sides and also the oil holes Ⓑ face inside.
- Apply engine oil to the bearing cap bolts.
- Tighten the bearing cap bolts to the specified torque.

Conrod bearing cap bolt (Initial): 40 N·m (4.0 kg-m, 24.0 lb-ft)
(Final) : 80 N·m (8.0 kg-m, 58.0 lb-ft)

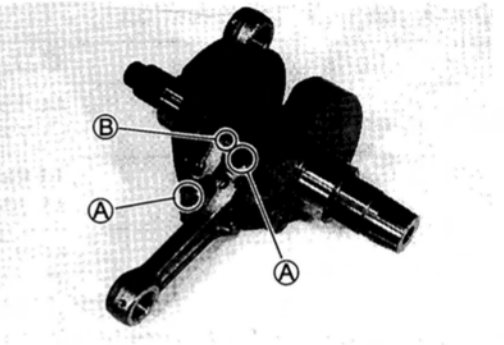

- Check the conrod movement for smooth turning.

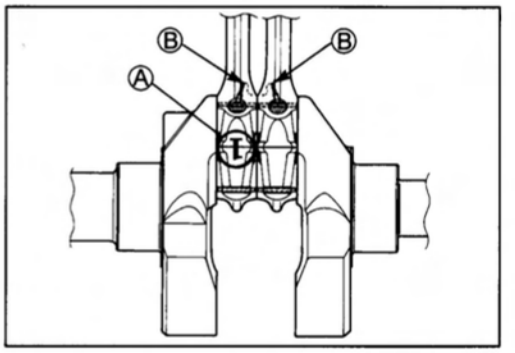

CRANKCASE-CRANKSHAFT BEARING INSPECTION AND SERVICE

CRANKCASE-CRANKSHAFT BEARING INSPECTION

- Inspect the crankshaft journal bearings for any damage. If any, replace them with a specified set of bearings.

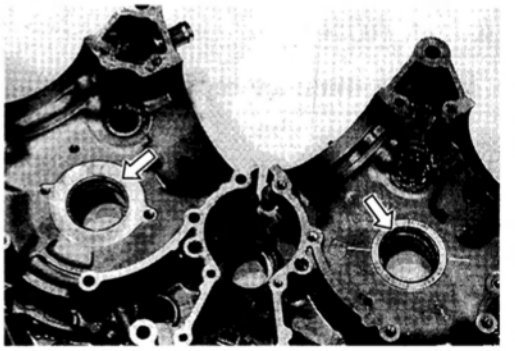

- Inspect the crankshaft journal for any damage.
- Measure the crankshaft journal O.D. by using the special tool.

Standard
Crankshaft journal O.D.: 47.985–48.000 mm (1.8892–1.8898 in)

09900-20202: Micrometer (25–50 mm)



CRANKCASE-CRANKSHAFT BEARING SELECTION

Select the specified bearings from the crankcase bore I.D. code. The crankcase bore I.D. code Ⓐ "A", "B" or "C", is stamped on the inside of each crankcase half.

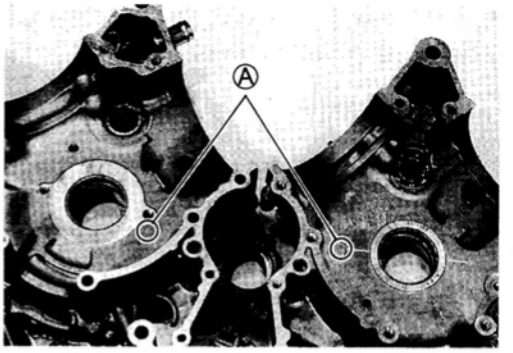

Bearing selection table

I.D. code Ⓐ	I.D. specification	Bearing
A	52.000–52.006 mm (2.0472–2.0475 in)	Green
B	52.006–52.012 mm (2.0475–2.0477 in)	Black
C	52.012–52.018 mm (2.0477–2.0479 in)	Brown

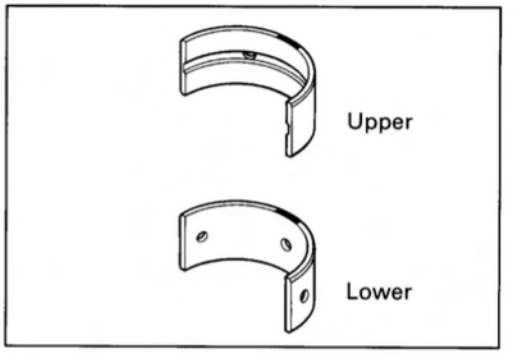

Bearing thickness

Color (Part No.)	Thickness
Green (12229-02F10-0A0...Upper) (12229-02F00-0A0...Lower)	1.988–1.991 mm (0.0783–0.0784 in)
Black (12229-02F10-0B0...Upper) (12229-02F00-0B0...Lower)	1.991–1.994 mm (0.0784–0.0785 in)
Brown (12229-02F10-0C0...Upper) (12229-02F00-0C0...Lower)	1.994–1.997 mm (0.0785–0.0786 in)

⚠ CAUTION

Bearing must be replaced as a set.

CRANKSHAFT JOURNAL BEARING REPLACEMENT

- Use the special tool to replace the crankshaft journal bearings. The replacement procedure is as follows.

TOOL 09913-60210: Journal bearing remover/installer

- Set the special tool as shown to remove the crankshaft journal bearings.

NOTE:
Remove the crankshaft journal bearings in only one direction, from inside to outside of each crankcase half.

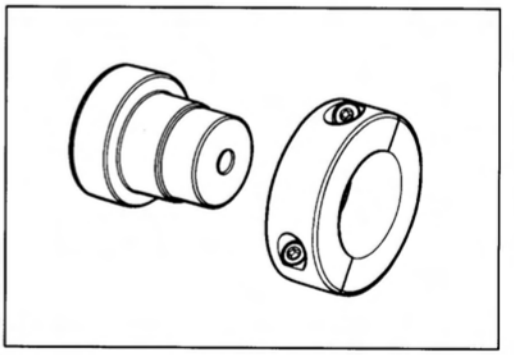



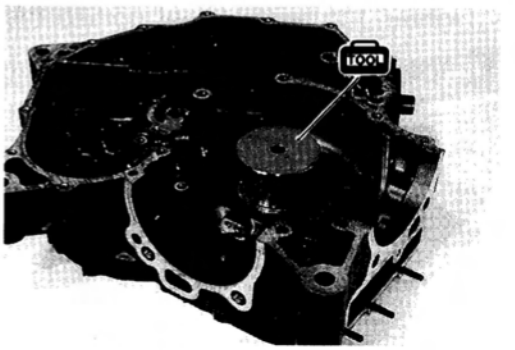

- Gradually press out the bearing with the special tool by using the hand-press.

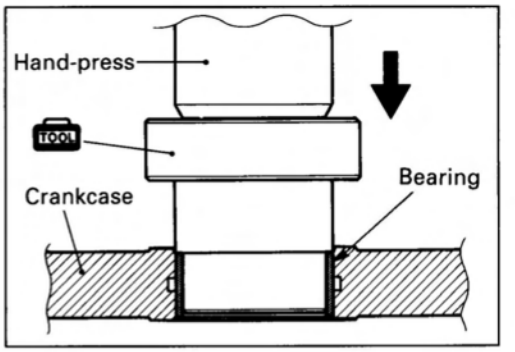

⚠ CAUTION

The removed bearings must be replaced with new ones.

NOTE:
Using the hand-press is recommended to remove the crankshaft journal bearings. However, the crankshaft journal bearings can be removed by using with the following special tools.

TOOL 09924-84510: Bearing installer set
09924-74570: Final drive gear bearing remover/installer

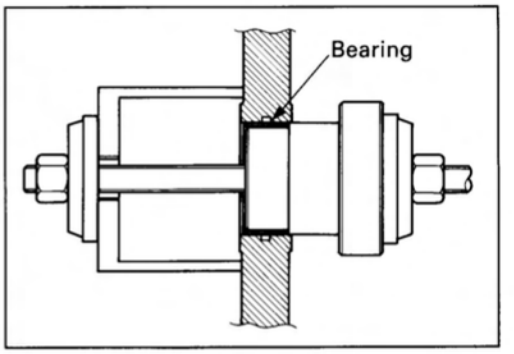

- Set the specified crankshaft journal bearings to the special tool.

⚠ CAUTION

- **Before setting the bearing, apply enough engine oil to the special tool and bearings.**
- **When setting the bearing, align the bearing side with the engraved line Ⓐ and also the bearing edge with the mating surface of the special tool.**

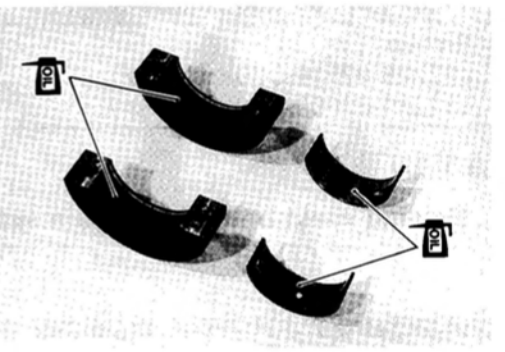

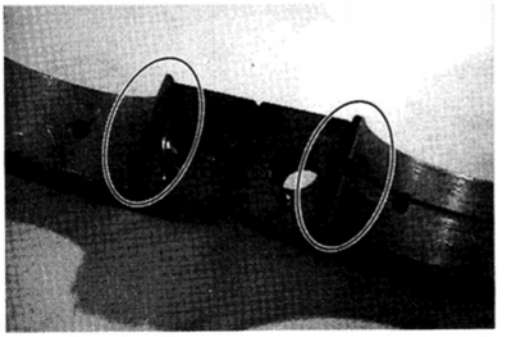

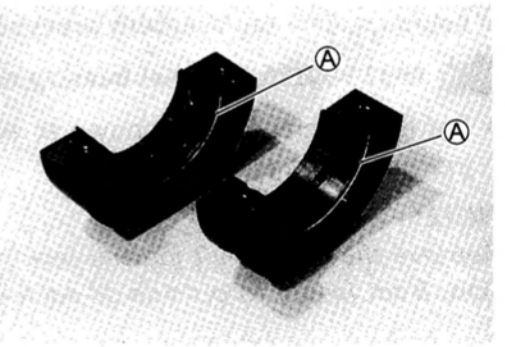

- Tighten the special tool bolt to the specified torque.

Special tool bolt: 23 N·m (2.3 kg-m, 16.5 lb-ft)



⚠ CAUTION

Before installing the bearings, lightly shave off the sharp edge part of the crankcase chamfer by using an oilstone and wash the crankcase bore with enough engine oil.

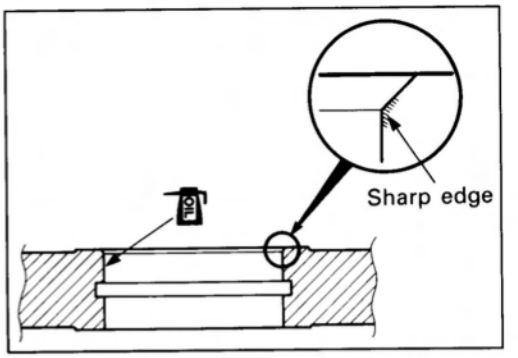

- Set the bearings installed in the special tool to the crankcase half as shown.



⚠ CAUTION

- **Be sure to face the bearing protruded side Ⓐ to the crankcase bore.**
- **Be sure to locate the grooved bearing at upper side and the non-grooved bearing at lower side.**
- **Align the bearing edges, special tool mating surface, with the line mark Ⓑ on the crankcase.**

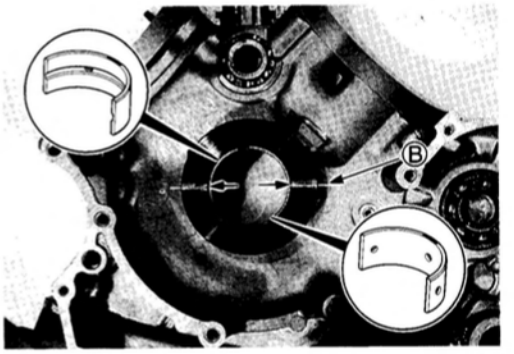

- Apply enough engine oil to the special tool and the bearings and then set the special tool carefully.
- Gradually press in the bearing into the main journal bore by using the hand-press until the special tool ① stops the special tool ②.

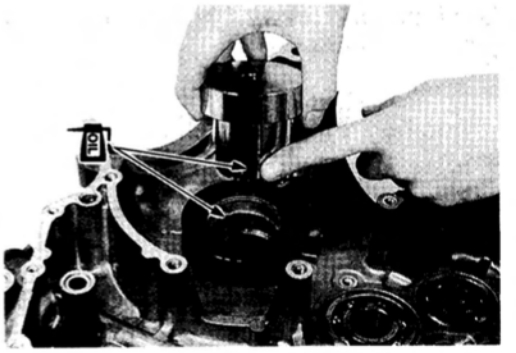

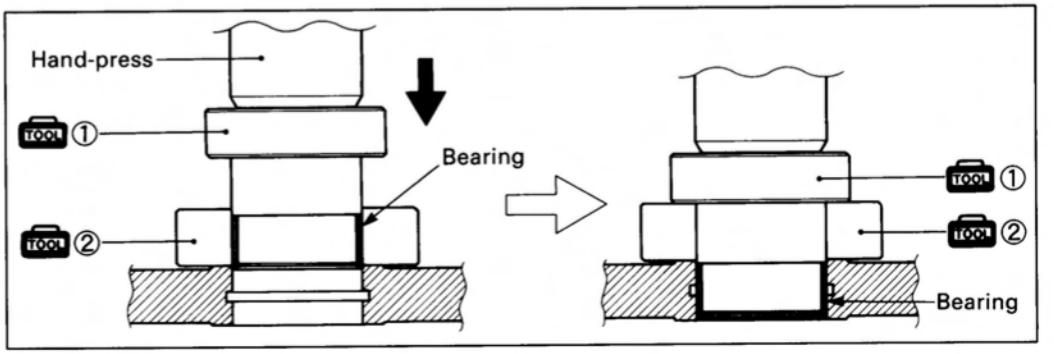

NOTE:
Using the hand-press is recommended to install the crankshaft journal bearings. However, the crankshaft journal bearings can be installed by using the following special tools.

09924-84510: Bearing installer set
09924-74570: Final drive gear bearing remover/installer

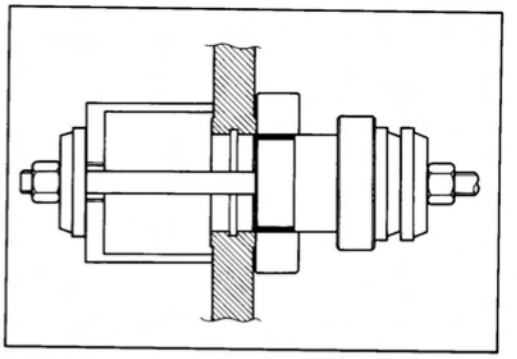

- After installing the bearings, check the bearing surface for any scratche or damage.

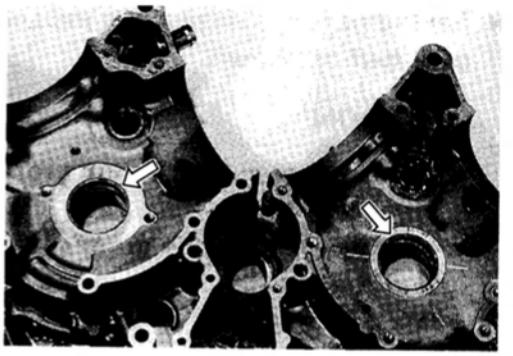

CRANKSHAFT THRUST CLEARANCE ADJUSTMENT

- Install the crankshaft into the left crankcase half and position the thrust shim on the crankshaft.
- Install the right crankcase half and tighten the crankcase bolts temporally.

NOTE:
** It is not necessary to apply SUZUKI BOND to the mating surface.*
** The oil grooved face Ⓐ of thrust shim ① is faced to crankshaft web side.*

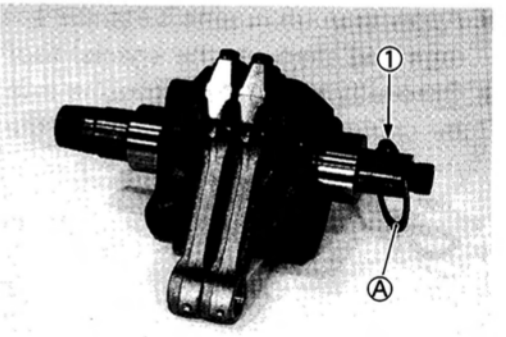

- Install the generator rotor with the key and tighten its bolt temporally.
- Install the thrust washer and primary drive gear on the right end of the crankshaft and tighten primary drive gear bolt to the specified torque. (See to pages 3-46 and -47.)

Primary drive gear bolt: 95 N·m (9.5 kg-m, 68.5 lb-ft)

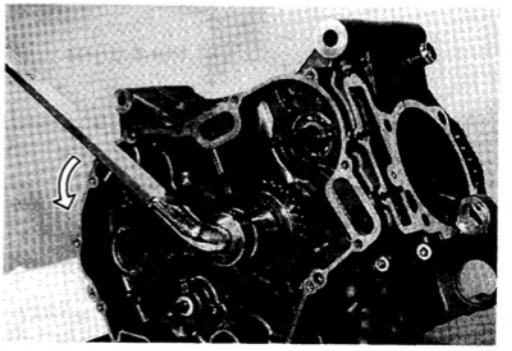

- Use a thickness gauge to measure the thrust clearance at some places between right crankcase and thrust washer.

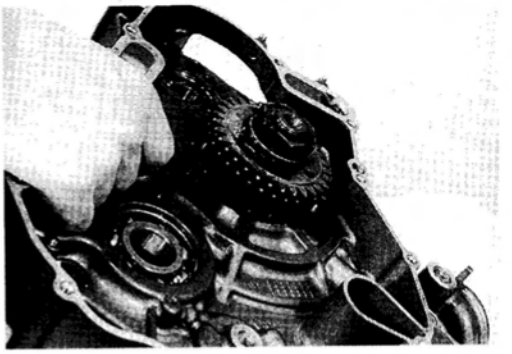

Standard
Crankshaft thrust clearance: 0.050–0.100 mm (0.0020–0.0039 in)

09900-20803: Thickness gauge

If the thrust clearance exceeds the standard range, adjust the thrust clearance by the following procedures:

- Remove the thrust shim, and measure its thickness with a micrometer.
- Change the thrust shim with the other shim if the thrust clearance is incorrect.
- Perform the thrust clearance measurement described above once again checking to make sure it is within standard.

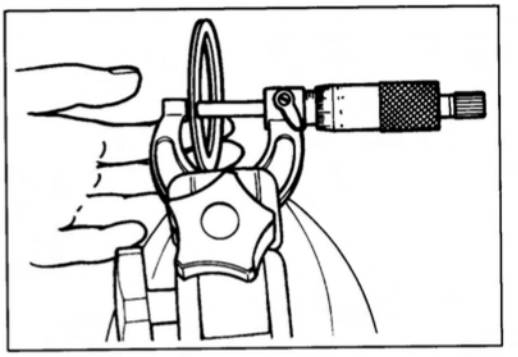

09900-20205: Micrometer (0–25 mm)

Unit: mm (in)

Part number	Thrust shim thickness
09160-48001	1.925–1.950 (0.0758–0.0768)
09160-48002	1.950–1.975 (0.0768–0.0778)
09160-48003	1.975–2.000 (0.0778–0.0787)
09160-48004	2.000–2.025 (0.0787–0.0797)
09160-48005	2.025–2.050 (0.0797–0.0807)
09160-48006	2.050–2.075 (0.0807–0.0817)
09160-48007	2.075–2.100 (0.0817–0.0827)
09160-48008	2.100–2.125 (0.0827–0.0837)
09160-48009	2.125–2.150 (0.0837–0.0846)
09160-48010	2.150–2.175 (0.0846–0.0856)

TRANSMISSION/CRANKSHAFT/CONROD INSTALLATION

Refer to the engine reassembly and the engine installation sections for these engine components installation.

* **ENGINE REASSEMBLY** ..... **See pages 3-38 through -78.**
* **ENGINE INSTALLATION** ..... **See pages 3-11 through -17.**

ENGINE LUBRICATION SYSTEM

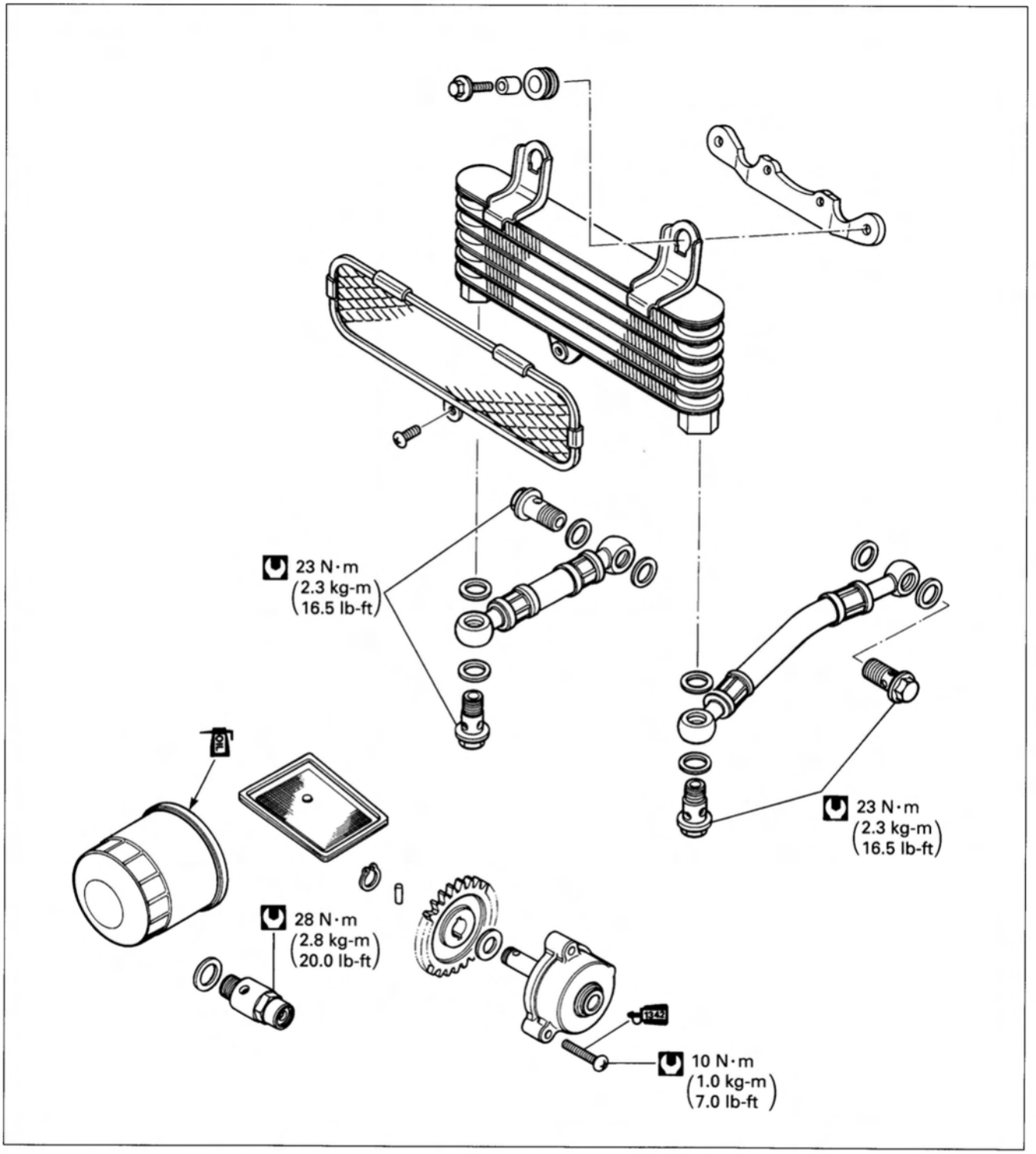

CONTENTS

OIL PUMP 3I- 1
OIL SUMP FILTER/OIL PRESSURE REGULATOR 3I- 3
OIL PRESSURE SWITCH/OIL COOLER 3I- 6
OIL FILTER 3I- 8
OIL PRESSURE 3I- 8
PISTON COOLING OIL NOZZLE/OIL JET 3I- 8
ENGINE LUBRICATION SYSTEM CHART 3I- 9
ENGINE LUBRICATION SYSTEM 3I-10

OIL PUMP

REMOVAL

The crankcase must be separated to service the oil pump. The oil pump service requires engine removal and disassembly. Refer to the engine removal and the engine disassembly sections for the oil pump removal.

* **ENGINE REMOVAL ..... See pages 3- 2 through -10.**
* **ENGINE DISASSEMBLY .. See pages 3-18 through -37.**

DISASSEMBLY

- Remove the oil pump fastening screw.
- Remove the oil pump cover ①.

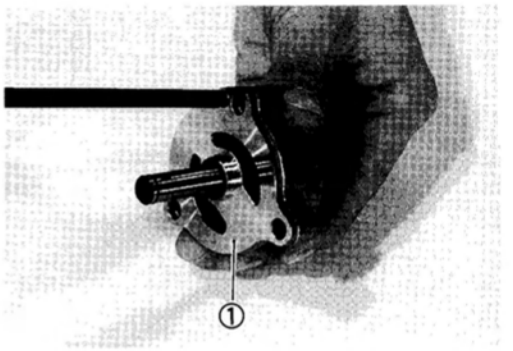

- Remove the rotor shaft ②, drive pin ③, inner rotor ④ and outer rotor ⑤ from the oil pump body ⑥.

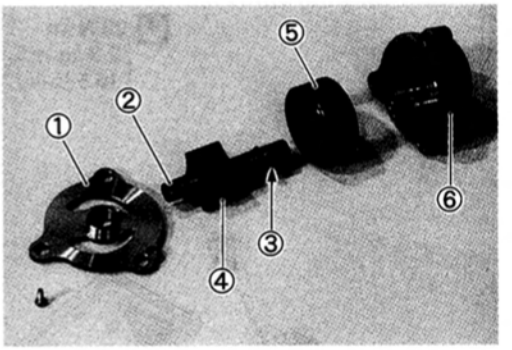

INSPECTION

Inspect the rotor tip clearance and outer rotor clearance with a thickness gauge.
If the clearance exceeds the service limit, replace the oil pump with a new one.

TOOL 09900-20803: Thickness gauge

Service Limit
Rotor tip clearance: 0.20 mm (0.008 in)
Outer rotor clearance: 0.35 mm (0.014 in)

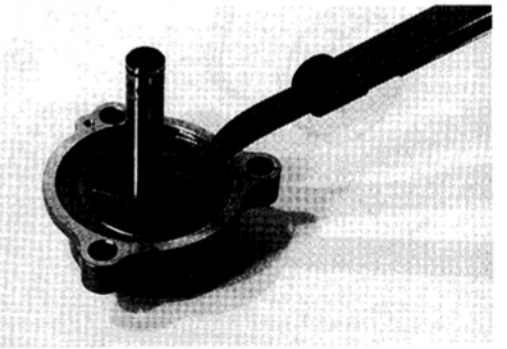

(Rotor tip clearance)

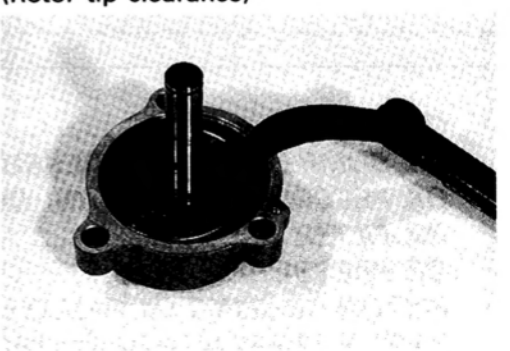

(Outer rotor clearance)

REASSEMBLY AND INSTALLATION

⚠ CAUTION

Wash the oil pump parts with fresh engine oil before reassembly.

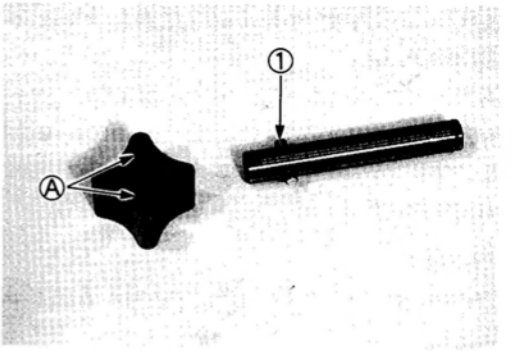

- Insert the rotor shaft into the inner rotor by aligning the drive pin ① with a slot Ⓐ in the inner rotor.

- Install the outer rotor and inner rotor into the oil pump body.

NOTE:
Position the punched mark Ⓑ on the outer rotor to be faced to the oil pump body side and punched mark Ⓒ on the inner rotor to the oil pump cover side.

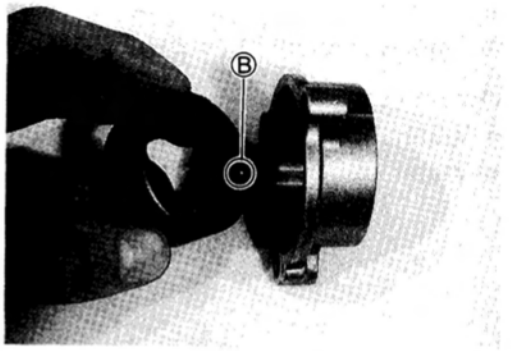

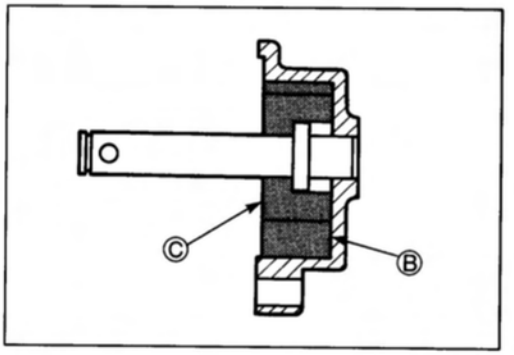

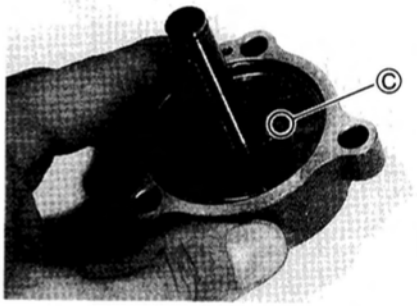

- Apply a small quantity of THREAD LOCK "1342" to the screw and tighten it.

1342 99000-32050: THREAD LOCK "1342"

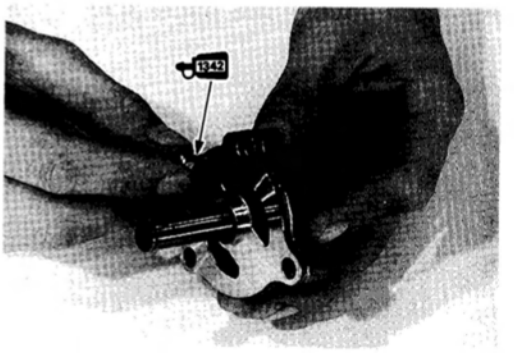

- Refer to the engine reassembly and the engine installation sections for the oil pump installation.

* **ENGINE REASSEMBLY** ..... **See pages 3-38 through -78.**
* **ENGINE INSTALLATION** ..... **See pages 3-11 through -17.**

OIL SUMP FILTER/OIL PRESSURE REGULATOR

REMOVAL

After draining engine oil and engine coolant, the following component parts must be removed in the described order before removing the oil sump filter and the oil pressure regulator.

NOTE:
Refer to the following pages for the details of each step.

Drain:
- Engine oil (See page 2-11.)
- Engine coolant (See page 2-15.)

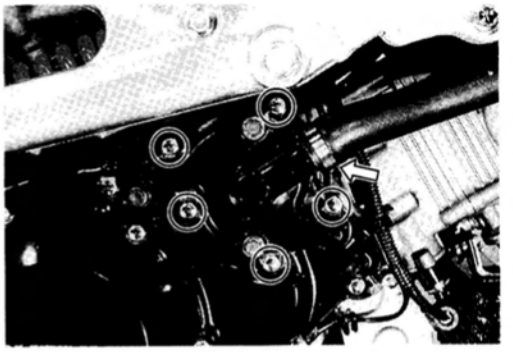

Remove:
- Water hose
- Water pump (See page 3-27.)
- Dowel pin
- Impeller (See page 3-27.)

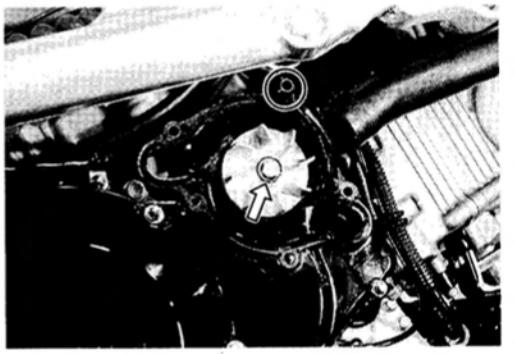

- Clutch cover (See page 3-27.)

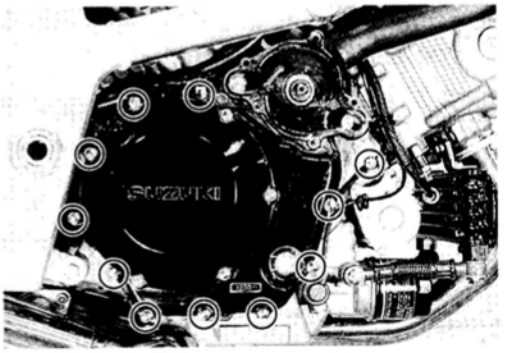

- Dowel pin
- Gasket

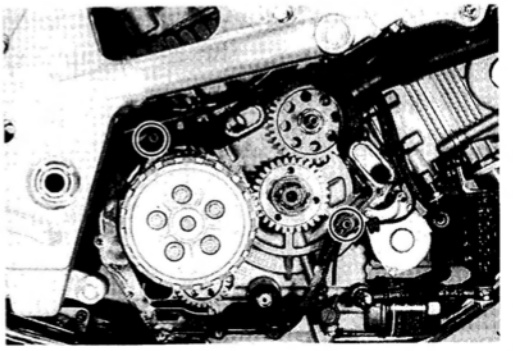

- Oil sump filter

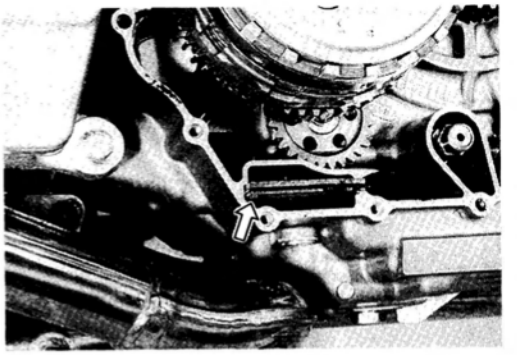

- Oil pressure regulator

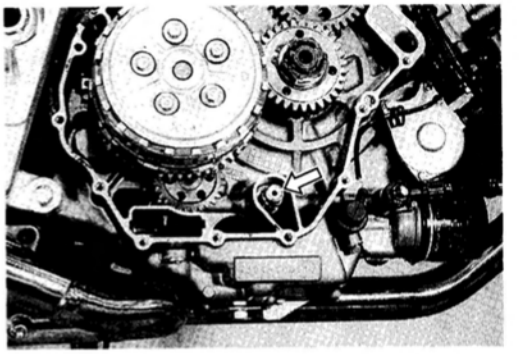

OIL PRESSURE REGULATOR INSPECTION

Check the operation of the oil pressure regulator by pushing on the piston with a proper bar. If the piston does not operate, replace the oil pressure regulator with a new one.



OIL SUMP FILTER CLEANING

Clean the oil sump filter with a compressed air.

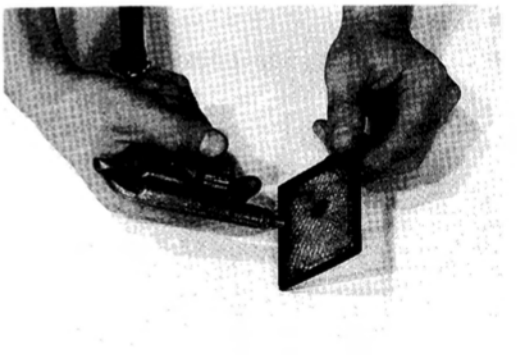

OIL SUMP FILTER/OIL PRESSURE REGULATOR INSTALLATION

Installation is in the reverse order of removal.

NOTE:
Refer to the following pages for the details of each step.

Install:

- Oil pressure regulator (See page 3-49.)

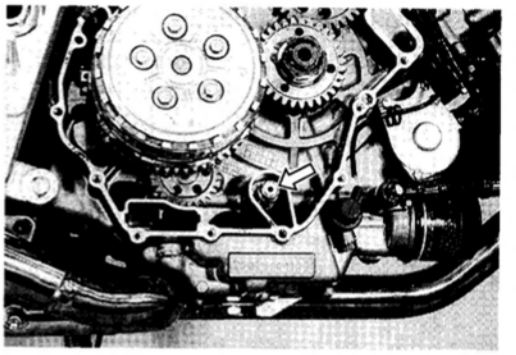

- Oil sump filter (See page 3-49.)

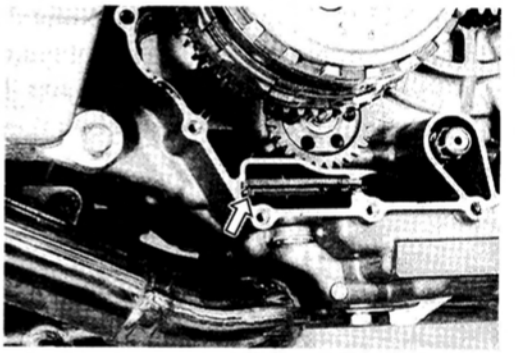

- Gasket
- Dowel pins (See page 3-53.)

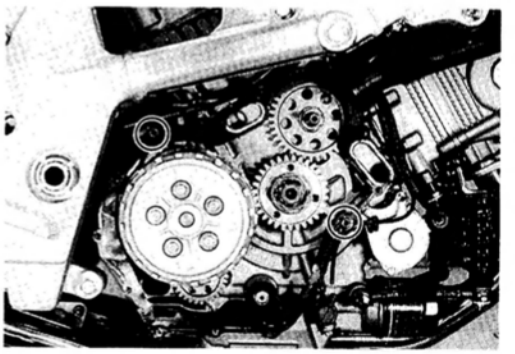

- Clutch cover (See pages 3-53 and -54.)

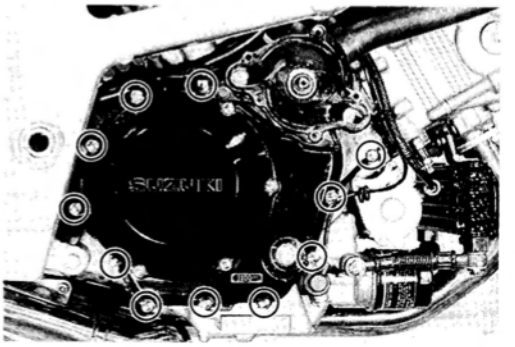

- Impeller (See page 3-54.)

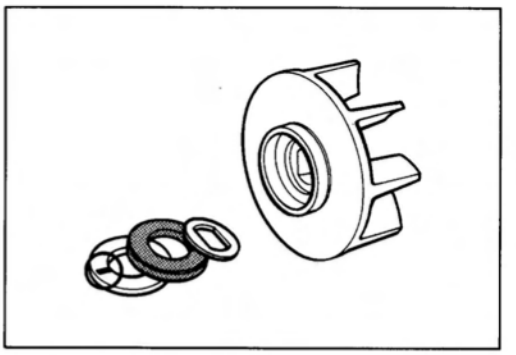

- Impeller securing bolt (See page 3-55.)
- Dowel pin

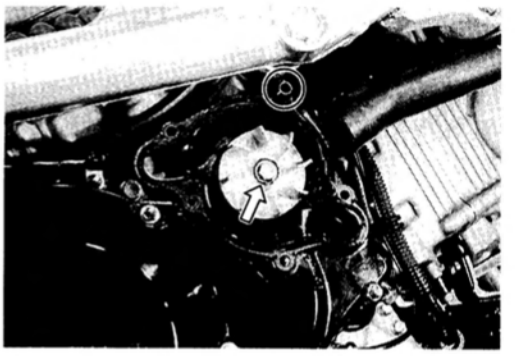

- Water pump case (See pages 3-55 and -56.)
- Water hose

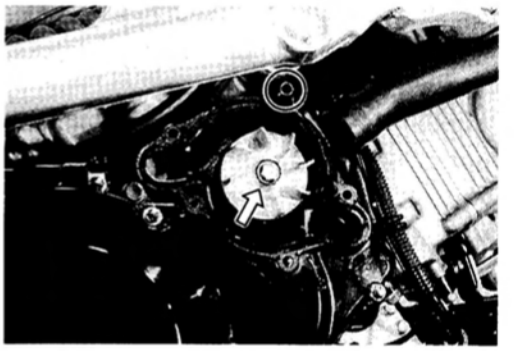

Adjust the following items to the specification.

	Page
* Engine coolant level	2-15
* Engine oil level	2-11

OIL PRESSURE SWITCH/OIL COOLER

REMOVAL

After draining engine oil, remove the oil pressure switch and the oil cooler.

NOTE:
When draining engine oil, refer to the following page for the detail.

Drain:
- Engine oil (See page 2-11.)

Remove:
- Oil pressure switch
- Oil cooler

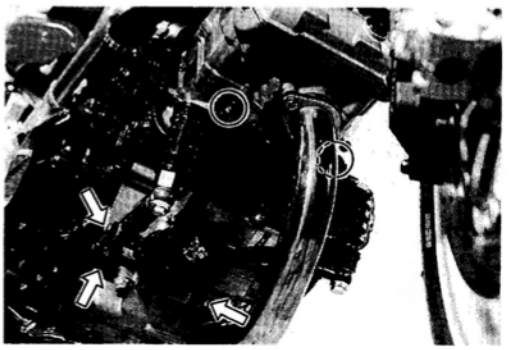

OIL PRESSURE SWITCH INSPECTION
Refer to page 7-37.

OIL COOLER HOSE INSPECTION
Inspect the oil cooler hoses for any damage and oil leakage. If any defects are found, replace the oil cooler hose with new ones.

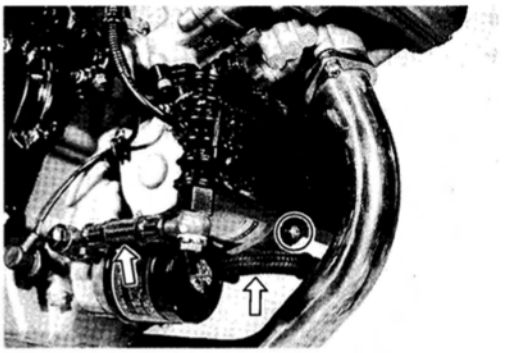

OIL COOLER INSPECTION AND CLEANING
Remove the road dirt or trash stuck to the oil cooler fins with a compressed air.
Inspect the oil cooler for oil leakage. If any defects are found, replace the oil cooler with a new one.
If the fins bent down or dented, repair by straightening them with the blade of a small screwdriver.

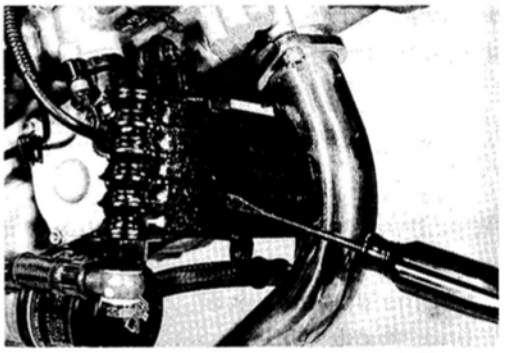

INSTALLATION
Installation is in the reverse order of removal.

NOTE:
Refer to the following pages for the details of each step.

Install:
- Oil cooler (See page 3-15.)
- Oil pressure switch (See page 3-43.)

Adjust the following item to the specification.

	Page
* Engine oil level	2-11

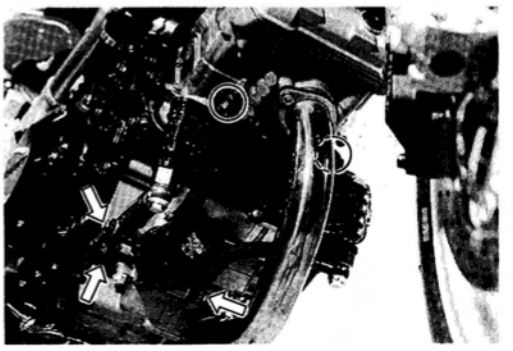

OIL FILTER

Refer to page 2-11.

OIL PRESSURE

Refer to page 2-26.

PISTON COOLING OIL NOZZLE/OIL JET

REMOVAL

The oil jet (for transmission) can be removed after draining out engine oil.
The piston cooling oil nozzles and the oil jets (for each cylinder head) can be removed after removing each cylinder.

NOTE:
Refer to the following pages for the details of each step.

Drain:
- Engine oil (See page 2-11.)

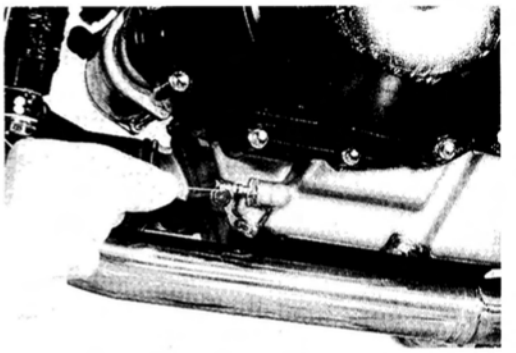

Remove:
- Oil jet (for transmission) (See page 3-36.)
- Cylinder (See section 3B.)
- Oil jets (for each cylinder head) (See pages 3-21 and -25.)
- Piston cooling oil nozzles (See page 3-36.)

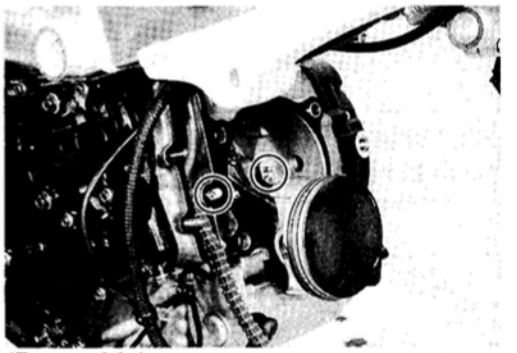

(Front side)

INSTALLATION

Installation is in the reverse order of removal.

NOTE:
Refer to the following pages for the details of each step.

Install:
- Piston cooling oil nozzles (See page 3-39.)
- Oil jets (for each cylinder head) (See page 3-59.)
- Cylinder (See section 3B.)
- Oil jet (for transmission) (See page 3-39.)

Adjust the following item to the specification.

	Page
* Engine oil level	2-11

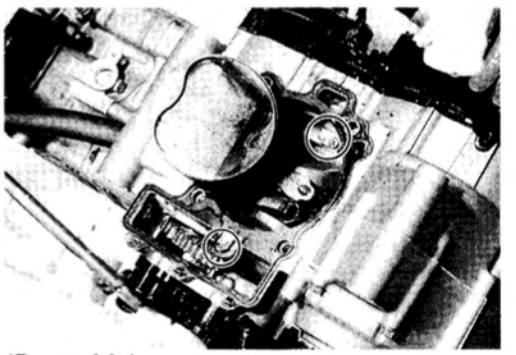

(Rear side)

INSPECTION

Check the piston cooling oil nozzles and the oil jets for clogging. If they are clogged, clean their oil passage with a proper wire and compressed air.

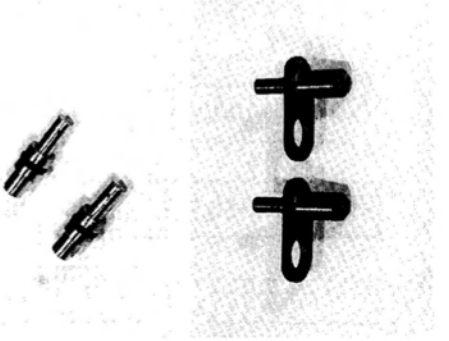

ENGINE LUBRICATION SYSTEM CHART

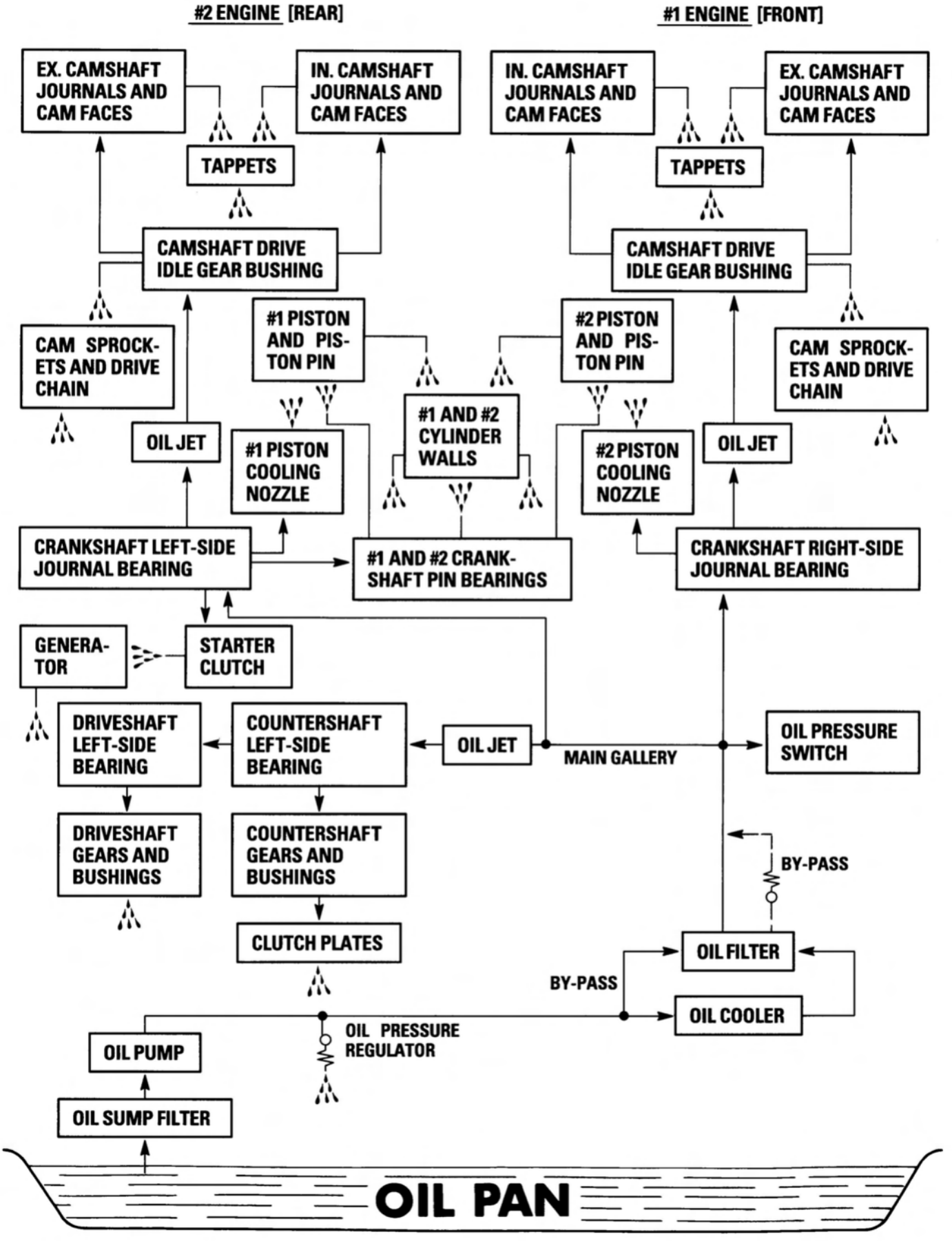

ENGINE LUBRICATION SYSTEM

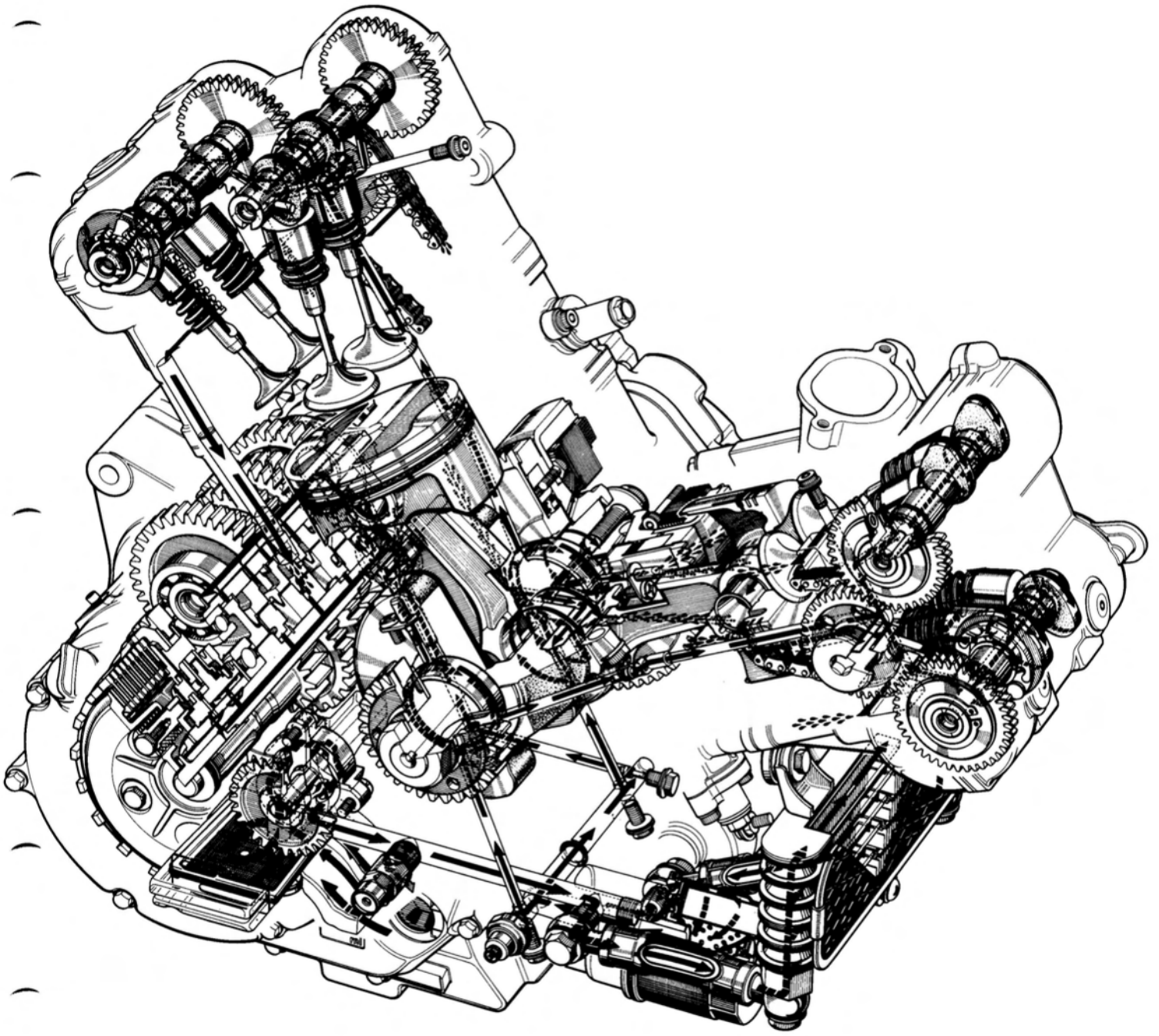

FI SYSTEM AND INTAKE AIR SYSTEM

CONTENTS

PRECAUTION IN SERVICING 4- 1
FI SYSTEM TECHNICAL FEATURES 4- 7
INJECTION TIME 4- 7
COMPENSATION OF INJECTION TIME 4- 8
INJECTION STOP CONTROL 4- 8
FUEL DELIVERY SYSTEM 4- 9
FUEL PUMP 4-10
FUEL PRESSURE REGULATOR 4-11
FUEL INJECTOR 4-11
FUEL PUMP CONTROL SYSTEM 4-12
ECM (FI CONTROL UNIT) 4-13
INJECTION TIMING 4-14
SENSORS 4-15
INTAKE AIR SYSTEM TECHNICAL FEATURES 4-19
INTAKE AIR CONTROL VALVE 4-20
OPERATION 4-21
FI SYSTEM PARTS LOCATION 4-24
FI SYSTEM DIAGRAM 4-25
FI SYSTEM WIRING DIAGRAM 4-26
SELF-DIAGNOSIS FUNCTION 4-27
USER MODE 4-27
DEALER MODE 4-28
FAIL-SAFE FUNCTION 4-30
FI SYSTEM TROUBLE SHOOTING 4-31
CUSTOMER COMPLAINT ANALYSIS 4-31
SELF-DIAGNOSTIC PROCEDURES 4-32
SELF-DIAGNOSIS RESET PROCEDURE 4-32
MALFUNCTION CODE AND DEFECTIVE CONDITION 4-33
"C11" CMP SENSOR CIRCUIT MALFUNCTION 4-35
"C12" CKP SENSOR CIRCUIT MALFUNCTION 4-36
"C13" IAP SENSOR CIRCUIT MALFUNCTION 4-37
"C14" TP SENSOR CIRCUIT MALFUNCTION 4-39
"C15" ECT SENSOR CIRCUIT MALFUNCTION 4-41
"C21" IAT SENSOR CIRCUIT MALFUNCTION 4-42
"C22" AP SENSOR CIRCUIT MALFUNCTION 4-43
"C23" TO SENSOR CIRCUIT MALFUNCTION 4-45
"C24" or "C25" IGNITION SYSTEM MALFUNCTION 4-46
"C31" GEAR POSITION SWITCH CIRCUIT MALFUNCTION 4-46
"C32" or "C33" FUEL INJECTION MALFUNCTION 4-47
"C41" FP RELAY CIRCUIT MALFUNCTION 4-48
"C42" IG SWITCH CIRCUIT MALFUNCTION 4-48
FUEL SYSTEM 4-49
FUEL TANK LIFT-UP 4-49
FUEL TANK REMOVAL 4-49
FUEL PRESSURE INSPECTION 4-50

FUEL PUMP INSPECTION 4-51
FUEL PUMP RELAY INSPECTION 4-51
FUEL PUMP AND FUEL FILTER REMOVAL 4-51
FUEL MESH FILTER INSPECTION AND CLEANING 4-52
FUEL PUMP AND FUEL FILTER INSTALLATION 4-52
THROTTLE BODY 4-53
CONSTRUCTION 4-53
THROTTLE BODY REMOVAL 4-54
THROTTLE BODY DISASSEMBLY 4-57
THROTTLE BODY CLEANING 4-60
INSPECTION 4-60
THROTTLE BODY REASSEMBLY 4-61
THROTTLE BODY INSTALLATION 4-65
FUEL INJECTOR INSPECTION 4-69
FUEL INJECTOR REMOVAL 4-69
FUEL INJECTOR INSTALLATION 4-69
AIR SCREW ADJUSTMENT 4-69
FAST IDLE ADJUSTMENT 4-70
THROTTLE VALVE SYNCHRONIZATION 4-71
THROTTLE LEVER GAP ADJUSTMENT 4-74
THROTTLE POSITION SENSOR (TPS) SETTING 4-74
THROTTLE CABLE ADJUSTMENT 4-75
FAST IDLE CABLE ADJUSTMENT 4-75
INTAKE AIR SYSTEM 4-76
INTAKE AIR SYSTEM INSPECTION 4-76
VCSV INSPECTION 4-76
VTV INSPECTION 4-76
INTAKE AIR CONTROL VALVE ACTUATOR INSPECTION 4-77
VACUUM DAMPER INSPECTION 4-77
SENSORS 4-78
IAP SENSOR INSPECTION 4-78
IAP SENSOR REMOVAL/INSTALLATION 4-78
TP SENSOR INSPECTION 4-78
TP SENSOR REMOVAL/INSTALLATION 4-78
CKP SENSOR INSPECTION 4-78
CKP SENSOR REMOVAL/INSTALLATION 4-78
CMP SENSOR INSPECTION 4-78
CMP SENSOR REMOVAL/INSTALLATION 4-78
IAT SENSOR INSPECTION 4-79
IAT SENSOR REMOVAL/INSTALLATION 4-79
ECT SENSOR INSPECTION 4-79
ECT SENSOR REMOVAL/INSTALLATION 4-79
AP SENSOR INSPECTION 4-79
AP SENSOR REMOVAL/INSTALLATION 4-79
TO SENSOR INSPECTION 4-79
TO SENSOR REMOVAL/INSTALLATION 4-79

PRECAUTIONS IN SERVICING

When handling the FI component parts or servicing the FI system, observe the following points for the safety of the system.

CONNECTOR/COUPLER

- When connecting a connector, be sure to push it in until a click is felt.
- With a lock type coupler, be sure to release the lock when disconnecting, and push it in fully till the lock works when connecting it.
- When disconnecting the coupler, be sure to hold the coupler body and do not pull the lead wires.
- Inspect each terminal on the connector/coupler for looseness or bending.
- Inspect each terminal for corrosion and contamination. The terminals must be clean and free of any foreign material which could impede proper terminal contact.

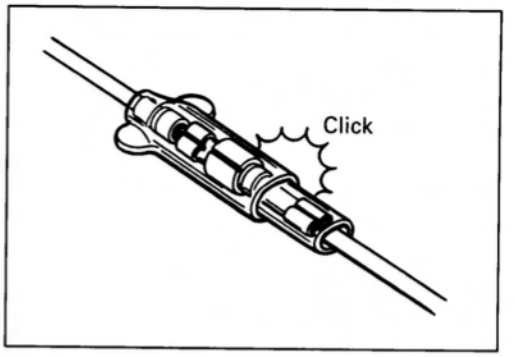

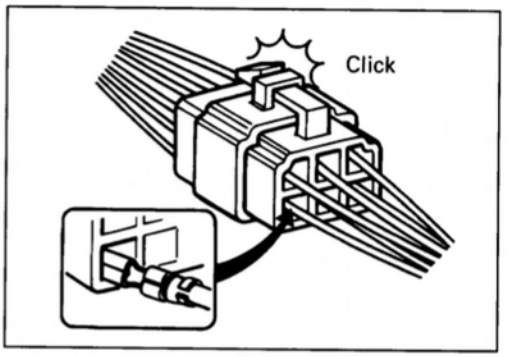

- Inspect each lead wire of the failed circuit for poor connection by shaking it by hand lightly. If any abnormal condition is found, repair or replace.

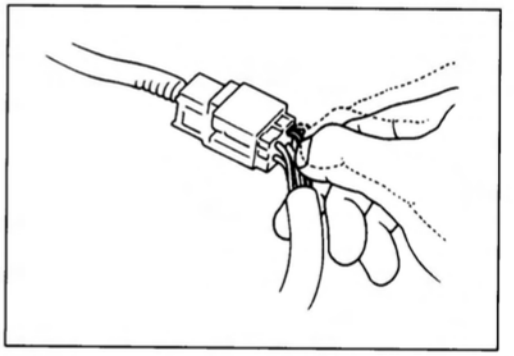

- When taking measurements at electrical connectors using a tester probe, be sure to insert the probe from the wire harness side (backside) of the connector/coupler.

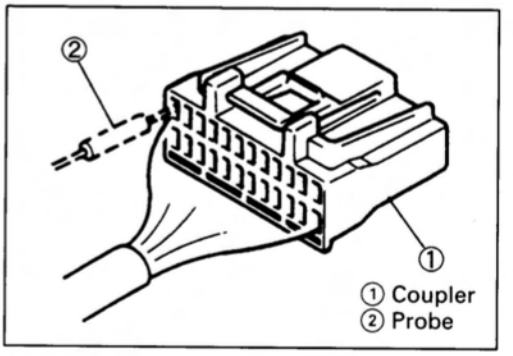

- When connecting the meter probe from the terminal side of the coupler (connection from harness side not being possible), use extra care not to force and cause the male terminal to bend or the female terminal to open. Connect the probe as shown to avoid opening of female terminal.
  Never push in the probe where male terminal is supposed to fit.
- Check the male connector for bend and female connector for excessive opening. Also check the coupler for locking (looseness), corrosion, dust, etc.

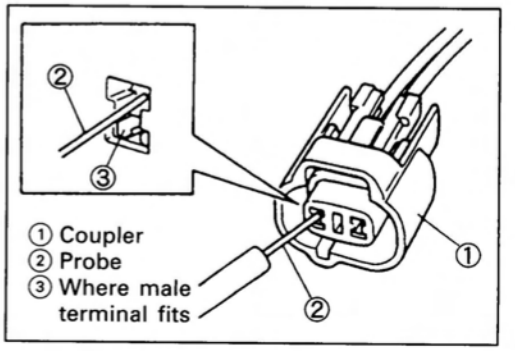

FUSE

- When a fuse blows, always investigate the cause, correct it and then replace the fuse.
- Do not use a fuse of a different capacity.
- Do not use wire or any other substitute for the fuse.

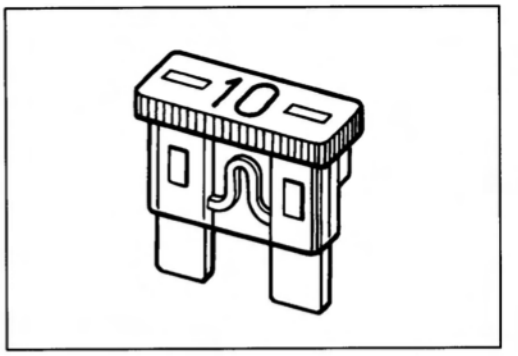

ECM/VARIOUS SENSORS

- Since each component is a high-precision part, great care should be taken not to apply any sharp impacts during removal and installation.

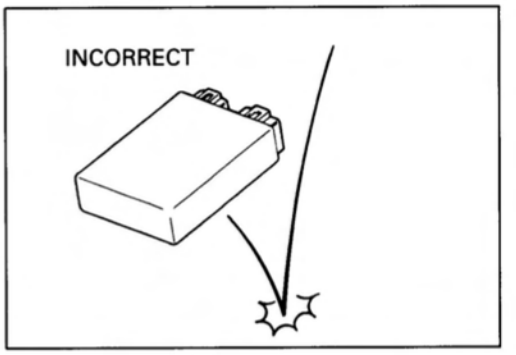

- Be careful not to touch the electrical terminals of the ECM. The static electricity from your body may damage this part.

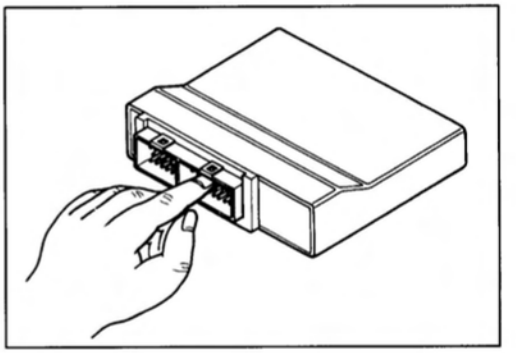

- When disconnecting and connecting the ECM couplers, make sure to turn OFF the ignition switch, or electronic parts may get damaged.

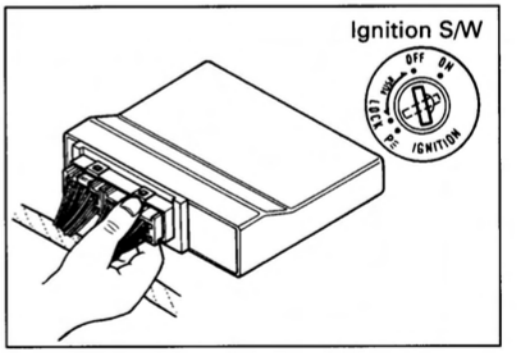

- Battery connection in reverse polarity is strictly prohibited. Such a wrong connection will damage the components of the FI system instantly when reverse power is applied.

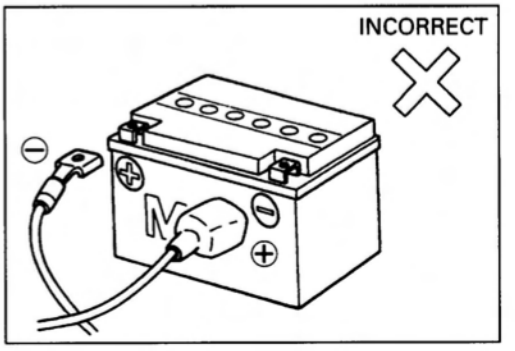

- Removing any battery terminal of a running engine is strictly prohibited.
  The moment such removal is made, damaging counter electromotive force will be applied to the ECM which may result in serious damage.

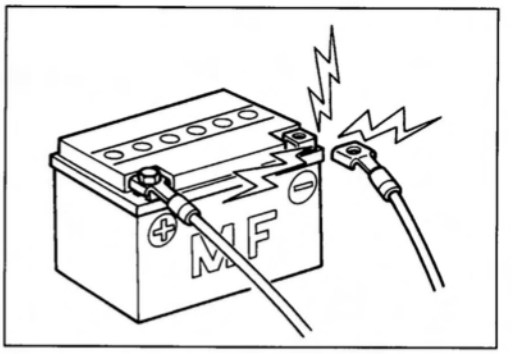

- Before measuring voltage at each terminal, check to make sure that battery voltage is 11V or higher. Terminal voltage check at low battery voltage will lead to erroneous diagnosis.

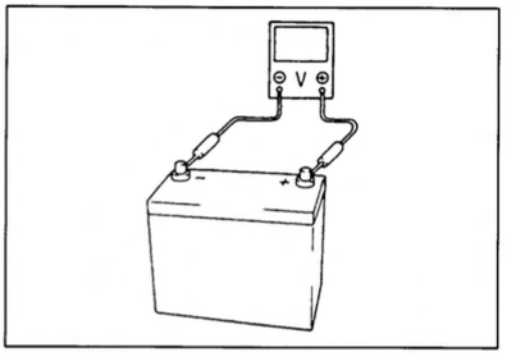

- Never connect any tester (voltmeter, ohmmeter, or whatever) to the ECM when its coupler is disconnected. Otherwise, damage to ECM may result.
- Never connect an ohmmeter to the ECM with its coupler connected. If attempted, damage to ECM or sensors may result.
- Be sure to use a specified voltmeter/ohmmeter. Otherwise, accurate measurements may not be obtained and personal injury may result.

ELECTRICAL CIRCUIT INSPECTION PROCEDURE

While there are various methods for electrical circuit inspection, described here is a general method to check for open and short circuit using an ohmmeter and a voltmeter.

OPEN CIRCUIT CHECK

Possible causes for the open circuit are as follows. As the cause can exist in the connector/coupler or terminal. They need to be checked carefully.

- Loose connection of connector/coupler
- Poor contact of terminal (due to dirt, corrosion or rust, poor contact tension, entry of foreign object etc.)
- Wire harness being open
- Poor terminal-to-wire connection

- Disconnect the negative cable from the battery.
- Check each connector/coupler at both ends of the circuit being checked for loose connection. Also check for condition of the coupler lock if equipped.

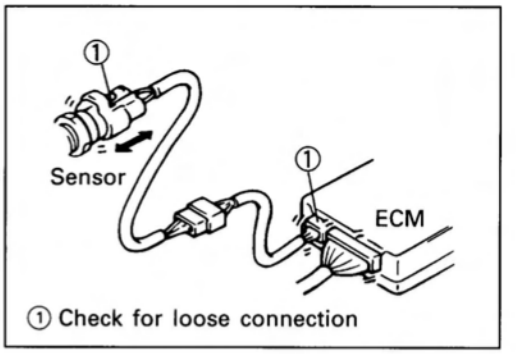

① Check for loose connection

- Using a test male terminal, check the female terminals of the circuit being checked for contact tension.
  Check each terminal visually for poor contact (possibly caused by dirt, corrosion, rust entry of foreign object, etc.). At the same time, check to make sure that each terminal is fully inserted in the coupler and locked.
  If contact tension is not enough, rectify the contact it to increase tension or replace.
  The terminals must be clean and free of any foreign material which could impede proper terminal contact.

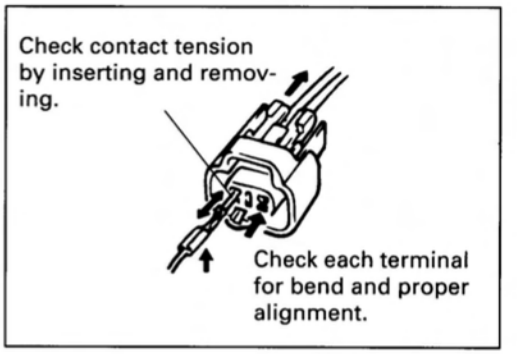

- Using continuity inspect or voltage check procedure as described below, inspect the wire harness terminals for open circuit and poor connection. Locate abnormality, if any.

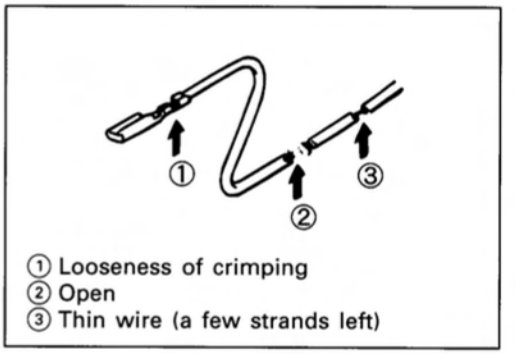

① Looseness of crimping
② Open
③ Thin wire (a few strands left)

Continuity check

- Measure resistance across coupler Ⓑ (between Ⓐ and Ⓒ in the figure).
  If no continuity is indicated (infinity or over limit), the circuit is open between terminals Ⓐ and Ⓒ.

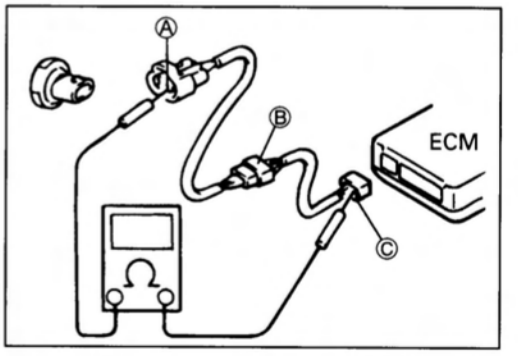

- Disconnect the coupler Ⓑ and measure resistance between couplers Ⓐ and Ⓑ.
  If no continuity is indicated, that means that the circuit is open between couplers Ⓐ and Ⓑ. If continuity is indicated, there is an open circuit between couplers Ⓑ′ and Ⓒ or an abnormality in coupler Ⓑ′ or coupler Ⓒ.

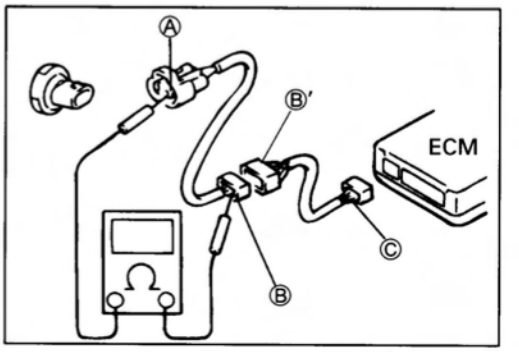

Voltage check

If voltage is supplied to the circuit being checked, voltage check can be used as circuit check.

- With all connectors/couplers connected and voltage applied to the circuit being checked, measure voltage between each terminal and body ground.

If measurements were taken as shown in the figure at the right and results are as listed below, it means that the circuit is open between terminals Ⓐ and Ⓑ.

Voltage Between:
Ⓒ and body ground: Approx. 5V
Ⓑ and body ground: Approx. 5V
Ⓐ and body ground: 0V

Also, if measured values are as listed below, a resistance (abnormality) exists which causes the voltage drop in the circuit between terminals Ⓐ and Ⓑ.

Voltage Between:
Ⓒ and body ground: Approx. 5V
Ⓑ and body ground: Approx. 5V ——— 2V voltage drop
Ⓐ and body ground: Approx. 3V ———

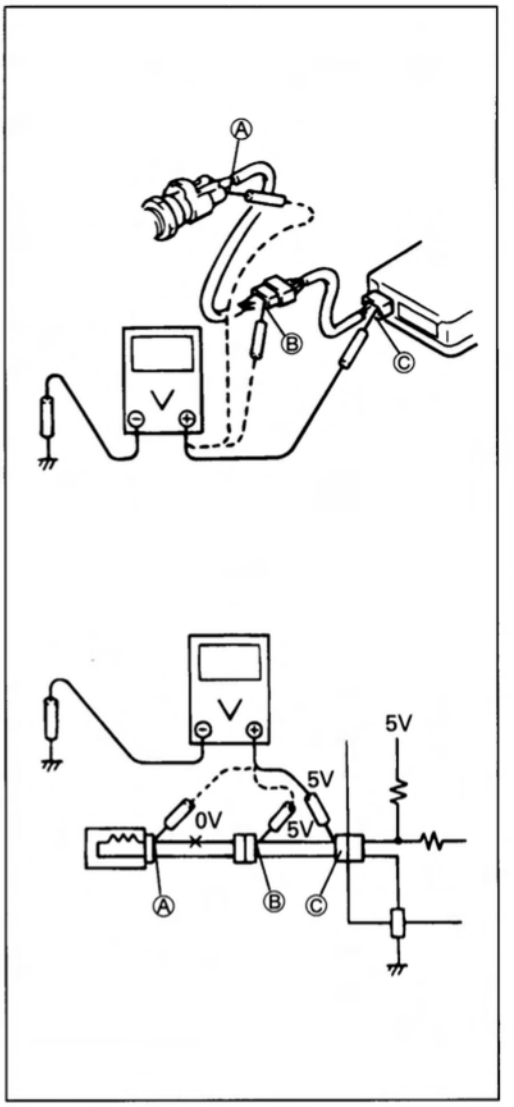

SHORT CIRCUIT CHECK (Wire harness to ground)

- Disconnect the negative cable from the battery.
- Disconnect the connectors/couplers at both ends of the circuit to be checked.

NOTE:
If the circuit to be checked branches to other parts as shown, disconnect all connectors/couplers of those parts. Otherwise, diagnosis will be misled.

- Measure resistance between terminal at one end of circuit (Ⓐ terminal in figure) and body ground. If continuity is indicated, there is a short circuit to ground between terminals Ⓐ and Ⓒ.

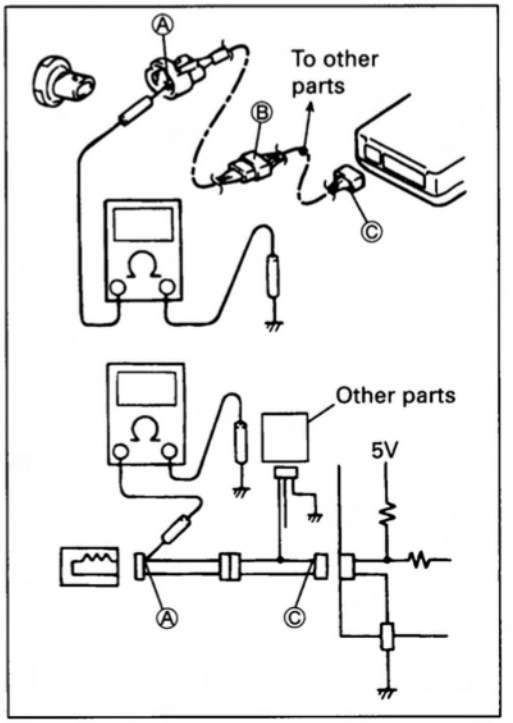

- Disconnect the connector/coupler included in circuit (coupler Ⓑ) and measure resistance between terminal Ⓐ and body ground.
  If continuity is indicated, the circuit is shorted to the ground between terminals Ⓐ and Ⓑ.

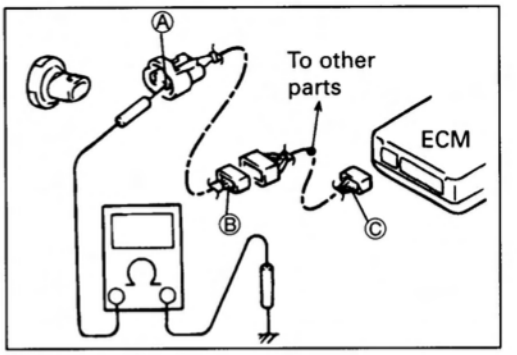

USING TESTERS

- Use the Suzuki pocket tester (09900-25002) or Suzuki multi-circuit tester (09900-25008).
- Use well-charged batteries in the tester.
- Be sure to set the tester to the correct testing range.

Using the tester

- Incorrectly connecting the ⊕ and ⊖ probes may cause the inside of the tester to burnout.
- If the voltage and current are not known, make measurements using the highest range.
- Reset the pocket tester to 0Ω before measuring each resistance or after changing the resistance range.
- When measuring the resistance with the multi-circuit tester, also measure the resistance with no-load. Subtract that resistance from the resistance measured under load in order to get the true resistance.

(Measured resistance) − (No-load resistance) = (True resistance)

- When measuring the resistance with the multi-circuit tester, ∞ becomes 10.00MΩ and "1" flashes in the display.
- Check that no voltage is applied before making the measurement. If voltage is applied, the tester may be damaged.
- After using the tester, turn the power off.

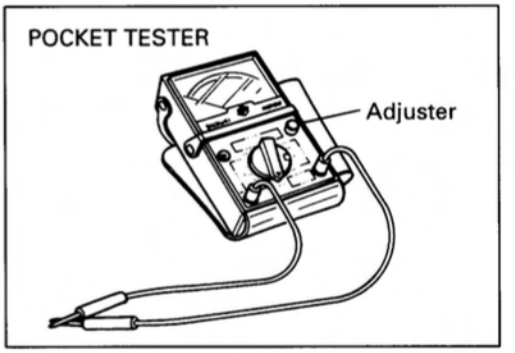

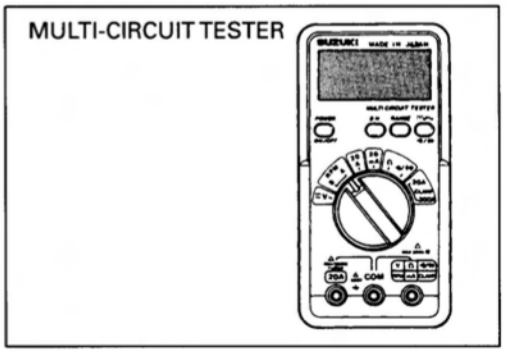

Pocket tester: 09900-25002
Multi-circuit tester: 09900-25008

NOTE:

* *When connecting the multi circuit tester, install fine copper wires (O.D is below 0.5 mm) to the back side of the lead wire coupler and connect the probes of tester to them.*
* *Use a fine copper wire, the outer diameter being below 0.5 mm, to prevent the rubber of the water proof coupler from damage.*

FI SYSTEM TECHNICAL FEATURES

INJECTION TIME (INJECTION VOLUME)

The factors to determine the injection time include the basic fuel injection time which is calculated on the basis of the intake air pressure, engine speed and throttle opening angle, and various compensations which are determined according to the signals from various sensors that detect the engine and driving conditions.

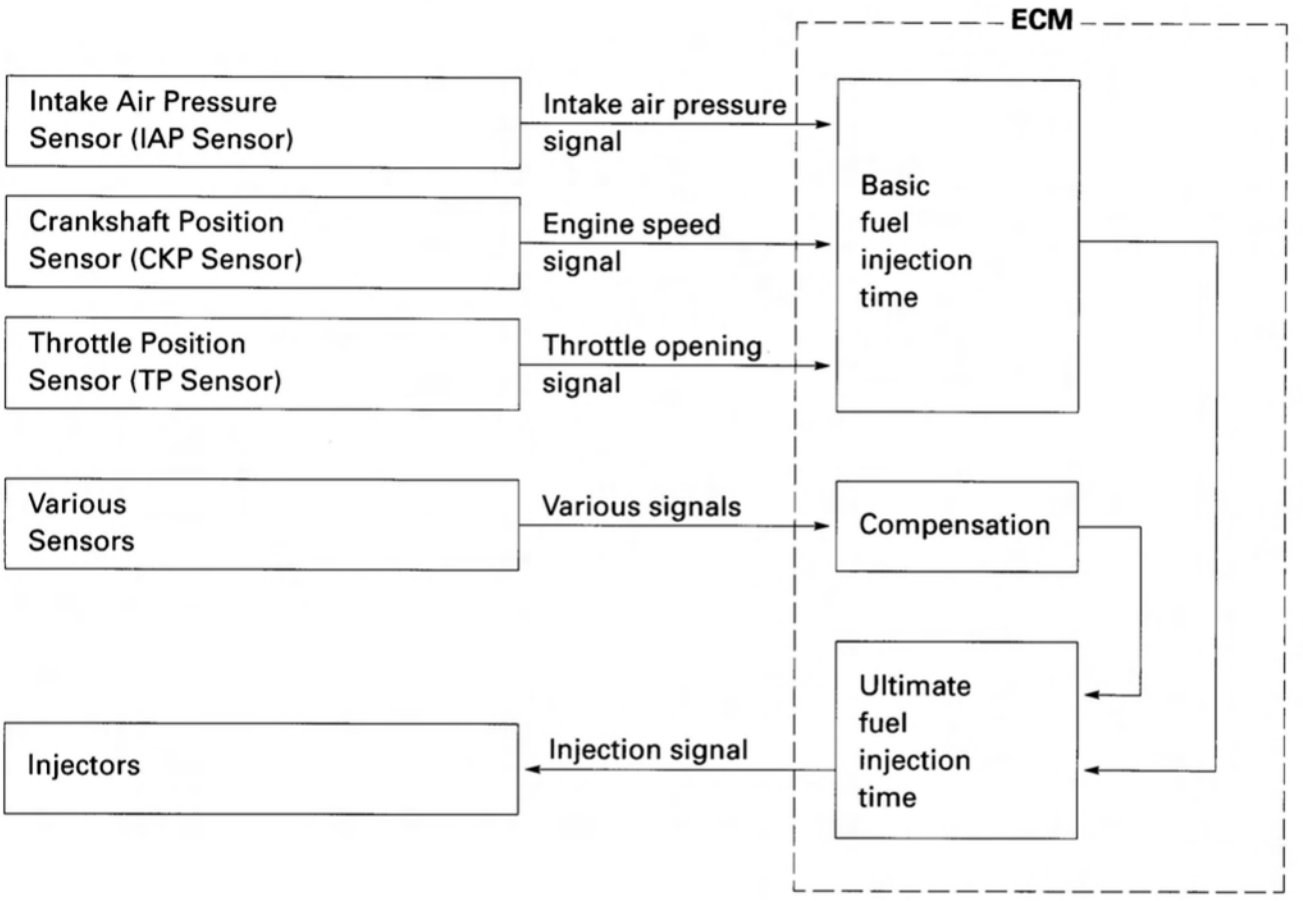

COMPENSATION OF INJECTION TIME (VOLUME)

The following different signals are output from the respective sensors for compensation of the fuel injection time (volume).

SIGNAL	DESCRIPTION
ATMOSPHERIC PRESSURE SENSOR SIGNAL	When atmospheric pressure is low, the sensor sends the signal to the ECM and reduce the injection time (volume).
ENGINE COOLANT TEMPERATURE SENSOR SIGNAL	When engine coolant temperature is low, injection time (volume) is increased.
INTAKE AIR TEMPERATURE SENSOR SIGNAL	When intake air temperature is low, injection time (volume) is increased.
BATTERY VOLTAGE SIGNAL	ECM operates on the battery voltage and at the same time, it monitors the voltage signal for compensation of the fuel injection time (volume). A longer injection time is needed to adjust injection volume in the case of low voltage.
GEAR POSITION SIGNAL/ ENGINE RPM SIGNAL	At high speed, high engine rpm in 5th or 6th gear, the injection time (volume) is increased. This is the compensation of the SRAD.
STARTING SIGNAL	When starting engine, additional fuel is injected during cranking engine.
ACCELERATION SIGNAL/ DECELERATION SIGNAL	During acceleration, the fuel injection time (volume) is increased, in accrdance with the throttle opening speed and engine rpm. During deceleration, the fuel injection is interrupted. Injection recovers when throttle valve is opened thereafter.

INJECTION STOP CONTROL

SIGNAL	DESCRIPTION
TIP OVER SENSOR SIGNAL	When the motorcycle tips over, the tip over sensor sends a signal to the ECM. Then, this signal cuts OFF current supplied to the fuel pump, fuel injectors and ignition coils.
OVER-REV. LIMITER SIGNAL	The fuel injectors stop operation when engine rpm reaches rev. limit rpm. The over-rev. limiter stops the ignition system first, and then the injection stop signal is sent from the ECM.

FUEL DELIVERY SYSTEM

The fuel delivery system consists of the fuel tank, fuel pump, fuel filter, fuel feed hose, fuel delivery pipe (including fuel injectors), fuel pressure regulator and fuel return hose. Fuel in the fuel tank is pumped up by the fuel pump and pressurized fuel to flow into the injector installed in the fuel delivery pipe. As the fuel pressure applied to the fuel injector (the pressure in the fuel delivery pipe) is always kept to a certain amount higher than the vacuum pressure in the throttle body by the fuel pressure regulator, the fuel is injected into the throttle body in conic dispersion when the injector opens according to the injection signal from the ECM.
The fuel relieved by the fuel pressure regulator returns through the fuel return hose to the fuel tank.

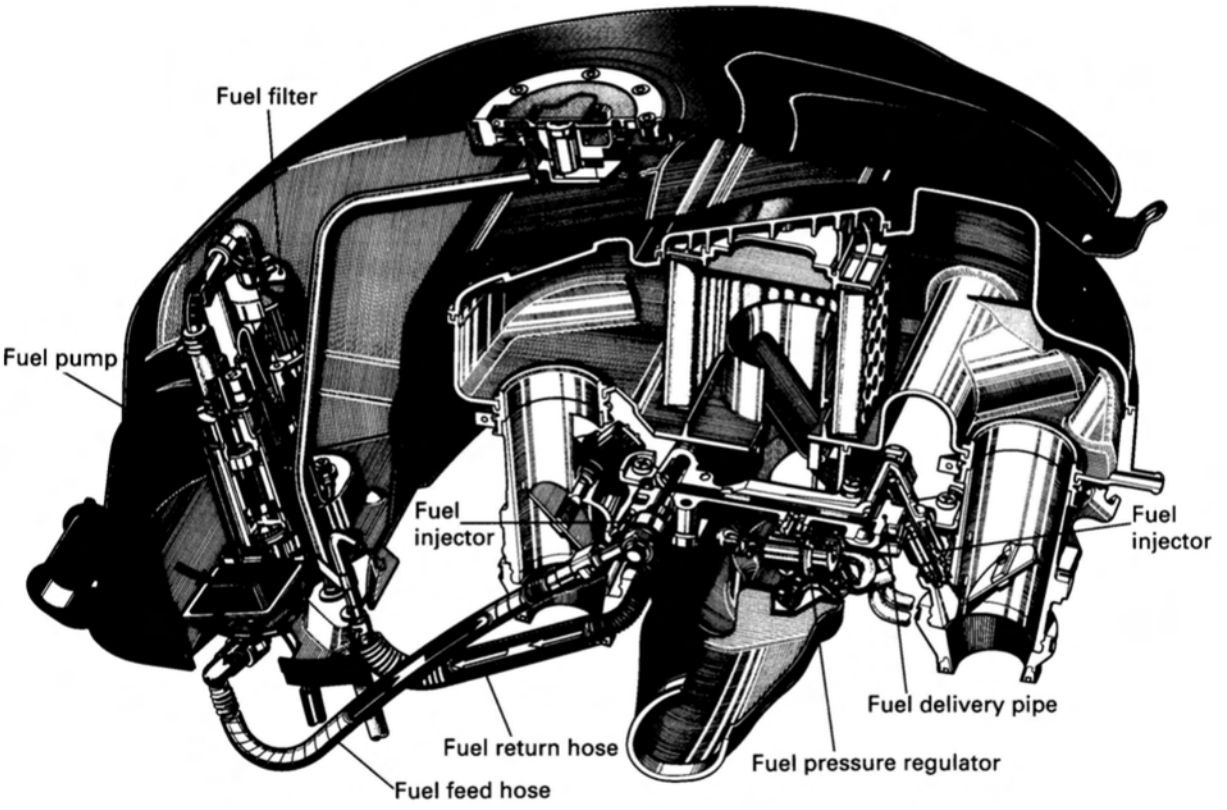

FUEL PUMP

The electric fuel pump located in the fuel tank consists of the armature, magnet, impeller, brush, check valve and relief valve. The ECM controls its ON/OFF operation as controlled under the FUEL PUMP CONTROL SYSTEM.

When electrical energy is supplied to the fuel pump, the motor in the pump runs and so does the impeller. This causes a pressure difference to occur between both sides of the impeller as there are many grooves around it. Then the fuel is drawn through the inlet port, and with its pressure increased, it is discharged through the outlet port. The fuel pump has a check valve to keep some pressure in the fuel feed hose even when the fuel pump is stopped. Also, the relief valve is equipped in the fuel pump, which controls when the outlet of the fuel pressure increases upto 4.5–6.5 kg/cm^2 (450–650 kPa, 64–92 psi), the relief valve opens and pressurized fuel is released to the fuel tank.

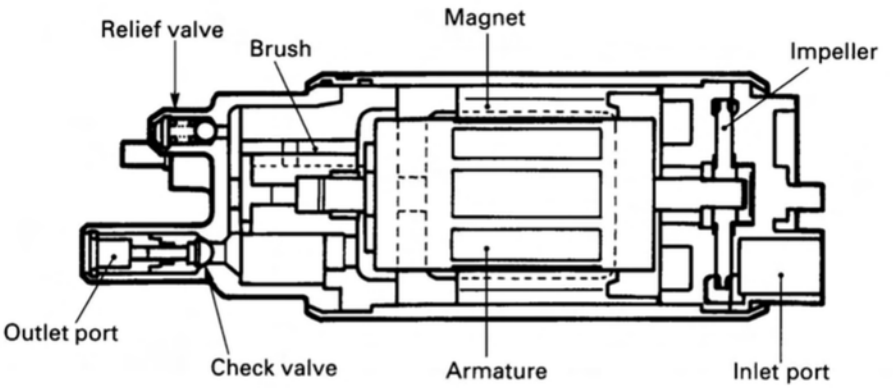

When the impeller is driven by the motor, pressure differential occurs between the front part and the rear part of the blade groove as viewed in angular direction due to fluid friction. This process continuously takes place causing fuel pressure to be built up. The pressurized fuel is then let out from the pump chamber and discharged through the motor section and the check valve.

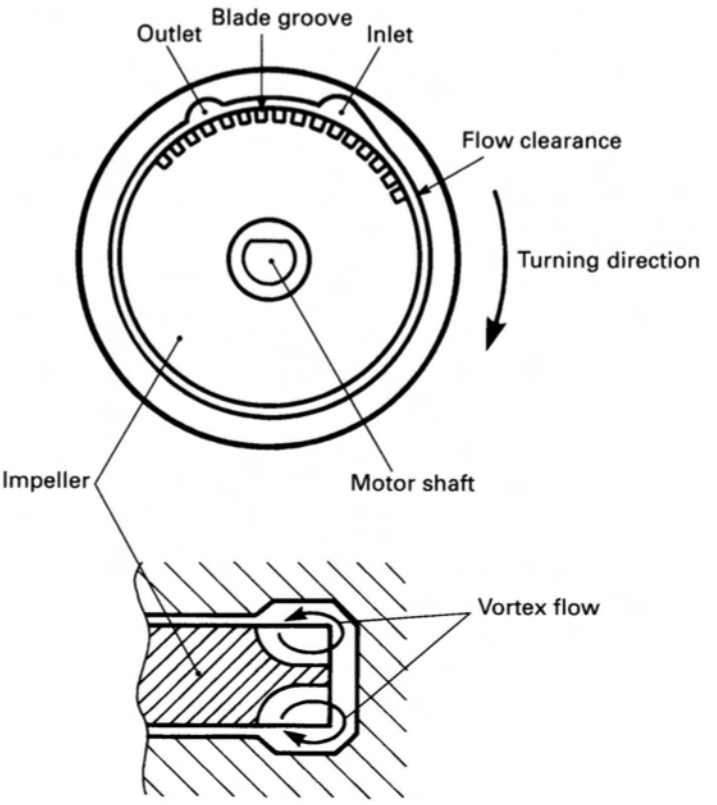

FUEL PRESSURE REGULATOR

The fuel pressure regulator is diaphragm-operated relief valve consisting of the diaphragm, spring and valve. It keeps the fuel pressure applied to the injector at 2.9 kg/cm^2 (290 kPa, 41 psi) higher than that in the throttle body at all times.

When the fuel pressure rises more than 2.9 kg/cm^2 (290 kPa, 41 psi) higher than the throttle body pressure, the fuel pushes the valve in the regulator open and excess fuel returns to the fuel tank via the fuel return hose.

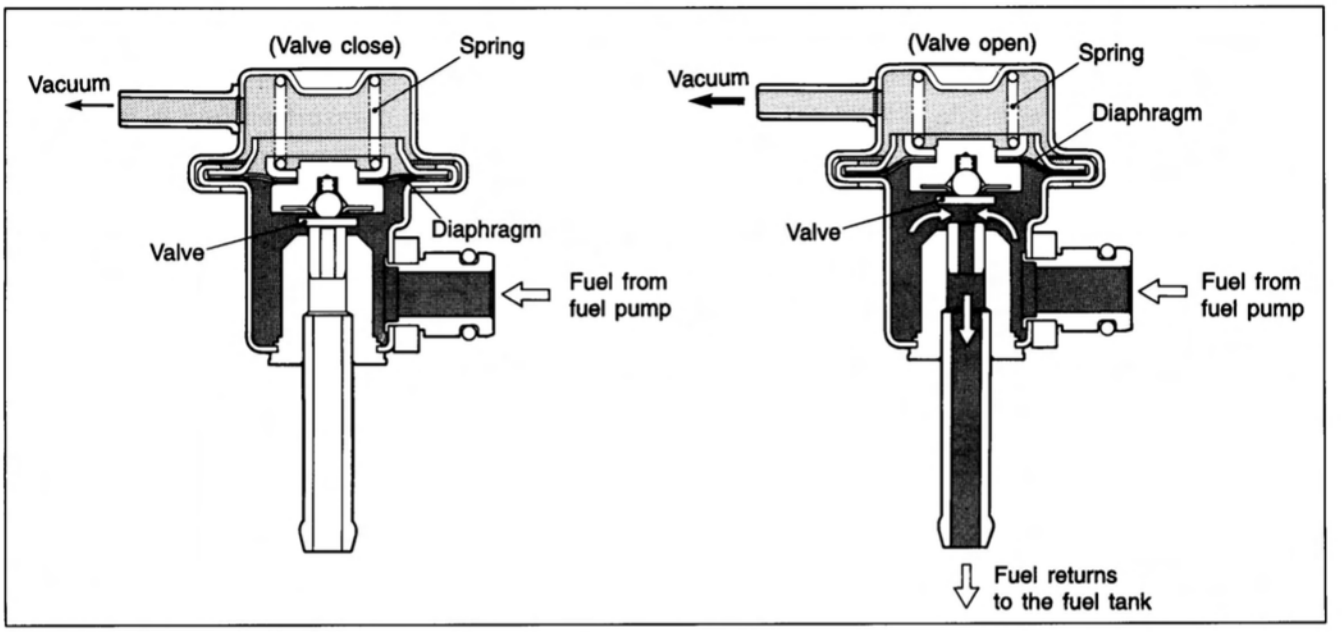

FUEL INJECTOR

The fuel injector consists of the solenoid coil, plunger, needle valve and filter.

It is an electromagnetic type injection nozzle which injects fuel in the throttle body according to the signal from the ECM.

When the solenoid coil of the injector is energized by the ECM, it becomes an electromagnet and attracts the plunger. At the same time, the needle valve which is incorporated with the plunger opens and the injector which is under the fuel pressure injects fuel in conic dispersion. As the lift stroke of the needle valve of the injector is set constant, the volume of the fuel injected at one time is determined by the length of time during which the solenoid coil is energized (injection time).

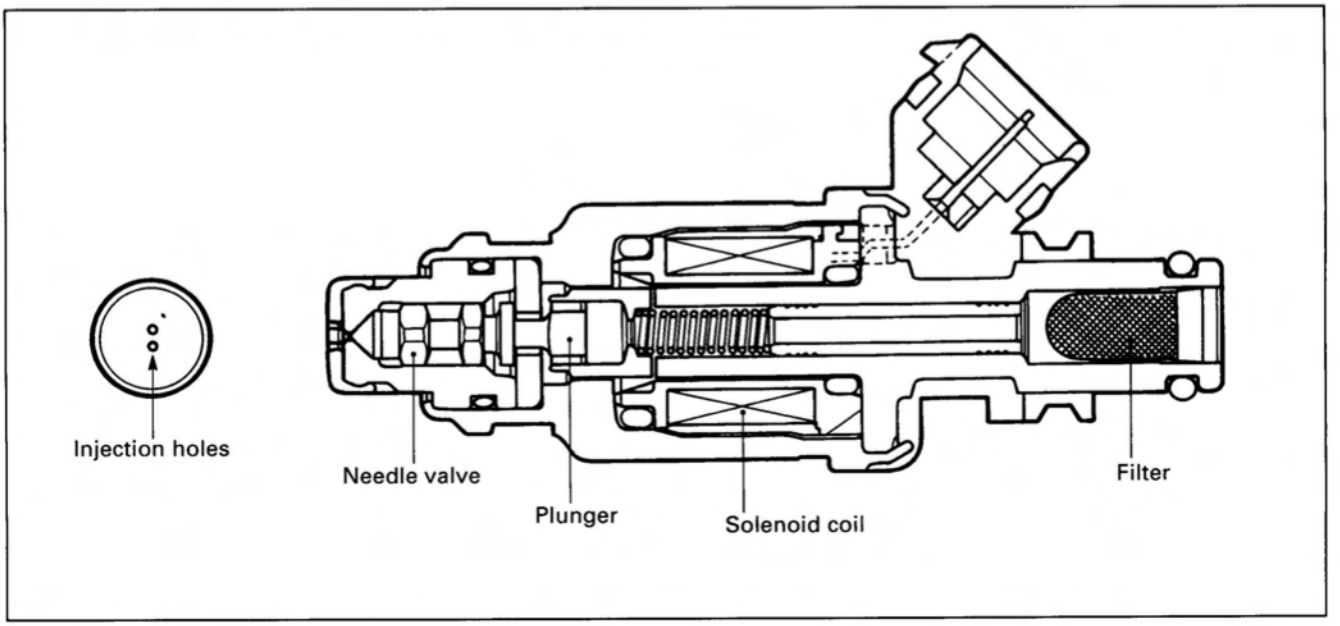

FUEL PUMP CONTROL SYSTEM

When the ignition switch is turned on, current from the battery flows to the fuel pump motor through the side-stand relay and the fuel pump relay causing the motor to turn.

Since the ECM has a timer function, the fuel pump motor stops turning in three seconds after the switch has been turned on.

Thereafter, when the crankshaft is turned by the starter motor or the engine has been started, the engine revolving signal is input to the ECM. Then, current flows to the fuel pump motor from the battery through the side-stand relay and the fuel pump relay so that the pump continues to function.

A tip over sensor is provided in the fuel pump control circuit. By this provision, anytime the motorcycle tips over, the tip over sensor sends a signal to the ECM to turn off power to the fuel pump relay, causing the fuel pump motor to stop. At the same time, current to the fuel injectors as well as the ignition coil is interrupted, which then stops the engine.

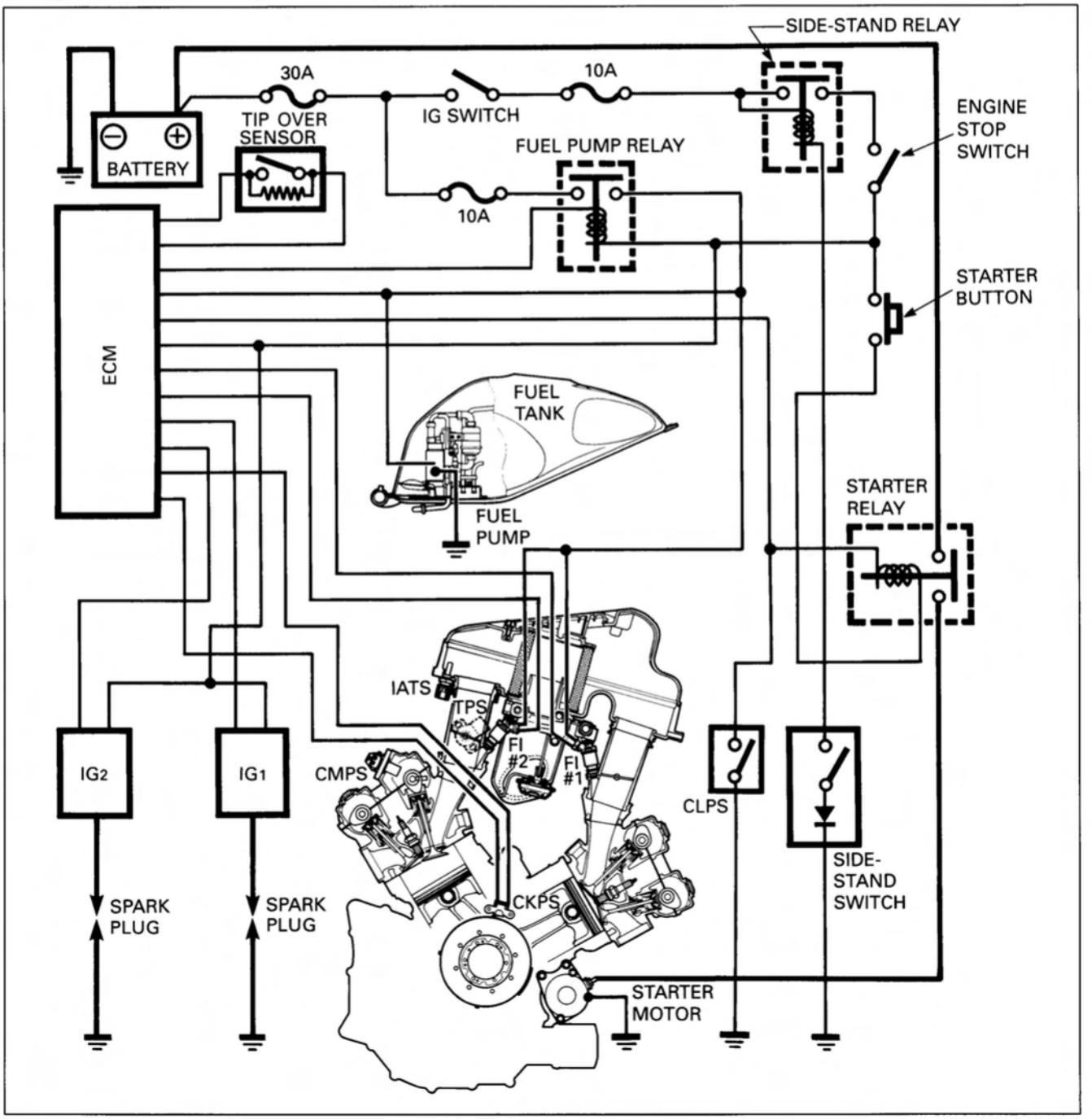

ECM (FI CONTROL UNIT)

The ECM is located under the seat.

The ECM consists of CPU (Central Processing Unit), memory (ROM) and I/O (Input/Output) sections. The signal from each sensor is sent to the input section and then sent to CPU. On the basis of signal information received, CPU calculates the volume of fuel necessary for injection using maps programmed for varying engine conditions. Then, the operation signal of the fuel injection is sent from the output section to the fuel injector.

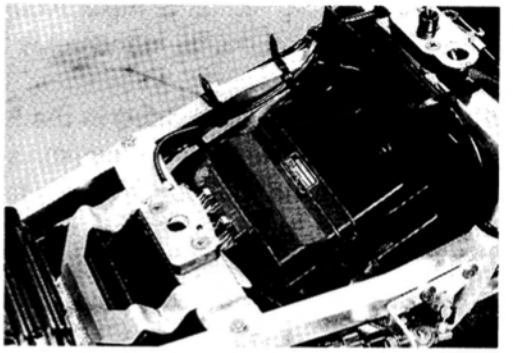

Four kinds of independent program maps are programmed in the ROM.

These four kinds of maps are designed to compensate for differences of the intake/exhaust systems and cooling performance due to the different front cylinder and rear cylinder bank angles.

LIGHT LOAD: When the engine is running in a light load, the fuel injected volume (time) is being the basis of the intake air pressure and engine speed.

HEAVY LOAD: When the engine is running in a heavy load, the fuel injected volume (time) is being the basis of the throttle valve opening and engine speed.

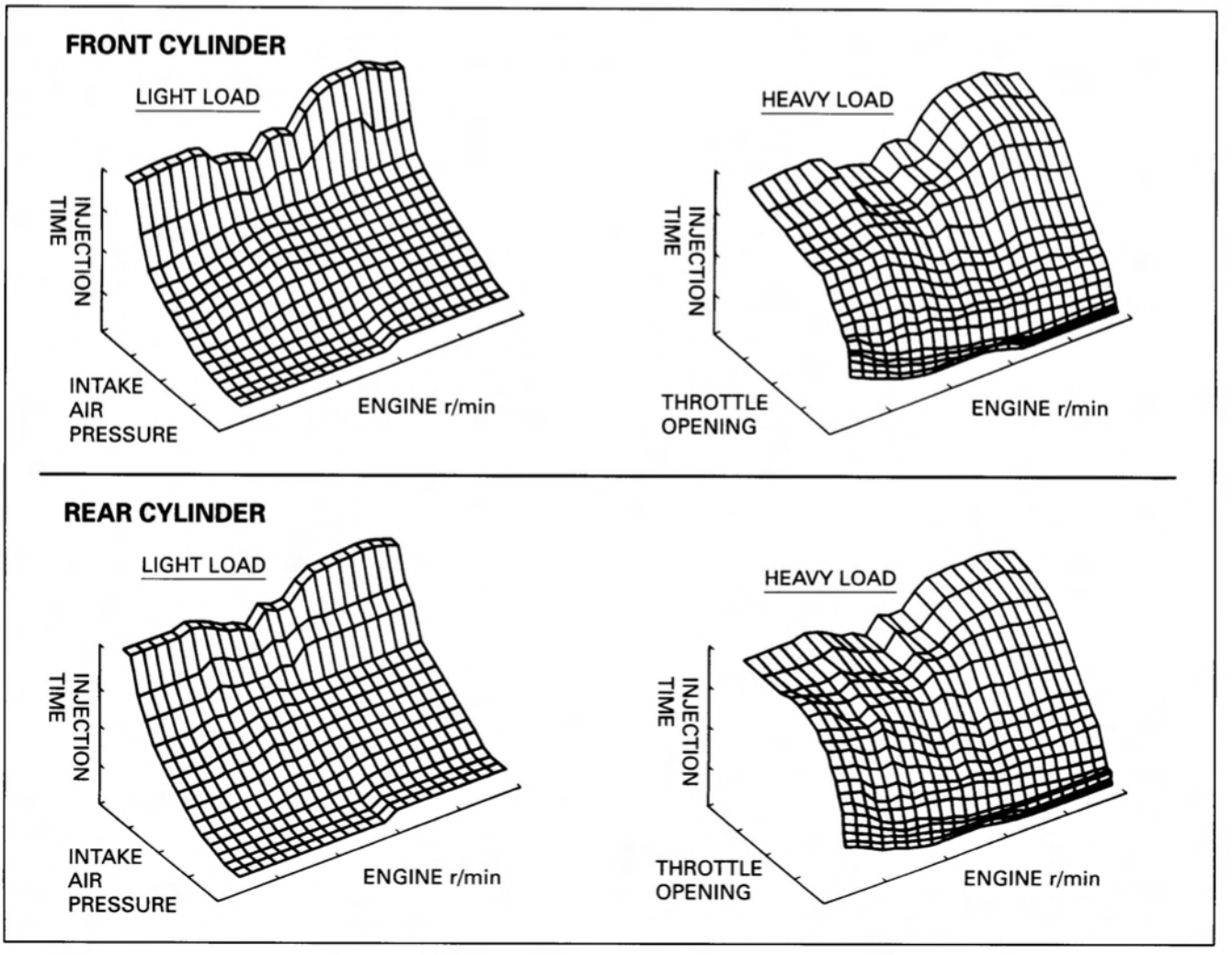

INJECTION TIMING

The system employs a sequential, front-and-rear cylinder independent injection type, using the crankshaft position sensor (signal generator) to determine the piston position (injection timing and ignition timing) and the camshaft position sensor to identify the cylinder during operation, and these information are sent to the ECM. This makes it possible to inject the optimum volume of fuel in the best timing for the engine operating conditions.

When the crankshaft begins to turn at the time of starting, the ECM sends the signals to the two injectors, front and rear, to inject fuel simultaneously. From the second turn onward, the sequential injection occurs for the front-and-rear cylinder independent injection as explained above.

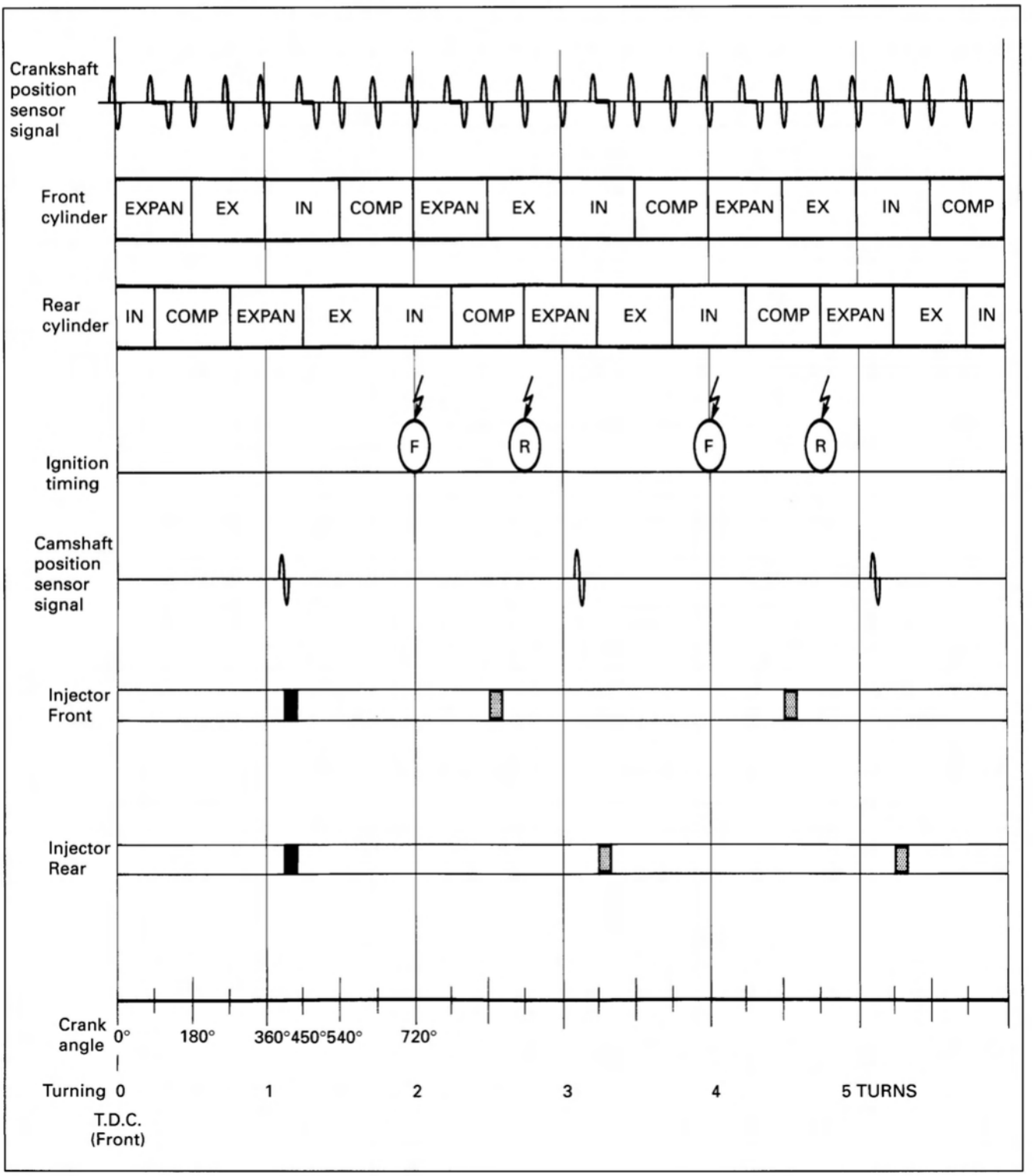

SENSORS

INTAKE AIR PRESSURE SENSOR (IAP SENSOR)



The intake air pressure sensor is located at the rear side of the air cleaner box and its vacuum hose is connected to the throttle body.
The sensor detects the intake air pressure, which is then converted into voltage signal and sent to the ECM.
The basic fuel injection time (volume) is determined according to the voltage signal (output voltage).
The voltage signal increases when the intake air pressure is high.

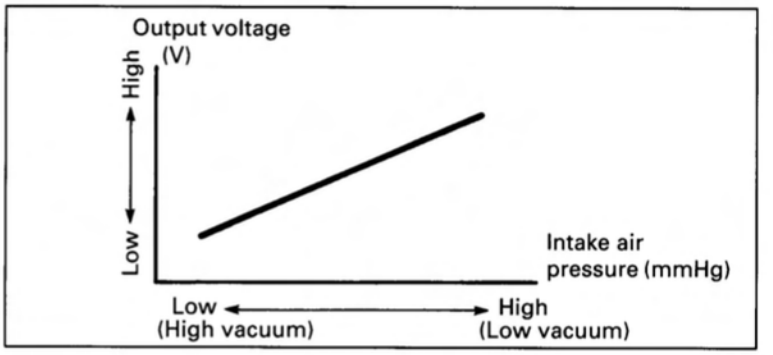

THROTTLE POSITION SENSOR (TP SENSOR)



The throttle position sensor is installed on the No.2 throttle body.
The throttle position sensor is a kind of variable resistor which detects the throttle opening angle.
The battery voltage in the sensor is changed to the throttle position voltage which is then sent to the ECM.
The basic fuel injection time (volume) is determined according to the voltage signal (output voltage).
The voltage signal increases as the throttle is opened wider.

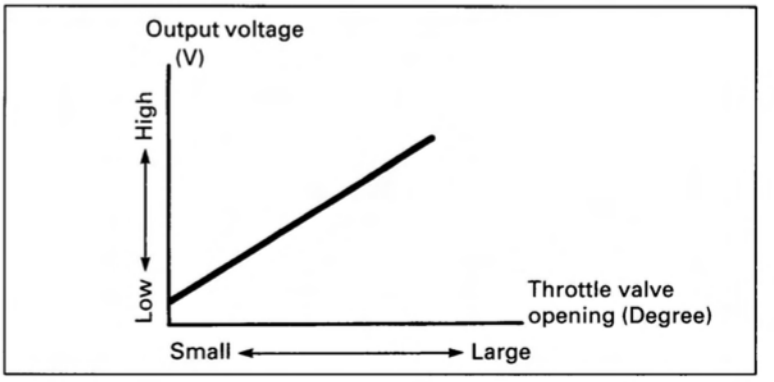

CRANKSHAFT POSITION SENSOR (CKP SENSOR)

The signal rotor is mounted on the left end of the crankshaft, and the crankshaft position sensor (Pick-up coil) is installed inside the generator cover.
The sensor generates the pick-up signal to be supplied to the ECM.
The ECM calculates and decides both the fuel injection timing and ignition timing.
The injection volume increases when the engine rpm is high.

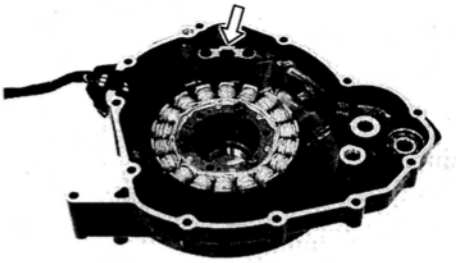

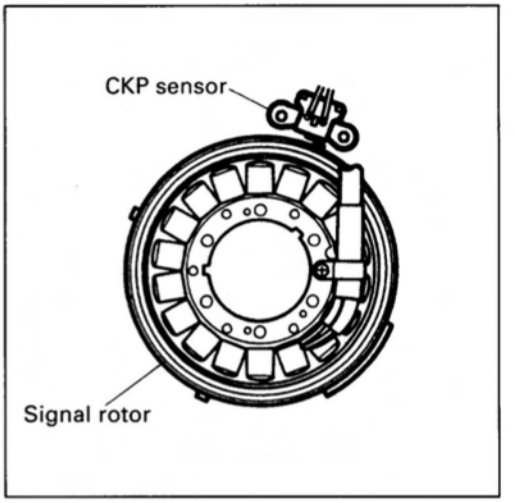

CAMSHAFT POSITION SENSOR (CMP SENSOR)

The signal rotor is installed on the No.2 intake camshaft, and the camshaft position sensor (Pick-up coil) is installed on the No.2 cylinder head cover.
The sensor generates the pick-up signal to be supplied to the ECM.
The ECM calculates and decides the cylinder identity and sequential injection timing.



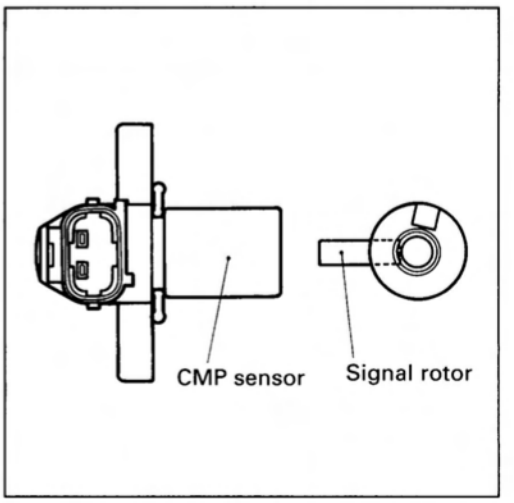

INTAKE AIR TEMPERATURE SENSOR (IAT SENSOR)

The intake air temperature sensor is installed at the rear side of the air cleaner box.

The sensor detects the intake air temperature, which is then converted from thermistor resistance value to voltage signal and sent to the ECM. The injection volume increases as intake air temperature decreases.

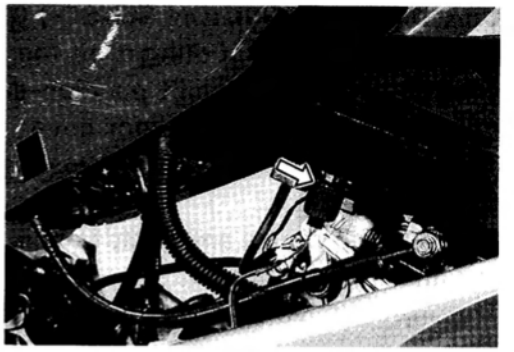

The thermistor resistance value increases when the intake air temperature is low, and decreases when the intake air temperature is high.

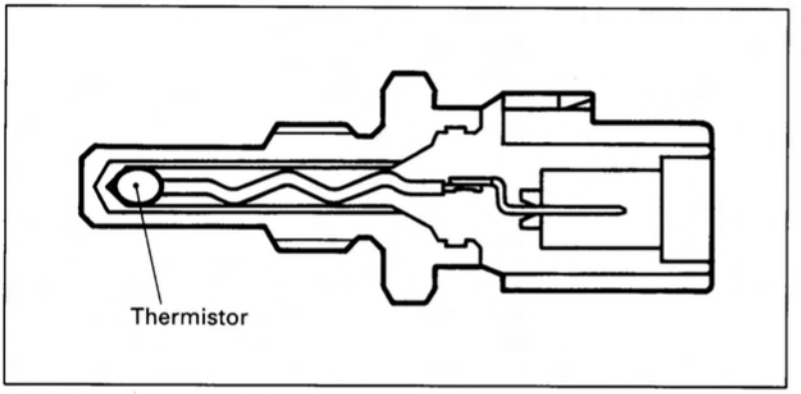

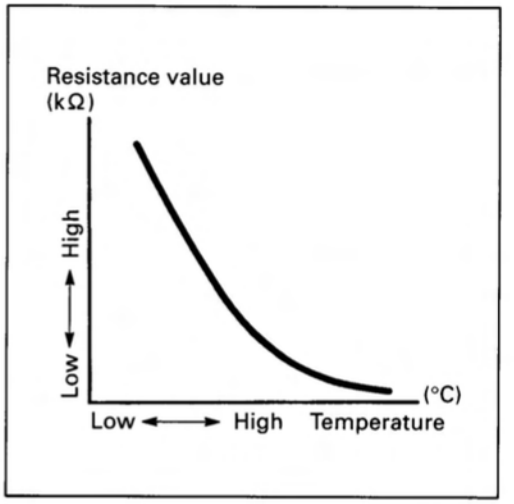

ENGINE COOLANT TEMPERATURE SENSOR (ECT SENSOR)

The engine coolant temperature sensor is installed at the left side of the radiator.

The sensor detects the engine coolant temperature, which is then converted from thermistor resistance value to voltage signal and sent to the ECM. The injection volume increases as coolant temperature decreases.



The thermistor resistance value increases when the engine coolant temperature is low, and decreases when the engine coolant temperature is high.

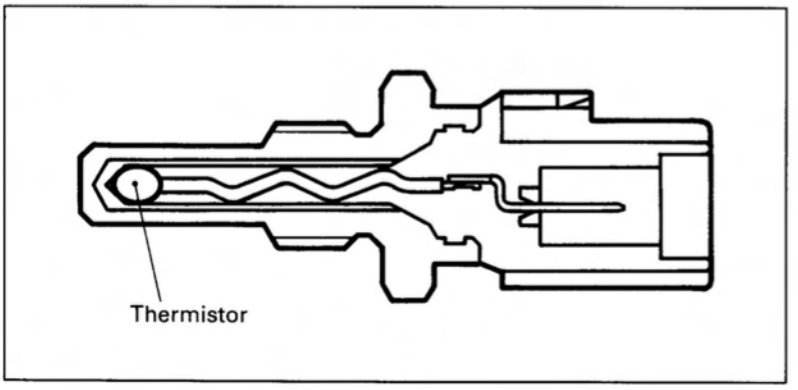

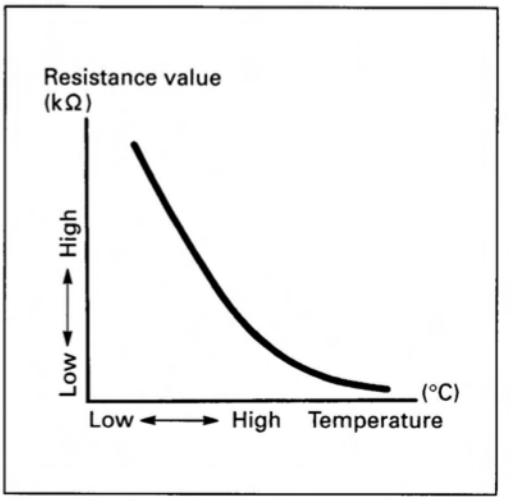

ATMOSPHERIC PRESSURE SENSOR (AP SENSOR)

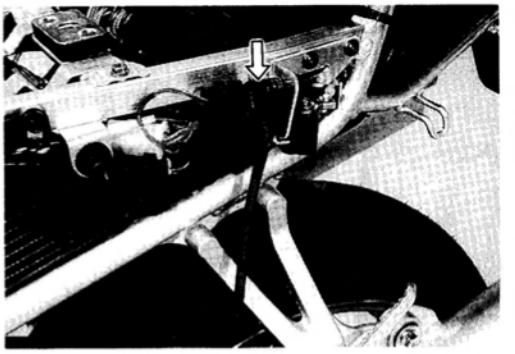

The atmospheric pressure sensor is located behind the left frame cover.

The sensor detects the atmospheric pressure. The detected pressure is converted into voltage signal and sent to the ECM.

The injection time (volume) is controlled according to the voltage signal (output voltage).

The voltage signal increases as the atmospheric pressure rises.

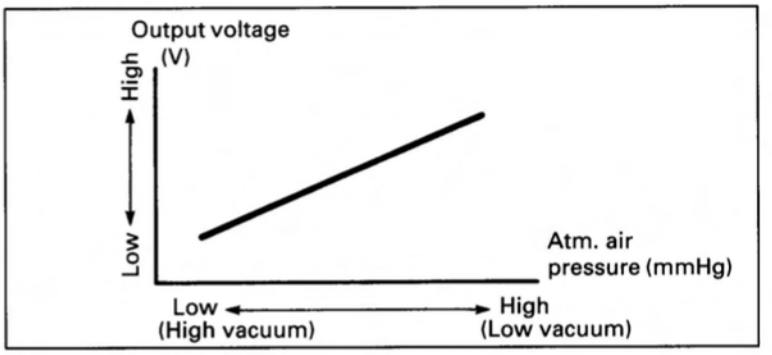

TIP OVER SENSOR (TO SENSOR)

The tip over sensor is located on the front of the battery. The sensor detects the leaning of the motorcycle. When it leans more than 43°, the mechanical switch turns ON and a signal is sent to the ECM. At the same time, this signal cuts OFF current supply to the fuel pump, fuel injectors and ignition coils.

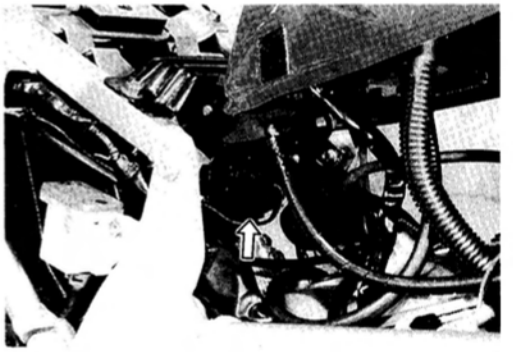

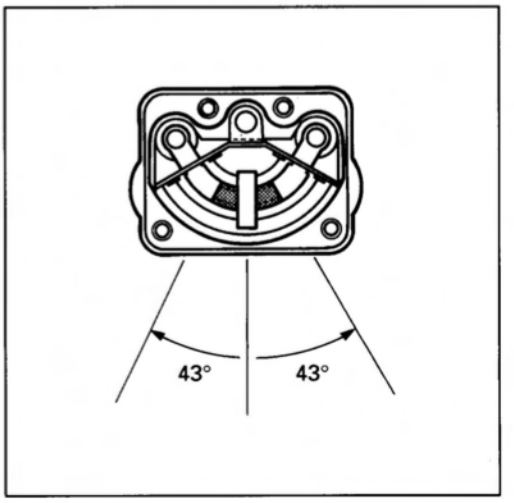

INTAKE AIR SYSTEM TECHNICAL FEATURES

This motorcycle uses SRAD (Suzuki Ram Air Direct induction) in the intake air system.
In this system, frontal wind pressure during running is guided into the air cleaner box in order to pressurize intake air, thereby improving intake efficiency for increased engine output.

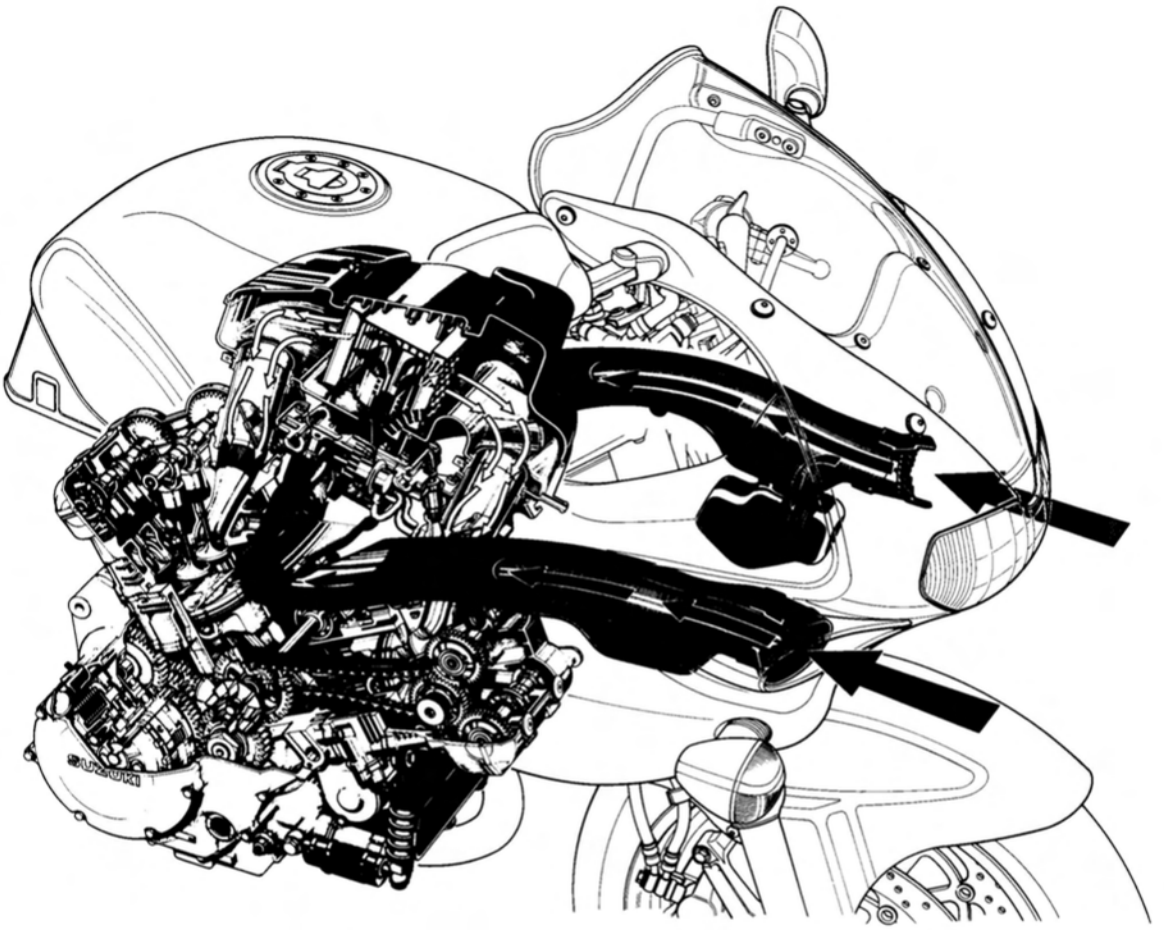

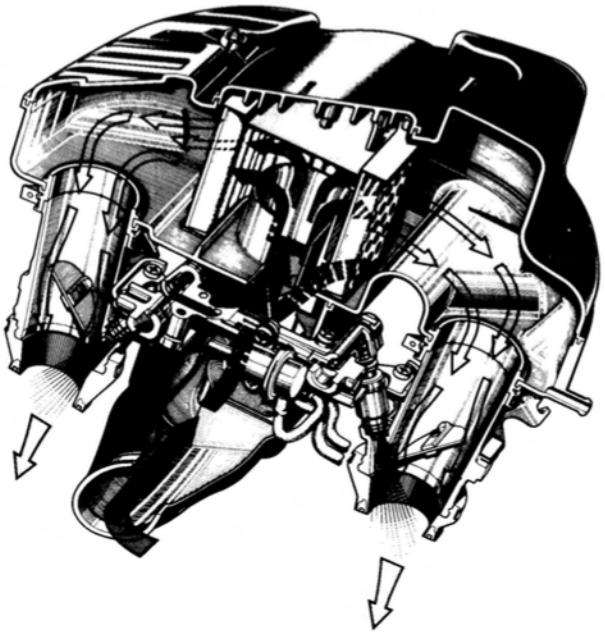

INTAKE AIR CONTROL VALVE

The intake air control valve is installed on the bottom part of the air cleaner box.
This system is designed to control the volume of intake air so as to improve engine output power. This is performed by opening or closing the air cleaner intake port according to the engine speed. When the engine is running in a low to medium speed range, the intake port is closed for controlled intake air volume. This improves the effect of intake air flow pulsation so that the engine can output higher power in this speed range.
When the engine is running in a medium to high speed range, the intake port is now fully open for guiding the maximum volume of air into the air cleaner box so that the engine can produce the maximum power in this speed range.

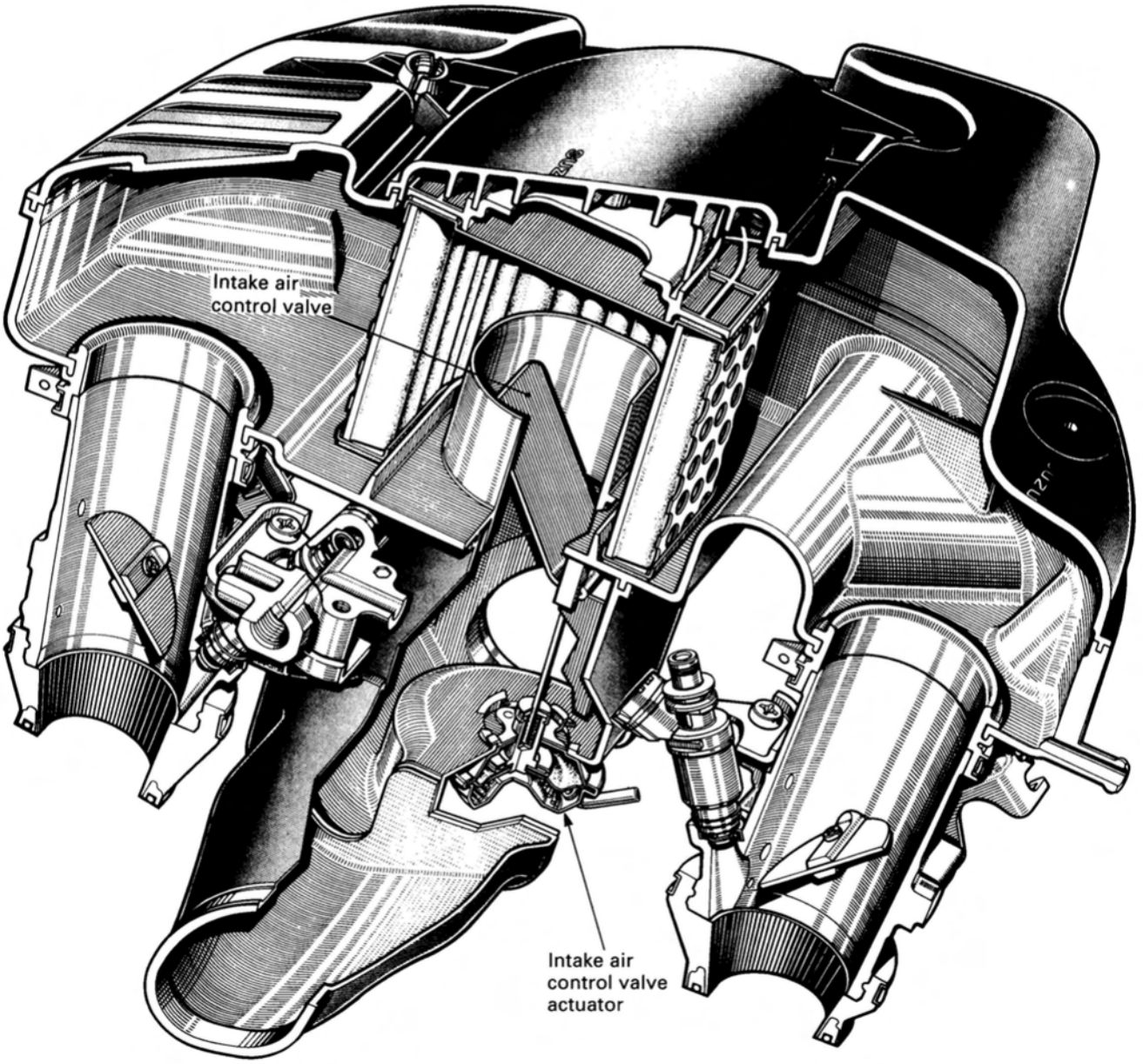

OPERATION

The intake air control valve system operates on the signal supplied from the ECM. The open/close operation of the air control valve is performed by an actuator which incorporates a vacuum operated diaphragm. The vacuum to operate this diaphragm is taken from the air stream inside the throttle body and transmitted through the vacuum transmitting valve and the vacuum control solenoid valve. (The vacuum control solenoid valve is mounted on the side of the air cleaner box.) The vacuum control solenoid valve allows the vacuum line to open or close on the basis of electrical signal supplied from the ECM. The vacuum damper is also provided in the vacuum line for the purpose of suppressing and stabilizing vacuum fluctuation.

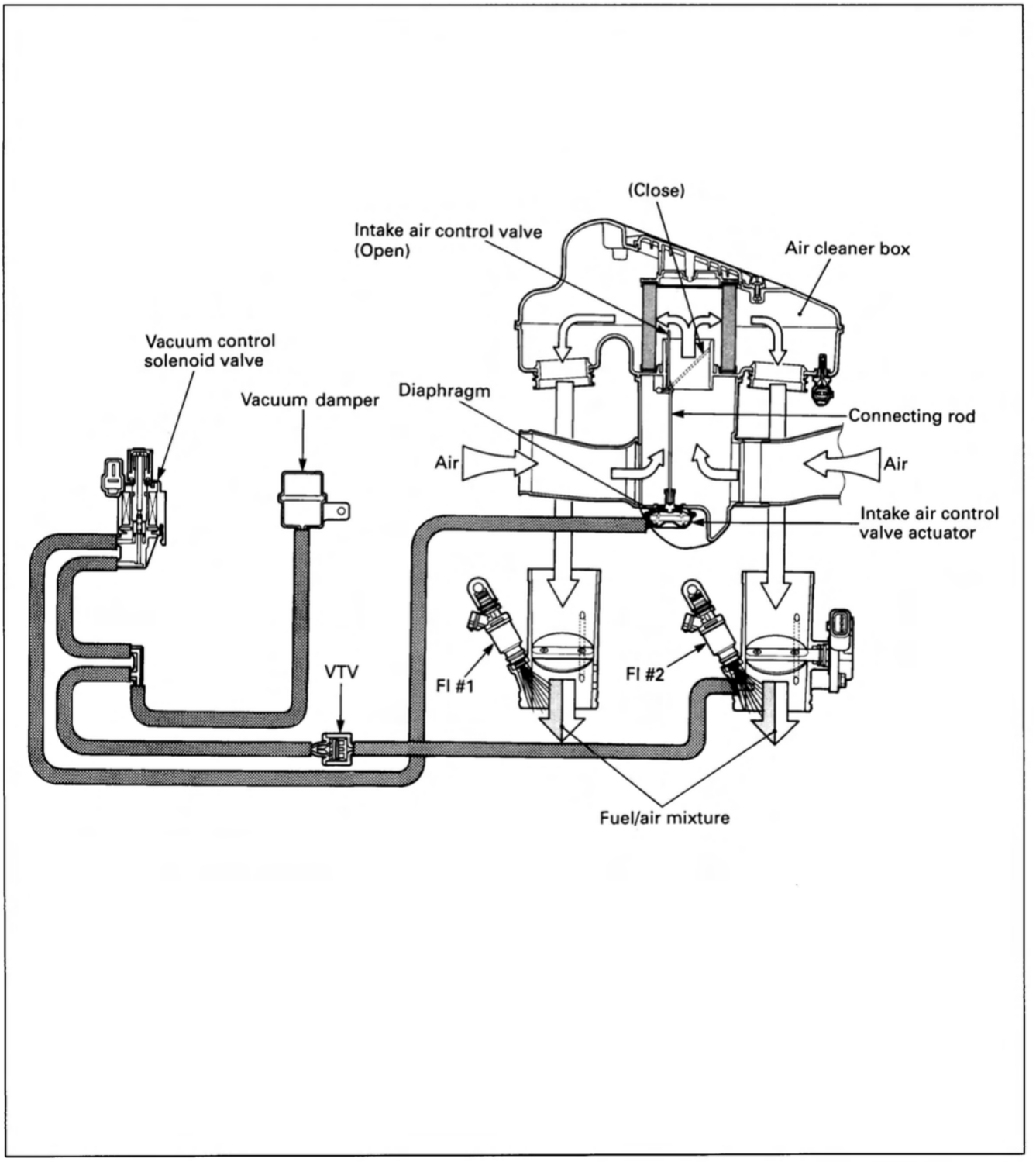

When the engine is running in a low to medium speed range, the electrical signal from the ECM energizes the solenoid coil in the vacuum control solenoid valve to create magnetism causing the valve to be pulled open. With the vacuum control solenoid valve open, the vacuum line on the throttle body side connects to that on the intake air control valve side allowing vacuum to transmit to the diaphragm to move downward. Since the diaphragm is mechanically connected with the intake air control valve via connecting rod, the diaphragm pulls down the intake air control valve to close.

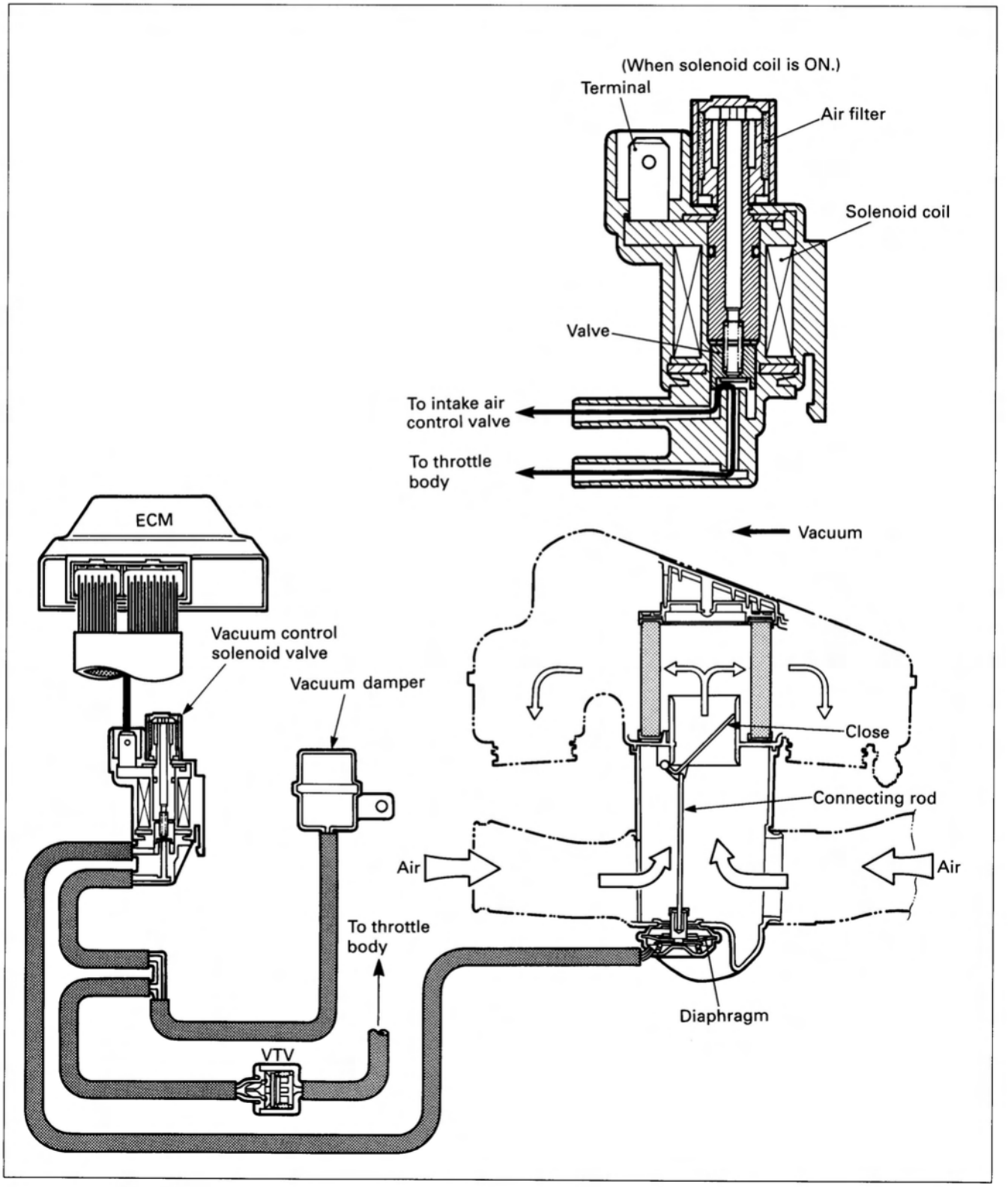

When the engine is running in a medium to high speed range, the signal from the ECM discontinues. Then, the solenoid coil is de-energized, causing vacuum on the throttle body side to stop being transmitted to the intake air control valve side. At the same time, the vacuum control solenoid valve let atmospheric pressure into the diaphragm side vacuum line, which deactivates the diaphragm and allows the spring to return and open the intake air control valve through the connecting rod.

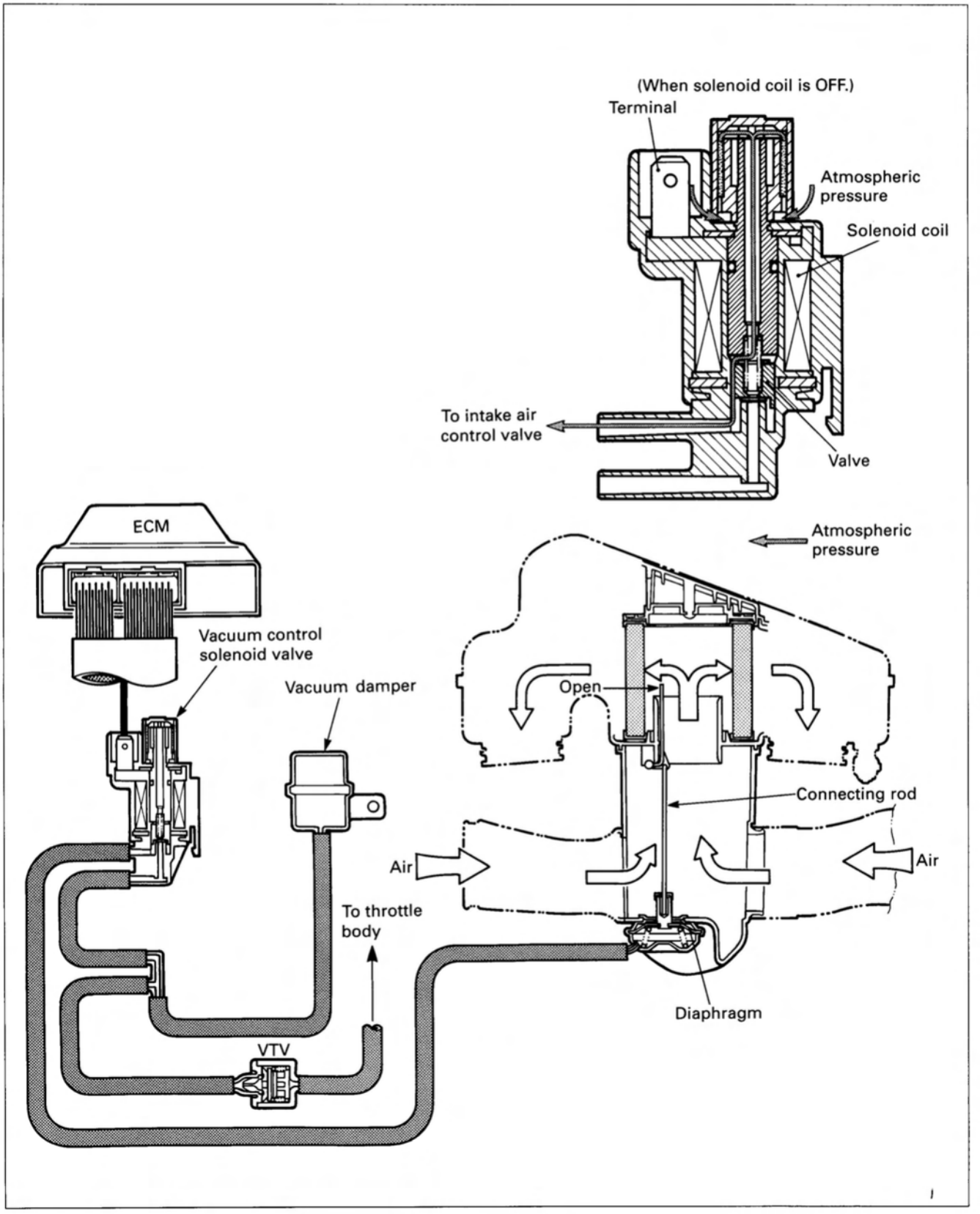

FI SYSTEM PARTS LOCATION

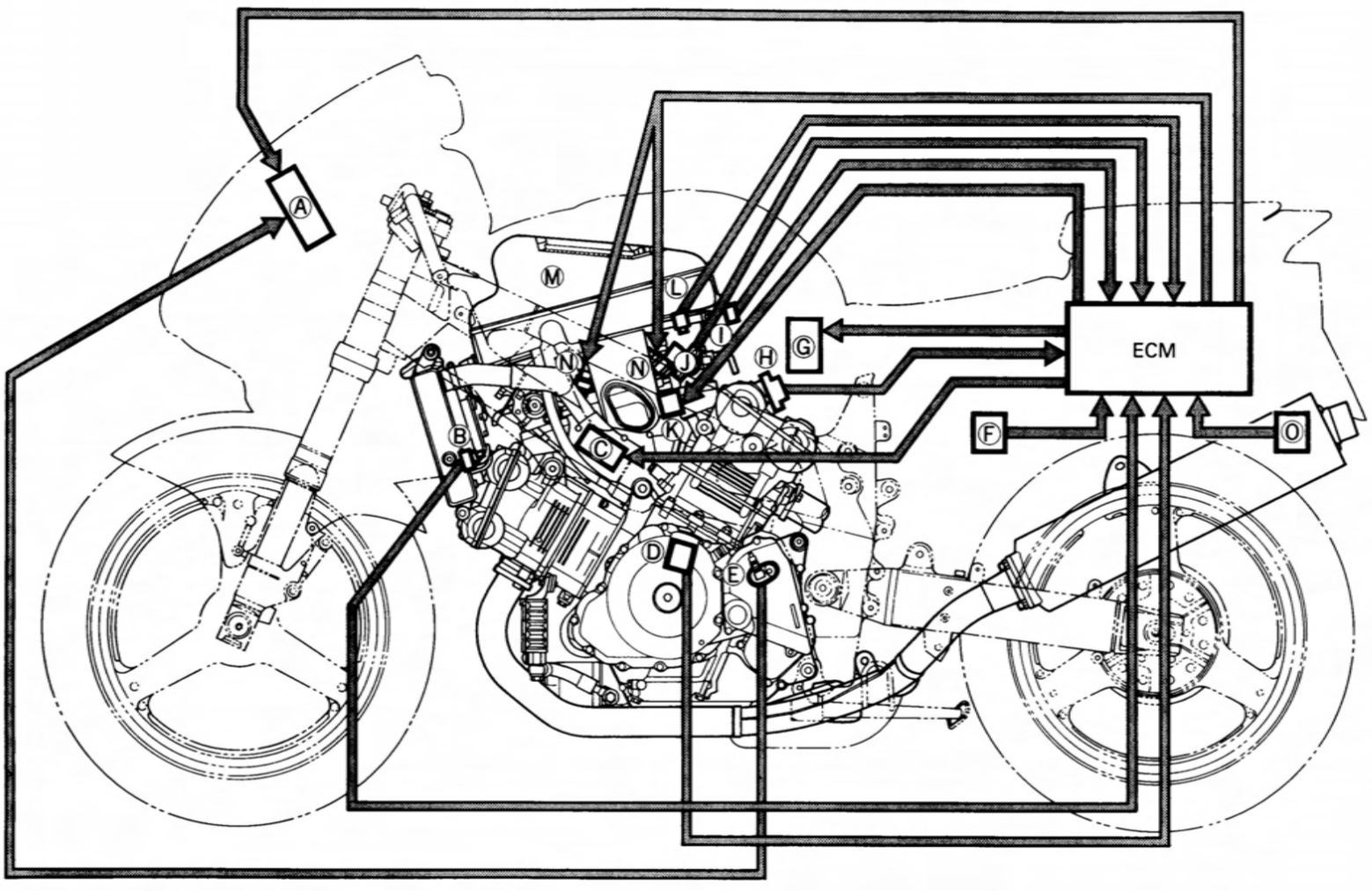

Ⓐ Speedometer
Ⓑ Engine coolant temperature sensor (ECTS)
Ⓒ Ignition coil (IG COIL)
Ⓓ Crankshaft position sensor (CKPS)
Ⓔ Speed sensor
Ⓕ Atmospheric pressure sensor (APS)
Ⓖ Fuel pump (FP)
Ⓗ Camshaft position sensor (CMPS)
Ⓘ Intake air pressure sensor (IAPS)
Ⓙ Throttle position sensor (TPS)
Ⓚ Vacuum control solenoid valve (VCSV)
Ⓛ Intake air temperature sensor (IATS)
Ⓜ Air cleaner
Ⓝ Fuel injector (FI)
Ⓞ Fuel pump relay (FP RELAY)

FI SYSTEM DIAGRAM

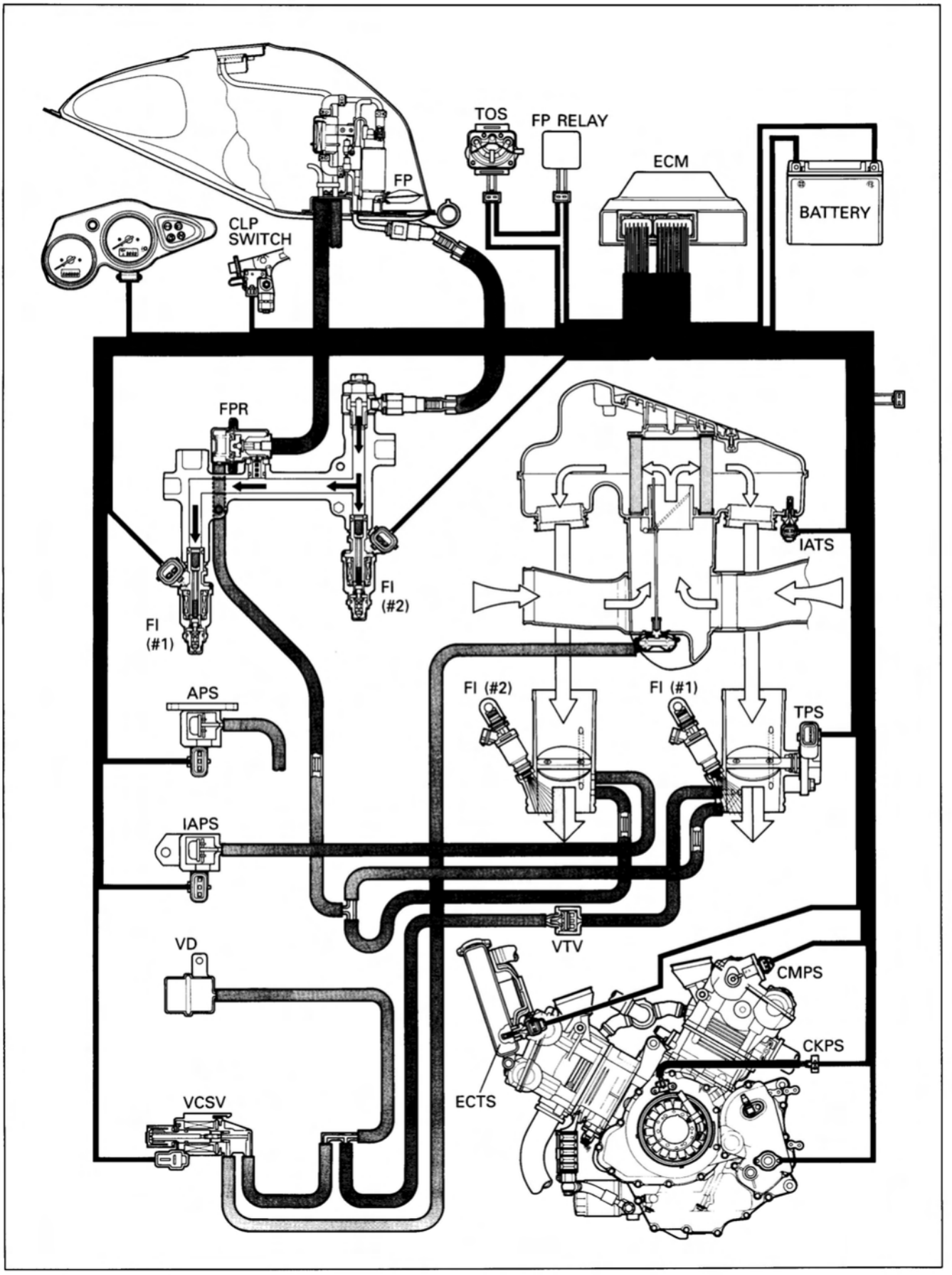

FI SYSTEM WIRING DIAGRAM

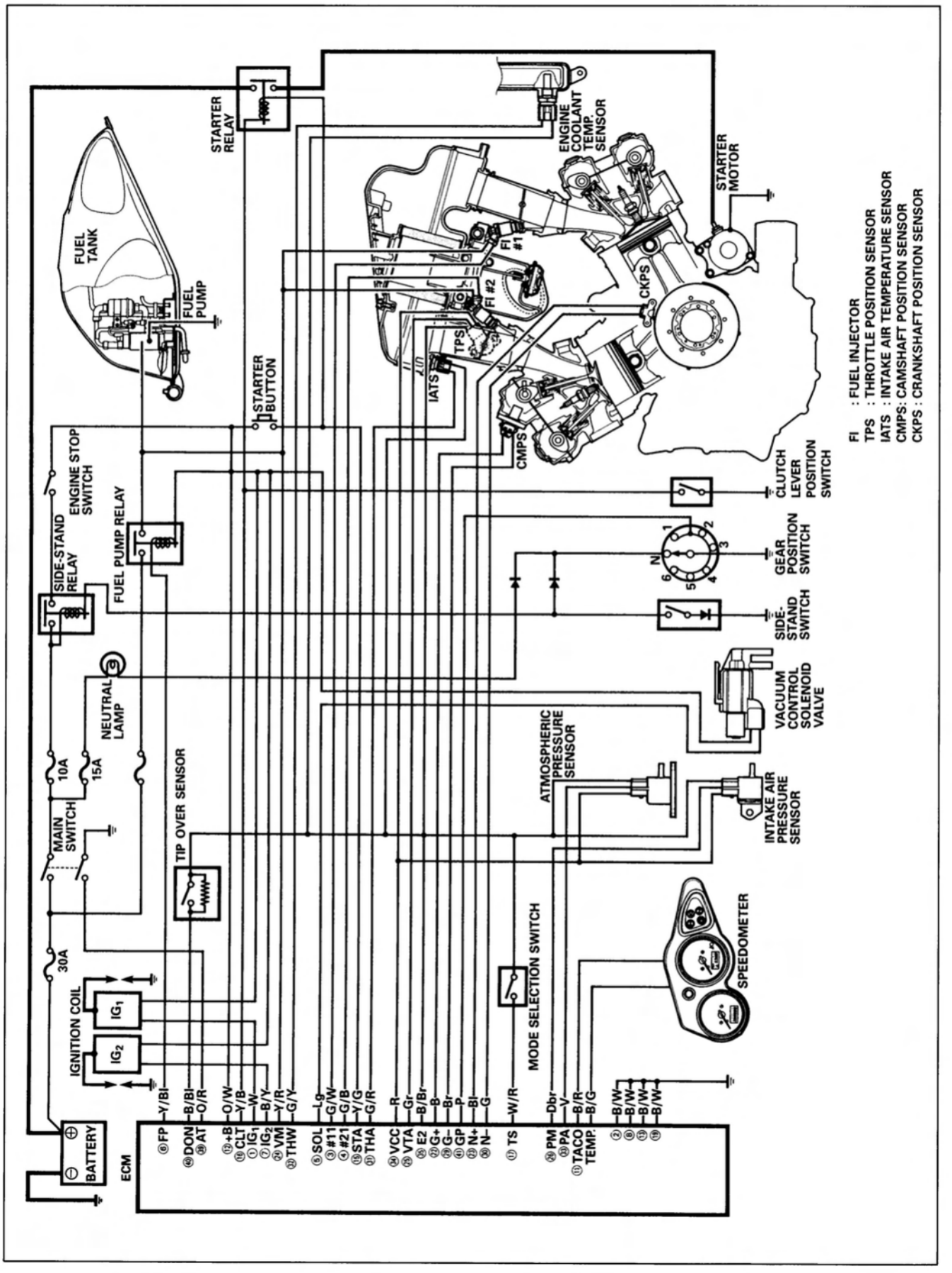

SELF-DIAGNOSIS FUNCTION

The self-diagnosis function is incorporated in the ECM. The function has two modes, "User mode" and "Dealer mode". The user can only be notified by the LCD (DISPLAY) panel and LED lamp. To check the function of the individual FI system devices, the dealer mode is prepared. In this check, the special tool is necessary to read the code of the malfunction items.

USER MODE

MALFUNCTION	LCD (DISPLAY) INDICATION	LED LAMP INDICATION	INDICATION MODE
"NO"	Coolant Temp.	Coolant Temp./ Oil Pressure	———
"YES" Engine can start	Coolant Temp. and "FI" letters *1	LED lamp turns ON.	Each 2 sec. Temp. or "FI" is indicated.
Engine can not start	Coolant Temp. and "FI" letters *2	LED lamp turns ON.	Each 2 sec. Temp. or "FI" is indicated.
	"FI" letter *3	LED lamp turns ON and blinks.	"FI" is indicated continuously.

*1
When one of signals is not received by ECM, the fail-safe circuit works and injection is not stopped. This case is indicated by "FI" and coolant temp. in the LCD panel and motorcycle can run.

*2
The injection signal is stopped, when the camshaft position sensor signal or crankshaft position sensor signal is not sent to ECM. This case is indicated by "FI" and coolant temp. in the LCD panel. Motorcycle does not run.

*3
The injection signal is stopped, when the signal is not sent to ECM from the tip over sensor, #1 and #2 ignition, #1 and #2 injector, fuel pump relay or ignition switch. This case is indicated by "FI" in the LCD panel when depressing the starter button. Motorcycle does not run.

"CHEC": The LCD panel indicates "CHEC" when no communication signal from the ECM is received for 5 seconds.
For Example:
The ignition switch is turned ON, and the engine stop switch is turned OFF. In this case, the speedometer does not receive any signal from the ECM, and it indicates "CHEC".
If the CHEC is indicated, the LCD does not indicate the trouble code. It is necessary to check the wiring harness between ECM and speedometer couplers.
The possible cause of this indication is as follows;
Engine stop switch is in OFF position. Side-stand/ignition inter-lock system is not working.
Ignition fuse is burnt.

NOTE:
The LED lamp also turns ON when engine coolant temperature is high or oil pressure is low.

DEALER MODE

The defective function is memorized in the computer. Use the special tool coupler to connect to the dealer mode coupler. The memorized malfunction code is displayed on LCD (DISPLAY) panel. Malfunction means that the ECM does not receive signal from the devices. These affected devices are indicated in the code form.

TOOL 09930-82710: Mode select switch

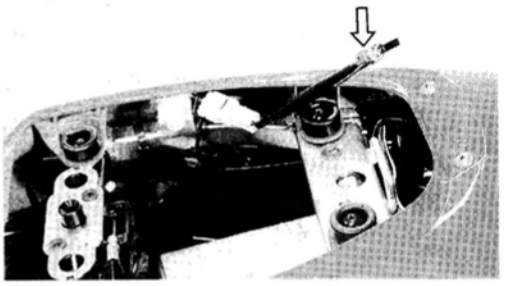

⚠ CAUTION

Before checking the malfunction code, do not disconnect the ECM lead wire couplers. If the couplers from the ECM are disconnected, the malfunction code memory is erased and the malfunction code can not checked.

MALFUNCTION	LCD (DISPLAY) INDICATION	LED LAMP INDICATION	INDICATION MODE
"NO"	c00	Operating as oil pressure indicator	——
"YES"	c** code is indicated from small code to large one.		Each 2 sec. code is indicated.

CODE	MALFUNCTION PART	REMARKS
c00	No	No defective part
c11	Camshaft position sensor (CMP sensor)	
c12	Crankshaft position sensor (CKP sensor)	Pick-up coil signal, signal generator
c13	Intake air pressure sensor (IAP sensor)	
c14	Throttle position sensor (TP sensor)	*3
c15	Engine coolant temp. sensor (ECT sensor)	
c21	Intake air temp. sensor (IAT sensor)	
c22	Atmospheric pressure sensor (AP sensor)	
c23	Tip over sensor (TO sensor)	
c24	Ignition signal (#1) (IG signal #1)	For front cylinder
c25	Ignition signal (#2) (IG signal #2)	For rear cylinder
c31	Gear position signal (GP switch)	
c32	Injector signal (#1) (FI signal #1)	For front cylinder
c33	Injector signal (#2) (FI signal #2)	For rear cylinder
c41	Fuel pump control system (FP control system)	Fuel pump, Fuel pump relay
c42	Ignition switch signal (IG switch signal)	Anti-theft

In the LCD (DISPLAY) panel, the malfunction code is indicated from small code to large code.

*3

To get the proper signal from the throttle position sensor, the sensor basic position is indicated in the LCD (DISPLAY) panel. The malfunction code is indicated by three column. In front of the three column, one column indicates the position, upper, middle or lower line. If the indication is upper or lower line when engine rpm is 1 200 rpm, slightly turn the throttle position sensor and bring the line to middle.

In the normal condition, the throttle valve stop screw pushes throttle valves slightly, and indication point is middle line.

Setting procedure:

1. Connect the special tool (Mode select switch) to the dealer mode coupler at the wiring harness, and start the engine.
2. Adjust the engine rpm to 1 200 rpm.
3. If the throttle position sensor adjustment is necessary, loosen the screws and turn the throttle position sensor and bring the line to middle.
4. Then, tighten the screws to fix the throttle position sensor.

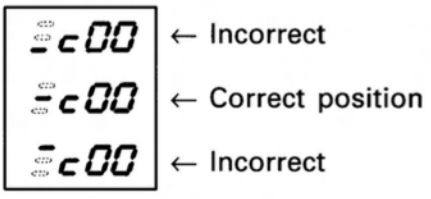

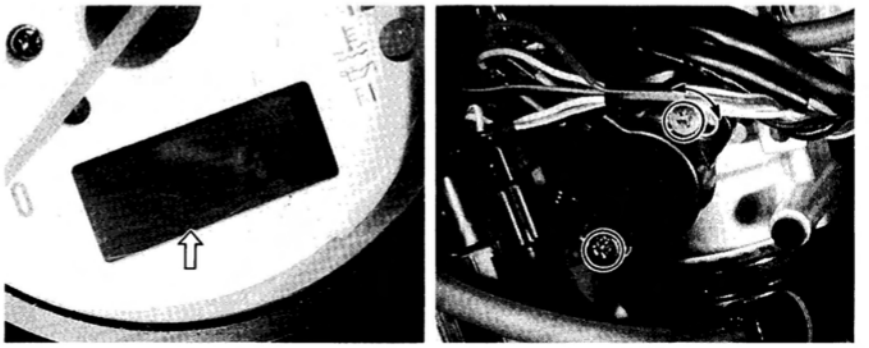

The signal indicates 0.4 sec./time, and two times show the correct position, where it is fixed.

FAIL-SAFE FUNCTION

FI system is provided with fail-safe function to secure a starting ability and running ability when any malfunction is detected by the ECM.

ITEM		FAIL-SAFE MODE	STARTING ABILITY	RUNNING ABILITY
Camshaft position sensor		When camshaft position signal has failed during running, the ECM determines cylinder as identified before occurrence of failure.	"NO"	"YES"
			Motorcycle can run, but once engine stops, engine can not start.	
Crankshaft position sensor		The motorcycle stops.	"NO"	"NO"
Intake air pressure sensor		Intake air pressure fixed to 760 mmHg.	"YES"	"YES"
Throttle position sensor		The throttle opening is fixed to full open position. Ignition timing is also fixed.	"YES"	"YES"
Engine coolant temperature sensor		Engine coolant temperature value is fixed to 80°C.	"YES"	"YES"
Intake air temperature sensor		Intake air temperature value is fixed to 40°C.	"YES"	"YES"
Atmospheric pressure sensor		Atmospheric pressure value is fixed to 760 mmHg.	"YES"	"YES"
Ignition signal	#1	#1 Ignition-off	"YES"	"YES"
			#2 cylinder only can run.	
	#2	#2 Ignition-off	"YES"	"YES"
			#1 cylinder only can run.	
Injection signal	#1	#1 Fuel-cut	"YES"	"YES"
			#2 cylinder only can run.	
	#2	#2 Fuel-cut	"YES"	"YES"
			#1 cylinder only can run.	
Gear position signal		Gear position signal is fixed to 6th gear.	"YES"	"YES"

"Yes" means that the engine can start and can run even if the above signal is not received from each sensor. But, the engine running condition is not perfect and only emergency help (fail-safe circuit) is operating and it is necessary to bring the motorcycle to the workshop for complete repair.

FI SYSTEM TROUBLE SHOOTING

CUSTOMER COMPLAINT ANALYSIS

Record details of the problem (failure, complaint) and how it occurred as described by the customer. For this purpose, use of such an inspection form will facilitate collecting information to the point required for proper analysis and diagnosis.

EXAMPLE: CUSTOMER PROBLEM INSPECTION FORM

User name:	Model:	VIN:	
Date of issue:	Date Reg.	Date of problem:	Mileage:

Malfunction indicator lamp condition (LED)	☐Always ON ☐Sometimes ON ☐Always OFF ☐Good condition
Malfunction display/code (LCD)	User mode: ☐No display ☐Malfunction display ( )
	Dealer mode: ☐No code ☐Malfunction code ( )

PROBLEM SYMPTOMS	
☐**Difficult Starting** ☐No cranking ☐No initial combustion ☐No combustion ☐Poor starting at (☐cold ☐warm ☐always) ☐Other_____	☐**Poor Driveability** ☐Hesitation on acceleration ☐Back fire/☐After fire ☐Lack of power ☐Surging ☐Abnormal knocking ☐Other_____
☐**Poor Idling** ☐Poor fast idle ☐Abnormal idling speed (☐High ☐Low)(r/min.) ☐Unstable ☐Hunting (r/min. to r/min.) ☐Other_____	☐**Engine Stall when** ☐Immediately after start ☐Throttle valve is opened ☐Throttle valve is closed ☐Load is applied ☐Other_____
☐OTHERS:	

MOTORCYCLE/ENVIRONMENTAL CONDITION WHEN PROBLEM OCCURS	
Environmental condition	
Weather	☐Fair ☐Cloudy ☐Rain ☐Snow ☐Always ☐Other_____
Temperature	☐Hot ☐Warm ☐Cool ☐Cold (°F/ °C) ☐Always
Frequency	☐Always ☐Sometimes (times/ day, month) ☐Only once ☐Under certain condition
Road	☐Urban ☐Suburb ☐Highway ☐Mountainous (☐Uphill ☐Downhill) ☐Tarmacadam ☐Gravel ☐Other_____
Motorcycle condition	
Engine condition	☐Cold ☐Warming up phase ☐Warmed up ☐Always ☐Other at starting ☐Immediately after start ☐Racing without load ☐Engine speed (r/min)
Motorcycle condition	During driving: ☐Constant speed ☐Accelerating ☐Decelerating ☐Right hand corner ☐Left hand corner ☐When shifting (Lever position) ☐At stop ☐Motorcycle speed when problem occurs (km/h, Mile/h) ☐Other_____

NOTE:

The above form is a standard sample. It should be modified according to conditions characteristic of each market.

SELF-DIAGNOSTIC PROCEDURES

- Don't disconnect couplers from ECM, battery cable from battery, ECM ground wire harness from engine or main fuse before confirming malfunction code (self-diagnostic trouble code) stored in memory. Such disconnection will erase memorized information in ECM memory.
- Malfunction code stored in ECM memory can be checked by the special tool.
- Before checking malfunction code, read SELF-DIAGNOSIS FUNCTION "USER MODE and DEALER MODE" (See P.4-27) carefully to have good understanding as to what functions are available and how to use it.
- Be sure to read "PRECAUTIONS for Electrical Circuit Service" (See P.4-3) before inspection and observe what is written there.
- Remove the rear seat.
- Connect the special tool Ⓐ to the dealer mode coupler Ⓑ at the wiring harness, and start the engine or crank the engine for more than 4 seconds.
- Turn the special tool's switch ON and check the malfunction code to determine the malfunction part.

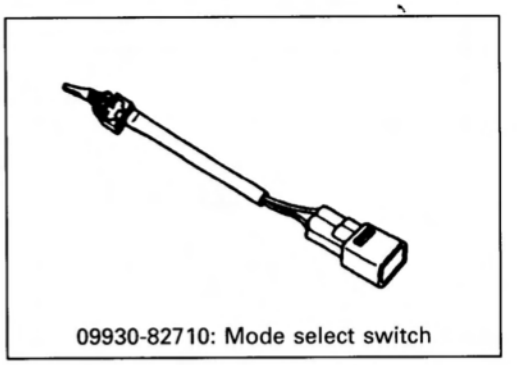

09930-82710: Mode select switch

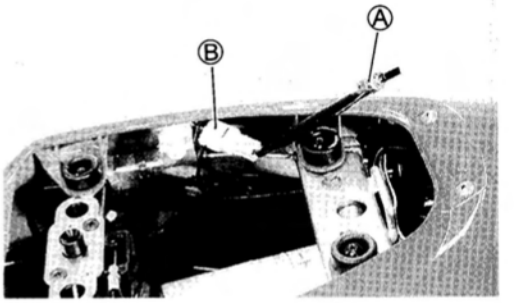



SELF-DIAGNOSIS RESET PROCEDURE

- After repairing the trouble, turn OFF the ignition switch and turn ON again.
  If the malfunction code is indicated (c00), the malfunction is cleared.
- Disconnect the special tool from the dealer mode coupler.

MALFUNCTION CODE AND DEFECTIVE CONDITION

MALFUNCTION CODE	DETECTED ITEM	DETECTED FAILURE CONDITION CHECK FOR
c00	NO FAULT	—
c11	Camshaft position sensor	The signal does not reach ECM for more than 2 sec. after receiving the starter signal. The camshaft position sensor wiring and mechanical parts. (Camshaft position sensor, rear intake cam pin, wiring/coupler connection)
c12	Crankshaft position sensor	The signal does not reach ECM for more than 2 sec. after receiving the starter signal. The crankshaft position sensor wiring and mechanical parts. (Crankshaft position sensor, wiring/coupler connection)
c13	Intake air pressure sensor	The sensor should produce following voltage. (0.5 V ≦ sensor voltage < 4.5 V) Without the above range, c13 is indicated. Intake air pressure sensor, wiring/coupler connection.
c14	Throttle position sensor	The sensor should produce following voltage. (0.2 V ≦ sensor voltage < 4.8 V) Without the above range, c14 is indicated. Throttle position sensor, wiring/coupler connection.
c15	Engine coolant temperature sensor	The sensor voltage should be the following. (0.15 V ≦ sensor voltage < 4.85 V) Without the above range, c15 is indicated. Engine coolant temperature sensor, wiring/coupler connection.
c21	Intake air temperature sensor	The sensor voltage should be the following. (0.15 V ≦ sensor voltage < 4.85 V) Without the above range, c21 is indicated. Intake air temperature sensor, wiring/coupler connection.
c22	Atmospheric pressure sensor	The sensor voltage should be the following. (0.25 V ≦ sensor voltage < 4.85 V) Without the above range, c22 is indicated. Atm. pressure sensor, wiring/coupler connection.
c23	Tip over sensor	The sensor voltage should be less than the following for more than 8 sec. after ignition switch turns ON. (sensor voltage < 4.85 V) Without the above value, c23 is indicated. Tip over sensor, wiring/coupler connection.
c24	Ignition signal #1 (Front)	Crankshaft position sensor (pick-up coil) signal is produced but signal from ignition coil is not produced continuous two times. In this case, the code c24 (for front cylinder) is indicated. c25 is indicated if rear cylinder fails.
c25	Ignition signal #2 (Rear)	Ignition coil, wiring/coupler connection, power supply from the battery.

c31	Gear position signal	Gear position signal voltage should be higher than the following for more than 2 seconds. (Gear position sensor voltage > 0.60 V) Without the above value, c31 is indicated.
		Gear position sensor, wiring/coupler connection. Gear-shift cam etc.
c32	Fuel injector signal #1 (Front)	Fuel injection signal stops, the c32 or c33 is indicated.
c33	Fuel injection signal #2 (Rear)	Injector, wiring/coupler connection, power supply to the injector.
c41	Fuel pump relay signal	When no signal from fuel pump relay, c41 is indicated.
		Fuel pump relay, connecting lead, power source to fuel pump relay.
c42	Ignition switch signal	Ignition switch signal is not input in the ECM.
		Ignition switch, lead wire/coupler.

"C11" CMP SENSOR CIRCUIT MALFUNCTION

DETECTED CONDITION	POSSIBLE CAUSE
No CMP sensor signal for 2 seconds at engine cranking.	• No metal particles or foreign material being attached on the CMP sensor and rotor tip. (See p.3-22 and -76.) • CMP sensor circuit open or short. • CMP sensor malfunction. • ECM malfunction.

INSPECTION

- Remove the front seat.
- Remove the fuel tank mounting bolts.
- Lift and support the fuel tank with its prop stay. (See p.4-49.)

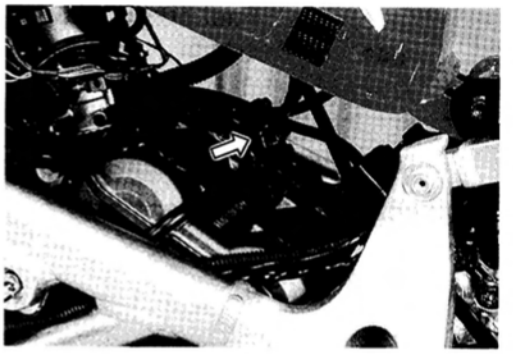

1 Turn the ignition switch OFF.
Check the CMP sensor coupler for loose or poor contacts.
If OK, then measure the CMP sensor resistance.
Disconnect the CMP sensor coupler and measure the resistance.
CMP sensor resistance: 0.9–1.3kΩ (Terminal–Terminal)
If OK, then check the continuity between each terminal and ground.
CMP sensor continuity: ∞Ω (Infinity) (Terminal–Ground)
09900-25008: Multi circuit tester
Tester knob indication: Resistance (Ω)

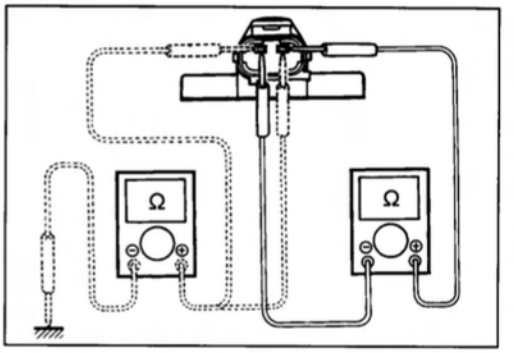

No → Replace the CMP sensor with a new one.
Yes ↓

2 Disconnect the CMP sensor coupler.
Crank the engine a few seconds with the starter motor, and measure the CMP sensor peak voltage at the sensor.
CMP sensor peak voltage: More than 0.8V (Black–Brown)
Repeat the above test procedure a few times and measure the highest peak voltage.
If OK, then measure the CMP sensor peak voltage at the ECM terminals. (G+/G− or ㉒/㉙)
09900-25008: Multi circuit tester
Tester knob indication: Voltage (⎓)

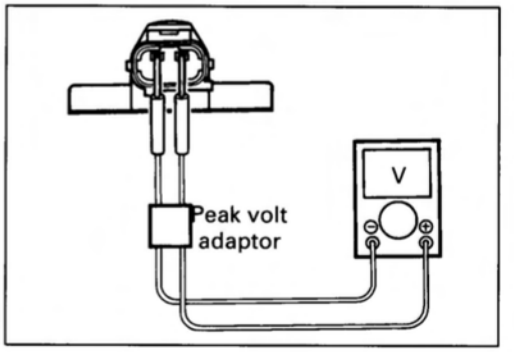

No → Loose or poor contacts on the CMP sensor coupler or ECM coupler. Replace the CMP sensor with a new one.
Yes ↓

Black or Brown wire open or shorted to ground, or poor ㉒ or ㉙ connection. (See p.4-26.)
If wire and connection are OK, intermittent trouble or faulty ECM.
Recheck each terminal and wire harness for open circuit and poor connection. (See p.4-4.)

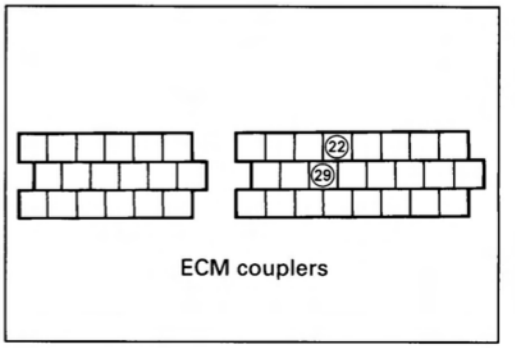

→ Replace the ECM with a new one, and inspect it again.

"C12" CKP SENSOR CIRCUIT MALFUNCTION

DETECTED CONDITION	POSSIBLE CAUSE
No CKP sensor signal for 2 seconds at engine cranking.	• No metal particles or foreign material being attached on the CKP sensor and rotor tips. (See p.3F-4.) • CKP sensor circuit open or short. • CKP sensor malfunction. • ECM malfunction.

INSPECTION

- Remove the front and rear seats.
- Remove the frame cover. (See p.6-4.)



1 Turn the ignition switch OFF.
Check the CKP sensor coupler for loose or poor contacts.
If OK, then measure the CKP sensor resistance.
Disconnect the CKP sensor coupler and measure the resistance.
CKP sensor resistance: 184–276 Ω (Blue–Green)
If OK, then check the continuity between each terminal and ground.
CKP sensor continuity: ∞ Ω (Infinity) (Blue–Ground, Green–Ground)
09900-25008: Multi circuit tester
Tester knob indication: Resistance (Ω)

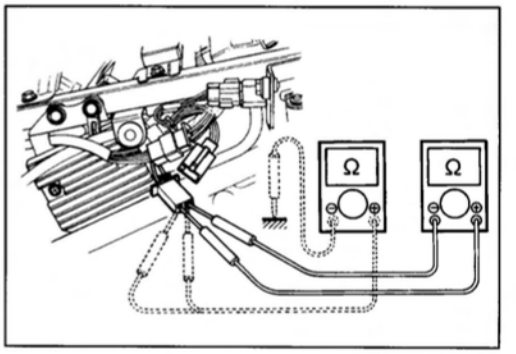

No → Replace the CKP sensor with a new one.

Yes ↓

2 Disconnect the CKP sensor coupler.
Crank the engine a few seconds with the starter motor, and measure the CKP sensor peak voltage at the coupler.
CKP sensor peak voltage: More than 4V (Blue–Green)
Repeat the above test procedure a few times and measure the highest peak voltage.
If OK, then measure the CKP sensor peak voltage at the ECM terminals. (N+/N− or ㉓/㉚)
09900-25008: Multi circuit tester
Tester knob indication: Voltage (⎓)

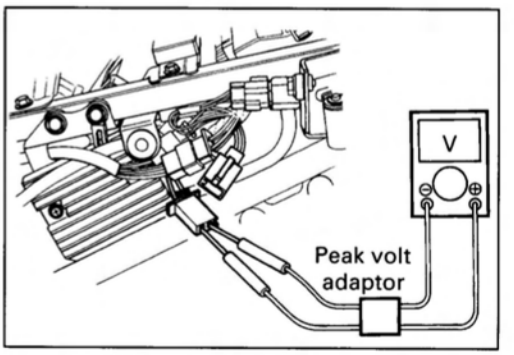

No → Loose or poor contacts on the CKP sensor coupler or ECM coupler. Replace the CKP sensor with a new one.

Yes ↓

Blue or Green wire open or shorted to ground, or poor ㉓ or ㉚ connection. (See p.4-26.)
If wire and connection are OK, intermittent trouble or faulty ECM.
Recheck each terminal and wire harness for open circuit and poor connection. (See p.4-4.)

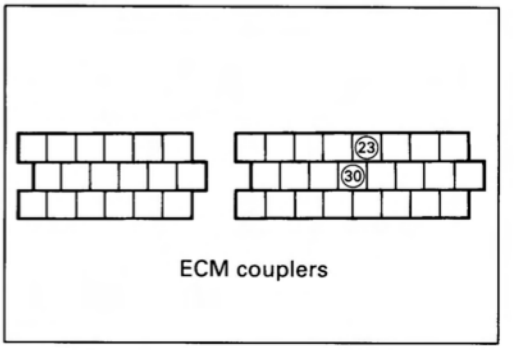

→ Replace the ECM with a new one, and inspect it again.

"C13" IAP SENSOR CIRCUIT MALFUNCTION

DETECTED CONDITION	POSSIBLE CAUSE
Low pressure and low voltage. High pressure and high voltage. (0.5V ≦ Sensor voltage < 4.5V without the above range.) *NOTE:* *Note that atmospheric pressure varies depending on weather conditions as well as altitude. Take that into consideration when inspecting voltage.*	• Clogged vacuum passage between throttle body and IAP sensor. • Air being drawn from vacuum passage between throttle body and IAP sensor. • Red wire circuit open or shorted to ground. • B/Br or Dbr wire circuit shorted to ground. • IAP sensor malfunction. • ECM malfunction.

INSPECTION

- Remove the front seat.
- Remove the fuel tank mounting bolts.
- Lift and support the fuel tank with its prop stay. (See p.4-49.)



1 Turn the ignition switch OFF.
Check the IAP sensor coupler for loose or poor contacts.
If OK, then measure the IAP sensor input voltage.
Disconnect the IAP sensor coupler.
Turn the ignition switch ON.
Measure the voltage at the Red wire and ground.
If OK, then measure the voltage at the Red wire and B/Br wire.
IAP sensor input voltage: 4.5–5.5V
(⊕Red–⊖Ground)
(⊕Red–⊖B/Br)
09900-25008: Multi circuit tester
Tester knob indication: Voltage (⎓)

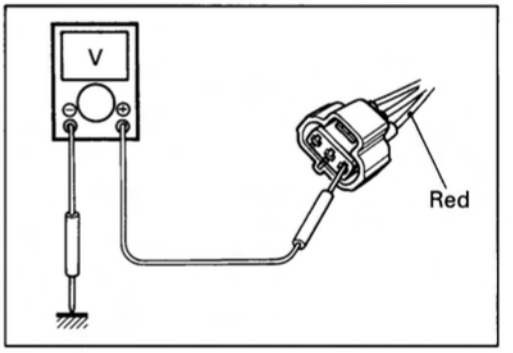

No → Loose or poor contacts on the ECM coupler.
Open or short circuit in the Red wire or B/Br wire.

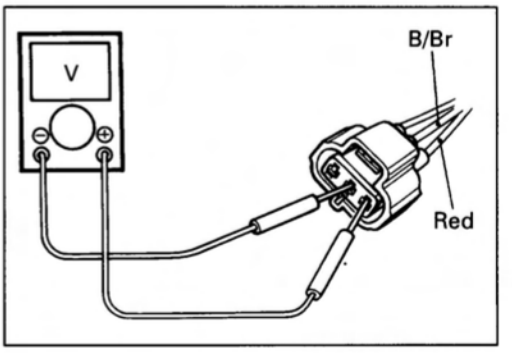

Yes

2 Connect the IAP sensor coupler.
Start the engine at idling speed.
Measure the IAP sensor output voltage at the wire side coupler (between Dbr and B/Br wires).
IAP sensor output voltage: Approx. 1.8V at idle speed (⊕Dbr–⊖B/Br)
09900-25008: Multi circuit tester
Tester knob indication: Voltage (⎓)

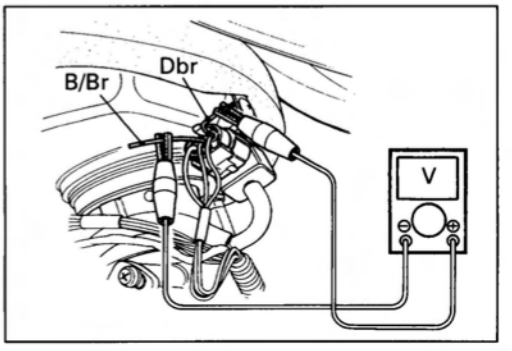

No → Check the vacuum hose for crack or damage.
Open or short circuit in the Dbr wire.
Replace the IAP sensor with a new one.

Yes

3 Remove the IAP sensor.
Connect the vacuum pump gauge to the vacuum port of the IAP sensor.
Arrange 3 new 1.5V batteries in series (check that total voltage is 4.5–5.0V) and connect ⊖ terminal to the ground terminal and ⊕ terminal to the Vcc terminal.
Check the voltage between Vout and ground. Also, check if voltage reduces when vacuum is applied up to 40 cmHg by using vacuum pump gauge. (See table below.)
09917-47910: Vacuum pump gauge
09900-25008: Multi circuit tester
Tester knob indication: Voltage (⎓)

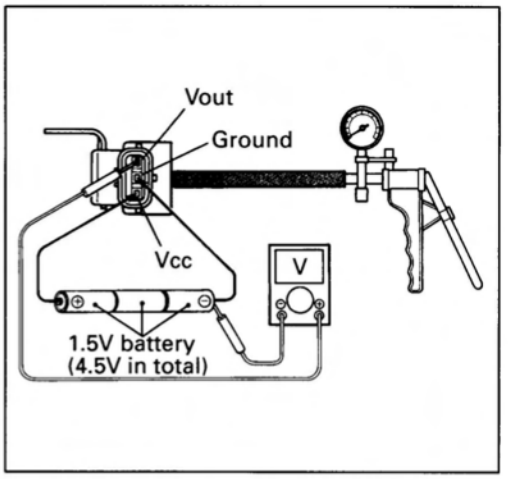

No → If check result is not satisfactory, replace IAP sensor with a new one.

Yes ↓

Red, Dbr or B/Br wire open or shorted to ground, or poor ㉖, ㉞ or ㉟ connection. (See p.4-26.)
If wire and connection are OK, intermittent trouble or faulty ECM.
Recheck each terminal and wire harness for open circuit and poor connection. (See p.4-4.)

→ Replace the ECM with a new one, and inspect it again.

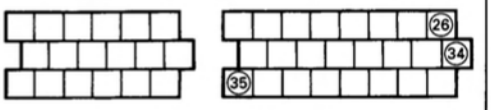

ECM couplers

Output voltage (Vcc voltage 4.5–5.0V, ambient temp. 20–30°C, 68–86°F)

ALTITUDE (Reference)		ATMOSPHERIC PRESSURE		OUTPUT VOLTAGE
(ft)	(m)	(mmHg)	kPa	(V)
0 – 2 000	0 – 610	760 – 707	100 – 94	3.1–3.6
2 001 – 5 000	611 – 1 524	Under 707 Over 634	94 – 85	2.8–3.4
5 001 – 8 000	1 525 – 2 438	Under 634 Over 567	85 – 76	2.6–3.1
8 001 – 10 000	2 439 – 3 048	Under 567 Over 526	76 – 70	2.4–2.9

"C14" TP SENSOR CIRCUIT MALFUNCTION

DETECTED CONDITION	POSSIBLE CAUSE
Signal voltage low or high. Difference between actual throttle opening and opening calculated by ECM in larger than specified value. (0.2V ≦ Sensor Voltage < 4.8V without the above range.)	• TP sensor maladjusted. • TP sensor circuit open or short. • TP sensor malfunction. • ECM malfunction.

INSPECTION

- Remove the front seat.
- Remove the fuel tank mounting bolts.
- Lift and support the fuel tank with its prop stay. (See p.4-49.)

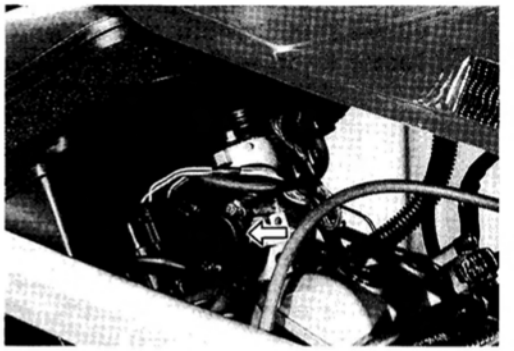

1 Turn the ignition switch OFF.
Check the TP sensor coupler for loose or poor contacts.
If OK, then measure the TP sensor input voltage.
Disconnect the TP sensor coupler.
Turn the ignition switch ON.
Measure the voltage at the Red wire and ground.
If OK, then measure the voltage at the Red wire and B/Br wire.
TPS sensor input voltage: 4.5–5.5V
(⊕Red–⊖Ground)
(⊕Red–⊖B/Br)
09900-25008: Multi circuit tester
Tester knob indication: Voltage (⎓)

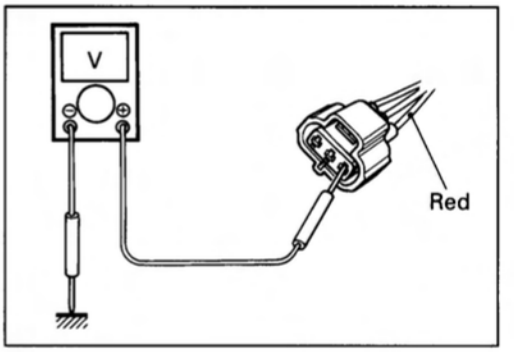

No → Loose or poor contacts on the ECM coupler.
Open or short circuit in the Red wire or B/Br wire.

Yes ↓

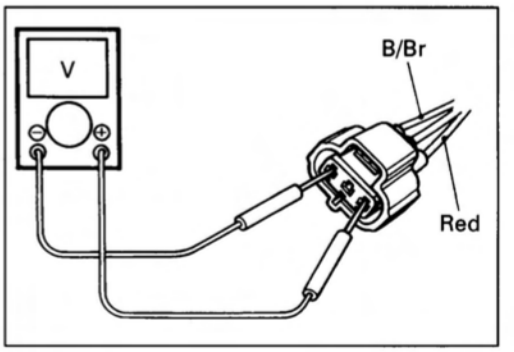

2 Turn the ignition switch OFF.
Disconnect the TP sensor coupler.
Check the continuity between terminal (Gray wire) and ground.
TP sensor continuity: ∞Ω (Infinity)
(Terminal "Gray"–Ground)
If OK, then measure the TP sensor resistance at the sensor terminals (between Gray and B/Br wire's terminals).
Turn the throttle grip and measure the resistance.
TP sensor resistance
Throttle valve is closed: Approx. 1.2kΩ
Throttle valve is opened: Approx. 4.4kΩ
09900-25008: Multi circuit tester
Tester knob indication: Resistance (Ω)

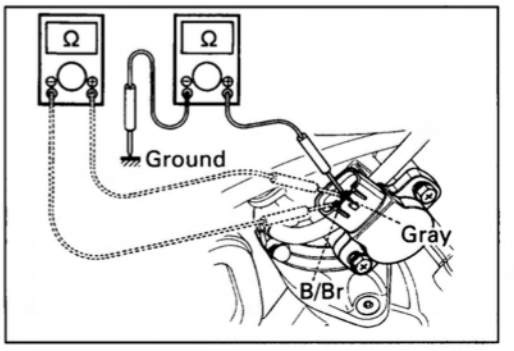

No → Reset the TP sensor position correctly.
Replace the TP sensor with a new one.

Yes ↓

3 Connect the TP sensor coupler.
Turn the ignition switch ON.
Measure the TP sensor output voltage at the wire side coupler (between Gray and B/Br wires) by turning the throttle grip.
TP sensor output voltage
Throttle valve is closed: Approx. 1.1V
Throttle valve is opened: Approx. 4.2V
09900-25008: Multi circuit tester
Tester knob indication: Voltage (⎓)

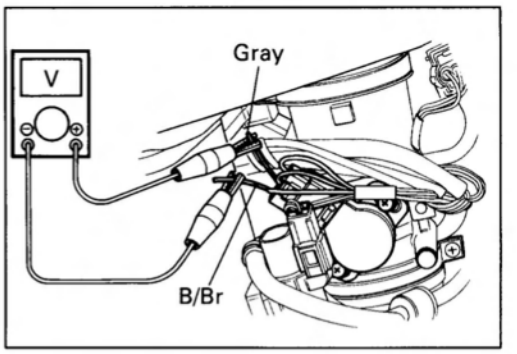

No → If check result is not satisfactory, replace TP sensor with a new one.

Yes ↓

Red, Gray or B/Br wire open or shorted to ground, or poor ㉕, ㉞ or ㉟ connection. (See p.4-26.)
If wire and connection are OK, intermittent trouble or faulty ECM.
Recheck each terminal and wire harness for open circuit and poor connection. (See p.4-4.)

→ Replace the ECM with a new one, and inspect it again.

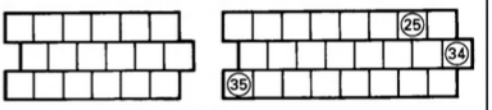

ECM couplers

"C15" ECT SENSOR CIRCUIT MALFUNCTION

DETECTED CONDITION	POSSIBLE CAUSE
High engine coolant temp. (Low voltage–Low resistance) Low engine coolant temp. (High voltage–High resistance)	• G/Y circuit shorted to ground. • B/Br circuit open. • ECT sensor malfunction. • ECM malfunction.

INSPECTION

1 Turn the ignition switch OFF.
Check the ECT sensor coupler for loose or poor contacts.
If OK, then measure the ECT sensor voltage at the wire side coupler.
Disconnect the coupler and turn the ignition switch ON.
Measure the voltage between G/Y wire terminal and ground.
If OK, then measure the voltage between G/Y wire terminal and B/Br wire terminal.
ECT sensor voltage: 4.5–5.5V
(⊕G/Y–⊖Ground)
(⊕G/Y–⊖B/Br)
09900-25008: Multi circuit tester
Tester knob indication: Voltage (⎓)



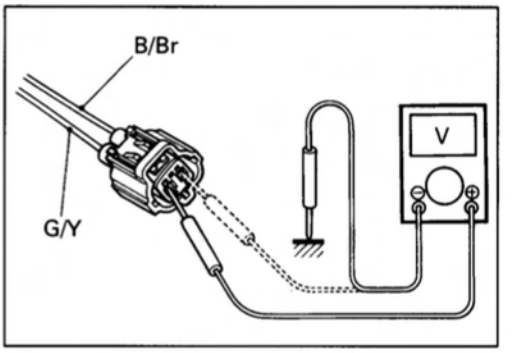

No → Loose or poor contacts on the ECM coupler.
Open or short circuit in the G/Y wire or B/Br wire.

Yes ↓

2 Turn the ignition switch OFF.
Measure the ECT sensor resistance.
ECT sensor resistance: 2.3–2.6kΩ at 20°C (68°F) (Terminal–Terminal)
09900-25008: Multi circuit tester
Tester knob indication: Resistance (Ω)
Refer to page 5-10 for details.

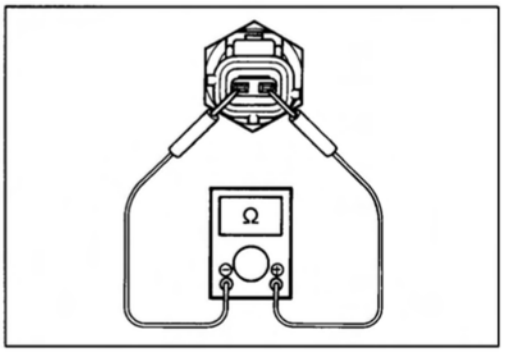

No → Replace the ECT sensor with a new one.

Yes ↓

G/Y or B/Br wire open or shorted to ground, or poor ㉜ or ㉟ connection. (See p.4-26.)
If wire and connection are OK, intermittent trouble or faulty ECM.
Recheck each terminal and wire harness for open circuit and poor connection. (See p.4-4.)

→ Replace the ECM with a new one, and inspect it again.

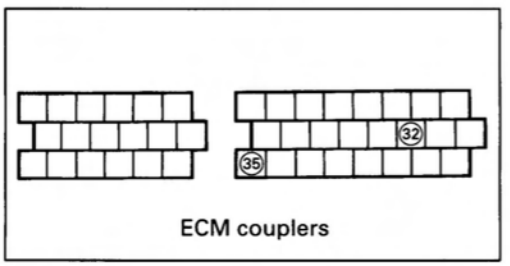

ECM couplers

Engine Coolant Temp.	Resistance
20°C (68°F)	Approx. 2.45kΩ
50°C (122°F)	Approx. 0.811kΩ
80°C (176°F)	Approx. 0.318kΩ
110°C (230°F)	Approx. 0.142kΩ

"C21" IAT SENSOR CIRCUIT MALFUNCTION

DETECTED CONDITION	POSSIBLE CAUSE
High intake air temp. (Low voltage–Low resistance) Low intake air temp. (High voltage–High resistance)	• G/R circuit shorted to ground. • B/Br circuit open. • IAT sensor malfunction. • ECM malfunction.

INSPECTION

- Remove the front seat.
- Remove the fuel tank mounting bolts.
- Lift and support the fuel tank with its prop stay. (See p.4-49.)

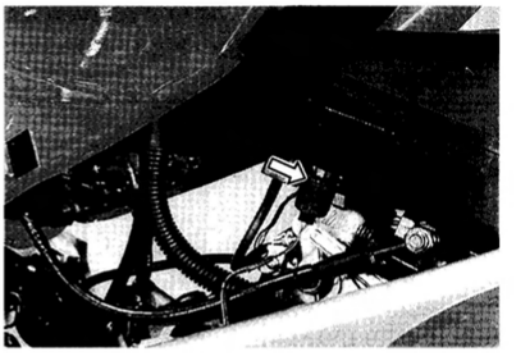

1 Turn the ignition switch OFF.
Check the IAT sensor coupler for loose or poor contacts.
If OK, then measure the IAT sensor voltage at the wire side coupler.
Disconnect the coupler and turn the ignition switch ON.
Measure the voltage between G/R wire terminal and B/Br wire terminal.
IAT sensor voltage: 4.5–5.5V
(⊕G/R–⊖Ground)
(⊕G/R–⊖B/Br)
09900-25008: Multi circuit tester
Tester knob indication: Voltage (⎓)

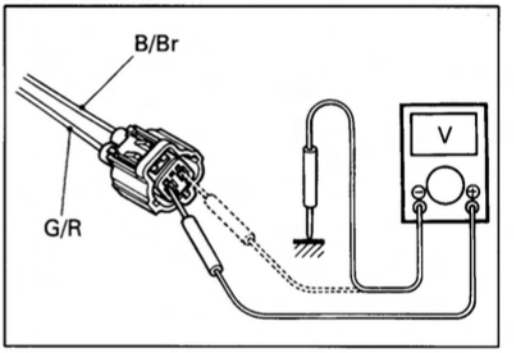

No → Loose or poor contacts on the ECM coupler.
Open or short circuit in the G/R wire or B/Br wire.

Yes ↓

2 Turn the ignition switch OFF.
Measure the IAT sensor resistance.
IAT sensor resistance: 2.2–2.7kΩ at 20°C (68°F)
(Terminal–Terminal)
09900-25008: Multi circuit tester
Tester knob indication: Resistance (Ω)

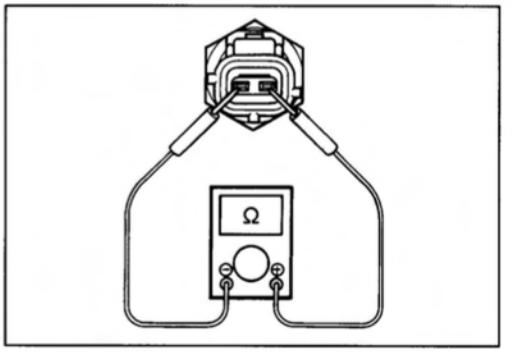

No → Replace the IAT sensor with a new one.

Yes ↓

G/R or B/Br wire open or shorted to ground, or poor ㉛ or ㉟ connection. (See p.4-26.)
If wire and connection are OK, intermittent trouble or faulty ECM.
Recheck each terminal and wire harness for open circuit and poor connection. (See p.4-4.)

→ Replace the ECM with a new one, and inspect it again.

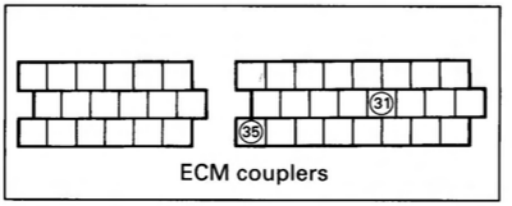

ECM couplers

Intake Air Temp.	Resistance
20°C (68°F)	Approx. 2.45kΩ
50°C (122°F)	Approx. 0.808kΩ
80°C (176°F)	Approx. 0.322kΩ
110°C (230°F)	Approx. 0.148kΩ

NOTE:
IAT sensor resistance measurement method is the same way as that of the ECT sensor, refer to page 5-10 for details.

"C22" AP SENSOR CIRCUIT MALFUNCTION

DETECTED CONDITION	POSSIBLE CAUSE
Low pressure and low voltage. High pressure and high voltage. (0.25V ≦ Sensor Voltage < 4.85V without the above range.) *NOTE:* *Note that atmospheric pressure varies depending on weather conditions as well as altitude. Take that into consideration when inspecting voltage.*	• Clogged air passage with dust. • Red wire circuit open or shorted to ground. • B/Br or Violet wire circuit shorted to ground. • AP sensor malfunction. • ECM malfunction.

INSPECTION

- Remove the frame cover. (See p.6-4.)



1 Turn the ignition switch OFF.
Check the AP sensor coupler for loose or poor contacts.
If OK, then measure the AP sensor input voltage.
Turn the ignition switch ON.
Disconnect the AP sensor coupler.
Measure the voltage between Red wire and ground.
If OK, then measure the voltage between Red wire and B/Br wire.
AP sensor input voltage: 4.5–5.5V
(⊕Red–⊖Ground)
(⊕Red–⊖B/Br)
09900-25008: Multi circuit tester
Tester knob indication: Voltage (⎓)

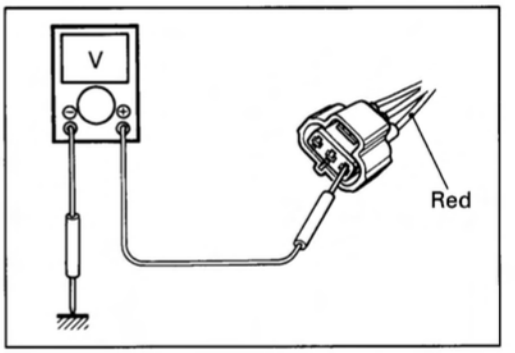

No → Loose or poor contacts on the ECM coupler.
Open or short circuit in the Red wire or B/Br wire.

Yes

2 Connect the AP sensor coupler.
Turn the ignition switch ON.
Measure the AP sensor output voltage at the wire side coupler between Violet and B/Br wires.
AP sensor output voltage: Approx. 3.6V
at 760 mmHg (100kPa)
(⊕Violet–⊖B/Br)
09900-25008: Multi circuit tester
Tester knob indication: Voltage (⎓)

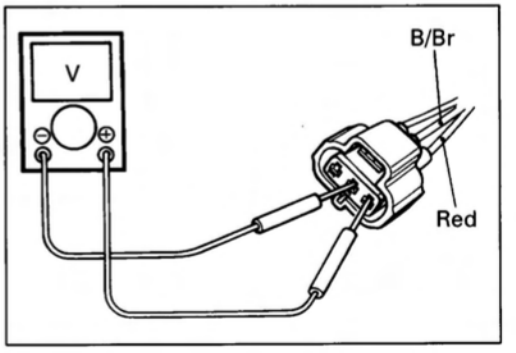

No → Check the air passage for clogging.
Open or short circuit in the violet wire.
Replace the AP sensor with a new one.

Yes

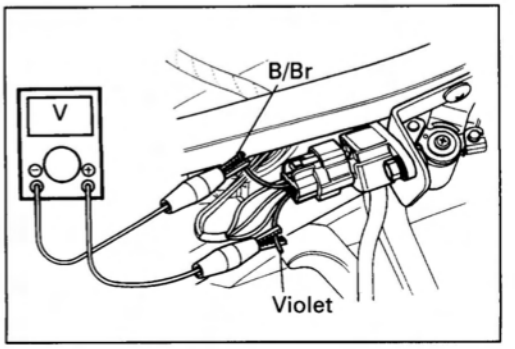

3 Remove the AP sensor.
Connect the vacuum pump gauge to the air passage port of the AP sensor.
Arrange 3 new 1.5V batteries in series (check that total voltage is 4.5–5.0V) and connect ⊖ terminal to the ground terminal and ⊕ terminal to the Vcc terminal.
Check the voltage between Vout and ground. Also, check if voltage reduces when vacuum is applied up to 40 cmHg by using vacuum pump gauge. (See table below.)
09917-47910: Vacuum pump gauge
09900-25008: Multi circuit tester
Tester knob indication: Voltage (⎓)

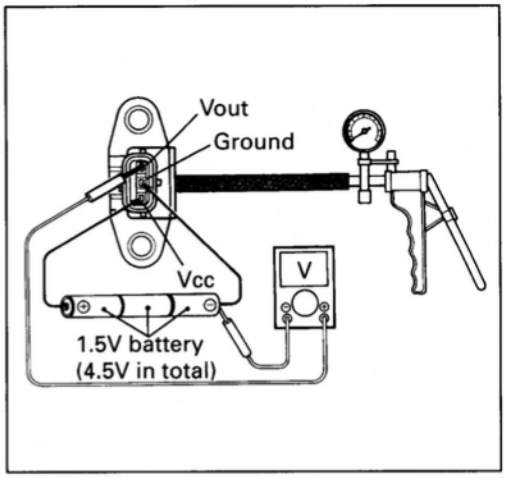

No → If check result is not satisfactory, replace AP sensor with a new one.

Yes ↓

Red, Violet or B/Br wire open or shorted to ground, or poor ㉝, ㉞ or ㉟ connection. (See p.4-26.)
If wire and connection are OK, intermittent trouble or faulty ECM.
Recheck each terminal and wire harness for open circuit and poor connection. (See p.4-4.)

→ Replace the ECM with a new one, and inspect it again.

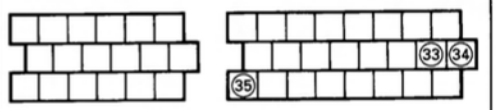

ECM couplers

Output voltage (Vcc voltage 4.5–5.0V, ambient temp. 20–30°C, 68–86°F)

ALTITUDE (Reference)		ATMOSPHERIC PRESSURE		OUTPUT VOLTAGE
(ft)	(m)	(mmHg)	kPa	(V)
0 I 2 000	0 I 610	760 I 707	100 I 94	3.1–3.6
2 001 I 5 000	611 I 1 524	Under 707 Over 634	94 I 85	2.8–3.4
5 001 I 8 000	1 525 I 2 438	Under 634 Over 567	85 I 76	2.6–3.1
8 001 I 10 000	2 439 I 3 048	Under 567 Over 526	76 I 70	2.4–2.9

"C23" TO SENSOR CIRCUIT MALFUNCTION

DETECTED CONDITION	POSSIBLE CAUSE
No TO sensor signal for a few seconds, after ignition switch turns ON. Sensor voltage high. (Sensor Voltage < 4.85V without the above range.)	• TO sensor circuit open or short. • TO sensor malfunction. • ECM malfunction.

INSPECTION

- Remove the front seat.
- Remove the fuel tank mounting bolts.
- Lift and support the fuel tank with its prop stay. (See p.4-49.)

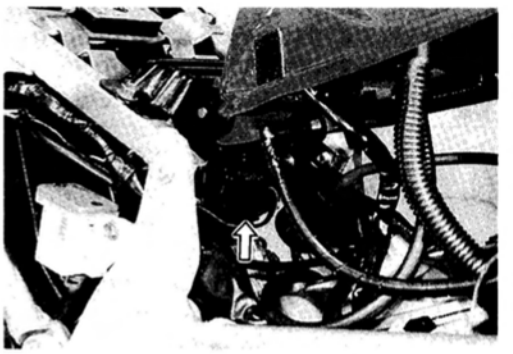

1 Turn the ignition switch OFF.
Check the TO sensor coupler for loose or poor contacts.
If OK, then measure the TO sensor resistance.
Disconnect the TO sensor coupler.
Measure the resistance between Black and B/W wire terminals.
TO sensor resistance: 60–64kΩ (Black–B/W)
09900-25008: Multi circuit tester
Tester knob indication: Resistance (Ω)

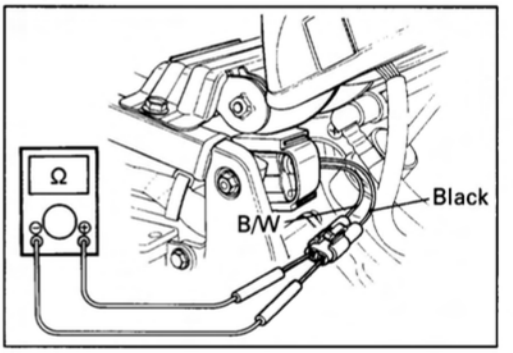

No → Replace the TO sensor with a new one.
Yes ↓

2 Connect the TO sensor coupler.
Turn the ignition switch ON.
Measure the voltage at the wire side coupler between Black and B/W wires.
TO sensor voltage: Approx. 2.5V (Black–B/W)
Also, measure the voltage when leaning of the motorcycle.
Dismount the TO sensor from its bracket and measure the voltage when it is leaned more than 43°, left and right, from the horizontal level.
TO sensor voltage: 0V (Black–B/W)
09900-25008: Multi circuit tester
Tester knob indication: Voltage (⎓)

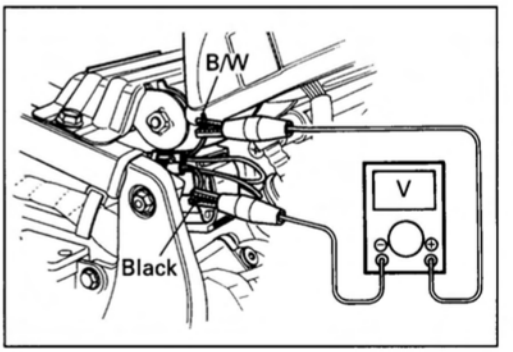

No → Loose or poor contacts on the ECM coupler.
Open or short circuit in the B/Bl wire or B/Br wire.
Replace the TO sensor with a new one.
Yes ↓

B/Bl or B/Br wire open or shorted to ground, or poor ㉟ or ㊵ connection. (See p.4-26.)
If wire and connection are OK, intermittent trouble or faulty ECM.
Recheck each terminal and wire harness for open circuit and poor connection. (See p.4-4.)

→ Replace the ECM with a new one, and inspect it again.

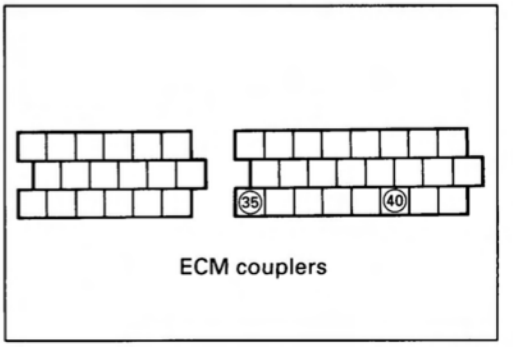

ECM couplers

"C24" or "C25" IGNITION SYSTEM MALFUNCTION

***Refer to the IGNITION SYSTEM for details. (See p.7-22.)**

"C31" GEAR POSITION (GP) SWITCH CIRCUIT MALFUNCTION

DETECTED CONDITION	POSSIBLE CAUSE
No Gear Position switch voltage Switch voltage low. (Switch Voltage > 0.6V without the above range.)	• Gear Position switch circuit open or short. • Gear Position switch malfunction. • ECM malfunction.

INSPECTION

1 Turn the ignition switch OFF.
Check the GP switch coupler for loose or poor contacts.
If OK, then measure the GP switch voltage.
Support the motorcycle with a jack.
Turn the side-stand to up-right position.
Turn the engine stop switch ON.
Turn the ignition switch ON.
Measure the voltage at the wire side coupler between Pink wire and ground, when shifting the gear-shift lever from 1st to Top.
GP switch voltage: More than 0.6V (Pink–Ground)
09900-25008: Multi circuit tester
Tester knob indication: Voltage (⎓)

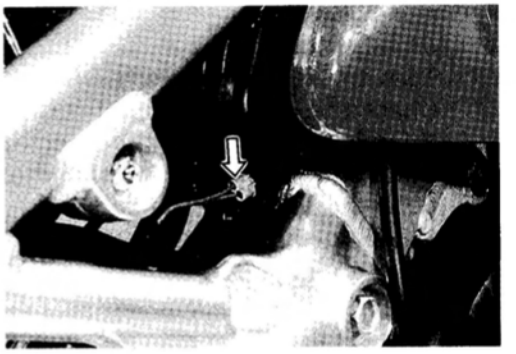

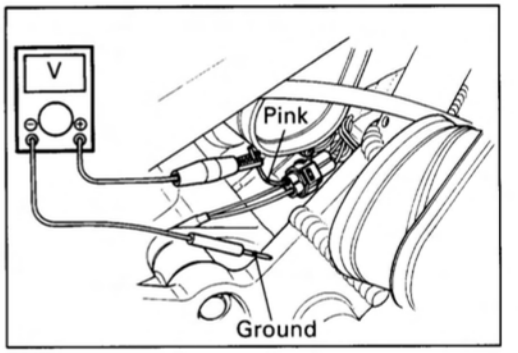

No → Open or short circuit in the Pink wire. Replace the GP switch with a new one.

Yes

Pink wire open or shorted to ground, or poor ㊶ connection. (See p.4-26.)
If wire and connection are OK, intermittent trouble or faulty ECM.
Recheck each terminal and wire harness for open circuit and poor connection. (See p.4-4.)

→ Replace the ECM with a new one, and inspect it again.

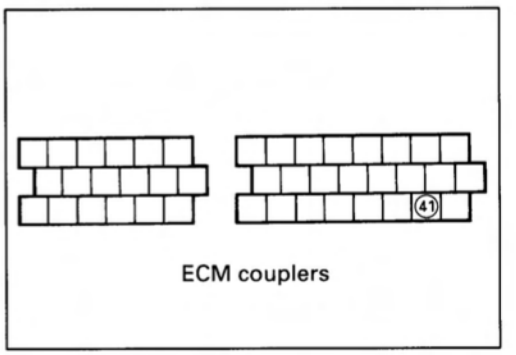

ECM couplers

"C32" or "C33" FUEL INJECTION MALFUNCTION

DETECTED CONDITION	POSSIBLE CAUSE
No injector current.	• Injector circuit open or short. • Injector malfunction. • ECM malfunction.

INSPECTION

- Remove the front seat.
- Remove the fuel tank mounting bolts.
- Lift and support the fuel tank with its prop stay. (See p.4-49.)
- Remove the air cleaner box. (See p.4-54 and -55.)

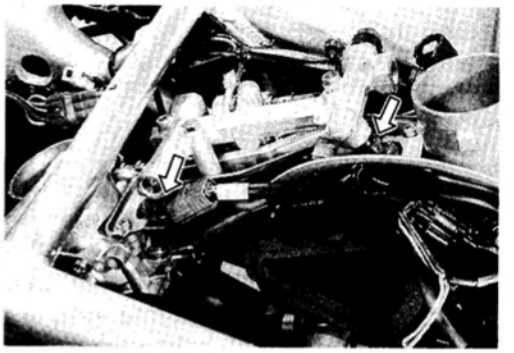

1 Turn the ignition switch OFF.
Check the injector coupler for loose or poor contacts.
If OK, then measure the injector resistance.
Disconnect the coupler and measure the resistance between terminals.
#1 INJ or #2 INJ resistance: 11–16Ω at 20°C (68°F) (Terminal–Terminal)
If OK, then check the continuity between each terminal and ground.
#1 INJ or #2 INJ continuity: ∞Ω (Infinity) (Terminal–Ground)
09900-25008: Multi circuit tester
Tester knob indication: Resistance (Ω)

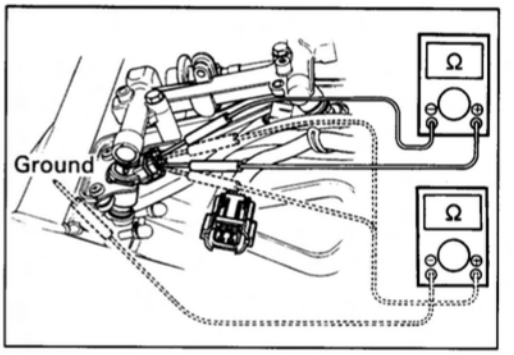

No → Replace the injector with a new one. (See p.4-69.)

Yes ↓

2 Turn the ignition switch ON.
Measure the injector voltage between Y/R wire and ground.
#1 INJ or #2 INJ voltage: Battery voltage (Y/R–Ground)
NOTE:
Injector voltage can be detected only 3 seconds after ignition switch is turned ON.
09900-25008: Multi circuit tester
Tester knob indication: Voltage (⎓)

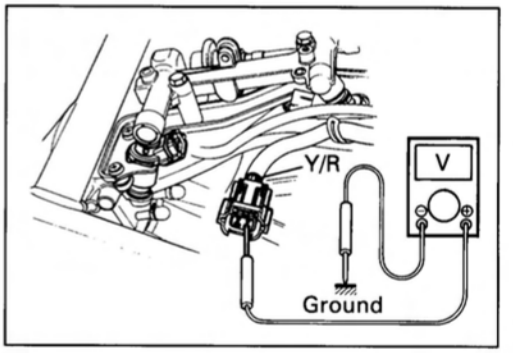

No → Open circuit in the Yellow/Red wire.

Yes ↓

G/W, G/B or Y/R wire open or shorted to ground, or poor ③, ④ or ㉔ connection. (See p.4-26.)
If wire and connection are OK, intermittent trouble or faulty ECM.
Recheck each terminal and wire harness for open circuit and poor connection. (See p.4-4.)

→ Replace the ECM with a new one, and inspect it again.

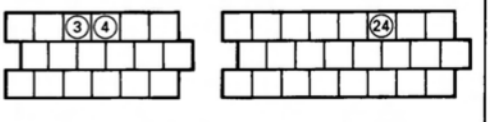

ECM couplers

"C41" FP RELAY CIRCUIT MALFUNCTION

DETECTED CONDITION	POSSIBLE CAUSE
No signal from fuel pump relay.	• Fuel pump relay circuit open or short. • Fuel pump relay malfunction. • ECM malfunction.

INSPECTION

- Remove the front and rear seats.
- Remove the frame cover. (See p.6-4.)

1 Turn the ignition switch OFF.
Check the FP relay coupler for loose or poor contacts.
If OK, then check the insulation and continuity, refer to page 4-51 for details.

No → Replace the FP relay with a new one.

Yes ↓

Y/Bl or O/W wire open or shorted to ground, or poor ⑥ or ⑫ connection. (See p.4-26.)
If wire and connection are OK, intermittent trouble or faulty ECM.
Recheck each terminal and wire harness for open circuit and poor connection. (See p.4-4.)

→ Replace the ECM with a new one, and inspect it again.

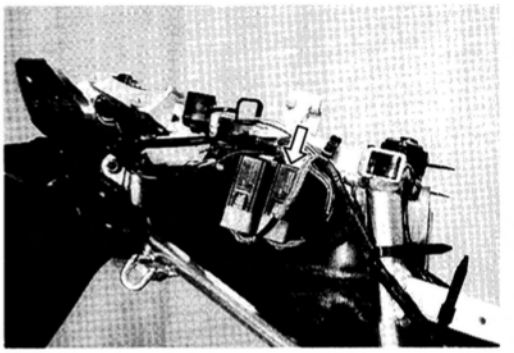

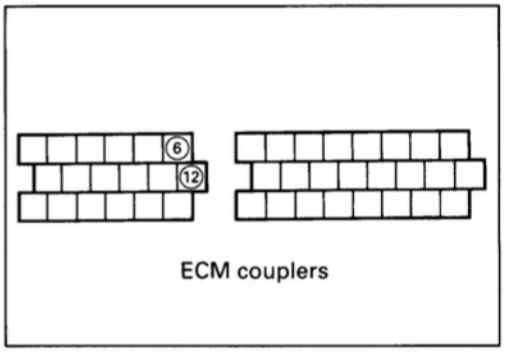

ECM couplers

"C42" IG SWITCH CIRCUIT MALFUNCTION

***Refer to the IGNITION SWITCH INSPECTION for details. (See p.7-37.)**

- Remove the front seat.
- Remove the fuel tank mounting bolts.
- Lift and support the fuel tank with its prop stay. (See p.4-49.)
- Remove the air cleaner box. (See p.4-54 and -55.)

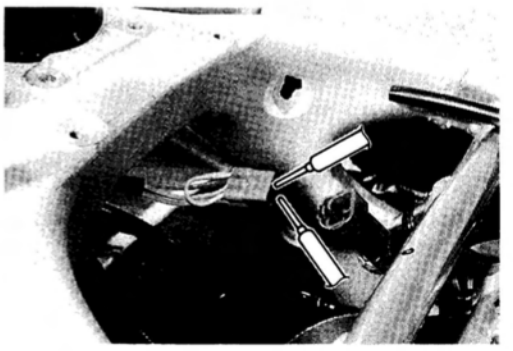

FUEL SYSTEM

FUEL TANK LIFT-UP

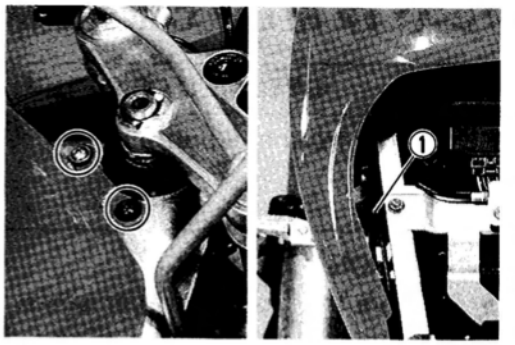

- Remove the front seat.
- Remove the fuel tank mounting bolts.
- Remove the fuel tank prop stay ① from the frame.
- Lift and support the fuel tank with its prop stay.

NOTE:
The prop stay is equipped with fuel tank plugs ② at both ends.

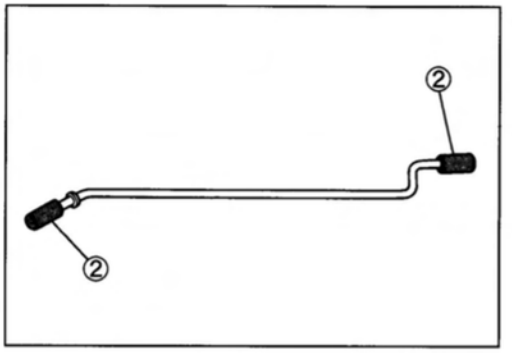

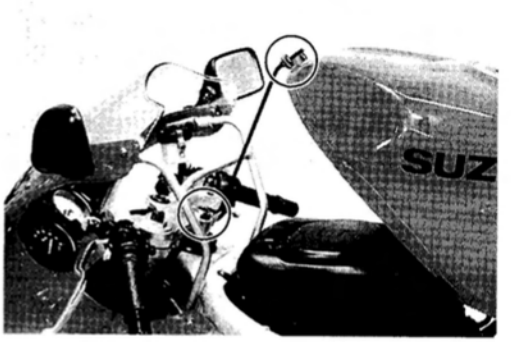

FUEL TANK REMOVAL

- Remove the front seat.
- Lift and support the fuel tank with its prop stay.
- Pinch the fuel return hose ① with a soft clip to prevent fuel leakage from the fuel tank.
- Disconnect the fuel return hose ① from the fuel pressure regulator and drain the fuel to the suitable container.

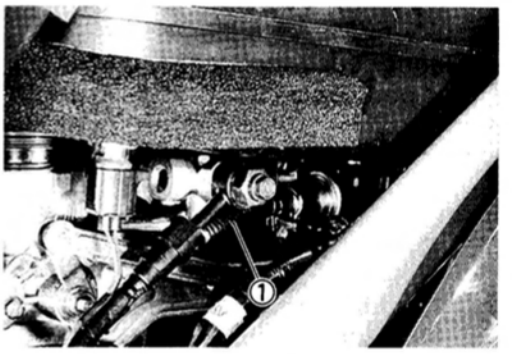

⚠WARNING

Gasoline is highly flammable and explosive.
Keep heat, spark and flame away.

- Disconnect the fuel return hose ①, fuel tank water drain hose ②, fuel feed hose ③ and fuel pump lead wire coupler ④.

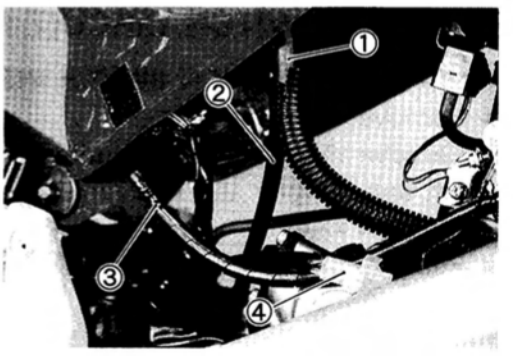

⚠WARNING

Be sure to install the fuel tank plug Ⓐ to the fuel return port to prevent fuel leakage.

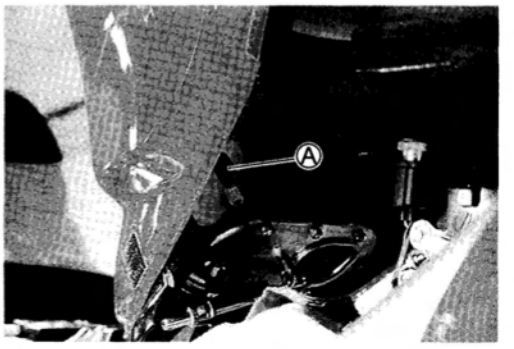

- Remove the fuel tank bolt.
- Remove the fuel tank.

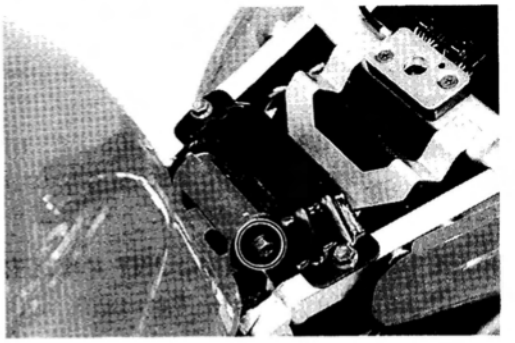

FUEL PRESSURE INSPECTION

- Remove the front seat.
- Lift and support the fuel tank with its prop stay.
- Place a rag under the fuel pressure check bolt ① and slowly loosen it and catch the remaining fuel using a suitable container.
- Remove the fuel pressure check bolt ① and install the special tools.

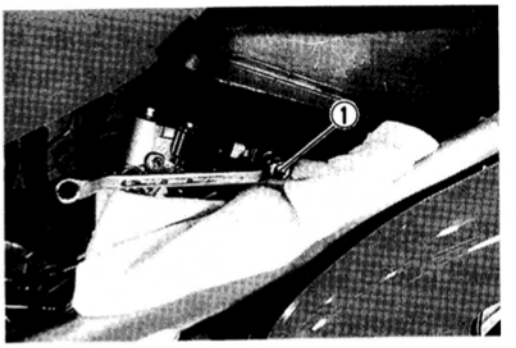

TOOL **09940-40210: Fuel pressure gauge adaptor**
09915-77330: Oil pressure gauge
09915-74520: Oil pressure gauge hose

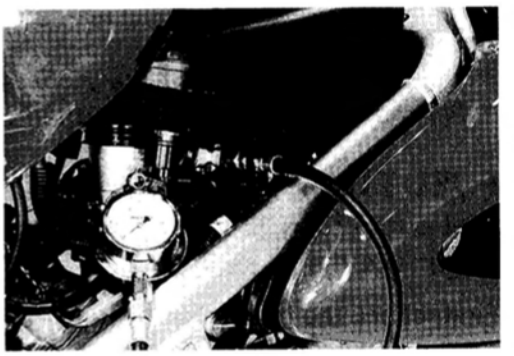

Turn the ignition switch ON and check the fuel pressure.

Fuel pressure: 2.9 kg/cm^2 (290 kPa, 41 psi)

If the fuel pressure is lower than the specified, inspect the following items:

* Fuel hose leakage
* Clogged fuel filter
* Pressure regulator
* Fuel pump

If the fuel pressure is higher than the specified, inspect the following items:

* Clogged or pinched fuel return hose
* Fuel pump check valve
* Pressure regulator

⚠ WARNING

*** Before removing the special tools, turn the ignition switch OFF position and release the fuel pressure slowly.**
*** Gasoline is highly flammable and explosive. Keep heat, sparks and flame away.**

⚠ CAUTION

Use a new gasket washer installed on the check bolt to prevent fuel leakage.

- Tighten the fuel pressure check bolt to the specified torque.

Fuel pressure check bolt: 10 N·m (1.0 kg-m, 7.0 lb-ft)

FUEL PUMP INSPECTION

Turn the ignition switch ON and check that the fuel pump operates for few seconds.
If the fuel pump motor does not make operating sound, replace the fuel pump assembly or inspect the fuel pump relay and tip over sensor.

FUEL DISCHARGE AMOUNT INSPECTION

- Lift and support the fuel tank with its prop stay.
- Drain the fuel from the fuel tank. (See p.4-49 for fuel tank removal section.)
- Disconnect the fuel return hose from the fuel tank.
- Place the measuring cylinder and insert the fuel return hose end into the measuring cylinder.
- Turn the ignition switch ON and measure the amount of fuel discharged.

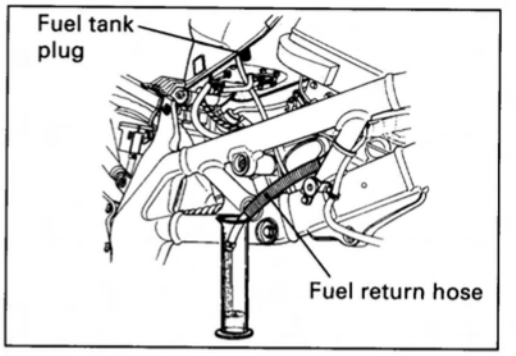

If the specified amount is not discharged, it means that the fuel pump is defective or that the fuel filter is clogged.

Fuel discharge amount:
26–30 ml/3 sec. (0.87/0.91–1.0/1.1 US/Imp oz)/3 sec.

NOTE:
** The battery must be in fully charged condition.*
** Fill the fuel tank with more than 5 liters of gasoline.*

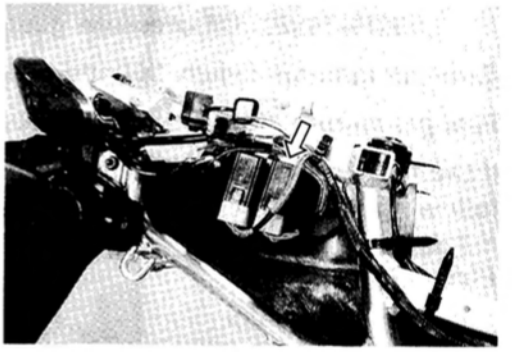

FUEL PUMP RELAY INSPECTION

Fuel pump relay is located behind the right frame cover.
- Remove the seats and frame cover. (See p.6-4.)

First, check the insulation between ① and ② terminals with pocket tester. Then apply 12 volts to ③ and ④ terminals, ⊕ to ③ and ⊖ to ④, and check the continuity between ① and ②.
If there is no continuity, replace it with a new one.

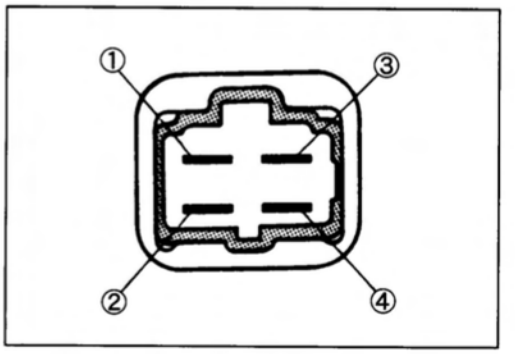

FUEL PUMP AND FUEL FILTER REMOVAL

- Remove the fuel tank. (See p.4-49.)
- Remove the fuel pump assembly by removing its mounting bolts.

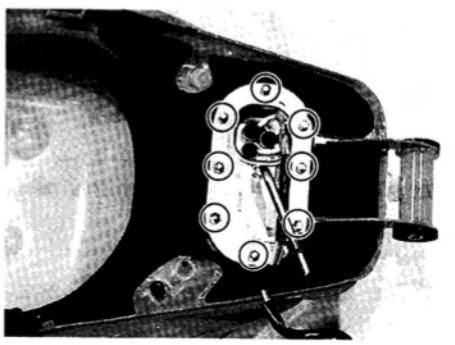

⚠WARNING

Gasoline is highly flammable and explosive.
Keep heat, spark and flame away.

NOTE:
When inspecting the fuel level indicator switches, refer to page 7-30.

- Remove the both sides of the fuel filter bracket screws ①.
- Slide the fuel hose clamps ② and remove the fuel filter ③.

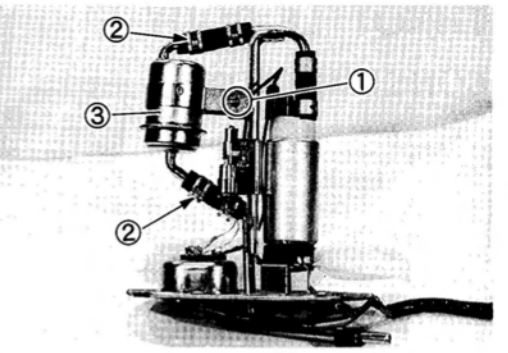

- Loosen the fuel filter band screw ④ and remove the fuel filter.

NOTE:
If the fuel mesh filter is clogged with many sediment or rust, replace the fuel filter cartridge with a new one.

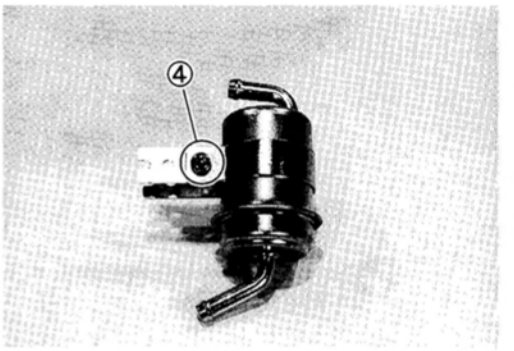

FUEL MESH FILTER INSPECTION AND CLEANING

If the mesh filter is clogged with sediment or rust, fuel will not flow smoothly and loss in engine power may result. Blow the fuel mesh filter with compressed air.

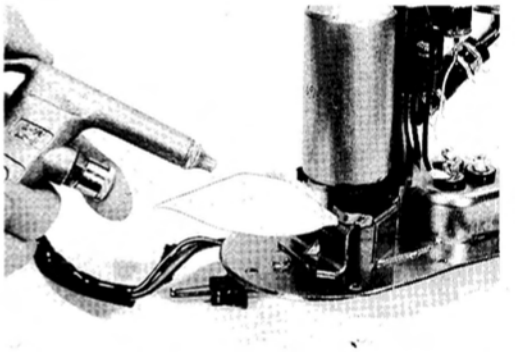

FUEL PUMP AND FUEL FILTER INSTALLATION

Install the fuel pump and fuel filter in the reverse order of removal, and pay attention to the following points:

- Align the stopper on the fuel filter bracket with the slit of the fuel filter band.
- When installing the fuel pump assembly, lightly tighten all the fuel pump assembly mounting bolts in the ascending order of numbers, and then tighten them to the specified torque in the above manner.

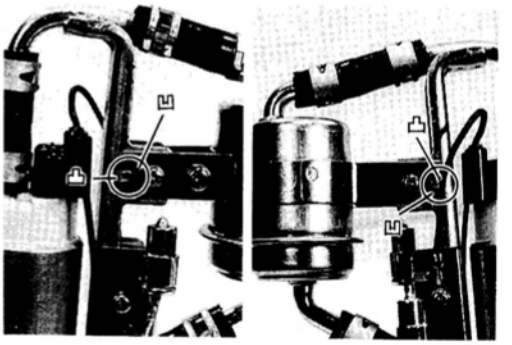

Fuel pump mounting bolt: 3 N·m (0.3 kg-m, 2.0 lb-ft)

⚠WARNING

Fuel pump gasket must be replaced with new one to prevent fuel leakage.

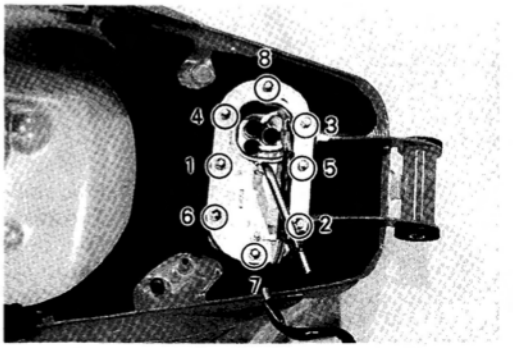

THROTTLE BODY

CONSTRUCTION

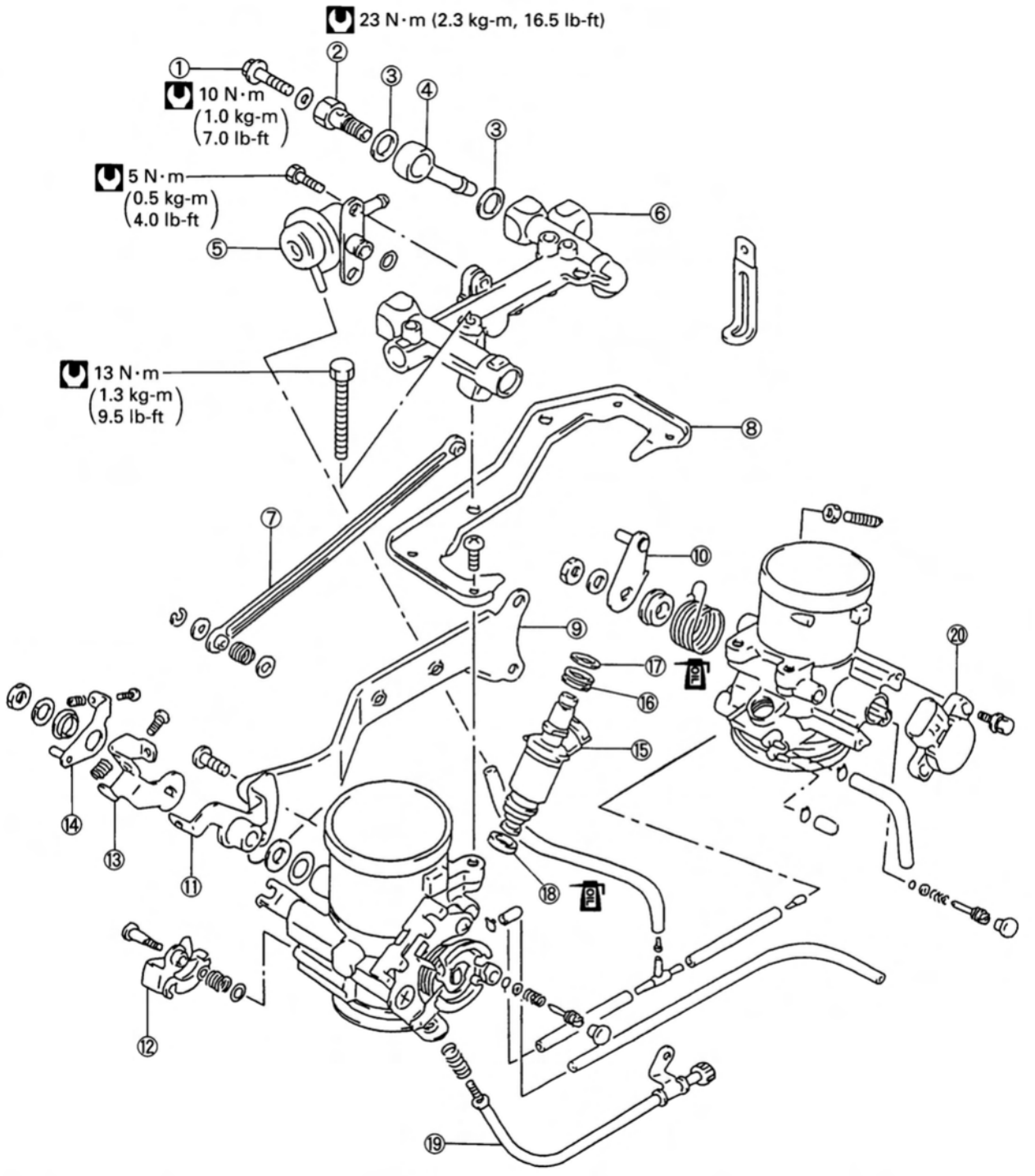

① Fuel pressure check bolt
② Fuel hose joint union bolt
③ Gasket washer
④ Fuel feed hose joint
⑤ Fuel pressure regulator
⑥ Fuel delivery pipe
⑦ Throttle lever link rod
⑧ Fuel delivery pipe bracket
⑨ Throttle body link plate
⑩ Throttle lever No.2
⑪ Throttle lever No.1
⑫ Fast idle cam
⑬ Throttle balance lever
⑭ Throttle valve shaft bracket
⑮ Injector
⑯ Dust seal
⑰ O-ring
⑱ Cushion seal
⑲ Throttle stop screw
⑳ TP sensor

THROTTLE BODY REMOVAL

- Lift and support the fuel tank with its prop stay. (See p.4-49.)
- Remove the air cleaner box mounting screws.

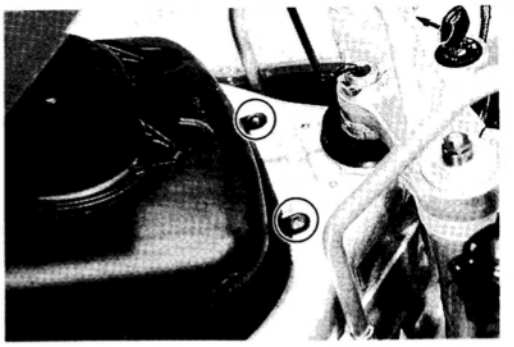

- Disconnect the vacuum hose ① from the VCSV.
- Disconnect the VCSV coupler ②.
- Remove the VCSV mounting screws ③.

VCSV: Vacuum Control Solenoid Valve

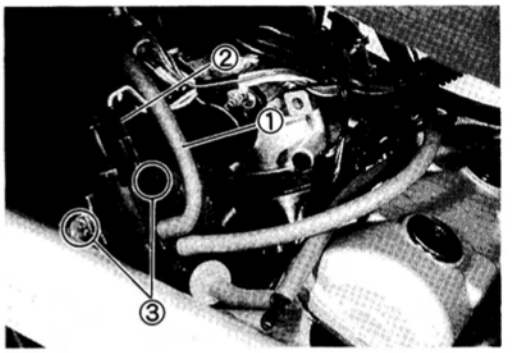

- Disconnect the IAP sensor coupler ④.
- Remove the IAP sensor mounting screw ⑤.

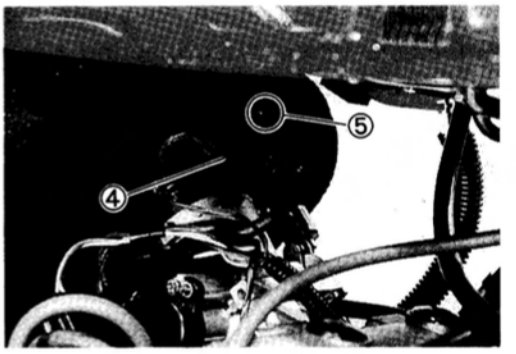

- Disconnect the IAT sensor coupler ⑥.
- Loosen the rear throttle body clamp screw ⑦ at the air cleaner box.

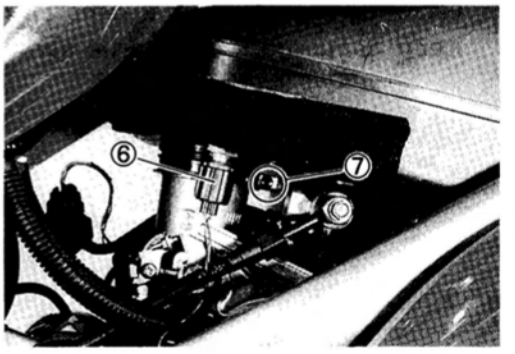

- Loosen the front throttle body clamp screw ⑧ at the air cleaner box.

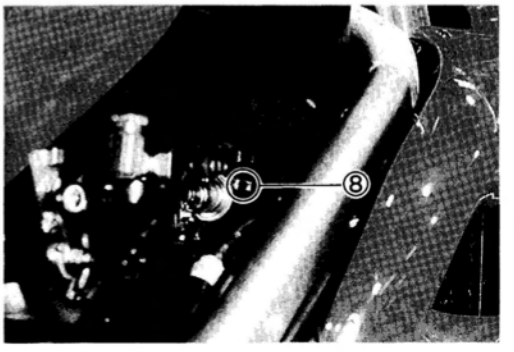

- Disconnect the crankcase breather hose ⑨ from the bottom side of the air cleaner box.

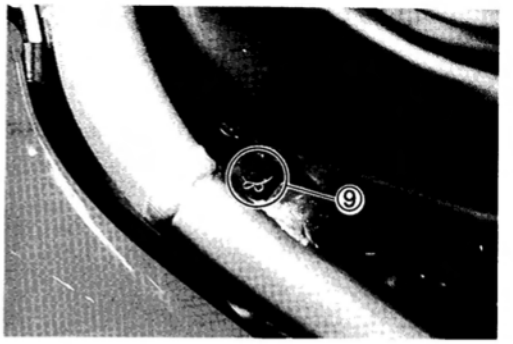

- Remove the air cleaner box.

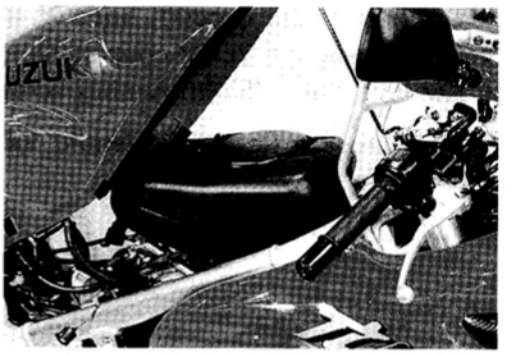

- Pinch the fuel return hose with a soft clip to prevent fuel leakage when disconnecting the fuel return hose from the fuel pressure regulator.
- Drain the fuel into a suitable container by removing the soft clip.
- Disconnect the fuel return hose ⑩ from the fuel tank and install the fuel tank plug to the fuel return port.
(See p.4-49.)

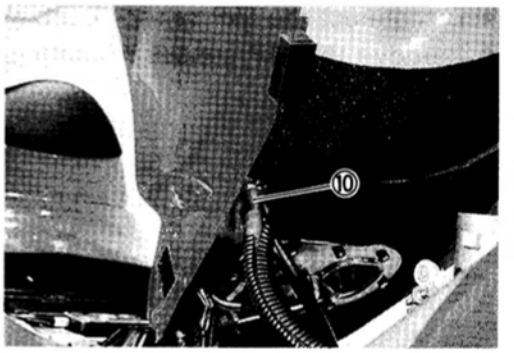

⚠WARNING

Gasoline is highly flammable and explosive.
Keep heat, spark and flame away.

- Place a rag under the fuel pressure check bolt and slowly loosen it to release the fuel pressure.
- Disconnect the fuel feed hose ⑪ from the delivery pipe side.

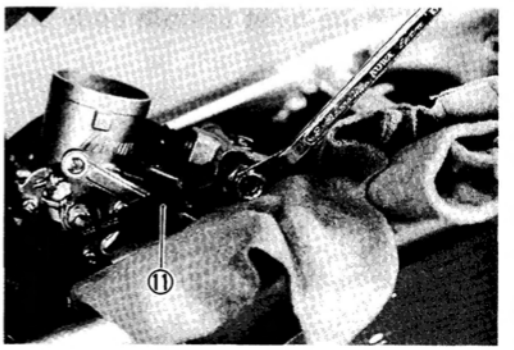

- Disconnect the fuel injector couplers No.1 and No.2.
- Disconnect the TP sensor coupler ⑫.

NOTE:
The fuel injector coupler No.1 can be distinguished from that of the No.2 by the "WHITE" tape.

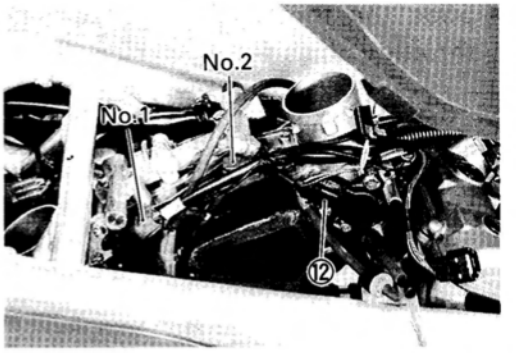

- Disconnect the vacuum hose ⑬ from the vacuum damper ⑭.

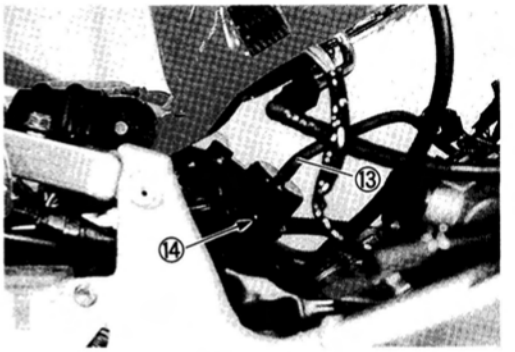

- Loosen the front throttle body clamp screw ⑮ at the intake pipe side.

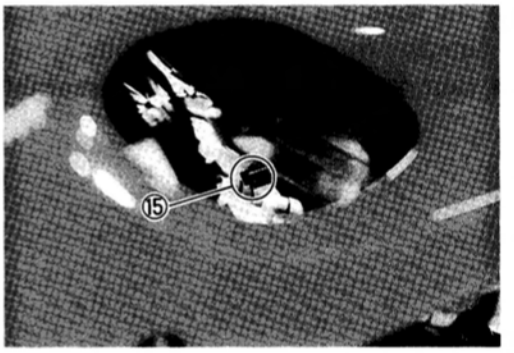

- Loosen the rear throttle body clamp screw ⑯ at the intake pipe side.

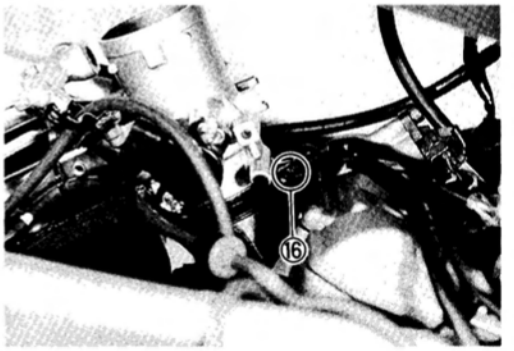

- Remove the No.2 intake air pipe ⑰ by removing its mounting bracket bolts.

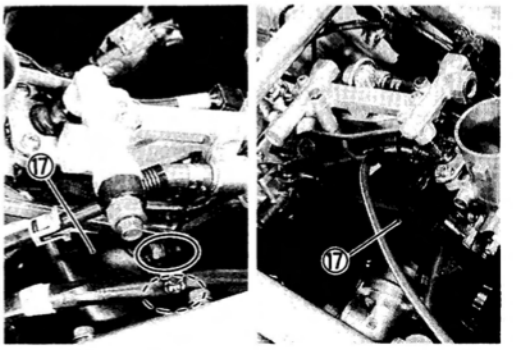

- Slide the throttle body assembly and disconnect the throttle cables from their drum.

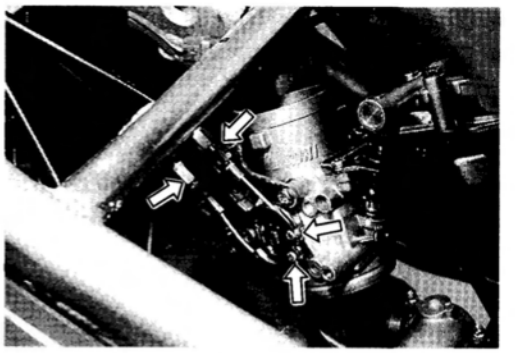

⚠ CAUTION

After disconnecting the throttle cables, do not snap the throttle valve from full open to full close. It may cause damage to the throttle valve and throttle body.

- Disconnect the fast idle cable from its cam.

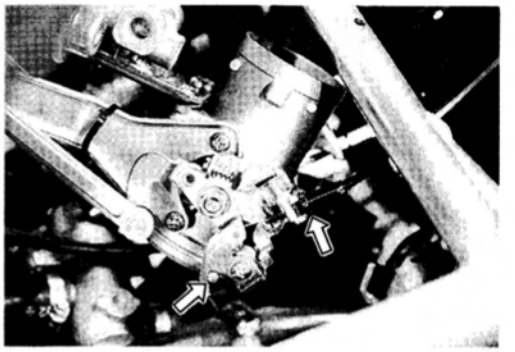

- Remove the throttle stop screw bracket by removing the engine mounting pinch bolt.
- Remove the throttle body assembly.

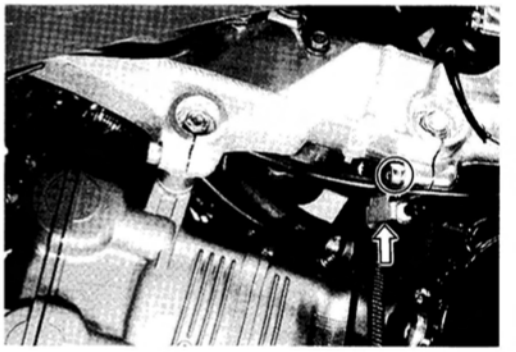

THROTTLE BODY DISASSEMBLY

- Disconnect the respective vacuum hoses from the throttle body assembly.

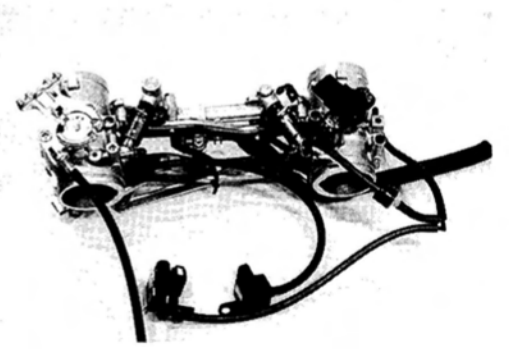

- Remove the TP sensor ①.
- Remove the throttle stop screw assembly ② by removing the throttle cable guide ③.

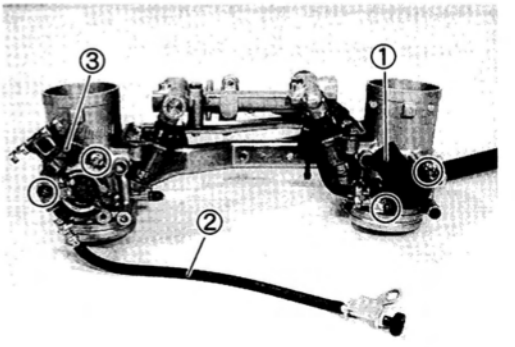

- Remove the fuel delivery pipe ① by removing the bolts.

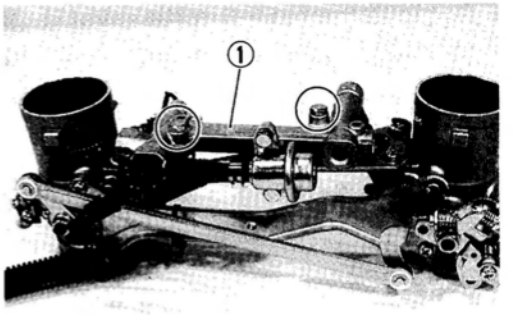

- Remove the fuel pressure regulator ② and fuel feed hose joint ③ from the fuel delivery pipe.

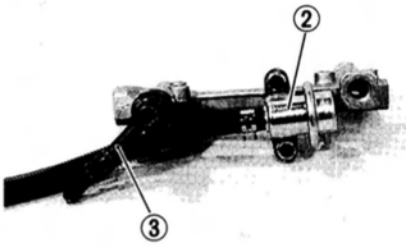

- Remove the fuel injectors, ④ and ⑤.

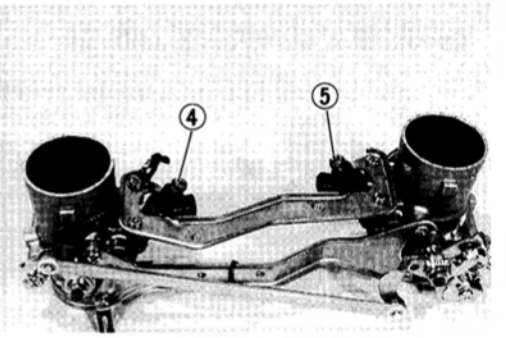

- Remove the fuel injector cushion seals ⑥.

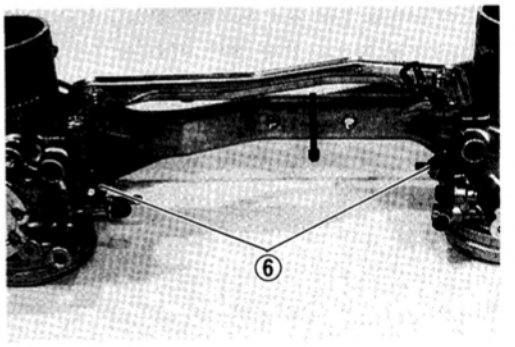

- Remove the fuel delivery pipe bracket ⑦ by removing its screws.

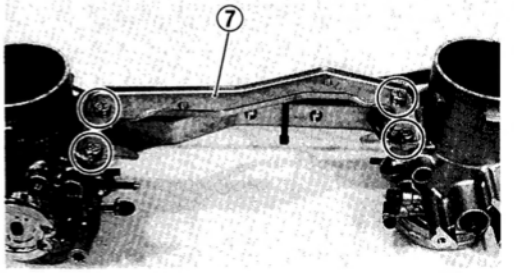

- Remove the No.1 throttle lever ① and No.2 throttle lever ② along with the throttle link rod ③ by removing the nuts.

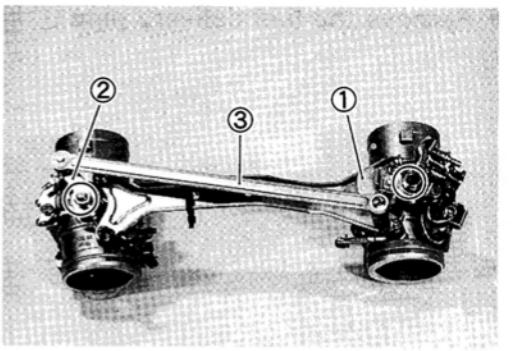

- Remove the spring retainer ④, spring ⑤ and bushing ⑥.
- Remove the washer ⑦ and bushing ⑧.

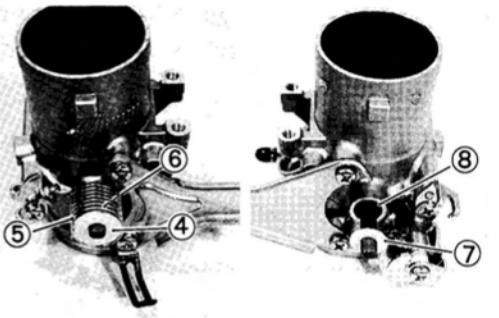

- Remove the throttle body link plate ⑨, fast idle cable guide ⑩ and fast idle cam ⑪.

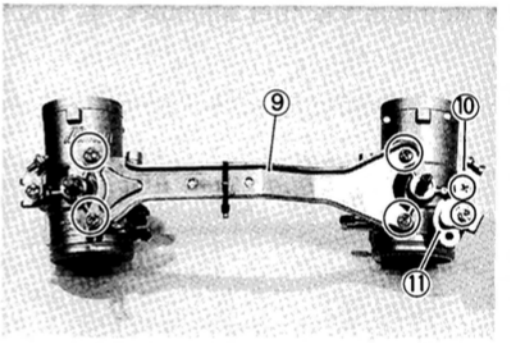

- Remove the air screw plug from the throttle body.
- Slowly turn the air screw in clockwise and count the number of turns until the screw is lightly seated. Make a note of how many turns were made so the screw can be reset correctly after cleaning.
- Remove the air screw with the spring, washer and O-ring.

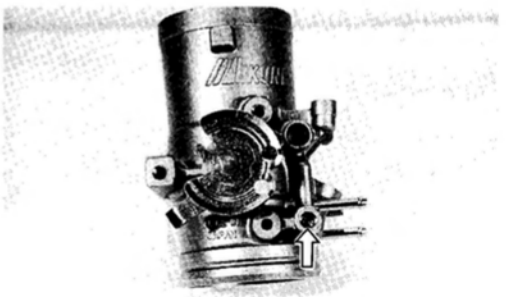



THROTTLE BODY CLEANING

⚠ WARNING

Some carburetor cleaning chemicals, especially dip-type soaking solutions, are very corrosive and must be handled carefully. Always follow the chemical manufacturer's instructions on proper use, handling and strage.

- Clean all passageways with a spray-type carburetor cleaner and blow dry with compressed air.

⚠ CAUTION

Do not use wire to clean passageways. Wire can damage passageways. If the components cannot be cleaned with a spray cleaner it may be necessary to use a dip-type cleaning solution and allow them to soak. Always follow the chemical manufacturer's instructions for proper use and cleaning of the throttle body components. Do not apply carburetor cleaning chemicals to the rubber and plastic materials.

INSPECTION

Check following items for any damage or clogging.

* Air screw
* Bypass air passage
* Throttle shaft bushing and seal
* Throttle valve
* Fuel injector filter
* O-ring
* Injector cushion seal
* Injector dust seal
* Vacuum hoses
* Jet

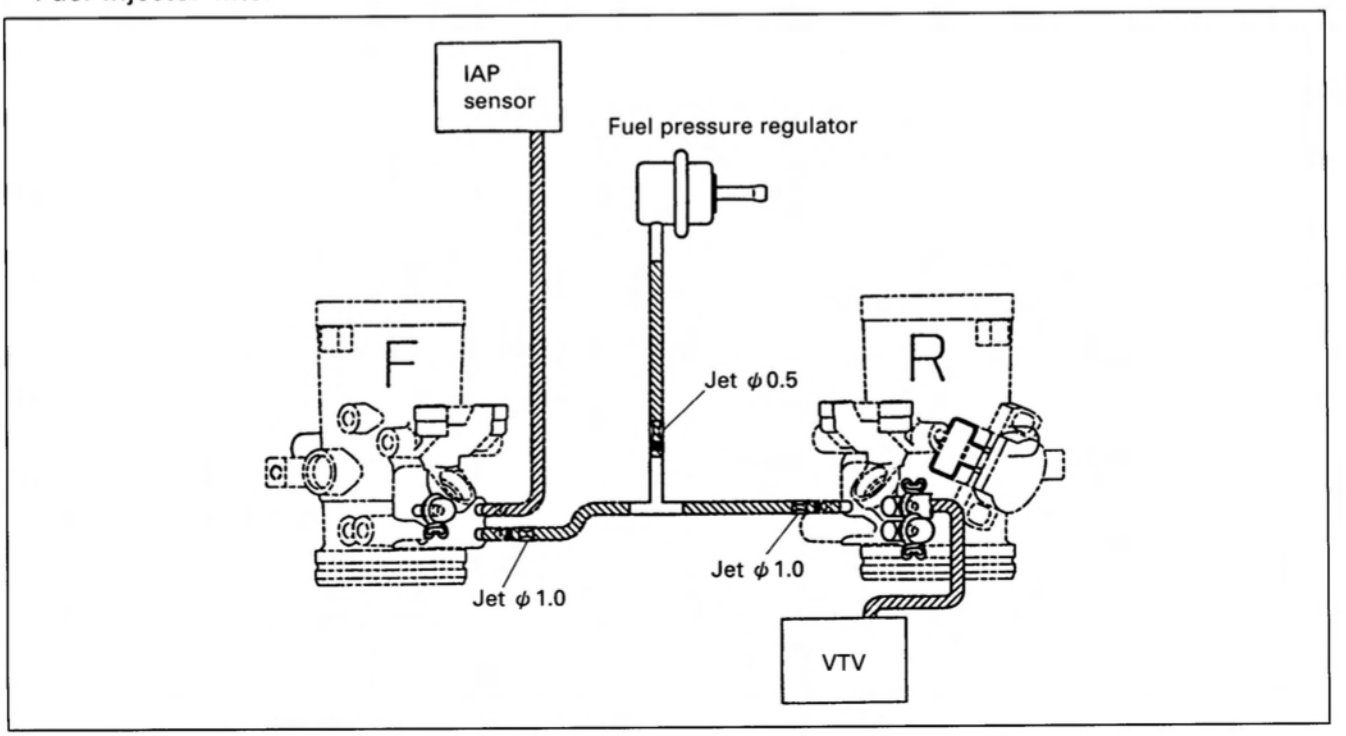

THROTTLE BODY REASSEMBLY

- After cleaning, reinstall the air screw to the original setting by turning the screw in until it lightly seats, and then backing it out the same number of turns counted during disassembly.

Air screw STD setting: Approx. 1-1/2 turns back

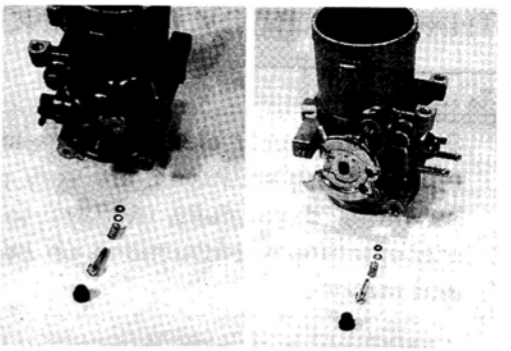

- Install the air screw plug.

⚠ CAUTION

Replace the O-ring with a new one.

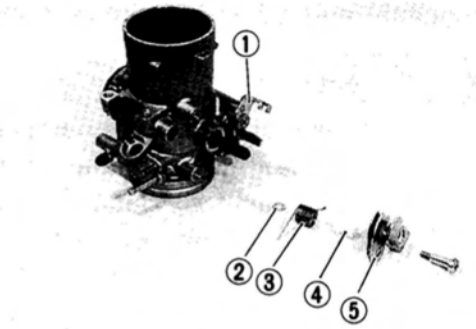

- Install the fast idle cable guide ①.
- Install the washer ②, spring ③, spring retainer ④ and fast idle cam ⑤.

- Fit the vacuum hose clamp Ⓐ correctly. (E-33 model)
- Temporarily reinstall the throttle body link plate ⑥. (Loosely tighten the link plate screws.)

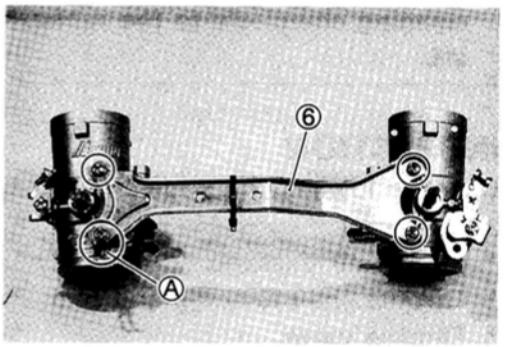

- Install the bushing ⑦ and washer ⑧.
- Install the bushing ⑨, spring ⑩ and spring retainer ⑪.

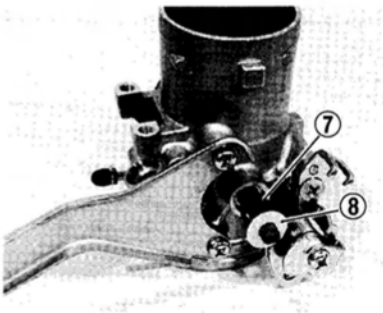

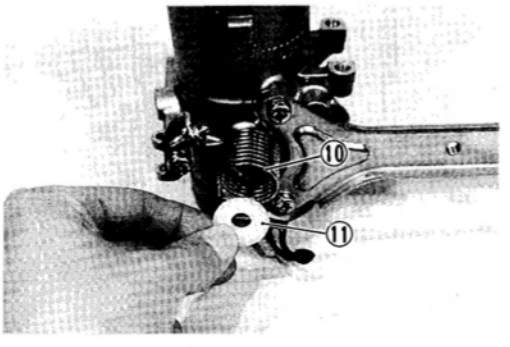

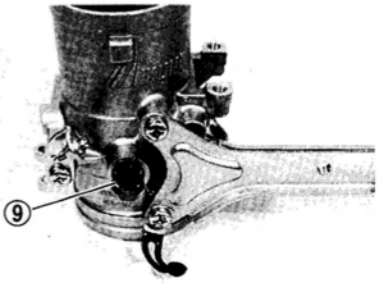

- Fully close the throttle valves, ① and ②.

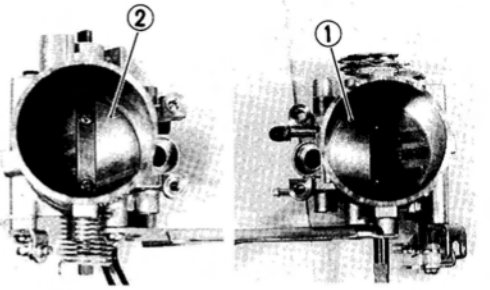

- Before installing the No.2 throttle lever, be sure to check the bushing ③, washer ④ and spring ⑤ installation properly.

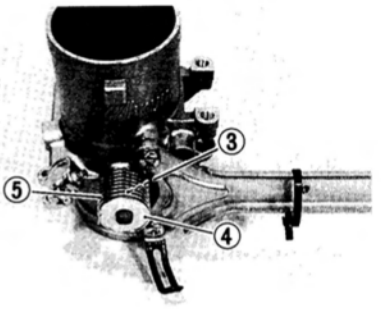

- Install the No.2 throttle lever ⑥ and hook the spring end Ⓐ to the No.2 throttle lever.

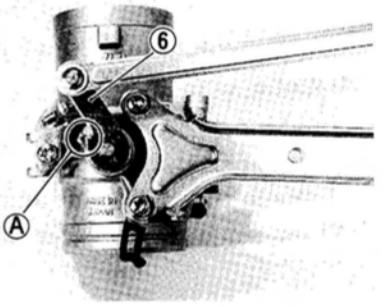

- Install the spring washer ⑦.
- Tighten the nut ⑧ securely.

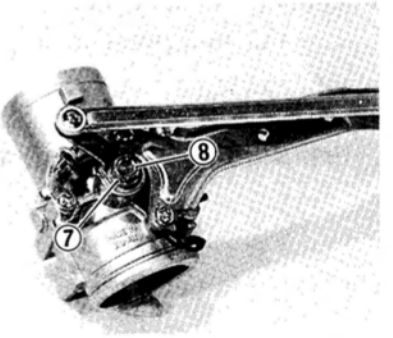

- Install the No.1 throttle lever ⑨ to the No.1 throttle valve shaft, then install the bushing ⑩ and spring washer ⑪.
- Tighten the nut ⑫ securely.

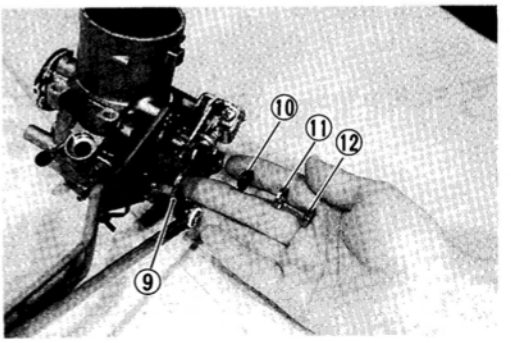

- Fit the vacuum hose clamp Ⓐ correctly.
- Install the fuel delivery pipe bracket ①.
- Tighten the throttle body link plate screws and fuel delivery pipe bracket screws securely.

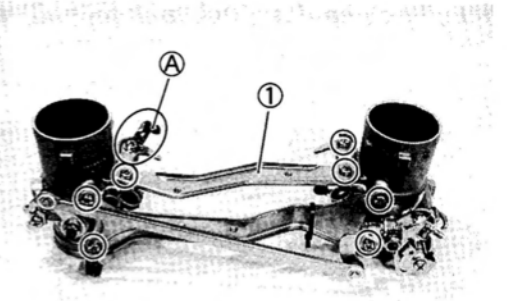

- Apply thin coat of the engine oil to new fuel injector cushion seals ② and install them to each throttle body.

⚠ CAUTION

Replace the cushion seal with a new one.

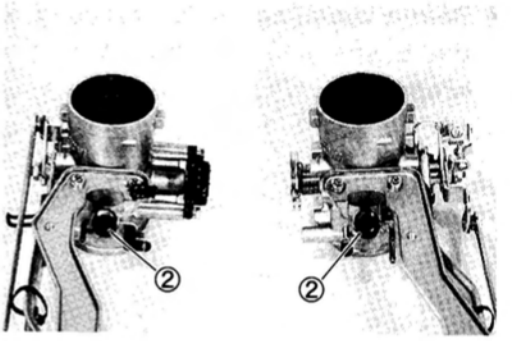

- Install the seals ③ and O-rings ④ to the fuel injectors.
- Apply thin coat of the engine oil to new O-rings ④.
- Install the fuel injectors by pushing them straight to each throttle body.

⚠ CAUTION

Replace the dust seal and O-ring with the new ones.
Never turn the injector while pushing it.

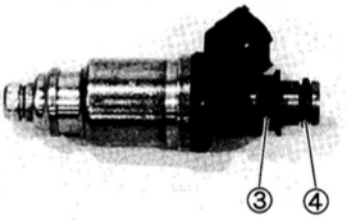

- Apply thin coat of the engine oil to new O-ring ⑤ and fit it to the fuel pressure regulator.

⚠ CAUTION

Replace the O-ring with a new one.

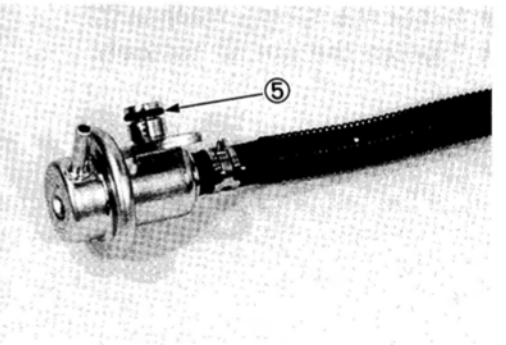

- Install the fuel pressure regulator to the fuel delivery pipe.

Fuel pressure regulator mounting bolt: 5 N·m
(0.5 kg-m, 3.5 lb-ft)

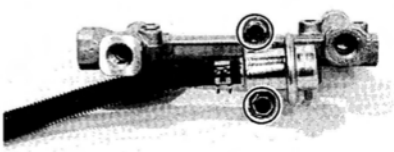

- Install the fuel feed hose joint ① to the fuel delivery pipe in the correct angle position.
- Tighten the hose joint union bolt to the specified torque.

Hose joint union bolt: 23 N·m (2.3 kg-m, 16.5 lb-ft)

NOTE:
Install the new gasket washers to both sides of the hose joint union.

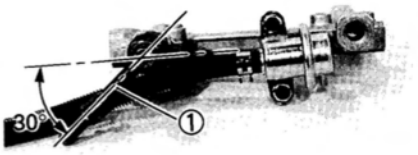

⚠ CAUTION

Use a new gasket to prevent fuel leakage.

- Install the fuel delivery pipe ② and tighten its bolts to the specified torque.

Fuel delivery pipe mounting bolt: 13 N·m (1.3 kg-m, 9.5 lb-ft)

- Clamp the fuel return hose ③.

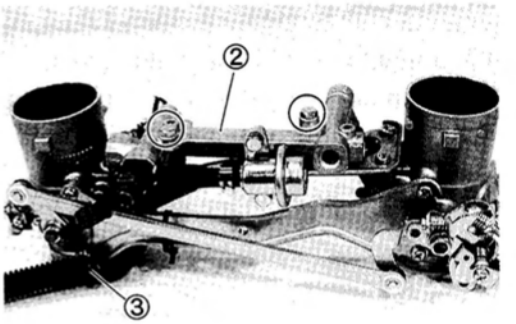

- Apply thin coat of the grease "A" to the seal ④ and install it onto the No.2 throttle valve shaft.

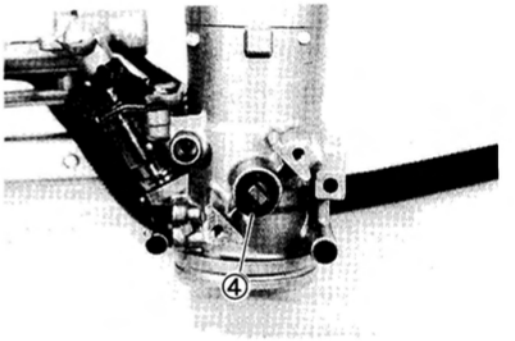

- Install the TP sensor to the No.2 throttle valve shaft by aligning the lug Ⓐ on the shaft with a slot Ⓑ in the TP sensor.
  Refer to page 4-29 for TP sensor setting procedure.

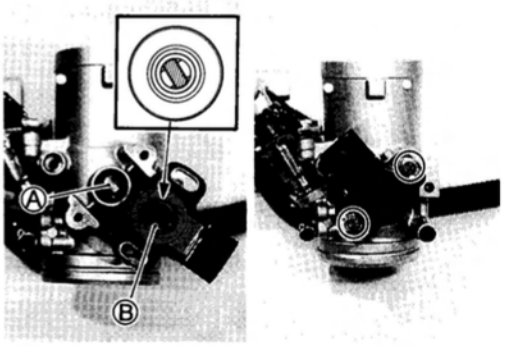

- Install the throttle cable guide ⑤.

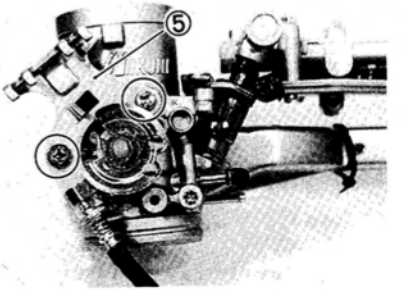

- Connect the VCSV vacuum hose ①, IAP sensor vacuum hose ② and fuel pressure regulator vacuum hose ③ as shown in the photo.

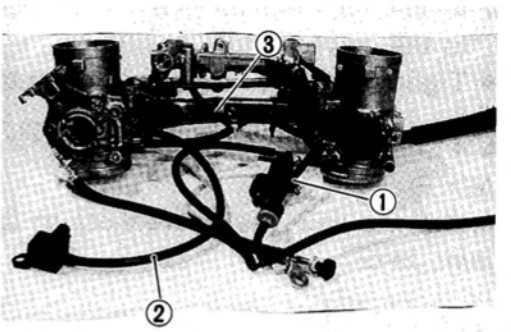

THROTTLE BODY INSTALLATION

- Connect the throttle pulling cable ① and throttle returning cable ② to the throttle cable drum.
- Adjust the throttle cable play with the cable adjusters ③ and ④.
  Refer to pages 2-13 and 4-75 for details.

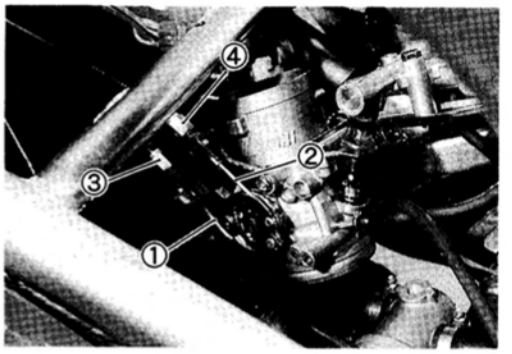

- Connect the fast idle cable ⑤ and adjust the fast idle cam clearance with the cable adjuster ⑥.
  Refer to page 4-75 for fast idle cable adjustment.

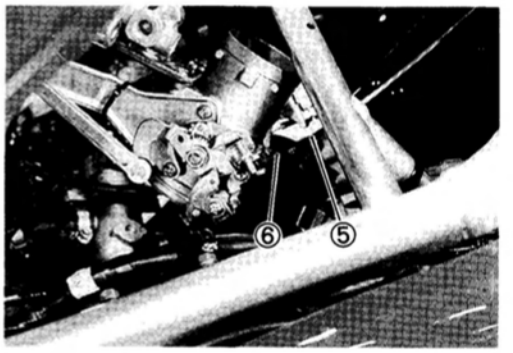

- Install the throttle body assembly and tighten the intake pipe side of the throttle body clamp screws.

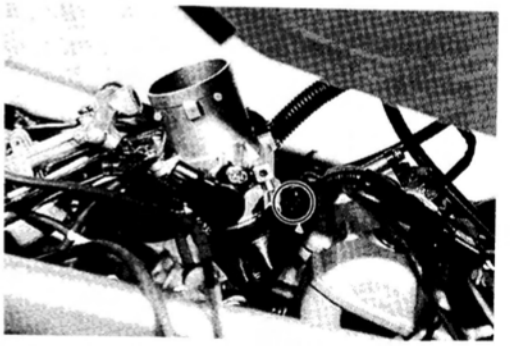

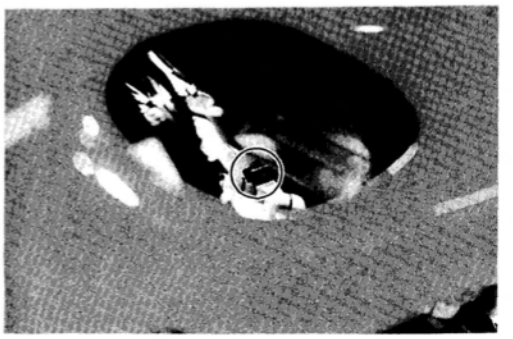

- Install the throttle stop screw bracket with the engine mounting pinch bolt.

Pinch bolt: 23 N·m (2.3 kg-m, 16.5 lb-ft)

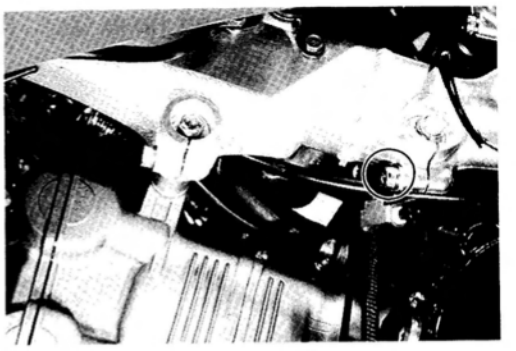

- Install the No.2 intake air pipe ①.

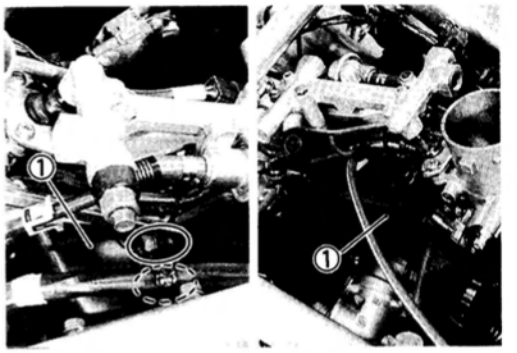

- Connect the fuel injector couplers, ② and ③.
- Connect the TP sensor coupler ④.
- Clamp the lead wires.

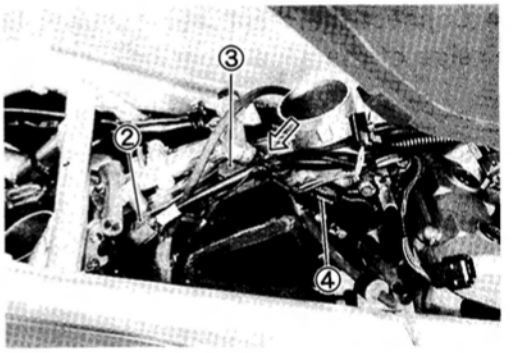

- Connect the vacuum hose to the vacuum damper ⑤.

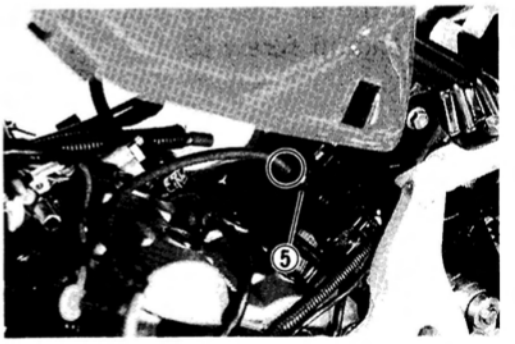

- Connect the fuel return hose ⑥.

⚠WARNING

Gasoline is highly flammable and explosive.
Keep heat, spark and flame away.

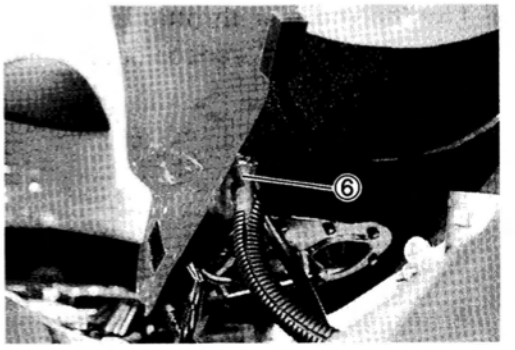

- Connect the fuel feed hose ⑦.

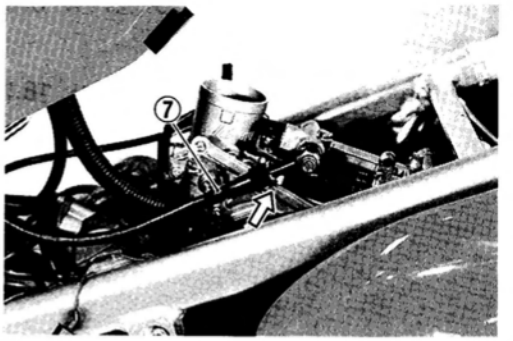

- Adjust the following items to the specification.

page
* Throttle cable play ..... 2-13 and 4-75
* Throttle position sensor 4-29
* Fast idle cable 4-75
* Throttle lever gap 4-74

- Connect the crankcase breather hose ① to the bottom side of the air cleaner box.

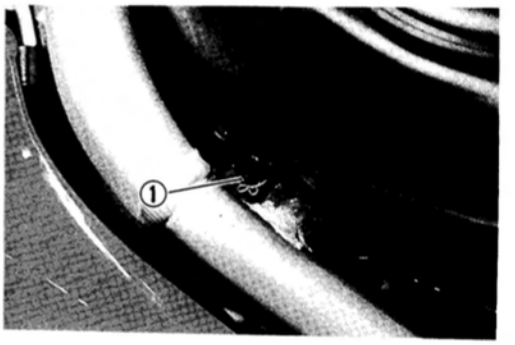

- Install the air cleaner box and tighten the front throttle body clamp screw ②.

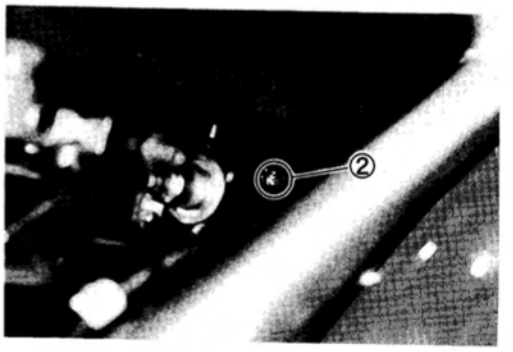

- Tighten the rear throttle body clamp screw ③.
- Connect the IAT sensor coupler ④.

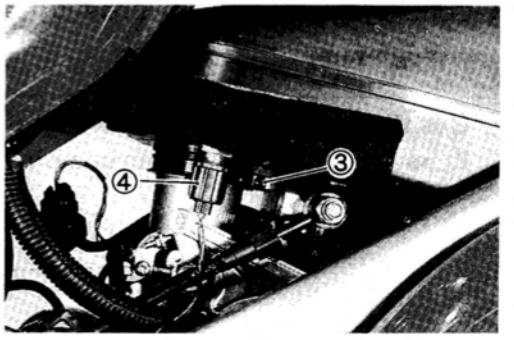

- Install the IAP sensor ⑤ to the air cleaner box.

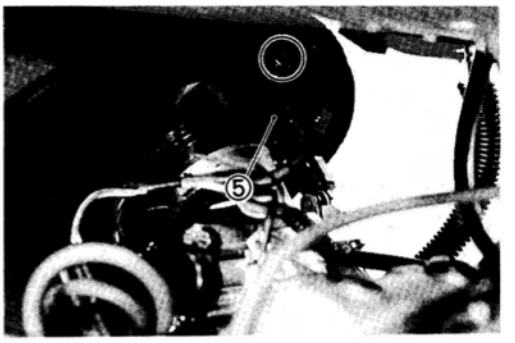

- Install the VCSV ⑥ to the air cleaner box.
- Connect the vacuum hose ⑦ to the VCSV.

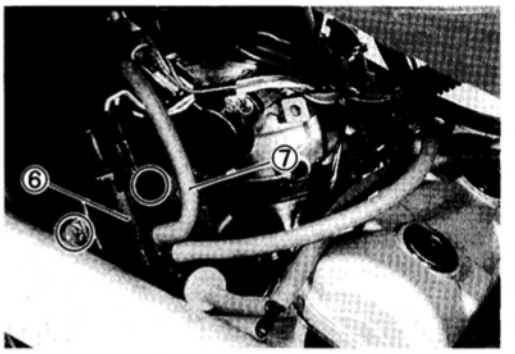

- Tighten the air cleaner box mounting screws.

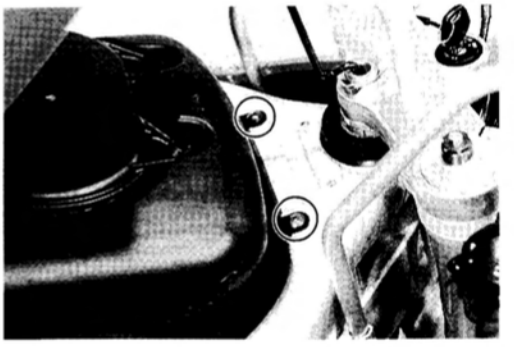

FUEL INJECTOR INSPECTION



The fuel injector can be checked without removing it from the throttle body.
Refer to page 4-47 for details.

FUEL INJECTOR REMOVAL

- Lift and support the fuel tank with its prop stay. (See p.4-49.)
- Remove the air cleaner box. (See p.4-54 and 55.)
- With battery negative cable disconnected, disconnect the injector couplers.
- Disconnect the fuel feed hose.
- Remove the fuel delivery pipe bolts. (See p.4-58.)
- Remove the fuel injectors No.1 and No.2. (See p.4-58.)

INSPECTION

Check fuel injector filter for evidence of dirt and contamination. If present, clean and check for presence of dirt in the fuel lines and fuel tank.

FUEL INJECTOR INSTALLATION

- Apply thin coat of the engine oil to new injector cushion seals and O-rings.
- Install the injector by pushing it straight to the throttle body. Never turn the injector while pushing it. (See p.4-63.)

AIR SCREW ADJUSTMENT

If it is necessary to adjust the throttle valve synchronization, adjust the air screws to the specification.

- Lift and support the fuel tank with its prop stay. (See p.4-49.)
- Remove the left fairing. (See p.6-1.)
- Remove the No.1 air screw plug Ⓐ and adjust the air screw ① to the specification by using screw driver as shown. Also adjust the No.2 air screw ②.

Air screw STD setting: Approx. 1-1/2 turns back

⚠ CAUTION

Do not overtighten the air screw.

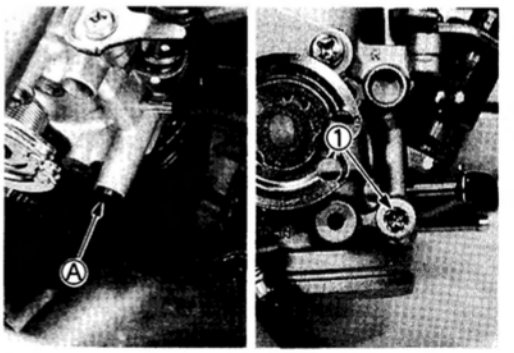

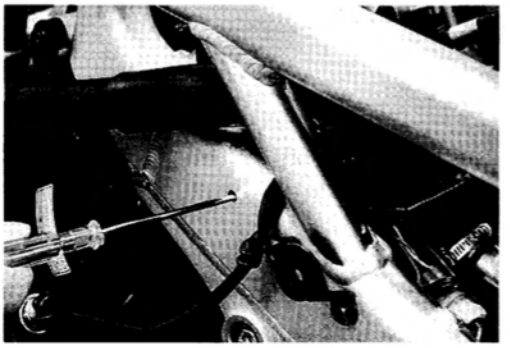

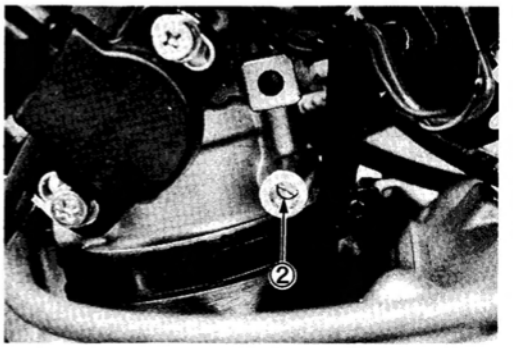

FAST IDLE ADJUSTMENT

The fast idle system is a kind of starter system, which opens throttle valve by the fast idle cam mechanically. The fast idle cam is turned by the fast idle cable and the cam pushes throttle valve shaft bracket which then opens throttle valve a little to increase the engine speed, and at the fully-pulled condition the engine speed is 2 000 rpm.

- Connect a tachometer.
- Start up the engine and run it in idle condition for warming up.
- Set the idle speed to 1 200 rpm.
- Turn the fast idle lever (choke lever) ① fully and check the fast idle setting rpm. If the engine speed is not in the specified range, adjust it to 2 000 rpm as explained in the following procedures.
- Lift and support the fuel tank with its prop stay. (See p.4-49.)
- With the fast idle cable fully-pulled, check the fast idle cam Ⓐ is in touch with the stopper Ⓑ. If not, adjust it with the cable adjuster ②.
- Start up the engine and turn the fast idle lever ① fully.
- Adjust the fast idle engine speed to 2 000 rpm by turning the fast idle adjusting screw ③.
- After adjusting the fast idle speed, set the idle speed to 1 200 rpm.

Fast idle setting rpm: 2 000 rpm
Engine idle rpm : 1 200 rpm

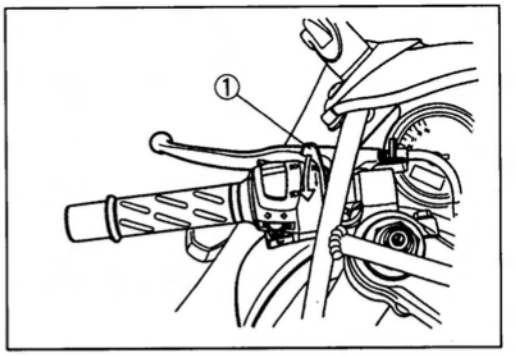

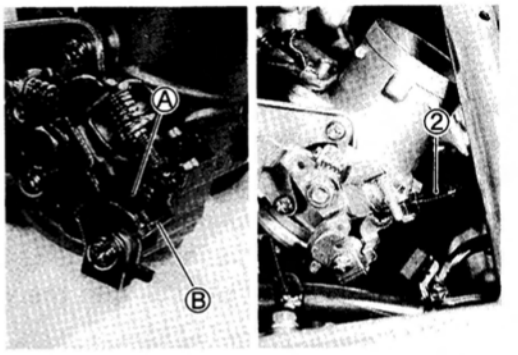

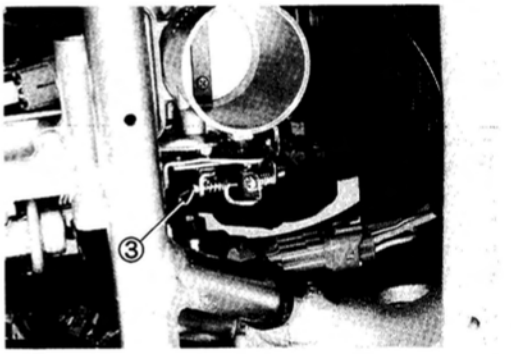

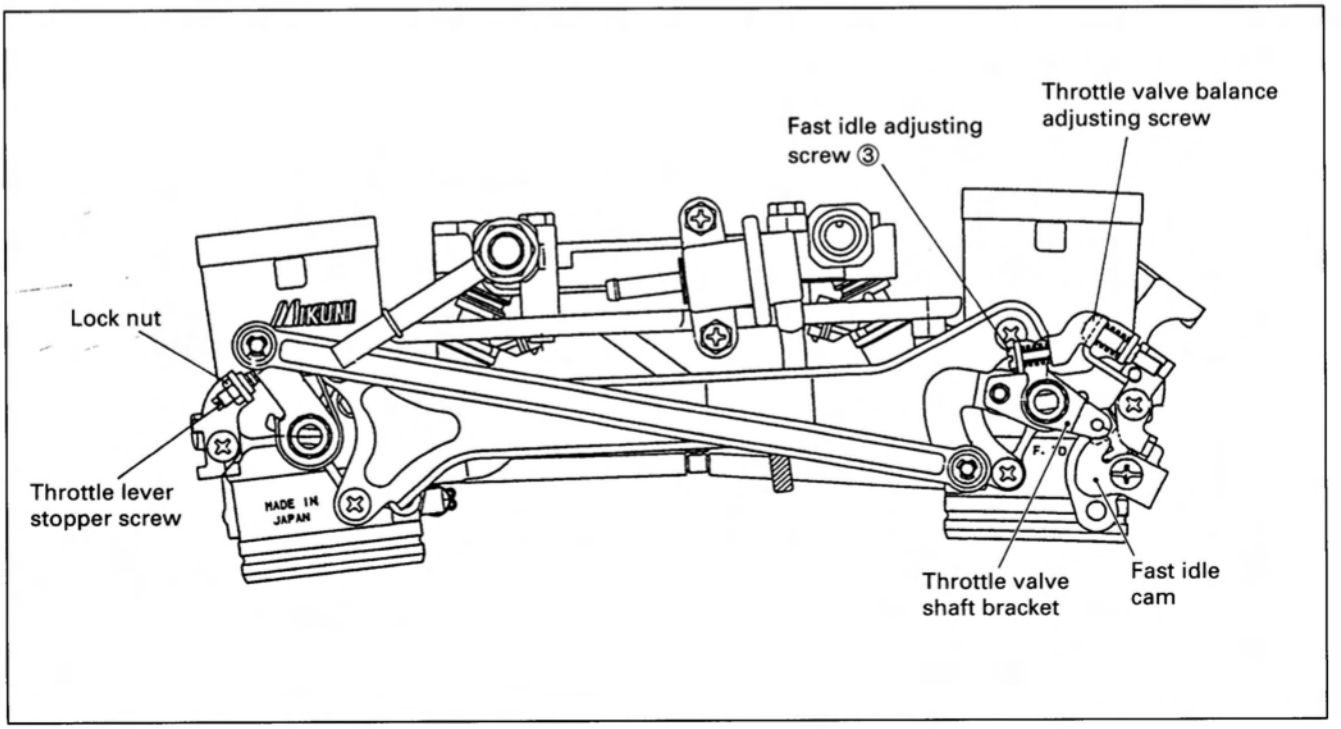

THROTTLE VALVE SYNCHRONIZATION

Check and adjust the throttle valve synchronization between front and rear cylinders.

CALIBRATING EACH GAUGE

- Lift and support the fuel tank. (See p.4-49.)
- Start up the engine and run it in idling condition for warming up.
- Stop the warmed-up engine.
- Disconnect the IAT sensor coupler ① and remove the IAT sensor from the air cleaner box.
- Connect the removed IAT sensor to its coupler and place it on the frame.
- Remove the IAP sensor mounting screw ②.
- Disconnect the VCSV coupler ③.
- Disconnect vacuum hose ④ from the VCSV.
- Disconnect the vacuum hose ⑤ from the VTV.
- Remove the air cleaner box. (See p.4-54 and 55.)
- Install the proper plug ⑥ into the vacuum hose ⑤ of the VTV.
- Remove the rubber cap ⑦ from the vacuum nipple on the front throttle body.
- Connect one of the two rubber hoses of the vacuum balancer gauge to the nipple ⑧ on the front throttle body.

TOOL 09913-13121: Vacuum balancer gauge

NOTE:

Each vacuum nipple size is different and it is necessary to use the same size of nipple. To adjust the nipple size, use the two hoses that is used for TL1000S throttle body to the fuel pressure regulator tri-connector. (See p.4-74.) The two pipes contains ϕ 1.0 jet inside, which applies measured vacuum to the gauge. And these two hoses are connected to the vacuum balancer gauge hose with proper same size joint as shown in the following illustration.

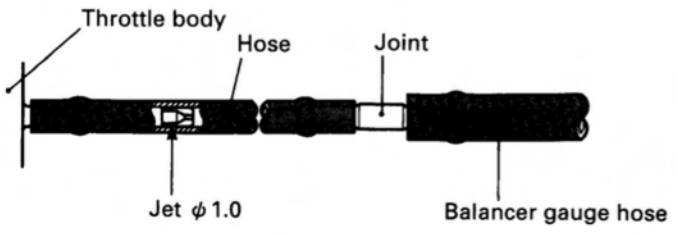

13682-02F00: Hose (2 pcs)
09493-20015: Jet ϕ 1.0 (2 pcs)
* Put the jet inside the hose and connect the hose to vacuum balancer gauge with proper same size joint.

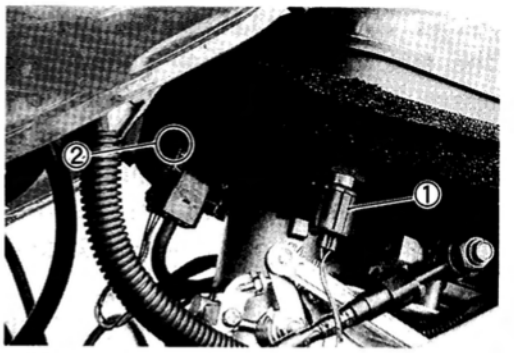

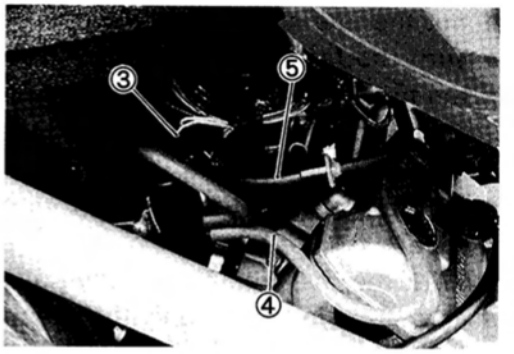

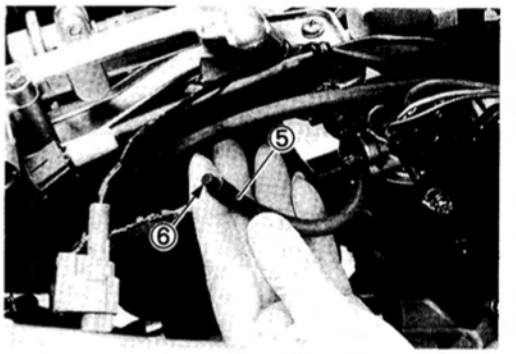



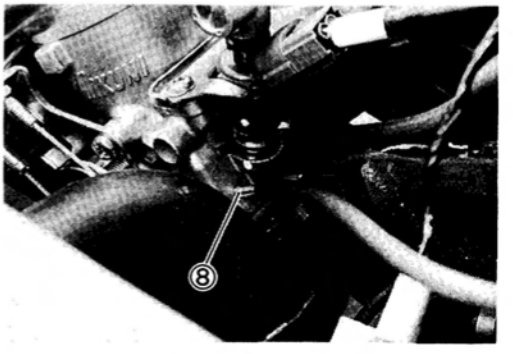

- Connect a tachometer.
- Start up the engine and keep it running at 1 200 rpm by turning throttle stop screw ①.

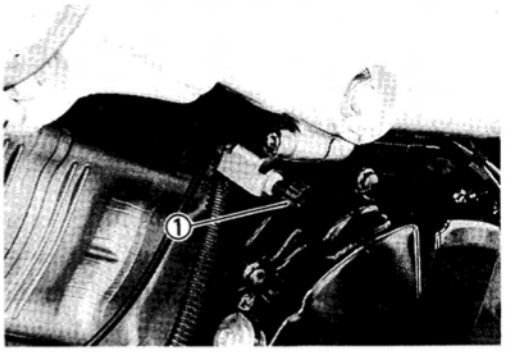

⚠ CAUTION

Avoid drawing dirt into the throttle body while running the engine without air cleaner box. Dirt drawn into the engine will damage the internal engine parts.

- Turn the air screw ② of the gauge so that the vacuum acting on the tube of that hose will bring the steel ball ③ in the tube to the center line ④.

NOTE:
The vacuum gauge is positioned approx. 30° from the horizontal level.

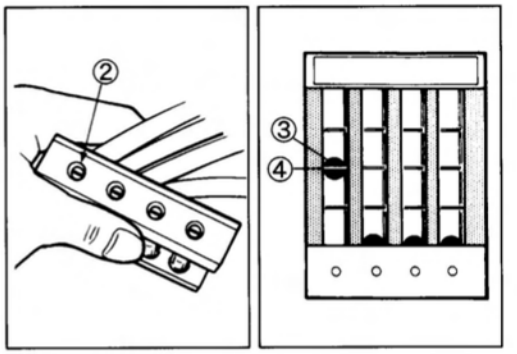

- After making sure that the steel ball stays steady at the center line, disconnect the hose from the front throttle body nipple and connect the next hose to this nipple.
- Turn air screw to bring the other steel ball ⑤ to the center line.

The balancer gauge is now ready for use in balancing the throttle valves.

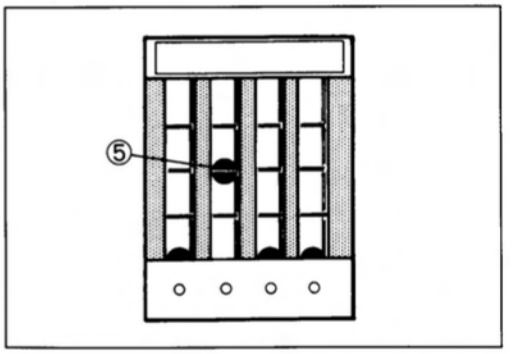

THROTTLE VALVE SYNCHRONIZATION

- To synchronize throttle valves, remove the rubber caps from each vacuum nipple and connect the vacuum balancer gauge hoses to the vacuum nipples.

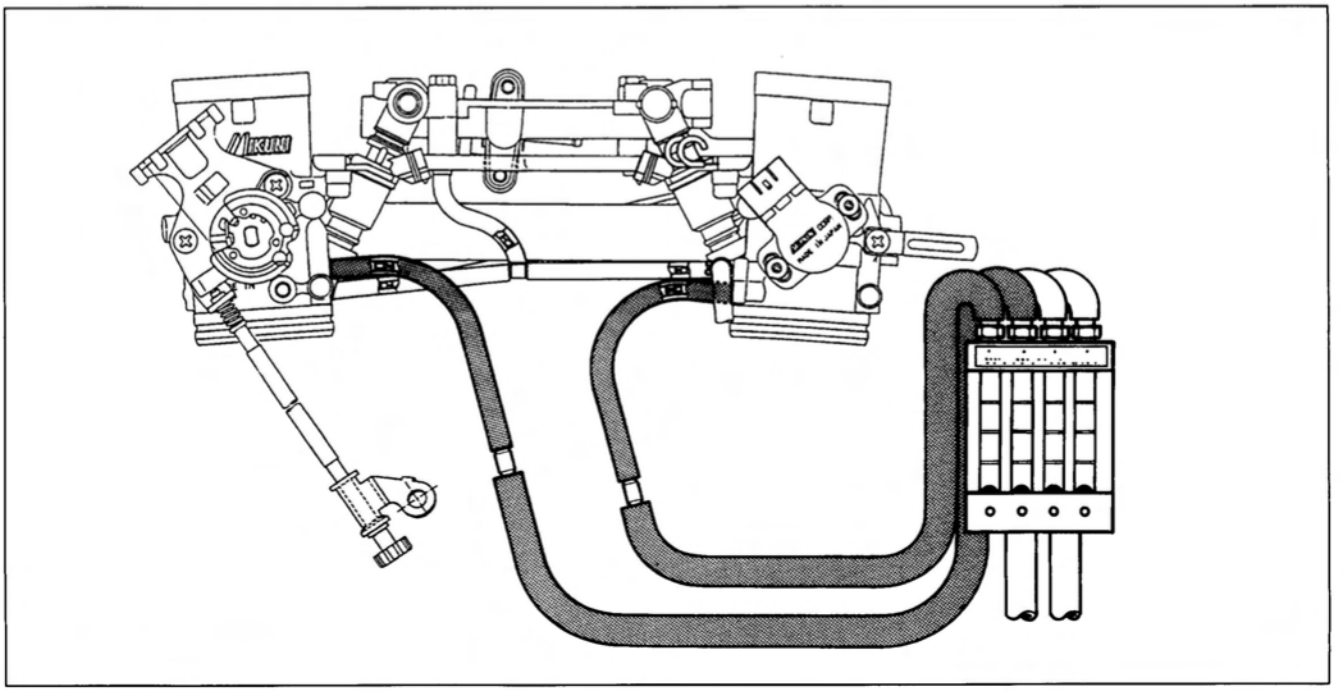

- Connect a tachometer and start up the engine.
- Bring the engine rpm to 1 200 rpm by the throttle stop screw.
- Check the vacuum of the two cylinders and balance the two throttle valves.

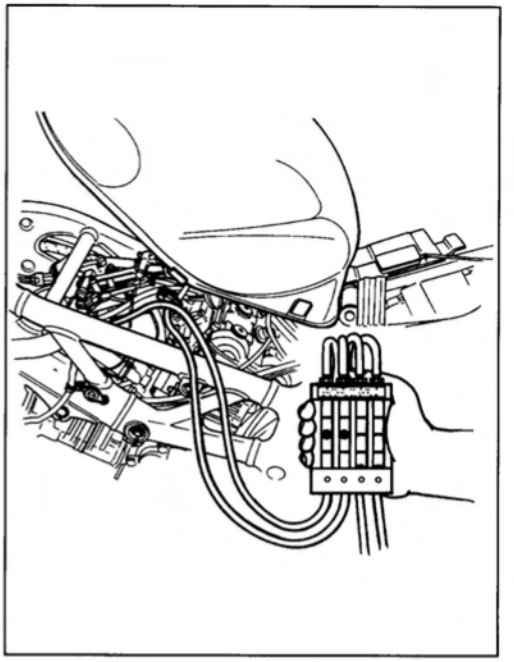

The vacuum gauge is positioned approx. 30° from the horizontal level, and in this position the two balls should be within one ball dia. If the difference is larger than one ball, turn the air screw on the throttle body and bring the ball to the same level.

NOTE:
Make sure that the throttle lever should have a gap (between throttle lever and throttle lever stopper screw) during synchronization.

When the vacuum difference is small (less than 20 mmHg = approx. one ball), use the air screw and balance the vacuum. The standard setting position of the air screw 1-1/2 turns out from seating position. After balancing the both valves, set the idle rpm to 1 200 rpm by the throttle stop screw after installing the air cleaner box.

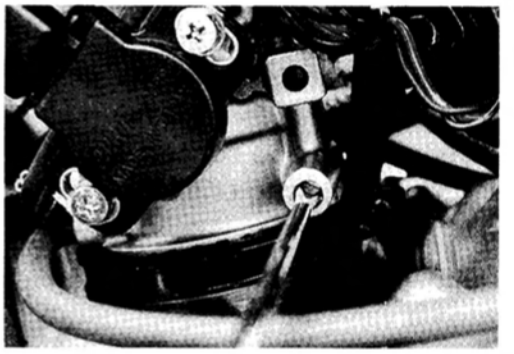

When the vacuum difference is large, use the throttle valve balance adjusting screw and balance the throttle valves.

NOTE:
During balancing the throttle valves, always keep the engine rpm at 1 200 rpm, using throttle stop screw.
For major balancing of the throttle valves, use the throttle valve balance adjusting screw, and minor adjustment is done by the air screws.

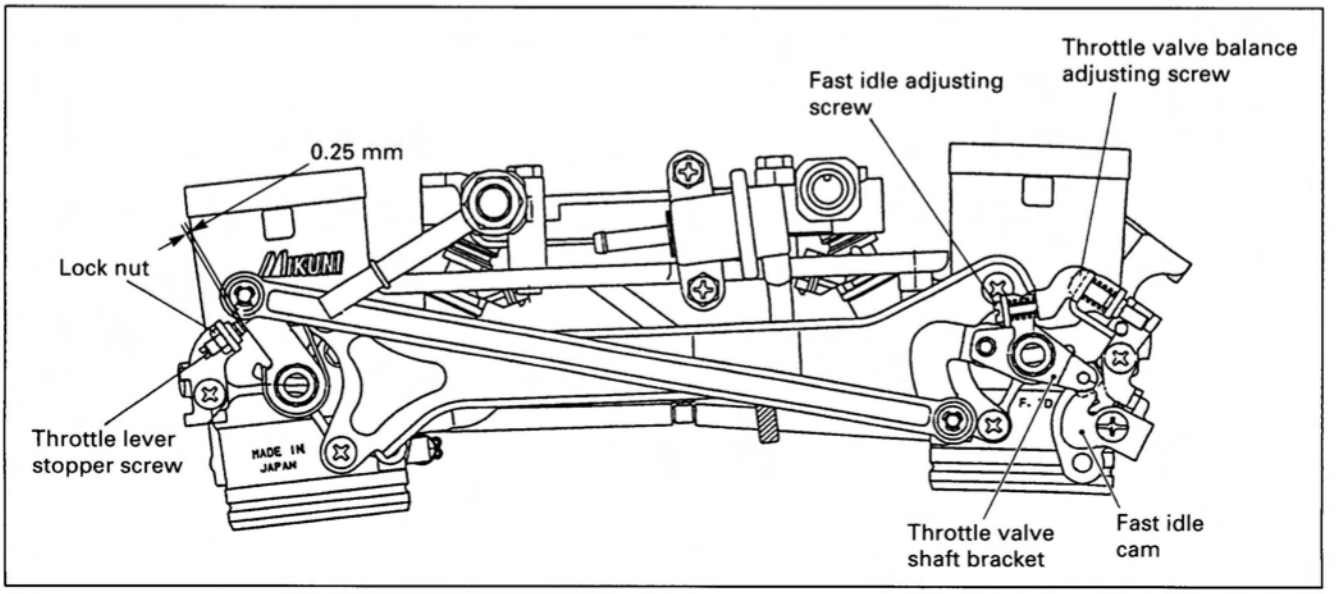

THROTTLE LEVER GAP ADJUSTMENT

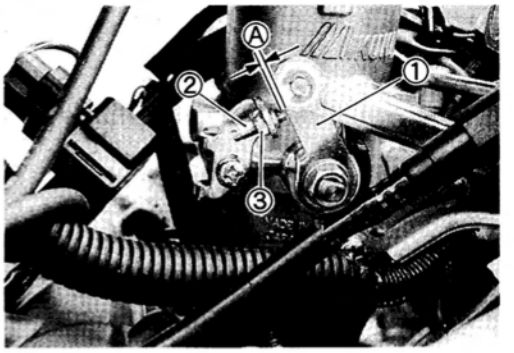

After adjusting the throttle valve synchronization and setting the idle speed, check the gap Ⓐ between lever ① and stopper screw ② to 0.25 mm.
If not, adjust the gap Ⓐ as follows.

- Loosen the lock nut ③, and tighten or loosen the stopper screw ② to obtain 0.25 mm of the gap Ⓐ.
  This screw works to prevent overshooting of the throttle valves.

Throttle lever GAP Ⓐ: 0.25 mm (0.010 in)

THROTTLE POSITION SENSOR (TPS) SETTING

After all adjustments are completed, check or adjust the TPS setting condition.
(Refer to page 4-29 for TPS setting procedure.)

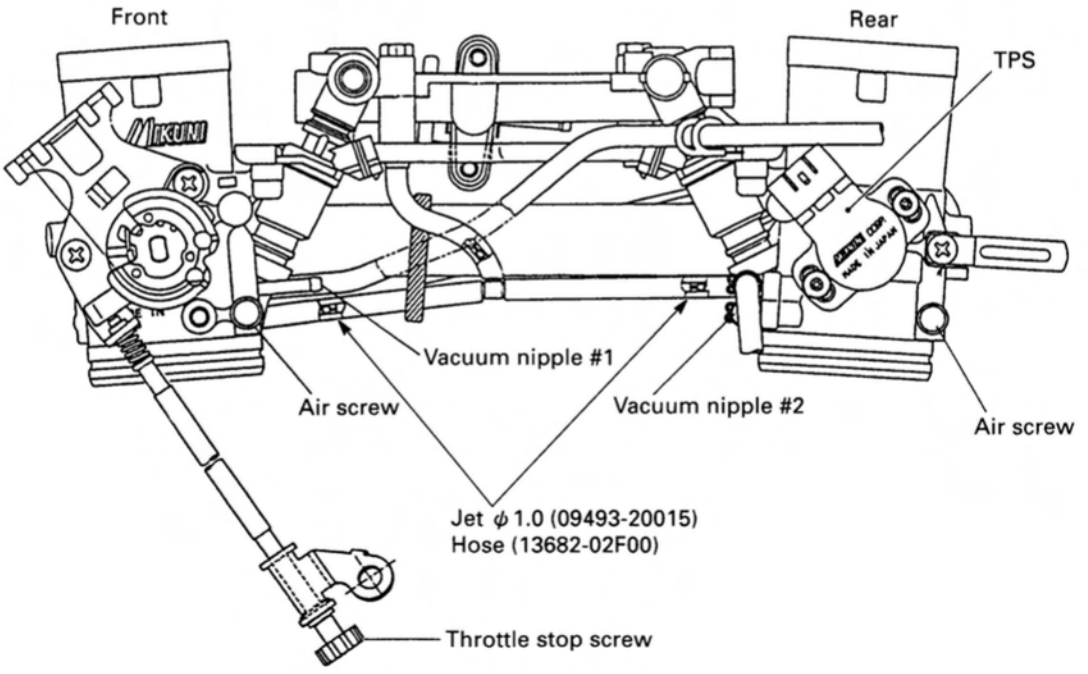

THROTTLE CABLE ADJUSTMENT

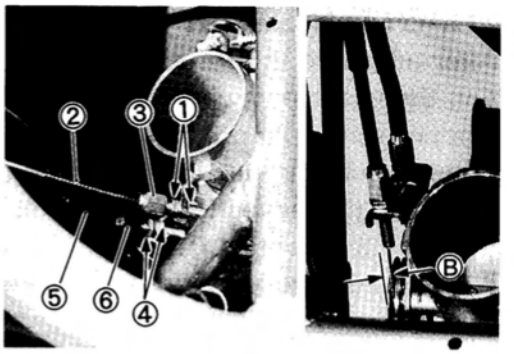

NOTE:
Minor adjustment can be made by the throttle grip side adjuster. (See p.2-13.)

MAJOR ADJUSTMENT

- Remove the air cleaner box. (See p.4-54 and 55.)
- Loosen the lock nuts ① of the throttle returning cable ②.
- Turn the returning cable adjuster ③ to obtain proper cable play.
- Loosen the lock nuts ④ of the throttle pulling cable ⑤.
- Turn the pulling cable adjuster ⑥ in or out until the throttle cable play Ⓐ of 2.0–4.0 mm (0.08–0.16 in) at the throttle grip is obtained.
- Tighten the lock nuts ④ securely while holding the adjuster ⑥.
- While holding the throttle grip at the fully closed position, slowly turn the returning cable adjuster ③ to obtain a cable slack Ⓑ of 1.0 mm (0.04 in).
- Tighten the lock nuts ① securely.

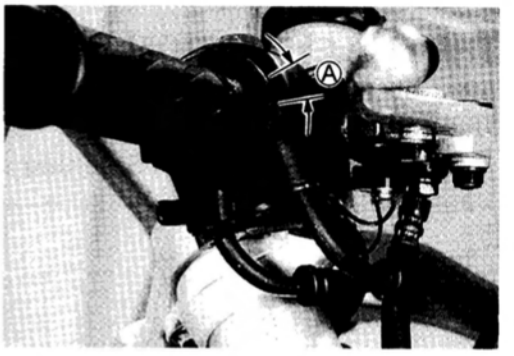

FAST IDLE CABLE ADJUSTMENT

- Lift and support the fuel tank with its prop stay. (See p.4-49.)
- With the fast idle cable fully-pulled, check the fast idle cam Ⓐ is touch with the stopper Ⓑ.
- If not, remove the air cleaner box (See p.4-54 and 55.) and adjust the fast idle cable.
- Loosen the lock nuts ① of the fast idle cable ②.
- Turn the cable adjuster ③ until the fast idle cam Ⓐ contacts the stopper Ⓑ.
- Tighten the lock nuts ① securely.

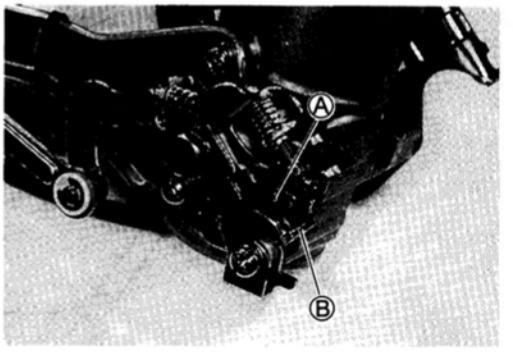

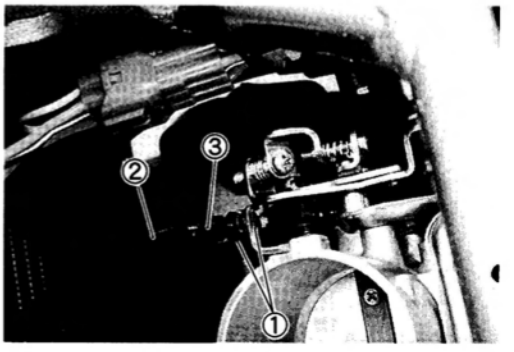

INTAKE AIR SYSTEM

INTAKE AIR SYSTEM INSPECTION

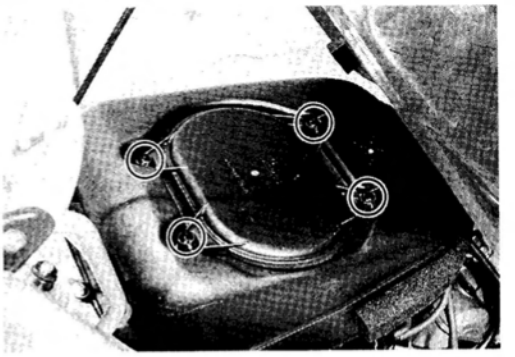

- Lift and support the fuel tank with its prop stay. (See p.4-49.)
- Remove the air cleaner element by removing the screws.
- Start up the engine and increase its speed gradually and check the RPM at which the intake air control valve begins to open.

Intake air control valve opening rpm: Above 4 000 rpm

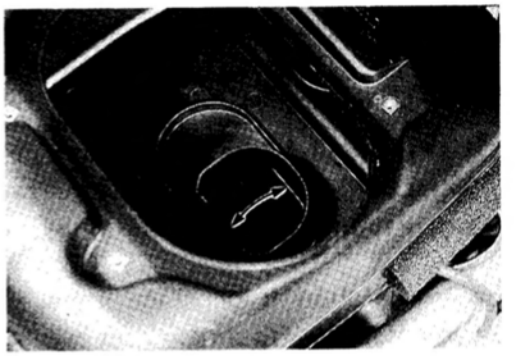

- Then, decrease the engine speed gradually and check the RPM at which the intake air control valve begins to close.

Intake air control valve closing rpm: Below 3 800 rpm

If they are not within the standard range, check the vacuum hoses for damage, clogging or pinching. If OK, then check the VCSV, VTV, diaphragm and vacuum damper.

VCSV INSPECTION

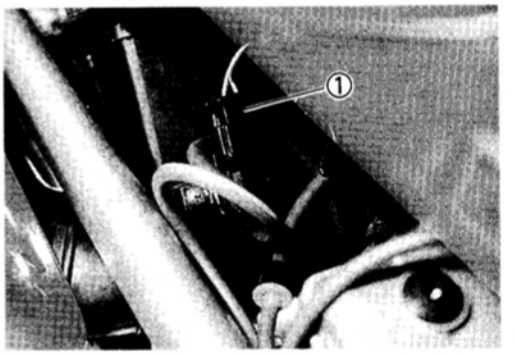

- Lift and support the fuel tank with its prop stay. (See p.4-49.)
- Disconnect the VCSV coupler ①.
- Measure the VCSV resistance.

Standard: 36–44Ω (Terminal–Terminal)

If the resistance is incorrect, replace the VCSV with a new one.

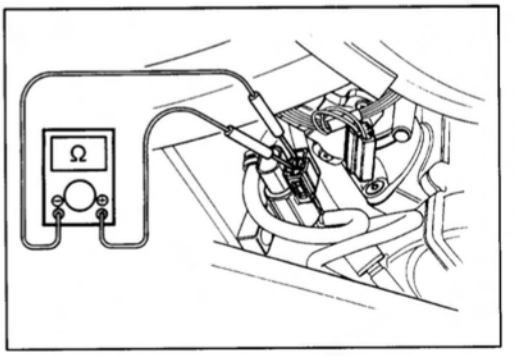

09900-25008: Multi circuit tester

Tester knob indication: Resistance (Ω)

VTV INSPECTION

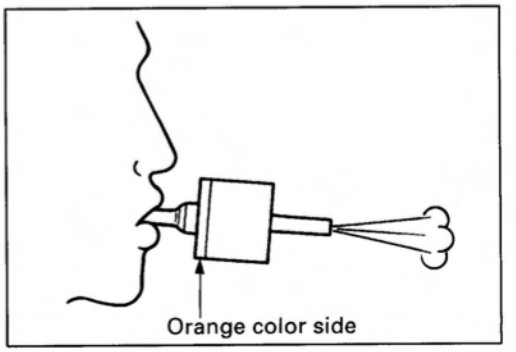

- Lift and support the fuel tank with its prop stay. (See p.4-49)
- Remove the VTV by disconnecting the vacuum hoses.
- Blow the VTV from the Orange color side. Air must flow out.
- Also, blow the VTV from opposite side. Air should not flow out.

If the operation is incorrect, replace the VTV with a new one.

INTAKE AIR CONTROL VALVE ACTUATOR INSPECTION

- Lift and support the fuel tank with its prop stay. (See p.4-49.)
- Remove the air cleaner element. (See p.4-76.)
- Disconnect the vacuum hose ① from the VCSV and connect the vacuum pump gauge to the disconnected vacuum hose ①.
- Apply vacuum with the vacuum pump gauge and check the intake air control valve operation.

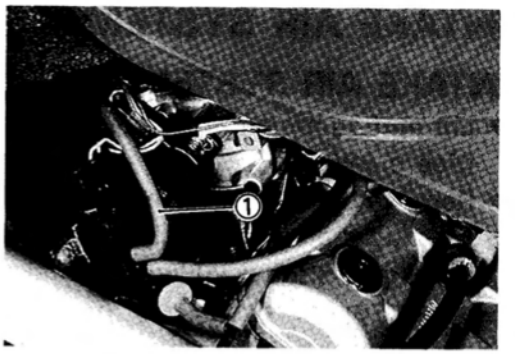

TOOL 09917-47910: Vacuum pump gauge

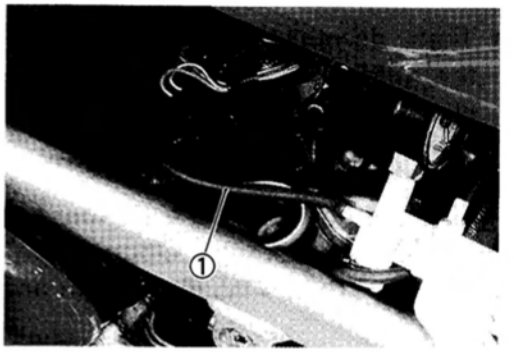

⚠ CAUTION

Use a hand operated vacuum pump. Do not apply high negative pressure (More than−180 mmHg) to prevent the diaphragm damage.

If the operation is incorrect, replace the intake air control valve actuator with a new one by removing the air cleaner box.

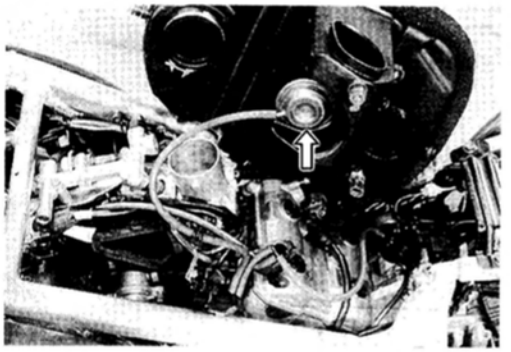



VACUUM DAMPER INSPECTION

- Lift and support the fuel tank with its prop stay. (See p.4-49.)

  Check the vacuum damper for damage and flaws or scratches, and replace it if necessary.

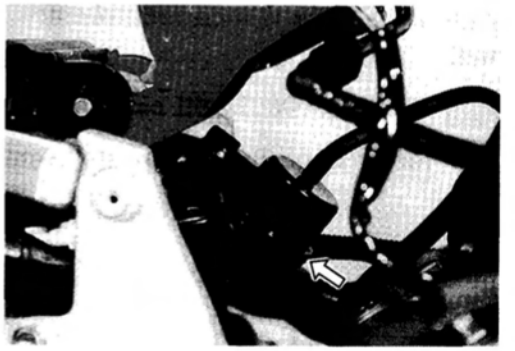

SENSORS

IAP SENSOR INSPECTION

The intake air pressure sensor is located at the rear side of the air cleaner box.
(See p.4-37.)

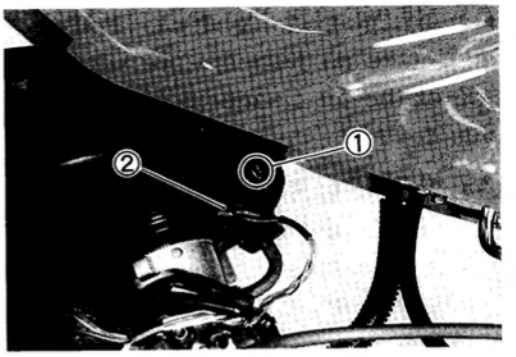

IAP SENSOR REMOVAL/INSTALLATION

- Lift and support the fuel tank.
- Remove the IAP sensor mounting screw ① and disconnect the coupler ②.
- Installation is in the reverse order of removal.

TP SENSOR INSPECTION

The throttle position sensor is installed on the No.2 throttle body.
(See p.4-39.)

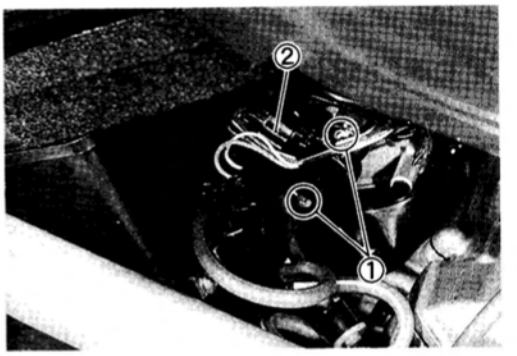

TP SENSOR REMOVAL/INSTALLATION

- Lift and support the fuel tank.
- Remove the TP sensor setting screws ① and disconnect the coupler ②.
- Install the TP sensor to the No.2 throttle valve shaft by aligning the lug Ⓐ on the shaft with a slot Ⓑ in the TP sensor. Refer to page 4-29 for TP sensor setting procedure.

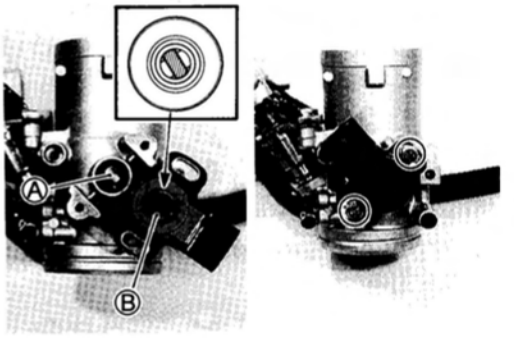

CKP SENSOR INSPECTION

The signal rotor is mounted on the left end of the crankshaft, and the crankshaft position sensor (Pick-up coil) is installed inside the generator cover.
(See p.4-36.)

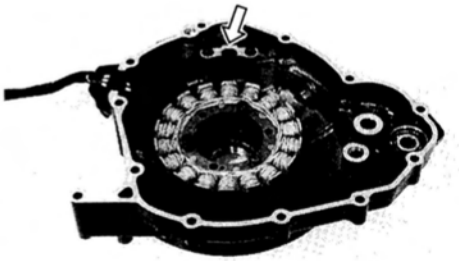

CKP SENSOR REMOVAL/INSTALLATION

(See p.3F-4.)

CMP SENSOR INSPECTION

The signal rotor is installed on the No.2 intake camshaft, and the camshaft position sensor (Pick-up coil) is installed on the No.2 cylinder head cover.
(See p.4-35.)

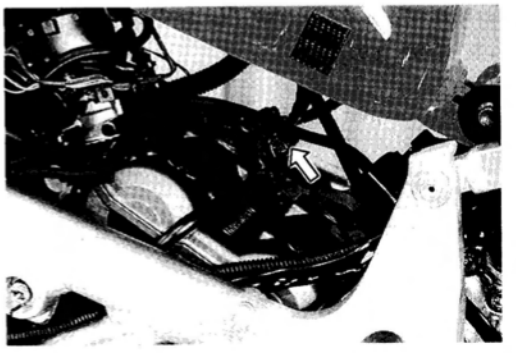

CMP SENSOR REMOVAL/INSTALLATION

- Lift and support the fuel tank.
  (See p.3-22 and 76.)

IAT SENSOR INSPECTION

The intake air temperature sensor is installed at the rear side of the air cleaner box.
(See p.4-42.)

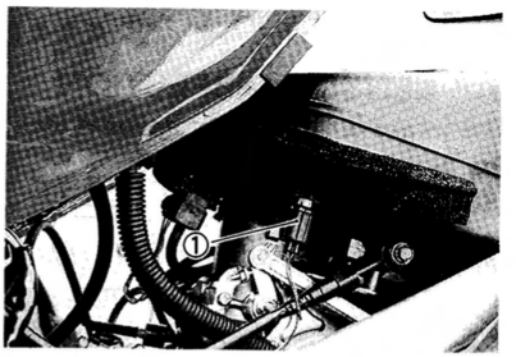

IAT SENSOR REMOVAL/INSTALLATION

- Lift and support the fuel tank.
- Disconnect the IAT sensor coupler ① and remove the IAT sensor from the air cleaner box.
- Installation is in the reverse order of removal.

IAT sensor: 18 N·m (1.8 kg-m, 13.0 lb-ft)

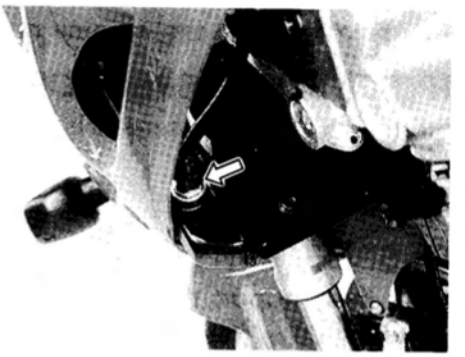

ECT SENSOR INSPECTION

The engine coolant temperature sensor is installed at the left side of the radiator.
(See p.4-41 and 5-10.)

ECT SENSOR REMOVAL/INSTALLATION

(See p.5-10 and 11.)

AP SENSOR INSPECTION

The atmospheric pressure sensor is located behind the left frame cover.
(See p.4-43.)

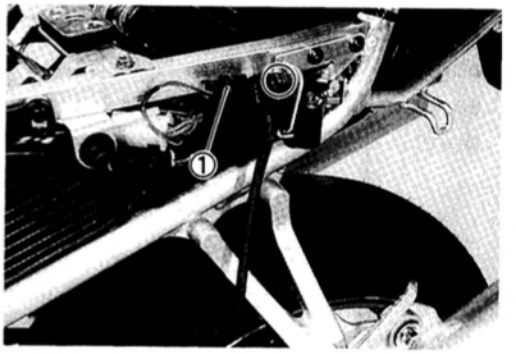

AP SENSOR REMOVAL/INSTALLATION

- Remove the frame cover. (See p.6-4.)
- Disconnect the coupler ① and remove the AP sensor from the frame.
- Installation is in the reverse order of removal.

TO SENSOR INSPECTION

The tip over sensor is located ahead of the battery.
(See p.4-45.)

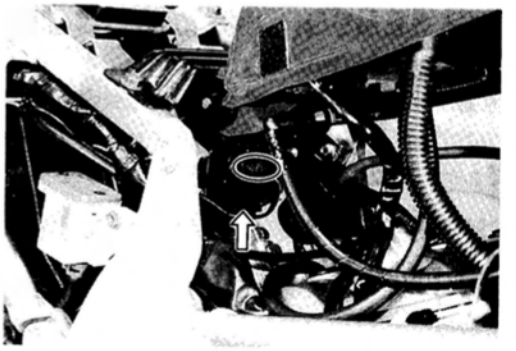

TO SENSOR REMOVAL/INSTALLATION

- Lift and support the fuel tank.
- Disconnect the coupler and remove the TO sensor from the frame.
- Installation is in the reverse order of removal.

NOTE:
When installing the TO sensor, bring the "UPPER" letter on it to the top.

COOLING SYSTEM

CONTENTS

COOLING SYSTEM 5- 1
DESCRIPTION 5- 1
CONSTRUCTION 5- 2
ENGINE COOLANT 5- 3
RADIATOR AND WATER HOSES 5- 4
REMOVAL 5- 4
INSPECTION 5- 5
REMOUNTING 5- 6
COOLING FAN 5- 7
REMOVAL 5- 7
INSPECTION 5- 7
REMOUNTING 5- 7
COOLING FAN THERMO-SWITCH 5- 8
REMOVAL 5- 8
INSPECTION 5- 9
INSTALLATION 5- 9
ENGINE COOLANT TEMPERATURE SENSOR 5-10
REMOVAL 5-10
INSPECTION 5-10
INSTALLATION 5-11
THERMOSTAT 5-11
REMOVAL 5-11
INSPECTION 5-12
INSTALLATION 5-12
WATER PUMP 5-12

COOLING SYSTEM

DESCRIPTION

The engine is cooled by engine coolant set in forced recirculation through jackets formed in the cylinder and cylinder head, and through the radiator. For the water pump, a high-capacity centrifugal pump is used. The radiator is a tube-and-fin type made of aluminum material, which is characterized by lightness in weight and good heat dissipation.

The thermostat is of wax pellet type, complete with a valve as the means of temperature-dependent control over the flow of engine coolant through the radiator. The valve is actuated by the temperature-sensitive wax contained in the pellet.

Referring to the following illustration, the thermostat is in the closed condition, so that engine coolant recirculates through the route comprising pump, engine, by-pass hole of the thermostat and radiator in the regulated condition.

As the coolant temperature rises to about 50°C (76.5°C for E-03, 28 and 33) and the thermostat valve unseats, the normal coolant flow is established. At about 65°C (90°C for E-03, 28 and 33) of coolant temperature, the thermostat becomes completely open and most of heat is released to the atmosphere through the radiator core.

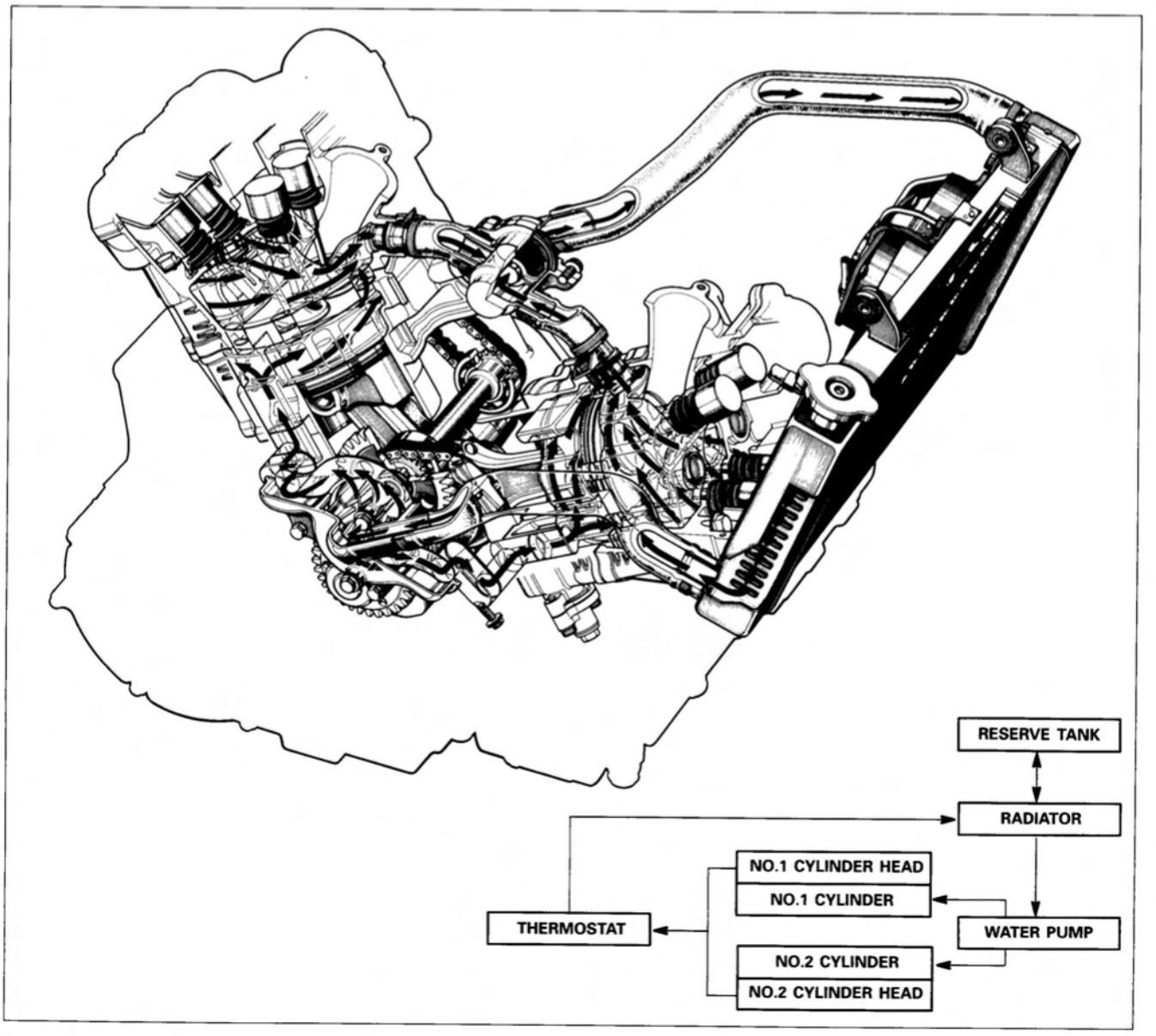

CONSTRUCTION

ITEM	N·m	kg-m	lb-ft
Ⓐ	6	0.6	4.5
Ⓑ	18	1.8	13.0
Ⓒ	6	0.6	4.5
Ⓓ	18	1.8	13.0

① Cooling fan
② Thermostat case
③ Radiator cap
④ Engine coolant reserve tank
⑤ Thermostat
⑥ Radiator
⑦ O-ring

Ⓐ Cooling fan mounting bolt
Ⓑ Cooling fan thermo-switch
Ⓒ Radiator mounting bolt
Ⓓ Engine coolant temperature sensor

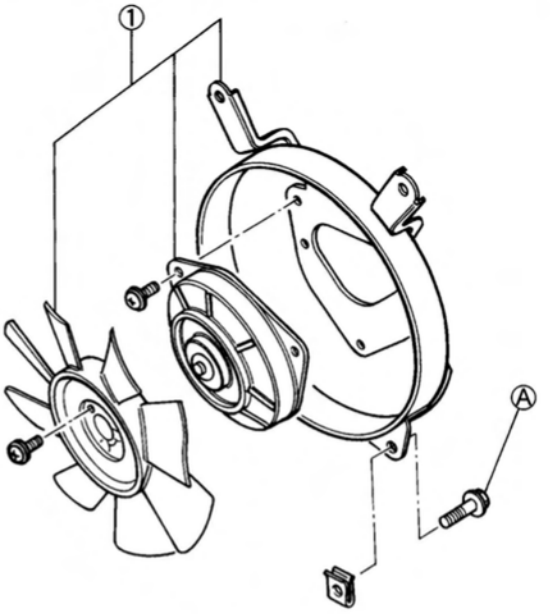

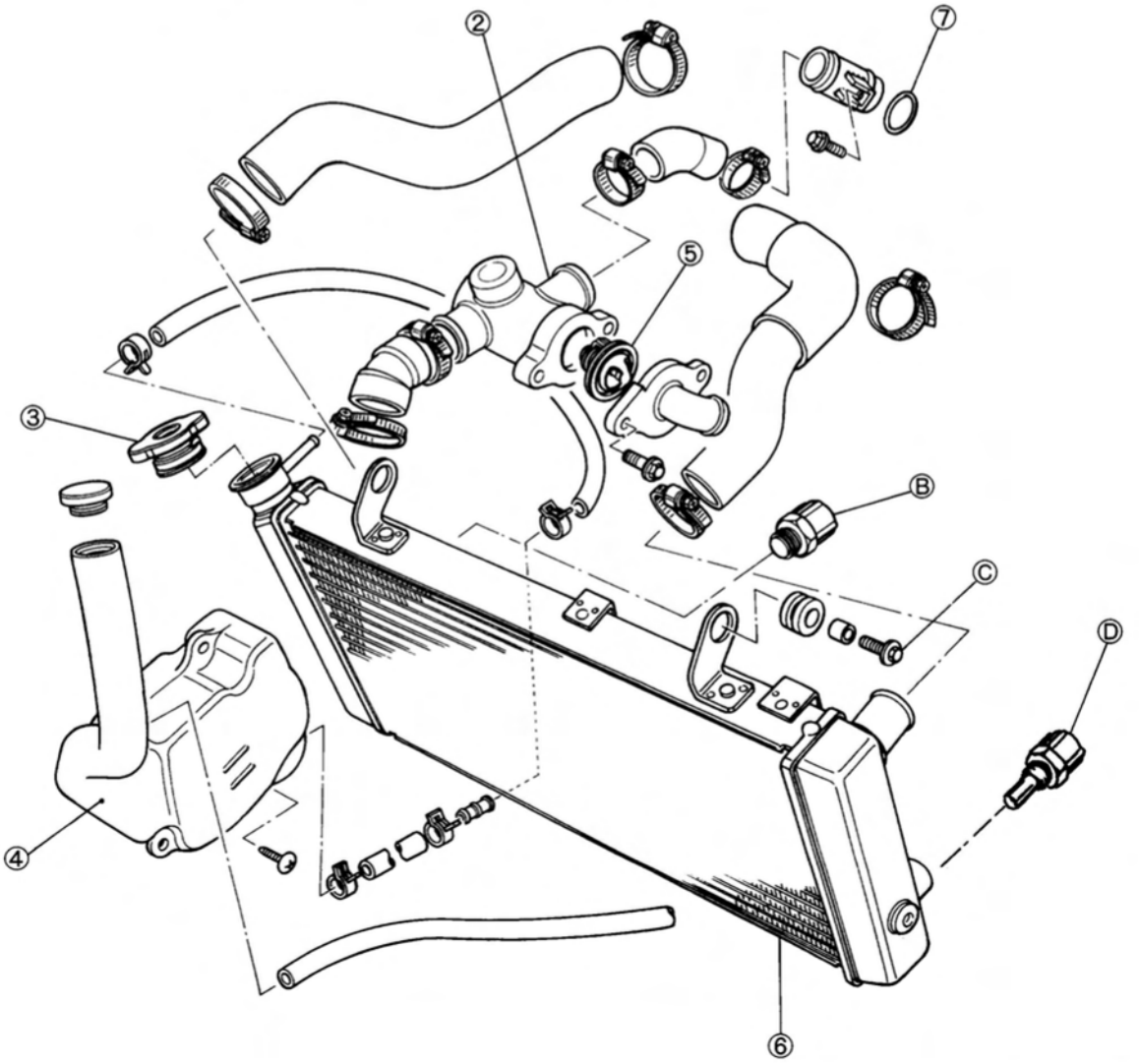

ENGINE COOLANT

At the time of manufacture, the cooling system is filled with a 50 : 50 mixture of distilled water and ethylene glycol anti-freeze. This 50 : 50 mixture will provide the optimum corrosion protection and excellent heat protection, and will protect the cooling system from freezing at temperatures above −31°C (−24°F).

If the motorcycle is to be exposed to temperatures below −31°C (−24°F), this mixing ratio should be increased up to 55% or 60% according to the figure.

Anti-freeze density	Freezing point
50%	−31°C (−24°F)
55%	−40°C (−40°F)
60%	−55°C (−67°F)

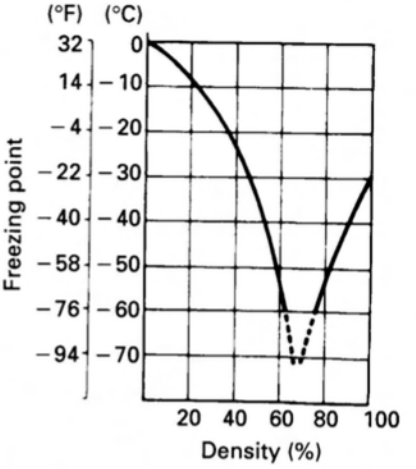

Fig. 1 Engine coolant density-freezing point curve.

⚠ CAUTION

- **Use a high quality ethylene glycol base anti-freeze, mixed with distilled water. Do not mix an alcohol base anti-freeze and different brands of anti-freeze.**
- **Do not put in more than 60% anti-freeze or less than 50%. (Refer to Right figure.)**
- **Do not use a radiator anti-leak additive.**

50% Engine coolant including reservoir capacity

Anti-freeze	1 100 ml (2.3/1.9 US/Imp. pt)
Water	1 100 ml (2.3/1.9 US/Imp. pt)

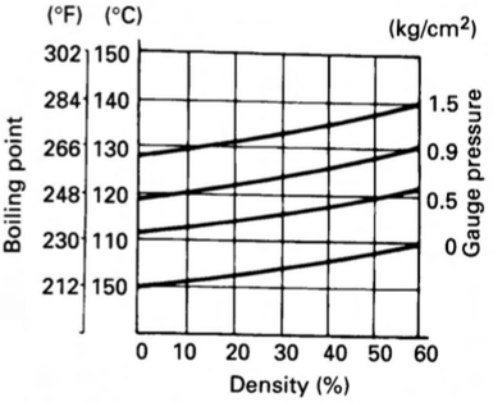

Fig. 2 Engine coolant density-boiling point curve.

⚠ WARNING

- *** You can be injured by scalding fluid or steam if you open the radiator cap when the engine is hot. After the engine cools, wrap a thick cloth around cap and carefully remove the cap by turning it a quarter turn to allow pressure to escape and then turn the cap all the way off.**
- *** The engine must be cool before servicing the cooling system.**
- *** Coolant is harmful;**
  - **If it comes in contact with skin or eyes, flush with water.**
  - **If swallowed accidentally, induce vomiting and call physician immediately.**
  - **Keep it away from children.**

RADIATOR AND WATER HOSES

REMOVAL

- Remove the upper fairing, left and right. (Refer to pages 6-1, and -2.)
- Remove the radiator cap ① and the water drain bolts ②, ③, and then drain engine coolant.

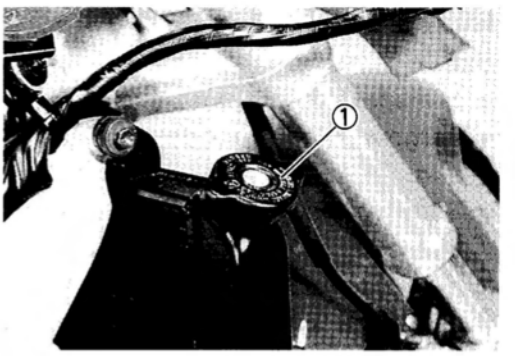

⚠WARNING

*** Do not open the radiator cap when the engine is hot, as you may be injured by escaping hot liquid or vapor.**

*** Engine coolant may be harmful if swallowed or if it comes in contact with skin or eyes. If engine coolant gets into the eyes or in contact with the skin, flush thoroughly with plenty of water. If swallowed, induce vomiting and call physician immediately!**

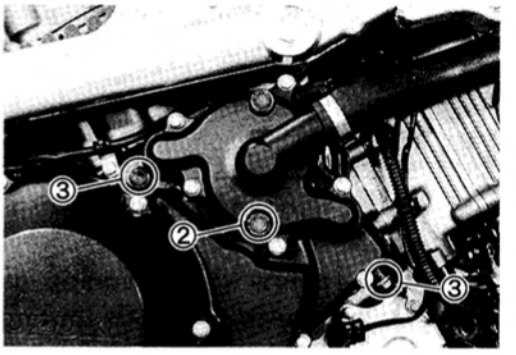

- Disconnect the cooling fan lead wire couplers.

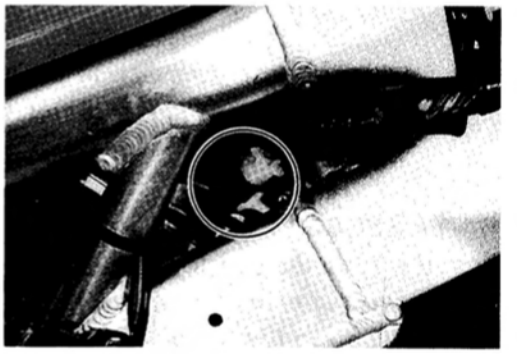

- Remove the water hoses from the radiator.
- Disconnect the cooling fan thermo-switch ④ and the engine coolant temperature sensor ⑤ lead wire couplers.
- Remove the radiator by removing its mounting bolts.
- Remove the water hoses by removing the clamps from the water pump and the thermostat case.

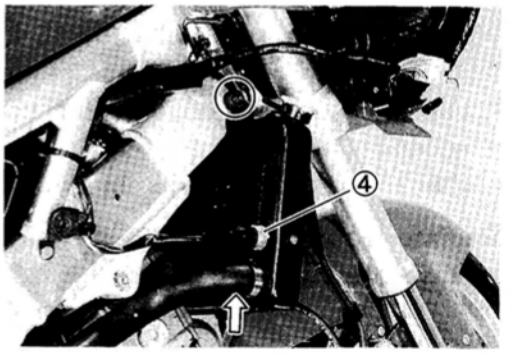

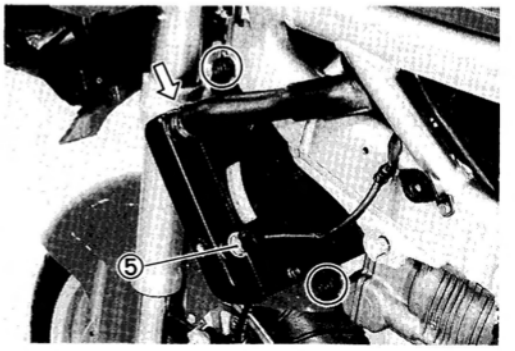

INSPECTION

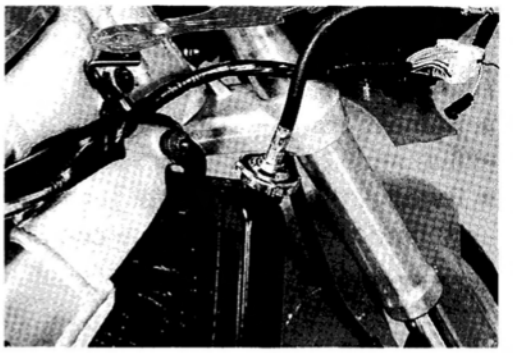

Before removing the radiator and draining the engine coolant, inspect the cooling system for tightness.

- Remove the right side upper fairing. (Refer to pages 6-1 and -2.)
- Remove the radiator cap and connect the tester ① to the filler.
- Give a pressure of about 120 kPa (1.2 kg/cm^2, 17 psi) and see if the system holds this pressure for 10 seconds. If the pressure should fall during this 10-second interval, it means that there is a leaking point in the system. In such a case, inspect the entire system and replace the leaking component or part.

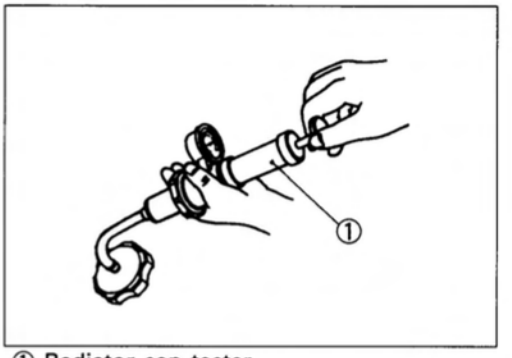

① Radiator cap tester

⚠ WARNING

*** Do not remove the radiator cap when the engine is hot.**
*** When removing the radiator cap tester, put a rag on the filler to prevent spouting of engine coolant.**

⚠ CAUTION

Do not allow the pressure to exceed the radiator cap release pressure, or the radiator can be damaged.

RADIATOR CAP INSPECTION

Test the radiator cap for release pressure by using the radiator cap tester in the following manner.

- Fit the cap to the tester, as shown, and build up pressure slowly by operating the tester. Make sure that the pressure build-up stops at 110 ± 15 kPa (1.1 ± 0.15 kg/cm^2, 15.6 ± 2.1 psi) and that, with the tester held standstill, the cap is capable of holding that pressure for at least 10 seconds. Replace the cap if it is found not to satisfy either of these two requirements.

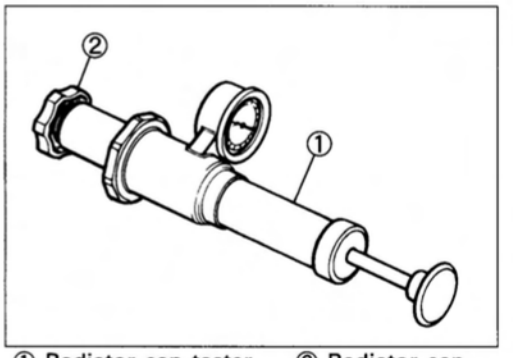

① Radiator cap tester ② Radiator cap

Radiator cap valve
release pressure: 110 ± 15 kPa
(1.1 ± 0.15 kg/cm^2, 15.6 ± 2.1 psi)

RADIATOR INSPECTION AND CLEANING

Road dirt or trash stuck to the fins must be removed. Use of compressed air is recommended for this cleaning. Fins bent down or dented can be repaired by straightening them with the blade of a small screwdriver.

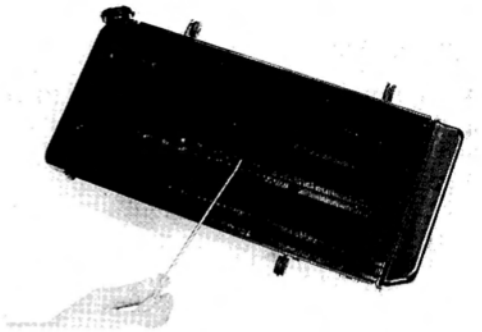

WATER HOSE INSPECTION

Any water hose found in a cracked condition or flattened must be replaced. Any leakage from the connecting section should be corrected by proper tightening.

REMOUNTING

Remount the radiator in the reverse order of its removal procedure. Pay attention to the following points:

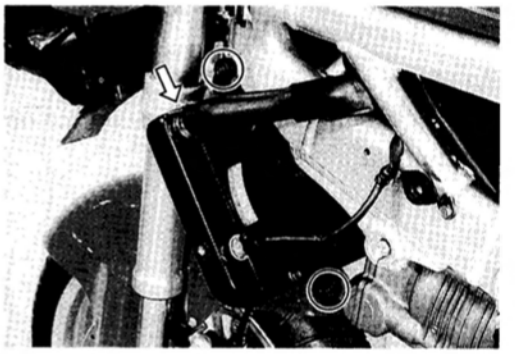

RADIATOR MOUNTING BOLT

- Tighten the radiator mounting bolts to the specified torque.

Radiator mounting bolt: 6 N·m (0.6 kg-m, 4.5 lb-ft)

- Be sure to route the water hoses. (Refer to page 8-26.)

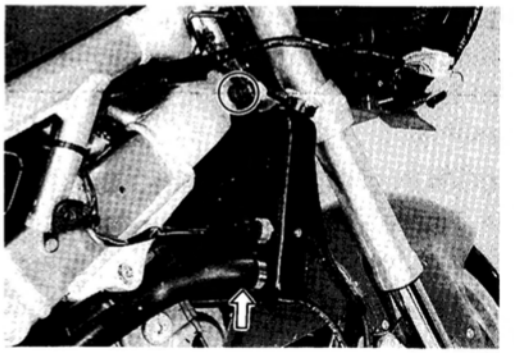

- After remounting the radiator, be sure to add engine coolant: refer to page 2-15 for refilling information.

Water drain bolt (M6): 5.5 N·m (0.55 kg-m, 4.0 lb-ft)
(M8): 13 N·m (1.3 kg-m, 9.5 lb-ft)
Air bleeder bolt (M8): 13 N·m (1.3 kg-m, 9.5 lb-ft)

COOLING FAN

REMOVAL

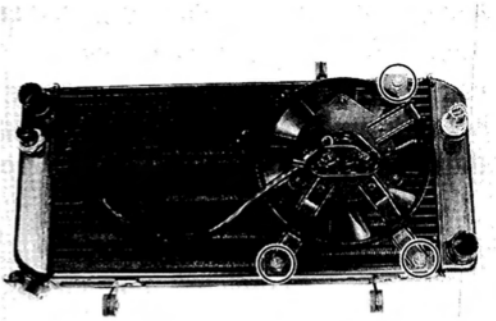

- Remove the radiator. (Refer to page 5-4.)
- Remove the cooling fan.

INSPECTION

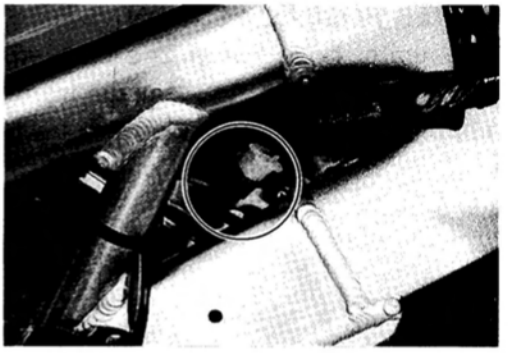

- Remove the upper fairing. (Refer to pages 6-1 and -2.)
- Remove the cooling fan lead wire coupler.

Test the cooling fan motor for load current with an ammeter connected as shown in the illustration.
The voltmeter is for making sure that the battery applies 12 volts to the motor. With the motor with electric motor fan running at full speed, the ammeter should be indicating not more than 5 amperes.
If the fan motor does not turn, replace the motor assembly with a new one.

NOTE:
When making above test, it is not necessary to remove the cooling fan.

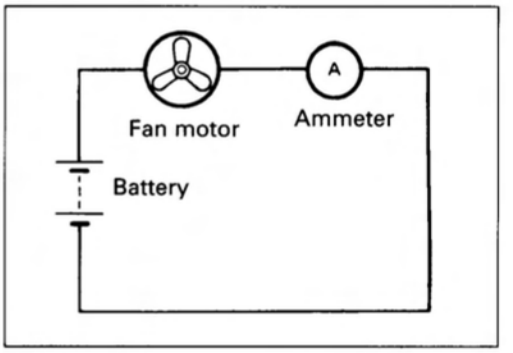

REMOUNTING

Remount the radiator and cooling fan in the reverse order of their removal procedure. Pay attention to the following points:

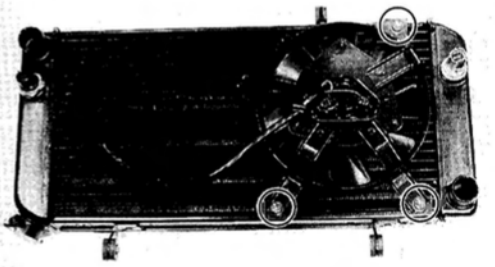

COOLING FAN MOUNTING BOLT AND NUT

- Tighten the cooling fan mounting bolt to the specified torque.

Cooling fun mounting bolt: 6 N·m (0.6 kg-m, 4.5 lb-ft)

RADIATOR MOUNTING BOLT

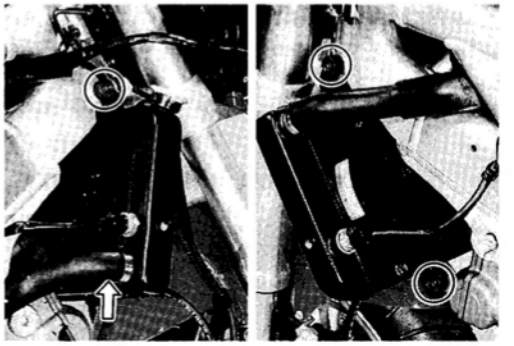

- Tighten the radiator mounting bolts to the specified torque.

Radiator mounting bolt: 6 N·m (0.6 kg-m, 4.5 lb-ft)

- Be sure to route the water hoses. (Refer to page 8-26.)
- After remounting the radiator, be sure to add engine coolant: refer to page 2-15 for refilling information.

Water drain bolt (M6): 5.5 N·m (0.55 kg-m, 4.0 lb-ft)
(M8): 13 N·m (1.3 kg-m, 9.5 lb-ft)
Air bleeder bolt (M8): 13 N·m (1.3 kg-m, 9.5 lb-ft)

COOLING FAN THERMO-SWITCH

The cooling fan, being located behind the radiator, is secured to the radiator by three bolts. The fan drive motor is automatically controlled by the thermo-switch. This switch remains open when the temperature of engine coolant is low, but it closes at about 105°C (221°F) of rising engine coolant temperature to set the fan in motion.

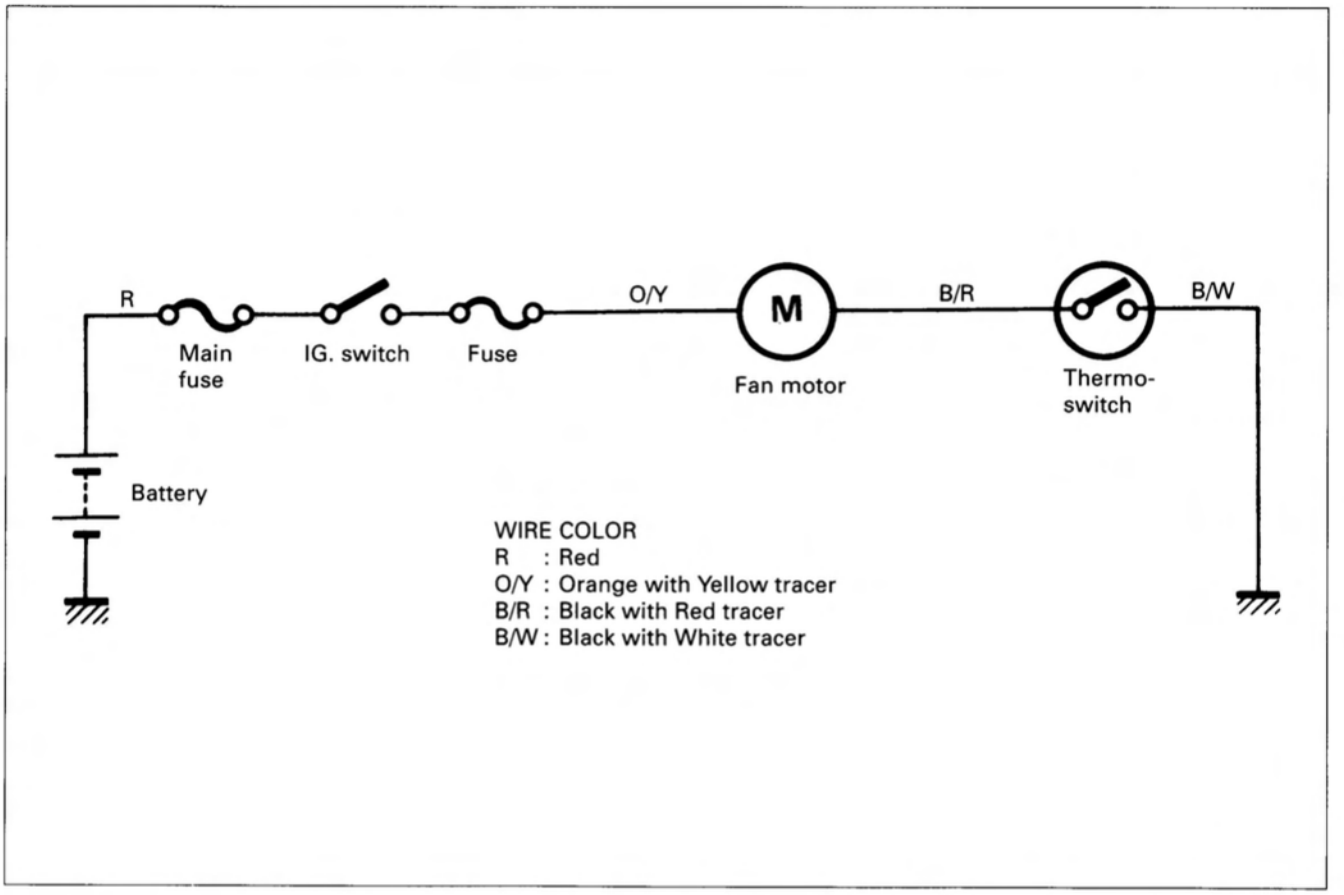

REMOVAL

- Remove the right side upper fairing. (Refer to pages 6-1 and -2.)
- Remove the radiator cap ① and the water drain bolts ②, ③, and then drain engine coolant.

⚠WARNING

*** Do not open the radiator cap when the engine is hot, as you may be injured by escaping hot liquid or vapor.**

*** Coolant may be harmful if swallowed or if it comes in contact with skin or eyes. If coolant gets into the eyes or in contact with the skin, flush thoroughly with plenty of water. If swallowed, induce vomiting and call physician immediately!**

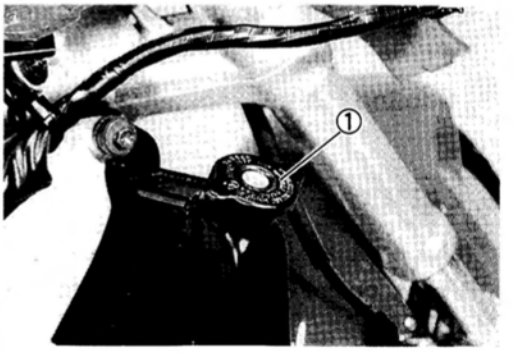

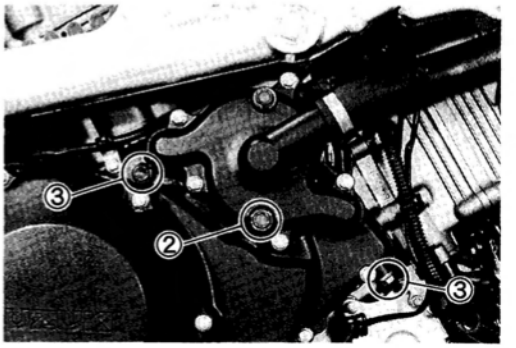

- Disconnect the cooling fan thermo-switch lead wire coupler.
- Remove the cooling fan thermo-switch ①.

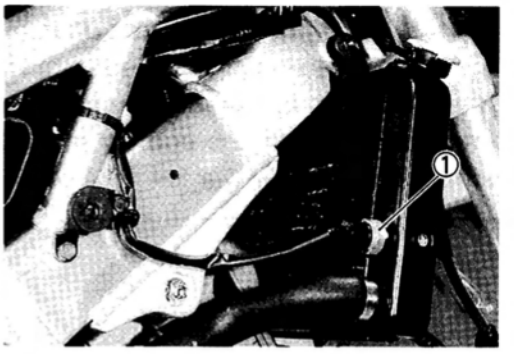

INSPECTION

The thermo-switch must be checked for its temperature-initiated closing action at the specification value of 105°C (221°F) by testing it at the bench as shown in the figure. Connect the thermo-switch to a circuit tester and place it in the oil contained in a pan, which is placed on a stove; heat the oil to raise its temperature slowly, and read the column thermometer when the switch closes.

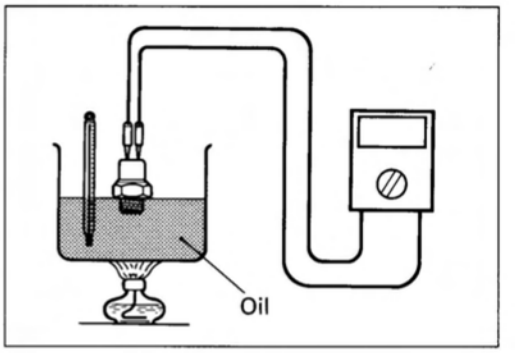

09900-25008: Multi circuit tester set

Tester knob indication: Continuity test (•))))

Thermo-switch specification

OFF → ON	Approx. 105°C (221°F)
ON → OFF	Approx. 100°C (212°F)

INSTALLATION

- Apply grease to the O-ring.

99000-25030: SUZUKI SUPER GREASE "A"

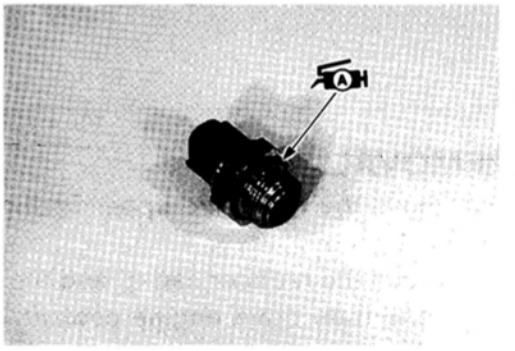

- Tighten the cooling fan thermo-switch to the specified torque.

Cooling fan thermo-switch: 18 N·m (1.8 kg-m, 13.0 lb-ft)

⚠ CAUTION

Take special care when handling the thermo-switch. It may cause damage if it gets a sharp impact.

- After installing the cooling fan thermo-switch, be sure to add engine coolant: refer to page 2-15 for refilling information.

Water drain bolt (M6): 5.5 N·m (0.55 kg-m, 4.0 lb-ft)
(M8): 13 N·m (1.3 kg-m, 9.5 lb-ft)
Air bleeder bolt (M8): 13 N·m (1.3 kg-m, 9.5 lb-ft)

ENGINE COOLANT TEMPERATURE SENSOR

REMOVAL

- Remove the right side upper fairing. (Refer to pages 6-1 and -2.)
- Remove the radiator cap ① and the water drain bolts ②, ③, and then drain engine coolant.

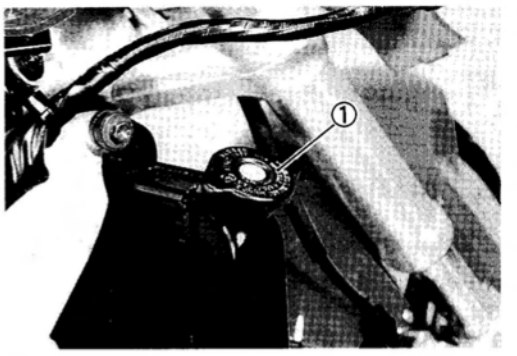

⚠ WARNING

*** Do not open the radiator cap when the engine is hot, as you may be injured by escaping hot liquid or vapor.**

*** Coolant may be harmful if swallowed or if it comes in contact with skin or eyes. If coolant gets into the eyes or in contact with the skin, flush thoroughly with plenty of water. If swallowed, induce vomiting and call physician immediately!**

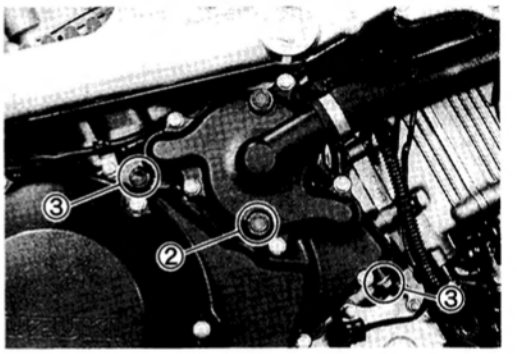

- Disconnect the lead wire connector.
- Remove the engine coolant temperature sensor ④.

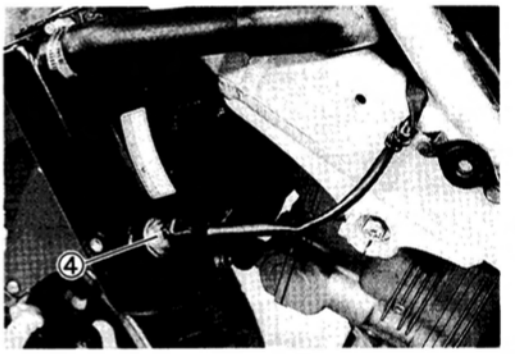

INSPECTION

Test the temperature gauge sensor at the bench to see if its ohmic value changes, as specified, with temperature. The test is to be run as follows: Connect the temperature sensor to the ohmmeter and place it in the oil contained in a pan, which is placed on a stove; heat the oil to raise its temperature slowly, reading the thermometer placed in the pan and also the ohmmeter. The temperature sensor whose ohmic value does not change in the proportion indicated in the table must be replaced.

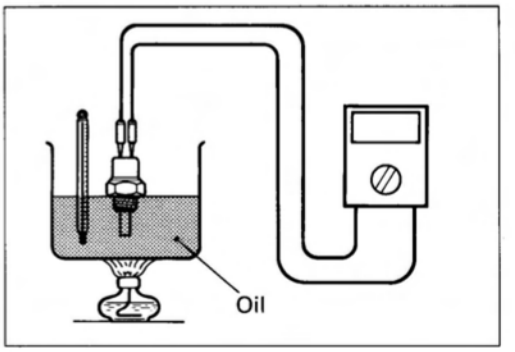

TOOL 09900-25008: Multi circuit tester set

Temperature sensor specification

Temperature	Standard resistance
20°C (68°F)	Approx. 2.45 kΩ
50°C (122°F)	Approx. 0.811 kΩ
80°C (176°F)	Approx. 0.318 kΩ
110°C (230°F)	Approx. 0.142 kΩ
130°C (266°F)	Approx. 0.088 kΩ

If the resistance noted to show infinity or too much different resistance value, temperature sensor must be replaced. For inspecting the engine coolant temperature meter and indicator, refer to pages 7-28 and -29.

INSTALLATION



- Tighten the engine coolant temperature sensor to the specified torque.

Engine coolant temperature sensor: 18 N·m (1.8 kg-m, 13.0 lb-ft)

⚠ CAUTION

Take special care when handling the temperature sensor. If may cause damage if it gets a sharp impact.

- After installing the engine coolant temperature sensor, be sure to add engine coolant: refer to page 2-15 for re-filling information.

Water drain bolt (M6): 5.5 N·m (0.55 kg-m, 4.0 lb-ft)
(M8): 13 N·m (1.3 kg-m, 9.5 lb-ft)
Air bleeder bolt (M8): 13 N·m (1.3 kg-m, 9.5 lb-ft)

THERMOSTAT

REMOVAL

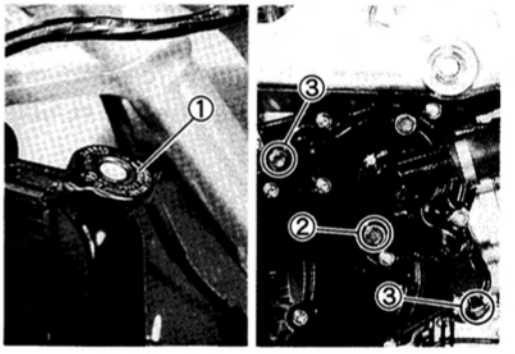

- Remove the right side upper fairing and the front seat. (Refer to pages 6-1, -2 and -4.)
- Remove the radiator cap ① and the water drain bolts ②, ③, and then drain engine coolant.

⚠ WARNING

*** Do not open the radiator cap when the engine is hot, as you may be injured by escaping hot liquid or vapor.**
*** Coolant may be harmful if swallowed or if it comes in contact with skin or eyes. If coolant gets into the eyes or in contact with the skin, flush thoroughly with plenty of water. If swallowed, induce vomiting and call physician immediately!**

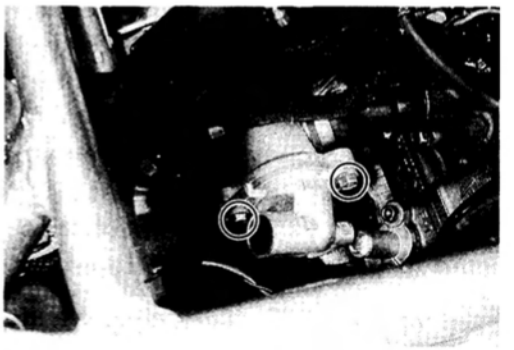

- Lift and support the fuel tank. (Refer to page 4-49.)
- Remove the air cleaner box. (Refer to pages 4-54 and -55.)
- Remove the water hose from the thermostat case.
- Remove the thermostat case bolts.
- Remove the thermostat.

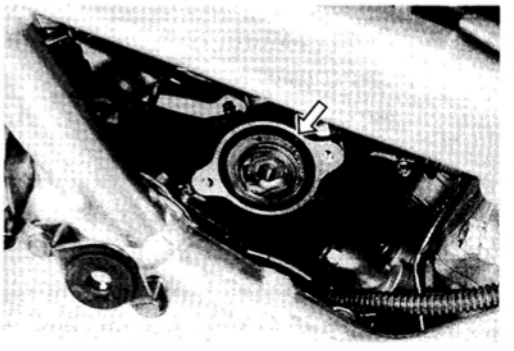

INSPECTION

Inspect the thermostat pellet for signs of cracking.

Test the thermostat at the bench for control action, in the following manner.

- Pass a string between flange, as shown in the illustration.
- Immerse the thermostat in the water contained in a beaker, as shown in the illustration. Note that the immersed thermostat is in suspension. Heat the water by placing the beaker on a stove and observe the rising temperature on a thermometer.
- Read the thermometer just when opening the thermostat. This reading, which is the temperature level at which the thermostat valve begins to open, should be within the standard value.

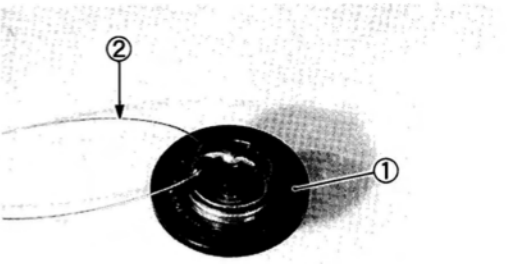

① Thermostat ② String

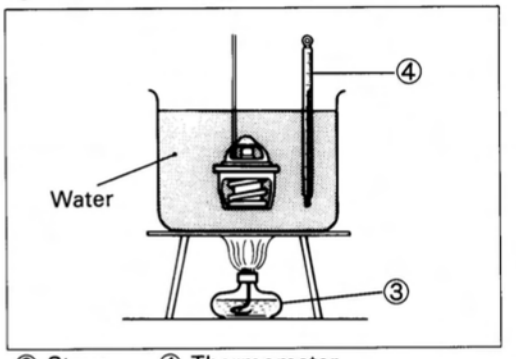

③ Stove ④ Thermometer

Standard
Thermostat valve opening temperature
(E-03, 28, 33): 74.5–78.5°C (166.1–173.3°F)
(Others): 48–52°C (118.4–125.6°F)

- Keep on heating the water to raise its temperature.
- Just when the water reaches specified value, the thermostat valve should have lifted by at least 7.0 mm (0.28 in).

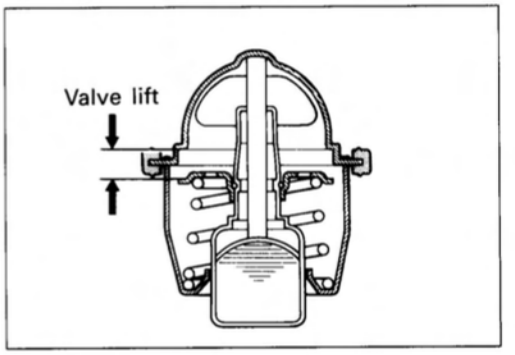

Standard
Thermostat valve lift
(E-03, 28, 33): Over 7.0 mm at 90°C (Over 0.28 in at 194°F)
(Others): Over 7.0 mm at 65°C (Over 0.28 in at 149°F)

- A thermostat failing to satisfy either of the two requirements (start-to-open temperature and valve lift) must be replaced.

INSTALLATION

Install the thermostat in the reverse order of their removal procedure. Pay attention to the following points.

- Apply grease to the rubber seal on the thermostat.

99000-25030: SUZUKI SUPER GREASE "A"

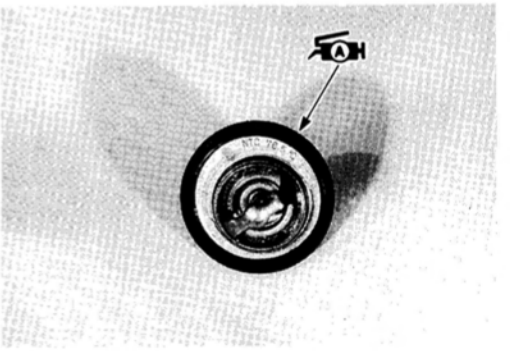

- The air bleeder hole Ⓐ of the thermostat faces upside.
- Be sure to route the water hose. (Refer to page 8-26.)
- After installing the thermostat, be sure to add engine coolant: refer to page 2-15 for refilling information.

Water drain bolt (M6): 5.5 N·m (0.55 kg-m, 4.0 lb-ft)
(M8): 13 N·m (1.3 kg-m, 9.5 lb-ft)
Air bleeder bolt (M8): 13 N·m (1.3 kg-m, 9.5 lb-ft)

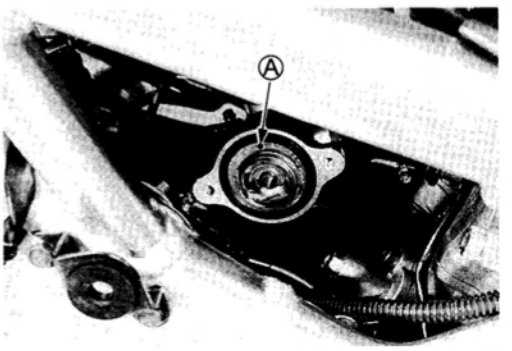

WATER PUMP

Refer to the section 3D for the water pump servicing.

CHASSIS

CONTENTS

EXTERIOR PARTS 6- 1
CONSTRUCTION 6- 1
REMOVAL 6- 1
REMOUNTING 6- 4
FRONT WHEEL 6- 5
CONSTRUCTION 6- 5
REMOVAL 6- 7
INSPECTION AND DISASSEMBLY 6- 7
REASSEMBLY AND REMOUNTING 6- 9
FRONT FORK 6-11
CONSTRUCTION 6-11
REMOVAL AND DISASSEMBLY 6-12
INSPECTION 6-14
REASSEMBLY AND REMOUNTING 6-15
SUSPENSION SETTING 6-19
STEERING 6-20
CONSTRUCTION 6-20
REMOVAL AND DISASSEMBLY 6-20
INSPECTION AND DISASSEMBLY 6-23
REASSEMBLY AND REMOUNTING 6-24
STEERING TENSION ADJUSTMENT 6-26
REAR WHEEL 6-27
CONSTRUCTION 6-27
REMOVAL 6-29
INSPECTION AND DISASSEMBLY 6-30
REASSEMBLY AND REMOUNTING 6-31
REAR SUSPENSION 6-33
DESCRIPTION 6-33
CONSTRUCTION 6-35
ROTARY DAMPER AND SPRING UNIT REMOVAL 6-37
ROTARY DAMPER AND SPRING UNIT INSPECTION AND DISASSEMBLY 6-39
ROTARY DAMPER AND SPRING UNIT REASSEMBLY AND REMOUNTING 6-40
SUSPENSION SETTING 6-42
REAR SWINGARM REMOVAL 6-43
REAR SWINGARM INSPECTION AND DISASSEMBLY 6-45
REAR SWINGARM REASSEMBLY AND REMOUNTING 6-46
FINAL INSPECTION AND ADJUSTEMNT 6-47
FRONT BRAKE 6-48
CONSTRUCTION 6-48
BRAKE PAD REPLACEMENT 6-49
BRAKE FLUID REPLACEMENT 6-49
CALIPER REMOVAL AND DISASSEMBLY 6-50
CALIPER INSPECTION 6-51
CALIPER REASSEMBLY AND REMOUNTING 6-51
DISC SERVICING 6-52
MASTER CYLINDER REMOVAL AND DISASSEMBLY 6-53
MASTER CYLINDER INSPECTION 6-54
MASTER CYLINDER REASSEMBLY AND REMOUNTING 6-54
REAR BRAKE 6-56
CONSTRUCTION 6-56
BRAKE PAD REPLACEMENT 6-57
BRAKE FLUID REPLACEMENT 6-57
CALIPER REMOVAL AND DISASSEMBLY 6-58
CALIPER INSPECTION 6-59
CALIPER REASSEMBLY AND REMOUNTING 6-59
MASTER CYLINDER REMOVAL AND DISASSEMBLY 6-60
MASTER CYLINDER INSPECTION 6-61
MASTER CYLINDER REASSEMBLY AND REMOUNTING 6-61
TIRE AND WHEEL 6-62
TIRE REMOVAL 6-62
INSPECTION 6-64
TIRE INSTALLATION 6-65

EXTERIOR PARTS

CONSTRUCTION

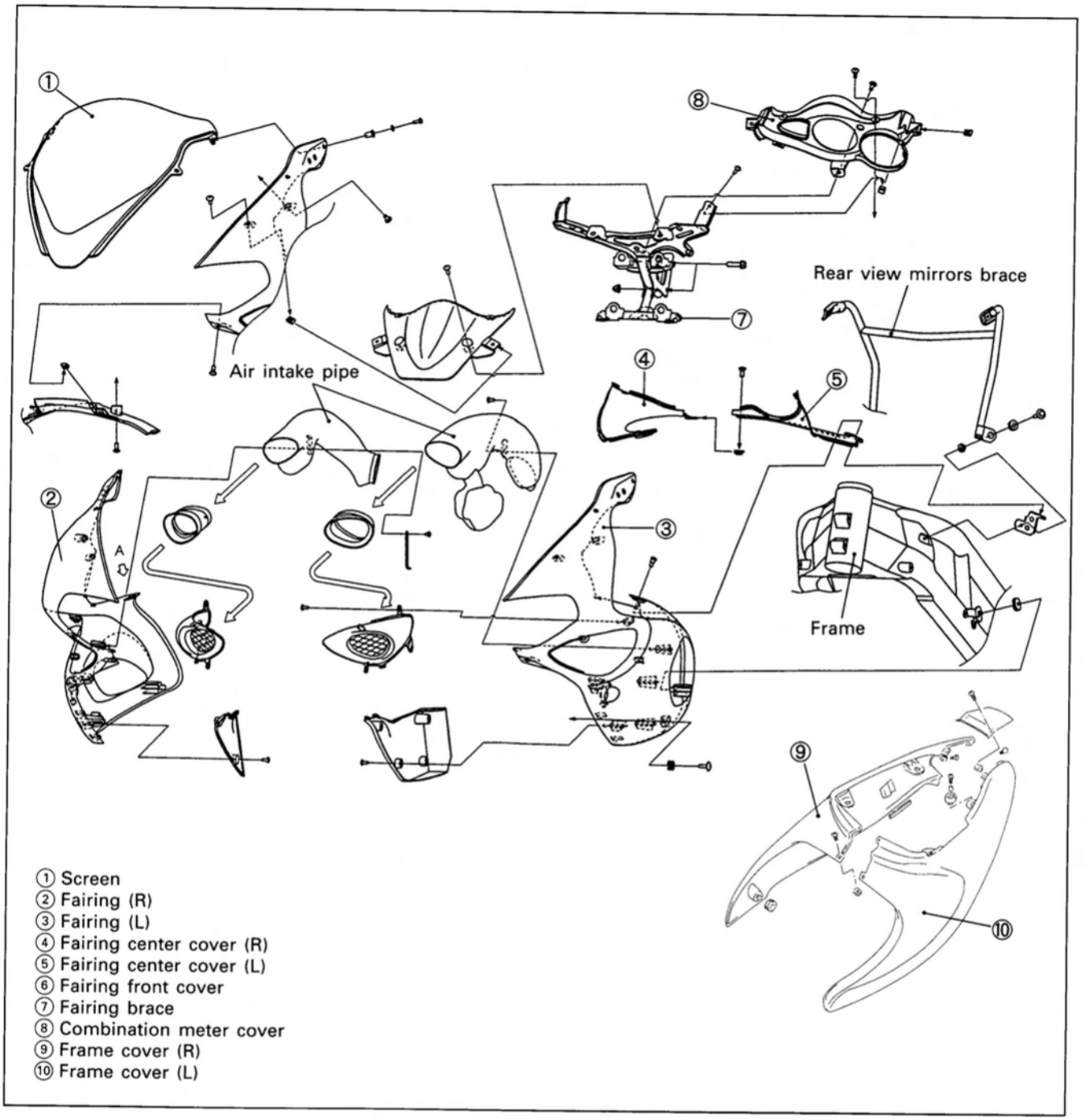

① Screen
② Fairing (R)
③ Fairing (L)
④ Fairing center cover (R)
⑤ Fairing center cover (L)
⑥ Fairing front cover
⑦ Fairing brace
⑧ Combination meter cover
⑨ Frame cover (R)
⑩ Frame cover (L)

REMOVAL

FAIRING AND FAIRING BRACE

- Remove the screen by removing the bolts and rubber cushions.

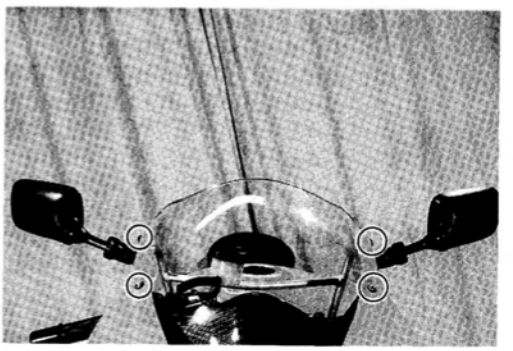

- Remove the rear view mirrors.

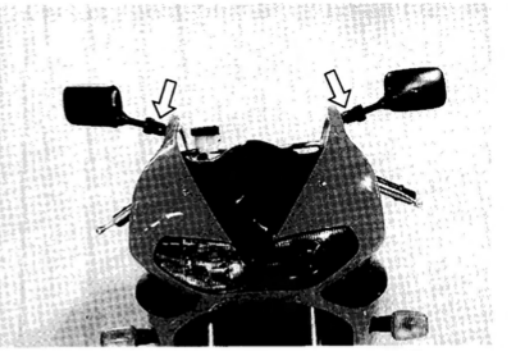

- Remove the fairing mounting bolts.
- Extract the hooked parts of fairing.

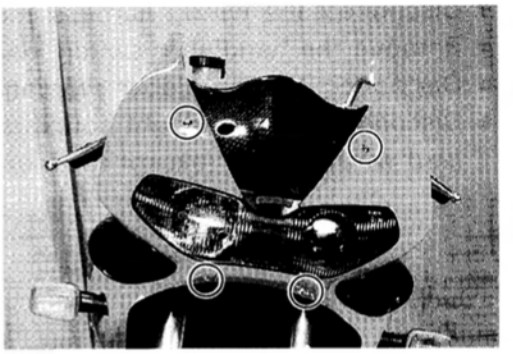

☆hooked part

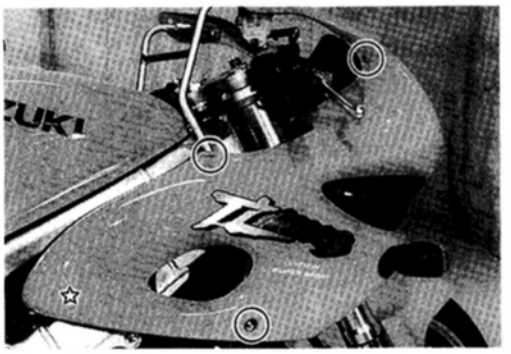

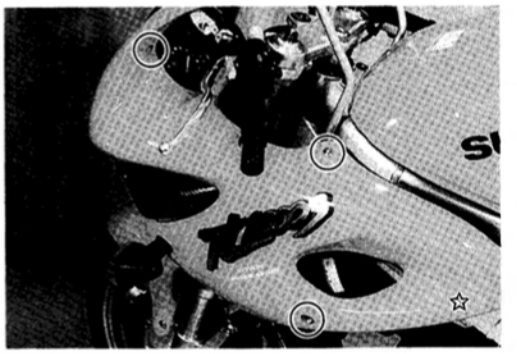

- Disconnect the engine coolant reserve tank hose ① and reserve tank overflow hose.
- Disconnect the front turn signal light lead wire couplers.

NOTE:
Fit the suitable plug to the reserve tank hose.

- Remove the fairing with the turn signal light and reserve tank.

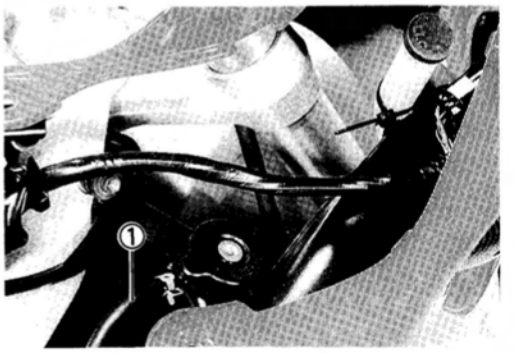

- Remove the fairing center cover.

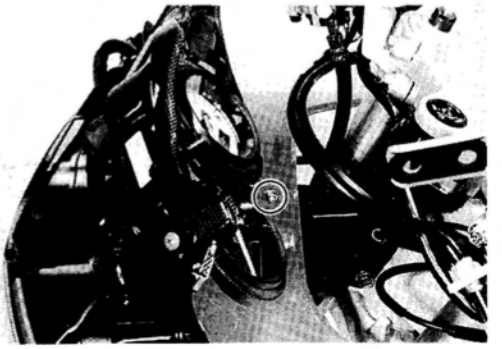

- Remove the fairing front cover.

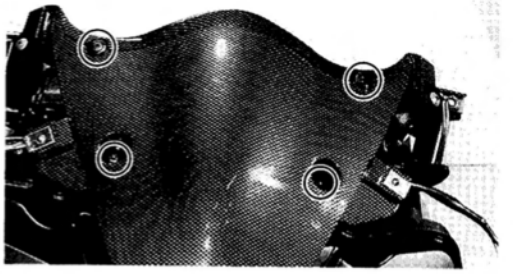

- Disconnect the wiring harness couplers ①.
- Remove the handlebar switch lead wire clamps ②.
- Disconnect the handlebar switche's couplers ③.
- Disconnect the headlight couplers ④ and position light lead wire coupler (except for E-03, 24, 28, 33).

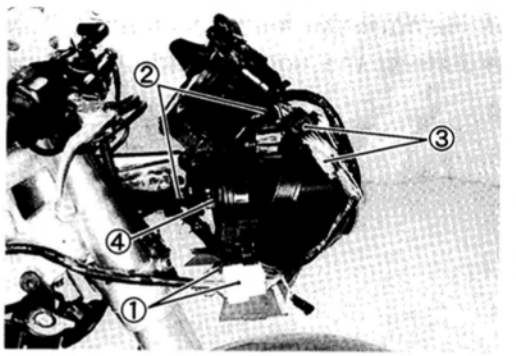

- Remove the fairing brace with the headlight and combination meter by removing the nut and bolts.

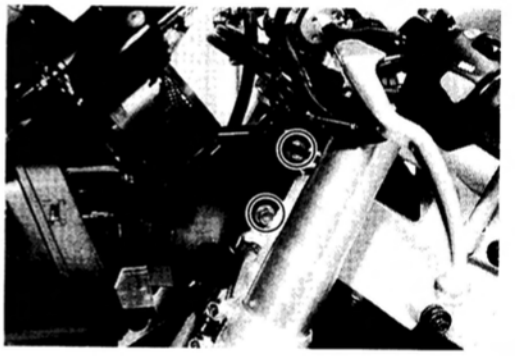

- Remove the fairing lower cover.

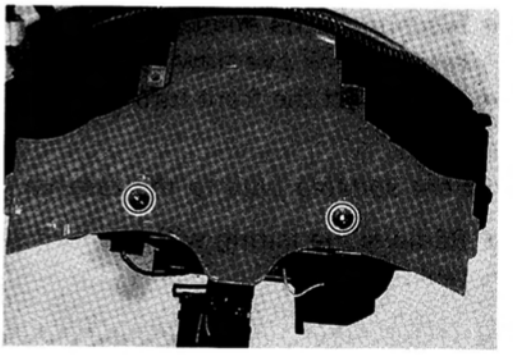

- Remove the headlight.

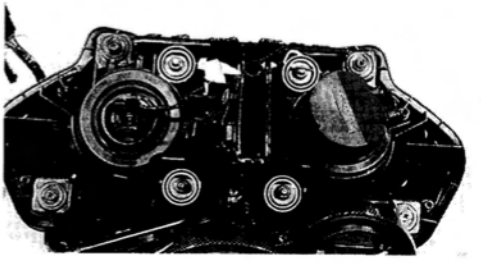

- Remove the combination meter ①.
- Remove the fuse box ②.

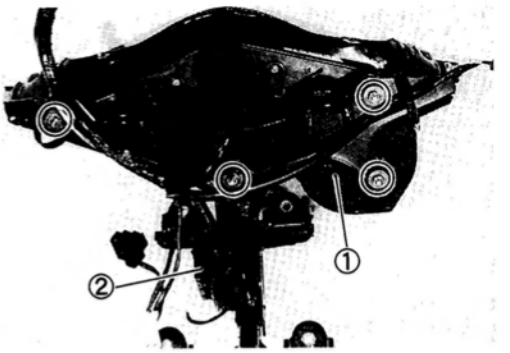

SEAT AND FRAME COVER

- Remove the both seats with the ignition key.

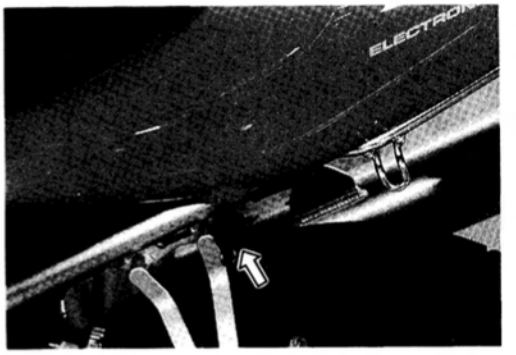

- Remove the frame cover mounting screws.
- Remove the frame cover by extracting the hooked parts.

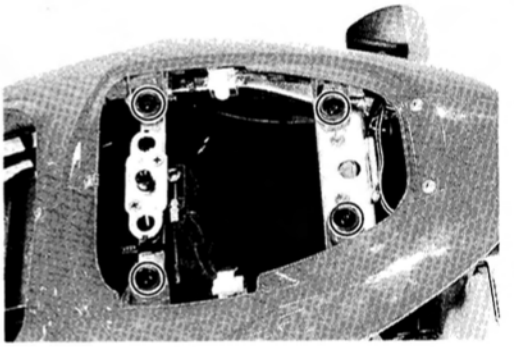

☆hooked part



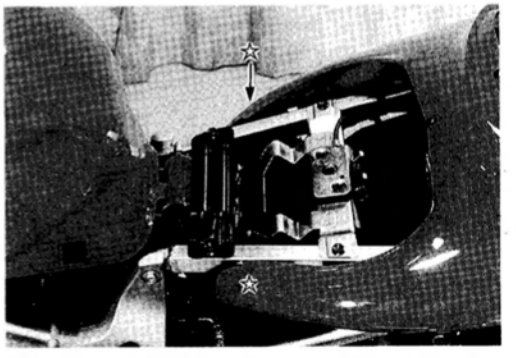

REMOUNTING

Remount each part in the reverse order of removal.

FRONT WHEEL

CONSTRUCTION

① Brake disc
② Dust seal
③ Bearing
④ Spacer
⑤ Spacer nut
⑥ Front wheel

Ⓐ Front axle
Ⓑ Brake disc bolt

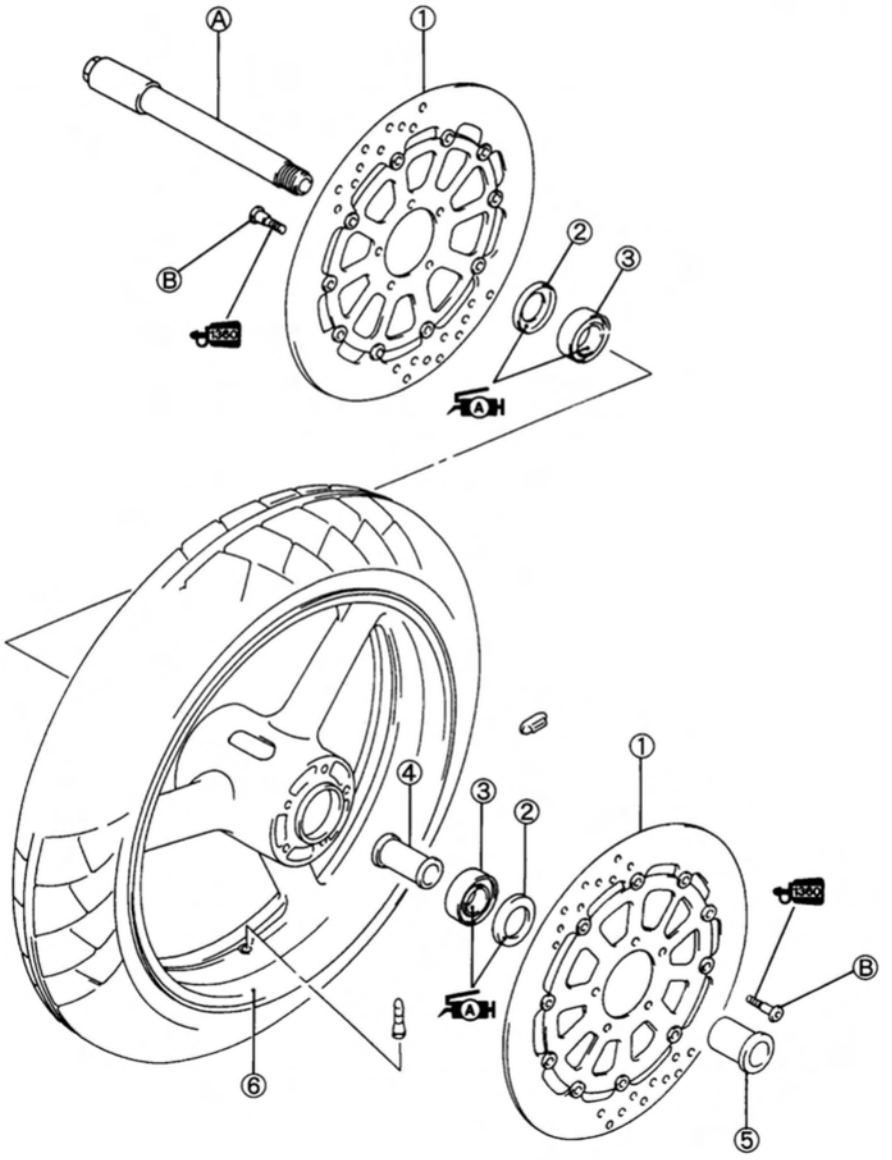

ITEM	N·m	kg-m	lb-ft
Ⓐ	100	10.0	72.5
Ⓑ	23	2.3	16.5

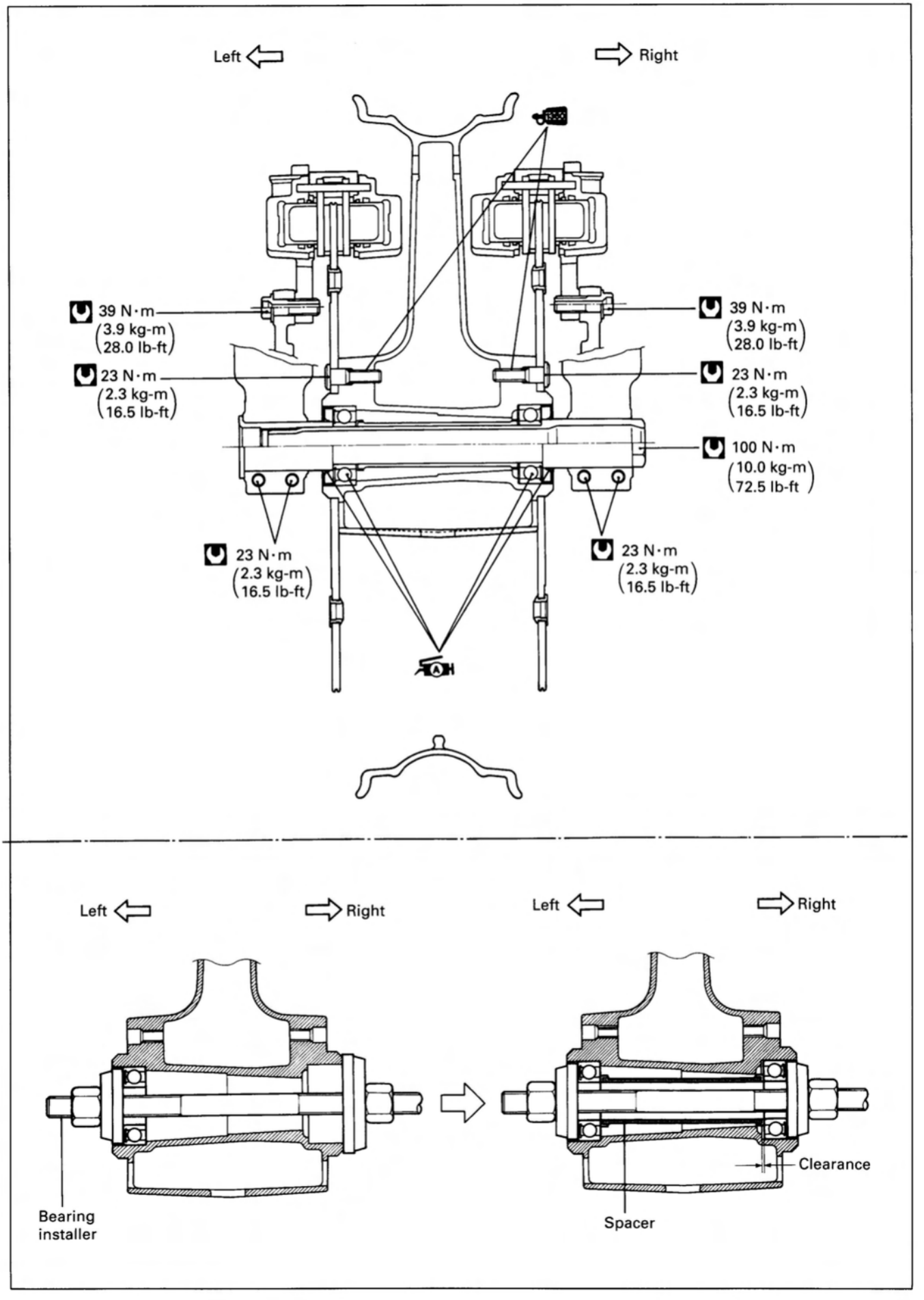
Left
Right
39 N·m
(3.9 kg-m
28.0 lb-ft)
23 N·m
(2.3 kg-m
16.5 lb-ft)
39 N·m
(3.9 kg-m
28.0 lb-ft)
23 N·m
(2.3 kg-m
16.5 lb-ft)
100 N·m
(10.0 kg-m
72.5 lb-ft)
23 N·m
(2.3 kg-m
16.5 lb-ft)
23 N·m
(2.3 kg-m
16.5 lb-ft)
Left
Right
Left
Right
Bearing
installer
Clearance
Spacer

REMOVAL

- Remove both brake calipers mounting bolts ①.

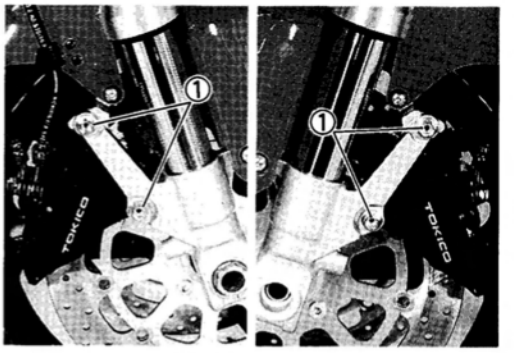

- Loosen the right axle pinch bolts ②.
- Loosen the front axle ③.
- Raise the front wheel off the ground with a jack.
- Remove the front wheel by removing the front axle.

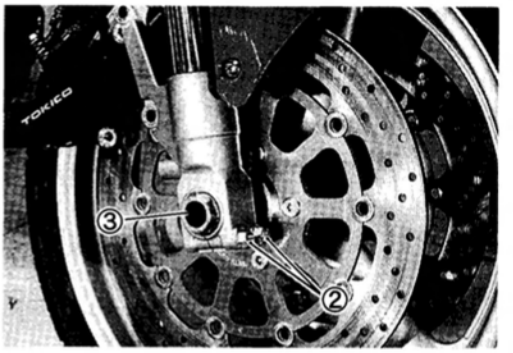

⚠ CAUTION

Do not operate the brake lever while dismounting the front wheel.

NOTE:
After removing the front wheel, fit the both calipers temporarily to the original positions.

- Remove the spacer nut ④ by loosening the left axle pinch bolts.

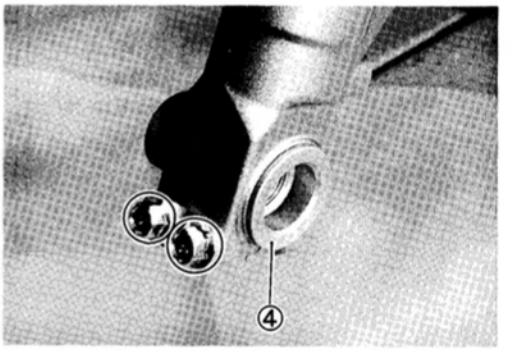

- Remove the brake discs.



INSPECTION AND DISASSEMBLY

TIRE ..... Refer to page 6-62.

FRONT WHEEL

Make sure that the wheel runout checked as shown does not exceed the service limit. An excessive runout is usually due to worn or loosen wheel bearings. If bearing replacement fails to reduce the runout, replace the wheel.

Service Limit (Axial and Radial): 2.0 mm (0.08 in)

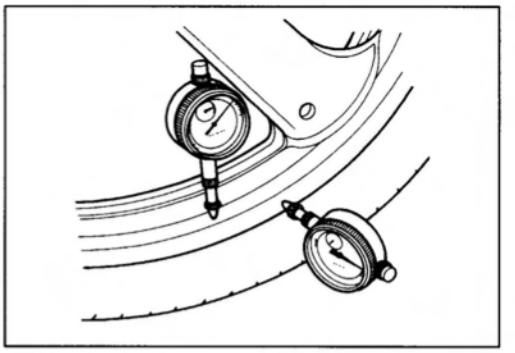

WHEEL BEARINGS

Inspect the play of the wheel bearings by finger while they are in the wheel. Rotate the inner race by finger to inspect for abnormal noise and smooth rotation.
Replace the bearing in the following procedure if there is anything unusual.

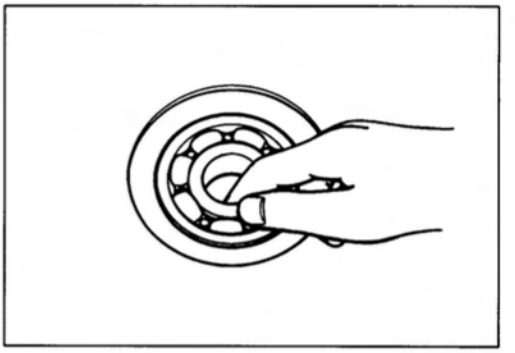

- Remove both side dust seals by using the special tool.

TOOL 09913-50121: Oil seal remover

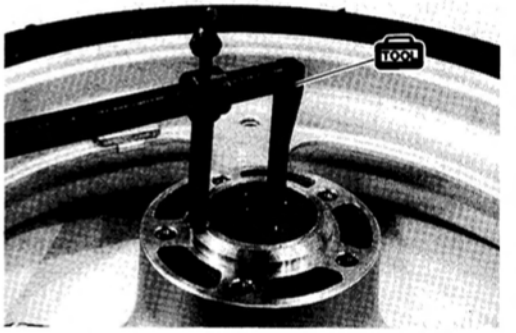

⚠ CAUTION

The removed dust seals must be replaced with new ones.

- Insert the adaptor into the wheel bearing.
- After inserting the wedge bar from the opposite side, lock the wedge bar in the slit of the adaptor.
- Drive out both side wheel bearing by knocking the wedge bar.

TOOL 09944-60210: Bearing remover

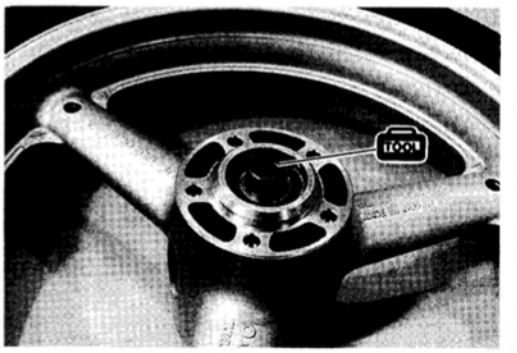

⚠ CAUTION

The removed bearings should be replaced with new ones.

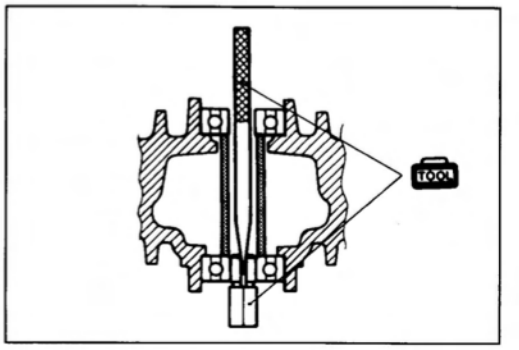

FRONT AXLE

Using a dial gauge, check the front axle for runout.
If the runout exceeds the limit, replace the front axle.

09900-20606: Dial gauge (1/100 mm)
09900-20701: Magnetic stand
09900-21304: V-block set (100 mm)

Service Limit: 0.25 mm (0.010 in)

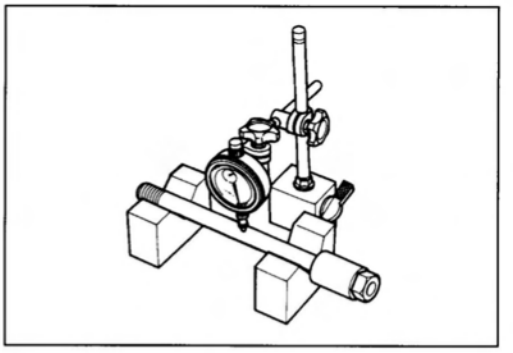

REASSEMBLY AND REMOUNTING

Reassemble and remount the front wheel in the reverse order of removal and disassembly. Pay attention to the following points:



WHEEL BEARING

- Apply SUZUKI SUPER GREASE "A" to the bearings before installing.

99000-25030: SUZUKI SUPER GREASE "A"

- Install the wheel bearings as follows by using the special tool.

09941-34513: Bearing/Steering race installer set

⚠ CAUTION

First install the left wheel bearing, then install the right wheel bearing. The sealed cover on the bearing must face to the outside. Refer to page 6-6 for details.

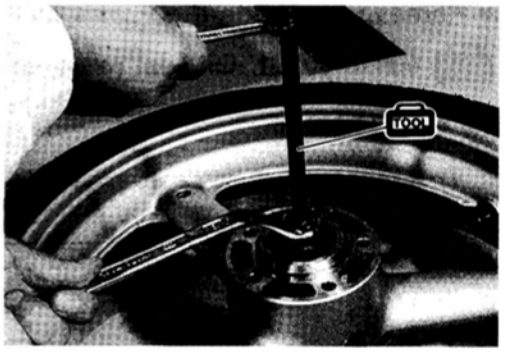

BRAKE DISC

- Make sure that the brake disc is clean and free of any greasy matter. Apply THREAD LOCK SUPER "1360" to the brake disc mounting bolts and tighten them to the specified torque.

99000-32130: THREAD LOCK SUPER "1360"

Brake disc bolt: 23 N·m (2.3 kg-m, 16.5 lb-ft)



SPACER NUT

- Insert the spacer nut to the left front fork leg.
- After touching the flange ① of the spacer nut to the front fork leg, tighten the axle pinch bolts to the specified torque.

Axle pinch bolt: 23 N·m (2.3 kg-m, 16.5 lb-ft)

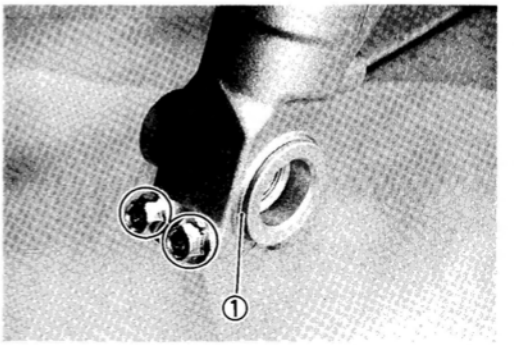

WHEEL

- Install the wheel with the front axle and tighten the front axle temporarily.

⚠ CAUTION

Face the directional arrow ① on the tire to the wheel rotation, when installing the wheel.

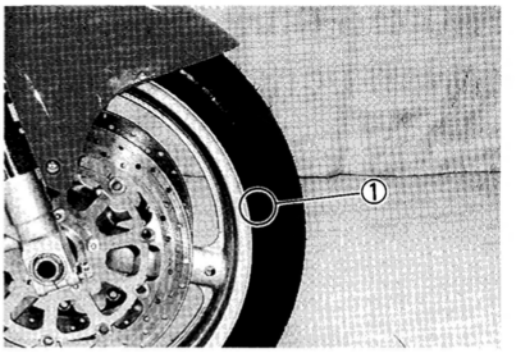

BRAKE CALIPER

- Tighten the brake caliper mounting bolts to the specified torque.

Front brake caliper mounting bolt: 39 N·m (3.9 kg-m, 28.0 lb-ft)

NOTE:
Push the pistons all the way into the caliper and remount the calipers.

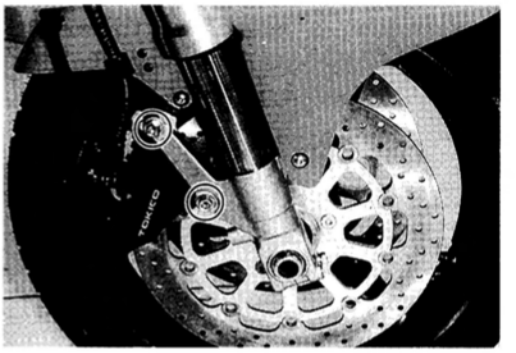

FRONT AXLE

- Tighten the front axle to the specified torque.

Front axle: 100 N·m (10.0 kg-m, 72.5 lb-ft)

- Tighten two axle pinch bolts on the right front fork leg to the specified torque.

Front axle pinch bolt: 23 N·m (2.3 kg-m, 16.5 lb-ft)

NOTE:
Before tightening the two axle pinch bolts on the right front fork leg, move the front fork up and down 4 or 5 times.

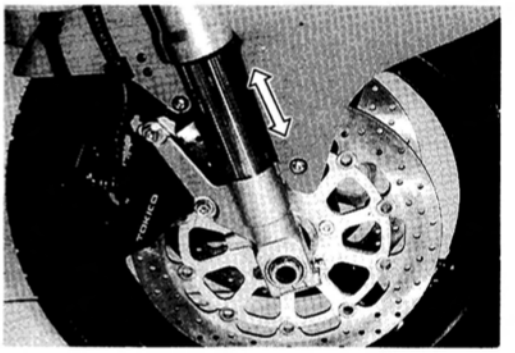

FRONT FORK

CONSTRUCTION

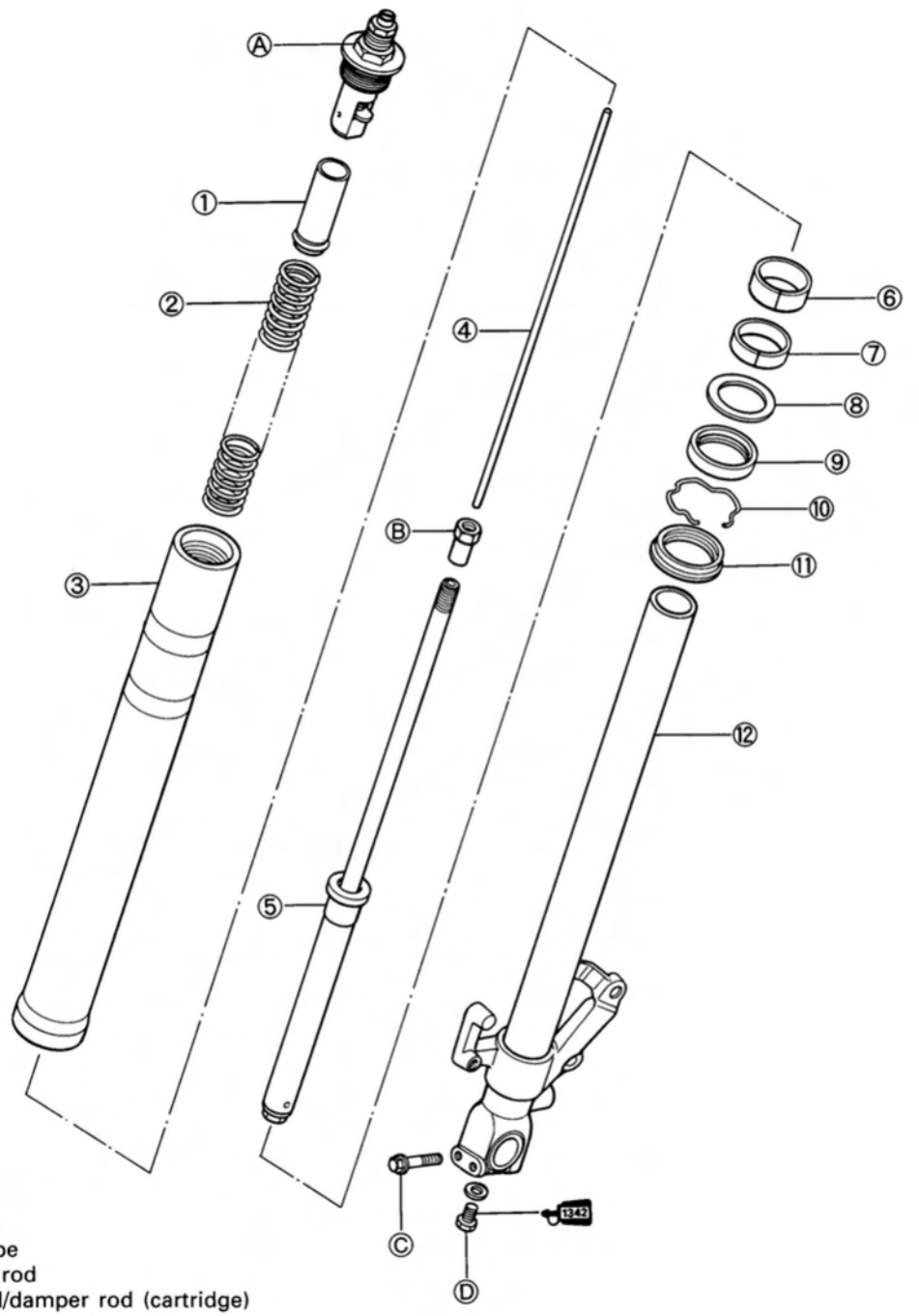

① Spacer
② Spring
③ Outer tube
④ Adjuster rod
⑤ Inner rod/damper rod (cartridge)
⑥ Anti-friction metal
⑦ Anti-friction metal
⑧ Oil seal retainer
⑨ Oil seal
⑩ Oil seal stopper ring
⑪ Dust seal
⑫ Inner tube

Ⓐ Front fork cap bolt
Ⓑ Front fork inner rod lock nut
Ⓒ Front axle pinch bolt
Ⓓ Damper rod bolt

ITEM	N·m	kg-m	lb-ft
Ⓐ	23	2.3	16.5
Ⓑ	15	1.5	11.0
Ⓒ	23	2.3	16.5
Ⓓ	40	4.0	29.0

REMOVAL AND DISASSEMBLY

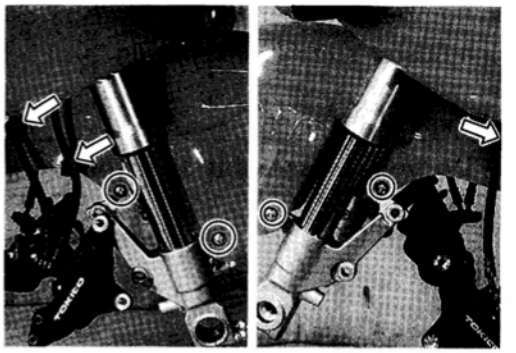

- Remove the front wheel. (Refer to page 6-7.)
- Disconnect the brake hose from the brake hose guides on the front fender.
- Remove the front fender.

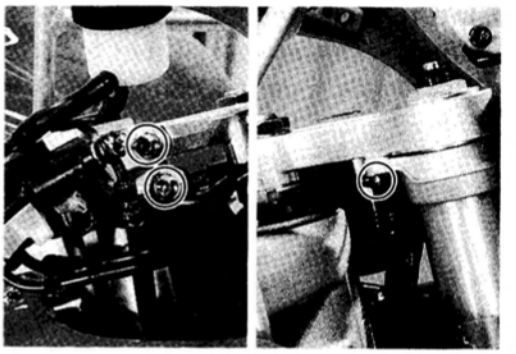

- Loosen the front fork upper clamp bolts, left and right.
- Loosen the handlebar clamp bolts and set bolts, left and right.

NOTE:
Slightly loosen the front fork cap bolts before loosening the lower clamp bolts to facilitate later disassembly.

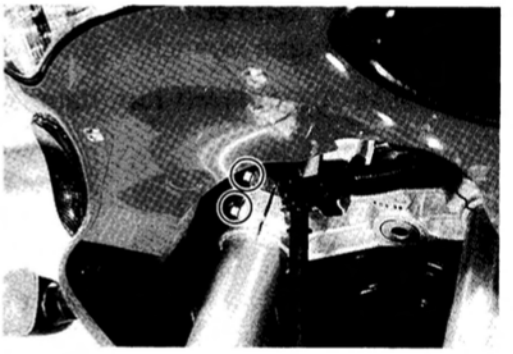

- Loosen the front fork lower clamp bolts, left and right.
- Remove the front forks, left and right.

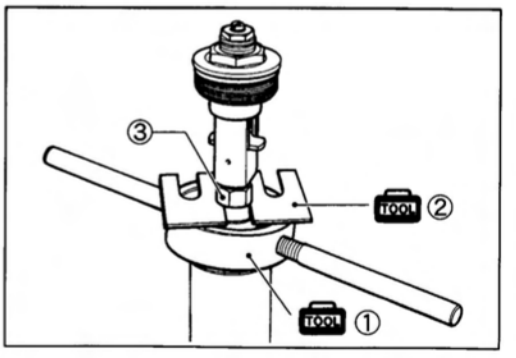

- Loosen the front fork cap bolt.
- Compress the fork spring with the special tool ① and insert the special tool ② between the lock nut and the spacer.

09940-94930: Front fork spacer holder ①
09940-94922: Stopper plate ②

NOTE:
Align the holes of the spacer with flat part of the fork cap bolt complete before installing the special tool ①.

- Remove the front fork cap bolt complete from the inner rod by loosening the lock nut ③.
- Compress the fork spring with the special tool ① and remove the special tool ②.

- Remove the front fork cap bolt complete ①, spacer ②, adjuster rod ③ and spring ④.

⚠ CAUTION

Do not disassemble the front fork cap complete ①.

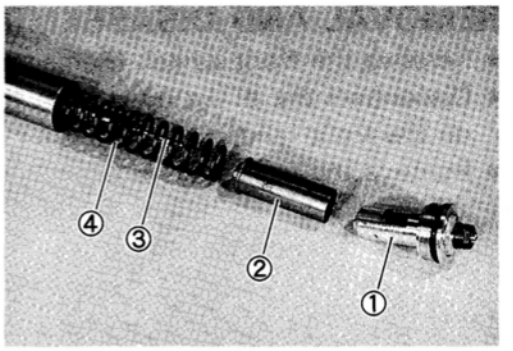

- Invert the front fork and stroke the inner rod several times with the special tool to let out fork oil.
- Under the inverted condition of front fork, drain oil to hold it for a few time.

TOOL 09940-50120: Inner rod holder

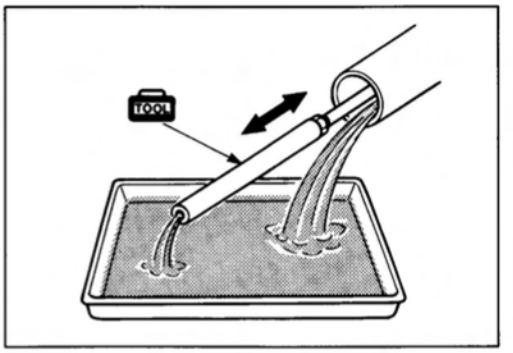

- Remove the damper rod bolt with the special tool and a 10 mm hexagon wrench.

TOOL 09940-30221: Front fork damper rod holder tool

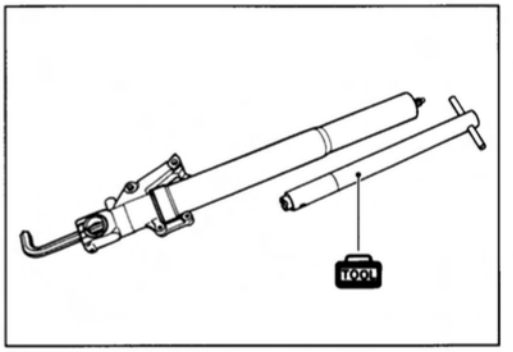

- Remove the inner rod/damper rod (cartridge).

⚠ CAUTION

Do not disassemble the inner rod/damper rod (cartridge).

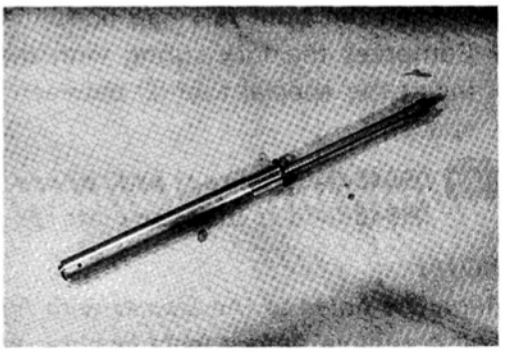

- Remove the dust seal ⑤ and the oil seal stopper ring ⑥.

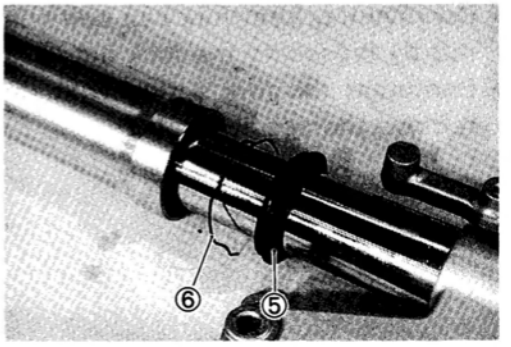

• Extract the outer tube from the inner tube.

NOTE:
Be careful not to damage the inner tube.

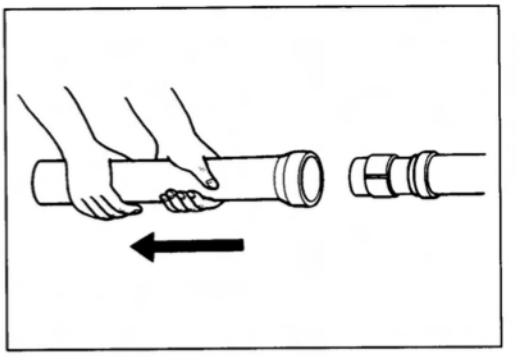

⚠ CAUTION

The "ANTI-FRICTION" metals, oil seals and dust seals must be replaced with new ones, when reassembling the front forks.

• Remove the following parts.

① Oil seal
② Oil seal retainer
③ Anti-friction metal (Outer tube)
④ Anti-friction metal (Inner tube)

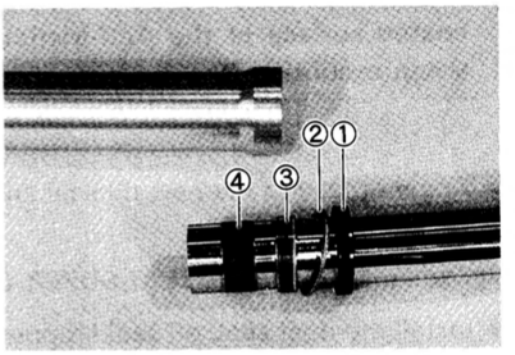

INSPECTION

INNER AND OUTER TUBES

Inspect the inner tube outer surface and outer tube inner surface for scratches.

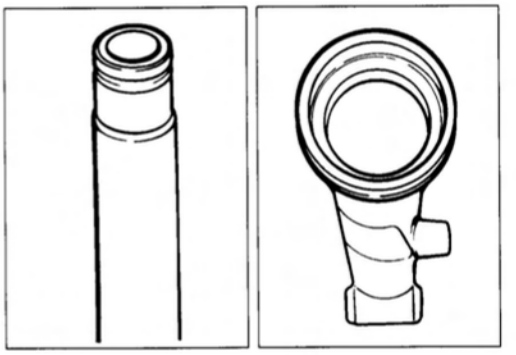

FORK SPRING

Measure the fork spring free length.
If it is shorter than the service limit, replace it with a new one.

Service Limit: 280 mm (11.0 in)

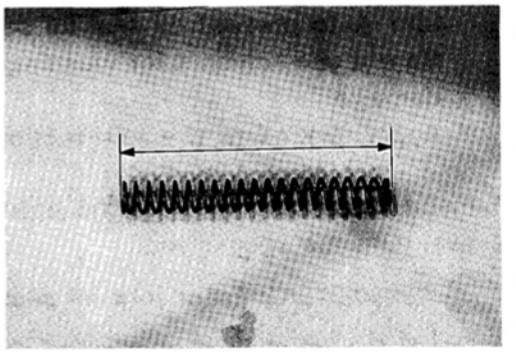

INNER ROD/DAMPER ROD

Move the inner rod by hand to examine it for smoothness.

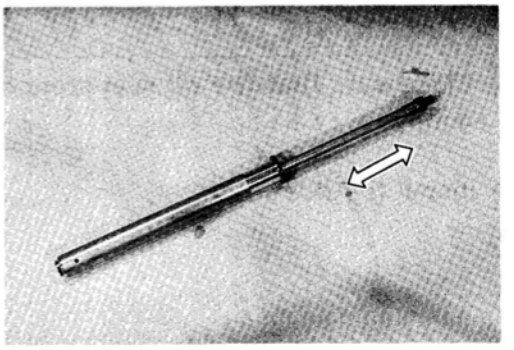

REASSEMBLY AND REMOUNTING

Reassemble and remount the front fork in the reverse order of removal and disassembly. Pay attention to the following points:

TUBE METALS AND SEALS

- Hold the inner tube vertically and clean the metal groove and install the ANTI-FRICTION metal by hand as shown.

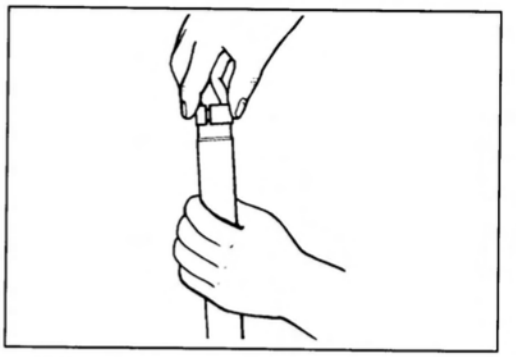

⚠ CAUTION

Use special care to prevent damage to the "Teflon" coated surface of the Anti-friction inner tube metal when mounting it.

- Apply grease to the new oil seal and dust seal lips lightly before installing it.

99000-25030: SUZUKI SUPER GREASE "A"

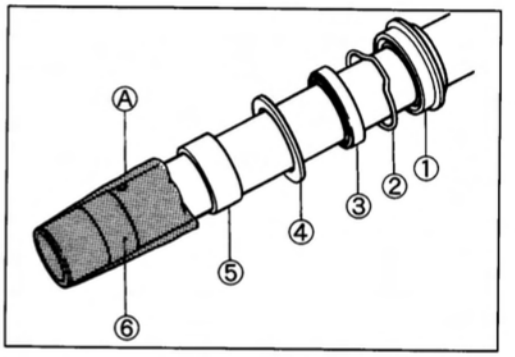

- Install the dust seal, oil seal stopper ring, oil seal, oil seal retainer and anti-friction metal onto the inner tube.

① Dust seal
② Oil seal stopper ring
③ Oil seal
④ Oil seal retainer
⑤ Anti-friction metal (Outer tube)
⑥ Anti-friction metal (Inner tube)

⚠ CAUTION

*** When installing the dust seal ① and oil seal ③ onto the inner tube, protect their seal lips with a vinyl film Ⓐ to prevent oil seal lip damage.**
*** Do not use solvents for washing to prevent oil seal damage.**
*** Apply fork oil to the Anti-friction metals.**

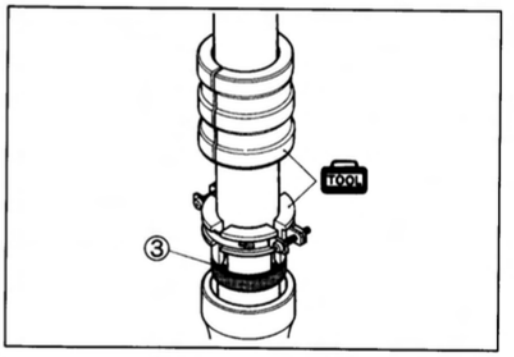

- Insert the inner tube into the outer tube and fit the oil seal with the special tool.

09940-52861: Front fork oil seal installer

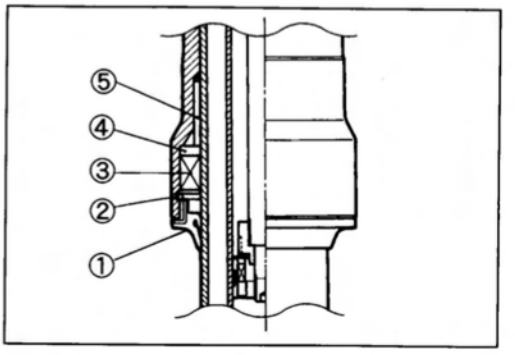

- Install the oil seal stopper ring ② to the outer tube.

⚠ CAUTION

Make sure that the oil seal stopper ring ② fitted securely.

- Install the dust seal.

DAMPER ROD BOLT

- Insert the inner rod/damper rod (cartridge) into the inner tube.
- Apply THREAD LOCK "1342" to the damper rod bolt and tighten it to the specified torque with the special tool and a 10 mm hexagon wrench.

99000-32050: THREAD LOCK "1342"

09940-30221: Front fork damper rod holder tool

Damper rod bolt: 40 N·m (4.0 kg-m, 29.0 lb-ft)

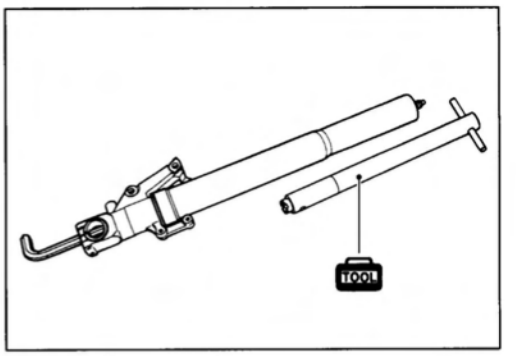

⚠ CAUTION

Use a new damper rod bolt gasket to prevent oil leakage.

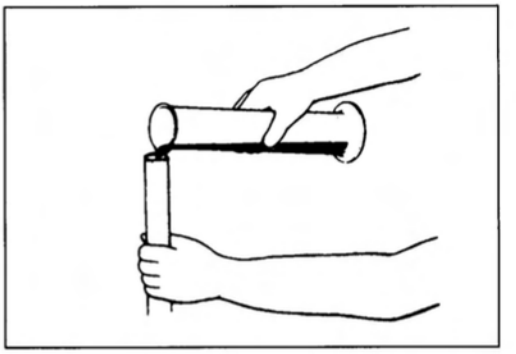

FORK OIL

- Place the front fork vertically without spring.
- Compress it fully.
- Pour specified front fork oil up to the top level of the outer tube.
- Move the inner rod slowly with the special tool more than ten times until bubbles do not come out from the oil.

09940-50120: Inner rod holder

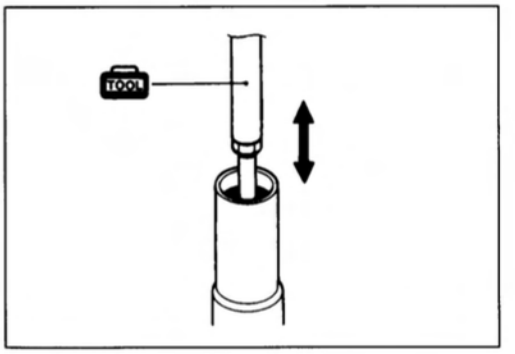

NOTE:
Refill front fork oil up to the top of the outer tube to find bubbles while bleeding air.

- Refill specified front fork oil up to the top level of the outer tube again. Move the outer tube up and down several strokes until bubbles do not come out from the oil.
- Keep the front fork vertically and wait 5–6 minutes.

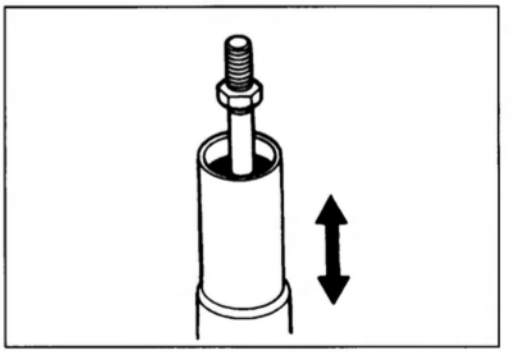

NOTE:
** Always keep oil level over the cartridge top end, or air may enter the cartridge during this procedure.*
** Take extreme attention to pump out air completely.*

- Hold the front fork vertically and adjust fork oil level with the special tool.

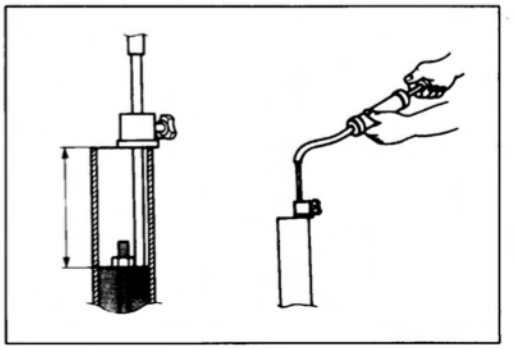

NOTE:
When adjusting the fork oil level, remove the fork spring and compress the outer tube fully.

09943-74111: Front fork oil level gauge

Fork oil level: 100 mm (3.9 in)

Fork oil type: Fork oil L01

99000-99044-L01: SUZUKI FORK OIL L01

Capacity (each leg): 488 ml (16.5/17.2 US/Imp oz)

FRONT FORK INNER ROD LOCK NUT

- Adjust the height Ⓐ of the inner rod threads by turning the lock nut ① at 11 mm (0.43 in) as shown in illustration.

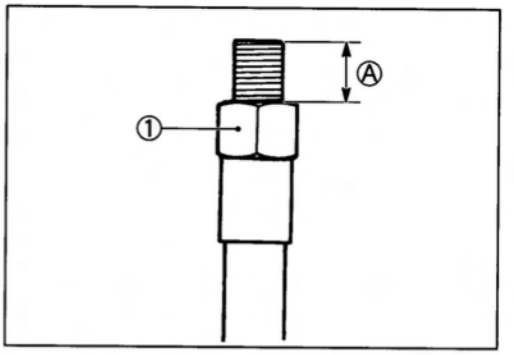

FORK SPRING

- Install the fork spring as shown in the illustration.

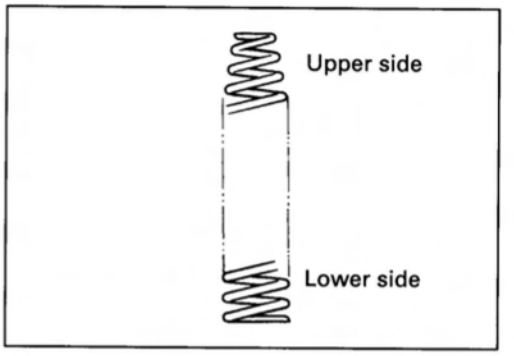

FRONT FORK CAP BOLT COMPLETE

- Pull up the inner rod with the special tool ②.
- Compress the spring with the special tool ③ and then insert the special tool ④ between the lock nut and spacer.

09940-50120: Inner rod holder ②
09940-94930: Front fork spacer holder ③
09940-94922: Stopper plate ④

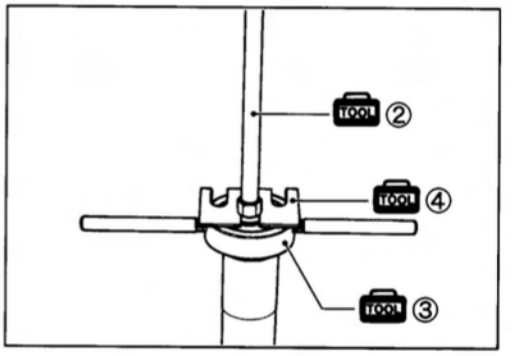

- Make sure that the height Ⓐ of the inner rod threads after removing the special tool ②.

Ⓐ: 11 mm (0.43 in)

- Slowly turn the cap bolt complete by hand until the end of the cap bolt seats on the lock nut.

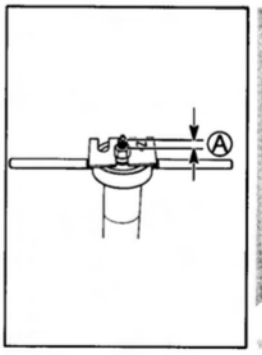



⚠ CAUTION

Be sure to adjust the rebound damping force adjuster ⑤ to the softest position before installing the cap bolt.

- Hold the cap bolt ⑥ and tighten the lock nut ① to the specified torque.

Inner rod lock nut: 15 N·m (1.5 kg-m, 11.0 lb-ft)

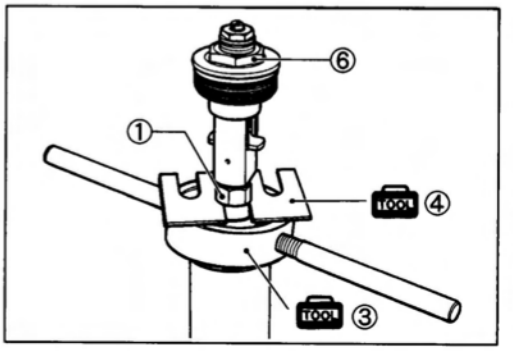

- Install the front fork cap bolt to the outer tube temporarily.
- Set the upper surface of the outer tube ① to the upper surface of the steering stem upper bracket ② and tighten the front fork lower clamp bolts to the specified torque.

Front fork lower clamp bolt ③: 23 N·m (2.3 kg-m, 16.5 lb-ft)

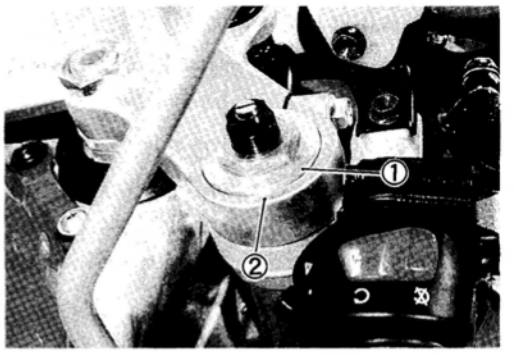

- Tighten the front fork cap bolt to the specified torque.

Front fork cap bolt ④: 23 N·m (2.3 kg-m, 16.5 lb-ft)

- Tighten the front fork upper clamp bolts, handlebar's set and clamp bolts to the specified torque.

Front fork upper clamp bolt ⑤: 23 N·m (2.3 kg-m, 16.5 lb-ft)
Handlebar's set bolt ⑥: 10 N·m (1.0 kg-m, 7.0 lb-ft)
Handlebar clamp bolt ⑦: 23 N·m (2.3 kg-m, 16.5 lb-ft)

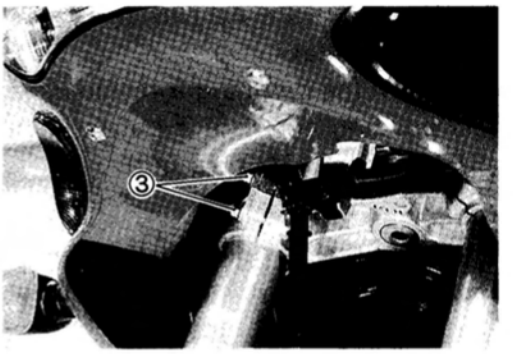

- Install the front fender and tighten the mounting bolts with finger.
- Install the front wheel. (Refer to page 6-10.)
- Install the brake calipers. (Refer to page 6-10.)
- Swing the motorcycle up and down several times.
- Tighten the front fender mounting bolts.
- Install the brake hose securely.

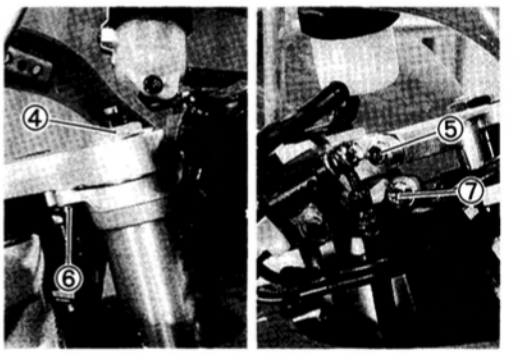

SUSPENSION SETTING

After installing the front fork, adjust the spring pre-load and damping force as follows.

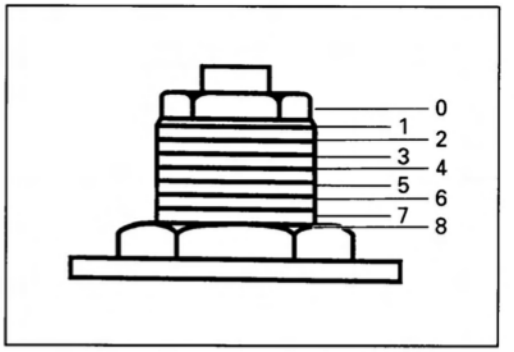

SPRING PRE-LOAD ADJUSTMENT

There are eight grooved lines on the side of the spring adjuster. Position 0 provides the maximum spring pre-load and position 8 provides the minimum spring pre-load.
(STD position: 4-1/2)

DAMPING FORCE ADJUSTMENT

(Rebound side)

Fully turn the damping force adjuster clockwise. It is at stiffest position and turn it out to standard setting position.
(STD position: 7/8 turn out)

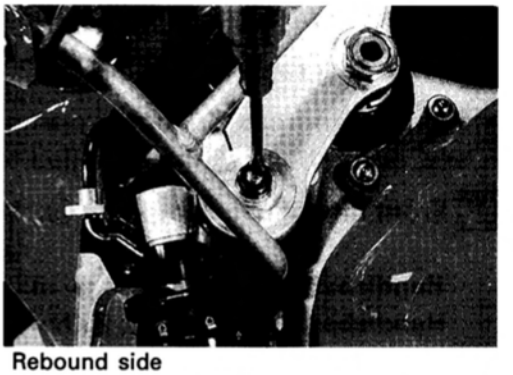

Rebound side

(Compression side)

Fully turn the damping force adjuster clockwise. It is at stiffest position and turn it out to standard setting position.
(STD position: 7/8 turn out)

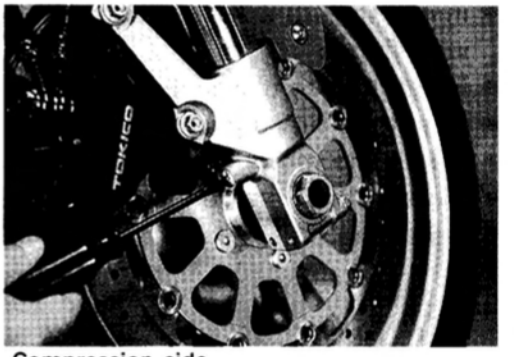

Compression side

STANDARD FRONT SUSPENSION SETTING

		Spring pre-load adjuster	Damping force adjuster	
			Rebound	Compression
Solo riding	Softer	4-1/2	1 turn out	1 turn out
	Standard	4-1/2	7/8 turn out	7/8 turn out
	Stiffer	4-1/2	5/8 turn out	5/8 turn out
Dual riding		4-1/2	7/8 turn out	7/8 turn out

⚠WARNING

Be sure to adjust the spring pre-load and damping force on both front fork legs equally.

STEERING

CONSTRUCTION

① Steering stem upper bracket
② Handlebars
③ Handlebar balancer
④ Steering stem
⑤ Dust seal
⑥ Steering stem upper bearing
⑦ Steering stem lower bearing

Ⓐ Steering stem head nut
Ⓑ Steering stem lock nut
Ⓒ Front fork upper clamp bolt
Ⓓ Handlebar clamp bolt
Ⓔ Handlebar's set bolt
Ⓕ Front fork lower clamp bolt

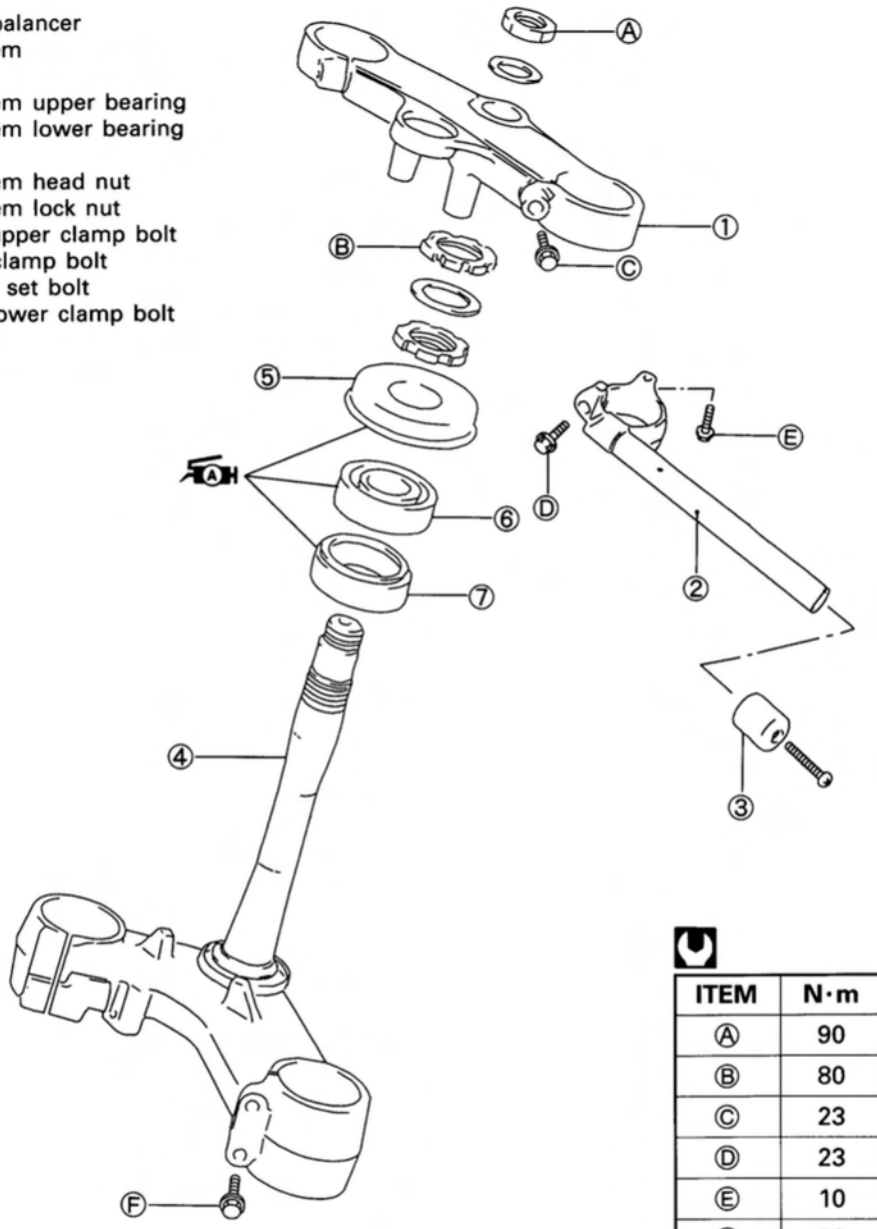

ITEM	N·m	kg-m	lb-ft
Ⓐ	90	9.0	65.0
Ⓑ	80	8.0	58.0
Ⓒ	23	2.3	16.5
Ⓓ	23	2.3	16.5
Ⓔ	10	1.0	7.0
Ⓕ	23	2.3	16.5

REMOVAL AND DISASSEMBLY

- Remove the front wheel. (Refer to page 6-7.)
- Remove the front fork. (Refer to page 6-12.)
- Remove the left fairing cover. (Refer to page 6-2.)
- Raise the fuel tank with the equipped tool. (Refer to page 4-49.)
- Loosen the air cleaner clamps and raise the air cleaner case. (Refer to page 4-55.)

- Disconnect the ignition switch lead wire coupler located under the air cleaner case.

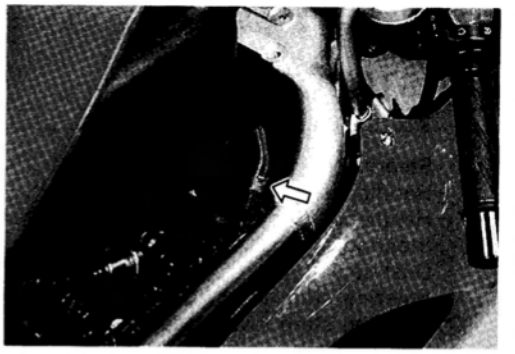

- Remove the left and right handlebar's set bolts.

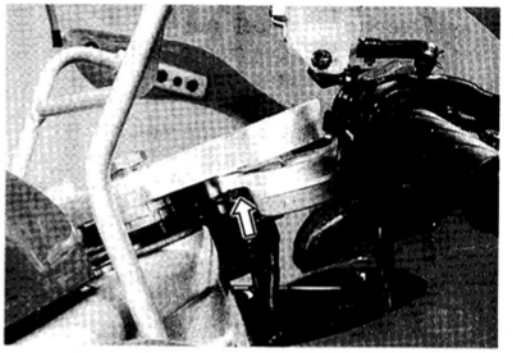

- Remove the steering stem upper bracket with the ignition switch by removing the head nut.

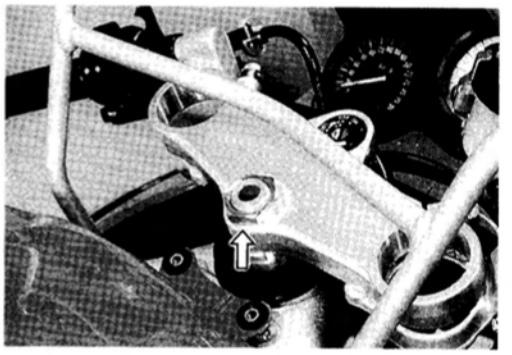

- Disconnect the front brake switch lead wires.
- Remove the front brake master cylinder mounting bolts and brake fluid reserve tank mounting bracket bolt.

NOTE:
Place the rags under each handlebar to prevent scratching the upper fairing.

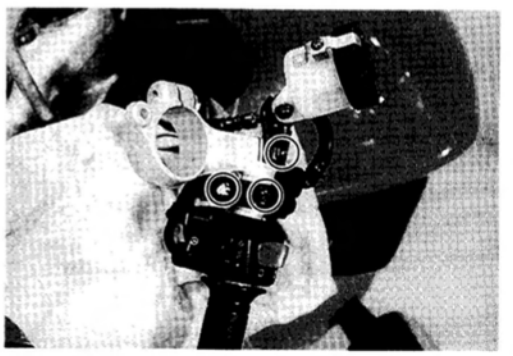

- Remove the right handlebar switch case screws.
- Remove the right handlebars with throttle grip by disconnecting the throttle cables.

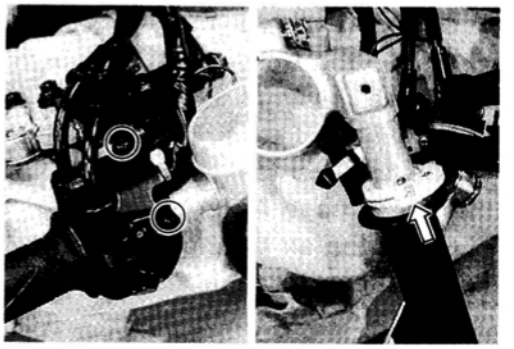

- Remove the front brake master cylinder and brake fluid reserve tank with brake hose by removing the clamp mounting bolt.

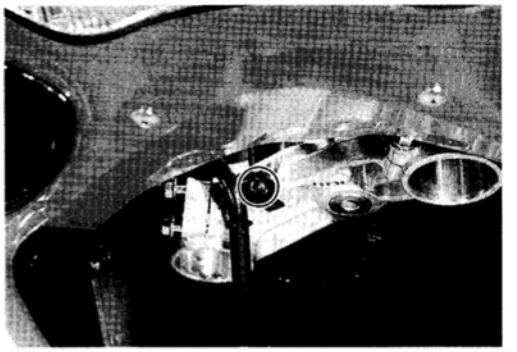

- Remove the clutch lever mounting nut and bolt.
- Disconnect the clutch cable ①.
- Remove the left handlebar switch case screws.

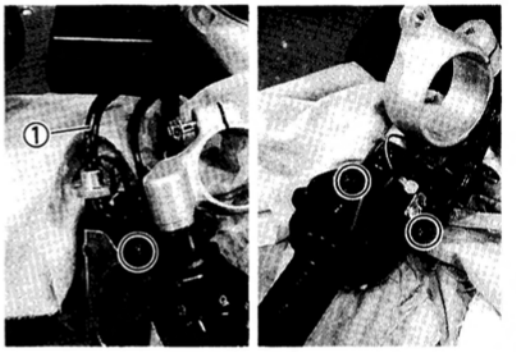

- Disconnect the clutch lever position switch lead wire.
- Remove the left handlebar.



- Remove the horn.

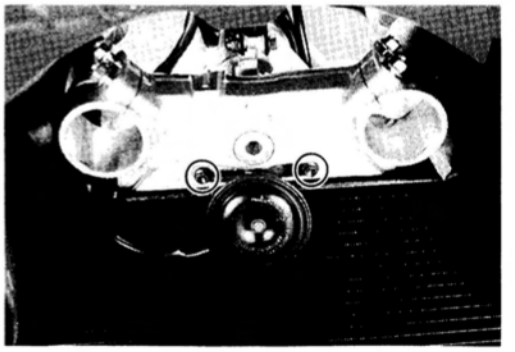

- Remove the steering stem lock nut, the washer and the steering stem nut with the special tools.

TOOL **09940-14911: Steering stem nut wrench**
09940-14960: Steering stem nut wrench socket

- Draw out the steering stem lower bracket.

NOTE:
Hold the steering stem lower bracket by hand to prevent it from falling.

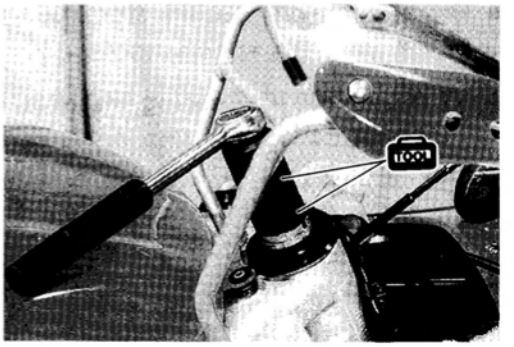

- Remove the dust seal ①, the steering stem upper bearing inner race ② and the bearing ③.

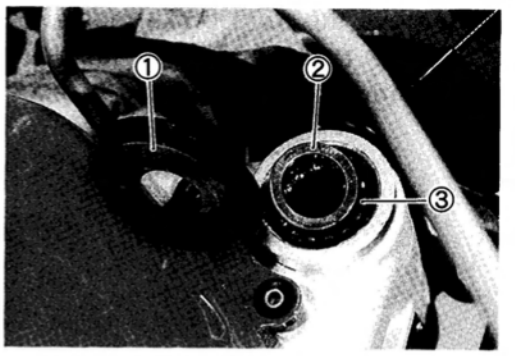

- Remove the ignition switch with the special tool.

TOOL **09930-11920: Torx bit JT40H**
09930-11940: Bit holder

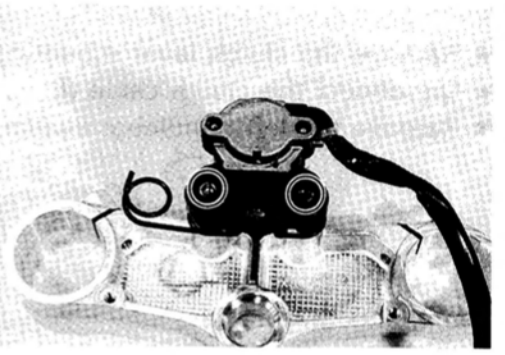

INSPECTION AND DISASSEMBLY

Inspect the removal parts for the following abnormalities.

* Handlebars distortion
* Race wear and brinelling
* Bearing wear or damage
* Abnormal noise of bearing
* Distortion of steering stem

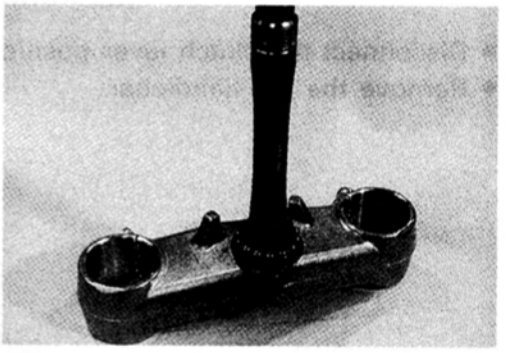

- Remove the steering stem lower bearing inner race with a chisel.

⚠ CAUTION

The removed bearing inner race must be replaced with a new one.

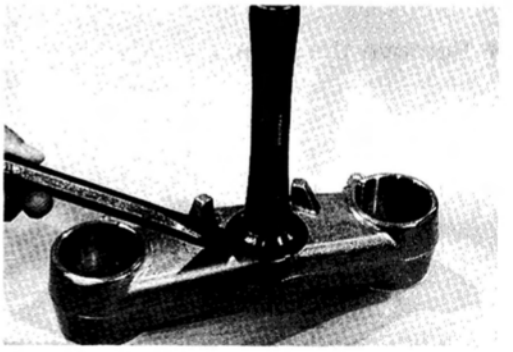

- Drive out the steering stem bearing races, upper and lower, with the special tools.

TOOL **09925-18010: Bearing installer/remover**
09941-54911: Bearing outer race remover

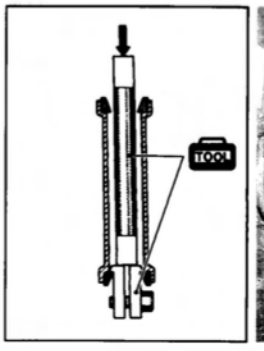



REASSEMBLY AND REMOUNTING

Reassemble and remount the steering stem in the reverse order of removal and disassembly.
Pay attention to the following points:

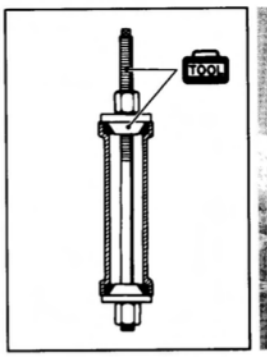



OUTER RACE

- Press in the upper and lower bearing outer races with the special tools.

09941-34513: Steering outer race installer
09924-84510: Bearing installer

INNER RACE

- Press in the lower bearing inner race with the special tool.

09925-18010: Steering bearing installer

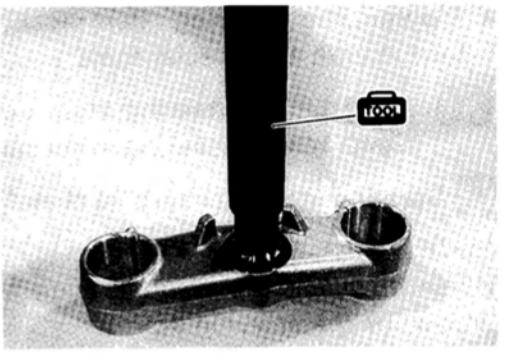

- Apply grease to upper and lower bearings and lip of dust seals before remounting the steering stem.

99000-25030: SUZUKI SUPER GREASE "A"

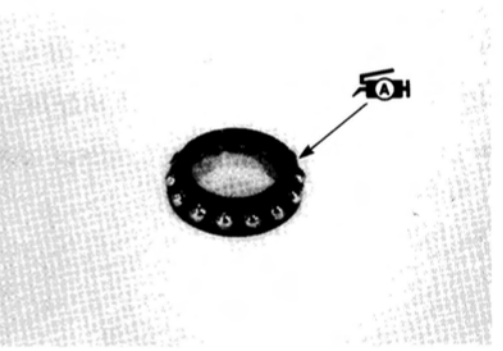

- Install the bearing.

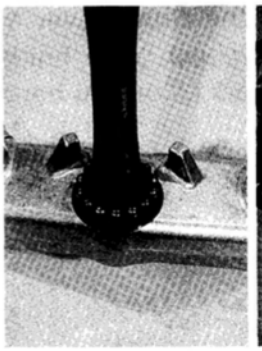



STEM NUT

- Tighten the steering stem nut to the specified torque with the special tools.

09940-14911: Steering stem nut wrench
09940-14960: Steering stem nut wrench socket

Steering stem nut: 45 N·m (4.5 kg-m, 32.5 lb-ft)

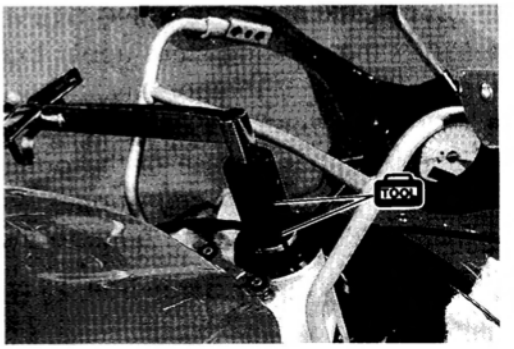

- Turn the steering stem lower bracket about five or six times to the left and right so that the angular ball bearings will be seated properly.
- Loosen the stem nut by 1/4–1/2 turn.

NOTE:
This adjustment will vary from motorcycle to motorcycle.

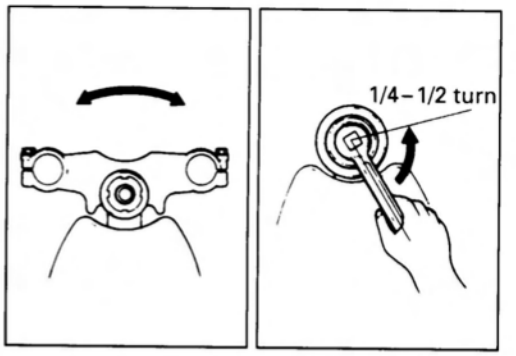

- Tighten the steering stem lock nut to the specified torque with the special tools.

09940-14911: Steering stem nut wrench
09940-14960: Steering stem nut wrench socket

Steering stem lock nut: 80 N·m (8.0 kg-m, 58.0 lb-ft)

NOTE:
When installing the washer, align the stopper lug to the groove of the steering stem.

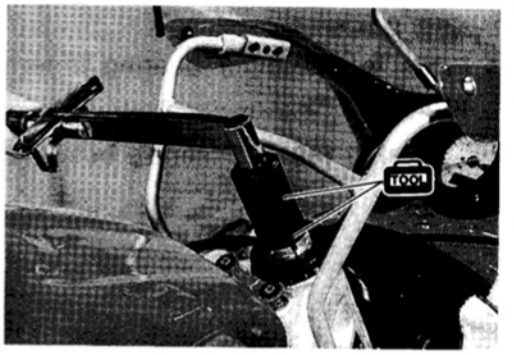

HANDLEBARS

- Apply grease to the throttle grip.

99000-25030: SUZUKI SUPER GREASE "A"

- Install the front brake master cylinder. (Refer to page 6-55.)

①: Punched mark

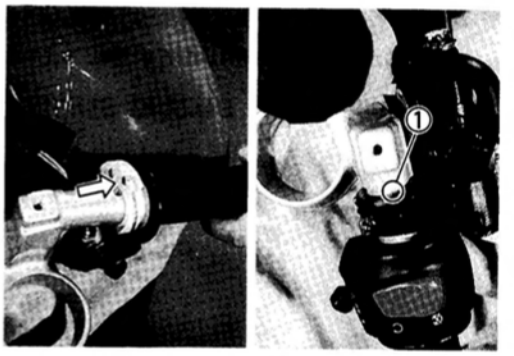

- When installing the clutch lever holder on the left handlebar, align the clutch lever holder's mating surface ② with punched mark ③ on the handlebar and tighten the mounting bolts.

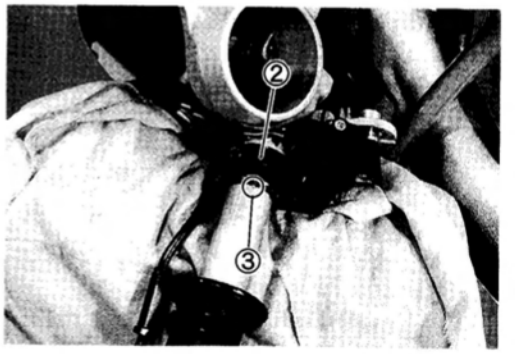

FRONT FORK AND STEERING STEM UPPER BRACKET

- Install the steering stem upper bracket and the steering stem head nut temporarily.
- Install the front fork and handlebars temporarily.
- Set the upper surface of the outer tube with the upper surface of steering stem upper bracket and tighten the front fork upper clamp bolts to the specified torque.

Front fork upper clamp bolt: 23 N·m (2.3 kg-m, 16.5 lb-ft)

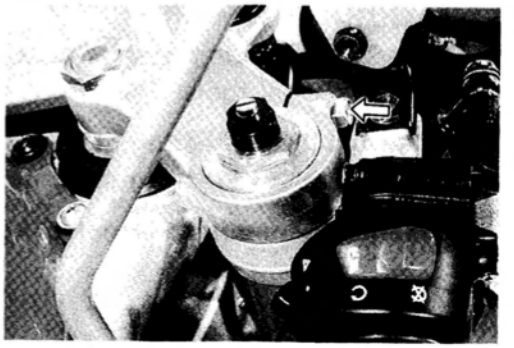

- Tighten the steering stem head nut to the specified torque.

Steering stem head nut: 90 N·m (9.0 kg-m, 65.0 lb-ft)

- Tighten the front fork lower clamp bolts ①, handlebar's set bolt ② and handlebar clamp bolt ③ to the specified torque.

Front fork lower clamp bolt ①: 23 N·m (2.3 kg-m, 16.5 lb-ft)
Handlebar's set bolt ②: 10 N·m (1.0 kg-m, 7.0 lb-ft)
Handlebar clamp bolt ③: 23 N·m (2.3 kg-m, 16.5 lb-ft)

- Install the front wheel. (Refer to page 6-9.)
- Adjust the throttle cable play. (Refer to page 2-13.)

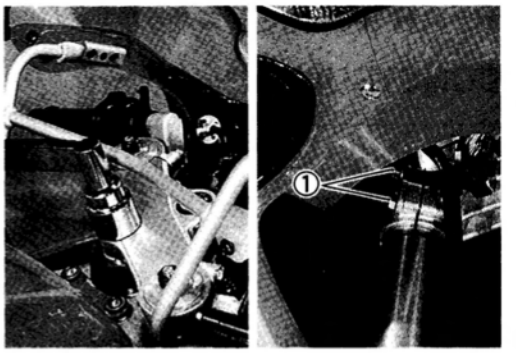

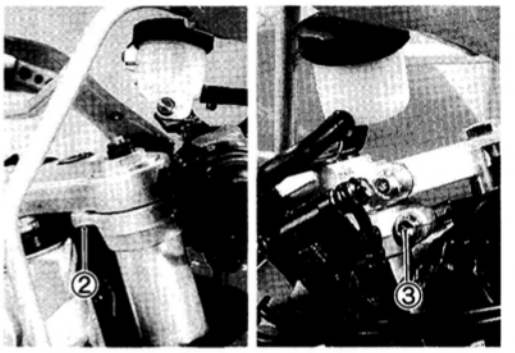

STEERING TENSION ADJUSTMENT

Check the steering movement in the following procedure.

- By supporting the motorcycle with a jack, lift the front wheel until it is off the floor by 20–30 mm (0.8–1.2 in).
- Check to make sure that the cables and wire harnesses are properly routed. (Refer to pages 8-13 through -16.)
- With the front wheel in the straight ahead state, hitch the spring scale (special tool) on one handlebar grip end as shown in the figure and read the graduation when the handlebar starts moving. Do the same on the other grip end.

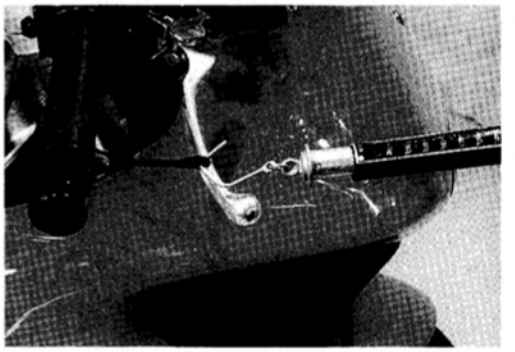

Initial force: 200–500 grams

TOOL 09940-92720: Spring scale

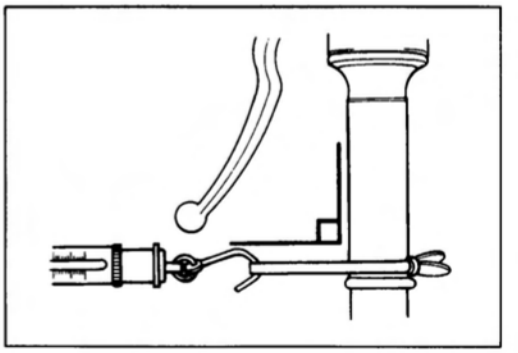

- If the initial force read on the scale when the handlebar starts turning is either too heavy or too light, adjust it till it satisfies the specification.
  1) First, loosen the front fork lower clamp bolts, steering stem head nut and steering stem lock nut, and then adjust the steering stem nut by loosening or tightening it.
  2) Tighten the steering stem lock nut, stem head nut and front fork lower clamp bolts to the specified torque and re-check the initial force with the spring scale according to the previously described procedure.
  3) If the initial force is found within the specified range, adjustment has been completed.

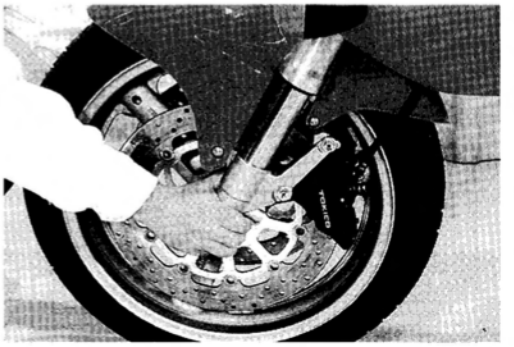

NOTE:
Hold the front fork legs, move them back and forth and make sure that the steering is not loose.

REAR WHEEL

CONSTRUCTION

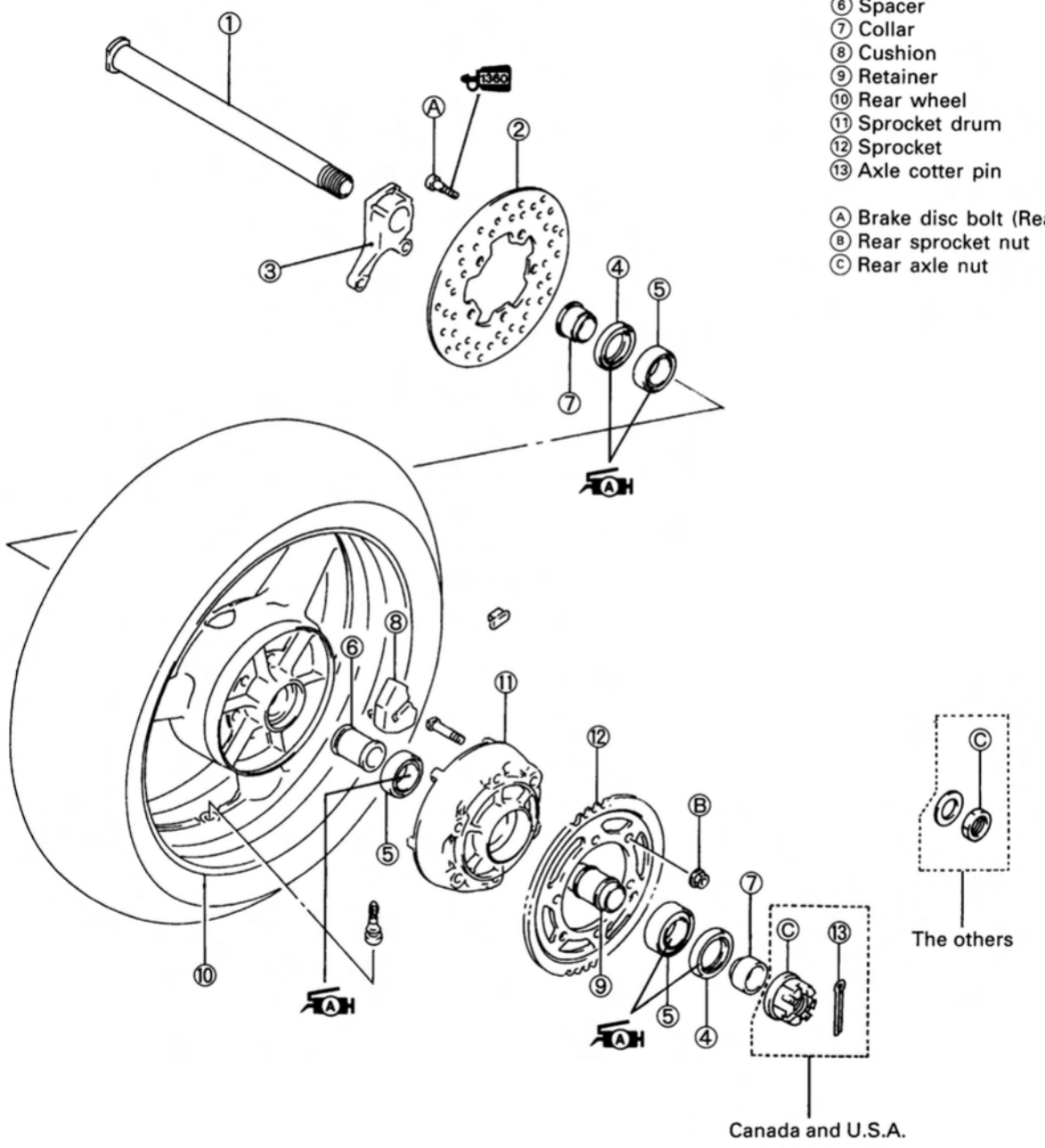

ITEM	N·m	kg-m	lb-ft
Ⓐ	35	3.5	25.5
Ⓑ	60	6.0	43.5
Ⓒ	100	10.0	72.5

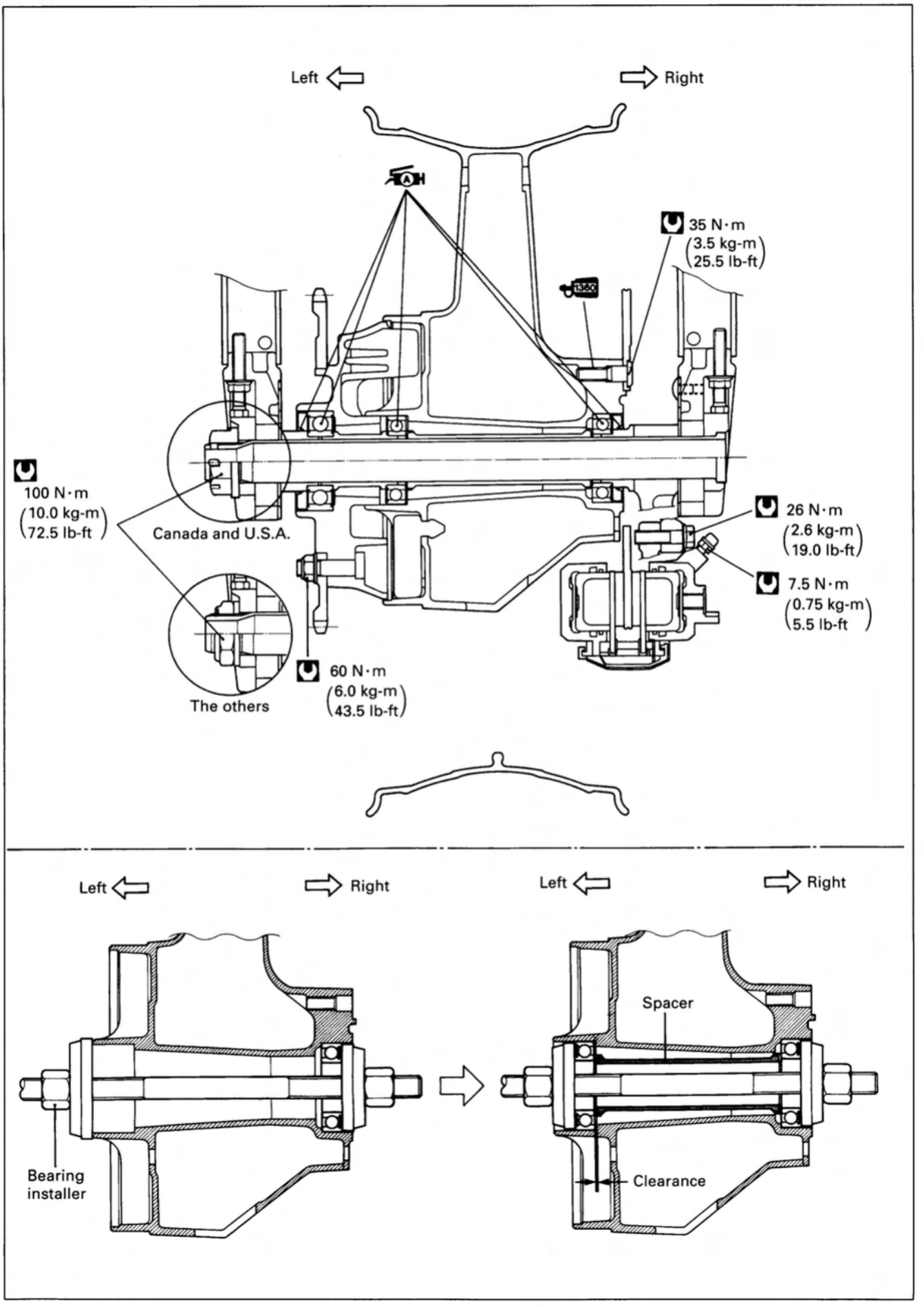
Left
Right
A
35 N·m
(3.5 kg-m
25.5 lb-ft)
100 N·m
(10.0 kg-m
72.5 lb-ft)
Canada and U.S.A.
26 N·m
(2.6 kg-m
19.0 lb-ft)
7.5 N·m
(0.75 kg-m
5.5 lb-ft)
60 N·m
(6.0 kg-m
43.5 lb-ft)
The others
Left
Right
Left
Right
Spacer
Bearing
installer
Clearance

REMOVAL

- Remove the cotter pin. (For Canada and U.S.A. models)
- Loosen the axle nut.
- Raise the rear wheel off the ground and support the motorcycle with a jack or wooden block.
- Remove the axle nut and draw out the rear axle.
- Remove the rear wheel by disengaging the drive chain.

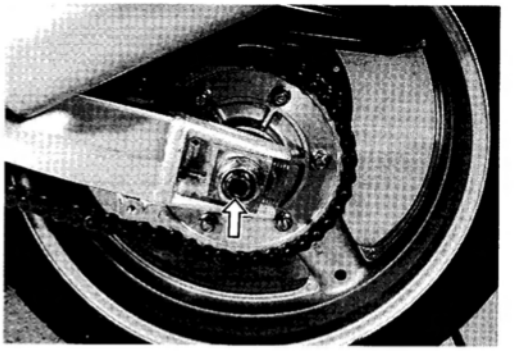

⚠ CAUTION

Do not operate the brake pedal while removing the rear wheel.

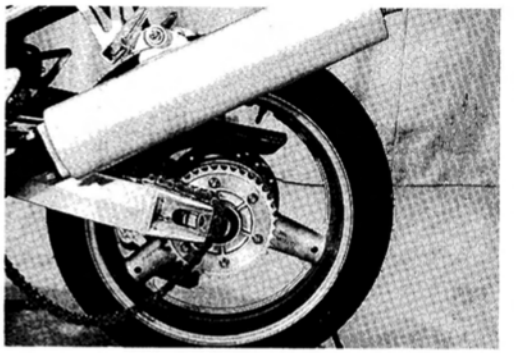

- Draw out the rear sprocket mounting drum from the wheel hub.
- Remove the rear sprocket mounting drum retainer ①.

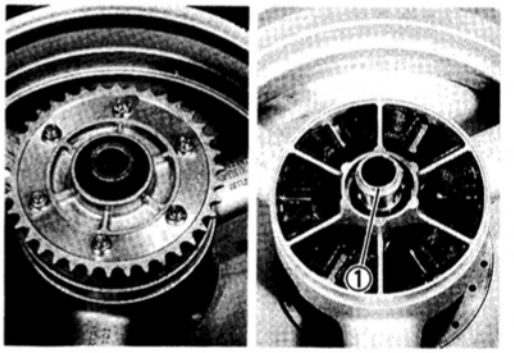

- Separate the rear sprocket from its mounting drum by removing nuts.
- Remove the collar ②.

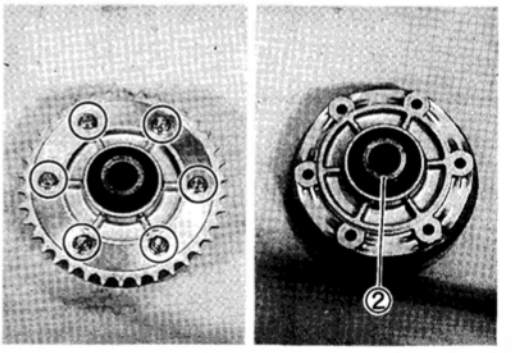

- Remove the brake disc.

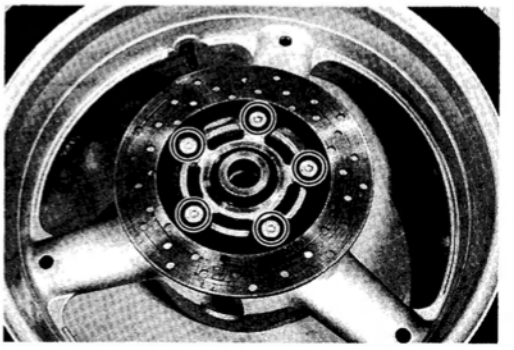

INSPECTION AND DISASSEMBLY

TIRE ..... Refer to pages 2-21 and 6-62.
WHEEL ..... Refer to page 6-8.

BEARINGS

Inspect the play of the wheel and sprocket mounting drum bearings by hand while they are in the wheel and drum. Rotate the inner race by hand to inspect for abnormal noise and smooth rotation. Replace the bearing if there is anything unusual.

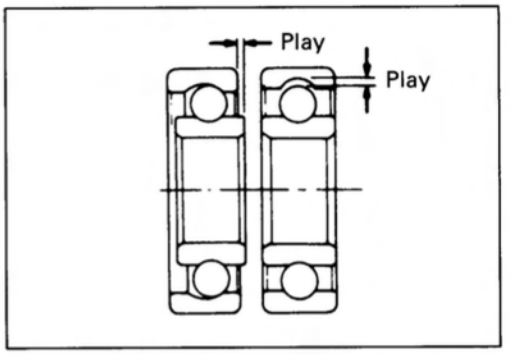

- Remove the sprocket mounting drum and rear wheel dust seals.

TOOL **09913-50121: Oil seal remover**

- Remove the sprocket mounting drum bearing and wheel bearings, with a suitable bar.

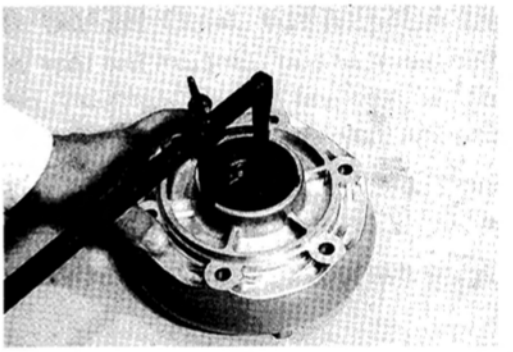

⚠ CAUTION

The removed dust seal and bearings must be replaced with new ones.

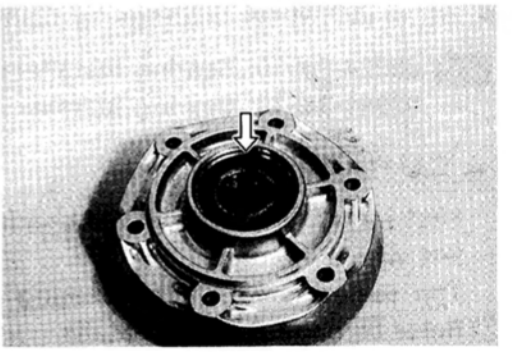

REAR AXLE

Using a dial gauge, check the rear axle for runout.
If the runout exceeds the limit, replace the rear axle.

Service Limit: 0.25 mm (0.010 in)

TOOL **09900-20606: Dial gauge (1/100 mm)**
09900-20701: Magnetic stand
09900-21304: V-block set (100 mm)

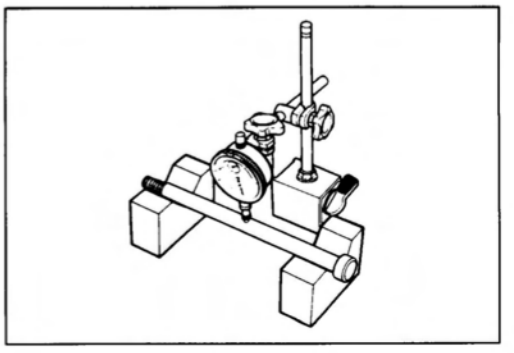

WHEEL DAMPER

Inspect the damper for wear and damage.
Replace the damper if there is anything unusual.

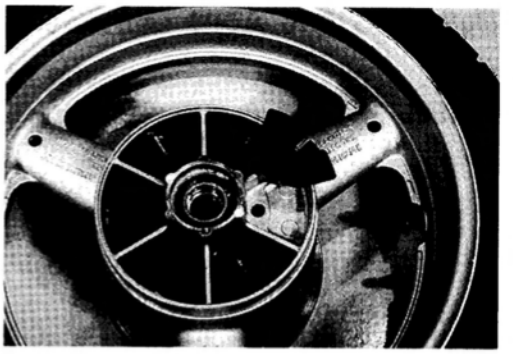

SPROCKET

Inspect the sprocket teeth for wear. If they are worn as shown, replace the two sprockets and drive chain as a set.

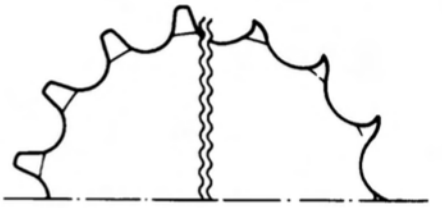

REASSEMBLY AND REMOUNTING

Reassemble and remount the rear wheel in the reverse order of removal and disassembly. Refer to pages 6-27 and 28, and pay attention to the following points:

WHEEL BEARING

- Apply grease to the bearings before installing.

99000-25030: SUZUKI SUPER GREASE "A"

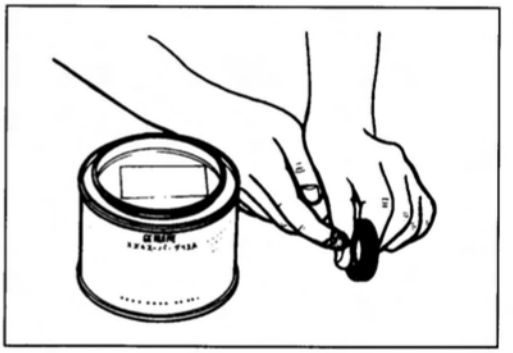

- Install the wheel bearings by using the special tools.

09924-84510: Bearing installer set
09941-34513: Bearing installer set

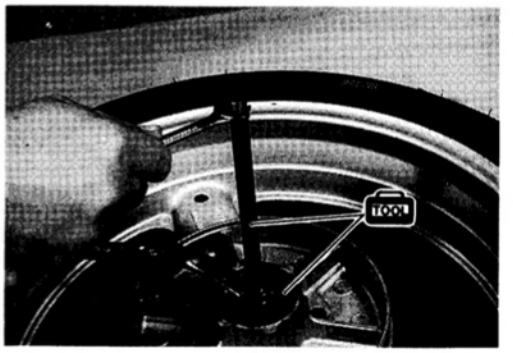

⚠ CAUTION

First install the right wheel bearing, then install the left wheel bearing.
The sealed cover of the bearing must face outside.
Refer to page 6-28 for details.

NOTE:
Apply grease to the dust seal lip before assembling rear wheel.

99000-25030: SUZUKI SUPER GREASE "A"

SPROCKET MOUNTING DRUM BEARING AND OIL SEAL

- Install the bearing and the oil seal using the bearing installer.

09913-75520: Bearing installer

NOTE:
Apply grease to the bearing and dust seal lip before assembling drum.

99000-25030: SUZUKI SUPER GREASE "A"

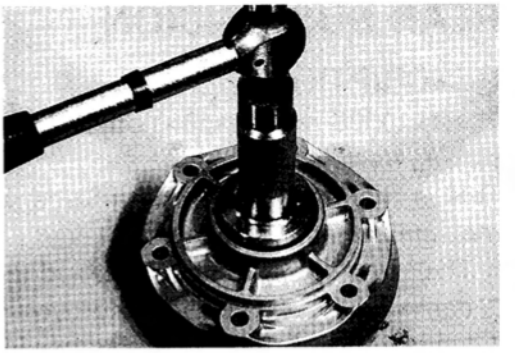

BRAKE DISC

- Apply THREAD LOCK SUPER "1360" to the disc bolts and tighten them to the specified torque.

NOTE:
Make sure that the brake disc is clean and free of any greasy matter.

99000-32130: THREAD LOCK SUPER "1360"

Brake disc bolt (Rear): 35 N·m (3.5 kg-m, 25.5 lb-ft)

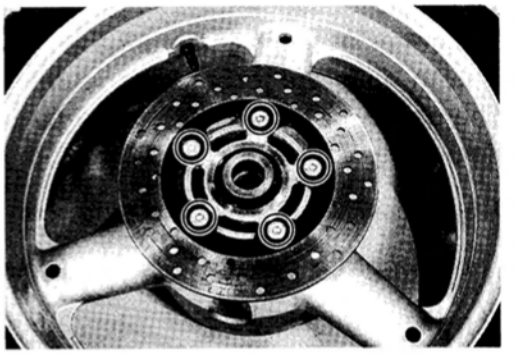

REAR SPROCKET

- Tighten the sprocket mounting nuts to the specified torque.

Rear sprocket nut: 60 N·m (6.0 kg-m, 43.5 lb-ft)

NOTE:
Face the stamped mark on the sprocket to outside.

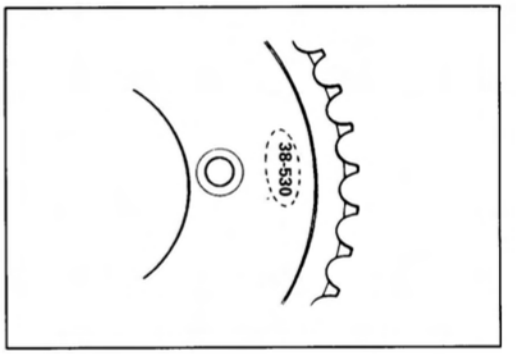

REAR AXLE

- Adjust the chain slack after rear wheel installation. (Refer to page 2-11.)
- Tighten the rear axle nut ① to the specified torque.

Rear axle nut: 100 N·m (10.0 kg-m, 72.5 lb-ft)

- Tighten both chain adjuster lock nuts ② securely.

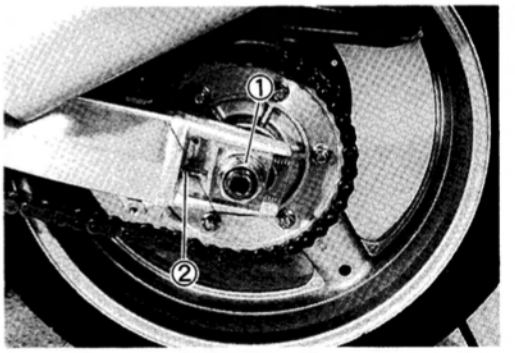

REAR SUSPENSION

DESCRIPTION

The TL1000S rear suspension system is newly designed, which is called the rotary damper suspension system.

This is the story of damping force, and major advantages of the new rotary damper suspension mechanism are as follows.

* The large volume oil is installed in the chamber, which is less deterioration, producing constant damping force even if motorcycle uses severe conditions.
* Lever ratio of the rotary damper is different from that of the spring unit, which can be selected ideal lever ratios for damping force and spring force separately.
* Damper and spring settings are easily adjusted separately.
* Both units are located at the different position, and this can centrize the mass.

The damping force is produced by the following manner.

Rear wheel receives shocks from the road.
↓
The shock is transmitted to the rear swingarm.
↓
The swingarm pushes lever linkage.
↓
The lever linkage pushes rotary damper shaft.
↓
The damper stroke is in turn to the rotary motion.
↓
This motion is transmitted to the rotary damper vanes.
↓
The vanes push the oil in the oil chambers.
↓
The vanes shaft has oil passage holes and damping forces are produced when oil passes hole and leaf valve.

The damping force is produced by the vanes and valves in the rotary damper, which is transferred from the center shaft. The stroking motion is changed to the rotary motion by the crank lever.

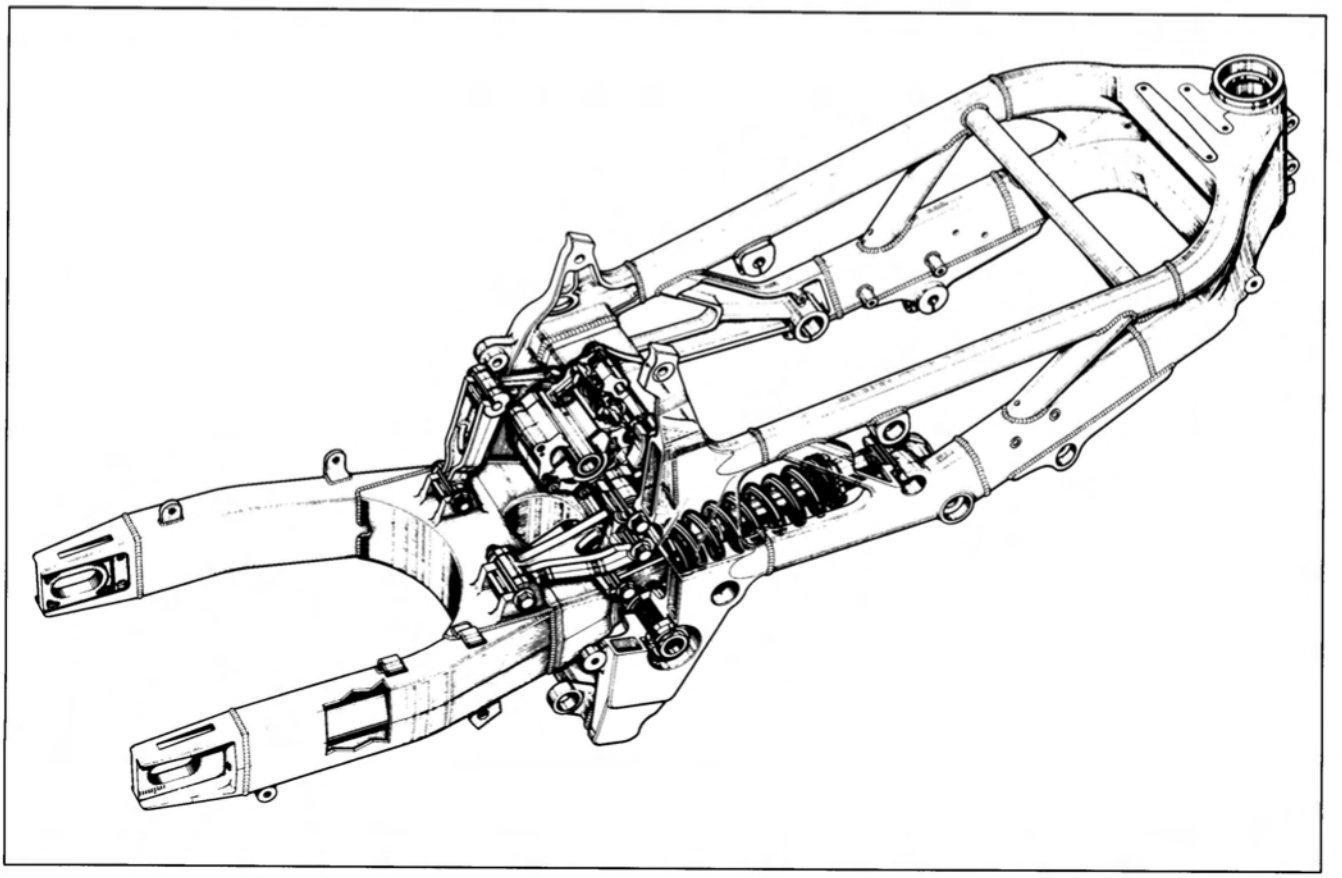

ROTARY DAMPER OPERATION

1. The crank lever rotates the rotor shaft, and the rotor vanes turn and push oil in the chamber "A".
2. The oil from the chamber "A" passes two routes, one is damping force adjuster valve and the other is the normal valve.
3. The oil passing resistance at the valves, the compression damping force is produced.
4. After passing one-way valve (check valve), the oil returns to chamber "B".
   In the unit the chamber "A" is connected with the chamber "A'", and the chamber "B" with "B'".
   The oil passage holes are provided at the shaft.
5. To prevent foaming air in the oil and temperature compensation, the pressurized air always pushes free piston in the accumulator.

REBOUND

1. The crank lever rotates the rotor shaft, and the rotor vanes turn and push oil in the chamber "B".
2. The oil flows reverse direction of compression stroke.

OIL CIRCUIT DIAGRAM

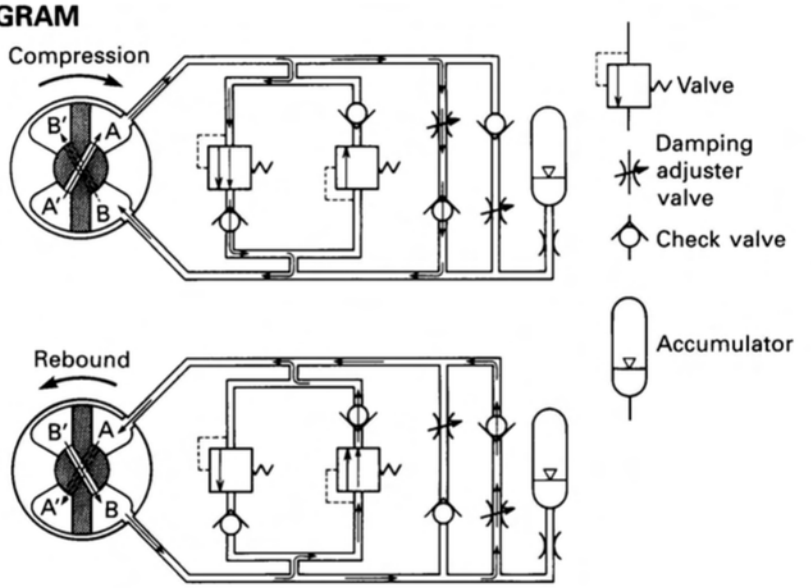

COMPRESSION

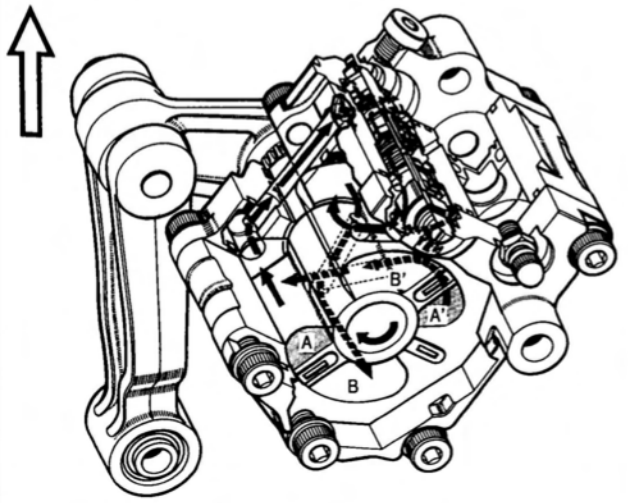

REBOUND

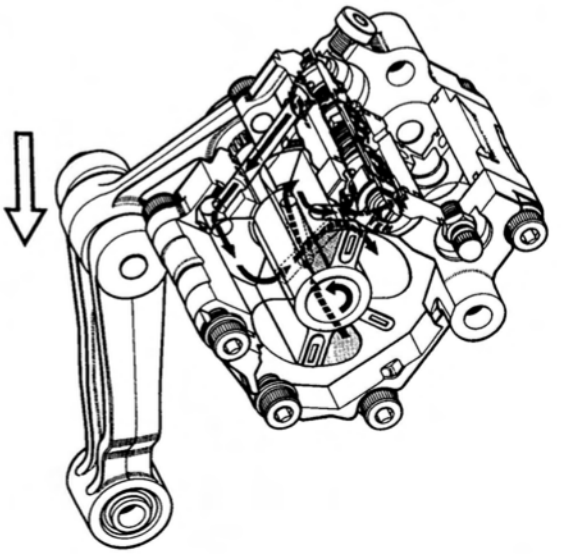

CONSTRUCTION

① Rear suspension spring unit
② Rear suspension rotary damper
③ Spring unit cushion lever
④ Spring unit cushion rod
⑤ Rotary damper cushion rod
⑥ Rotary damper cushion lever
⑦ Swingarm
⑧ Torque link
⑨ Chain buffer

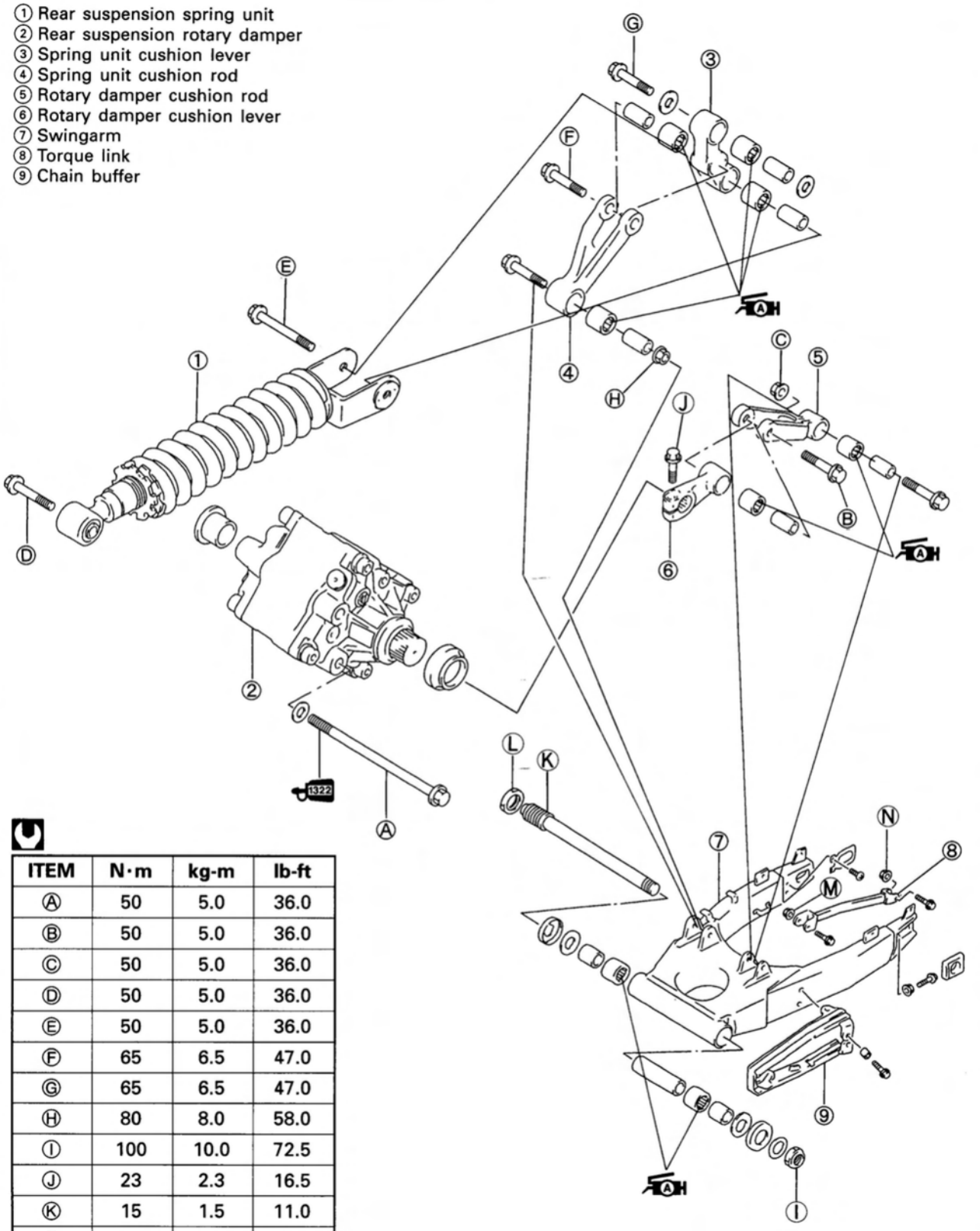

ITEM	N·m	kg-m	lb-ft
Ⓐ	50	5.0	36.0
Ⓑ	50	5.0	36.0
Ⓒ	50	5.0	36.0
Ⓓ	50	5.0	36.0
Ⓔ	50	5.0	36.0
Ⓕ	65	6.5	47.0
Ⓖ	65	6.5	47.0
Ⓗ	80	8.0	58.0
Ⓘ	100	10.0	72.5
Ⓙ	23	2.3	16.5
Ⓚ	15	1.5	11.0
Ⓛ	90	9.0	65.0
Ⓜ	28	2.8	20.0
Ⓝ	35	3.5	25.5

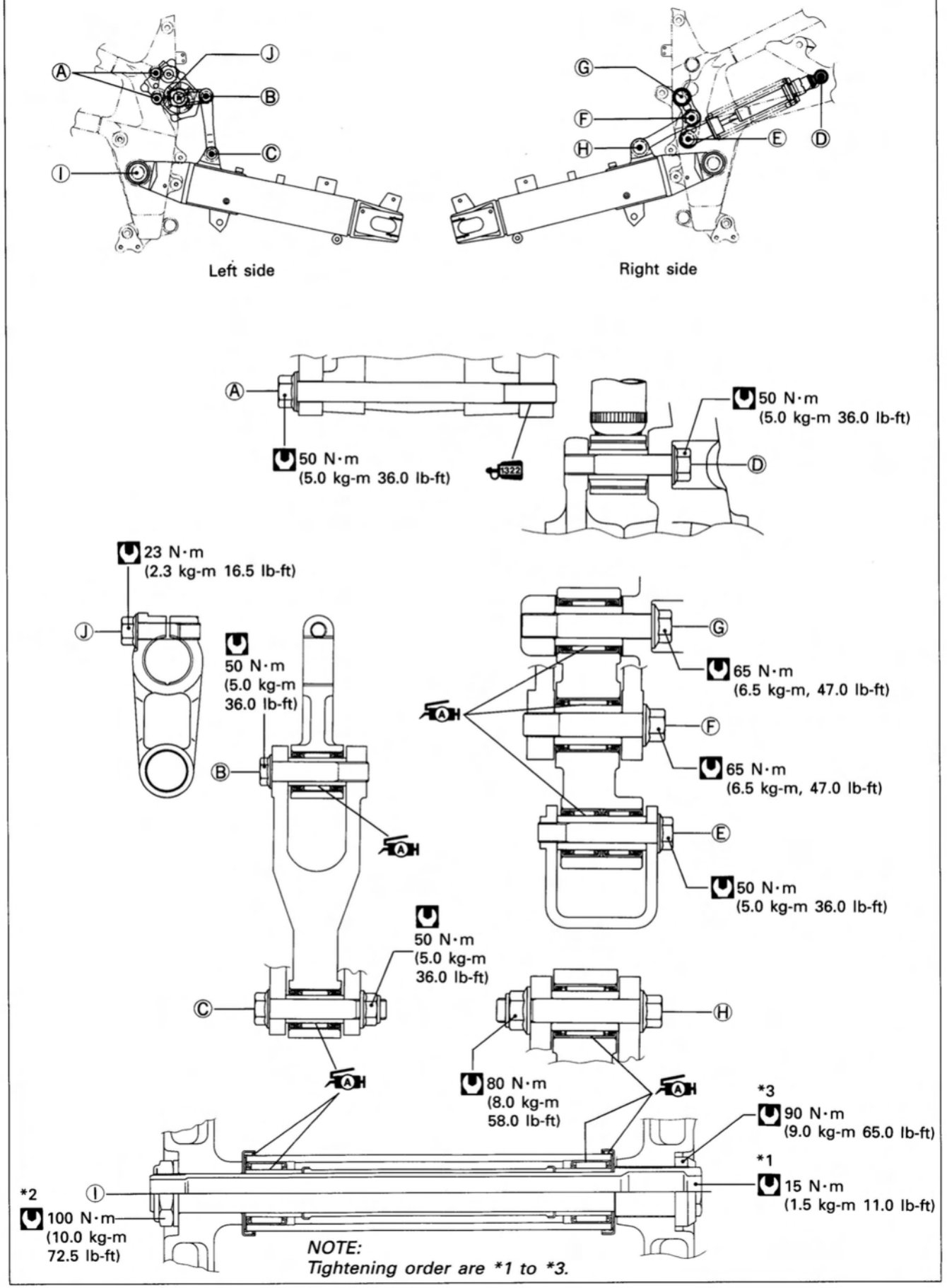
A
J
B
C
I
Left side
G
F
H
E
D
Right side
A
50 N·m
(5.0 kg-m 36.0 lb-ft)
1322
50 N·m
(5.0 kg-m 36.0 lb-ft)
D
23 N·m
(2.3 kg-m 16.5 lb-ft)
J
50 N·m
(5.0 kg-m
36.0 lb-ft)
B
A H
G
65 N·m
(6.5 kg-m, 47.0 lb-ft)
F
65 N·m
(6.5 kg-m, 47.0 lb-ft)
E
50 N·m
(5.0 kg-m 36.0 lb-ft)
50 N·m
(5.0 kg-m
36.0 lb-ft)
C
H
80 N·m
(8.0 kg-m
58.0 lb-ft)
*3
90 N·m
(9.0 kg-m 65.0 lb-ft)
*1
15 N·m
(1.5 kg-m 11.0 lb-ft)
*2
I
100 N·m
(10.0 kg-m
72.5 lb-ft)
NOTE:
Tightening order are *1 to *3.

ROTARY DAMPER AND SPRING UNIT REMOVAL

ROTARY DAMPER

- Keep the motorcycle with a jack.
- Loosen the rear axle nut and chain adjuster lock nuts.
- Remove the gearshifting rod arm ①.
- Remove the left footrest mounting bolts ②.

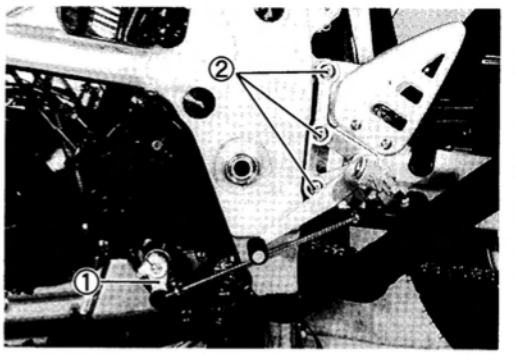

- Remove the rod pivot nut and bolt ③.
- Remove the rotary damper mounting bolts ④.

NOTE:
Place a rag on the rear swingarm before removing the rotary damper.

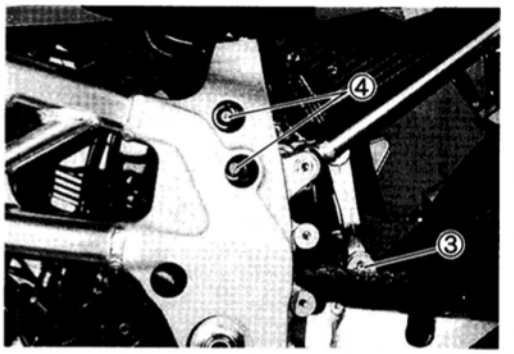

- Remove the spring unit mounting bolt ⑤.

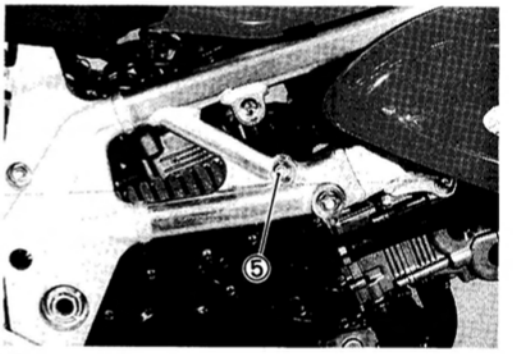

- Remove the rotary damper.

NOTE:
Lift the motorcycle until the rear wheel off the ground with a jack before removing the rotary damper.

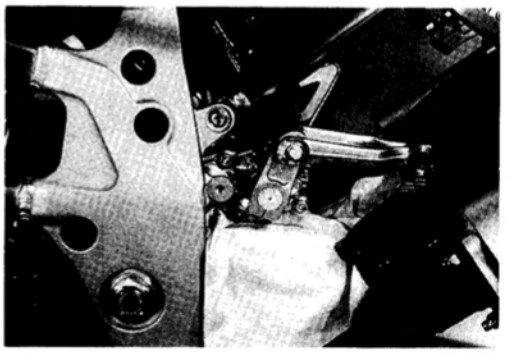

- Remove the cushion lever with rod.



- Separate the cushion rod and lever.

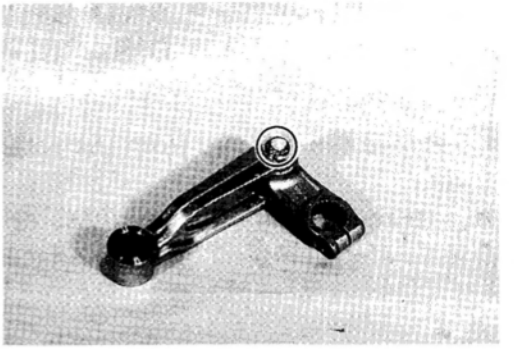

SPRING UNIT

- Remove the rear brake fluid reserve tank mounting bolt ①.
- Remove the right footrest mounting bolts ②.

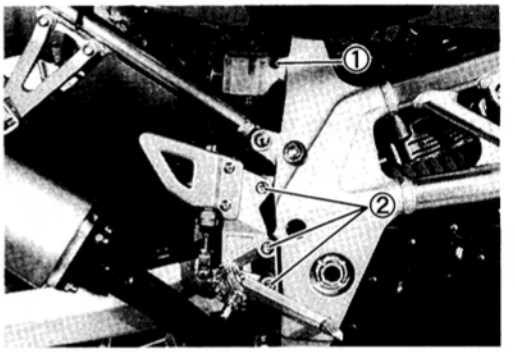

- Remove the spring unit with the spring unit cushion rod and cushion lever by removing the mounting bolts.

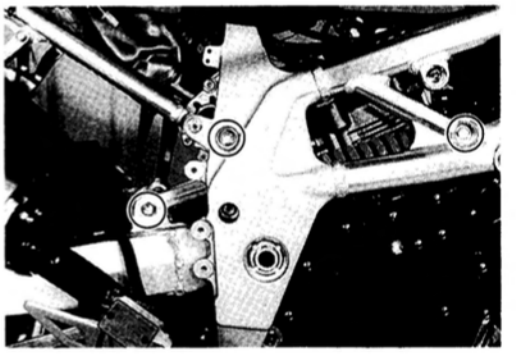

- Remove the cushion lever with rod.

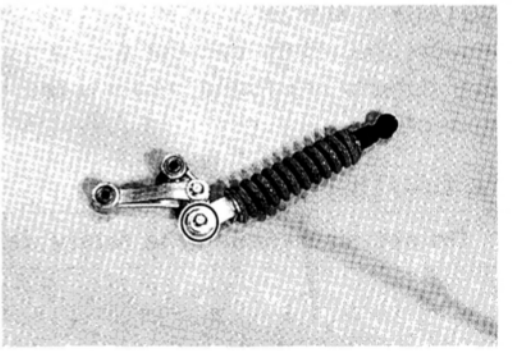

- Separate the cushion lever and rod.

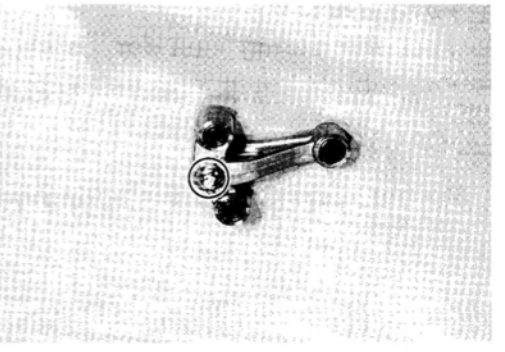

ROTARY DAMPER AND SPRING UNIT INSPECTION AND DISASSEMBLY

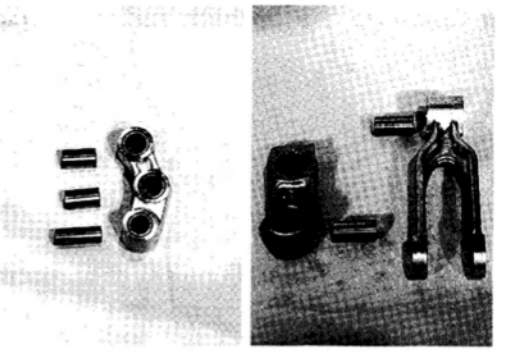

SPACER

- Remove the spacers from the rotary damper cushion lever.

Inspect the spacers for any flaws or other damage. If any defects are found, replace the spacers with new ones.

CUSHION LEVER AND ROD BEARING

Insert the spacer ① into bearing and check the play to move the spacer up and down.
If an excessive play is noted, replace the bearing with new ones.

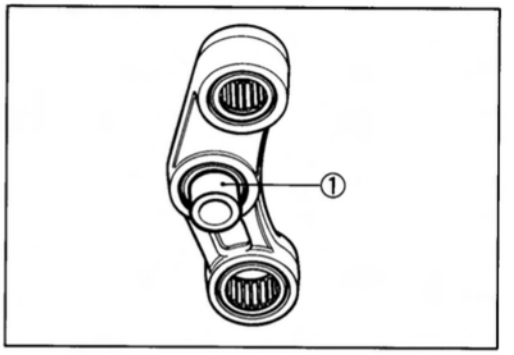

- Remove the bearing with a suitable socket wrench.

⚠ CAUTION

The removed bearing must be replaced with new ones.

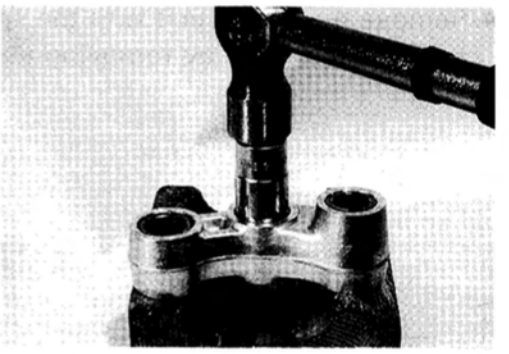

ROTARY DAMPER

Inspect the rotary damper for damage and oil leakage. If any defects are found, replace the rotary damper with a new one.

⚠ CAUTION

Do not disassemble the rotary damper.

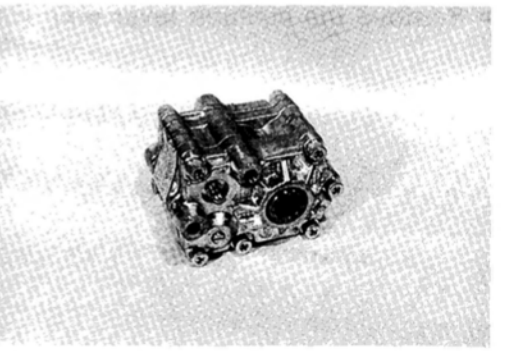

SPRING UNIT

Inspect the spring unit for damage. If any defects are found, replace the spring unit with a new one.

⚠ CAUTION

Do not disassemble the spring unit.

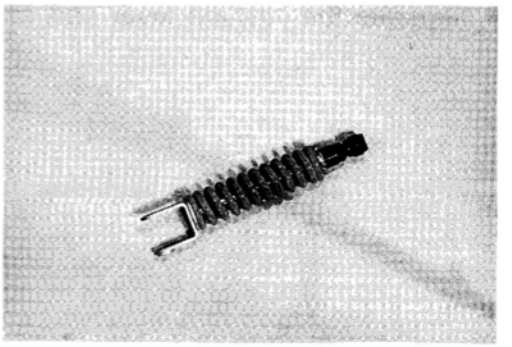

ROTARY DAMPER AND SPRING UNIT REASSEMBLY AND REMOUNTING

CUSHION LEVER AND ROD BEARING

- Press the bearings into the cushion lever and rod with the special tool.

09924-84521: Bearing installer

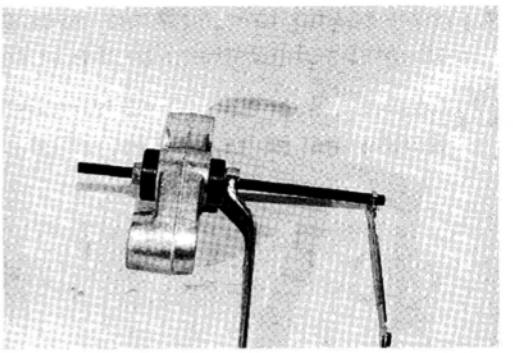

- Apply grease to the bearing and spacers.

99000-25030: SUZUKI SUPER GREASE "A"



- Tighten the rotary damper cushion rod/lever bolt to the specified torque.

Cushion rod bolt: 50 N·m (5.0 kg-m, 36.0 lb-ft)

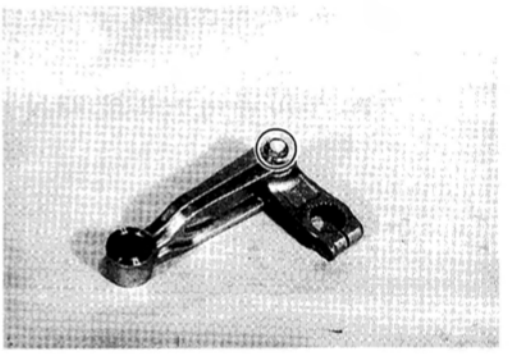

- Align the punched marks ①, when installing the cushion lever to the shaft.
- Tighten the lever bolt ② to the specified torque.

Cushion lever bolt: 23 N·m (2.3 kg-m, 16.5 lb-ft)

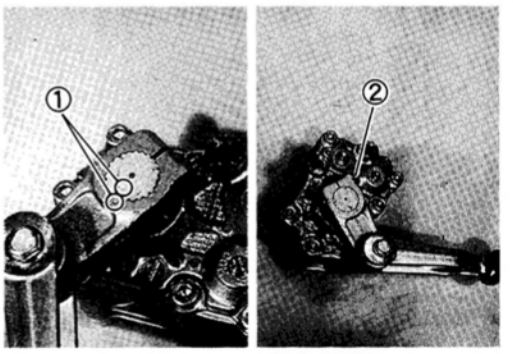

- Remount the rotary damper to the motorcycle and tighten the bolts and nut to the specified torque. (Refer to page 6-36.)

Rotary damper bolt ③: 50 N·m (5.0 kg-m, 36.0 lb-ft)
Cushion rod nut ④: 50 N·m (5.0 kg-m, 36.0 lb-ft)

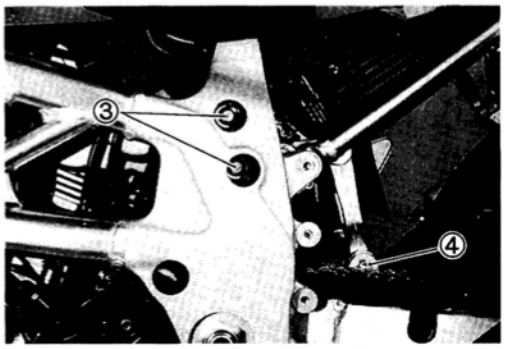

- Install spring unit cushion lever and rod to the spring unit, and tighten them to the specified torque.

Cushion lever bolt ①: 65 N·m (6.5 kg-m, 47.0 lb-ft)
Spring unit bolt ②: 50 N·m (5.0 kg-m, 36.0 lb-ft)

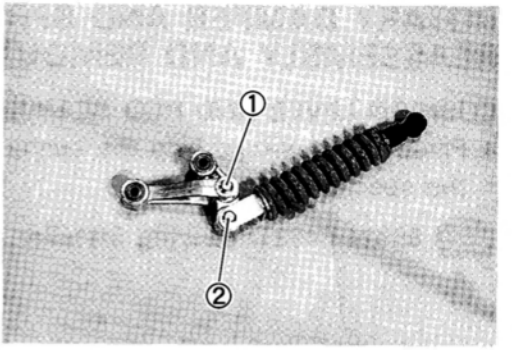

- Remount the spring unit to the motorcycle and tighten the nut and bolts to the specified torque.

Cushion rod nut ③: 80 N·m (8.0 kg-m, 58.0 lb-ft)
Cushion lever bolt ④: 65 N·m (6.5 kg-m, 47.0 lb-ft)
Spring unit bolt ⑤: 50 N·m (5.0 kg-m, 36.0 lb-ft)

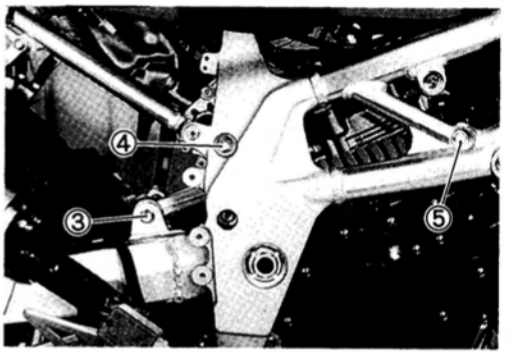

- Tighten the left and right footrest mounting bolts to the specified torque.

Footrest mounting bolt ⑥: 23 N·m (2.3 kg-m, 16.5 lb-ft)

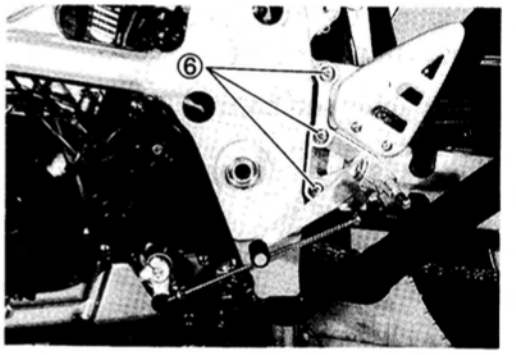

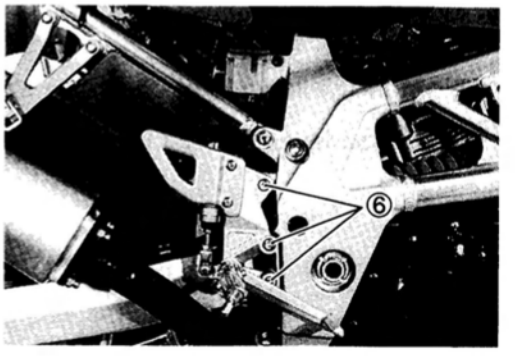

SUSPENSION SETTING

SPRING PRE-LOAD

STD Spring set length: 180 mm (7.1 in)

After installing the rear suspension, adjust the damping force as follows.

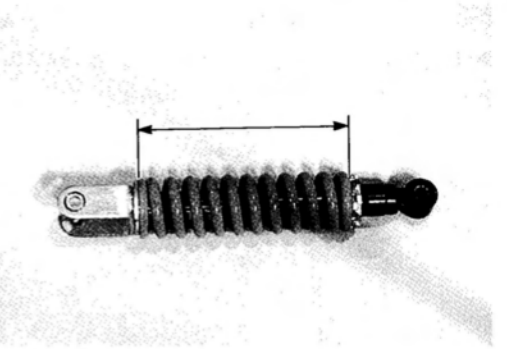

DAMPING FORCE ADJUSTMENT

(Rebound side)

Fully turn the damping force adjuster clockwise. It is at stiffest position and turn it out to standard setting position. (STD position is 2 turns out.)

(Compression side)

Fully turn the damping force adjuster clockwise. It is at stiffest position and turn it out to standard setting position. (STD position is 1-1/8 turns out.)



Rebound side



Compression side

STANDARD SUSPENSION SETTING

		REAR		
		Spring set length	Damping force adjuster	
			Rebound	Compression
Solo riding	Softer	180 mm (7.1 in)	2-1/8 turns out	1-1/4 turns out
	Standard	180 mm (7.1 in)	2 turns out	1-1/8 turns out
	Stiffer	180 mm (7.1 in)	1-3/4 turns out	1-1/8 turns out
Dual riding		180 mm (7.1 in)	2 turns out	1-1/8 turns out

FINAL INSPECTION AND ADJUSTMENT

After installing the rear suspension, the following adjustments are required before driving.

* Drive chain ..... Page 2-17
* Rear brake ..... Page 2-19
* Tire pressure ..... Page 2-21
* Chassis bolts and nuts ..... Page 2-23

REAR SWINGARM REMOVAL

- Remove the rear wheel. (Refer to page 6-29.)
- Remove the right muffler.

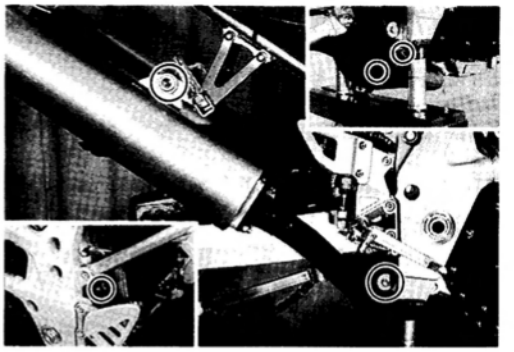

- Place a rag underneath the brake hose union bolt on the brake master cylinder to catch any spilled drops of brake fluid.
- Remove the brake hose union bolt ①.
- Remove the torque link bolt ②.

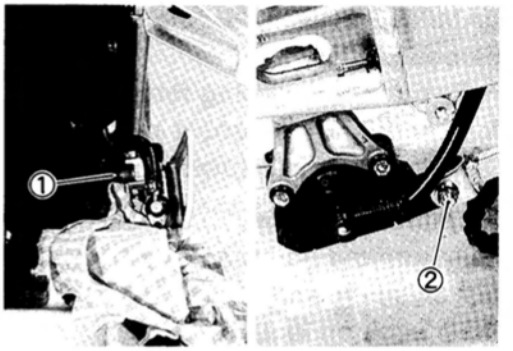

- Remove the rear brake caliper with brake hose from the hose clamps and hose guide.

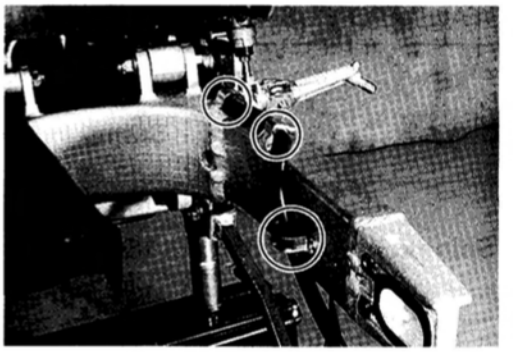

- Remove the right footrest mounting bolts.

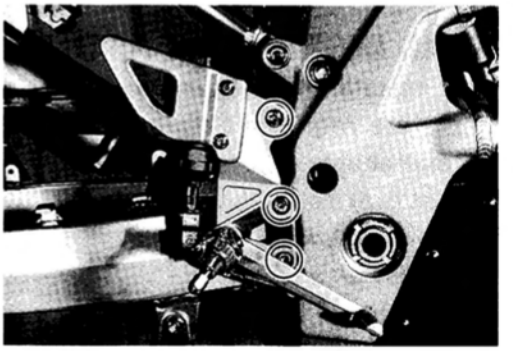

- Remove the cushion rod mounting nuts and bolts.

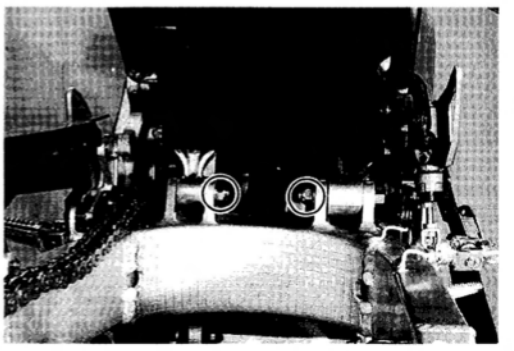

- Remove the swingarm pivot shaft lock nut with the special tool.

09940-14970: Swingarm pivot shaft lock nut socket wrench

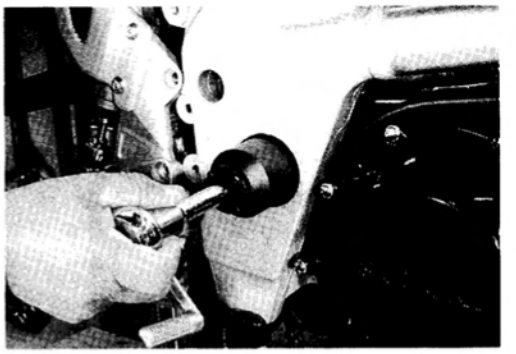

- Remove the swingarm pivot shaft nut ①.
- Remove the swingarm pivot shaft ②.
- Remove the swingarm.

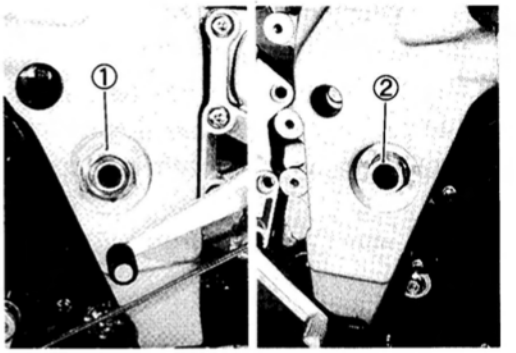

- Remove the chain cover.

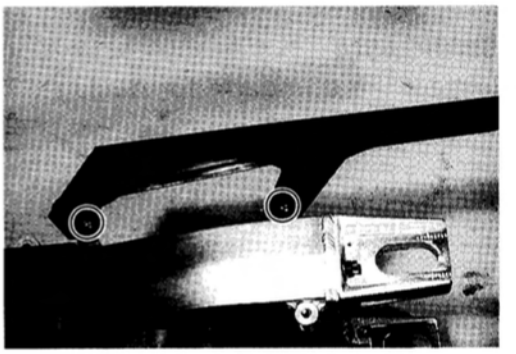

- Remove the chain buffer.

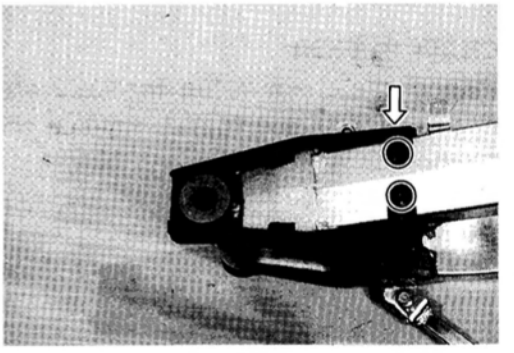

- Remove the torque link.

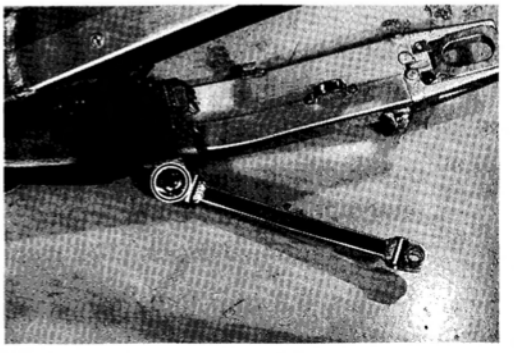

REAR SWINGARM INSPECTION AND DISASSEMBLY

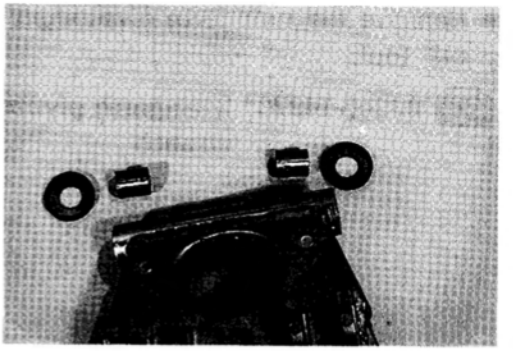

SPACER

- Remove the dust seals and spacers from swingarm.
- Inspect the spacers for any flaws or other damage. If any defects are found, replace the spacers with new ones.

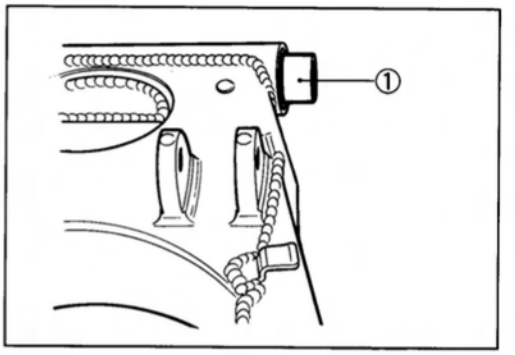

SWINGARM BEARING

Insert the spacer ① into bearing and check the play to move the spacer up and down.
If excessive play is noted, replace the bearing with a new one.

- Draw out the swingarm pivot bearings with suitable bar.

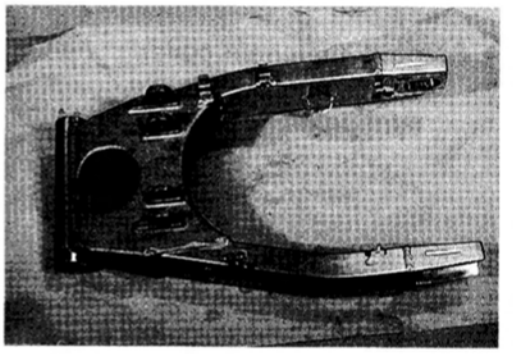

SWINGARM

Inspect the swingarm for damage.



CHAIN BUFFER

Inspect the chain buffer for wear and damage.
If any defects are found, replace the chain buffer with a new one.

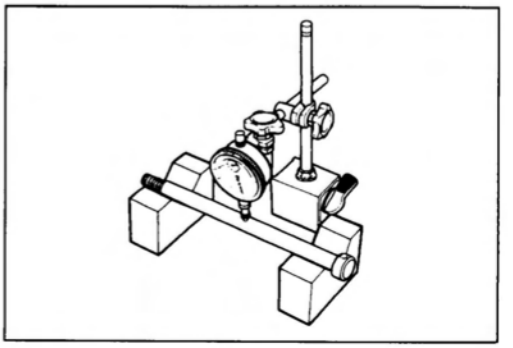

SWINGARM PIVOT SHAFT

Using a dial gauge, check the pivot shaft runout and replace it if the runout exceeds the limit.

09900-20606: Dial gauge (1/100 mm, 10 mm)
09900-20701: Magnetic stand
09900-21304: V-block (100 mm)

Service limit: 0.3 mm (0.01 in)

REAR SWINGARM REASSEMBLY AND REMOUNTING

Reassemble and remounting the swingarm in the reverse order of removal and disassembly, and pay attention to the following points:

SWINGARM BEARING

- Press the bearing into the swingarm pivot by using the special tool.

09941-34513: Bearing/Steering race installer

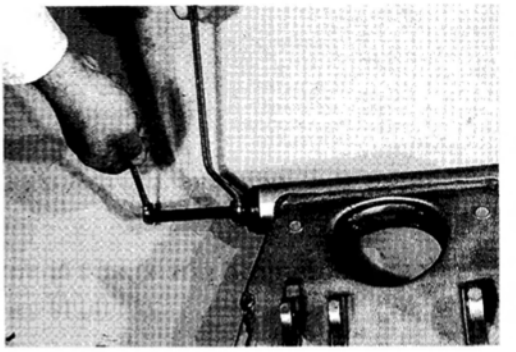

NOTE:
When reinstalling the bearing, stamped mark of bearing must face outside.

- Apply grease to the spacers, bearings and dust seals.

99000-25030: SUZUKI SUPER GREASE "A"

- Install the rear torque link and tighten the nut to the specified torque.

Rear torque link nut: 28 N·m (2.8 kg-m, 20.0 lb-ft)

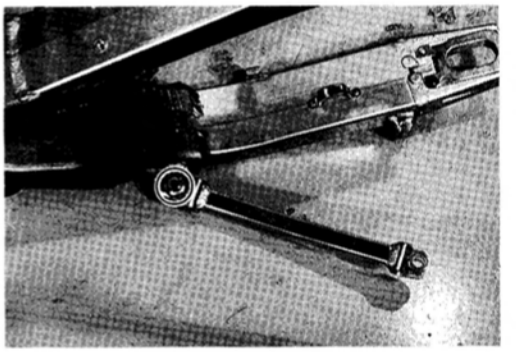

SWINGARM PIVOT SHAFT AND NUT

Swingarm pivot shaft and nuts tightening order are as follows.

- Install the swingarm pivot shaft ① and tighten to the specified torque.

Swingarm pivot shaft: 15 N·m (1.5 kg-m, 11.0 lb-ft)

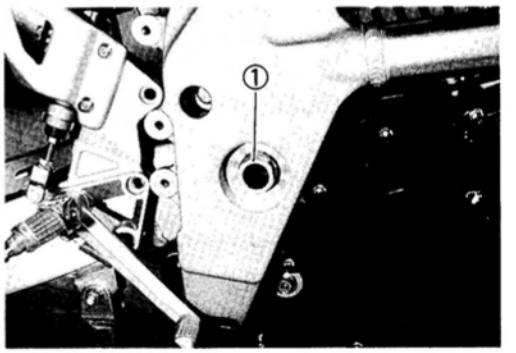

- Hold the swingarm pivot shaft with a 27 mm offset wrench and tighten the swingarm pivot nut ② to the specified torque.

Swingarm pivot shaft nut: 100 N·m (10.0 kg-m, 72.5 lb-ft)

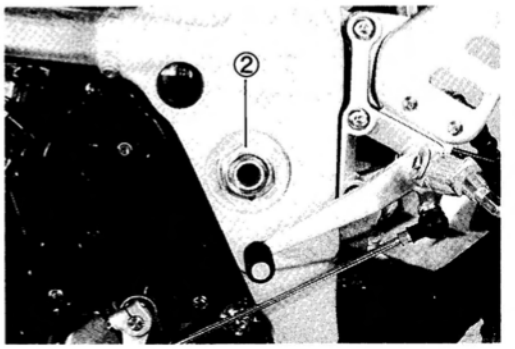

- Tighten the swingarm pivot shaft lock nut to the specified torque with the special tool.

09940-14970: Swingarm pivot shaft lock nut socket wrench

Swingarm pivot shaft lock nut: 90 N·m (9.0 kg-m, 65.0 lb-ft)

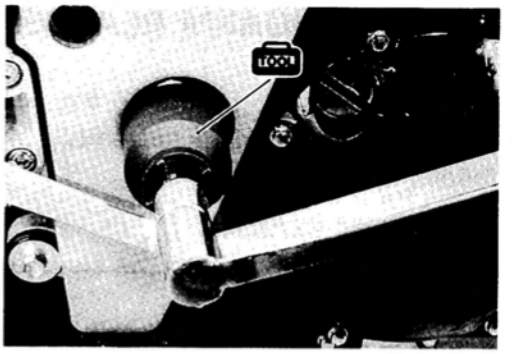

- Tighten the rear cushion rod mounting nuts (①, ②) to the specified torque.

Rear cushion rod nut ①: 50 N·m (5.0 kg-m, 36.0 lb-ft)
②: 80 N·m (8.0 kg-m, 58.0 lb-ft)

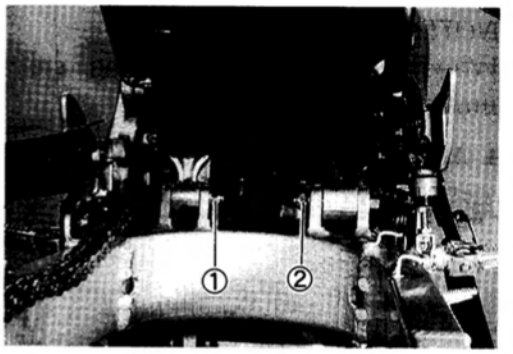

- Install the rear brake hose correctly.
- Tighten the brake hose union bolt to the specified torque.

Brake hose union bolt: 23 N·m (2.3 kg-m, 16.5 lb-ft)



MUFFLER
Refer to page 2-22.

REAR AXLE NUT AND TORQUE LINK NUT
Refer to pages 6-32 and 6-35.

REAR BRAKE
Bleed air from the system after reassembling the caliper. (Refer to page 2-20.)

FINAL INSPECTION AND ADJUSTMENT

After installing the rear swingarm and rear wheel, the following adjustments are required before driving motorcycle.

DRIVE CHAIN ..... Refer to page 2-17.
REAR BRAKE ..... Refer to page 2-19.
TIRE PRESSURE ..... Refer to page 2-21.

FRONT BRAKE

CONSTRUCTION

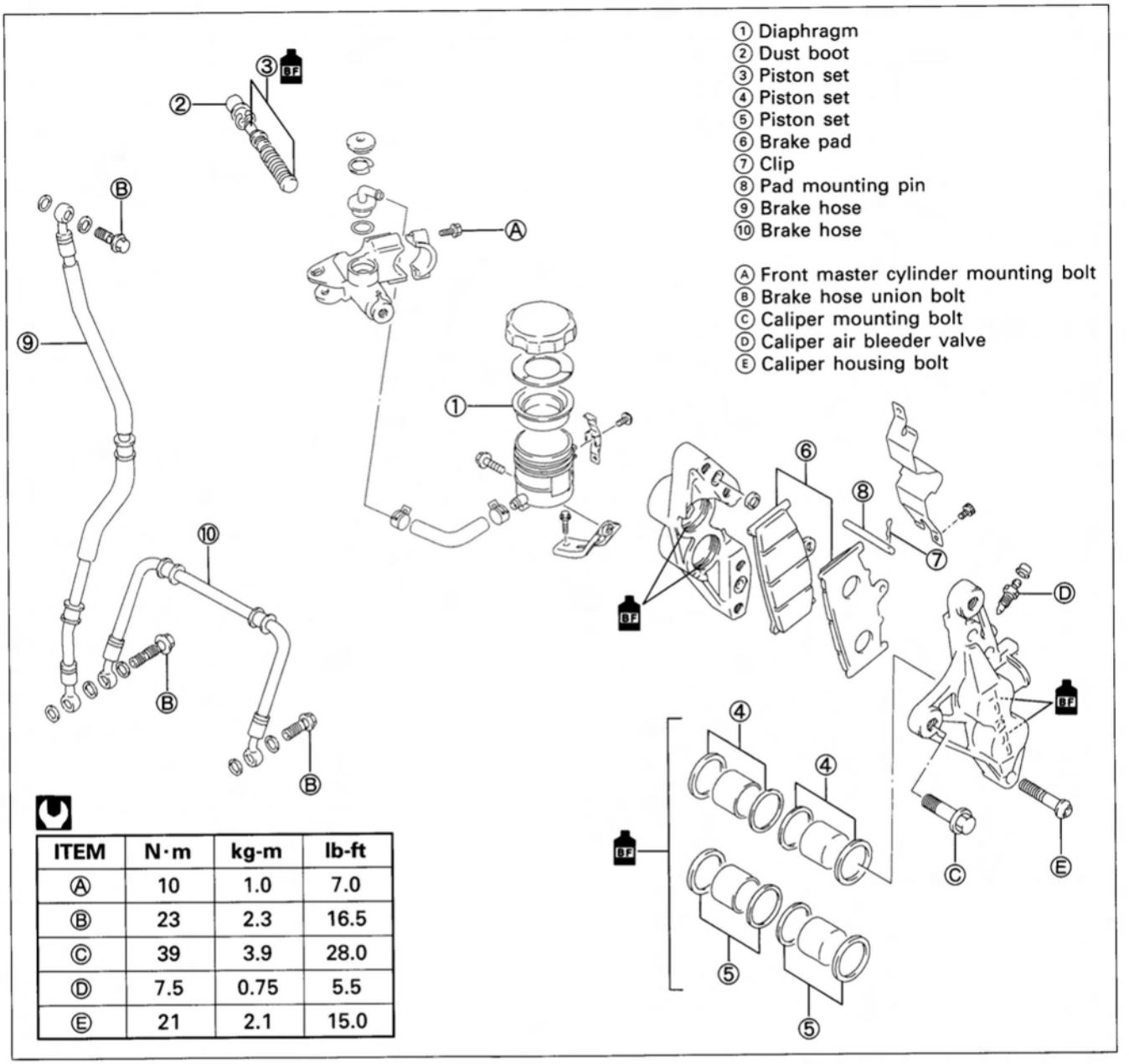

ITEM	N·m	kg-m	lb-ft
Ⓐ	10	1.0	7.0
Ⓑ	23	2.3	16.5
Ⓒ	39	3.9	28.0
Ⓓ	7.5	0.75	5.5
Ⓔ	21	2.1	15.0

⚠ WARNING

- **This brake system is filled with a ethylene glycol-based DOT 4 brake fluid. Do not use or mix different types of fluid such as silicone-based or petroleum-based.**
- **Do not use any brake fluid taken from old, used or unsealed containers. Never reuse brake fluid left over from the last servicing or stored for long periods.**
- **When storing the brake fluid, seal the container completely and keep away from children.**
- **When replenishing brake fluid, take care not to get dust into fluid.**
- **When washing brake components, use fresh brake fluid. Never use cleaning solvent.**
- **A contaminated brake disc or brake pad reduces braking performance. Discard contaminated pads and clean the disc with high quality brake cleaner or neutral detergent.**

⚠ CAUTION

Handle brake fluid with care: the fluid reacts chemically with paint, plastics, rubber materials etc.

BRAKE PAD REPLACEMENT

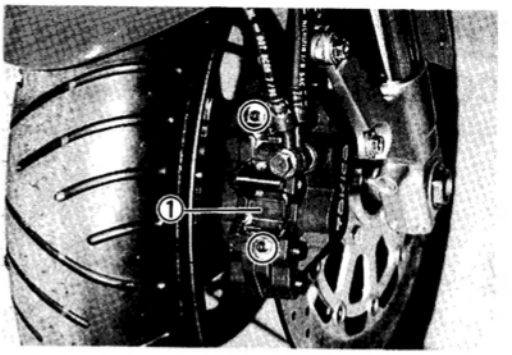

- Remove the spring ①.
- Remove the brake pads by removing the clip ② and pad mounting pin ③.

⚠ CAUTION

*** Do not operate the brake lever while dismounting the pads.**
*** Replace the brake pad as a set, otherwise braking performance will be adversely affected.**

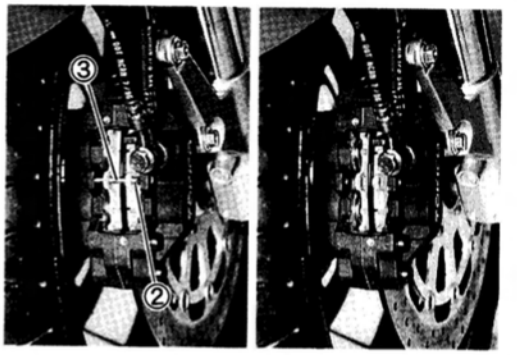

- Remount the new pads.

NOTE:
After replacing the brake pads, pump with the brake lever few times to operate the brake correctly and then check the brake fluid level.

BRAKE FLUID REPLACEMENT

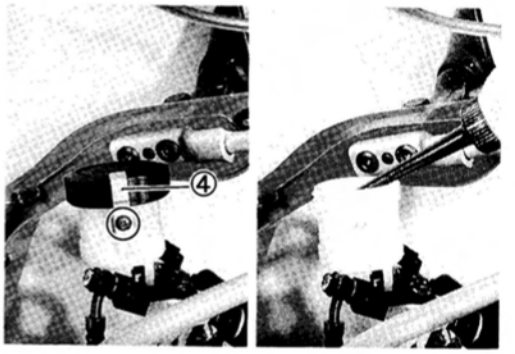

- Place the motorcycle on a level surface and keep the handlebars straight.
- Remove the brake fluid reserve tank cap and diaphragm by removing the cap stopper ④.
- Suck up the old brake fluid as much as possible.
- Fill the reservoir with fresh brake fluid.

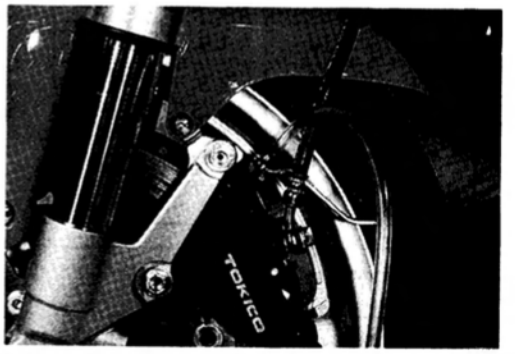

- Attach a pipe to the caliper air bleeder valve, and insert the free end of hose into a receptacle.
- Loosen the bleeder valve and pump the brake lever until no more old brake fluid flows out of the bleeder valve.
- Close the caliper air bleeder valve, and disconnect a clear hose. Fill the reserve tank with fresh brake fluid to the upper mark of the reserve tank.

Specification and Classification: DOT 4

⚠ CAUTION

Bleed air in the brake fluid circuit. (Refer to page 2-20.)

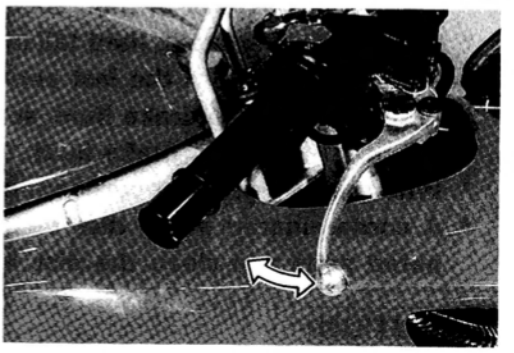

CALIPER REMOVAL AND DISASSEMBLY

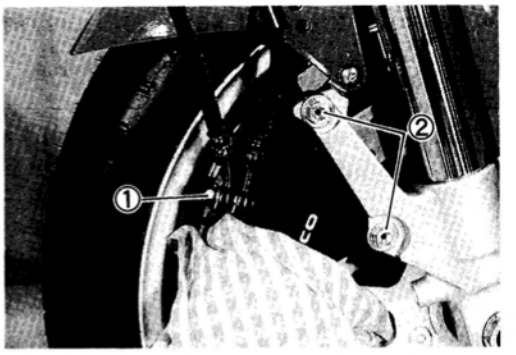

- Remove the brake hose from the caliper by removing the union bolt ① and catch the brake fluid in a suitable receptacle.

NOTE:
Place a rag underneath the union bolt on the brake caliper to catch the spilled drops of brake fluid.

- Remove the brake caliper by removing the caliper mounting bolts ②.

⚠ CAUTION

Never reuse the brake fluid left over from previous servicing and stored for long periods.

⚠WARNING

Brake fluid, if it leaks, will interfere with safe running and discolor painted surfaces. Check the brake hose and hose joints for cracks and fluid leakage.

NOTE:
Slightly loosen the caliper housing bolts before removing the caliper mounting bolts to facilitate later disassembly.

- Remove the brake pads. (Refer to page 6-49.)
- Separate the caliper halves to remove the caliper housing bolts.

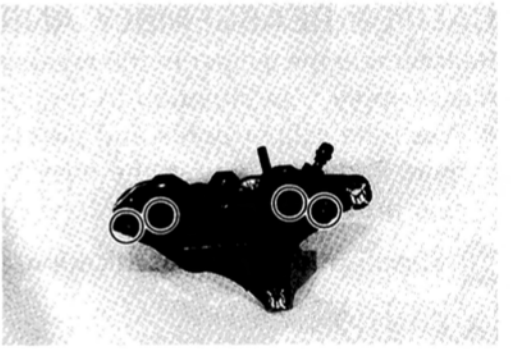

- Remove the O-rings ③.

⚠ CAUTION

Replace the O-rings with new ones.

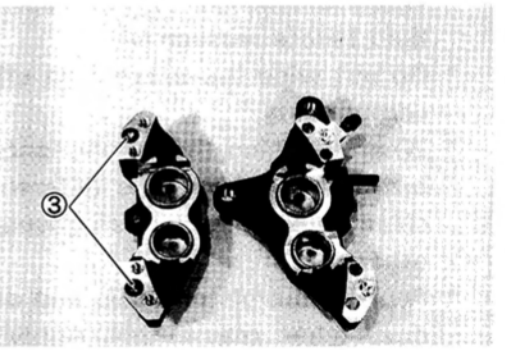

- Place a rag over the pistons to prevent its popping out and push out the pistons with an air gun.

⚠ CAUTION

Do not use high pressure air to prevent piston damage.



- Remove the dust seals and piston seals.

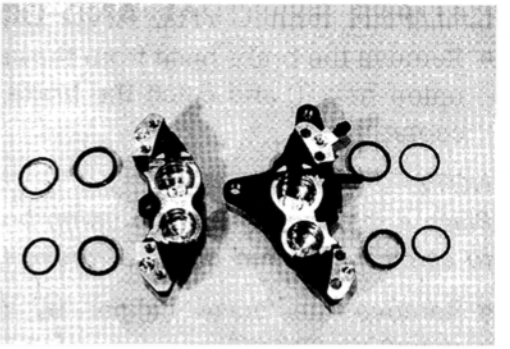

⚠ CAUTION

Do not reuse the dust seals and piston seals to prevent fluid leakage.

CALIPER INSPECTION



CALIPER

Inspect the caliper cylinder wall for nicks, scratches or other damage.

PISTON

Inspect the piston surface for any scratches or other damage.

CALIPER REASSEMBLY AND REMOUNTING

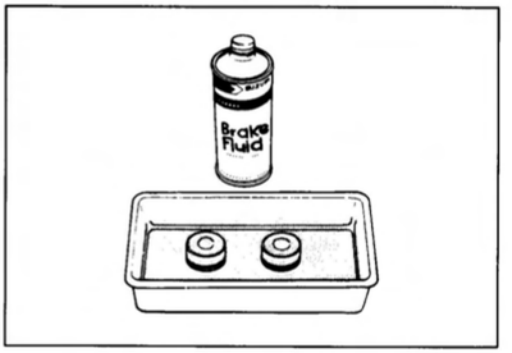

Reassemble the caliper in the reverse order of removal and disassembly. Pay attention to the following points:

- Wash the caliper bores and pistons with specified brake fluid. Particularly wash the dust seal grooves and piston seal grooves.

BF **Specification and Classification: DOT 4**

⚠ CAUTION

- *** Wash the caliper components with fresh brake fluid before reassembly.**
- *** Do not wipe the brake fluid off after washing the components.**
- *** When washing the components, use the specified brake fluid. Never use different types of fluid or cleaning solvent such as gasoline, kerosine or the others.**
- *** Replace the piston seals and dust seals with new ones when reassembly. Apply the brake fluid to both seals when installing them.**

PISTON SEAL

- Install the piston seals as shown in the illustration.

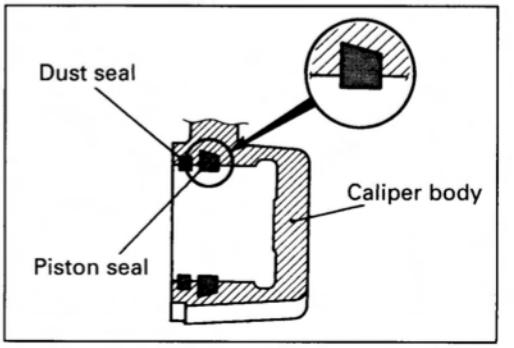

- Tighten each bolt to the specified torque.

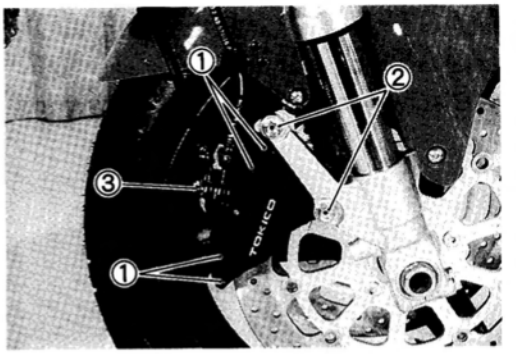

Front brake caliper housing bolt ①:
23 N·m (2.3 kg-m, 16.5 lb-ft)
Front brake caliper mounting bolt ②:
39 N·m (3.9 kg-m, 28.0 lb-ft)
Front brake hose union bolt ③:
23 N·m (2.3 kg-m, 16.5 lb-ft)

NOTE:
Before remounting the caliper, push the piston all the way into the caliper.

⚠ CAUTION

Bleed air from the system after reassembling the caliper. (Refer to page 2-20.)

DISC SERVICING

- Remove the front wheel. (Refer to page 6-7.)

Visually check the brake disc for damage or cracks.
Measure the thickness with a micrometer.
Replace the disc if the thickness is less than the service limit or if damage is found.

Service Limit
Front disc thickness: 4.5 mm (0.18 in)

09900-20205: Micrometer (0–25 mm)

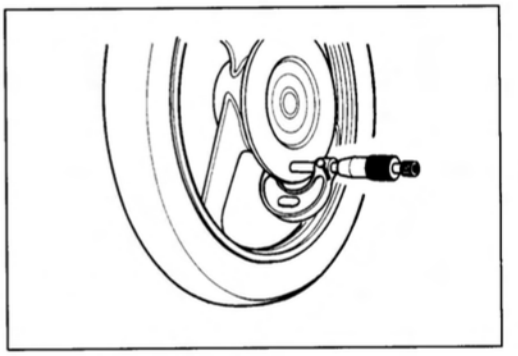

Measure the runout with a dial gauge.
Replace the disc if the runout exceeds the service limit.

Service Limit
Front disc runout: 0.30 mm (0.012 in)

09900-20606: Dial gauge (1/100 mm)
09900-20701: Magnetic stand

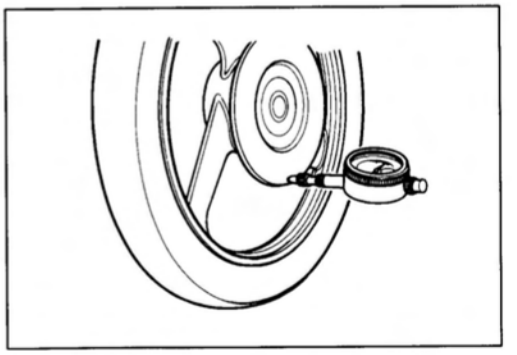

- Remove the disc. (Refer to page 6-7.)
- Install the disc. (Refer to page 6-9.)

MASTER CYLINDER REMOVAL AND DISASSEMBLY

- Disconnect the front brake switch lead wires.

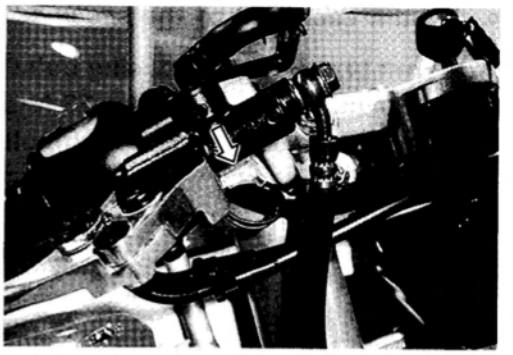

- Place a rag underneath the union bolt on the master cylinder to catch any spilled drops of brake fluid. Remove the union bolt and disconnect the brake hose.



⚠ CAUTION

Immediately and completely wipe off any brake fluid contacting any part of the motorcycle. The fluid reacts chemically with paint, plastics and rubber materials, etc. and will damage them severely.

- Remove the brake fluid reserve tank mounting bolt.
- Remove the master cylinder with the reserve tank.

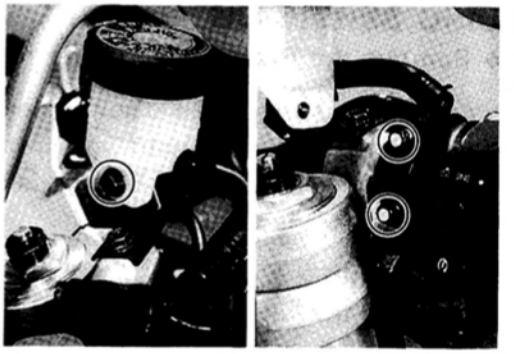

- Remove the reserve tank with hose connector by removing the circlip.
- Drain brake fluid.

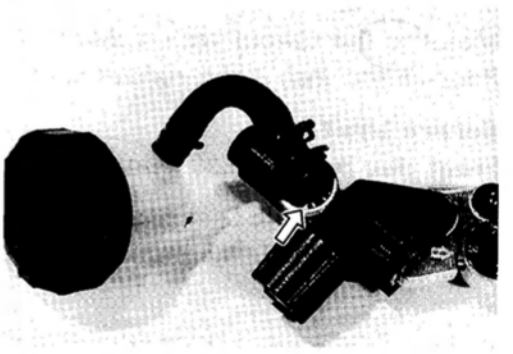

- Remove the brake lever ① and brake switch ②.

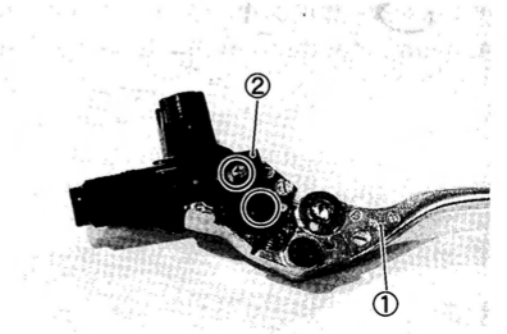

- Pull out the dust boot ① and remove the circlip ②.

TOOL 09900-06108: Snap ring pliers

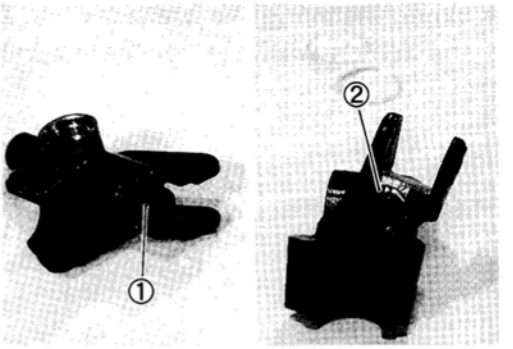

- Remove the piston, secondary cup, primary cup and return spring.

③ Secondary cup
④ Piston
⑤ Primary cup
⑥ Return spring

- Remove the O-ring ⑦.

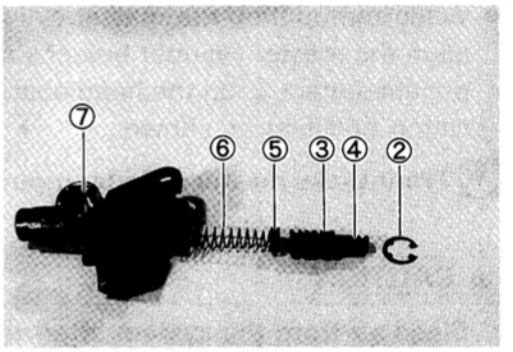

MASTER CYLINDER INSPECTION

Inspect the master cylinder bore for any scratches or other damage.
Inspect the piston surface for any scratches or other damage.
Inspect the primary cup, secondary cup and dust seal for wear or damage.

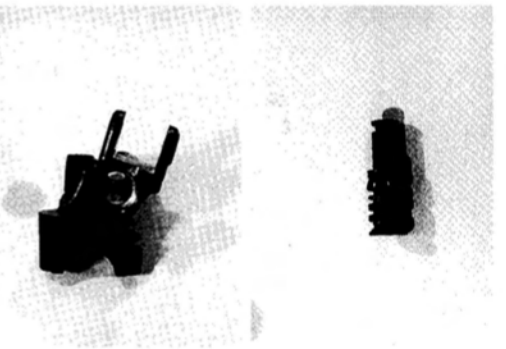

MASTER CYLINDER REASSEMBLY AND REMOUNTING

Reassemble the master cylinder in the reverse order of removal and disassembly. Pay attention to the following points:

⚠ CAUTION

*** Wash the master cylinder components with fresh brake fluid before reassembly. Never use cleaning solvent or gasoline to wash them.**
*** Do not wipe the components with a rag.**
*** Apply brake fluid to the cylinder bore and all the component to be inserted into the bore.**

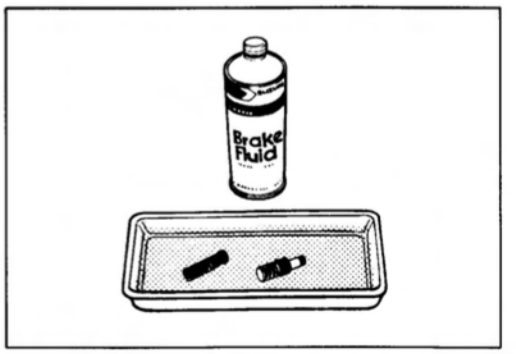

BF Specification and Classification: DOT 4

- When installing the brake switch, align the protrusion of the switch with hole of the master cylinder.

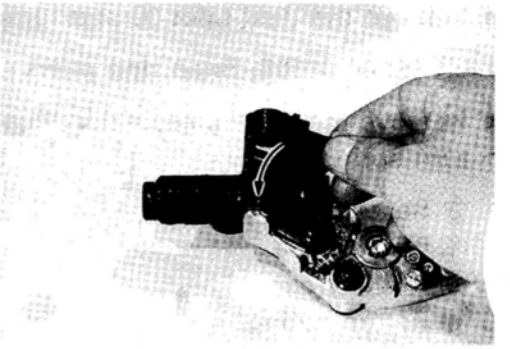

- When remounting the master cylinder on the handlebar, align the master cylinder holder's mating surface ① with punched mark ② on the handlebar and tighten the upper clamp bolt first as shown.

Front brake master cylinder mounting bolt:
10 N·m (1.0 kg-m, 7.0 lb-ft)

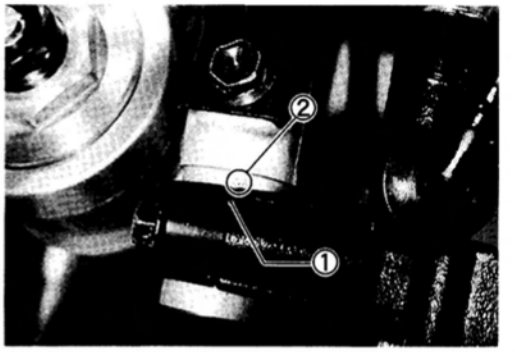

⚠ CAUTION

Bleed air from the system after reassembling master cylinder. (Refer to page 2-20.)

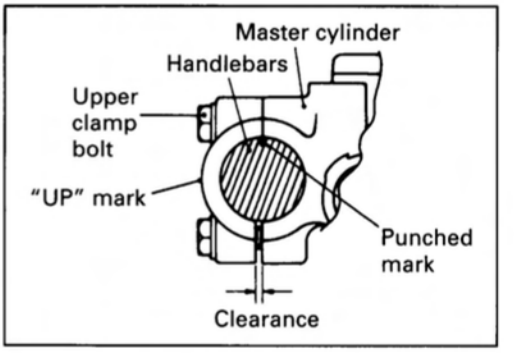

- When reinstalling the brake fluid reserve tank, align the protrusion of the tank with bracket hole.

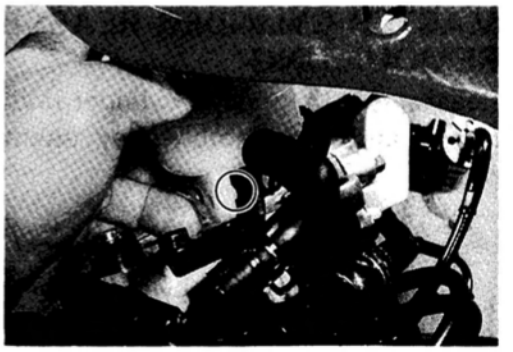

REAR BRAKE

CONSTRUCTION

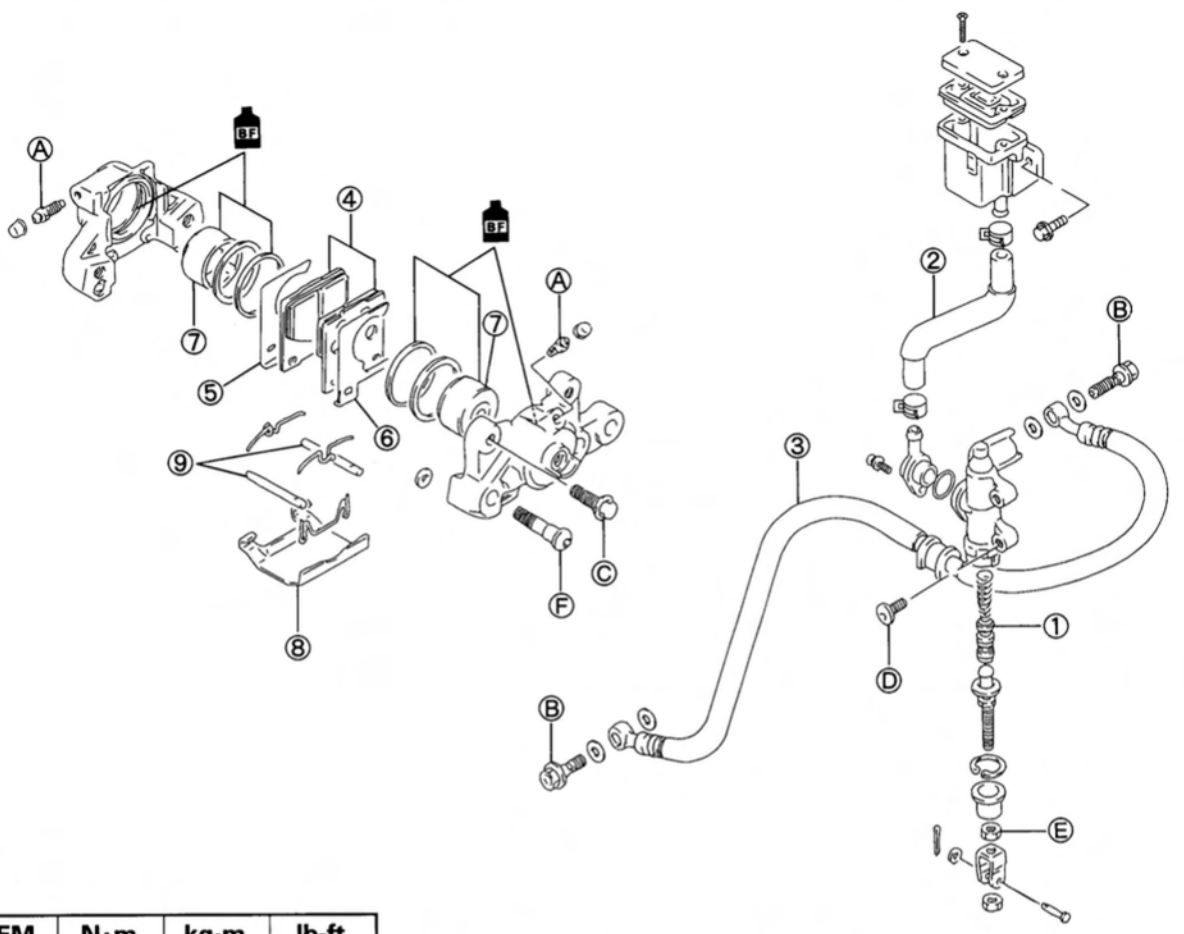

ITEM	N·m	kg-m	lb-ft
Ⓐ	7.5	0.75	5.5
Ⓑ	23	2.3	16.5
Ⓒ	26	2.6	19.0
Ⓓ	10	1.0	7.0
Ⓔ	18	1.8	13.0
Ⓕ	30	3.0	21.5

① Piston/cup set
② Reserve tank hose
③ Brake hose
④ Pad
⑤ Inner shim
⑥ Outer shim
⑦ Piston
⑧ Cover
⑨ Pad mounting pin

Ⓐ Caliper air bleeder valve
Ⓑ Brake hose union bolt
Ⓒ Rear brake caliper mounting bolt
Ⓓ Rear brake master cylinder mounting bolt
Ⓔ Rear brake master cylinder rod lock nut
Ⓕ Rear brake caliper housing bolt

⚠WARNING

*** This brake system is filled with a ethylene glycol-based DOT 4 brake fluid. Do not use or mix different types of fluid such as silicone-based or petroleum-based.**
*** Do not use any brake fluid taken from old, used or unsealed containers. Never reuse brake fluid left over from the last servicing or stored for long periods.**
*** When storing the brake fluid, seal the container completely and keep away from children.**
*** When replenishing brake fluid, take care not to get dust into fluid.**
*** When washing brake components, use fresh brake fluid. Never use cleaning solvent.**
*** A contaminated brake disc or brake pad reduces braking performance. Discard contaminated pads and clean the disc with high quality brake cleaner or neutral detergent.**

⚠ CAUTION

Handle brake fluid with care: the fluid reacts chemically with paint, plastics, rubber materials etc.

BRAKE PAD REPLACEMENT

- Remove the cover.

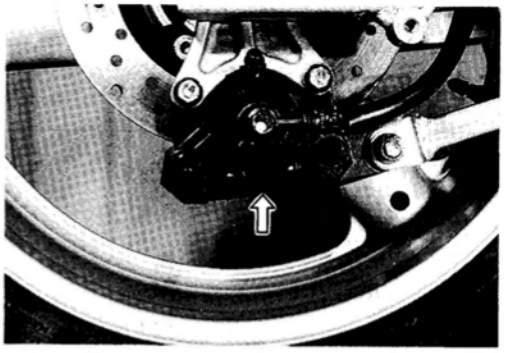

- Remove the clip ①.
- Remove the pads with shims by removing the pad mounting pins ② and springs ③.

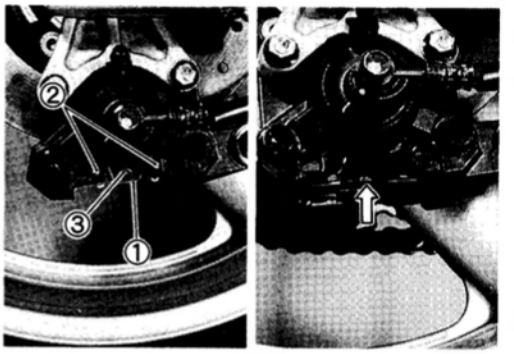

⚠ CAUTION

*** Do not operate the brake pedal while dismounting the pads.**
*** Replace the brake pad as a set, otherwise braking performance will be adversely affected.**

- Remount the new brake pads and shims.

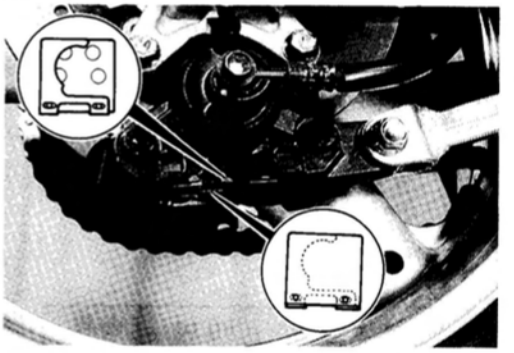

⚠ CAUTION

Be sure to install the shims (④, ⑤) properly as shown in the illustration.

NOTE:
After replacing the brake pads, pump with the brake pedal few times to operate the brake correctly and then check the brake fluid level.

BRAKE FLUID REPLACEMENT

- Remove the seat. (Refer to page 6-4.)
- Remove the brake fluid reserve tank cap.
- Replace the brake fluid in the same manner of the front brake.

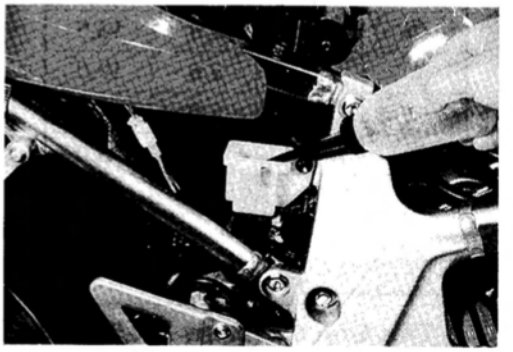

Specification and Classification: DOT 4

⚠ CAUTION

Bleed air in the brake fluid circuit. (Refer to page 2-20.)

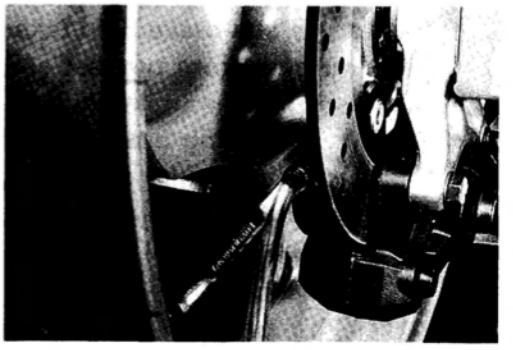

CALIPER REMOVAL AND DISASSEMBLY

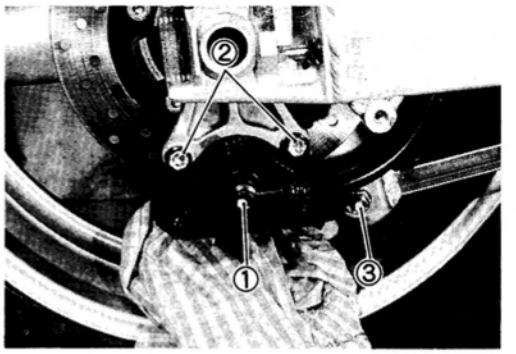

- Remove the union bolt ① and catch the brake fluid in a suitable receptacle.

⚠ CAUTION

Never reuse the brake fluid left over from previous servicing and stored for long periods.

⚠WARNING

Brake fluid, if it leaks, will interfere with safe running and discolor painted surfaces. Check the brake hose and hose joints for cracks and fluid leakage.

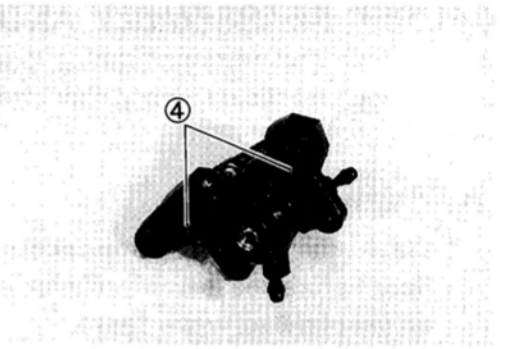

- Remove the caliper mounting bolts ② and torque link bolt ③.

NOTE:
Slightly loosen the caliper housing bolts ④ to facilitate later disassembly before removing the caliper mounting bolts.

- Remove the pads. (Refer to page 6-57.)
- Remove the caliper housing bolts ④.
- Separate the caliper halves.
- Remove the O-ring ⑤.



⚠ CAUTION

Replace the O-ring with a new one.

- Place a rag over the piston to prevent it from popping out and push out the piston by using an air gun.



⚠ CAUTION

Do not use high pressure air to prevent piston damage.

- Remove the dust seals and piston seals.

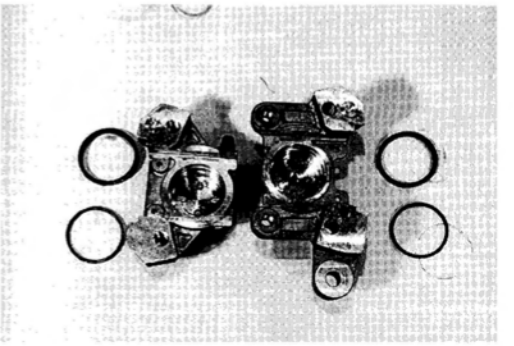

⚠ CAUTION

Do not reuse the dust seals and piston seals to prevent fluid leakage.

CALIPER INSPECTION

CALIPER ..... Refer to page 6-51.
PISTON ..... Refer to page 6-51.
DISC ..... Refer to page 6-52.

Service Limit
Rear disc thickness: 4.5 mm (0.18 in)
Rear disc runout: 0.30 mm (0.012 in)

CALIPER REASSEMBLY AND REMOUNTING

Reassemble and remount the caliper in the reverse order of removal and disassembly. Pay attention to the following points:

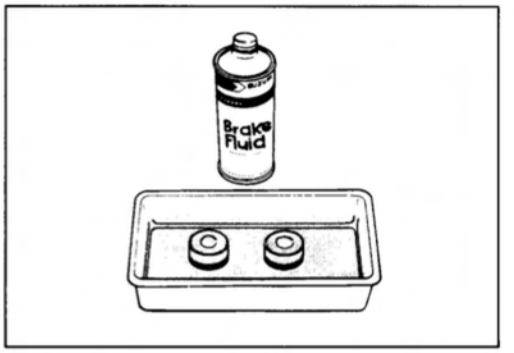

⚠ CAUTION

*** Wash the caliper components with fresh brake fluid before reassembly. Never use cleaning solvent or gasoline to wash them.**
*** Apply brake fluid to the caliper bore and piston to be inserted into the bore.**

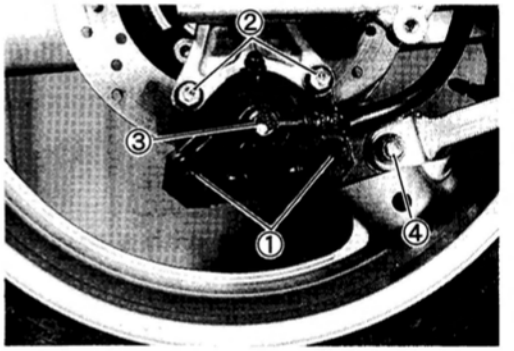

Specification and Classification: DOT 4

- Tighten each bolt to the specified torque.

Rear brake caliper housing bolt ① : 30 N·m (3.0 kg-m, 21.5 lb-ft)
Rear brake caliper mounting bolt ② : 26 N·m (2.6 kg-m, 19.0 lb-ft)
Brake hose union bolt ③ : 23 N·m (2.3 kg-m, 16.5 lb-ft)
Rear torque link nut ④ : 35 N·m (3.5 kg-m, 25.5 lb-ft)

⚠ CAUTION

Bleed air from the system after reassembling the caliper. (Refer to page 2-20.)

PISTON SEAL

- Install the piston seal. (Refer to page 6-51.)

MASTER CYLINDER REMOVAL AND DISASSEMBLY

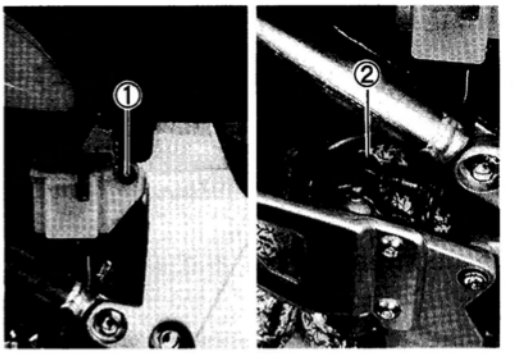

- Remove the brake fluid reserve tank mounting bolt ①.
- Place a rag underneath the union bolt on the master cylinder to catch spilled drops of brake fluid. Remove the union bolt ② and disconnect the brake hose.
- Loosen the lock nut ③.
- Remove the master cylinder with reserve tank by removing the mounting bolts ④ and master cylinder rod ⑤.

⚠ CAUTION

Immediately and completely wipe off any brake fluid contacting any parts of the motorcycle. The fluid reacts chemically with paint, plastic and rubber materials, etc. and will damage them severely.

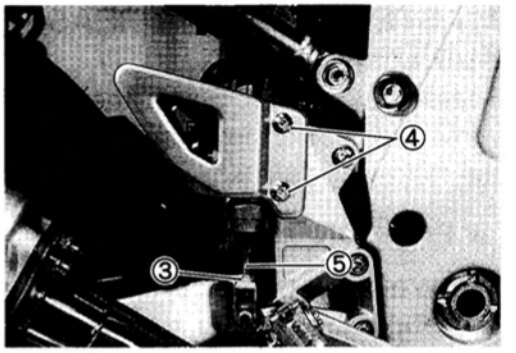

- Remove the connector by removing the screw.
- Remove the O-ring ⑥.

⚠ CAUTION

Replace the O-ring with a new one.

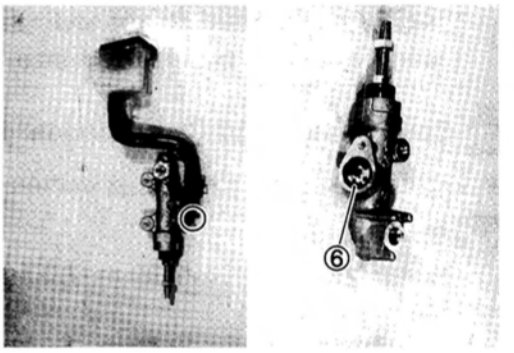

- Pull out the dust seal then remove the circlip with the special tool.

TOOL 09900-06108: Snap ring pliers

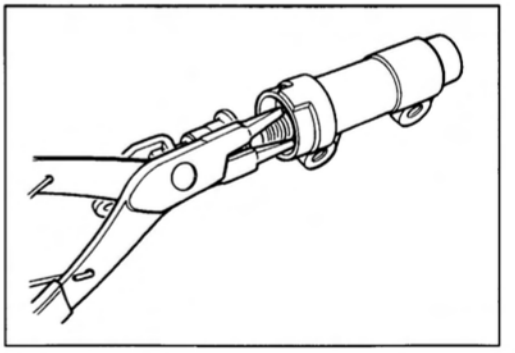

- Remove the push rod, piston/primary cup and spring.

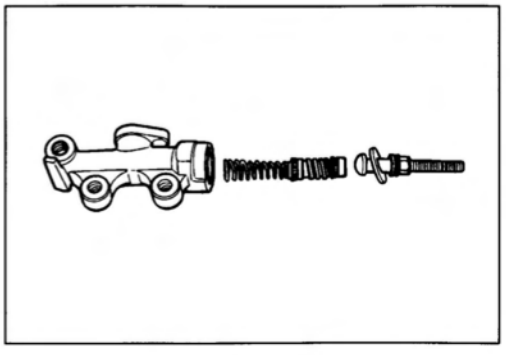

MASTER CYLINDER INSPECTION

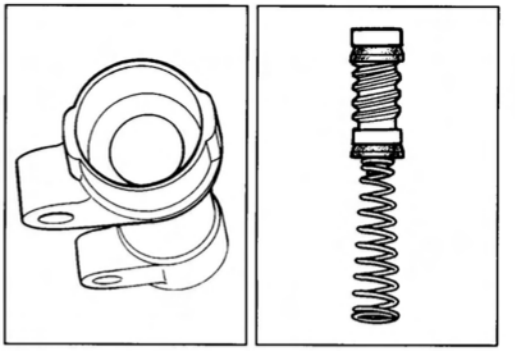

CYLINDER, PISTON AND CUP SET

Inspect the cylinder bore wall for any scratches or other damage.
Inspect the piston surface for any scratches or other damage.
Inspect the cup set and each rubber part for damage.

MASTER CYLINDER REASSEMBLY AND REMOUNTING

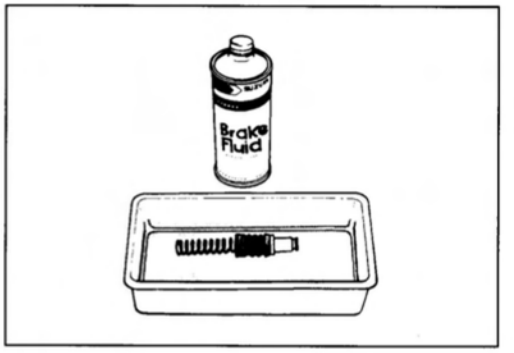

Reassemble and remount the master cylinder in the reverse order of removal and disassembly. Pay attention to the following points:

⚠ CAUTION

*** Wash the master cylinder components with fresh brake fluid before reassembly. Never use cleaning solvent or gasoline to wash them.**
*** Apply brake fluid to the cylinder bore and all the component to be inserted into the bore.**

Specification and Classification: DOT 4

- Tighten each bolt to the specified torque.

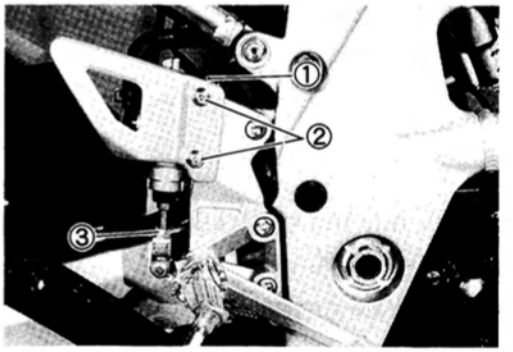

Brake hose union bolt ① : 23 N·m (2.3 kg-m, 16.5 lb-ft)
Master cylinder mounting bolt ② : 10 N·m (1.0 kg-m, 7.0 lb-ft)
Master cylinder rod lock nut ③ : 18 N·m (1.8 kg-m, 13.0 lb-ft)

⚠ CAUTION

Bleed air from the system after reassembling master cylinder. (Refer to page 2-20.)

TIRE AND WHEEL

TIRE REMOVAL

The most critical factor of a tubeless tire is the seal between the wheel rim and the tire bead. Because of this, we recommend using a tire changer which is also more efficient than tire levers. For tire removal, the following tools are required.

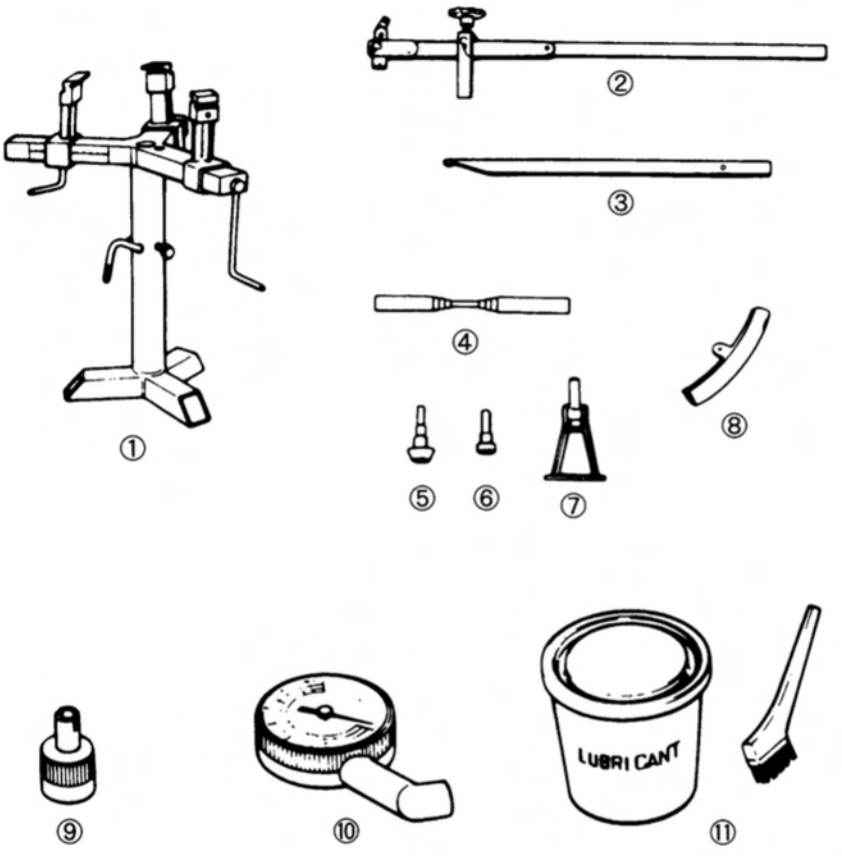

① Tire changer stand
② Operation arm
③ Tire lever
④ Center shaft
⑤ Bead pushing roller
⑥ Rim guide roller
⑦ Bead breaker
⑧ Rim protector
⑨ Core remover
⑩ Air pressure gauge
⑪ Tire lubricant

- Remove the valve core from the valve stem, and deflate the tire completely.

NOTE:
Mark the tire with chalk to note the position ① of the tire on the rim and rotational direction ② of the tire.

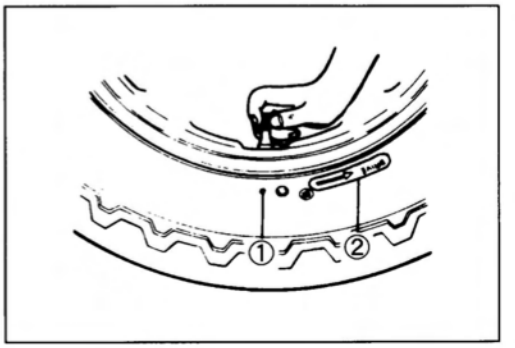

- Place the center shaft ① to the wheel, and fix the wheel with the rim holder ②.

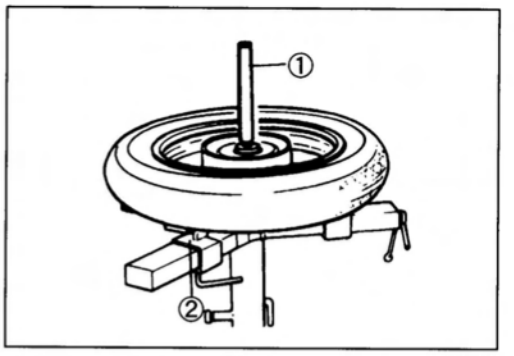

- Attach the operation arm ③ to the center shaft.

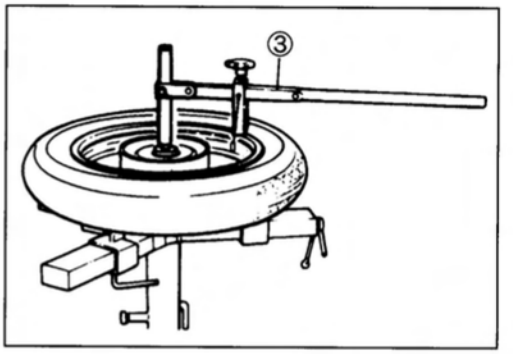

- Attach the bead breaker ④ to the operation arm, and dismount the bead from the rim. Turn the wheel over and dismount the other bead from the rim.

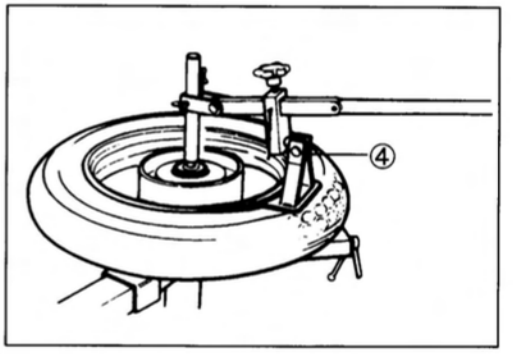

- Install the rim guide roller ⑤.
- Install the rim protector ⑥, and raise the bead with the tire lever ⑦.

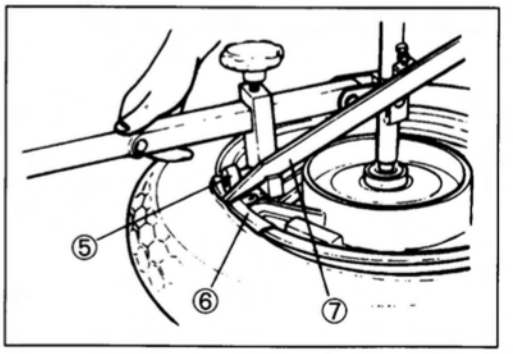

- Set the tire lever against the operation arm, and rotate the lever around the rim. Repeat this procedure to remove the other bead from the rim.

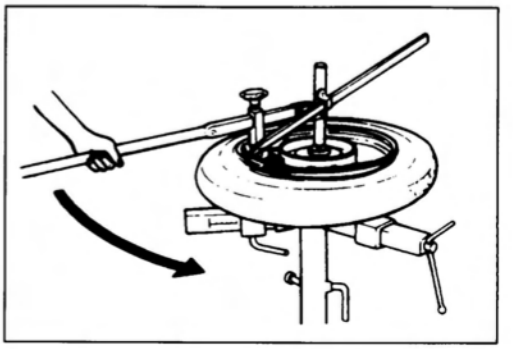

INSPECTION

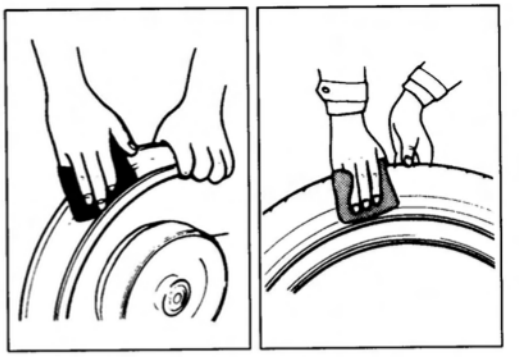

WHEEL

Wipe off any rubber substance or rust from the wheel, and inspect the wheel rim. If any one of the following items is observed, replace it with a new wheel.

* A distortion or crack.
* Any scratches or flaws in the bead seating area.
* Wheel rim runout (Axial & Radial) of more than 2.0 mm (0.08 in).

Wheel rim runout (Axial and Radial): 2.0 mm (0.08 in)

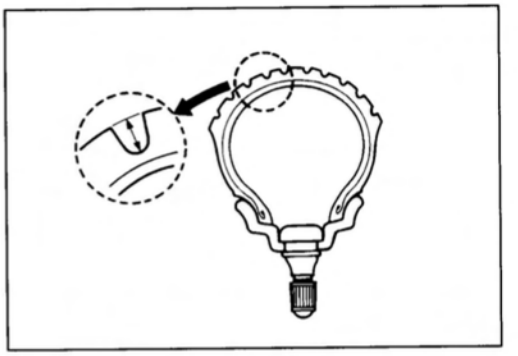

TIRE

Thoroughly inspect the removed tire, and if any one of the following items is observed, do not repair the tire. Replace with a new one.

* A puncture or a split whose total length or diameter exceeds 6.0 mm (0.24 in).
* A scratch or split at the side wall.
* Tread depth less than 1.6 mm (0.06 in) in the front tire and less than 2.0 mm (0.08 in) in the rear tire.

TOOL 09900-20805: Tire depth gauge

Tire tread depth limit: Front 1.6 mm (0.06 in)
Rear 2.0 mm (0.08 in)

* Ply separation.
* Tread separation.
* Tread wear is extraordinarily deformed or distributed around the tire.
* Scratches at the bead.
* Cord is cut.
* Damage from skidding (flat spots).
* Abnormality in the inner liner.

NOTE:
When repairing a flat tire, follow the repair instructions and use only recommended repairing materials.

VALVE INSPECTION

Inspect the valve after the tire is removed from the rim, and replace with a new valve if the seal rubber has any splits or scratches.

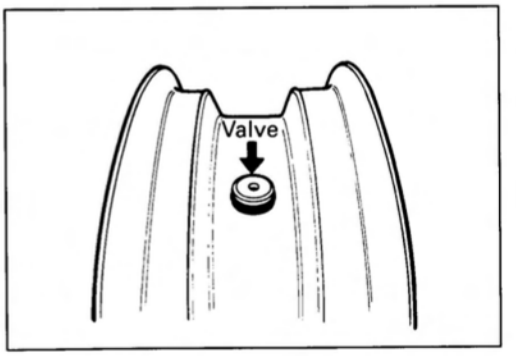

Inspect the removed valve core and replace with the new one if the seal is abnormally deformed or worn.

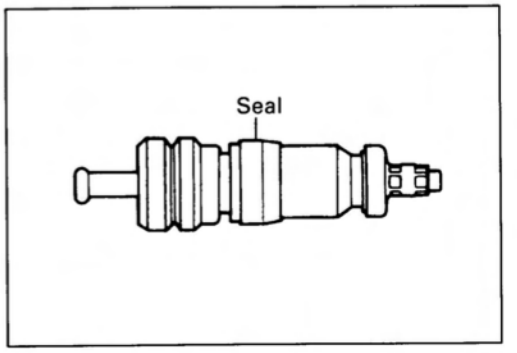

VALVE INSTALLATION

Any dust or rust around the valve hole must be cleaned off. Then install the valve in the rim.

NOTE:
To properly install the valve into the valve hole, apply a special tire lubricant *or neutral soapy liquid to the valve.*

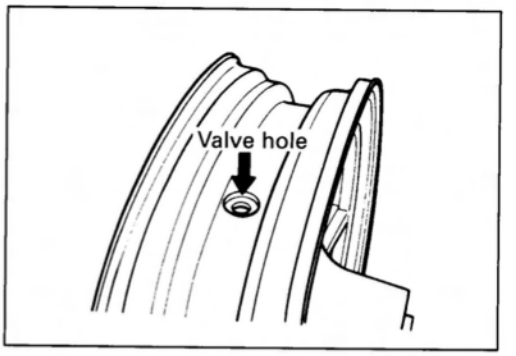

⚠ CAUTION

Be careful not to damage the lip of valve.

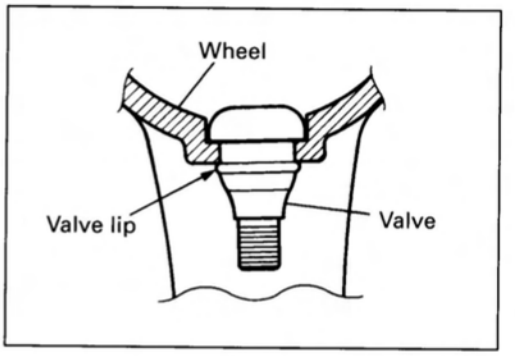

TIRE INSTALLATION

- Apply a special tire lubricant or neutral soapy liquid to the tire bead.

⚠ CAUTION

Never apply grease, oil or gasoline to the tire bead.

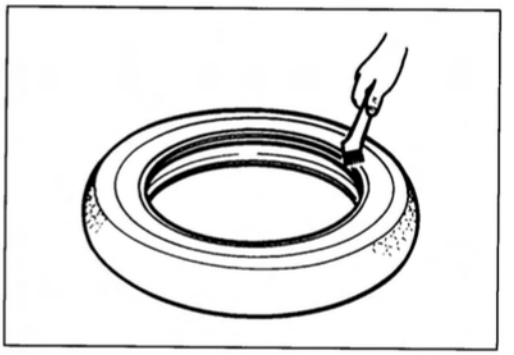

- When installing the tire, align the balancing mark of the tire with the valve as shown.

⚠ CAUTION

Face the tire directional arrow to the direction of wheel directional arrow, when installing the tire.

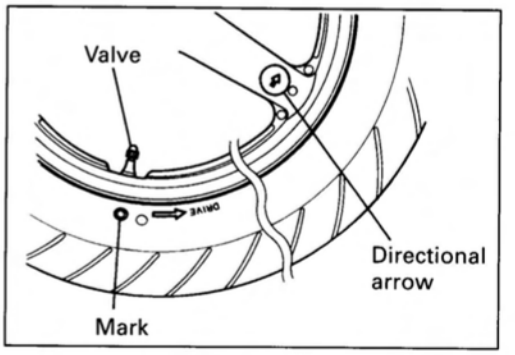

- Set the bead pushing roller ①.
- Rotate the operation arm around the rim to mount the bead completely. Do the bottom bead first, then the upper bead.
- Remove the wheel from the tire changer, and install the valve core in the valve stem.

NOTE:
Before installing the valve core, inspect the core.

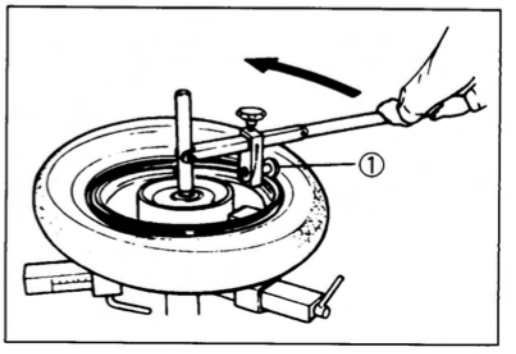

- Bounce the tire several times while rotating. This makes the tire bead expand outwards, and thus makes inflation easier.

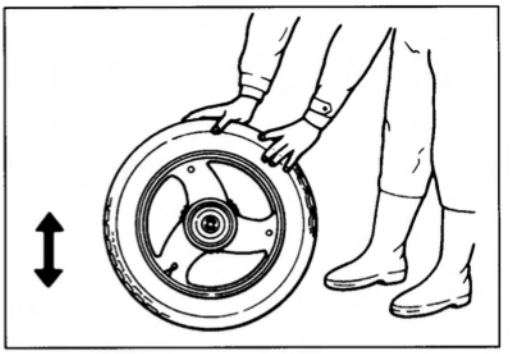

NOTE:
Before inflating, confirm that the balance mark lines up with the valve stem.

- Pump up the tire with air.

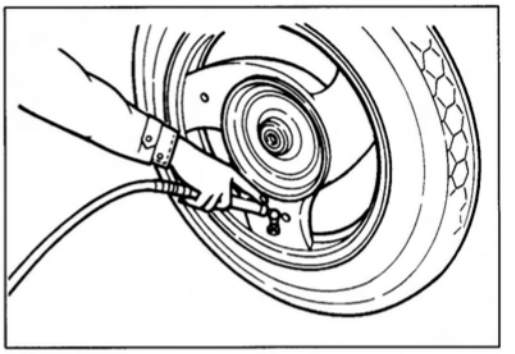

⚠WARNING

Do not inflate the tire to more than 400 kPa (4.0 kg/cm², 56 psi). The tire could burst with sufficient force to cause severe injury. Never stand directly over the tire while inflating it.

NOTE:
Check the "rim line" cast on the tire side walls. It must be equidistant from the wheel rim all the way around. If the distance between the rim line and wheel rim varies, this indicates that the bead is not properly seated. If this is so, deflate the tire completely, and unseat the bead for both sides. Coat the bead with lubricant, and try again.

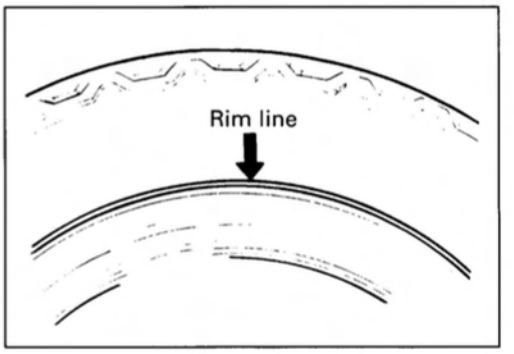

- After tire is properly seated to the wheel rim, adjust the air-pressure to the recommended pressure. Correct the wheel balance if necessary.

⚠WARNING

*** Do not run a repaired tire more than 50 km/h (30 mph) within 24 hours after tire repairing, since the patch may not be completely cured.**
*** Do not exceed 130 km/h (80 mph) with a repaired tire.**

TIRE PRESSURE

COLD INFLATION TIRE PRESSURE	SOLO RIDING			DUAL RIDING		
	kPa	kg/cm²	psi	kPa	kg/cm²	psi
FRONT	250	2.50	36	250	2.50	36
REAR	250	2.50	36	250	2.50	36

ELECTRICAL SYSTEM

CONTENTS

CAUTIONS IN SERVICING 7- 1
LOCATION OF ELECTRICAL COMPONENTS 7- 3
CHARGING SYSTEM 7- 5
  DESCRIPTION 7- 5
  TROUBLESHOOTING 7- 7
  INSPECTION 7- 8
STARTER SYSTEM AND SIDE-STAND/IGNITION INTERLOCK SYSTEM 7-10
  STARTER SYSTEM DESCRIPTION 7-10
  SIDE-STAND/IGNITION INTERLOCK SYSTEM DESCRIPTION 7-10
  TROUBLESHOOTING 7-12
  STARTER MOTOR REMOVAL AND DISASSEMBLY 7-13
  STARTER MOTOR INSPECTION 7-13
  STARTER MOTOR REASSEMBLY 7-14
  STARTER RELAY INSPECTION 7-15
  SIDE-STAND/IGNITION INTERLOCK SYSTEM PART INSPECTION 7-16
IGNITION SYSTEM 7-19
  DESCRIPTION 7-19
  TROUBLESHOOTING 7-21
  INSPECTION 7-22
COMBINATION METER 7-26
  REMOVAL 7-26
  DISASSEMBLY 7-26
  INSPECTION 7-27
LAMPS 7-32
  HEADLIGHT 7-32
  BRAKE LIGHT/TAILLIGHT AND LICENSE LIGHT 7-35
  TURN SIGNAL LIGHT 7-35
RELAY 7-36
SWITCHES 7-37
BATTERY 7-38
  SPECIFICATIONS 7-38
  INITIAL CHARGING 7-38
  SERVICING 7-39
  RECHARGING OPERATION 7-40

CAUTIONS IN SERVICING

CONNECTOR

- When connecting a connector, be sure to push it in until a click is felt.
- Inspect the connector for corrosion, contamination and breakage in its cover.

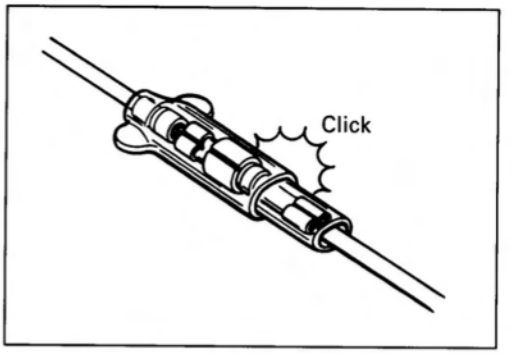

COUPLER

- With a lock type coupler, be sure to release the lock before disconnecting it and push it in fully till the lock works when connecting it.
- When disconnecting the coupler, be sure to hold the coupler itself and do not pull the lead wires.
- Inspect each terminal on the coupler for being loose or bent.
- Inspect each terminal for corrosion and contamination.

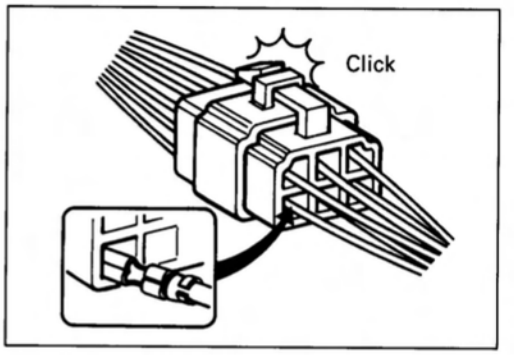

CLAMP

- Clamp the wire harness at such positions as indicated in "WIRE HARNESS ROUTING" (Refer to pages 8-19, 20 and 21.).
- Bend the clamp properly so that the wire harness is clamped securely.
- In clamping the wire harness, use care not to allow it to hang down.
- Do not use wire or any other substitute for the band type clamp.

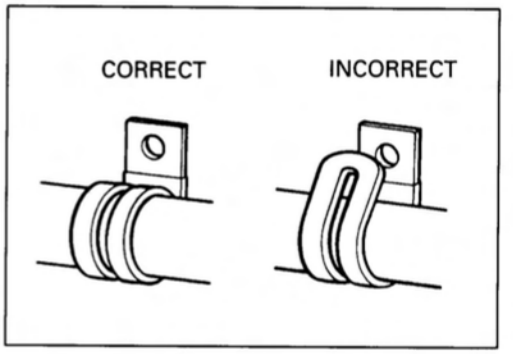

FUSE

- When a fuse blows, always investigate the cause, correct it and then replace the fuse.
- Do not use a fuse of a different capacity.
- Do not use wire or any other substitute for the fuse.

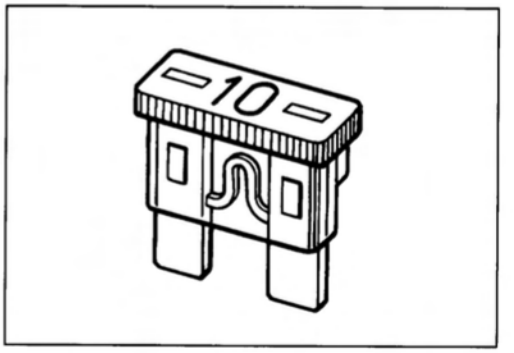

SEMI-CONDUCTOR EQUIPPED PART

- Be careful not to drop the part with a semi-conductor built in such as a ECM.
- When inspecting this part, follow inspection instruction strictly. Neglecting proper procedure may cause damage to this part.

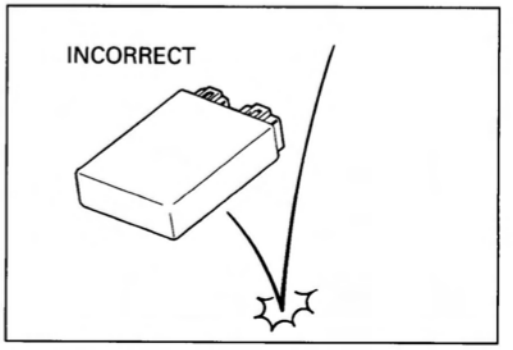

BATTERY

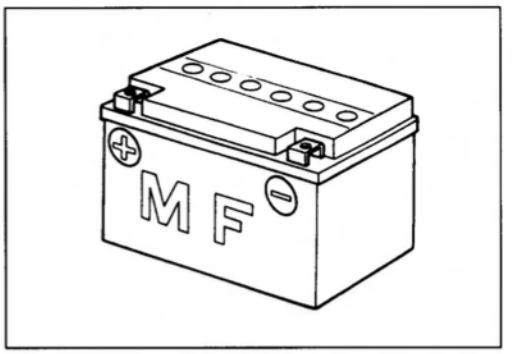

- The MF battery used in this vehicle does not require maintenance as inspection of electrolyte level and replenishment of water.
- No hydrogen gas is produced during normal charging of the battery, but such gas may be produced when it is overcharged. Therefore, do not bring fire near the battery while it is being charged.
- Note that the charging system for the MF battery is different from that of an ordinary battery. Do not replace with an ordinary battery.

CONNECTING BATTERY

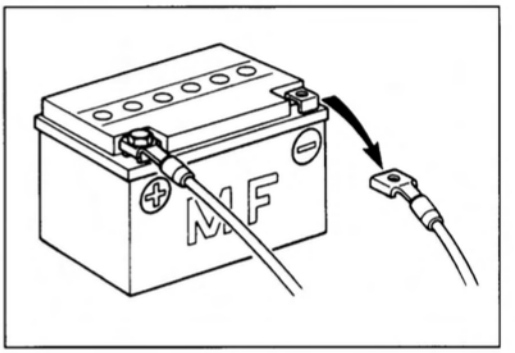

- When disconnecting terminals from the battery for disassembly or servicing, be sure to disconnect the negative (⊖) terminal first.
- When connecting terminals to the battery, be sure to connect the positive (⊕) terminal first.
- If the terminal is found corroded, remove the battery, pour warm water over it and clean with a wire brush.
- Upon completion of connection, apply grease lightly.
- Put a cover over the positive (⊕) terminal.

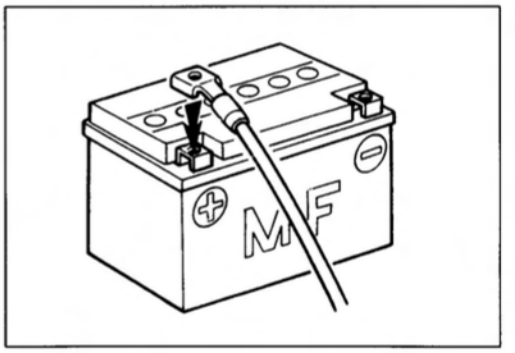

WIRING PROCEDURE

- Route the wire harness properly according to "WIRE HARNESS ROUTING" (Refer to pages 8-19, 20 and 21.).

USING MULTI CIRCUIT TESTER

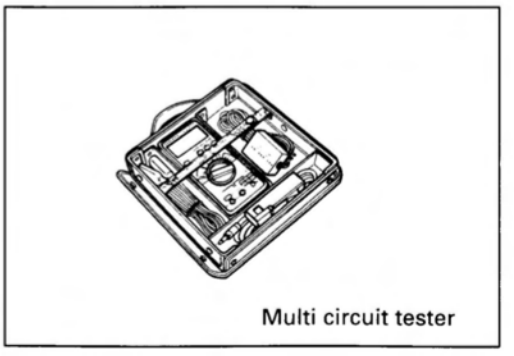

Multi circuit tester

- Be sure to use positive (⊕) and negative (⊖) probes of the tester properly. Their false use may cause damage in the tester.
- If the current values are not known, start measuring in the higher range.
- Taking a measurement where voltage is applied in the resistance range may cause damage in the tester. When measuring resistance, check to make sure that no voltage is applied there.
- After using the tester, turn the switch to the OFF position.

⚠ CAUTION

Before using the multi circuit tester, read the instruction manual.

LOCATION OF ELECTRICAL COMPONENTS

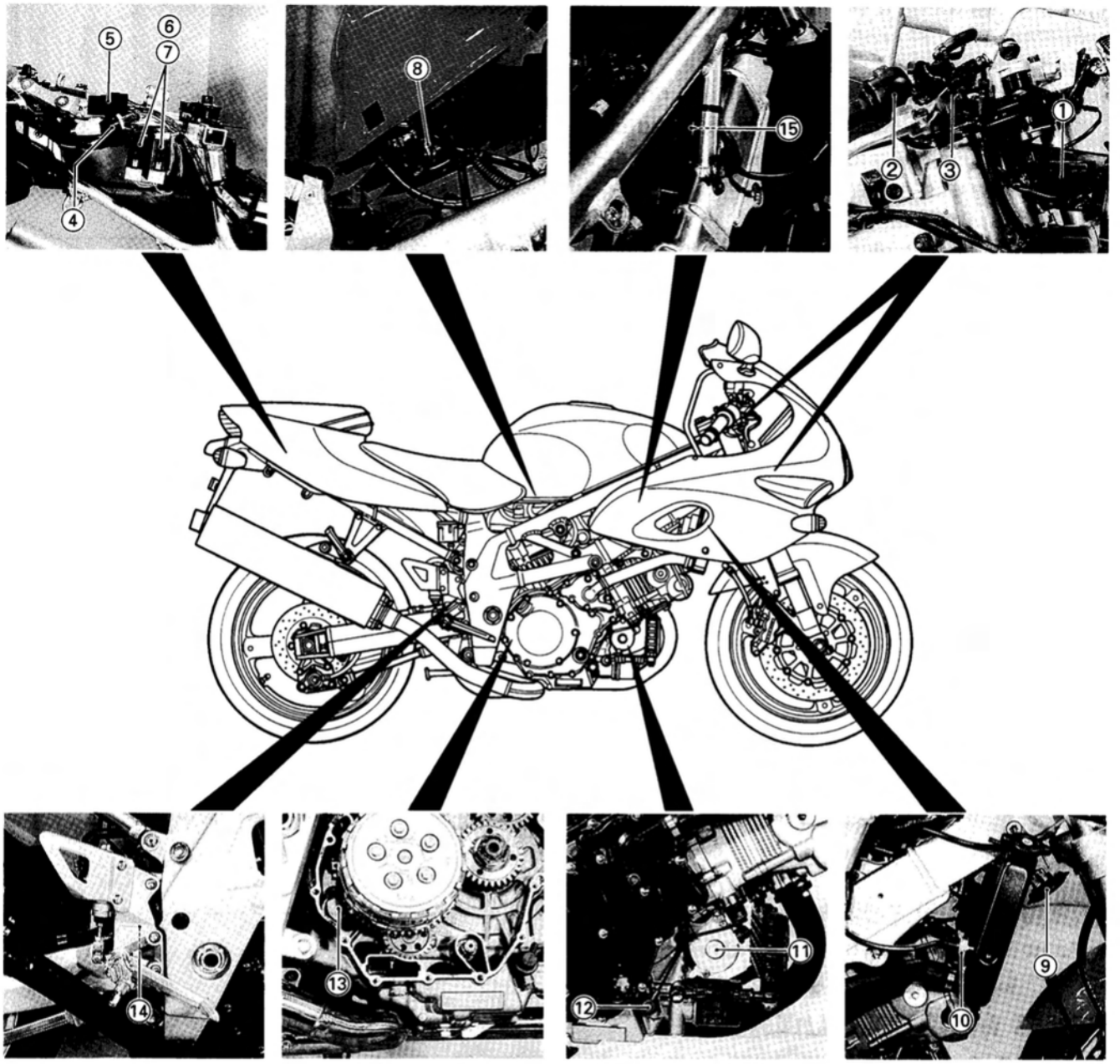

①Fuse box
②Handlebar switch (R)
③Front brake switch
④Mode selection switch coupler
⑤CD-ROM
⑥Side-stand relay
⑦Fuel pump relay
⑧Fuel pump
⑨Horn
⑩Fan motor switch
⑪Starter motor
⑫Oil pressure switch
⑬Gear position switch
⑭Rear brake switch
⑮Ignition coil (No.1)

NOTE:
Side-stand relay and fuel pump relay are the same parts, but they can be distinguished by the lead wire colors.

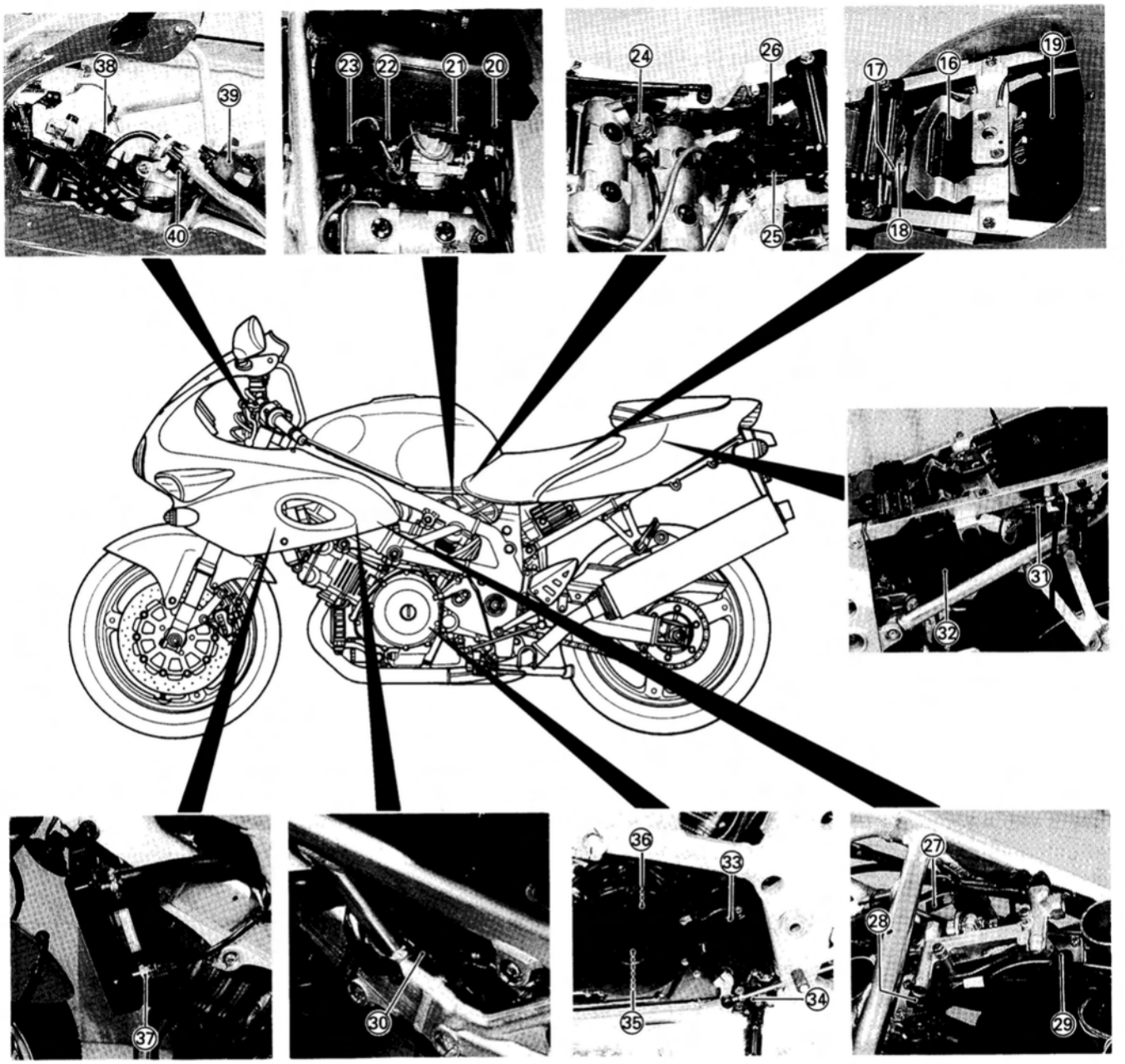

⑯Battery
⑰Main fuse
⑱Starter relay
⑲Engine control module
⑳Intake air temp. sensor
㉑Intake air pressure sensor
㉒Throttle position sensor
㉓Vacuum control solenoid valve
㉔Camshaft position sensor
㉕Turn signal relay
㉖Tip over sensor
㉗Side-stand/ignition interlock diode
㉘Fuel injector (No.1)
㉙Fuel injector (No.2)
㉚Ignition coil (No.2)
㉛Atmospheric pressure sensor
㉜Regulator/Rectifier
㉝Speedometer sensor
㉞Side-stand switch
㉟AC generator
㊱Crankshaft position sensor
㊲Engine coolant temp. sensor
㊳Ignition switch
㊴Handlebar switch (L)
㊵Clutch lever position switch

CHARGING SYSTEM

DESCRIPTION

The circuit of the charging system is indicated in the figure, which is composed of an AC generator, regulator/rectifier unit and battery.

The AC current generated from the AC generator is rectified by the rectifier and is turned into DC current, then it charges the battery.

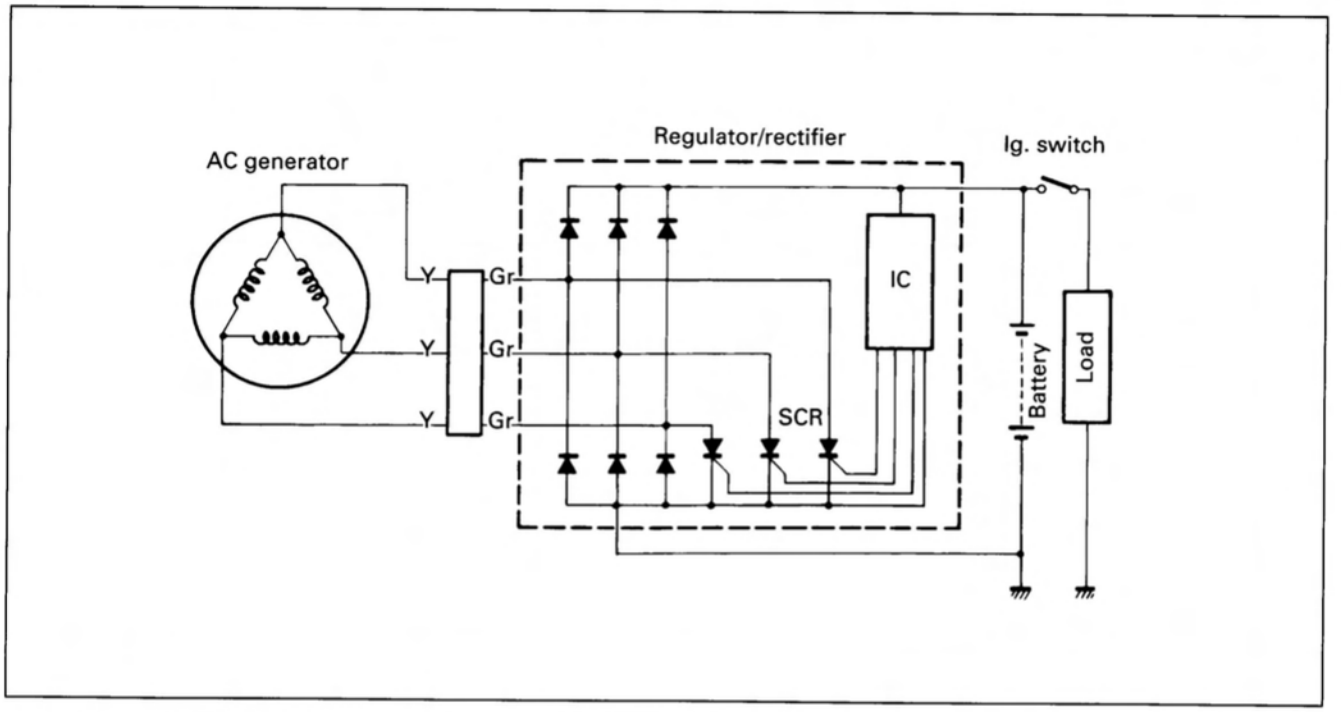

FUNCTION OF REGULATOR

While the engine r/min is low and the generated voltage of the AC generator is lower than the adjusted voltage of Regulator, the regulator does not function. However, the generated current charges the battery directly at this time.

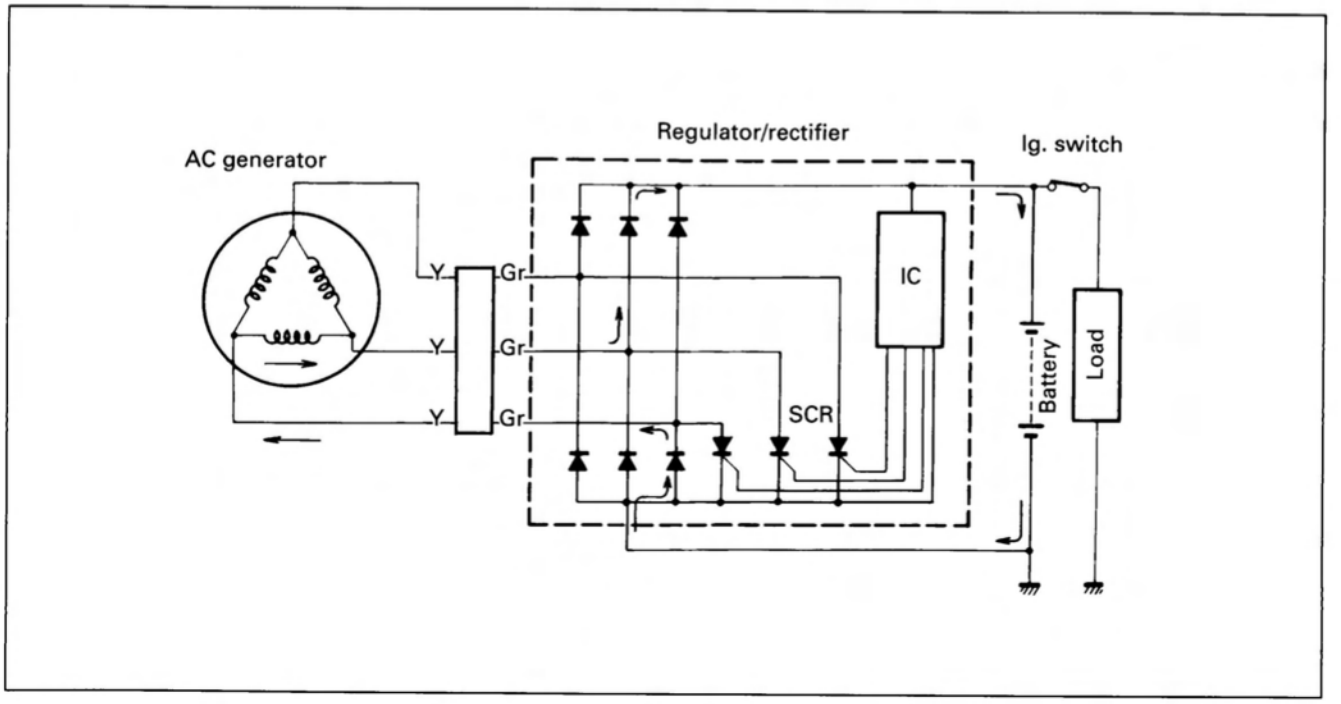

When the engine r/min becomes higher, the generated voltage of the AC generator also becomes higher and the voltage between the battery terminals becomes high accordingly. When it reaches the adjusted voltage of the I.C., (Integrated Circuit) and it is turned "ON", a signal will be sent to the SCR (Thyristor) gate probe and the SCR will be turned "ON".
Then, the SCR becomes conductive in the direction from point Ⓐ to point Ⓑ. At this time, the current generated from the AC generator gets through the SCR without charging the battery and returns to AC generator again. At the end of this state, since the AC current generated from AC generator flows to point Ⓑ, the reverse current tends to flow to SCR. Then, the circuit of SCR turns to the OFF mode and begins to charge the battery again. Thus these repetitions maintain charging voltage and current to the battery constant and protect it from overcharging.

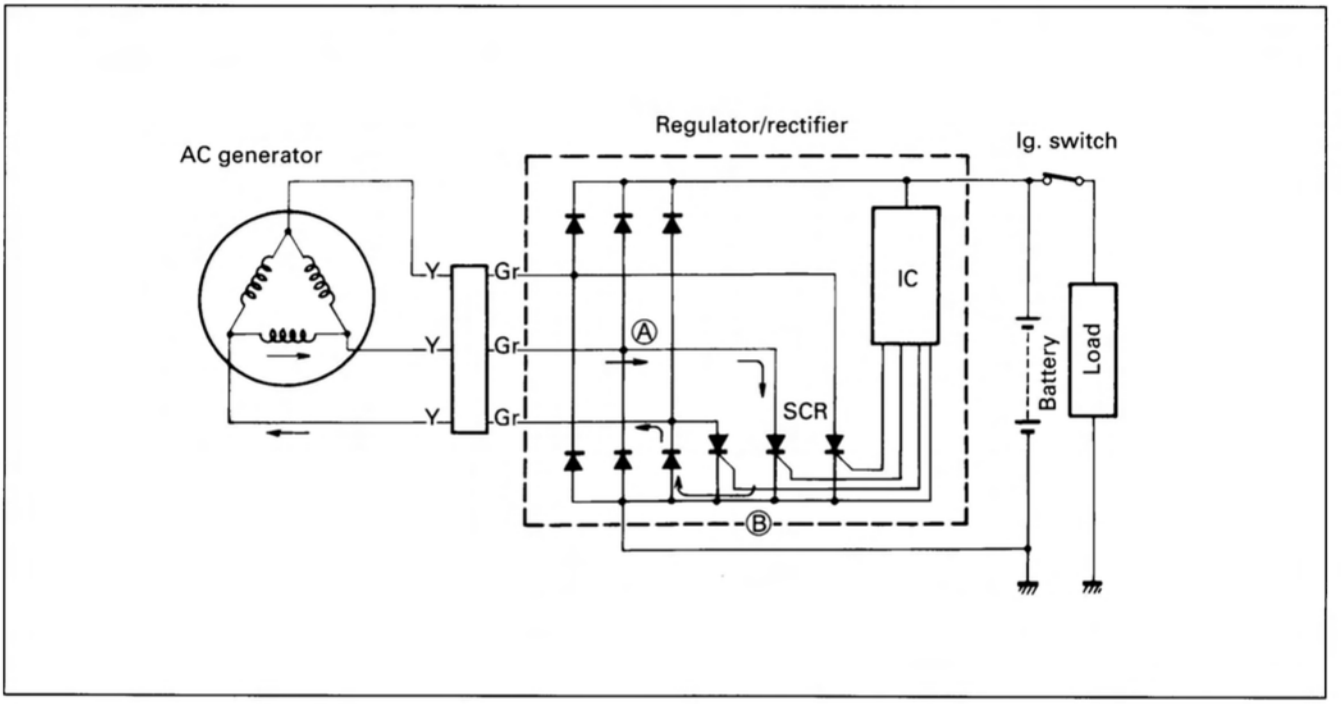

TROUBLESHOOTING

Battery runs down quickly.

- Check accessories which excessively waste electric power.
  - Installed → • Remove accessories.
  - Not installed ↓
- Inspect battery leak current. (Refer to page 7-8.)
  - Leak → • Short circuit of wire harness
    • Loose or disconnected wires
    • Faulty battery
  - No leak ↓
- Inspect charging voltage between battery terminals. (Refer to page 7-8.)
  - Correct → • Faulty battery
    • Abnormal driving condition
  - Incorrect ↓
- Inspect continuity generator coils. (Refer to page 7-9.)
  - No continuity → • Faulty generator coils or disconnected lead wires
  - Correct ↓
- Inspect generator no-load voltage. (Refer to page 7-9.)
  - Incorrect → • Faulty AC generator
  - Correct ↓
- Inspect regulator/rectifier. (Refer to page 7-9.)
  - Incorrect → • Faulty regulator/rectifier
  - Correct ↓
- Inspect wirings.
  - Incorrect → • Short circuit of wire harness
    • Poor contact of couplers
  - Correct ↓
- → • Faulty battery

Others

Battery overcharge	• Faulty regulator/rectifier • Faulty battery • Poor contact of generator lead wire coupler

INSPECTION

BATTERY LEAK CURRENT INSPECTION

- Remove the seat and battery holder plate.
- Turn the ignition switch to the OFF position.
- Disconnect the battery ⊖ lead wire.
- Connect the multi circuit tester between the ⊖ terminal and ⊖ lead wire of the battery.

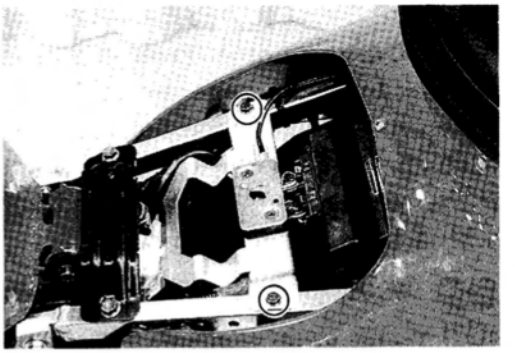

Note that leakage is indicated if the tester reads over 1mA.

TOOL 09900-25008: Multi circuit tester set

Battery leak current: Under 1mA

Tester knob indication: Current (⎓ , 20mA)



⚠ CAUTION

*** Because the leak current might be large, turn the tester to high range first when connecting an ammeter.**
*** Do not turn the ignition switch to the ON position when measuring current.**

When leakage is found, look for the part where the tester read under 1mA through the couplers and connectors are removed one by one.

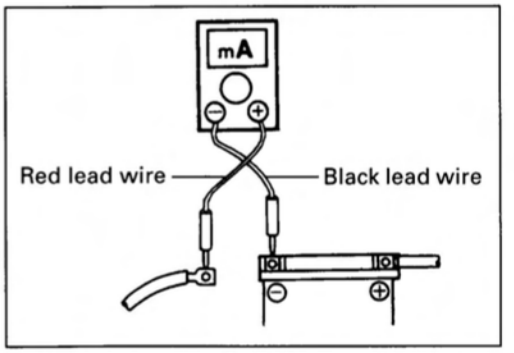

CHARGING OUTPUT INSPECTION

- Remove the seat and battery holder plate.
- Start the engine and keep it running at 5 000 r/min. with lighting switch turned ON and dimmer switch turned HI position.

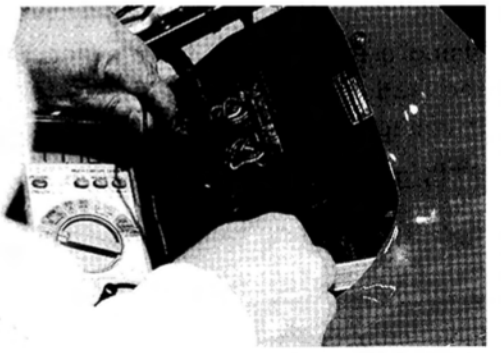

Measure the DC voltage between the battery terminals ⊕ and ⊖ with a multi circuit tester. If the tester reads under 13.3V or over 14.3V, inspect the generator coil and regulator/rectifier.

NOTE:
When making this test, be sure that the battery is fully-charged condition.

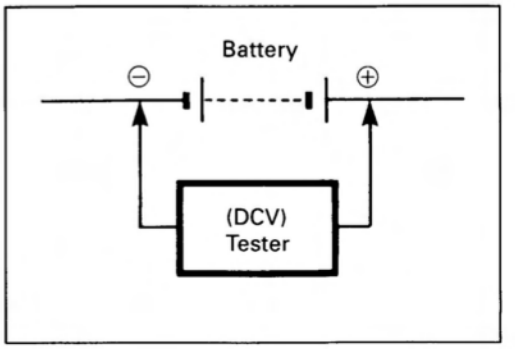

TOOL 09900-25008: Multi circuit tester set

Charging output
Standard: 13.3–14.3V at 5 000 r/min.

Tester knob indication: Voltage (⎓)

GENERATOR COIL RESISTANCE INSPECTION

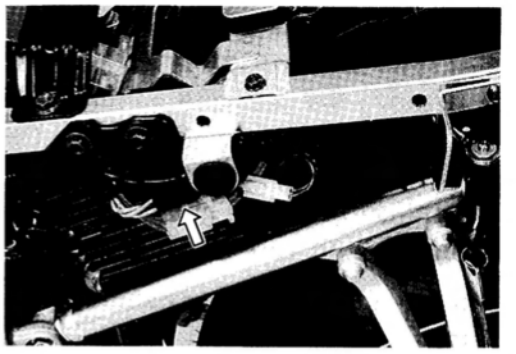

- Remove the frame cover. (Refer to page 6-1.)
- Disconnect the generator coupler.

Measure the resistance between the three lead wires.
Also check that the stator core is insulated.
If the resistance is not specified value, replace the stator with a new one.

09900-25008: Multi circuit tester set

Tester knob indication: Resistance (Ω)

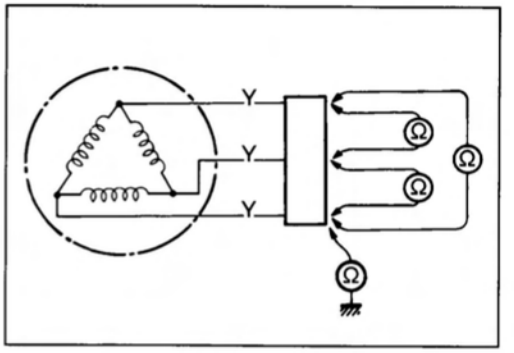

Generator coil resistance: 0.1–1.0 Ω

NOTE:
When making above test, it is not necessary to remove the AC generator.

GENERATOR NO-LOAD PERFORMANCE INSPECTION

- Start the engine and keep it running at 5 000 r/min.

Using a multi circuit tester, measure the voltage between three lead wires.
If the tester reads under the specified value, replace the AC generator with a new one.

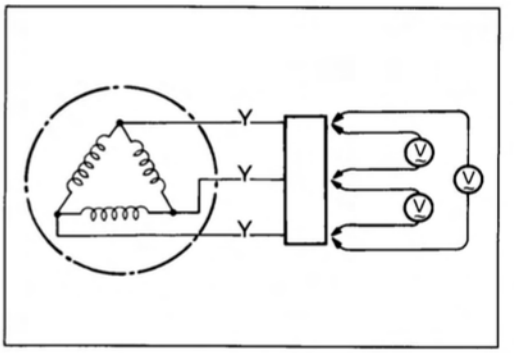

09900-25008: Multi circuit tester set

Generator no-load performance:
More than 70V at 5 000 r/min
(When engine is cold)

Tester knob indication: Voltage (~)

REGULATOR/RECTIFIER INSPECTION

- Remove the frame cover. (Refer to page 6-1.)
- Disconnect the regulator/rectifier couplers.

Using a multi circuit tester, measure the voltage between the lead wires in the following table.
If voltage is incorrect, replace the regulator/rectifier.

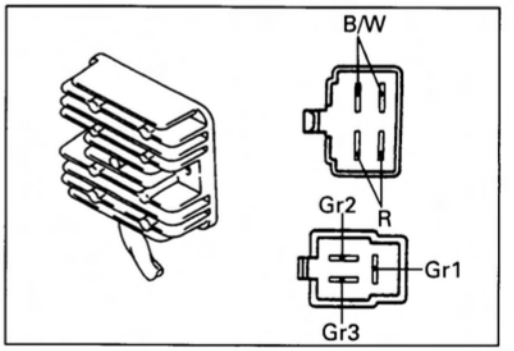

09900-25008: Multi circuit tester set

Tester knob indication: Diode test (⊣◀)

Unit: V

⊖ Probe of tester to: / ⊕ Probe of tester to:	R	Gr_1	Gr_2	Gr_3	B/W
R		0.4–0.7	0.4–0.7	0.4–0.7	0.5–0.8
Gr_1	1.4–1.5		1.4–1.5	1.4–1.5	0.4–0.7
Gr_2	1.4–1.5	1.4–1.5		1.4–1.5	0.4–0.7
Gr_3	1.4–1.5	1.4–1.5	1.4–1.5		0.4–0.7
B/W	1.4–1.5	1.4–1.5	1.4–1.5	1.4–1.5	

Gr: Gray, R: Red, B/W: Black with White tracer

NOTE:
If the tester read under 1.4V, replace the battery of multi circuit tester when do not connecting the tester probes.

STARTER SYSTEM AND SIDE-STAND/IGNITION INTERLOCK SYSTEM

STARTER SYSTEM DESCRIPTION

The starter system is shown in the diagram below: namely, the starter motor, clutch lever position switch, starter relay, starter button, engine stop switch, side-stand relay, side-stand switch, gear position switch, IG switch and battery.

Depressing the starter button (on the right handlebar switch box) energizes the relay, causing the contact points to close which connects the starter motor to the battery. The motor draws about 80 amperes to start the engine.

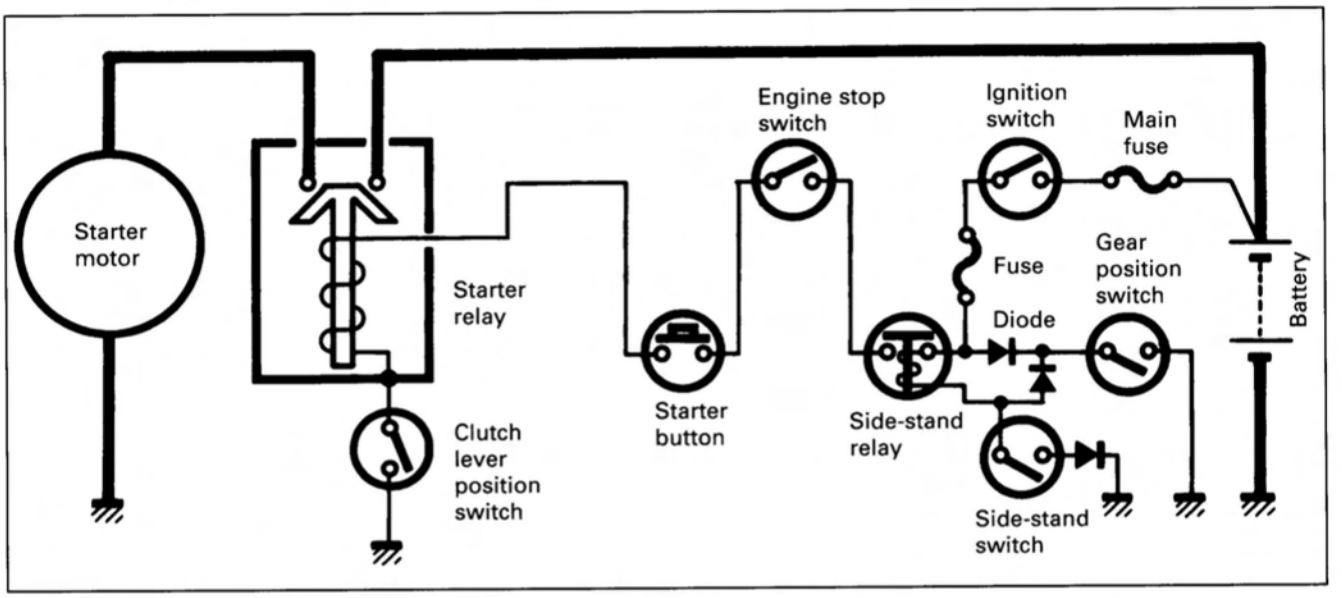

SIDE-STAND/IGNITION INTERLOCK SYSTEM DESCRIPTION

This side-stand/ignition interlock system is to prevent starting the motorcycle with the side-stand left down. The system is operated by an electric circuit provided between the battery and ignition coil.

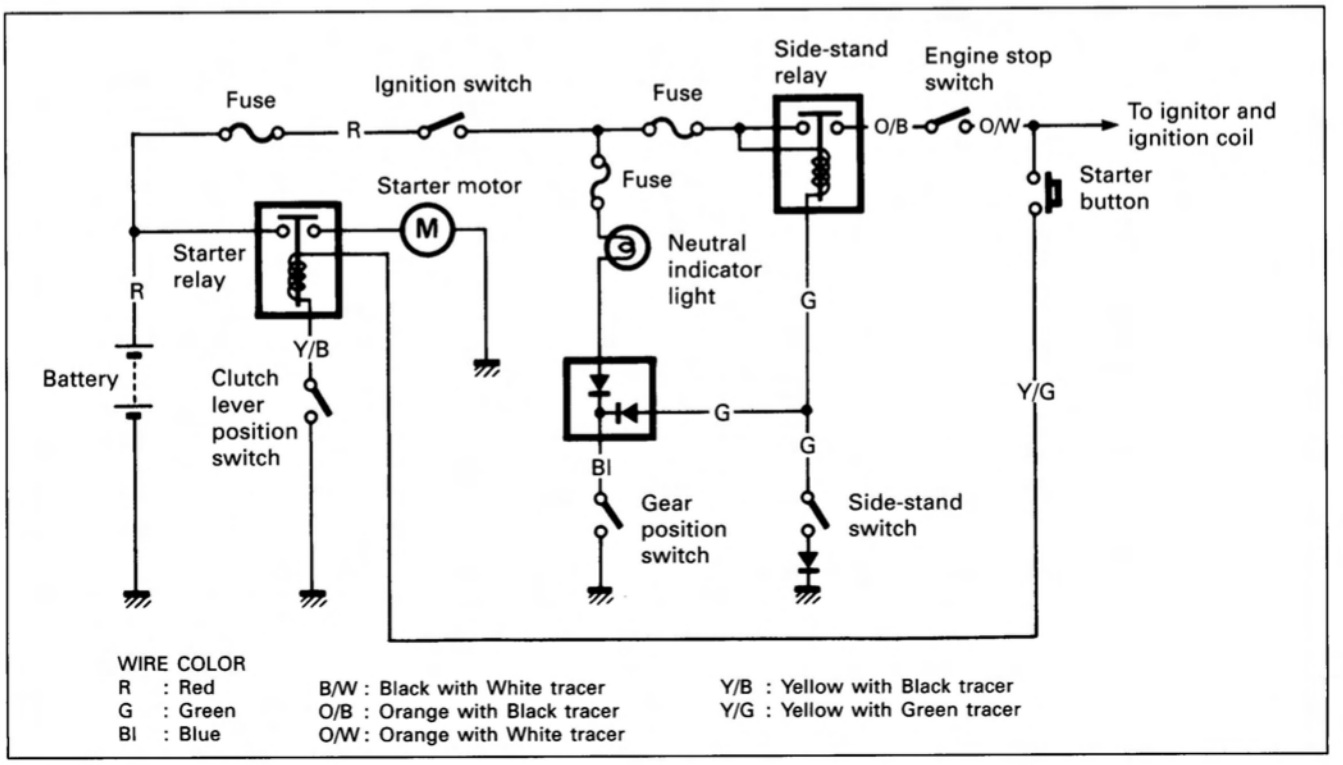

The circuit consists of relay, lamp, diode and switches and decides to live the ignition coil depending on the position of the TRANSMISSION and SIDE-STAND with the neutral and side-stand switches working mutually.
The ignition coil lives only in two situations as follows.

1. Transmission: "NEUTRAL (ON)" Side-stand: "DOWN (OFF)"
   The current flow Ⓐ turns "ON" the relay and the ignition coil lives even the side-stand is kept down. This is or warming up the engine.

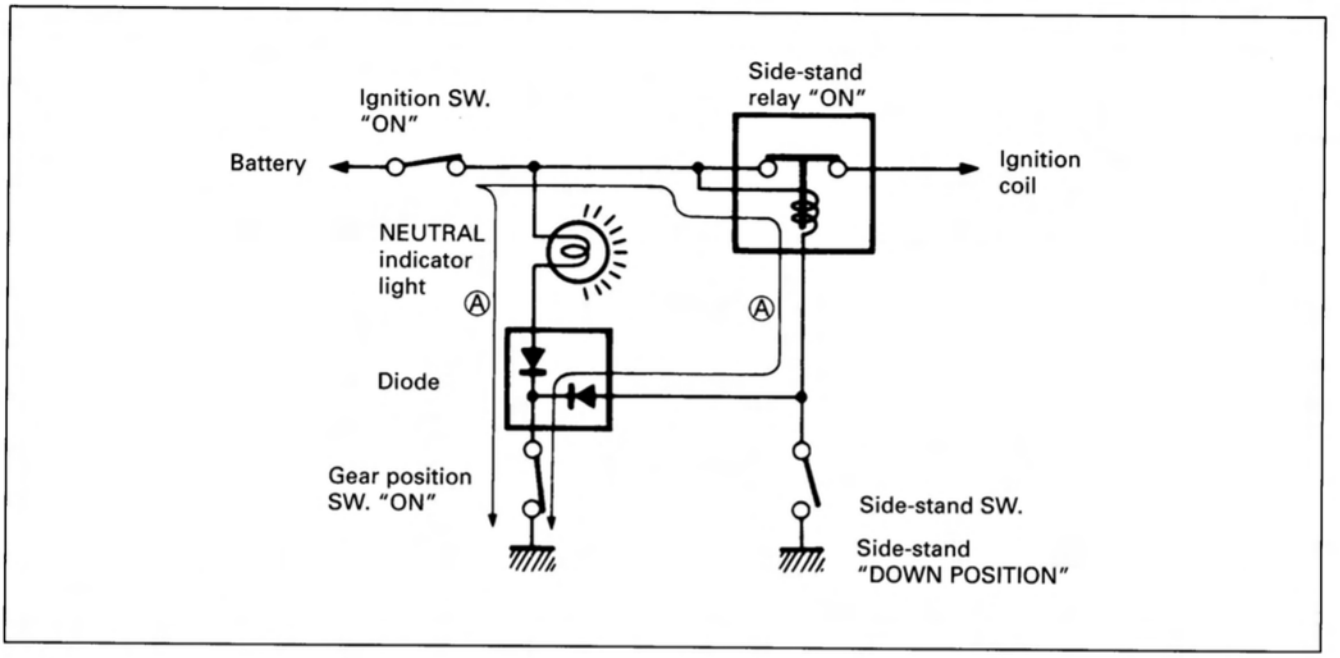

2. Side-stand: "UP-RIGHT (ON)"
   The current flow Ⓑ turns "ON" the relay and the ignition coil lives. The engine can be easily started at any transmission position.

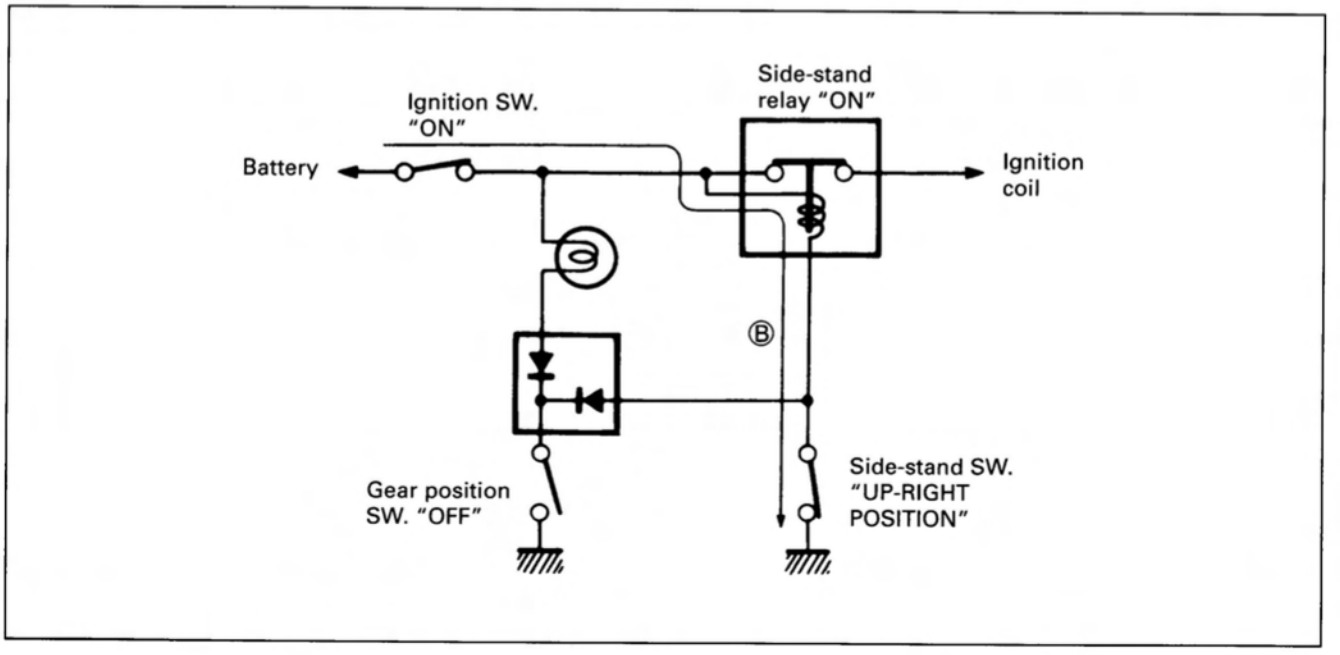

TROUBLESHOOTING

Starter motor will not run.

The transmission is in neutral. Turn on the ignition switch with the engine stop switch in "RUN" position.
Check whether to hear the click noise from the starter relay when the starter button is pushed.
Grasp the clutch lever when pushing the starter button.

- Clicks → Check whether to run the starter motor when connect the starter motor terminal to the battery ⊕ terminal directly. (Do not use thin wire, because a large amount of current flows.)
  - Run → • Faulty starter relay • Loosen or disconnected starter motor lead wire
  - Not run → • Faulty starter motor
- No click → Measure the starter relay voltage at the starter relay connectors (between Y/G ⊕ and Y/B ⊖) when the starter button is pushed.
  - Not voltage → • Faulty ignition switch • Faulty engine stop switch • Faulty gear position switch • Faulty diode • Faulty side-stand relay • Faulty starter button • Faulty clutch lever position switch • Poor contact of connector • Open circuit in wiring harness
  - Voltage measured → Check the starter relay. (Refer to page 7-15.)
    - Incorrect → • Faulty starter relay
    - Correct → • Poor contact of the starter relay

Starter motor runs when the transmission is in neutral, but does not run with the transmission in any position except neutral, with the side-stand up position.

Check the side-stand switch. (Refer to page 7-17.)

- Incorrect → • Faulty side-stand switch
- Correct → • Open circuit in wiring harness • Poor contact of connector

Others

Engine does not turn though starter motor runs.	• Faulty starter clutch

STARTER MOTOR REMOVAL AND DISASSEMBLY

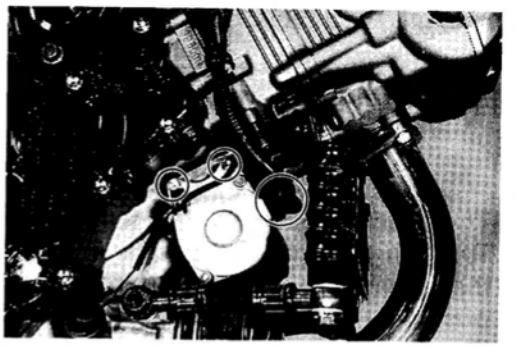

- Disconnect the starter motor lead wire.
- Remove the starter motor.

- Disassemble the starter motor as shown in the illustration.

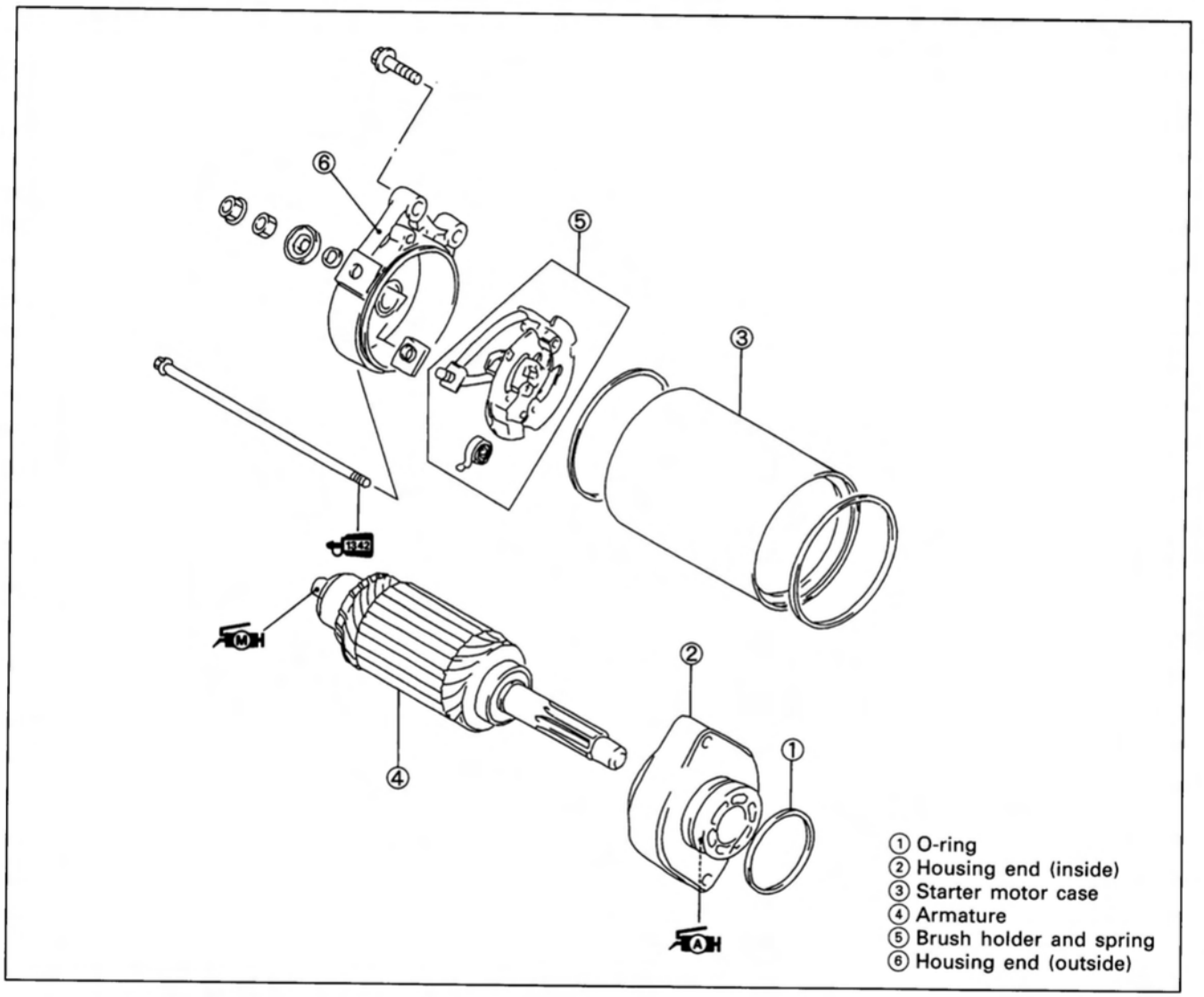

STARTER MOTOR INSPECTION

CARBON BRUSH

Inspect the brushed for abnormal wear, crack or smoothness in the brush holder.
If the brush has failed, replace the brush sub assy.

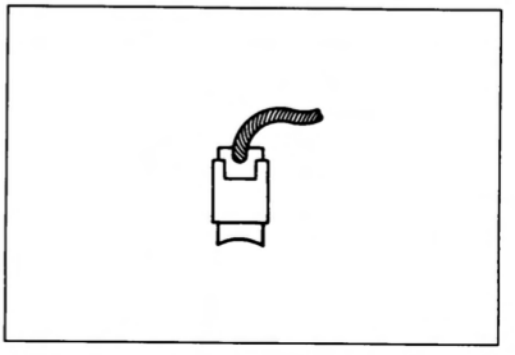

COMMUTATOR

Inspect the commutator for discoloration, abnormal wear or undercut Ⓐ.
If the commutator is abnormally worn, replace the armature.
When surface is descolored, polish it with #400 sand paper and clean it with dry cloth.
If there is no undercut, scrape out the insulator ① with saw blade.

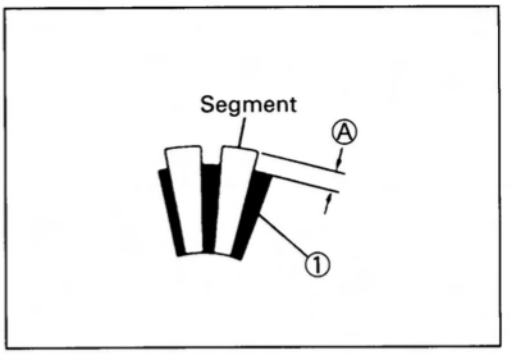

ARMATURE COIL INSPECTION

Check for continuity between each segment.
Check for continuity between each segment and the armature shaft.
If there is no continuity between the segments or there is continuity between the segments and shaft, replace the armature with a new one.

09900-25008: Multi circuit tester set

Tester knob indication: Continuity test (•))))

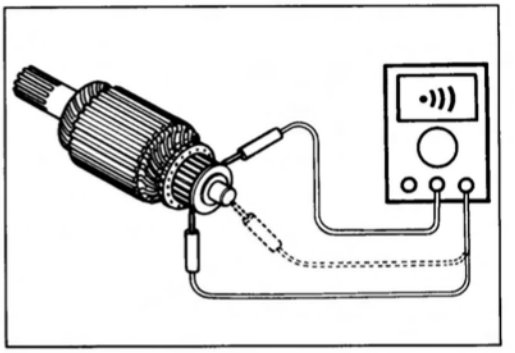

OIL SEAL INSPECTION

Check the oil seal lip for damage or leakage.
If any damage is found, replace the housing end.

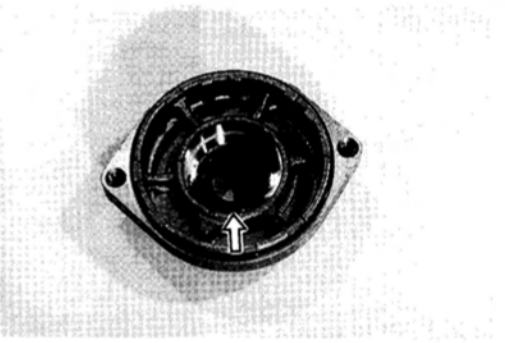

STARTER MOTOR REASSEMBLY

Reassemble the starter motor in the reverse order of disassembly. Pay attention to the following points:

⚠ CAUTION

Replace the O-ring with a new one to prevent oil leakage and moisture.



- Apply SUZUKI SUPER GREASE "A" to the lip of the oil seal.

99000-25030: SUZUKI SUPER GREASE "A"

- Apply a small quantity of MOLY PASTE to the armature shaft.

99000-25140: SUZUKI MOLY PASTE

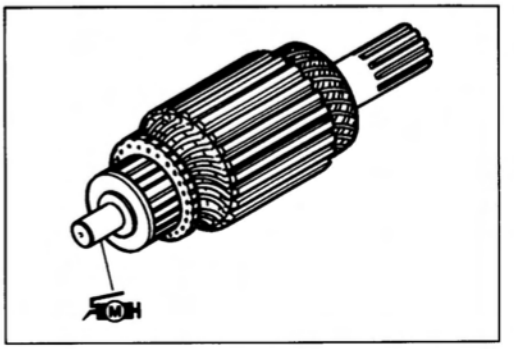

- Apply a small quantity of THREAD LOCK "1342" to the starter motor housing bolts.

99000-32050: THREAD LOCK "1342"

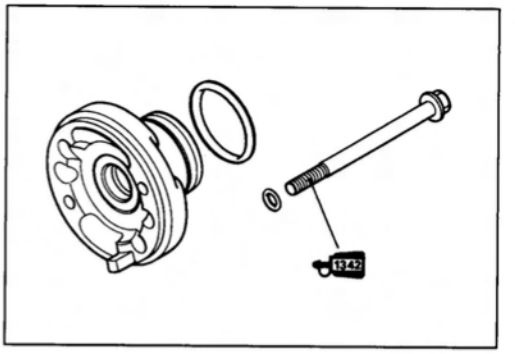

STARTER RELAY INSPECTION

- Remove the seat. (Refer to page 6-4.)
- Remove the battery holder plate ① and fuel tank mounting bracket bolts ②.
- Disconnect the battery ⊖ lead wire ③ and starter relay cover ④.
- Disconnect the starter motor lead wire ⑤, battery lead wire ⑥ and starter relay coupler ⑦ at the starter relay.
- Remove the starter relay.

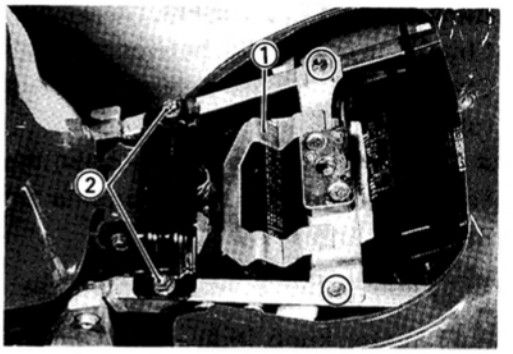

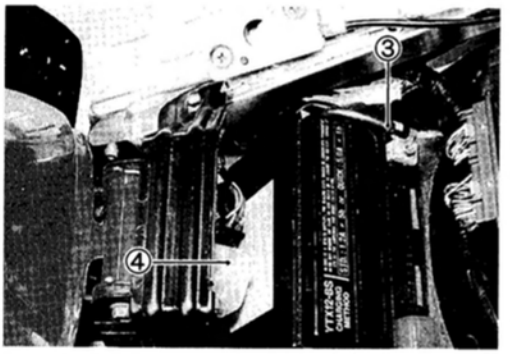



Apply 12 volts to Ⓐ and Ⓑ terminals, inspect the continuity between the terminals, positive and negative.
If the starter relay is in sound condition, continuity is found.

09900-25008: Multi circuit tester set

Tester knob indication: Continuity test (•)))

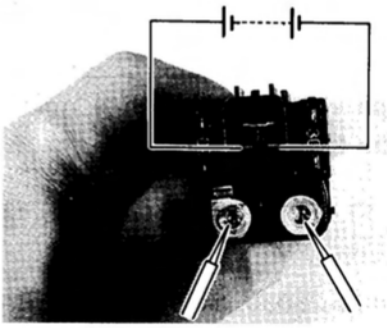

⚠ CAUTION

Do not apply a battery voltage more than 5 seconds to the starter relay as it may overheat and cause damage to the relay coil.

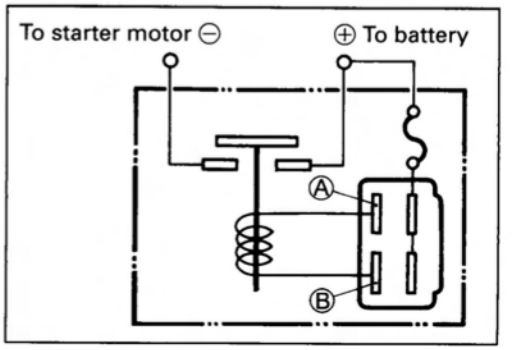

- Check the coil for "open", "ground" and ohmic resistance. The coil is in good condition if the resistance is as follows.

09900-25008: Multi circuit tester set

Starter relay resistance
Standard: 3–6Ω

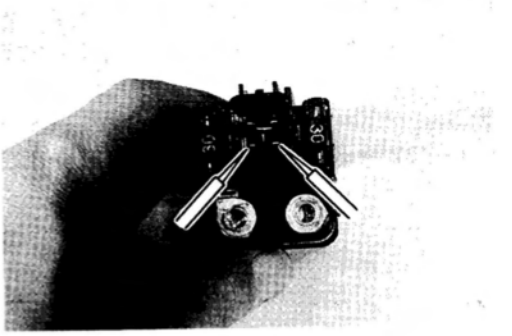

SIDE-STAND/IGNITION INTERLOCK SYSTEM PART INSPECTION

If the interlock system does not operate properly, check each component. If any abnormality is found, replace the component with a new one.

DIODE

The diode ① is located under the air cleaner.

- Remove the air cleaner. (Refer to pages 4-54 and -55.)
- Disconnect the diode.

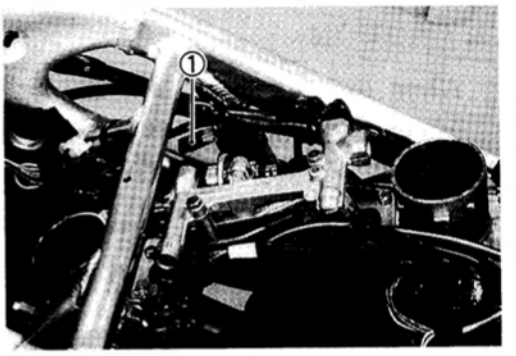

Using a multi circuit tester, measure the voltage between the terminals in the following table.

Unit: V

⊖ Probe of tester to: / ⊕ Probe of tester to:	②	③
②		1.4–1.5
③	0.4–0.6	

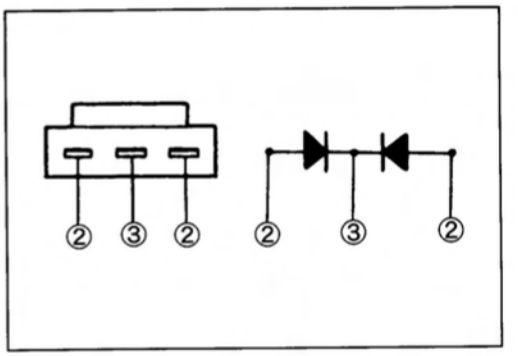

09900-25008: Multi circuit tester set

Tester knob indication: Diode test (⊣◂)

NOTE:
If the tester read under 1.4V, replace the battery of multi circuit tester when do not connecting the tester probes.

GEAR POSITION SWITCH

The gear position switch lead wire coupler is located under the intake air duct.

- Disconnect the gear position switch lead wire and check the continuity between Blue and Ground with the transmission in "NEUTRAL".

	Blue	Ground
ON (Neutral)	○	○
OFF (Except neutral)		

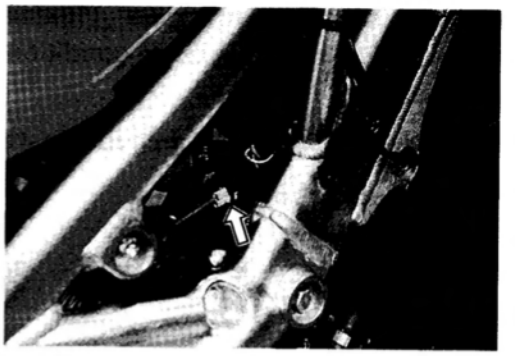

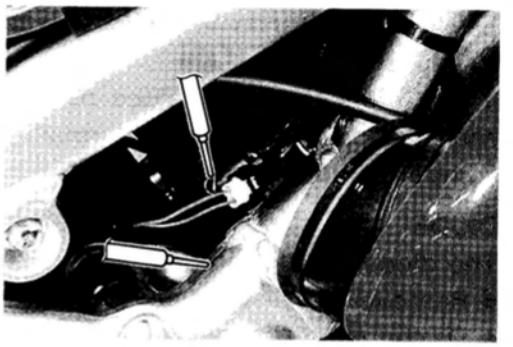

⚠ CAUTION

When disconnecting and connecting the gear position switch lead wire coupler, make sure to turn OFF the ignition switch, or electronic parts may get damaged.

- Connect the gear position switch lead wire coupler to the wiring harness.
- Turn ignition switch "ON" position and side-stand upright position.

Using a multi circuit tester, measure the voltage between Red lead wire and ground with low to top gear positions.

09900-25008: Multi circuit tester set

Tester knob indication: Voltage (⎓)

Neutral position switch voltage: More than 0.6V
(* Low to top gear position, * Except neutral position) (Red–Ground)

NOTE:

* *When connecting the multi circuit tester, install the copper stings (O.D is below 0.5 mm) to the back side of the lead wire coupler and connect the probes of tester to them.*

* *Use the copper sting, its outer diameter is below 0.5 mm, to prevent damaging the rubber of the water proof coupler.*

SIDE-STAND SWITCH

The side-stand switch lead wire coupler is located under the air cleaner.

- Remove the air cleaner. (Refer to page 6-1.)
- Disconnect the side-stand switch lead wire coupler and measure the voltage between Green and Black/White lead wires.

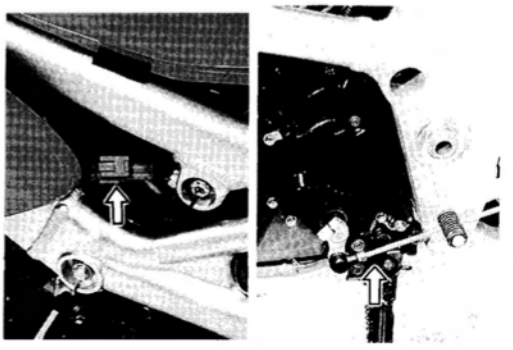

09900-25008: Multi circuit tester set

Tester knob indication: Diode test (⊣◂)

	Green (⊕ Probe)	Black/White (⊖ Probe)
ON (UP-right position)	0.4–0.6 V	
OFF (Down position)	1.4–1.5 V	

NOTE:
If the tester read under 1.4V, replace the battery of multi circuit tester when do not connecting the tester probes.

SIDE-STAND RELAY AND FUEL PUMP RELAY

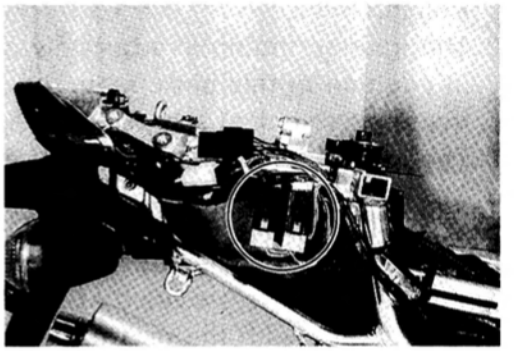

The side-stand relay and fuel pump relay are located behind the frame cover.

- Remove the frame cover. (Refer to page 6-4.)
- Remove the side-stand relay or fuel pump relay.

NOTE:
Side-stand relay and fuel pump relay are the same parts, but they can be distinguished by the lead wire colors.

Side-stand relay wire color: G, O/B, O/Y, O/Y
Fuel pump relay wire color: O/Bl, O/W, Y/Bl, Y/R

G : Green
O/B : Orange with Black tracer
O/Bl : Orange with Blue tracer
O/W : Orange with White tracer
O/Y : Orange with Yellow tracer
Y/Bl : Yellow with Blue tracer
Y/R : Yellow with Red tracer

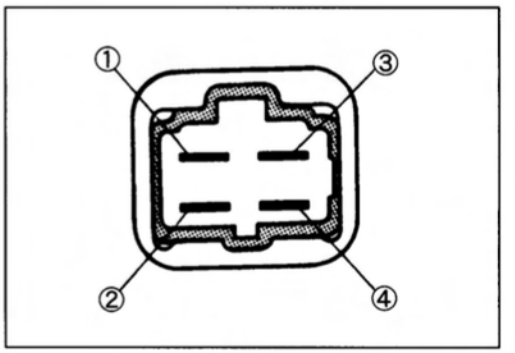

First, check the insulation between ① and ② terminals with tester. Then apply 12 volts to ③ and ④ terminals, ⊕ to ③ and ⊖ to ④, and check the continuity between ① and ②. If there is no continuity, replace it with a new one.

IGNITION SYSTEM

DESCRIPTION

The ignition system is controlled by the ECM. The system is normal ignition system that is called digital transistorized ignition system to decide accurate ignition timing according to the engine rpm, gear position, and throttle position.

This system consists of the crankshaft position sensor (pick up coil), ECM, two ignition coils and spark plugs.

1. The ignition coil power source is supplied through the side-stand relay from the battery, which means that the ignition coil power source is controlled by the side-stand and gear position switch.
2. The ignition timing is accurately controlled by the throttle position and engine rpm.
   In addition to this basic map, the engine coolant temp. sensor affects the ignition timing when the engine coolant temperature is low and engine starts, using fast idle system.
3. The ignition timing is also changed due to the gear position and throttle position.

To stop or to operate the ignition system, the following devices affects the ignition timing.

Crankshaft position sensor:
The pick up coil is provided at the left end of the crankshaft, which produces signal wave form when meeting with the protrusion on the generator rotor.
The generated wave is sent to the ECM that calculates the engine rpm.
This signal decides the ignition timing and signal to the tachometer.

This signal decides the ignition timing without calculating the signal under 700 r/min as the crankshaft turning speed varies when engine rpm is low.
Over 700 r/min, the signal is processed and calculated by the ECM, which decides the ignition timing in response to fast idle and engine coolant temperature.
When starting the engine, ignition timing is 1° A.T.D.C. until 700 r/min.
If this signal is not sent to ECM, ignition system and injection system do not operate.

Throttle position sensor:
This sensor is set at the throttle body, and it is a kind of variable resistor, which changes resistance value when throttle is opening. With this signal the ECM decides the ignition timing in response to the engine rpm.
The ignition timing map is composed of two factors, throttle position and engine rpm.

Gear position switch:
The gear position switch has a different resistance for each gear, and ECM understands the gear position. The ECM selects the ignition timing when the gear position is changed.

Engine coolant temp. sensor:
This sensor changes ignition timing to advance side when the temperature is below 60°C and fast idle system is working in the throttle valve closed condition. The timing advances during the fast idling condition, and gradually returns to the basic map when engine coolant temperature is increasing.

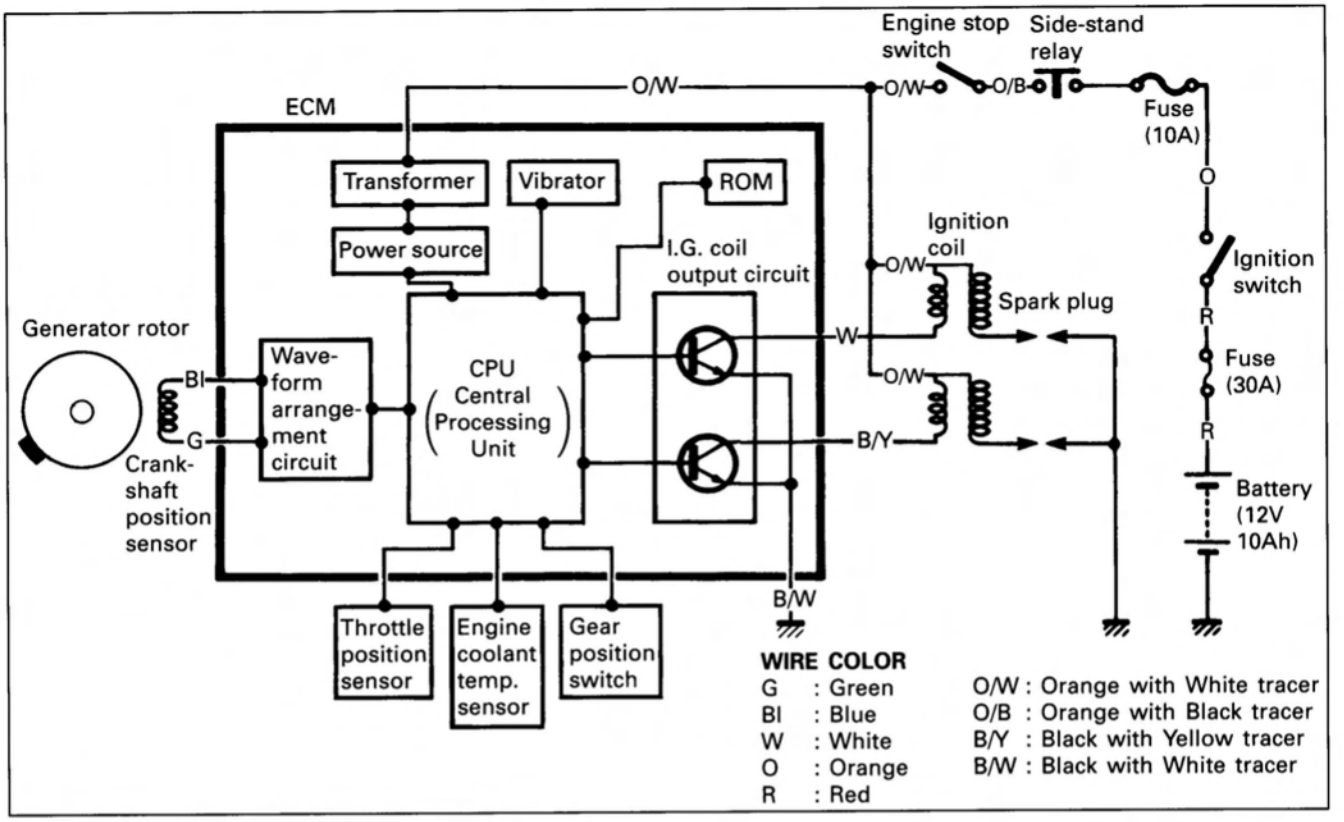

NOTE:

The ignition cut-off circuit is incorporated in this ECM to prevent over-running engine. If engine rpm reaches 10 200 r/min., this circuit cuts off the ignition primary current for all spark plugs.

⚠ CAUTION

Engine can run over 10 200 r/min. without load, even if the ignition cut-off circuit is effective, and it may cause engine damage. Do not run the engine without load over 10 200 r/min. at anytime.

IGNITION TIMING MAP

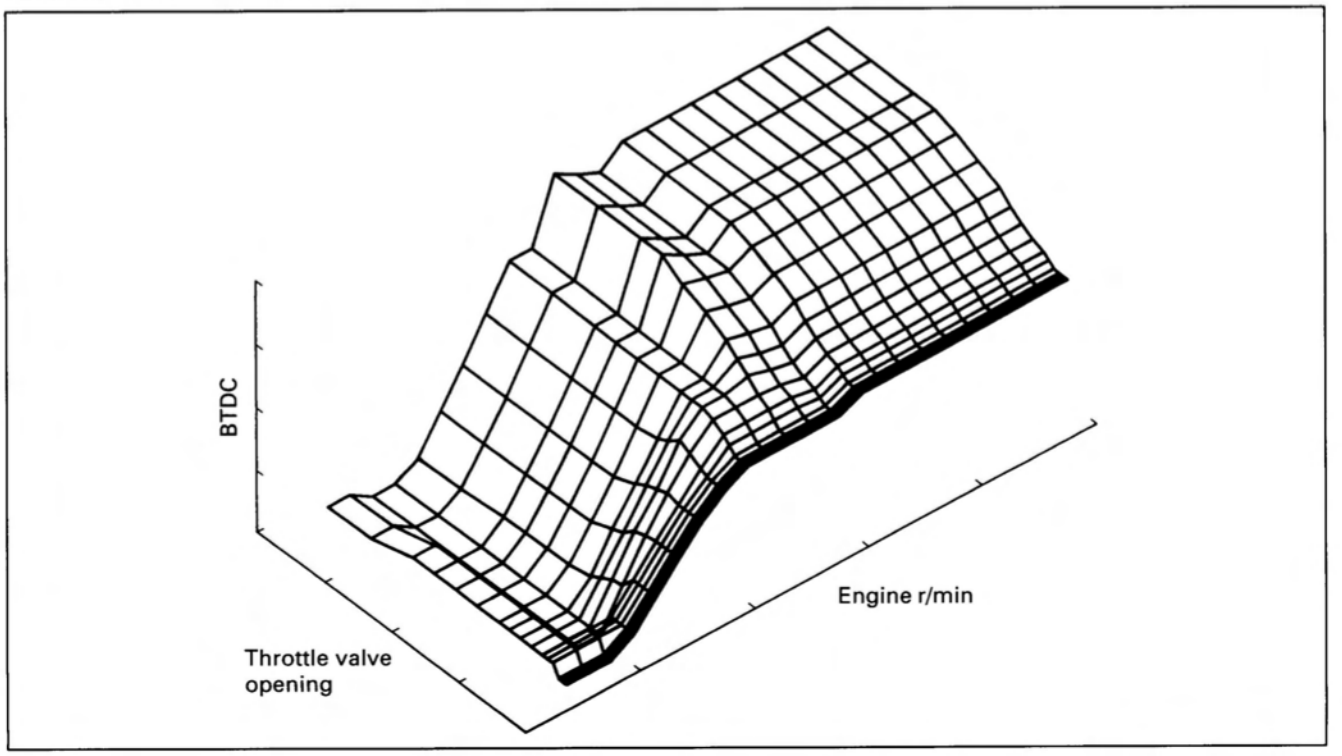

TROUBLESHOOTING

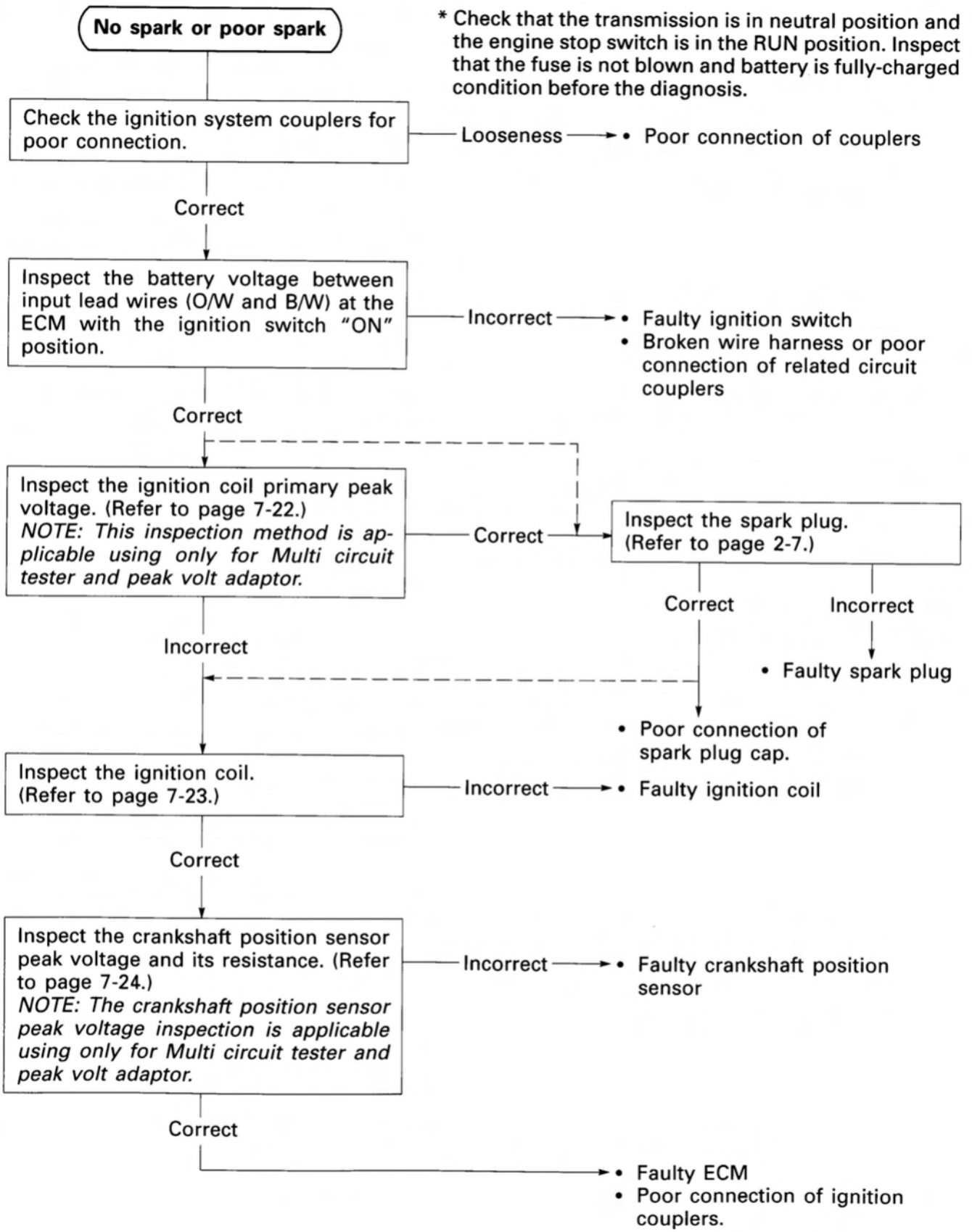

INSPECTION

IGNITION COIL PRIMARY PEAK VOLTAGE

- Lift the fuel tank. (Refer to page 4-49.)
- Remove the right fairing. (Refer to page 6-1.)
- Remove the two spark plug caps.
- Connect new two spark plugs to each spark plug cap and ground them to the crankcase or frame.

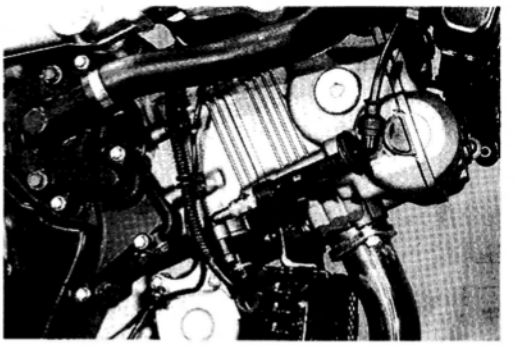

NOTE:
Be sure that all couplers and spark plugs are connected properly and the battery used is in fully-charged condition.

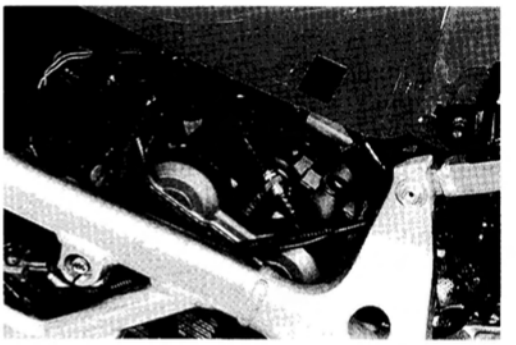

⚠ CAUTION

Avoid grounding the spark plugs and suppling the electrical shock to the cylinder head cover (magnesium parts) to prevent the damage of the magnesium material.

Inspect the No.1 ignition coil primary peak voltage in the following procedure.

- Connect the multi circuit tester with peak voltage adaptor as follow.

No.1 ignition coil: White terminal–Ground
(⊕ Probe) (⊖ Probe)

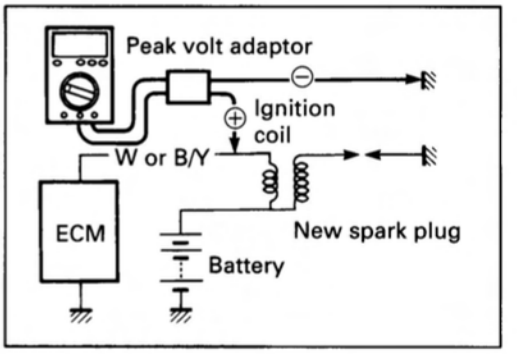

NOTE:
Do not disconnect the ignition coil primary lead wire.

TOOL 09900-25008: Multi circuit tester set

⚠ CAUTION

When using the multi circuit tester and peak volt adaptor, follow the instruction manual.



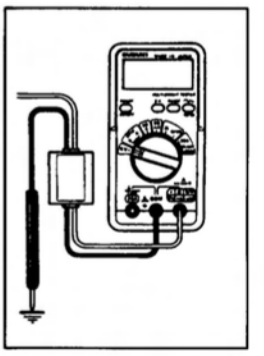

- Shift the transmission into the neutral and turn ignition switch "ON".
- Crank the engine a few seconds with starter motor by depressing starter button and then measure the ignition coil primary peak voltage.
- Repeat the above inspection a few times and measure the highest ignition coil primary peak voltage.

Tester knob indication: Voltage (⎓)

Ignition coil primary peak voltage: More than 280 V

⚠ WARNING

Do not touch the tester probes and spark plugs to prevent an electric shock while testing.

Inspect the No.2 ignition coil primary peak voltage in the same manner of No.1 ignition coil inspection.
No.2 ignition coil: B/Y terminal–Ground
(⊕ Probe) (⊖ Probe)
B/Y: Black with Yellow tracer

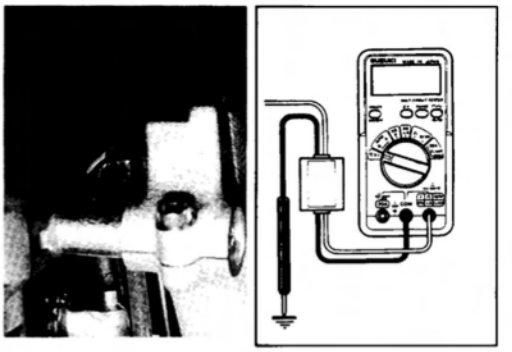

NOTE:
Do not disconnect the ignition coil primary wire.

Tester knob indication: Voltage (⎓)

Ignition coil primary peak voltage: More than 280 V

If they are lower than the specified values, inspect the ignition coil, crankshaft position sensor and ECM. (Refer to page 7-20.)

IGNITION COIL (Checking with Electro Tester)
- Remove the air cleaner. (Refer to page 4-4.)
- Remove the ignition coils.

NOTE:
Make sure that the three-needle sparking distance of electro tester is set at 8 mm (0.3 in).

- With the tester, test the ignition coil for sparking performance. The test connection is as indicated.

If no sparking or orange color sparking occurs in the above conditions, it may be caused by defective coil.

09900-28108: Electro tester

Spark performance: Over 8 mm (0.3 in)

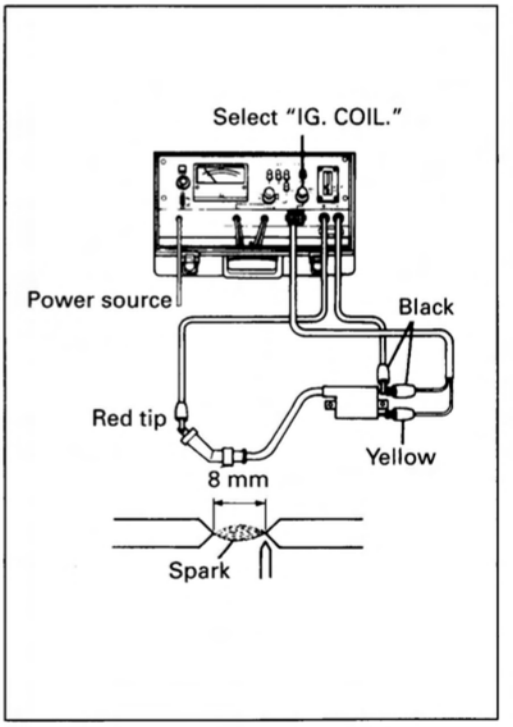

⚠ WARNING

Do not touch the wire clips to prevent an electric shock when testing.

⚠ CAUTION

When using the electro tester, follow the instruction manual.

IGNITION COIL RESISTANCE
- An ohm meter may be used, instead of the electro tester. In either case, the ignition coil is to be checked for continuity in both primary and secondary windings. Exact ohmic readings are not necessary, but, if the windings are in sound condition, their continuity will be noted with these approximate ohmic values.

Ignition coil resistance
Primary: 3–5Ω (⊕ tap–⊖ tap)
Secondary: 20–28 kΩ (Plug cap–⊕ tap)

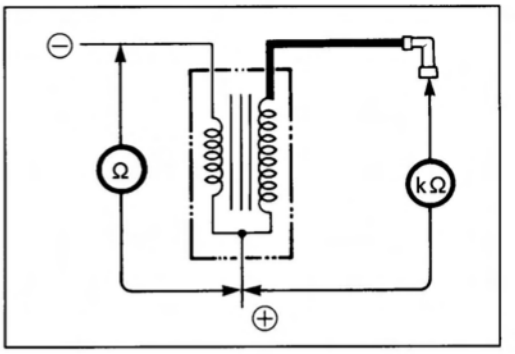

CRANKSHAFT POSITION SENSOR (Checking with Multi Circuit Tester)

- Remove the seat.
- Remove the battery holder plate.
- Disconnect the ECM lead wire coupler ① from the ECM.

NOTE:
Be sure that all couplers are connected properly and the battery used is in fully-charged condition.

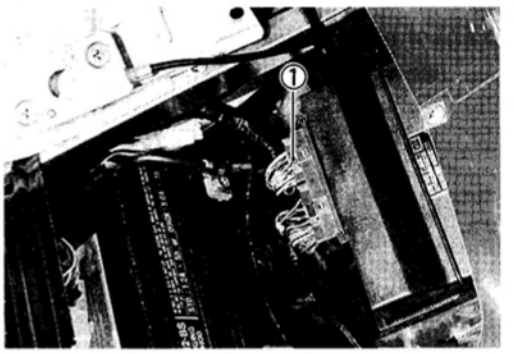

Inspect the crankshaft position sensor peak voltage between Green and Blue lead wires in the ECM coupler.

- Connect the multi circuit tester with peak volt adaptor as follows.

Green (⊕ Probe)–Blue (⊖ Probe)

TOOL 09900-25008: Multi circuit tester set

⚠ CAUTION

When using multi circuit tester and peak volt adaptor, follow the instruction manual.

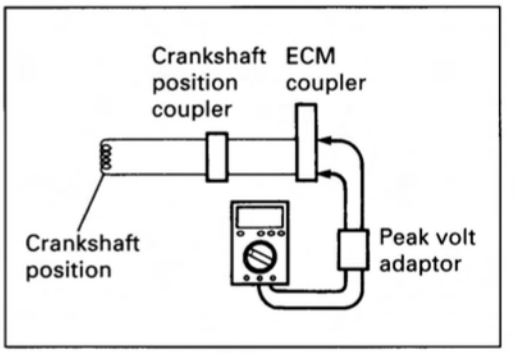

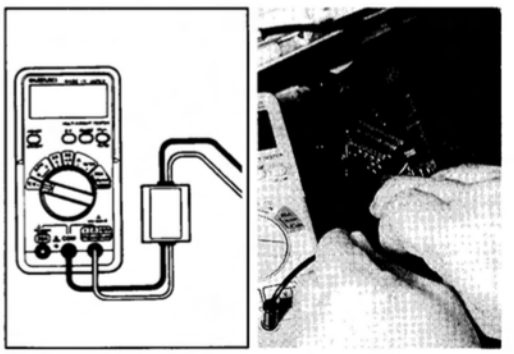

- Shift the transmission into the neutral and turn ignition switch "ON".
- Crank the engine a few seconds with starter motor by depressing starter button and then measure the crankshaft position sensor peak voltage.
- Repeat the above test procedure a few times and measure the highest crankshaft position sensor peak voltage.

V Tester knob indication: Voltage (⎓)

Crankshaft position sensor peak voltage:
More than 4.0V (Green–Blue)

If the peak voltage measured on the ECM lead wire coupler is lower than the specified value, check the peak voltage on the crankshaft position sensor lead wire coupler in the following procedure.

- Remove the frame cover. (Refer to page 6-4.)
- Disconnect the crankshaft position sensor lead wire coupler ① and connect the multi circuit tester with peak volt adaptor.

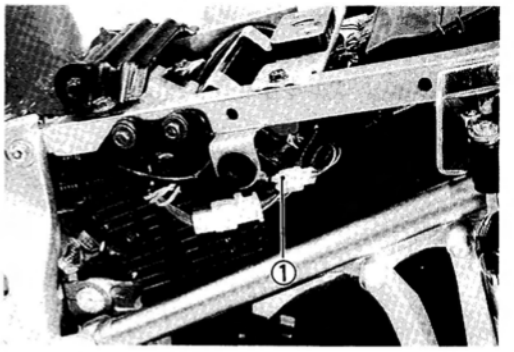

Green (⊕ Probe)–Blue (⊖ Probe)

- Measure the crankshaft position sensor peak voltage in the same manner of measuring on the ECM lead wire coupler.

Tester knob indication: Voltage (⎓)

Crankshaft position sensor peak voltage:
More than 4.0V (Green–Blue)

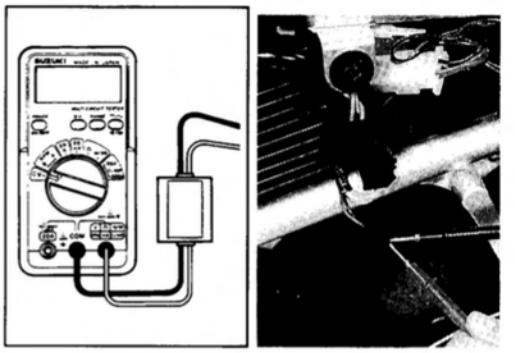

If the peak voltage on the crankshaft position sensor lead wire coupler is normal but on the ECM lead wire coupler is abnormal, the wire harness must be replaced. If the both peak voltage is abnormal, the crankshaft position sensor must be replaced and recheck.

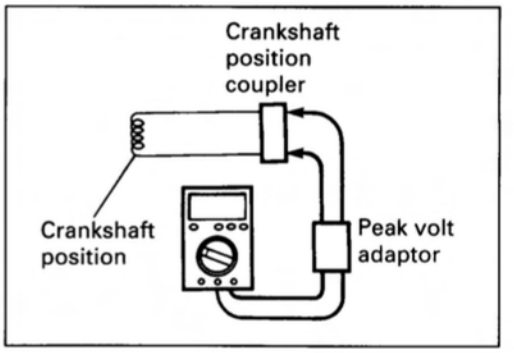

CRANKSHAFT POSITION SENSOR RESISTANCE

- Remove the frame cover and disconnect the lead wire coupler.
- Measure the resistance between lead wires and ground. If the resistance is not specified value, the crankshaft position sensor must be replaced.

Crankshaft position sensor resistance:
184–276Ω (Green–Blue)
∞ Ω (Blue–Ground)

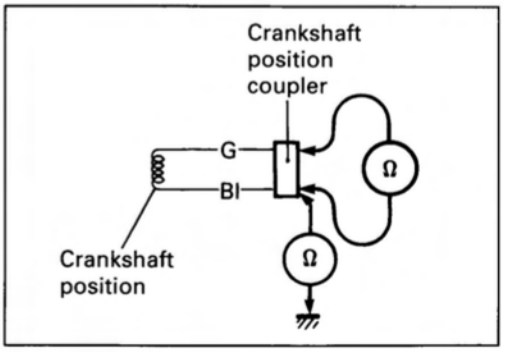

NOTE:
Refer to page 3-45 for crankshaft position sensor replacing.

SPARK PLUG
Refer to page 2-7.

COMBINATION METER

REMOVAL

- Remove the fairing. (Refer to page 6-1.)
- Remove the fairing center cover.

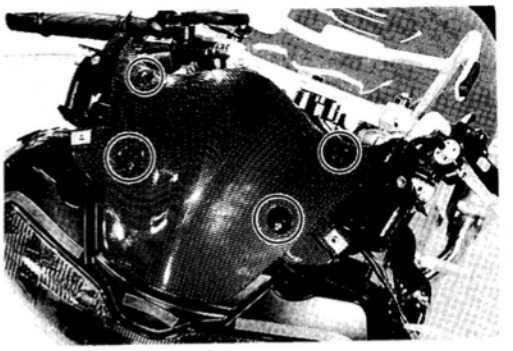

- Remove the combination meter cover.
- Disconnect the lead wire coupler.



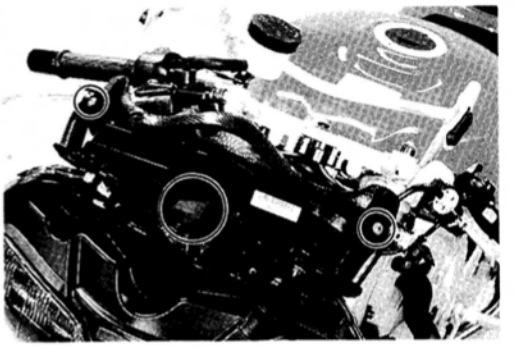

- Remove the combination meter.

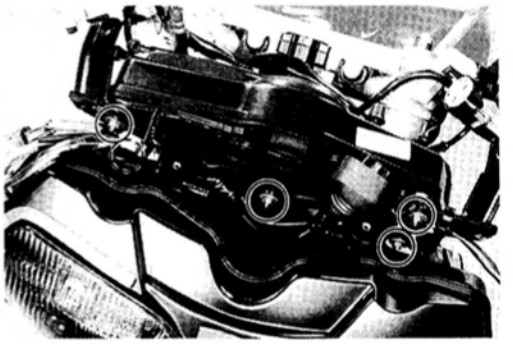

⚠ CAUTION

When disconnecting and connecting the combination meter coupler, make sure to turn OFF the ignition switch, or electronic parts may get damaged.

DISASSEMBLY

- Disassemble the combination meter as follows.

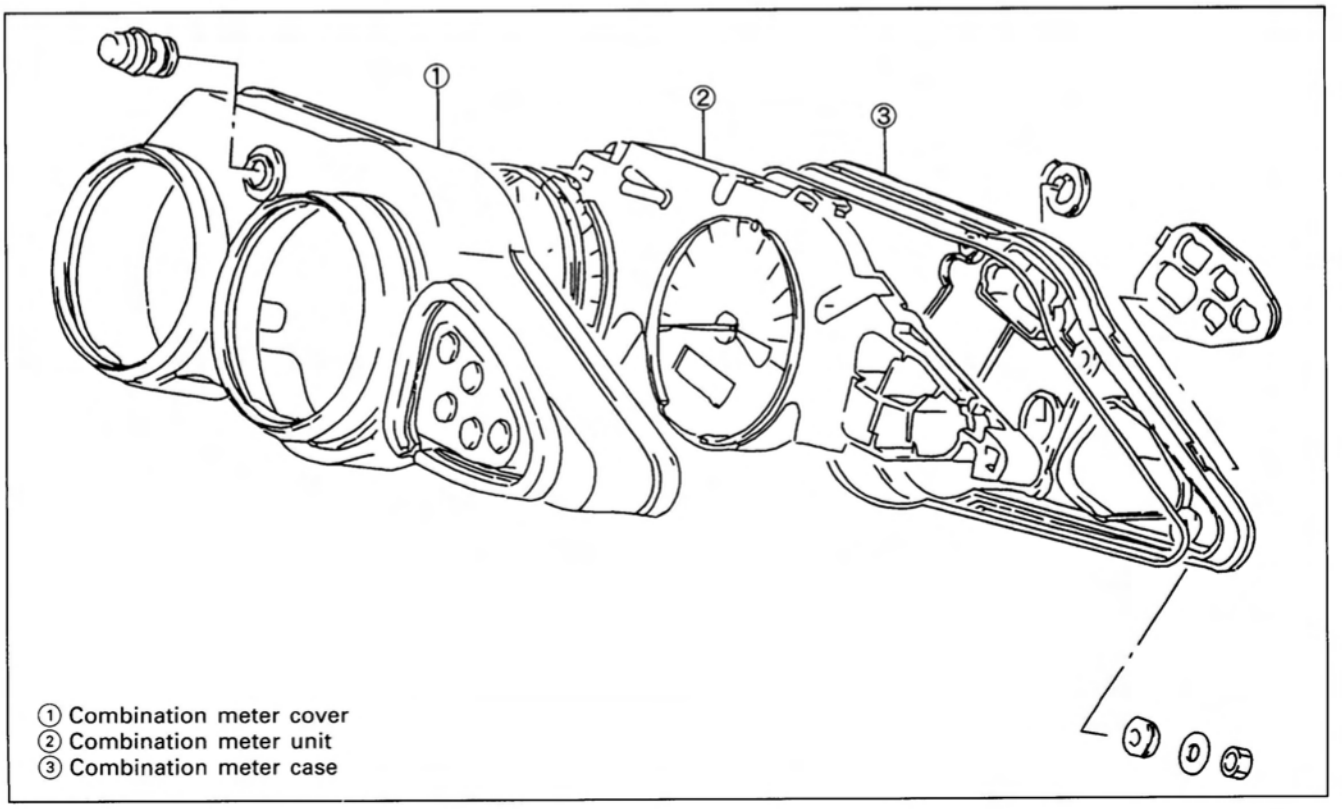

① Combination meter cover
② Combination meter unit
③ Combination meter case

INSPECTION

Using the tester, check the continuity between terminals in the following diagram. If the continuity measured is incorrect, remove and check the bulb.
If the bulb is failure, install the new bulb and check the continuity again. If the bulb is correct, replace the unit with a new one.

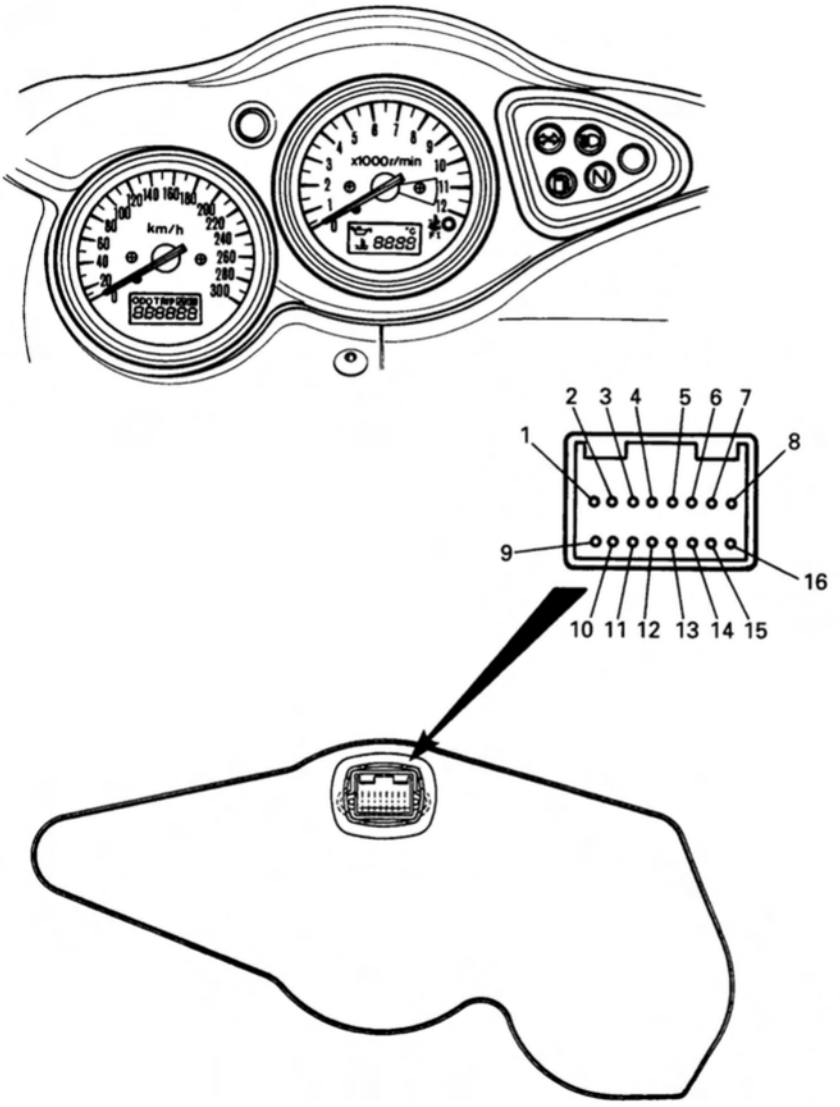

ITEM	⊕ Probe of tester to:	⊖ Probe of tester to:
HIGH BEAM	10	8
NEUTRAL	2	13
TURN (R), (L)	12	8
	11	8
ILLUMI	9	8

1 : BATTERY ⊕
2 : IGNITION ⊕
3 : SPEED SENSOR ⊕
4 : TACHO
5 : FUEL A
6 : FUEL B
7 : OIL
8 : GROUND
9 : ILLUMI ⊕
10 : HIGH BEAM ⊕
11 : TURN (L) ⊕
12 : TURN (R) ⊕
13 : NEUTRAL ⊖
14 : SPEED
15 : FI
16 : GROUND

ENGINE COOLANT TEMPERATURE METER AND INDICATOR INSPECTION

The LCD ① (Liquid crystal display) and LED ② (Light Emitting Diode) in the tachometer indicate the engine coolant temperature information. The checking procedure of these system are explained as following four steps:

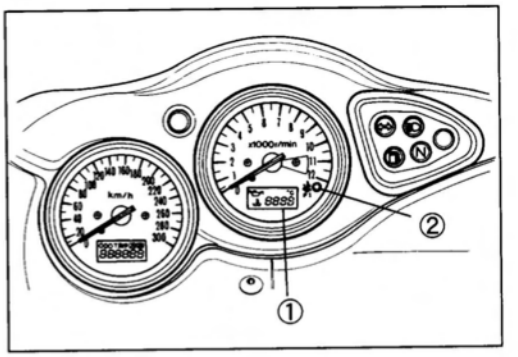

First step:
- Remove the frame cover. (Refer to page 6-2.)
- Disconnect the oil pressure switch lead wire coupler which is located near the regulator/rectifier.
- Disconnect the engine coolant temp. sensor lead wire coupler.

⚠ CAUTION

When connecting and disconnecting the engine coolant temp. sensor lead wire coupler, make sure to turn OFF the ignition switch, or electronic parts may get damaged.

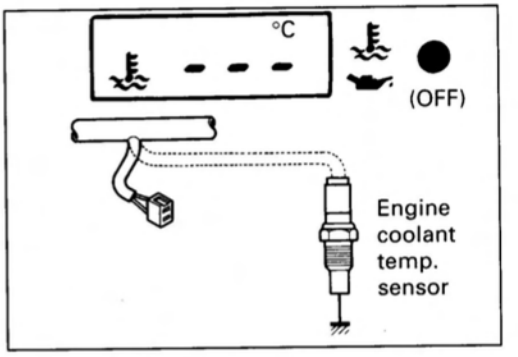

- Turn the ignition switch on, then the LCD should not indicate figure but "– – –".

Second step:
- Turn the ignition switch off.
- Connect a approx. 0.811 kΩ resistor between B/Br lead wire and G/Y lead wire coming from the main wiring harness.
- Turn the ignition switch on, then the LCD should indicate "50"°C ("122"°F) and LED not light.

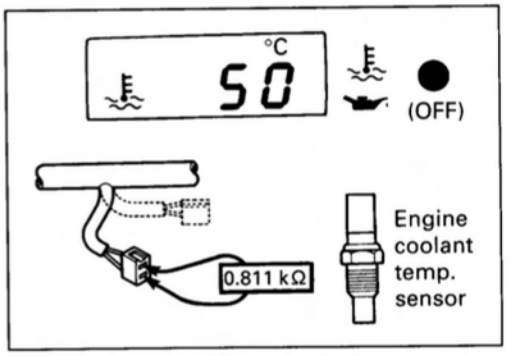

Third step:
- Turn the ignition switch off.
- Change the resistor to approx. 0.088 kΩ
- Turn the ignition switch on, the LCD should keep flickering "130"°C ("266"°F) and LED should light.

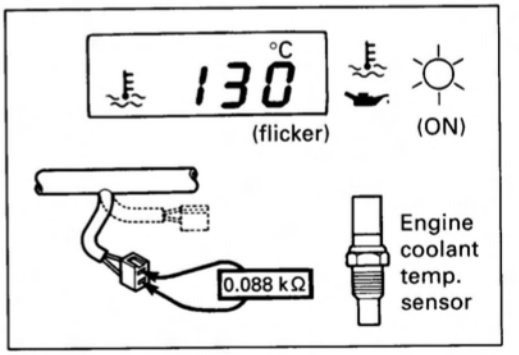

Fourth step:
- Turn the ignition switch off.
- Connect a jumper wire.
- Turn the ignition switch on, the LCD should keep flickering "HI" and the LED should light.

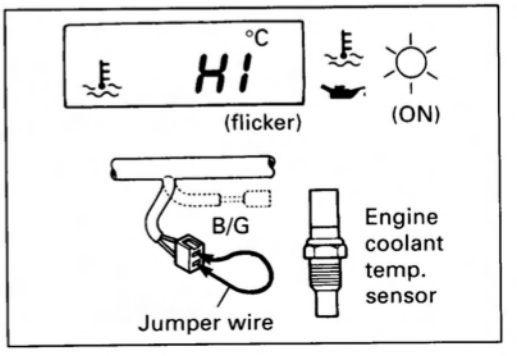

The following table shows the relation of the resistance, LED and LCD.

RESISTANCE	LED	LCD	
∞	OFF	"– – –"	ON
Approx. 0.811 kΩ	OFF	"50"°C ("122"°F)	ON
Approx. 0.088 kΩ	ON	"130"°C ("266"°F)	flicker
Use the jumper wire	ON	"HI"	flicker

If either one or all indications are abnormal, replace the meter with a new one.

For inspecting the engine coolant temp. sensor, refer to pages 5-11 and -12.

FUEL LEVEL INDICATOR INSPECTION

The fuel level indicator light should flicker, when its switch Ⓐ turn "ON" and should keep lighting, when its switch Ⓑ turn "ON".

These system inspection are explained as follows.

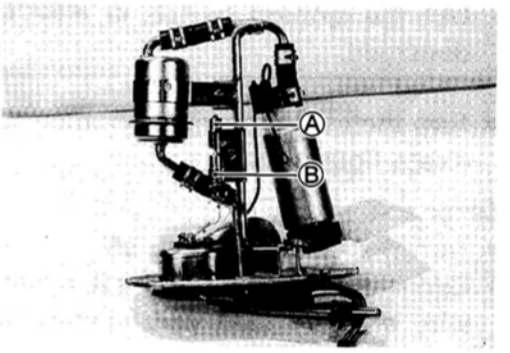

FUEL LEVEL INDICATOR LIGHT INSPECTION

- Lift the fuel tank and support it by prop. (Refer to page 4-2.)
- The fuel indicator light lights up for approx. 3 seconds after the ignition switch is turned on then the indicator light should go out.
- Disconnect the fuel pump lead wire coupler ①.
- Connect a jumper wire between B/W lead and R/B lead coming from the main wiring harness and check whether fuel indicator light is flickering.
- Check if the fuel indicator light will go out within approx. 30 seconds, when disconnecting a jumper wire.

B/W: Black with White tracer
R/B: Red with Black tracer

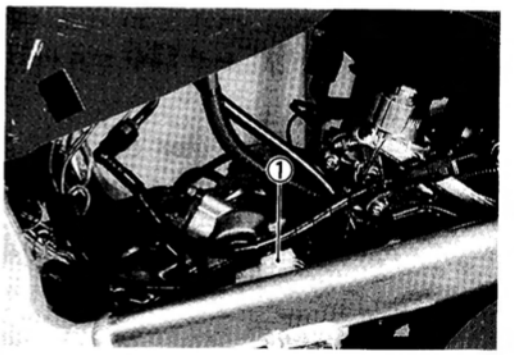

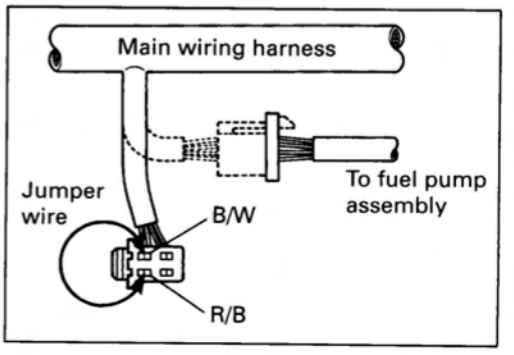

- Connect jumper wires between B/W lead and R/B lead and B/W lead and B/Lg lead coming from the main wiring harness and check whether the fuel indicator light comes on.
- Check if the fuel indicator light will go out within approx. 30 seconds, when disconnecting jumper wires.

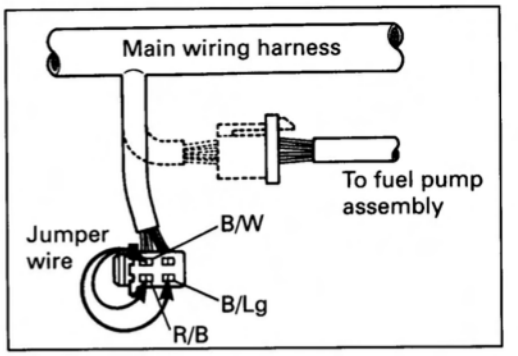

B/W: Black with White tracer
B/Lg: Black with Light green tracer

If the fuel indicator light does not function properly check the bulb. If the bulb is in good condition, replace the meter with a new one.

FUEL LEVEL INDICATOR SWITCH INSPECTION

- Remove the fuel tank. (Refer to page 4-49.)
- Remove the fuel pump. (Refer to pages 4-6 and -7.)

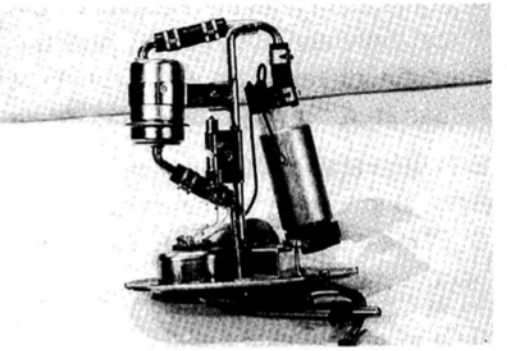

- Connect 12V battery and test bulb (12V, 1.7W) to the fuel level indicator switch as shown in the right illustrations. The bulb should come on after several seconds if the switch is in good condition.

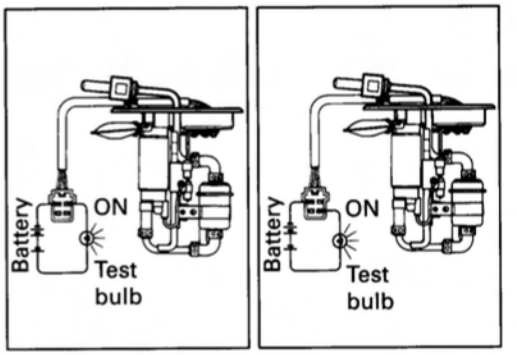

- When the switch is immersed and stirred in water under the above condition, the bulb should go out. If the bulb remains lit, replace the unit with a new one.

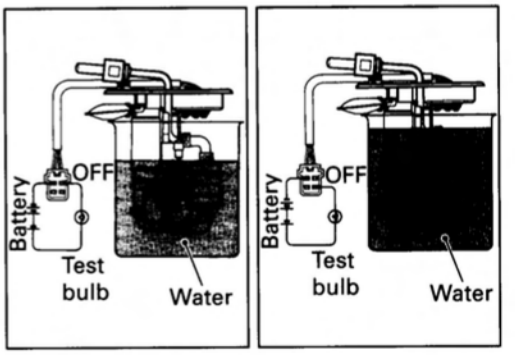

SPEEDOMETER INSPECTION

If the speedometer, odometer or trip meter does not function properly. Inspect the speedometer sensor and connection of couplers. If the speedometer sensor and connection is all right, replace the meter with a new one.

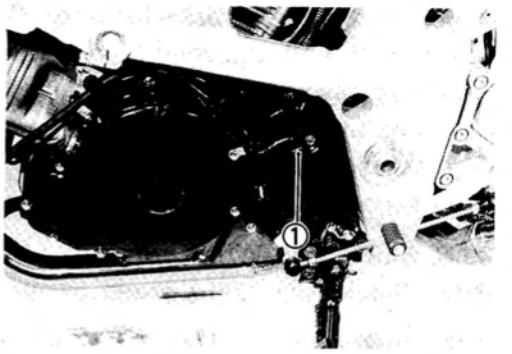

SPEEDOMETER SENSOR INSPECTION

- Disconnect speedometer sensor lead wire coupler.
- Remove the speedometer sensor ① by removing its mounting bolt.
- Connect 12V battery (between B/R and B/W), 10 kΩ resistor (between B/R and B) and the multi circuit tester (⊕ probe of tester to B/R and ⊖ to B) as shown right illustration.

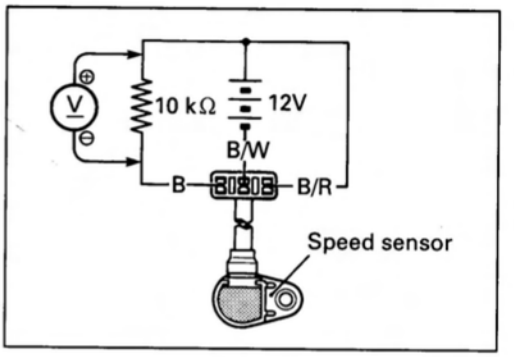

B/R: Black with Red tracer
B/W: Black with White tracer
B: Black

09900-25008: Multi circuit tester set

Tester knob indication: Voltage (⎓)

- Under above condition, if a suitable screwdriver touching the pick-up surface of the speed sensor moves, the tester reading voltage relatively changes (0V→12V or 12V→0V). If the tester reading voltage does not change, replace the speedometer sensor with a new one.

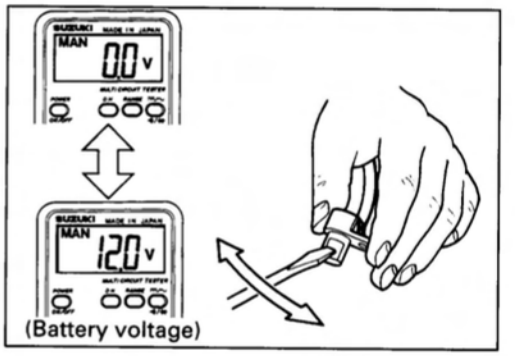

NOTE:
The highest tester reading voltage (12V) while testing is same as battery voltage.

OIL PRESSURE INDICATOR INSPECTION

- Remove the frame cover. (Refer to page 6-4.)
- Disconnect the oil pressure Black lead wire coupler.
- Turn the ignition switch on.
- Check if the oil pressure indicator will light, when connecting a jumper wire between Black lead wire coming from main wiring harness and engine ground.

If the indicator does not light, replace the unit with a new one after checking connecting couplers.

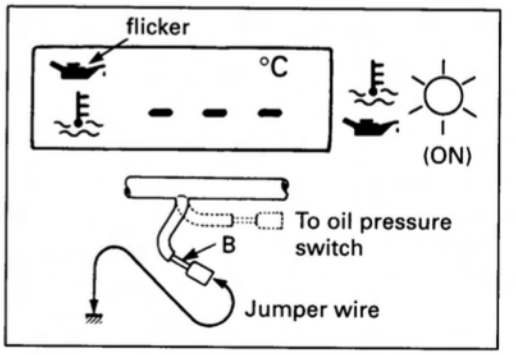

LAMPS

HEADLIGHT

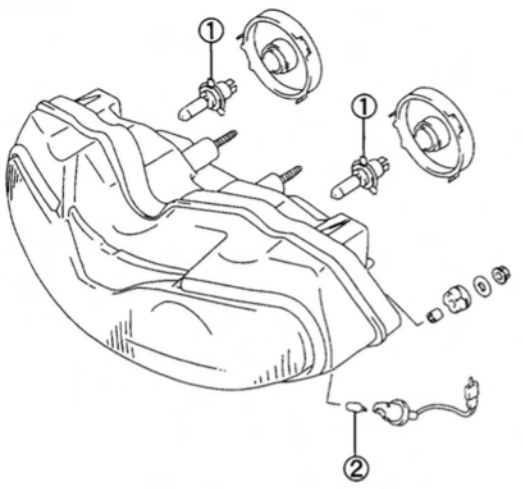

For E-02, 03, 24, 28 and 33

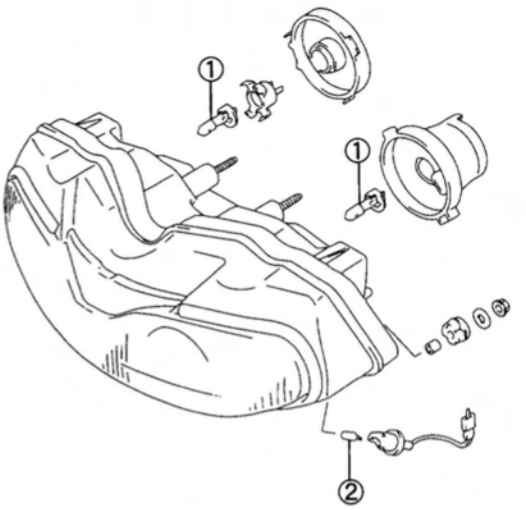

For the others

Headlight bulb ①: 12V 60/55W × 2 (For E-02,03,24,28 and 33)
12V 55W + 12V 55W (For the other models)
Position light bulb ②: 12V 5W (Except for E-03, 24, 28 and 33)

NOTE:
Adjust the headlight, both vertical and horizontal, after reassembling.

HEADLIGHT BULB REPLACEMENT

- Remove the fairing upper covers (①, ②) by removing the screws ③.

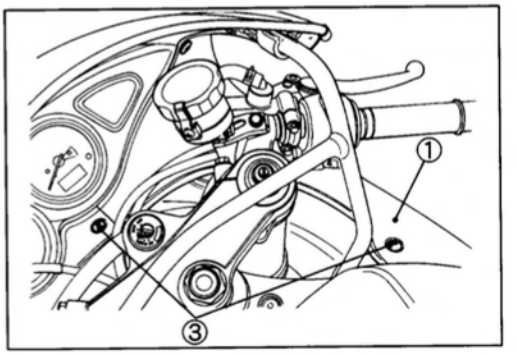

⚠ CAUTION

If you touch the bulb with your bare hands, clean it with a cloth moistened with alcohol or soapy water to prevent early failure.

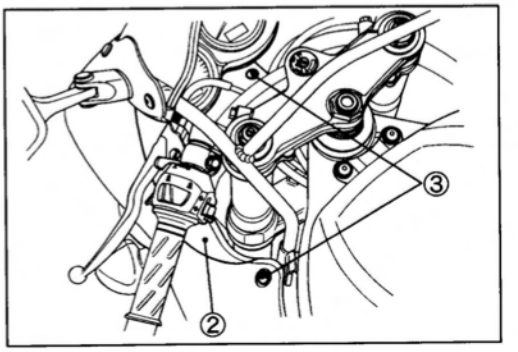

Left side bulb (For E-02, 03, 24 and 33 models)

- Disconnect the socket ① and remove the rubber cap ②.
- Remove the headlight bulb ③ by unhooking the bulb holder spring ④.
- Reassemble the headlight bulb in the reverse order of removal.

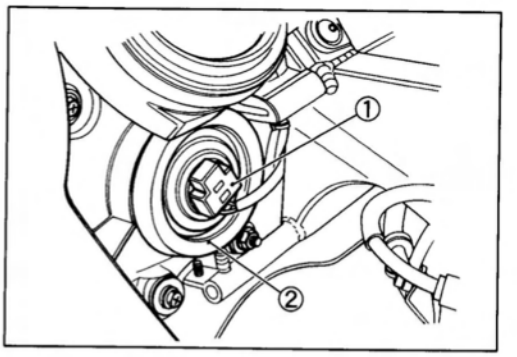

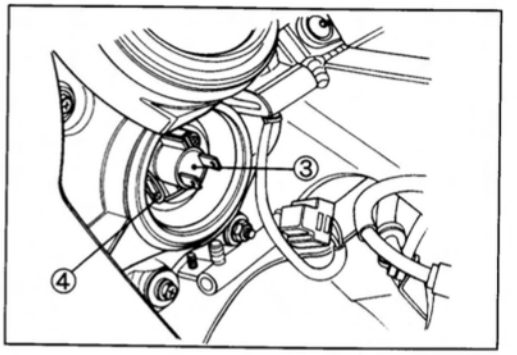

Left side bulb (For the other models)

- Disconnect the lead wires ⑤ after removing the rubber cap ⑥.

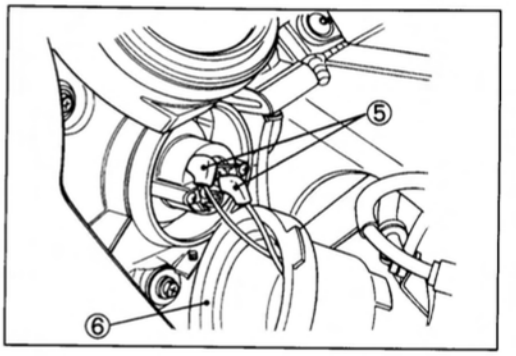

- Remove the headlight bulb ⑦ by unhooking the bulb holder spring ⑧.
- Reassemble the headlight bulb in the reverse order of removal.

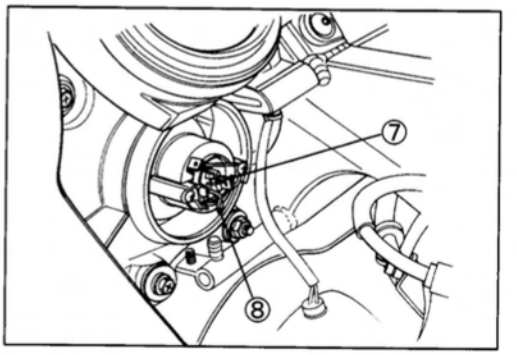

Right side bulb (For all models)

- Disconnect the socket and remove the rubber cap.
- Remove the bulb ⑨ by unhooking the bulb holder spring ⑩.
- Reassemble the headlight bulb in the reverse order of removal.

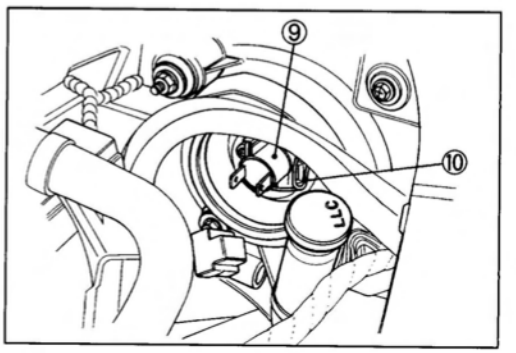

POSITION LIGHT BULB REPLACEMENT (Except for E-03, 24, 28 and 33 models)

- Remove the fairing lower panel ① by removing the screws ②.

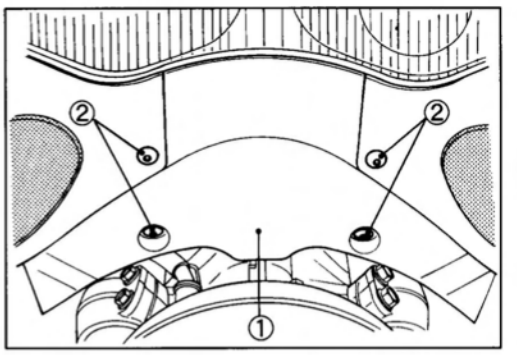

- Remove the position light socket.
- Remove the bulb ③.
- Reassemble the position light bulb in the reverse order of removal.

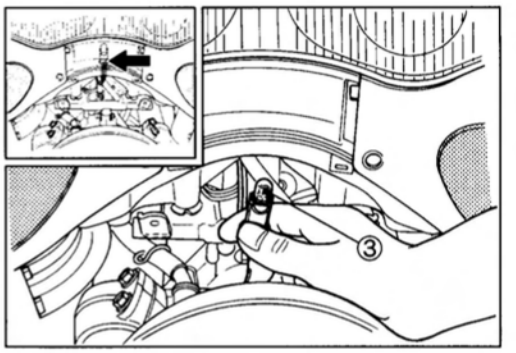

HEADLIGHT BEAM ADJUSTMENT

To adjust the beam horizontally:

- Turn the adjuster ④ clockwise or counterclockwise.

To adjust the beam vertically:

- Turn the adjuster ⑤ clockwise or counterclockwise.

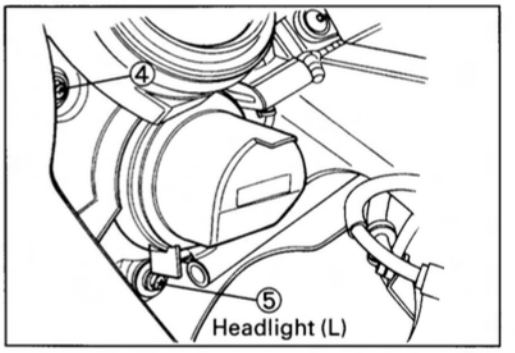

NOTE:

To adjust the headlight beam, adjust the beam horizontally first and then adjust the beam vertically.

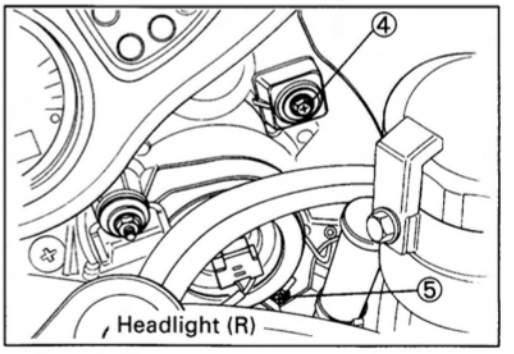

BRAKE LIGHT/TAILLIGHT AND LICENSE LIGHT

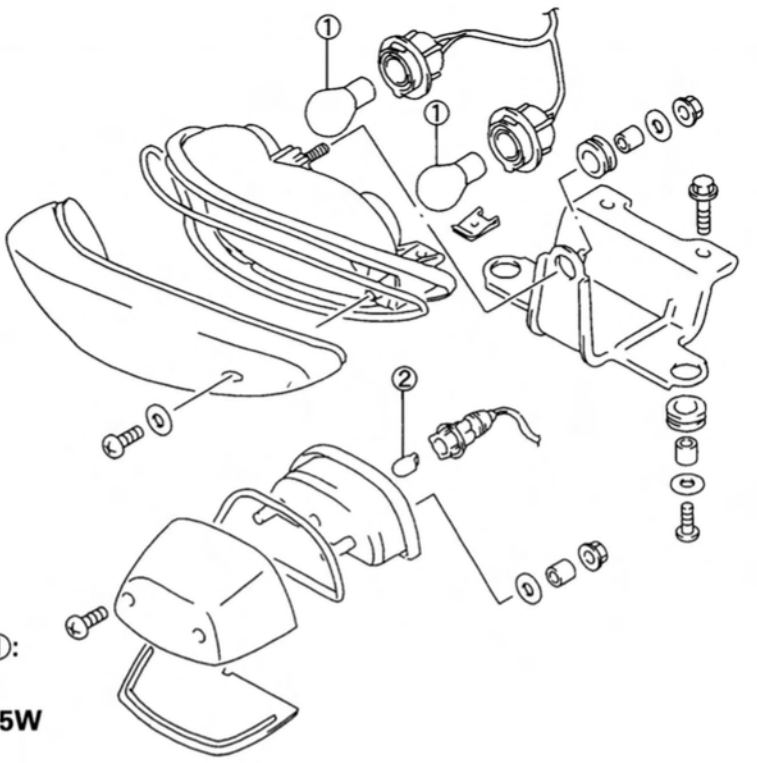

Brake light/Taillight bulb ①:
12V 21/5W×2
License light bulb ②: 12V 5W

⚠ CAUTION

If you touch the bulb with your bare hands, clean it with a cloth moistened with alcohol or soapy water to prevent early failure.

TURN SIGNAL LIGHT

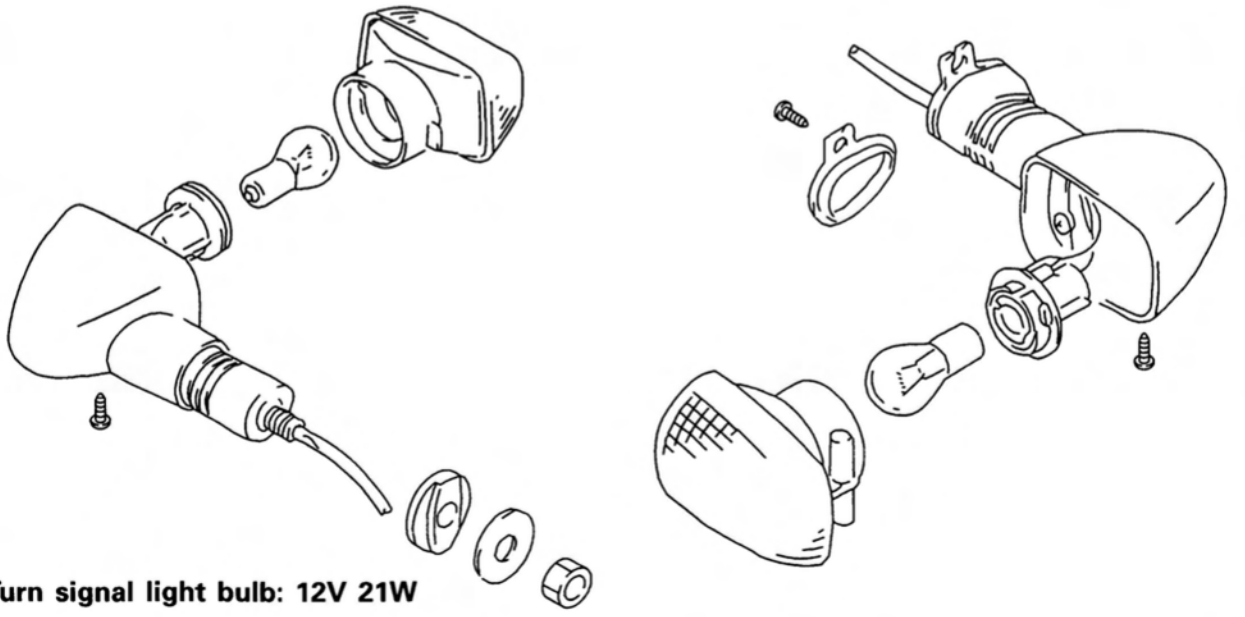

Turn signal light bulb: 12V 21W

⚠ CAUTION

If you touch the bulb with your bare hands, clean it with a cloth moistened with alcohol or soapy water to prevent early failure.

RELAY

STARTER RELAY

The starter relay is located under the front seat. (Refer to page 7-15.)

SIDE-STAND RELAY

The side-stand relay is located behind the right frame cover. (Refer to page 7-18.)

FUEL PUMP RELAY

The fuel pump relay is located behind the right frame cover. (Refer to page 7-18.)

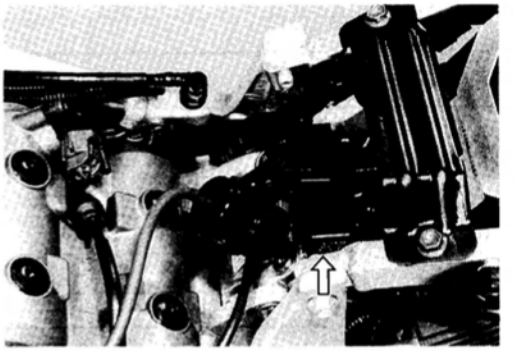

TURN SIGNAL RELAY

The turn signal relay is located under the fuel tank.
If the turn signal light does not light, inspect the bulb, turn signal switch and circuit connection.
If the bulb, turn signal switch and circuit connection checked are all right, the turn signal relay may be faulty, replace it with a new one.

NOTE:
Be sure that the battery used is in fully-charged condition.

SWITCHES

Inspect each switch for continuity with a tester. If any abnormality is found, replace the respective switch assemblies with new ones.

IGNITION SWITCH

(For E-24)

Position \ Color	R	O	O/Y	B/W
ON	○——	——○	○——	——○
OFF				
LOCK				

(For Others)

Position \ Color	R	O	Gr	Br	O/Y	B/W
ON	○——	——○	○——	——○	○——	——○
OFF						
LOCK						
P	○————			——○		

LIGHTING SWITCH

(Except for E-03, 24, 28 and 33)

Position \ Color	O/Bl	Gr	O/R	Y/W
OFF				
•	○——	——○		
ON	○——	——○	○——	——○

DIMMER SWITCH

Position \ Color	Y/W	W	Y
HI	○————		——○
LO	○——	——○	

TURN SIGNAL SWITCH

Position \ Color	Lg	Lbl	B
L		○——	——○
PUSH			
R	○——	——○	

PASSING LIGHT SWITCH

(Except for E-03, 28 and 33)

Position \ Color	O/R	Y
•		
PUSH	○————	——○

ENGINE STOP SWITCH

Position \ Color	O/B	O/W
OFF		
RUN	○————	——○

STARTER BUTTON

Position \ Color	O/W	Y/G
•		
PUSH	○————	——○

HORN BUTTON

Position \ Color	B/Bl	B/W
•		
PUSH	○————	——○

FRONT BRAKE SWITCH

Position \ Color	B	B/R
OFF		
ON	○————	——○

REAR BRAKE SWITCH

Position \ Color	O	W/B
OFF		
ON	○————	——○

CLUTCH LEVER POSITION SWITCH

Position \ Color	B/Y	B/Y
OFF		
ON	○————	——○

OIL PRESSURE SWITCH

Position \ Color	B	Ground
ON (engine is stopped)	○————	——○
OFF (engine is running)		

NOTE: Before inspecting the oil pressure switch, check if the engine oil level is enough. (Refer to page 2-9).

WIRE COLOR

B	**: Black**	**Lbl**	**: Light blue**	**R**	**: Red**
Br	**: Brown**	**Lg**	**: Light green**	**Y**	**: Yellow**
Gr	**: Gray**	**O**	**: Orange**	**W**	**: White**

B/Bl : Black with Blue tracer
B/W : Black with White tracer
B/Y : Black with Yellow tracer
B/R : Black with Red tracer
O/B : Orange with Black tracer
O/Bl : Orange with Blue tracer
O/R : Orange with Red tracer
O/W : Orange with White tracer
O/Y : Orange with Yellow tracer
W/B : White with Black tracer
Y/G : Yellow with Green tracer
Y/W : Yellow with White tracer

BATTERY

SPECIFICATIONS

Type designation	FTX12-BS
Capacity	12V, 36 kC (10 Ah)/10HR
Standard electrolyte S.G.	1.320 at 20°C (68°F)

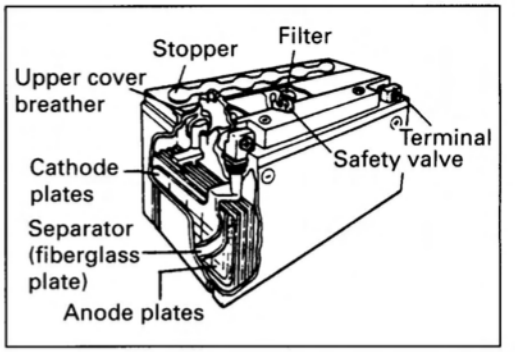

INITIAL CHARGING

Filling electrolyte

- Remove the aluminum tape ① sealing the battery electrolyte filler holes.

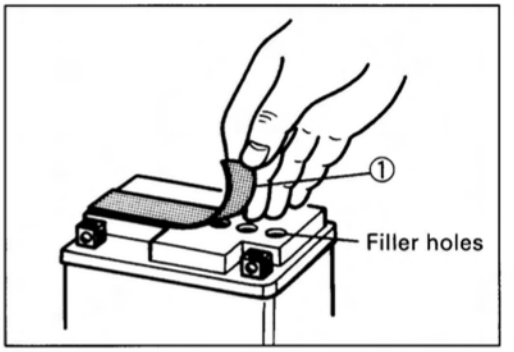

- Remove the caps ②.

NOTE:

* *After filling the electrolyte completely, use the removed cap ② as the sealed caps of battery-filler holes.*

* *Do not remove or pierce the sealed areas ③ of the electrolyte container.*

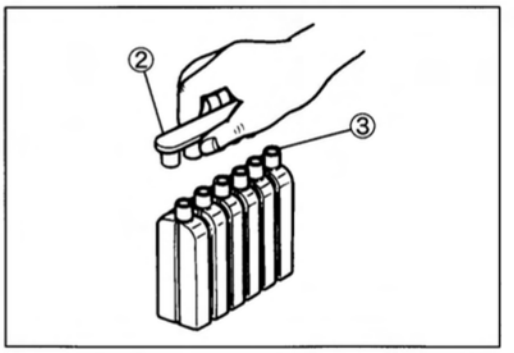

- Insert the nozzles of the electrolyte container into the battery's electrolyte filler holes, holding the container firmly so that it does not fall. Take precaution not to allow any of the fluid to spill.

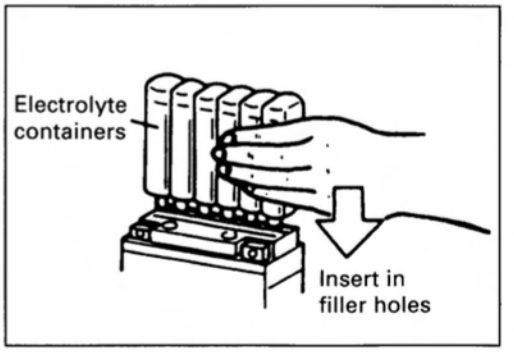

- Make sure air bubbles are coming up each electrolyte container, and leave in this position for about more than 20 minutes.

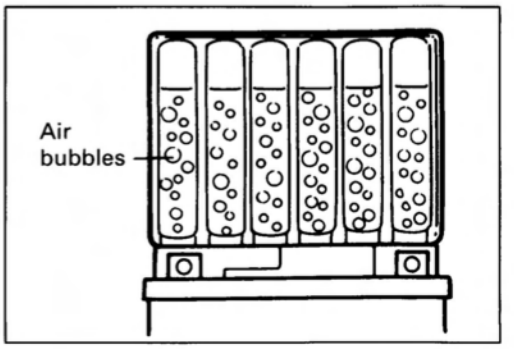

NOTE:
If no air bubbles are coming up from a filler port, tap the bottom of the two or three times.
Never remove the container from the battery.

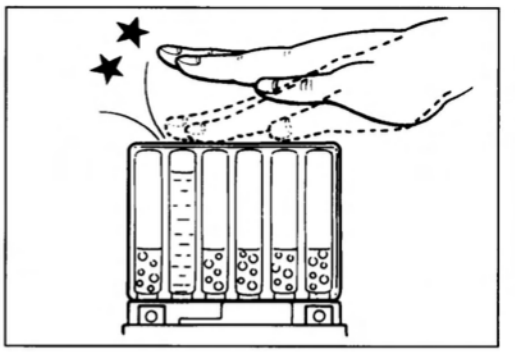

- After confirming that the electrolyte has entered the battery completely, remove the electrolyte containers from the battery. Wait for around 20 minutes.
- Insert the caps into the filler holes, pressing in firmly so that the top of the caps do not protrude above the upper surface of the battery's top cover.

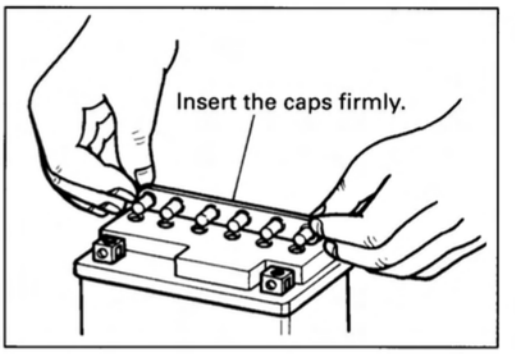

⚠ CAUTION

*** Never use anything except the specified battery.**
*** Once install the caps to the battery; do not remove the caps.**

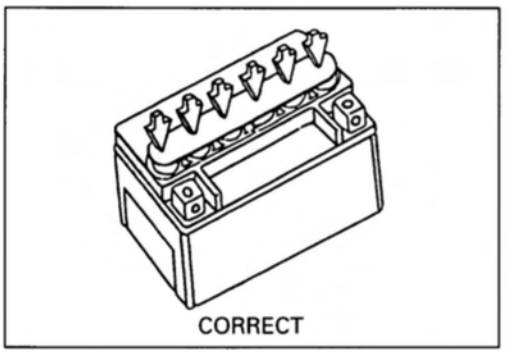
CORRECT

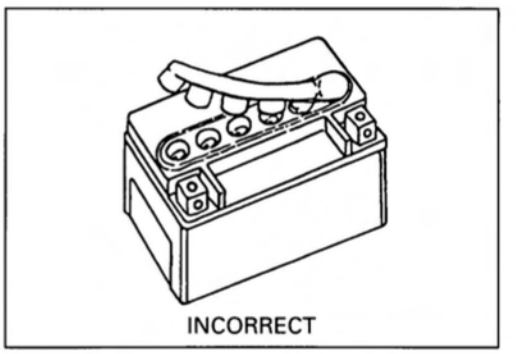
INCORRECT

- Using multi circuit tester, measure the battery voltage. The tester should indicate more than 12.5–12.6V (DC) as shown in the Fig. If the battery voltage is lower than the specification, charge the battery with a battery charger. (Refer to the recharging operation.)

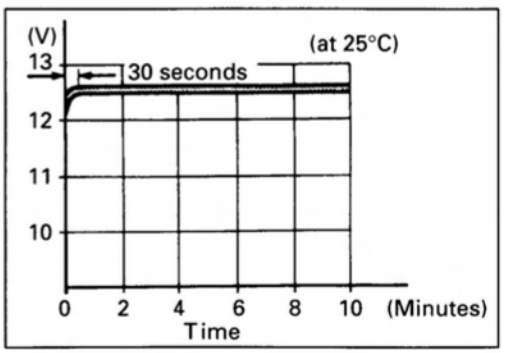

NOTE:
Initial charging for a new battery is recommended if two years have elapsed since the date of manufacture.

SERVICING

Visually inspect the surface of the battery container. If any signs of cracking or electrolyte leakage from the sides of the battery have occurred, replace the battery with a new one. If the battery terminals are found to be coated with rust or an acidic white powdery substance, then this can be cleaned away with sandpaper.

RECHARGING OPERATION

- Using the multi circuit tester, check the battery voltage. If the voltage reading is less than the 12.0V (DC), recharge the battery with a battery charger.

⚠ CAUTION

When recharging the battery, remove the battery from the motorcycle.

NOTE:
Do not remove the caps on the battery top while recharging.

Recharging time: 5A for one hour or 1.2A for 5 to 10 hours

⚠ CAUTION

Be careful not to permit the charging current to exceed 5A at any time.

- After recharging, wait for more than 30 minutes and check the battery voltage with a multi circuit tester.
- If the battery voltage is less than the 12.5V, recharge the battery again.
- If battery voltage is still less than 12.5V, after recharging, replace the battery with a new one.
- When the motorcycle is not used for a long period, check the battery every 1 month to prevent the battery discharge.

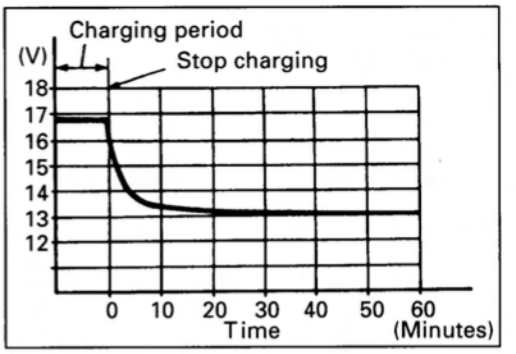

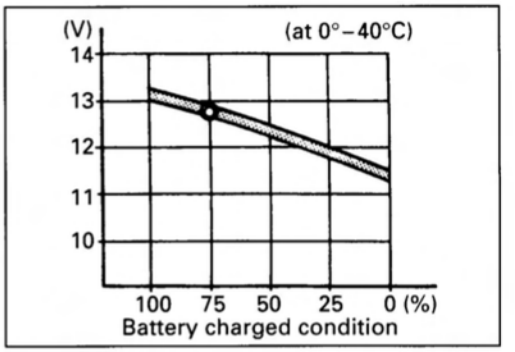

SERVICING INFORMATION

CONTENTS

TROUBLE SHOOTING 8- 1

FI SYSTEM MALFUNCTION CODE AND DEFECTIVE CONDITION 8- 1

ENGINE 8- 3

RADIATOR 8- 8

CHASSIS 8- 9

BRAKES 8-10

ELECTRICAL 8-11

BATTERY 8-12

WIRING DIAGRAM 8-13

FI SYSTEM WIRING DIAGRAM 8-13

WIRING DIAGRAM 8-14

WIRE HARNESS, CABLE AND HOSE ROUTING 8-19

WIRE HARNESS ROUTING 8-19

CABLE ROUTING 8-22

FUEL SYSTEM HOSE ROUTING 8-24

COOLING SYSTEM HOSE ROUTING 8-26

FRONT BRAKE HOSE ROUTING 8-27

REAR BRAKE HOSE ROUTING 8-28

PAIR (AIR SUPPLY) SYSTEM HOSE ROUTING 8-29

FAIRING CUSHION 8-30

SPECIAL TOOLS 8-31

TIGHTENING TORQUE 8-34

SERVICE DATA 8-37

TROUBLESHOOTING

FI SYSTEM MALFUNCTION CODE AND DEFECTIVE CONDITION

MALFUNCTION CODE	DETECTED ITEM	DETECTED FAILURE CONDITION CHECK FOR
c00	NO FAULT	—
c11	Camshaft position sensor or circuit malfunction	The signal does not reach to ECM for more than 2 sec. after receiving the starter signal.
		The CMP sensor wiring and mechanical parts. (CMP sensor, rear intake cam pin, wiring/coupler connection)
c12	Crankshaft position sensor or circuit malfunction	The signal does not reach to ECM for more than 2 sec. after receiving the starter signal.
		The CKP sensor wiring and mechanical parts. (CKP sensor, wiring/coupler connection)
c13	Intake air pressure sensor malfunction	The sensor produces following voltage. (0.5 V ≦ sensor voltage < 4.5 V) Without the above range, c13 is indicated.
	Intake air pressure sensor circuit low input	Low pressure – high vacuum – low voltage (or IAP sensor circuit shorted to ground)
	Intake air pressure sensor circuit high input	High pressure – low vacuum – high voltage (or IAP sensor circuit open)
		IAP sensor, wiring/coupler connection.
c14	Throttle position sensor malfunction	The sensor produces following voltage. (0.2 V ≦ sensor voltage < 4.8 V) Without the above range, c14 is indicated.
	Throttle position circuit low input	Low voltage (or TP sensor circuit shorted to ground)
	Throttle position circuit high input	High voltage (or TP sensor circuit open)
		TP sensor, wiring/coupler connection.
c15	Engine coolant temp. sensor malfunction	The sensor voltage should be the following. (0.15 V ≦ sensor voltage < 4.85 V) Without the above range, c15 is indicated.
	Engine coolant temp. circuit low input	High temperature – low voltage (or ECT sensor circuit shorted to ground)
	Engine coolant temp. circuit high input	Low temperature – high voltage (or ECT sensor circuit open)
		ECT sensor, wiring/coupler connection.
c21	Intake air temp. sensor malfunction	The sensor voltage should be the following. (0.15 V ≦ sensor voltage < 4.85 V) Without the above range, c21 is indicated.
	Intake air temp. circuit low input	High temperature – low voltage (or IAT sensor circuit shorted to ground)
	Intake air temp. circuit high input	Low temperature – high voltage (or IAT sensor circuit open)
		IAT sensor, wiring/coupler connection.

c22	Atmospheric pressure sensor malfunction	The sensor voltage should be the following. (0.25 V ≦ sensor voltage < 4.85 V) Without the above range, c22 is indicated.
	Atmospheric pressure sensor low/high input	Atmospheric pressure is lower or higher than specification.
		AP sensor, wiring/coupler connection.
c23	Tip over sensor or circuit malfunction	The sensor voltage is less than the following for more than 8 sec. after ignition switch turns ON. (sensor voltage < 4.85 V) Without the above value, c23 is indicated.
		TO sensor, wiring/coupler connection.
c24	Ignition signal #1 (Front) circuit malfunction	CKP sensor (pick-up coil) signal is produced but signal from ignition coil is not produced continuous two times. In this case, the code c24 (for front cylinder) is indicated. c25 is indicated if rear cylinder fails.
c25	Ignition signal #2 (Rear) circuit malfunction	Ignition coil, wiring/coupler connection, power supply from the battery.
c31	Gear position signal circuit malfunction	Gear position signal voltage should be higher than the following for more than 2 seconds. (Gear position sensor voltage > 0.60 V) Without the above value, c31 is indicated.
		Gear position sensor, wiring/coupler connection. Gearshift cam etc.
c32	Fuel injector signal #1 (Front) circuit malfunction	Fuel injection signal stops, the c32 or c33 is indicated.
c33	Fuel injection signal #2 (Rear) circuit malfunction	Injector, wiring/coupler connection, power supply to the injector.
c41	Fuel pump relay signal circuit malfunction	When no signal from fuel pump relay, c41 is indicated.
		Fuel pump relay, connecting lead, power source to fuel pump relay.
c42	Ignition switch signal circuit malfunction	Ignition switch signal is not input in the ECM.
		Ignition switch, lead wire/coupler.

ENGINE

Complaint	Symptom and possible causes	Remedy
Engine will not start, or is hard to start.	**Compression too low**	
	1. Out of adjustment tappet clearance.	Adjust.
	2. Worn valve guides or poor seating of valves.	Repair or replace.
	3. Mistiming valves.	Adjust.
	4. Excessively worn piston rings.	Replace.
	5. Worn-down cylinder bores.	Replace or rebore.
	6. Too slowly starter motor cranks.	See electrical section.
	7. Poor seating of spark plugs.	Retighten.
	Plugs not sparking	
	1. Fouled spark plugs.	Clean.
	2. Wet spark plugs.	Clean and dry.
	3. Defective ignition coil or camshaft position sensor.	Replace.
	4. Open or short in high-tension cords.	Replace.
	5. Defective crankshaft position sensor.	Replace.
	6. Defective ECM.	Replace.
	7. Open-circuited wiring connections.	Repair or replace.
	No fuel reaching the intake manifold	
	1. Clogged fuel filter or fuel hose.	Clean or replace.
	2. Defective fuel pump.	Replace.
	3. Defective fuel pressure regulator.	Replace.
	4. Defective fuel injector.	Replace.
	5. Defective fuel pump relay.	Replace.
	6. Defective ECM.	Replace.
	7. Open-circuited wiring connections.	Check and repair.
	Incorrect fuel/air mixture	
	1. Out of adjustment throttle position sensor.	Adjust.
	2. Defective fuel pump.	Replace.
	3. Defective fuel pressure regulator.	Replace.
	4. Defective throttle position sensor.	Replace.
	5. Defective crankshaft position sensor.	Replace.
	6. Defective intake air pressure sensor.	Replace.
	7. Defective atmospheric pressure sensor.	Replace.
	8. Defective ECM.	Replace.
	9. Defective vacuum control solenoid valve.	Replace.
	10. Defective engine coolant temp. sensor.	Replace.
	11. Defective intake air temp. sensor.	Replace.

Complaint	Symptom and possible causes	Remedy
Engine idles poorly.	1. Out of adjustment tappet clearance.	Adjust.
	2. Poor seating of valves.	Replace or repair.
	3. Defective valve guides.	Replace.
	4. Worn down camshaft.	Replace.
	5. Too wide spark plug gaps.	Adjust or replace.
	6. Defective ignition coil.	Replace.
	7. Defective crankshaft position sensor.	Replace.
	8. Defective ECM.	Replace.
	9. Defective throttle position sensor.	Replace.
	10. Defective fuel pump.	Replace.
	11. Imbalanced throttle valve.	Adjust.
	12. Damaged or cracked vacuum hose.	Replace.
Engine stalls easily.	**Incorrect fuel/air mixture**	
	1. Defective intake air pressure sensor or circuit.	Repair or replace.
	2. Clogged fuel filter.	Clean or replace.
	3. Defective fuel pump.	Replace.
	4. Defective fuel pressure regulator.	Replace.
	5. Damaged or cracked vacuum hose.	Replace.
	6. Defective engine coolant temp. sensor.	Replace.
	7. Defective thermostat.	Replace.
	8. Defective intake air temp. sensor.	Replace.
	Improperly working fuel injector	
	1. Defective fuel injector.	Replace.
	2. No injection signal from ECM.	Repair or replace.
	3. Open or short circuited wiring connection.	Repair or replace.
	4. Defective battery or low battery voltage.	Replace or recharge.
	Improperly working control circuit or sensors	
	1. Defective ECM.	Replace.
	2. Defective fuel pressure regulator.	Replace.
	3. Defective throttle position sensor.	Replace.
	4. Defective intake air temp. sensor.	Replace.
	5. Defective camshaft position sensor.	Replace.
	6. Defective crankshaft position sensor.	Replace.
	7. Defective engine coolant temp. sensor.	Replace.
	8. Defective fuel pump relay.	Replace.
	Improperly working engine internal parts	
	1. Fouled spark plugs.	Clean.
	2. Defective crankshaft position sensor or ECM.	Replace.
	3. Clogged fuel hose.	Clean.
	4. Out of adjustment tappet clearance.	Adjust.

Complaint	Symptom and possible causes	Remedy
Noisy engine.	**Excessive valve chatter**	
	1. Too large tappet clearance.	Adjust.
	2. Weakened or broken valve springs.	Replace.
	3. Worn tappet or cam surface.	Replace.
	4. Worn and burnt camshaft journal.	Replace.
	Noise seems to come from piston	
	1. Worn down pistons or cylinders.	Replace.
	2. Fouled with carbon combustion chambers.	Clean.
	3. Worn piston pins or piston pin bore.	Replace.
	4. Worn piston rings or ring grooves.	Replace.
	Noise seems to come from timing chain	
	1. Stretched chain.	Replace.
	2. Worn sprockets.	Replace.
	3. Not working tension adjuster.	Repair or replace.
	Noise seems to come from clutch	
	1. Worn splines of countershaft or hub.	Replace.
	2. Worn teeth of clutch plates.	Replace.
	3. Distorted clutch plates, driven and drive.	Replace.
	4. Worn clutch release bearing.	Replace.
	5. Weakened clutch dampers.	Replace the primary driven gear.
	Noise seems to come from crankshaft	
	1. Due to wear rattling bearings.	Replace.
	2. Worn and burnt big-end bearings.	Replace.
	3. Worn and burnt journal bearings.	Replace.
	4. Too large thrust clearance.	Replace thrust bearing.
	Noise seems to come from transmission	
	1. Worn or rubbing gears.	Replace.
	2. Worn splines.	Replace.
	3. Worn or rubbing primary gears.	Replace.
	4. Worn bearings.	Replace.
	Noise seems to come from water pump	
	1. Too much play on pump shaft bearing.	Replace.
	2. Worn or damaged impeller shaft.	Replace.
	3. Worn or damaged mechanical seal.	Replace.
	4. Touches pump case and impeller.	Replace.
Engine runs poorly in high speed range.	**Defective engine internal/electrical parts**	
	1. Weakened valve springs.	Replace.
	2. Worn camshafts.	Replace.
	3. Valve timing out of adjustment.	Adjust.
	4. Too narrow spark plug gaps.	Adjust.
	5. Ignition not advanced sufficiently due to poorly working timing advance circuit.	Replace ignitor unit.
	6. Defective ignition coil.	Replace.
	7. Defective crankshaft position sensor.	Replace.
	8. Defective ECM.	Replace.
	9. Clogged air cleaner element.	Clean.
	10. Clogged fuel hose, resulting in inadequate fuel supply to injector.	Clean and prime.
	11. Defective fuel pump.	Replace.
	12. Defective throttle position sensor.	Replace.

Complaint	Symptom and possible causes	Remedy
Engine runs poorly in high speed range.	**Defective air flow system**	
	1. Clogged air cleaner element.	Clean or replace.
	2. Defective throttle valve.	Adjuster or replace.
	3. Sucking air from throttle body joint.	Repair or replace.
	4. Defective ECM.	Replace.
	5. Defective vacuum control solenoid valve.	Replace.
	6. Defective intake air control valve actuator.	Replace.
	Defective control circuit or sensor	
	1. Low fuel pressure.	Repair or replace.
	2. Defective throttle position sensor.	Replace.
	3. Defective intake air temp. sensor.	Replace.
	4. Defective camshaft position sensor.	Replace.
	5. Defective crankshaft position sensor.	Replace.
	6. Defective gear position sensor.	Replace.
	7. Defective intake air pressure sensor.	Replace.
	8. Defective atmospheric pressure sensor.	Replace.
	9. Defective ECM.	Replace.
	10. Imbalancing throttle valve synchronization.	Adjust.
Engine lacks power.	**Defective engine internal/electrical parts**	
	1. Loss of tappet clearance.	Adjust.
	2. Weakened valve springs.	Replace.
	3. Out of adjustment valve timing.	Adjust.
	4. Worn piston rings or cylinders.	Replace.
	5. Poor seating of valves.	Repair.
	6. Fouled spark plug.	Clean or replace.
	7. Incorrect spark plug.	Adjust or replace.
	8. Clogged injector.	Clean.
	9. Out of adjustment throttle position sensor.	Adjust.
	10. Clogged air cleaner element.	Clean.
	11. Imbalancing throttle valve synchronization.	Adjust.
	12. Sucking air from throttle valve or vacuum hose.	Retighten or replace.
	13. Too much engine oil.	Drain out excess oil.
	14. Defective fuel pump or ECM.	Replace.
	15. Defective signal coil and ignition coil.	Replace.
	Defective control circuit or sensor	
	1. Low fuel pressure.	Repair or replace.
	2. Defective throttle position sensor.	Replace.
	3. Defective intake air temp. sensor.	Replace.
	4. Defective camshaft position sensor.	Replace.
	5. Defective crankshaft position sensor.	Replace.
	6. Defective gear position sensor.	Replace.
	7. Defective intake air pressure sensor.	Replace.
	8. Defective atmospheric pressure sensor.	Replace.
	9. Defective ECM.	Replace.
	10. Imbalancing throttle valve synchronization.	Adjust.

Complaint	Symptom and possible causes	Remedy
Engine overheats.	**Defective engine internal parts**	
	1. Heavy carbon deposit on piston crowns.	Clean.
	2. Not enough oil in the engine.	Add oil.
	3. Defective oil pump or clogged oil circuit.	Replace or clean.
	4. Sucking air from intake pipes.	Retighten or replace.
	5. Use incorrect engine oil.	Change.
	6. Defective cooling system.	See radiator section.
	Lean fuel/air mixture	
	1. Short-circuited intake air pressure sensor/lead wire.	Repair or replace.
	2. Short-circuited intake air temp. sensor/lead wire.	Repair or replace.
	3. Clogged or defective fuel pressure vacuum hose.	Clean or replace.
	4. Sucking air from intake pipe joint.	Repair or replace.
	5. Defective fuel injector.	Replace.
	6. Defective engine coolant temp. sensor.	Replace.
	The other factors	
	1. Ignition timing is too advanced due to defective timing advance system (engine coolant temp. sensor, gear position sensor, crankshaft position sensor and ECM.)	Replace.
	2. Drive chain is too tight.	Adjust.
Dirty or heavy exhaust smoke.	1. Too much engine oil in the engine.	Check with inspection window drain out excess oil.
	2. Worn piston rings or cylinders.	Replace.
	3. Worn valve guides.	Replace.
	4. Scored or scuffed cylinder walls.	Replace.
	5. Worn valves stems.	Replace.
	6. Defective stem seal.	Replace.
	7. Worn oil ring side rails.	Replace.
Slipping clutch.	1. Out of adjustment or loss of play clutch control.	Adjust.
	2. Weakened clutch springs.	Replace.
	3. Worn or distorted pressure plate.	Replace.
	4. Distorted clutch plates or clutch plate.	Replace.
Dragging clutch.	1. Out of adjustment or too much play clutch control.	Adjust.
	2. Some clutch spring weakened while others are not.	Replace.
	3. Distorted pressure plate or clutch plate.	Replace.
Transmission will not shift.	1. Broken gearshift cam.	Replace.
	2. Distorted gearshift forks.	Replace.
	3. Worn gearshift pawl.	Replace.
Transmission will not shift back.	1. Broken return spring on shift shaft.	Replace.
	2. Rubbing or stickly shift shaft.	Repair or replace.
	3. Distorted or worn gearshift forks.	Replace.
Transmission jumps out of gear.	1. Worn shifting gears on driveshaft or countershaft.	Replace.
	2. Distorted or worn gearshift forks.	Replace.
	3. Weakened stopper spring on gearshift stopper.	Replace.

RADIATOR (COOLING SYSTEM)

Complaint	Symptom and possible causes	Remedy
Engine overheats.	1. Not enough engine coolant.	Add engine coolant.
	2. Clogged with dirt or trashes radiator core.	Clean.
	3. Faulty cooling fan.	Repair or replace.
	4. Defective cooling fan thermo-switch.	Replace.
	5. Clogged water passage.	Clean.
	6. Air trapped in the cooling circuit.	Bleed out air.
	7. Defective water pump.	Replace.
	8. Use incorrect engine coolant.	Replace.
Engine overcools.	1. Defective cooling fan thermo-switch.	Replace.
	2. Extremely cold weather.	Put on the radiator cover.
	3. Defective thermostat.	Replace.

CHASSIS

Complaint	Symptom and possible causes	Remedy
Heavy steering.	1. Overtightened steering stem nut. 2. Broken bearing in steering stem. 3. Distorted steering stem. 4. Not enough pressure in tires.	Adjust. Replace. Replace. Adjust.
Wobbly handlebars.	1. Loss of balance between right and left front forks. 2. Distorted front fork. 3. Distorted front axle or crooked tire. 4. Loose steering stem nut. 5. Worn or incorrect tire or wrong tire pressure.	Replace. Repair or replace. Replace. Adjust. Adjust or replace.
Wobby front wheel.	1. Distorted wheel rim. 2. Worn front wheel bearings. 3. Defective or incorrect tire. 4. Loose axle or axle pinch bolt. 5. Incorrect front fork oil level.	Replace. Replace. Replace. Retighten. Adjust.
Front suspension too soft.	1. Weakened springs. 2. Not enough fork oil. 3. Wrong weight fork oil. 4. Improperly set front fork spring adjuster. 5. Improperly set front fork damping force adjuster.	Replace. Replenish. Replace. Adjust. Adjust.
Front suspension too stiff.	1. Too viscous fork oil. 2. Too much fork oil. 3. Improperly set front fork spring adjuster. 4. Improperly set front fork damping force adjuster.	Replace. Drain excess oil. Adjust. Adjust.
Noisy front suspension.	1. Not enough fork oil. 2. Loose bolts on suspension.	Replenish. Retighten.
Wobbly rear wheel.	1. Distorted wheel rim. 2. Worn rear wheel bearing or swingarm bearings. 3. Defective or incorrect tire. 4. Worn swingarm and rear suspensions. 5. Loose nuts or bolts on rear suspensions.	Replace. Replace. Replace. Replace. Retighten.
Rear suspension too soft.	1. Weakened spring of spring unit. 2. Leakage oil of shock absorber. 3. Improperly set rear spring unit adjuster. 4. Improperly set rotary damper damping force adjuster.	Replace. Replace. Adjust. Adjust.
Rear suspension too stiff.	1. Bent spring unit shaft. 2. Bent swingarm. 3. Worn swingarm bearings. 4. Improperly set rear suspension adjuster. 5. Improperly set rotary damper damping force adjuster.	Replace. Replace. Replace. Adjust. Adjust.
Noisy rear suspension.	1. Loose nuts or bolts on rear suspension. 2. Worn swingarm bearings.	Retighten. Replace.

BRAKES

Complaint	Symptom and possible causes	Remedy
Insufficient brake power.	1. Leakage of brake fluid from hydraulic system. 2. Worn pads. 3. Oil adhesion of engaging surface of pads/shoe. 4. Worn disc. 5. Air in hydraulic system. 6. Not enough brake fluid in the reservoir.	Repair or replace. Replace. Clean disc and pads. Replace. Bleed air. Replenish.
Brake squeaking.	1. Carbon adhesion on pad surface. 2. Tilted pad. 3. Damaged wheel bearing. 4. Loosen front-wheel axle or rear-wheel axle. 5. Worn pads. 6. Foreign material in brake fluid. 7. Clogged return port of master cylinder.	Repair surface with sandpaper. Modify pad fitting or replace. Replace. Tighten to specified torque. Replace. Replace brake fluid. Disassemble and clean master cylinder.
Excessive brake lever stroke.	1. Air in hydraulic system. 2. Insufficient brake fluid. 3. Improper quality of brake fluid.	Bleed air. Replenish fluid to specified level; bleed air. Replace with correct fluid.
Leakage of brake fluid.	1. Insufficient tightening of connection joints. 2. Cracked hose. 3. Worn piston and/or cup.	Tighten to specified torque. Replace. Replace piston and/or cup.

ELECTRICAL

Complaint	Symptom and possible causes	Remedy
No sparking or poor sparking.	1. Defective ignition coil or camshaft position sensor. 2. Defective spark plugs. 3. Defective crankshaft position sensor. 4. Defective ECM. 5. Defective tip over sensor. 6. Open-circuited wiring connections.	Replace. Replace. Replace. Replace. Replace. Check and repair.
Spark plug soon become fouled with carbon.	1. Mixture too rich. 2. Idling speed set too high. 3. Incorrect gasoline. 4. Dirty element in air cleaner. 5. Too cold spark plugs.	Consult FI system. Adjust fast idle or throttle stop screw. Change. Clean or replace. Replace with hot type plugs.
Spark plugs become fouled too soon.	1. Worn piston rings. 2. Worn piston or cylinders. 3. Excessive clearance of valve stems in valve guides. 4. Worn stem oil seal.	Replace. Replace. Replace. Replace.
Spark plug electrodes overheat or burn.	1. Too hot spark plugs. 2. Overheated the engine. 3. Loose spark plugs. 4. Too lean mixture.	Replace with cold type plugs. Tune up. Retighten. Consult FI system.
Generator does not charge.	1. Open or short lead wires, or loose lead connections. 2. Shorted, grounded or open generator coils. 3. Shorted or panctured regulator/rectifiers.	Repair or replace or retighten. Replace. Replace.
Generator does charge, but charging rate is below the specification.	1. Lead wires tend to get shorted or open-circuited or loosely connected at terminals. 2. Grounded or open-circuited stator coils or generator. 3. Defective regulator/rectifier. 4. Defective cell plates in the battery.	Repair or retighten. Replace. Replace. Replace the battery.
Generator overcharges.	1. Internal short-circuit in the battery. 2. Damaged or defective resistor element in the regulator/rectifier. 3. Poorly grounded regulator/rectifier.	Replace the battery. Replace. Clean and tighten ground connection.
Unstable charging.	1. Lead wire insulation frayed due to vibration, resulting in intermittent shorting. 2. Internally shorted generator. 3. Defective regulator/rectifier.	Repair or replace. Replace. Replace.
Starter button is not effective.	1. Run down battery. 2. Defective switch contacts. 3. Not seating properly brushes on commutator in starter motor. 4. Defective starter relay/starter interlock switch. 5. Defective main fuse.	Repair or replace. Replace. Repair or replace. Replace. Replace.

BATTERY

Complaint	Symptom and possible causes	Remedy
"Sulfation", acidic white powdery substance or spots on surfaces of cell plates.	1. Cracked battery case. 2. Battery has been left in a run-down condition for a long time.	Replace the battery. Replace the battery.
Battery runs down quickly.	1. Not correct the charging system. 2. Cell plates have lost much of their active material as a result of overcharging. 3. A short-circuit condition exists within the battery. 4. Too low battery voltage. 5. Too old battery.	Check the generator, regulator/rectifier and circuit connections and make necessary adjustments to obtain specified charging operation. Replace the battery, and correct the charging system. Replace the battery. Recharge the battery fully. Replace the battery.
Battery "sulfation".	1. Too low or too high charging rate. (When not in use batteries should be checked at least once a month to avoid sulfation.) 2. Left unused the battery for too long in cold climate.	Replace the battery. Replace the battery, if badly sulfated.
Battery discharges too rapidly.	Dirty container top and sides.	Clean.

WIRING DIAGRAM

FI SYSTEM WIRING DIAGRAM

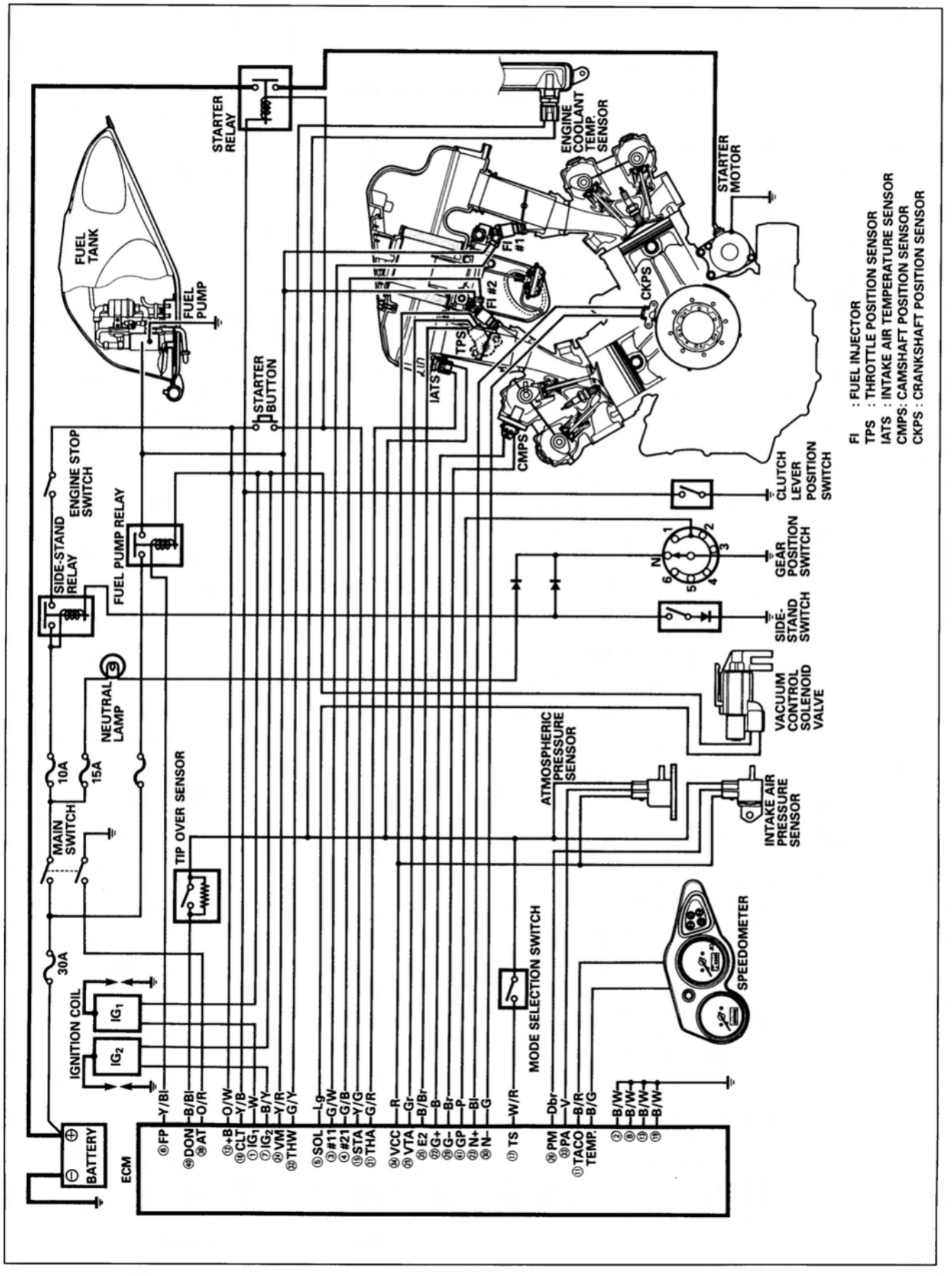

WIRING DIAGRAM

For U.S.A. and Canada

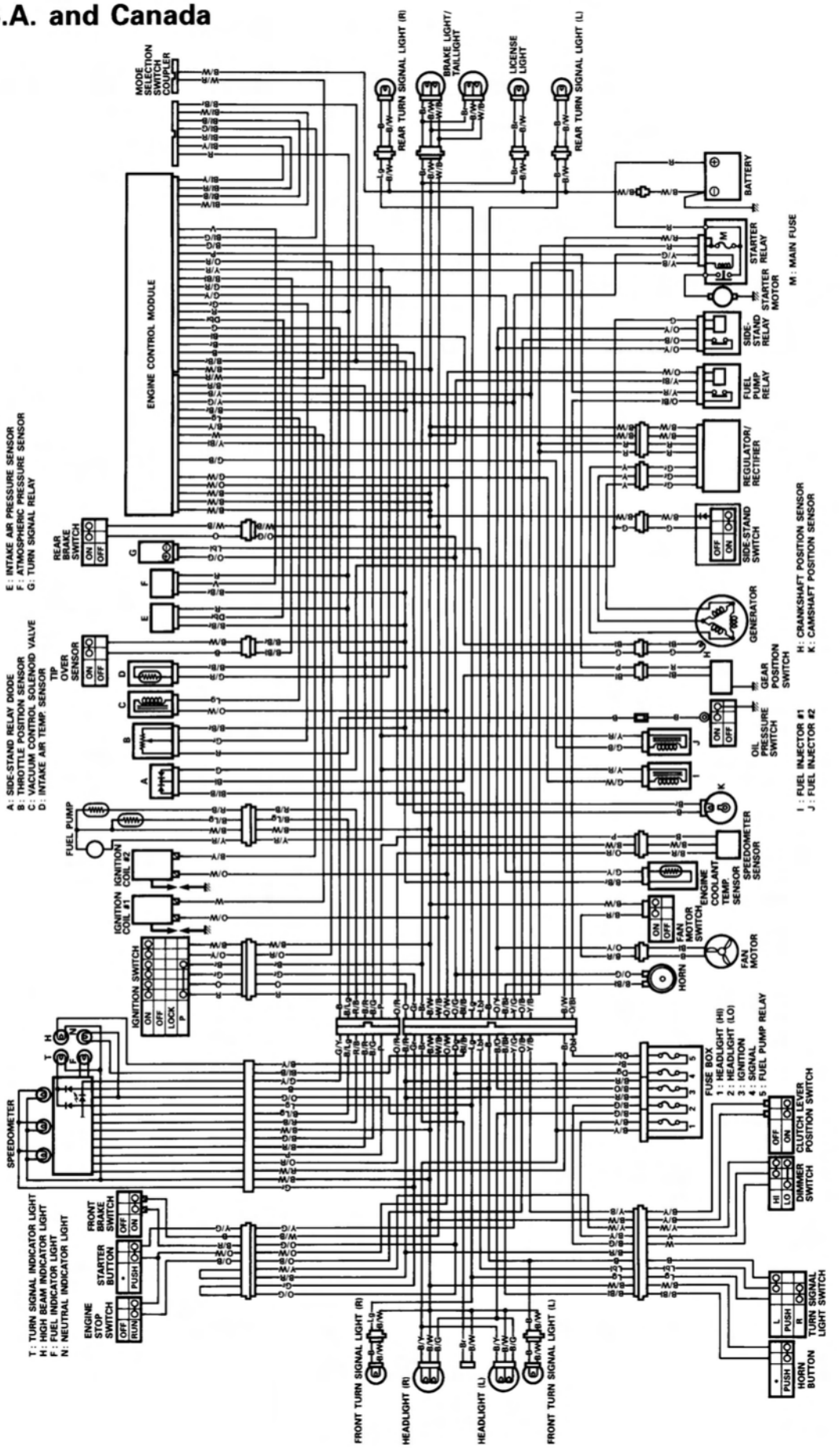

For E-04, 18, 22, 25, 34, 37, 39

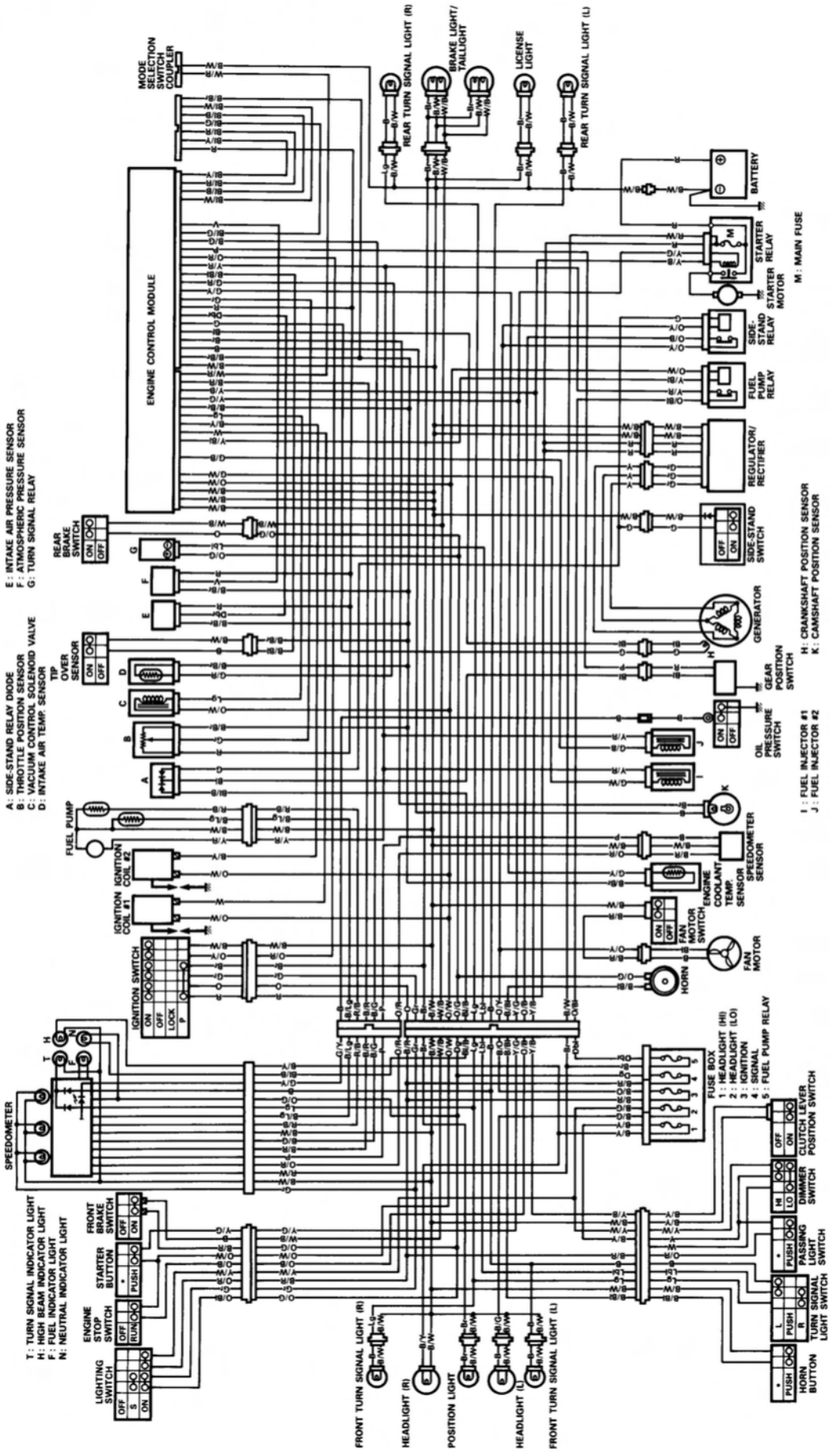

For E-02

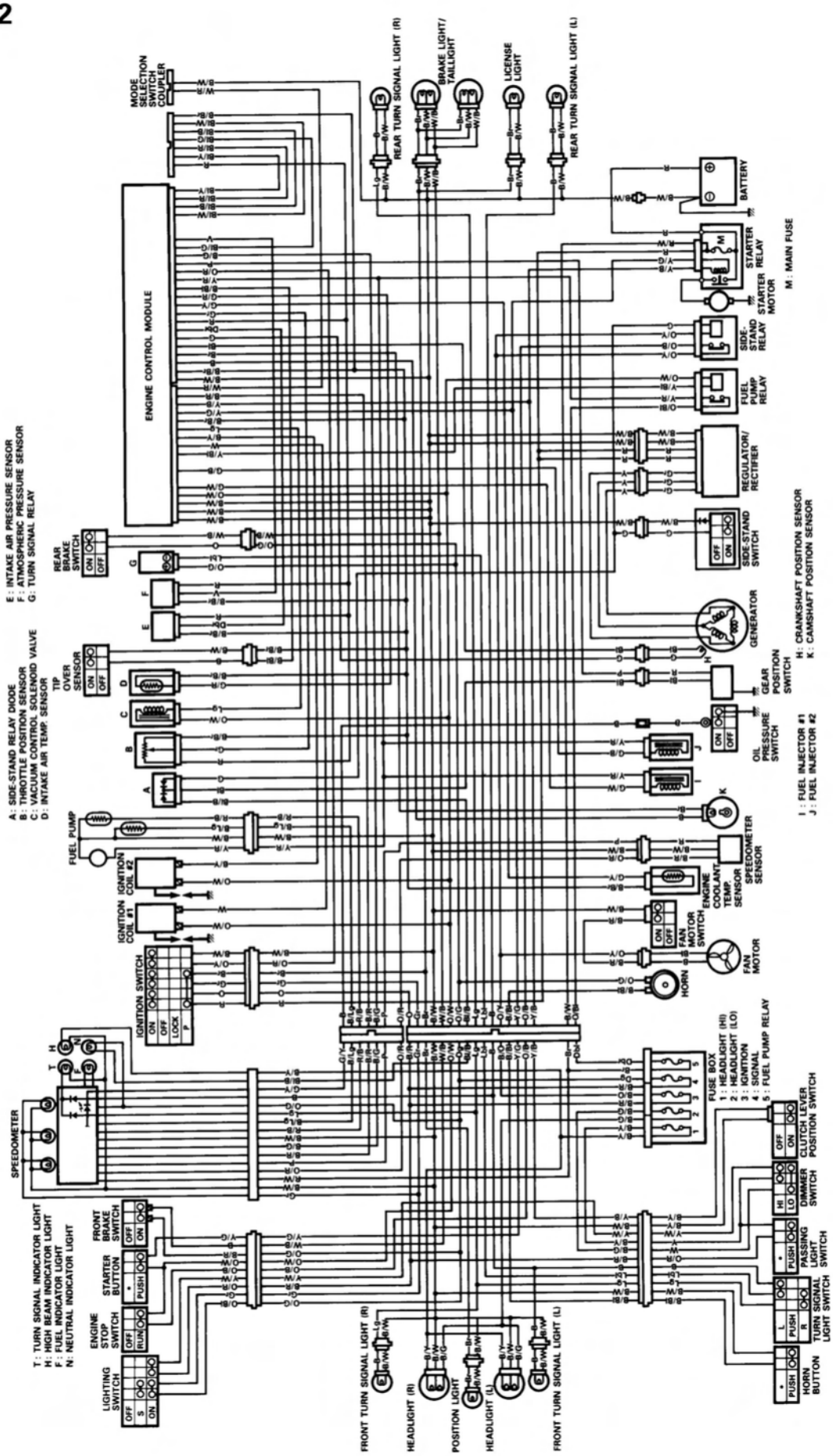
ENGINE CONTROL MODULE
MODE SELECTION SWITCH COUPLER
REAR TURN SIGNAL LIGHT (R)
BRAKE LIGHT/ TAILLIGHT
LICENSE LIGHT
REAR TURN SIGNAL LIGHT (L)
BATTERY
STARTER RELAY
STARTER MOTOR
M: MAIN FUSE
SIDE-STAND RELAY
FUEL PUMP RELAY
REGULATOR/ RECTIFIER
SIDE-STAND SWITCH
GENERATOR
GEAR POSITION SWITCH
H: CRANKSHAFT POSITION SENSOR
K: CAMSHAFT POSITION SENSOR
OIL PRESSURE SWITCH
I: FUEL INJECTOR #1
J: FUEL INJECTOR #2
SPEEDOMETER SENSOR
ENGINE COOLANT TEMP. SENSOR
FAN MOTOR SWITCH
FAN MOTOR
HORN
FUSE BOX
1: HEADLIGHT (HI)
2: HEADLIGHT (LO)
3: IGNITION
4: SIGNAL
5: FUEL PUMP RELAY
CLUTCH LEVER POSITION SWITCH
DIMMER SWITCH
PASSING LIGHT SWITCH
TURN SIGNAL LIGHT SWITCH
HORN BUTTON
FRONT BRAKE SWITCH
REAR BRAKE SWITCH
STARTER BUTTON
ENGINE STOP SWITCH
LIGHTING SWITCH
IGNITION SWITCH
IGNITION COIL #1
IGNITION COIL #2
FUEL PUMP
SPEEDOMETER
FRONT TURN SIGNAL LIGHT (R)
HEADLIGHT (R)
POSITION LIGHT
HEADLIGHT (L)
FRONT TURN SIGNAL LIGHT (L)
A: SIDE-STAND RELAY DIODE
B: THROTTLE POSITION SENSOR
C: VACUUM CONTROL SOLENOID VALVE
D: INTAKE AIR TEMP. SENSOR
TIP OVER SENSOR
E: INTAKE AIR PRESSURE SENSOR
F: ATMOSPHERIC PRESSURE SENSOR
G: TURN SIGNAL RELAY
T: TURN SIGNAL INDICATOR LIGHT
H: HIGH BEAM INDICATOR LIGHT
F: FUEL INDICATOR LIGHT
N: NEUTRAL INDICATOR LIGHT

For E-24

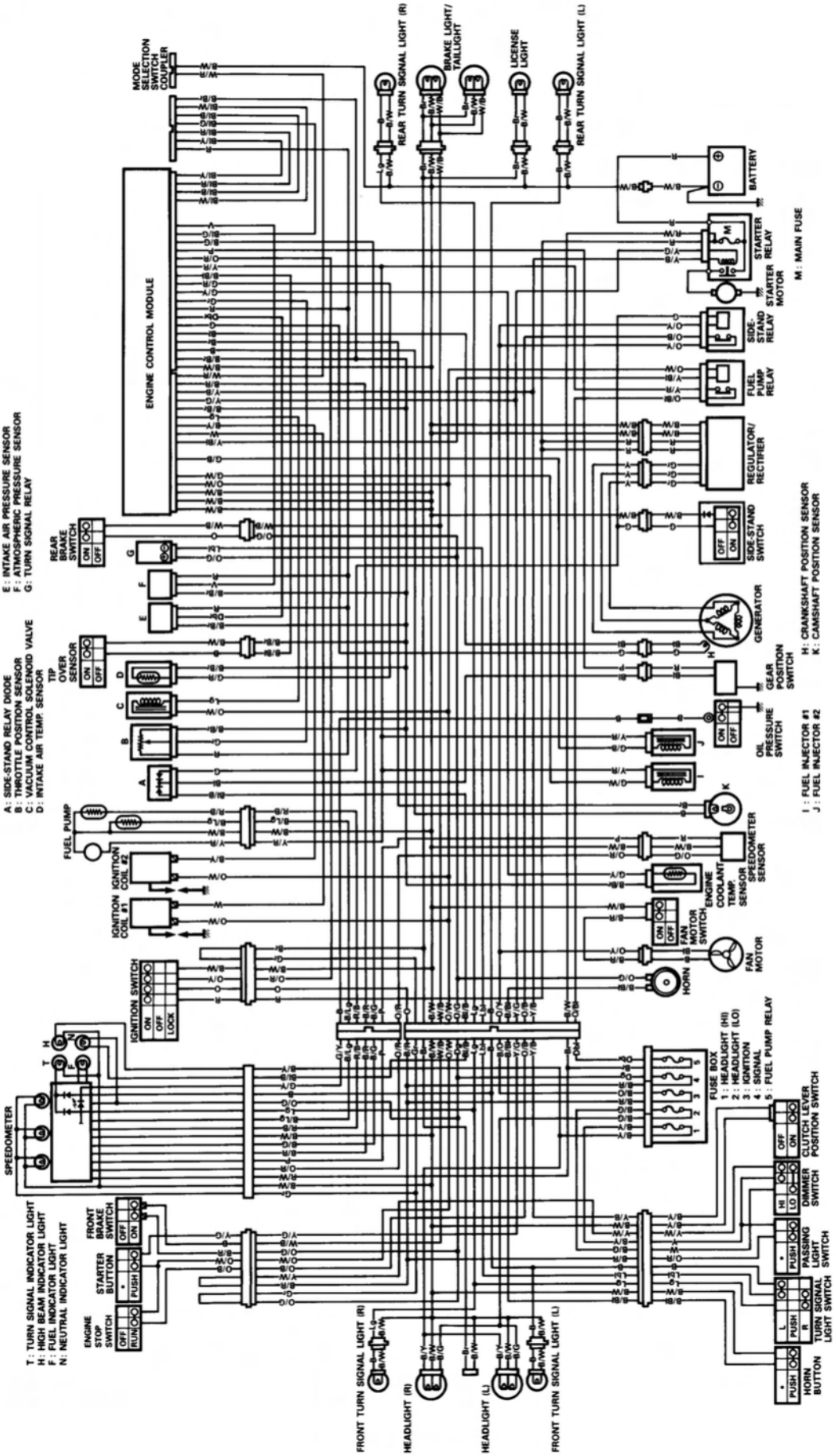
MODE SELECTION SWITCH COUPLER
REAR TURN SIGNAL LIGHT (R)
BRAKE LIGHT/ TAILLIGHT
LICENSE LIGHT
REAR TURN SIGNAL LIGHT (L)
BATTERY
STARTER RELAY
STARTER MOTOR
M: MAIN FUSE
ENGINE CONTROL MODULE
SIDE-STAND RELAY
FUEL PUMP RELAY
REGULATOR/ RECTIFIER
SIDE-STAND SWITCH
GENERATOR
GEAR POSITION SWITCH
H: CRANKSHAFT POSITION SENSOR
K: CAMSHAFT POSITION SENSOR
OIL PRESSURE SWITCH
I: FUEL INJECTOR #1
J: FUEL INJECTOR #2
SPEEDOMETER SENSOR
ENGINE COOLANT TEMP. SENSOR
FAN MOTOR SWITCH
FAN MOTOR
HORN
FUEL PUMP
IGNITION COIL #2
IGNITION COIL #1
IGNITION SWITCH
FUSE BOX
1: HEADLIGHT (HI)
2: HEADLIGHT (LO)
3: IGNITION
4: SIGNAL
5: FUEL PUMP RELAY
SPEEDOMETER
CLUTCH LEVER POSITION SWITCH
DIMMER SWITCH
PASSING LIGHT SWITCH
TURN SIGNAL LIGHT SWITCH
HORN BUTTON
FRONT BRAKE SWITCH
STARTER BUTTON
ENGINE STOP SWITCH
FRONT TURN SIGNAL LIGHT (R)
HEADLIGHT (R)
HEADLIGHT (L)
FRONT TURN SIGNAL LIGHT (L)
REAR BRAKE SWITCH
TIP OVER SENSOR
A: SIDE-STAND RELAY DIODE
B: THROTTLE POSITION SENSOR
C: VACUUM CONTROL SOLENOID VALVE
D: INTAKE AIR TEMP. SENSOR
E: INTAKE AIR PRESSURE SENSOR
F: ATMOSPHERIC PRESSURE SENSOR
G: TURN SIGNAL RELAY
T: TURN SIGNAL INDICATOR LIGHT
H: HIGH BEAM INDICATOR LIGHT
F: FUEL INDICATOR LIGHT
N: NEUTRAL INDICATOR LIGHT

WIRE COLOR

B : Black
Bl : Blue
Br : Brown
Dbr : Dark brown
Dg : Dark green
G : Green
Gr : Gray
Lbl : Light blue
Lg : Light green
O : Orange
P : Pink
R : Red
V : Violet
W : White
Y : Yellow
B/Bl : Black with Blue tracer
B/Br : Black with Brown tracer
B/G : Black with Green tracer
B/Lg : Black with Light green tracer
B/O : Black with Orange tracer
B/R : Black with Red tracer
B/W : Black with White tracer
B/Y : Black with Yellow tracer
Bl/B : Blue with Black tracer
Bl/G : Blue with Green tracer
Bl/R : Blue with Red tracer
Bl/W : Blue with White tracer
Bl/Y : Blue with Yellow tracer
G/B : Green with Black tracer
G/R : Green with Red tracer
G/W : Green with White tracer
G/Y : Green with Yellow tracer
O/B : Orange with Black tracer
O/Bl : Orange with Blue tracer
O/G : Orange with Green tracer
O/R : Orange with Red tracer
O/W : Orange with White tracer
O/Y : Orange with Yellow tracer
R/B : Red with Black tracer
R/W : Red with White tracer
W/B : White with Black tracer
W/R : White with Red tracer
Y/B : Yellow with Black tracer
Y/Bl : Yellow with Blue tracer
Y/G : Yellow with Green tracer
Y/R : Yellow with Red tracer
Y/W : Yellow with White tracer

WIRE HARNESS, CABLE AND HOSE ROUTING

WIRE HARNESS ROUTING

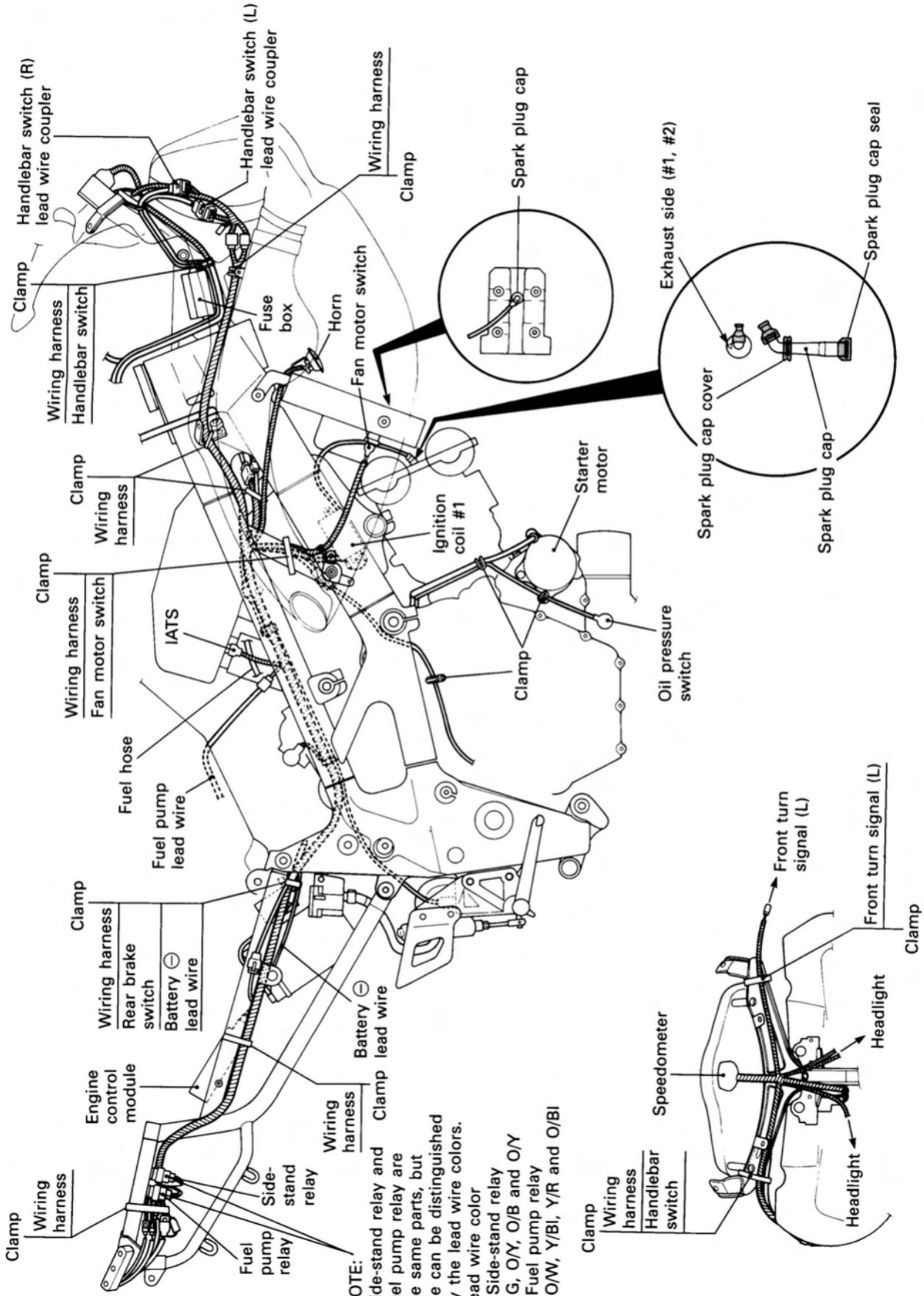

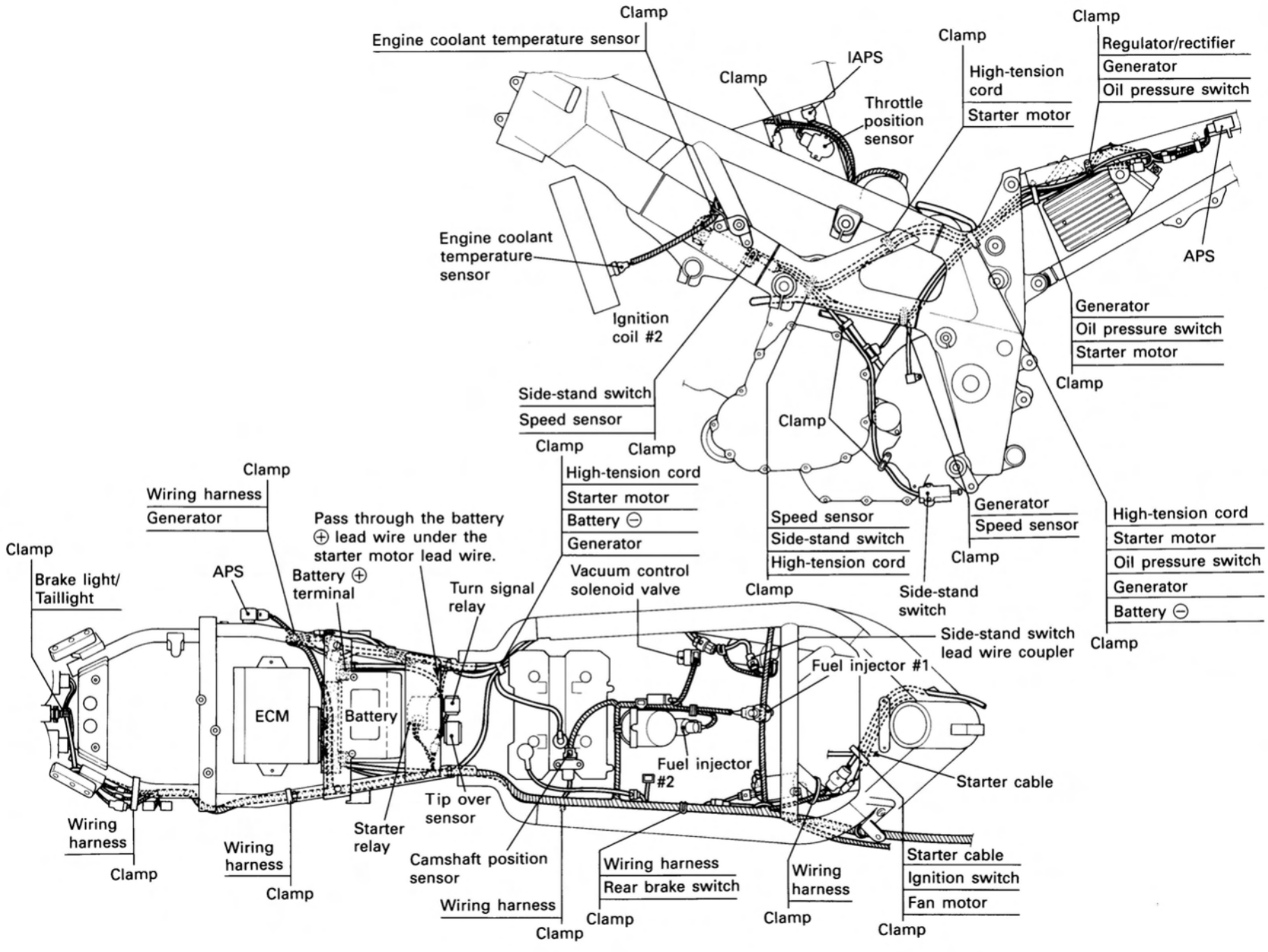
Clamp
Engine coolant temperature sensor
IAPS
Clamp
Throttle position sensor
Clamp
High-tension cord
Starter motor
Clamp
Regulator/rectifier
Generator
Oil pressure switch
APS
Engine coolant temperature sensor
Ignition coil #2
Generator
Oil pressure switch
Starter motor
Clamp
Side-stand switch
Speed sensor
Clamp
Clamp
Clamp
High-tension cord
Starter motor
Battery ⊖
Generator
Clamp
Speed sensor
Side-stand switch
High-tension cord
Clamp
Generator
Speed sensor
Clamp
Side-stand switch
High-tension cord
Starter motor
Oil pressure switch
Generator
Battery ⊖
Clamp
Clamp
Wiring harness
Generator
Pass through the battery ⊕ lead wire under the starter motor lead wire.
Clamp
Brake light/ Taillight
APS
Battery ⊕ terminal
Turn signal relay
Vacuum control solenoid valve
Side-stand switch lead wire coupler
Fuel injector #1
ECM
Battery
Fuel injector #2
Starter cable
Wiring harness
Clamp
Wiring harness
Clamp
Starter relay
Tip over sensor
Camshaft position sensor
Wiring harness
Clamp
Wiring harness
Rear brake switch
Clamp
Wiring harness
Clamp
Starter cable
Ignition switch
Fan motor
Clamp

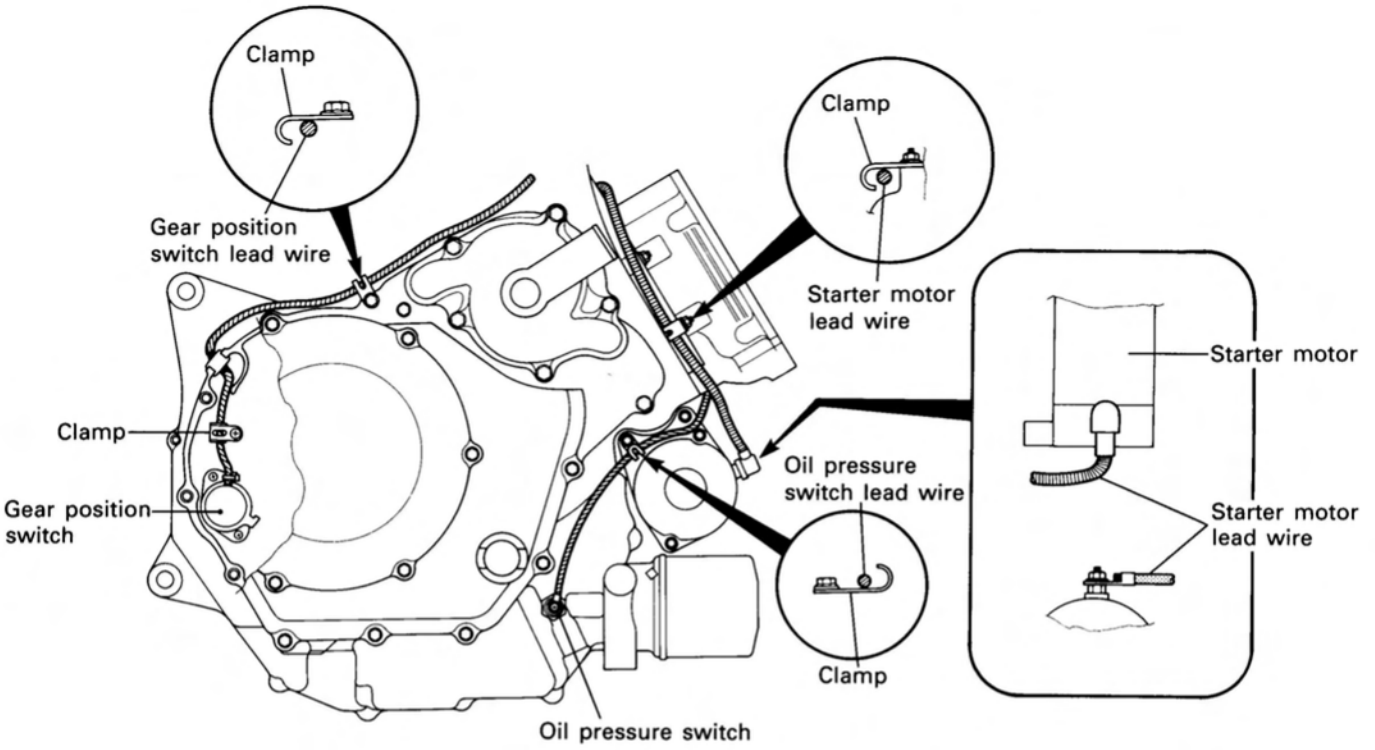
Clamp
Gear position switch lead wire
Clamp
Starter motor lead wire
Starter motor
Clamp
Gear position switch
Oil pressure switch lead wire
Starter motor lead wire
Clamp
Oil pressure switch

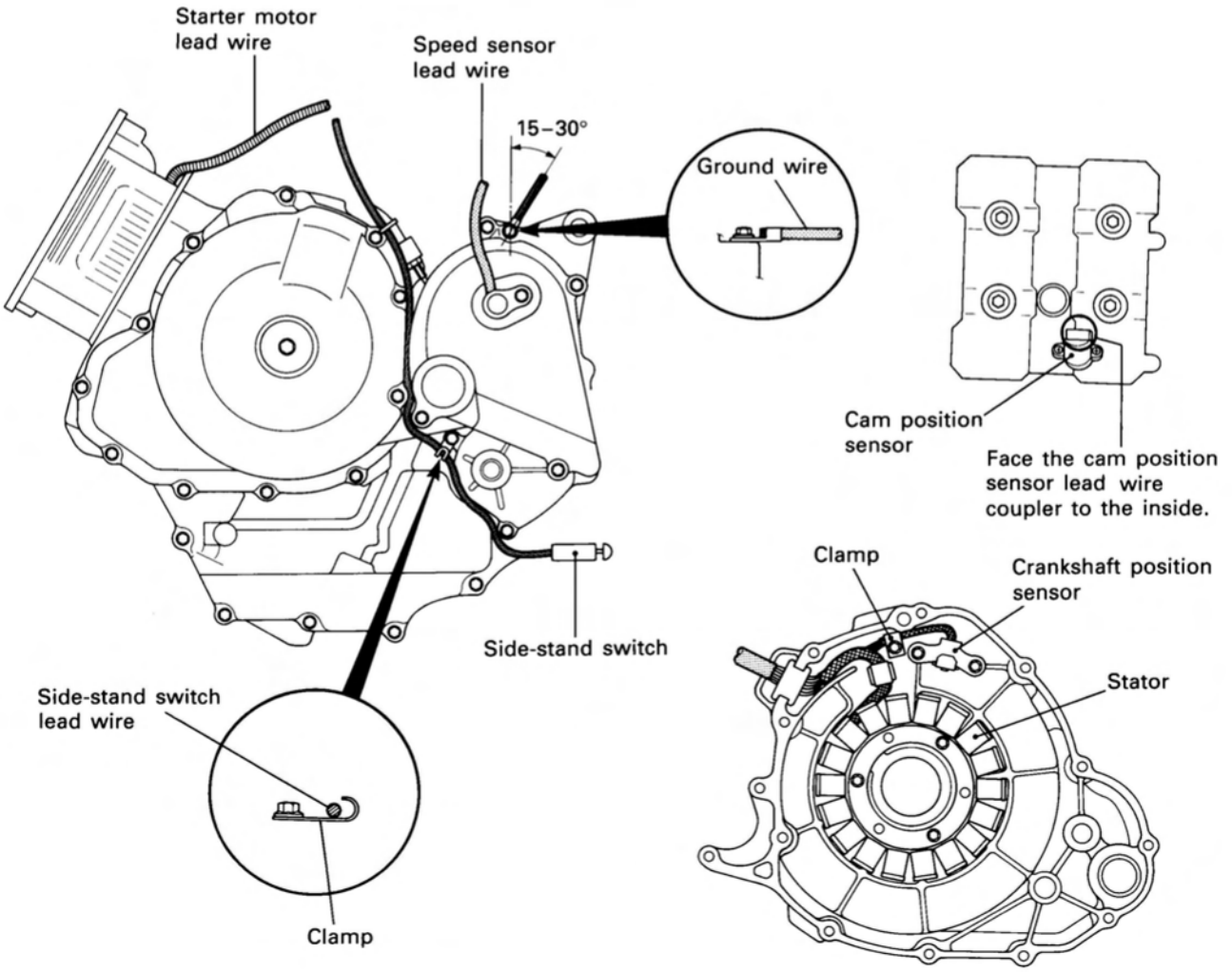
Starter motor lead wire
Speed sensor lead wire
15–30°
Ground wire
Cam position sensor
Face the cam position sensor lead wire coupler to the inside.
Side-stand switch
Side-stand switch lead wire
Clamp
Clamp
Crankshaft position sensor
Stator

CABLE ROUTING

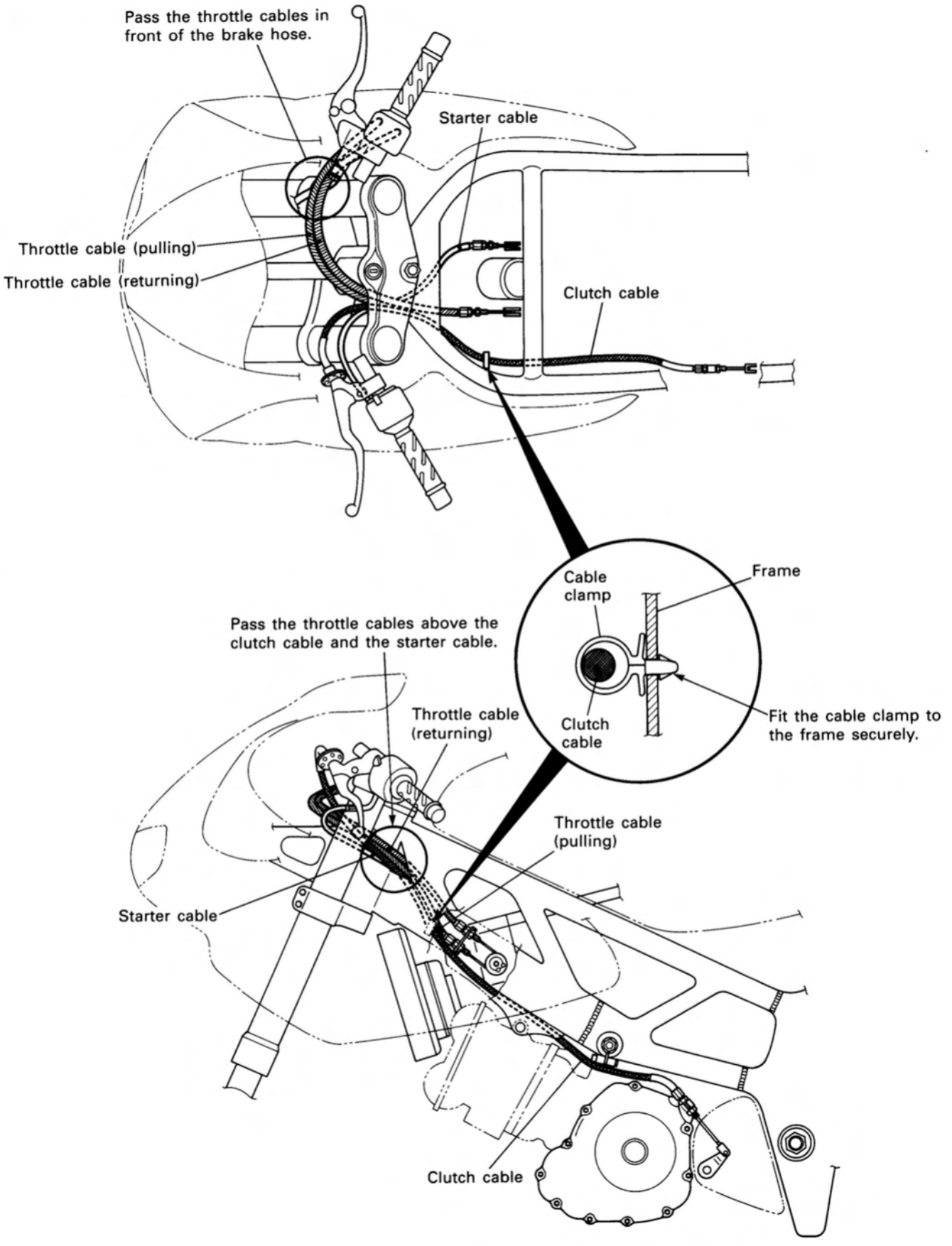

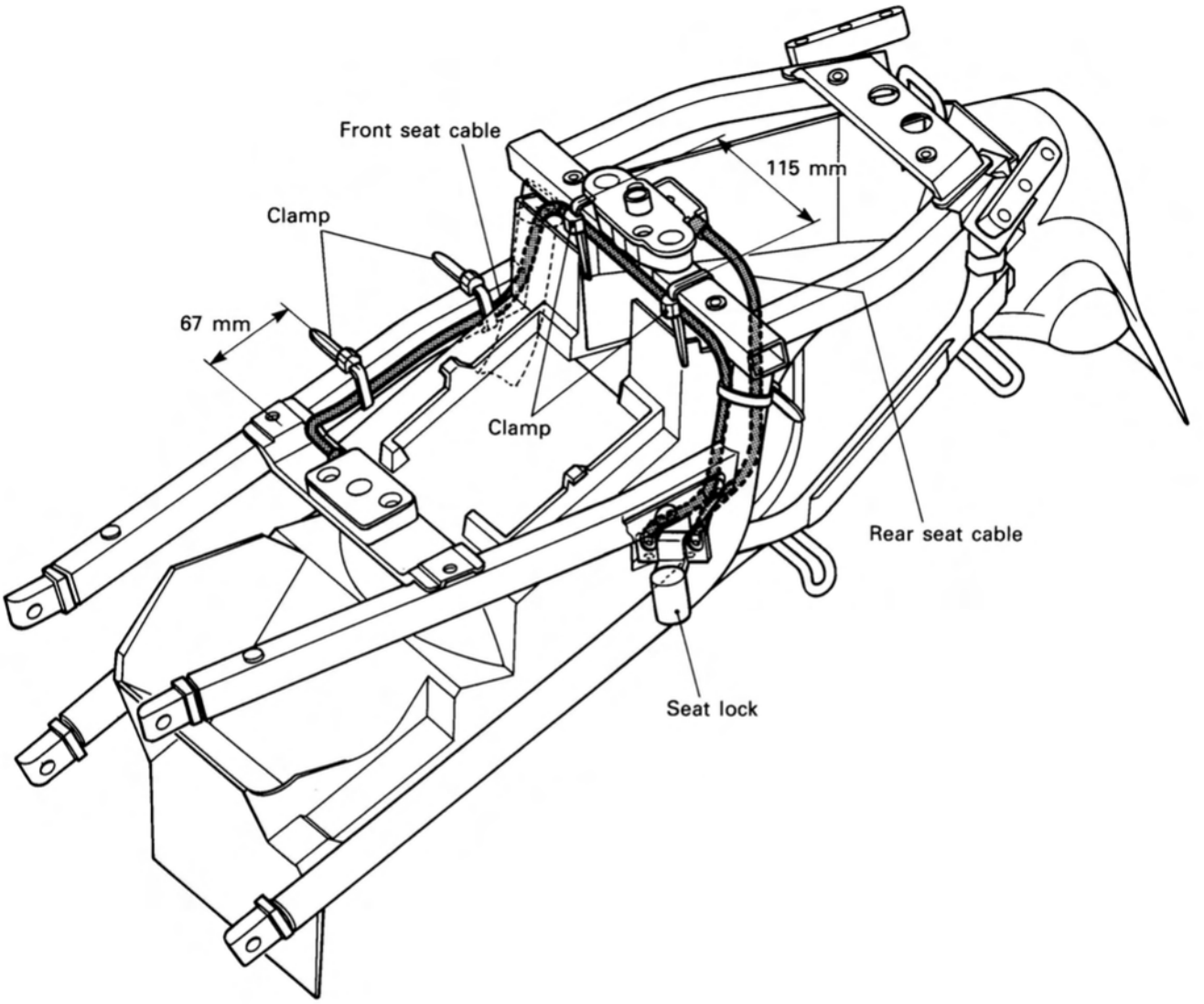
Front seat cable
115 mm
Clamp
67 mm
Clamp
Rear seat cable
Seat lock

FUEL SYSTEM HOSE ROUTING

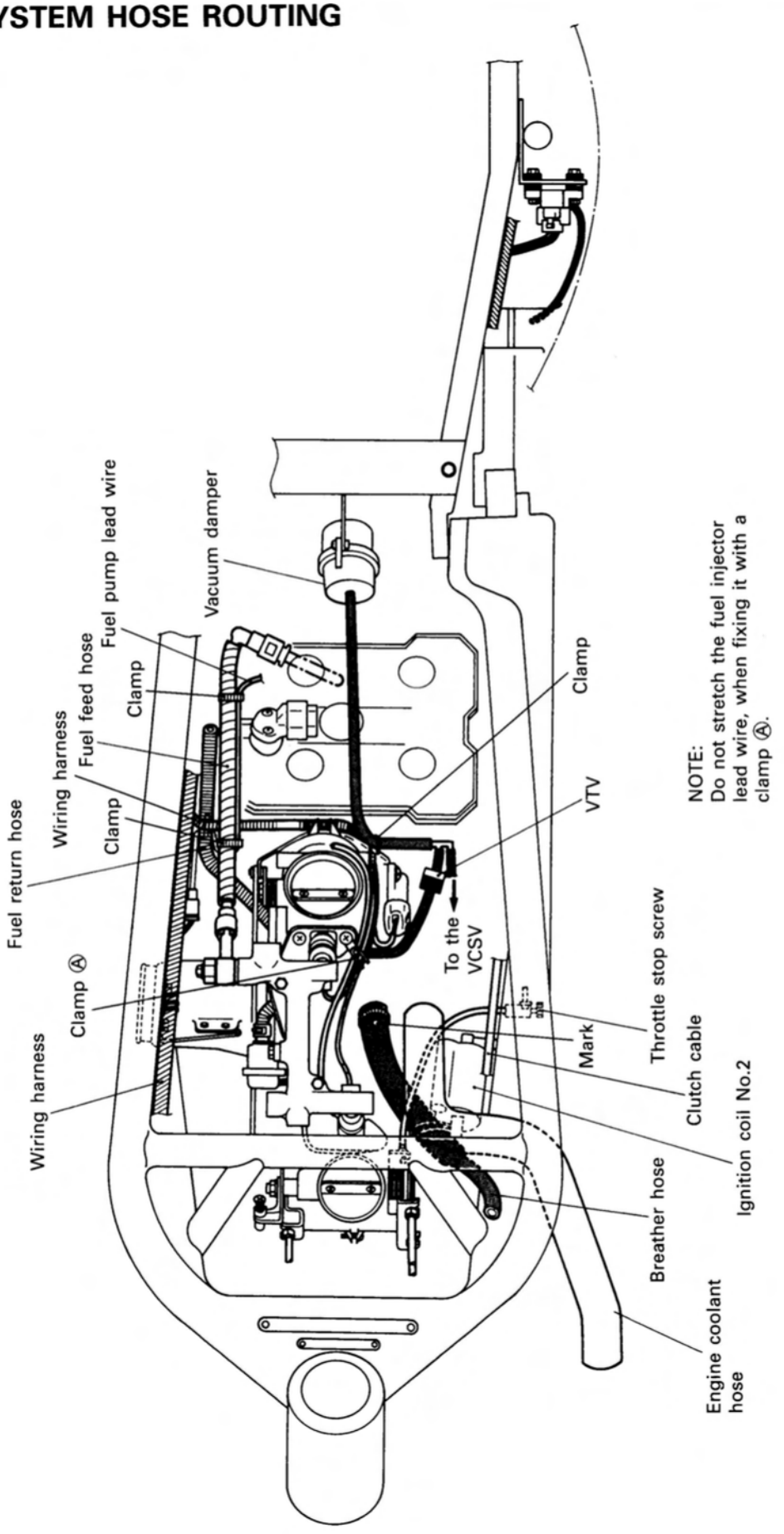

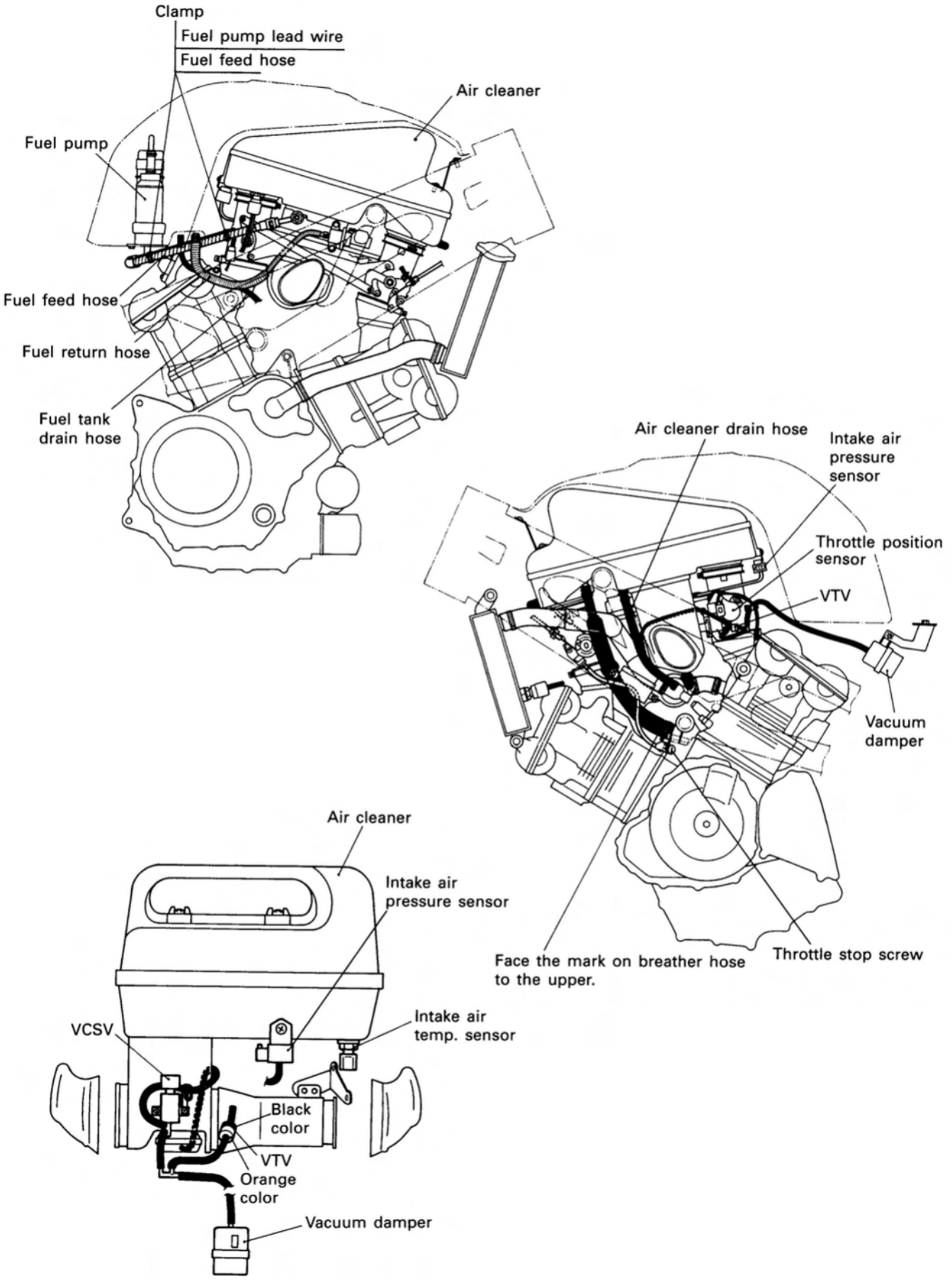
Clamp
Fuel pump lead wire
Fuel feed hose
Air cleaner
Fuel pump
Fuel feed hose
Fuel return hose
Fuel tank drain hose
Air cleaner drain hose
Intake air pressure sensor
Throttle position sensor
VTV
Vacuum damper
Face the mark on breather hose to the upper.
Throttle stop screw
Air cleaner
Intake air pressure sensor
VCSV
Intake air temp. sensor
Black color
VTV
Orange color
Vacuum damper

COOLING SYSTEM HOSE ROUTING

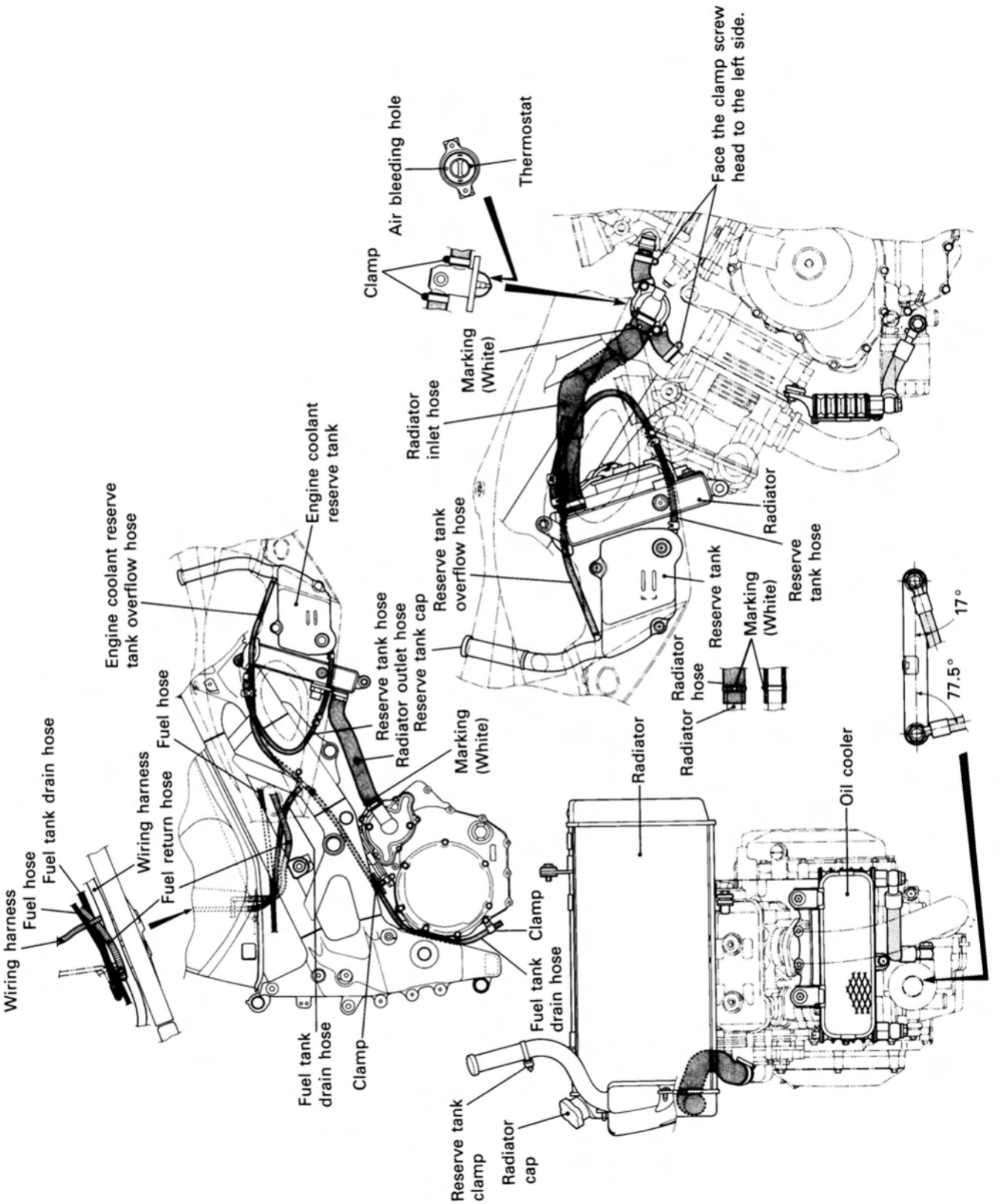

FRONT BRAKE HOSE ROUTING

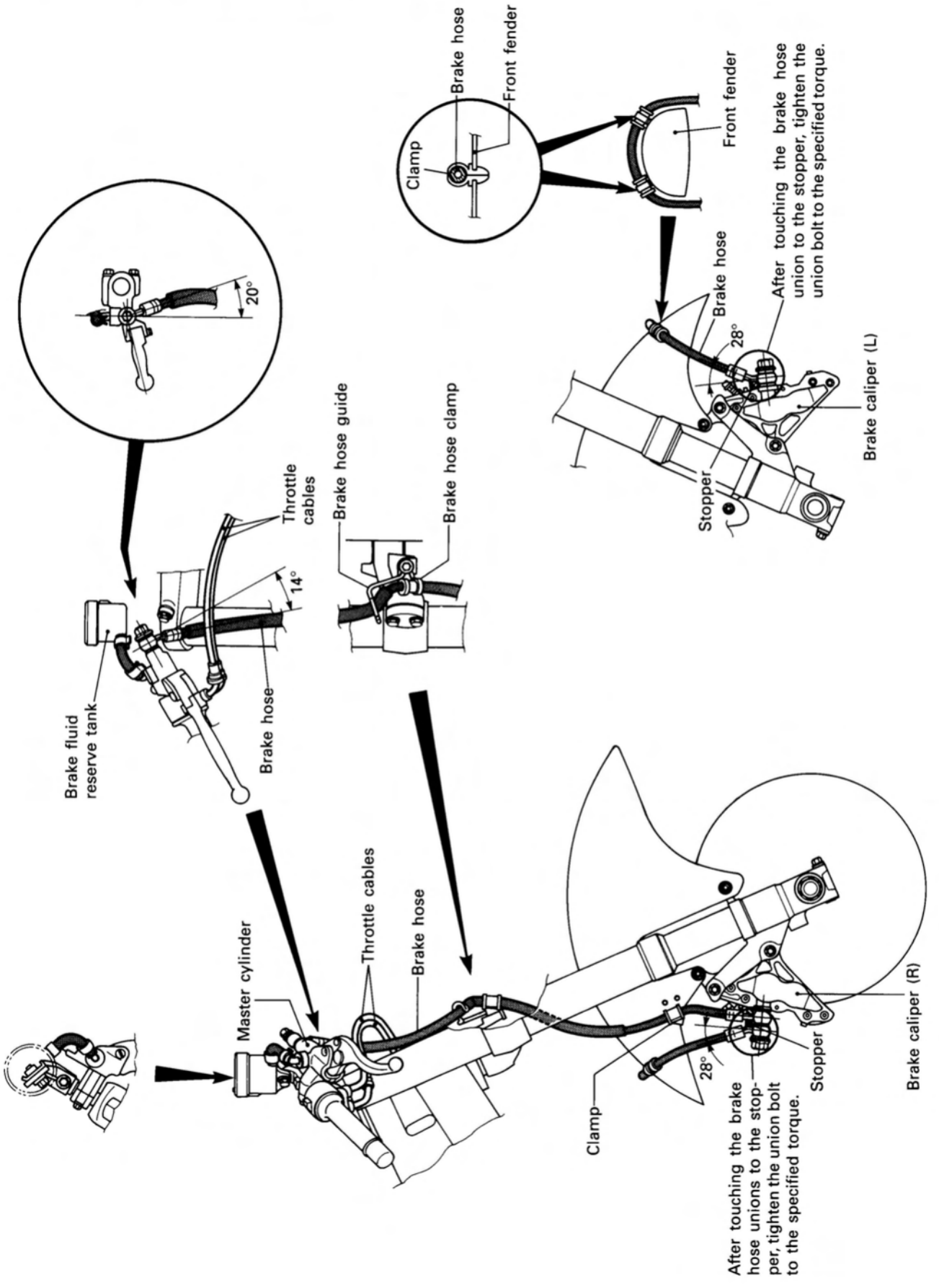

REAR BRAKE HOSE ROUTING

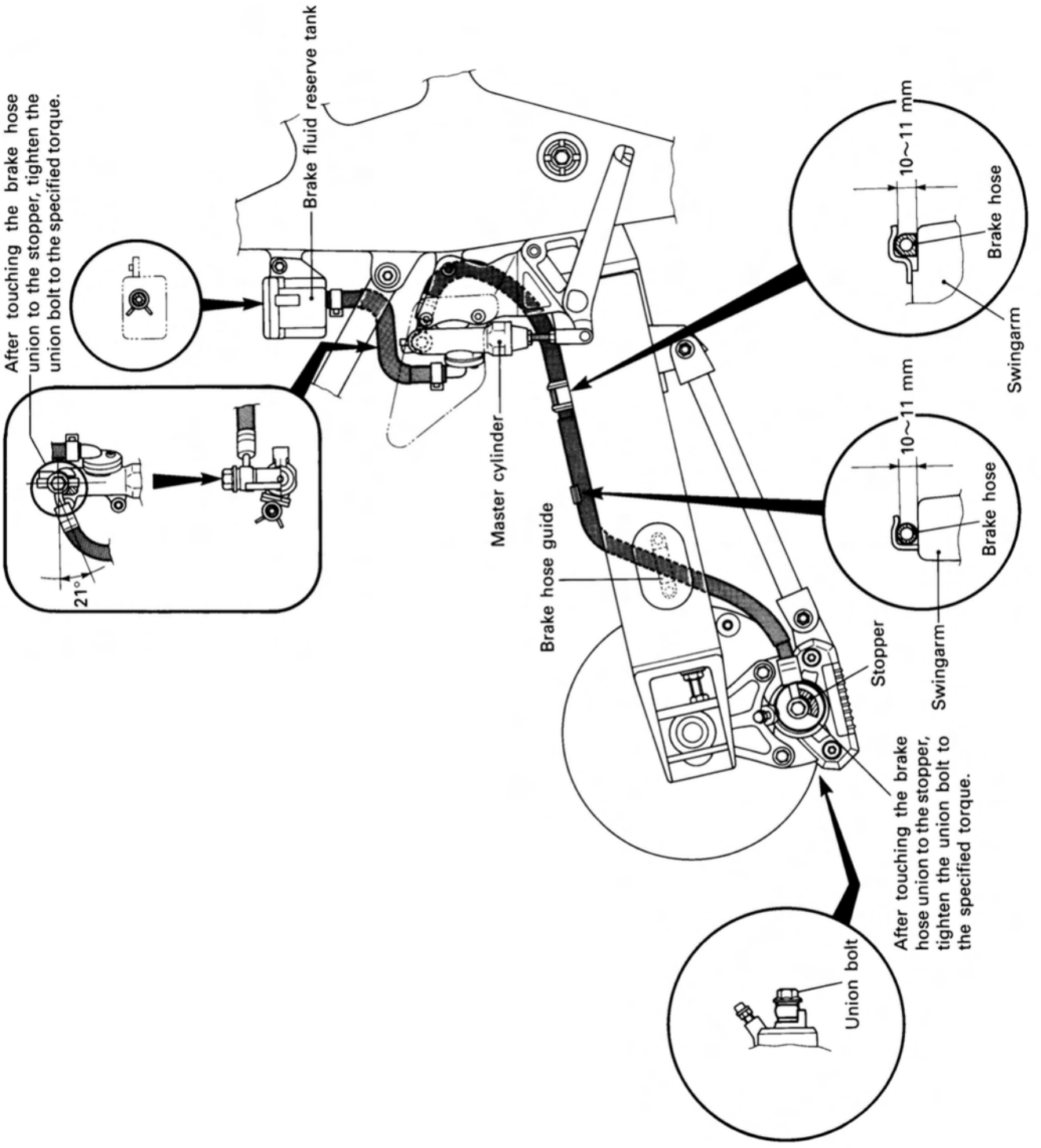

PAIR (AIR SUPPLY) SYSTEM HOSE ROUTING

(For E-18 and 39 models)

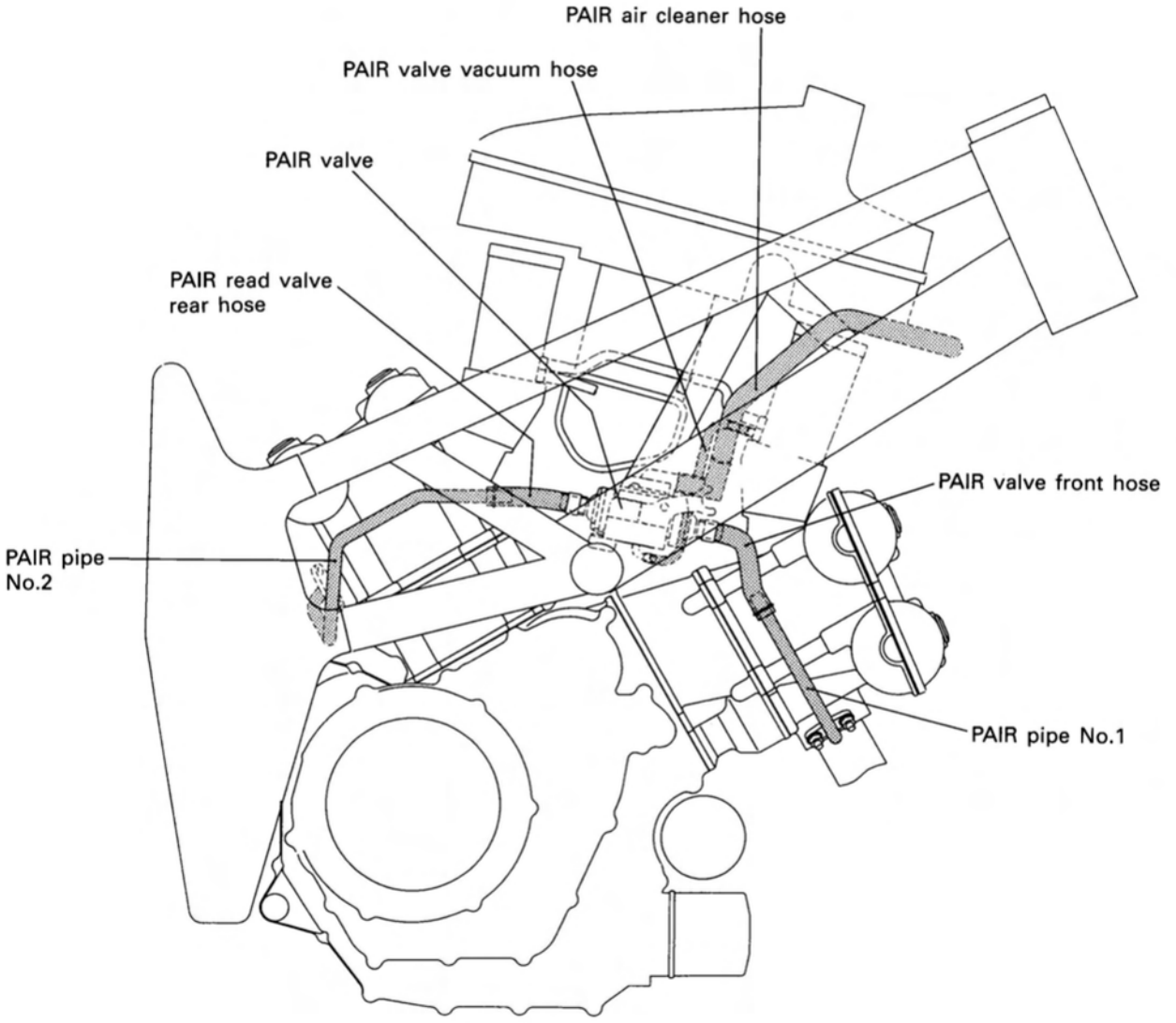

FAIRING CUSHION

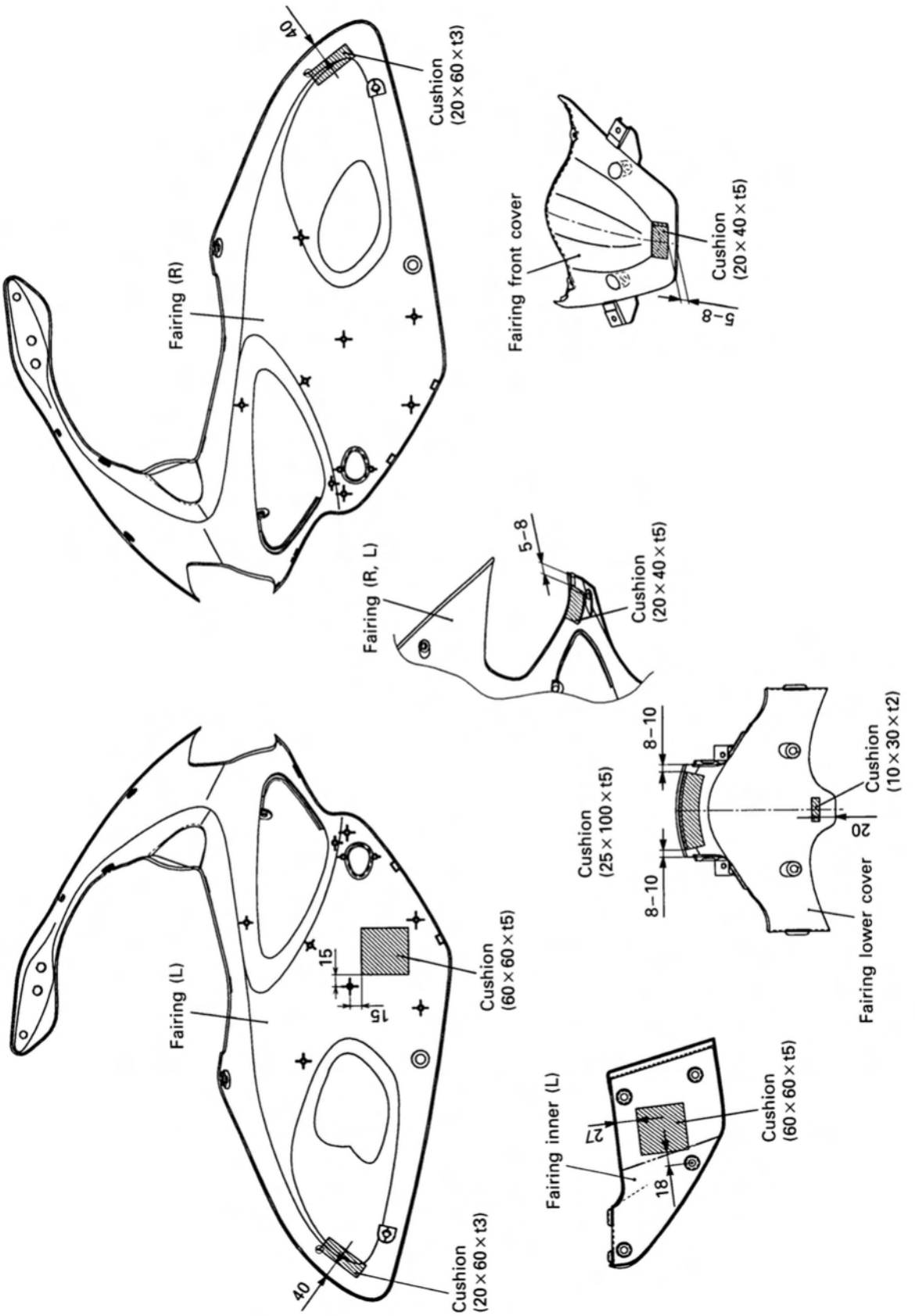

SPECIAL TOOLS

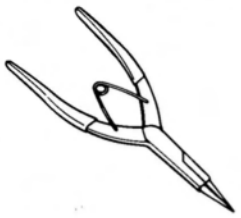 09900-06107 Snap ring pliers	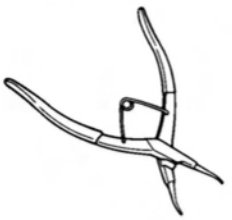 09900-06108 Snap ring pliers	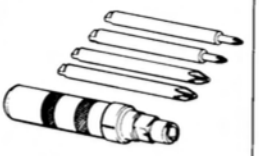 09900-09003 Impact driver set	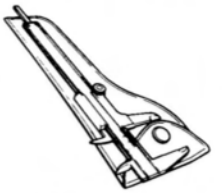 09900-20101 or 09900-20102 Vernier calipers	 09900-20202 Micrometer (25–50 mm)
 09900-20204 Micrometer (75–100 mm)	 09900-20205 Micrometer (0–25 mm)	 09900-20508 Cylinder gauge set	 09900-20602 Dial gauge (1/1000 mm, 1 mm)	 09900-20606 Dial gauge (1/100 mm, 10 mm)
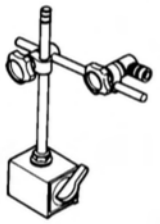 09900-20701 Magnetic stand	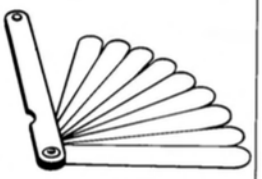 09900-20803 09900-20806 Thickness gauge	 09900-20805 Tire depth gauge	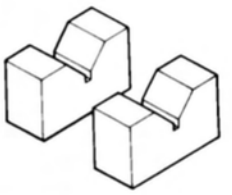 09900-21304 V-block (100 mm)	 09900-22301 09900-22302 Plastigauge
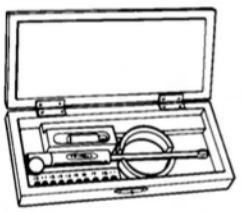 09900-22403 Small bore gauge (18–35 mm)	 09900-25008 Multi circuit tester set	 09900-28106 Electro tester	 09913-10750 Compression gauge adapter	 09913-13121 Carburetor balancer set
 09913-50121 Oil seal remover	 09913-60210 Journal bearing remover/installer	 09913-75821 Bearing remover	 09913-75830 Bearing remover	 09913-76010 Bearing installer
 09913-75520 09913-85210 Bearing installer	 09915-40610 Oil filter wrench	 09915-64510 Compression gauge	 09915-74520 Oil pressure gauge hose	 09915-74531 Oil pressure gauge adaptor

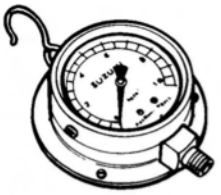 09915-77330 Meter (for high pressure)	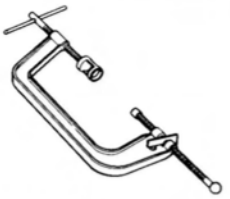 09916-14510 Valve spring compressor	 09916-14910 Valve spring compressor attachment	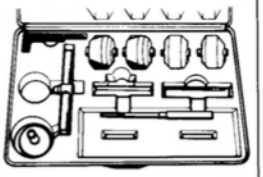 09916-21110 Valve seat cutter set	 09916-24480 Solid pilot (N-140-5.5)
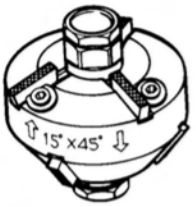 Valve seat cutter head See page 3-31.	 09916-34542 Reamer handle	 09916-34550 Valve guide reamer (5.5 mm)	 09916-34580 Valve guide reamer (10.8 mm)	 09916-44910 Valve guide remover/ installer
 09916-53340 Attachment	 09916-84511 Tweezers	 09917-47910 Vacuum pump gauge	 09920-13120 Crankcase separating tool	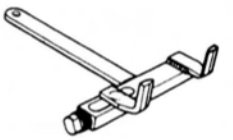 09920-53740 Clutch sleeve hub holder
 09923-74510 Bearing puller	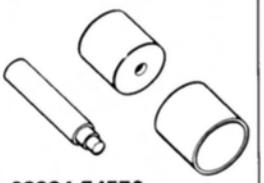 09924-74570 Final drive gear bearing installer/ remover	 09924-84510 Bearing installer set	 09924-84521 Bearing installer set	 09925-18010 Steering bearing installer
 09930-11920 Torx bit JT40H	 09930-11940 Bit holder	 09930-30102 Sliding shaft	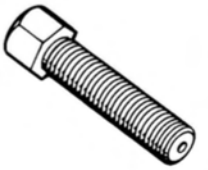 09930-30450 Rotor remover	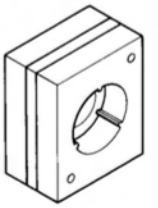 09930-73110 Starter torque limiter holder
 09930-73120. Starter torque limiter socket	 09930-82710 Mode selection switch	 09940-14911 Steering stem nut wrench	 09940-14960 Steering nut wrench socket	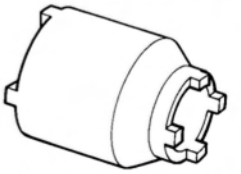 09940-14970 Swingarm pivot shaft lock nut socket wrench

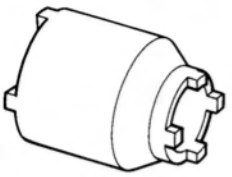 09940-14980 Engine mounting thrust adjuster socket wrench	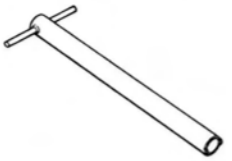 09940-30221 Front fork assembling tool	 09940-40210 Fuel pressure gauge adaptor	 09940-50120 Front fork inner rod holder	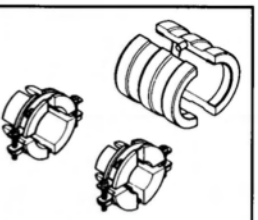 09940-52861 Front fork oil seal installer set
 09940-92720 Spring scale	 09940-94922 Front fork spring stopper plate	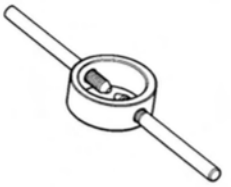 09940-94930 Front fork spacer holder	 09941-34513 Steering race installer	 09941-54911 Bearing outer race remover
 09943-74111 Fork oil level gauge	 09944-60210 Wheel bearing remover			

NOTE:
When order the special tool, please confirm whether it is available or not.

TIGHTENING TORQUE

ENGINE

ITEM		N·m	kg-m	lb-ft
Cylinder head cover bolt		14	1.4	10.0
Spark plug		11	1.1	8.0
Camshaft journal holder bolt		10	1.0	7.0
Cam chain tension adjuster bolt	[F]	23	2.3	16.5
	[R]	7	0.7	5.0
Cam chain tension adjuster mounting bolt		10	1.0	7.0
No.2 cam drive idle gear/sprocket shaft		40	4.0	29.0
Cam chain tensioner mounting bolt		10	1.0	7.0
Cylinder head nut	[M: 8]	25	2.5	18.0
	[M: 6]	10	1.0	7.0
Cylinder head bolt	[M: 10]	42	4.2	30.5
	[M: 6]	10	1.0	7.0
Cylinder nut	[M: 6]	10	1.0	7.0
Water drain bolt	[M: 6]	5.5	0.55	4.0
	[M: 8]	13	1.3	9.5
Air bleeder bolt	[M: 8]	13	1.3	9.5
Impeller securing bolt		8	0.8	6.0
Clutch sleeve hub nut		100	10.0	72.5
Clutch spring set bolt		10	1.0	7.0
Clutch spring support bolt		11	1.1	8.0
Oil pressure regulator		28	2.8	20.0
No.1 cam drive idle gear/sprocket nut		70	7.0	50.5
Primary drive gear nut		95	9.5	68.5
Generator cover plug		15	1.5	11.0
Valve timing inspection plug		23	2.3	16.5
Generator rotor bolt		160	16.0	115.5
Starter clutch bolt		10	1.0	7.0
Generator stator set bolt		10	1.0	7.0
Generator stator clamp bolt		5.5	0.55	4.0
Crankshaft position sensor set bolt		5.5	0.55	4.0
Gearshift cam stopper bolt		10	1.0	7.0
Gearshift cam stopper plate bolt		10	1.0	7.0
Gearshift arm stopper bolt		23	2.3	16.5
Oil pressure switch		14	1.4	10.0
Crankcase bolt	[M: 6]	11	1.1	8.0
	[M: 8]	22	2.2	16.0
Oil gallery plug	[M: 16]	35	3.5	25.5
	[M: 8]	10	1.0	7.0
Oil drain plug		23	2.3	16.5
Piston cooling oil nozzle bolt		8	0.8	6.0
Oil pump mounting bolt		10	1.0	7.0
Conrod bearing cap bolt		80	8.0	58.0
Exhaust pipe bolt		23	2.3	16.5

ITEM		N·m	kg-m	lb-ft
Crankcase bearing retainer screw		8	0.8	6.0
Muffler mounting nut		23	2.3	16.5
Muffler joint nut		25	2.5	18.0
Oil hose union bolt	[M: 12]	23	2.3	16.5
	[M: 14]	23	2.3	16.5
Speed sensor rotor bolt		13	1.3	9.5
Engine sprocket nut		115	11.5	83.0
Engine mounting pinch bolt [L: 30]		23	2.3	16.5
Engine mounting bolt	[M: 12]	93	9.3	67.5
	[M: 10]	55	5.5	40.0
Engine mounting thrust adjuster		10	1.0	7.0
Engine mounting thrust adjuster lock nut		45	4.5	32.5
Camshaft position sensor mounting bolt		8	0.8	6.0
Cooling fan thermo-switch		18	1.8	13.0
Engine coolant temperature sensor		18	1.8	13.0
Intake air temperature sensor		18	1.8	13.0
Fuel pressure check plug		10	1.0	7.0

CHASSIS

ITEM	N·m	kg-m	lb-ft
Steering stem head nut	90	9.0	65.0
Steering stem lock nut	80	8.0	58.0
Front fork upper clamp bolt	23	2.3	16.5
Front fork lower clamp bolt	23	2.3	16.5
Front fork cap bolt	23	2.3	16.5
Front fork inner rod lock nut	15	1.5	11.0
Front fork damper rod bolt	40	4.0	29.0
Front axle	100	10.0	72.5
Front axle pinch bolt	23	2.3	16.5
Handlebar set bolt	10	1.0	7.0
Handlebar clamp bolt	23	2.3	16.5
Front brake master cylinder mounting bolt	10	1.0	7.0
Front brake caliper mounting bolt	39	3.9	28.0
Front brake caliper housing bolt	21	2.1	15.0
Brake hose union bolt (Front & Rear)	23	2.3	16.5
Caliper air bleeder valve (Front & Rear)	7.5	0.75	5.5
Brake disc bolt (Front)	23	2.3	16.5
Brake disc bolt (Rear)	35	3.5	25.5
Rear brake caliper mounting bolt	26	2.6	19.0
Rear brake caliper housing bolt	30	3.0	21.5
Rear brake master cylinder mounting bolt	10	1.0	7.0
Rear brake master cylinder rod lock nut	18	1.8	13.0

ITEM	N·m	kg-m	lb-ft
Front footrest bracket mounting bolt	23	2.3	16.5
Front footrest bolt	39	3.9	28.0
Swingarm pivot shaft	15	1.5	11.0
Swingarm pivot nut	100	10.0	72.5
Swingarm pivot shaft lock nut	90	9.0	65.0
Torque link nut (Front)	28	2.8	20.0
Torque link nut (Rear)	35	3.5	25.5
Rear suspension rotary damper mounting bolt	50	5.0	36.0
Rear suspension spring unit cushion lever bolt	65	6.5	47.0
Rear suspension spring unit cushion rod bolt	65	6.5	47.0
Rear suspension spring unit cushion rod nut	80	8.0	58.0
Rear suspension spring unit mounting bolt (Front & Rear)	50	5.0	36.0
Rear suspension rotary damper lever bolt	23	2.3	16.5
Rear suspension rotary damper cushion rod bolt and nut	50	5.0	36.0
Rear axle nut	100	10.0	72.5
Rear sprocket nut	60	6.0	43.5

TIGHTENING TORQUE CHART

For other bolts and nuts listed previously, refer to this chart:

Bolt Diameter Ⓐ (mm)	Conventional or "4" marked bolt			"7" marked bolt		
	N·m	kg-m	lb-ft	N·m	kg-m	lb-ft
4	1.5	0.15	1.0	2.3	0.23	1.5
5	3	0.3	2.0	4.5	0.45	3.0
6	5.5	0.55	4.0	10	1.0	7.0
8	13	1.3	9.5	23	2.3	16.5
10	29	2.9	21.0	50	5.0	36.0
12	45	4.5	32.5	85	8.5	61.5
14	65	6.5	47.0	135	13.5	97.5
16	105	10.5	76.0	210	21.0	152.0
18	160	16.0	115.5	240	24.0	173.5

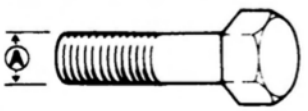

Conventional bolt

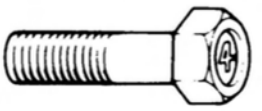

"4" marked bolt

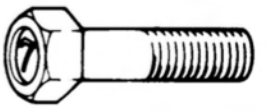

"7" marked bolt

SERVICE DATA

VALVE + GUIDE

Unit: mm (in)

ITEM	STANDARD		LIMIT
Valve diam.	IN.	40 (1.56)	———
	EX.	33 (1.30)	———
Tappet clearance (when cold)	IN.	0.10–0.20 (0.004–0.008)	———
	EX.	0.20–0.30 (0.008–0.012)	———
Valve guide to valve stem clearance	IN.	0.010–0.037 (0.0004–0.0015)	———
	EX.	0.030–0.057 (0.0012–0.0022)	———
Valve stem deflection	IN. & EX.	———	0.35 (0.014)
Valve guide I.D.	IN. & EX.	5.500–5.512 (0.2165–0.2170)	———
Valve stem O.D.	IN.	5.475–5.490 (0.2156–0.2161)	———
	EX.	5.455–5.470 (0.2148–0.2154)	———
Valve stem runout	IN. & EX.	———	0.05 (0.002)
Valve head thickness	IN. & EX.	———	0.5 (0.02)
Valve seat width	IN. & EX.	0.9–1.1 (0.035–0.043)	———
Valve head radial runout	IN. & EX.	———	0.03 (0.001)
Valve spring free length (IN. & EX.)	INNER	———	37.0 (1.46)
	OUTER	———	40.7 (1.60)
Valve spring tension (IN. & EX.)	INNER	6.2 kg (13.7 lbs) at length 33.1 mm (1.30 in)	———
	OUTER	15.4 kg (33.95 lbs) at length 36.6 mm (1.44 in)	———

CAMSHAFT + CYLINDER HEAD

Unit: mm (in)

ITEM	STANDARD			LIMIT
Cam height	IN.	E-04	34.770–34.838 (1.3689–1.3716)	34.47 (1.357)
		Others	37.770–37.838 (1.4842–1.4897)	37.47 (1.475)
	EX.	36.380–36.448 (1.4323–1.4350)		36.08 (1.420)

ITEM	STANDARD		LIMIT
Camshaft journal oil clearance	IN. & EX.	0.019–0.053 (0.0007–0.0021)	0.150 (0.0059)
Camshaft journal holder I.D.	IN. & EX.	22.012–22.025 (0.8666–0.8671)	———
Camshaft journal O.D.	IN. & EX.	21.972–21.993 (0.8650–0.8659)	———
Camshaft runout	IN. & EX.	———	0.10 (0.004)
No.2 cam drive idle gear/sprocket thrust clearance	0.15–0.29 (0.006–0.011)		———
Cylinder head distortion	———		0.05 (0.002)

CYLINDER + PISTON + PISTON RING

Unit: mm (in)

ITEM	STANDARD			LIMIT
Compression pressure (Automatic de-comp. actuated)	1 000–1 400 kPa (10–14 kg/cm^2 142–199 psi)			700 kPa (7 kg/cm^2 128 psi)
Compression pressure difference	———			200 kPa (2 kg/cm^2 28 psi)
Piston to cylinder clearance	0.015–0.025 (0.0006–0.0010)			0.12 (0.0047)
Cylinder bore	98.000–98.015 (3.8583–3.8589)			Nicks or Scratches
Piston diam.	97.980–97.995 (3.8575–3.8581) Measure at 10 mm (0.4 in) from the skirt end.			97.880 (3.8535)
Cylinder distortion	———			0.05 (0.002)
Piston ring free end gap	1st	Approx.	6.8 (0.27)	5.4 (0.21)
	2nd	Approx.	9.9 (0.39)	7.9 (0.31)
Piston ring end gap	1st	0.15–0.35 (0.006–0.014)		0.5 (0.02)
	2nd	RN	0.15–0.30 (0.004–0.010)	0.5 (0.02)
Piston ring to groove clearance	1st	———		0.18 (0.0071)
	2nd	———		0.15 (0.0059)
Piston ring groove width	1st	0.93–0.95 (0.0366–0.0374)		———
		1.55–1.57 (0.0610–0.0618)		———
	2nd	1.01–1.03 (0.0398–0.0406)		———
	Oil	2.51–2.53 (0.0988–0.0996)		———

ITEM	STANDARD		LIMIT
Piston ring thickness	1st	0.84–0.89 (0.033–0.035)	———
		1.40–1.42 (0.055–0.056)	———
	2nd	0.97–0.99 (0.038–0.039)	———
Piston pin bore I.D.	22.002–22.008 (0.8662–0.8665)		22.030 (0.8673)
Piston pin O.D.	21.992–22.000 (0.8658–0.8661)		21.980 (0.8654)

CONROD + CRANKSHAFT

Unit: mm (in)

ITEM	STANDARD	LIMIT
Conrod small end I.D.	22.010–22.018 (0.8665–0.8668)	22.040 (0.8677)
Conrod big end side clearance	0.17–0.32 (0.007–0.013)	0.50 (0.020)
Conrod big end width	21.95–22.00 (0.864–0.866)	———
Crank pin width	44.17–44.22 (1.739–1.741)	———
Conrod big end oil clearance	0.032–0.056 (0.0013–0.0022)	0.080 (0.0031)
Crank pin O.D.	44.976–45.000 (1.7707–1.7717)	———
Crankshaft journal oil clearance	0.018–0.045 (0.0007–0.0018)	0.080 (0.0031)
Crankshaft journal O.D.	47.985–48.000 (1.8892–1.8898)	———
Crankshaft thrust clearance	0.050–0.100 (0.0020–0.0039)	———
Crankshaft thrust bearing thickness	1.925–2.175 (0.0758–0.0856)	———

OIL PUMP

ITEM	STANDARD	LIMIT
Oil pump reduction ratio	1.301 (57/31 × 29/41)	———
Oil pressure (at 60°C, 140°F)	Above 300 kPa (3.0 kg/cm^2, 43 psi) Below 600 kPa (6.0 kg/cm^2, 85 psi) at 3 000 r/min.	———

CLUTCH

Unit: mm (in)

ITEM	STANDARD	LIMIT
Clutch lever play	10–15 (0.4–0.6)	———
Drive plate thickness	2.92–3.08 (0.115–0.121)	———
Drive plate claw width	———	12.9 (0.51)
Clutch release screw	1/4 turn back	———

ITEM	STANDARD	LIMIT
Driven plate distortion	———	0.10 (0.004)
Clutch spring free length	———	29.6 (1.17)

THERMOSTAT + RADIATOR + FAN

ITEM		STANDARD	LIMIT
Thermostat valve opening temperature	E-03, 28, 33	74.5–78.5°C (166.1–173.3°F)	———
	Others	48–52°C (118.4–125.6°F)	———
Thermostat valve lift	E-03, 28, 33	Over 7 mm (0.28 in) at 90°C (194°F)	———
	Others	Over 7 mm (0.28 in) at 65°C (149°F)	———
Radiator cap valve opening pressure		110 kPa (1.1 kg/cm^2, 15.6 psi)	———
Cooling fan thermo-switch operating temperature	OFF→ON	Approx. 105°C (221°F)	———
	ON→OFF	Approx. 100°C (212°F)	———
Engine coolant temperature sensor resistance	20°C (68°F)	Approx. 2.45 kΩ	———
	50°C (122°F)	Approx. 0.811 kΩ	———
	80°C (176°F)	Approx. 0.318 kΩ	———
	110°C (230°F)	Approx. 0.142 kΩ	———
	130°C (266°F)	Approx. 0.088 kΩ	———

TRANSMISSION + DRIVE CHAIN

Unit: mm (in) Except ratio

ITEM		STANDARD	LIMIT
Primary reduction ratio		1.838 (57/31)	———
Final reduction ratio		2.235 (38/17)	———
Gear ratios	Low	2.666 (32/12)	———
	2nd	1.933 (29/15)	———
	3rd	1.500 (27/18)	———
	4th	1.227 (27/22)	———
	5th	1.086 (25/23)	———
	Top	1.000 (24/24)	———
Shift fork to groove clearance		0.1–0.3 (0.004–0.012)	0.50 (0.020)
Shift fork groove width		5.0–5.1 (0.197–0.201)	———
Shift fork thickness		4.8–4.9 (0.189–0.193)	———
Drive chain	Type	RK50GSVZ1	———
	Links	104 links, ENDLESS	———
	20-pitch length	———	319.4 (12.6)

ITEM	STANDARD	LIMIT
Drive chain slack	25–35 (1.0–1.4)	———
Gearshift lever height	60 (2.4)	———

INJECTOR + FUEL PUMP + FUEL PRESSURE REGULATOR

ITEM	SPECIFICATION	NOTE
Injector resistance	11–16 Ω at 20°C (68°F)	
Fuel pump discharge amount	Approx. 1 L (1.1/0.9 US/Imp qt) for 1 minute at 2.9 kg/cm^2 (290 kPa, 41 psi)	
Fuel pressure regulator operating set pressure	Approx. 2.9 kg/cm^2 (290 kPa, 41 psi)	

FI-SENSORS + INTAKE AIR CONTROL VALVE

ITEM		SPECIFICATION		NOTE
CMP sensor resistance		0.9–1.3 kΩ		
CMP sensor peak voltage		More than 0.8V		
CKP sensor resistance		184–276 Ω		
CKP sensor peak voltage		More than 4V		
IAP sensor input voltage		4.5–5.5V		
IAP sensor output voltage		Approx. 1.8V at idle speed		
TP sensor input voltage		4.5–5.5V		
TP sensor resistance	(Closed)	Approx. 1.2 kΩ		
	(Opened)	Approx. 4.4 kΩ		
TP sensor output voltage	(Closed)	Approx. 1.1V		
	(Opened)	Approx. 4.2V		
ECT sensor input voltage		4.5–5.5V		
ECT sensor resistance		2.3–2.6 kΩ at 20°C (68°F)		
IAT sensor input voltage		4.5–5.5V		
IAT sensor resistance		2.2–2.7 kΩ at 20°C (68°F)		
AP sensor input voltage		4.5–5.5V		
AP sensor output voltage		Approx. 3.6V at 760 mmHg (100 kPa)		
TO sensor resistance		60–64 kΩ		
TO sensor voltage		Approx. 2.5V		
GP sensor voltage		More than 0.6V (From 1st to Top)		
Injector voltage		Battery voltage		
Ignition coil primary peak voltage		More than 280V (When cranking)		
VCSV resistance		36–44 Ω		
Intake air control valve operating rpm	Opening rpm	Above 4 000 rpm		
	Closing rpm	Below 3 800 rpm		

THROTTLE BODY

ITEM	SPECIFICATION	
	E-18	Others
Fast idle r/min	2 000 r/min.	←
Idle r/min	1 200 ± 50 r/min.	1 200 ± 100 r/min.
Throttle cable play	2.0–4.0 mm (0.08–0.16 in)	←

ELECTRICAL

Unit: mm (in)

ITEM			SPECIFICATION	NOTE
Ignition timing			3° B.T.D.C. at 1 200 r/min.	
Firing order			1·2	
Spark plug	E-03, 28, 33	Type	NGK: CR8EK Denso: U24ETR	
		Gap	0.6–0.7 (0.024–0.028)	
	Others	Type	NGK: CR8E Denso: U24ESR-N	
		Gap	0.7–0.8 (0.028–0.031)	
Spark performance			Over 8 (0.3) at 1 atm.	
Crankshaft position sensor resistance			184–276 Ω	Bl–G
Ignition coil resistance		Primary	3–5 Ω	⊕ tap – ⊖ tap
		Secondary	20–28 kΩ	⊕ tap – Plug cap
Crankshaft position sensor peak voltage			More than 4.0V	
Ignition coil primary peak voltage			More than 280V	
Generator coil resistance			0.1–1.0 Ω	Y–Y
Generator Max. output			Approx. 380W at 5 000 r/min.	
Generator no-load voltage (When engine is cold)			More than 70V (AC) at 5 000 r/min.	
Regulated voltage			13.3–14.3V at 5 000 r/min.	
Starter relay resistance			3–6 Ω	
Battery	Type designation		FTX12-BS	
	Capacity		12V 36 kC (10 Ah)/10 HR	
	Standard electrolyte S.G.		1.320 at 20°C (68°F)	
Fuse size	Headlight	HI	15A	
		LO	15A	
	Turn signal		15A	
	Ignition		10A	
	Fuel pump relay		10A	
	Main		30A	

WATTAGE

Unit: W

ITEM		SPECIFICATION		
		E-03, 24, 28, 33	E-04, 18, 22, 25, 34, 37, 39	E-02
Headlight	HI	60×2	55	60×2
	LO	55×2	55	55×2
Position light			5	←
Brake light/Taillight		21/5×2	←	←
Turn signal light		21	←	←
Speedometer/Tachometer light		0.84×3	←	←
Turn signal indicator light		3	←	←
High beam indicator light		1.7	←	←
Neutral indicator light		1.7	←	←
Fuel level indicator light		1.7	←	←
License light		5	←	←

BRAKE + WHEEL

Unit: mm (in)

ITEM		STANDARD		LIMIT
Rear brake pedal height			60 (2.4)	———
Brake disc thickness		Front	5.0±0.2 (0.197±0.008)	4.5 (0.18)
		Rear	5.0±0.2 (0.197±0.008)	4.5 (0.18)
Brake disc runout (Front & Rear)			———	0.30 (0.012)
Master cylinder bore		Front	14.000–14.043 (0.5512–0.5529)	———
		Rear	12.700–12.743 (0.5000–0.5017)	———
Master cylinder piston diam.		Front	13.957–13.984 (0.5495–0.5506)	———
		Rear	12.657–12.684 (0.4983–0.4994)	———
Brake caliper cylinder bore	Leading	Front	27.000–27.076 (1.0630–1.0660)	———
	Trailing		30.230–30.306 (1.1902–1.1931)	———
		Rear	38.180–38.256 (1.5031–1.5061)	———
Brake caliper piston diam.	Leading	Front	26.920–26.970 (1.0598–1.0618)	———
	Trailing		30.150–30.200 (1.1870–1.1890)	———
		Rear	38.098–38.148 (1.4999–1.5019)	———
Wheel rim runout (Front & Rear)		Axial	———	2.0 (0.08)
		Radial	———	2.0 (0.08)

ITEM	STANDARD		LIMIT
Wheel axle runout	Front	———	0.25 (0.010)
	Rear	———	0.25 (0.010)
Wheel rim size	Front	J17 × MT 3.50	———
	Rear	J17 × MT 6.00	———
Tire size	Front	120/70 ZR17 (58W)	———
	Rear	190/50 ZR17 (73W)	———
Tire tread depth	Front	———	1.6 (0.06)
	Rear	———	2.0 (0.08)

SUSPENSION

Unit: mm (in)

ITEM	STANDARD		LIMIT
Front fork stroke	120 (4.7)		———
Front fork spring free length	———		280 (11.0)
Front fork oil level	100 (3.9)		———
Front fork spring adjuster	4-1/2th groove		———
Front fork damping force adjuster	Rebound	7/8 turn out	———
	Compression	7/8 turn out	———
Rear suspension spring unit set length	180 (7.1)		———
Rear suspension rotary damper damping force adjuster	Rebound	At punch mark (about 2 turns out)	———
	Compression	At punch mark (about 1-1/8 turns out)	———
Rear wheel travel	128 (5.0)		———
Swingarm pivot shaft runout	———		0.3 (0.01)

TIRE PRESSURE

COLD INFLATION TIRE PRESSURE	SOLO RIDING			DUAL RIDING		
	kPa	kg/cm^2	psi	kPa	kg/cm^2	psi
FRONT	250	2.50	36	250	2.50	36
REAR	250	2.50	36	250	2.50	36

FUEL + OIL + ENGINE COOLANT

ITEM	SPECIFICATION		NOTE
Fuel type	Use only unleaded gasoline of at least 87 pump octane ($\frac{R+M}{2}$) or 91 octane or higher rated by the research method. Gasoline containing MTBE (Methyl Tertiary Butyl Ether), less than 10% ethanol, or less than 5% methanol with appropriate cosolvents and corrosion inhibitor is permissible.		E-03, 33
	Use only unleaded gasoline of at least 87 pump octane ($\frac{R+M}{2}$ method) or 91 octane or higher rated by the Research Method.		E-28
	Gasoline used should be graded 85–95 octane or higher. An unleaded gasoline is recommended.		The others
Fuel tank	17 L (4.5/3.7 US/Imp gal)		
Engine oil type	SAE 10W/40, API SF or SG		
Engine oil capacity	Change	3 100 ml (3.3/2.7 US/Imp qt)	
	Filter change	3 300 ml (3.5/2.9 US/Imp qt)	
	Overhaul	3 600 ml (3.8/3.2 US/Imp qt)	
Front fork oil type	Fork oil L01		
Front fork oil capacity (each leg)	488 ml (16.5/17.2 US/Imp oz)		
Brake fluid type	DOT 4		
Engine coolant type	Use an anti-freeze/coolant compatible with aluminum radiator, mixed with distilled water only, at the ratio of 50 : 50.		
Engine coolant including reserve	2 200 ml (2.3/1.9 US/Imp qt)		

EMISSION CONTROL INFORMATION

CONTENTS

FUEL INJECTION SYSTEM 9- 1
EVAPORATIVE EMISSION CONTROL SYSTEM 9- 1
CANISTER HOSE ROUTING 9- 2
EVAPORATIVE EMISSION CONTROL SYSTEM INSPECTION 9- 2

FUEL INJECTION SYSTEM

TL1000S motorcycles are equipped with a fuel injection system for emission level control. This fuel injection system is precision designed, manufactured and adjusted to comply with the applicable emission limits.

EVAPORATIVE EMISSION CONTROL SYSTEM (California model only)

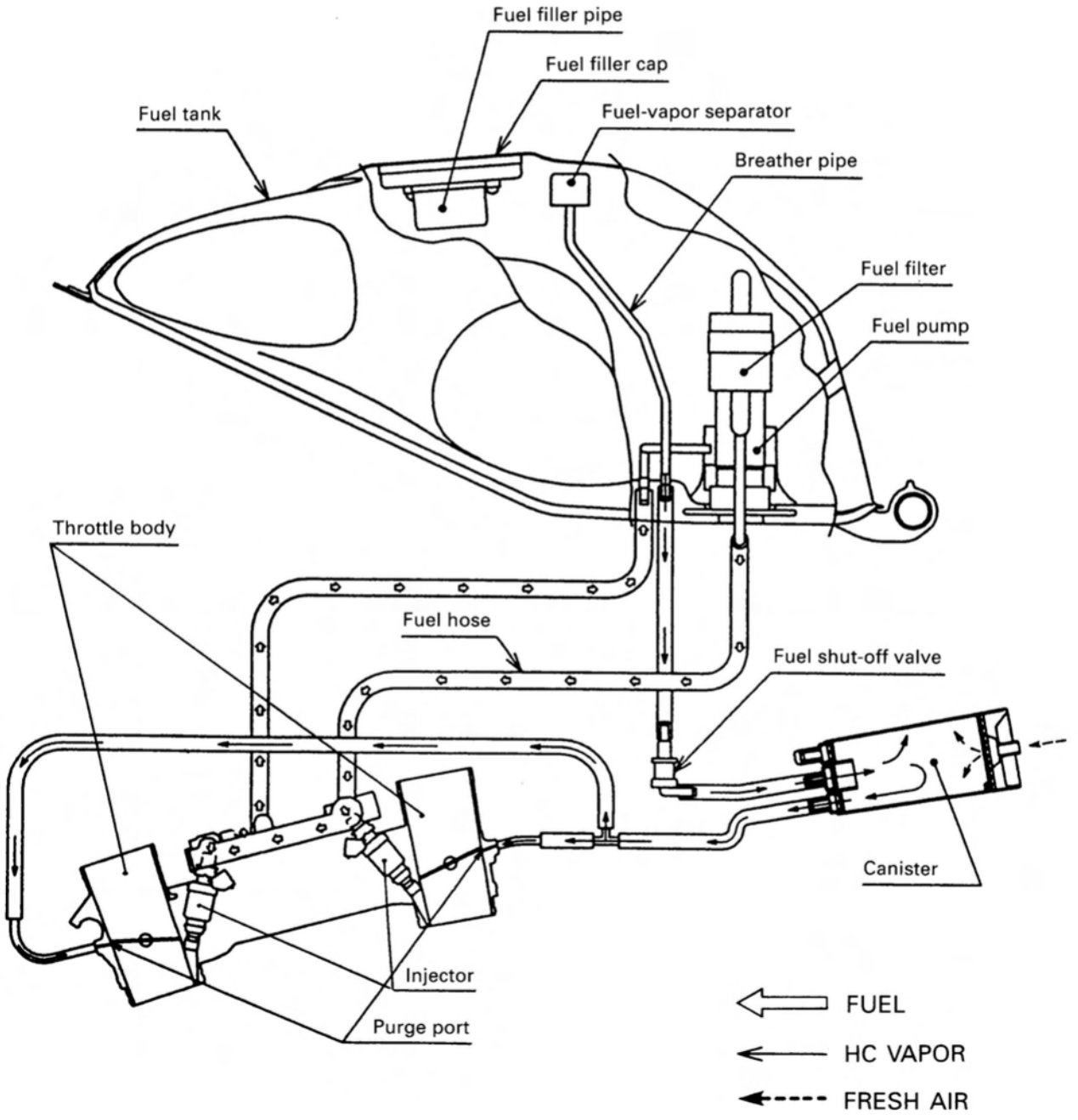

CANISTER HOSE ROUTING (California model only)

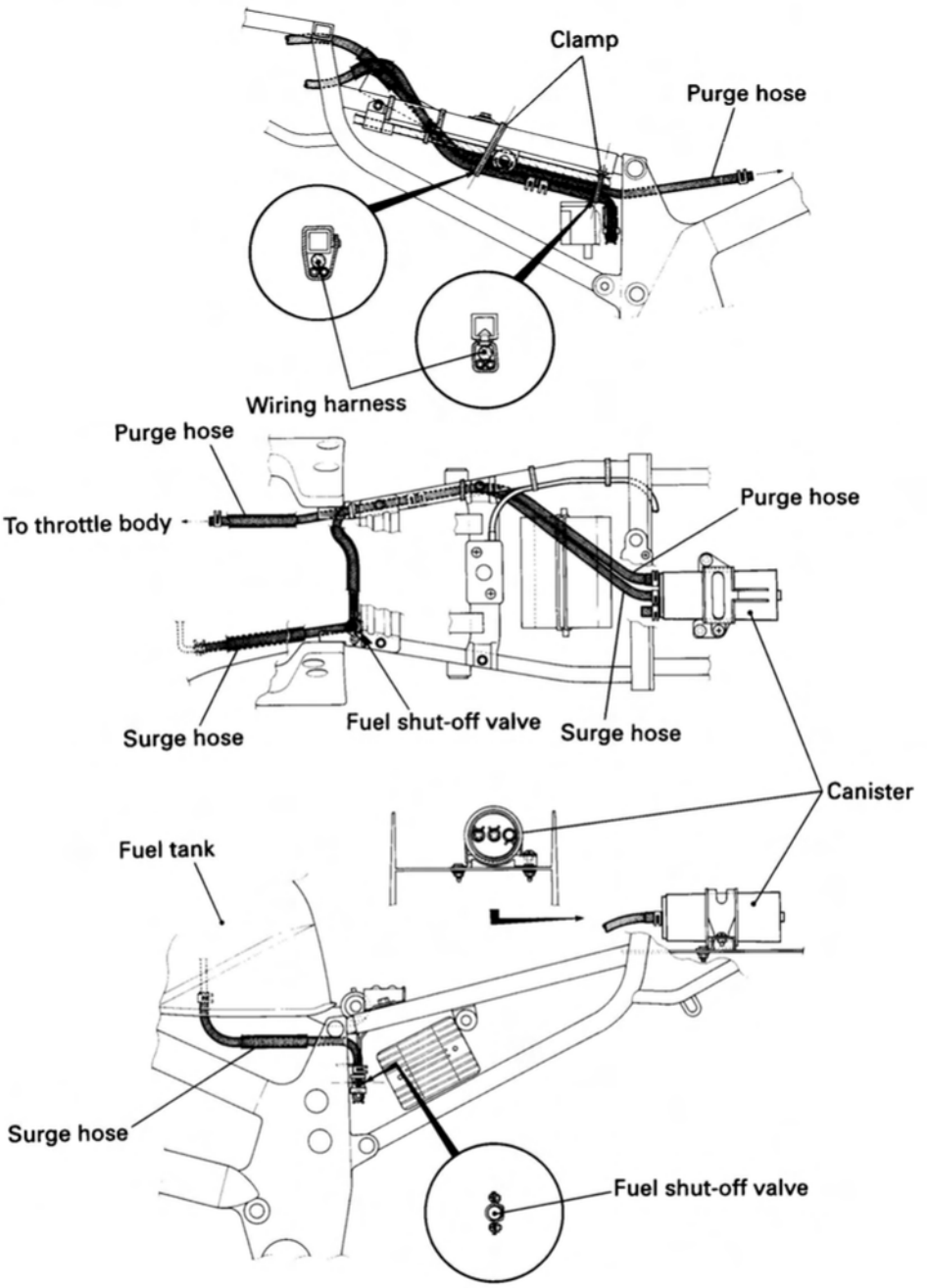

EVAPORATIVE EMISSION CONTROL SYSTEM INSPECTION (California model only)

- Remove the frame cover. (Refer to page 6-4.)
- Remove the fuel tank.(Refer to page 4-49.)

HOSES AND PIPES

Inspect the hoses and pipes for wear or damage.
Inspect that the hoses and pipes are securely connected.

CANISTER

Inspect the canister for damage to the body.

TL1000SW ('98-MODEL)

This section describes service data, service specifications and servicing procedures which differ from those of the TL1000SV ('97-model).

NOTE:
- *Any differences between the TL1000SV ('97-model) and TL1000SW ('98-model) in specifications and service data are indicated with an asterisk mark (*).*
- *Please refer to the sections 1 through 9 for details which are not given in this section.*

GROUP INDEX

GENERAL INFORMATION	10-1
PERIODIC MAINTENANCE	10-2
ENGINE	10-3
FI SYSTEM AND INTAKE AIR SYSTEM	10-4
COOLING SYSTEM	10-5
CHASSIS	10-6
SERVICING INFORMATION	10-8
EMISSION CONTROL INFORMATION	10-9

GENERAL INFORMATION

CONTENTS

INFORMATION LABELS 10-1-1

SPECIFICATIONS 10-1-2

INFORMATION LABELS

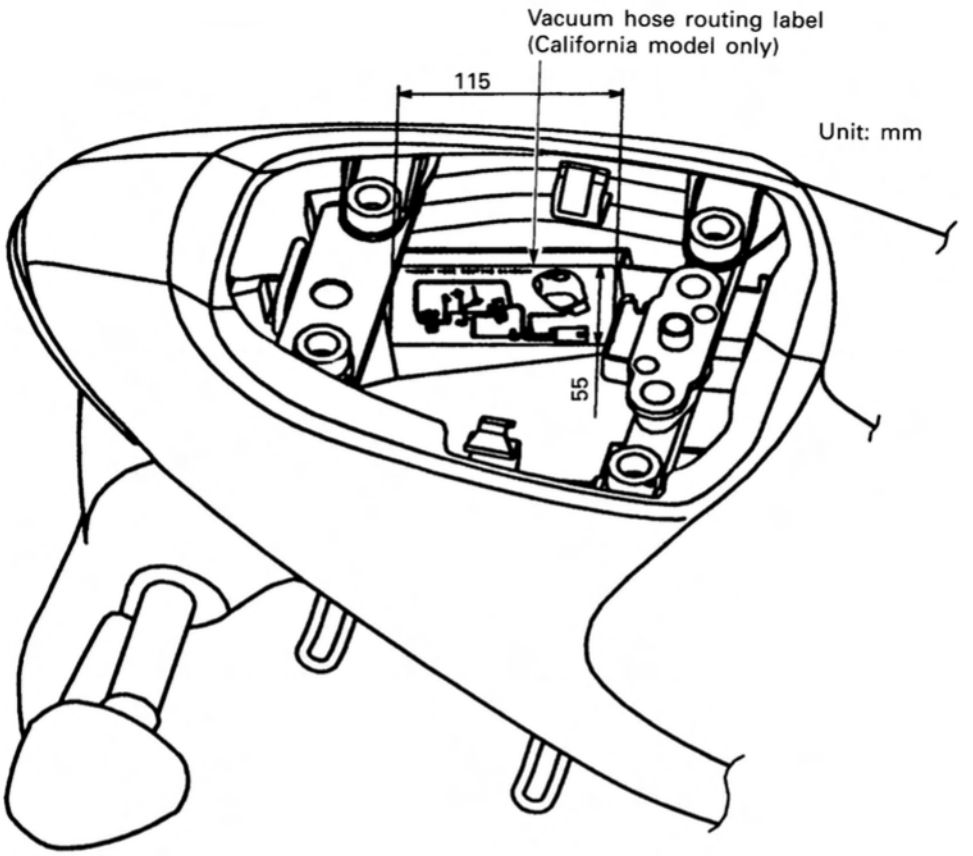

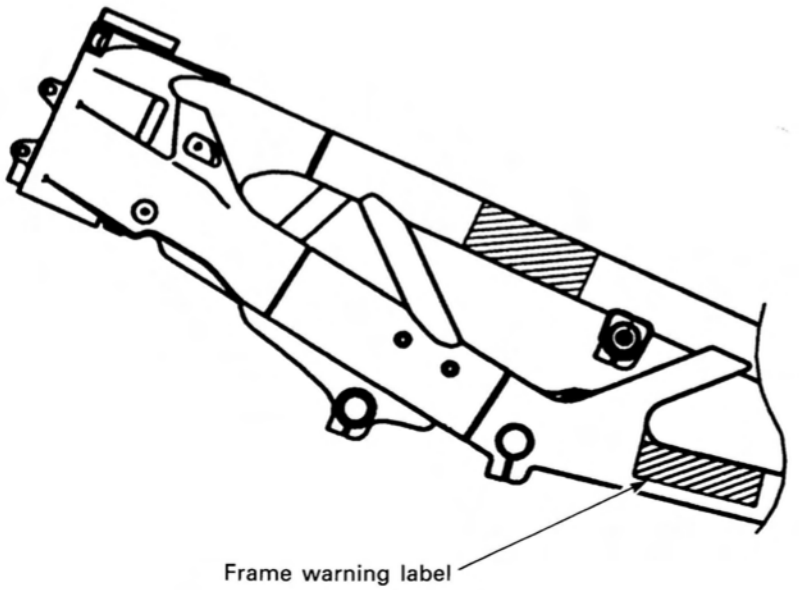

SPECIFICATIONS

DIMENSIONS AND DRY MASS

Overall length	2 045 mm (80.5 in)	E-02,03,04,25,28,33,34,37
	2 065 mm (81.3 in)	E-18,22,24
	2 085 mm (82.1 in)	E-39
Overall width	715 mm (28.1 in)	
Overall height	1 175 mm (46.3 in)	
Wheelbase	1 415 mm (55.7 in)	
Ground clearance	140 mm (5.5 in)	
Seat height	835 mm (32.9 in)	
Dry mass	* 191 kg (421 lbs)	

ENGINE

Type	Four-stroke, Liquid-cooled, DOHC, TSCC, 90-degree V-twin
Number of cylinders	2
Bore	98.0 mm (3.858 in)
Stroke	66.0 mm (2.598 in)
Piston displacement	996 cm^3 (60.8 cu. in)
Compression ratio	11.3 : 1
Fuel system	Fuel injection
Air cleaner	Non-woven fabric element
Starter system	Electric starter
Lubrication system	Wet sump

TRANSMISSION

Clutch	Wet multi-plate type
Transmission	6-speed constant mesh
Gearshift pattern	1-down, 5-up
Primary reduction ratio	1.838 (57/31)
Final reduction ratio	2.235 (38/17)
Gear ratios, Low	2.666 (32/12)
2nd	1.933 (29/15)
3rd	1.500 (27/18)
4th	1.227 (27/22)
5th	1.086 (25/23)
Top	1.000 (24/24)
Drive chain	RK50 GSVZ1, 104 links

CHASSIS

Front suspension	Inverted telescopic, coil spring, oil damped, spring pre-load fully adjustable, compression damping force fully adjustable, rebound damping force fully adjustable.
Rear suspension	Swingarm, coil spring, rotary damper, spring pre-road fully adjustable, compression damping force fully adjustable, rebound damping force fully adjustable.
Steering angle	30° (right & left)
Caster	23° 42′
Trail	94.5 mm (3.7 in)
Turning radius	3.1 m (10.2 ft)
Front brake	Disc brake, twin
Rear brake	Disc brake
Front tire size	120/70 ZR17, (58W)
Rear tire size	190/50 ZR17, (73W)
Front fork stroke	120 mm (4.7 in)
Rear wheel travel	128 mm (5.0 in)

ELECTRICAL

Ignition type	Electronic ignition (Transistorized)
Ignition timing	3° B.T.D.C. at 1 200 r/min
Spark plug	NGK: CR8EK or ND: U24ETR
Battery	12V 36.0 kC (10 Ah)/10HR
Generator	Three-phase A.C. Generator
Fuse	30/15/15/15/10/10A
Headlight	12V 60/55W × 2 ..... E-02,03,24,28,33 12V 55W + 12V 55W ..... Others
Position light	12V 5W ..... Except for E-03,24,28,33
Turn signal light	12V 21W
License light	12V 5W
Brake light/Taillight	12V 21/5W × 2
Speedometer/Tachometer light	12V 0.84W × 3
Neutral indicator light	12V 1.7W
High beam indicator light	12V 1.7W
Turn signal indicator light	12V 3W
Fuel indicator light	12V 1.7W
Engine coolant temp. indicator light	LED

CAPACITIES

Fuel tank	17 L (4.5/3.7 US/Imp gal)
Engine oil, oil change	3 100 ml (3.3/2.7 US/Imp qt)
with filter change	3 300 ml (3.5/2.9 US/Imp qt)
overhaul	3 600 ml (3.8/3.2 US/Imp qt)
Engine coolant, including reserve	2 200 ml (2.3/1.9 US/Imp qt)
Front fork oil (each leg)	* 477 ml (16.1/16.8 US/Imp oz)

Specifications marked with asterisks (*) are exclusive to TL1000SW.
These specifications are subject to change without notice.

PERIODIC MAINTENANCE

CONTENTS

MAINTENANCE AND TUNE-UP PROCEDURES 10-2-1
SPARK PLUG 10-2-1

MAINTENANCE AND TUNE-UP PROCEDURES

This section describes the servicing procedures for each Periodic Maintenance item which differ from those of the TL1000SV ('97-model).
For details other than the following item, refer to the section 2.

SPARK PLUG (Except for U.S.A. and CANADA)

Inspect every 6 000 km (4 000 miles, 6 months) and Replace every 12 000 km (7 500 miles, 12 months).

TYPE AND HEAT RANGE

	Standard	Cold type
NGK	CR8EK	CR9EK or CR10EK
DENSO	U24ETR	U27ETR or U31ETR

SPARK PLUG GAP

Standard
Spark plug gap: 0.6–0.7 mm (0.024–0.028 in)

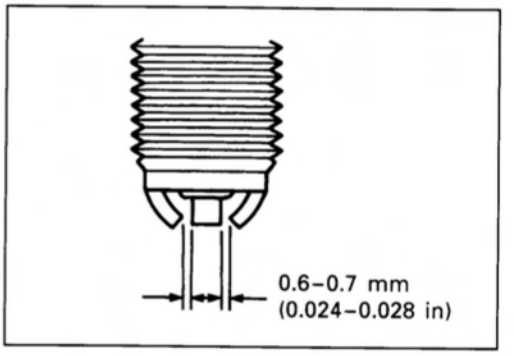

ENGINE

CONTENTS

ENGINE DISASSEMBLY AND REASSEMBLY 10-3-1
ENGINE DISASSEMBLY/REASSEMBLY 10-3-1
CAMSHAFT/CYLINDER HEAD 3A 10-3-2
CAMSHAFT 10-3-2
CYLINDER/PISTON 3B 10-3-2
PISTON RING 10-3-2
WATER PUMP/CLUTCH COVER 3D 10-3-2
WATER PUMP REMOVAL/INSTALLATION 10-3-2
CRANKCASE/TRANSMISSION/CRANKSHAFT/CONROD .. 3H 10-3-3
GEARSHIFT CAM/GEAR POSITION SWITCH 10-3-3
ENGINE LUBRICATION SYSTEM 3I 10-3-3
OIL PUMP 10-3-3

ENGINE DISASSEMBLY AND REASSEMBLY

ENGINE DISASSEMBLY/REASSEMBLY

Refer to pp. 3-18 and -78.

CRANKCASE BREATHER

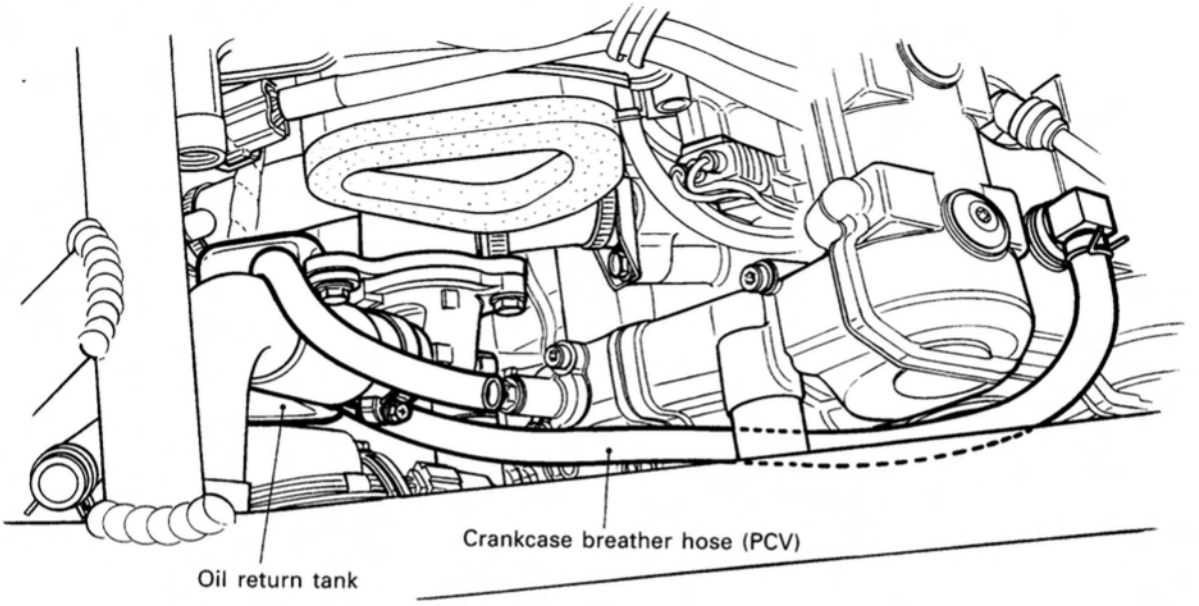

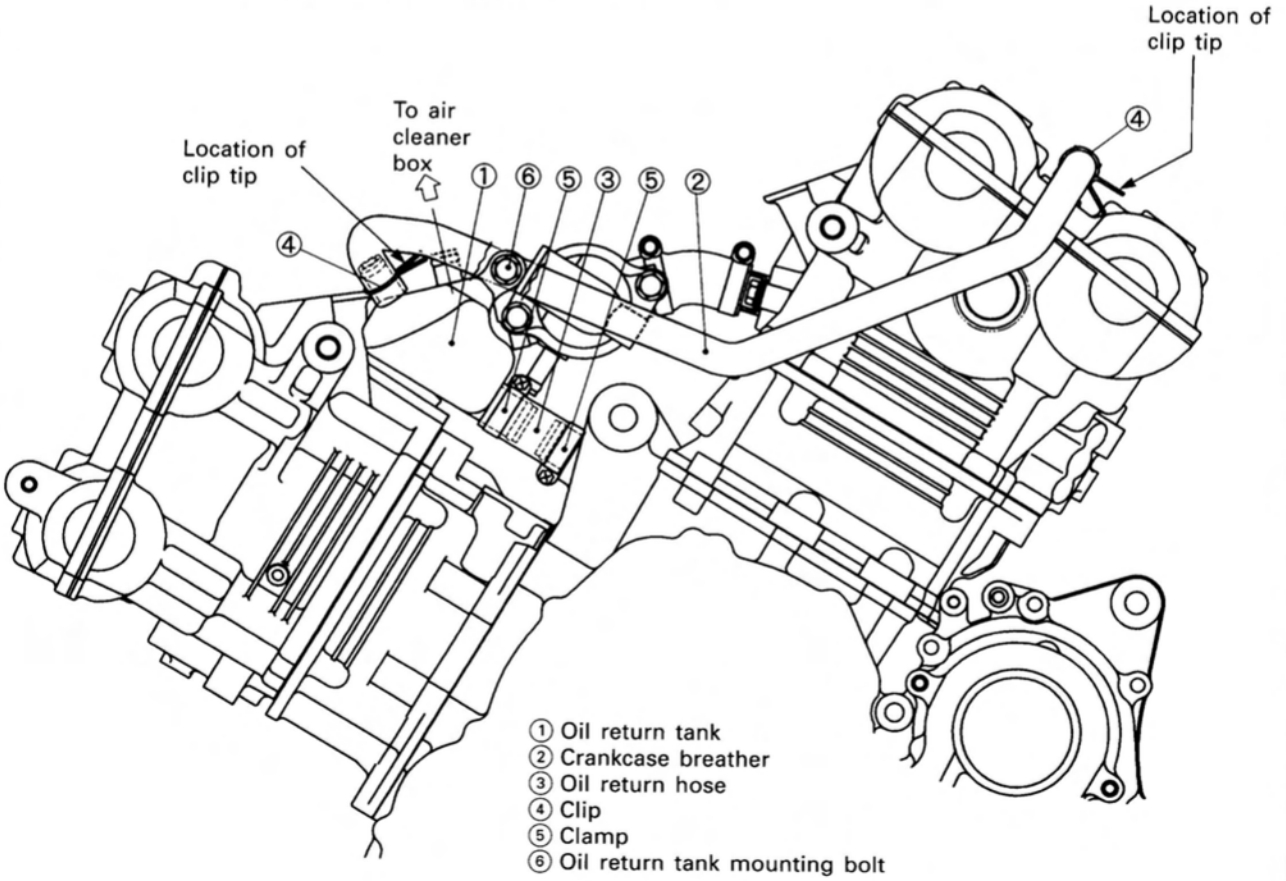

CAMSHAFT/CYLINDER HEAD 3A

CAMSHAFT

For details other than the following, refer to the section 3A of the TL1000S Service Manual.

The camshaft I.D. code has been changed which is stamped on the camshaft end.

	Intake cam	Exhaust cam
I.D. code	D	D

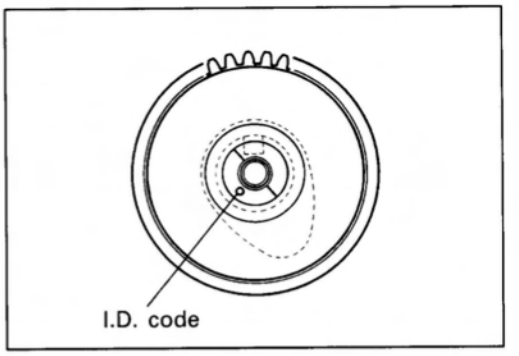

CYLINDER/PISTON 3B

PISTON RING

For details other than the following, refer to the section 3B of the TL1000S Service Manual.

Piston ring thickness

Standard
1st Ring: 0.86–0.91 mm (0.034–0.036 in)
1.38–1.40 mm (0.054–0.055 in)



Piston ring free end gap

Standard
1st Ring: Approx. 8.8 mm (0.35 in)

Service Limit
1st Ring: 7.0 mm (0.28 in)

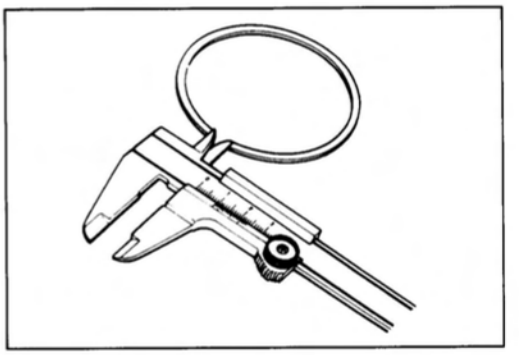

Standard
2nd Ring: Approx. 10.1 mm (0.40 in)

Service Limit
2nd Ring: 8.1 mm (0.32 in)

Piston ring end gap

Standard
2nd Ring: 0.30–0.45 mm (0.012–0.018 in)

Service Limit
2nd Ring: 0.7 mm (0.03 in)



WATER PUMP/CLUTCH COVER 3D

WATER PUMP REMOVAL/INSTALLATION

For details other than the following, refer to section 3D.

- Disconnect the by-pass hose ① from the water pump case.
- Installation is in the reverse order of removal.

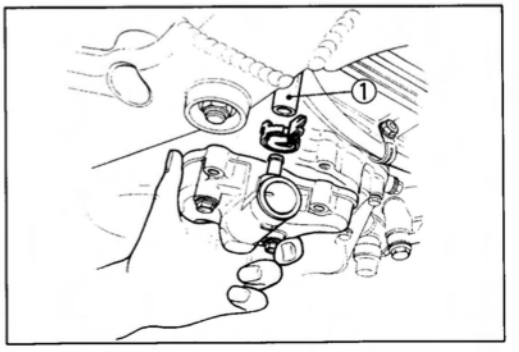

CRANKCASE/TRANSMISSION/ CRANKSHAFT/CONROD

3H

GEARSHIFT CAM/GEAR POSITION SWITCH

For details other than the following, refer to section 3H and see pp. 3-30, -35, -40 and -48.)

GEARSHIFT CAM

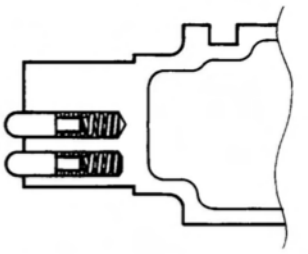

GEAR POSITION SWITCH

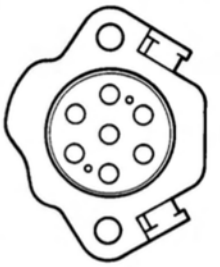

ENGINE LUBRICATION SYSTEM

3I

OIL PUMP

For details other than the following, refer to section 3I of the TL1000S Service Manual.

The oil pump has interchangeability between '97-model and '98-model.

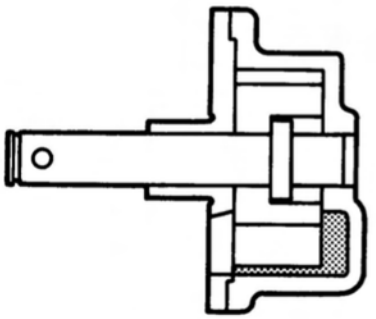

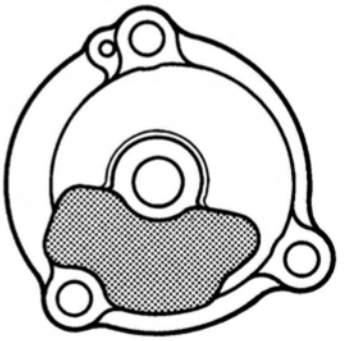

FI SYSTEM AND INTAKE AIR SYSTEM

CONTENTS

SELF-DIAGNOSIS FUNCTION 10-4-1
USER MODE 10-4-1
DEALER MODE 10-4-2
FUEL SYSTEM 10-4-3
FUEL TANK LIFT-UP 10-4-3
LOWERING FUEL TANK 10-4-3

SELF-DIAGNOSIS FUNCTION

The self-diagnosis function is incorporated in the ECM. The function has two modes, "User mode" and "Dealer mode". The user can only be notified by the LCD (DISPLAY) panel and LED lamp. To check the function of the individual FI system devices, the dealer mode is prepared. In this check, the special tool is necessary to read the code of the malfunction items.

USER MODE

MALFUNCTION	LCD (DISPLAY) INDICATION	LED LAMP INDICATION	INDICATION MODE
"NO"	Coolant Temp.	Coolant Temp./ Oil Pressure	———
"YES"	Coolant Temp. and "FI" letters *1	LED lamp turns ON.	Each 2 sec. Temp. or "FI" is indicated.
Engine can start			
Engine can not start	"FI" letter *2	LED lamp turns ON and blinks.	"FI" is indicated continuously.

*1
When one of signals is not received by ECM, the fail-safe circuit works and injection is not stopped. This case is indicated by "FI" and coolant temp. in the LCD panel and motorcycle can run.

*2
The injection signal is stopped, when the signal is not sent to ECM from the camshaft position sensor, crankshaft position sensor, tip over sensor, #1/#2 ignition, #1/#2 injector, fuel pump relay or ignition switch. This case is indicated by "FI" in the LCD panel when depressing the starter button. Motorcycle does not run.

"CHEC": The LCD panel indicates "CHEC" when no communication signal from the ECM receives for 5 seconds.
For Example:
The ignition switch is turned ON, and the engine stop switch is turned OFF. In this case, the speedometer does not receive any signal from the ECM, and it indicates "CHEC".
If the CHEC is indicated, the LCD does not indicate the trouble code. It is necessary to check the wiring harness between ECM and speedometer couplers.
The possible cause of this indication is as follows;
Engine stop switch is in OFF position. Side-stand/ignition inter-lock system is not working.
Ignition fuse is burnt.

NOTE:
The LED lamp also turns ON when engine coolant temperature is high or oil pressure is low.

DEALER MODE

The defective function is memorized in the computer. Use the special tool's coupler to connect to the dealer mode coupler. The memorized malfunction code is displayed on LCD (DISPLAY) panel. Malfunction means that the ECM does not receive signal from the devices. These affected devices are indicated in the code form.

TOOL 09930-82710: Mode select switch

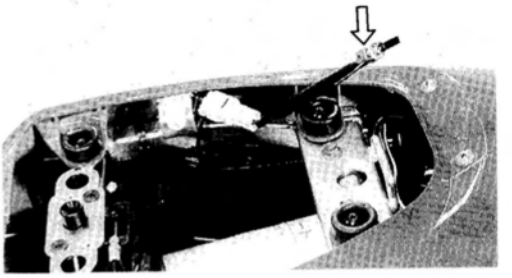

⚠ CAUTION

Before checking the malfunction code, do not disconnect the ECM lead wire couplers. If the couplers from the ECM are disconnected, the malfunction code memory is erased and the malfunction code can not checked.

MALFUNCTION	LCD (DISPLAY) INDICATION	LED LAMP INDICATION	INDICATION MODE
"NO"	c00	Operating as oil pressure indicator	———
"YES"	c✳✳ code is indicated from small code to large one.		Each 2 sec. code is indicated.

FUEL SYSTEM

FUEL TANK LIFT-UP

- Remove the front seat.
- Remove the bolt top caps ①.

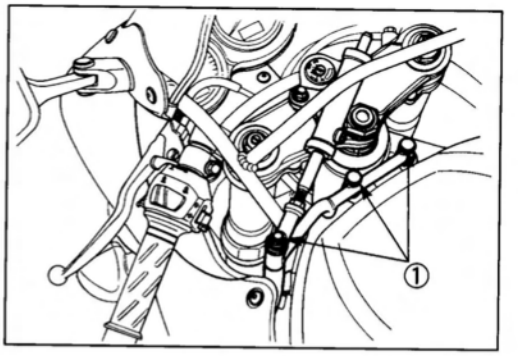

- Remove the steering damper mounting bolt ② and steering damper stay mounting bolts ③.

TOOL 09900-00410: Hexagon wrench set

NOTE:
Be careful not to damage the fuel tank. Place a rag between the stay and fuel tank.

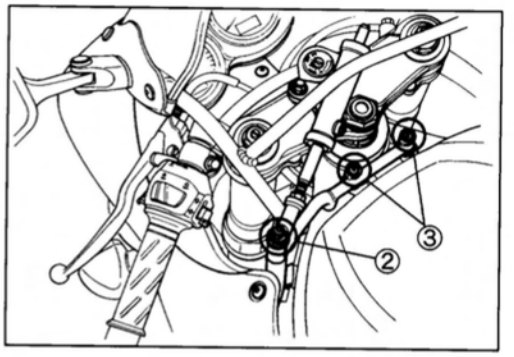

- Remove the upper steering damper stay ④.

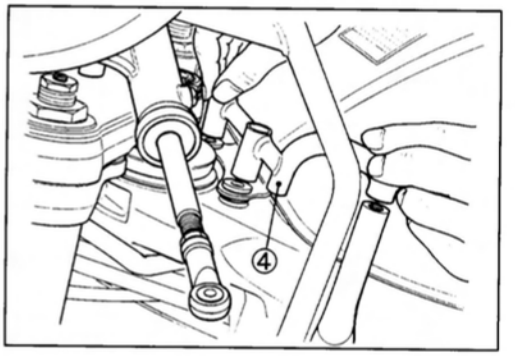

- Lift and support the fuel tank with its prop stay.

NOTE:
To prevent the damper rod hitting with the fuel tank, move the damper rod ahead of the mirror brace.

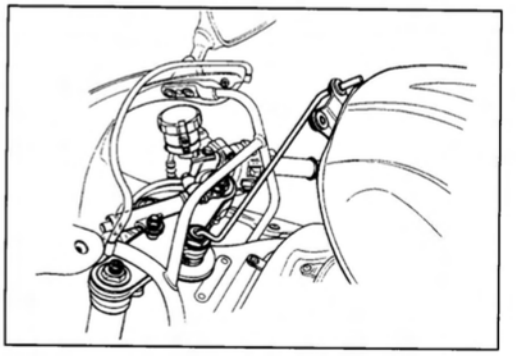

LOWERING FUEL TANK

- Remove the prop stay and slowly lower the fuel tank back into place.
- Place the upper steering damper stay ①.
- Refer to page 6-5 for the upper steering damper stay and steering damper installation.

NOTE:
Be careful not to damage the fuel tank. Place a rag between the stay and fuel tank.

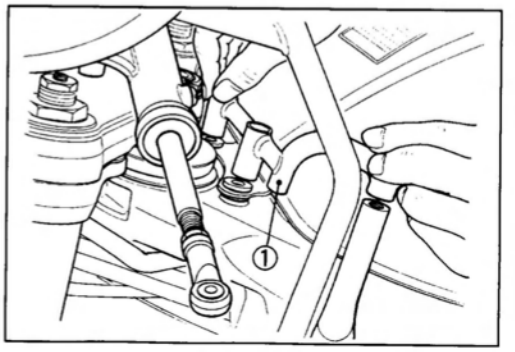

COOLING SYSTEM

CONTENTS

COOLING SYSTEM 10-5-1
CONSTRUCTION 10-5-1
THERMOSTAT 10-5-2
REMOVAL 10-5-2
INSPECTION 10-5-2
INSTALLATION 10-5-3
ENGINE COOLANT TEMPERATURE SENSOR 10-5-3
REMOVAL 10-5-3
INSPECTION 10-5-4
INSTALLATION 10-5-4
BY-PASS HOSE 10-5-4
REMOVAL 10-5-4
INSTALLATION 10-5-4

COOLING SYSTEM

CONSTRUCTION

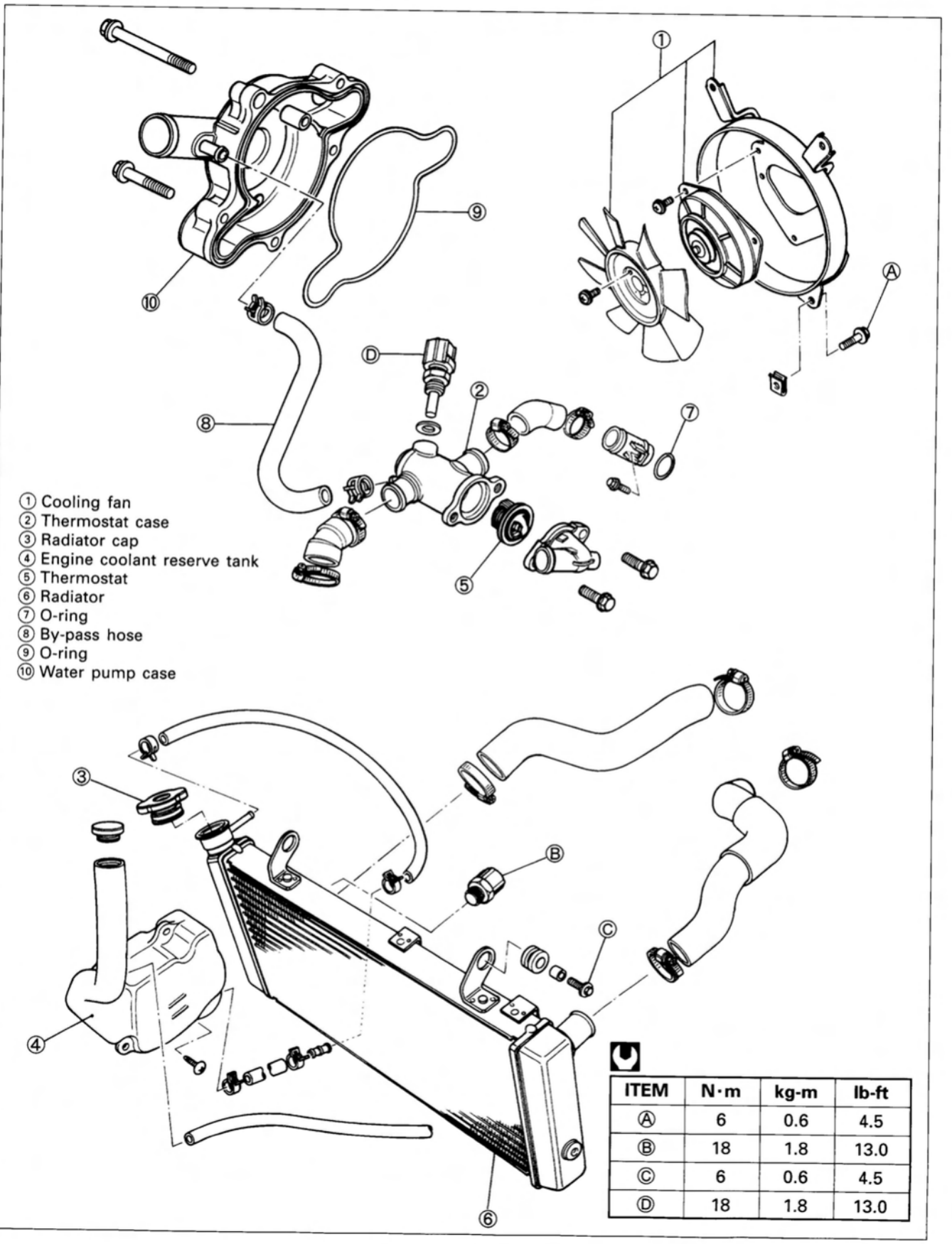

ITEM	N·m	kg-m	lb-ft
Ⓐ	6	0.6	4.5
Ⓑ	18	1.8	13.0
Ⓒ	6	0.6	4.5
Ⓓ	18	1.8	13.0

THERMOSTAT

REMOVAL

- Remove the RH rear view mirror and RH fairing. (See pp.6-1 f..)
- Remove the front seat.

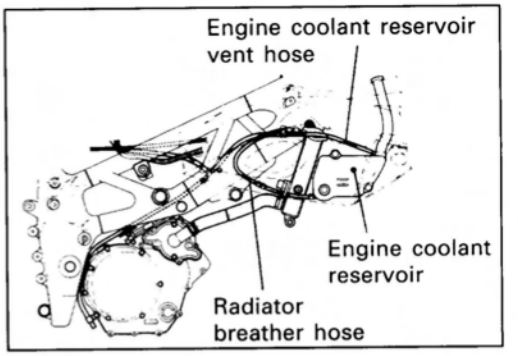

- Disconnect the radiator breather hose from the radiator and reservoir vent hose from the reservoir.

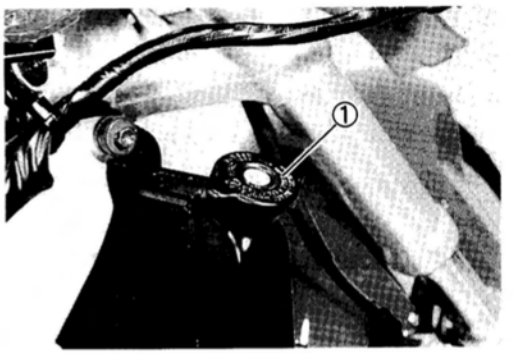

- Remove the radiator cap ① and engine coolant drain bolts ② and ③.
- Tighten the drain bolts ② and ③ after engine coolant is drained.

Engine coolant drain bolt
(M6): 5.5 N·m (0.55 kg-m, 4.0 lb-ft)
(M8): 13 N·m (1.3 kg-m, 9.5 lb-ft)

⚠WARNING

*** Do not open the radiator cap when the engine is hot, as you may be injured by escaping hot liquid or vapor.**
*** Engine coolant may be harmful if swallowed or if it comes in contact with skin or eyes. If engine coolant gets into the eyes or in contact with the skin, flush thoroughly with plenty of water. If swallowed, induce vomiting and call physician immediately!**

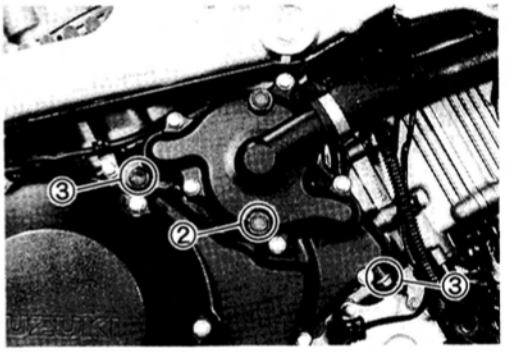

- Remove the thermostat case bolts by using a 10 mm universal socket wrench.

NOTE:
Be careful not to damage the frame tube. Use a rag or other sheet for protection.

- Remove the thermostat.

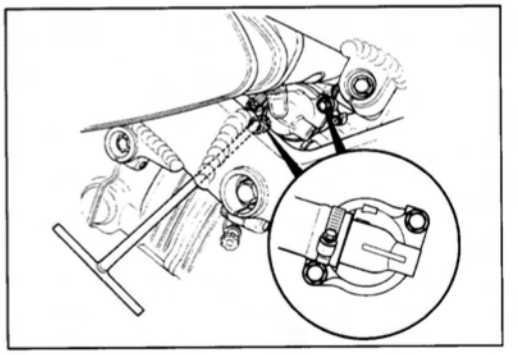

INSPECTION

The following service data are different from those of the TL1000SV ('97-MODEL).

Standard
Thermostat valve opening temp.
80.5–83.5°C (176.9–182.3°F)
Thermostat valve lift
Over 8 mm at 95°C (Over 0.31 in at 203°F)

(See p. 5-12.)

INSTALLATION

Installation is in the reverse order of removal.
Pay attention to the following points.

- Apply grease to the rubber seal in the thermostat.

99000-25030: SUZUKI SUPER GREASE "A"

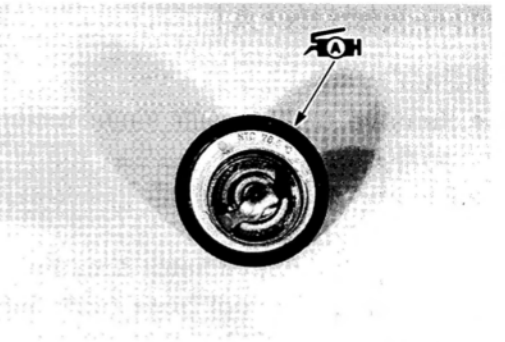

- The air bleeder hole Ⓐ of the thermostat faces upside.
- Be sure to route the water hose. (See p. 8-26.)
- After installing the thermostat, be sure to add engine coolant. (See p. 2-15.)

Water drain bolt (M6): 5.5 N·m (0.55 kg-m, 4.0 lb-ft)
(M8): 13 N·m (1.3 kg-m, 9.5 lb-ft)
Air bleeder bolt (M8): 13 N·m (1.3 kg-m, 9.5 lb-ft)

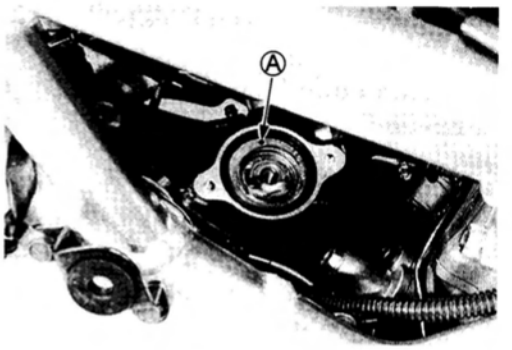

ENGINE COOLANT TEMPERATURE SENSOR

The engine coolant temperature sensor location has been changed from the radiator to the thermostat case.

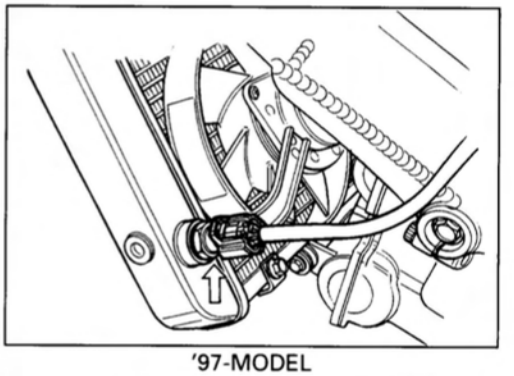

'97-MODEL

REMOVAL

- Remove the RH rear view mirror and RH fairing. (See pp. 6-1 f..)
- Remove the front seat.
- Disconnect the radiator breather hose and reservoir hose. (See previous page.)
- Remove the radiator cap and engine coolant drain bolts. (See previous page.)
- Lift and support the fuel tank with its prop stay. (See p. 4-1.)
- Remove the air cleaner box. (See pp. 4-54..)

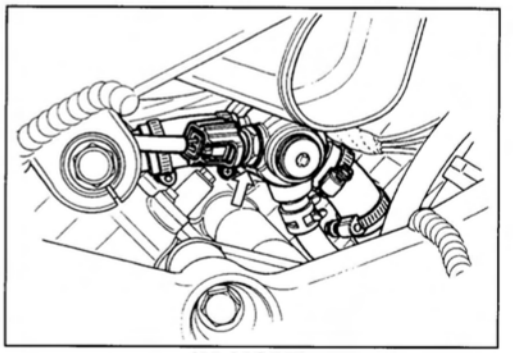

'98-MODEL

- After disconnecting the lead wire coupler, remove the engine coolant temperature sensor.

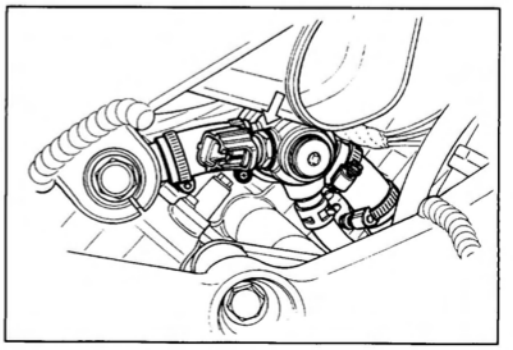

INSPECTION

Inspection procedure and specification for the engine coolant temperature sensor are the same as the '97-model. (See p. 5-10.)

INSTALLATION

- Installation is in the reverse order of removal. (See p. 5-11.)

BY-PASS HOSE

The by-pass hose has been added between thermostat case and water pump.

REMOVAL

- Remove the RH rear view mirror and RH fairing. (See pp. 6-1 f..)
- Remove the front seat.
- Disconnect the radiator breather hose and reservoir hose. (See p. 5-2.)
- Remove the radiator cap and engine coolant drain bolts. (See p. 5-2.)
- Lift and support the fuel tank with its prop stay. (See p. 4-1.)

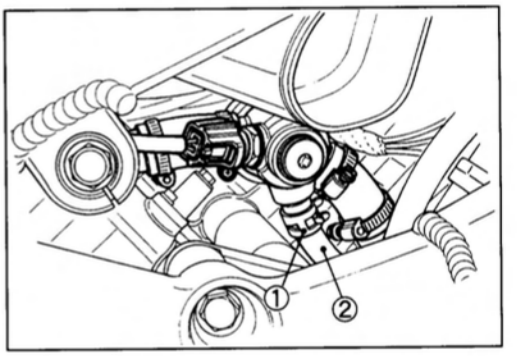

- Slide the by-pass hose clamps ① at the thermostat case and water pump, then disconnect the by-pass hose ②.

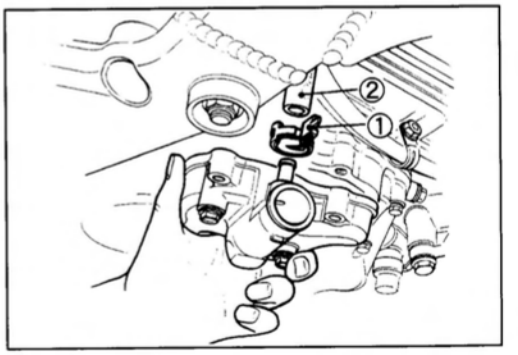

INSTALLATION

- Installation is in the reverse order of removal.

CHASSIS

CONTENTS

FRONT FORK 10-6-1
SUSPENSION SETTING 10-6-1
STEERING 10-6-2
STEERING DAMPER 10-6-2
STEERING DAMPER REMOVAL 10-6-3
STEERING DAMPER INSPECTION 10-6-3
STEERING DAMPER INSTALLATION 10-6-3
STEERING DAMPER STAY REMOVAL 10-6-4
STEERING DAMPER STAY INSTALLATION 10-6-4
REAR SUSPENSION 10-6-6
SUSPENSION SETTING 10-6-6

FRONT FORK

The following service data are different from those of the TL1000SV ('97-MODEL).

Fork oil level: 112 mm (4.4 in)

Fork oil capacity (each leg): 477 ml (16.1/16.8 US/Imp oz)

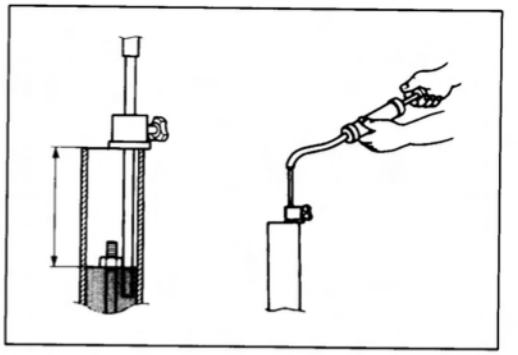

SUSPENSION SETTING

SPRING PRE-LOAD ADJUSTMENT

There are eight grooved lines on the side of the spring adjuster. Position 0 provides the maximum spring pre-load and position 8 provides the minimum spring pre-load. (STD position: 4)

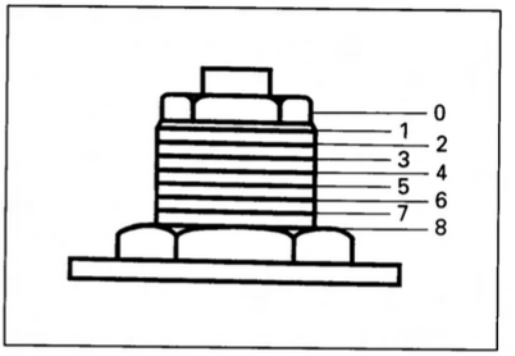

DAMPING FORCE ADJUSTMENT

(Rebound side)

Fully turn the damping force adjuster ① clockwise. It is at stiffest position and turn it out to standard setting position. (STD position: 3/4 turn out)

(Compression side)

Fully turn the damping force adjuster ② clockwise. It is at stiffest position and turn it out to standard setting position. (STD position: 1-1/4 turns out)

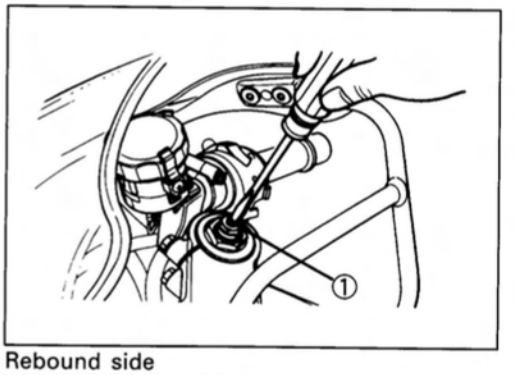

Rebound side

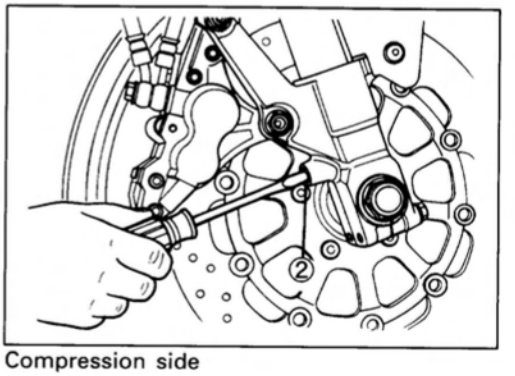

Compression side

STANDARD FRONT SUSPENSION SETTING

		Spring pre-load adjuster	Damping force adjuster	
			Rebound	Compression
Solo riding	Softer	4	7/8 turn out	1-3/8 turns out
	Standard	4	3/4 turn out	1-1/4 turns out
	Stiffer	4	2/4 turn out	1-1/4 turns out
Dual riding		4	3/4 turn out	1-1/4 turns out

⚠WARNING

Be sure to adjust the spring pre-load and damping force on both front fork legs equally.

STEERING

STEERING DAMPER

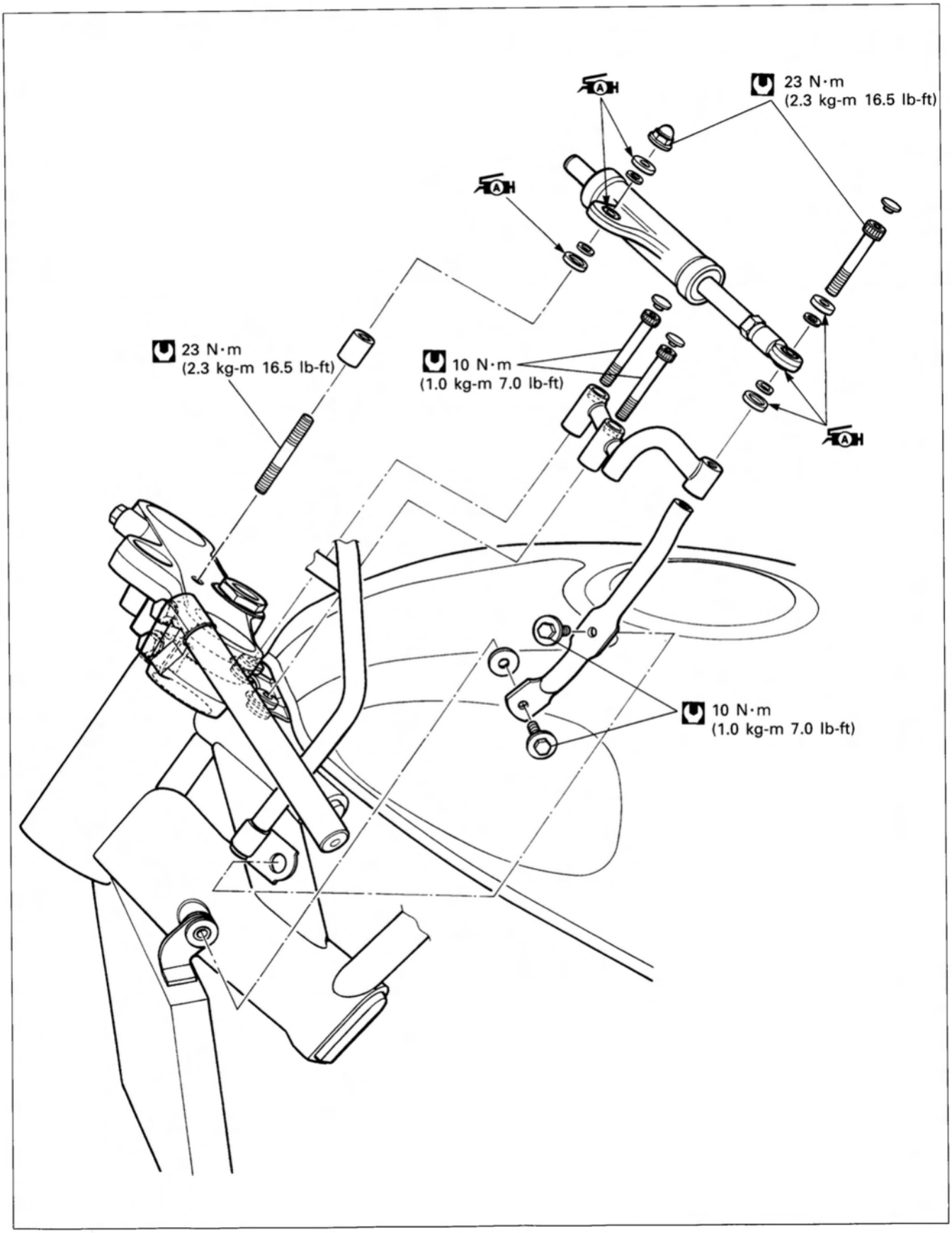

STEERING DAMPER REMOVAL

- Remove the bolt top cap ①.
- Remove the steering damper by removing the bolt ② and nut ③.

09900-00410: Hexagon wrench set

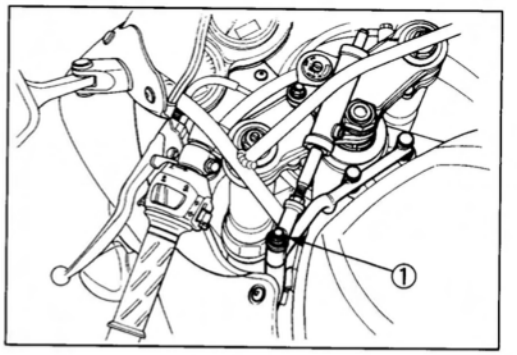

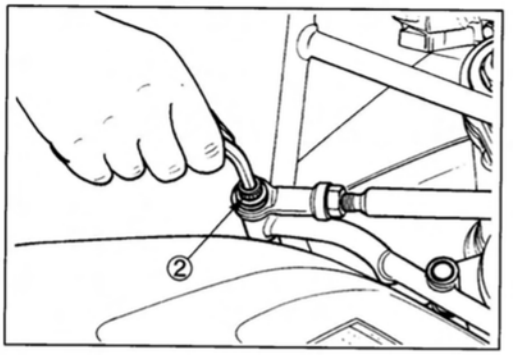

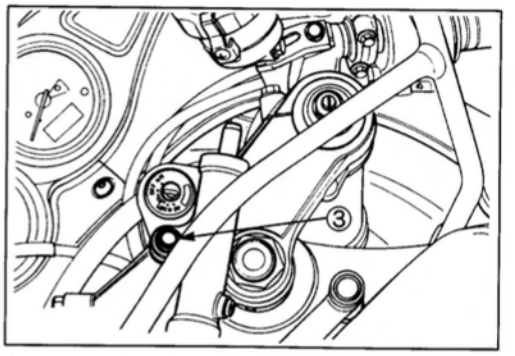

STEERING DAMPER INSPECTION

Inspect the steering damper body, bearing and oil seal for damage and oil leakage.
Move the steering damper rod by hand to inspect for a smooth movement.
If any defects are found, replace the steering damper with a new one.

STEERING DAMPER INSTALLATION

- Apply grease to the bearings and dust seals before installing.

99000-25030: SUZUKI SUPER GREASE "A"

- Fit the shims and dust seals on both sides of the bearing.

NOTE:
Wipe off any oil residue with a clean cloth.

- Tighten the steering damper mounting bolt and nut to the specified torque.

Steering damper mounting bolt/nut:
23 N·m (2.3 kg-m, 16.5 lb-ft)

- Fit the bolt top cap.

NOTE:
Check the smoothness of the steering, turn the handlebars several times. If feel any unusual resistance, recheck the installation and hardware torque.

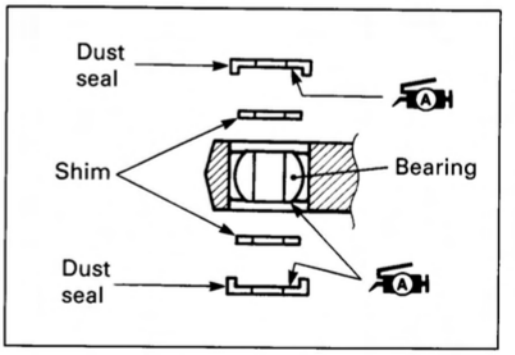

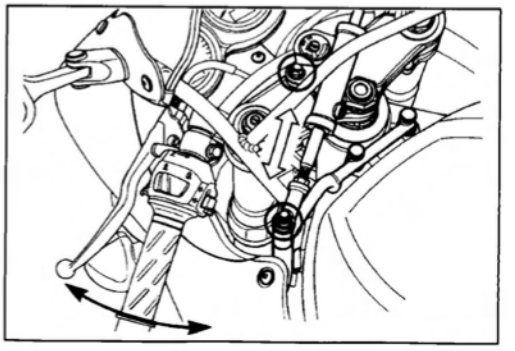

STEERING DAMPER STAY REMOVAL

- Remove the bolt top caps ①.

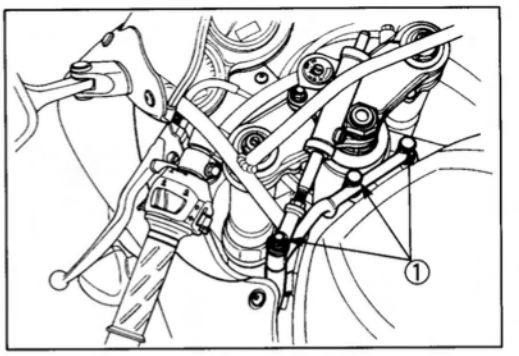

- Remove the steering damper mounting bolt ② and steering damper stay mounting bolts ③.

TOOL 09900-00410: Hexagon wrench set

NOTE:
Be careful not to damage the fuel tank. Place a rag between the stay and fuel tank.

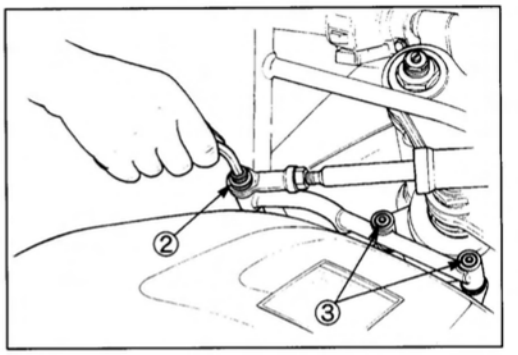

- Remove the upper steering damper stay ④.

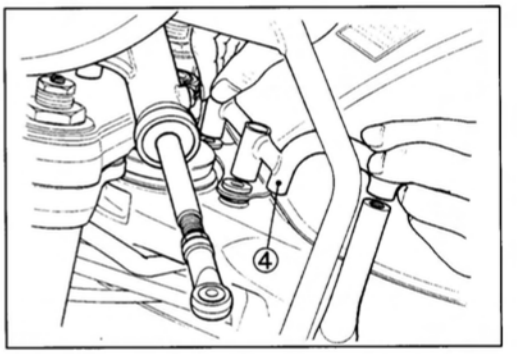

- Remove the lower steering damper stay ⑤ by removing the bolts ⑥.

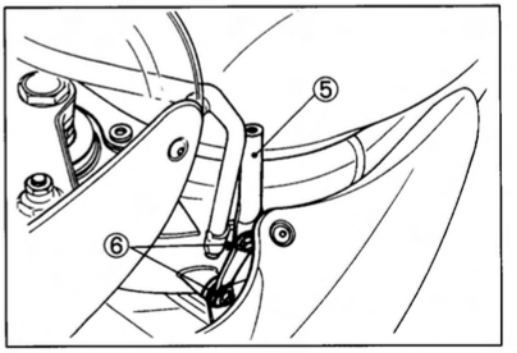

STEERING DAMPER STAY INSTALLATION

- Tighten the lower steering damper stay mounting bolts ① and ② to the specified torque.

Steering damper stay mounting bolt: 10 N·m (1.0 kg-m, 7.0 lb-ft)

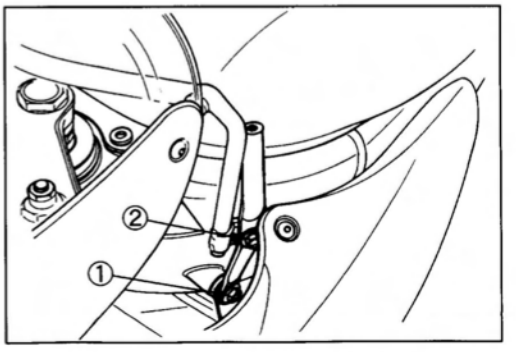

- Tighten the steering damper stay mounting bolts ③ and steering damper mounting bolt ④ to the specified torque.

Steering damper stay mounting bolt: 10 N·m (1.0 kg-m, 7.0 lb-ft)
Steering damper mounting bolt: 23 N·m (2.3 kg-m, 16.5 lb-ft)

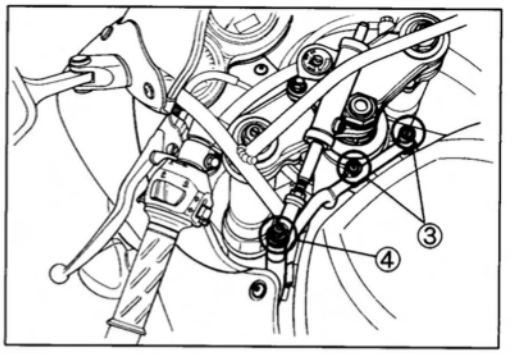

NOTE:
Be careful not to damage the fuel tank. Place a rag between the stay and fuel tank.

- Fit the bolt top caps.

NOTE:
Check the smoothness of the steering, turn the handlebars several times. If feel any unusual resistance, recheck the installation and hardware torque.

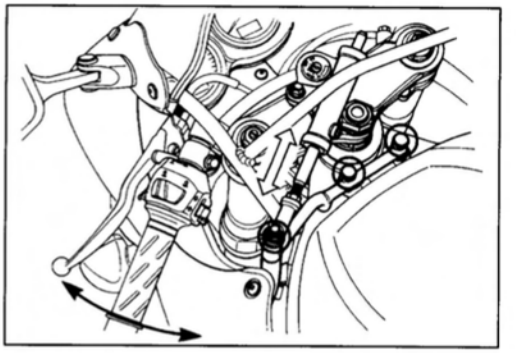

REAR SUSPENSION

SUSPENSION SETTING

SPRING PRE-LOAD

STD Spring set length: 180.5 mm (7.11 in)

After installing the rear suspension, adjust the damping force as follows.

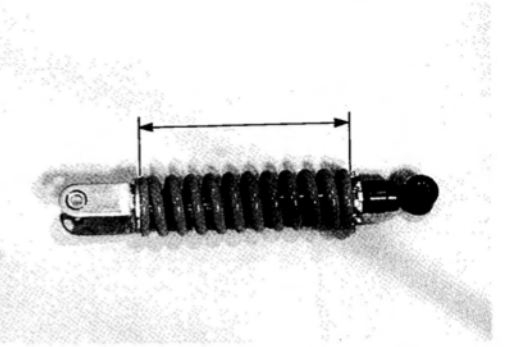

DAMPING FORCE ADJUSTMENT

(Rebound side)

Fully turn the damping force adjuster ① clockwise. It is at stiffest position and turn it out to standard setting position. (STD position is 2-1/4 turns out.)

(Compression side)

Fully turn the damping force adjuster ② clockwise. It is at stiffest position and turn it out to standard setting position. (STD position is 1-1/4 turns out.)

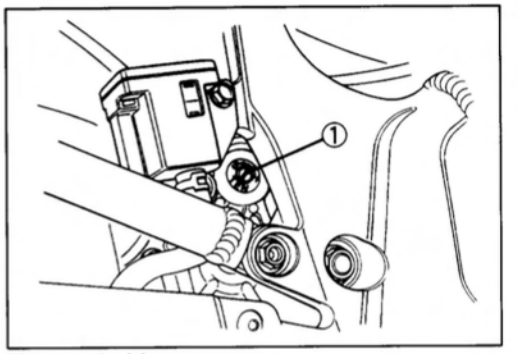

Rebound side

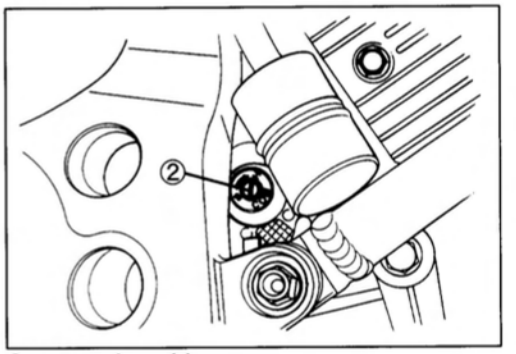

Compression side

STANDARD SUSPENSION SETTING

		Spring set length	Damping force adjuster	
			Rebound	Compression
Solo riding	Softer	180.5 mm (7.11 in)	2-3/8 turns out	1-3/8 turns out
	Standard	180.5 mm (7.11 in)	2-1/4 turns out	1-1/4 turns out
	Stiffer	180.5 mm (7.11 in)	2 turns out	1-1/4 turns out
Dual riding		180.5 mm (7.11 in)	2-1/4 turns out	1-1/4 turns out

NOTE:

The STD setting position varies a little from each motorcycle and it can be distinguished by the following painted colors.

No paint	Painted Blue	Painted Red
If there is no paint on the punch mark, make sure that the two punch marks align.	If there is Blue paint on the punch mark, turn the adjuster clockwise until the two punch marks align.	If there is Red paint on the punch mark, turn the adjuster counterclockwise until the two punch marks align.

SERVICING INFORMATION

CONTENTS

WIRE HARNESS, CABLE AND HOSE ROUTING 10-8-1
FUEL SYSTEM HOSE ROUTING 10-8-1
PAIR (AIR SUPPLY) SYSTEM HOSE ROUTING 10-8-2
SERVICE DATA 10-8-3

WIRE HARNESS, CABLE AND HOSE ROUTING

FUEL SYSTEM HOSE ROUTING

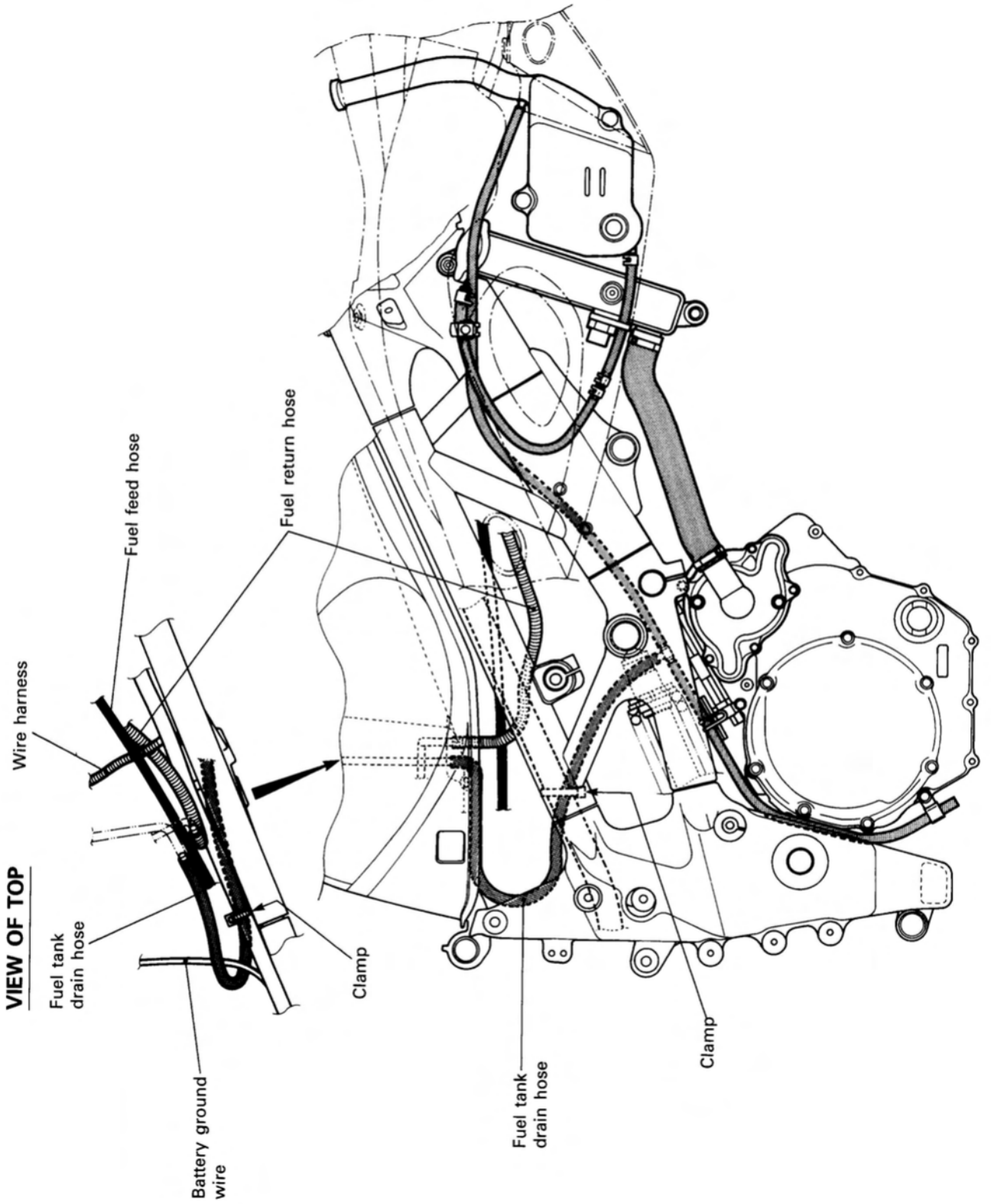

PAIR (AIR SUPPLY) SYSTEM HOSE ROUTING (For E-03, 18, 22, 28, 33 and 39)

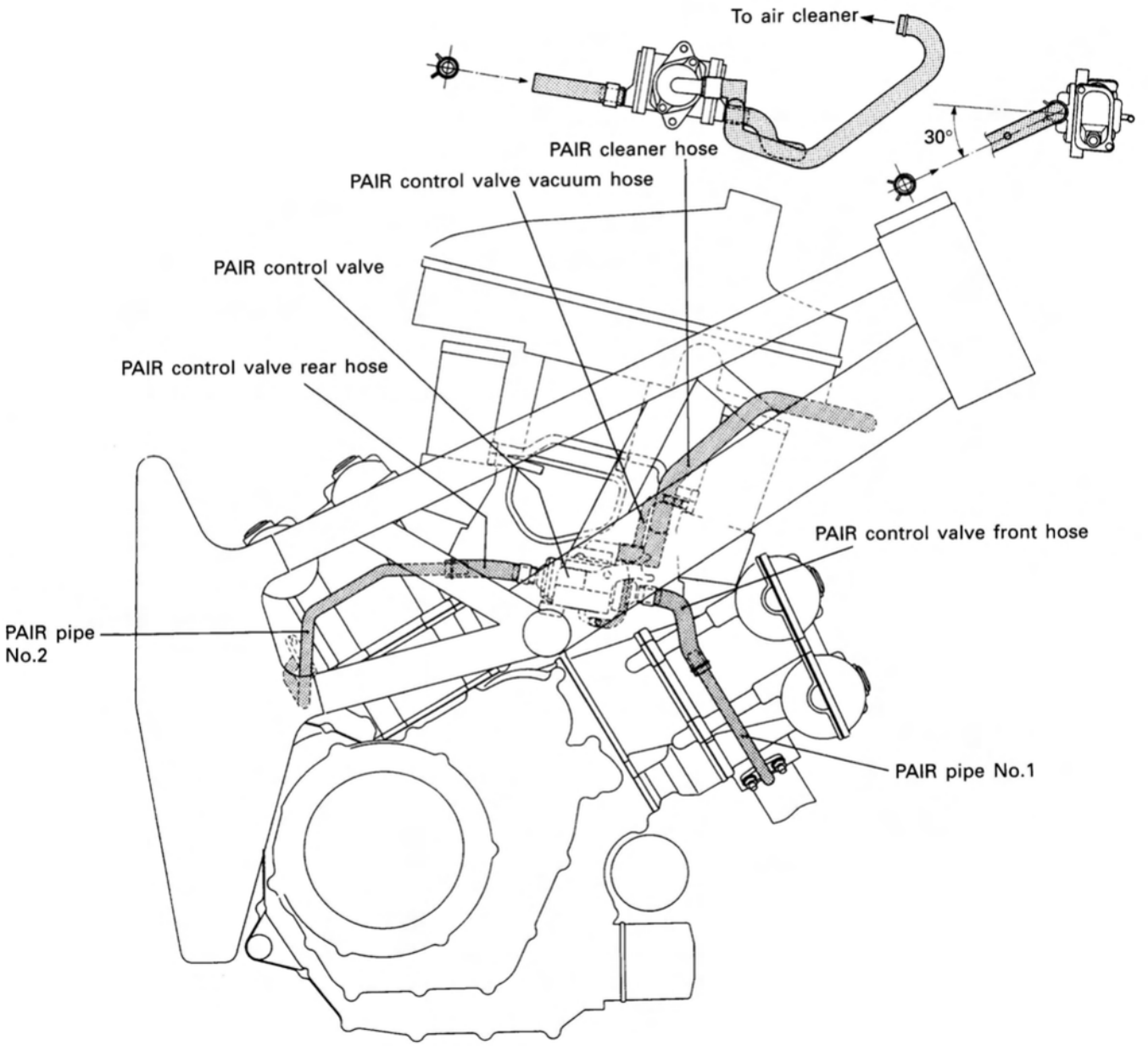

SERVICE DATA

VALVE + GUIDE

Unit: mm (in)

ITEM	STANDARD		LIMIT
Valve diam.	IN.	40 (1.56)	———
	EX.	33 (1.30)	———
Tappet clearance (when cold)	IN.	0.10–0.20 (0.004–0.008)	———
	EX.	0.20–0.30 (0.008–0.012)	———
Valve guide to valve stem clearance	IN.	0.010–0.037 (0.0004–0.0015)	———
	EX.	0.030–0.057 (0.0012–0.0022)	———
Valve stem deflection	IN. & EX.	———	0.35 (0.014)
Valve guide I.D.	IN. & EX.	5.500–5.512 (0.2165–0.2170)	———
Valve stem O.D.	IN.	5.475–5.490 (0.2156–0.2161)	———
	EX.	5.455–5.470 (0.2148–0.2154)	———
Valve stem runout	IN. & EX.	———	0.05 (0.002)
Valve head thickness	IN. & EX.	———	0.5 (0.02)
Valve seat width	IN. & EX.	0.9–1.1 (0.035–0.043)	———
Valve head radial runout	IN. & EX.	———	0.03 (0.001)
Valve spring free length (IN. & EX.)	INNER	———	37.0 (1.46)
	OUTER	———	40.7 (1.60)
Valve spring tension (IN. & EX.)	INNER	6.2 kg (13.7 lbs) at length 33.1 mm (1.30 in)	———
	OUTER	15.4 kg (33.95 lbs) at length 36.6 mm (1.44 in)	———

CAMSHAFT + CYLINDER HEAD

Unit: mm (in)

ITEM	STANDARD			LIMIT
Cam height	IN.	E-04	34.770–34.838 (1.3689–1.3716)	34.47 (1.357)
		Others	37.770–37.838 (1.4842–1.4897)	37.47 (1.475)
	EX.	36.380–36.448 (1.4323–1.4350)		36.08 (1.420)

ITEM	STANDARD		LIMIT
Camshaft journal oil clearance	IN. & EX.	0.019–0.053 (0.0007–0.0021)	0.150 (0.0059)
Camshaft journal holder I.D.	IN. & EX.	22.012–22.025 (0.8666–0.8671)	———
Camshaft journal O.D.	IN. & EX.	21.972–21.993 (0.8650–0.8659)	———
Camshaft runout	IN. & EX.	———	0.10 (0.004)
No.2 cam drive idle gear/sprocket thrust clearance	0.15–0.29 (0.006–0.011)		———
Cylinder head distortion	———		0.05 (0.002)

CYLINDER + PISTON + PISTON RING

Unit: mm (in)

ITEM	STANDARD			LIMIT
Compression pressure (Automatic de-comp. actuated)	1 000–1 400 kPa (10–14 kg/cm^2, 142–199 psi)			700 kPa (7 kg/cm^2, 128 psi)
Compression pressure difference	———			200 kPa (2 kg/cm^2, 28 psi)
Piston to cylinder clearance	0.015–0.025 (0.0006–0.0010)			0.12 (0.0047)
Cylinder bore	98.000–98.015 (3.8583–3.8589)			Nicks or Scratches
Piston diam.	97.980–97.995 (3.8575–3.8581) Measure at 10 mm (0.4 in) from the skirt end.			97.880 (3.8535)
Cylinder distortion	———			0.05 (0.002)
Piston ring free end gap	1st	Approx.	*8.8 (0.35)	*7.0 (0.28)
	2nd	Approx.	*10.1 (0.40)	*8.1 (0.32)
Piston ring end gap	1st	0.15–0.35 (0.006–0.014)		0.5 (0.02)
	2nd	RN	*0.30–0.45 (0.012–0.018)	*0.7 (0.03)
Piston ring to groove clearance	1st	———		0.18 (0.0071)
	2nd	———		0.15 (0.0059)
Piston ring groove width	1st	0.93–0.95 (0.0366–0.0374)		———
		1.55–1.57 (0.0610–0.0618)		———
	2nd	1.01–1.03 (0.0398–0.0406)		———
	Oil	2.51–2.53 (0.0988–0.0996)		———

ITEM	STANDARD		LIMIT
Piston ring thickness	1st	*0.86–0.91 (0.034–0.036)	———
		*1.38–1.40 (0.054–0.055)	———
	2nd	0.97–0.99 (0.038–0.039)	———
Piston pin bore I.D.	22.002–22.008 (0.8662–0.8665)		22.030 (0.8673)
Piston pin O.D.	21.992–22.000 (0.8658–0.8661)		21.980 (0.8654)

CONROD + CRANKSHAFT

Unit: mm (in)

ITEM	STANDARD	LIMIT
Conrod small end I.D.	22.010–22.018 (0.8665–0.8668)	22.040 (0.8677)
Conrod big end side clearance	0.17–0.32 (0.007–0.013)	0.50 (0.020)
Conrod big end width	21.95–22.00 (0.864–0.866)	———
Crank pin width	44.17–44.22 (1.739–1.741)	———
Conrod big end oil clearance	0.032–0.056 (0.0013–0.0022)	0.080 (0.0031)
Crank pin O.D.	44.976–45.000 (1.7707–1.7717)	———
Crankshaft journal oil clearance	0.018–0.045 (0.0007–0.0018)	0.080 (0.0031)
Crankshaft journal O.D.	47.985–48.000 (1.8892–1.8898)	———
Crankshaft thrust clearance	0.050–0.100 (0.0020–0.0039)	———
Crankshaft thrust bearing thickness	1.925–2.175 (0.0758–0.0856)	———

OIL PUMP

ITEM	STANDARD	LIMIT
Oil pump reduction ratio	1.301 (57/31 × 29/41)	———
Oil pressure (at 60°C, 140°F)	Above 300 kPa (3.0 kg/cm^2, 43 psi) Below 600 kPa (6.0 kg/cm^2, 85 psi) at 3 000 r/min.	———

CLUTCH

Unit: mm (in)

ITEM	STANDARD	LIMIT
Clutch lever play	10–15 (0.4–0.6)	———
Drive plate thickness	2.92–3.08 (0.115–0.121)	———
Drive plate claw width	———	12.9 (0.51)
Clutch release screw	1/4 turn back	———

ITEM	STANDARD	LIMIT
Driven plate distortion	———	0.10 (0.004)
Clutch spring free length	———	29.6 (1.17)

THERMOSTAT + RADIATOR + FAN

ITEM		STANDARD	LIMIT
Thermostat valve opening temperature		*80.5–83.5°C (176.9–182.3°F)	———
Thermostat valve lift		*Over 8 mm (0.31 in) at 95°C (203°F)	———
Radiator cap valve opening pressure		110 kPa (1.1 kg/cm^2, 15.6 psi)	———
Cooling fan thermo-switch operating temperature	OFF→ON	Approx. 105°C (221°F)	———
	ON→OFF	Approx. 100°C (212°F)	———
Engine coolant temperature sensor resistance	20°C (68°F)	Approx. 2.45 kΩ	———
	50°C (122°F)	Approx. 0.811 kΩ	———
	80°C (176°F)	Approx. 0.318 kΩ	———
	110°C (230°F)	Approx. 0.142 kΩ	———
	130°C (266°F)	Approx. 0.088 kΩ	———

TRANSMISSION + DRIVE CHAIN

Unit: mm (in) Except ratio

ITEM		STANDARD	LIMIT
Primary reduction ratio		1.838 (57/31)	———
Final reduction ratio		2.235 (38/17)	———
Gear ratios	Low	2.666 (32/12)	———
	2nd	1.933 (29/15)	———
	3rd	1.500 (27/18)	———
	4th	1.227 (27/22)	———
	5th	1.086 (25/23)	———
	Top	1.000 (24/24)	———
Shift fork to groove clearance		0.1–0.3 (0.004–0.012)	0.50 (0.020)
Shift fork groove width		5.0–5.1 (0.197–0.201)	———
Shift fork thickness		4.8–4.9 (0.189–0.193)	———
Drive chain	Type	RK50GSVZ1	———
	Links	104 links, ENDLESS	———
	20-pitch length	———	319.4 (12.6)

ITEM	STANDARD	LIMIT
Drive chain slack	25–35 (1.0–1.4)	———
Gearshift lever height	60 (2.4)	———

INJECTOR + FUEL PUMP + FUEL PRESSURE REGULATOR

ITEM	SPECIFICATION	NOTE
Injector resistance	11–16 Ω at 20°C (68°F)	
Fuel pump discharge amount	Approx. 1 L (1.1/0.9 US/Imp qt) for 1 minute at 2.9 kg/cm^2 (290 kPa, 41 psi)	
Fuel pressure regulator operating set pressure	Approx. 2.9 kg/cm^2 (290 kPa, 41 psi)	

FI-SENSORS + INTAKE AIR CONTROL VALVE

ITEM		SPECIFICATION		NOTE
CMP sensor resistance		0.9–1.3 kΩ		
CMP sensor peak voltage		More than 0.8V		
CKP sensor resistance		184–276 Ω		
CKP sensor peak voltage		More than 4V		
IAP sensor input voltage		4.5–5.5V		
IAP sensor output voltage		Approx. 1.8V at idle speed		
TP sensor input voltage		4.5–5.5V		
TP sensor resistance	(Closed)	Approx. 1.2 kΩ		
	(Opened)	Approx. 4.4 kΩ		
TP sensor output voltage	(Closed)	Approx. 1.1V		
	(Opened)	Approx. 4.2V		
ECT sensor input voltage		4.5–5.5V		
ECT sensor resistance		2.3–2.6 kΩ at 20°C (68°F)		
IAT sensor input voltage		4.5–5.5V		
IAT sensor resistance		2.2–2.7 kΩ at 20°C (68°F)		
AP sensor input voltage		4.5–5.5V		
AP sensor output voltage		Approx. 3.6V at 760 mmHg (100 kPa)		
TO sensor resistance		60–64 kΩ		
TO sensor voltage		Approx. 2.5V		
GP sensor voltage		More than 0.6V (From 1st to Top)		
Injector voltage		Battery voltage		
Ignition coil primary peak voltage		More than 280V (When cranking)		
VCSV resistance		36–44 Ω		
Intake air control valve operating rpm	Opening rpm	Above 4 000 rpm		
	Closing rpm	Below 3 800 rpm		

THROTTLE BODY

ITEM	SPECIFICATION	
	E-18	Others
Fast idle r/min	2 000 r/min.	←
Idle r/min	1 200 ± 50 r/min.	1 200 ± 100 r/min.
Throttle cable play	2.0–4.0 mm (0.08–0.16 in)	←

ELECTRICAL

Unit: mm (in)

ITEM			SPECIFICATION	NOTE
Ignition timing			3° B.T.D.C. at 1 200 r/min.	
Firing order			1·2	
Spark plug		Type	NGK: CR8EK Denso: U24ETR	
		Gap	0.6–0.7 (0.024–0.028)	
Spark performance			Over 8 (0.3) at 1 atm.	
Crankshaft position sensor resistance			184–276 Ω	BI–G
Ignition coil resistance		Primary	3–5 Ω	⊕ tap – ⊖ tap
		Secondary	20–28 kΩ	⊕ tap – Plug cap
Crankshaft position sensor peak voltage			More than 4.0V	
Ignition coil primary peak voltage			More than 280V	
Generator coil resistance			0.1–1.0 Ω	Y–Y
Generator Max. output			Approx. 380W at 5 000 r/min.	
Generator no-load voltage (When engine is cold)			More than 70V (AC) at 5 000 r/min.	
Regulated voltage			13.3–14.3V at 5 000 r/min.	
Starter relay resistance			3–6 Ω	
Battery	Type designation		FTX12-BS	
	Capacity		12V 36 kC (10 Ah)/10 HR	
	Standard electrolyte S.G.		1.320 at 20°C (68°F)	
Fuse size	Headlight	HI	15A	
		LO	15A	
	Turn signal		15A	
	Ignition		10A	
	Fuel pump relay		10A	
	Main		30A	

WATTAGE

Unit: W

ITEM		SPECIFICATION		
		E-03, 24, 28, 33	E-04, 18, 22, 25, 34, 37, 39	E-02
Headlight	HI	60×2	55	60×2
	LO	55×2	55	55×2
Position light			5	←
Brake light/Taillight		21/5×2	←	←
Turn signal light		21	←	←
Speedometer/Tachometer light		0.84×3	←	←
Turn signal indicator light		3	←	←
High beam indicator light		1.7	←	←
Neutral indicator light		1.7	←	←
Fuel level indicator light		1.7	←	←
License light		5	←	←

BRAKE + WHEEL

Unit: mm (in)

ITEM			STANDARD	LIMIT
Rear brake pedal height			60 (2.4)	———
Brake disc thickness		Front	5.0±0.2 (0.197±0.008)	4.5 (0.18)
		Rear	5.0±0.2 (0.197±0.008)	4.5 (0.18)
Brake disc runout (Front & Rear)			———	0.30 (0.012)
Master cylinder bore		Front	14.000–14.043 (0.5512–0.5529)	———
		Rear	12.700–12.743 (0.5000–0.5017)	———
Master cylinder piston diam.		Front	13.957–13.984 (0.5495–0.5506)	———
		Rear	12.657–12.684 (0.4983–0.4994)	———
Brake caliper cylinder bore	Leading	Front	27.000–27.076 (1.0630–1.0660)	———
	Trailing		30.230–30.306 (1.1902–1.1931)	———
		Rear	38.180–38.256 (1.5031–1.5061)	———
Brake caliper piston diam.	Leading	Front	26.920–26.970 (1.0598–1.0618)	———
	Trailing		30.150–30.200 (1.1870–1.1890)	———
		Rear	38.098–38.148 (1.4999–1.5019)	———
Wheel rim runout (Front & Rear)		Axial	———	2.0 (0.08)
		Radial	———	2.0 (0.08)

ITEM	STANDARD		LIMIT
Wheel axle runout	Front	———	0.25 (0.010)
	Rear	———	0.25 (0.010)
Wheel rim size	Front	J17 × MT 3.50	———
	Rear	J17 × MT 6.00	———
Tire size	Front	120/70 ZR17 (58W)	———
	Rear	190/50 ZR17 (73W)	———
Tire tread depth	Front	———	1.6 (0.06)
	Rear	———	2.0 (0.08)

SUSPENSION

Unit: mm (in)

ITEM	STANDARD		LIMIT
Front fork stroke	120 (4.7)		———
Front fork spring free length	———		280 (11.0)
Front fork oil level	*112 (4.4)		———
Front fork spring adjuster	*4th groove		———
Front fork damping force adjuster	Rebound	*¾ turn out	———
	Compression	*1-¼ turns out	———
Rear suspension spring unit set length	180 (7.1)		———
Rear suspension rotary damper damping force adjuster	Rebound	*At punch mark (about 2-¼ turns out)	———
	Compression	*At punch mark (about 1-¼ turns out)	———
Rear wheel travel	128 (5.0)		———
Swingarm pivot shaft runout	———		0.3 (0.01)

TIRE PRESSURE

COLD INFLATION TIRE PRESSURE	SOLO RIDING			DUAL RIDING		
	kPa	kg/cm^2	psi	kPa	kg/cm^2	psi
FRONT	250	2.50	36	250	2.50	36
REAR	250	2.50	36	250	2.50	36

FUEL + OIL + ENGINE COOLANT

ITEM	SPECIFICATION		NOTE
Fuel type	Use only unleaded gasoline of at least 87 pump octane ($\frac{R+M}{2}$) or 91 octane or higher rated by the research method. Gasoline containing MTBE (Methyl Tertiary Butyl Ether), less than 10% ethanol, or less than 5% methanol with appropriate cosolvents and corrosion inhibitor is permissible.		E-03, 33
	Use only unleaded gasoline of at least 87 pump octane ($\frac{R+M}{2}$ method) or 91 octane or higher rated by the Research Method.		E-28
	Gasoline used should be graded 85–95 octane or higher. An unleaded gasoline is recommended.		The others
Fuel tank	17 L (4.5/3.7 US/Imp gal)		
Engine oil type	SAE 10W/40, API SF or SG		
Engine oil capacity	Change	3 100 ml (3.3/2.7 US/Imp qt)	
	Filter change	3 300 ml (3.5/2.9 US/Imp qt)	
	Overhaul	3 600 ml (3.8/3.2 US/Imp qt)	
Front fork oil type	Fork oil L01		
Front fork oil capacity (each leg)	*477 ml (16.1/16.8 US/Imp oz)		
Brake fluid type	DOT 4		
Engine coolant type	Use an anti-freeze/coolant compatible with aluminum radiator, mixed with distilled water only, at the ratio of 50 : 50.		
Engine coolant including reserve	2 200 ml (2.3/1.9 US/Imp qt)		

EMISSION CONTROL INFORMATION

CONTENTS

PAIR (AIR SUPPLY) SYSTEM DIAGRAM 10-9-1
PAIR (AIR SUPPLY) SYSTEM HOSE ROUTING 10-9-2
PAIR (AIR SUPPLY) SYSTEM INSPECTION 10-9-3

PAIR (AIR SUPPLY) SYSTEM DIAGRAM

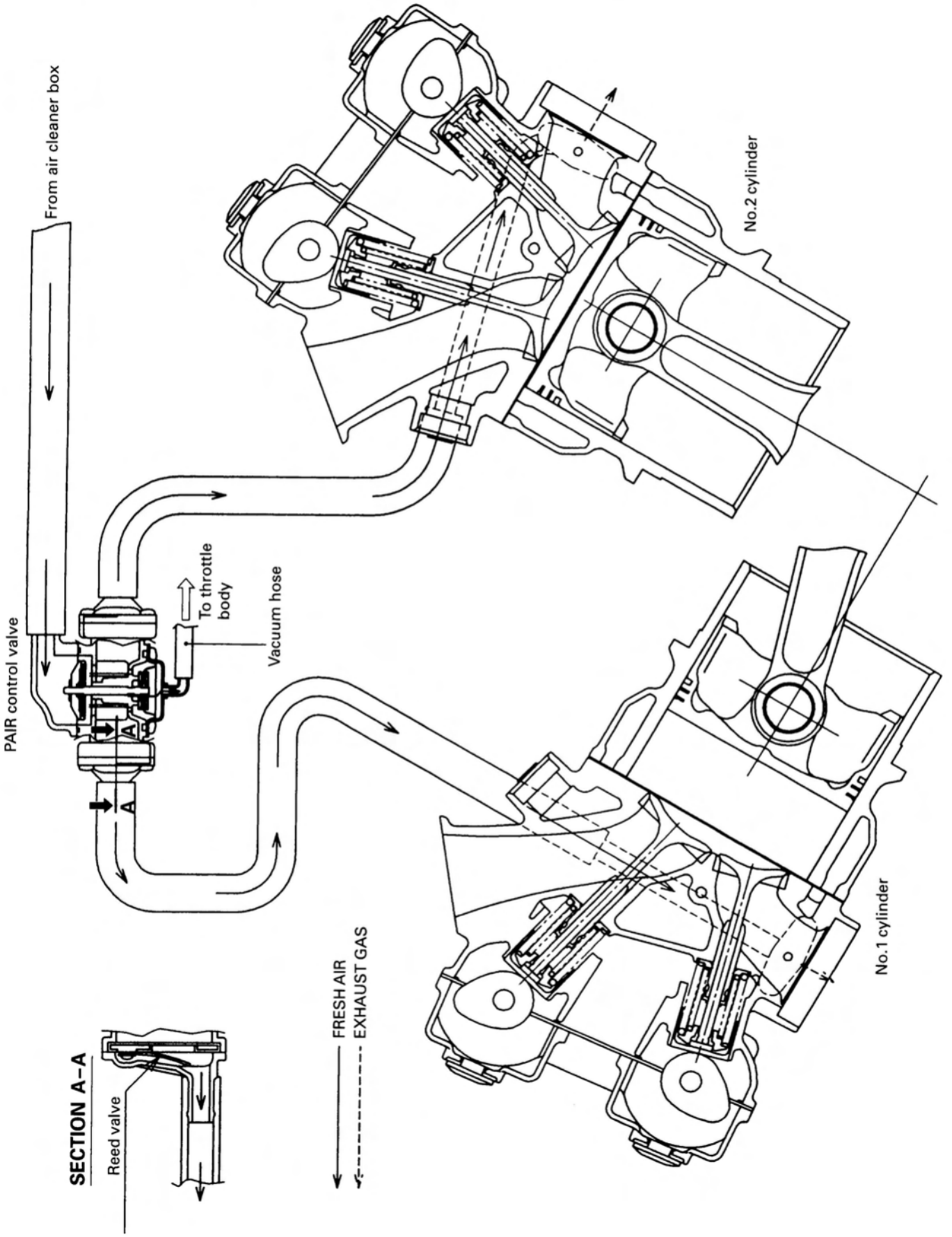

PAIR (AIR SUPPLY) SYSTEM HOSE ROUTING

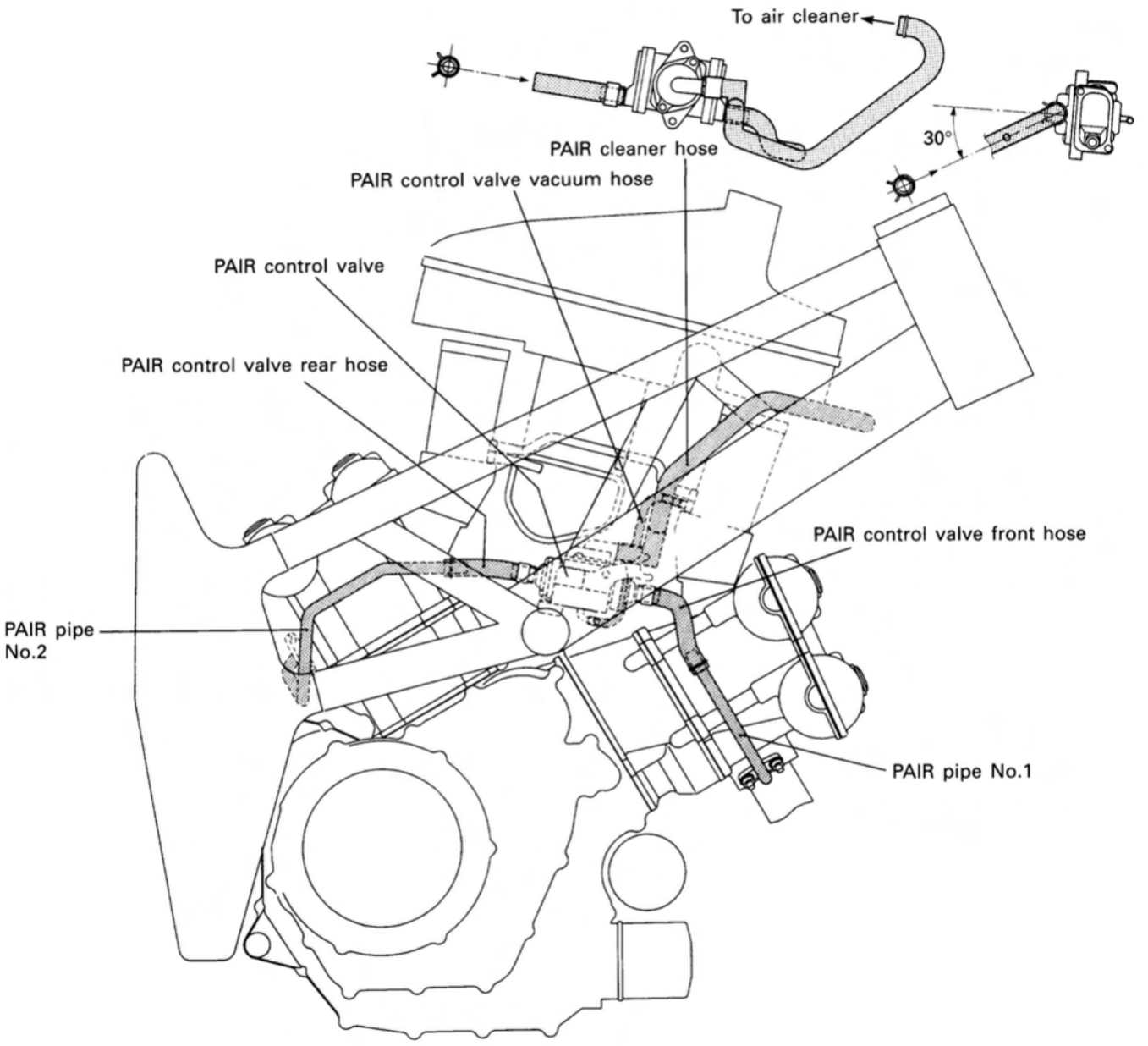

PAIR (AIR SUPPLY) SYSTEM INSPECTION

- Remove the air cleaner box. (See pp. 4-54 and -55 in the TL1000S Service Manual.)

HOSES AND PIPES

Inspect the hoses and pipes for wear or damage.
Inspect that the hoses and pipes are securely connected.

PAIR CONTROL VALVE

Inspect the PAIR control valve for damage of the body.

PAIR CLEANER

Inspect the PAIR cleaner for damage of the body.

REED VALVE OF PAIR CONTROL VALVE

- Remove the PAIR control valve.
- Remove the both reed valve covers ①.

Inspect the reed valves.
If the carbon deposit is found in the reed valve, replace the PAIR control valve with a new one.

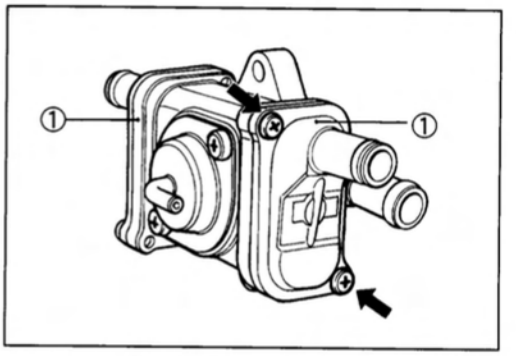

PAIR CONTROL VALVE

- Remove the PAIR control valve.

Blow the air inlet port of the control valve as shown in the illustration. If air does not flow out, replace the control valve with a new one.

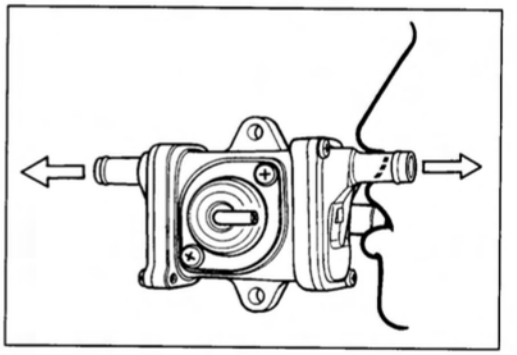

Connect the vacuum pump to the vacuum port of the control valve as shown in the illustration. Apply negative pressure slowly to the control valve and blow the above manner. If air does not become flow out within the specification, the control valve is normal condition.
If the control valve does not function within the specification, replace the control valve with a new one.

Negative pressure range: 36–60 kPa (270–450 mmHg)

TOOL 09917-47010: Vacuum pump gauge

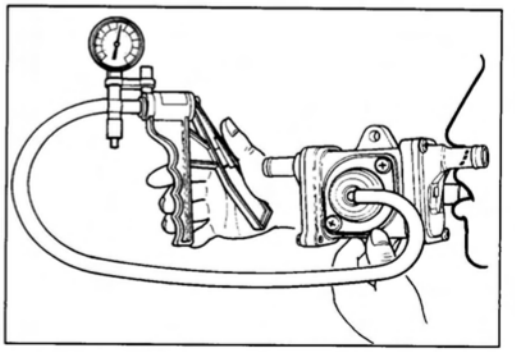

⚠ CAUTION

Use a hand operated vacuum pump to prevent the control valve damage.

TL1000SX ('99-MODEL)

This section describes service data, service specifications and servicing procedures which differ from those of the TL1000SW ('98-model).

NOTE:
- *Any differences between the TL1000SW ('98-model) and TL1000SX ('99-model) in specifications and service data are indicated with an asterisk mark (*).*
- *Please refer to the sections 1 through 10 for details which are not given in this section.*

GROUP INDEX

GENERAL INFORMATION	11-1
ENGINE	11-3
SERVICING INFORMATION	11-8

GENERAL INFORMATION

CONTENTS

SPECIFICATIONS 11-1-1

SPECIFICATIONS

DIMENSIONS AND DRY MASS

Overall length	2 045 mm (80.5 in) E-02,03,04,25,28,33,34,37
	2 065 mm (81.3 in) E-18,22,24
Overall width	715 mm (28.1 in)
Overall height	1 175 mm (46.3 in)
Wheelbase	1 415 mm (55.7 in)
Ground clearance	140 mm (5.5 in)
Seat height	835 mm (32.9 in)
Dry mass	191 kg (421 lbs)

ENGINE

Type	Four-stroke, Liquid-cooled, DOHC, TSCC, 90-degree V-twin
Number of cylinders	2
Bore	98.0 mm (3.858 in)
Stroke	66.0 mm (2.598 in)
Piston displacement	996 cm^3 (60.8 cu. in)
Compression ratio	11.3 : 1
Fuel system	Fuel injection
Air cleaner	Non-woven fabric element
Starter system	Electric starter
Lubrication system	Wet sump

TRANSMISSION

Clutch	Wet multi-plate type
Transmission	6-speed constant mesh
Gearshift pattern	1-down, 5-up
Primary reduction ratio	1.838 (57/31)
Final reduction ratio	2.235 (38/17)
Gear ratios, Low	2.666 (32/12)
2nd	1.933 (29/15)
3rd	1.500 (27/18)
4th	1.227 (27/22)
5th	1.086 (25/23)
Top	1.000 (24/24)
Drive chain	RK50 GSVZ1, 104 links

CHASSIS

Front suspension	Inverted telescopic, coil spring, oil damped, spring pre-load fully adjustable, compression damping force fully adjustable, rebound damping force fully adjustable.
Rear suspension	Swingarm, coil spring, rotary damper, spring pre-road fully adjustable, compression damping force fully adjustable, rebound damping force fully adjustable.
Steering angle	30° (right & left)
Caster	23° 42'
Trail	94.5 mm (3.7 in)
Turning radius	3.1 m (10.2 ft)
Front brake	Disc brake, twin
Rear brake	Disc brake
Front tire size	120/70 ZR17, (58W)
Rear tire size	190/50 ZR17, (73W)
Front fork stroke	120 mm (4.7 in)
Rear wheel travel	128 mm (5.0 in)

ELECTRICAL

Ignition type	Electronic ignition (Transistorized)
Ignition timing	3° B.T.D.C. at 1 200 r/min
Spark plug	NGK: CR8EK or ND: U24ETR
Battery	12V 36.0 kC (10 Ah)/10HR
Generator	Three-phase A.C. Generator
Fuse	30/15/15/15/10/10A
Headlight	12V 60/55W × 2 ..... E-02,03,24,28,33 12V 55W + 12V 55W ..... Others
Position light	12V 5W ..... Except for E-03,24,28,33
Turn signal light	12V 21W
License light	12V 5W
Brake light/Taillight	12V 21/5W × 2
Speedometer/Tachometer light	12V 0.84W × 3
Neutral indicator light	12V 1.7W
High beam indicator light	12V 1.7W
Turn signal indicator light	12V 3W
Fuel indicator light	12V 1.7W
Engine coolant temp. indicator light	LED

CAPACITIES

Fuel tank	17 L (4.5/3.7 US/Imp gal)
Engine oil, oil change	3 100 ml (3.3/2.7 US/Imp qt)
with filter change	3 300 ml (3.5/2.9 US/Imp qt)
overhaul	3 600 ml (3.8/3.2 US/Imp qt)
Engine coolant, including reserve	2 200 ml (2.3/1.9 US/Imp qt)
Front fork oil (each leg)	477 ml (16.1/16.8 US/Imp oz)

These specifications are subject to change without notice.

ENGINE

CONTENTS

CLUTCH 3C 11-3-1

CLUTCH DRIVE CAM/DRIVEN CAM AND CLUTCH SLEEVE HUB INSTALLATION 11-3-1

CLUTCH INSPECTION 11-3-3

CLUTCH PLATES INSTALLATION 11-3-4

CRANKCASE/TRANSMISSION/CRANKSHAFT/CONROD .. 3H 11-3-6

TRANSMISSION 11-3-6

CRANKSHAFT 11-3-8

CLUTCH 3C

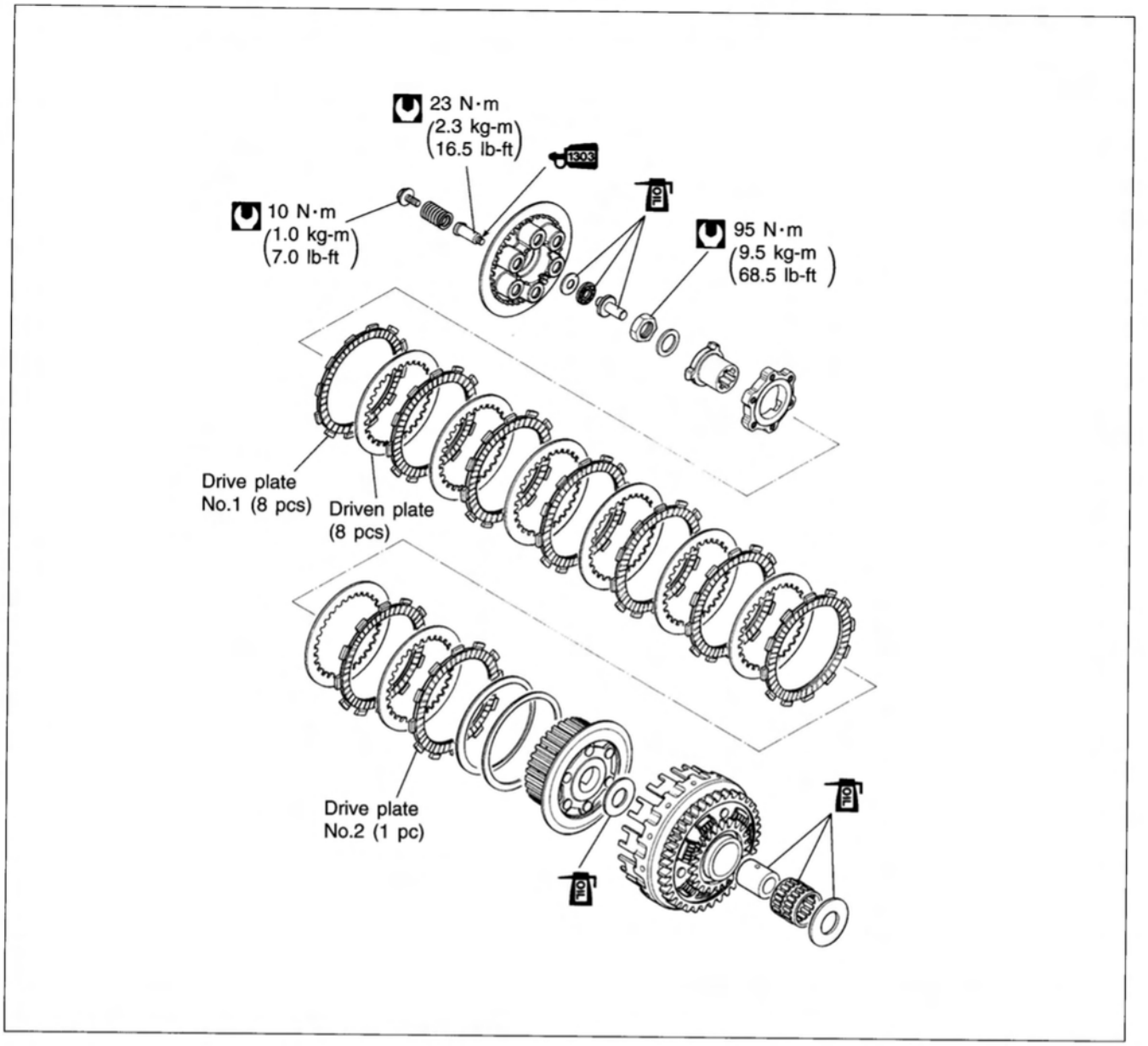

CLUTCH DRIVE CAM/DRIVEN CAM AND CLUTCH SLEEVE HUB INSTALLATION

For details other than the following, refer to the section 3C of the TL1000S Service Manual.

NOTE:
When replacing the clutch spring support bolts ①, apply THREAD LOCK SUPER "1303" and tighten them to the specified torque.

1303 99000-32030: THREAD LOCK SUPER "1303"

Clutch spring support bolt: 23 N·m (2.3 kg-m, 16.5 lb-ft)

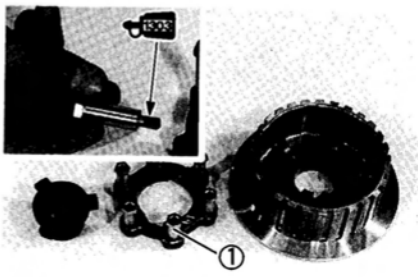

- Install the clutch drive cam ①, driven cam ② onto the clutch sleeve hub ③.

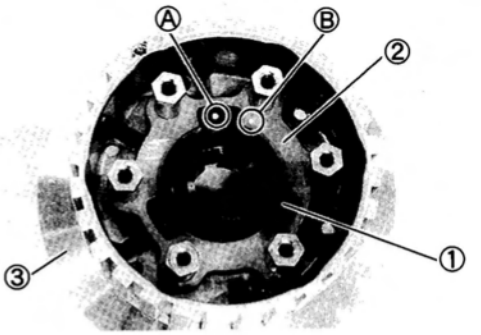

NOTE:
Align the punched mark Ⓐ on the clutch drive cam ① with punched mark Ⓑ on the clutch driven cam ②.

- Install the clutch sleeve hub ③ with the clutch drive ① and driven ② cams onto the countershaft.

NOTE:
The clutch drive ① and driven ② cams should be replaced as a set.

- Install the washer ④ onto the countershaft.

NOTE:
The convex side of the washer faces outside.

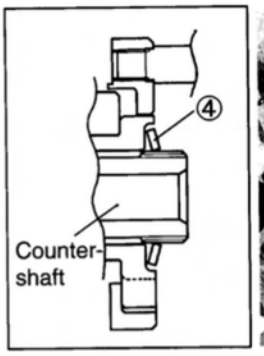



- Tighten the clutch sleeve hub nut ⑤ to the specified torque by using the special tool.

Clutch sleeve hub nut: 95 N·m (9.5 kg-m, 68.5 lb-ft)

09920-53740: Clutch sleeve hub holder

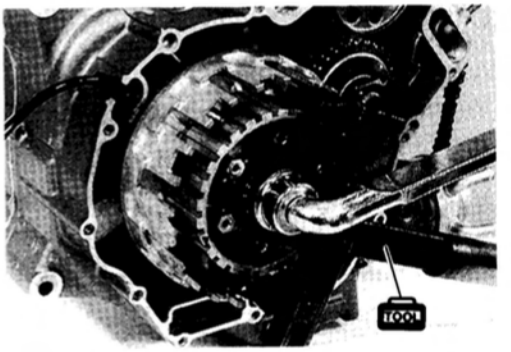

- Lock the clutch sleeve hub nut ⑤ with a center punch.

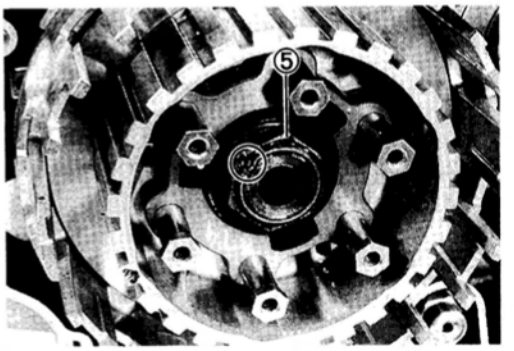

- Install the spring washer seat ⑥ and spring washer ⑦ onto the clutch sleeve hub correctly.

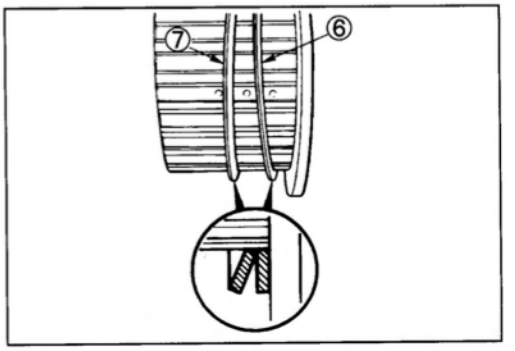

CLUTCH INSPECTION

CLUTCH DRIVE PLATES

NOTE:
Wipe off engine oil from the clutch drive plates with a clean rag.

Measure the thickness of drive plates with a vernier calipers. If each drive plate is not within the standard range, replace it with a new one.

Standard
Drive plate thickness (No.1 and No.2): 3.22–3.38 mm (0.127–0.133 in)

09900-20102: Vernier calipers

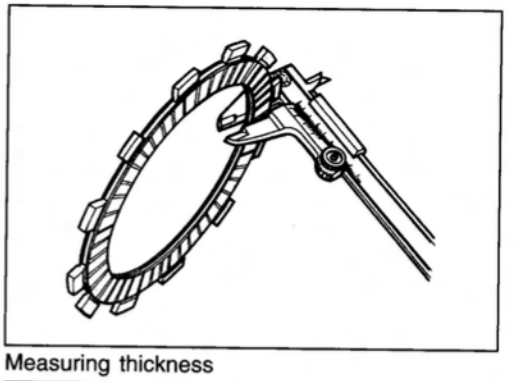
Measuring thickness

Measure the claw width of drive plates with a vernier calipers. Replace the drive plates found to have worn down to the limit.

Service Limit
Drive plate claw width (No.1 and No.2): 12.9 mm (0.51 in)

09900-20102: Vernier calipers

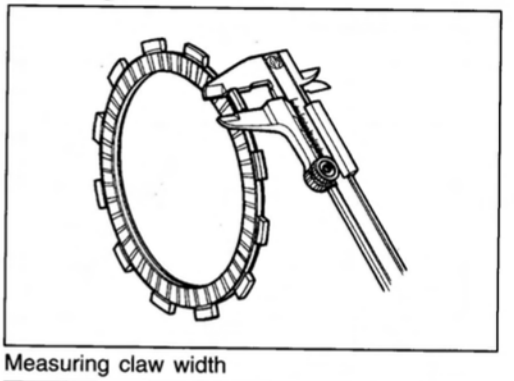
Measuring claw width

CLUTCH DRIVEN PLATES

NOTE:
Wipe off engine oil from the clutch driven plates with a clean rag.

Measure each driven plate for distortion with a thickness gauge and surface plate.
Replace driven plates which exceed the limit.

Service Limit
Driven plate distortion (No.1 and No.2): 0.10 mm (0.004 in)

09900-20803: Thickness gauge

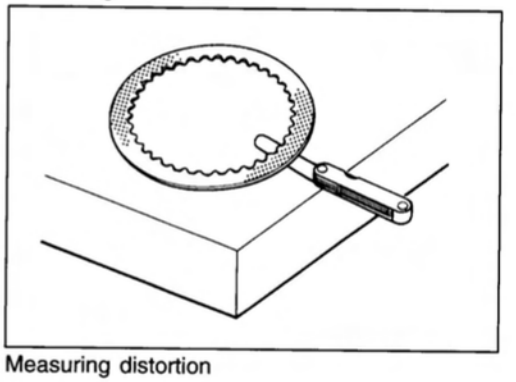
Measuring distortion

CLUTCH SPRING FREE LENGTH

Measure the free length of each coil spring with a vernier calipers, and compare the length with the specified limit. Replace all the springs if any spring is not within the limit.

Service Limit
Clutch spring free length: 22.4 mm (0.88 in)

09900-20102: Vernier calipers

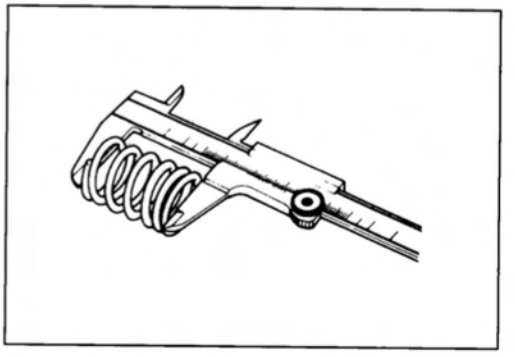

CLUTCH PLATES INSTALLATION

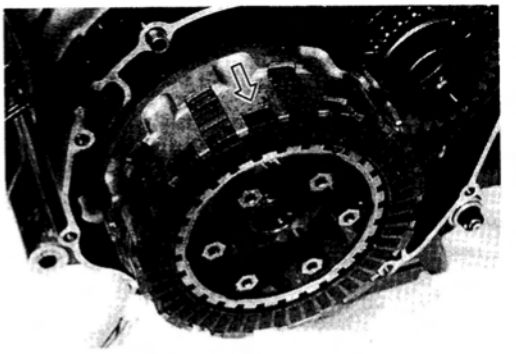

- Insert the clutch drive plates and driven plates one by one into the clutch sleeve hub in the prescribed order, No.2 drive plate Ⓑ being inserted first. (Two kinds of drive plate No.1 and No.2 are equipped, they can be distinguished by the inside diameter.)

NOTE:
Insert the outermost No.1 drive plate to the other slits of clutch housing as shown.

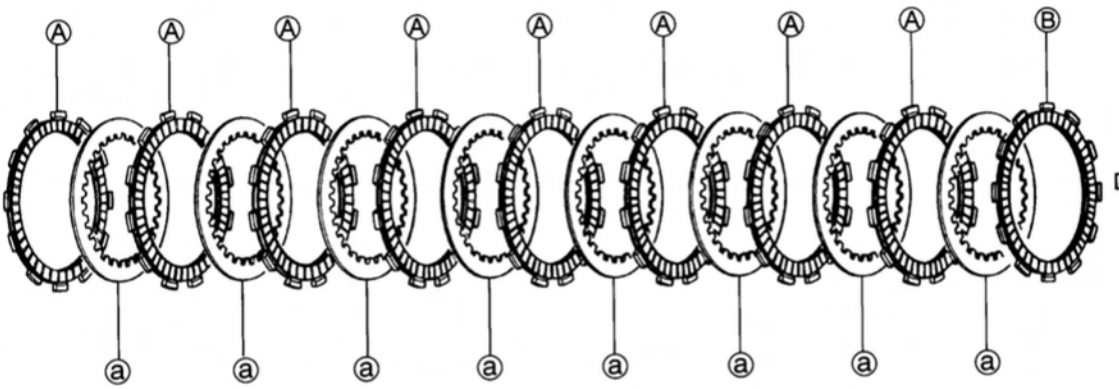

DRIVE PLATE:
Ⓐ No.1 Drive Plate (Inside Diameter): 112 mm (4.41 in) ... 8 pcs
Ⓑ No.2 Drive Plate (Inside Diameter): 120 mm (4.72 in) ... 1 pc

DRIVEN PLATE:
ⓐ Driven Plate (Thickness): 1.6 mm (0.06 in) ... 8 pcs

- Install the clutch push rod ① into the countershaft.

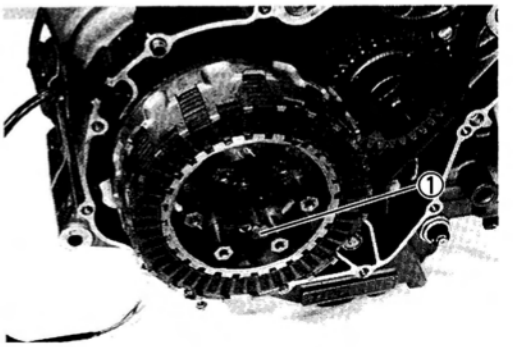

- Install the clutch push piece ①, the bearing ② and the thrust washer ③ to the countershaft.

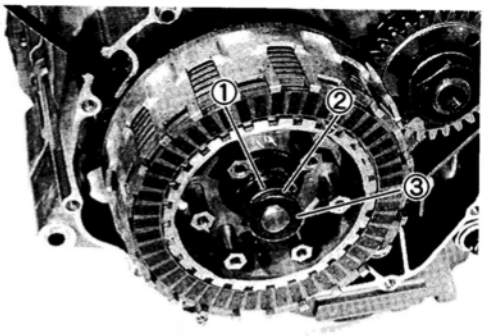

- Put the pressure plate ④ onto the clutch sleeve hub.

NOTE:
Align the punched mark Ⓐ on the clutch sleeve hub with the punched mark Ⓑ on the pressure plate.

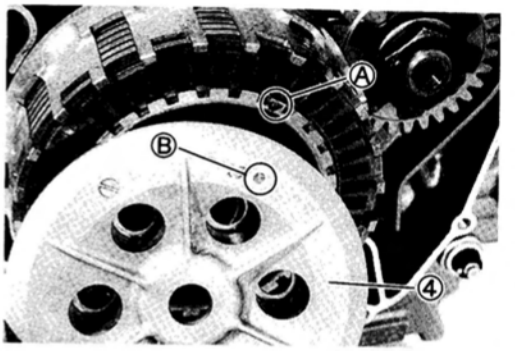

- Tighten the clutch spring set bolts diagonally to the specified torque while holding the generator rotor with a 36-mm wrench.

Clutch spring set bolts: 10 N·m (1.0 kg-m, 7.0 lb-ft)

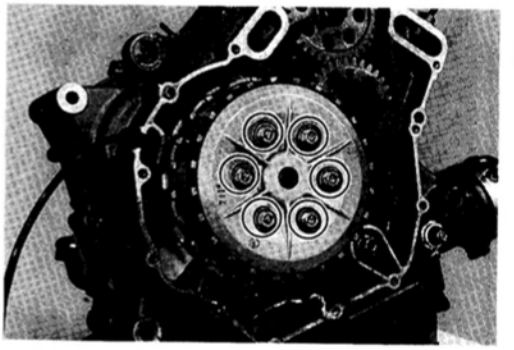

CRANKCASE/TRANSMISSION/CRANKSHAFT/CONROD 3H

TRANSMISSION

For details other than the following, refer to the section 3H of the TL1000S Service Manual.

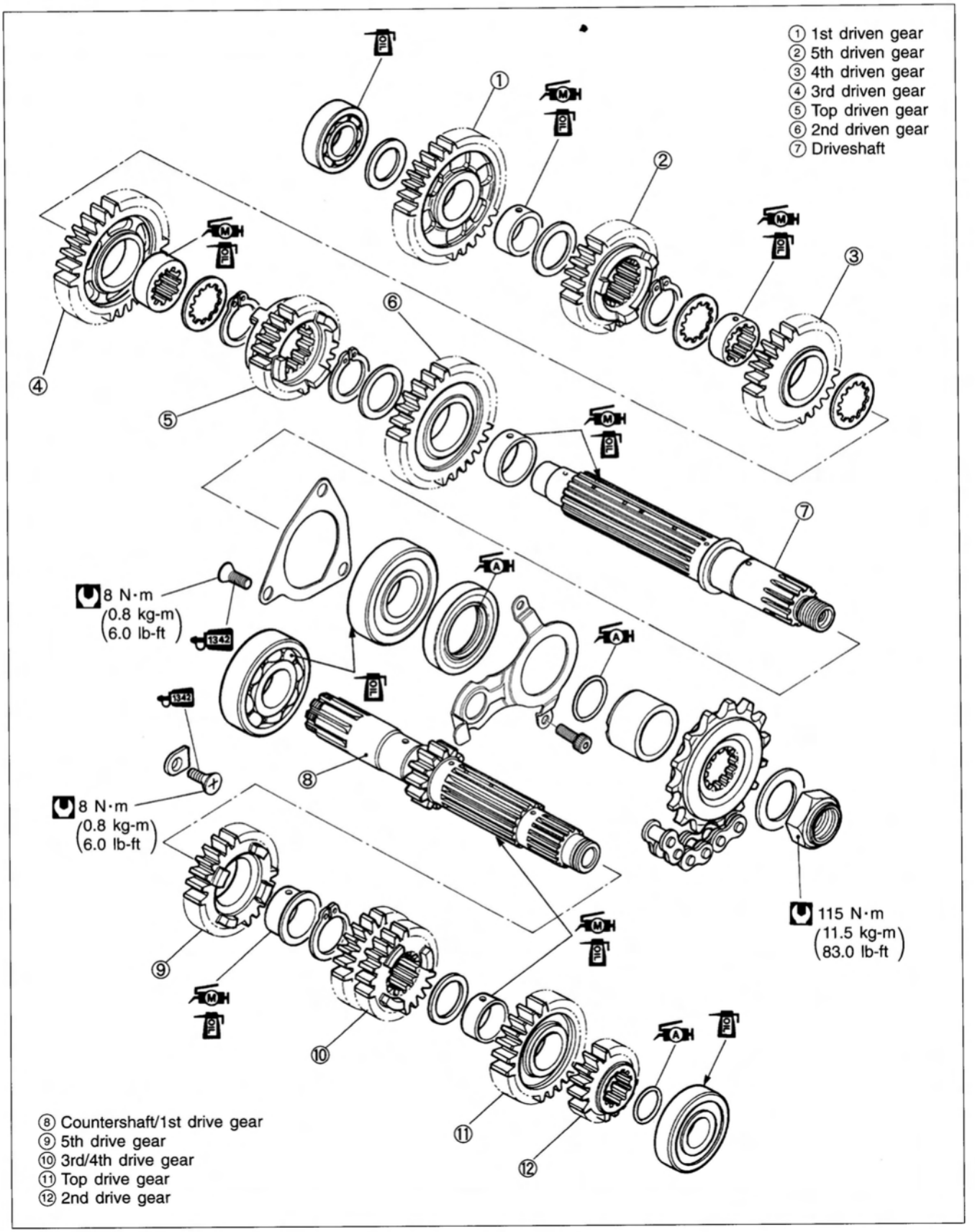

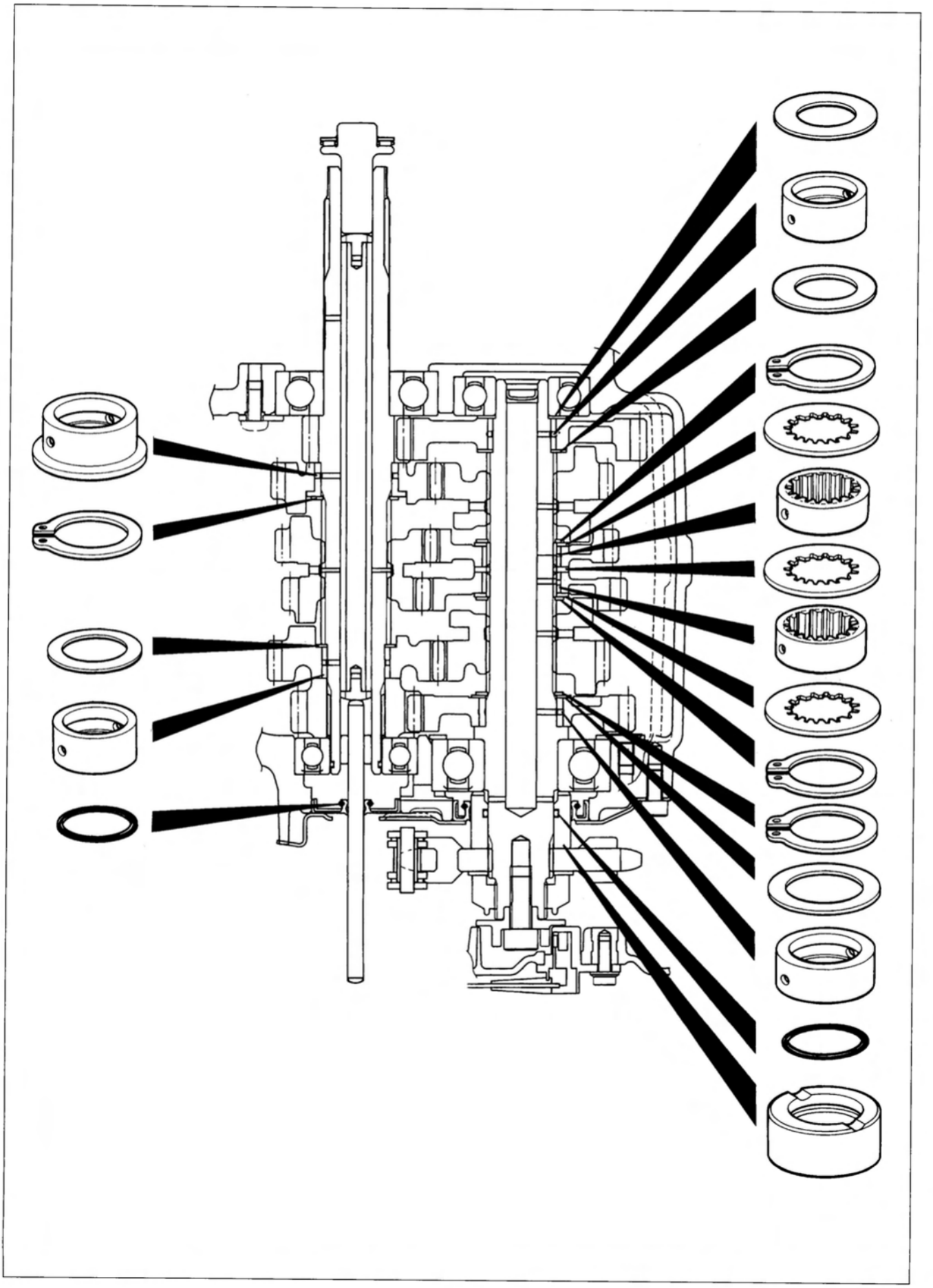

CRANKSHAFT

For details other than the following, refer to the section 3H of the TL1000S Service Manual.

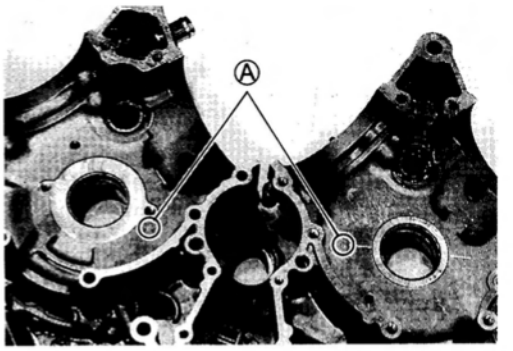

CRANKCASE-CRANKSHAFT BEARING SELECTION

Select the specified bearings from the crankcase bore I.D. code. The crankcase bore I.D. code Ⓐ "A", "B" or "C", is stamped on the inside of each crankcase half.

Bearing selection table

I.D. code Ⓐ	I.D. specification	Bearing
A	52.000–52.006 mm (2.0472–2.0475 in)	Green
B	52.006–52.012 mm (2.0475–2.0477 in)	Black
C	52.012–52.018 mm (2.0477–2.0479 in)	Brown

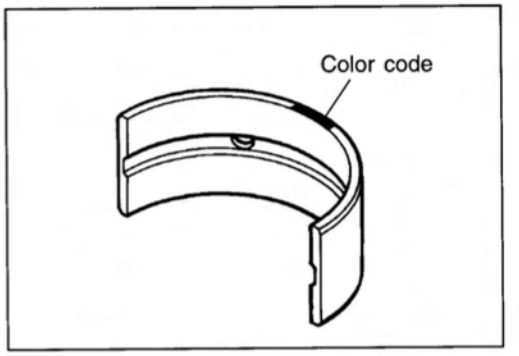

Bearing thickness

Color (Part No.)	Thickness
Green (12229-02F21-0A0)	1.992–1.995 mm (0.0784–0.0785 in)
Black (12229-02F21-0B0)	1.995–1.998 mm (0.0785–0.0787 in)
Brown (12229-02F21-0C0)	1.998–2.001 mm (0.0787–0.0788 in)

⚠ CAUTION

Bearing must be replaced as a set.

SERVICING INFORMATION

CONTENTS

SERVICE DATA 11-8-1

SERVICE DATA

VALVE + GUIDE

Unit: mm (in)

ITEM	STANDARD		LIMIT
Valve diam.	IN.	40 (1.56)	———
	EX.	33 (1.30)	———
Tappet clearance (when cold)	IN.	0.10–0.20 (0.004–0.008)	———
	EX.	0.20–0.30 (0.008–0.012)	———
Valve guide to valve stem clearance	IN.	0.010–0.037 (0.0004–0.0015)	———
	EX.	0.030–0.057 (0.0012–0.0022)	———
Valve stem deflection	IN. & EX.	———	0.35 (0.014)
Valve guide I.D.	IN. & EX.	5.500–5.512 (0.2165–0.2170)	———
Valve stem O.D.	IN.	5.475–5.490 (0.2156–0.2161)	———
	EX.	5.455–5.470 (0.2148–0.2154)	———
Valve stem runout	IN. & EX.	———	0.05 (0.002)
Valve head thickness	IN. & EX.	———	0.5 (0.02)
Valve seat width	IN. & EX.	0.9–1.1 (0.035–0.043)	———
Valve head radial runout	IN. & EX.	———	0.03 (0.001)
Valve spring free length (IN. & EX.)	INNER	———	37.0 (1.46)
	OUTER	———	40.7 (1.60)
Valve spring tension (IN. & EX.)	INNER	6.2 kg (13.7 lbs) at length 33.1 mm (1.30 in)	———
	OUTER	15.4 kg (33.95 lbs) at length 36.6 mm (1.44 in)	———

CAMSHAFT + CYLINDER HEAD

Unit: mm (in)

ITEM	STANDARD		LIMIT
Cam height	IN.	37.770–37.838 (1.4897–1.4897)	37.47 (1.475)
	EX.	36.380–36.448 (1.4323–1.4350)	36.08 (1.420)

ITEM	STANDARD		LIMIT
Camshaft journal oil clearance	IN. & EX.	0.019–0.053 (0.0007–0.0021)	0.150 (0.0059)
Camshaft journal holder I.D.	IN. & EX.	22.012–22.025 (0.8666–0.8671)	———
Camshaft journal O.D.	IN. & EX.	21.972–21.993 (0.8650–0.8659)	———
Camshaft runout	IN. & EX.	———	0.10 (0.004)
No.2 cam drive idle gear/sprocket thrust clearance	0.15–0.29 (0.006–0.011)		———
Cylinder head distortion	———		0.05 (0.002)

CYLINDER + PISTON + PISTON RING

Unit: mm (in)

ITEM	STANDARD			LIMIT
Compression pressure (Automatic de-comp. actuated)	1 000–1 400 kPa (10–14 kg/cm^2 142–199 psi)			700 kPa (7 kg/cm^2 128 psi)
Compression pressure difference	———			200 kPa (2 kg/cm^2 28 psi)
Piston to cylinder clearance	0.015–0.025 (0.0006–0.0010)			0.12 (0.0047)
Cylinder bore	98.000–98.015 (3.8583–3.8589)			Nicks or Scratches
Piston diam.	97.980–97.995 (3.8575–3.8581) Measure at 10 mm (0.4 in) from the skirt end.			97.880 (3.8535)
Cylinder distortion	———			0.05 (0.002)
Piston ring free end gap	1st	Approx.	8.8 (0.35)	7.0 (0.28)
	2nd	Approx.	10.1 (0.40)	8.1 (0.32)
Piston ring end gap	1st	0.15–0.35 (0.006–0.014)		0.5 (0.02)
	2nd	RN	0.30–0.45 (0.012–0.018)	0.7 (0.03)
Piston ring to groove clearance	1st	———		0.18 (0.0071)
	2nd	———		0.15 (0.0059)
Piston ring groove width	1st	0.93–0.95 (0.0366–0.0374)		———
		1.55–1.57 (0.0610–0.0618)		———
	2nd	1.01–1.03 (0.0398–0.0406)		———
	Oil	2.51–2.53 (0.0988–0.0996)		———

ITEM	STANDARD		LIMIT
Piston ring thickness	1st	0.86–0.91 (0.034–0.036)	———
		1.38–1.40 (0.054–0.055)	———
	2nd	0.97–0.99 (0.038–0.039)	———
Piston pin bore I.D.	22.002–22.008 (0.8662–0.8665)		22.030 (0.8673)
Piston pin O.D.	21.992–22.000 (0.8658–0.8661)		21.980 (0.8654)

CONROD + CRANKSHAFT

Unit: mm (in)

ITEM	STANDARD	LIMIT
Conrod small end I.D.	22.010–22.018 (0.8665–0.8668)	22.040 (0.8677)
Conrod big end side clearance	0.17–0.32 (0.007–0.013)	0.50 (0.020)
Conrod big end width	21.95–22.00 (0.864–0.866)	———
Crank pin width	44.17–44.22 (1.739–1.741)	———
Conrod big end oil clearance	0.032–0.056 (0.0013–0.0022)	0.080 (0.0031)
Crank pin O.D.	44.976–45.000 (1.7707–1.7717)	———
Crankshaft journal oil clearance	*0.010–0.037 (0.0006–0.0015)	0.080 (0.0031)
Crankshaft journal O.D.	47.985–48.000 (1.8892–1.8898)	———
Crankshaft thrust clearance	0.050–0.100 (0.0020–0.0039)	———
Crankshaft thrust bearing thickness	1.925–2.175 (0.0758–0.0856)	———

OIL PUMP

ITEM	STANDARD	LIMIT
Oil pump reduction ratio	1.301 (57/31 × 29/41)	———
Oil pressure (at 60°C, 140°F)	Above 300 kPa (3.0 kg/cm^2, 43 psi) Below 600 kPa (6.0 kg/cm^2, 85 psi) at 3 000 r/min.	———

CLUTCH

Unit: mm (in)

ITEM	STANDARD	LIMIT
Clutch lever play	10–15 (0.4–0.6)	———
Drive plate thickness	*3.22–3.38 (0.127–0.133)	———
Drive plate claw width	13.7–13.8 (0.539–0.543)	12.9 (0.51)
Clutch release screw	1/4 turn back	———

ITEM	STANDARD	LIMIT
Driven plate distortion	———	0.10 (0.004)
Clutch spring free length	———	*22.4 (0.88)

THERMOSTAT + RADIATOR + FAN

ITEM		STANDARD	LIMIT
Thermostat valve opening temperature		80.5–83.5°C (176.9–182.3°F)	———
Thermostat valve lift		Over 8 mm (0.31 in) at 95°C (203°F)	———
Radiator cap valve opening pressure		110 kPa (1.1 kg/cm^2, 15.6 psi)	———
Cooling fan thermo-switch operating temperature	OFF→ON	Approx. 105°C (221°F)	———
	ON→OFF	Approx. 100°C (212°F)	———
Engine coolant temperature sensor resistance	20°C (68°F)	Approx. 2.45 kΩ	———
	50°C (122°F)	Approx. 0.811 kΩ	———
	80°C (176°F)	Approx. 0.318 kΩ	———
	110°C (230°F)	Approx. 0.142 kΩ	———
	130°C (266°F)	Approx. 0.088 kΩ	———

TRANSMISSION + DRIVE CHAIN

Unit: mm (in) Except ratio

ITEM		STANDARD	LIMIT
Primary reduction ratio		1.838 (57/31)	———
Final reduction ratio		2.235 (38/17)	———
Gear ratios	Low	2.666 (32/12)	———
	2nd	1.933 (29/15)	———
	3rd	1.500 (27/18)	———
	4th	1.227 (27/22)	———
	5th	1.086 (25/23)	———
	Top	1.000 (24/24)	———
Shift fork to groove clearance		0.1–0.3 (0.004–0.012)	0.50 (0.020)
Shift fork groove width		5.0–5.1 (0.197–0.201)	———
Shift fork thickness		4.8–4.9 (0.189–0.193)	———
Drive chain	Type	RK50GSVZ1	———
	Links	104 links, ENDLESS	———
	20-pitch length	———	319.4 (12.6)

ITEM	STANDARD	LIMIT
Drive chain slack	25–35 (1.0–1.4)	———
Gearshift lever height	60 (2.4)	———

INJECTOR + FUEL PUMP + FUEL PRESSURE REGULATOR

ITEM	SPECIFICATION	NOTE
Injector resistance	10–16 Ω at 20°C (68°F)	
Fuel pump discharge amount	Approx. 1 L (1.1/0.9 US/Imp qt) for 1 minute at 2.9 kg/cm^2 (290 kPa, 41 psi)	
Fuel pressure regulator operating set pressure	Approx. 2.9 kg/cm^2 (290 kPa, 41 psi)	

FI-SENSORS + INTAKE AIR CONTROL VALVE

ITEM		SPECIFICATION		NOTE
CMP sensor resistance		0.9–1.3 kΩ		
CMP sensor peak voltage		More than 0.8V		
CKP sensor resistance		184–276 Ω		
CKP sensor peak voltage		More than 4V		
IAP sensor input voltage		4.5–5.5V		
IAP sensor output voltage		Approx. 1.8V at idle speed		
TP sensor input voltage		4.5–5.5V		
TP sensor resistance	(Closed)	Approx. 1.2 kΩ		
	(Opened)	Approx. 4.4 kΩ		
TP sensor output voltage	(Closed)	Approx. 1.1V		
	(Opened)	Approx. 4.2V		
ECT sensor input voltage		4.5–5.5V		
ECT sensor resistance		2.3–2.6 kΩ at 20°C (68°F)		
IAT sensor input voltage		4.5–5.5V		
IAT sensor resistance		2.2–2.7 kΩ at 20°C (68°F)		
AP sensor input voltage		4.5–5.5V		
AP sensor output voltage		Approx. 3.6V at 760 mmHg (100 kPa)		
TO sensor resistance		60–64 kΩ		
TO sensor voltage		Approx. 2.5V		
GP sensor voltage		More than 0.6V (From 1st to Top)		
Injector voltage		Battery voltage		
Ignition coil primary peak voltage		More than 280V (When cranking)		
VCSV resistance		36–44 Ω		
Intake air control valve operating rpm	Opening rpm	Above 4 000 rpm		
	Closing rpm	Below 3 800 rpm		

THROTTLE BODY

ITEM	SPECIFICATION	
	E-18	Others
Fast idle r/min	2 000 r/min.	←
Idle r/min	1 200 ± 50 r/min.	1 200 ± 100 r/min.
Throttle cable play	2.0–4.0 mm (0.08–0.16 in)	←

ELECTRICAL

Unit: mm (in)

ITEM			SPECIFICATION	NOTE
Ignition timing			3° B.T.D.C. at 1 200 r/min.	
Firing order			1-2	
Spark plug		Type	NGK: CR8EK Denso: U24ETR	
		Gap	0.6–0.7 (0.024–0.028)	
Spark performance			Over 8 (0.3) at 1 atm.	
Crankshaft position sensor resistance			184–276 Ω	Bl–G
Ignition coil resistance		Primary	3–5 Ω	⊕ tap – ⊖ tap
		Secondary	20–28 kΩ	⊕ tap – Plug cap
Crankshaft position sensor peak voltage			More than 4.0V	
Ignition coil primary peak voltage			More than 280V	
Generator coil resistance			0.1–1.0 Ω	Y–Y
Generator Max. output			Approx. 380W at 5 000 r/min.	
Generator no-load voltage (When engine is cold)			More than 70V (AC) at 5 000 r/min.	
Regulated voltage			13.3–14.3V at 5 000 r/min.	
Starter relay resistance			3–6 Ω	
Battery	Type designation		FTX12-BS	
	Capacity		12V 36 kC (10 Ah)/10 HR	
	Standard electrolyte S.G.		1.320 at 20°C (68°F)	
Fuse size	Headlight	HI	15A	
		LO	15A	
	Turn signal		15A	
	Ignition		10A	
	Fuel pump relay		10A	
	Main		30A	

WATTAGE

Unit: W

ITEM		SPECIFICATION		
		E-03, 24, 28, 33	E-04, 18, 22, 25, 34, 37, 39	E-02
Headlight	HI	60×2	55	60×2
	LO	55×2	55	55×2
Position light			5	←
Brake light/Taillight		21/5×2	←	←
Turn signal light		21	←	←
Speedometer/Tachometer light		0.84×3	←	←
Turn signal indicator light		3	←	←
High beam indicator light		1.7	←	←
Neutral indicator light		1.7	←	←
Fuel level indicator light		1.7	←	←
License light		5	←	←

BRAKE + WHEEL

Unit: mm (in)

ITEM		STANDARD		LIMIT
Rear brake pedal height			60 (2.4)	———
Brake disc thickness		Front	5.0±0.2 (0.197±0.008)	4.5 (0.18)
		Rear	5.0±0.2 (0.197±0.008)	4.5 (0.18)
Brake disc runout (Front & Rear)			———	0.30 (0.012)
Master cylinder bore		Front	14.000–14.043 (0.5512–0.5529)	———
		Rear	12.700–12.743 (0.5000–0.5017)	———
Master cylinder piston diam.		Front	13.957–13.984 (0.5495–0.5506)	———
		Rear	12.657–12.684 (0.4983–0.4994)	———
Brake caliper cylinder bore	Leading	Front	27.000–27.076 (1.0630–1.0660)	———
	Trailing		30.230–30.306 (1.1902–1.1931)	———
		Rear	38.180–38.256 (1.5031–1.5061)	———
Brake caliper piston diam.	Leading	Front	26.920–26.970 (1.0598–1.0618)	———
	Trailing		30.150–30.200 (1.1870–1.1890)	———
		Rear	38.098–38.148 (1.4999–1.5019)	———
Wheel rim runout (Front & Rear)		Axial	———	2.0 (0.08)
		Radial	———	2.0 (0.08)

ITEM	STANDARD		LIMIT
Wheel axle runout	Front	———	0.25 (0.010)
	Rear	———	0.25 (0.010)
Wheel rim size	Front	J17 × MT 3.50	———
	Rear	J17 × MT 6.00	———
Tire size	Front	120/70 ZR17 (58W)	———
	Rear	190/50 ZR17 (73W)	———
Tire tread depth	Front	———	1.6 (0.06)
	Rear	———	2.0 (0.08)

SUSPENSION

Unit: mm (in)

ITEM	STANDARD		LIMIT
Front fork stroke	120 (4.7)		———
Front fork spring free length	———		280 (11.0)
Front fork oil level	112 (4.4)		———
Front fork spring adjuster	4th groove		———
Front fork damping force adjuster	Rebound	¾ turn out	———
	Compression	1-¼ turns out	———
Rear suspension spring unit set length	180 (7.1)		———
Rear suspension rotary damper damping force adjuster	Rebound	At punch mark (about 2-¼ turns out)	———
	Compression	At punch mark (about 1-¼ turns out)	———
Rear wheel travel	128 (5.0)		———
Swingarm pivot shaft runout	———		0.3 (0.01)

TIRE PRESSURE

COLD INFLATION TIRE PRESSURE	SOLO RIDING			DUAL RIDING		
	kPa	kg/cm^2	psi	kPa	kg/cm^2	psi
FRONT	250	2.50	36	250	2.50	36
REAR	250	2.50	36	250	2.50	36

FUEL + OIL + ENGINE COOLANT

ITEM	SPECIFICATION		NOTE
Fuel type	Use only unleaded gasoline of at least 87 pump octane ($\frac{R+M}{2}$) or 91 octane or higher rated by the research method. Gasoline containing MTBE (Methyl Tertiary Butyl Ether), less than 10% ethanol, or less than 5% methanol with appropriate cosolvents and corrosion inhibitor is permissible.		E-03, 33
	Use only unleaded gasoline of at least 87 pump octane ($\frac{R+M}{2}$ method) or 91 octane or higher rated by the Research Method.		E-28
	Gasoline used should be graded 85–95 octane or higher. An unleaded gasoline is recommended.		The others
Fuel tank	17 L (4.5/3.7 US/Imp gal)		
Engine oil type	SAE 10W/40, API SF or SG		
Engine oil capacity	Change	3 100 ml (3.3/2.7 US/Imp qt)	
	Filter change	3 300 ml (3.5/2.9 US/Imp qt)	
	Overhaul	3 600 ml (3.8/3.2 US/Imp qt)	
Front fork oil type	Fork oil L01		
Front fork oil capacity (each leg)	477 ml (16.1/16.8 US/Imp oz)		
Brake fluid type	DOT 4		
Engine coolant type	Use an anti-freeze/coolant compatible with aluminum radiator, mixed with distilled water only, at the ratio of 50 : 50.		
Engine coolant including reserve	2 200 ml (2.3/1.9 US/Imp qt)		

TL1000SY ('00-MODEL)

This section describes service data, service specifications and servicing procedures which differ from those of the TL1000SX ('99-model).

NOTE:
- *Any differences between the TL1000SX (1999-model) and TL1000SY (2000-model) in specifications and service data are indicated with an asterisk mark (*).*
- *Please refer to the sections 1 through 11 for details which are not given in this section.*

GROUP INDEX

GENERAL INFORMATION	12-1
ENGINE	12-3
SERVICING INFORMATION	12-8

GENERAL INFORMATION

CONTENTS

SPECIFICATIONS 12-1- 1

SPECIFICATIONS

DIMENSIONS AND DRY MASS

Overall length	2 045 mm (80.5 in) E-02,03,04,25,28,33,34,37
	2 065 mm (81.3 in) E-18,22,24
Overall width	715 mm (28.1 in)
Overall height	1 175 mm (46.3 in)
Wheelbase	1 415 mm (55.7 in)
Ground clearance	140 mm (5.5 in)
Seat height	835 mm (32.9 in)
Dry mass	191 kg (421 lbs)

ENGINE

Type	Four-stroke, Liquid-cooled, DOHC, TSCC, 90-degree V-twin
Number of cylinders	2
Bore	98.0 mm (3.858 in)
Stroke	66.0 mm (2.598 in)
Piston displacement	996 cm^3 (60.8 cu. in)
Compression ratio	11.3 : 1
Fuel system	Fuel injection
Air cleaner	Non-woven fabric element
Starter system	Electric starter
Lubrication system	Wet sump

TRANSMISSION

Clutch	Wet multi-plate type
Transmission	6-speed constant mesh
Gearshift pattern	1-down, 5-up
Primary reduction ratio	1.838 (57/31)
Final reduction ratio	2.235 (38/17)
Gear ratios, Low	2.666 (32/12)
2nd	1.933 (29/15)
3rd	1.500 (27/18)
4th	1.227 (27/22)
5th	1.086 (25/23)
Top	1.000 (24/24)
Drive chain	RK50 GSVZ1, 104 links

CHASSIS

Front suspension	Inverted telescopic, coil spring, oil damped, spring pre-load fully adjustable, compression damping force fully adjustable, rebound damping force fully adjustable.
Rear suspension	Swingarm, coil spring, rotary damper, spring pre-road fully adjustable, compressiondamping force fully adjustable, rebound damping force fully adjustable.
Steering angle	30° (right & left)
Caster	23° 42'
Trail	94.5 mm (3.7 in)
Turning radius	3.1 m (10.2 ft)
Front brake	Disc brake, twin
Rear brake	Disc brake
Front tire size	120/70 ZR17, (58W)
Rear tire size	190/50 ZR17, (73W)
Front fork stroke	120 mm (4.7 in)
Rear wheel travel	128 mm (5.0 in)

ELECTRICAL

Ignition type	Electronic ignition (ECM)	
Ignition timing	3° B.T.D.C. at 1 200 r/min	
Spark plug	NGK: CR8EK or ND: U24ETR	
Battery	12 V 36.0 kC (10 Ah)/10 HR	
Generator	Three-phase A.C. Generator	
Fuse	30/15/15/15/10/10 A	
Headlight	12 V 60/55 W × 2	E-02,03,24,28,33
	12 V 55 W + 12 V 55 W	Others
Position light	12 V 5 W	Except for E-03,24,28,33
Turn signal light	12 V 21 W × 4	
License light	12 V 5 W	
Brake light/Taillight	12 V 21/5 W × 2	
Speedometer/Tachometer light	12 V 0.84 W × 3	
Neutral indicator light	12 V 1.7 W	
High beam indicator light	12 V 1.7 W	
Turn signal indicator light	12 V 3 W	
Fuel indicator light	12 V 1.7 W	
Engine coolant temp. indicator light	LED	

CAPACITIES

Fuel tank	17 L (4.5/3.7 US/Imp gal)
Engine oil, oil change	3 100 ml (3.3/2.7 US/Imp qt)
with filter change	3 300 ml (3.5/2.9 US/Imp qt)
overhaul	3 600 ml (3.8/3.2 US/Imp qt)
Engine coolant, including reserve	2 200 ml (2.3/1.9 US/Imp qt)
Front fork oil (each leg)	477 ml (16.1/16.8 US/Imp oz)

These specifications are subject to change without notice.

ENGINE

CONTENTS

ENGINE DISASSEMBLY AND REASSEMBLY 3 12-3- 1
OIL SEPARATOR 12-3- 1
CAMSHAFT/CYLINDER HEAD ..... 3 A 12-3- 1
VALVE SPRING 12-3- 1
CRANKCASE/TRANSMISSION/CRANKSHAFT/CONROD ..... 3 H 12-3- 2
CONROD-CRANK PIN BEARING 12-3- 2
ENGINE LUBRICATION SYSTEM ..... 3 I 12-3- 2
OIL PUMP 12-3- 2

ENGINE DISASSEMBLY AND REASSEMBLY

3

OIL SEPARATOR

The oil separator ① is attached in the right crankcase half.

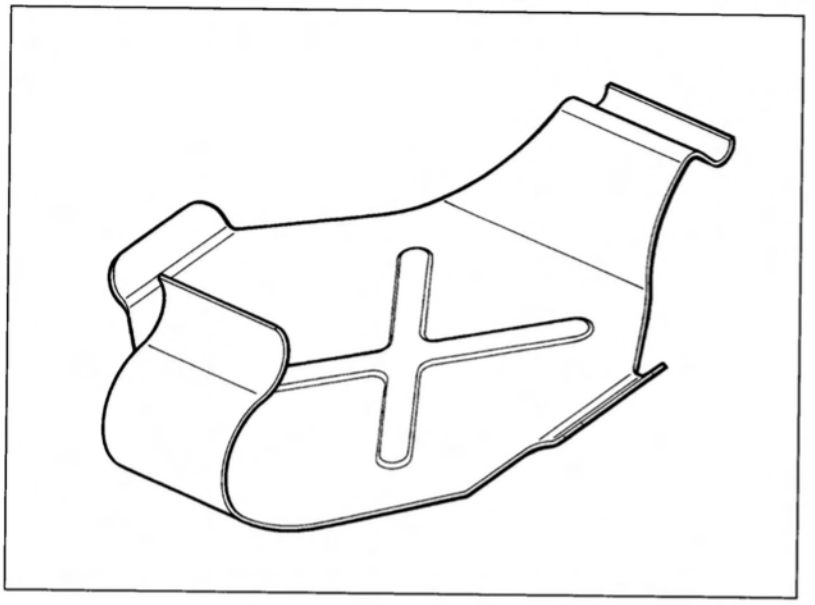

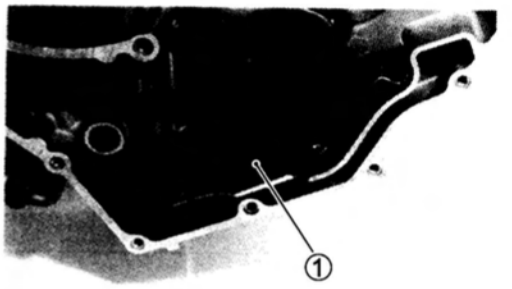

CAMSHAFT/CYLINDER HEAD

3A

VALVE SPRING

For details other than the following, refer to the section 3A of the TL1000S Service Manual.

DATA **Valve spring free length (IN & EX)**
Service Limit
Inner spring: 39.9 mm (1.57 in)
Outer spring: 43.2 mm (1.71 in)

DATA **Valve spring tension (IN & EX)**
Standard
Inner spring: 9.2 kgf/33.1 mm (20.3 lbs/1.30 in)
Outer spring: 16.7 kgf/36.6 mm (36.8 lbs/1.44 in)

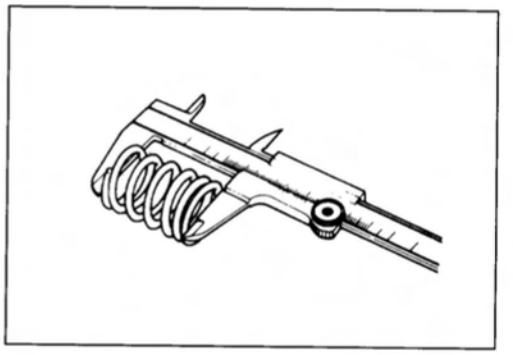

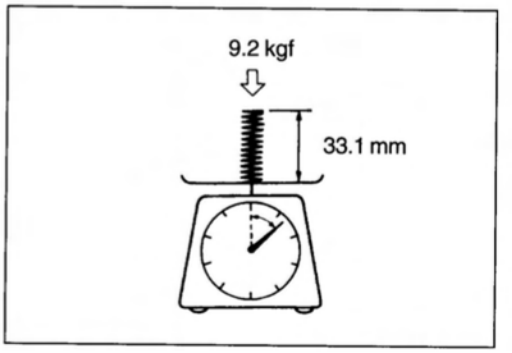

CRANKCASE/TRANSMISSION/CRANKSHAFT/CONROD 3H

CONROD-CRANK PIN BEARING

For details other than the following, refer to the section 3H of the TL1000S Service Manual.

DATA **Conrod big end oil clearance**
Standard: 0.040 – 0.064 mm
(0.0016 – 0.0025 in)

Bearing thickness

Color (Part No.)	Thickness
Green (12164-02F11-0A0)	1.476 – 1.480 mm (0.0581 – 0.0583 in)
Black (12164-02F11-0B0)	1.480 – 1.484 mm (0.0583 – 0.0584 in)
Brown (12164-02F11-0C0)	1.484 – 1.488 mm (0.0584 – 0.0586 in)
Yellow (12164-02F11-0D0)	1.488 – 1.492 mm (0.0586 – 0.0587 in)

⚠ CAUTION

Bearing must be replaced as a set.

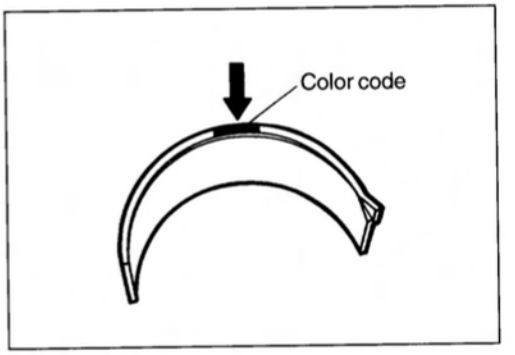

ENGINE LUBRICATION SYSTEM 3I

OIL PUMP

For details other than the following, refer to the section 3I of the TL1000S Service Manual.

The oil pump is the same as TL1000R.

	1999-MODEL	2000-MODEL
Ⓐ	17 mm (0.67 in)	19 mm (0.75 in)

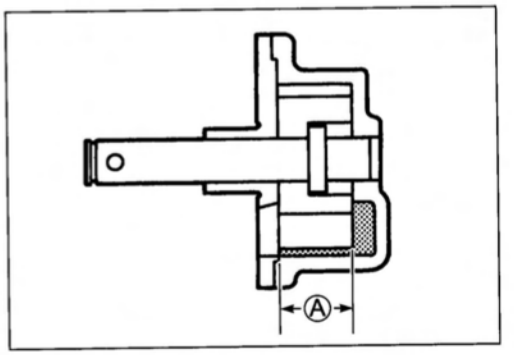

SERVICING INFORMATION

CONTENTS

WIRE HARNESS, CABLE AND HOSE ROUTING 12-8- 1
PAIR SYSTEM HOSE ROUTING 12-8- 1
SERVICE DATA 12-8- 2

WIRE HARNESS, CABLE AND HOSE ROUTING

PAIR (AIR SUPPLY) SYSTEM HOSE ROUTING

(For E-03, 18, 22, 28 and 33)

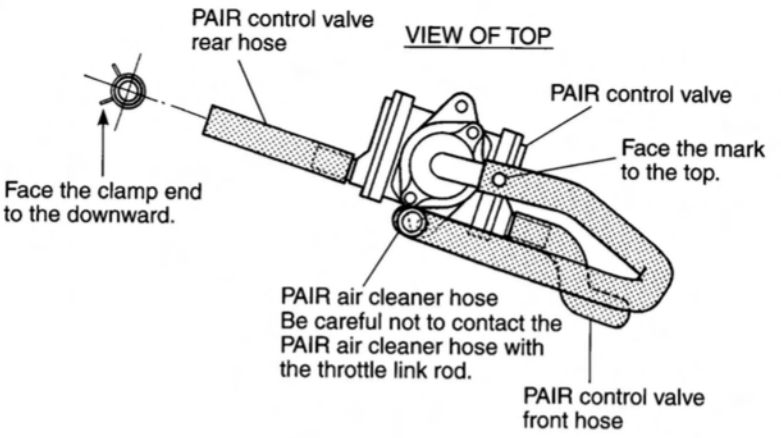

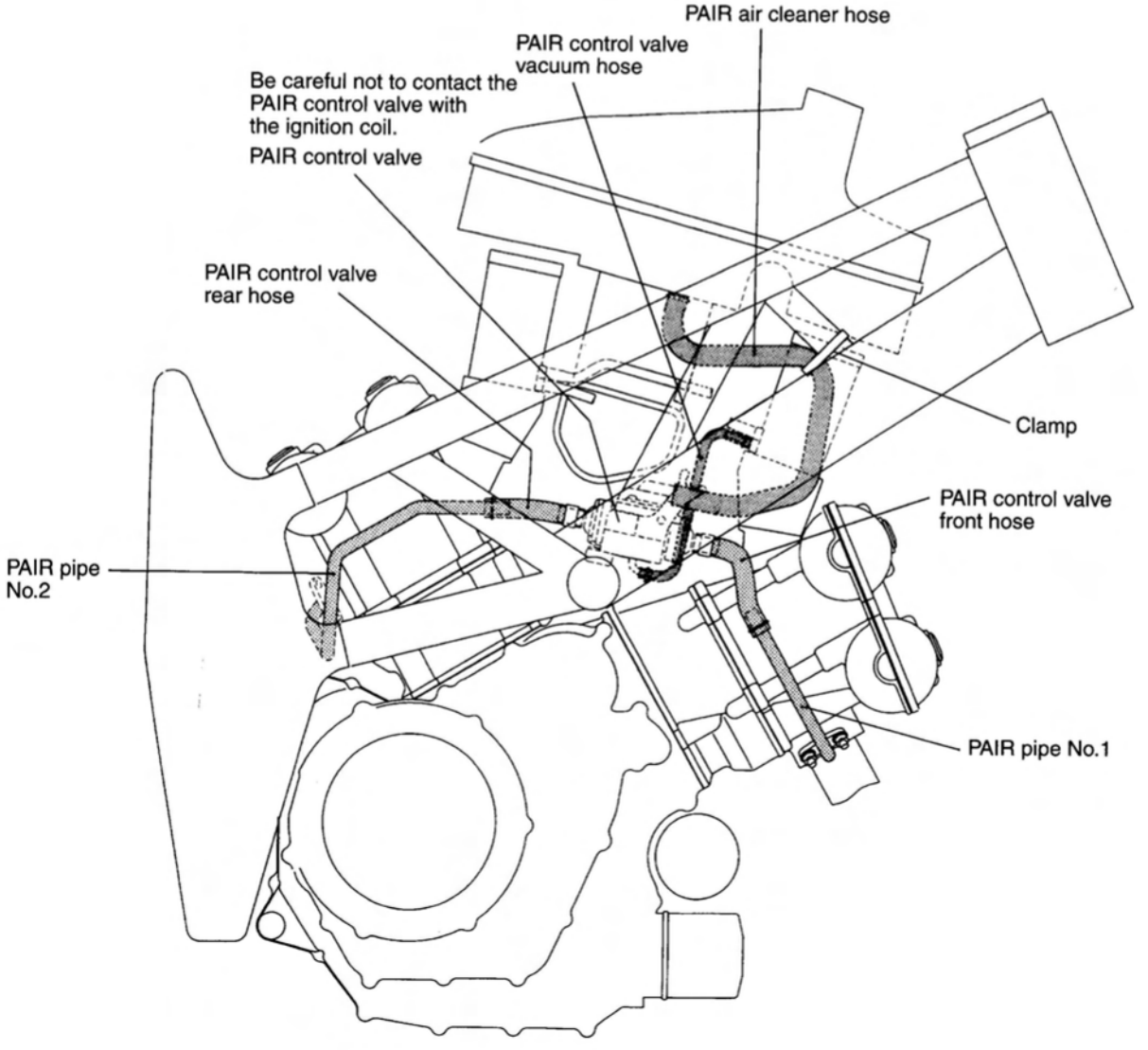

SERVICE DATA

VALVE + GUIDE

Unit: mm (in)

ITEM	STANDARD		LIMIT
Valve diam.	IN.	40 (1.56)	———
	EX.	33 (1.30)	———
Tappet clearance (when cold)	IN.	0.10 – 0.20 (0.004 – 0.008)	———
	EX.	0.20 – 0.30 (0.008 – 0.012)	———
Valve guide to valve stem clearance	IN.	0.010 – 0.037 (0.0004 – 0.0015)	———
	EX.	0.030 – 0.057 (0.0012 – 0.0022)	———
Valve stem deflection	IN. & EX.	———	0.35 (0.014)
Valve guide I.D.	IN. & EX.	5.500 – 5.512 (0.2165 – 0.2170)	———
Valve stem O.D.	IN.	5.475 – 5.490 (0.2156 – 0.2161)	———
	EX.	5.455 – 5.470 (0.2148 – 0.2154)	———
Valve stem runout	IN. & EX.	———	0.05 (0.002)
Valve head thickness	IN. & EX.	———	0.5 (0.02)
Valve seat width	IN. & EX.	0.9 – 1.1 (0.035 – 0.043)	———
Valve head radial runout	IN. & EX.	———	0.03 (0.001)
Valve spring free length (IN. & EX.)	INNER	———	* 39.9 (1.57)
	OUTER	———	* 43.2 (1.71)
Valve spring tension (IN. & EX.)	INNER	* 9.2 kgf (20.3 lbs) at length 33.1 mm (1.30 in)	———
	OUTER	* 16.7 kgf (36.8 lbs) at length 36.6 mm (1.44 in)	———

CAMSHAFT + CYLINDER HEAD

Unit: mm (in)

ITEM	STANDARD		LIMIT
Cam height	IN.	37.770 – 37.838 (1.4870 – 1.4897)	37.47 (1.475)
	EX.	36.380 – 36.448 (1.4323 – 1.4350)	36.08 (1.420)

ITEM	STANDARD		LIMIT
Camshaft journal oil clearance	IN. & EX.	0.019 – 0.053 (0.0007 – 0.0021)	0.150 (0.0059)
Camshaft journal holder I.D.	IN. & EX.	22.012 – 22.025 (0.8666 – 0.8671)	———
Camshaft journal O.D.	IN. & EX.	21.972 – 21.993 (0.8650 – 0.8659)	———
Camshaft runout	IN. & EX.	———	0.10 (0.004)
No.2 cam drive idle gear/sprocket thrust clearance	0.15 – 0.29 (0.006 – 0.011)		———
Cylinder head distortion	———		0.05 (0.002)

CYLINDER + PISTON + PISTON RING

Unit: mm (in)

ITEM	STANDARD		LIMIT
Compression pressure (Automatic de-comp. actuated)	1 000 – 1 400 kPa (10 – 14 kgf/cm² 142 – 199 psi)		700 kPa (7 kgf/cm² 128 psi)
Compression pressure difference	———		200 kPa (2 kgf/cm² 28 psi)
Piston to cylinder clearance	0.015 – 0.025 (0.0006 – 0.0010)		0.12 (0.0047)
Cylinder bore	98.000 – 98.015 (3.8583 – 3.8589)		Nicks or Scratches
Piston diam.	97.980 – 97.995 (3.8575 – 3.8581) Measure at 10 mm (0.4 in) from the skirt end.		97.880 (3.8535)
Cylinder distortion	———		0.05 (0.002)
Piston ring free end gap	1st	Approx. 8.8 (0.35)	7.0 (0.28)
	2nd	Approx. 10.1 (0.40)	8.1 (0.32)
Piston ring end gap	1st	0.15 – 0.35 (0.006 – 0.014)	0.5 (0.02)
	2nd	RN: 0.30 – 0.45 (0.012 – 0.018)	0.7 (0.03)
Piston ring to groove clearance	1st	———	0.18 (0.0071)
	2nd	———	0.15 (0.0059)
Piston ring groove width	1st	0.93 – 0.95 (0.0366 – 0.0374)	———
		1.55 – 1.57 (0.0610 – 0.0618)	———
	2nd	1.01 – 1.03 (0.0398 – 0.0406)	———
	Oil	2.51 – 2.53 (0.0988 – 0.0996)	———

ITEM	STANDARD		LIMIT
Piston ring thickness	1st	0.86 – 0.91 (0.034 – 0.036)	———
		1.38 – 1.40 (0.054 – 0.055)	———
	2nd	0.97 – 0.99 (0.038 – 0.039)	———
Piston pin bore I.D.	22.002 – 22.008 (0.8662 – 0.8665)		22.030 (0.8673)
Piston pin O.D.	21.992 – 22.000 (0.8658 – 0.8661)		21.980 (0.8654)

CONROD + CRANKSHAFT

Unit: mm (in)

ITEM	STANDARD	LIMIT
Conrod small end I.D.	22.010 – 22.018 (0.8665 – 0.8668)	22.040 (0.8677)
Conrod big end side clearance	0.17 – 0.32 (0.007 – 0.013)	0.50 (0.020)
Conrod big end width	21.95 – 22.00 (0.864 – 0.866)	———
Crank pin width	44.17 – 44.22 (1.739 – 1.741)	———
Conrod big end oil clearance	* 0.040 – 0.064 (0.0016 – 0.0025)	0.080 (0.0031)
Crank pin O.D.	44.976 – 45.000 (1.7707 – 1.7717)	———
Crankshaft journal oil clearance	0.010 – 0.037 (0.0004 – 0.0015)	0.080 (0.0031)
Crankshaft journal O.D.	47.985 – 48.000 (1.8892 – 1.8898)	———
Crankshaft thrust clearance	0.050 – 0.100 (0.0020 – 0.0039)	———
Crankshaft thrust bearing thickness	1.925 – 2.175 (0.0758 – 0.0856)	———

OIL PUMP

ITEM	STANDARD	LIMIT
Oil pump reduction ratio	1.301 (57/31 × 29/41)	———
Oil pressure (at 60°C, 140°F)	Above 300 kPa (3.0 kgf/cm², 43 psi) Below 600 kPa (6.0 kgf/cm², 85 psi) at 3 000 r/min.	———

CLUTCH

Unit: mm (in)

ITEM	STANDARD	LIMIT
Clutch lever play	10 – 15 (0.4 – 0.6)	———
Drive plate thickness	3.22 – 3.38 (0.127 – 0.133)	———
Drive plate claw width	13.7 – 13.8 (0.539 – 0.543)	12.9 (0.51)
Clutch release screw	1/4 turn back	———

ITEM	STANDARD	LIMIT
Driven plate distortion	———	0.10 (0.004)
Clutch spring free length	———	22.4 (0.88)

THERMOSTAT + RADIATOR + FAN

ITEM		STANDARD	LIMIT
Thermostat valve opening temperature		80.5 – 83.5°C (176.9 – 182.3°F)	———
Thermostat valve lift		Over 8 mm (0.31 in) at 95°C (203°F)	———
Radiator cap valve opening pressure		110 kPa (1.1 kgf/cm², 15.6 psi)	———
Cooling fan thermo-switch operating temperature	OFF→ON	Approx. 105°C (221°F)	———
	ON→OFF	Approx. 100°C (212°F)	———
Engine coolant temperature sensor resistance	20°C (68°F)	Approx. 2.45 kΩ	———
	50°C (122°F)	Approx. 0.811 kΩ	———
	80°C (176°F)	Approx. 0.318 kΩ	———
	110°C (230°F)	Approx. 0.142 kΩ	———
	130°C (266°F)	Approx. 0.088 kΩ	———

TRANSMISSION + DRIVE CHAIN

Unit: mm (in) Except ratio

ITEM			STANDARD	LIMIT
Primary reduction ratio			1.838 (57/31)	———
Final reduction ratio			2.235 (38/17)	———
Gear ratios	Low		2.666 (32/12)	———
	2nd		1.933 (29/15)	———
	3rd		1.500 (27/18)	———
	4th		1.227 (27/22)	———
	5th		1.086 (25/23)	———
	Top		1.000 (24/24)	———
Shift fork to groove clearance			0.1 – 0.3 (0.004 – 0.012)	0.50 (0.020)
Shift fork groove width			5.0 – 5.1 (0.197 – 0.201)	———
Shift fork thickness			4.8 – 4.9 (0.189 – 0.193)	———
Drive chain		Type	RK50GSVZ1	———
		Links	104 links, ENDLESS	———
		20-pitch length	———	319.4 (12.6)

ITEM	STANDARD	LIMIT
Drive chain slack	25 – 35 (1.0 – 1.4)	———
Gearshift lever height	60 (2.4)	———

INJECTOR + FUEL PUMP + FUEL PRESSURE REGULATOR

ITEM	SPECIFICATION	NOTE
Injector resistance	10 – 16 Ω at 20°C (68°F)	
Fuel pump discharge amount	Approx. 1 L (1.1/0.9 US/Imp qt) for 1 minute at 2.9 kgf/cm² (290 kPa, 41 psi)	
Fuel pressure regulator operating set pressure	Approx. 2.9 kgf/cm² (290 kPa, 41 psi)	

FI-SENSORS + INTAKE AIR CONTROL VALVE

ITEM		SPECIFICATION		NOTE
CMP sensor resistance		0.9 – 1.3 kΩ		
CMP sensor peak voltage		More than 0.8 V		
CKP sensor resistance		184 – 276 Ω		
CKP sensor peak voltage		More than 4 V		
IAP sensor input voltage		4.5 – 5.5 V		
IAP sensor output voltage		Approx. 1.8 V at idle speed		
TP sensor input voltage		4.5 – 5.5 V		
TP sensor resistance	(Closed)	Approx. 1.2 kΩ		
	(Opened)	Approx. 4.4 kΩ		
TP sensor output voltage	(Closed)	Approx. 1.1 V		
	(Opened)	Approx. 4.2 V		
ECT sensor input voltage		4.5 – 5.5 V		
ECT sensor resistance		2.3 – 2.6 kΩ at 20°C (68°F)		
IAT sensor input voltage		4.5 – 5.5 V		
IAT sensor resistance		2.2 – 2.7 kΩ at 20°C (68°F)		
AP sensor input voltage		4.5 – 5.5 V		
AP sensor output voltage		Approx. 3.6 V at 760 mmHg (100 kPa)		
TO sensor resistance		60 – 64 kΩ		
TO sensor voltage		Approx. 2.5 V		
GP sensor voltage		More than 0.6 V (From 1st to Top)		
Injector voltage		Battery voltage		
Ignition coil primary peak voltage		More than 280 V (When cranking)		
VCSV resistance		36 – 44 Ω		
Intake air control valve operating rpm		Opening rpm	Above 4 000 rpm	
		Closing rpm	Below 3 800 rpm	

THROTTLE BODY

ITEM	SPECIFICATION	
	E-18	Others
Fast idle r/min	2 000 r/min.	←
Idle r/min	1 200 ± 50 r/min.	1 200 ± 100 r/min.
Throttle cable play	2.0 – 4.0 mm (0.08 – 0.16 in)	←

ELECTRICAL

Unit: mm (in)

ITEM			SPECIFICATION	NOTE
Ignition timing			3° B.T.D.C. at 1 200 r/min.	
Firing order			1·2	
Spark plug		Type	NGK: CR8EK Denso: U24ETR	
		Gap	0.6 – 0.7 (0.024 – 0.028)	
Spark performance			Over 8 (0.3) at 1 atm.	
Crankshaft position sensor resistance			184 – 276 Ω	Bl – G
Ignition coil resistance		Primary	3 – 5 Ω	⊕ tap – ⊖ tap
		Secondary	20 – 28 kΩ	⊕ tap – Plug cap
Crankshaft position sensor peak voltage			More than 4.0 V	
Ignition coil primary peak voltage			More than 280 V	
Generator coil resistance			0.1 – 1.0 Ω	Y – Y
Generator Max. output			Approx. 380 W at 5 000 r/min.	
Generator no-load voltage (When engine is cold)			More than 70V (AC) at 5 000 r/min.	
Regulated voltage			13.3 – 14.3 V at 5 000 r/min.	
Starter relay resistance			3 – 6 Ω	
Battery	Type designation		FTX12-BS	
	Capacity		12V 36 kC (10 Ah)/10 HR	
	Standard electrolyte S.G.		1.320 at 20°C (68°F)	
Fuse size	Headlight	HI	15A	
		LO	15A	
	Turn signal		15A	
	Ignition		10A	
	Fuel pump relay		10A	
	Main		30A	

WATTAGE

Unit: W

ITEM		SPECIFICATION		
		E-03, 24, 28, 33	E-04, 18, 22, 25, 34, 37	E-02
Headlight	HI	60 × 2	55	60 × 2
	LO	55 × 2	55	55 × 2
Position light			5	←
Brake light/Taillight		21/5 × 2	←	←
Turn signal light		21 × 4	←	←
Speedometer/Tachometer light		0.84 × 3	←	←
Turn signal indicator light		3	←	←
High beam indicator light		1.7	←	←
Neutral indicator light		1.7	←	←
Fuel level indicator light		1.7	←	←
License light		5	←	←

BRAKE + WHEEL

Unit: mm (in)

ITEM			STANDARD	LIMIT
Rear brake pedal height			60 (2.4)	———
Brake disc thickness		Front	5.0 ± 0.2 (0.197 ± 0.008)	4.5 (0.18)
		Rear	5.0 ± 0.2 (0.197 ± 0.008)	4.5 (0.18)
Brake disc runout (Front & Rear)			———	0.30 (0.012)
Master cylinder bore		Front	14.000 – 14.043 (0.5512 – 0.5529)	———
		Rear	12.700 – 12.743 (0.5000 – 0.5017)	———
Master cylinder piston diam.		Front	13.957 – 13.984 (0.5495 – 0.5506)	———
		Rear	12.657 – 12.684 (0.4983 – 0.4994)	———
Brake caliper cylinder bore	Leading	Front	27.000 – 27.076 (1.0630 – 1.0660)	———
	Trailing		30.230 – 30.306 (1.1902 – 1.1931)	———
		Rear	38.180 – 38.256 (1.5031 – 1.5061)	———
Brake caliper piston diam.	Leading	Front	26.920 – 26.970 (1.0598 – 1.0618)	———
	Trailing		30.150 – 30.200 (1.1870 – 1.1890)	———
		Rear	38.098 – 38.148 (1.4999 – 1.5019)	———
Wheel rim runout (Front & Rear)		Axial	———	2.0 (0.08)
		Radial	———	2.0 (0.08)

ITEM	STANDARD		LIMIT
Wheel axle runout	Front	———	0.25 (0.010)
	Rear	———	0.25 (0.010)
Wheel rim size	Front	17 × MT 3.50	———
	Rear	17 × MT 6.00	———
Tire size	Front	120/70 ZR17 (58W)	———
	Rear	190/50 ZR17 (73W)	———
Tire tread depth	Front	———	1.6 (0.06)
	Rear	———	2.0 (0.08)

SUSPENSION

Unit: mm (in)

ITEM	STANDARD		LIMIT
Front fork stroke	120 (4.7)		———
Front fork spring free length	———		280 (11.0)
Front fork oil level	112 (4.4)		———
Front fork spring adjuster	4th groove		———
Front fork damping force adjuster	Rebound	¾ turn out	———
	Compression	1-¼ turns out	———
Rear suspension spring unit set length	180 (7.1)		———
Rear suspension rotary damper damping force adjuster	Rebound	At punch mark (about 2-¼ turns out)	———
	Compression	At punch mark (about 1-¼ turns out)	———
Rear wheel travel	128 (5.0)		———
Swingarm pivot shaft runout	———		0.3 (0.01)

TIRE PRESSURE

COLD INFLATION TIRE PRESSURE	SOLO RIDING			DUAL RIDING		
	kPa	kgf/cm²	psi	kPa	kgf/cm²	psi
FRONT	250	2.50	36	250	2.50	36
REAR	250	2.50	36	250	2.50	36

FUEL + OIL + ENGINE COOLANT

ITEM	SPECIFICATION		NOTE
Fuel type	Use only unleaded gasoline of at least 87 pump octane ($\frac{R+M}{2}$) or 91 octane or higher rated by the research method. Gasoline containing MTBE (Methyl Tertiary Butyl Ether), less than 10% ethanol, or less than 5% methanol with appropriate cosolvents and corrosion inhibitor is permissible.		E-03, 33
	Use only unleaded gasoline of at least 87 pump octane ($\frac{R+M}{2}$ method) or 91 octane or higher rated by the Research Method.		E-28
	Gasoline used should be graded 91 octane or higher. An unleaded gasoline is recommended.		The others
Fuel tank	17 L (4.5/3.7 US/Imp gal)		
Engine oil type	SAE 10W/40, API SF or SG		
Engine oil capacity	Change	3 100 ml (3.3/2.7 US/Imp qt)	
	Filter change	3 300 ml (3.5/2.9 US/Imp qt)	
	Overhaul	3 600 ml (3.8/3.2 US/Imp qt)	
Front fork oil type	Fork oil L01		
Front fork oil capacity (each leg)	477 ml (16.1/16.8 US/Imp oz)		
Brake fluid type	DOT 4		
Engine coolant type	Use an anti-freeze/coolant compatible with aluminum radiator, mixed with distilled water only, at the ratio of 50 : 50.		
Engine coolant including reserve	2 200 ml (2.3/1.9 US/Imp qt)		

TL1000SK1 (2001-MODEL)

This section describes service data, service specifications and servicing procedures which differ from those of the TL1000SY ('00-model).

NOTE:
- *Asterisk (*) mark indicates the K1 ('01) model specifications.*
- *Please refer to the sections 1 through 12 for details which are not given in this section.*

CONTENTS

SPECIFICATIONS 13- 2
SERVICE DATA 13- 3
CLUTCH 13-12
FRONT BRAKE HOSE ROUTING 13-13
CRANKCASE BREATHER 13-14

SPECIFICATIONS

DIMENSIONS AND DRY MASS	
Overall length	2 045 mm (80.5 in) E-02, 03, 04, 25, 28, 33, 34
	2 065 mm (81.3 in) E-18, 22, 24
Overall width	715 mm (28.1 in)
Overall height	1 175 mm (46.3 in)
Wheelbase	1 415 mm (55.7 in)
Ground clearance	140 mm (5.5 in)
Seat height	835 mm (32.9 in)
Dry mass	191 kg (421 lbs)
ENGINE	
Type	4-stroke, Liquid-cooled, DOHC, 90° degree V-twin
Number of cylinders	2
Bore	98.0 mm (3.858 in)
Stroke	66.0 mm (2.598 in)
Displacement	996 cm^3 (60.8 cu. in)
Compression ratio	11.3 : 1
Fuel system	Fuel injection system
Air cleaner	Non-woven fabric element
Starter system	Electric
Lubrication system	Wet sump
Idle speed	1 200 ± 50 r/min E-18
	1 200 ± 100 r/min .....Others
TRANSMISSION	
Clutch	Wet multi-plate type
Transmission	6-speed constant mesh
Gearshift pattern	1-down, 5-up
Primary reduction ratio	1.838 (57/31)
Gear ratios, Low	2.666 (32/12)
2nd	1.933 (29/15)
3rd	1.500 (27/18)
4th	1.227 (27/22)
5th	1.086 (25/23)
Top	1.000 (24/24)
Final reduction ratio	2.235 (38/17)
Drive chain	RK50 GSVZ1, 104 links
CHASSIS	
Front suspension	Inverted telescopic, coil spring, oil damped, spring pre-load fully adjustable, compression damping force fully adjustable, rebound damping force fully adjustable
Rear suspension	Swingarm type, coil spring, rotary damper, spring pre-load fully adjustable, compression damping force fully adjustable, rebound damping force fully adjustable
Front suspension stroke	120 mm (4.7 in)
Rear wheel travel	128 mm (5.0 in)
Caster	23° 42'
Trail	94.5 mm (3.7 in)
Steering angle	30° (right & left)
Turning radius	3.1 m (10.17 ft)
Front brake	Disc brake, twin
Rear brake	Disc brake
Front tire size	120/70 ZR17 (58W), tubeless
Rear tire size	190/50 ZR17 (73W), tubeless
ELECTRICAL	
Ignition type	Electronic ignition (Transistorized)
Ignition timing	3° B.T.D.C. at 1 200 r/min
Spark plug	NGK CR8EK or DENSO U24ETR
Battery	12V 36 kC (10Ah)/10 HR
Generator	Three-phase A.C. generator
Main fuse	30A
Fuse	15/15/10/15/10A
Headlight	12V 60/55W × 2 ..... E-02, 03, 24, 28, 33
	12V 55 + 55/55W ..... Others
Position/Parking light	12V 5W ..... Except E-03, 24, 28, 33
Brake light/Taillight	12V 21/5W × 2
License plate light	12V 5W
Turn signal light	12V 21W
Speedometer/Tachometer light	12V 0.84W × 3
Coolant temperature/Oil pressure indicator light	LED
Fuel level gauge light	12V 1.7W
Turn signal indicator light	12V 3W
Neutral indicator light	12V 1.7W
High beam indicator light	12V 1.7W
CAPACITIES	
Fuel tank	17 L (4.5/3.7 US/Imp gal)
Engine oil, oil change	3 100 ml (3.3/2.7 US/Imp qt)
with filter change	3 300 ml (3.5/2.9 US/Imp qt)
overhaul	3 600 ml (3.8/3.2 US/Imp qt)
Front fork oil (each leg)	477 ml (16.1/16.8 US/Imp oz)
Coolant	2.2 L (2.3/1.9 US/Imp qt)

SERVICE DATA

VALVE + GUIDE

Unit: mm (in)

ITEM	STANDARD		LIMIT
Valve diam.	IN.	40 (1.56)	———
	EX.	33 (1.30)	———
Tappet clearance (when cold)	IN.	0.10 – 0.20 (0.004 – 0.008)	———
	EX.	0.20 – 0.30 (0.008 – 0.012)	———
Valve guide to valve stem clearance	IN.	0.010 – 0.037 (0.0004 – 0.0015)	———
	EX.	0.030 – 0.057 (0.0012 – 0.0022)	———
Valve stem deflection	IN. & EX.	———	0.35 (0.014)
Valve guide I.D.	IN. & EX.	5.500 – 5.512 (0.2165 – 0.2170)	———
Valve stem O.D.	IN.	5.475 – 5.490 (0.2156 – 0.2161)	———
	EX.	5.455 – 5.470 (0.2148 – 0.2154)	———
Valve stem runout	IN. & EX.	———	0.05 (0.002)
Valve head thickness	IN. & EX.	———	0.5 (0.02)
Valve seat width	IN. & EX.	0.9 – 1.1 (0.035 – 0.043)	———
Valve head radial runout	IN. & EX.	———	0.03 (0.001)
Valve spring free length (IN. & EX.)	INNER	———	39.9 (1.57)
	OUTER	———	43.2 (1.71)
Valve spring tension (IN. & EX.)	INNER	9.2 kgf (20.3 lbs) at length 33.1 mm (1.30 in)	———
	OUTER	16.7 kgf (36.8 lbs) at length 36.6 mm (1.44 in)	———

CAMSHAFT + CYLINDER HEAD

Unit: mm (in)

ITEM	STANDARD		LIMIT
Cam height	IN.	37.770 – 37.838 (1.4870 – 1.4897)	37.47 (1.475)
	EX.	36.380 – 36.448 (1.4323 – 1.4350)	36.08 (1.420)

ITEM	STANDARD		LIMIT
Camshaft journal oil clearance	IN. & EX.	0.019 – 0.053 (0.0007 – 0.0021)	0.150 (0.0059)
Camshaft journal holder I.D.	IN. & EX.	22.012 – 22.025 (0.8666 – 0.8671)	———
Camshaft journal O.D.	IN. & EX.	21.972 – 21.993 (0.8650 – 0.8659)	———
Camshaft runout	IN. & EX.	———	0.10 (0.004)
No.2 cam drive idle gear/sprocket thrust clearance	0.15 – 0.29 (0.006 – 0.011)		———
Cylinder head distortion	———		0.05 (0.002)

CYLINDER + PISTON + PISTON RING

Unit: mm (in)

ITEM	STANDARD		LIMIT
Compression pressure (Automatic de-comp. actuated)	1 000 – 1 400 kPa (10 – 14 kgf/cm², 142 – 199 psi)		700 kPa (7 kgf/cm², 128 psi)
Compression pressure difference	———		200 kPa (2 kgf/cm², 28 psi)
Piston to cylinder clearance	0.015 – 0.025 (0.0006 – 0.0010)		0.12 (0.0047)
Cylinder bore	98.000 – 98.015 (3.8583 – 3.8589)		Nicks or Scratches
Piston diam.	97.980 – 97.995 (3.8575 – 3.8581) Measure at 10 mm (0.4 in) from the skirt end.		97.880 (3.8535)
Cylinder distortion	———		0.05 (0.002)
Piston ring free end gap	1st	Approx. 8.8 (0.35)	7.0 (0.28)
	2nd	Approx. 10.1 (0.40)	8.1 (0.32)
Piston ring end gap	1st	0.15 – 0.35 (0.006 – 0.014)	0.5 (0.02)
	2nd	RN: 0.30 – 0.45 (0.012 – 0.018)	0.7 (0.03)
Piston ring to groove clearance	1st	———	0.18 (0.0071)
	2nd	———	0.15 (0.0059)
Piston ring groove width	1st	0.93 – 0.95 (0.0366 – 0.0374)	———
		1.55 – 1.57 (0.0610 – 0.0618)	———
	2nd	1.01 – 1.03 (0.0398 – 0.0406)	———
	Oil	2.51 – 2.53 (0.0988 – 0.0996)	———

ITEM	STANDARD		LIMIT
Piston ring thickness	1st	0.86 – 0.91 (0.034 – 0.036)	———
		1.38 – 1.40 (0.054 – 0.055)	———
	2nd	0.97 – 0.99 (0.038 – 0.039)	———
Piston pin bore I.D.	22.002 – 22.008 (0.8662 – 0.8665)		22.030 (0.8673)
Piston pin O.D.	21.992 – 22.000 (0.8658 – 0.8661)		21.980 (0.8654)

CONROD + CRANKSHAFT

Unit: mm (in)

ITEM	STANDARD	LIMIT
Conrod small end I.D.	22.010 – 22.018 (0.8665 – 0.8668)	22.040 (0.8677)
Conrod big end side clearance	0.17 – 0.32 (0.007 – 0.013)	0.50 (0.020)
Conrod big end width	21.95 – 22.00 (0.864 – 0.866)	———
Crank pin width	44.17 – 44.22 (1.739 – 1.741)	———
Conrod big end oil clearance	0.040 – 0.064 (0.0016 – 0.0025)	0.080 (0.0031)
Crank pin O.D.	44.976 – 45.000 (1.7707 – 1.7717)	———
Crankshaft journal oil clearance	0.010 – 0.037 (0.0004 – 0.0015)	0.080 (0.0031)
Crankshaft journal O.D.	47.985 – 48.000 (1.8892 – 1.8898)	———
Crankshaft thrust clearance	0.050 – 0.100 (0.0020 – 0.0039)	———
Crankshaft thrust bearing thickness	1.925 – 2.175 (0.0758 – 0.0856)	———

OIL PUMP

ITEM	STANDARD	LIMIT
Oil pump reduction ratio	1.301 (57/31 x 29/41)	———
Oil pressure (at 60°C, 140°F)	Above 300 kPa (3.0 kgf/cm^2, 43 psi) Below 600 kPa (6.0 kgf/cm^2, 85 psi) at 3 000 r/min.	———

CLUTCH

Unit: mm (in)

ITEM	STANDARD	LIMIT
Clutch lever play	10 – 15 (0.4 – 0.6)	———
Drive plate thickness	*2.92 – 3.08 (0.115 – 0.121)	———
Drive plate claw width	13.7 – 13.8 (0.539 – 0.543)	12.9 (0.51)
Clutch release screw	1/4 turn back	———

ITEM	STANDARD	LIMIT
Driven plate distortion	———	0.10 (0.004)
Clutch spring free length	———	22.4 (0.88)

THERMOSTAT + RADIATOR + FAN

ITEM		STANDARD	LIMIT
Thermostat valve opening temperature		80.5 – 83.5°C (176.9 – 182.3°F)	———
Thermostat valve lift		Over 8 mm (0.31 in) at 95°C (203°F)	———
Radiator cap valve opening pressure		110 kPa (1.1 kgf/cm^2, 15.6 psi)	———
Cooling fan thermo-switch operating temperature	OFF→ON	Approx. 105°C (221°F)	———
	ON→OFF	Approx. 100°C (212°F)	———
Engine coolant temperature sensor resistance	20°C (68°F)	Approx. 2.45 kΩ	———
	50°C (122°F)	Approx. 0.811 kΩ	———
	80°C (176°F)	Approx. 0.318 kΩ	———
	110°C (230°F)	Approx. 0.142 kΩ	———
	130°C (266°F)	Approx. 0.088 kΩ	———

TRANSMISSION + DRIVE CHAIN

Unit: mm (in) Except ratio

ITEM		STANDARD		LIMIT
Primary reduction ratio		1.838 (57/31)		———
Final reduction ratio		2.235 (38/17)		———
Gear ratios	Low	2.666 (32/12)		———
	2nd	1.933 (29/15)		———
	3rd	1.500 (27/18)		———
	4th	1.227 (27/22)		———
	5th	1.086 (25/23)		———
	Top	1.000 (24/24)		———
Shift fork to groove clearance		0.1 – 0.3 (0.004 – 0.012)		0.50 (0.020)
Shift fork groove width		5.0 – 5.1 (0.197 – 0.201)		———
Shift fork thickness		4.8 – 4.9 (0.189 – 0.193)		———
Drive chain		Type	RK50GSVZ1	———
		Links	104 links, ENDLESS	———
		20-pitch length	———	319.4 (12.6)

ITEM	STANDARD	LIMIT
Drive chain slack	25 – 35 (1.0 – 1.4)	———
Gearshift lever height	60 (2.4)	———

INJECTOR + FUEL PUMP + FUEL PRESSURE REGULATOR

ITEM	SPECIFICATION	NOTE
Injector resistance	10 – 16 Ω at 20°C (68°F)	
Fuel pump discharge amount	Approx. 1 L (1.1/0.9 US/Imp qt) for 1 minute at 2.9 kgf/cm² (290 kPa, 41 psi)	
Fuel pressure regulator operating set pressure	Approx. 2.9 kgf/cm² (290 kPa, 41 psi)	

FI-SENSORS + INTAKE AIR CONTROL VALVE

ITEM		SPECIFICATION		NOTE
CMP sensor resistance		0.9 – 1.3 kΩ		
CMP sensor peak voltage		More than 0.8 V		
CKP sensor resistance		184 – 276 Ω		
CKP sensor peak voltage		More than 4 V		
IAP sensor input voltage		4.5 – 5.5 V		
IAP sensor output voltage		Approx. 1.8 V at idle speed		
TP sensor input voltage		4.5 – 5.5 V		
TP sensor resistance	(Closed)	Approx. 1.2 kΩ		
	(Opened)	Approx. 4.4 kΩ		
TP sensor output voltage	(Closed)	Approx. 1.1 V		
	(Opened)	Approx. 4.2 V		
ECT sensor input voltage		4.5 – 5.5 V		
ECT sensor resistance		2.3 – 2.6 kΩ at 20°C (68°F)		
IAT sensor input voltage		4.5 – 5.5 V		
IAT sensor resistance		2.2 – 2.7 kΩ at 20°C (68°F)		
AP sensor input voltage		4.5 – 5.5 V		
AP sensor output voltage		Approx. 3.6 V at 760 mmHg (100 kPa)		
TO sensor resistance		60 – 64 kΩ		
TO sensor voltage		Approx. 2.5 V		
GP sensor voltage		More than 0.6 V (From 1st to Top)		
Injector voltage		Battery voltage		
Ignition coil primary peak voltage		More than 280 V (When cranking)		
VCSV resistance		36 – 44 Ω		
Intake air control valve operating rpm		Opening rpm	Above 4 000 rpm	
		Closing rpm	Below 3 800 rpm	

THROTTLE BODY

ITEM	SPECIFICATION	
	E-18	Others
Fast idle r/min	2 000 r/min.	←
Idle r/min	1 200 ± 50 r/min.	1 200 ± 100 r/min.
Throttle cable play	2.0 – 4.0 mm (0.08 – 0.16 in)	←

ELECTRICAL

Unit: mm (in)

ITEM			SPECIFICATION		NOTE
Ignition timing			3° B.T.D.C. at 1 200 r/min.		
Firing order			1-2		
Spark plug		Type	NGK: CR8EK Denso: U24ETR		
		Gap	0.6 – 0.7 (0.024 – 0.028)		
Spark performance			Over 8 (0.3) at 1 atm.		
Crankshaft position sensor resistance			184 – 276 Ω		Bl – G
Ignition coil resistance		Primary	3 – 5 Ω		⊕ tap – ⊖ tap
		Secondary	20 – 28 kΩ		⊕ tap – Plug cap
Crankshaft position sensor peak voltage			More than 4.0 V		
Ignition coil primary peak voltage			More than 280 V		
Generator coil resistance			0.1 – 1.0 Ω		Y – Y
Generator Max. output			Approx. 380 W at 5 000 r/min.		
Generator no-load voltage (When engine is cold)			More than 70V (AC) at 5 000 r/min.		
Regulated voltage			13.3 – 14.3 V at 5 000 r/min.		
Starter relay resistance			3 – 6 Ω		
Battery	Type designation		FTX12-BS		
	Capacity		12V 36 kC (10 Ah)/10 HR		
	Standard electrolyte S.G.		1.320 at 20°C (68°F)		
Fuse size	Headlight	HI	15A		
		LO	15A		
	Turn signal		15A		
	Ignition		10A		
	Fuel pump relay		10A		
	Main		30A		

WATTAGE

Unit: W

ITEM		SPECIFICATION		
		E-03, 24, 28, 33	E-04, 18, 22, 25, 34, 37	E-02
Headlight	HI	60 × 2	55	60 × 2
	LO	55 × 2	55	55 × 2
Position light			5	←
Brake light/Taillight		21/5 × 2	←	←
Turn signal light		21 × 4	←	←
Speedometer/Tachometer light		0.84 × 3	←	←
Turn signal indicator light		3	←	←
High beam indicator light		1.7	←	←
Neutral indicator light		1.7	←	←
Fuel level indicator light		1.7	←	←
License light		5	←	←

BRAKE + WHEEL

Unit: mm (in)

ITEM			STANDARD	LIMIT
Rear brake pedal height			60 (2.4)	———
Brake disc thickness		Front	5.0 ± 0.2 (0.197 ± 0.008)	4.5 (0.18)
		Rear	5.0 ± 0.2 (0.197 ± 0.008)	4.5 (0.18)
Brake disc runout (Front & Rear)			———	0.30 (0.012)
Master cylinder bore		Front	14.000 – 14.043 (0.5512 – 0.5529)	———
		Rear	12.700 – 12.743 (0.5000 – 0.5017)	———
Master cylinder piston diam.		Front	13.957 – 13.984 (0.5495 – 0.5506)	———
		Rear	12.657 – 12.684 (0.4983 – 0.4994)	———
Brake caliper cylinder bore	Leading	Front	27.000 – 27.076 (1.0630 – 1.0660)	———
	Trailing		30.230 – 30.306 (1.1902 – 1.1931)	———
		Rear	38.180 – 38.256 (1.5031 – 1.5061)	———
Brake caliper piston diam.	Leading	Front	26.920 – 26.970 (1.0598 – 1.0618)	———
	Trailing		30.150 – 30.200 (1.1870 – 1.1890)	———
		Rear	38.098 – 38.148 (1.4999 – 1.5019)	———
Wheel rim runout (Front & Rear)		Axial	———	2.0 (0.08)
		Radial	———	2.0 (0.08)

ITEM	STANDARD		LIMIT
Wheel axle runout	Front	———	0.25 (0.010)
	Rear	———	0.25 (0.010)
Wheel rim size	Front	17 × MT 3.50	———
	Rear	17 × MT 6.00	———
Tire size	Front	120/70 ZR17 (58W)	———
	Rear	190/50 ZR17 (73W)	———
Tire tread depth	Front	———	1.6 (0.06)
	Rear	———	2.0 (0.08)

SUSPENSION

Unit: mm (in)

ITEM	STANDARD		LIMIT
Front fork stroke	120 (4.7)		———
Front fork spring free length	———		280 (11.0)
Front fork oil level	112 (4.4)		———
Front fork spring adjuster	4th groove		———
Front fork damping force adjuster	Rebound	¾ turn out	———
	Compression	1-¼ turns out	———
Rear suspension spring unit set length	180 (7.1)		———
Rear suspension rotary damper damping force adjuster	Rebound	At punch mark (about 2-¼ turns out)	———
	Compression	At punch mark (about 1-¼ turns out)	———
Rear wheel travel	128 (5.0)		———
Swingarm pivot shaft runout	———		0.3 (0.01)

TIRE PRESSURE

COLD INFLATION TIRE PRESSURE	SOLO RIDING			DUAL RIDING		
	kPa	kgf/cm²	psi	kPa	kgf/cm²	psi
FRONT	250	2.50	36	250	2.50	36
REAR	250	2.50	36	250	2.50	36

FUEL + OIL + ENGINE COOLANT

ITEM	SPECIFICATION		NOTE
Fuel type	Use only unleaded gasoline of at least 87 pump octane ($\frac{R+M}{2}$) or 91 octane or higher rated by the research method. Gasoline containing MTBE (Methyl Tertiary Butyl Ether), less than 10% ethanol, or less than 5% methanol with appropriate cosolvents and corrosion inhibitor is permissible.		E-03, 28, 33
	Gasoline used should be graded 91 octane or higher. An unleaded gasoline is recommended.		The others
Fuel tank	17 L (4.5/3.7 US/Imp gal)		
Engine oil type	SAE 10W/40, API SF or SG		
Engine oil capacity	Change	3 100 ml (3.3/2.7 US/Imp qt)	
	Filter change	3 300 ml (3.5/2.9 US/Imp qt)	
	Overhaul	3 600 ml (3.8/3.2 US/Imp qt)	
Front fork oil type	Fork oil L01		
Front fork oil capacity (each leg)	477 ml (16.1/16.8 US/Imp oz)		
Brake fluid type	DOT 4		
Engine coolant type	Use an anti-freeze/coolant compatible with aluminum radiator, mixed with distilled water only, at the ratio of 50 : 50.		
Engine coolant including reserve	2 200 ml (2.3/1.9 US/Imp qt)		

CLUTCH

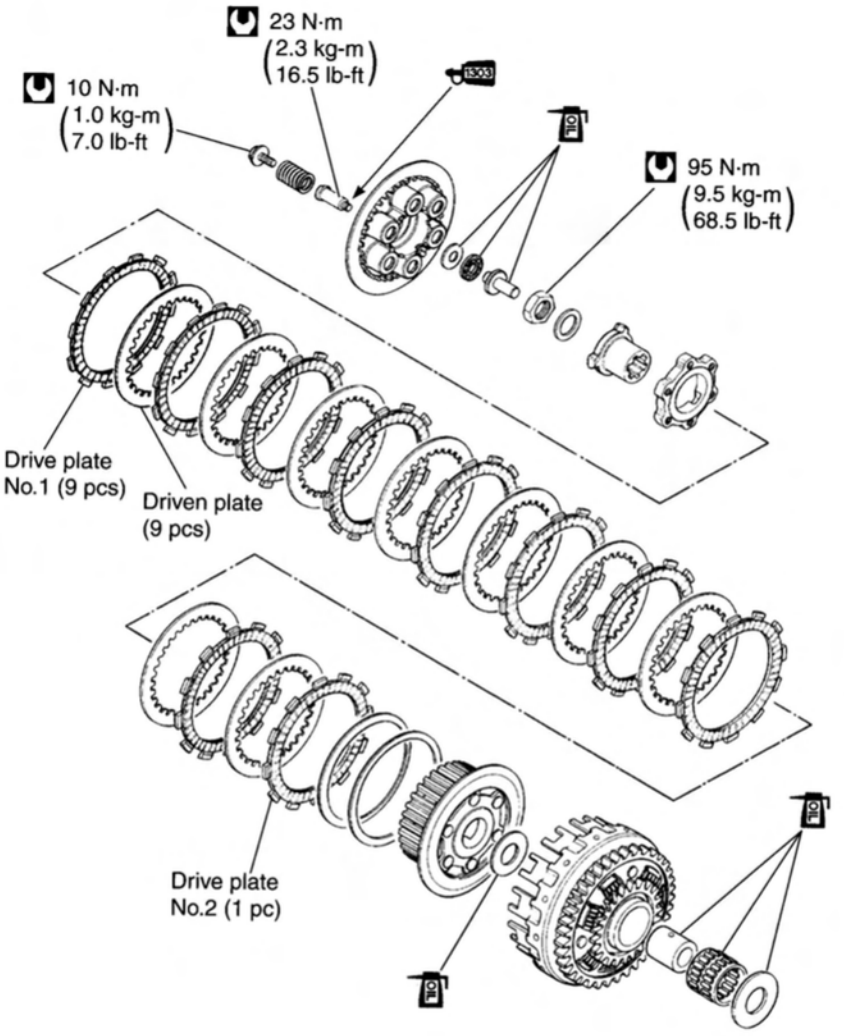
23 N·m
(2.3 kg-m
16.5 lb-ft)
10 N·m
(1.0 kg-m
7.0 lb-ft)
95 N·m
(9.5 kg-m
68.5 lb-ft)
OIL
Drive plate
No.1 (9 pcs)
Driven plate
(9 pcs)
Drive plate
No.2 (1 pc)
OIL
OIL

FRONT BRAKE HOSE ROUTING

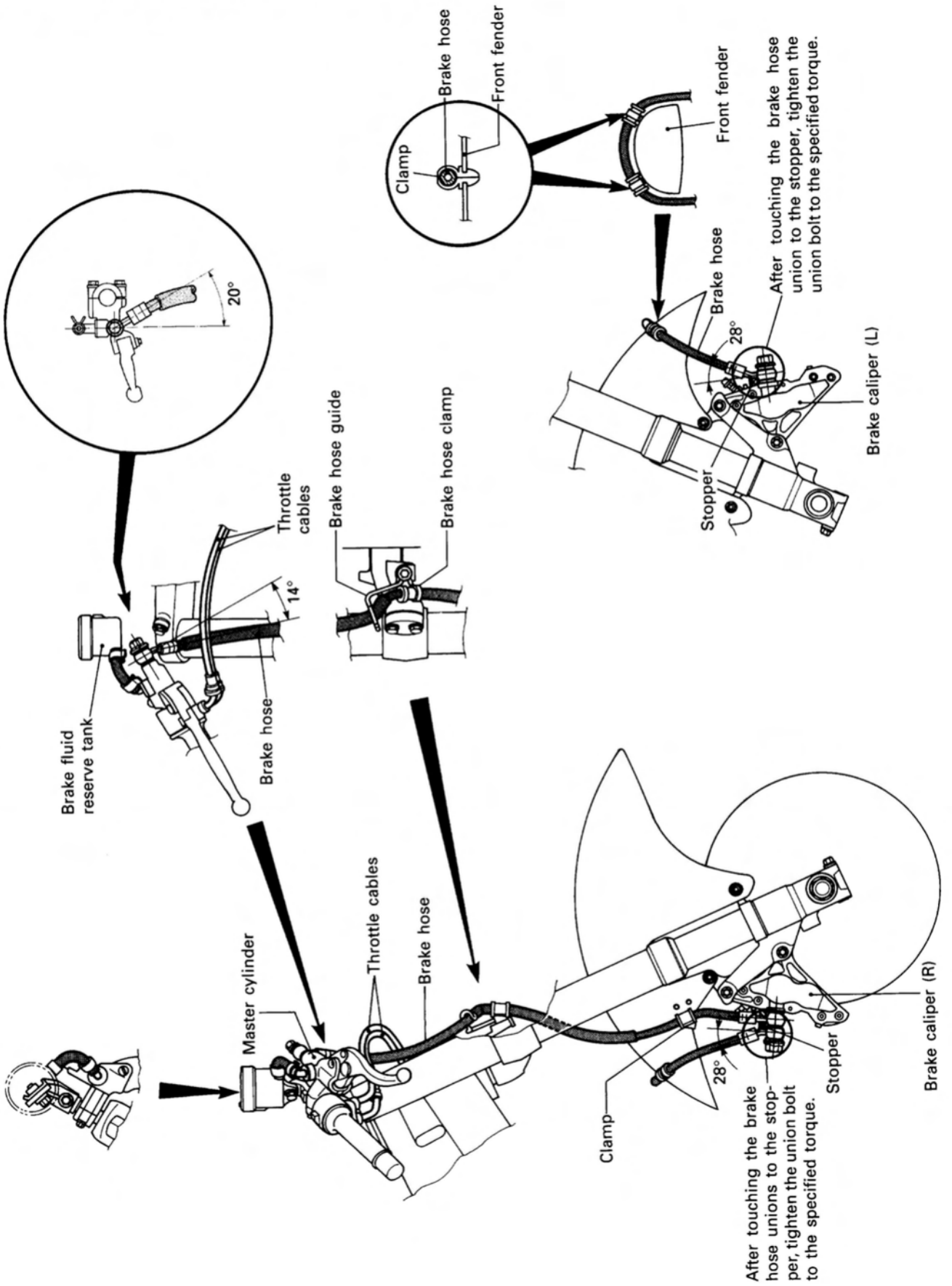

CRANKCASE BREATHER

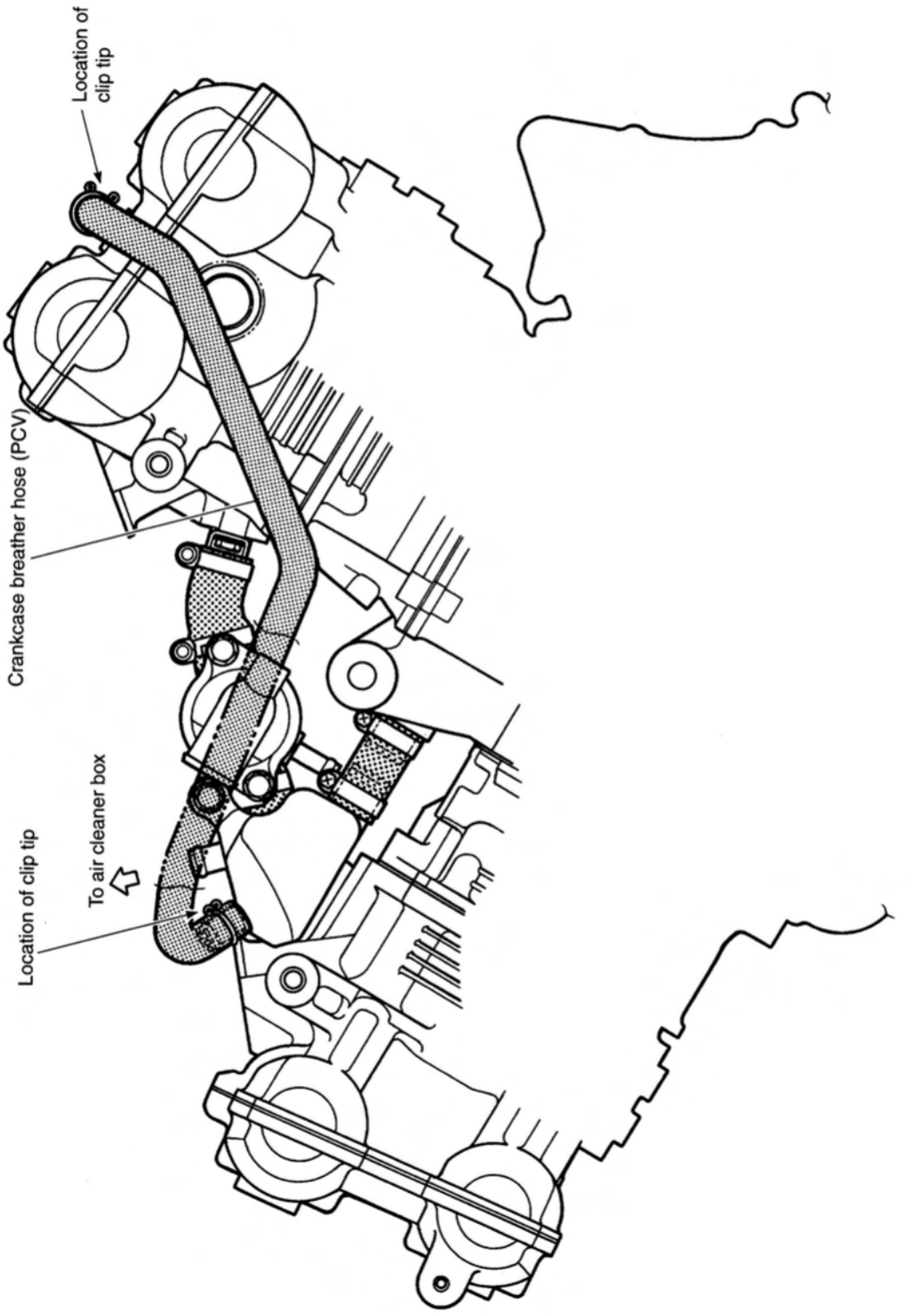

Prepared by

SUZUKI MOTOR CORPORATION

Motorcycle Service Department

4th Ed. October, 2000

1st Ed. February, 1997

Part No. 99500-39144-03E

Printed in Japan

FIG.57

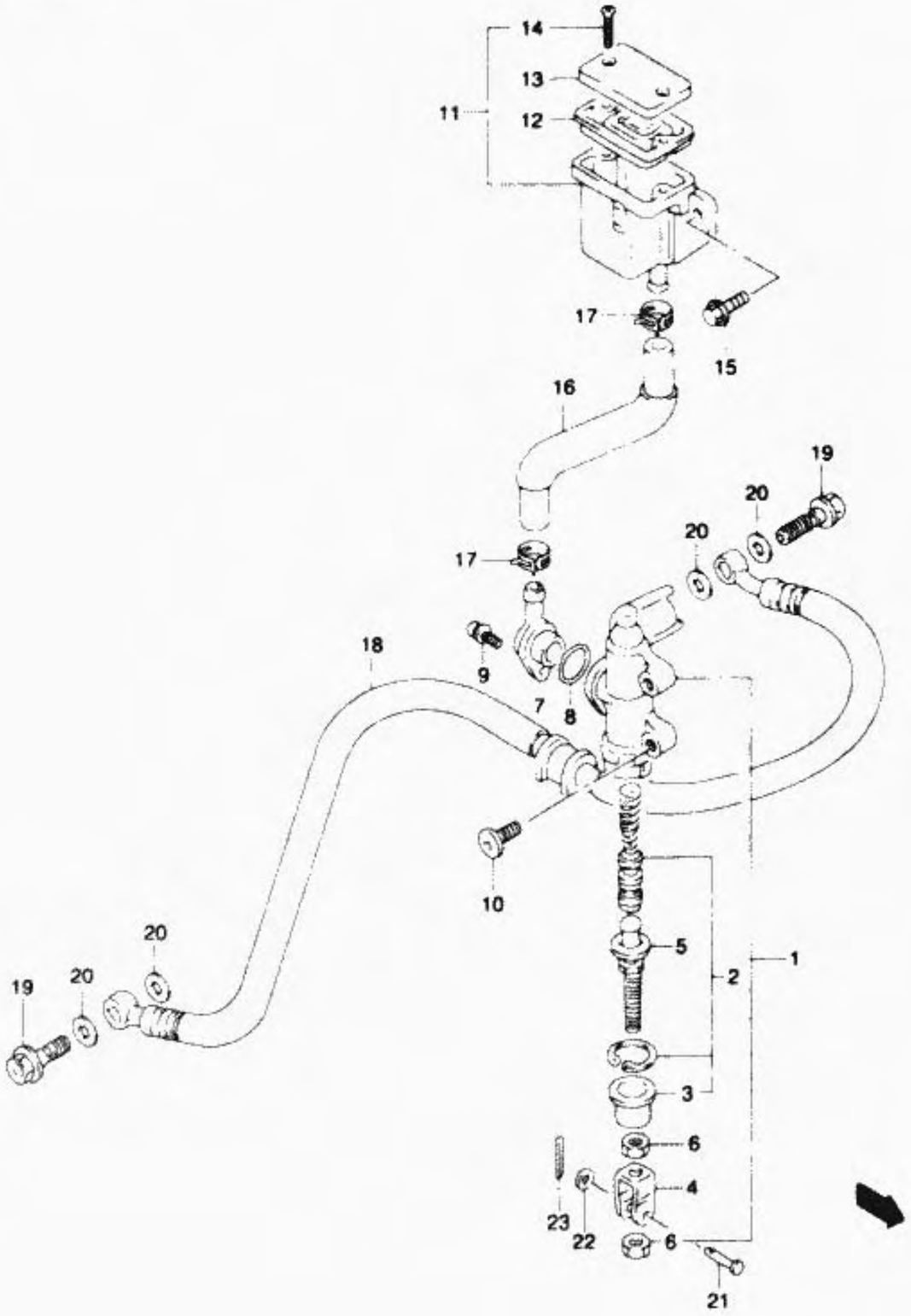

FIG.57 (J- 7) REAR MASTER CYLINDER

REF.NO.	PART NO.	DESCRIPTION	QTY.	REMARKS
1	69600-33C00	CYLINDER ASSY. REAR MASTER	1	
2	69600-04820	.PISTON / CAP SET	1	
3	69691-00A00	.BOOT	1	
4	69692-27A30	.YOKE	1	
5	69670-48B00	.ROD, PUSH	1	
6	69693-05A00	.NUT	2	
7	69672-05A00	.CONNECTOR	1	
8	69686-34200	.O RING	1	
9	02112-74123	.SCREW	1	
10	09139-06029	BOLT (6X25)	2	
11	69740-24A01	TANK ASSY, REAR RESERVOIR	1	
12	59667-04700	.DIAPHRAGM	1	
13	59669-05D00	.CAP	1	
14	69689-04A00	.SCREW	2	
15	01550-06123	BOLT	1	
16	69730-02F00	HOSE, RESERVOIR TANK	1	
17	09401-13417	CLAMP	2	
18	69480-02F00	HOSE, REAR BRAKE	1	
19	09360-10041	BOLT (10X1.00X22)	2	
20	09161-10009	WASHER (10X15X1.5)	4	
21	09200-06037	PIN	1	
22	08322-01063	WASHER	1	
23	04111-20158	PIN, COTTER	1	

FIG.56

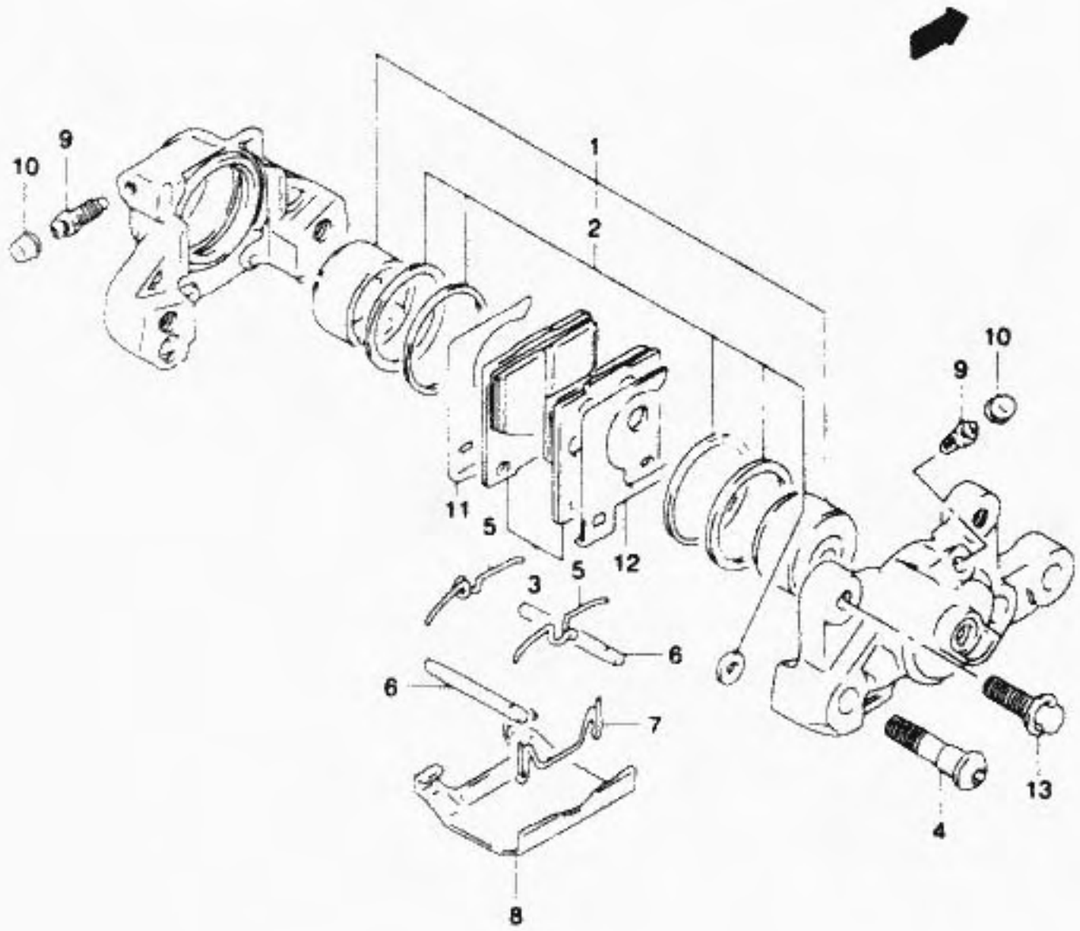

FIG.56 (J- 6) REAR CALIPER

REF.NO.	PART NO.	DESCRIPTION	QTY.	REMARKS
	69100-05C62	CALIPER ASSY, REAR	1	
1	69100-05850	.PISTON SET	1	
2	69100-32820	..SEAL SET, PISTON	1	
3	69100-05860	.PAD SET	1	
4	59145-05C50	.BOLT	2	
5	59143-16700	.SPRING	2	
6	69141-46E01	.PIN	2	
7	69142-46E01	.CLIP	1	
8	59151-16701	.COVER	1	
9	59121-18410	.BLEEDER	2	
10	55156-66310	.CAP	2	
11	59371-20C00	.SHIM, INNER	1	
12	59381-20C00	.SHIM, OUTER	1	
13	01550-08303	BOLT	2	

FIG.55

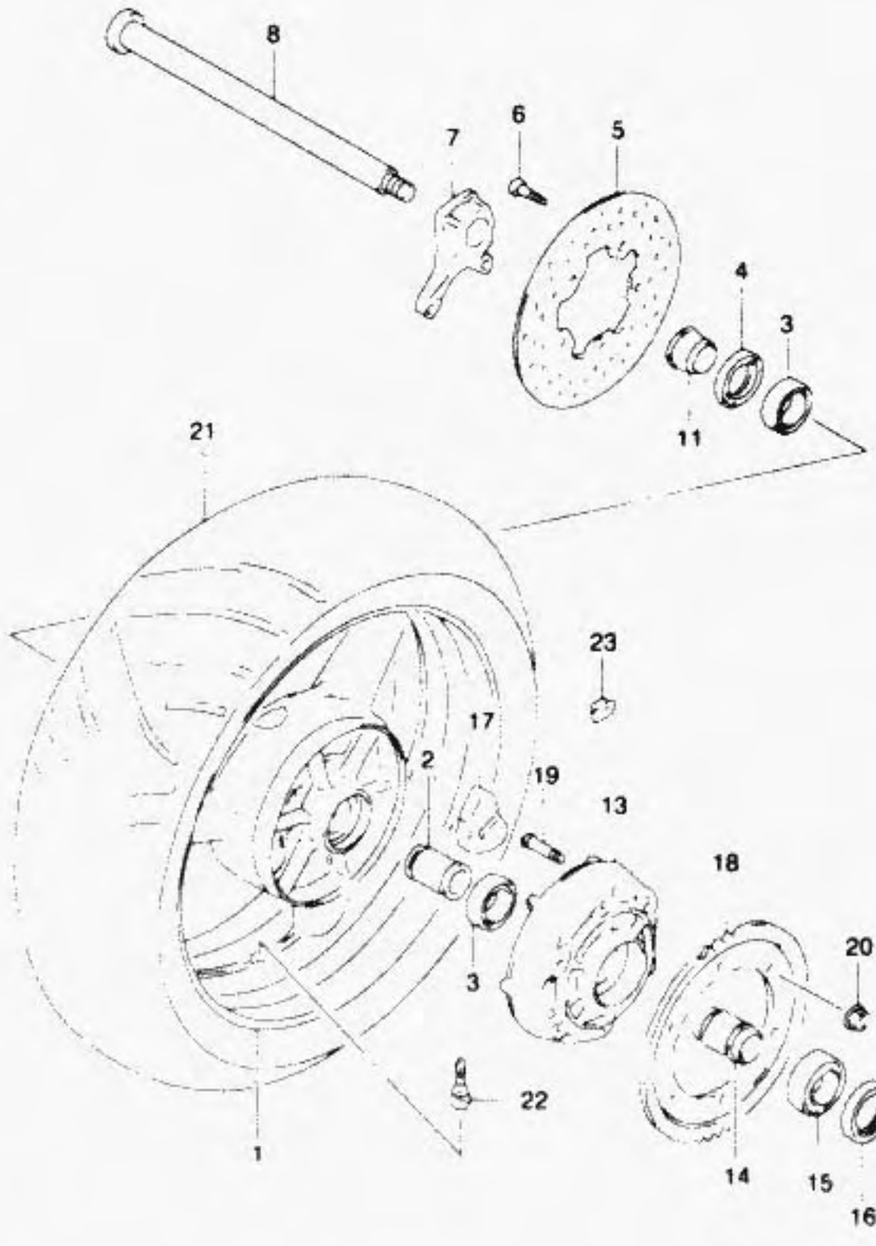

FIG.55 (J- 5) REAR WHEEL

REF.NO.	PART NO.	DESCRIPTION	QTY.	REMARKS
1-1	64111-33E00-35B	WHEEL, REAR (17XMT6.00)(GOLD)	1	MODEL V/W/X →64111-33E10-35B
1-2	64111-33E10-35B	WHEEL, REAR (17XMT6.00)(GOLD)	1	MODEL Y
1-3	64111-33E10-Y6G	WHEEL, REAR (17XMT6.00) (SILVER)	1	MODEL K1
2-1	64730-33E00	SPACER, HUB BEARING	1	MODEL V MODEL W -F.NO.W2100483 →64731-33E10
2-2	64731-33E10	SPACER, HUB BEARING	1	MODEL W F.NO.W2100484-
2-3	64731-33E10	SPACER, HUB BEARING	1	MODEL X/Y/K1
3	09262-32008	BEARING (32X58X13)	2	
4	09285-38001	SEAL, RH (38X58X7)	1	
5	69211-33E10	DISC, REAR BRAKE	1	
6	93106-08125	BOLT (8X33)	5	
7	69721-33E00	BRACKET, REAR CALIPER	1	
8	64711-33E30	AXLE, REAR	1	
9	04111-40408	PIN, COTTER	1	
10	09141-25001	NUT	1	
11	64741-33E00	SPACER, AXLE RH	1	
12	64751-33E00	SPACER, AXLE LH	1	
13	64611-33E02	DRUM, REAR SPROCKET	1	
14	64733-33E00	RETAINER, SPROCKET DRUM	1	
15	09262-32007	BEARING (32X65X17)	1	
16	09285-39001	SEAL (39X65X7)	1	
17	64651-17E00	ABSORBER, HUB SHOCK	6	
18	64511-02F00	SPROCKET, REAR (NT:38)	1	
19	09119-10059	BOLT (10X38)	6	
20	08319-31107	NUT	6	
21	65110-02F00	TIRE, REAR (190/50 ZR17) METZELER	1	PURCHASE LOCALLY
22	43130-24A00	VALVE ASSY, WHEEL RIM (TR412)	1	
23-1	55411-00A00	BALANCER (10G)	0-3	
23-2	55412-00A01	BALANCER (20G)	0-3	

FIG.54

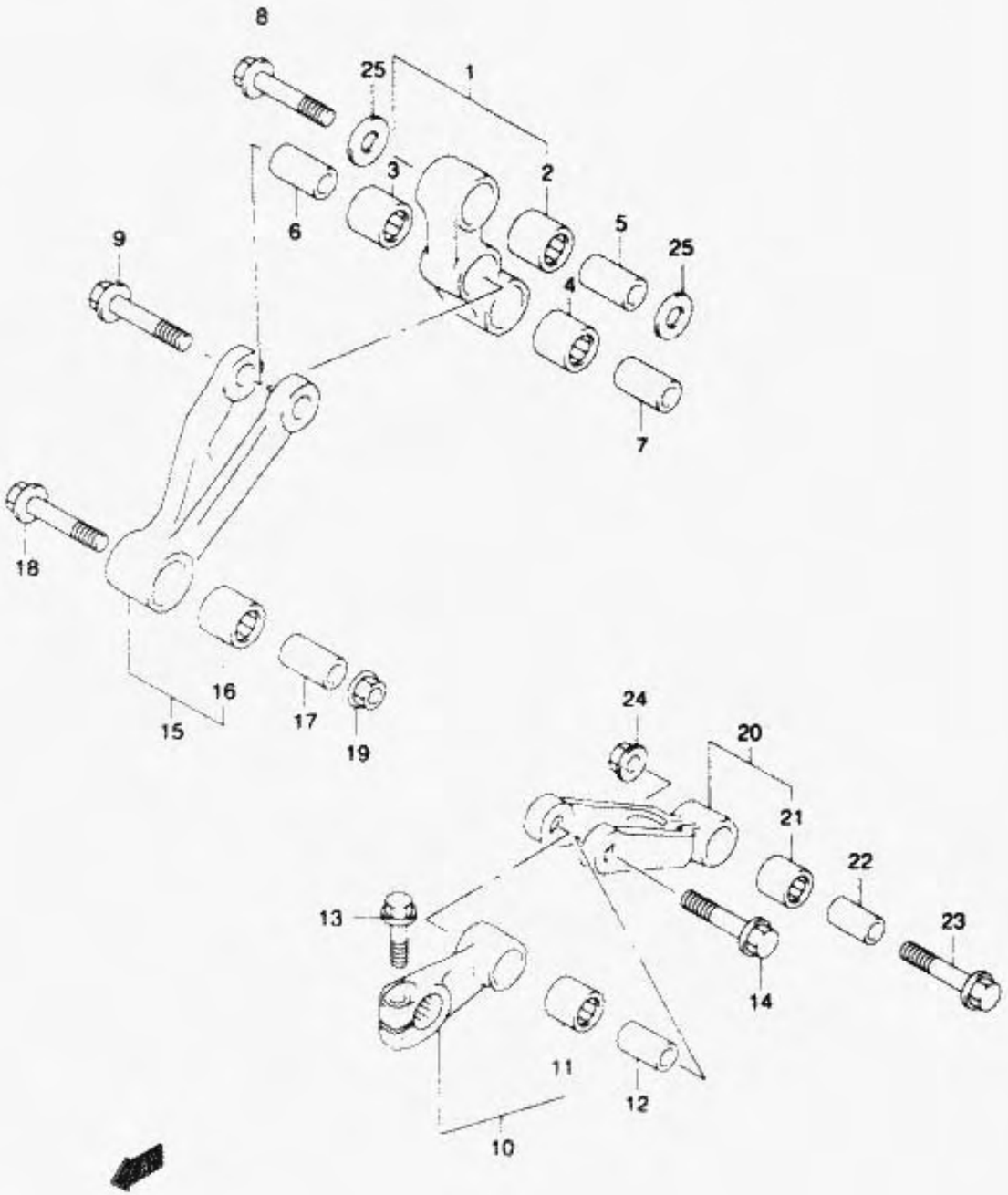

FIG.54 (J- 4) REAR CUSHION LEVER

REF.NO.	PART NO.	DESCRIPTION	QTY.	REMARKS
1	62600-02810	LEVER SET, REAR CUSHION	1	
2	09263-20073	.BEARING, FRONT (20X27X30)	1	
3	09263-20074	.BEARING, CENTER (20X27X32)	1	
4	09263-17039	.BEARING, REAR (17X24X20)	2	
5	62317-27C10	SPACER, LEVER FRONT (12X20X34)	1	
6	62317-27C10	SPACER, LEVER CENTER (12X20X34)	1	
7	62684-02F00	SPACER, LEVER REAR (10X17X45)	1	
8	62658-01C60	BOLT, LEVER FRONT (12X65)	1	
9	62668-42A02	BOLT, LEVER CENTER (12X62)	1	
10	62600-02860	ARM SET, REAR CUSHION	1	
11	09263-14025	.BEARING (14X20X25)	1	
12	62646-02F00	SPACER, ARM (10X14X29)	1	
13	09103-08042	BOLT, ARM (8X31)	1	
14	62648-14500	BOLT, ARM (10X48)	1	
15	62650-02810	ROD SET, REAR CUSHION RH	1	
16	09263-20074	.BEARING (20X27X32)	1	
17	62317-27C10	SPACER, ROD RH (12X20X34)	1	
18	62668-27A00	BOLT, ROD RH (12X72)	1	
19	08319-31128	NUT	1	
20	62640-02810	ROD SET, REAR CUSHION LH	1	
21	09263-14025	.BEARING (14X20X25)	1	
22	62646-02F00	SPACER, ROD LH (10X14X29)	1	
23	62311-14501	BOLT, ROD LH (10X58)	1	
24	08319-31107	NUT	1	
25	09181-20186	WASHER, LEVER FRONT	2	

FIG.53

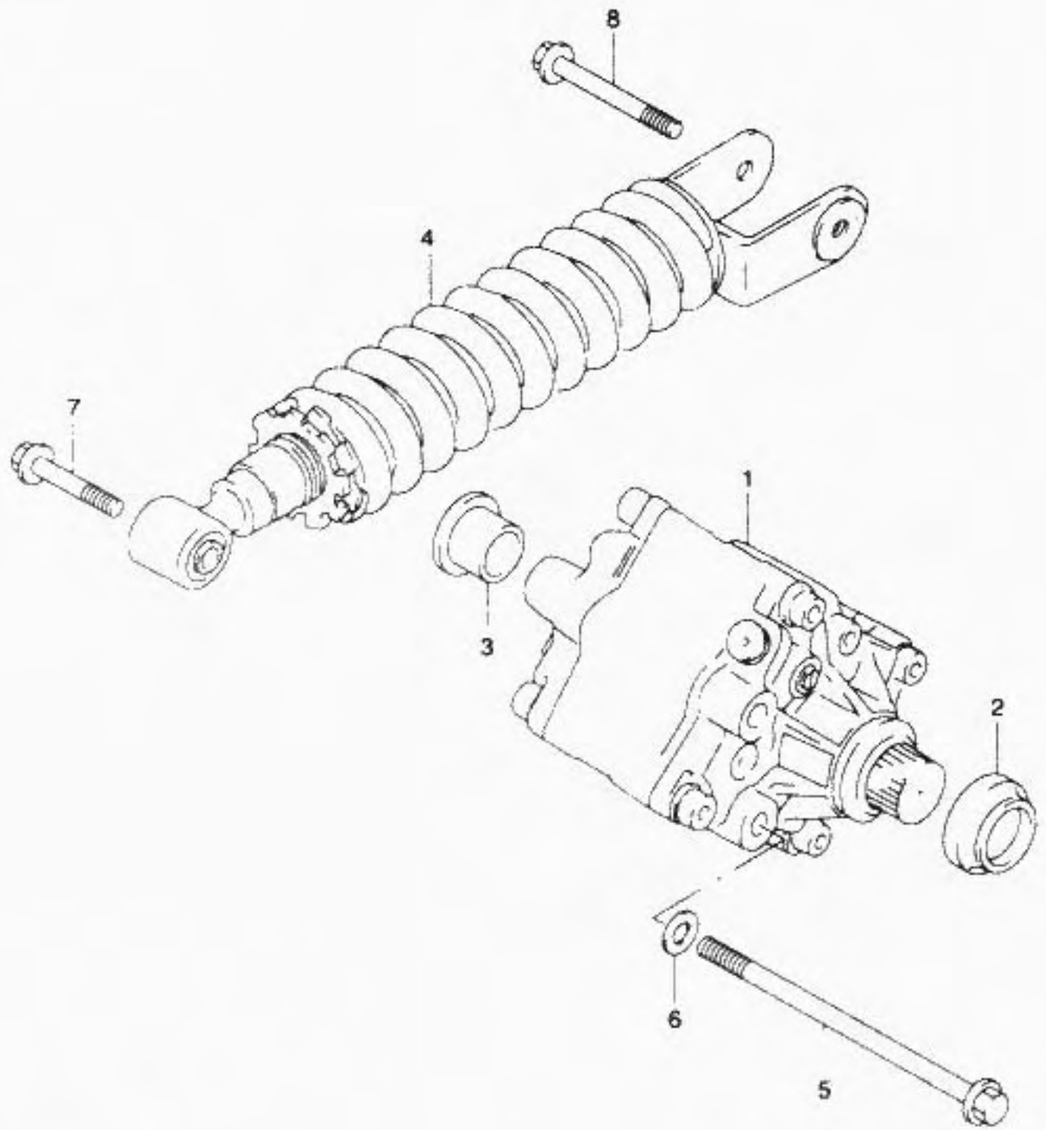

FIG.53 (J- 3) REAR DAMPER

REF.NO.	PART NO.	DESCRIPTION	QTY.	REMARKS
1-1	62110-02F20	DAMPER ASSY, REAR	1	MODEL V E3
1-2	62110-02F00	DAMPER ASSY, REAR	1	MODEL V E28
1-3	62110-02F40	DAMPER ASSY, REAR	1	MODEL W/X/Y
1-4	62110-02F50	DAMPER ASSY, REAR	1	MODEL K1 E3,E33
1-5	62110-02F41	DAMPER ASSY, REAR	1	MODEL K1 E28
2	62138-02F00	CAP	1	
3	62139-02F00	CAP	1	
4-1	62200-02F00-37W	UNIT ASSY, REAR SPRING (RED)	1	MODEL V
4-2	62200-02F20-37W	UNIT ASSY, REAR SPRING (RED)	1	MODEL W/X/Y/K1
5	09103-10122	BOLT, DAMPER (10X130)	2	
6	09164-10008	WASHER, DAMPER (10.2X20X1.0)	2	
7	09103-10101	BOLT, UPPER (10X54)	1	
8	09103-10050	BOLT, LOWER (10X60)	1	

FIG.52

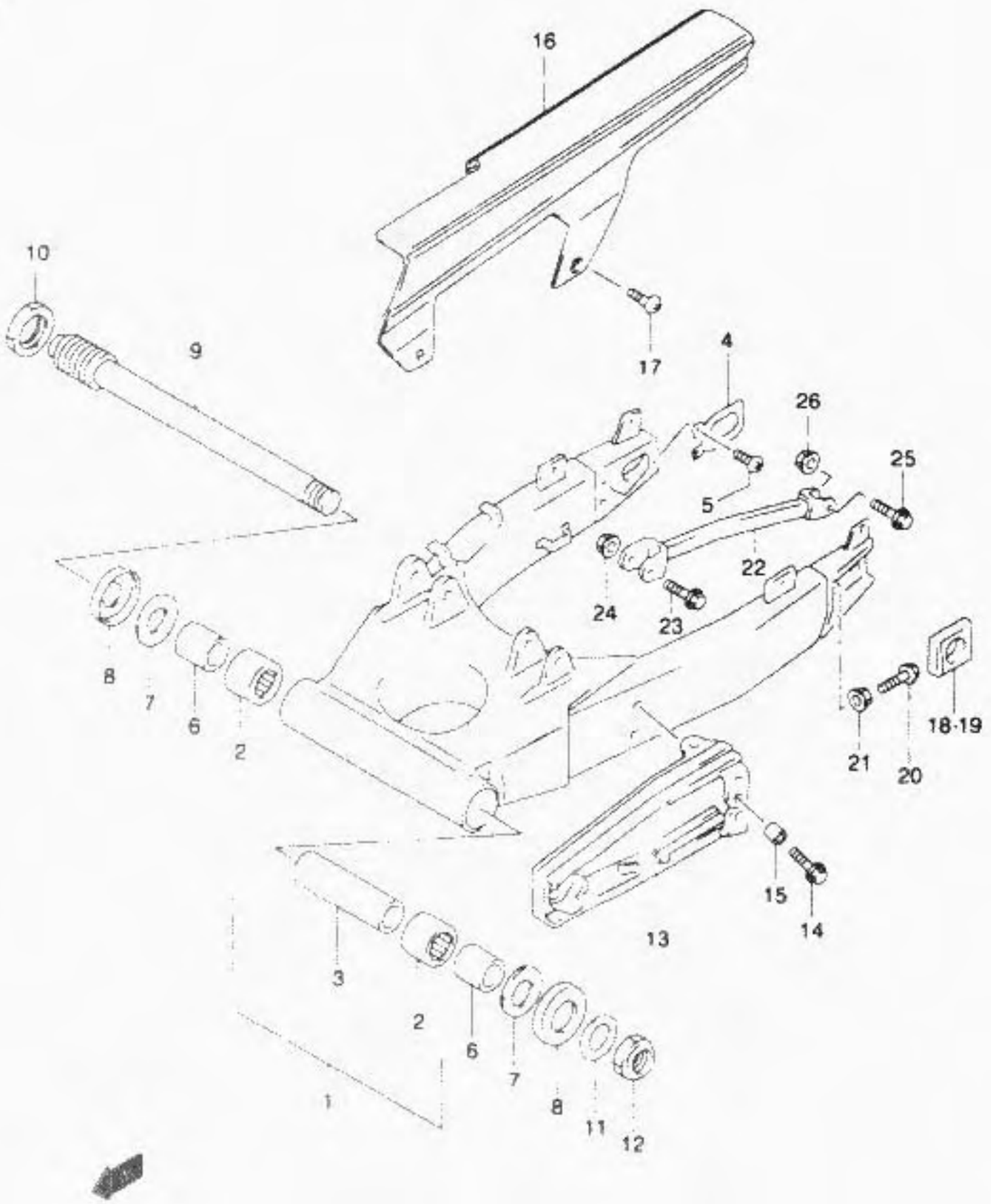

FIG.52 (J- 2) REAR SWINGING ARM

REF.NO.	PART NO.	DESCRIPTION	QTY.	REMARKS
1	61000-02F10	SWINGING ARM ASSY, REAR	1	
2	09263-30040	.BEARING, PIVOT (30X40X25)	2	
3-1	61280-33E00	.SPACER, CENTER	1	MODEL V MODEL W -F.NO.W2100483 →61281-33E10
3-2	61281-33E10	.SPACER, CENTER	1	MODEL W F.NO.W2100484-
3-3	61281-33E10	.SPACER, CENTER	1	MODEL X/Y/K1
4	61124-33E00	PLATE, BRACKET	2	
5	02142-06163	SCREW	2	
6	61251-17E10	SPACER, BEARING	2	
7	08211-25481	WASHER, THRUST	2	
8	61262-17E10	SEAL, DUST	2	
9	61211-33E00	SHAFT, PIVOT	1	
10	61214-40C31	NUT, PIVOT BOLT	1	
11	09160-25070	WASHER	1	
12	09159-25001	NUT	1	
13	61273-02F00	BUFFER, CHAIN TOUCH DEFENSE	1	
14	09116-06152	BOLT (6X20)	3	
15	09180-06306	SPACER (6.5X9X5)	3	
16	61310-34E00	CASE, CHAIN	1	
17	09139-06083	SCREW (6X16)	2	
18	61445-33E00	WASHER, CHAIN ADJUSTER RH	1	
19	61446-33E10	WASHER, CHAIN ADJUSTER LH	1	
20	09100-08287	BOLT (8X50)	2	
21	08316-10083	NUT	2	
22	64310-33E00	TORQUE LINK, REAR	1	
23	09111-08083	BOLT, FRONT (8X44)	1	
24	08319-31087	NUT	1	
25	09103-10019	BOLT, REAR (10X37)	1	
26	08319-31107	NUT	1	

FIG.51

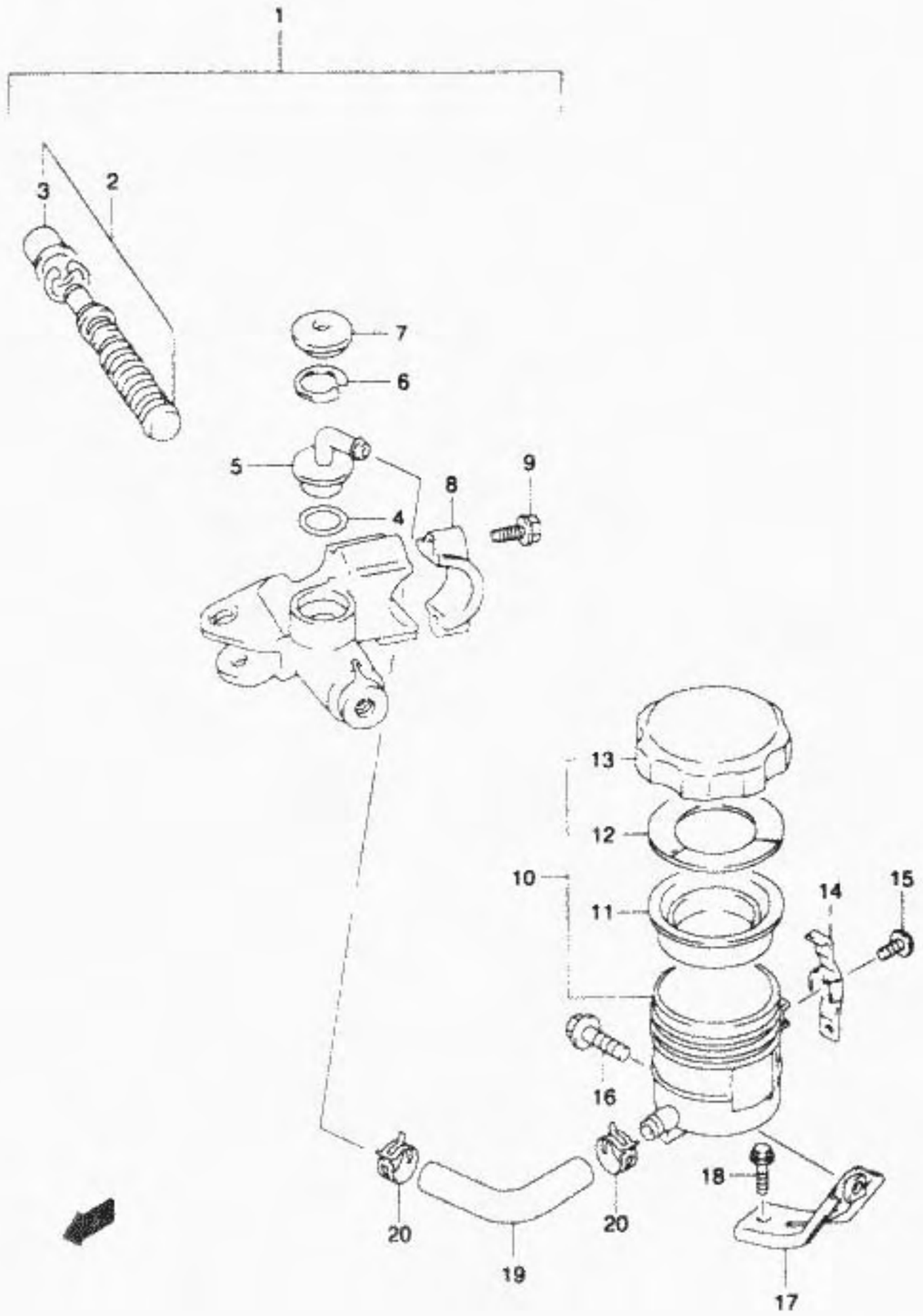

FIG.51 (I-12) FRONT MASTER CYLINDER

REF.NO.	PART NO.	DESCRIPTION	QTY.	REMARKS
1	59600-17C00	CYLINDER ASSY, FRONT MASTER	1	
2	59600-45850	.PISTON/CUP SET	1	
3	59666-44300	.BOOT	1	
4	69686-34200	.O RING	1	
5	59672-17C00	.CONNECTOR	1	
6	69674-00B20	.CIRCLIP	1	
7	59673-17C00	.COVER, DUST	1	
8	59671-36500	.HOLDER	1	
9	59675-19C00	.BOLT	2	
10	59740-07D00	TANK ASSY, RESERVOIR	1	
11	59667-18441	.DIAPHRAGM	1	
12	59668-18441	.PLATE	1	
13	59669-07D00	.CAP	1	
14	59743-17C00	PLATE, TANK CAP	1	
15	02142-04103	SCREW	1	
16	01550-06123	BOLT	1	
17	59750-02F00	BRACKET, RESERVOIR TANK	1	
18	01550-06123	BOLT	1	
19	59731-32C00	HOSE, RESERVOIR TANK	1	
20	59735-17C00	CLAMP, HOSE	2	

FIG.50

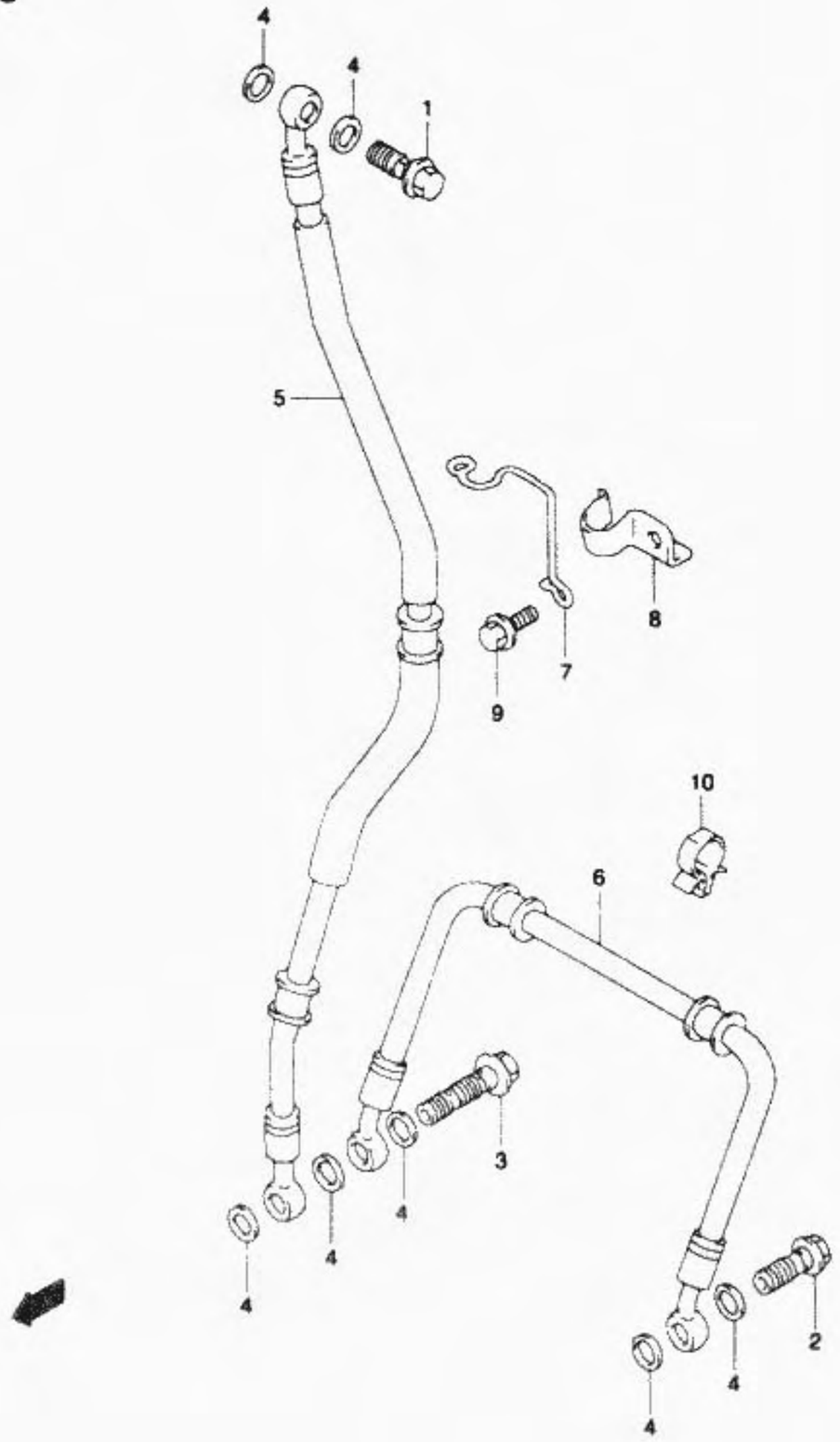

FIG.50 (I-11) FRONT BRAKE HOSE

REF.NO.	PART NO.	DESCRIPTION	QTY.	REMARKS
1	09360-10041	BOLT, UPPER (10X1.00X22)	1	
2	09360-10042	BOLT, LH (10X1.25X22)	1	
3	09360-10044	BOLT, RH (10X1.25X36)	1	
4	09161-10009	WASHER	7	
5	59480-02F00	HOSE, FRONT BRAKE NO.1	1	
6	59240-02F00	HOSE, FRONT BRAKE NO.2	1	
7	59243-02F00	GUIDE, BRAKE HOSE NO 1	1	
8	59266-38D00	CLAMP, BRAKE HOSE NO.1	1	
9	01550-06163	BOLT	1	
10	09403-14304	CLAMP, BRAKE HOSE NO.2	2	

FIG.49

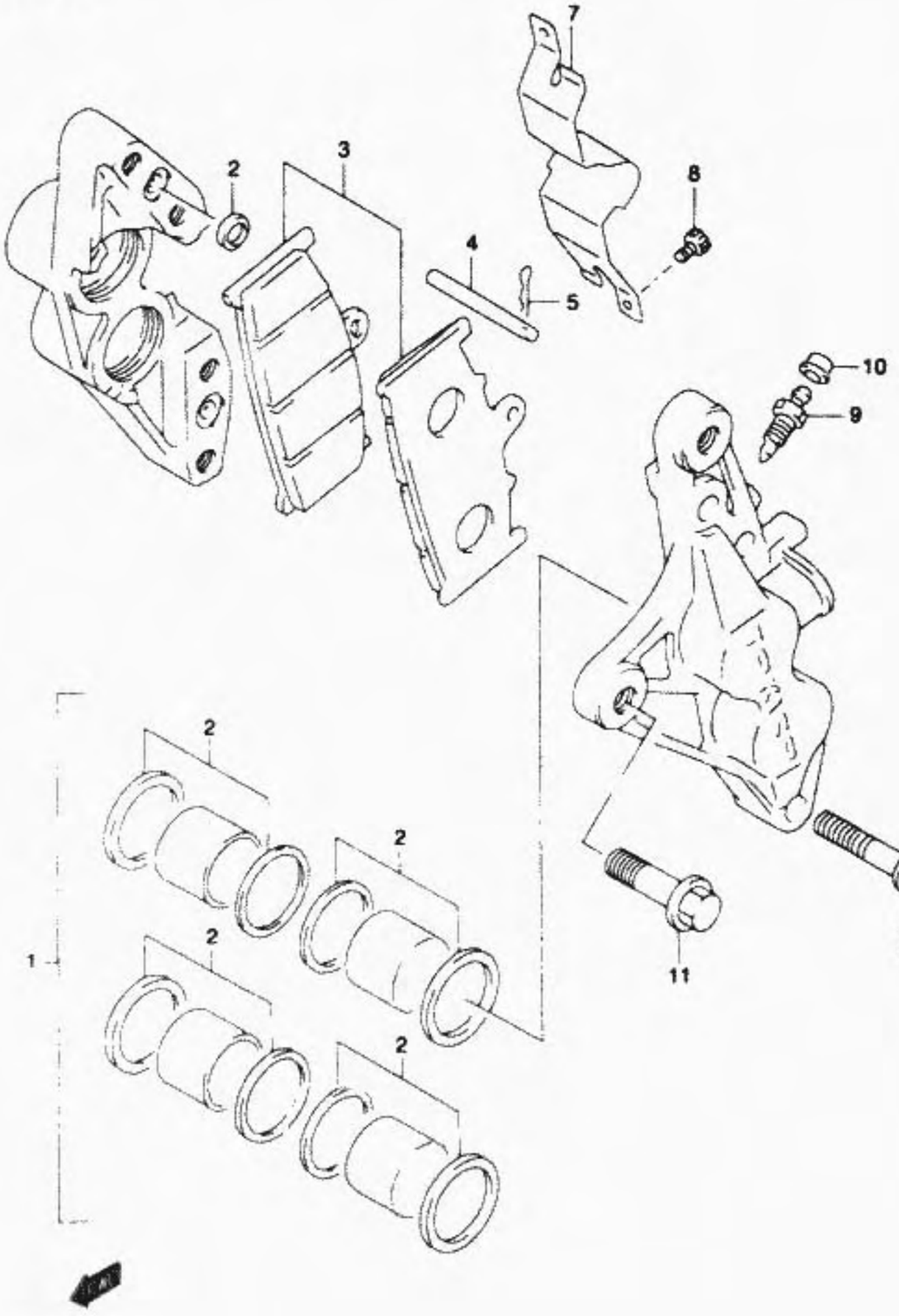

FIG.49 (I-10) FRONT CALIPERS

REF.NO.	PART NO.	DESCRIPTION	QTY.	REMARKS
	59100-34E00	CALIPER ASSY, FRONT RH	1	
	59300-34E00	CALIPER ASSY, FRONT LH	1	
1	59300-34810	.PISTON SET	2	
2	59300-34820	.SEAL SET, PISTON	2	
3	59300-34830	.PAD SET	2	
4	69141-45000	.PIN	2	
5	69142-45000	.CLIP	2	
6	59145-34E00	.BOLT	8	
7-1	59152-22D01	.COVER, RH	1	
7-2	59151-22D01	.COVER, LH	1	
8	59153-22D00	.SCREW	4	
9	59121-18410	.BLEEDER	2	
10	55156-66310	.CAP	2	
11	09103-10296	BOLT (10X30)	4	

FIG.48A

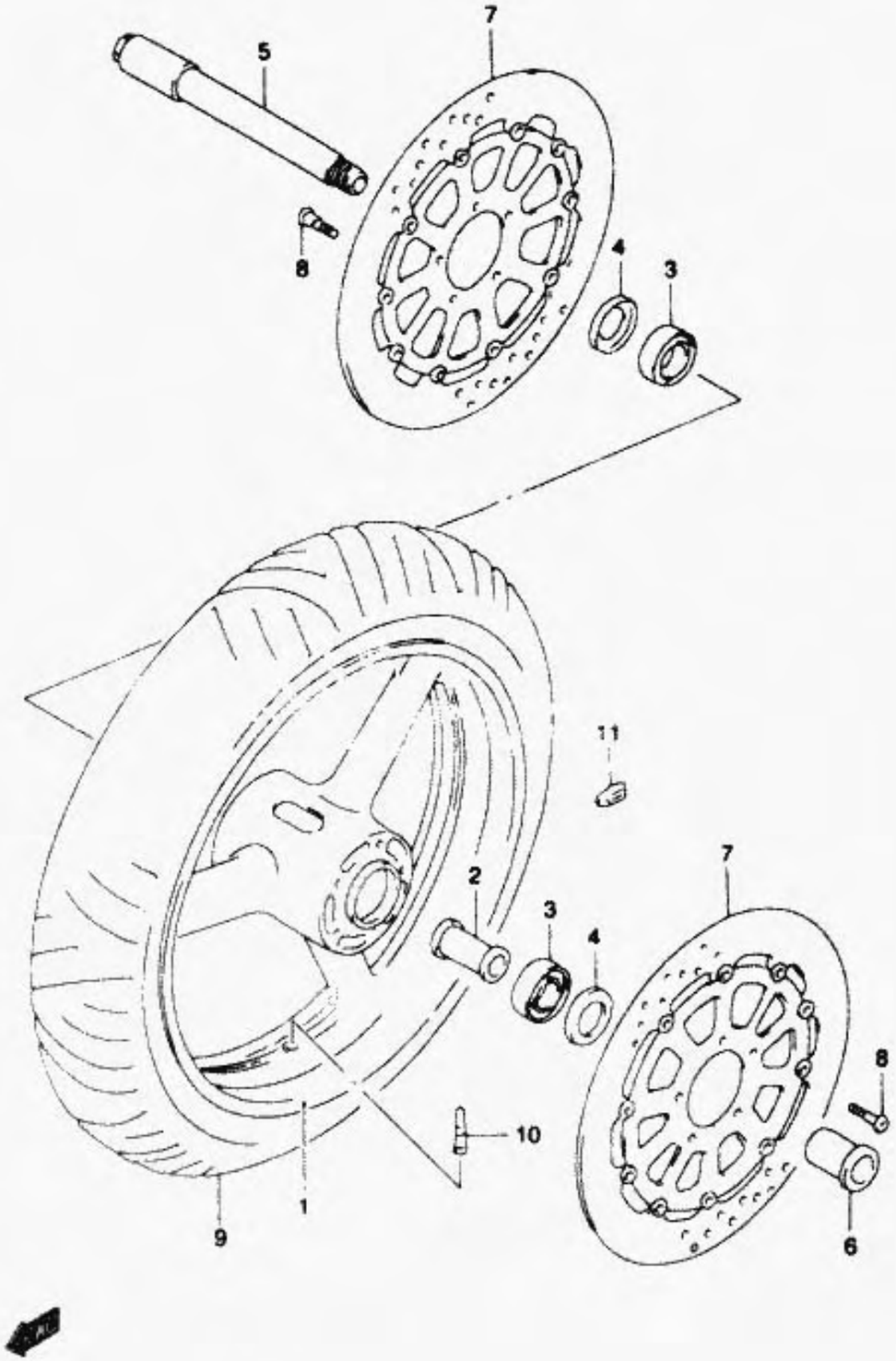

FIG.48A(1- 9) FRONT WHEEL (MODEL K1)

REF.NO.	PART NO.	DESCRIPTION	QTY.	REMARKS
1	54111-33E10-Y6G	WHEEL, FRONT (17XMT3.50) (SILVER)	1	
2	54731-33E10	SPACER, HUB BEARING	1	
3	09262-25061	BEARING (25X52X15)	2	
4	09285-32004	SEAL (32X52X7)	2	
5	54711-33E00	AXLE, FRONT	1	
6	54712-33E00	NUT, AXLE	1	
7	59210-33E20	DISC, FRONT BRAKE	2	
8	09106-08125	BOLT (8X33)	10	
9	55110-02F00	TIRE, FRONT 120/70 ZR17(58W),METZELER	1	PURCHASE LOCALLY MEZ1A FRONT
10	43130-24A00	VALVE ASSY, WHEEL RIM (TR412)	1	
11-1	55411-00A00	BALANCER (10G)	0~3	
11-2	55412-00A01	BALANCER (20G)	0~3	

FIG.48

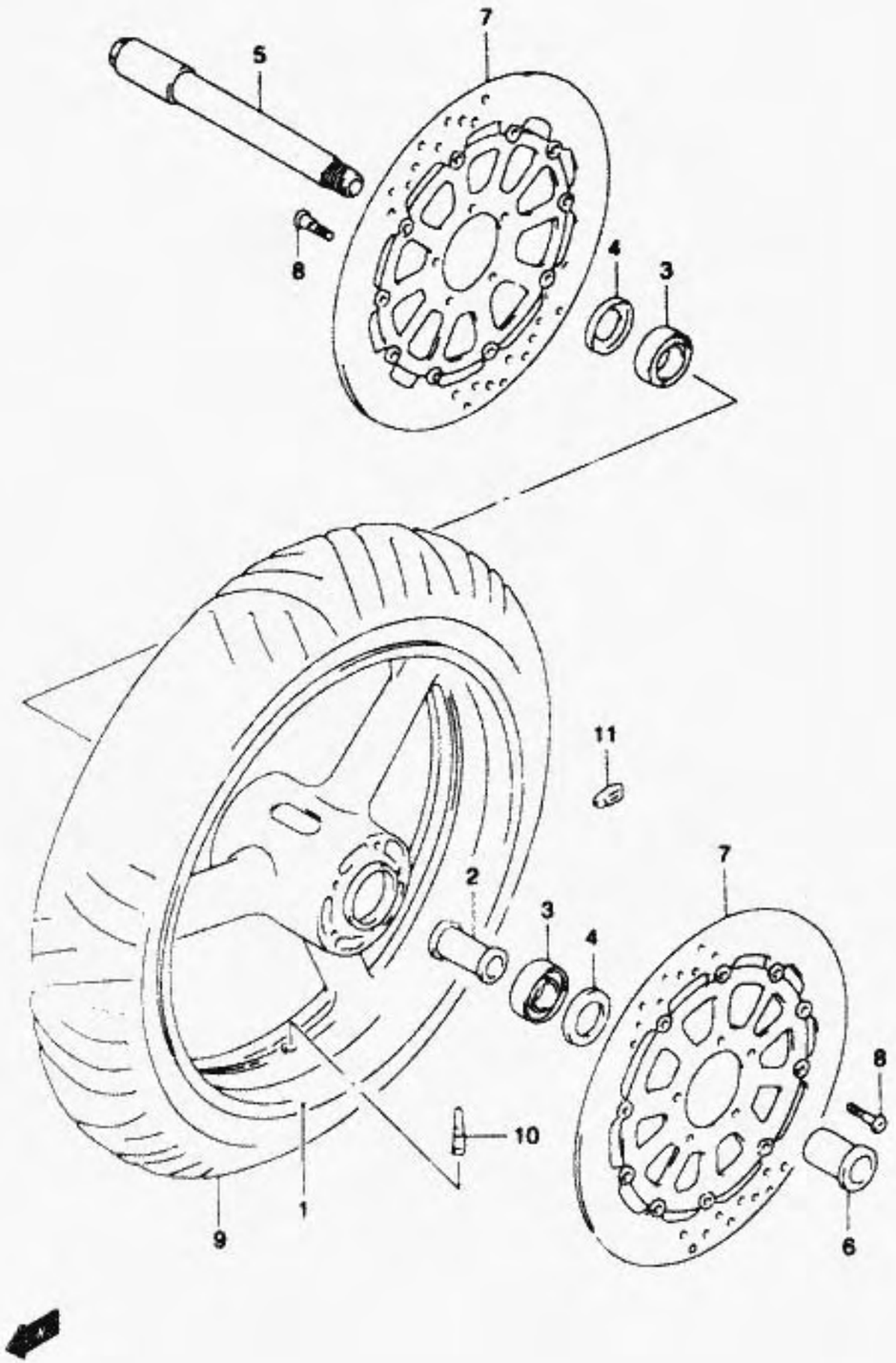

FIG.48 (I- 8) FRONT WHEEL (MODEL V/W/X/Y)

REF.NO.	PART NO.	DESCRIPTION	QTY.	REMARKS
1-1	54111-33E00-35B	WHEEL, FRONT (17XMT3.50) (GOLD)	1	MODEL V/W/X →54111-33E10-35B
1-2	54111-33E10-35B	WHEEL, FRONT (1YXMT3.50) (GOLD)	1	MODEL Y
2-1	54730-33E00	SPACER, HUB BEARING	1	MODEL V MODEL W -F.NO.W2100483 →54731-33E10
2-2	54731-33E10	SPACER, HUB BEARING	1	MODEL W F.NO.W2100484-
2-3	54731-33E10	SPACER, HUB BEARING	1	MODEL X/Y
3	09262-25061	BEARING (25X52X15)	2	
4	09285-32004	SEAL (32X52X7)	2	
5	54711-33E00	AXLE, FRONT	1	
6	54712-33E00	NUT, AXLE	1	
7	59210-33E20	DISC, FRONT BRAKE	2	
8	09106-08125	BOLT (8X33)	10	
9	55110-02F00	TIRE, FRONT 120/70 ZR17(58W),METZELER	1	PURCHASE LOCALLY MEZ1A FRONT
10	43130-24A00	VALVE ASSY, WHEEL RIM (TR412)	1	
11-1	55411-00A00	BALANCER (10G)	0-3	
11-2	55412-00A01	BALANCER (20G)	0-3	

REFER TO FIG.48A(I-9) FOR MODEL K1

FIG.47A

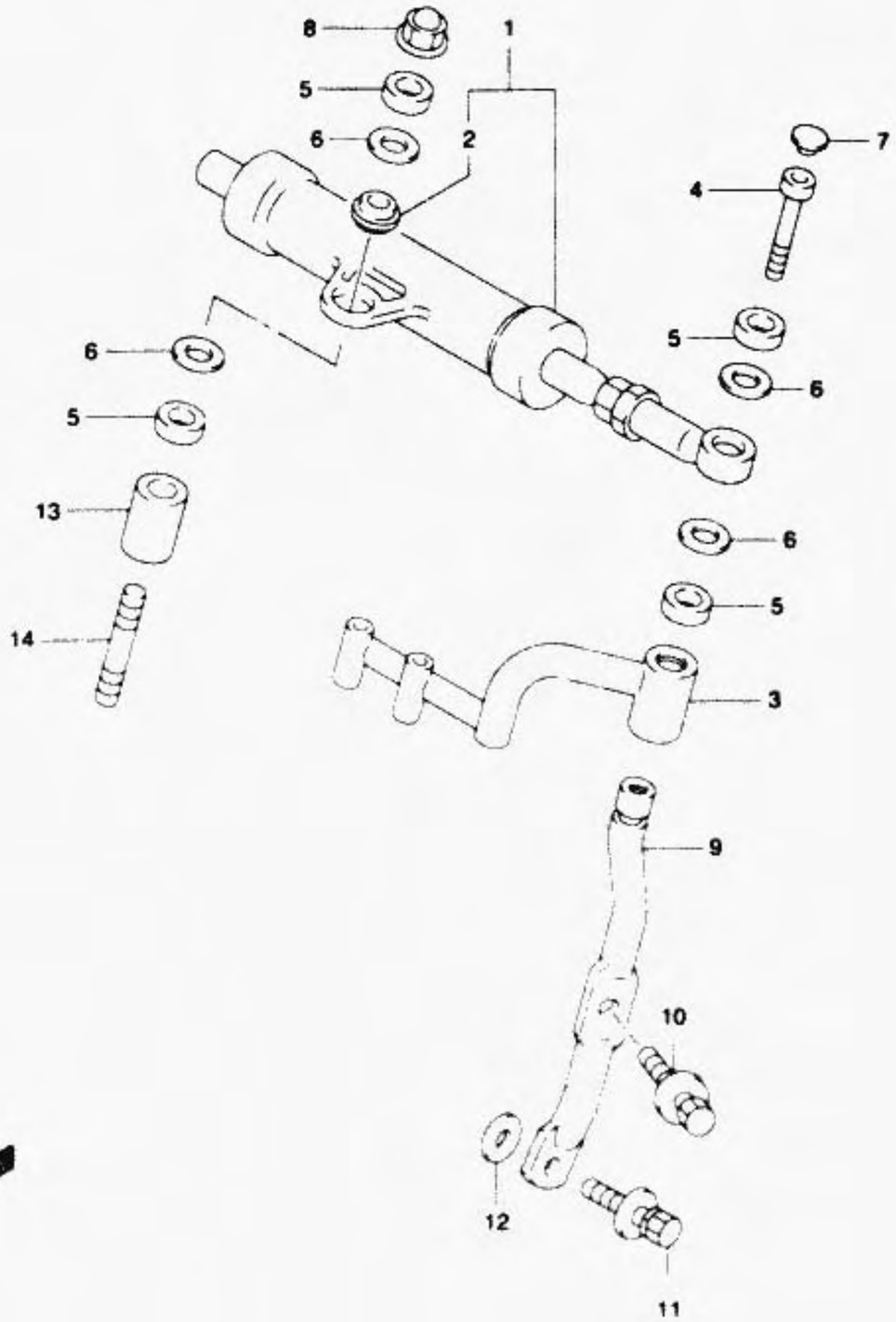

FIG.47A(1- 7) STEERING DAMPER (MODEL W/X/Y/K1)

REF.NO.	PART NO.	DESCRIPTION	QTY.	REMARKS
1-1	51750-02F00	DAMPER ASSY, STEERING	1	E3
1-2	51750-02F10	DAMPER ASSY, STEERING	1	E28
2	09269-08003	BEARING (8X17.5X11)	1	
3	51710-02F10	STAY, STEERING DAMPER	1	
4	07130-08507	BOLT (8X50)	1	
5	64339-40410	SEAL, DAMPER DUST	4	
6	09181-08106	WASHER (8X12X0.8)	4	
7	09250-06011	CAP	1	
8	08313-20087	NUT	1	
9	51720-02F10	ROD, STEERING DAMPER	1	
10	09116-06171	BOLT (6X30)	1	
11	51735-02F00	BOLT, LOWER LH (6X35)	1	
12	09160-06088	WASHER (6.5X20X1.6)	1	
13	51722-02F10	SPACER, DAMPER (8.1X17X25.5)	1	
14	09108-08167	BOLT (8X50)	1	

FIG.47

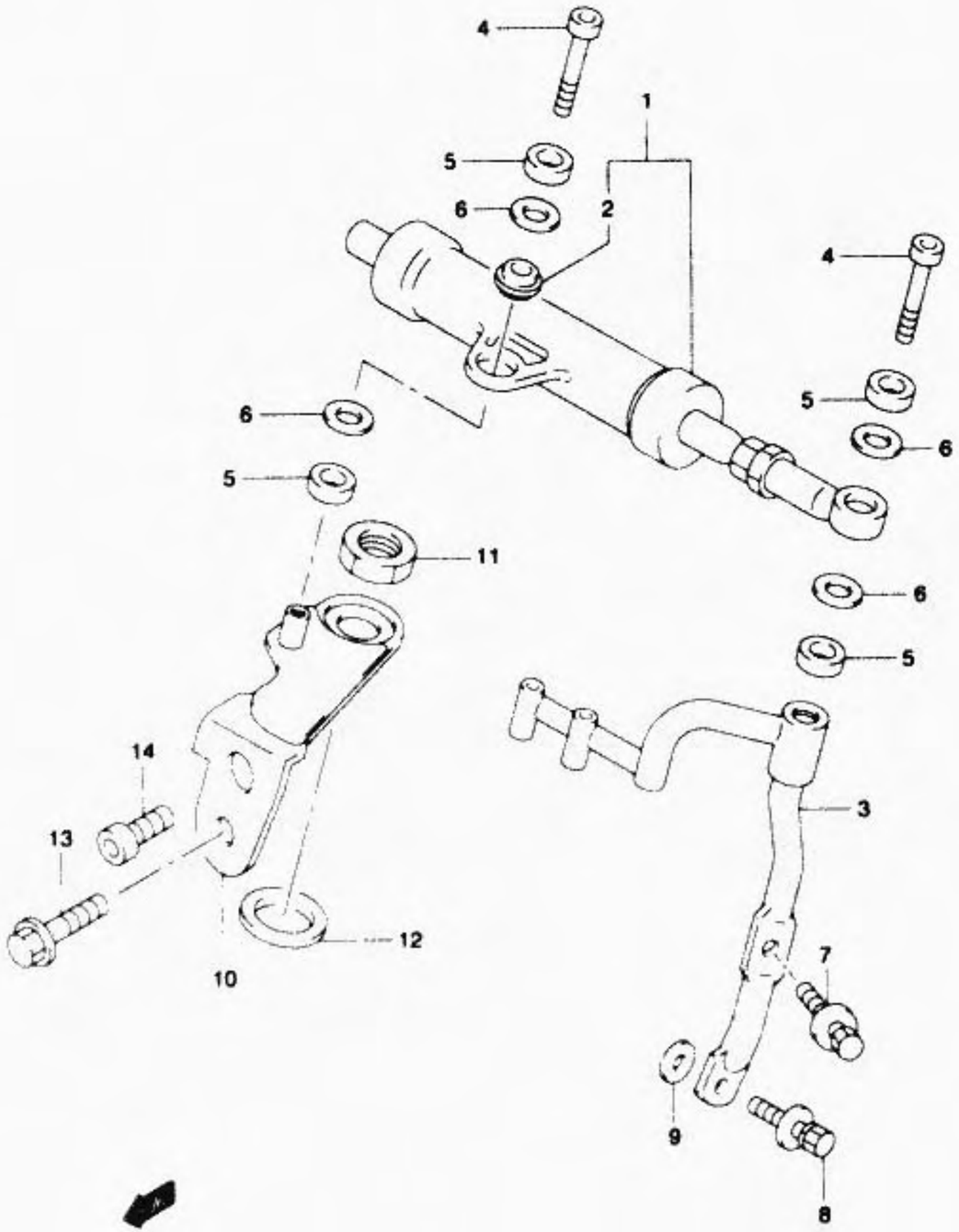

FIG.47 (I- 6) STEERING DAMPER (MODEL V)

REF.NO.	PART NO.	DESCRIPTION	QTY.	REMARKS
1-1	51750-02F00	DAMPER ASSY, STEERING	1	E3
1-2	51750-02F10	DAMPER ASSY, STEERING	1	E28
2	09269-08003	.BEARING (8X17.5X11)	1	
3	51710-02F00	STAY, STEERING DAMPER	1	→51700-02810
4	09106-08071	BOLT (8X35)	2	
5	64339-40410	SEAL, DAMPER DUST	4	
6	09181-08106	WASHER (8X12X0.8)	4	
7	09116-06171	BOLT (6X30)	1	
8	51735-02F00	BOLT, LOWER LH (6X35)	1	
9	09160-06088	WASHER (6.5X20X1.6)	1	
10	51720-02F00	PLATE, STEERING DAMPER	1	→51700-02820
11	51353-02F10	NUT, STEM UPPER (M24)	1	
12	51723-02F00	WASHER (26X38X1.6)	1	
13	01550-08127	BOLT, LOWER (8X12)	1	
14	51328-03FA0	BOLT, UPPER (8X32)	1	

REFER TO FIG.47A(I-7) FOR MODEL W/X/Y/K1

FIG.46A

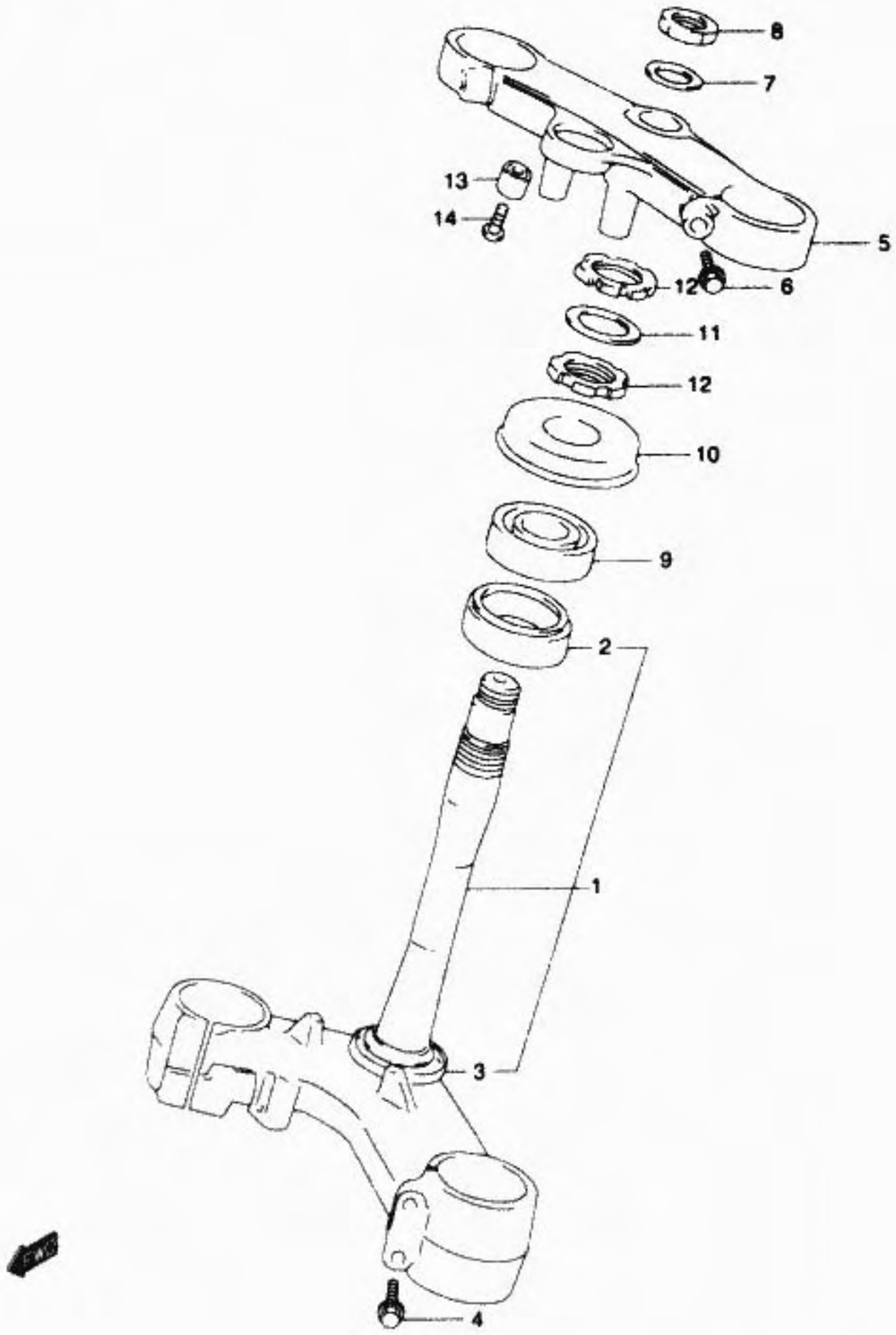

FIG.46A(I- 5) STEERING STEM (MODEL W/X/Y/K1)

REF.NO.	PART NO.	DESCRIPTION	QTY.	REMARKS
1	51410-02F00	STEM, STEERING	1	
2	09267-30010	.BEARING (30X55X17)	1	
3	51644-12C00	.SEAL, STEM LOWER	1	
4	01550-08407	BOLT	4	
5	51311-02F10	HEAD, STEERING STEM	1	
6	01550-08357	BOLT	2	
7	51356-27C00	WASHER	1	
8	51353-02F00	NUT	1	
9	09267-30010	BEARING (30X55X17)	1	
10	51643-33E00	SEAL, STEM UPPER DUST	1	
11	51641-33E00	WASHER, STEM	1	
12	51631-33E00	NUT, STEM	2	
13	56278-02F00	BALANCER, BRACKET UPPER	2	
14	02142-06303	SCREW	2	

FIG.46

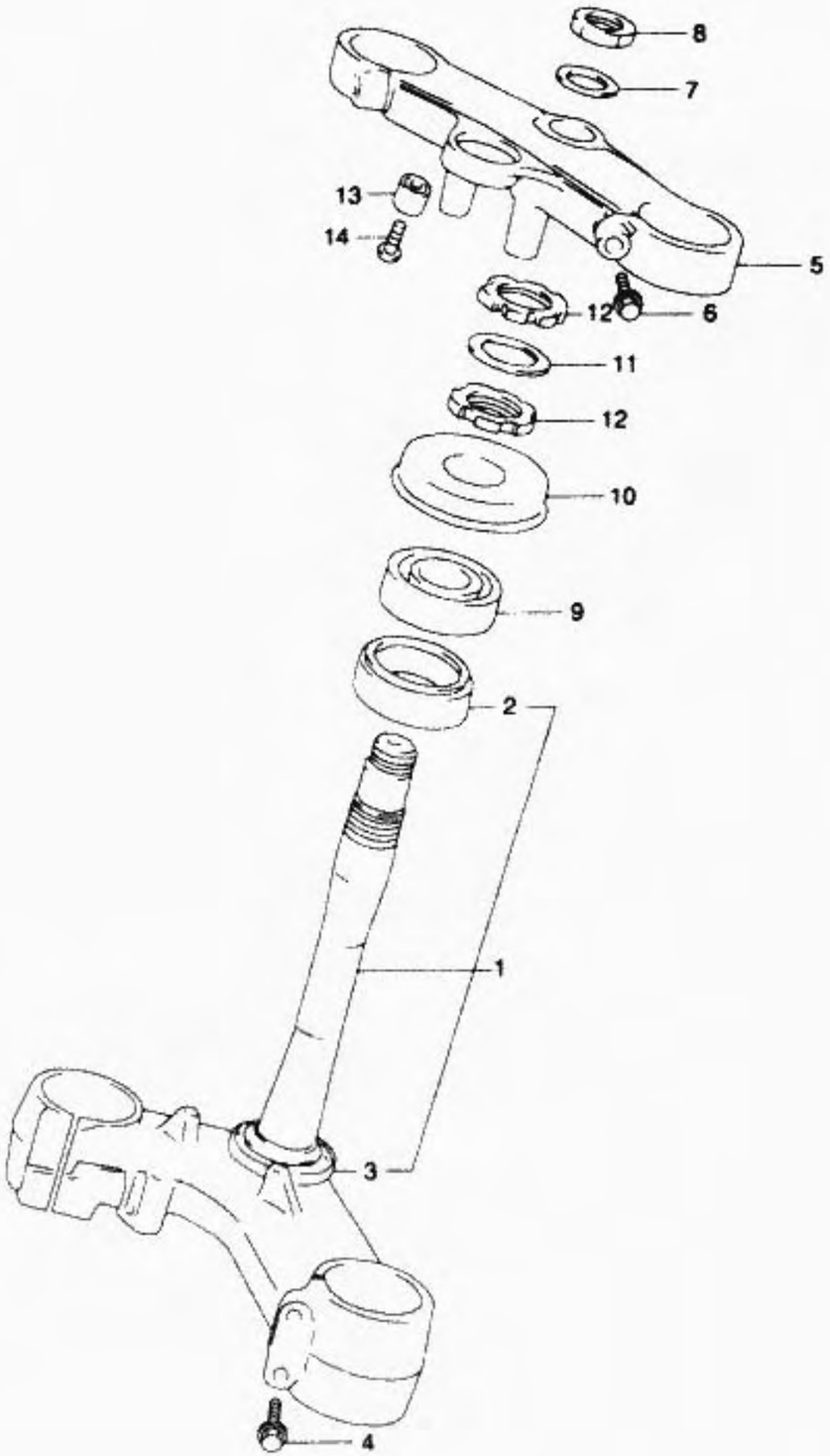

FIG.46 (I- 4) STEERING STEM (MODEL V)

REF.NO.	PART NO.	DESCRIPTION	QTY.	REMARKS
1	51410-02F00	STEM, STEERING	1	
2	09267-30010	.BEARING (30X55X17)	1	
3	51644-12C00	.SEAL, STEM LOWER	1	
4	01550-08407	BOLT	4	
5	51311-02F00	HEAD, STEERING STEM	1	
6-1	01550-08357	BOLT	2	NO STEERING DAMPER
6-2	51328-03FA0	BOLT, LH (8X32)	1	WITH STEERING DAMPER
6-3	01550-08357	BOLT, RH (8X35)	1	WITH STEERING DAMPER
7-1	51356-27C00	WASHER	1	NO STEERING DAMPER
7-2	51723-02F00	WASHER	1	WITH STEERING DAMPER
8-1	51353-02F00	NUT	1	NO STEERING DAMPER
8-2	51353-02F10	NUT	1	WITH STEERING DAMPER
9	09267-30010	BEARING (30X55X17)	1	
10	51643-33E00	SEAL, STEM UPPER DUST	1	
11	51641-33E00	WASHER, STEM	1	
12	51631-33E00	NUT, STEM	2	
13	56278-02F00	BALANCER, BRACKET UPPER	2	
14	02142-06303	SCREW	2	

REFER TO FIG.46A(I-5) FOR MODEL W/X/Y/K1

FIG.45A

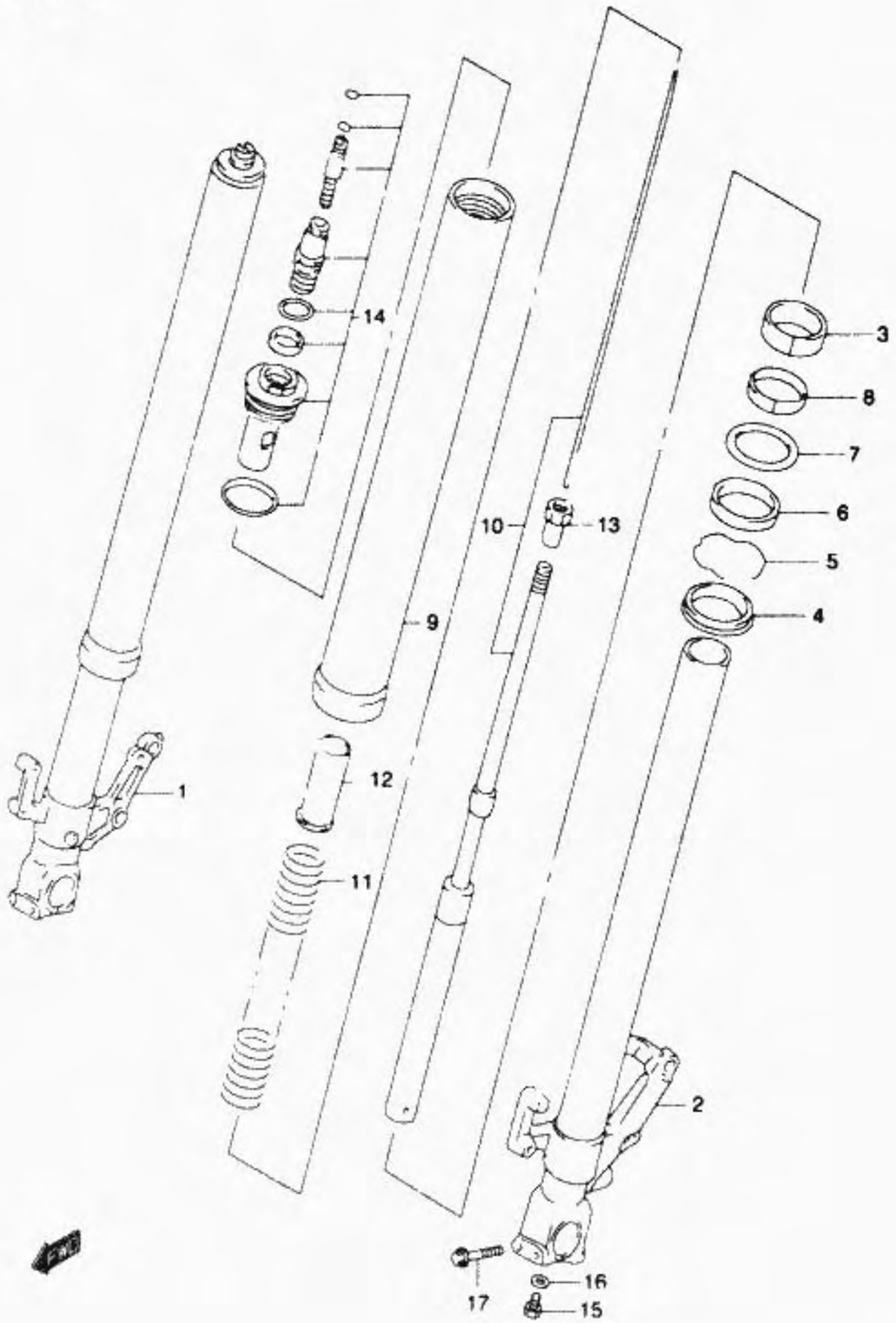

FIG.45A(I- 3) FRONT DAMPER (MODEL W/X/Y/K1)

REF.NO.	PART NO.	DESCRIPTION	QTY.	REMARKS
	51103-02F20	DAMPER ASSY, FRONT FORK RH	1	
	51104-02F20	DAMPER ASSY, FRONT FORK LH	1	
1	51110-02F00	.TUBE, INNER RH	1	
2	51120-02F00	.TUBE, INNER LH	1	
3	51121-40C00	.PISTON	2	
4	51173-46E20	.SEAL, DUST	2	
5	51156-14200	.RING, SNAP	2	
6	51153-46E20	.SEAL, OIL	2	
7	51158-14200	.WASHER	2	
8	51167-02F00	.METAL, SLIDE	2	
9	51130-02F00	.TUBE, OUTER	2	
10	51146-02F20	.CYLINDER	2	
11	51171-02F20	.SPRING, FRONT	2	
12	51176-02F20	.SPACER	2	
13	51129-27C00	.NUT	2	
14	51351-02F00	.CAP, FORK	2	
15	51147-40C00	.BOLT	2	
16	51148-40300	.GASKET	2	
17	01550-08457	.BOLT	4	

FIG.45

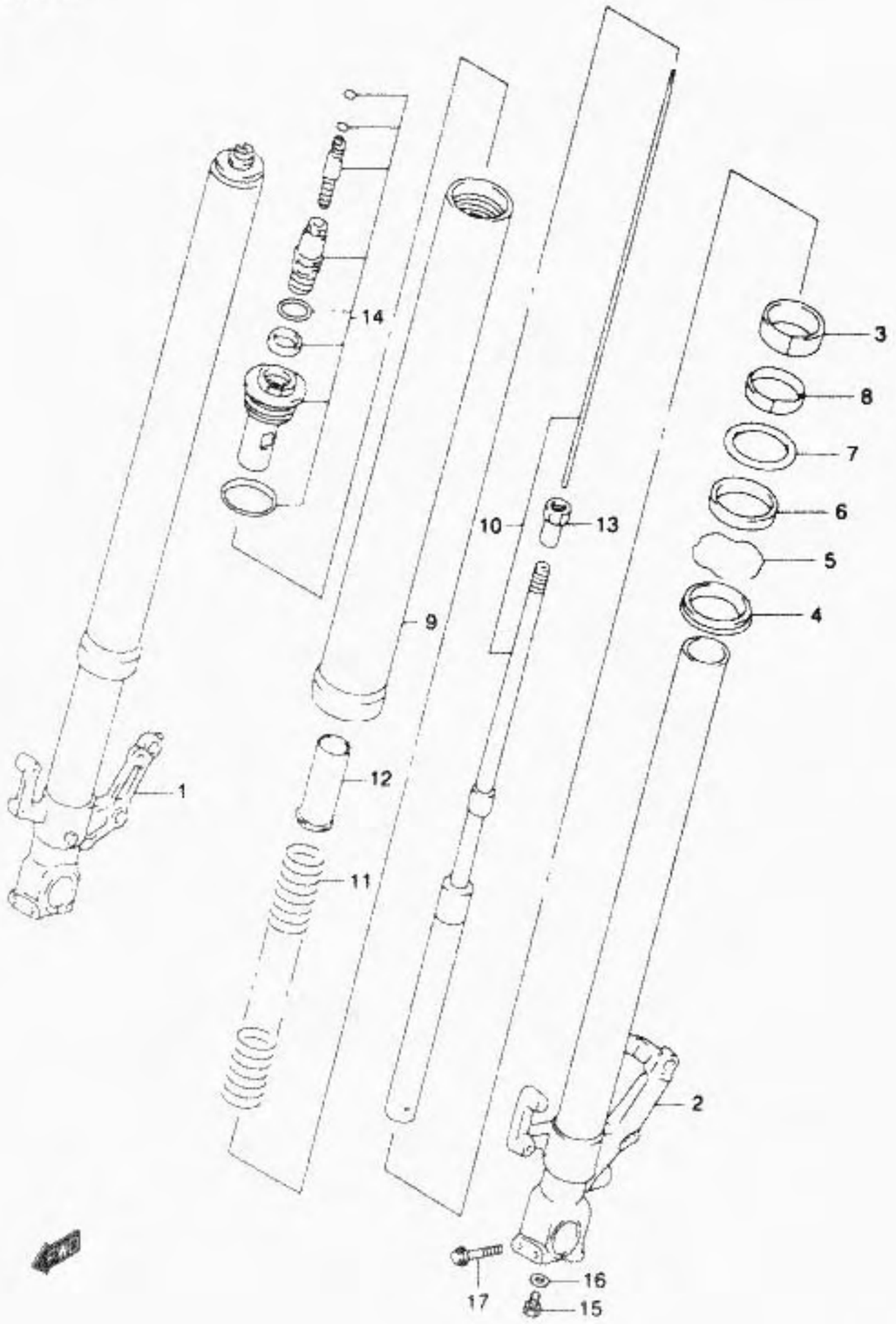

FIG.45 (I- 2) FRONT DAMPER (MODEL V)

REF.NO.	PART NO.	DESCRIPTION	QTY.	REMARKS
	51103-02F00	DAMPER ASSY, FRONT FORK RH	1	
	51104-02F00	DAMPER ASSY, FRONT FORK LH	1	
1	51110-02F00	.TUBE, INNER RH	1	
2	51120-02F00	.TUBE, INNER LH	1	
3	51121-40C00	.PISTON	2	
4	51173-46E20	.SEAL, DUST	2	
5	51156-14200	.RING, SNAP	2	
6	51153-46E20	.SEAL, OIL	2	
7	51158-14200	.WASHER	2	
8	51167-02F00	.METAL, SLIDE	2	
9	51130-02F00	.TUBE, OUTER	2	
10	51146-02F00	.CYLINDER	2	
11	51171-02F00	.SPRING, FRONT	2	
12	51176-02F00	.SPACER	2	
13	51129-27C00	.NUT	2	
14	51351-02F00	.CAP, FORK	2	
15	51147-40C00	.BOLT	2	
16	51148-40300	.GASKET	2	
17	01550-08457	.BOLT	4	

REFER TO FIG.45A(I-3) FOR MODEL W/X/Y/K1

FIG.44A

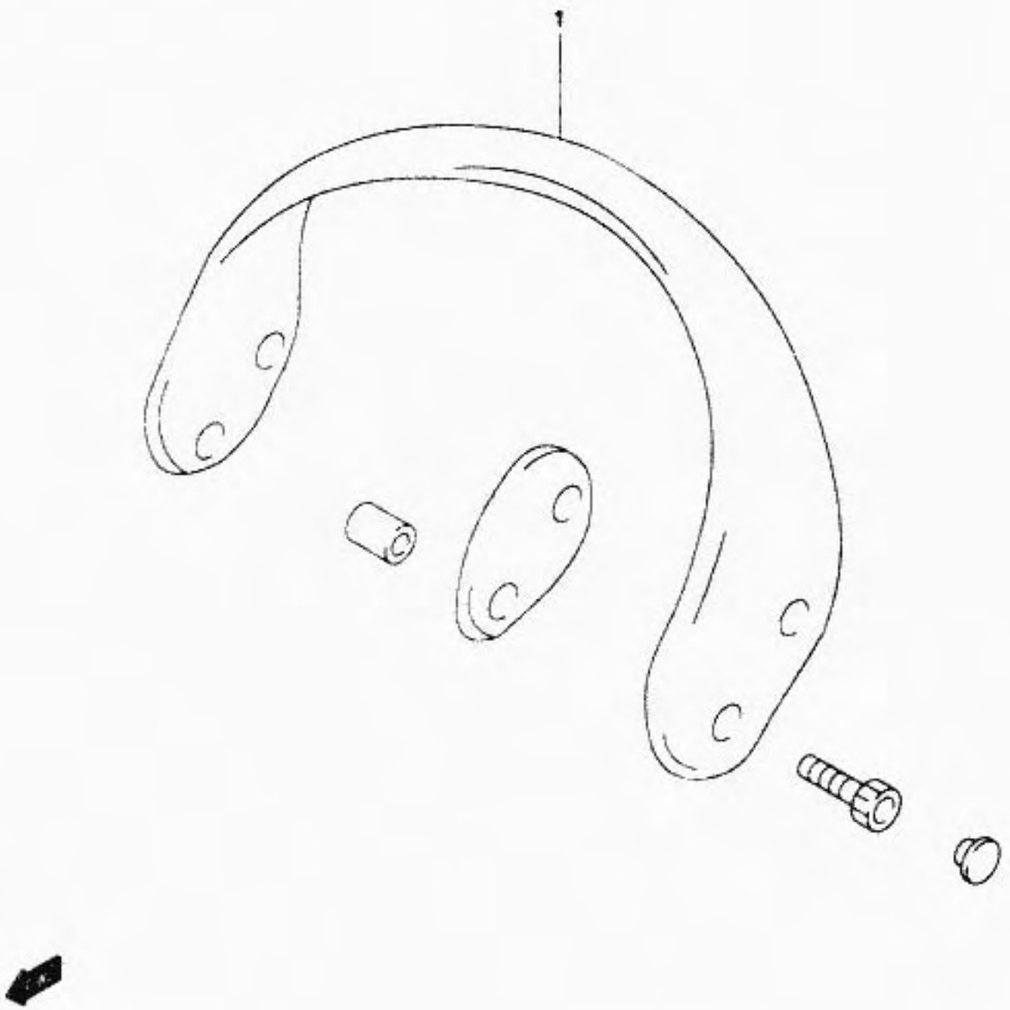

FIG.44A(H- 6) PILLION RIDER HANDLE SET (OPTIONAL)

REF.NO.	PART NO.	DESCRIPTION	QTY.	REMARKS
1-1	46200-02810-1UH	HANDLE SET, PILLION RIDER (GREEN)	1	MODEL V
1-2	46200-02810-28V	HANDLE SET, PILLION RIDER (RED)	1	MODEL V/W
1-3	46200-02810-33J	HANDLE SET, PILLION RIDER (BLACK)	1	MODEL V/W
1-4	46200-02810-Y0W	HANDLE SET, PILLION RIDER (ORANGE)	1	MODEL X
1-5	46200-02810-Y7H	HANDLE SET, PILLION RIDER (BLUE)	1	MODEL X E28
1-6	46200-02810-Y7M	HANDLE SET, PILLION RIDER (RED)	1	MODEL Y
1-7	46200-02810-Y9H	HANDLE SET, PILLION RIDER (YELLOW)	1	MODEL Y E28
1-8	46200-02810-YC2	HANDLE SET, PILLION RIDER (BLUE)	1	MODEL K1
1-9	46200-02810-Y7L	HANDLE SET, PILLION RIDER (BLACK)	1	MODEL K1

FIG.44

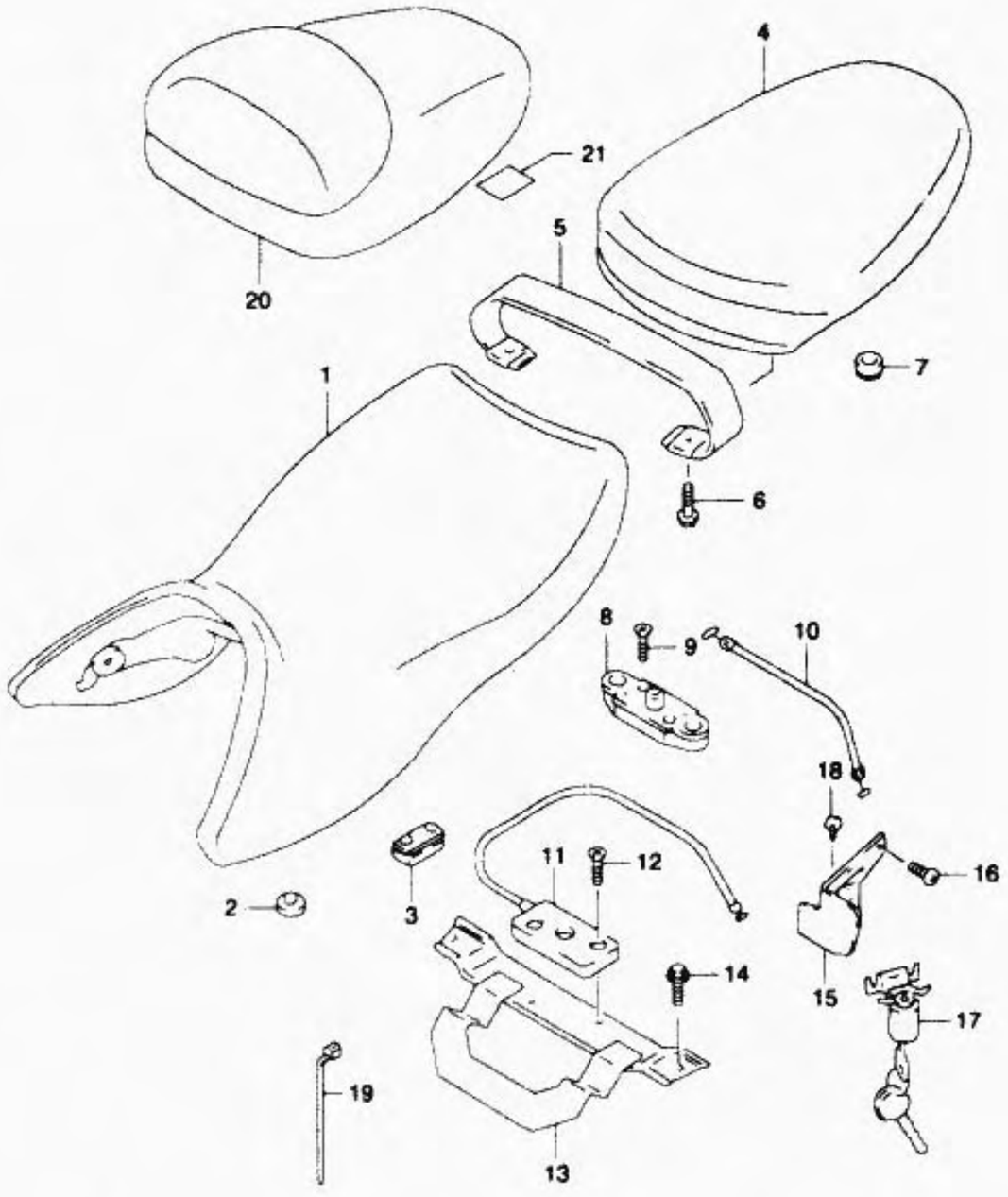

FIG.44 (H- 5) SEAT

REF.NO.	PART NO.	DESCRIPTION	QTY.	REMARKS
1	45100-02F10-R42	SEAT ASSY (BLACK)	1	
2-1	45148-36C00	.CUSHION, REAR	2	
2-2	09321-10002	.CUSHION, FRONT	2	
3	45149-31300	.CUSHION	2	
4	45300-02F20-R42	SEAT ASSY, PILLION (BLACK)	1	
5	45180-02F20-R42	.BAND ASSY, SEAT (BLACK)	1	
6	01550-06207	.BOLT	2	
7	45213-31300	.CUSHION	2	
8	45220-20A01	BRACKET, SEAT REAR	1	
9	02122-06303	SCREW	2	
10	45280-38400	CABLE, SEAT LOCK	1	
11	45220-02F00	BRACKET, SEAT FRONT	1	
12	02122-06253	SCREW	2	
13	45120-02F00	BRACKET, SEAT LOCK	1	
14	01550-06163	BOLT	2	
15	45289-02F00	BRACKET, SEAT LOCK	1	
16	02142-06123	SCREW	2	
17	95700-02820	LOCK SET, SEAT	1	
18	02142-05103	SCREW	2	
19	09407-14403	CLAMP	6	
20-1	45550-02F00-1UH	BOX, SEAT TAIL (GREEN)	1	MODEL V
20-2	45550-02F00-28V	BOX, SEAT TAIL (RED)	1	MODEL V/W
20-3	45550-02F00-33J	BOX, SEAT TAIL (BLACK)	1	MODEL V/W
20-4	45550-02F00-Y0W	BOX, SEAT TAIL (ORANGE)	1	MODEL X
20-5	45550-02F00-Y7H	BOX, SEAT TAIL (BLUE)	1	MODEL X E28
20-6	45550-02F00-Y7M	BOX, SEAT TAIL (RED)	1	MODEL Y
20-7	45550-02F00-Y9H	BOX, SEAT TAIL (YELLOW)	1	MODEL Y E28
20-8	45550-02F00-YC2	BOX, SEAT TAIL (BLUE)	1	MODEL K1
20-9	45550-02F00-Y7L	BOX, SEAT TAIL (BLACK)	1	MODEL K1
21	45559-33E00	PROTECTOR, COVER (5PIECE)	1	

FIG.43A

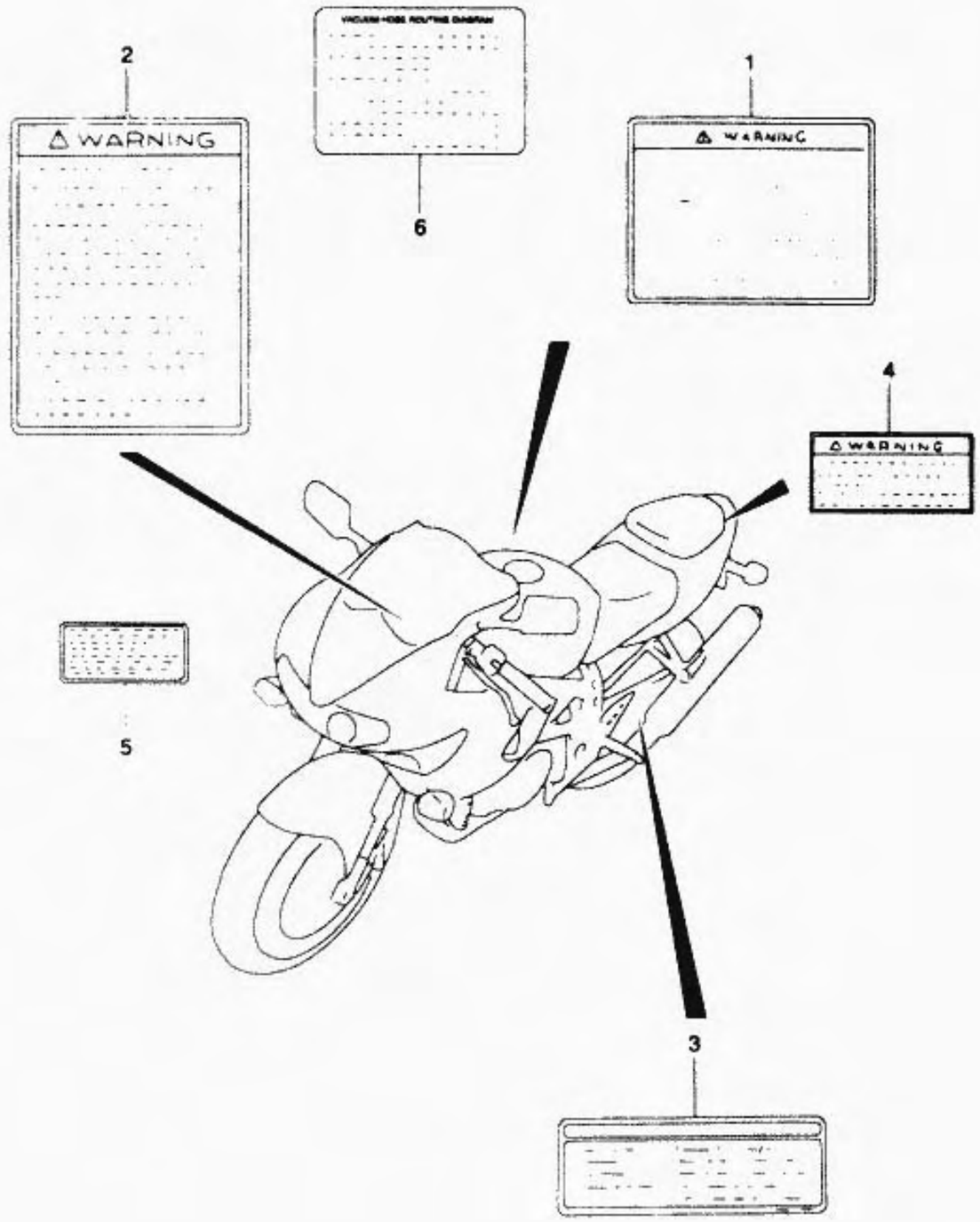

FIG.43A(H- 4) LABEL (MODEL K1)

REF.NO.	PART NO.	DESCRIPTION	QTY.	REMARKS
1-1	68319-29F00	LABEL, WARNING (ENGLISH)	1	
1-2	68319-29F10	LABEL, WARNING	1	E28
2-1	68922-14F00	LABEL, SCREEN (ENGLISH)	1	
2-2	68922-14F30	LABEL, SCREEN (FRANCH)	1	E28
3-1	68332-02F30	LABEL, TIRE (ENGLISH)	1	
3-2	68332-02F20	LABEL, TIRE	1	E28
4	68353-26E01	LABEL, MANUAL NOTICE	1	
5-1	68613-18E00	LABEL, STEERING	1	
5-2	68613-24F00	LABEL, STEERING	1	E28
6	68387-02F11	LABEL, HOSE ROUTING	1	E33
7-1	99011-02F55-03A	MANUAL, OWNER'S	1	
7-2	99011-02F55-042	MANUAL, OWNER'S	1	E28 DRAWING NOT SHOWN

FIG.43

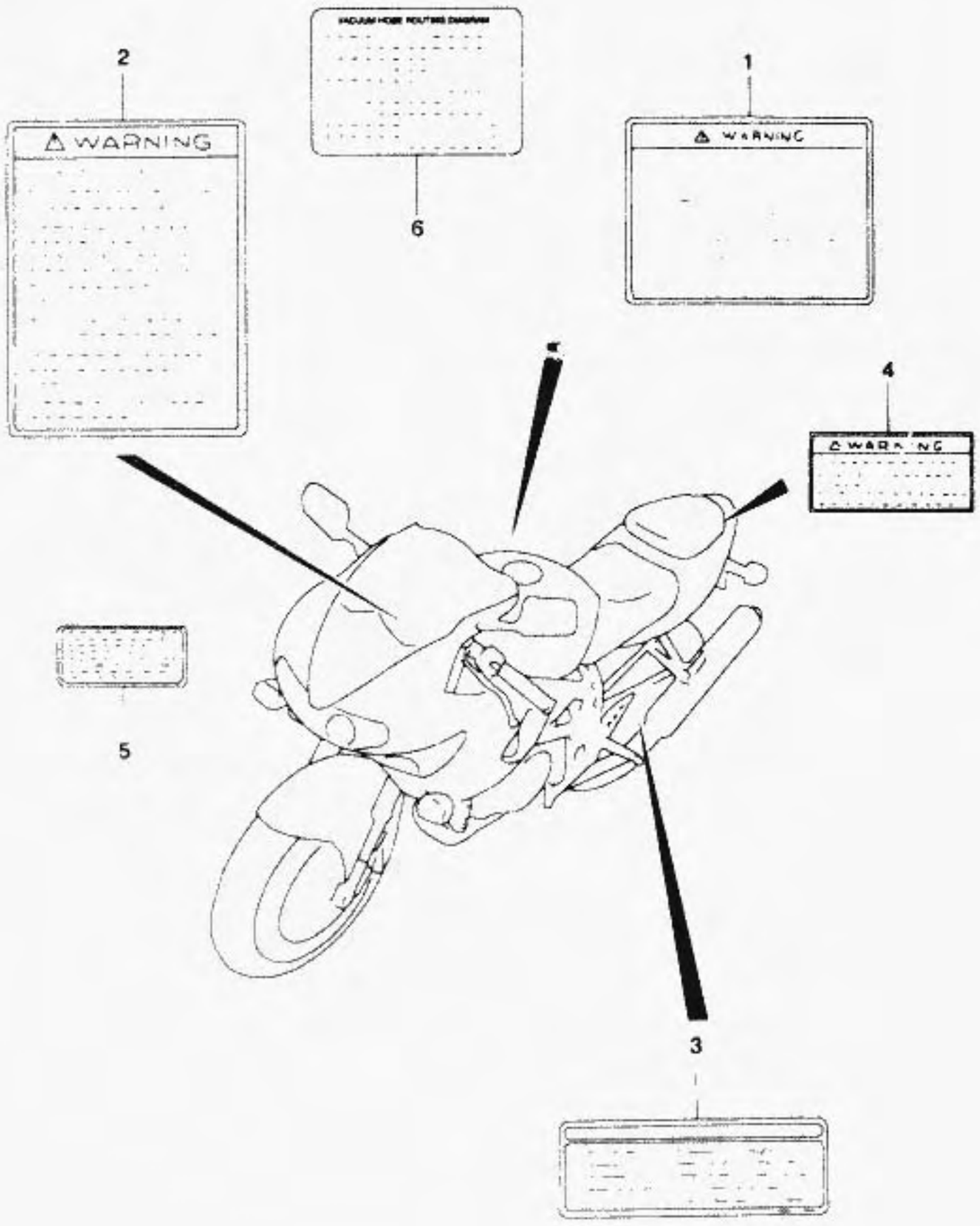

FIG.43 (H- 3) LABEL (MODEL V/W/X/Y)

REF.NO.	PART NO.	DESCRIPTION	QTY.	REMARKS
1-1	68319-33E01	LABEL, SAFETY (ENGLISH)	1	
1-2	68319-33E11	LABEL, SAFETY	1	E28
2-1	68922-14F00	LABEL, SCREEN (ENGLISH)	1	
2-2	68922-14F30	LABEL, SCREEN (FRANCH)	1	E28
3-1	68332-02F00	LABEL, AIR	1	MODEL V
3-2	68332-02F30	LABEL, TIRE INFORMATION	1	MODEL W/X/Y
3-3	68332-02F20	LABEL, TIRE INFORMATION	1	MODEL W/X/Y E28
4	68353-26E01	LABEL, MANUAL NOTICE	1	
5-1	68613-18E00	LABEL, STEERING	1	
5-2	68613-21E00	LABEL, STEERING	1	MODEL V/W/X E28
5-3	68613-24F00	LABEL, STEERING	1	MODEL Y E28
6-1	68387-02F01	LABEL, HOSE ROUTING	1	MODEL V E33
6-2	68387-02F10	LABEL, HOSE ROUTING	1	MODEL W E33
6-3	68387-02F11	LABEL, HOSE ROUTING	1	MODEL X/Y E33
7-1	99011-02F51-03A	MANUAL, OWNER'S	1	MODEL V
7-2	99011-02F52-03A	MANUAL, OWNER'S	1	MODEL W
7-3	99011-02F53-03A	MANUAL, OWNER'S	1	MODEL X
7-4	99011-02F54-03A	MANUAL, OWNER'S	1	MODEL Y
7-5	99011-02F51-042	MANUAL, OWNER'S	1	MODEL V E28
7-6	99011-02F52-042	MANUAL, OWNER'S	1	MODEL W E28
7-7	99011-02F53-042	MANUAL, OWNER'S	1	MODEL X E28
7-8	99011-02F54-042	MANUAL, OWNER'S	1	MODEL Y E28 DRAWING NOT SHOWN

REFER TO FIG.43A(H-4) FOR MODEL K1

FIG.42

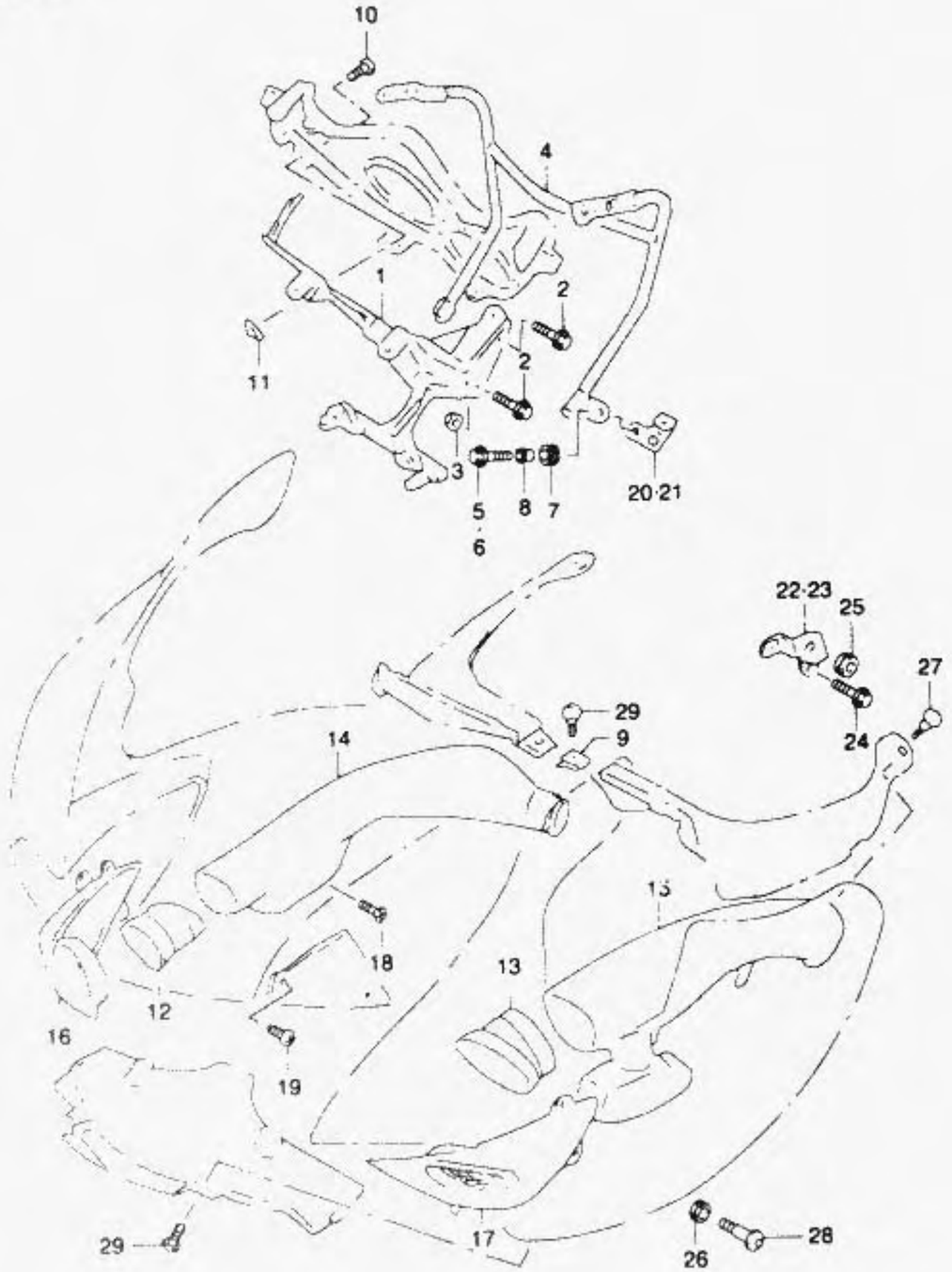

FIG.42 (H- 2) INSTALLATION PARTS

REF.NO.	PART NO.	DESCRIPTION	QTY.	REMARKS
1-1	94510-02F00	BRACE, COWLING	1	MODEL V
1-2	94510-02F01	BRACE, COWLING	1	MODEL W/X/Y/K1
2	01550-08303	BOLT	2	
3	08313-20083	NUT	1	
4-1	94520-02F00	BRACE, REAR VIEW MIRROR	1	MODEL V/W/X
4-2	94520-02F01	BRACE, REAR VIEW MORROR	1	MODEL Y/K1
5-1	09116-06143	BOLT, RH	1	MODEL V/W/X
5-2	09116-06115	BOLT, RH	1	MODEL Y/K1
6	09116-06171	BOLT, LH	1	
7	09320-09009	CUSHION	2	
8	94529-46E00	WASHER, INNER	2	
9-1	94484-32B00	NUT	7	MODEL V/W/X
9-2	94484-24F00	NUT	7	MODEL Y/K1
10	03242-05163	SCREW, METER PANEL & BRACE	2	
11	09148-05020	NUT	2	
12	94453-02F00	JOINT, AIR INTAKE RH	1	
13	94454-02F00	JOINT, AIR INTAKE LH	1	
14	94451-02F00	PIPE, AIR INTAKE RH	1	
15	94452-02F00	PIPE, AIR INTAKE LH	1	
16	94670-02F00	COVER, INTAKE RH	1	
17	94680-02F00	COVER, INTAKE LH	1	
18	03541-05123	SCREW, PIPE & COVER	8	
19	03541-05123	SCREW, INNER COWL	6	
20	94531-02F00	BRACKET, SIDE UPPER RH	1	
21	94532-02F00	BRACKET, SIDE UPPER LH	1	
22	94540-02F00	BRACKET, SIDE REAR RH	1	
23	94550-02F00	BRACKET, SIDE REAR LH	1	
24	01500-06163	BOLT, BRACKET	4	
25	09320-08018	CUSHION	2	
26	09320-09016	CUSHION	2	
27	09139-05055	SCREW, SIDE COWL & PANEL	2	
28	09139-06087	SCREW, SIDE COWL LOWER	2	
29	09139-05054	SCREW	12	

FIG.41D

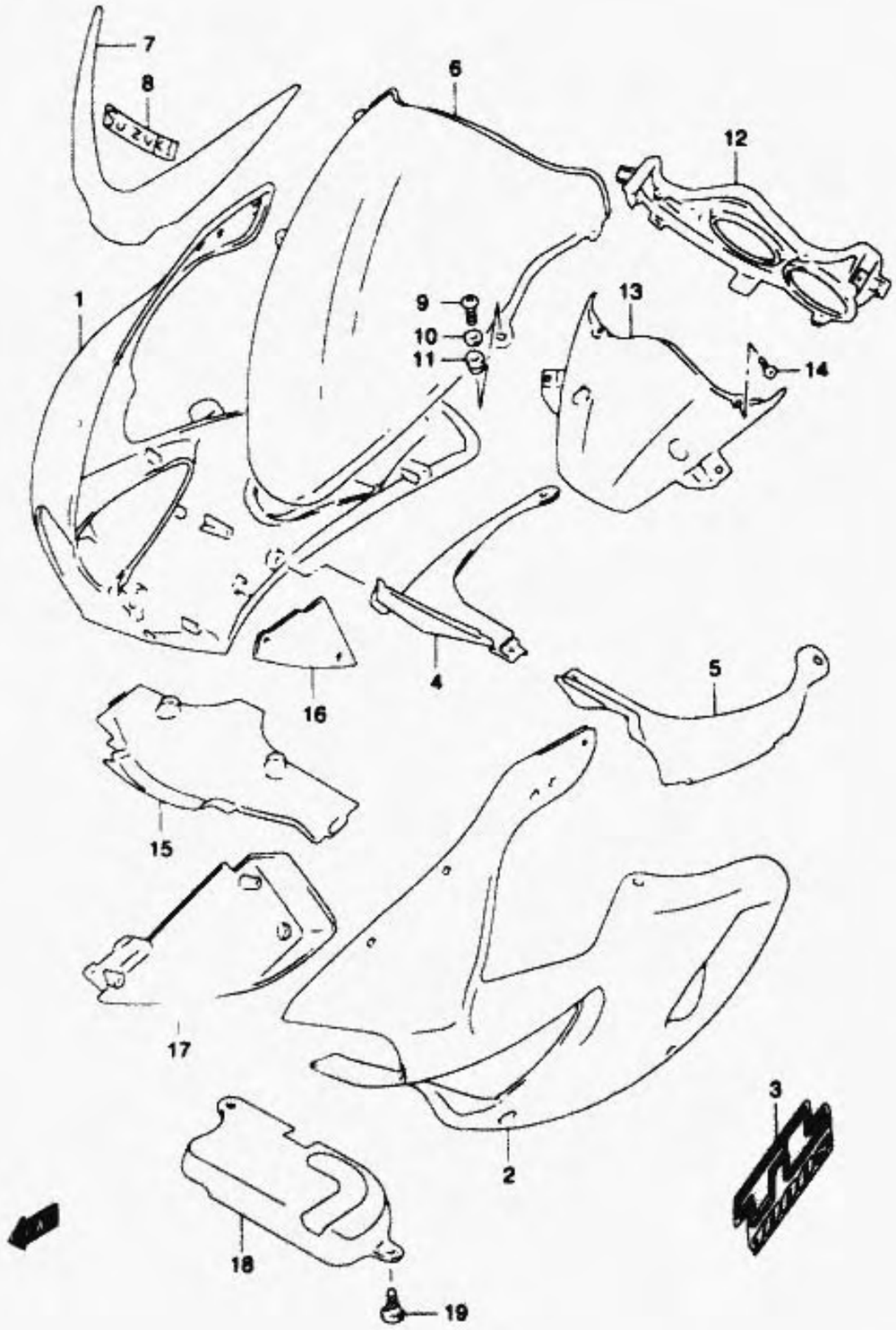

FIG.41D(G-10) COWLING BODY (MODEL K1)

REF.NO.	PART NO.	DESCRIPTION	QTY.	REMARKS
1-1	94410-02F30-Y7L	COWLING, SIDE RH (BLACK)	1	
1-2	94410-02F30-YC2	COWLING, SIDE RH (BLUE)	1	
2-1	94420-02F30-Y7L	COWLING, SIDE LH (BLACK)	1	
2-2	94420-02F30-YC2	COWLING, SIDE LH (BLUE)	1	
3-1	68681-02F30-N9Y	.EMBLEM	2	FOR Y7L
3-2	68681-02F30-FH8	.EMBLEM	2	FOR YC2
4-1	94415-02F00-Y7L	PANEL, SIDE RH (BLACK)	1	
4-2	94415-02F00-YC2	PANEL, SIDE RH (BLUE)	1	
5-1	94425-02F00-Y7L	PANEL, SIDE LH (BLACK)	1	
5-2	94425-02F00-YC2	PANEL, SIDE LH (BLUE)	1	
6	94610-02F00-13L	WINDSCREEN (SILVER)	1	
7	68275-02F00	.TAPE	1	
8	68[illegible]0-02F00-13L	.EMBLEM (SILVER)	1	
9	09139-05025	SCREW	4	
10	08322-01053	WASHER	4	
11	09159-05019	NUT	4	
12	94630-02F00	PANEL, METER	1	
13	94640-02F00	PANEL, FRONT	1	
14	09409-06322-5PK	CLIP (BLACK)	2	
15-1	94430-02F00-Y7L	COWLING, CENTER LOWER (BLACK)	1	
15-2	94430-02F00-YC2	COWLING, CENTER LOWER (BLUE)	1	
16	94461-02F00	COWLING, INNER RH	1	
17	94460-02F00	COWLING, INNER LH	1	
18	94457-02F00	COVER, COWL FRONT LOWER	1	
19	63161-43E00	BOLT	2	

FIG.41C

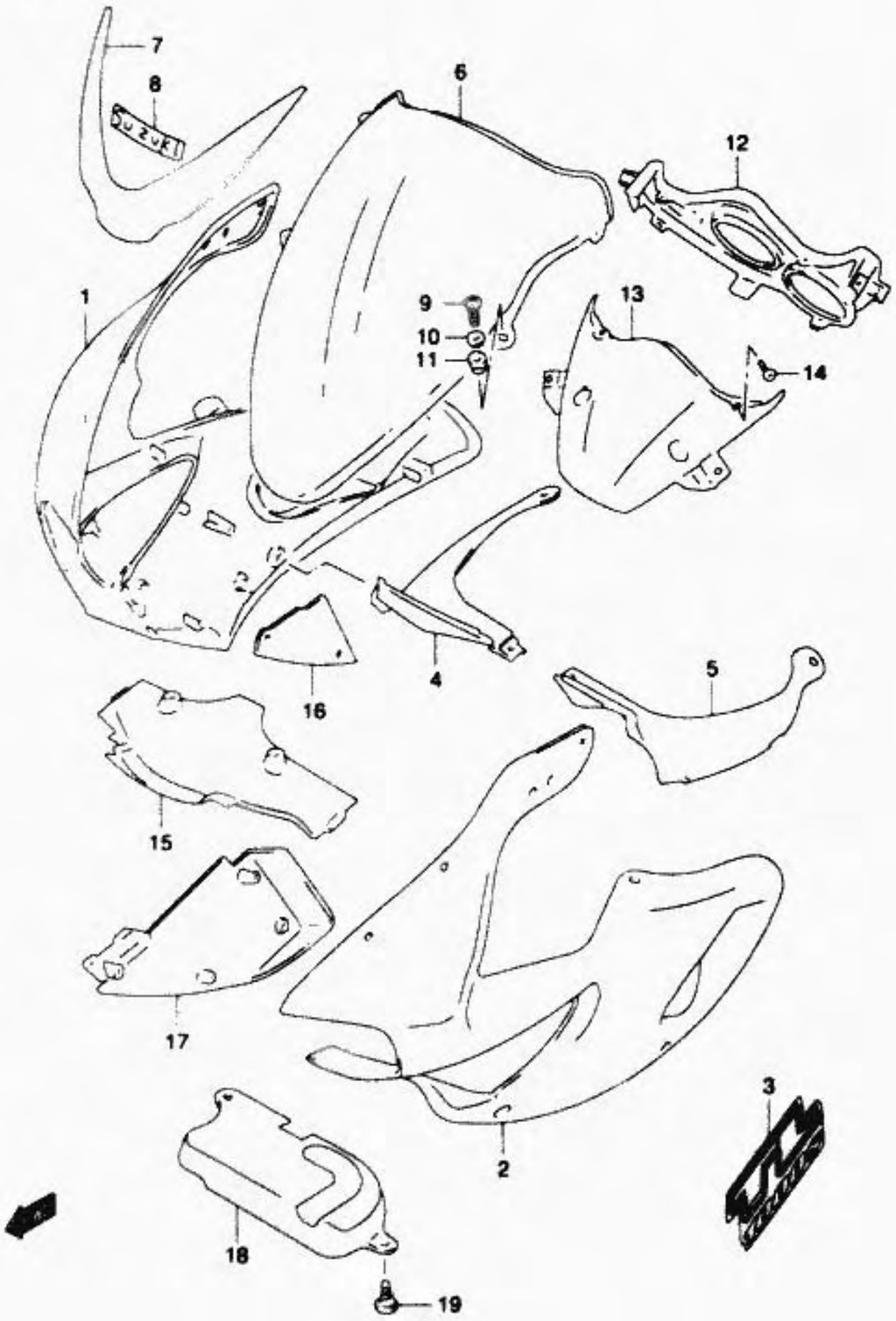

FIG.41C(G-9) COWLING BODY (MODEL Y)

REF.NO.	PART NO.	DESCRIPTION	QTY.	REMARKS
1-1	94410-02F30-Y7M	COWLING, SIDE RH (RED)	1	
1-2	94410-02F30-Y9H	COWLING, SIDE RH (YELLOW)	1	E28
2-1	94420-02F30-Y7M	COWLING, SIDE LH (RED)	1	
2-2	94420-02F30-Y9H	COWLING, SIDE LH (YELLOW)	1	E28
3-1	68681-02F30-CA9	.EMBLEM	2	
3-2	68681-02F30-CB1	.EMBLEM	2	E28
4-1	94415-02F00-Y7M	PANEL, SIDE RH (RED)	1	
4-2	94415-02F00-Y9H	PANEL, SIDE RH (YELOW)	1	E28
5-1	94425-02F00-Y7M	PANEL, SIDE LH (RED)	1	
5-2	94425-02F00-Y9H	PANEL, SIDE LH (YELLOW)	1	E28
6	94610-02F00-13L	WINDSCREEN (SILVER)	1	
7	68275-02F00	.TAPE	1	
8	68280-02F00-13L	.EMBLEM (SILVER)	1	
9	09139-05025	SCREW	4	
10	08322-01053	WASHER	4	
11	09159-05019	NUT	4	
12	94630-02F00	PANEL, METER	1	
13	94640-02F00	PANEL, FRONT	1	
14	09409-06322-5PK	CLIP (BLACK)	2	
15-1	94430-02F00-Y7M	COWLING, CENTER LOWER (RED)	1	
15-2	94430-02F00-Y9H	COWLING, CENTER LOWER (YELLOW)	1	E28
16	94461-02F00	COWLING, INNER RH	1	
17	94460-02F00	COWLING, INNER LH	1	
18	94457-02F00	COVER, COWL FRONT LOWER	1	
19	63161-43E00	BOLT	2	

REFER TO FIG.41D(G-10) FOR MODEL K1

FIG.41B

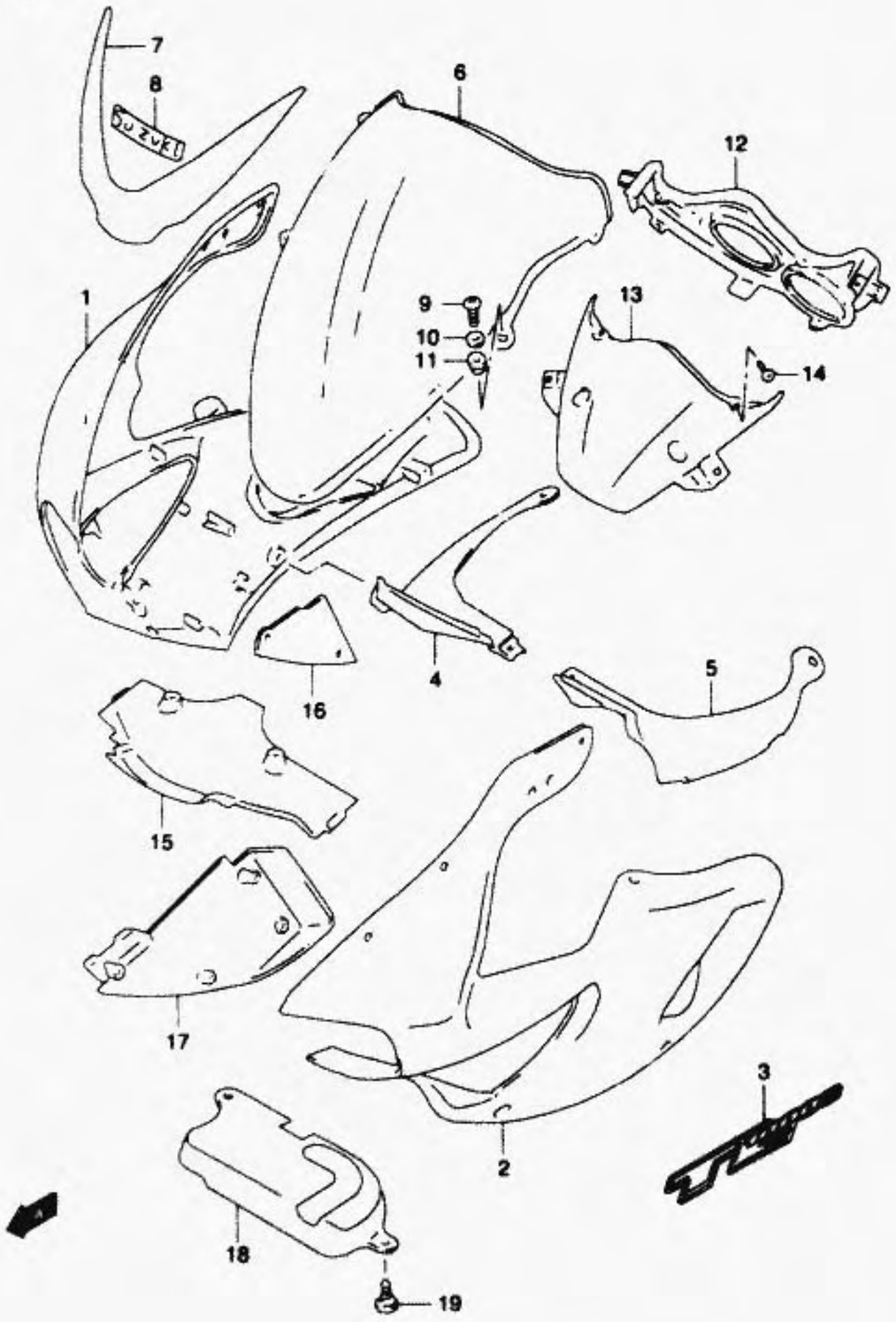

FIG.41B(G- 8) COWLING BODY (MODEL X)

REF.NO.	PART NO.	DESCRIPTION	QTY.	REMARKS
1-1	94410-02F20-Y0W	COWLING, SIDE RH (ORANGE)	1	
1-2	94410-02F20-Y7H	COWLING, SIDE RH (BLUE)	1	E28
2-1	94420-02F20-Y0W	COWLING, SIDE LH (ORANGE)	1	
2-2	94420-02F20-Y7H	COWLING, SIDE LH (BLUE)	1	E28
3-1	68681-02F20-M1G	.EMBLEM	2	FOR Y0W
3-2	68681-02F20-M1J	.EMBLEM	2	E28 FOR Y7H
4-1	94415-02F00-Y0W	PANEL, SIDE RH (ORANGE)	1	
4-2	94415-02F00-Y7H	PANEL, SIDE RH (BLUE)	1	E28
5-1	94425-02F00-Y0W	PANEL, SIDE LH (ORANGE)	1	
5-2	94425-02F00-Y7H	PANEL, SIDE LH (BLUE)	1	E28
6	94610-02F00-0FP	WINDSCREEN (SILVER)	1	
7	68275-02F00	.TAPE	1	
8	68280-02F00-0FP	.EMBLEM (SILVER)	1	
9	09139-05025	SCREW	4	
10	08322-01053	WASHER	4	
11	09159-05019	NUT	4	
12	94630-02F00	PANEL, METER	1	
13	94640-02F00	PANEL, FRONT	1	
14	09409-06322-5PK	CL (BLACK)	2	
15-1	94430-02F00-Y0W	COWLING, CENTER LOWER (ORANGE)	1	
15-2	94430-02F00-Y7H	COWLING, CENTER LOWER (BLUE)	1	E28
16	94461-02F00	COWLING, INNER RH	1	
17	94460-02F00	COWLING, INNER LH	1	
18	94457-02F00	COVER, COWL FRONT LOWER	1	
19	63161-43E00	BOLT	2	

REFER TO FIG.41C(G- 9) FOR MODEL Y
REFER TO FIG.41D(G-10) FOR MODEL K1

FIG.41A

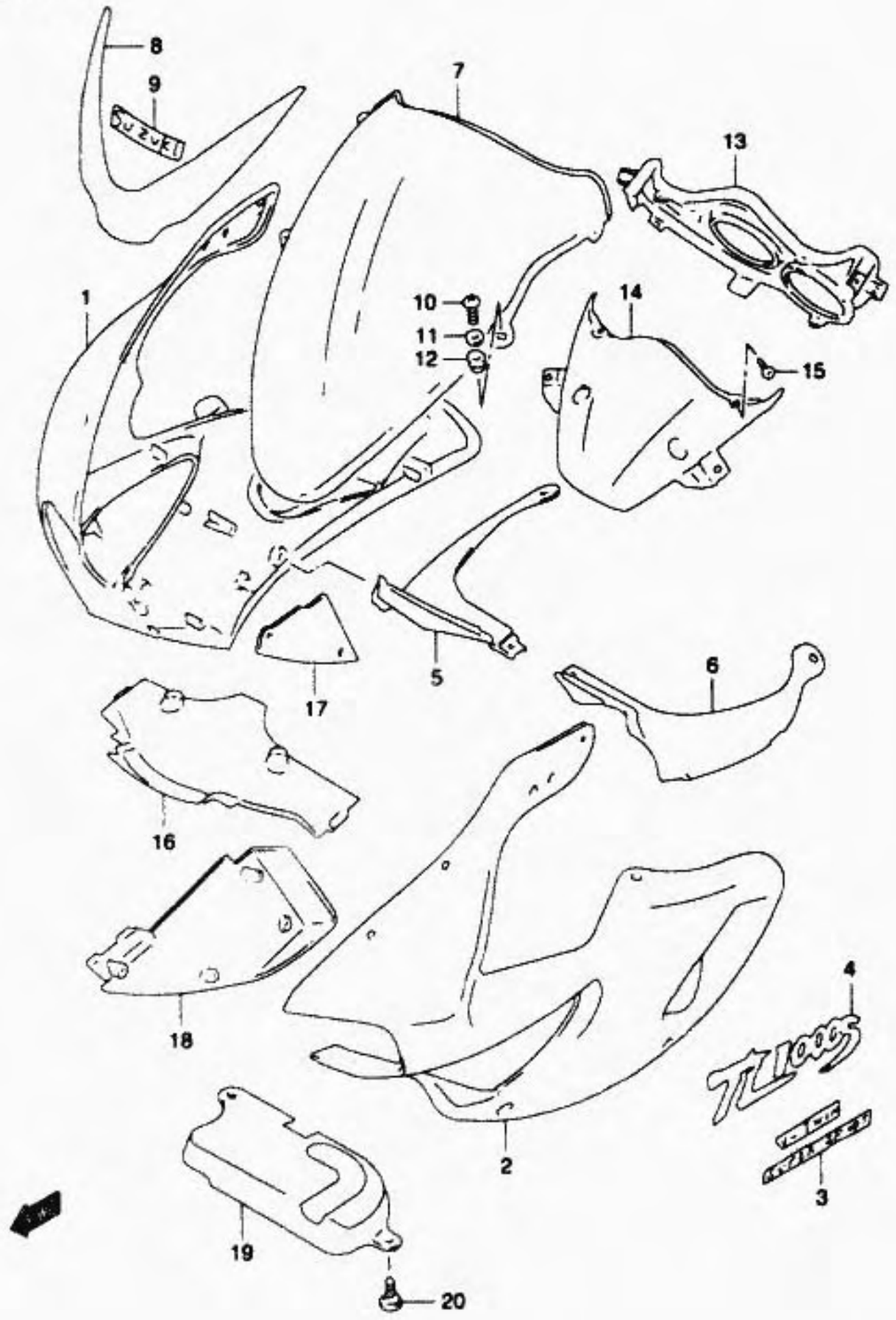

FIG.41A(G- 7) COWLING BODY (MODEL W)

REF.NO.	PART NO.	DESCRIPTION	QTY.	REMARKS
1-1	94410-02F11-28V	COWLING, SIDE RH (RED)	1	
1-2	94410-02F11-33J	COWLING, SIDE RH (BLACK)	1	
2-1	94420-02F11-28V	COWLING, SIDE LH (RED)	1	
2-2	94420-02F11-33J	COWLING, SIDE LH (BLACK)	1	
3-1	68681-02F10-K1C	.EMBLEM	2	FOR 28V
3-2	68681-02F10-G7U	.EMBLEM	2	FOR 33J
4-1	68682-02F11-Z2L	.EMBLEM, TL1000S	2	FOR 28V
4-2	68682-02F11-Z2M	.EMBLEM, TL1000S	2	FOR 33J
5-1	94415-02F00-28V	PANEL, SIDE RH (RED)	1	
5-2	94415-02F00-33J	PANEL, SIDE RH (BLACK)	1	
6-1	94425-02F00-28V	PANEL, SIDE LH (RED)	1	
6-2	94425-02F00-33J	PANEL, SIDE LH (BLACK)	1	
7	94610-02F00-0FP	WINDSCREEN (SILVER)	1	
8	68275-02F00	.TAPE	1	
9	68280-02F00-0FP	.EMBLEM (SILVER)	1	
10	09139-05025	SCREW	4	
11	08322-01053	WASHER	4	
12	09159-05019	NUT	4	
13	94630-02F00	PANEL, METER	1	
14	94640-02F00	PANEL, FRONT	1	
15	09409-06322-5PK	CLIP (BLACK)	2	
16-1	94430-02F00-28V	COWLING, CENTER LOWER (RED)	1	
16-2	94430-02F00-33J	COWLING, CENTER LOWER (BLACK)	1	
17	94461-02F00	COWLING, INNER RH	1	
18	94460-02F00	COWLING, INNER LH	1	
19	94457-02F00	COVER, COWL FRONT LOWER	1	
20	63161-43E00	BOLT	2	

REFER TO FIG.41B(G- 8) FOR MODEL X
REFER TO FIG.41C(G- 9) FOR MODEL Y
REFER TO FIG.41D(G-10) FOR MODEL K1

FIG.41

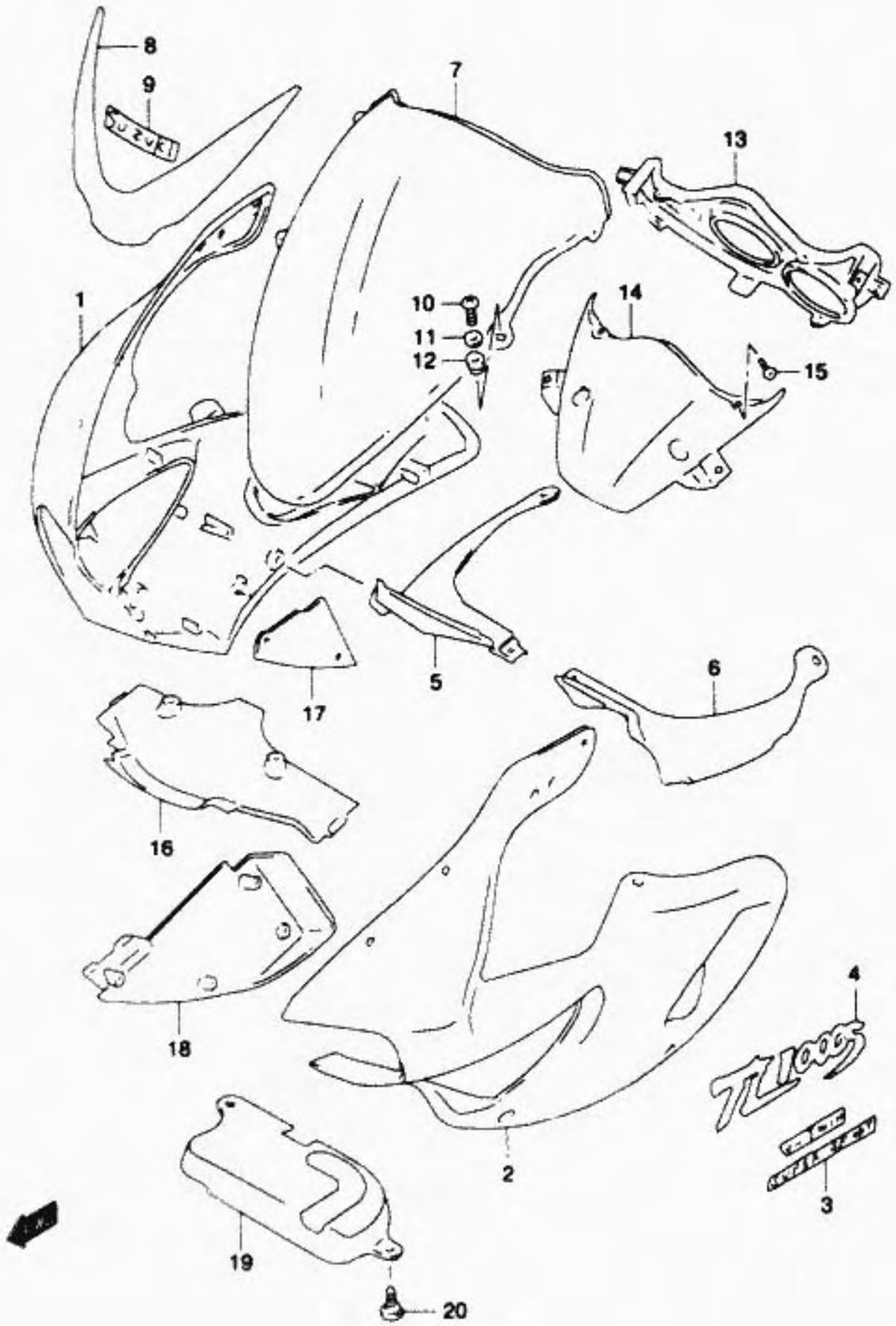

FIG.41 (G- 6) COWLING BODY (MODEL V)

REF.NO.	PART NO.	DESCRIPTION	QTY.	REMARKS
16-1	94430-02F00-28V	COWLING, CENTER LOWER (RED)	1	
16-2	94430-02F00-1UH	COWLING, CENTER LOWER (GREEN)	1	
16-3	94430-02F00-33J	COWLING, CENTER LOWER (BLACK)	1	
17	94461-02F00	COWLING, INNER RH	1	
18	94460-02F00	COWLING, INNER LH	1	
19	94457-02F00	COVER, COWL FRONT LOWER	1	
20	63161-43E00	BOLT	2	

REFER TO FIG.41A(G- 7) FOR MODEL W
REFER TO FIG.41B(G- 8) FOR MODEL X
REFER TO FIG.41C(G- 9) FOR MODEL Y
REFER TO FIG.41D(G-10) FOR MODEL K1

FIG.41

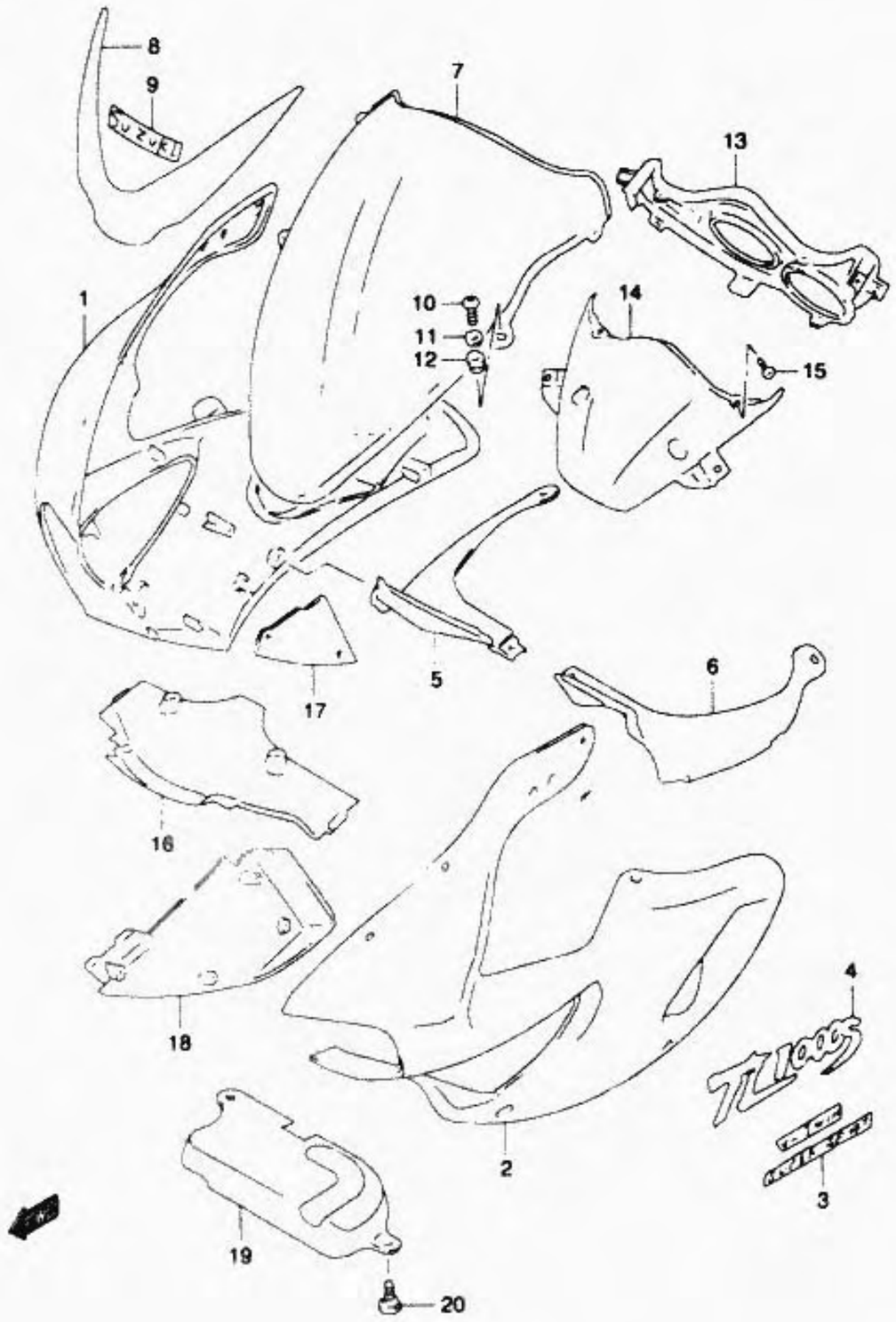

FIG.41 (G- 5) COWLING BODY (MODEL V)

REF.NO.	PART NO.	DESCRIPTION	QTY.	REMARKS
1-1	94410-02F01-28V	COWLING, SIDE RH (RED)	1	
1-2	94410-02F00-1UH	COWLING, SIDE RH (GREEN)	1	
1-3	94410-02F00-33J	COWLING, SIDE RH (BLACK)	1	
2-1	94420-02F01-28V	COWLING, SIDE LH (RED)	1	
2-2	94420-02F00-1UH	COWLING, SIDE LH (GREEN)	1	
2-3	94420-02F00-33J	COWLING, SIDE LH (BLACK)	1	
3-1	68681-02F00-H3Y	.EMBLEM	2	FOR 28V
3-2	68681-02F00-H3Z	.EMBLEM	2	FOR 1UH
3-3	68681-02F00-3EE	.EMBLEM	2	FOR 33J
4-1	68682-02F00-H4A	.EMBLEM, TL1000S	2	FOR 28V
4-2	68682-02F00-H4B	.EMBLEM, TL1000S	2	FOR 1UH
4-3	68682-02F00-H4S	.EMBLEM, TL1000S	2	FOR 33J
5-1	94415-02F00-28V	PANEL, SIDE RH (RED)	1	
5-2	94415-02F00-1UH	PANEL, SIDE RH (GREEN)	1	
5-3	94415-02F00-33J	PANEL, SIDE RH (BLACK)	1	
6-1	94425-02F00-28V	PANEL, SIDE LH (RED)	1	
6-2	94425-02F00-1UH	PANEL, SIDE LH (GREEN)	1	
6-3	94425-02F00-33J	PANEL, SIDE LH (BLACK)	1	
7	94610-02F00-0FP	WINDSCREEN (SILVER)	1	
8	68275-02F00	.TAPE	1	
9	68280-02F00-0FP	.EMBLEM (SILVER)	1	
10	09139-05025	SCREW	4	
11	08322-01053	WASHER	4	
12	09159-05019	NUT	4	
13	94630-02F00	PANEL, METER	1	
14	94640-02F00	PANEL, FRONT	1	
15	09409-06322-5PK	CLIP (BLACK)	2	

REFER TO FIG.41A(G- 7) FOR MODEL W
REFER TO FIG.41B(G- 8) FOR MODEL X
REFER TO FIG.41C(G- 9) FOR MODEL Y
REFER TO FIG.41D(G-10) FOR MODEL K1

FIG.40

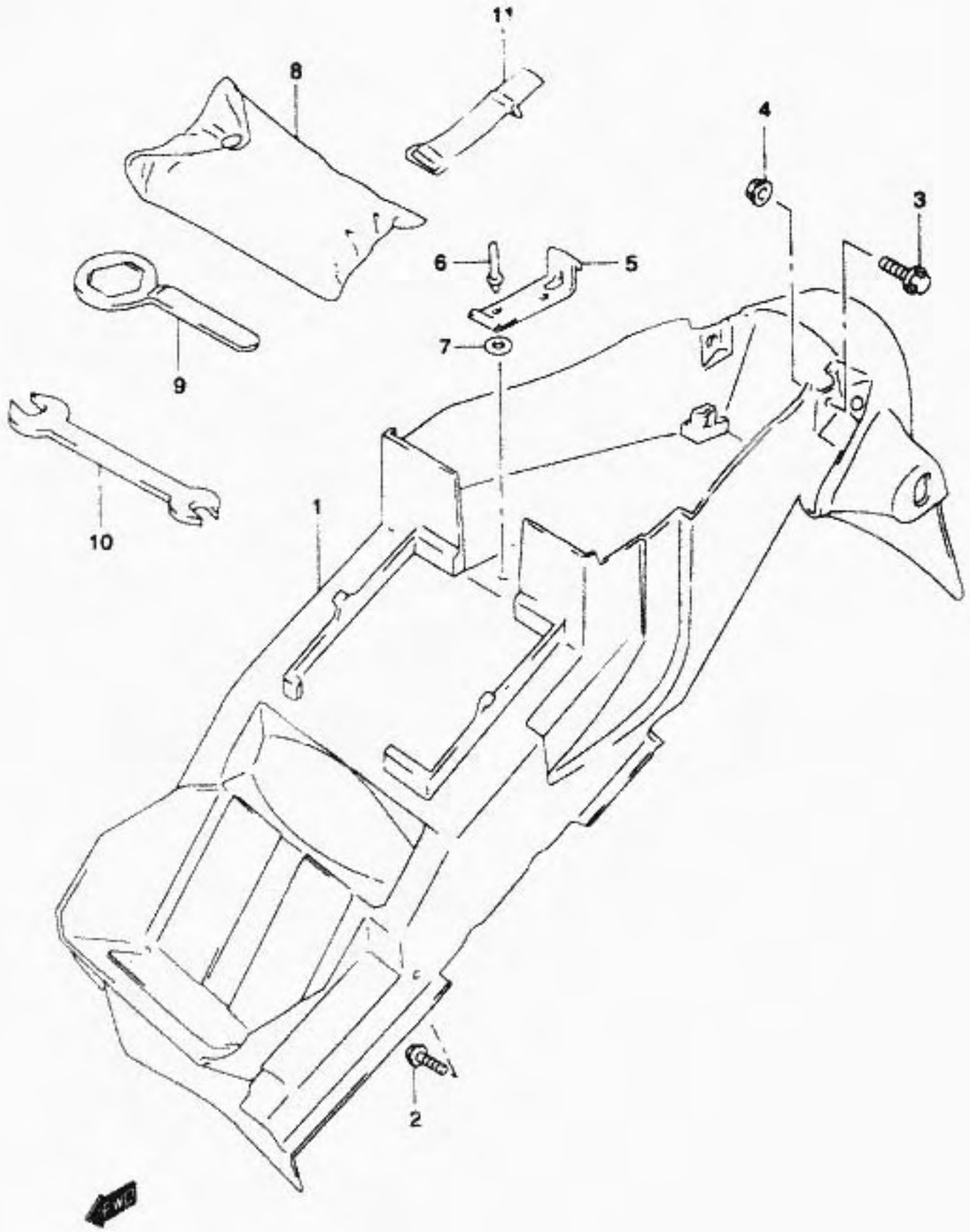

FIG.40 (G- 4) REAR FENDER

REF.NO.	PART NO.	DESCRIPTION	QTY.	REMARKS
1-1	63111-02F00	FENDER, REAR	1	
1-2	63111-02F10	FENDER, REAR	1	E33
2	09111-06061	BOLT	2	
3-1	09116-06144	BOLT	2	MODEL V/W/X
3-2	09116-06165	BOLT	2	MODEL Y/K1
4	08316-10063	NUT	2	
5	63466-02F00	HOLDER, TOOL	1	
6-1	09229-04020	RIVET	2	
6-2	09229-04020	RIVET	4	E33
7-1	08322-01043	WASHER	2	
7-2	08322-01043	WASHER	4	E33
8-1	09800-21008	TOOL ASSY	1	MODEL V/W
8-2	09800-21039	TOOL ASSY	1	MODEL X/Y/K1
9	09817-00034	RING SPANNER, 36	1	MODEL V/W
10	09813-00027	SPANNER (8X10)	1	
11	47435-02F01	BAND, TOOL	1	

FIG.39

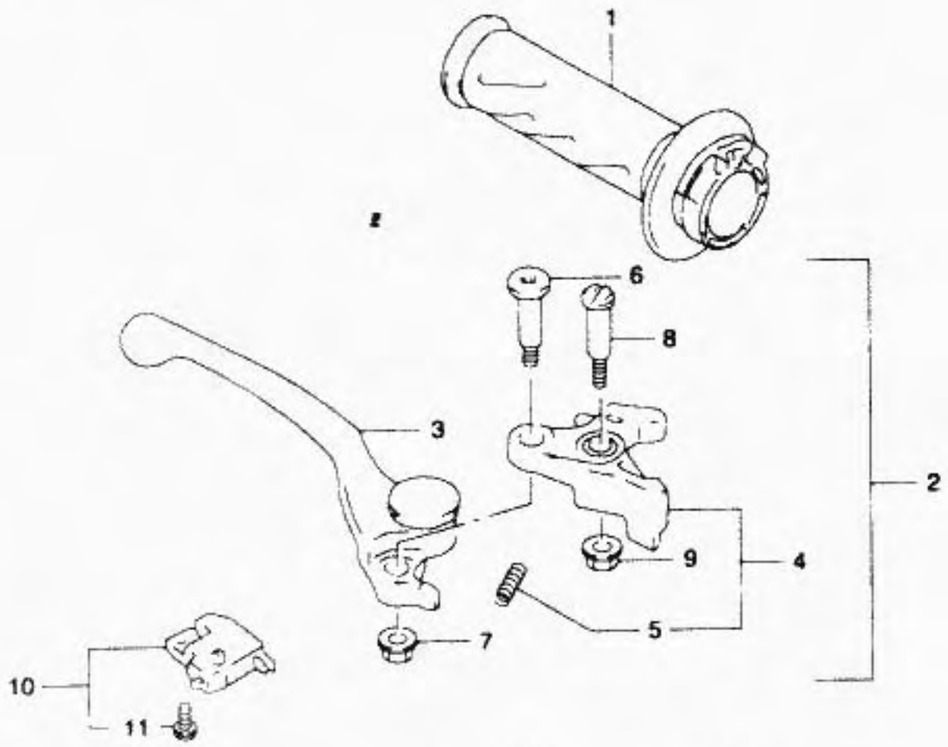

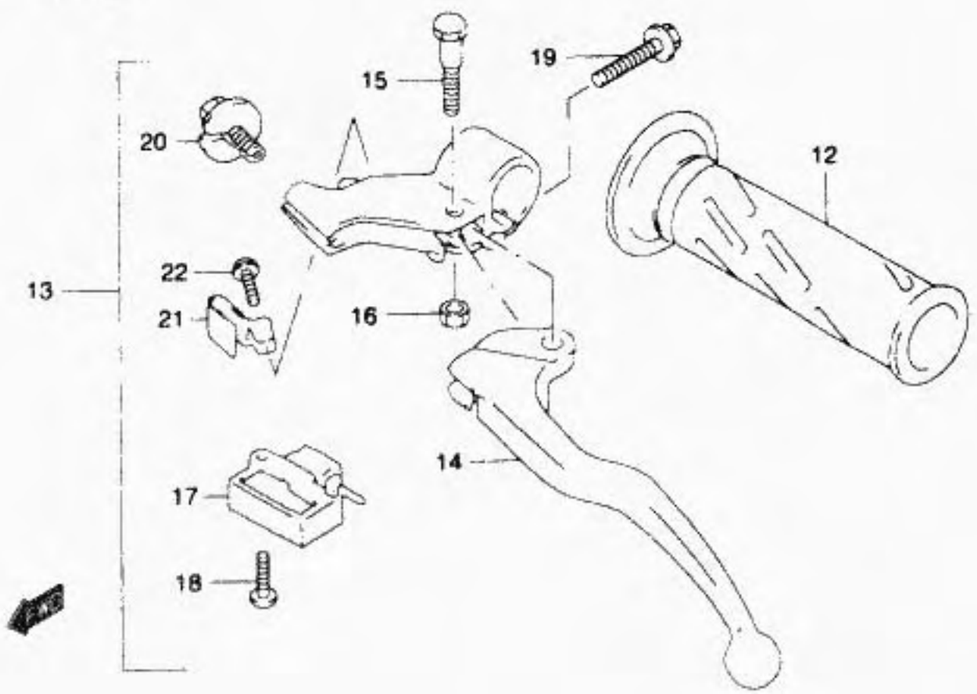

FIG.39 (G- 3) HANDLE LEVER

REF.NO.	PART NO.	DESCRIPTION	QTY.	REMARKS
1	57110-46E01	GRIP, THROTTLE	1	
2-1	57300-32C01	LEVER ASSY, BRAKE	1	MODEL V
2-2	57300-32C10	LEVER ASSY, BRAKE	1	MODEL W/X/Y/K1
3	57420-32C00	.LEVER, ADJUST	1	
4-1	57430-32C00	.KNOCKER	1	MODEL V/W
4-2	57430-32C10	.KNOCKER	1	MODEL X/Y/K1
5	57438-32C00	..SPRING	1	
6	57437-32C01	.BOLT, LEVER	1	
7	08319-31063	.NUT	1	
8	57431-17C00	.BOLT, KNOCKER	1	
9	08316-10063	.NUT	1	
10	57460-17C00	SWITCH ASSY, STOP	1	
11	57465-17C00	.SCREW	1	
12	57211-22D01	GRIP, LH	1	
13-1	57500-33E20	LEVER ASSY, CLUTCH	1	MODEL V/W/X/Y
13-2	57500-33E21	LEVER ASSY, CLUTCH	1	MODEL K1
14-1	57621-33E00	.LEVER, CLUTCH	1	MODEL V/W/X/Y
14-2	57621-33E01	.LEVER, CLUTCH	1	MODEL K1
15-1	57431-45C00	.BOLT	1	MODEL V/W/X/Y
15-2	57431-45C01	.BOLT	1	MODEL K1
16	08319-21063	.NUT	1	
17	57560-05A00	.SWITCH ASSY, CLUTCH	1	
18	02122-03208	.SCREW	1	
19	01547-06203	.BOLT, HOLDER	1	
20	57641-33E20	.NUT, CABLE ADJUSTER	1	
21	57644-33E00	.SPRING	1	
22	57642-33E00	.SCREW, SPRING	1	

FIG.38

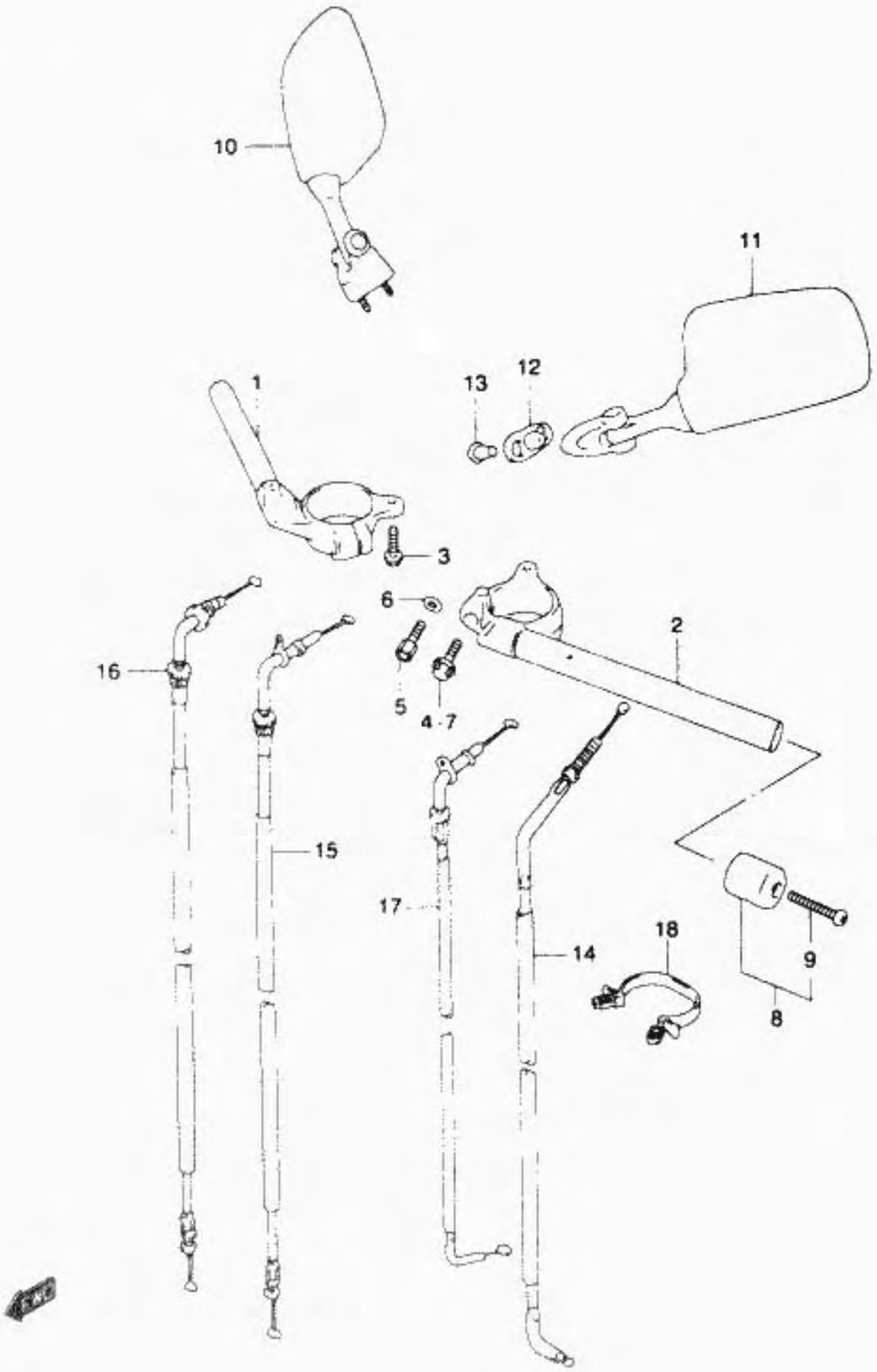

FIG.38 (G- 2) HANDLEBAR

REF.NO.	PART NO.	DESCRIPTION	QTY.	REMARKS
1	56111-02F00	HANDLEBAR, RH	1	
2	56151-02F00	HANDLEBAR, LH	1	
3	01550-06163	BOLT, SET	2	
4	09103-08269	BOLT, HANDLEBAR RH	1	MODEL V
5	56121-02F00	BOLT, HANDLEBAR LH	1	MODEL V
6	08322-01083	WASHER, LH	1	MODEL V
7	09103-08269	BOLT, HANDLEBAR	2	MODEL W/X/Y/K1
8	56200-04821	BALANCER SET, HANDLEBAR	2	
9	02122-06603	SCREW	2	
10	56500-22D11	MIRROR ASSY, REAR VIEW RH	1	
11	56600-22D11	MIRROR ASSY, REAR VIEW LH	1	
12	94576-22D00	CUSHION	2	
13	56619-17C00	NUT	4	
14	58200-02F00	CABLE ASSY, CLUTCH	1	
15-1	58300-02F00	CABLE ASSY, THROTTLE NO.1	1	MODEL V
15-2	58300-02F01	CABLE ASSY, THROTTLE NO.1	1	MODEL W/X/Y/K1
16-1	58300-02F10	CABLE ASSY, THROTTLE NO.2	1	MODEL V
16-2	58300-02F11	CABLE ASSY, THROTTLE NO.2	1	MODEL W/X/Y/K1
17	58410-02F00	CABLE, STARTER	1	
18	09403-24302	CLAMP	1	

FIG.37

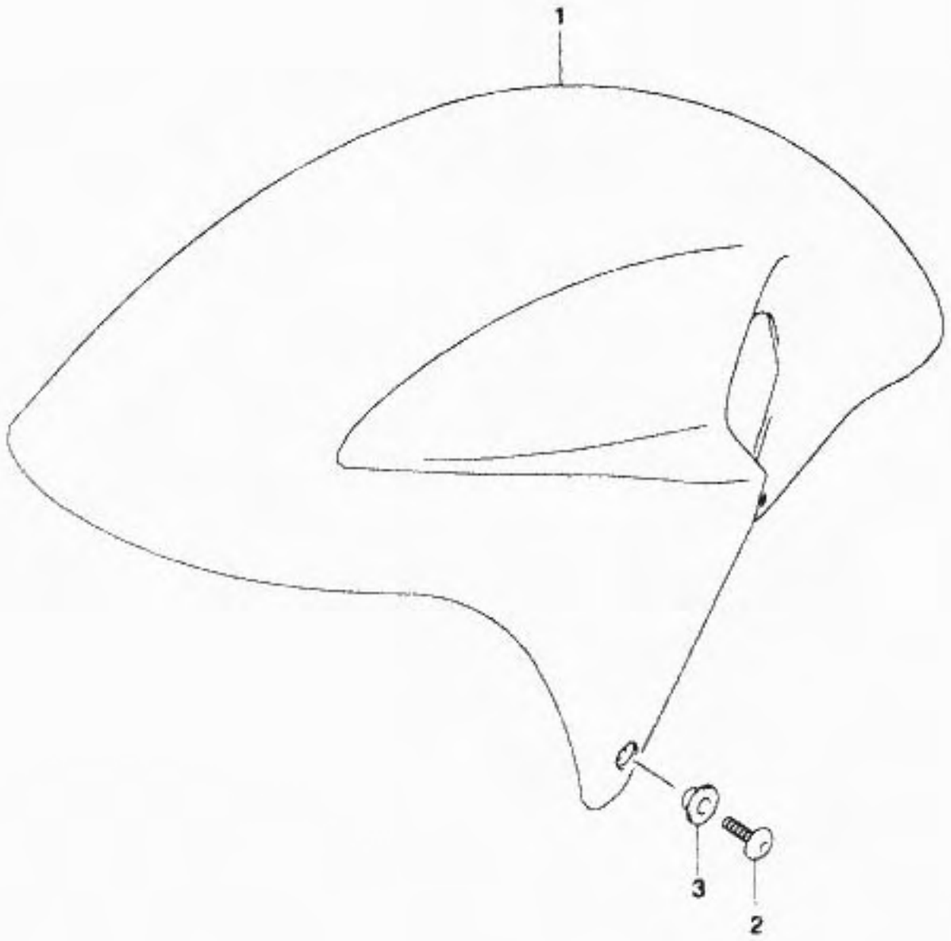

FIG.37 (F-15) FRONT FENDER

REF.NO.	PART NO.	DESCRIPTION	QTY.	REMARKS
1-1	53110-02F00-28V	FENDER, FRONT (RED)	1	FOR 28V,3AX
1-2	53110-02F00-1UH	FENDER, FRONT (GREEN)	1	FOR 1UH
1-3	53110-02F00-33J	FENDER, FRONT (BLACK)	1	FOR 33J,2AX
1-4	53110-02F00-Y0W	FENDER, FRONT (ORANGE)	1	FOR Y0W
1-5	53110-02F00-Y7H	FENDER, FRONT (BLUE)	1	E28 FOR Y7H
1-6	53110-02F00-Y7M	FENDER, FRONT (RED)	1	FOR Y7M
1-7	53110-02F10-Y7L	FENDER, FRONT (BLACK)	1	FOR Y7L
1-8	53110-02F10-YC2	FENDER, FRONT (BLUE)	1	FOR YC2
1-9	53110-02F10-Y9H	FENDER, FRONT (YELLOW)	1	FOR Y9H
2	09139-06030	SCREW	4	
3	09161-06021	WASHER	4	

FIG.36B

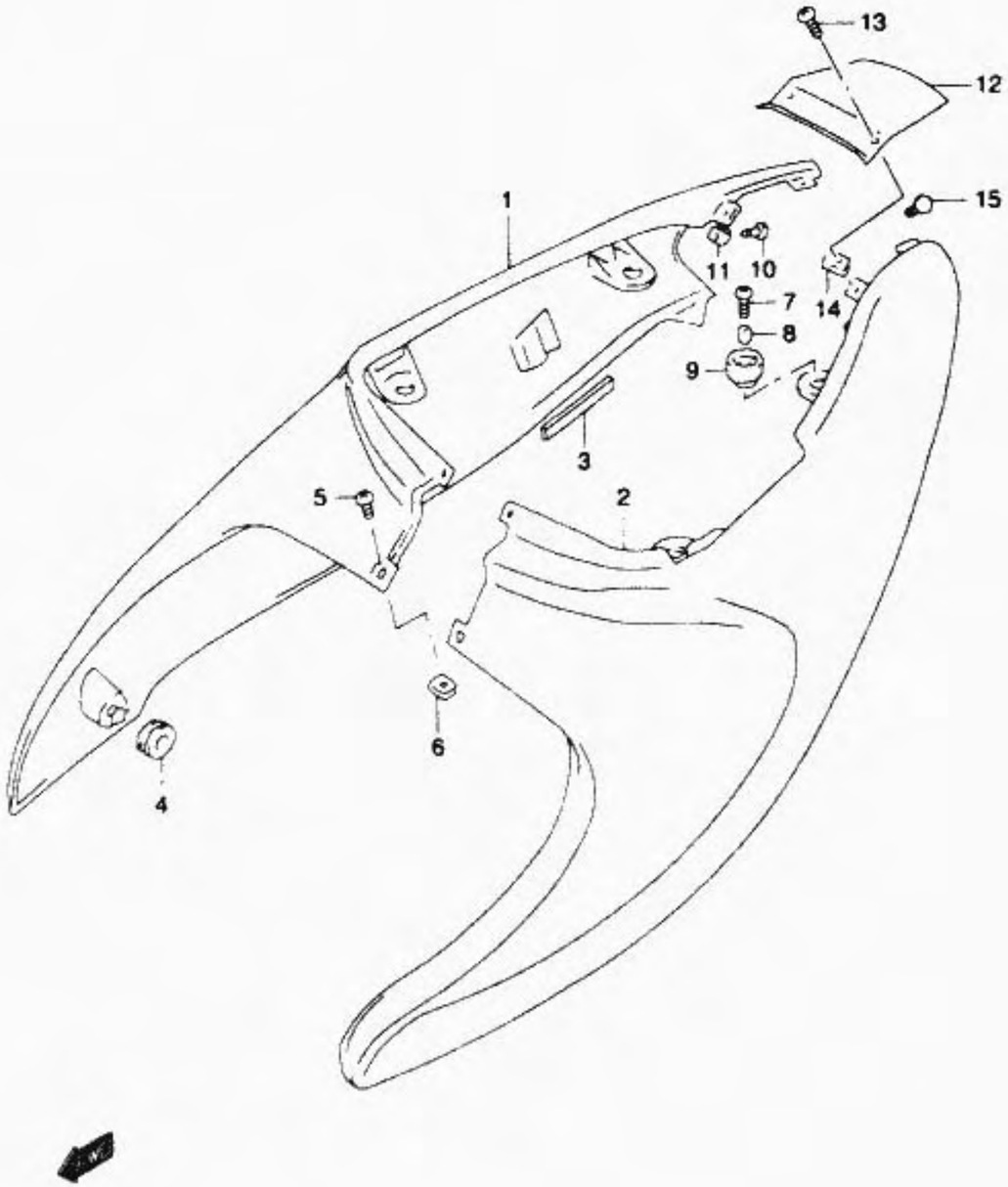

FIG.36B(F-14) FRAME COVER (MODEL K1)

REF.NO.	PART NO.	DESCRIPTION	QTY.	REMARKS
1-1	47110-02F10-Y7L	COVER, FRAME RH (BLACK)	1	
1-2	47110-02F10-YC2	COVER, FRAME RH (BLUE)	1	
2-1	47210-02F10-Y7L	COVER, FRAME LH (BLACK)	1	
2-2	47210-02F10-YC2	COVER, FRAME LH (BLUE)	1	
3	47161-02F00	.CUSHION	2	
4	09320-08018	CUSHION, FRONT	2	
5	03241-15123	SCREW, CENTER	2	
6	09148-05038	NUT	2	
7	09136-06105	SCREW	4	
8	09180-06286	SPACER	4	
9	09320-10045	CUSHION, UPPER	4	
10	09136-05034	SCREW, REAR LOWER	2	
11	09148-05038	NUT	2	
12-1	47311-02F00-Y7L	COVER, CENTER (BLACK)	1	
12-2	47311-02F00-YC2	COVER, CENTER (BLUE)	1	
13	03241-15123	SCREW	2	
14	09148-05038	NUT	2	
15	47129-02F00	CUSHION, REAR	2	

FIG.36A

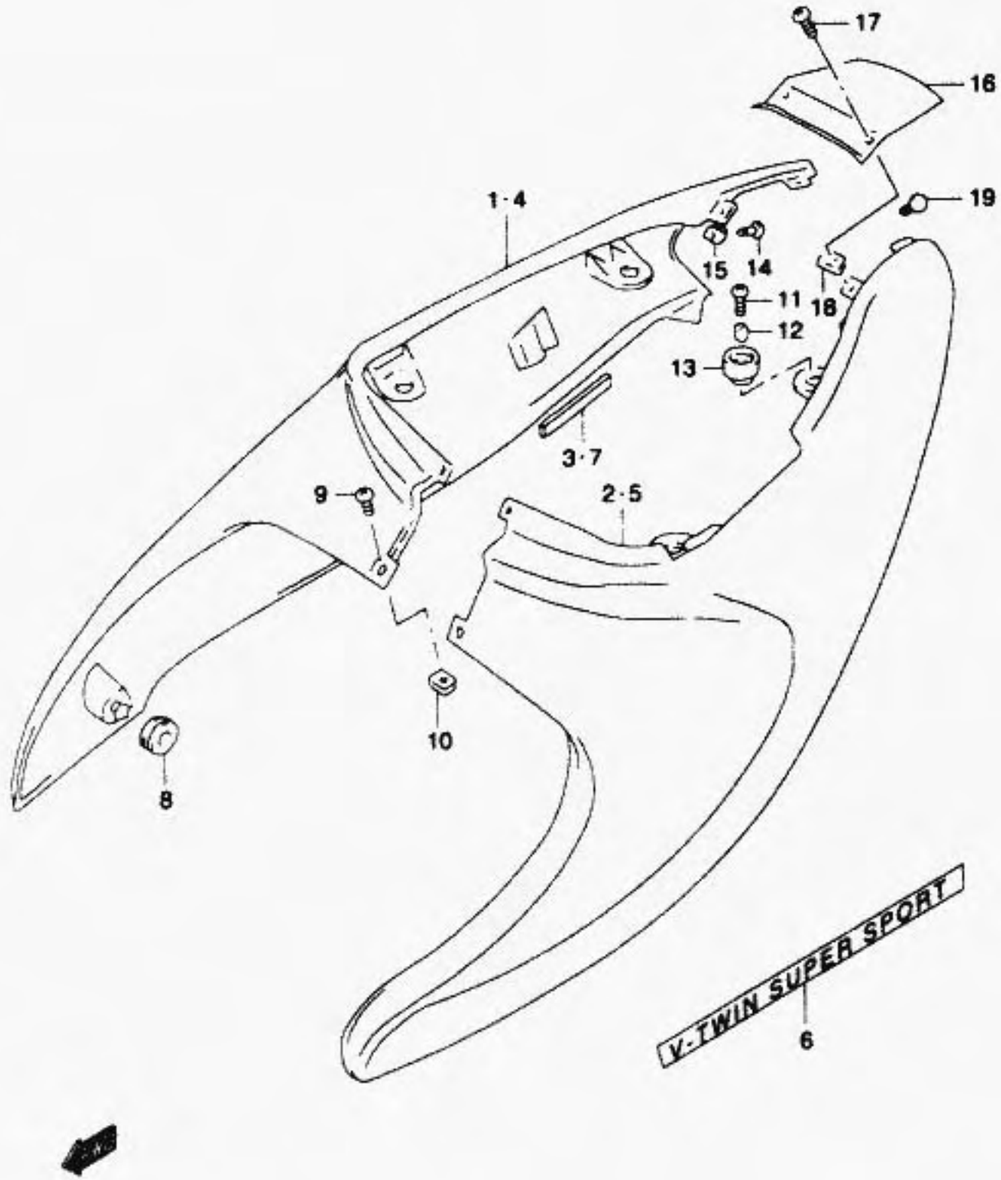

FIG.36A(F-13) FRAME COVER (MODEL X/Y)

REF.NO.	PART NO.	DESCRIPTION	QTY.	REMARKS
1-1	47110-02F10-Y0W	COVER, FRAME RH (ORANGE)	1	MODEL X
1-2	47110-02F10-Y7M	COVER, FRAME RH (RED)	1	MODEL Y
1-3	47110-02F10-Y9H	COVER, FRAME RH (YELLOW)	1	MODEL Y E28
2-1	47210-02F10-Y0W	COVER, FRAME LH (ORANGE)	1	MODEL X
2-2	47210-02F10-Y7M	COVER, FRAME LH (RED)	1	MODEL Y
2-3	47210-02F10-Y9H	COVER, FRAME LH (YELLOW)	1	MODEL Y E28
3	47161-02F00	.CUSHION	2	
4	47110-02F20-Y7H	COVER, FRAME RH (BLUE)	1	MODEL X E28
5	47210-02F20-Y7H	COVER, FRAME LH (BLUE)	1	MODEL X E28
6	68131-02F20-M1E	.EMBLEM	2	MODEL X E28
7	47161-02F00	.CUSHION	2	
8	09320-08018	CUSHION, FRONT	2	
9	03241-15123	SCREW, CENTER	2	
10	09148-05038	NUT	2	
11	09136-06105	SCREW	4	
12	09180-06286	SPACER	4	
13	09320-10045	CUSHION, UPPER	4	
14	09136-05034	SCREW, REAR LOWER	2	
15	09148-05038	NUT	2	
16-1	47311-02F00-Y0W	COVER, CENTER (ORANGE)	1	MODEL X
16-2	47311-02F00-Y7M	COVER, CENTER (RED)	1	MODEL Y
16-3	47311-02F00-Y7H	COVER, CENTER (BLUE)	1	MODEL X E28
16-4	47311-02F00-Y9H	COVER, CENTER (YELLOW)	1	MODEL Y E28
17	03241-15123	SCREW	2	
18	09148-05038	NUT	2	
19	47129-02F00	CUSHION, REAR	2	

REFER TO FIG.36B(F-14) FOR MODEL K1

FIG.36

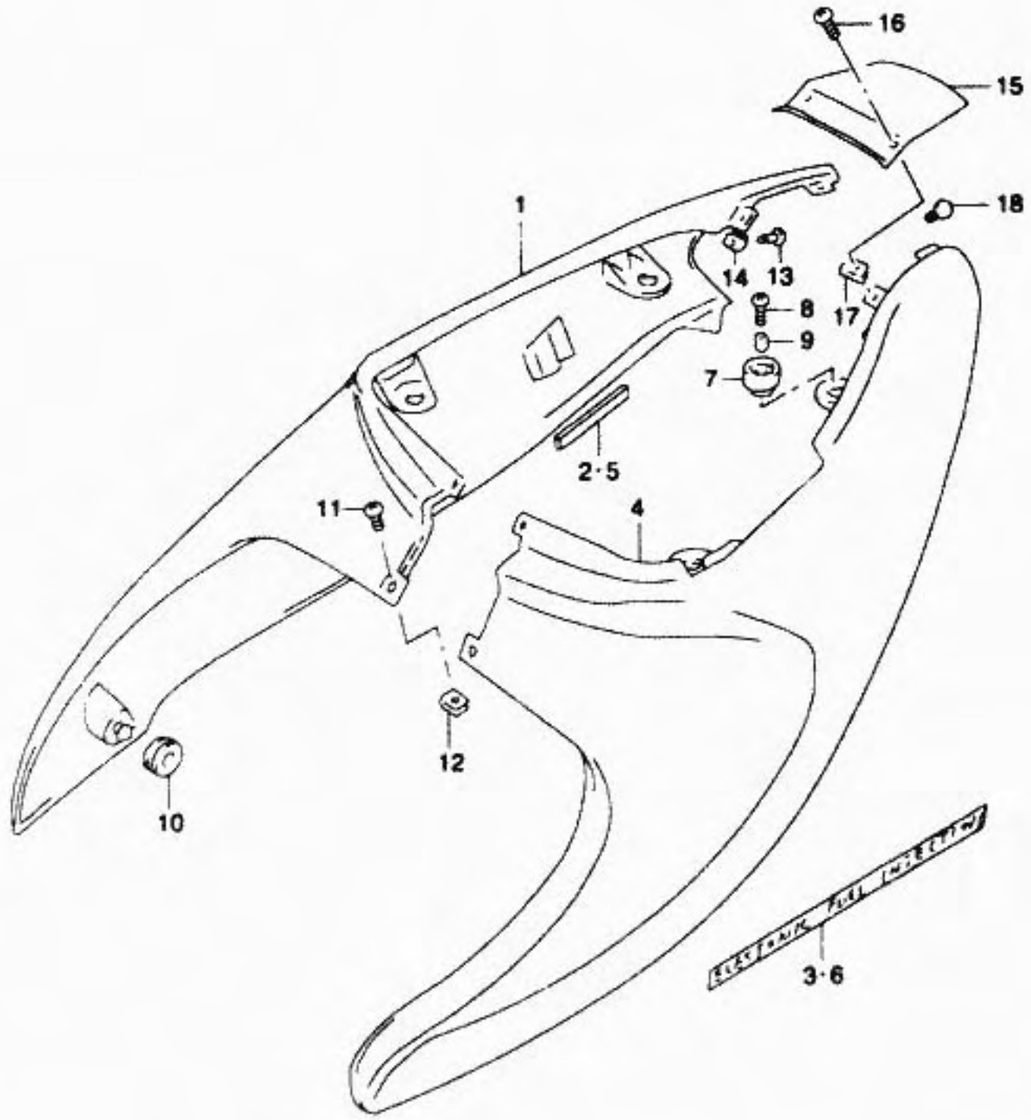

FIG.36 (F-12) FRAME COVER (MODEL V/W)

REF.NO.	PART NO.	DESCRIPTION	QTY.	REMARKS
15-1	47311-02F00-28V	COVER, FRAME CENTER (RED)	1	FOR 28V,3AX
15-2	47311-02F00-1UH	COVER, FRAME CENTER (GREEN)	1	FOR 1UH
15-3	47311-02F00-33J	COVER, FRAME CENTER (BLACK)	1	FOR 33J,2AX
16	03241-15123	SCREW, REAR	2	
17	09148-05038	NUT	2	
18	47129-02F00	CUSHION, FRAME COVER REAR	2	

REFER TO FIG.36A(F-13) FOR MODEL X/Y
REFER TO FIG.36B(F-14) FOR MODEL K1

FIG.36

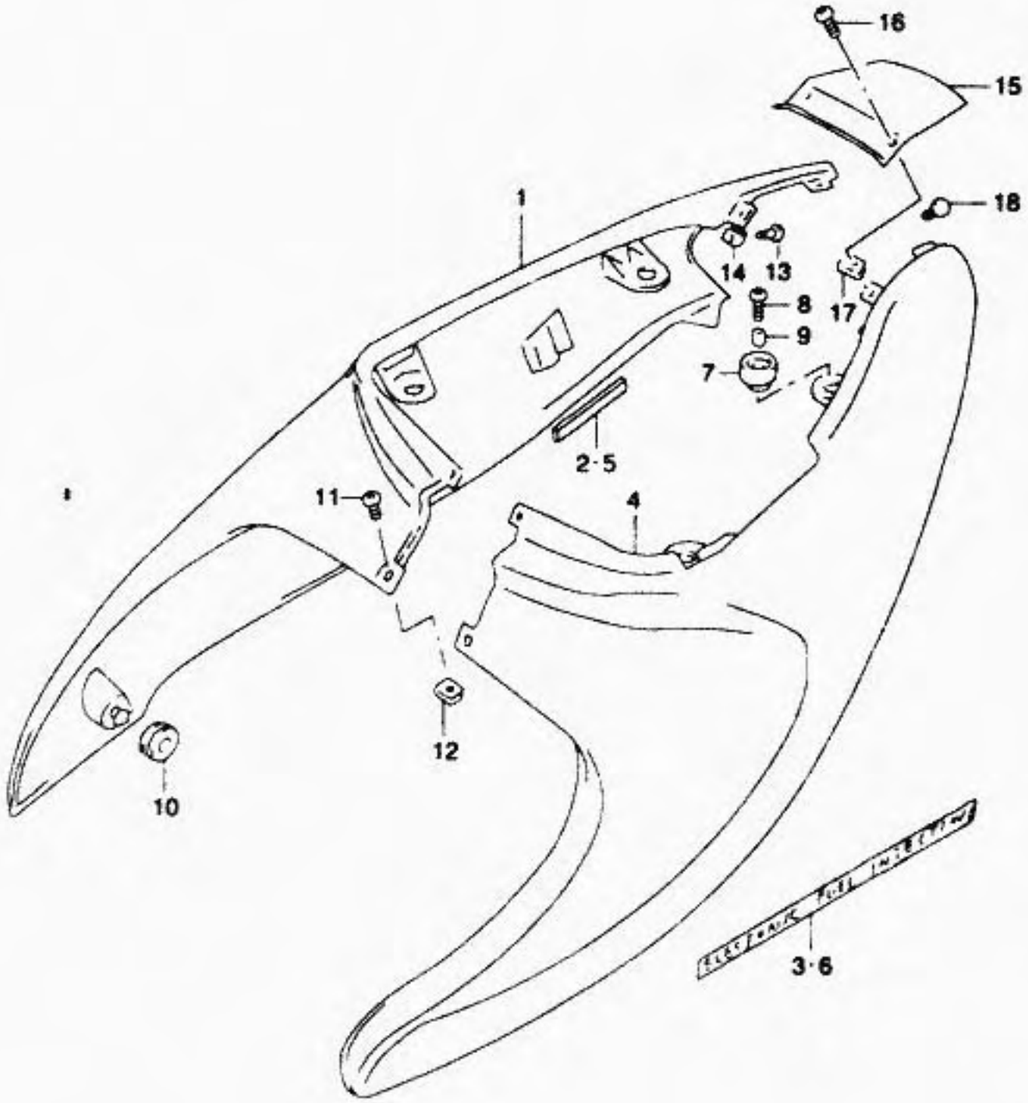

FIG.36 (F-11) FRAME COVER (MODEL V/W)

REF.NO.	PART NO.	DESCRIPTION	QTY.	REMARKS
1-1	47110-02F00-28V	COVER, FRAME RH (RED)	1	MODEL V
1-2	47110-02F00-1UH	COVER, FRAME RH (GREEN)	1	MODEL V
1-3	47110-02F00-33J	COVER, FRAME RH (BLACK)	1	MODEL V
1-4	47110-02F00-3AX	COVER, FRAME RH (RED)	1	MODEL W
1-5	47110-02F00-2AX	COVER, FRAME RH (BLACK)	1	MODEL W
2	47161-02F00	.CUSHION	1	
3-1	68131-02F00-H3Y	.EMBLEM	1	FOR 28V
3-2	68131-02F00-H3Z	.EMBLEM	1	FOR 1UH
3-3	68131-02F00-3EE	.EMBLEM	1	FOR 33J
3-4	68131-02F00-K1C	.EMBLEM	1	FOR 3AX
3-5	68131-02F00-G7U	.EMBLEM	1	FOR 2AX
4-1	47210-02F00-28V	COVER, FRAME LH (RED)	1	MODEL V
4-2	47210-02F00-1UH	COVER, FRAME LH (GREEN)	1	MODEL V
4-3	47210-02F00-33J	COVER, FRAME LH (BLACK)	1	MODEL V
4-4	47210-02F00-3AX	COVER, FRAME LH (RED)	1	MODEL W
4-5	47210-02F00-2AX	COVER, FRAME LH (BLACK)	1	MODEL W
5	47161-02F00	.CUSHION	1	
6-1	68131-02F00-H3Y	.EMBLEM	1	FOR 28V
6-2	68131-02F00-H3Z	.EMBLEM	1	FOR 1UH
6-3	68131-02F00-3EE	.EMBLEM	1	FOR 33J
6-4	68131-02F00-K1C	.EMBLEM	1	FOR 3AX
6-5	68131-02F00-G7U	.EMBLEM	1	FOR 2AX
7	09320-10045	CUSHION, UPPER	4	
8	09136-06105	SCREW, UPPER	4	
9	09180-06286	SPACER	4	
10	09320-08018	CUSHION, FRONT	2	
11	03241-15123	SCREW, CENTER	2	
12	09148-05038	NUT	2	
13	09136-05034	SCREW, REAR LOWER	2	
14	09148-05038	NUT	2	

REFER TO FIG.36A(F-13) FOR MODEL X/Y
REFER TO FIG.36B(F-14) FOR MODEL K1

FIG.35

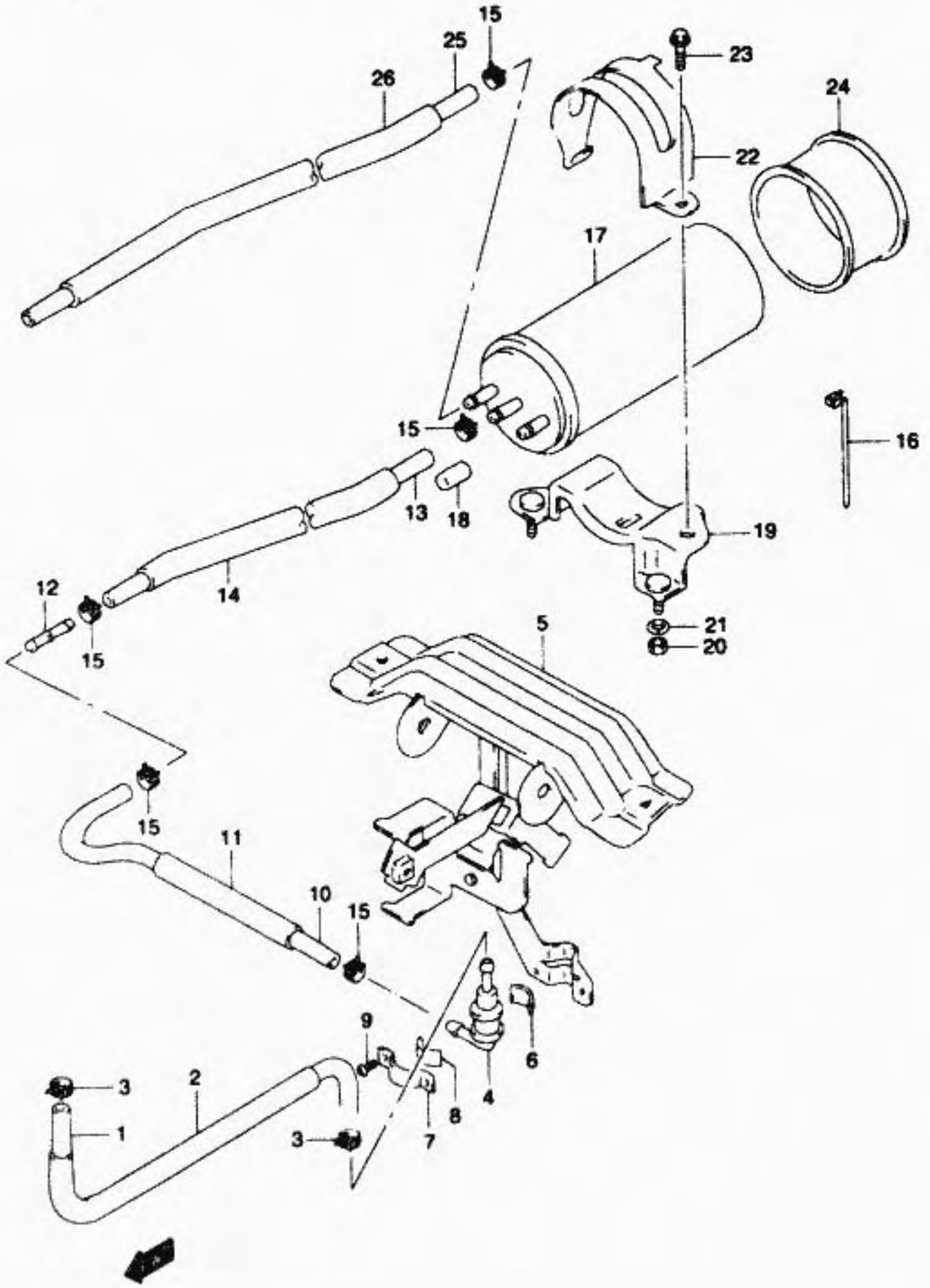

FIG.35 (F-10) CANISTER (E33)

REF.NO.	PART NO.	DESCRIPTION	QTY.	REMARKS
1	44435-02F00	HOSE, TANK & VALVE	1	
2	09351-14152-600	PROTECTOR	1	L:600→200
3	09401-11413	CLIP	2	
4	44240-17C00	VALVE, BREATHER	1	
5-1	44550-02F10	BRACKET, BREATHER VALVE	1	MODEL V/W/X/Y
5-2	44550-02F11	BRACKET, BREATHER VALVE	1	MODEL K1
6	44894-24A00	.CUSHION	1	
7	44892-24A00	PLATE, BREATHER VALVE	1	
8	44894-24A00	.CUSHION	1	
9	02142-04083	SCREW, PLATE	2	
10	09355-54116-600	HOSE, VALVE & CANISTER FRONT	1	L:600→280
11	09351-14152-600	PROTECTOR	1	L:600→240
12	09364-06005	UNION	1	
13	09355-54116-600	HOSE, VALVE ' CANISTER REAR	1	L:600→380
14	09351-14152-600	PROTECTOR	1	L:600→340
15	09401-11413	CLIP	4	
16-1	09407-18402	CLAMP	1	MODEL V/W
16-2	09407-25401	CLAMP	1	MODEL X/Y/K1
17	17210-26E00	CANISTER	1	
18	09251-07003	CAP	1	
19	44880-02F01	BRACKET, CANISTER	1	
20	08319-31063	NUT, BRACKET	2	
21	09169-06071	WASHER	2	
22	44882-02F01	HOLDER, CANISTER	1	
23	02142-06123	SCREW, HOLDER	1	
24	44883-26E00	CUSHION, CANISTER	1	
25	09359-54111-00A	HOSE, CARB	1	L:1000→740
26	09351-14152-00B	PROTECTOR	1	L:2000→700
27	09401-12404	CLIP	2	

FIG.34A

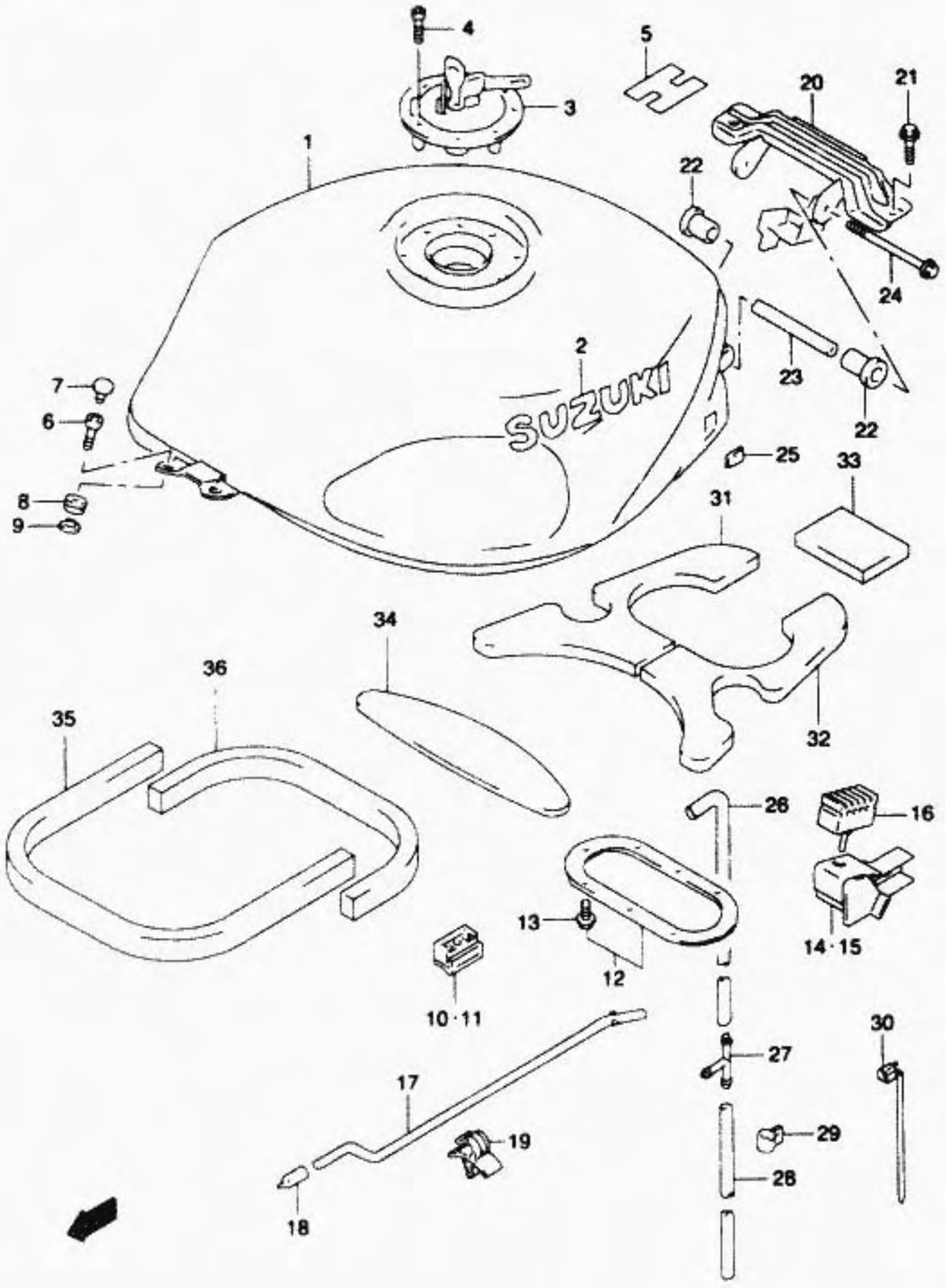

FIG.34A(F-9) FUEL TANK (MODEL Y/K1)

REF.NO.	PART NO.	DESCRIPTION	QTY.	REMARKS
25	44572-02F00	FASTENER	2	
26	44423-02F01	HOSE, WATER DRAIN	1	
27	09367-08005	3 WAY, DRAIN HOSE	1	
28	09352-70103-600	HOSE, DRAIN (L:600→400)	1	
29	09403-14408	CLIP	1	
30	09407-14403	CLAMP	1	
31	44191-02F01	SHIELD, TANK HEAT RH	1	E33
32	44192-02F01	SHIELD, TANK HEAT LH	1	E33
33	44193-02F00	SHIELD, TANK HEAT REAR	1	E33
34	44194-02F00	SHIELD, TANK HEAT FRONT	1	E33
35	44195-02F00	SHIELD, TANK HEAT NO.1	1	E33
36	44196-02F00	SHIELD, TANK HEAT NO.2	1	E33

FIG.34A

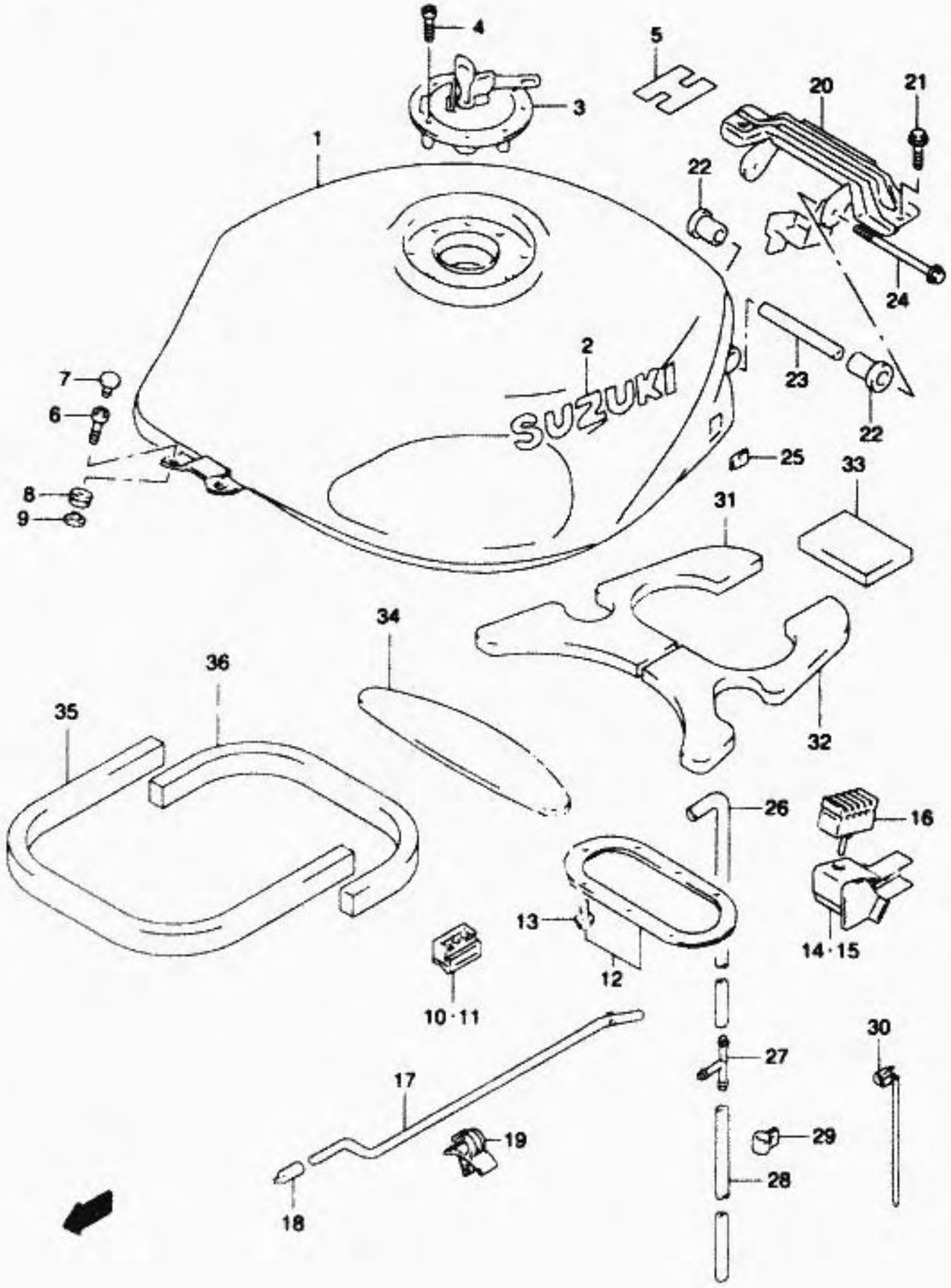

FIG.34A(F-8) FUEL TANK (MODEL Y/K1)

REF.NO.	PART NO.	DESCRIPTION	QTY.	REMARKS
1-1	44100-02F01-Y7M	TANK ASSY, FUEL (RED)	1	MODEL Y
1-2	44100-02F01-Y9H	TANK ASSY, FUEL (YELLOW)	1	MODEL Y E28
1-3	44100-02F01-Y7L	TANK ASSY, FUEL (BLACK)	1	MODEL K1
1-4	44100-02F01-YC2	TANK ASSY, FUEL (BLUE)	1	MODEL K1
1-5	44100-02F11-Y7M	TANK ASSY, FUEL (RED)	1	MODEL Y E33
1-6	44100-02F11-Y7L	TANK ASSY, FUEL (BLACK)	1	MODEL K1 E33
1-7	44100-02F11-YC2	TANK ASSY, FUEL (BLUE)	1	MODEL K1 E33
2-1	68111-12C00-0AT	.EMBLEM (CHROME)	2	
2-2	68111-12C00-YC9	.EMBLEM (BLACK)	2	MODEL Y E28 FOR Y9H
3-1	44200-33870	CAP SET, FUEL TANK	1	
3-2	44200-33890	CAP SET, FUEL TANL	1	E33
4	09106-05017	BOLT	4	
5	44261-02F00	LABEL, INNER	1	
6	07130-06653	BOLT	2	
7	44514-02F00	CAP, BOLT	2	
8	09320-09009	CUSHION	2	
9	09169-06062	WASHER	2	
10	44559-02F00	CUSHION, SIDE RH	1	
11	44569-02F00	CUSHION, SIDE LH	1	
12	44590-02820	GASKET SET, FUEL PUMP	1	
13	15211-02F00	.BOLT	8	
14	44560-02F00	BRACKET, REAR RH	1	
15	44570-02F00	BRACKET, REAR LH	1	
16	44542-02F00	CUSHION, REAR SIDE	2	
17	44574-33E01	STAY, FUEL TANK	1	
18	09251-05006	PLUG	1	
19	09403-05310	CLAMP	1	
20	44550-02F01	BRACKET, REAR	1	
21	09106-08140	BOLT, BRACKET	2	
22	44541-02F00	CUSHION, JOINT	2	
23	44561-33E10	SPACER, JOINT	1	
24	01550-08953	BOLT, JOINT	1	

FIG.34

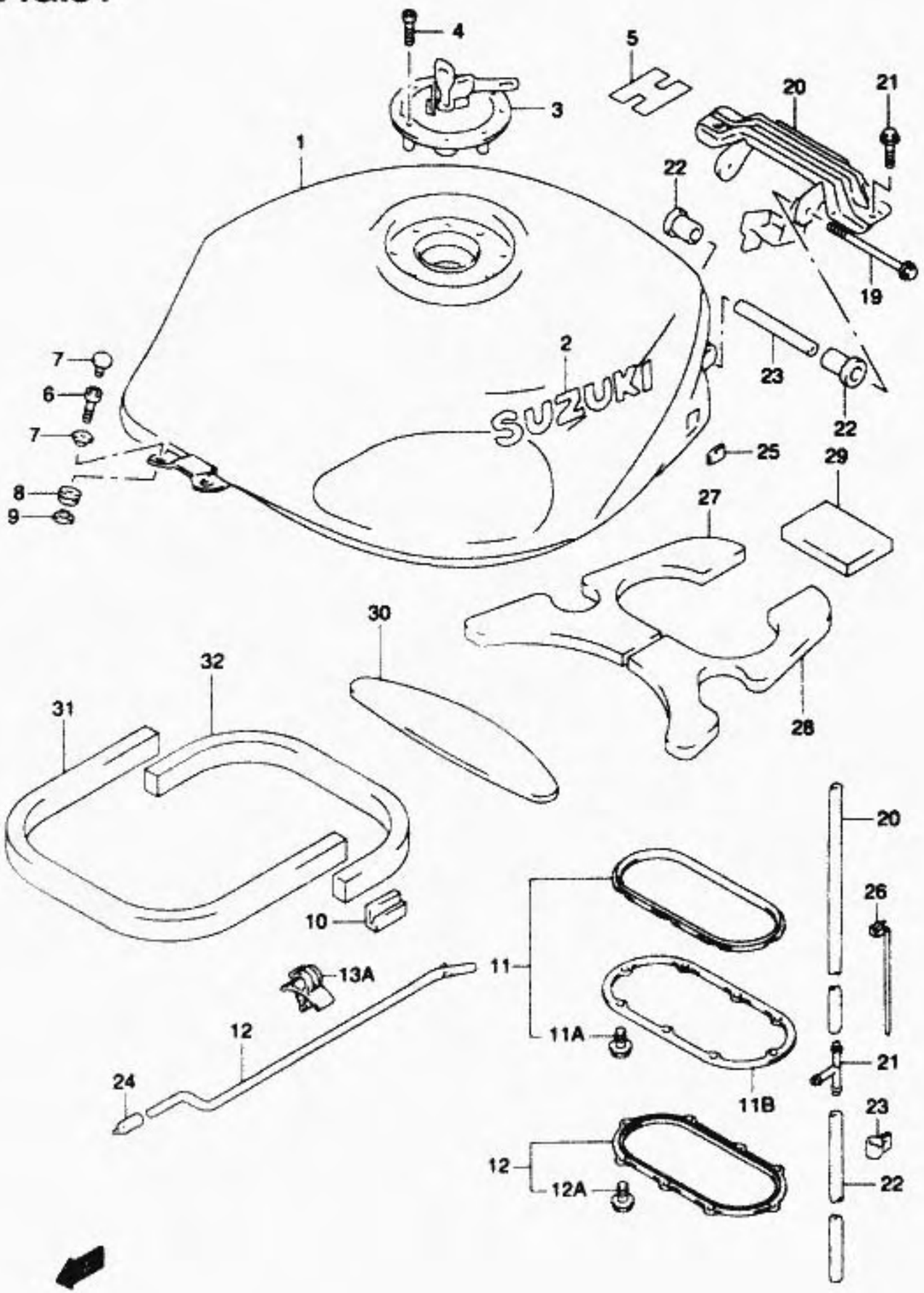

FIG.34 (F- 7) FUEL TANK (MODEL V/W/X)

REF.NO.	PART NO.	DESCRIPTION	QTY.	REMARKS
18-1	44561-33E00	SPACER, JOINT	1	MODEL V
18-2	44561-33E10	SPACER, JOINT	1	MODEL W/X
19	01550-08953	BOLT, JOINT	1	
20-1	09352-70103-600	HOSE, WATER DRAIN (L:600:330)	1	MODEL V
20-2	44423-02F00	HOSE, WATER DRAIN NO.1	1	MODEL W
20-3	44423-02F01	HOSE, WATER DRAIN NO.1	1	MODEL X
21	09367-08005	3 WAY, DRAIN HOSE	1	
22-1	09352-70103-600	HOSE, WATER DRIAN (L:600→520)	1	MODEL V/W
22-2	09352-70103-600	HOSE, WATER DRAIN (L:600→400)	1	MODEL X
23	09403-14408	CLAMP	1	
24	09251-05006	PLUG, FUEL RETURN PIPE	2	
25	44261-02F00	LABEL, FUEL TANK INNER	1	
26	09407-14403	CLAMP, DRAIN HOSE	1	MODEL W/X
27	44191-02F00	SHIELD, TANK HEAT RH	1	E33
28	44192-02F00	SHIELD, TANK HEAT LH	1	E33
29	44193-02F00	SHIELD, TANK HEAT REAR	1	E33
30	44194-02F00	SHIELD, TANK HEAT FRONT	1	PE33
31	44195-02F00	SHIELD, TANK HEAT NO.1	1	E33
32	44196-02F00	SHIELD, TANK HEAT NO.2	1	E33

REFER TO FIG.34A(F-8) FOR MODEL Y/K1

FIG.34

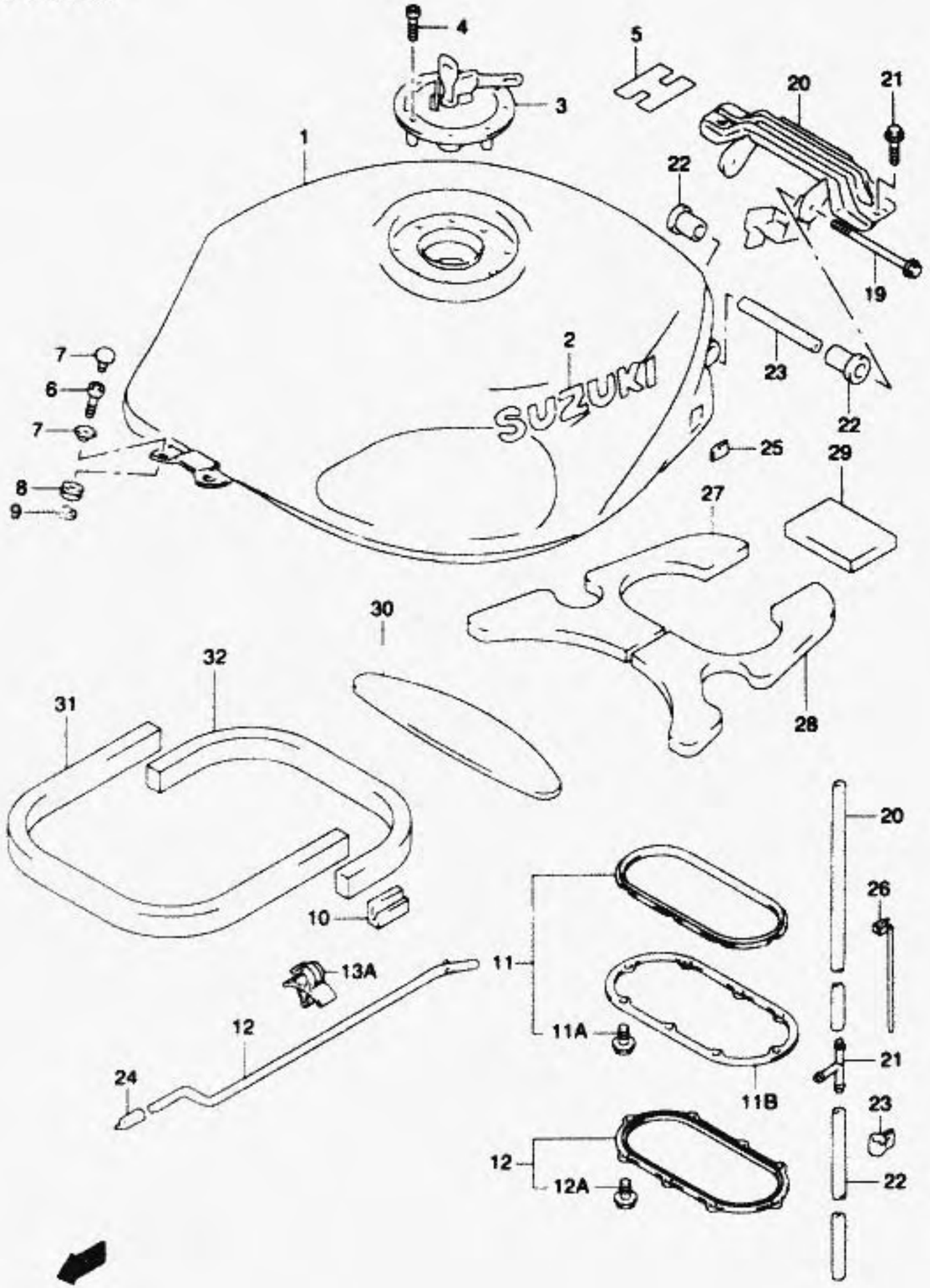

FIG.34 (F- 6) FUEL TANK (MODEL V/W/X)

REF.NO.	PART NO.	DESCRIPTION	QTY.	REMARKS
1-1	44100-02F01-28V	TANK ASSY, FUEL (RED)	1	MODEL V/W
1-2	44100-02F01-1UH	TANK ASSY, FUEL (GREEN)	1	MODEL V
1-3	44100-02F01-33J	TANK ASSY, FUEL (BLACK)	1	MODEL V/W
1-4	44100-02F01-Y0W	TANK ASSY, FUEL (ORANGE)	1	MODEL X
1-5	44100-02F01-Y7H	TANK ASSY, FUEL (BLUE)	1	MODEL X E28
1-6	44100-02F11-28V	TANK ASSY, FUEL (RED)	1	MODEL V/W E33
1-7	44100-02F11-1UH	TANK ASSY, FUEL (GREEN)	1	MODEL V E33
1-8	44100-02F11-33J	TANK ASSY, FUEL (BLACK)	1	MODEL V/W E33
1-9	44100-02F11-Y0W	TANK ASSY, FUEL (ORANGE)	1	MODEL X E33
2-1	68111-12C00-20G	.EMBLEM (GRAY)	2	FOR 28V,Y0W
2-2	68111-12C00-0SF	.EMBLEM (SILVER)	2	FOR 1UH,33J
2-3	68111-12C00-1ZY	.EMBLEM (GRAY)	1	E28 FOR Y7H
3-1	44200-33870	CAP SET, FUEL TANK	1	
3-2	44200-33890	CAP SET, FUEL TANK	1	E33
4	09106-05017	BOLT, CAP	4	
5	07130-06553	BOLT, FRONT	2	
6	44514-02F00	CAP, BOLT	2	
7	09160-06132	WASHER	2	MODEL V
8	09320-09009	CUSHION	2	
9	09169-06062	SPACER	2	
10	44541-33E00	CUSHION, SIDE	2	
11	44590-02830	GASKET SET, FUEL PUMP	1	MODEL V
11A	15211-02F00	.BOLT	8	MODEL V
11B	44597-02F00	PLATE, FUEL PUMP	1	MODEL V
12	44590-02820	GASKET SET, FUEL PUMP	1	MODEL W/X
12A	15211-02F00	.BOLT	8	MODEL W/X
13	44574-33E01	STAY, FUEL TANK	1	
13A	09403-05310	CLAMP	2	
14	44550-02F00	BRACKET, REAR	1	
15-1	01550-08163	BOLT, REAR BRACKET	2	MODEL V
15-2	09106-08140	BOLT, REAR BRACKET	2	MODEL W/X
16	44541-02F00	CUSHION, REAR	2	
17	44572-02F00	FASTENER	2	

REFER TO FIG.34A(F-8) FOR MODEL Y/K1

FIG.33

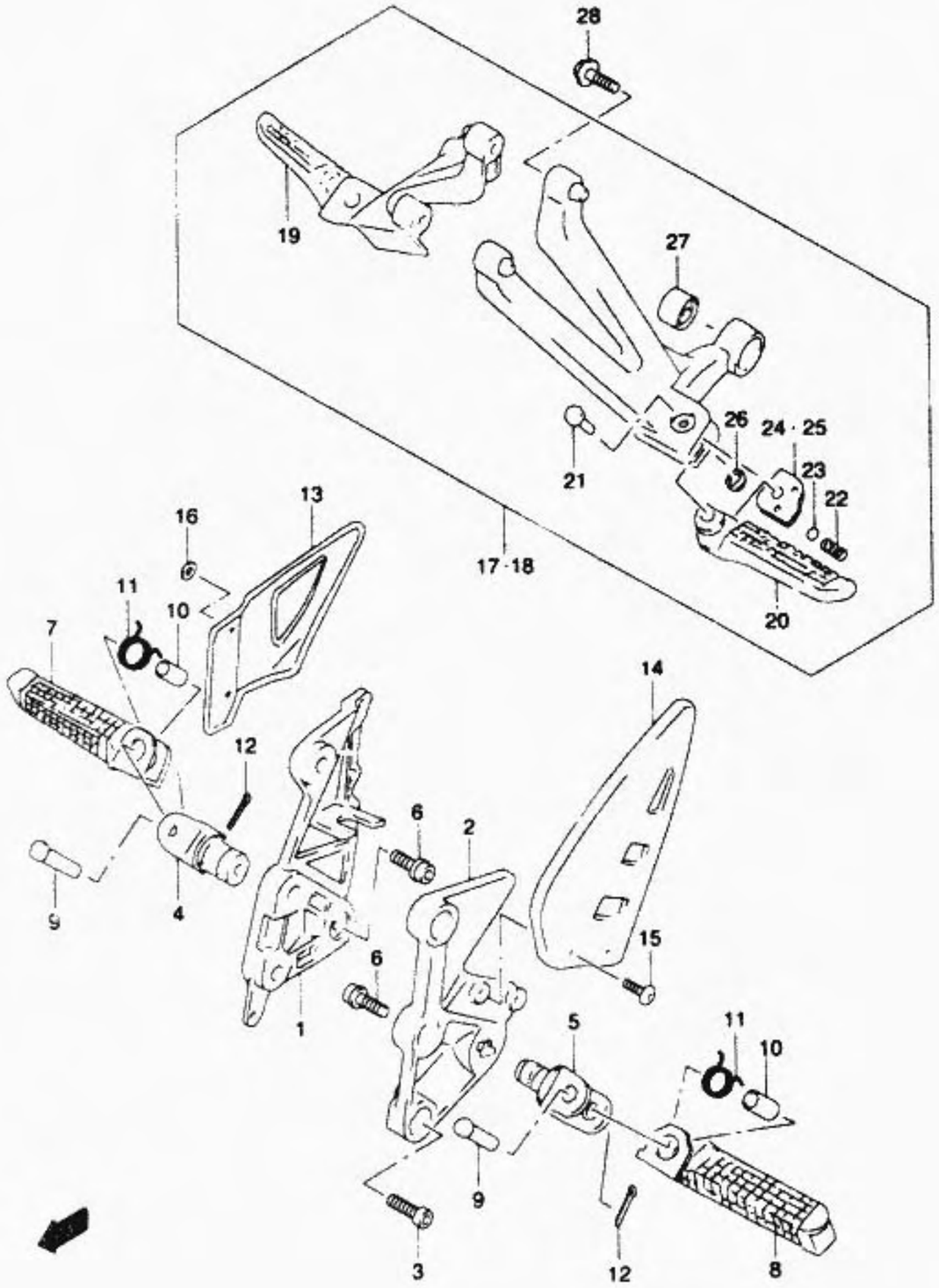

FIG.33 (F- 5) FOOTREST

REF.NO.	PART NO.	DESCRIPTION	QTY.	REMARKS
24-1	43816-23E10	.PLATE, RH	1	MODEL V
24-2	43816-33E20	.PLATE, RH	1	MODEL W/X
24-3	43816-33E21	.PLATE, RH	1	MODEL Y/K1
25-1	43826-23E10	.PLATE, LH	1	MODEL V
25-2	43826-33E20	.PLATE, LH	1	MODEL W/X
25-3	43826-33E21	.PLATE, LH	1	MODEL Y/K1
26	08332-11043	.E RING	2	
27	09319-08028	.BUSH, MUFFLER SUPPORT	2	
28	01550-08163	BOLT, BRACKET	4	

FIG.33

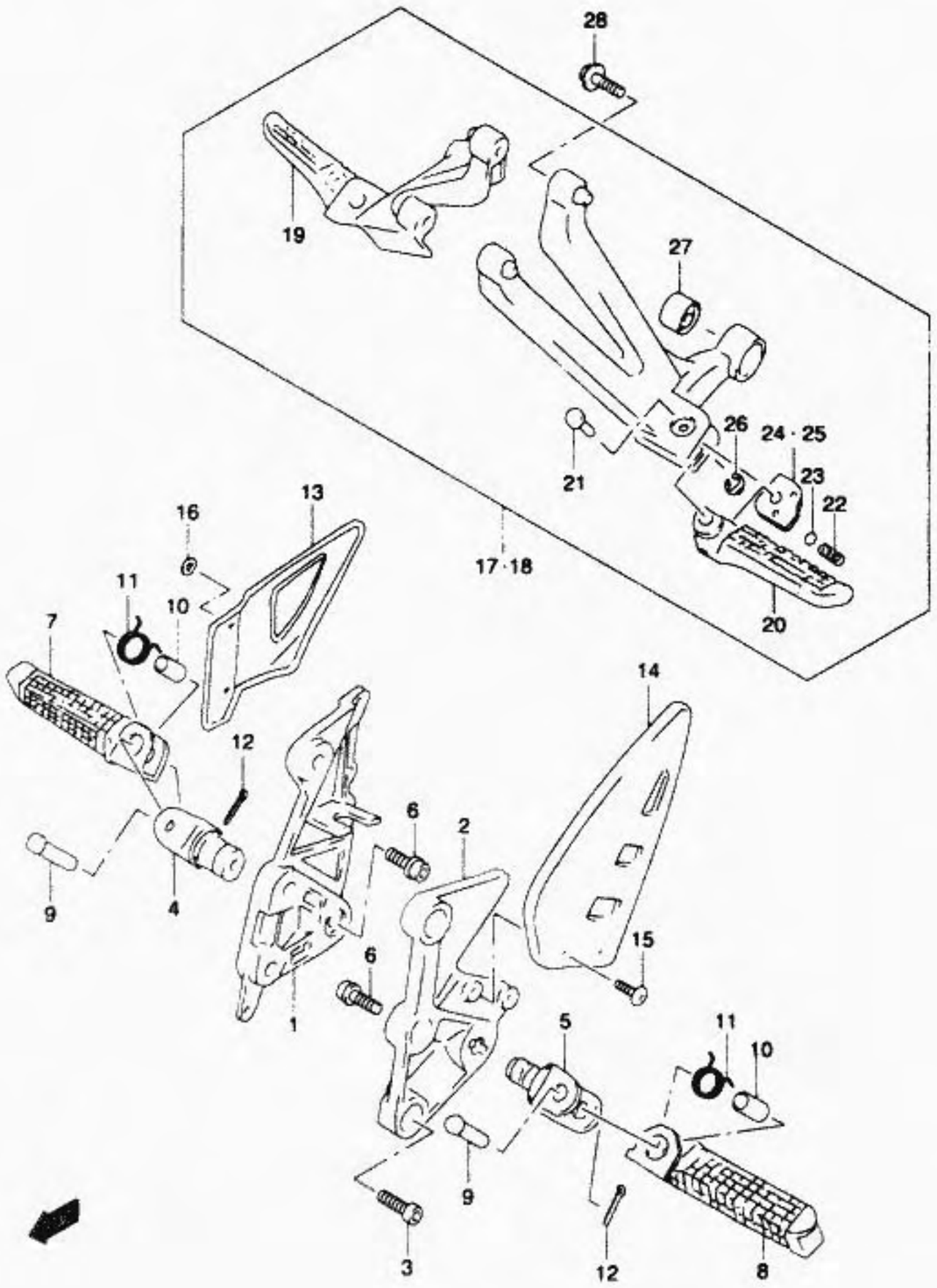

FIG.33 (F- 4) FOOTREST

REF.NO.	PART NO.	DESCRIPTION	QTY.	REMARKS
1	43511-02F00	BRACKET, FRONT FOOTREST RH	1	
2	43521-02F00	BRACKET, FRONT FOOTREST LH	1	
3-1	07130-08207	BOLT, BRACKET	6	MODEL V
3-2	07130-08203	BOLT, BRACKET	6	MODEL W/X/Y/K1
4-1	43530-17E00	HOLDER, FOOTREST RH	1	MODEL V
4-2	43530-17E01	HOLDER, FOOTREST RH	1	MODEL W/X/Y/K1
5	43540-17E00	HOLDER, FOOTREST LH	1	
6	09106-10064	BOLT, HOLDER	2	
7-1	43510-02F00	BAR, FRONT FOOTREST RH	1	MODEL V/W/X
7-2	43510-02F11	BAR, FRONT FOOTREST RH	1	MODEL Y/K1
8-1	43520-02F00	BAR, FRONT FOOTREST LH	1	MODEL V/W/X
8-2	43520-02F11	BAR, FRONT FOOTREST LH	1	MODEL Y/K1
9	09200-08057	PIN	2	
10	09180-08149	SPACER	2	
11	09448-18022	SPRING	2	
12	04111-25158	COTTER PIN	2	
13-1	43570-02F00	GUARD, FOOTREST RH	1	MODEL V
13-2	43570-02F01	GUARD, FOOTREST RH	1	MODEL W/X/Y/K1
14-1	43580-02F00	GUARD, FOOTREST LH	1	MODEL V
14-2	43580-02F01	GUARD, FOOTREST LH	1	MODEL W/X/Y/K1
15	09139-05033	BOLT, GUARD LH	2	
16	09160-06129	WASHER, GUARD RH	2	
17	43600-02F00	FOOTREST ASSY, PILLION RH	1	
18	43700-02F00	FOOTREST ASSY, PILLION LH	1	
19-1	43611-33E00	.BAR, PILLION RH	1	MODEL V/W/X
19-2	43611-33E11	.BAR, PILLION RH	1	MODEL Y/K1
20-1	43621-33E00	.BAR, PILLION LH	1	MODEL V/W/X
20-2	43621-33E11	.BAR, PILLION LH	1	MODEL Y/K1
21	87259-85510	.PIN	2	
22	09440-05005	.SPRING	2	
23	06111-07004	.BALL	2	

FIG.32

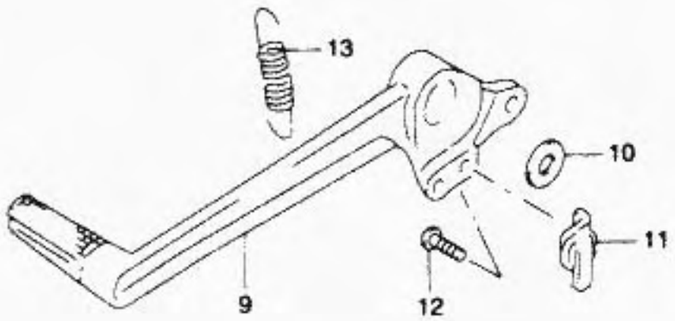

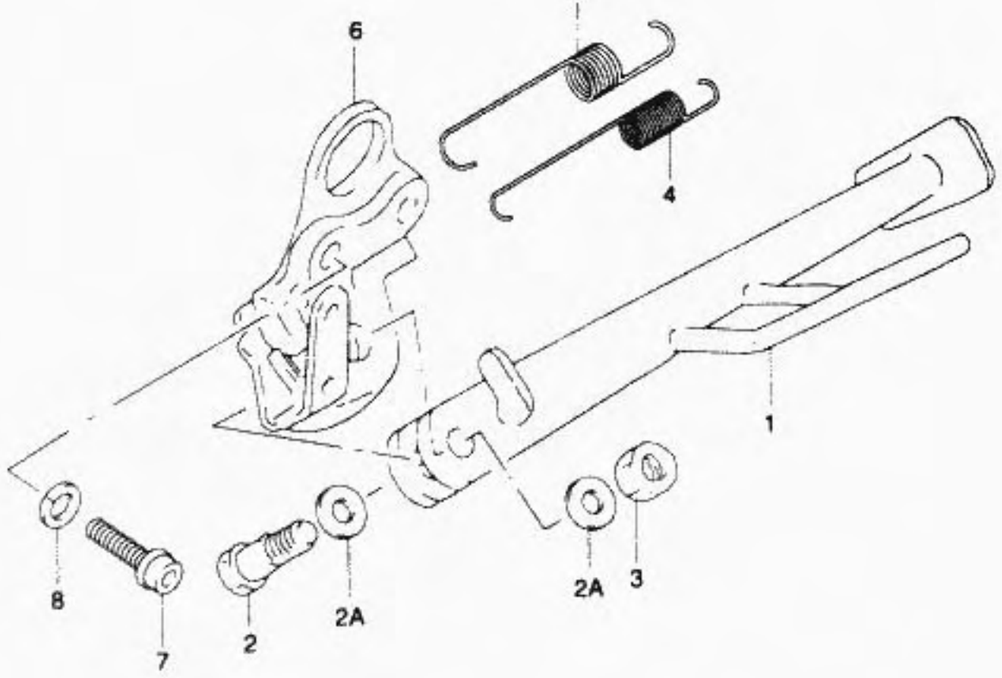

FIG.32 (F-3) STAND

REF.NO.	PART NO.	DESCRIPTION	QTY.	REMARKS
1	42310-02F10	STAND, PROP	1	
2	09111-10027	BOLT, PROP STAND	1	
2A	09164-08015	WASHER	2	MODEL W/X/Y/K1
3-1	08319-21103	NUT	1	MODEL V
3-2	09159-10097	NUT	1	MODEL W/X/Y/K1
4	09443-14066	SPRING, INNER	1	
5	09443-19012	SPRING, OUTER	1	
6	42330-02F00	BRACKET, PROP STAND	1	
7	07120-08303	BOLT	2	
8	08321-01083	LOCK WASHER	2	MODEL V
9	43111-33E00	PEDAL, BRAKE	1	
10	09160-18022	WASHER	1	
11	43561-33E00	HOOK, RETURN SPRING	1	
12	02112-05163	SCREW	1	
13	09443-11030	SPRING, RETURN	1	

FIG.31

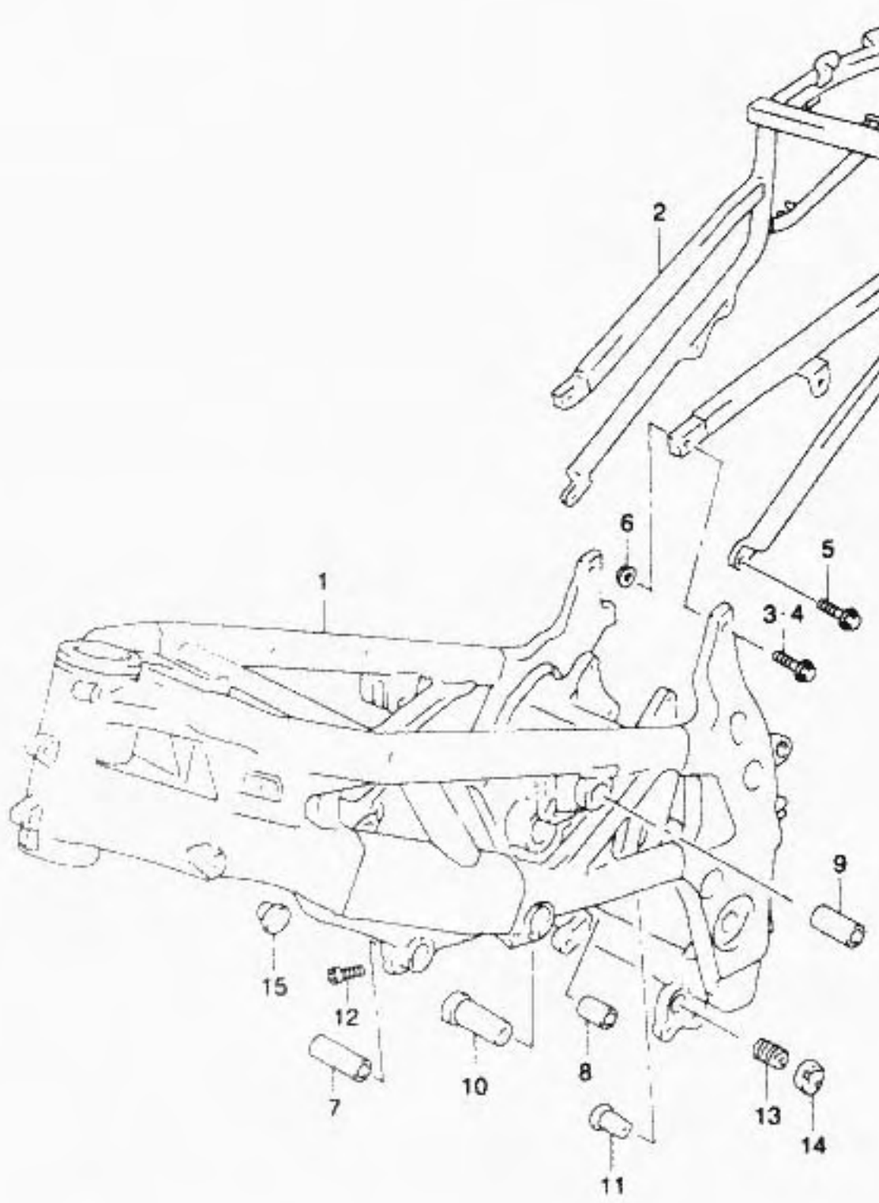

FIG.31 (F- 2) FRAME

REF.NO.	PART NO.	DESCRIPTION	QTY.	REMARKS
1-1	41100-02F00	FRAME	1	MODEL V **SEE NOTE
1-2	41100-02F03	FRAME	1	MODEL W/X/Y/K1 **SEE NOTE
2	41200-02F00	RAIL, SEAT	1	
3-1	59199-33E00	BOLT, SEAT RAIL	4	MODEL V
3-2	09103-10296	BOLT, SEAT RAIL	4	MODEL W/X
4	09103-10284	BOLT, UPPER	2	MODEL Y/K1
5	09103-10296	BOLT, LOWER	2	MODEL Y/K1
6	08319-31107	NUT, UPPER	2	MODEL Y/K1
7	41198-02F00	SPACER, ENGINE HEAD FRONT LH	1	
8	41941-02F00	SPACER, ENGINE HEAD REAR RH	1	
9	41942-02F00	SPACER, ENGINE HEAD REAR LH	1	
10	41932-02F00	SPACER, CRANKCASE FRONT LH	1	
11	41911-33E00	SPACER, CRANKCASE REAR LH	1	
12	07130-08307	BOLT, SPACER	4	
13-1	41921-33E10	BOLT, CRANKCASE ADJUST	1	MODEL V
13-2	41921-33E11	BOLT, CRANKCASE ADJUST	1	MODEL W/X/Y/K1
14	41922-33E10	NUT, CRANK CASE ADJUST	1	
15	09250-06001	CAP, BOSS	1	

******ENGINE CASES AND FRAMES FOR THIS MODEL MUST BE ORDERED ON THE FRAME/ENGINE CASE ORDER FORM (99924-FC003). IF YOU HAVE ANY QUESTIONS REGARDING THESE PROCEDURES, PLEASE CALL YOUR PARTS COORDINATOR *BEFORE* PLACING YOUR ORDER.**

FIG.30

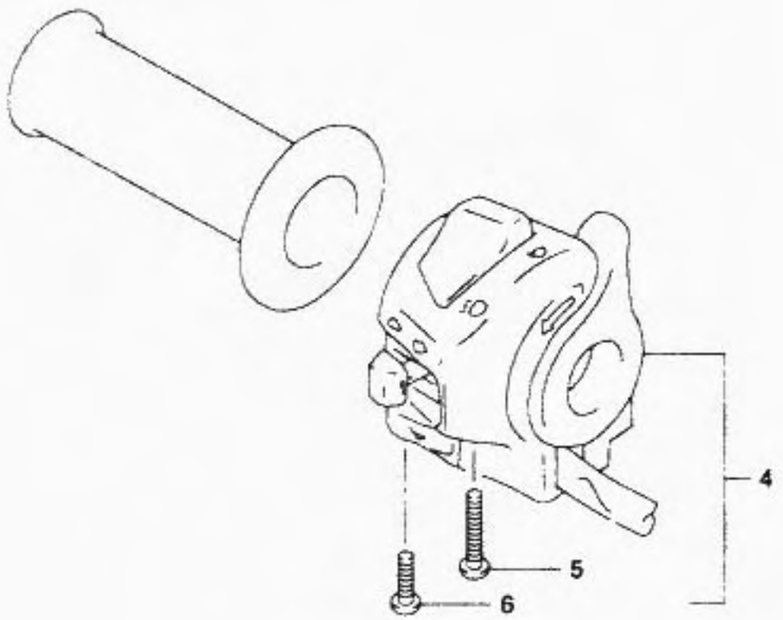

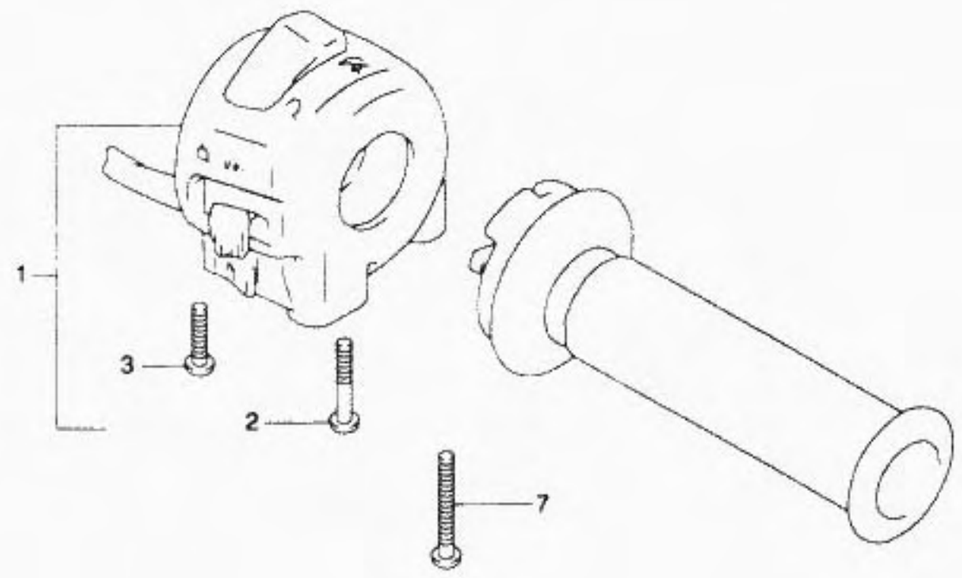

FIG.30 (E-15) HANDLE SWITCH

REF.NO.	PART NO.	DESCRIPTION	QTY.	REMARKS
1	37200-33E31	SWITCH ASSY, HANDLE RH	1	
2	02112-05305	SCREW	1	
3	02112-05505	SCREW	1	
4	37400-33E31	SWITCH ASSY, HANDLE LH	1	
5	02112-05253	SCREW	1	
6	02112-05455	SCREW	1	
7	02112-05103	SCREW, THROTTLE CABLE	1	

FIG.29

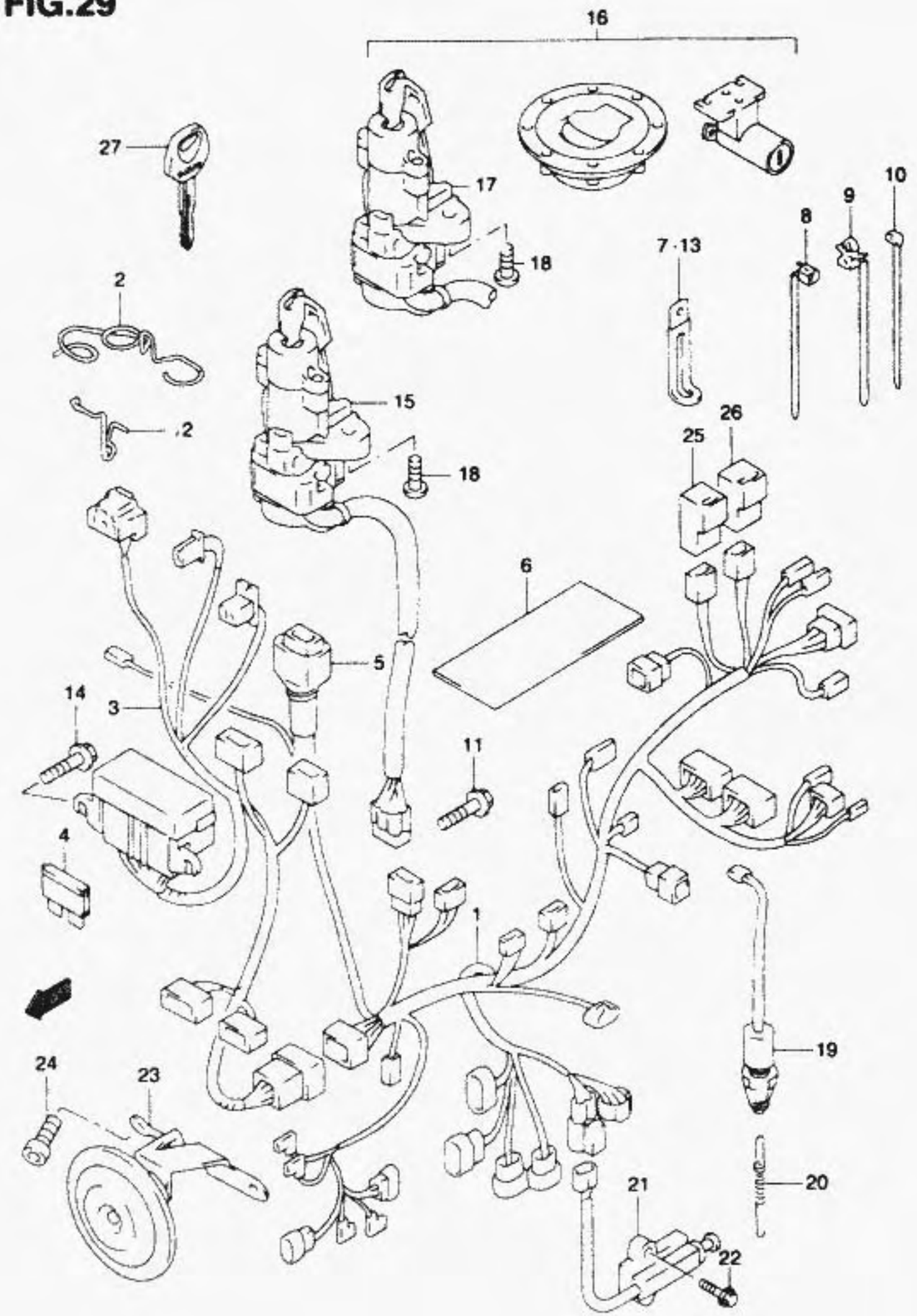

FIG.29 (E-14) WIRING HARNESS

REF.NO.	PART NO.	DESCRIPTION	QTY.	REMARKS
21	37840-26X50	SWITCH ASSY, SIDE STAND	1	
22	01550-06163	BOLT	2	
23	38500-02F10	HORN ASSY	1	
24	07120-06123	BOLT	2	
25	38740-26E00	RELAY ASSY, FUEL PUMP	1	
26	38740-26E00	RELAY ASSY, SIDE STAND	1	
27	37146-33E00	KEY, BLANK	1	OPT

FIG.29

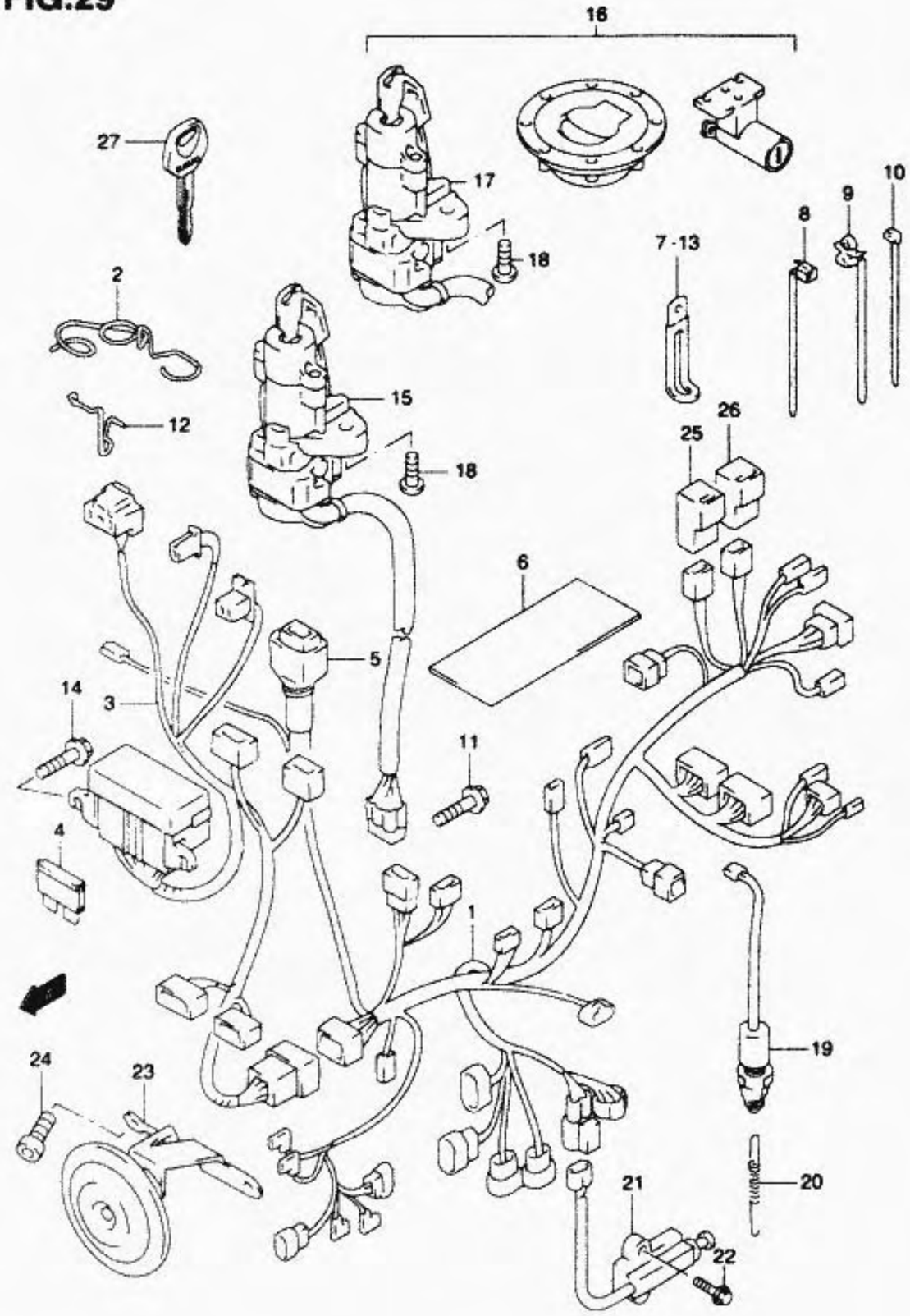

FIG.29 (E-13) WIRING HARNESS

REF.NO.	PART NO.	DESCRIPTION	QTY.	REMARKS
1-1	36610-02F00	HARNESS, WIRING NO.1	1	MODEL V
1-2	36610-02F10	HARNESS, WIRING NO.1	1	MODEL W/X/Y/K1
2	36619-33E00	GUIDE, WIRING HARNESS	1	
3	36620-02F10	HARNESS, WIRING NO.2	1	
4-1	09481-10101	.FUSE (10A)	2	
4-2	09481-15101	.FUSE (15A)	3	
5	36618-33E00	.COVER, SPEEDOMETER COUPLER	1	
6	36920-14D00	PROTECTOR, WIRING HARNESS	1	35X170
7-1	09404-06429	CLAMP (L:60)	3	
7-2	09404-06431	CLAMP (L:65)	4	
8-1	09407-11401	CLAMP (L:95)	2	
8-2	09407-14403	CLAMP (L:125)	3	
8-3	09407-25401	CLAMP (L:235)	3	
9-1	09407-11402	CLAMP (L:90)	1	
9-2	09407-17401	CLAMP (L:150)	2	
9-3	09407-18402	CLAMP (L:165)	3	
10	09407-14407	CLAMP (L:145)	1	
11	01550-06103	SCREW, WIRING HARNESS	3	
12	36745-33E00	STOPPER, FUSE BOX	1	
13-1	09404-06431	CLAMP, FUSE BOX (L:65)	1	MODEL V
13-2	09404-06434	CLAMP, FUSE BOX (L:95)	1	MODEL W/X/Y/K1 ←09404-06433
14	02142-06123	SCREW, FUSE BOX	2	
15	37100-33E01	LOCK ASSY, STEERING	1	MODEL V
16-1	37000-02830	LOCK SET	1	MODEL V/W/X/Y/K1
16-2	37000-02840	LOCK SET	1	MODEL V/W/X/Y/K1 E33
17	37100-02F00	.LOCK ASSY, STEERING	1	MODEL V/W/X/Y/K1
18	09139-08016	SCREW (8X20)	2	
19	37740-31D00	SWITCH ASSY, STOP LAMP	1	
20	09443-06012	SPRING	1	

FIG.28

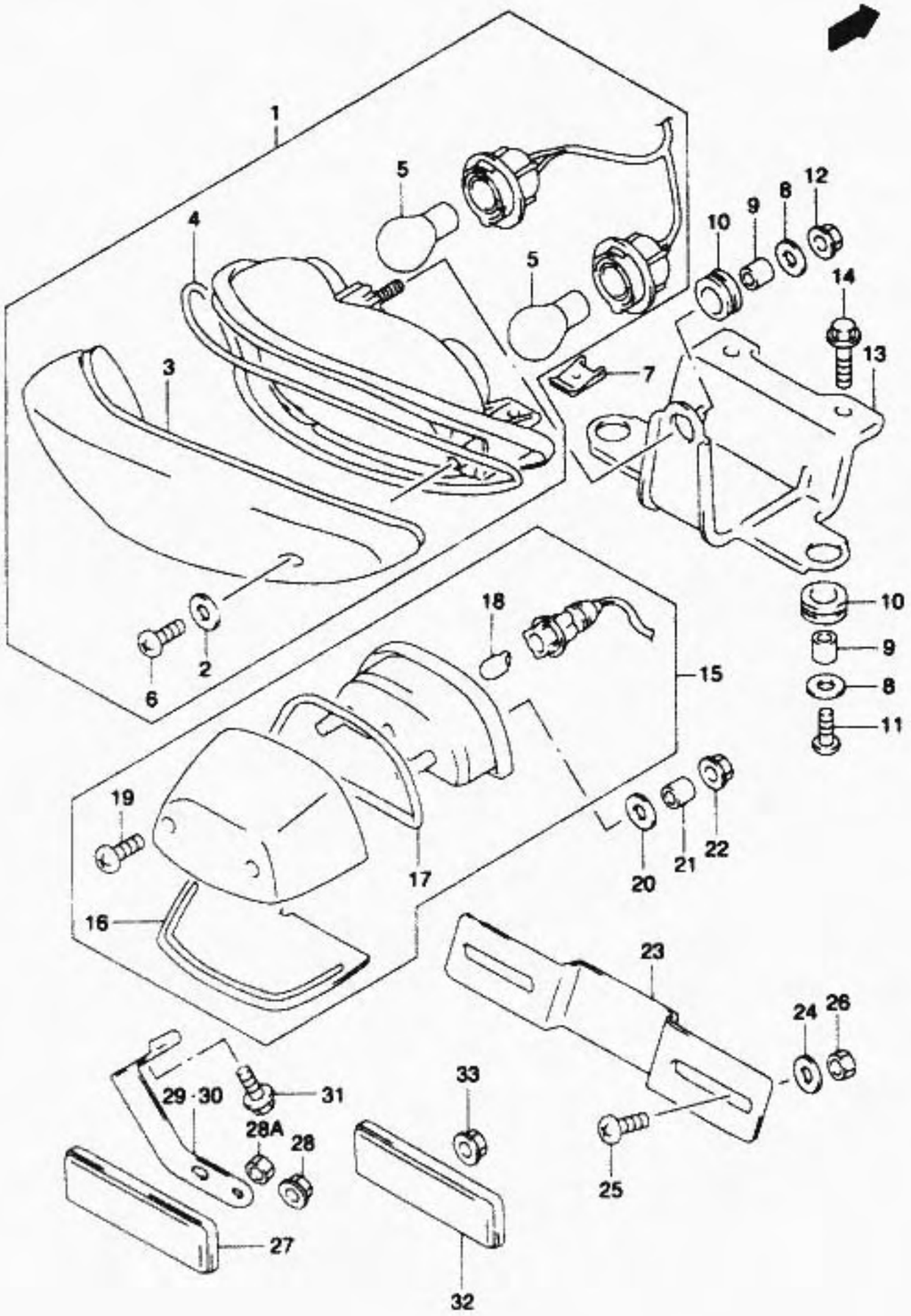

FIG.28 (E-12) TAIL LAMP

REF.NO.	PART NO.	DESCRIPTION	QTY.	REMARKS
32-1	35970-24D60	REFLEX REFLECTOR ASSY, REAR	1	MODEL V
32-2	35970-07F00	REFLEX REFLECTOR ASSY, REAR	1	MODEL W/X/Y/K1
33-1	08316-20053	NUT	1	MODEL V
33-2	08316-10053	NUT	1	MODEL W/X/Y/K1

FIG.28

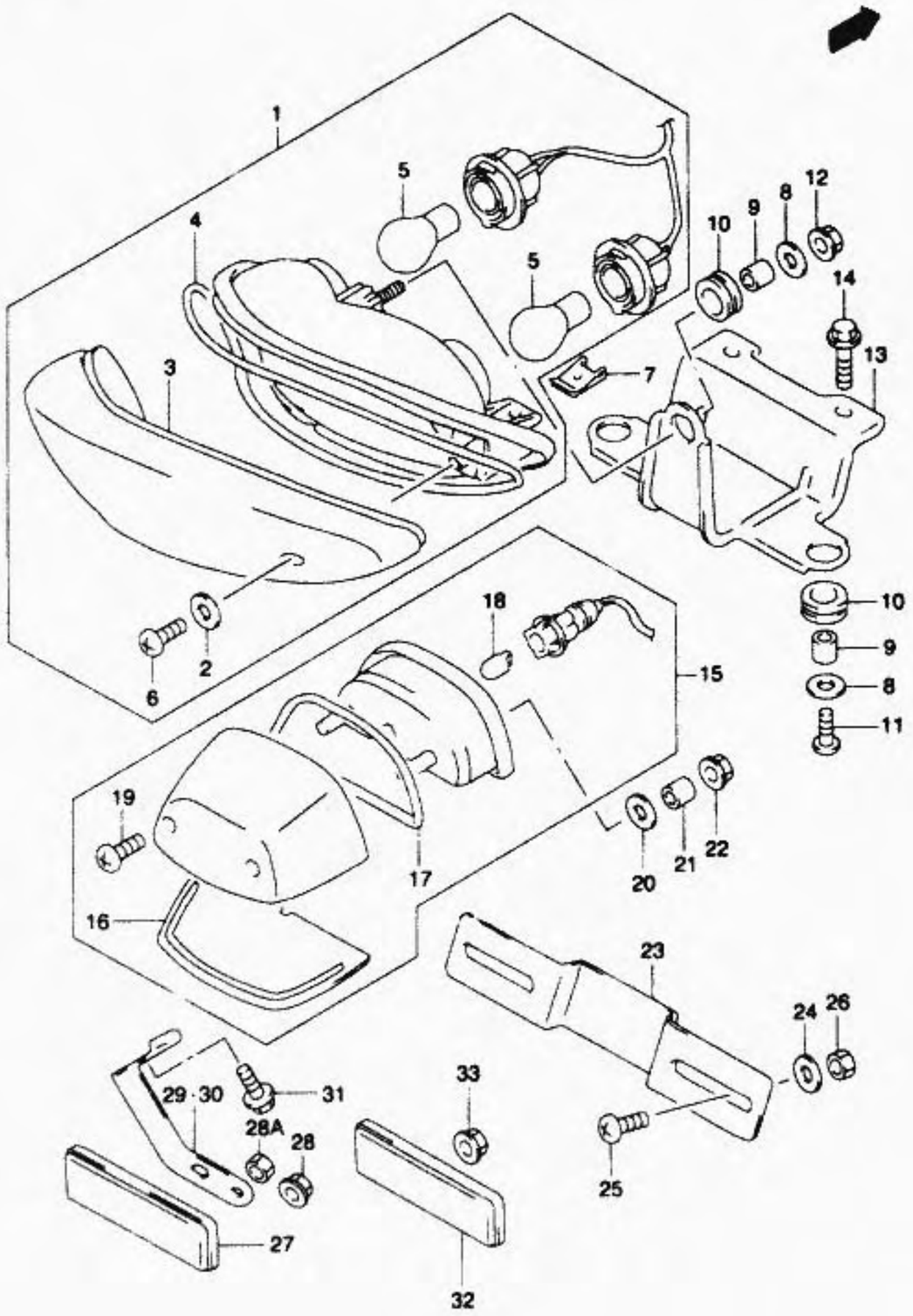

FIG.28 (E-11) TAIL LAMP

REF.NO.	PART NO.	DESCRIPTION	QTY.	REMARKS
1	35710-02F30	LAMP ASSY, REAR COMBINATION	1	
2	35627-43010	.GASKET	2	
3	35712-02F30	.LENS	1	
4	35713-02F00	.GASKET	1	
5	09471-12083	.BULB (12V,21/5W)	1	←09471-12128
6	03211-04207	.SCREW	2	←03211-04203
7	09148-05020	NUT, LOWER	2	
8	09160-06088	WASHER (6.5X20X1.60)	3	
9	09180-06285	SPACER (6.5X10X9.0)	3	
10	09320-09009	CUSHION	3	
11	03541-05203	SCREW, REAR COMBINATION	2	
12	08316-10063	NUT, REAR COMBINATION CENTER	1	
13	35730-02F00	BRACKET, REAR COMBINATION	1	
14	01550-06163	BOLT, BRACKET	2	
15	35910-02F00	LAMP ASSY, LICENSE	1	
16	35912-02F00	.LENS	1	
17	35913-02F00	.GASKET	1	
18	09471-12081	.BULB (12V,5W)	1	
19	03211-04163	.SCREW	2	
20	09160-06088	WASHER (6.5X20X1.60)	2	
21	09180-05054	SPACER (5.5X9.5X11.5)	2	
22	08316-10053	NUT	2	
23	35927-48B30	BRACKET, LICENSE PLATE	1	
24	09160-06088	WASHER (6.5X20X1.60)	2	
25	02142-06123	SCREW	2	
26	08316-10063	NUT	2	
27-1	35970-24D60	REFLEX REFLECTOR ASSY, REAR	2	MODEL V
27-2	35970-07F00	REFLEX REFLECTOR ASSY, REAR	2	MODEL W/X/Y/K1
28	08316-00053	NUT	2	MODEL V
28A	08310-00053	NUT	2	MODEL W/X/Y/K1
29	35975-02F00	BRACKET, REAR SIDE RH	1	
30	35976-02F00	BRACKET, REAR SIDE LH	1	
31	01550-06123	BOLT	2	

FIG.27

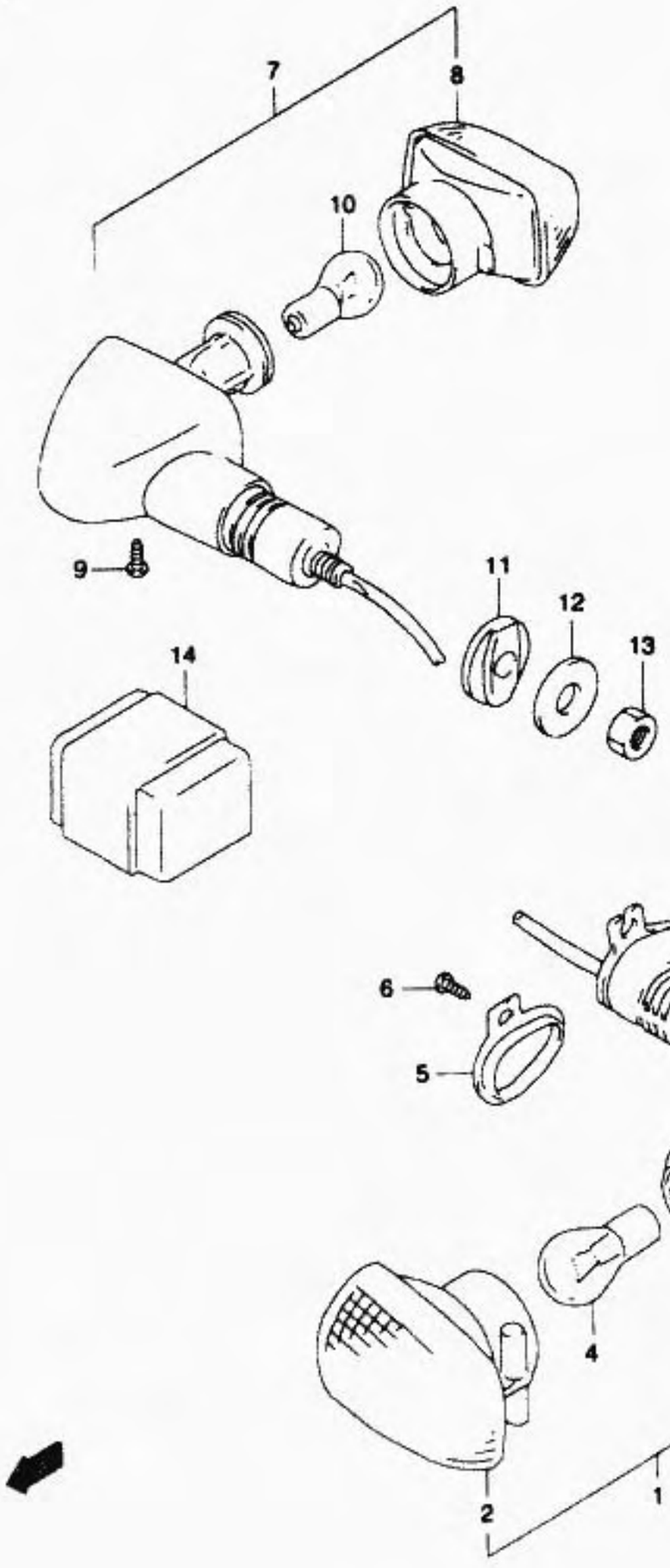

FIG.27 (E-10) TURNSIGNAL LAMP

REF.NO.	PART NO.	DESCRIPTION	QTY.	REMARKS
1-1	35601-33E30	LAMP ASSY, FRONT TURNSIGNAL RH	1	
1-2	35602-33E30	LAMP ASSY, FRONT TURNSIGNAL LH	1	
2	35610-33E00	.LAMP UNIT	2	
3	03242-04123	.SCREW	2	
4	09471-12045	.BULB (12V,21W)	2	
5	35629-33E00	PLATE, FRONT	2	
6	03511-05103	SCREW	4	
7-1	35603-33E30	LAMP ASSY, REAR TURNSIGNAL RH	1	
7-2	35604-33E30	LAMP ASSY, REAR TURNSIGNAL LH	1	
8	35610-33E00	.LAMP UNIT	2	
9	03242-04123	.SCREW	2	
10	09471-12045	.BULB (12V,21W)	2	
11	35695-17C00	SPACER, REAR TURNSIGNAL LAMP	2	
12	09160-10501	WASHER (10.5X30X2.3)	2	
13	08310-00103	NUT	2	
14	38610-26E00	RELAY ASSY, TURNSIGNAL LAMP	1	

FIG.26

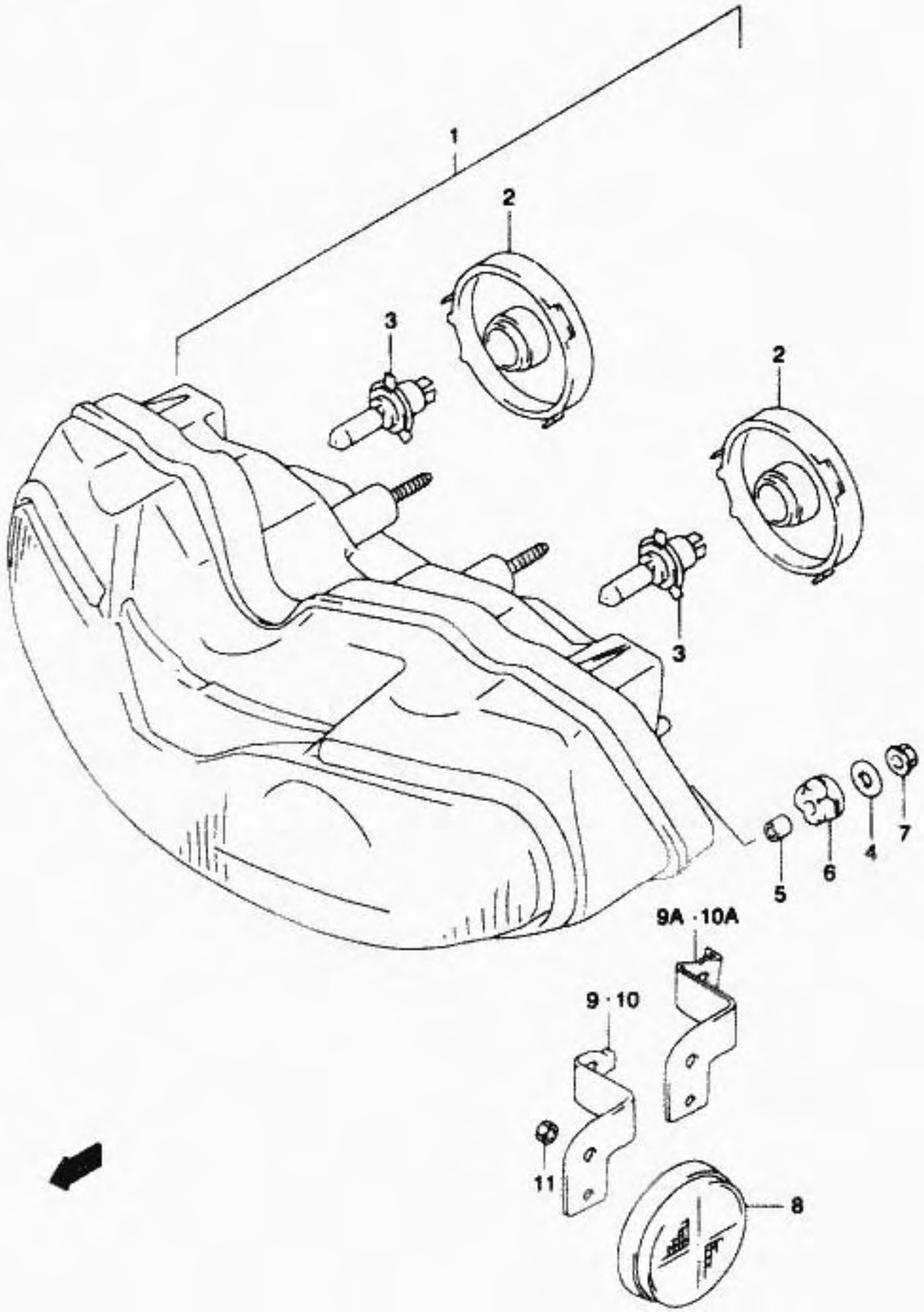

FIG.26 (E- 9) HEADLAMP

REF.NO.	PART NO.	DESCRIPTION	QTY.	REMARKS
1-1	35100-02F30-999	HEADLAMP ASSY	1	MODEL V/W/X
1-2	35100-02F31-999	HEADLAMP ASSY	1	MODEL Y/K1
2	35125-02F00	.SOCKET, COVER	2	
3	09471-12185	BULB (12V,60/55W)	2	
4-1	09160-06088	WASHER (6.5X20X1.60)	4	MODEL V/W/X
4-2	09160-06109	WASHER (6.5X18X1.60)	4	MODEL Y/K1
5	09180-06267	SPACER (6.5X9X12.5)	4	
6	09320-09010	CUSHION	4	
7	08316-10063	NUT	4	
8	35950-14A00	REFLEX REFLECTOR ASSY, FR	2	
9	35956-17D00	BRACKET, FR RH	1	MODEL V/W
9A	35956-02F00	BRACKET, FR RH	1	MODEL X/Y/K1
10	35957-17D00	BRACKET, FR LH	1	MODEL V/W
10A	35957-02F00	BRACKET, FR LH	1	MODEL X/Y/K1
11	08310-00053	NUT	2	

FIG.25

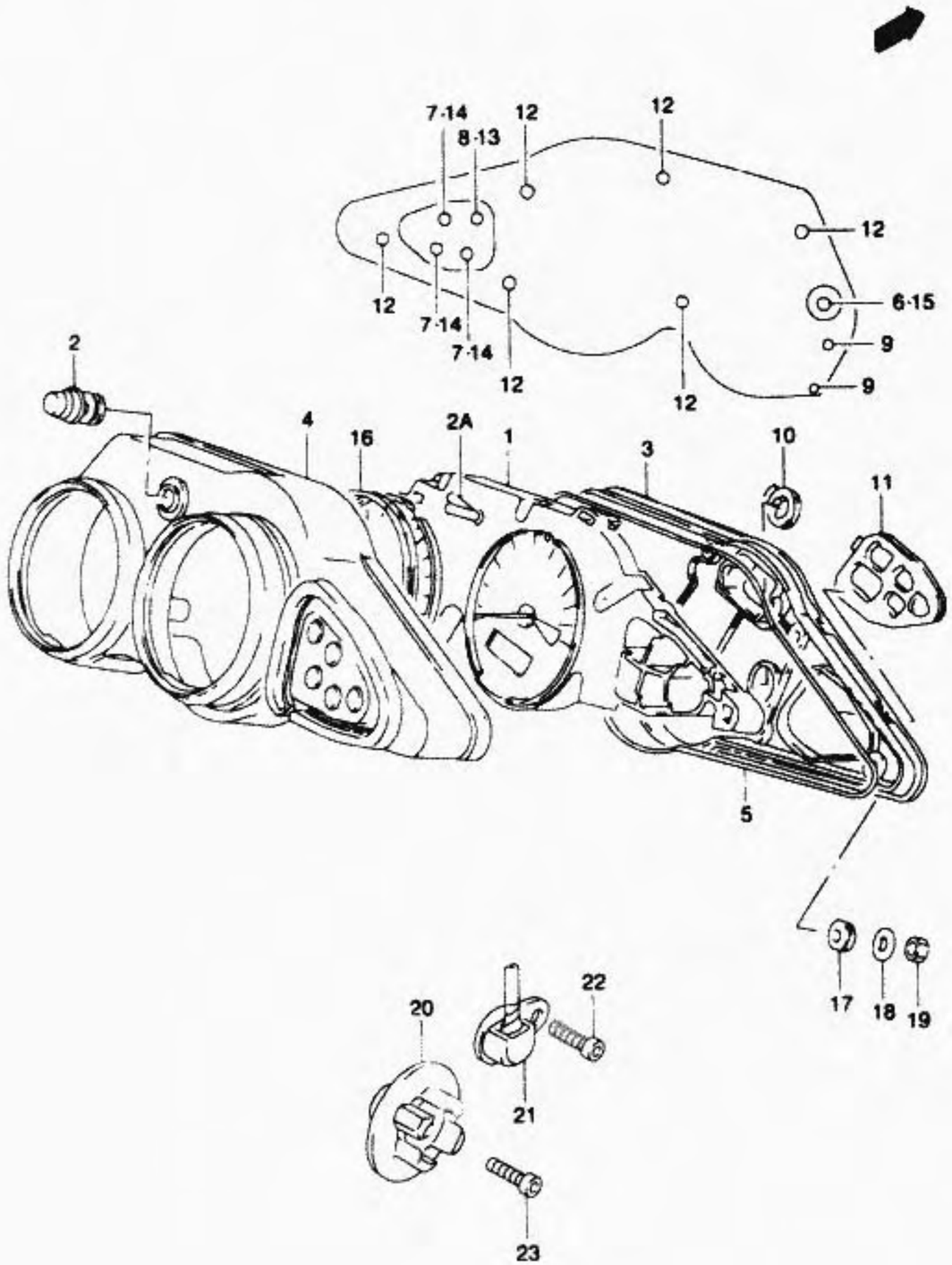

FIG.25 (E-8) SPEEDOMETER

REF.NO.	PART NO.	DESCRIPTION	QTY.	REMARKS
1-1	34119-02F30	SPEEDOMETER (MILE/KILO)	1	MODEL V/W/X/Y
1-2	34119-02F10	SPEEDOMETER (KILO)	1	MODEL V/W/X/Y E28
1-3	34119-02F80	SPEEDOMETER (MILE/KILO)	1	MODEL K1
1-4	34119-02F60	SPEEDOMETER (KILO)	1	MODEL K1 E28
2	34124-02F00	SWITCH, GUM	1	
2A	34123-02F00	LEVER	1	
3	34130-02F00	CASE ASSY	1	
4	34150-02F00	VISOR	1	
5	34153-02F00	GASKET	1	
6	34172-71E70	SOCKET	3	
7	34173-19D00	SOCKET	3	
8	34173-19D70	SOCKET	1	
9	34183-33DC0	SCREW	2	
10	34196-02F00	BLIND. CAP (ILLUMI)	3	MODEL V/W/X/Y
11	34196-02F10	BLIND. CAP (P.BOX)	1	
12	03211-04207	SCREW	6	
13	09471-12065	BULB (12V,3W)	1	
14	09471-12100	BULB (12V,1.7W)	3	
15	09471-12189	BULB (14V,0.84W)	3	
16	34188-02F00	CUSHION, SPEED & TACHO	2	
17	34996-43410	CUSHION, METER	4	
18	09160-05037	WASHER, METER (5.5X16X1.2)	4	
19	08310-00053	NUT	4	
20-1	34981-42E00	ROTOR, SPEED	1	MODEL V/W/X/Y
20-2	34981-35F00	ROTOR, SPEED	1	MODEL K1
21-1	34990-33E10	SENSOR, SPEED	1	MODEL V/W/X/Y
21-2	34990-35F00	SENSOR, SPEED	1	MODEL K1
22	07120-05103	BOLT, SPEED SENSOR	1	
23-1	07130-08203	BOLT, SPEED ROTOR	1	MODEL V/W/X/Y
23-2	07130-08253	BOLT, SPEED ROTOR	1	MODEL K1

FIG.24

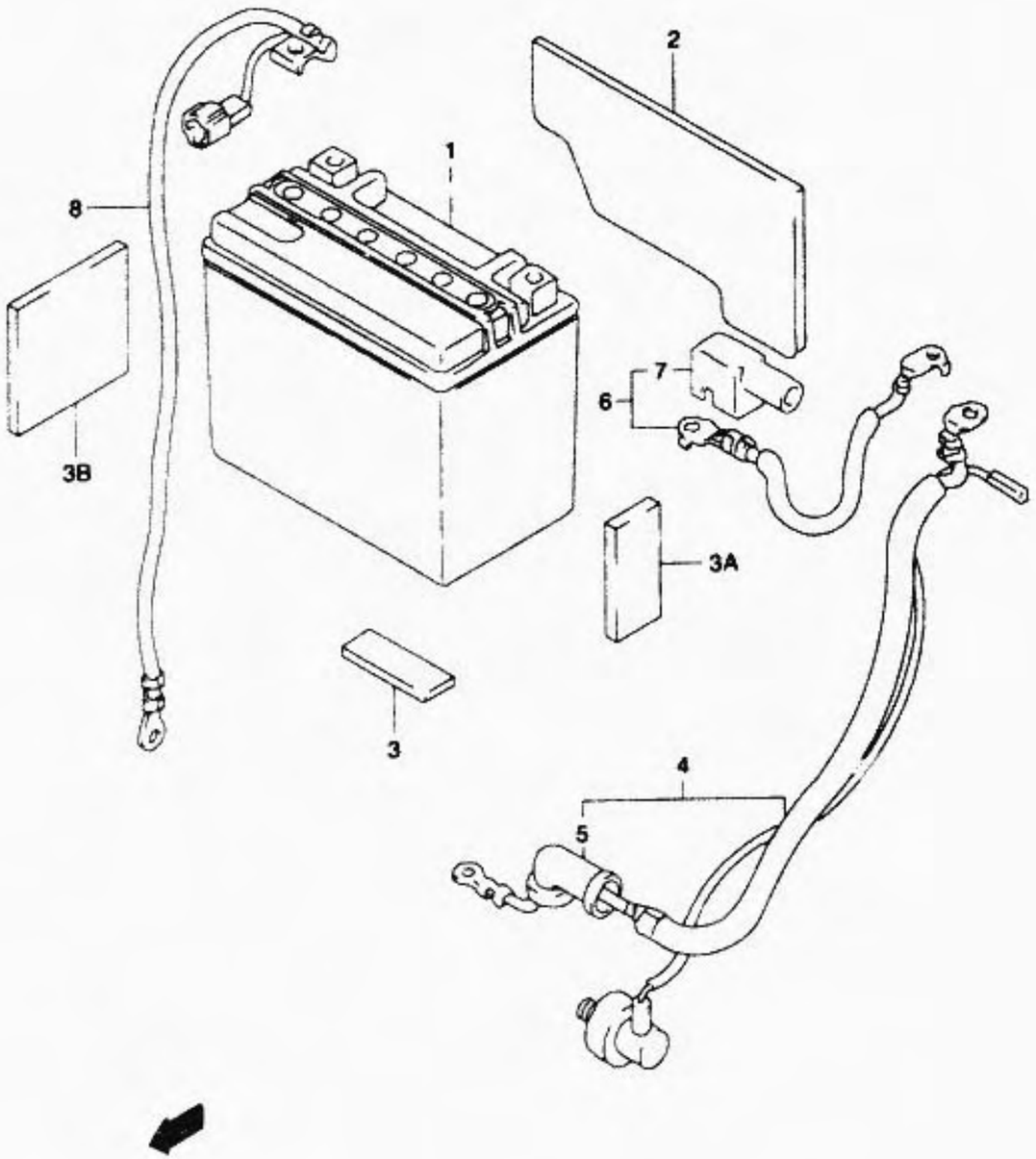

FIG.24 (E- 7) BATTERY

REF.NO.	PART NO.	DESCRIPTION	QTY.	REMARKS
1	33610-48E20	BATTERY ASSY (12V,10AH)	1	
2	33651-37000	PROTECTOR (170X95X3)	4	CUT AS REQUIRED PROFILE (40X20,115X50)
3	33652-35400	PROTECTOR (50X20X8)	1	
3A	33652-28000	PROTECTOR (20X45X6)	2	
3B	33652-20C00	PROTECTOR (50X50X5)	2	
4	33810-02F00	WIRE, STARTER MOTOR LEAD	1	
5	31861-48B10	.CAP, STARTER MOTOR	1	
6	33820-48E00	WIRE, BATTERY PLUS LEAD	1	
7-1	33624-33C10	.CAP, BATTERY PLUG	1	MODEL V
7-2	33624-16E00	.CAP, BATTERY PLUG	1	MODEL W/X/Y/K1
8	33860-02F00	WIRE, BATTERY MINUS	1	

FIG.23

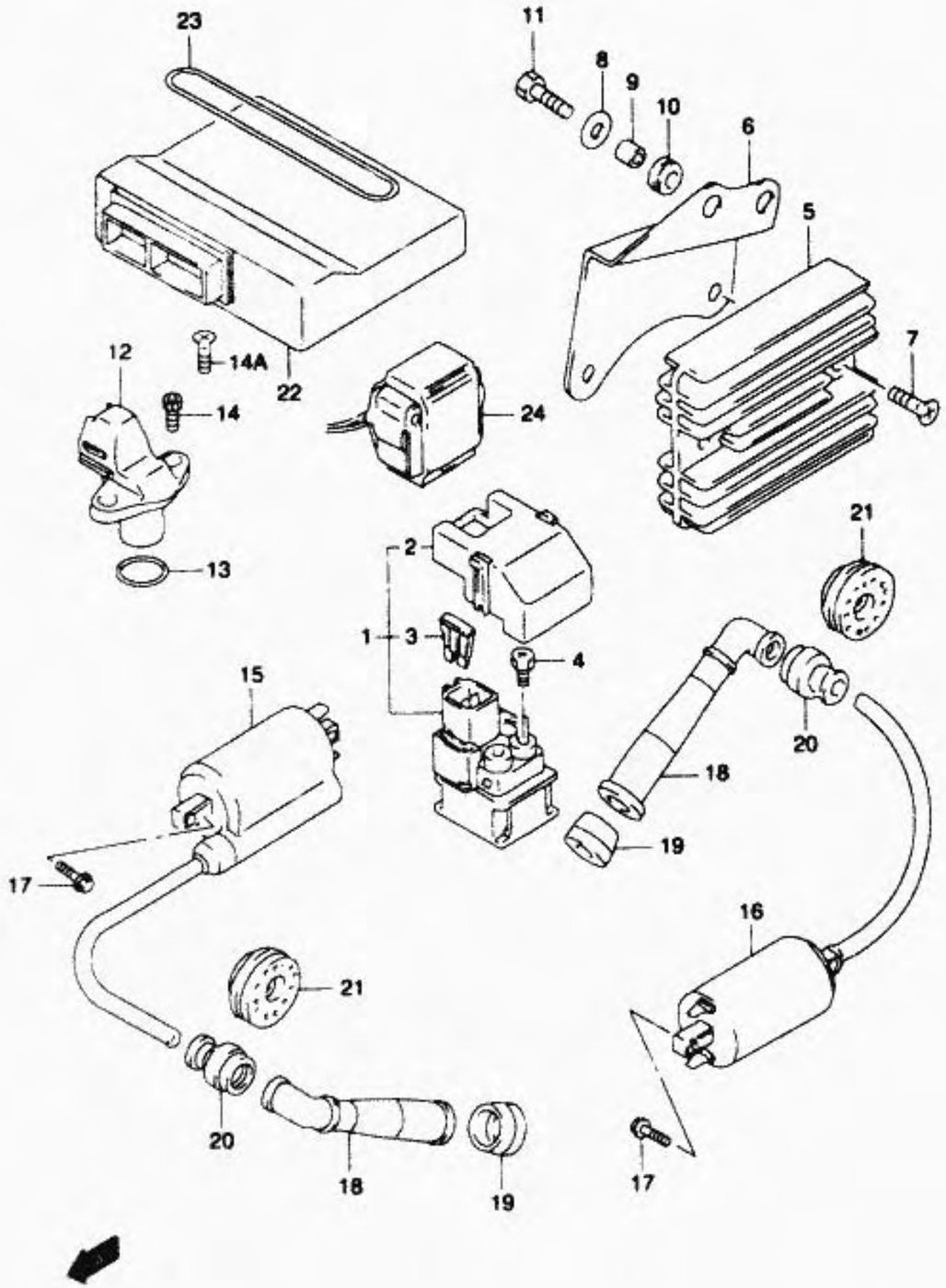

FIG.23 (E- 6) ELECTRICAL

REF.NO.	PART NO.	DESCRIPTION	QTY.	REMARKS
1	31800-21E20	RELAY ASSY, STARTING	1	
2	31861-21E20	.COVER, RELAY ASSY	1	
3	09481-30101	.FUSE, 30A	2	
4	09128-06013	BOLT	2	
5	32800-02F00	RECTIFIER ASSY	1	
6	32831-02F00	BRACKET, RECT FTG	1	
7	09136-06093	SCREW, RECTIFIER	2	
8-1	09160-06132	WASHER, RECT FTG BRACKET	2	MODEL V/W/X 6.5X18X1.6
8-2	09160-06084	WASHER, RECT FTG BRACKET	2	MODEL Y/K1 6.5X18X1.6
9	09180-06258	SPACER, RECT FTG BRACKET	2	6.5X9X6.7
10	09320-09036	CUSHION, RECT FTG	2	
11	01560-06253	BOLT	2	
12	32160-02F00	SENSOR ASSY, CAM POSITION	1	
13	32161-02F00	PACKING	1	
14	07130-06163	BOLT	2	MODEL V
14A	02112-06163	SCREW	2	MODEL W/X/Y/K1
15	33410-48E00	COIL ASSY, IGNITION	1	
16	33420-38A11	COIL ASSY, IGNITION	1	
17	02162-05203	SCREW	4	
18	33510-11D00	CAP ASSY, SPARK PLUG	2	
19	33541-23E01	SEAL, SPARK PLUG CAP	2	
20	33542-38B00	SEAL, HIGH TENSION CORD	2	
21	33543-02F00	COVER, SPARK PLUG CAP	2	
22-1	32920-02F40	CONTROL UNIT, EPI	1	MODEL V
22-2	32920-02FJ0	CONTROL UNIT, EPI	1	MODEL W/X/Y/K1
23	33651-12910	BAND, EPI CONT	1	
24	33960-02F00	SENSOR ASSY, FUEL CUT	1	

FIG.22

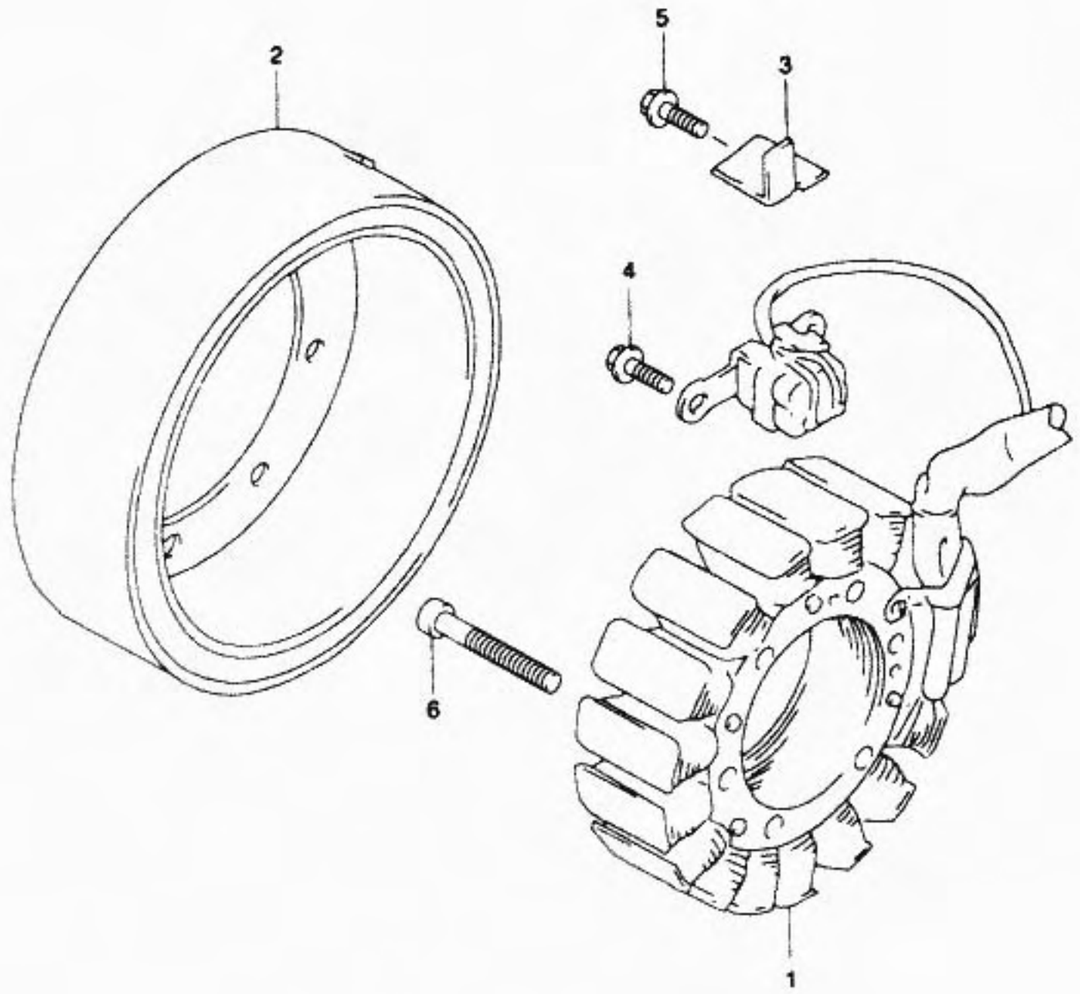

FIG.22 (E- 5) MAGNETO

REF.NO.	PART NO.	DESCRIPTION	QTY.	REMARKS
1	32101-02F00	STATOR ASSY	1	
2	32102-02F00	ROTOR ASSY	1	
3	32371-13E00	CLAMP, MAGNETO	1	
4	01547-05103	BOLT, SENSOR	2	
5	01547-05103	BOLT, MANGETO LEAD	1	
6	07130-06353	BOLT	3	

FIG.21

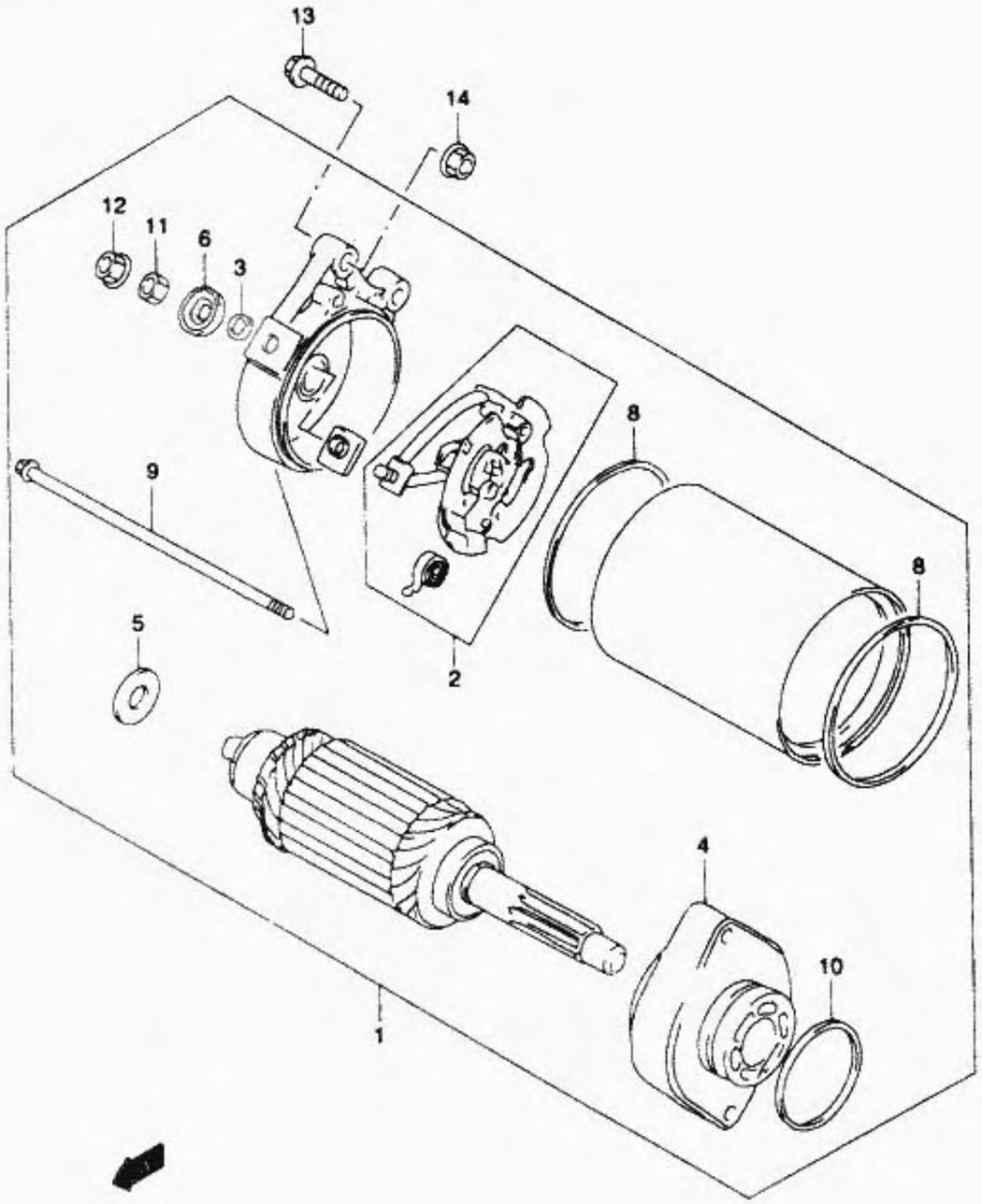

FIG.21 (E- 4) STARTING MOTOR

REF.NO.	PART NO.	DESCRIPTION	QTY.	REMARKS
1-1	31100-02F00	MOTOR ASSY, STARTING	1	MODEL V/W
1-2	31100-02F10	MOTOR ASSY, STARTING	1	MODEL X/Y/K1
2	31132-45C00	.HOLDER SET, BRUSH	1	
3	31143-38300	.O RING	1	
4	31150-44B00	.BRACKET SET	1	
5	31170-43400	.SHIM SET	1	
6	31172-38300	.BUSHING	1	
7	31173-88C00	.BUSHING	1	
8	31264-44110	.O RING	2	
9	31281-24B10	.BOLT	2	
10-1	09280-35003	.O RING (D:2.0,ID:35)	1	MODEL V
10-2	09280-35005	.O RING (D:2.1,ID:34.7)	1	MODEL W/X/Y/K1
11	08310-00067	.NUT	1	
12	08361-35068	.NUT	1	
13	01547-06257	BOLT	2	
14	08361-35068	NUT	1	

FIG.20A

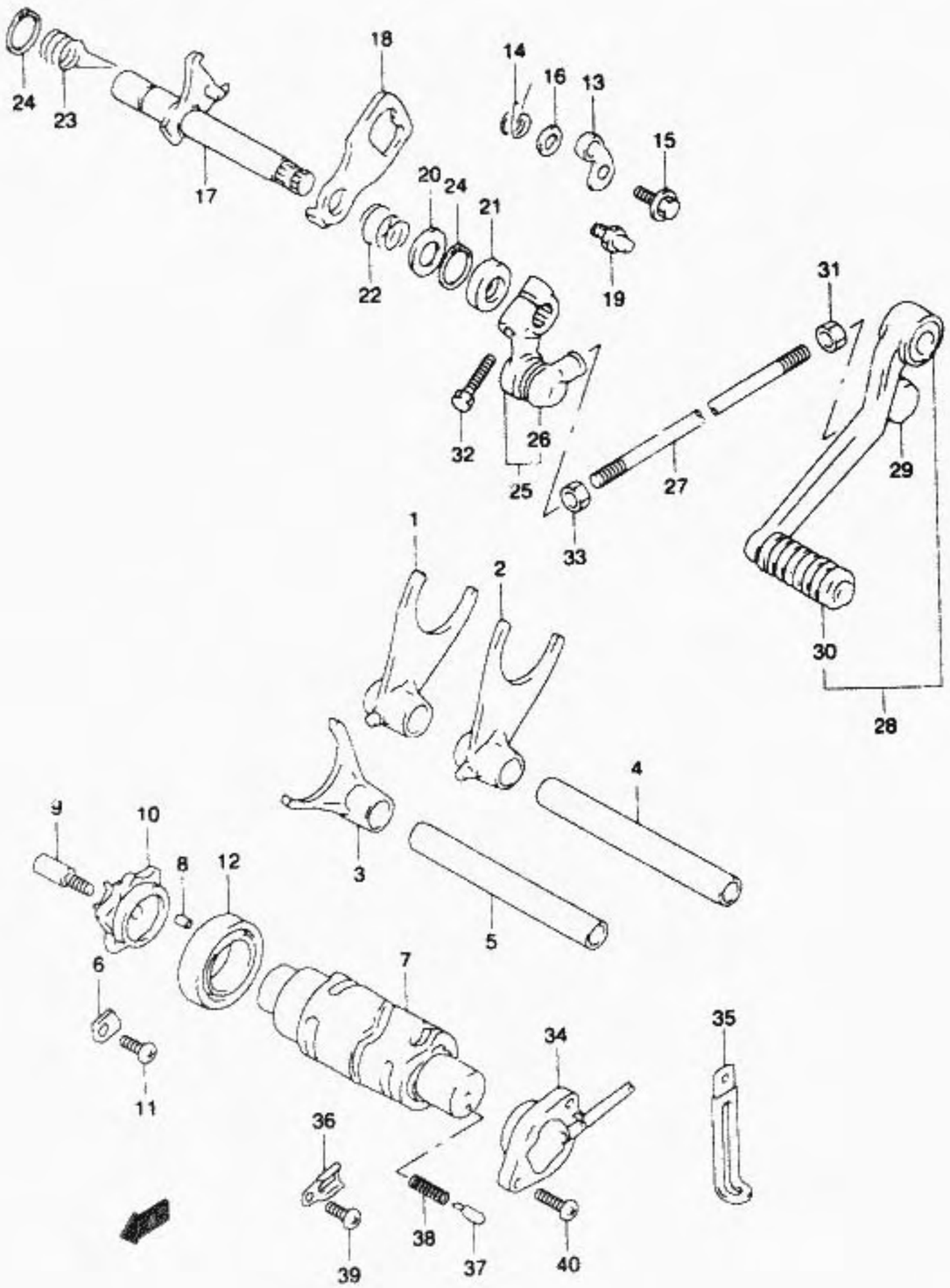

FIG.20A(E-3) GEAR SHIFTING (MODEL X/Y/K1)

REF.NO.	PART NO.	DESCRIPTION	QTY.	REMARKS
31	09140-06011	NUT	1	
32	01500-06253	BOLT	1	
33	08310-00067	NUT	1	
34	37730-02F10	BASE ASSY, GEAR SHIFT TERM	1	
35	09404-06432	CLAMP (L:80)	1	
36	31497-45000	CLAMP, GEAR SHIFT	1	
37	09209-05011	CONTACT, GEAR SHIFT	1	
38	09440-04010	SPRING, GEAR SHIFT SW	1	
39	02112-05103	SCREW, CLAMP	1	
40	02112-05163	SCREW, GEAR SHIFT SW	2	

FIG.20A

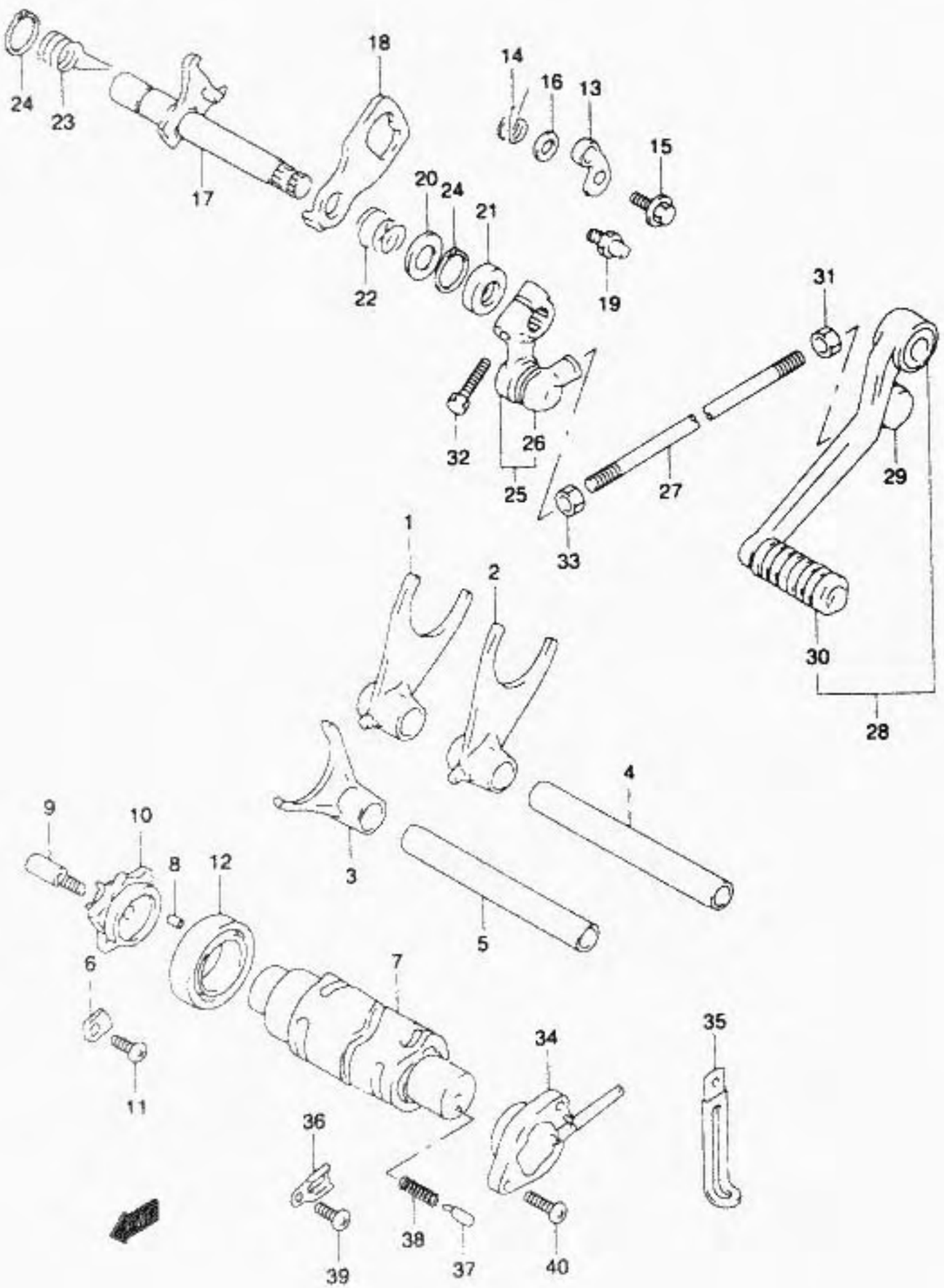

FIG.20A(E-2) GEAR SHIFTING (MODEL X/Y/K1)

REF.NO.	PART NO.	DESCRIPTION	QTY.	REMARKS
1	25211-17E01	FORK, GEAR SHIFT NO.2	1	
2	25211-17E10	FORK, GEAR SHIFT NO.1	1	
3	25231-17E11	FORK, GEAR SHIFT NO.3	1	
4	25411-02F20	SHAFT, GEAR SHIFT FORK NO.1	1	
5	25411-02F10	SHAFT, GEAR SHIFT FORK NO.2	1	
6	24741-21A00	RETAINER, SHIFT CAM	2	
7	25310-02F10	CAM, GEAR SHIFT	1	
8	04221-04089	.PIN, SHIFT CAM	1	
9	25312-12C00	STOPPER, SHIFT CAM	1	
10	25381-13E10	PLATE, GEAR SHIFT	1	
11	02112-06123	SCREW, SHIFT CAM	2	
12	08113-69050	BEARING, SHIFT CAM	1	
13	25350-26D01	STOPPER, SHIFT CAM	1	
14	25355-13E00	SPRING, STOPPER ARM	1	
15	09111-06041	BOLT (6X14.3)	1	
16	08211-06141	WASHER	1	
17	25510-02F11	SHAFT, GEAR SHIFT	1	
18	25512-13E11	PLATE, GEAR SHIFT	1	
19-1	25671-01000	STOPPER, GEAR SHIFT	1	MODEL X/Y
19-2	25671-01011	STOPPER, GEAR SHIFT	1	MODEL K1
20	09181-14167	WASHER, GEAR SHIFT RH	3	14X22X1.0
21	09283-14006	SEAL, SHIFT SHAFT OIL	1	14X22X6.0
22	09440-17009	SPRING, GEAR SHIFT PLATE	1	
23	09444-20001	SPRING, SHIFT SHAFT	1	
	08331-31146	CIRCLIP, GEAR SHIFT	2	
	25520-19C02	ARM, GEAR SHIFT LINK	1	
26	25526-47000	.COVER, DUST	1	
27	25525-32C10	ROD, GEAR SHIFT LINK	1	
28	25600-33E00	LEVER ASSY, GEAR SHIFT	1	
29	25526-47000	.COVER, DUST	1	
30	25652-20C00	.RUBBER	1	

40 TL1000S K1 E3 E28

FIG.20

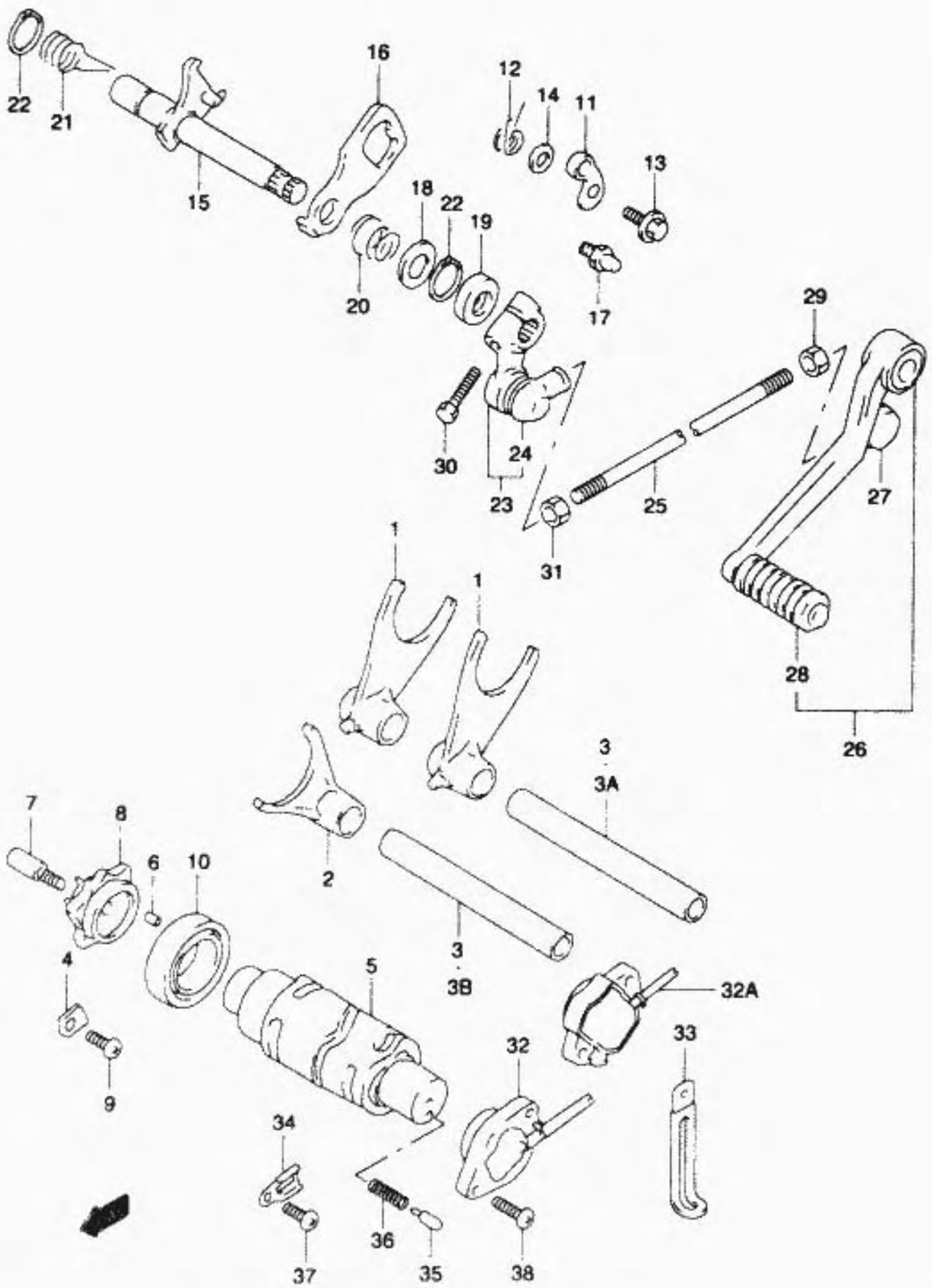

FIG.20 (D-15) GEAR SHIFTING (MODEL V/W)

REF.NO.	PART NO.	DESCRIPTION	QTY.	REMARKS
29	09140-06011	NUT	1	
30	01500-06253	BOLT	1	
31	08310-00067	NUT	1	
32	37730-02F00	BASE ASSY, GEAR SHIFT TERM	1	MODEL V
32A	37730-02F10	BASE ASSY, GEAR SHIFT TERM	1	MODEL W
33	09404-06429	CLAMP (L:80)	1	
34	31497-45000	CLAMP, GEAR SHIFT	1	
35	09209-05011	CONTACT, GEAR SHIFT	1	
36	09440-04010	SPRING, GEAR SHIFT SW	1	
37	02112-05103	SCREW, CLAMP	1	
38	02112-05163	SCREW, GEAR SHIFT SW	2	

REFER TO FIG.20A(E-2) FOR MODEL X/Y/K1

FIG.20

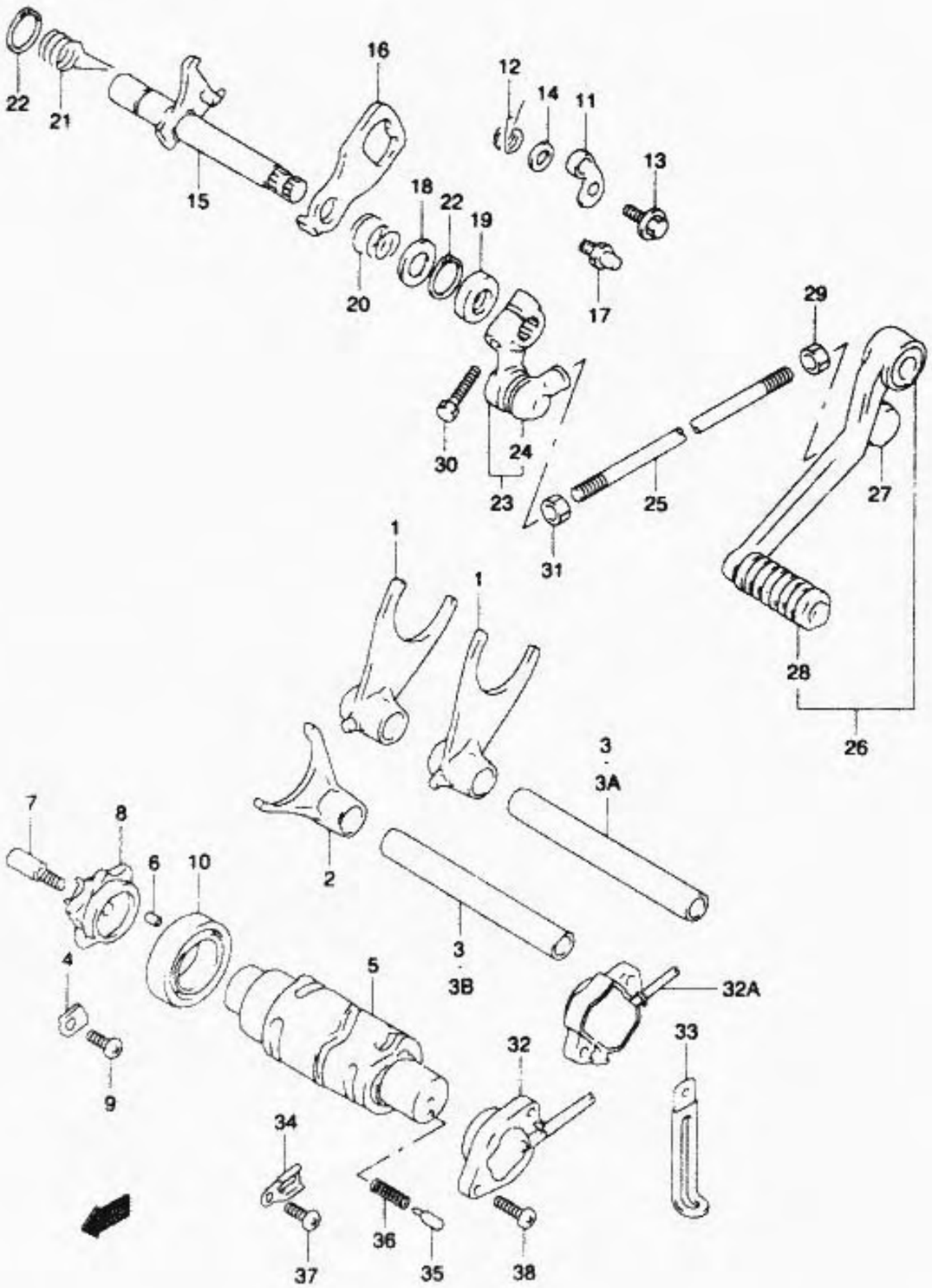

FIG.20 (D-14) GEAR SHIFTING (MODEL V/W)

REF.NO.	PART NO.	DESCRIPTION	QTY.	REMARKS
1	25211-17E00	FORK, GEAR SHIFT NO.1	2	
2	25231-17E00	FORK, GEAR SHIFT NO.3	1	
3	25411-38A00	SHAFT, GEAR SHIFT FORK NO.1	2	MODEL V
3A	25411-02F00	SHAFT, GEAR SHIFT FORK NO.1	1	MODEL W
3B	25411-02F10	SHAFT, GEAR SHIFT FORK NO.2	1	MODEL W
4	24741-21A00	RETAINER, SHIFT CAM	2	
5	25310-02F01	CAM, GEAR SHIFT	1	
6	04221-04089	.PIN, SHIFT CAM	1	
7	25312-12C00	STOPPER, SHIFT CAM	1	
8	25381-13E10	PLATE, GEAR SHIFT	1	
9	02112-06123	SCREW, SHIFT CAM	2	
10	08113-69050	BEARING, SHIFT CAM	1	
11	25350-26D01	STOPPER, SHIFT CAM	1	
12	25355-13E00	SPRING. STOPPER ARM	1	
13	09111-06041	BOLT (6X14.3)	1	
14	08211-06141	WASHER	1	
15	25510-02F01	SHAFT, GEAR SHIFT	1	
16	25512-13E11	PLATE, GEAR SHIFT	1	
17	25671-01000	STOPPER, GEAR SHIFT	1	
18	09181-14167	WASHER, GEAR SHIFT RH	3	14X22X1.0
19	09283-14006	SEAL, SHIFT SHAFT OIL	1	14X22X6.0
20	09440-17009	SPRING. GEAR SHIFT PLATE	1	
21	09444-20001	SPRING, SHIFT SHAFT	1	
22	08331-31146	CIRCLIP, GEAR SHIFT	2	
23	25520-19C02	ARM, GEAR SHIFT LINK	1	
24	25526-47000	.COVER, DUST	1	
25	25525-32C10	ROD, GEAR SHIFT LINK	1	
26	25600-33E00	LEVER ASSY, GEAR SHIFT	1	
27	25526-47000	.COVER, DUST	1	
28	25652-20C00	.RUBBER	1	

REFER TO FIG.20A(E-2) FOR MODEL X/Y/K1

38 TL1000S K1 E3 E28

FIG.19A

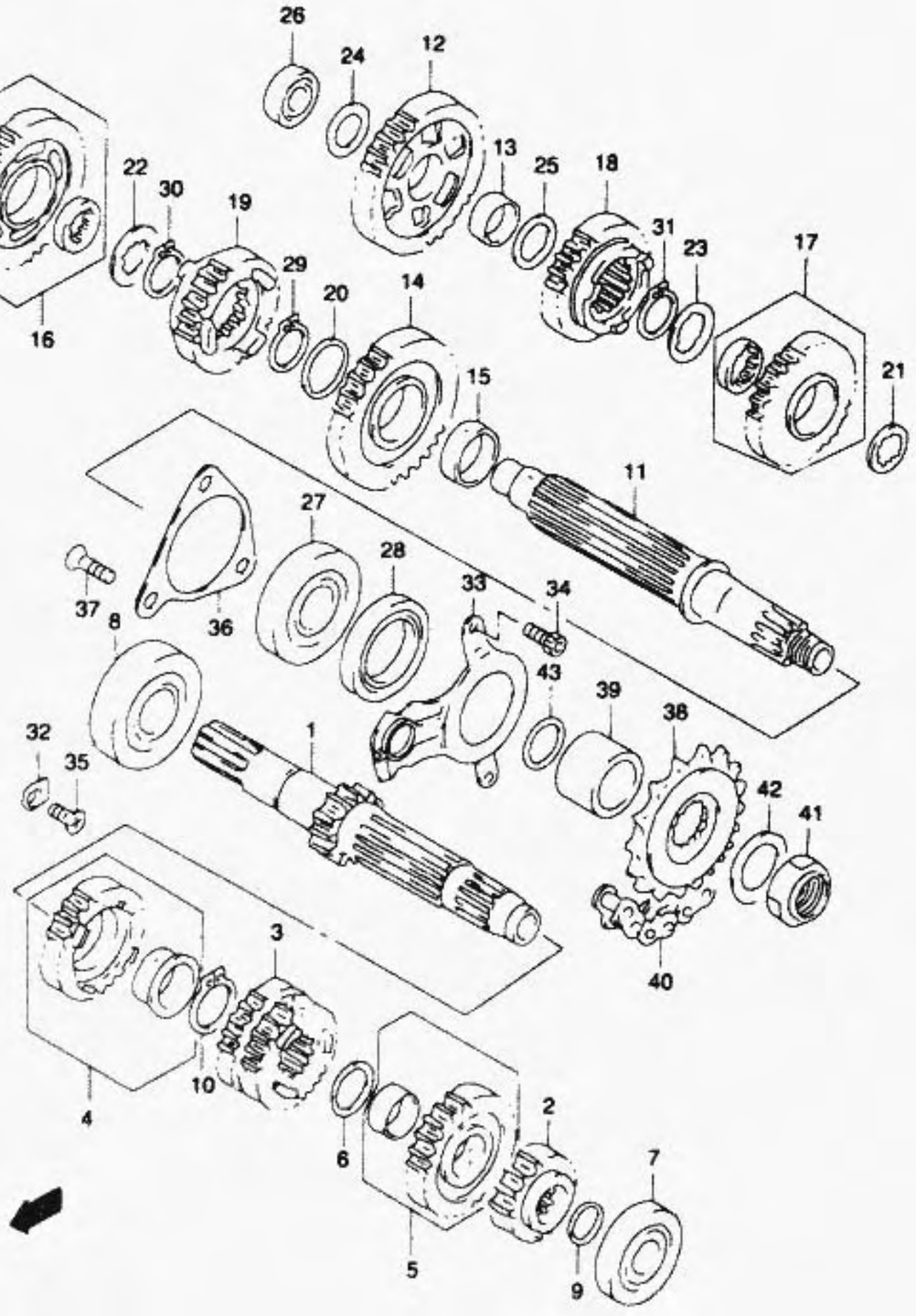

FIG.19A(D-13) TRANSMISSION (MODEL X/Y/K1)

REF.NO.	PART NO.	DESCRIPTION	QTY.	REMARKS
32	24741-21A00	RETAINER, CENTER SHAFT	1	
33	24751-02F01	RETAINER, DRIVE SHAFT	1	
34	07130-06123	BOLT, DRIVE SHAFT	2	
35	02112-06123	SCREW, CENTER SHAFT	1	
36	24741-02F00	RETAINER, DRIVE SHAFT BRG	1	
37	09126-06011	SCREW, DRIVE SHAFT (6X12)	3	
38-1	27510-21A20	SPROCKET, ENGINE (NT:17)	1	MODEL X
38-2	27510-21A31	SPROCKET, ENGINE (NT:17)	1	MODEL Y/K1
39	27531-24B12	SPACER, SPROCKET	1	
40-1	27600-17C20-104	CHAIN ASSY (RK50GSVZ1,104L)	1	MODEL X/Y
40-2	27600-24F30-104	CHAIN ASSY (RK50GSVZ3,104L)	1	MODEL K1
41	09159-20004	NUT	1	
42	09181-25268	WASHER (25X40X1.5)	1	
43	09280-24010	O RING (D:2.4,ID:23.7)	1	

FIG.19A

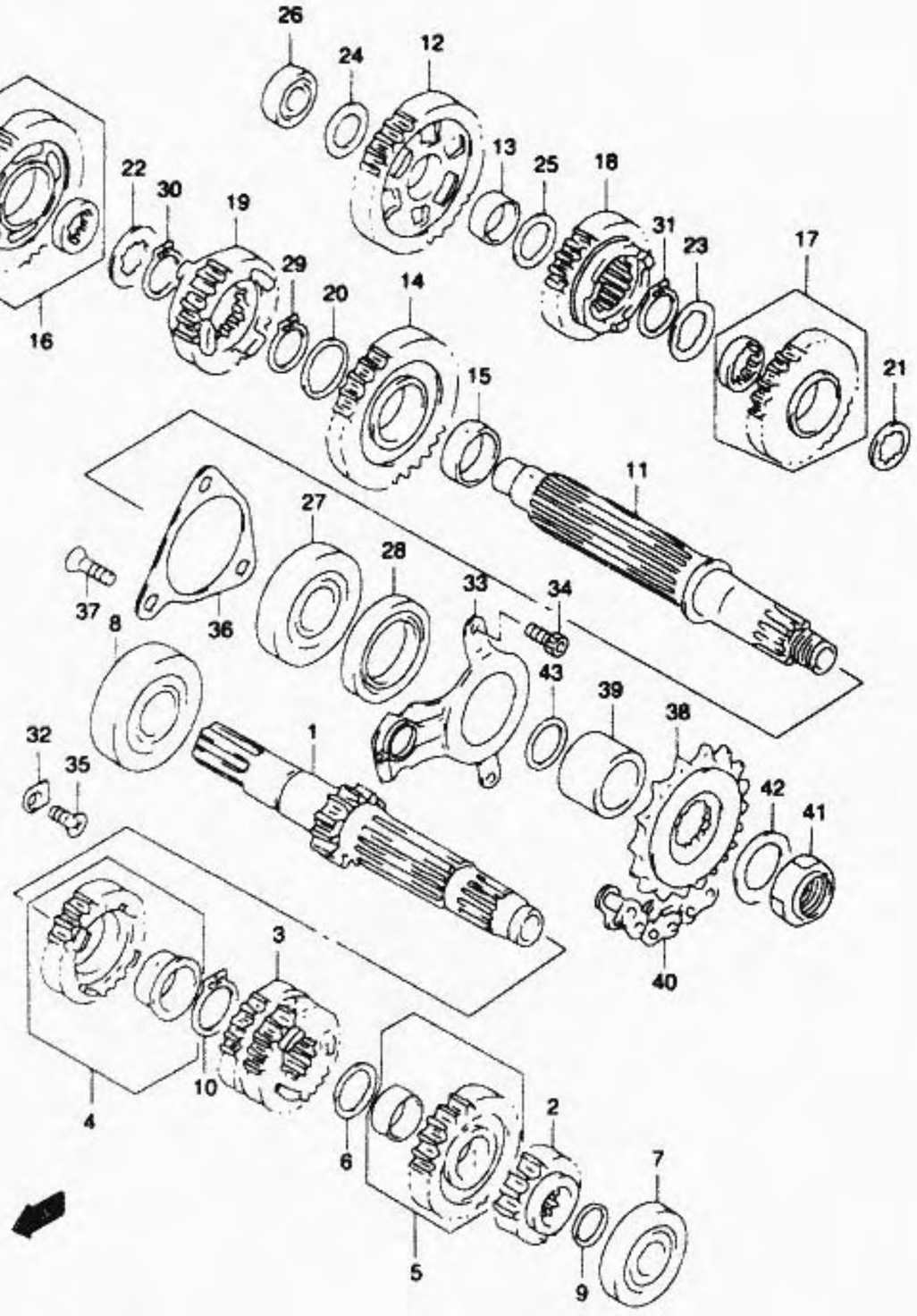

FIG.19A(D-12) TRANSMISSION (MODEL X/Y/K1)

REF.NO.	PART NO.	DESCRIPTION	QTY.	REMARKS
1	24120-02F06	SHAFT, COUNTER (NT:12)	1	
2	24221-02F01	GEAR, 2ND DRIVE (NT:15)	1	
3	24231-02F13	GEAR, 3RD & 4TH DRIVE	1	NT:18/27
4	24251-02810	GEAR SET, 5TH DRIVE	1	NT:23
5	24261-02810	GEAR SET, 6TH DRIVE	1	NT:24
6	09181-22167	WASHER, 6TH DRIVE	1	22X30X1.0
7	09262-20139	BEARING, CENTER SHAFT LH	1	20X47X14
8	09262-25073	BEARING, CENTER SHAFT RH	1	25X62X17
9	09280-17004	O RING, CENTER SHAFT	1	D:1.9,ID:16.6
10	09380-27001	CIRCLIP, 5TH DRIVE	1	
11-1	24130-02F04	SHAFT, DRIVE	1	MODEL X/Y
11-2	24130-02F10	SHAFT, DRIVE	1	MODEL K1
12	24311-02F10	GEAR, 1ST DRIVEN (NT:32)	1	
13	24312-02F00	BUSH, 1ST DRIVEN	1	
14	24321-02F11	GEAR, 2ND DRIVEN (NT:29)	1	
15	24322-02F01	BUSH, 2ND DRIVEN	1	
16	24331-02810	GEAR SET, 3RD DRIVEN	1	NT:27
17	24341-02810	GEAR SET, 4TH DRIVEN	1	NT:27
18	24351-02F13	GEAR, 5TH DRIVEN (NT:25)	1	
19	24361-02F11	GEAR, 6TH DRIVEN (NT:24)	1	
20	09160-27008	WASHER, 2ND D RIVEN	1	27X36X1
21	09167-27002	WASHER, 3RD & 4TH DRIVEN	1	27X36X2
22	24333-02F00	WASHER, 3RD DRIVEN	1	
23	24333-02F00	WASHER, 4TH DRIVEN	1	
24	09181-20251	WASHER, 1ST DRIVEN RH	1	20X34X1
25	09181-22223	WASHER, 1ST DRIVEN LH	1	22X34X1
26	09262-20082	BEARING, DRIVE SHAFT RH	1	20X52X15
27	09262-28040	BEARING, DRIVE SHAFT LH	1	28X68X20
28	09283-38020	SEAL, DRIVE SHAFT	1	38X52X8
29	09380-27001	CIRCLIP, 2ND DRIVEN	1	
30	09380-27001	CIRCLIP, 3RD DRIVEN	1	
31	09380-27001	CIRCLIP, 4TH DRIVEN	1	

FIG.19

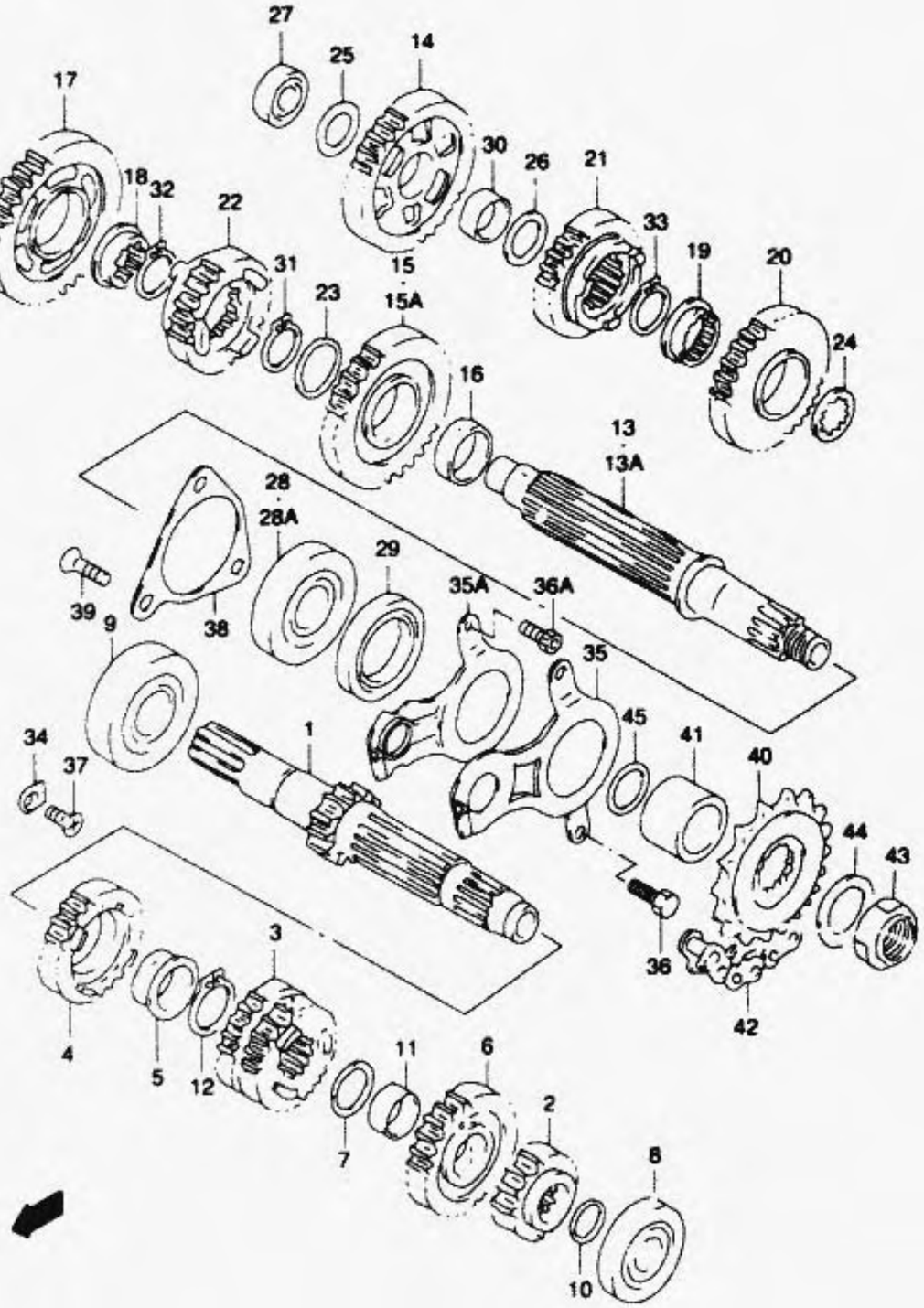

FIG.19 (D-11) TRANSMISSION (MODEL V/W)

REF.NO.	PART NO.	DESCRIPTION	QTY.	REMARKS
24	09167-27002	WASHER, 3RD & 4TH	1	27X36X2
25	09181-20251	WASHER, 1ST DRIVEN RH	1	20X34X1
26	09181-22223	WASHER, 1ST DRIVEN LH	1	22X34X1
27	09262-20082	BEARING, DRIVE SHAFT RH	1	20X52X15
28	09262-28037	BEARING, DRIVE SHAFT LH	1	MODEL V 28X68X18
28A	09262-28040	BEARING, DRIVE SHAFT LH	1	MODEL W 28X68X20
29-1	09283-38017	SEAL, DRIVE SHAFT	1	MODEL V 38X52X8
29-2	09283-38020	SEAL, DRIVE SHAFT	1	MODEL W 38X52X8
30	24312-02F00	BUSH, 1ST DRIVEN	1	
31	09380-27001	CIRCLIP, 2ND	1	
32	09380-27001	CIRCLIP, 3RD	1	
33	09380-27001	CIRCLIP, 4TH	1	
34	24741-21A00	RETAINER, CENTER SHAFT	1	
35	24751-02F00	RETAINER, DRIVE SHAFT OIL SEAL	1	MODEL V
35A	24751-02F01	RETAINER, DRIVE SHAFT OIL SEAL	1	MODEL W
36	01500-06123	BOLT, DRIVE SHAFT	3	MODEL V
36A	07130-06123	BOLT, DRIVE SHAFT	2	MODEL W
37	02112-06123	SCREW, CENTER SHAFT	1	
38	24741-02F00	RETAINER, DRIVE SHAFT BRG	1	MODEL W
39	09126-06011	SCREW, DRIVE SHAFT (6X12)	3	MODEL W
40	27510-21A20	SPROCKET, ENGINE (NT:17)	1	
41-1	27531-24B10	SPACER, SPROCKET	1	MODEL V
41-2	27531-24B12	SPACER, SPROCKET	1	MODEL W
42	27600-17C20-104	CHAIN ASSY (RK50GSVZ1,104L)	1	
43	09159-20004	NUT	1	
44	09181-25268	WASHER (25X40X1.5)	1	
45	09280-24010	O RING (D:2.4,ID:23.7)	1	

REFER TO FIG.19A(D-12) FOR MODEL X/Y/K1

FIG.19

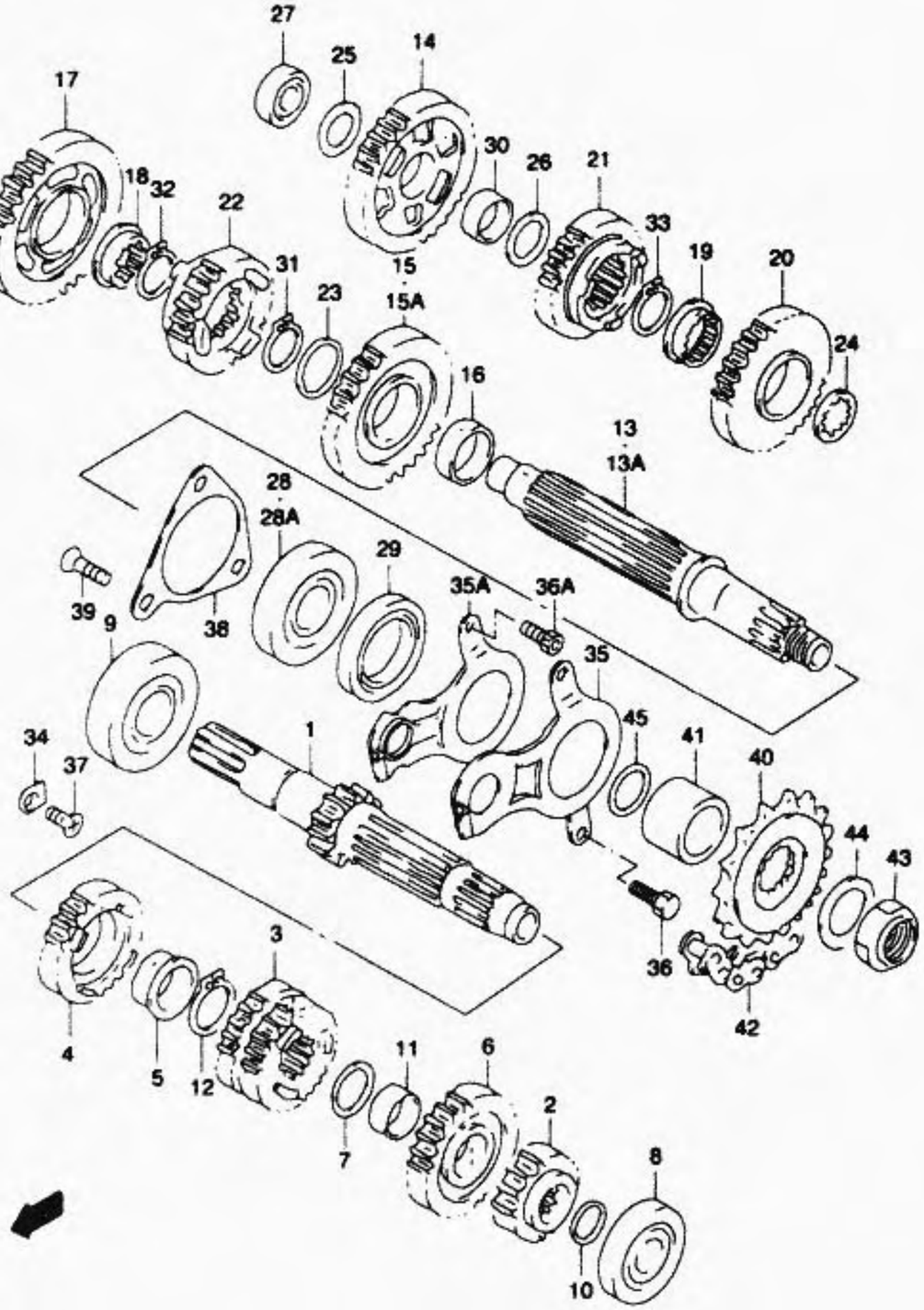

FIG.19 (D-10) TRANSMISSION (MODEL V/W)

REF.NO.	PART NO.	DESCRIPTION	QTY.	REMARKS
1-1	24120-02F01	SHAFT, COUNTER (NT:12)	1	MODEL V
1-2	24120-02F02	SHAFT, COUNTER (NT:12)	1	MODEL W
2	24221-02F01	GEAR, 2ND DRIVE (NT:15)	1	
3-1	24231-02F00	GEAR, 3RD & 4TH DRIVE (NT:18)	1	MODEL V
3-2	24231-02F01	GEAR, 3RD & 4TH DRIVE (NT:18)	1	MODEL W
4	24251-02F01	GEAR, 5TH DRIVE (NT:23)	1	
5	24252-02F00	BUSH, 5TH DRIVE GEAR	1	
6	24261-02F01	GEAR, 6TH DRIVE (NT:24)	1	
7	09181-22167	WASHER, 6TH	1	22X30X1.0
8	09262-20081	BEARING, CENTER SHAFT LH	1	20X47X14
9	09262-25073	BEARING, CENTER SHAFT RH	1	25X62X17
10	09280-17004	O RING, CENTER SHAFT	1	D:1.9.ID:16.6
11	09300-22005	BUSH, 6TH DRIVE	1	
12	09380-27001	CIRCLIP, 5TH DRIVE	1	
13	24130-02F01	SHAFT, DRIVE	1	MODEL V
13A	24130-02F03	SHAFT, DRIVE	1	MODEL W
14-1	24311-02F01	GEAR, 1ST DRIVEN (NT:32)	1	MODEL V
14-2	24311-02F02	GEAR, 1ST DRIVEN (NT:32)	1	MODEL W
15	24321-02F01	GEAR, 2ND DRIVEN (NT:29)	1	MODEL V
15A	24321-02F02	GEAR, 2ND DRIVEN (NT:29)	1	MODEL W
16	24322-02F01	BUSH, 2ND	1	
17-1	24331-02F00	GEAR, 3RD DRIVEN (NT:27)	1	MODEL V
17-2	24331-02F01	GEAR, 3RD DRIVEN (NT:27)	1	MODEL W
18	24332-17E10	BUSH, 3RD	1	
19	24332-17E10	BUSH, 4TH	1	
20	24341-02F00	GEAR, 4TH DRIVEN (NT:27)	1	
21-1	24351-02F01	GEAR, 5TH DRIVEN (NT:25)	1	MODEL V
21-2	24351-02F03	GEAR, 5TH DRIVEN (NT:25)	1	MODEL W
22-1	24361-02F01	GEAR, 6TH DRIVEN (NT:24)	1	MODEL V
22-2	24361-02F03	GEAR, 6TH DRIVEN (NT:24)	1	MODEL W
23	09160-27008	WASHER, 2ND DRIVEN GEAR	1	27X36X1

REFER TO FIG.19A(D-12) FOR MODEL X/Y/K1

FIG.18A

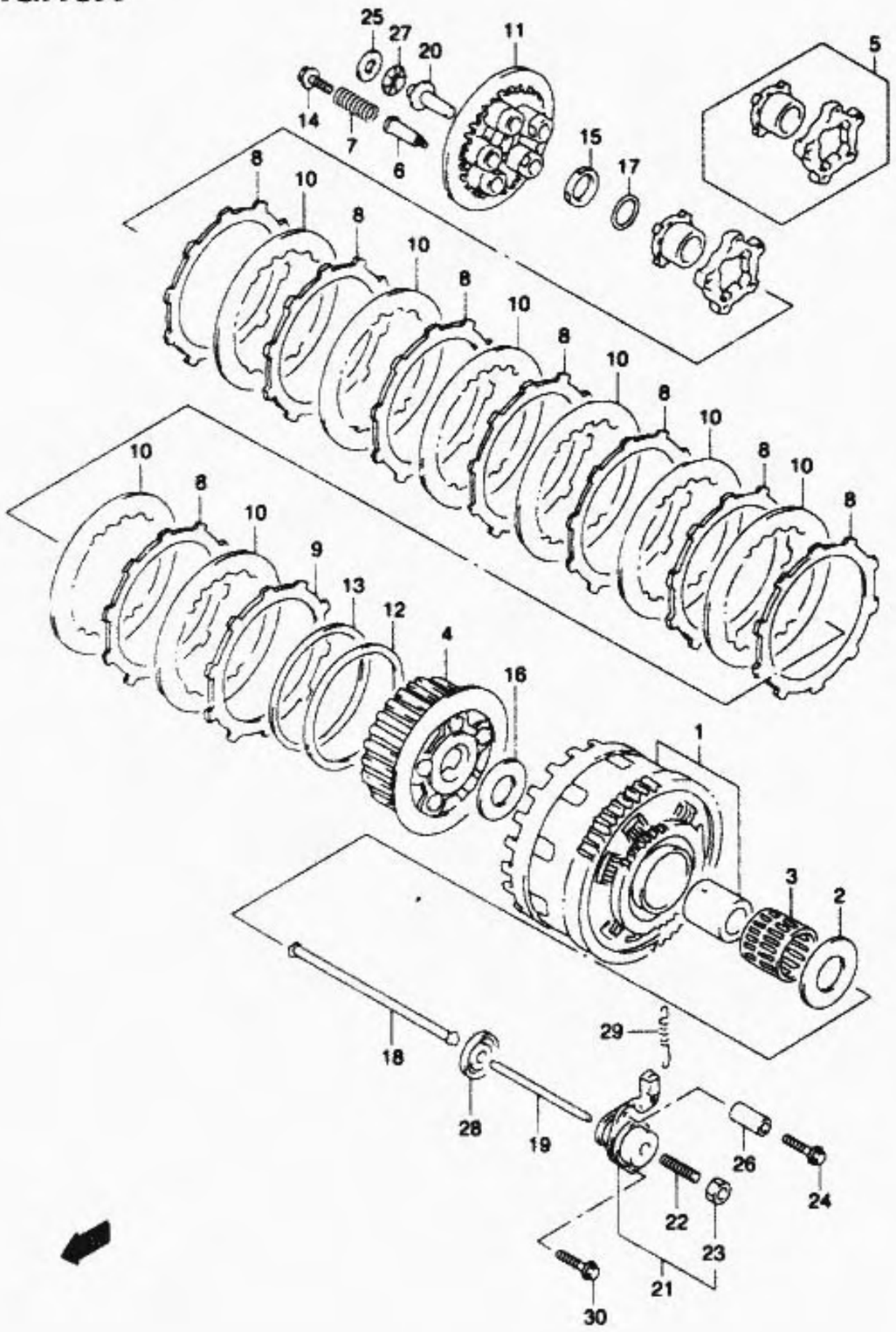

FIG.18A(D- 9) CLUTCH (MODEL X/Y/K1)

REF.NO.	PART NO.	DESCRIPTION	QTY.	REMARKS
25	09160 15045	WASHER, CLUTCH PUSH	1	15.5X218X1
26	09180-06322	SPACER, CL RELEASE	1	
27	09263-15003	BEARING, CLUTCH PUSH	1	15X28X2
28	09285-06015	SEAL, CLUTCH PUSH	1	6X34X5.5
29	09443-08047	SPRING, CLUTCH RELEASE	1	
30	01550-06603	BOLT	1	

FIG.18A

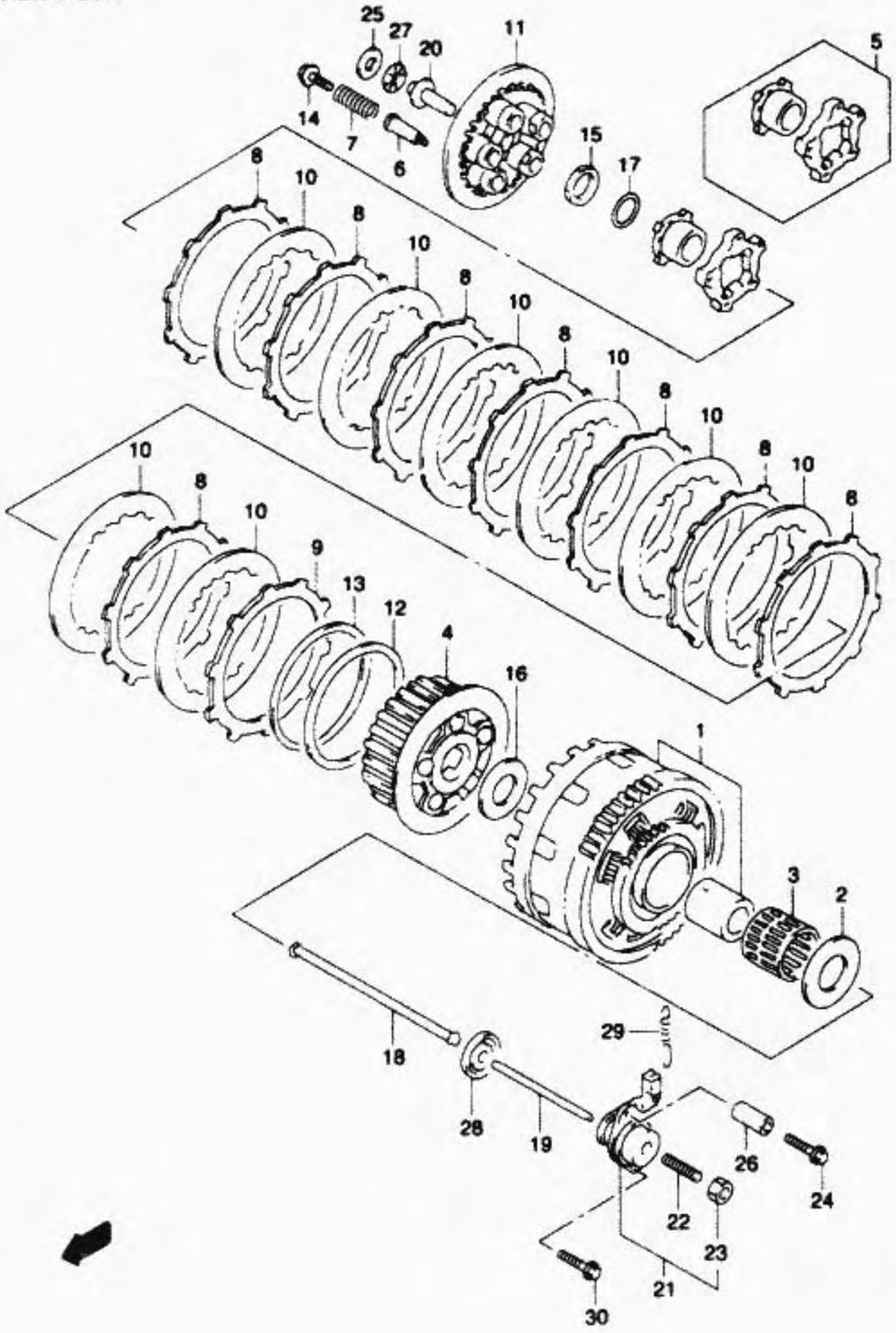

FIG.18A(D-8) CLUTCH (MODEL X/Y/K1)

REF.NO.	PART NO.	DESCRIPTION	QTY.	REMARKS
1	21200-02820	GEAR ASSY, PRIMARY DRIVEN	1	
2	09160-25071	WASHER (25.1X54X2.5)	1	
3	09263-35017	BEARING (35X40X35.8)	1	
4	21410-02F10	HUB, CLUTCH SLEEVE	1	
5	21610-02F12	CAM SET, CLUTCH	1	
6-1	21481-02F10	BOLT, SPRING SURPORT	6	MODEL X/Y
6-2	21481-02F11	BOLT, SPRING SURPORT	6	MODEL K1
7	21413-02F10	SPRING, CLUTCH	6	
8-1	21441-02F10	PLATE, CLUTCH DRIVE	8	MODEL X
8-2	21441-02F11	PLATE, CLUTCH DRIVE	8	MODEL Y
8-3	21441-02F30	PLATE, CLUTCH DRIVE	9	MODEL K1
9-1	21442-02F10	PLATE, CLUTCH DRIVE NO.2	1	MODEL X
9-2	21442-02F11	PLATE, CLUTCH DRIVE NO.2	1	MODEL Y/K1
10-1	21451-02F10	PLATE, CLUTCH DRIVEN	8	MODEL X/Y
10-2	21451-02F30	PLATE, CLUTCH DRIVEN	9	MODEL K1
11	21462-02F10	DISK, CLUTCH PRESSURE	1	
12	21471-02F10	SEAT, WAVE WASHER	1	
13	21472-02F10	WASHER, CLUTCH PLATE WAVE	1	
14-1	21482-02F10	BOLT, CLUTCH SPRING	6	MODEL X/Y
14-2	21482-02F11	BOLT, CLUTCH	6	MODEL K1
15	09159-24010	NUT, CLUTCH SLEEVE HUB	1	
16-1	09160-25072	WASHER, CLUTCH SLEEVE	1	MODEL X/Y,25X50X2.5
16-2	09160-25056	WASHER, CLUTCH SLEEVE	1	MODEL K1,25X50X2.5
17	09164-24006	WASHER, CLUTCH SLEEVE	1	24.2X35X2
18	23110-38B00	ROD, CLUTCH PUSH RH	1	
19	23111-05A01	ROD, CLUTCH PUSH LH	1	
20	23121-38B00	PIECE, CLUTCH PUSH	1	
21	23200-15500	SCREW ASSY, CLUTCH RELEASE	1	
22	09134-06010	SCREW	1	
23	08310-00067	NUT	1	
24	09103-06197	BOLT, CL RELEASE	1	

FIG.18

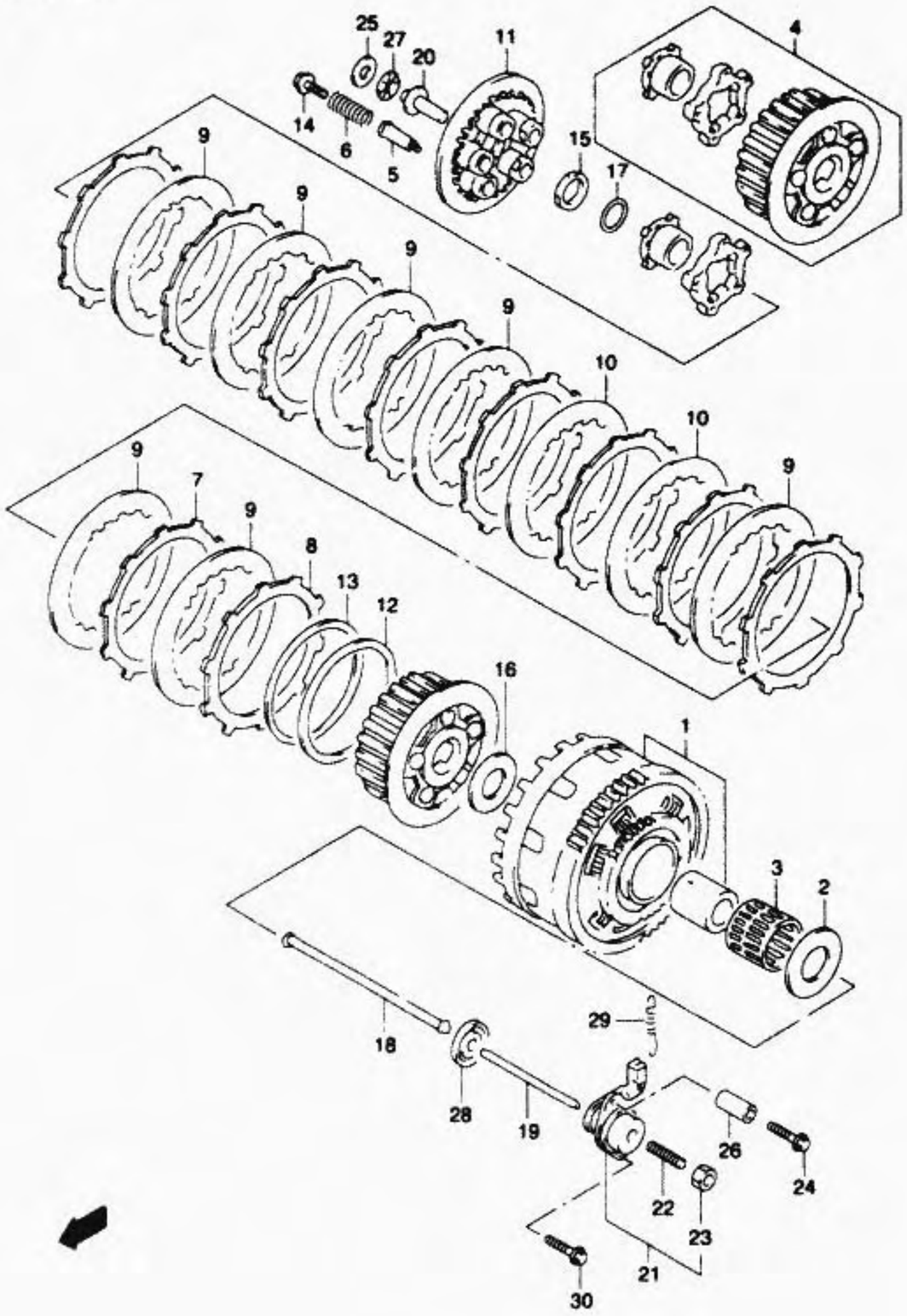

FIG.18 (D- 7) CLUTCH (MODEL V/W)

REF.NO.	PART NO.	DESCRIPTION	QTY.	REMARKS
1	21200-02810	GEAR ASSY, PRIMARY DRIVEN	1	
2-1	09160-25067	WASHER (25X54X2.5)	1	MODEL V
2-2	09160-25071	WASHER (25X54X2.5)	1	MODEL W
3	09263-35017	BEARING (35X40X35.8)	1	
4	21610-02F00	CAM SET, CLUTCH	1	
5	21411-02F00	BOLT, CLUTCH SPRING	5	
6	21413-02F00	SPRING, CLUTCH ASSIST	5	
7	21441-31E40	PLATE, CLUTCH DRIVE NO.1	9	
8	21442-31E00	PLATE, CLUTCH DRIVE NO.2	1	
9	21451-31E00	PLATE, CLUTCH DRIVEN NO.1	7	T:1.6
10	21451-31E10	PLATE, CLUTCH DRIVEN NO.2	2	T:2.0
11	21462-02F00	DISK, CLUTCH PRESSURE	1	
12	21471-31E00	SEAT, WAVE WASHER	1	
13	21472-31E01	WASHER, CLUTCH PLATE WAVE	1	
14	21482-13E00	BOLT, CLUTCH SPRING	5	
15	09159-24010	NUT, CLUTCH SLEEVE HUB	1	
16-1	09160-25056	WASHER, CLUTCH SLEEVE	1	MODEL V 25X50X2.5
16-2	09160-25072	WASHER, CLUTCH SLEEVE	1	MODEL W 25X50X2.5
17	09164-24006	WASHER, CLUTCH SLEEVE	1	24.2X35X2
18	23110-38B00	ROD, CLUTCH PUSH RH	1	
19	23111-34C00	ROD, CLUTCH PUSH LH	1	
20	23121-38B00	PIECE, CLUTCH PUSH	1	
21	23200-15500	SCREW ASSY, CLUTCH RELEASE	1	
22	09134-06010	.SCREW	1	
23	08310-00067	.NUT	1	
24	09103-06197	BOLT, CLUTCH RELEASE	1	
25	09160-15045	WASHER, CLUTCH PUSH	1	15.5X28X1
26	09180-06322	SPACER, CLUTCH RELEASE	1	
27	09263-15003	BEARING, CLUTCH PUSH	1	15X28X2
28	09285-06015	SEAL, CLUTCH PUSH	1	6X34X5.5
29	09443-08047	SPRING, CLUTCH RELEASE	1	
30	01550-06603	BOLT	1	
31	21440-02F00	CLUTCH PLATE SET, HI PERF.	1	OPT. REFER TO SERV. BULL TL/SV-11 FOR INFORMATION

REFER TO FIG.18A(D- 8) FOR MODEL X/Y/K1

31 TL1000S K1 E3 E28

FIG.17A

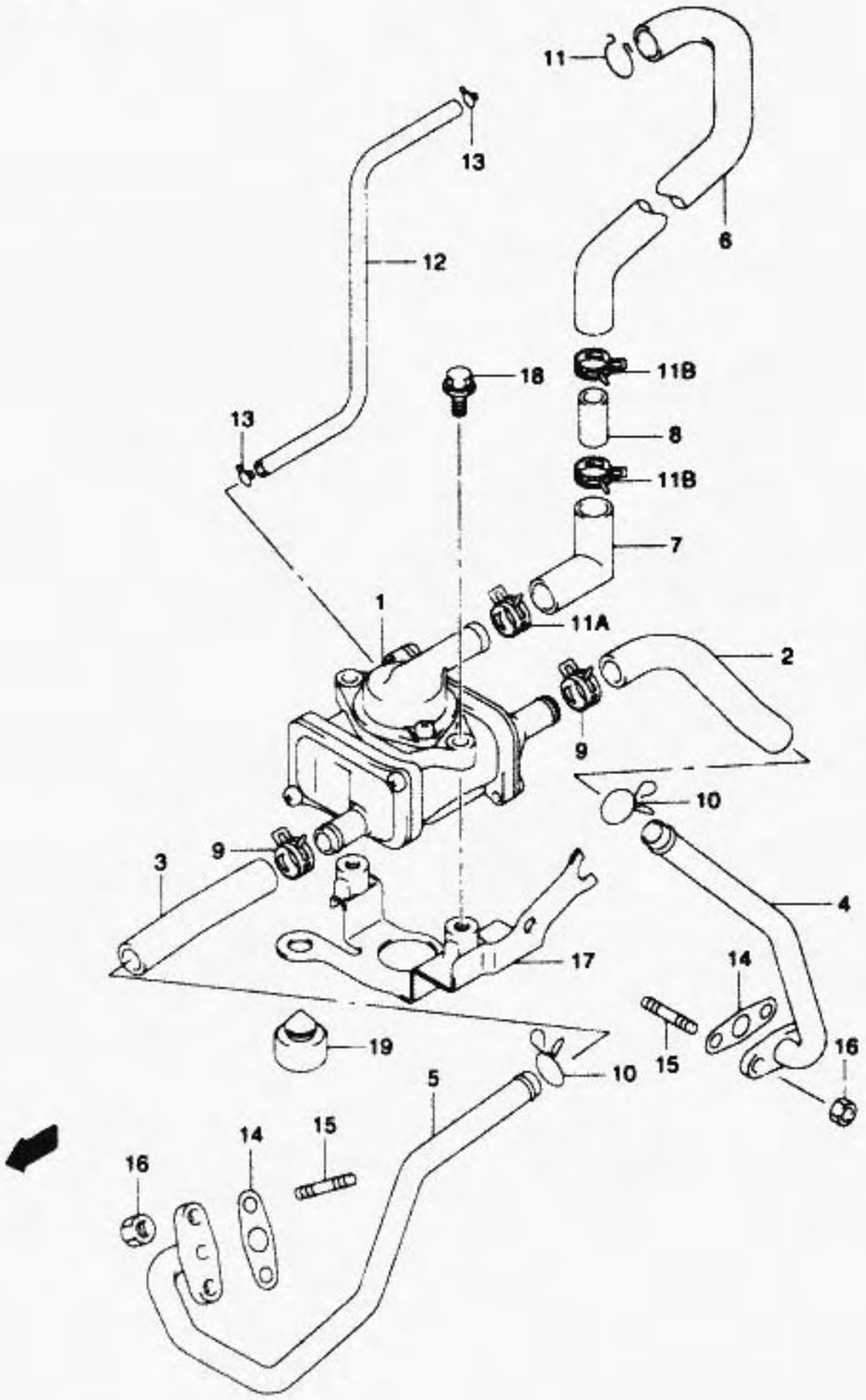

FIG.17A(D-6) 2ND AIR (MODEL W/X/Y/K1)

REF.NO.	PART NO.	DESCRIPTION	QTY.	REMARKS
1	18450-48E00	VALVE ASSY, 2ND AIR	1	
2	18461-02F00	HOSE, 2ND AIR VALVE FRONT	1	
3	18471-02F00	HOSE, 2ND AIR VALVE REAR	1	
4	18410-02F00	PIPE, 2ND AIR FRONT	1	
5	18420-02F00	PIPE, 2ND AIR REAR	1	
6-1	18711-02F10	HOSE, 2ND AIR CLEANER	1	MODEL W/X
6-2	18711-02F20	HOSE, 2ND AIR CLEANER	1	MODEL Y
6-3	18711-02F21	HOSE, 2ND AIR CLEANER	1	MODEL K1
7	18712-02F00	HOSE, 2ND AIR CLEANER JOINT	1	
8	13888-19B00	JOINT, 2ND AIR CLEANER HOSE	1	
9	09401-15404	CLIP, 2ND AIR VALVE HOSE NO.1	2	
10	09401-13409	CLIP, 2ND AIR VALVE HOSE NO.2	2	
11	09401-15401	CLIP, 2ND AIR CLEANER HOSE	1	
11A	09401-15408	CLIP, 2ND AIR CLEANER HOSE NO.2	1	
11B	09401-14404	CLIP, 2ND AIR CLEANER HOSE JOINT	2	
12	09352-40703-600	HOSE, 2ND AIR VALVE VACUUM	1	L:600→250
13	09401-06101	CLIP, 2ND AIR VACUUM HOSE	2	
14	18441-45C00	GASKET, 2ND AIR PIPE	2	
15	01421-06163	BOLT, 2ND AIR PIPE STUD	4	
16	08316-10063	NUT	4	
17	18610-02F10	BRACKET, 2ND AIR VALVE	1	
18	01550-06163	BOLT	3	
19	09321-10002	CUSHION	1	

FIG.17

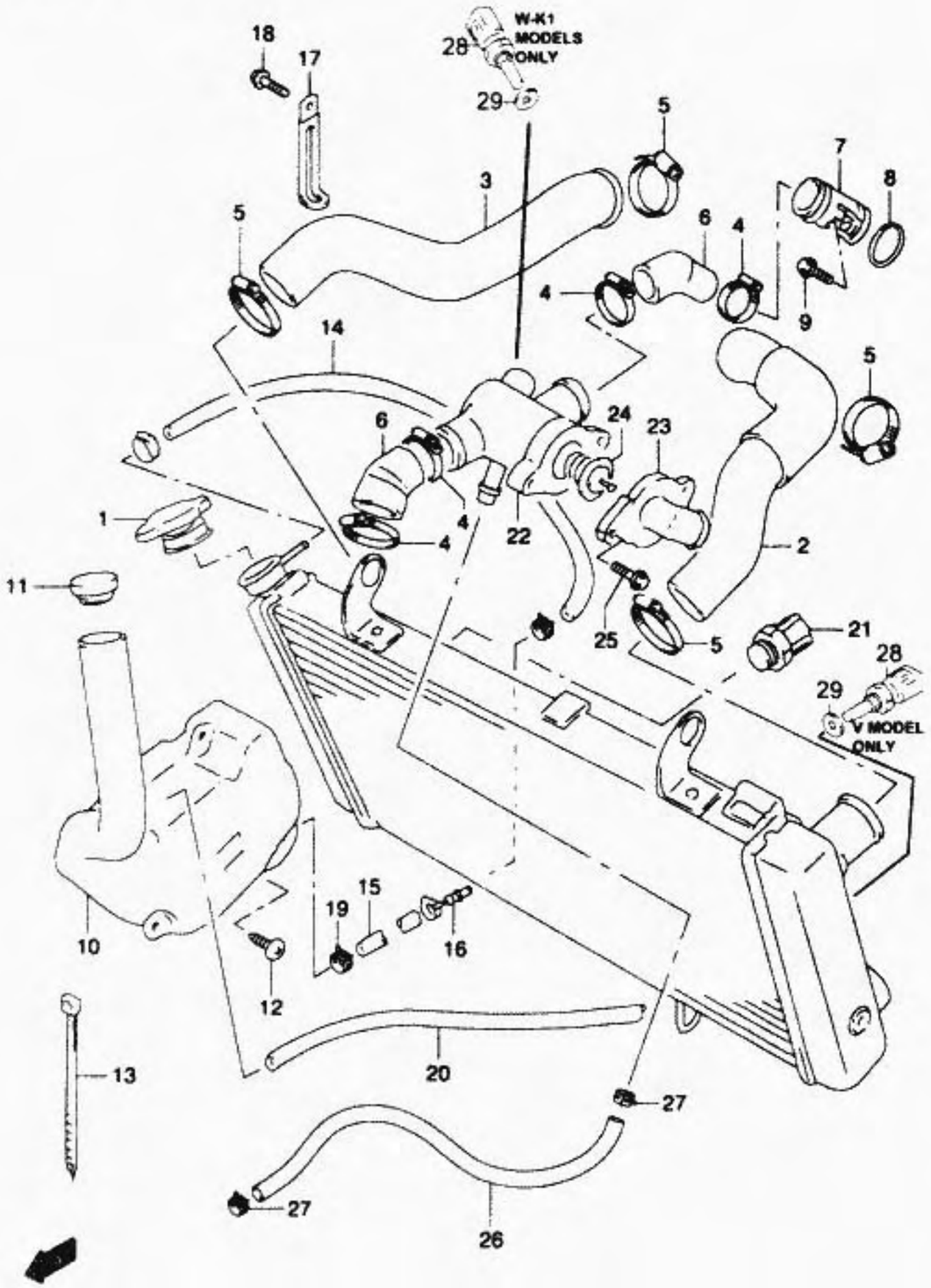

FIG.17 (D- 5) RADIATOR HOSE

REF.NO.	PART NO.	DESCRIPTION	QTY.	REMARKS
21	17680-33E00	SWITCH, RADIATOR FAN	1	
22-1	17662-02F00	CONNECTOR, THERMOSTAT INLET	1	MODEL V
22-2	17662-02F10	CONNECTOR, THERMOSTAT INLET	1	MODEL W/X/Y/K1
23	17663-42E00	CAP, THERMOSTAT CONNECTOR	1	
24-1	17670-32C10	THERMOSTAT, WATER	1	MODEL V
24-2	17670-50F00	THERMOSTAT, WATER	1	MODEL W/X/Y/K1
24-3	17670-32C20	THERMOSTAT, WATER	1	MODEL V OPT
25	01550-06163	BOLT	2	
26	17856-02F10	HOSE, CONNECTOR TO WATER PUMP	1	MODEL W/X/Y/K1
27	09401-12409	CLIP	1	MODEL W/X/Y/K1
28	13650-51G10	SENSOR, WATER TEMP.	1	
29	09168-12016	GASKET, WATER TEMP SENSOR	1	

FIG.17

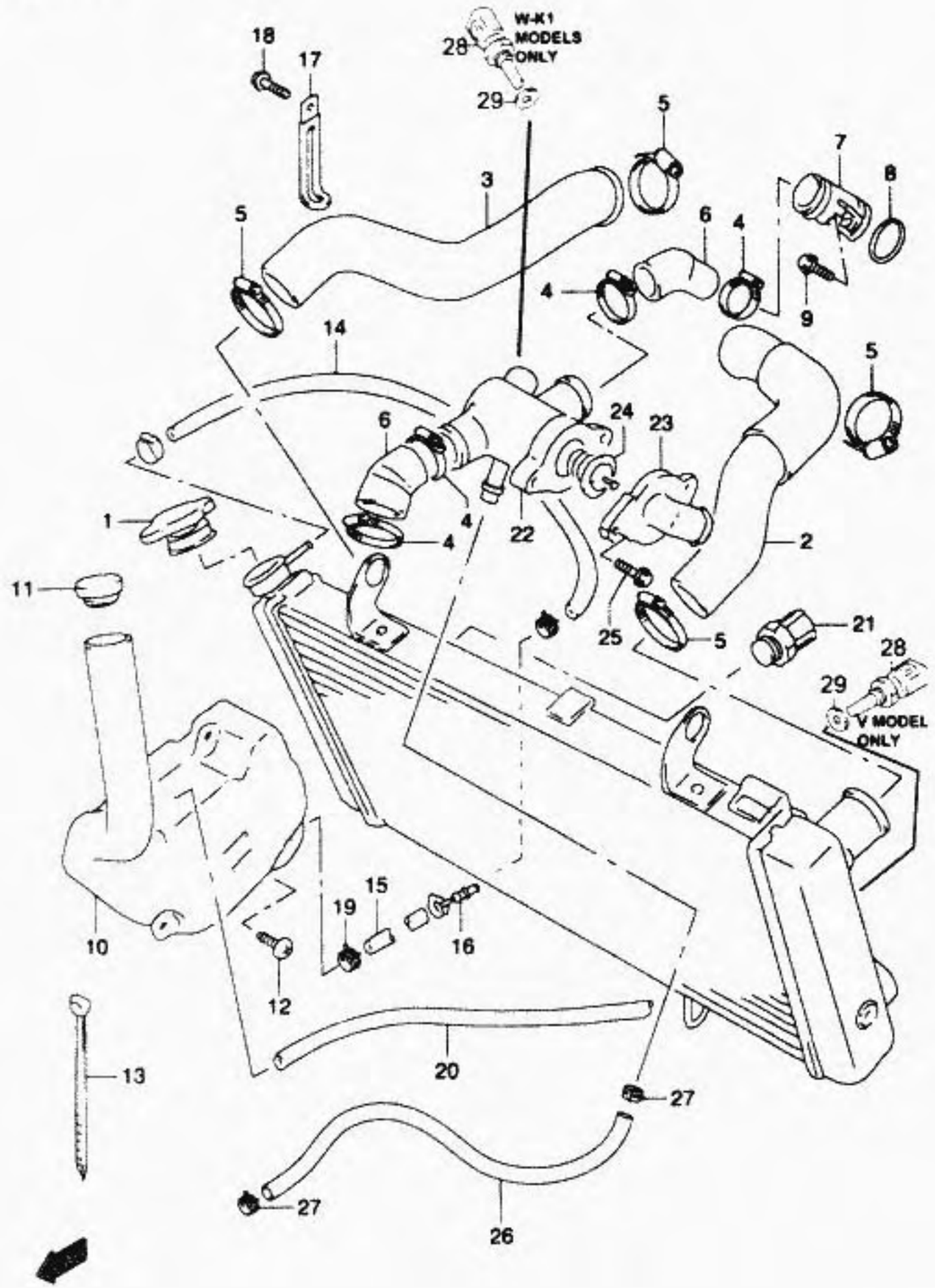

FIG.17 (D- 4) RADIATOR HOSE

REF.NO.	PART NO.	DESCRIPTION	QTY.	REMARKS
1-1	17730-12C01	CAP, RADIATOR	1	MODEL V/W
1-2	17730-12C20	CAP, RADIATOR	1	MODEL X/Y/K1
2	17851-02F00	HOSE, RADIATOR INLET	1	
3-1	17852-02F00	HOSE, RADIATOR OUTLET	1	MODEL V
3-2	17852-02F10	HOSE, RADIATOR OUTLET	1	MODEL W/X/Y/K1
4	09402-28511	CLAMP	4	
5	09402-38511	CLAMP	4	
6	17853-02F00	HOSE, CONNECTOR INLET	2	
7-1	17890-02F00	UNION, CONNECTOR HOSE	2	MODEL V
7-2	17890-02F00	UNION, CONNECTOR HOSE REAR	1	MODEL W/X/Y/K1
7-3	17890-02F10	UNION, CONNECTOR HOSE FRONT	1	MODEL W/X/Y/K1
8	09280-18009	O RING	2	
9-1	01550-06163	BOLT	2	MODEL V
9-2	07130-06163	BOLT	2	MODEL W ~E.NO.111960
9-3	07130-06123	BOLT	2	MODEL W E.NO.111961~
9-4	07130-06123	BOLT	2	MODEL X/Y/K1
10	17910-02F00	TANK ASSY, RESERVOIR	1	
11	17932-12C00	CAP	1	
12	09136-05034	SCREW	2	
13	09407-17401	CLAMP	1	
14	09352-50901-600	HOSE, INLET NO.1	1	L:600→270
15	09352-50901-600	HOSE, INLET NO.2	1	L:600→180
16	09364-06005	UNION	1	
17	09404-06432	CLAMP	1	
18	03541-05083	SCREW	1	
19	09401-08411	CLIP	4	
20-1	09352-50901-600	HOSE (5X9X600)	1	MODEL V,L:600→560
20-2	09352-50901-00B	HOSE (5X9X2000)	1	MODEL W/X/Y/K1,L:2000→680

FIG.16

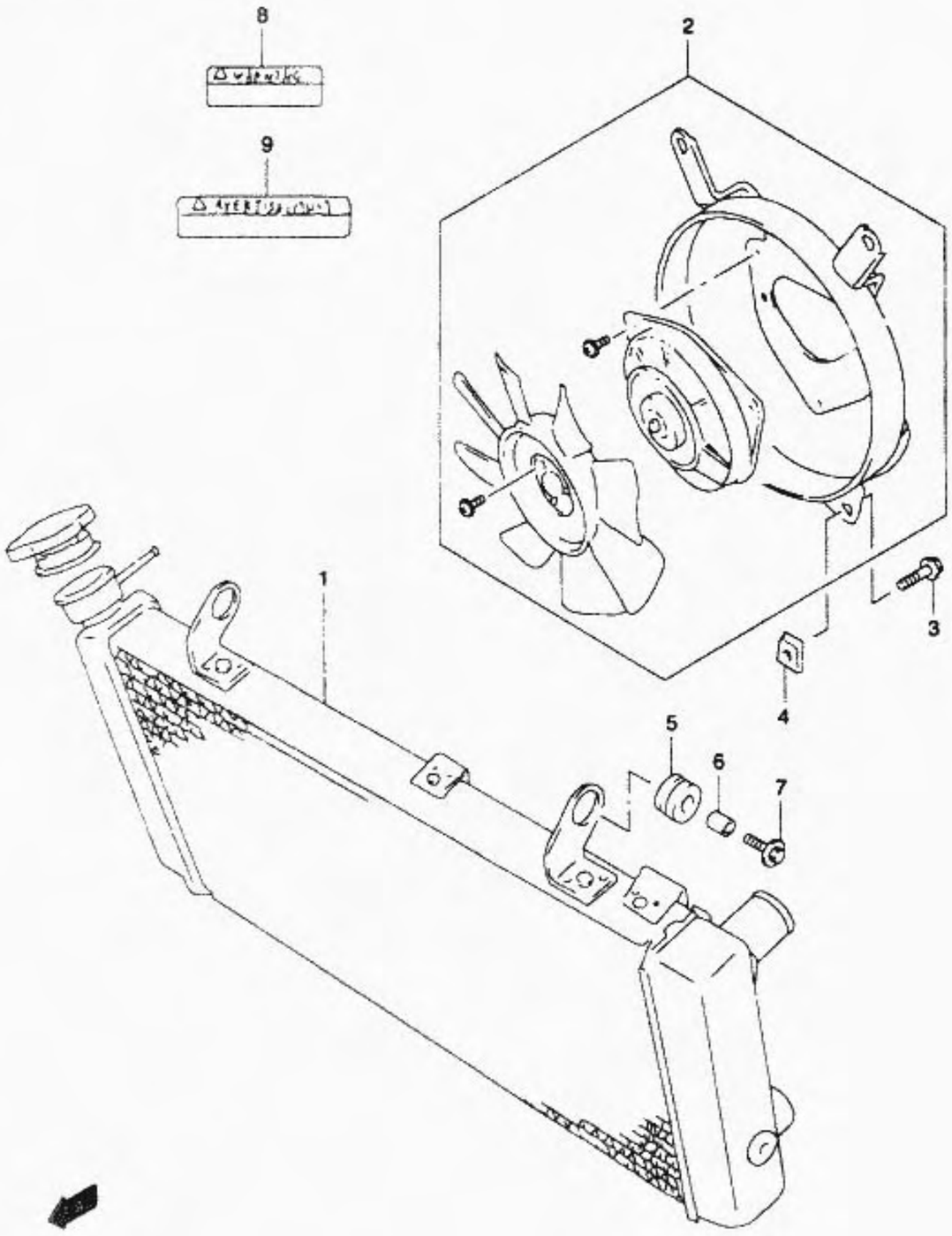

FIG.16 (D- 3) RADIATOR

REF.NO.	PART NO.	DESCRIPTION	QTY.	REMARKS
1-1	17710-02F00	RADIATOR ASSY, WATER	1	MODEL V
1-2	17710-02F10	RADIATOR ASSY, WATER	1	MODEL W/X/Y/K1
2	17800-02F00	FAN ASSY	1	
3	01550-06103	BOLT	3	
4-1	17762-39A00	NUT, FAN ASSY	3	MODEL V/W
4-2	09148-06015	NUT, FAN ASSY	3	MODEL X/Y/K1
5	09320-10042	CUSHION	3	
6	09180-06290	SPACER	3	
7-1	09118-06097	BOLT (6X20)	3	MODEL V
7-2	09118-06097	BOLT (6X20)	2	MODEL W/X/Y/K1
8	17991-02F00	LABEL, COOLING FAN	1	
9	17991-02F10	LABEL, COOLING FAN	1	E28

FIG.15

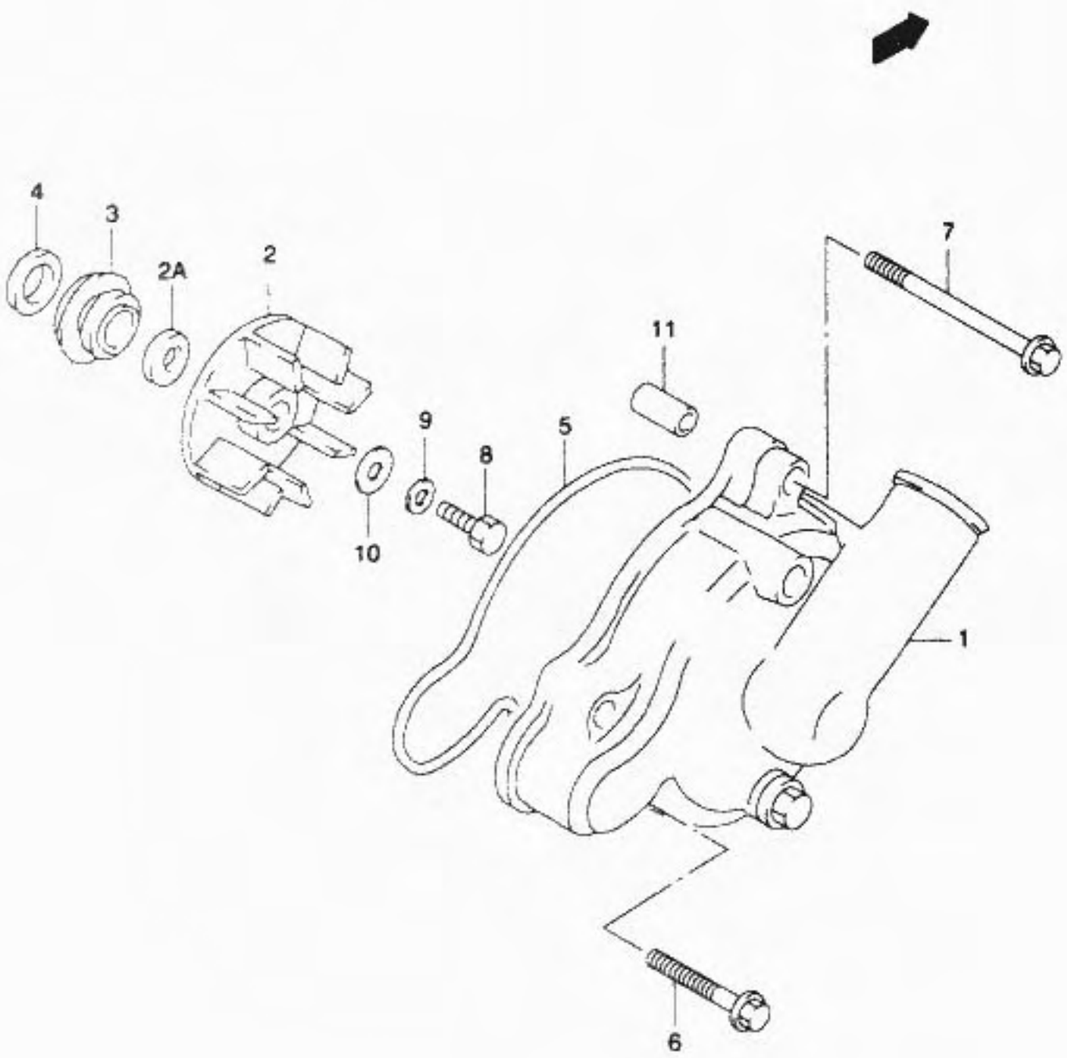

FIG.15 (D- 2) WATER PUMP

REF.NO.	PART NO.	DESCRIPTION	QTY.	REMARKS
1-1	17410-02F00	CASE, WATER PUMP	1	MODEL V
1-2	17410-02F10	CASE, WATER PUMP	1	MODEL W/X/Y/K1
2	17491-02F00	IMPELLER	1	
2A	17533-02F00	WASHER, IMPELLER	1	
3-1	17470-02F00	SEAL, MECHANICAL	1	MODEL V
3-2	17470-02F10	SEAL, MECHANICAL	1	MODEL W/X/Y/K1
4	17461-02F00	OIL SEAL	1	
5	17435-02F00	O RING	1	
6	01547-06307	SCREW	2	
7	01547-06557	BOLT	3	
8-1	09100-06099	BOLT (6X13)	1	-E.NO.111570
8-2	09100-06162	BOLT (6X13)	1	E.NO.111571-
9	09164-06006	LOCK WASHER	1	
10	09168-06025	GASKET	1	
11	04211-09149	PIN	1	

FIG.14

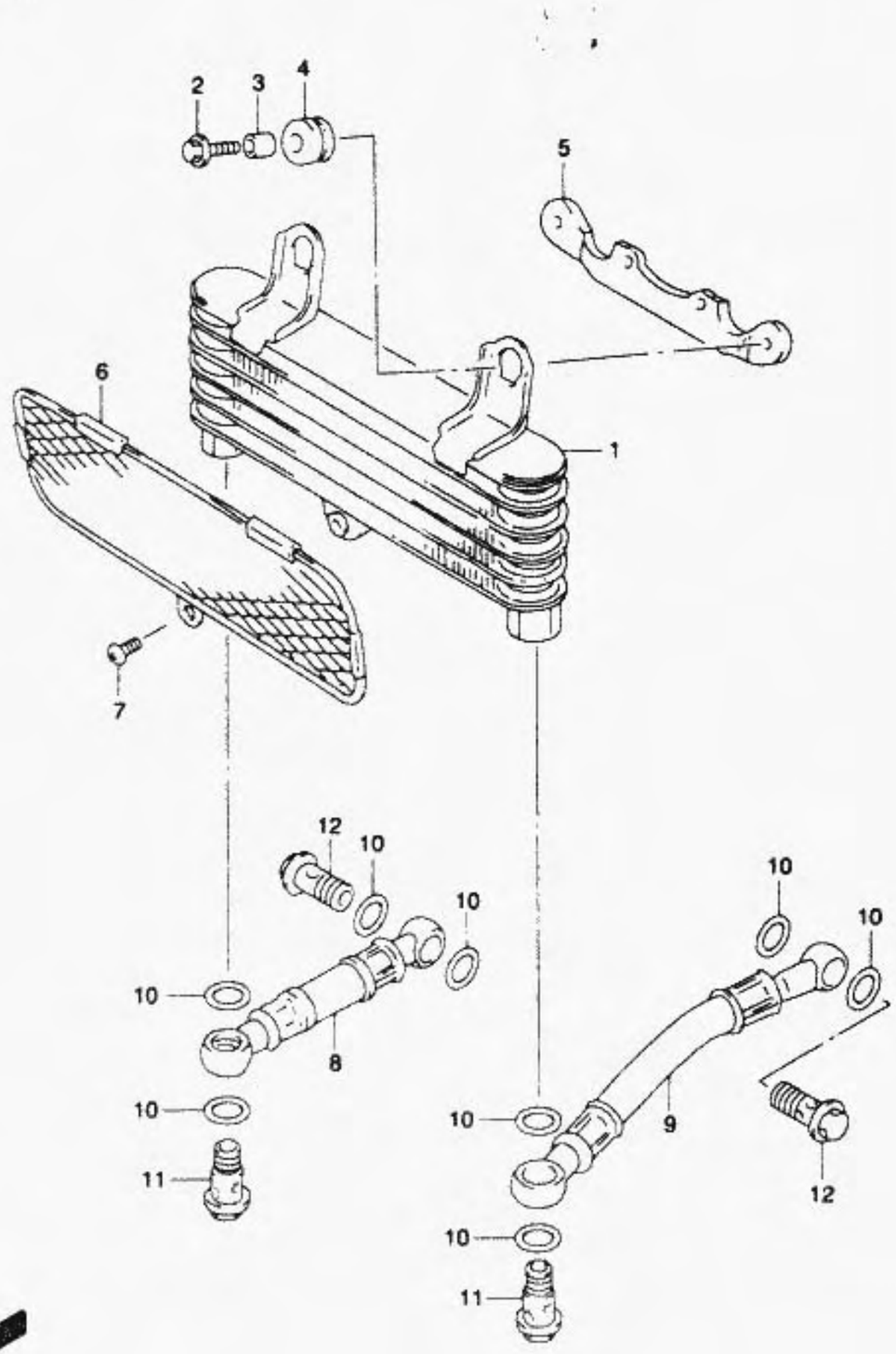

FIG.14 (C-14) OIL COOLER

REF.NO.	PART NO.	DESCRIPTION	QTY.	REMARKS
1	16600-02F00	COOLER ASSY, OIL	1	
2-1	09116-06143	BOLT	2	MODEL V/W/X
2-2	09116-06115	BOLT	2	MODEL Y/K1
3	09180-06310	SPACER (6.5X10X10)	2	
4	09320-10015	CUSHION	2	
5	16620-02F00	BRACKET, OIL COOLER	1	
6	16650-02F00	GUARD, OIL COOLER	1	
7	02142-05103	BOLT	1	
8	16460-02F00	HOSE, OIL COOLER,RH	1	
9	16470-02F00	HOSE, OIL COOLER,LH	1	
10	09168-14011	GASKET	8	
11	09360-12006	BOLT, UNION	2	
12	09360-14012	BOLT	2	

FIG.13

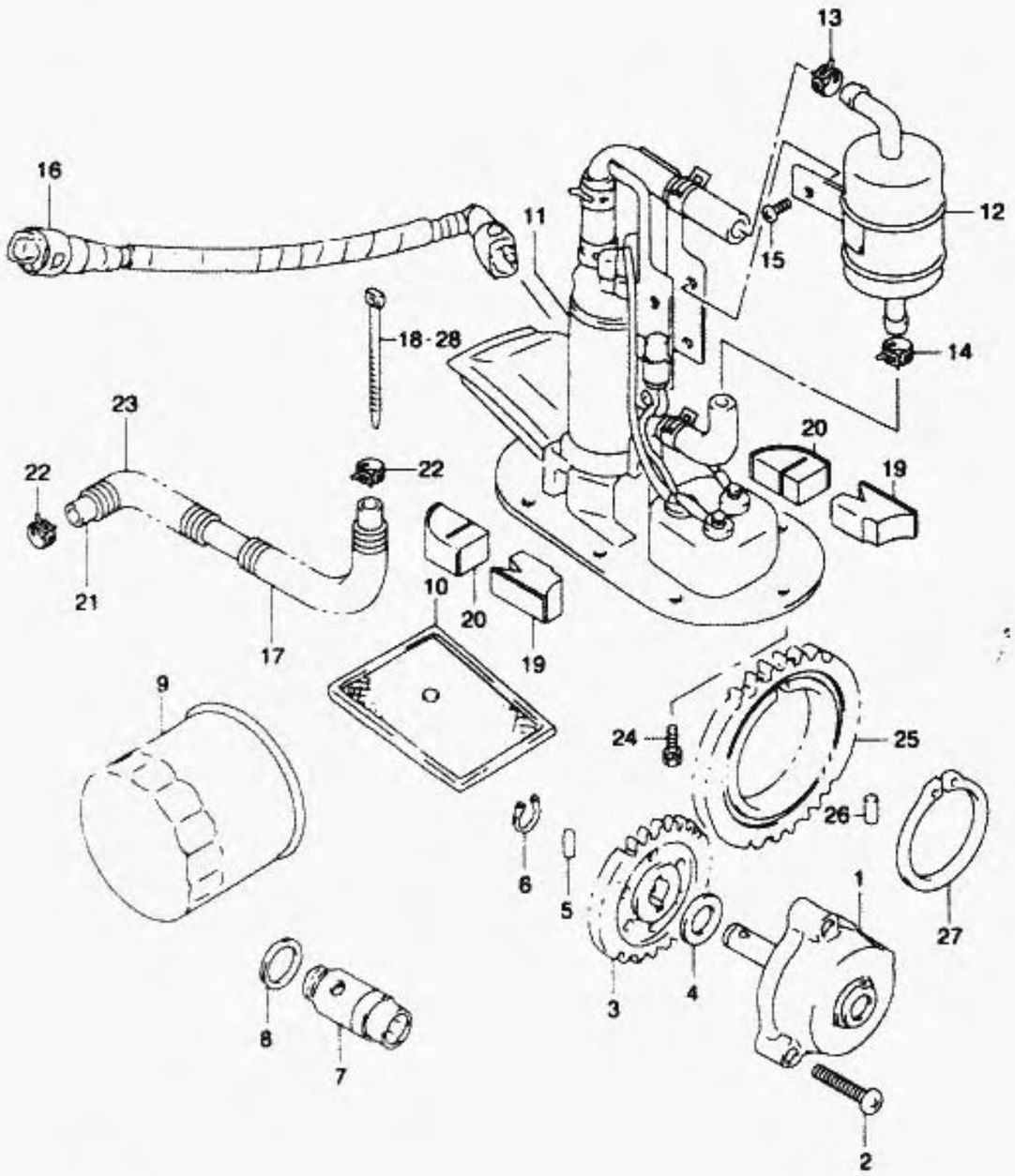

FIG.13 (C-13) OIL PUMP / FUEL PUMP

REF.NO.	PART NO.	DESCRIPTION	QTY.	REMARKS
1-1	16400-02F00	PUMP ASSY, ENGINE OIL	1	MODEL V
1-2	16400-02FA0	PUMP ASSY, ENGINE OIL	1	MODEL W/X
1-3	16400-02FB0	PUMP ASSY, ENGINE OIL	1	MODEL Y/K1
2	02112-06253	SCREW	3	
3	16331-02F00	GEAR, OIL PUMP DRIVEN	1	
4	09181-10158	WASHER	1	
5	09261-04009	PIN	1	
6	08331-31106	CIRCLIP	1	
7	16440-33E00	VALVE ASSY, OIL RELIEF	1	
8	09168-16002	GASKET	1	
9	16510-34E00	FILTER ASSY, ENGINE OIL	1	
10	16520-32E00	STRAINER, ENGINE OIL	1	
11	15100-02F00	PUMP ASSY, FUEL	1	
12	15410-02F10	.FILTER, FUEL	1	
13	09401-13410	.CLIP	1	
14	09401-13410	.CLIP	1	
15	02112-34063	.SCREW	2	
16	15810-02F00	HOSE, FUEL	1	
17	15819-02F00	PROTECTOR	1	
18	09407-08401	CLAMP	2	
19	15111-02F00	SPACER, FUEL PUMP NO.1	2	
20	15112-02F00	SPACER, FUEL PUMP NO.2	2	
21	09355-54115-600	HOSE	1	L:600→360
22-1	09401-10409	CLIP	2	MODEL V
22-2	09401-11411	CLIP	2	MODEL W/X/Y/K1
23	09440-13037	PROTECTOR	1	
24	15211-02F00	BOLT	8	
25	16321-02F00	GEAR, OIL PUMP DRIVE	1	
26	09261-06002	PIN	1	
27	08331-31506	CIRCLIP	1	
28	09407-14403	CLAMP, FUEL PUMP WIRE	1	

FIG.12

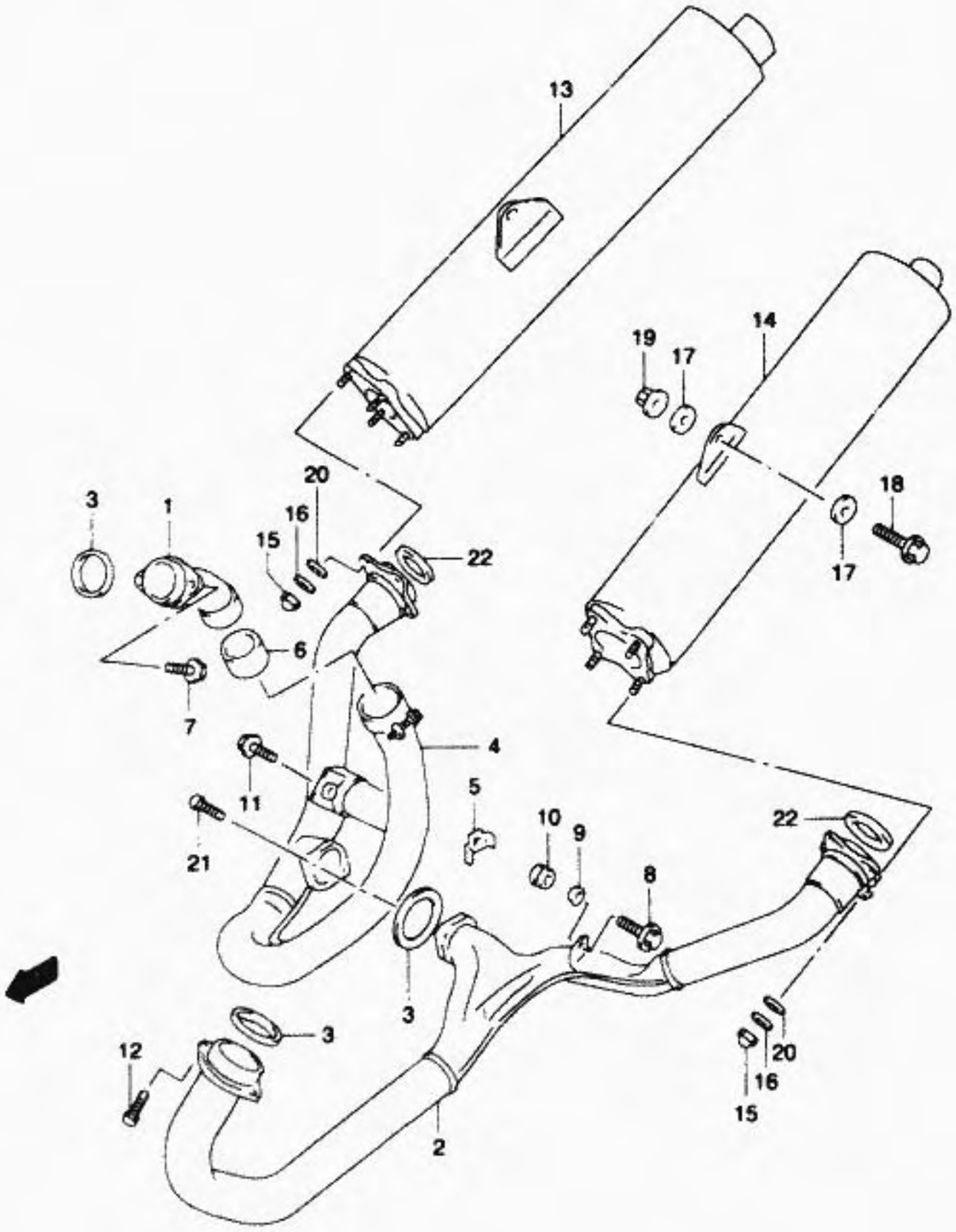

FIG.12 (C-12) MUFFLER

REF.NO.	PART NO.	DESCRIPTION	QTY.	REMARKS
1	14150-02F00	PIPE, EXHAUST RH	1	
2	14160-02F00	PIPE, EXHAUST LH	1	
3	14181-31D00	GASKET	3	
4	14210-02F00	PIPE, EXHAUST JOINT	1	
5	14414-02F00	NUT, EXHAUST SUPPORT	1	
6	14771-02F00	CONNECTOR	1	
7	01550-08403	BOLT	2	
8	09118-08152	BOLT	2	
9	09180-08152	SPACER	2	
10	09320-12048	CUSHION	2	
11	01550-08257	BOLT	2	
12-1	07130-08257	BOLT	2	MODEL V
12-2	09106-08104	BOLT (8X25,	2	MODEL W/X/Y/K1
13	14310-02F00-H01	BODY, MUFFLER RH	1	
14	14340-02F00-H01	BODY, MUFFLER LH	1	
15-1	09159-08101	NUT	8	MODEL V/W/X
15-2	09159-08115	NUT	8	MODEL Y/K1
16	09160-08114	WASHER	8	
17	09160-08131	WASHER	4	
18	01550-08357	BOLT	2	
19	08361-25088	NUT	2	
20	09280-08012	O RING	8	
21	14118-73G01	BOLT, EXHAUST JOINT	2	
22	14181-02F00	GASKET, MUFFLER JOINT	2	

FIG.11

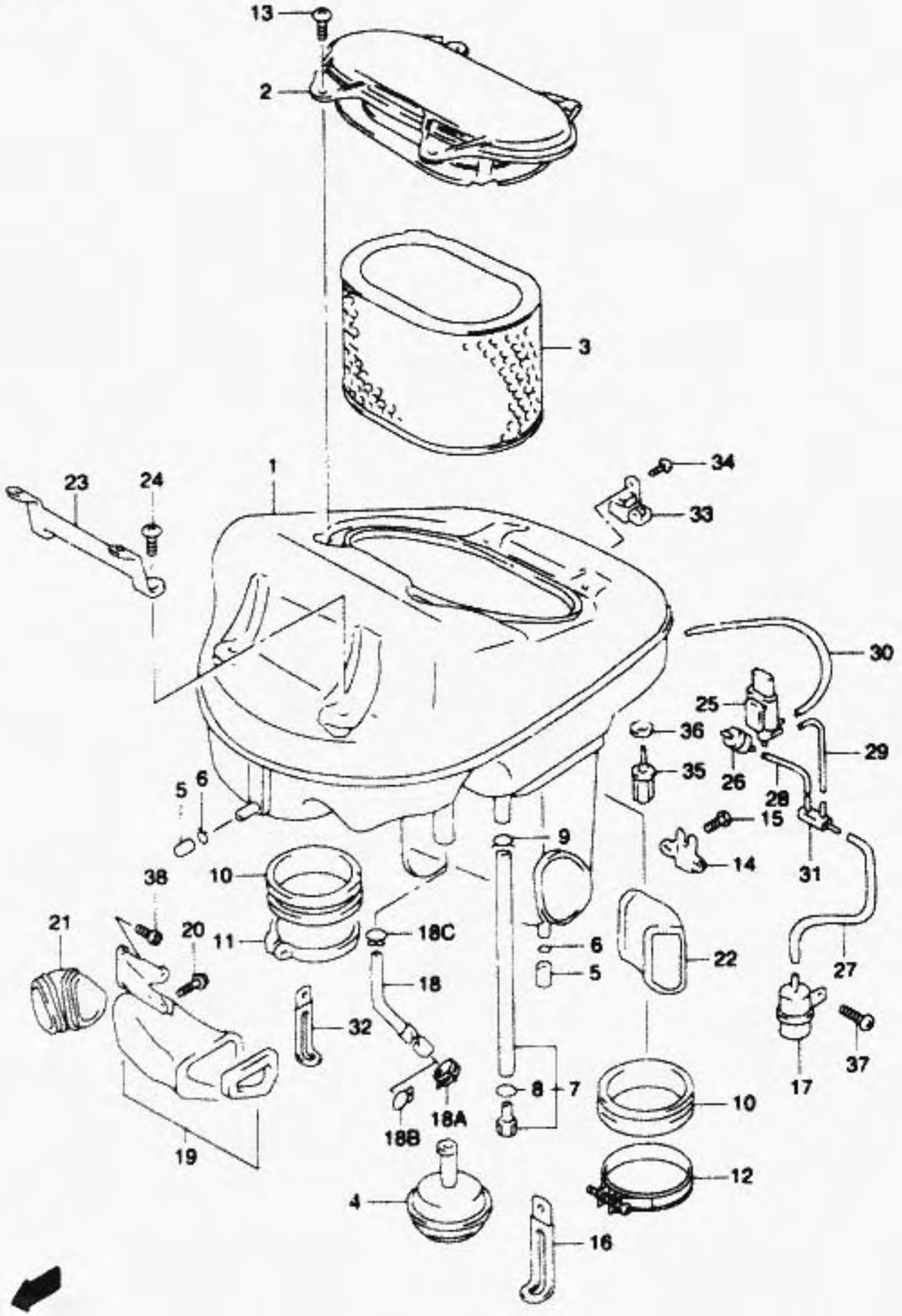

FIG.11 (C-11) AIR CLEANER

REF.NO.	PART NO.	DESCRIPTION	QTY.	REMARKS
25	18115-70G10	VALVE ASSY, SOLENOID	1	
26	95569-78040	VALVE, CHECK	1	
27	09355-40805-600	HOSE	1	L:600→260
28	09355-40805-600	HOSE	1	L:600→40
29	09355-40805-600	HOSE	1	L:600→70
30	09355-40805-600	HOSE	1	L:600→380
31	09367-04009	3 WAY	1	
32	09404-06433	CLAMP	1	MODEL V/W
33	15620-02F00	SENSOR, BOOST	1	
34	02142-05103	BOLT	1	
35	13650-61B00	SENSOR, AIR TEMPERATURE	1	
36	09168-12017	GASKET (12X17X1.0)	1	
37	02142-05123	BOLT	1	
38	01580-06163	BOLT	2	

FIG.11

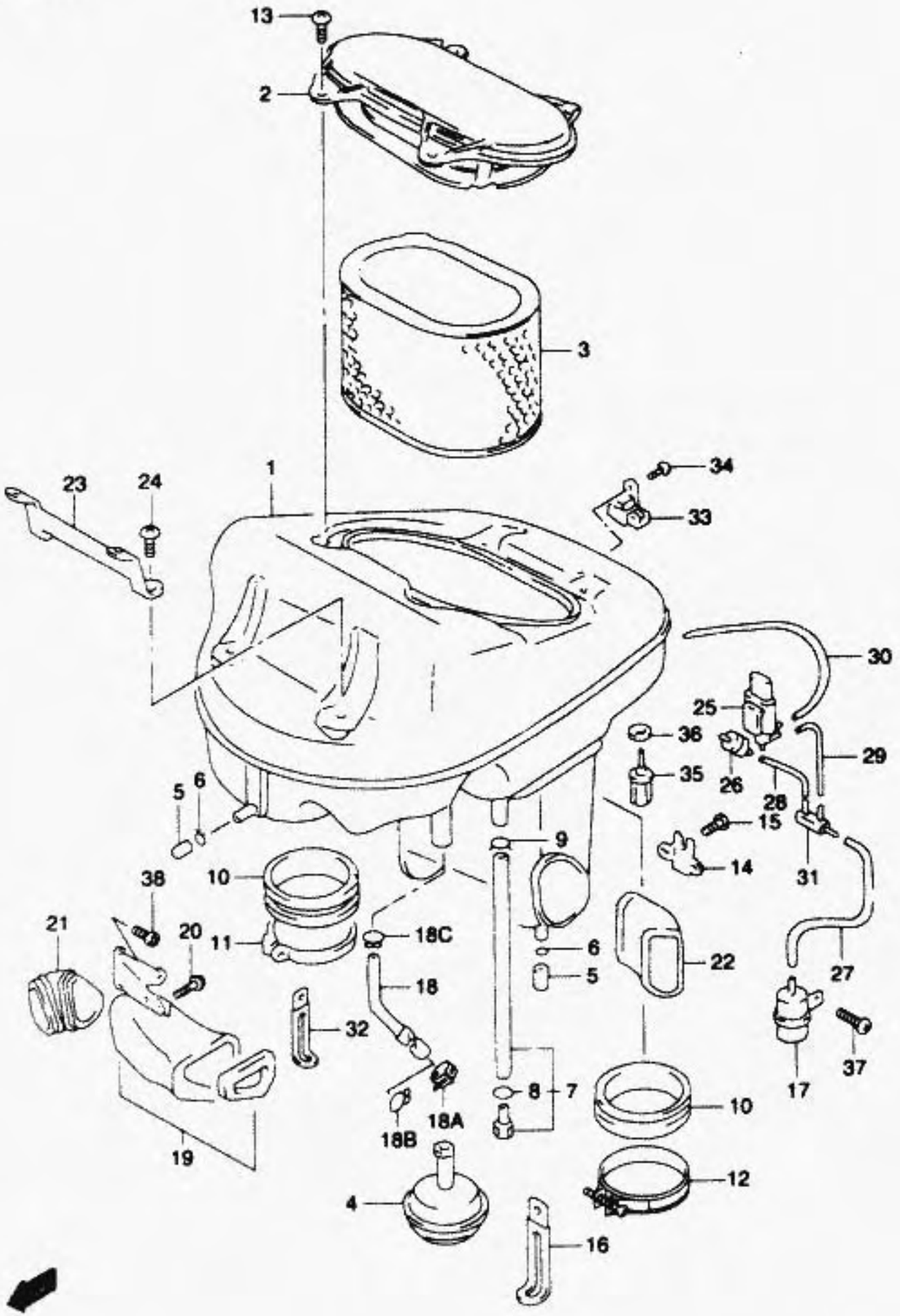

FIG.11 (C-10) AIR CLEANER

REF.NO.	PART NO.	DESCRIPTION	QTY.	REMARKS
1-1	13700-02F00	CLEANER ASSY, AIR	1	MODEL V/W/X
1-2	13700-02F20	CLEANER ASSY, AIR	1	MODEL Y/K1
2	13740-02F00	.CAP	1	
3	13780-02F00	.FILTER	1	
4	13895-02F00	.DIAPHRAGM	1	
5	13859-41B10	.PLUG, BREATHER	2	
6	09401-14301	.CLIP	2	
7	13870-11218	.TUBE, DRAIN	1	
8	09401-11101	..CLIP	1	
9	09401-13409	.CLIP	1	
10	13881-02F00	.TUBE, OUTLET	2	
11	13826-02F00	.CLAMP	1	
12	13826-02F00	.CLAMP	1	
13	02142-05123	.SCREW	4	
14	18116-02F00	.BRACKET, SOLENOID VALVE	1	
15	02142-05103	.SCREW	2	
16	09404-06432	.CLAMP	1	
17	13715-02F00	CHAMBER, VACUUM	1	
18-1	13851-02F00	TUBE, BREATHER	1	MODEL V
18-2	13851-02F10	TUBE, BREATHER	1	MODEL W/X/Y/K1
18A	09402-28511	CLAMP	1	MDOEL V
18B	09401-15301	CLIP	1	MODEL W/X/Y/K1
18C	09401-14403	CLIP	1	
19	13890-02F00	DUCT AIR CLEANER	1	
20	01580-06123	.BOLT	2	
21	13892-02F00	BOOT, AIR INLET RH	1	
22	13893-02F00	BOOT, AIR INLET LH	1	
23	13980-02F00	.BRACKET	1	
24	02142-06123	BOLT	4	

21 TL1000S K1 E3 E28

FIG.10A

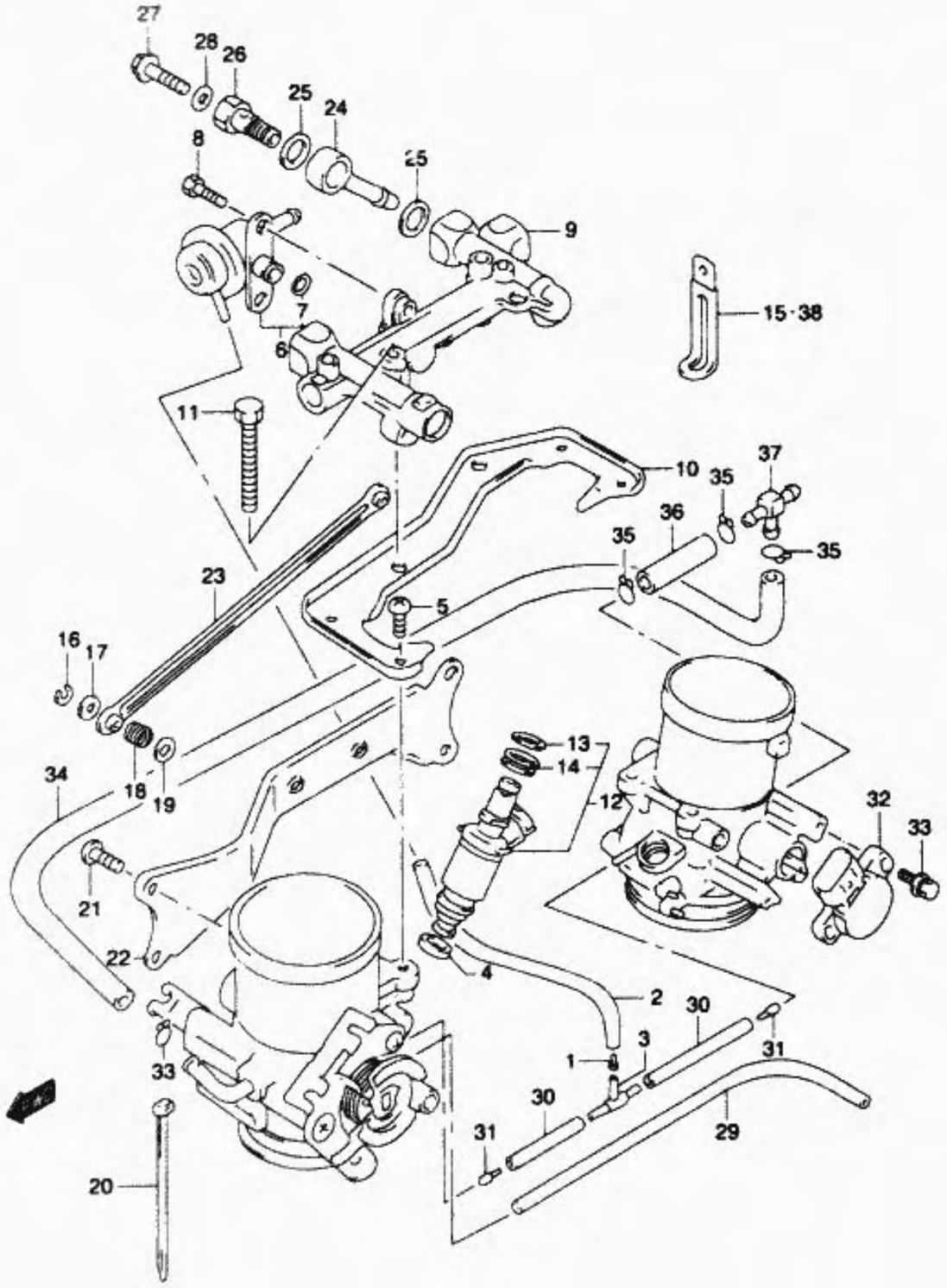

FIG.10A(C-9) THROTTLE BODY FITTING PARTS

REF.NO.	PART NO.	DESCRIPTION	QTY.	REMARKS
29-1	13681-02F00	HOSE	1	MODEL V/W/X
29-2	13683-10F60	HOSE	1	MODEL Y/K1
30-1	13682-02F00	HOSE	2	MODEL V/W/X/Y
30-2	13683-10F60	HOSE	2	MODEL K1
31	09493-20015	JET	2	
32	13580-02F00	SENSOR ASSY, THROTTLE	1	
33	13605-02F00	BOLT	2	
34	13684-02F10	HOSE	1	E33
35	09401-10410	CLIP	4	E33
36-1	13684-02F00	HOSE	1	MODEL V/W/X E33
36-2	13684-02F10	HOSE	1	MODEL Y/K1 E33
37	13685-48B00	NIPPLE	1	E33
38	09404-06432	PLATE	1	E33

FIG.10A

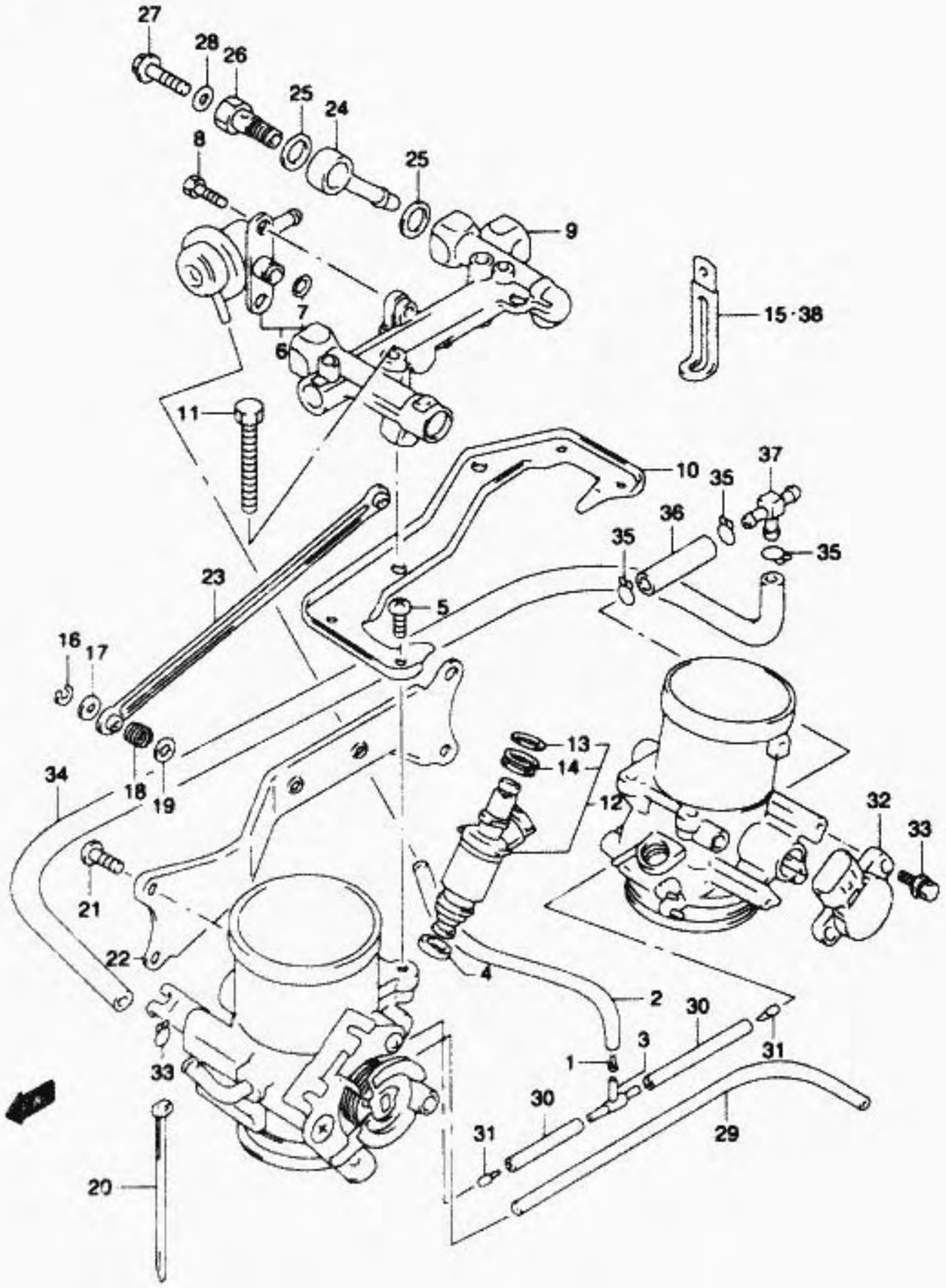

FIG.10A(C- 8) THROTTLE BODY FITTING PARTS

REF.NO.	PART NO.	DESCRIPTION	QTY.	REMARKS
1	09493-50006	JET	1	
2-1	13682-02F10	HOSE	1	MODEL V/W/X
2-2	13683-10F60	HOSE4	1	MODEL Y/K1
3	09367-04007	NIPPLE	1	
4	09320-08062	CUSHION	2	
5	13602-06148	SCREW	4	
6-1	15610-02F00	REGULATOR, FUEL PRESSURE	1	MODEL V/W
6-2	15610-02F10	REGULATOR, FUEL PRESSURE	1	MODEL X/Y/K1
7	15710-09300	.O RING	1	
8	13612-02F00	BOLT	2	
9	15731-02F00	PIPE ASSY, DELIVERY	1	
10	13625-02F00	PLATE	1	
11	13612-02F10	BOLT	2	
12-1	15710-02F00	INJECTOR ASSY	2	MODEL V
12-2	15710-02FA0	INJECTOR ASSY	2	MODEL W/X/Y/K1
13-1	15710-09300	.O RING	2	MODEL V
13-2	15717-02F00	.O RING	2	MODEL W/X/Y/K1
14	15720-09300	.GROMMET	2	
15	09404-06432	PLATE	2	
16	13617-44500	E RING	2	
17	13615-02F10	RING	2	
18-1	13543-02F00	SPRING	2	MODEL V/W/X/Y
18-2	13546-02FA0	SPRING	2	MODEL K1
19	13615-02F20	RING	2	
20	13671-02F00	CLIP	1	
21	13602-02F00	SCREW	4	
22	13626-02F00	PLATE	1	
23	13540-02F00	LEVER ASSY	1	
24	15815-02F00	CONNECTOR	1	
25	13925-85553	GASKET	2	
26	13923-85551	BOLT	1	
27	17568-50F00	PLUG	1	
28	09168-06023	GASKET	1	

19 TL1000S K1 E3 E28

FIG.10

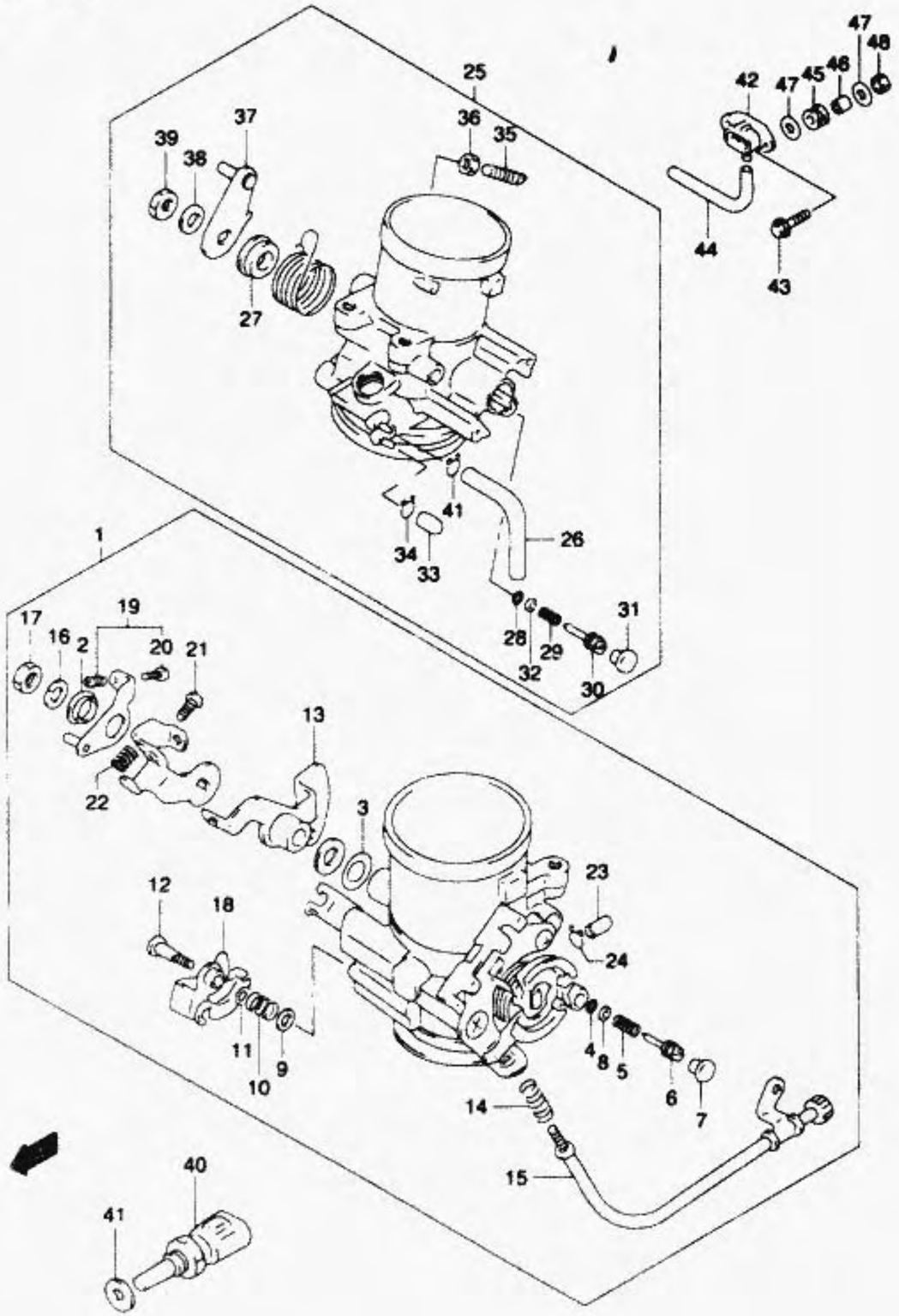

FIG.10 (C- 7) THROTTLE BODY

REF.NO.	PART NO.	DESCRIPTION	QTY.	REMARKS
25-1	13420-02F00	BODY ASSY, THROTTLE REAR	1	MODEL V
25-2	13420-02F20	BODY ASSY, THROTTLE REAR	1	MODEL V E33
25-3	13402-02F50	BODY ASSY, THROTTLE REAR	1	MODEL W/X/Y/K1
25-4	13402-02F60	BODY ASSY, THROTTLE REAR	1	MODEL W/X/Y/K1 E33
26-1	13683-02F00	.HOSE	1	MODEL V/W/X
26-2	13683-10F60	.HOSE	1	MODEL Y/K1
27-1	13615-02F00	.RING	1	MODEL V/W/X/Y
27-2	13574-02FA0	.RING	1	MODEL K1
28	13295-29900	.O RING	1	
29	13494-09410	.SPRING	1	
30	13269-16700	.ADJUST SCREW	1	
31	13357-36A00	.PLUG	1	
32	13606-47A00	.WASHER	1	
33	13274-84000	.CAP	1	
34	09401-06101	.CLIP	2	
35-1	13267-02F00	.SCREW	1	MODEL V/W/X/Y
35-2	13605-47080	.SCREW	1	MODEL K1
36	13607-47070	.NUT	1	
37	13542-02F00	.LEVER ASSY	1	
38	95559-82140	.WASHER	1	
39	13607-37010	.NUT	1	
40	13650-51G10	SENSOR, WATER TEMPERATURE	1	
41	09168-12017	GASKET (12X17X1.0)	1	
42	18590-80C50	SENSOR, AIR PRESSURE	1	
43	01550-06253	BOLT	2	
44	09255-40805-600	HOSE	1	L:600→150
45	09320-10501	CUSHION	2	
46	09180-06310	SPACER	2	
47	09160-06077	WASHER	4	
48	08316-10063	NUT	2	

18 TL1000S K1 E3 E28

FIG.10

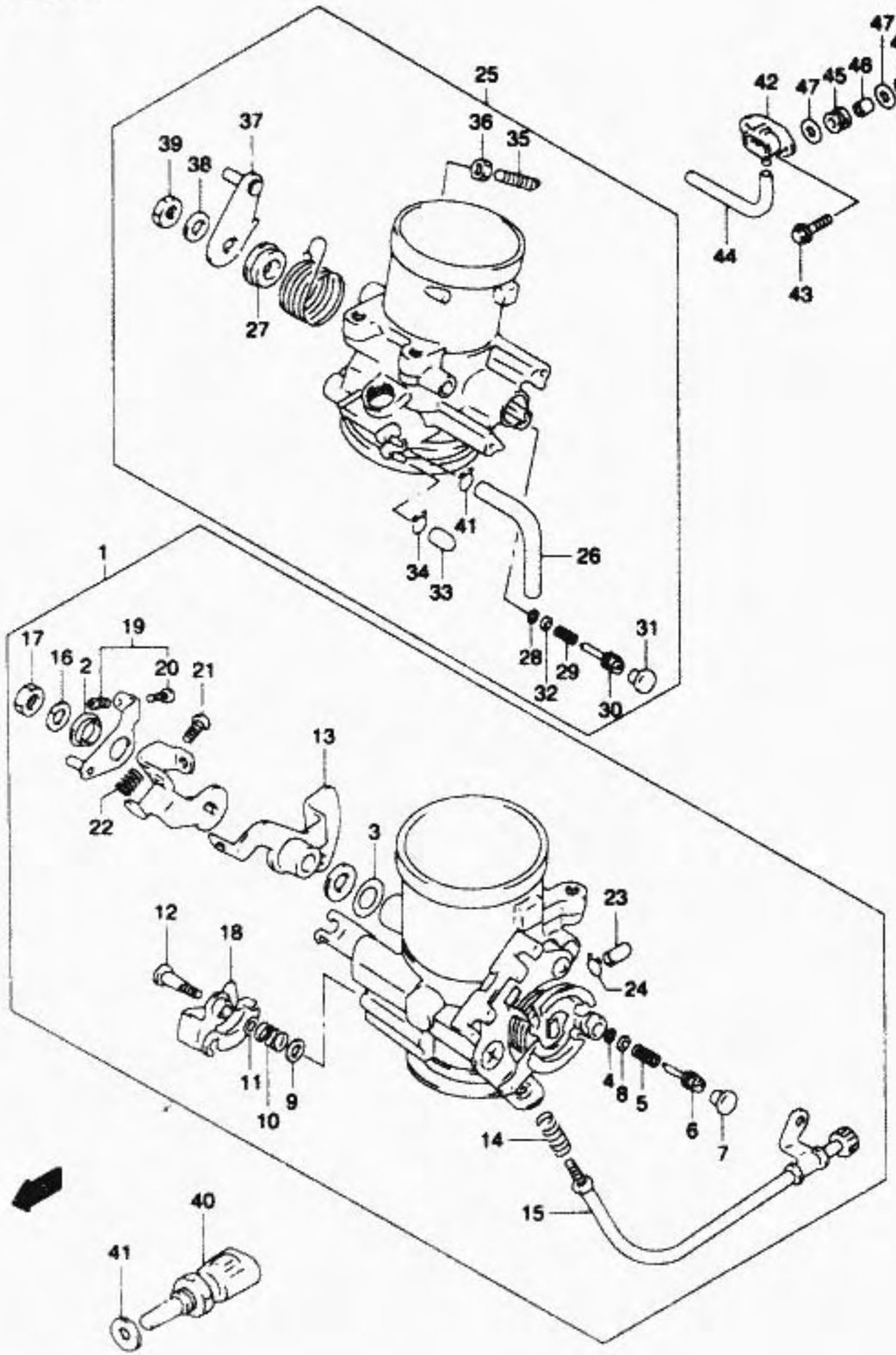

FIG.10 (C- 6) THROTTLE BODY

REF.NO.	PART NO.	DESCRIPTION	QTY.	REMARKS
1-1	13410-02F00	BODY ASSY, THROTTLE FRONT	1	MODEL V
1-2	13410-02F20	BODY ASSY, THROTTLE FRONT	1	MODEL V E33
1-3	13401-02F50	BODY ASSY, THROTTLE FRONT	1	MODEL W/X/Y/K1
1-4	13401-02F60	BODY ASSY, THROTTLE FRONT	1	MODEL W/X/Y/K1 E33
2	95569-82140	.RING	1	
3-1	13556-02F00	.PACKING	1	MODEL V/W/X/Y
3-2	13557-02FA0	.PACKING	1	MODEL K1
4	13295-29900	.O RING	1	
5	13494-09410	.SPRING	1	
6	13269-16700	.ADJUST SCREW	1	
7	13357-36A00	.PLUG	1	
8	13606-47A00	.WASHER	1	
9	13606-38800	.WASHER	1	
10	13426-02F00	.SPRING	1	
11	13424-02F00	.RING	1	
12	13548-20E20	.SCREW	1	
13	13541-02F00	.LEVER ASSY	1	
14	13271-93011	.SPRING	1	
15	13270-02F00	.ADJUSTER ASSY	1	
16	95559-82140	.WASHER	1	
17	13607-37010	.NUT	1	
18	13421-02F00	.LEVER ASSY	1	
19	13601-60AT0	.SCREW SET, ADJUST	1	
20	02112-04203	..SCREW	1	
21	13602-42E10	.SCREW	1	
22	13375-60A00	.SPRING	1	
23	13274-84000	.CAP	1	
24	09401-06101	.CLIP	1	

FIG.9

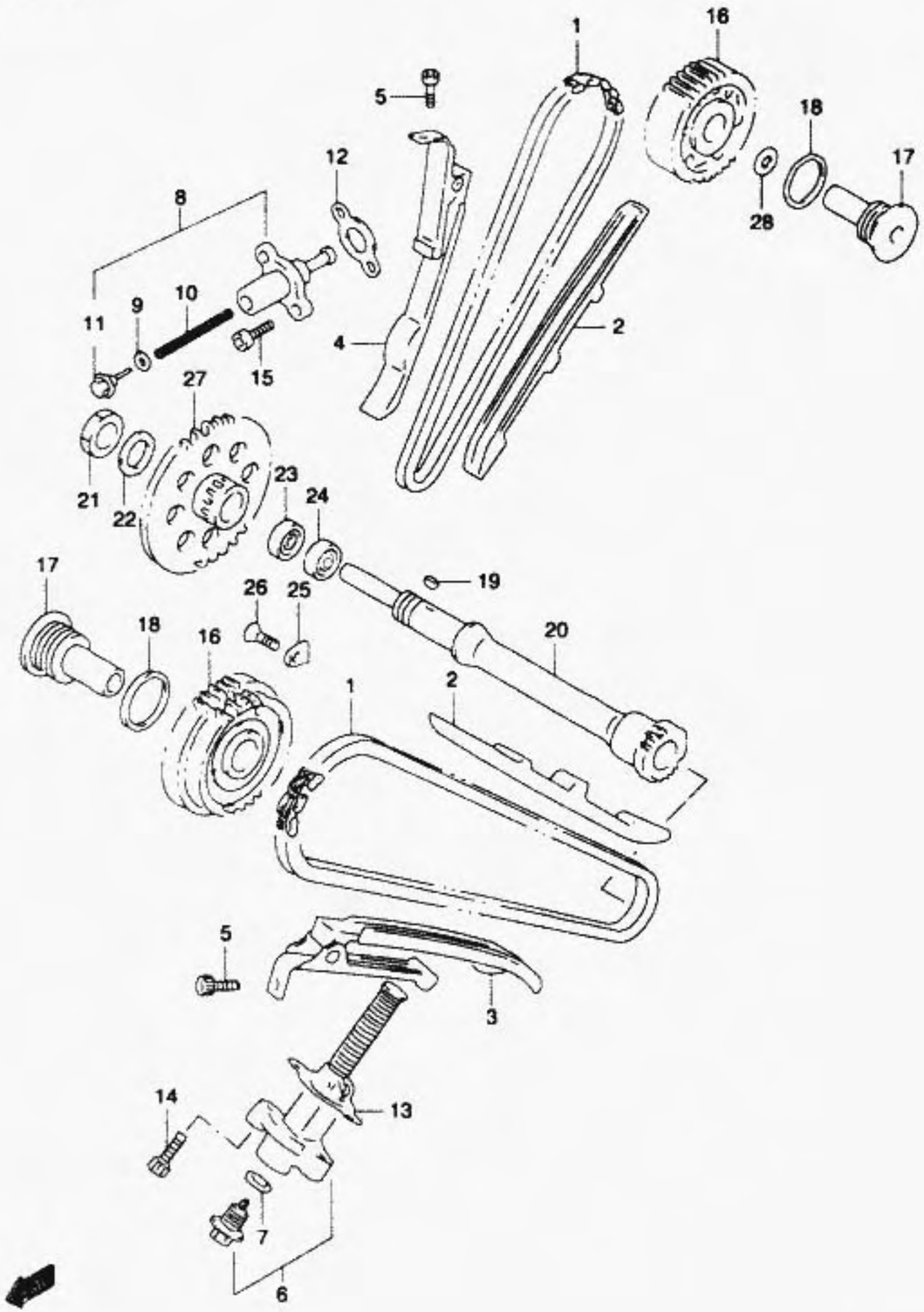

FIG.9 (C- 5) CAM CHAIN

REF.NO.	PART NO.	DESCRIPTION	QTY.	REMARKS
25	24741-20A00	RETAINER, BEARING	1	
26	02122-06123	SCREW	1	
27-1	12731-02F00	SPROCKET, IDLER NO.1	1	MODEL V/W
27-2	12731-02F10	SPROCKET, IDLER NO.1	1	MODEL X/Y/K1
28-1	09181-15164	SHIM, CAM CHAIN IDLER NO.2	2	
28-2	09181-15166	SHIM, CAM CHAIN IDLER NO.2	2	
28-3	09181-15172	SHIM, CAM CHAIN IDLER NO.2	2	
28-4	09181-15176	SHIM, CAM CHAIN IDLER NO.2	2	
28-5	09181-15181	SHIM, CAM CHAIN IDLER NO.2	2	
28-6	09181-15182	SHIM, CAM CHAIN IDLER NO.2	2	

FIG.9

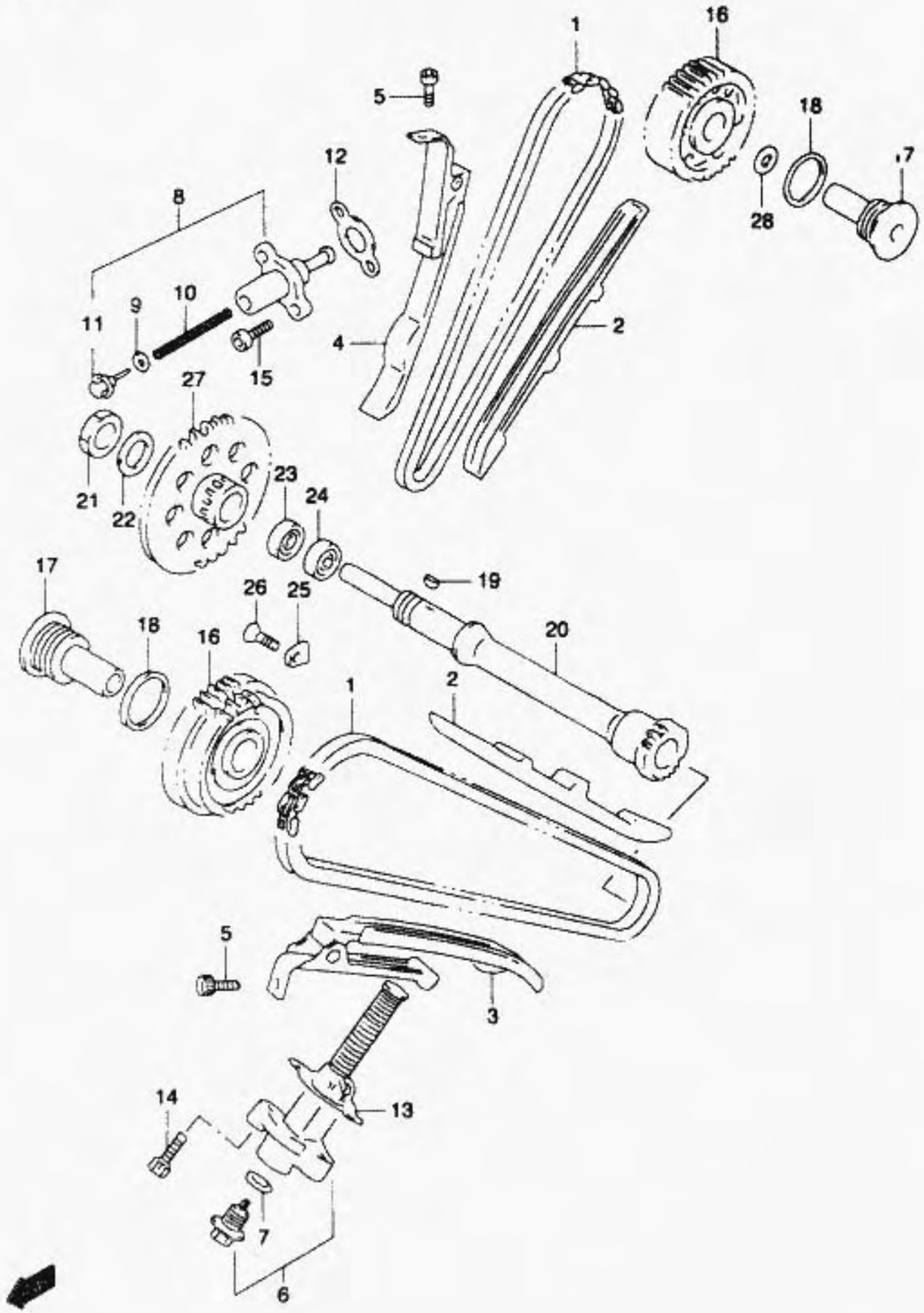

FIG.9 (C- 4) CAM CHAIN

REF.NO.	PART NO.	DESCRIPTION	QTY.	REMARKS
1	12760-02F00	CHAIN, CAM SHAFT DRIVE	2	
2	12771-02F00	GUIDE, CAM CHAIN	2	
3-1	12810-02F00	TENSIONER, FRONT CAM CHAIN	1	-E.NO.111570
3-2	12810-02F10	TENSIONER, FRONT CAM CHAIN	1	E.NO.111571-
4-1	12815-02F00	TENSIONER, REAR CAM CHAIN		-E.NO.111570
4-2	12815-02F10	TENSIONER, REAR CAM CHAIN	1	E.NO.111571-
5-1	07130-06163	BOLT	2	-E.NO.111570
5-2	07120-06123	BOLT	2	E.NO.111571-
6	12832-24A01	ADJUSTER ASSY, FRONT TENSIONER	1	
7	09168-12018	.GASKET	1	
8	12830-30A01	ADJUSTER ASSY, REAR TENSIONER	1	
9	12832-02A00	.O RING	1	
10	12833-30A01	.SPRING	1	
11	12834-02A00	.PLUG	1	
12	12837-19B10	GASKET	1	
13	12837-24A10	GASKET	1	
14	07130-06253	BOLT	2	
15	07130-06203	BOLT	2	
16-1	12750-02F00	GEAR, CAM CHAIN IDLER NO.2	2	MODEL V/W/X/Y -F.NO.Y2100073
16-2	12750-02F10	GEAR, CAM CHAIN IDLER NO.2	2	MODEL Y/K1 F.NO.2100074-
17	12755-02F01	SHAFT, IDLER NO.2	2	
18	09168-26001	GASKET	2	
19	09421-04004	KEY	1	
20	12716-02F00	SHAFT, IDLER	1	
21	09140-16005	NUT	1	
22	09181-16212	WASHER	1	
23	08113-63030	BEARING, R	1	
24-1	08113-60050	BEARING, L	1	-F.NO.T501-111997 E.NO.T501-112108-113971
24-2	09262-25123	BEARING, L	1	E.NO.T501-111998-112107 E.NO.T501-113972-

FIG.8

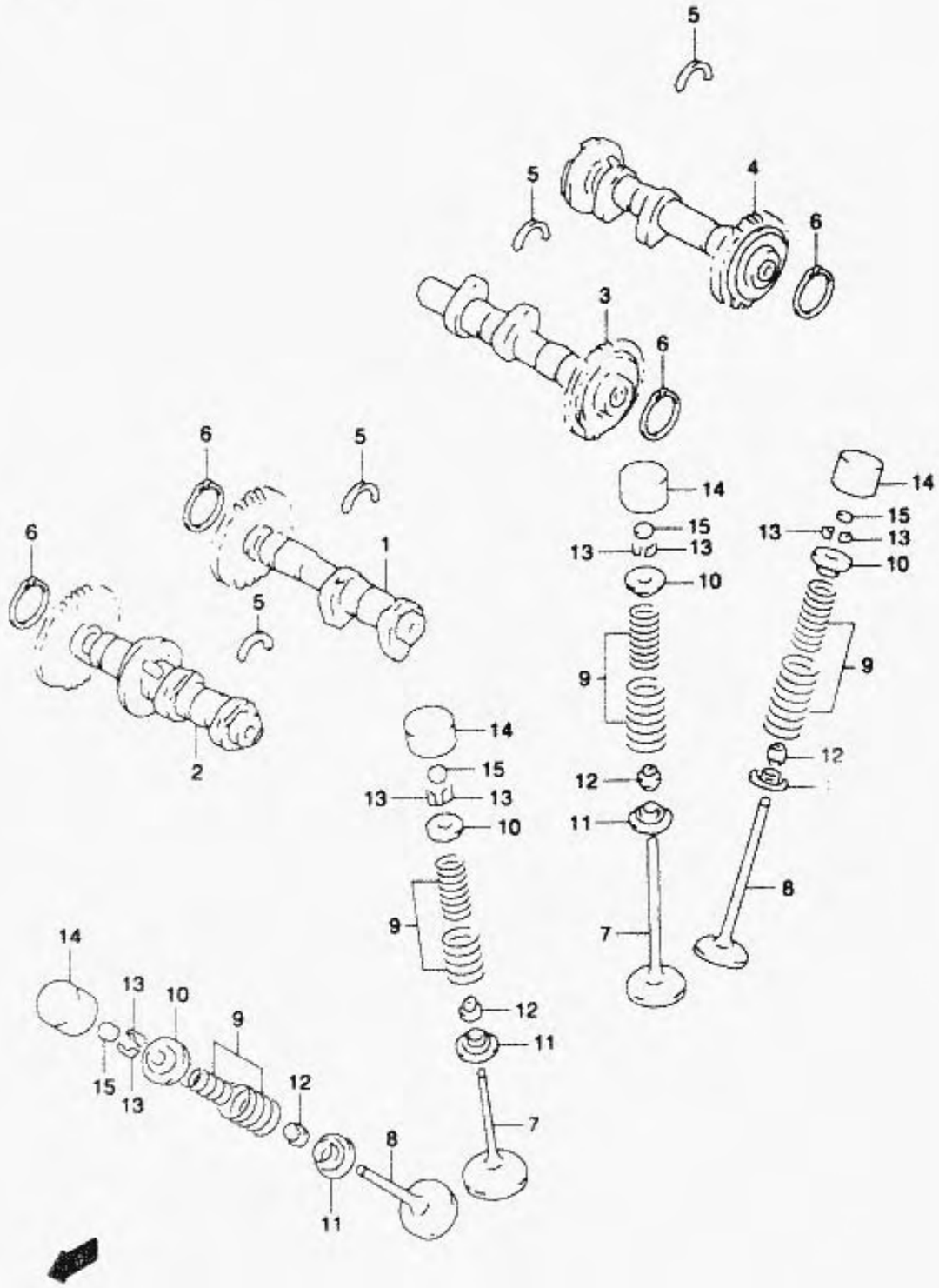

FIG.8 (C- 3) CAM SHAFT / VALVE

REF.NO.	PART NO.	DESCRIPTION	QTY.	REMARKS
15-1	12892-41C00-230	SHIM, TAPPET (T:2.30)	8	
15-2	12892-41C00-235	SHIM, TAPPET (T:2.35)	8	
15-3	12892-41C00-240	SHIM, TAPPET (T:2.40)	8	
15-4	12892-41C00-245	SHIM, TAPPET (T:2.45)	8	
15-5	12892-41C00-250	SHIM, TAPPET (T:2.50)	8	
15-6	12892-41C00-255	SHIM, TAPPET (T:2.55)	8	
15-7	12892-41C00-260	SHIM, TAPPET (T:2.60)	8	
15-8	12892-41C00-265	SHIM, TAPPET (T:2.65)	8	
15-9	12892-41C00-270	SHIM, TAPPET (T:2.70)	8	
15-10	12892-41C00-275	SHIM, TAPPET (T:2.75)	8	
15-11	12892-41C00-280	SHIM, TAPPET (T:2.80)	8	
15-12	12892-41C00-285	SHIM, TAPPET (T:2.85)	8	
15-13	12892-41C00-290	SHIM, TAPPET (T:2.90)	8	
15-14	12892-41C00-295	SHIM, TAPPET (T:2.95)	8	
15-15	12892-41C00-300	SHIM, TAPPET (T:3.00)	8	
15-16	12892-41C00-305	SHIM, TAPPET (T:3.05)	8	
15-17	12892-41C00-310	SHIM, TAPPET (T:3.10)	8	
15-18	12892-41C00-315	SHIM, TAPPET (T:3.15)	8	
15-19	12892-41C00-320	SHIM, TAPPET (T:3.20)	8	
15-20	12892-41C00-325	SHIM, TAPPET (T:3.25)	8	
15-21	12892-41C00-330	SHIM, TAPPET (T:3.30)	8	
15-22	12892-41C00-335	SHIM, TAPPET (T:3.35)	8	
15-23	12892-41C00-340	SHIM, TAPPET (T:3.40)	8	
15-24	12892-41C00-345	SHIM, TAPPET (T:3.45)	8	
15-25	12892-41C00-350	SHIM, TAPPET (T:3.50)	8	
16	12800-41810	SHIM SET, TAPPET INC.REF.NO.15-5~15-25 (5PCS.EACH) & NO.17	1	OPT NOT SHOWN
17	99000-69471	.CASE, TAPPET SHIM	1	OPT NOT SHOWN

FIG.8

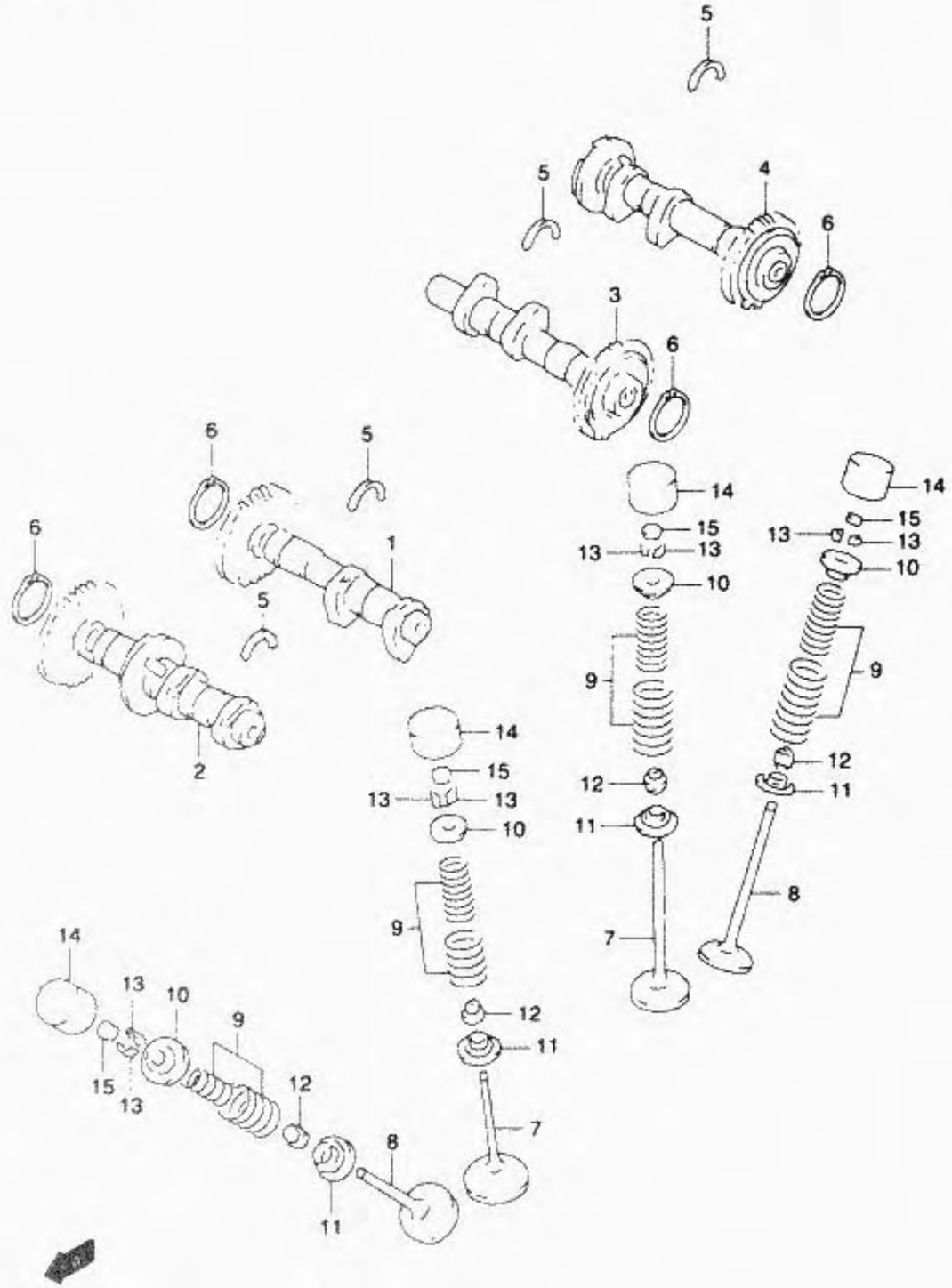

FIG.8 (C- 2) CAM SHAFT / VALVE

REF.NO.	PART NO.	DESCRIPTION	QTY.	REMARKS
1-1	12701-02F00	CAM SHAFT ASSY, INTAKE FRONT	1	MODEL V
1-2	12701-02F40	CAM SHAFT ASSY, INTAKE FRONT	1	MODEL W/X/Y -F.NO.Y2100073
1-3	12701-02F41	CAM SHAFT ASSY, INTAKE FRONT	1	MODEL Y F.NO.Y2100074-
1-4	12701-02F50	CAM SHAFT ASSY, INTAKE FRONT	1	MODEL K1
2-1	12702-02F00	CAM SHAFT ASSY, EXHAUST FRONT	1	MODEL V
2-2	12702-02F40	CAM SHAFT ASSY, EXHAUST FRONT	1	MODEL W/X/Y -F.NO.Y2100073
2-3	12702-02F41	CAM SHAFT ASSY, EXHAUST FRONT	1	MODEL Y F.NO.Y2100074-
2-4	12702-02F50	CAM SHAFT ASSY, EXHAUST FRONT	1	MODEL K1
3-1	12703-02F00	CAM SHAFT ASSY, INTAKE REAR	1	MODEL V
3-2	12703-02F40	CAM SHAFT ASSY, INTAKE REAR	1	MODEL W/X/Y -F.NO.Y2100073
3-3	12703-02F41	CAM SHAFT ASSY, INTAKE REAR	1	MODEL Y F.NO.Y2100074-
3-4	12703-02F50	CAM SHAFT ASSY, INTAKE REAR	1	MODEL K1
4-1	12704-02F00	CAM SHAFT ASSY, EXHAUST REAR	1	MODEL V
4-2	12704-02F40	CAM SHAFT ASSY, EXHAUST REAR	1	MODEL W/X/Y -F.NO.Y2100073
4-3	12704-02F41	CAM SHAFT ASSY, EXHAUST REAR	1	MODEL Y F.NO.Y2100074-
4-4	12704-02F50	CAM SHAFT ASSY, EXHAUST REAR	1	MODEL K1
5	09390-22006	C RING	4	
6	08331-31266	CIRCLIP	4	
7	12911-02F00	VALVE, INTAKE	4	
8	12912-02F00	VALVE, EXHAUST	4	
9-1	12920-02F00	SPRING SET, VALVE	8	MODEL V/W/X
9-2	12920-02F10	SPRING SET, VALVE	8	MODEL Y/K1
10-1	12931-02F00	RETAINER, VALVE SPRING	8	MODEL V/W/X
10-2	12931-02F10	RETAINER, VALVE SPRING	8	MODEL Y/K1
11	12933-38400	SEAT, VALVE SPRING	8	
12	09289-05015	SEAL, VALVE STEM OIL	8	
13	12932-24400	COTTER, VALVE	16	
14	12891-02F00	TAPPET	8	

13 TL1000S K1 E3 E28

FIG.7

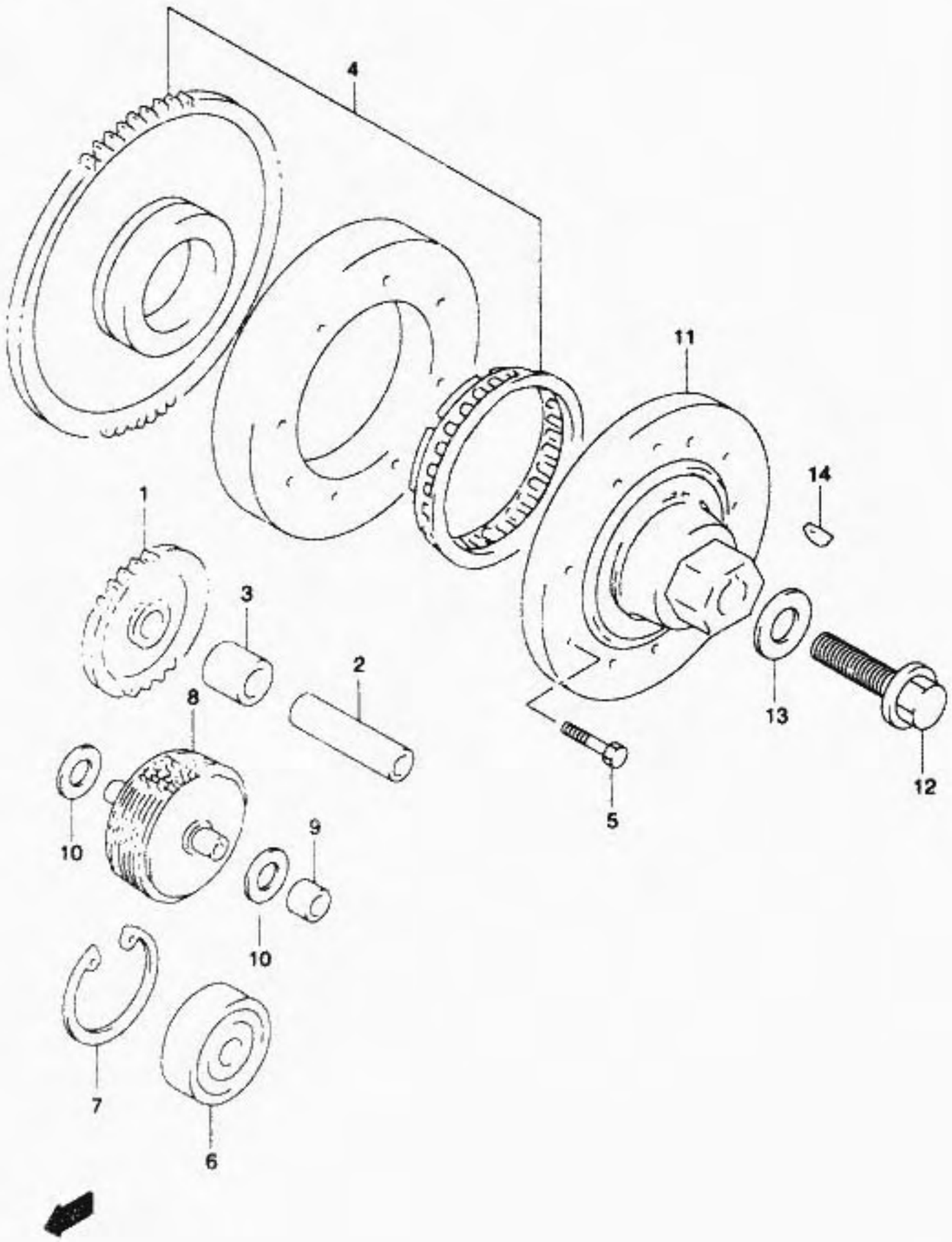

FIG.7 (B-13) STARTER CLUTCH

REF.NO.	PART NO.	DESCRIPTION	QTY.	REMARKS
1	12612-02F00	GEAR, STARTER IDLE	1	
2	09206-12002	PIN	1	
3	09180-12140	SPACER	1	
4-1	12600-02840	CLUTCH SET, STARTER	1	-E.NO.111954
4-2	12600-02841	CLUTCH SET, STARTER	1	E.NO.111955-
5	01500-06203	BOLT	8	
6	09262-12001	BEARING	1	
7	08331-41286	CIRCLIP	1	
8	12600-12D00	LIMITER ASSY, STARTER IDLE GEAR	1	
9	12618-31D01	BUSH	2	
10	08211-10221	WASHER	2	
11-1	12641-02F00	HOUSING, STARTER CLUTCH	1	MODEL V
11-2	12641-02F10	HOUSING, STARTER CLUTCH	1	MODEL W/X/Y/K1
12	09103-12004	BOLT	1	
13	09160-12036	WASHER	1	
14	09420-04003	KEY	1	

FIG.6

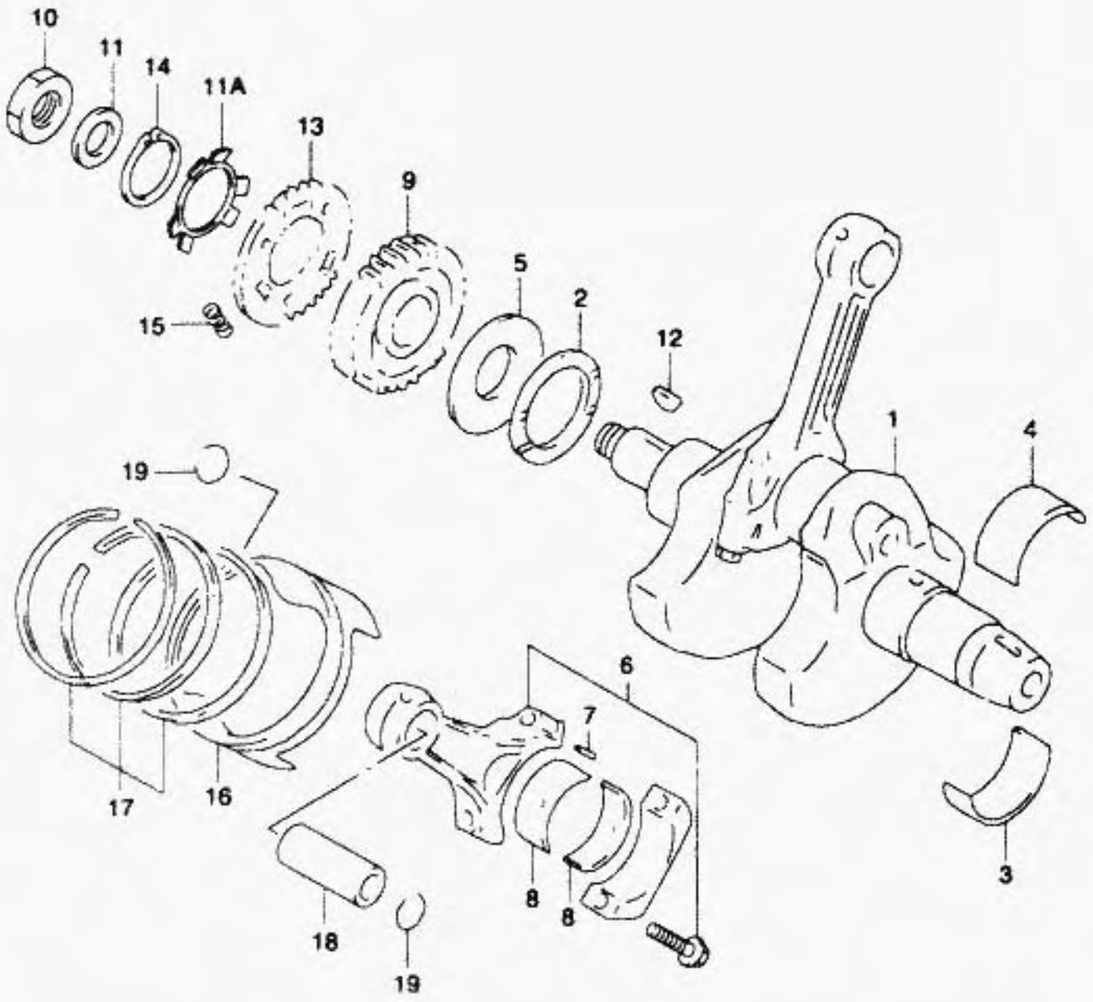

FIG.6 (B-12) CRANKSHAFT

REF.NO.	PART NO.	DESCRIPTION	QTY.	REMARKS
8-1	12164-02F00-0A0	BEARING, CRANK PIN	4	MODEL V/W/X SEE NOTE
8-2	12164-02F00-0B0	BEARING, CRANK PIN	4	MODEL V/W/X SEE NOTE
8-3	12164-02F00-0C0	BEARING, CRANK PIN	4	MODEL V/W/X SEE NOTE
8-4	12164-02F00-0D0	BEARING, CRANK PIN	4	MODEL V/W/X SEE NOTE
8-5	12164-02F11-0A0	BEARING, CRANK PIN	4	MODEL Y/K1 SEE NOTE
8-6	12164-02F11-0B0	BEARING, CRANK PIN	4	MODEL Y/K1 SEE NOTE
8-7	12164-02F11-0C0	BEARING, CRANK PIN	4	MODEL Y/K1 SEE NOTE
8-8	12164-02F11-0D0	BEARING, CRANK PIN	4	MODEL Y/K1 SEE NOTE
9-1	21111-02F00	GEAR, PRIMARY DRIVE	1	MODEL V/W
9-2	21111-02F10	GEAR, PRIMARY DRIVE	1	MODEL X/Y
9-3	21111-02F11	GEAR, PRIMARY DRIVE	1	MODEL K1
10	09140-22012	NUT	1	
11	09164-22007	WASHER	1	
11A	21114-02F00	WASHER, WAVE	1	MODEL X/Y/K1
12-1	08341-31069	KEY	1	MODEL V/W/X
12-2	09420-06001	KEY	1	MODEL Y/K1
13	21112-02F00	GEAR, PRIMARY DRIVE SCISSORS	1	
14-1	08331-31426	CIRCLIP	1	MODEL V/W
14-2	08331-31406	CIRCLIP	1	MODEL X/Y/K1
15	09440-07001	SPRING	3	
16	12111-02F00-0F0	PISTON	2	
17-1	12140-02F40	RING SET, PISTON	2	MODEL V
17-2	12140-02F42	RING SET, PISTON	2	MODEL W/X/Y/K1
18	12151-02F00	PIN, PISTON	2	
19	09381-22002	CIRCLIP	4	

*****NOTE THERE IS A BEARING KIT AVAILABLE FOR THIS MODEL**
TL1000S V, W (1997-1998) DISCONTINUED
TL1000S X (1999) 99104-BRGKT-019
TL1000S Y, K1 (2000-2001) 99104-BRGKT-022
REFER TO PARTS BULLETIN # 431-92-02 FOR EXPLANATION

FIG.6

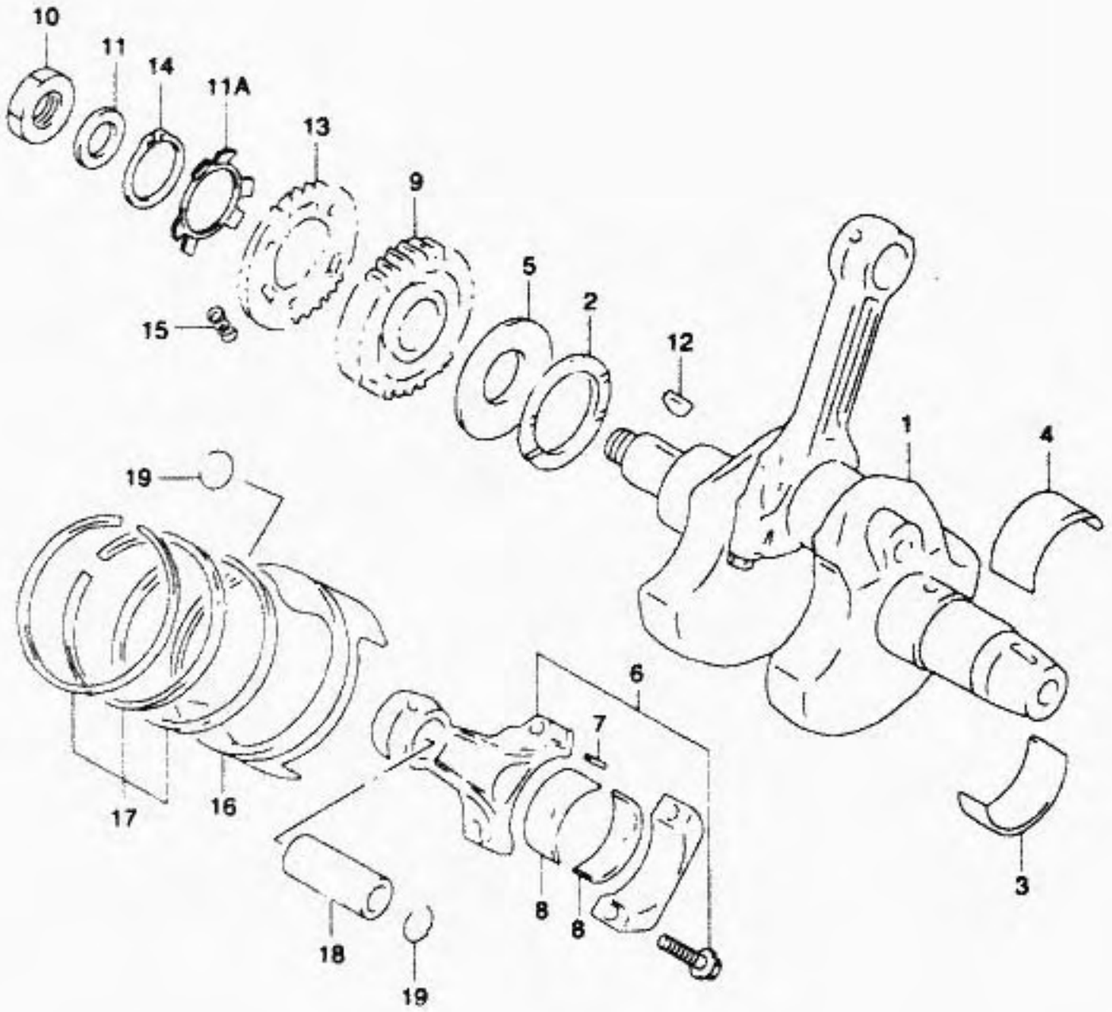

FIG.6 (B-11) CRANKSHAFT

REF.NO.	PART NO.	DESCRIPTION	QTY.	REMARKS
1-1	12000-02810	CRANKSHAFT SET	1	MODEL V/W/X
1-2	12000-02830	CRANKSHAFT SET	1	MODEL Y/K1
2-1	09160-48001	.WASHER, CRANK THRUST (T:1.94)	1	
2-2	09160-48002	.WASHER, CRANK THRUST (T:1.96)	1	
2-3	09160-48003	.WASHER, CRANK THRUST (T:1.99)	1	
2-4	09160-48004	.WASHER, CRANK THRUST (T:2.01)	1	
2-5	09160-48005	.WASHER, CRANK THRUST (T:2.04)	1	
2-6	09160-48006	.WASHER, CRANK THRUST (T:2.06)	1	
2-7	09160-48007	.WASHER, CRANK THRUST (T:2.09)	1	
2-8	09160-48008	.WASHER, CRANK THRUST (T:2.11)	1	
2-9	09160-48009	.WASHER, CRANK THRUST (T:2.14)	1	
2-10	09160-48010	.WASHER, CRANK THRUST (T:2.16)	1	
3-1	12229-02F00-0A0	BEARING, LOWER (GREEN)	2	MODEL V/W SEE NOTE
3-2	12229-02F00-0B0	BEARING, LOWER (BLACK)	2	MODEL V/W SEE NOTE
3-3	12229-02F00-0C0	BEARING, LOWER (BROWN)	2	MODEL V/W SEE NOTE
3-4	12229-02F21-0A0	BEARING, CRANKSHAFT	2	MODEL X/Y/K1 SEE NOTE
3-5	12229-02F21-0B0	BEARING, CRANKSHAFT	2	MODEL X/Y/K1 SEE NOTE
3-6	12229-02F21-0C0	BEARING, CRANKSHAFT	2	MODEL X/Y/K1 SEE NOTE
4-1	12229-02F10-0A0	BEARING, UPPER (GREEN)	2	MODEL V/W SEE NOTE
4-2	12229-02F10-0B0	BEARING, UPPER (BLACK)	2	MODEL V/W SEE NOTE
4-3	12229-02F10-0C0	BEARING, UPPER (BROWN)	2	MODEL V/W SEE NOTE
4-4	12229-02F21-0A0	BEARING, CRANKSHAFT	2	MODEL X/Y/K1 SEE NOTE
4-5	12229-02F21-0B0	BEARING, CRANKSHAFT	2	MODEL X/Y/K1 SEE NOTE
4-6	12229-02F21-0C0	BEARING, CRANKSHAFT	2	MODEL X/Y/K1 SEE NOTE
5-1	12652-38B00	WASHER, CRANK THRUST	1	-E.NO.111954
5-2	12652-02F00	WASHER, CRANK THRUST	1	E.NO.111955-
6	12160-02F00	CONNECTING ROD ASSY	2	
7	12165-27A50	.PIN	4	

*****NOTE THERE IS A BEARING KIT AVAILABLE FOR THIS MODEL**

TL1000S V, W (1997-1998) DISCONTINUED

TL1000S X (1999) 99104-BRGKT-019

TL1000S Y, K1 (2000-2001) 99104-BRGKT-022

REFER TO PARTS BULLETIN # 431-92-02 FOR EXPLANATION

FIG.5

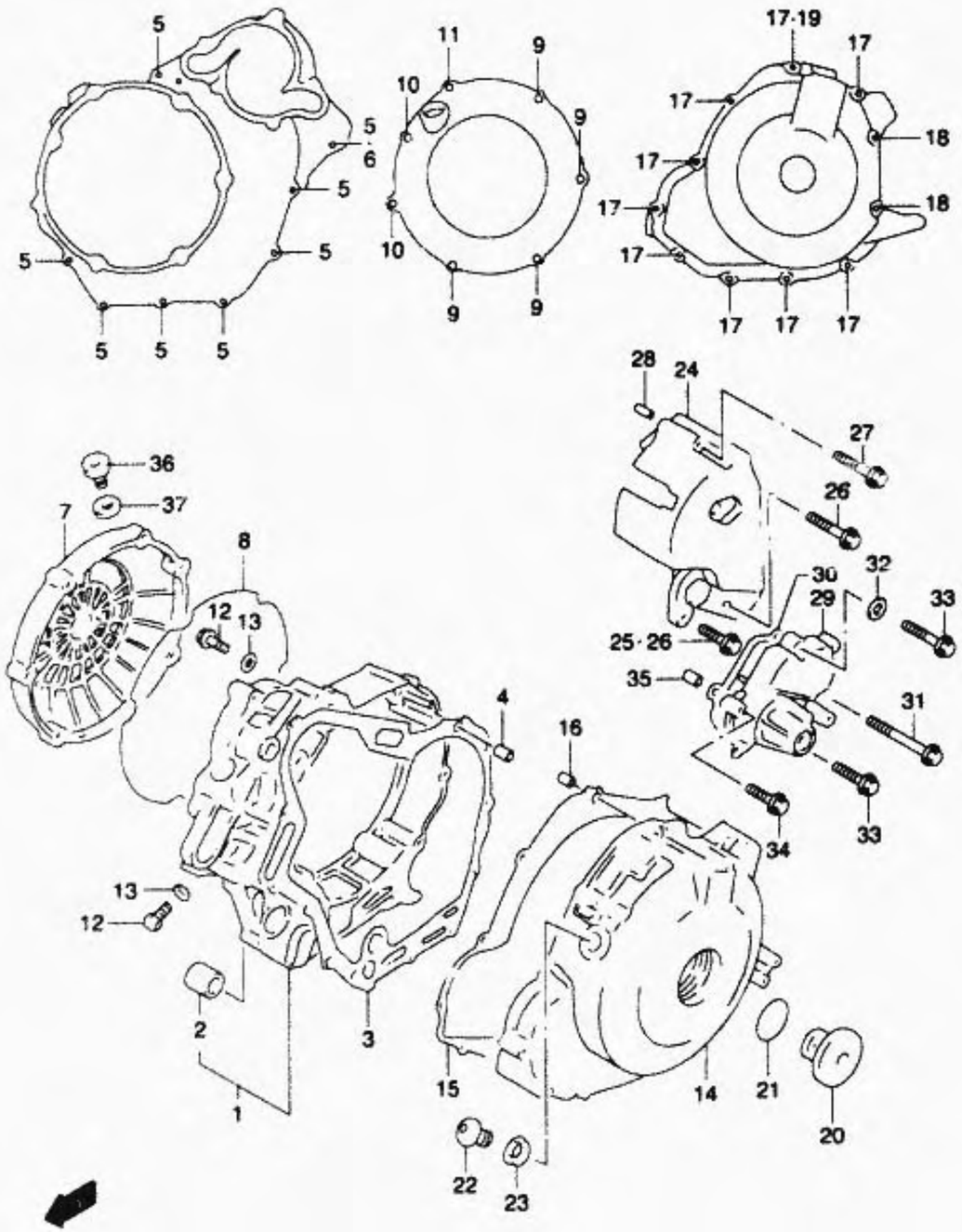

FIG.5 (B-10) CRANKCASE COVER

REF.NO.	PART NO.	DESCRIPTION	QTY.	REMARKS
21	09280-33004	O RING (D:3.1,ID:32.7)	1	
22	09248-14005	PLUG	1	
23	09168-14002	GASKET	1	
24	11360-02F00	COVER, ENGINE SPROCKET	1	
25	01547-06257	BOLT	1	MODEL V
26-1	01547-06357	BOLT	1	MODEL V
26-2	01547-06357	BOLT	2	MODEL W/X/Y/K1
27	01547-06757	BOLT	1	
28	04211-09149	PIN	2	
29-1	11381-02F00	COVER, GEAR SHIFT	1	MODEL V
29-2	11381-02F01	COVER, GEAR SHIFT	1	MODEL W/X/Y/K1
30-1	11485-02F00	GASKET	1	MODEL V/W/X
30-2	11485-02F10	GASKET	1	MODEL Y/K1
31	09103-06126	BOLT	1	
32-1	09168-06024	GASKET (5.8X11X1.2)	1	MODEL V/W/X
32-2	09168-06023	GASKET (5.8X13X1.2)	1	MODEL Y/K1
33-1	01547-06257	BOLT (CHROME)	2	
33-2	01547-06253	BOLT (GREEN)	2	
34-1	01547-06357	BOLT (CHROME)	2	
34-2	01547-06353	BOLT (GREEN)	2	
35	04211-09149	PIN	2	
36	09259-20008	PLUG, OIL FILLER	1	
37	09280-17003	O RING	1	

FIG.5

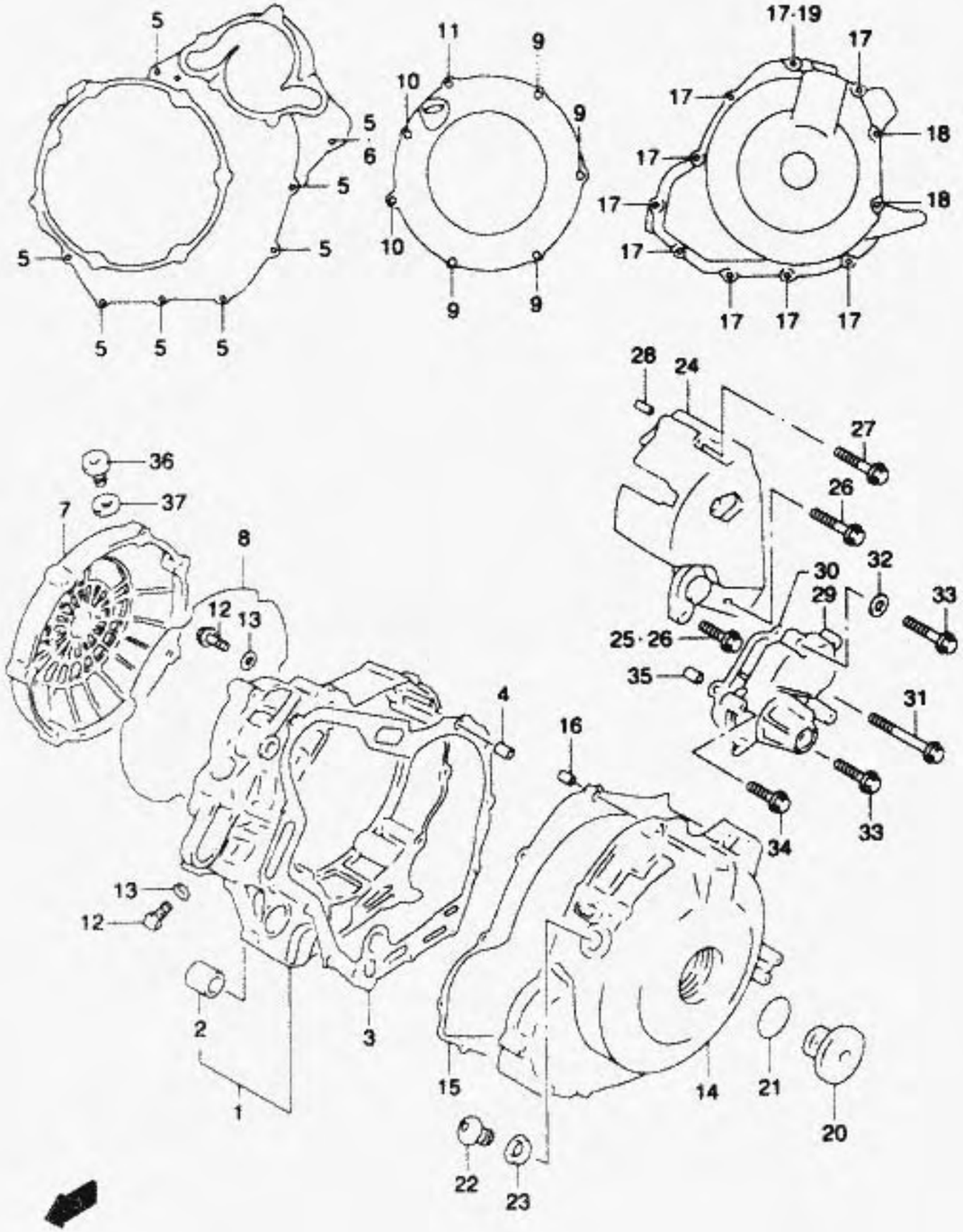

FIG.5 (B- 9) CRANKCASE COVER

REF.NO.	PART NO.	DESCRIPTION	QTY.	REMARKS
1-1	11340-02F00	COVER, CLUTCH	1	MODEL V
1-2	11340-02F10	COVER, CLUTCH	1	MODEL W/X/Y/K1
2	11971-33210	LENS, OIL LEVEL CHECK	1	
3-1	11482-02F00	GASKET	1	MODEL V/W/X
3-2	11482-02F10	GASKET	1	MODEL Y/K1
4	04211-09149	PIN	2	
5	01547-06303	BOLT	8	
6-1	09168-06024	GASKET (5.8X11X1.2)	1	MODEL V/W/X
6-2	09168-06023	GASKET (5.8X13X1.2)	1	MODEL Y/K1
7-1	11370-02F00	COVER, CLUTCH OUTER	1	MODEL V →11370-02F10 W/11484-02F10 01547-06757(2PCS)
7-2	11370-02F10	COVER, CLUTCH OUTER	1	MODEL W/X/Y/K1
8-1	11484-02F00	O RING	1	MODEL V
8-2	11484-02F10	O RING	1	MODEL W/X/Y/K1
9	01547-06307	BOLT	4	
10-1	01547-06803	BOLT	2	MODEL V
10-2	01547-06757	BOLT	2	MODEL W/X/Y/K1
11	01547-06857	BOLT	1	
12-1	01550-06103	BOLT	2	MODEL V
12-2	01550-06103	BOLT	1	MODEL W/X/Y/K1
13-1	09168-06004	GASKET	2	MODEL V
13-2	09168-06004	GASKET	1	MODEL W/X/Y/K1
14-1	11351-02F00	COVER, MAGNETO	1	MODEL V →11351-02F01 W/01547-06357
14-2	11351-02F01	COVER, MAGNETO	1	MODEL W/X/Y/K1
15-1	11483-02F00	GASKET	1	MODEL V/W/X
15-2	11483-02F10	GASKET	1	MODEL Y/K1
16	04211-09149	PIN	1	
17	01547-06357	BOLT	9	
18	01547-06707	BOLT	2	
19-1	09168-06024	GASKET (5.8X11X1.2)	1	MODEL V/W/X
19-2	09168-06023	GASKET (5.8X13X1.2)	1	MODEL Y/K1
20	09259-36021	PLUG	1	

FIG.4

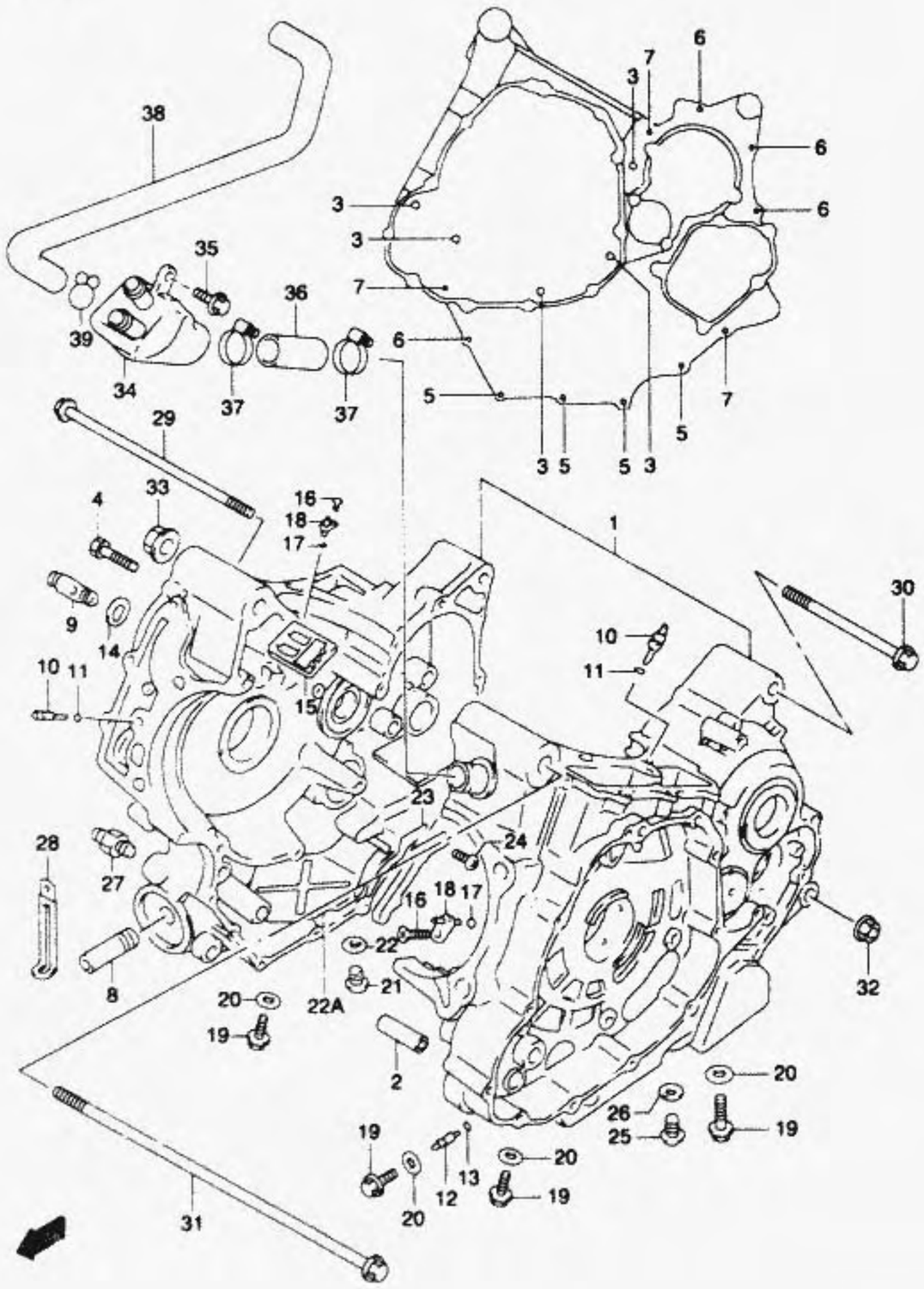

FIG.4 (B-8) CRANKCASE

REF.NO.	PART NO.	DESCRIPTION	QTY.	REMARKS
22A	11324-02F10	SEPARATOR, OIL	1	MODEL Y/K1
23	11323-02F00	COVER, OIL GALLERY	1	MODEL V/W
24	02112-06123	SCREW	2	MODEL V/W
25	09247-14001	PLUG	1	
26	09168-14002	GASKET	1	
27-1	37820-33D00	SWITCH ASSY, OIL PRESSURE	1	MODEL V/W/X/Y
27-2	37820-33D10	SWITCH ASSY, OIL PRESSURE	1	MODEL K1
28-1	09404-06429	CLAMP	3	MODEL V/W
28-2	09404-06432	CLAMP	3	MODEL X/Y/K1
29	09103-10145	BOLT	1	
30	09103-10146	BOLT	1	
31	09103-12050	BOLT	1	
32	09159-10058	NUT	1	
33	08319-31128	NUT	1	
34-1	11330-02F00	TANK, OIL RETURN	1	MODEL W
34-2	11330-02F01	TANK, OIL RETURN	1	MODEL X
34-3	11330-02F10	TANK, OIL RETURN	1	MODEL K1
35	01550-06163	BOLT, OIL RETURN TANK	1	MODEL W/X/Y/K1
36-1	11333-02F00	HOSE, OIL RETURN	1	MODEL W/X/Y
36-2	11333-02F10	HOSE, OIL RETURN	1	MODEL K1
37	09402-28511	CLIP, OIL RETURN HOSE	2	MODEL W/X/Y/K1
38	11332-02F00	HOSE, BREATHER	1	MODEL W/X/Y/K1
39	09401-15101	CLIP	2	MODEL W/X/Y/K1

FIG.4

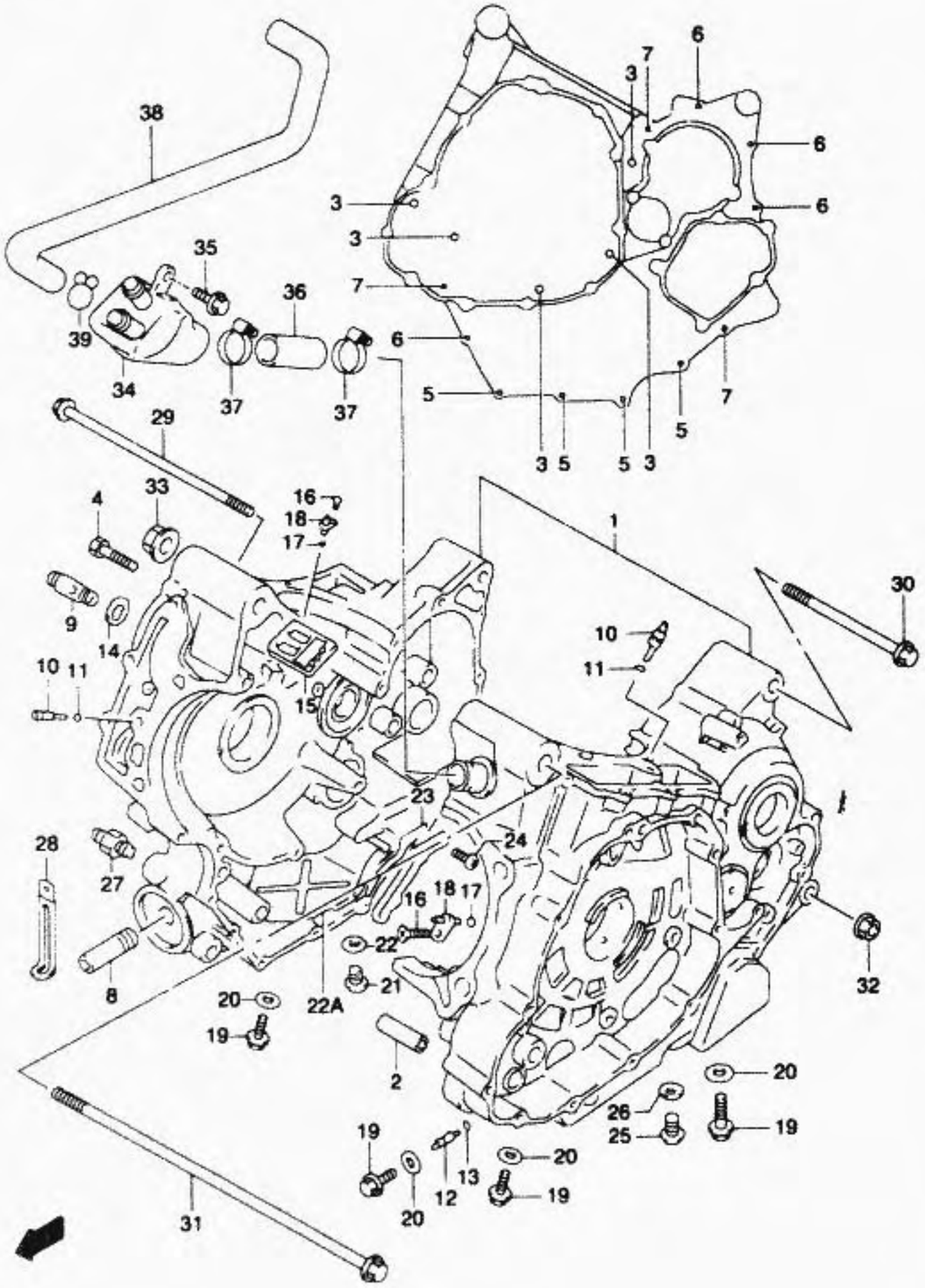

FIG.4 (B-7) CRANKCASE

REF.NO.	PART NO.	DESCRIPTION	QTY.	REMARKS
1-1	11305-02860	CRANKCASE SET	1	MODEL V **SEE NOTE
1-2	11306-02820	CRANKCASE SET	1	MODEL W **SEE NOTE
1-3	11306-02822	CRANKCASE SET	1	MODEL X **SEE NOTE ~E.NO.T501-111997 E.NO.T501-112108~113971
1-4	11306-02860	CRANKCASE SET	1	MODEL X/Y/K1 **SEE NOTE E.NO.T501-111998~112107 E.NO.T501-113972~
2	11319-33E00	PIN	2	
3	07120-08903	BOLT	5	
4	07130-08703	BOLT	2	
5	01550-06353	BOLT	4	
6	01550-06703	BOLT	4	
7	01550-06853	BOLT	3	
8	16591-06B00	UNION, OIL FILTER STAND	1	
9	11329-02F00	JET, OIL GALLERY 3.6	1	
10	09493-20014	JET, OIL GALLERY	2	
11	09280-04004	O RING (D:1.2,ID:4)	2	
12-1	09493-20014	JET, OIL GALLERY MISSION	1	MODEL V
12-2	09493-28010	JET, OIL GALLERY MISSION	1	MODEL W/X/Y/K1
13	09280-04004	O RING	1	
14	09280-12009	O RING	1	
15	13150-02F00	VALVE ASSY, BREATHER	1	
16	09125-06086	BOLT	2	
17	09280-04004	O RING (D:1.2,ID:4)	2	
18	11390-02F00	JET, PISTON COOLING	2	
19	01550-08123	BOLT	4	
20	09168-08015	GASKET	4	
21	09248-16012	PLUG	1	
22	09168-16002	GASKET	1	

******ENGINE CASES AND FRAMES FOR THIS MODEL MUST BE ORDERED ON THE FRAME/ENGINE CASE ORDER FORM (99924-FC003). IF YOU HAVE ANY QUESTIONS REGARDING THESE PROCEDURES, PLEASE CALL YOUR PARTS COORDINATOR *BEFORE* PLACING YOUR ORDER.**

FIG.3

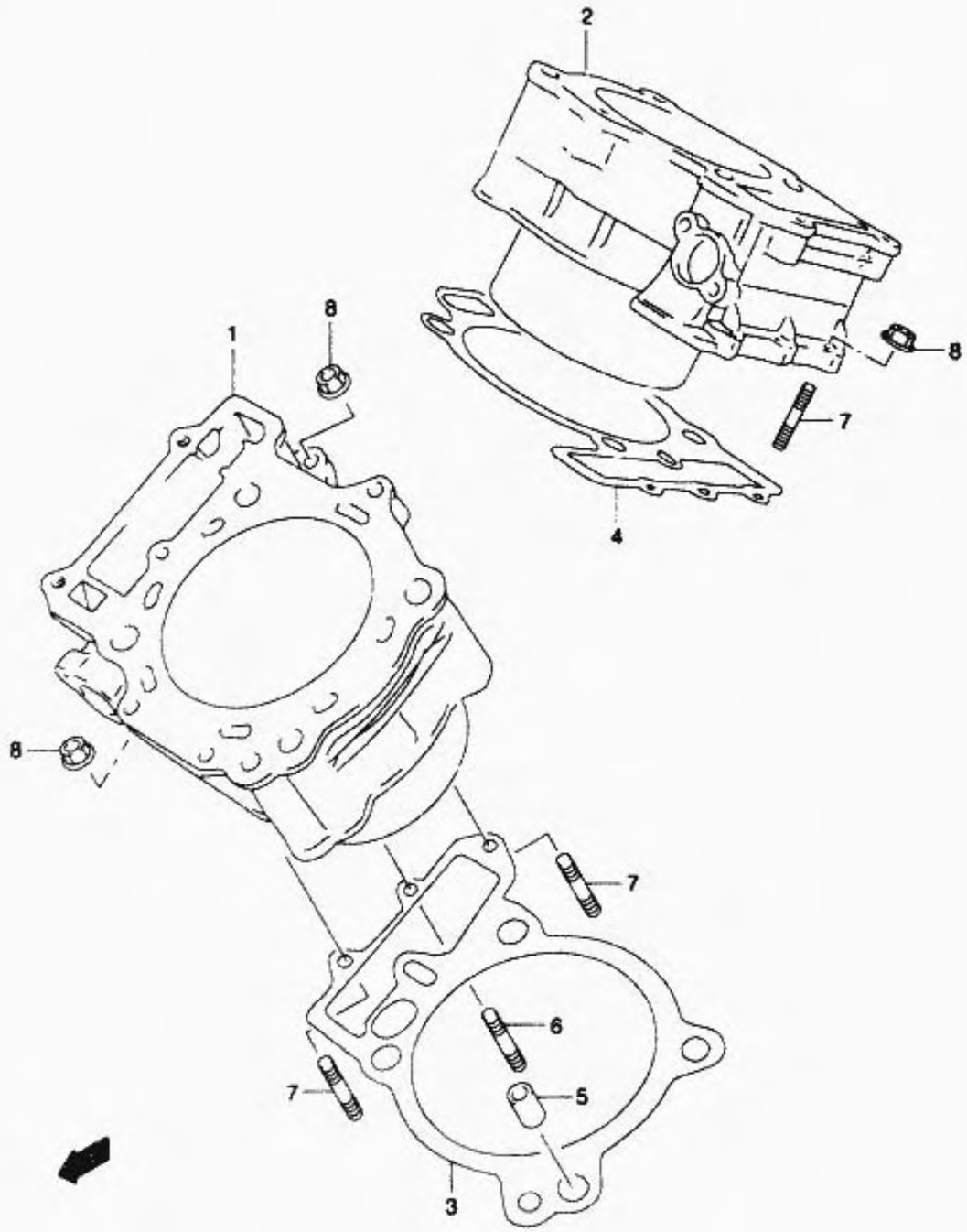

FIG.3 (B-6) CYLINDER

REF.NO.	PART NO.	DESCRIPTION	QTY.	REMARKS
1-1	11211-02F00-0F0	CYLINDER, FRONT	1	MODEL V
1-2	11211-02F01-0F0	CYLINDER, FRONT	1	MODEL W/X/Y
1-3	11211-02F02-0F0	CYLINDER, FRONT	1	MODEL K1
2-1	11221-02F00-0F0	CYLINDER, REAR	1	MODEL V
2-2	11221-02F01-0F0	CYLINDER, REAR	1	MODEL W/X/Y
2-3	11221-02F02-0F0	CYLINDER, REAR	1	MODEL K1
3-1	11241-02F00	GASKET, CYLINDER FRONT	1	-E.NO.111954
3-2	11241-02F01	GASKET, CYLINDER FRONT	1	E.NO.111955-
4-1	11242-02F00	GASKET, CYLINDER REAR	1	-E.NO.111954
4-2	11242-02F01	GASKET, CYLINDER REAR	1	E.NO.111955-
5	04211-13189	PIN	4	
6	09108-06118	STUD BOLT	1	
7	01421-06203	STUD BOLT	5	
8	08316-10063	NUT	6	

FIG.2

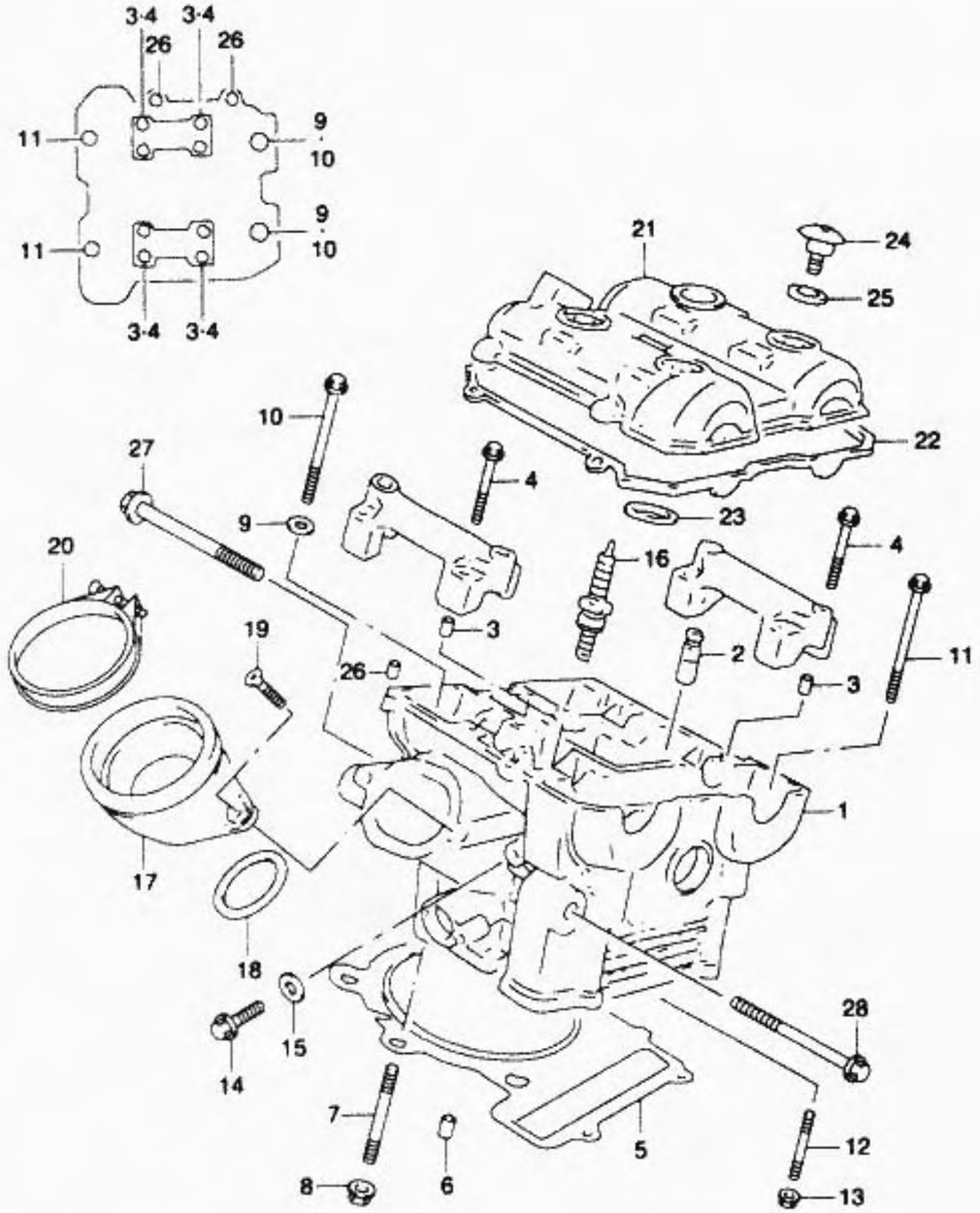

FIG.2 (B- 5) REAR CYLINDER HEAD

REF.NO.	PART NO.	DESCRIPTION	QTY.	REMARKS
17	13101-02F00	PIPE, INTAKE REAR	1	
18	09280-55005	O RING	1	
19	09120-06010	SCREW	2	
20	09402-70203	CLAMP	1	
21-1	11172-02F00	COVER, CYLINDER HEAD	1	MODEL V
21-2	11170-02F11	COVER, CYLINDER HEAD	1	MODEL W/X/Y/K1
22	11173-02F00	GASKET	1	
23	11178-17E00	GASKET	1	
24	09106-07009	BOLT (7X17.5)	4	
25	09161-11008	WASHER	4	
26	09206-08001	PIN	2	
27	01550-10807	BOLT	1	
28	01550-10707	BOLT	1	

FIG.2

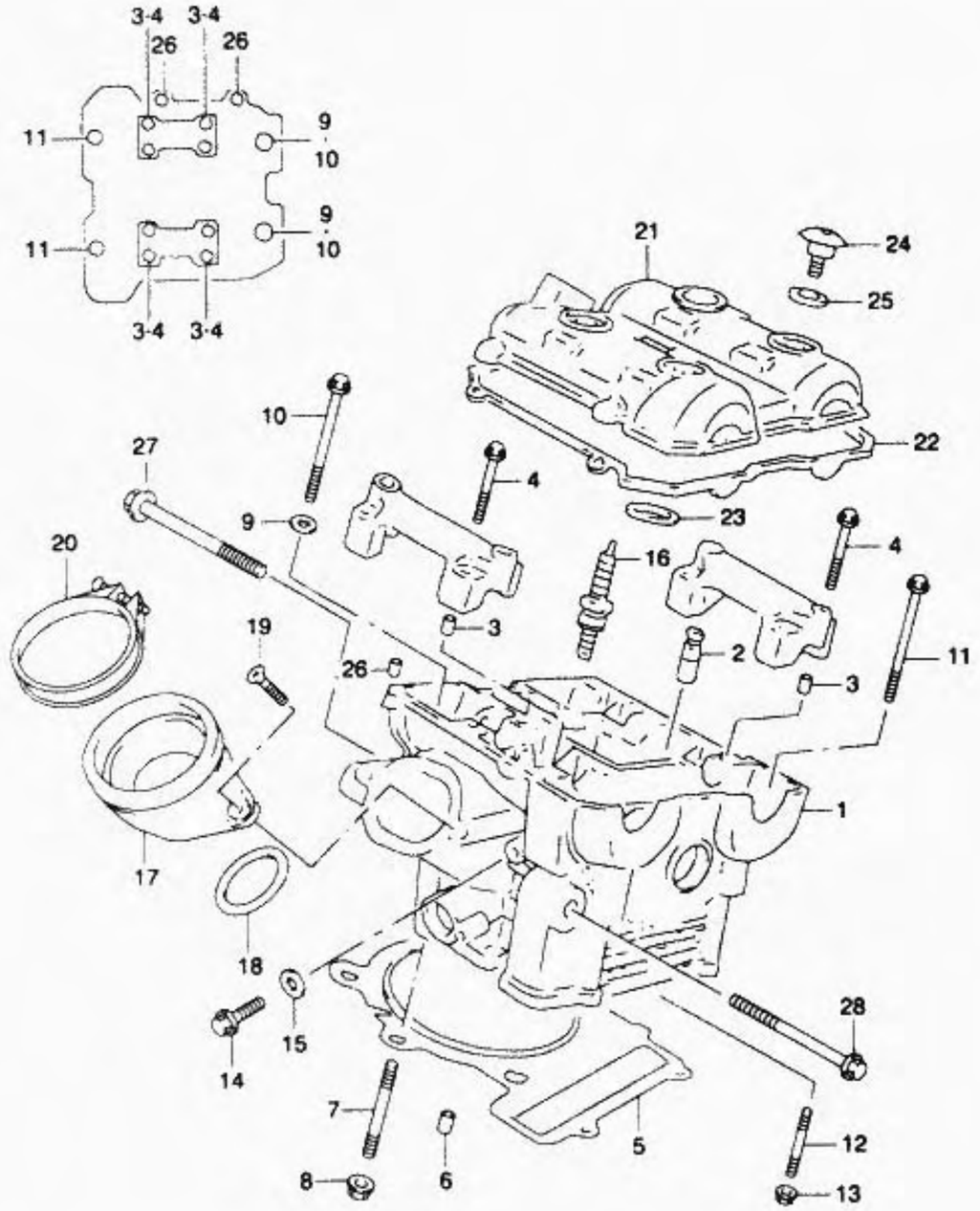

FIG.2 (B- 4) REAR CYLINDER HEAD

REF.NO.	PART NO.	DESCRIPTION	QTY.	REMARKS
1-1	11100-02F00	HEAD ASSY, CYLINDER REAR	1	MODEL V
1-2	11100-02F30	HEAD ASSY, CYLINDER REAR	1	MODEL W
1-3	11100-02F31	HEAD ASSY, CYLINDER REAR	1	MODEL X/Y/K1
2	11115-32E70	.GUIDE, VALVE	4	
3	09206-08001	.PIN	4	
4	09103-06026	.BOLT (6X39)	8	
5-1	11141-02F00	GASKET	1	~E.NO.111954
5-2	11141-02F01	GASKET	1	E.NO.111955~
6	04211-13189	PIN	2	
7	09108-08143	STUD BOLT (8X35)	1	
8	08316-10083	NUT	1	
9	09160-10082	WASHER	4	
10-1	09103-10276	BOLT (10X175)	4	MODEL V/W
10-2	11161-02F00	BOLT (10X175)	4	MODEL X/Y/K1
11	09103-06103	BOLT (6X70)	2	
12	09108-06096	STUD BOLT (6X30)	2	
13	08316-10063	NUT	2	
14	07120-06123	PLUG	1	
15	09168-06023	GASKET	1	
16-1	09482-00410	SPARK PLUG (NGK,CR9EK)	1	~F.NO.103237
16-2	09482-00411	SPARK PLUG (DENSO,U27ETR)	1	~F.NO.103237
16-3	09482-00412	SPARK PLUG (NGK,CR8EK)	1	F.NO.103238~
16-4	09482-00413	SPARK PLUG (DENSO,U24ETR)	1	F.NO.103238~
16-5	09482-00412	SPARK PLUG (NGK,CR8EK)	1	~F.NO.103237 OPT
16-6	09482-00413	SPARK PLUG (DENSO,U24ETR)	1	~F.NO.103237 OPT
16-7	09482-00410	SPARK PLUG (NGK,CR9EK)	1	F.NO.103238~ OPT
16-8	09482-00411	SPARK PLUG (DENSO,U27ETR)	1	F.NO.103238~ OPT
16-9	09482-00462	SPARK PLUG (NGK,CR10EK)	1	OPT
16-10	09482-00463	SPARK PLUG (DENSO,U31ETR)	1	OPT

FIG.1

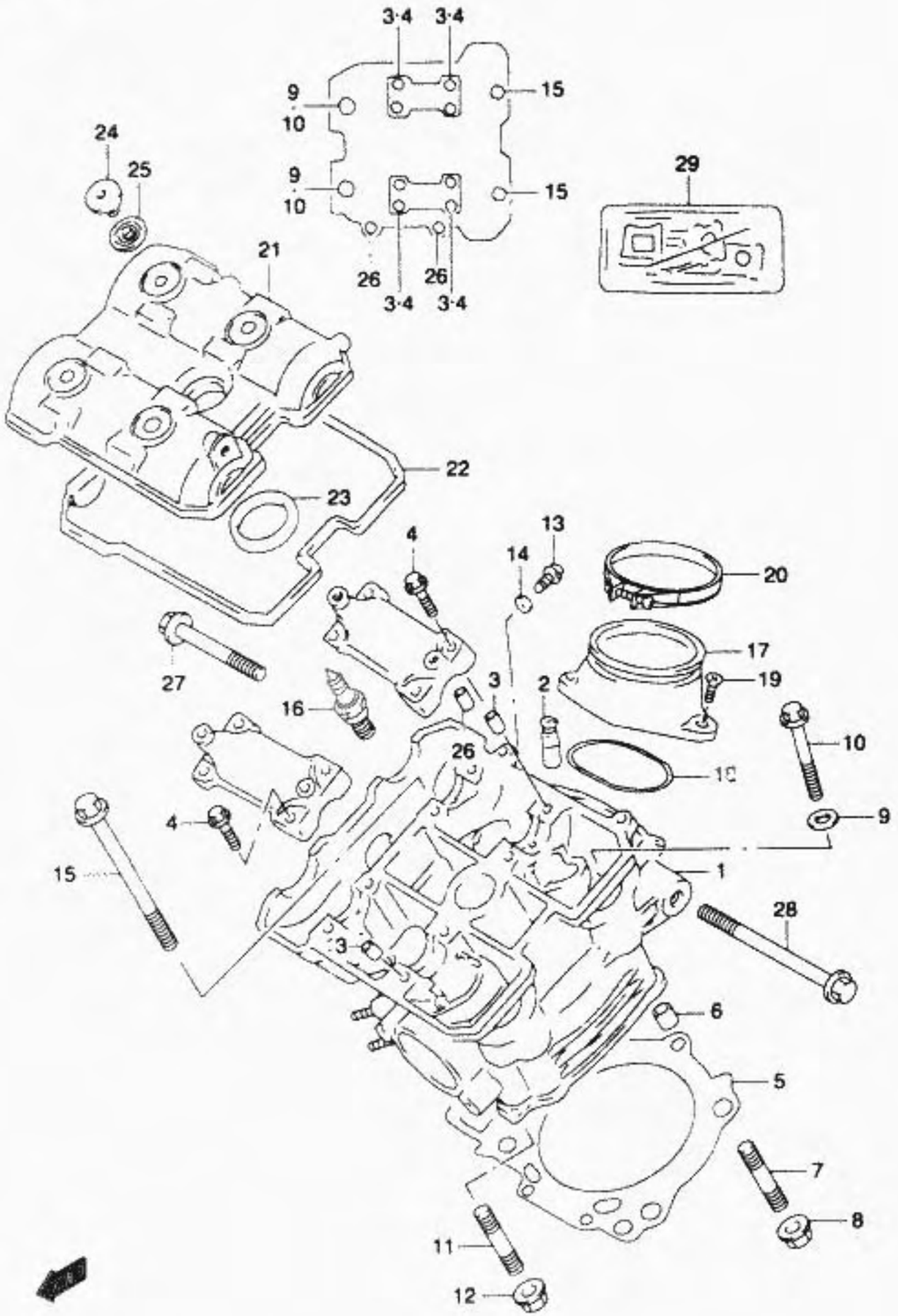

FIG.1 (B-3) FRONT CYLINDER HEAD

REF.NO.	PART NO.	DESCRIPTION	QTY.	REMARKS
17	13101-02F00	PIPE, INTAKE FRONT	1	
18	09280-55005	O RING	1	
19	09120-06010	SCREW	2	
20	09402-70203	CLAMP	1	
21	11171-02F00	COVER, CYLINDER	1	
22	11173-02F00	GASKET	1	
23	11178-17E00	GASKET	1	
24	09106-07009	BOLT (7X17.5)	4	
25	09161-11008	WASHER	4	
26	09206-08001	PIN	2	
27	01550-10657	BOLT	1	
28	01550-10907	BOLT	1	
29-1	11401-02850	GASKET SET	1	~E.NO.111954 NOT INCLUDE 2ND AIR GASKET
29-2	11401-02852	GASKET SET	1	E.NO.111955~ NOT INCLUDE 2ND AIR GASKET
29-3	11401-02870	GASKET SET	1	MODEL K1 NOT INCLUDE 2ND AIR GASKET

FIG.1

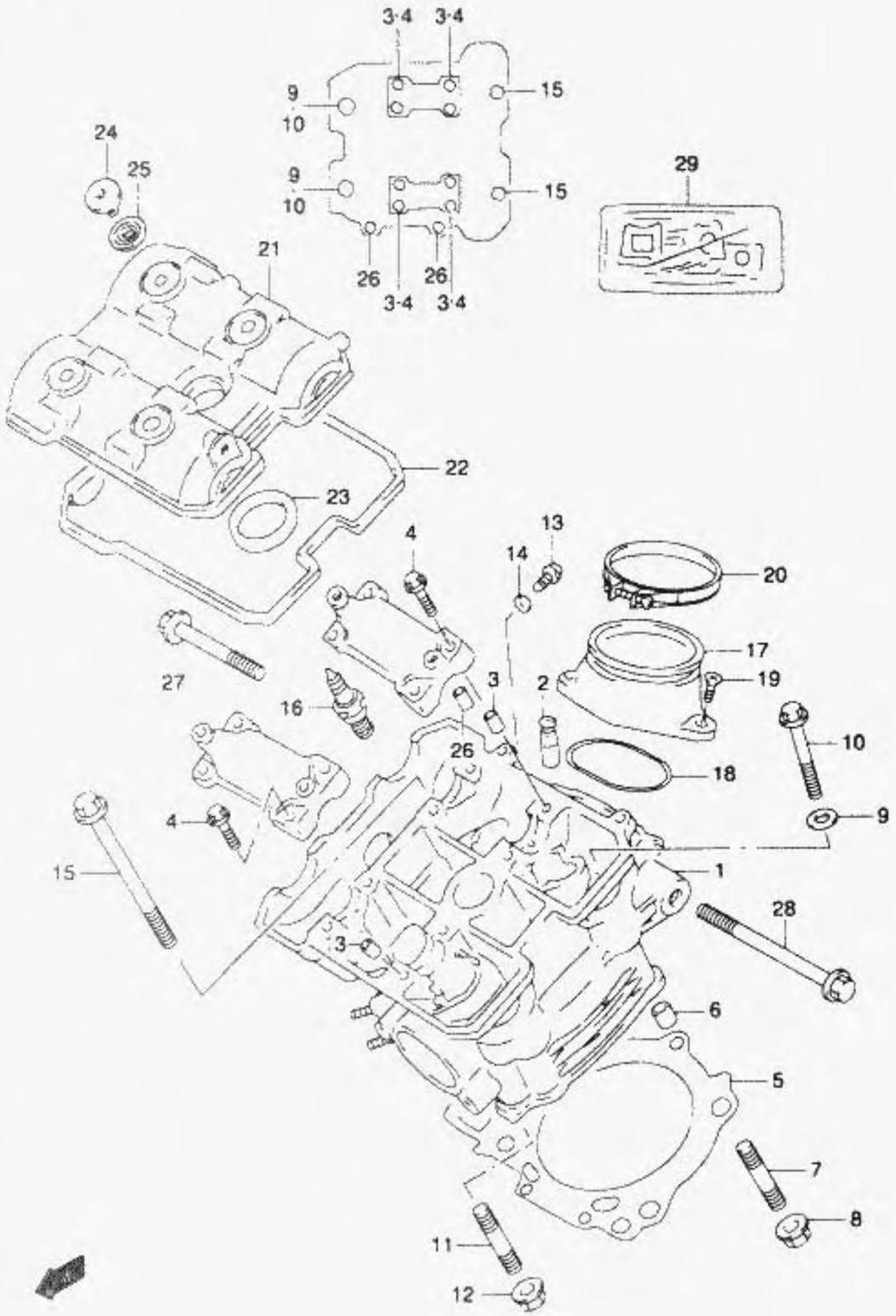

FIG.1 (B-2) FRONT CYLINDER HEAD

REF.NO.	PART NO.	DESCRIPTION	QTY.	REMARKS
1-1	11100-02F00	HEAD ASSY, CYLINDER FRONT	1	MODEL V
1-2	11100-02F30	HEAD ASSY, CYLINDER FRONT	1	MODEL W
1-3	11100-02F31	HEAD ASSY, CYLINDER FRONT	1	MODEL X/Y/K1
2	11115-32E70	GUIDE, VALVE	4	
3	09206-08001	PIN	4	
4	09103-06026	BOLT (6X39)	8	
5-1	11141-02F00	GASKET	1	-E.NO.111954
5-2	11141-02F01	GASKET	1	E.NO.111955-
6	04211-13189	PIN	2	
7	09108-08143	STUD BOLT (8X35)	1	
8	08316-10083	NUT	1	
9	09160-10082	WASHER	4	
10-1	09103-10276	BOLT (10X175)	4	MODEL V/W
10-2	11161-02F00	BOLT (10X175)	4	MODEL X/Y/K1
11	09108-06096	STUD BOLT (6X30)	2	
12	08316-10063	NUT	2	
13	07120-06123	PLUG	1	
14	09168-06023	GASKET	1	
15	09103-06103	BOLT (6X70)	2	
16-1	09482-00410	SPARK PLUG (NGK,CR9EK)	1	-F.NO.103237
16-2	09482-00411	SPARK PLUG (DENSO,U27ETR)	1	-F.NO.103237
16-3	09482-00412	SPARK PLUG (NGK,CR8EK)	1	F.NO.103238-
16-4	09482-00413	SPARK PLUG (DENSO,U24ETR)	1	F.NO.103238-
16-5	09482-00412	SPARK PLUG (NGK,CR8EK)	1	-F.NO.103237 OPT
16-6	09482-00413	SPARK PLUG (DENSO,U24ETR)	1	-F.NO.103237 OPT
16-7	09482-00410	SPARK PLUG (NGK,CR9EK)	1	F.NO.103238- OPT
16-8	09482-00411	SPARK PLUG (DENSO,U27ETR)	1	F.NO.103236- OPT
16-9	09482-00462	SPARK PLUG (NGK,CR10EK)	1	OPT
16-10	09482-00463	SPARK PLUG (DENSO,U31ETR)	1	OPT

1 TL1000S K1 E3 E28

MILLIMETER → INCH CONVERSION CHART
TABLEAU DE CONVERSION DE MILLIMETRES → POUCES

	0	1	2	3	4	5	6	7	8	9
00	.000	039	079	118	157	.197	236	276	.315	354
10	394	433	472	512	551	591	630	669	.709	748
20	.787	827	866	906	945	.984	1.024	1.063	1.102	1.142
30	1.181	1.220	1.260	1.299	1.339	1.378	1.417	1.457	1.496	1.535
40	1.575	1.614	1.654	1.693	1.732	1.772	1.811	1.850	1.890	1.929
50	1.969	2.008	2.047	2.087	2.126	2.165	2.205	2.214	2.283	2.323
60	2.362	2.402	2.441	2.480	2.520	2.559	2.598	2.638	2.677	2.717
70	2.756	2.795	2.835	2.874	2.913	2.953	2.992	3.031	3.071	3.110
80	3.150	3.189	3.228	3.268	3.307	3.346	3.386	3.425	3.465	3.504
90	3.543	3.583	3.622	3.661	3.701	3.740	3.780	3.819	3.858	3.898

How to read
Mode de lecture

	0	1	2	3	4
00	...	...	...	...	...
10	...	...	...	...	...
20	...	...	...	0.906	...
30	...	...	...	...	...

23 millimeters equal 0.906 inch
23 millimètres égalent 0.906 pouce

Contents are subject to change without notice or obligation

Les matières traitées sont susceptibles d'être modifiées sans préavis obligation de notre part.

COLOR CHART
TABLEAU DES COULEURS

FOR PAINT INQUIRIES, PLEASE CALL COLOR-RITE (800) 736-7980

COLOR NO NO DE COULEUR	COLOR DESCRIPTION DESCRIPTION DE COULEUR	COLOR NO NO DE COULEUR	COLOR DESCRIPTION DESCRIPTION DE COULEUR
CA9	0AT,019,Y7M	Y7M	PEARL HELIOS RED
CB1	YC9,0FP,Y9H	Y9H	PEARL LIVELY YELLOW
FHB	0AT,20G,YC2	Z2L	EMBLEM TL1000S NO.1
G7U	33J,Y0W	Z2M	EMBLEM TL1000S NO.2
H3Y	25Y,28V	Z66	CANDY PHARAOH YELLOW
H3Z	1UH,28V	0AT	SILVER
H4A	24Z,20G,28V	0FP	TRADITIONAL SILVER METALLIC
H4B	24Z,20G,17U,1UH	0SF	HUSKY SILVER(TAPE)
H4S	24Z,17U,20G,33J	019	BLACK
K1C	Z66,28V	1RR	BAT GOLD(TAPE)
M1E	1ZY,Y7H	1UH	PRIME GREEN
M1G	Y2D,1ZY,20G,019,Y0W	1ZY	URBAN LIGHT GRAY METALLIC
M1J	Y2D,0FP,17U,1RR,Y7H	13L	BRIGHT SILVER METALLIC
N9Y	Y7L,17U,0AT	17U	GRAY METALLIC
R42	BLACK	2AX	PEARL NOVELTY BLACK (33J)
YC2	CANDY GRAND BLUE	20G	CHARCOAL GRAY METALLIC
YC9	HAIR LINE CHROME BLACK	24Z	SUNSET GOLD (TAPE)
Y0W	CANDY KORAN ORANGE	25Y	MARBLE SCIENCE YELLOW
Y2D	FLASU SILVER METALLIC	28V	MARBLE ITALIAN RED
Y6G	SHAINING SILVER	3AX	MARBLE ITALIAN RED (28V)
Y7H	DARK SPACE BLUE	3EE	33J,28V
Y7L	SATURN BLACK METALLIC	33J	PEARL NOVELTY BLACK

COLOR CHART
TABLEAU DES COULEURS

FOR PAINT INQUIRIES, PLEASE CALL COLOR-RITE (800) 736-7980

COLOR NO NO DE COULEUR	COLOR DESCRIPTION DESCRIPTION DE COULEUR	COLOR NO NO DE COULEUR	COLOR DESCRIPTION DESCRIPTION DE COULEUR
35B	KANON GOLD METALLIC		
37W	POINT RED		
5PK	BLACK		

PREFACE

When it becomes necessary to replace parts on SUZUKI MOTORCYCLES, always use SUZUKI GENUINE PARTS which have passed a strict inspection which guarantees quality and performance.

This parts catalogue covers the list of all service parts for SUZUKI TL1000SV, TL1000SW, TL1000SX, TL1000SY, TL1000SK1.

INSTRUCTIONS FOR QUOTING THE CATALOGUE

1. DIMENSIONS

Dimensions of the parts in this catalogue are indicated in unit millimeters.

2. ABBREVIATIONS

Abbreviations used in this catalogue are as follows:

AR	: As required	NT	: Number of teeth
ASSY	: Assembly	OPT	: Optional
E.No.	: Engine number	OS	: Over size
F.No.	: Frame number	STD	: Standard
d	: Diameter of material	T	: Thickness
ID	: Inside diameter	US	: Under size
OD	: Outside diameter	W	: Width
L	: Length	E28	: Canada specificati
LH	: Left hand side	E3	: Federal specificat
RH	: Right hand side	E33	: California specification

12 x 34 x 5.6 ····· Figures in the description column show the dimensions of parts.
ID OD T(or W,L)

© 2001 American Suzuki Motor Corporation

3. INNER PARTS OF ASSEMBLY

Part name with a dot (.) in front as shown in the description column indicates the component of the assembly also available individually.

4. MODIFICATION NOTICE

A parts bulletin will be sent to you on all occasions when changes in parts occur, including interchangeable modifications between new parts and old ones.

5. NOTE

5-1. There are some different parts from those of production models among spare parts for the administrative reasons and common use of them with other models.

5-2. In respect of rubber hoses and vinyl tubes, please be sure to use them by cutting off according to the length mentioned on parts catalogue or what is actually required on the vehicle.

5-3. Note that the dra..ngs on the illustration page are for ready reference of spare parts number, not to be used as an assembly manual. When assembling, use "SUZUKI SERVICE MANUAL".

6. SERIAL FRAME NUMBER

TL1000SV : JS1VT51A V2100001~
TL1000SW : JS1VT51A W2100001~
TL1000SX : JS1VT51A X2100001~
TL1000SY : JS1VT51A Y2100001~
TL1000SK1 : JS1VT51A 12100001~

FIG.58

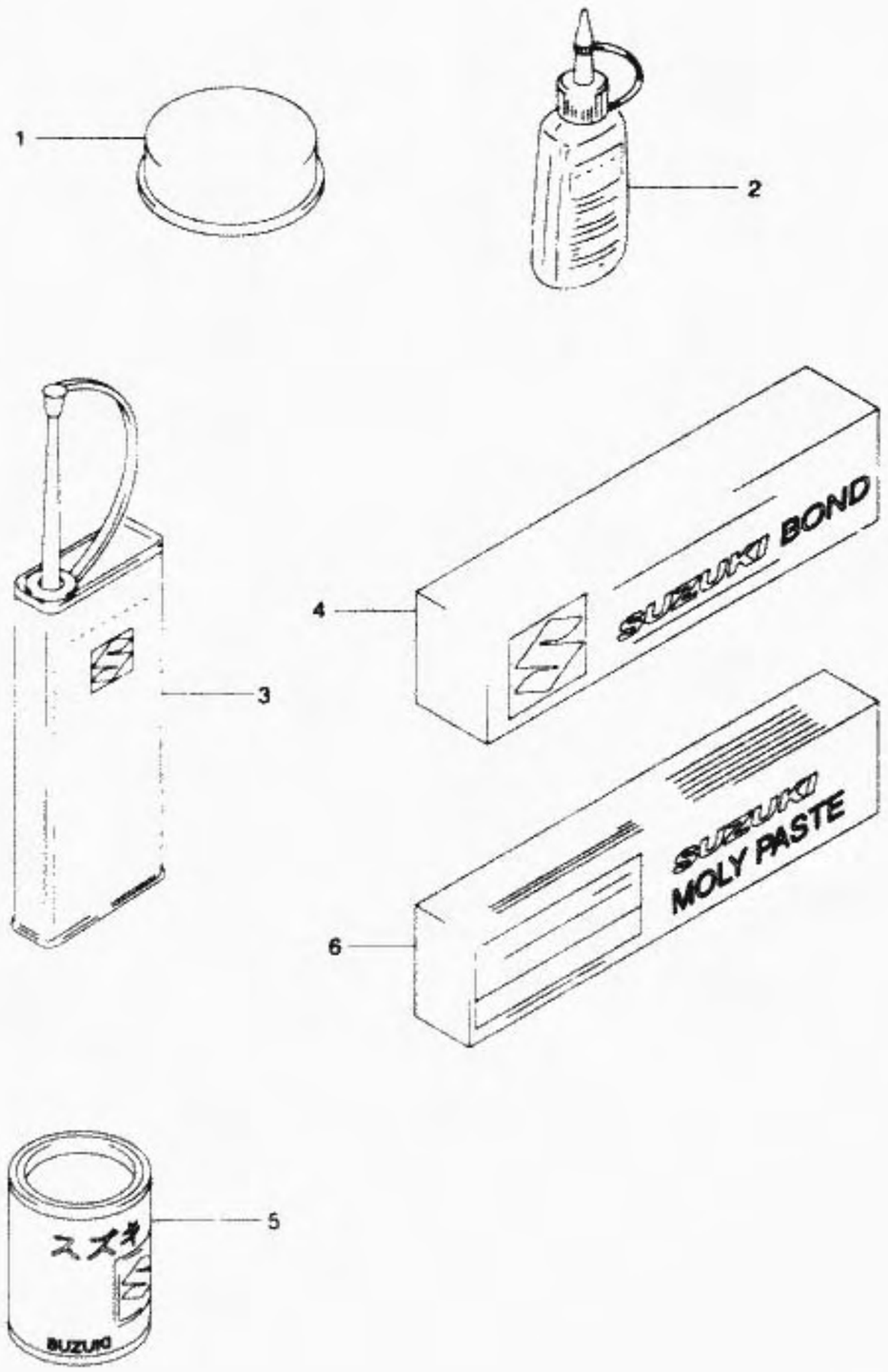

FIG.58 (J- 8) OPTIONAL

REF.NO.	PART NO.	DESCRIPTION	QTY.	REMARKS
1	99000-25110	SUZUKI PBC GREASE	1	20G
2-1	99104-32020	THREAD LOCK SUPER (1361A)	1	50G
2-2	99104-32030	THREAD LOCK SUPER (1363A)	1	50G
2-3	99000-32050	THREAD LOCK SUPER (1342)	1	50G
2-4	99000-32100	THREAD LOCK SUPER (1305)	1	50G
2-5	99000-32130	THREAD LOCK SUPER (1360)	1	50G
3	99000-32040	THREAD LOCK CEMENT	1	200G
4-1	99000-31140	SUZUKI BOND (1207B) BLACK	1	100G
4-2	99000-31110	SUZUKI BOND (1215)	1	100G
5	99000-25030	SUZUKI SUPER GREASE	1	150G
6	99000-25140	SUZUKI MOLY PASTE	1	50G