HONDA

1968-75

Service Manual

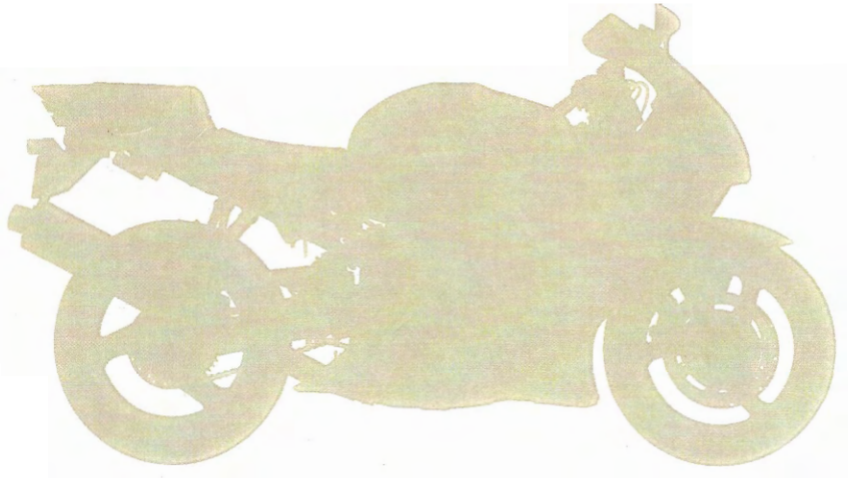

CB/CL450

FOREWORD

This manual is a maintenance and servicing guide for the HONDA 450, the largest in the series HONDA matorcycles.

The description and information is based on the Model CB 450, however, since the Model CL 450 is very similar in design and performance, the manual is also applicable to this model equally as well. The areas of difference are specifically noted both by description and figures.

Each section contains a general description of operation for the respective components and the unique design features attributing to the superior performances of these models.

Service and maintenance procedures are outlined in detail to enable the shop personnel to locate the problems rapidly and make repairs with much saving in time.

This manual has been prepared by major groups, assemblies and sections for easy use. Further, all work procedures are descriptive and accompanied by many photographs and drawings for clarity.

HONDA MOTOR CO., LTD.

Service Pablications Office

ALL INFORMATION, ILLUSTRATIONS, DIRECTIONS AND SPECIFICATIONS INCLUDED IN THIS PUBLICATION ARE BASED ON THE LATEST PRODUCT INFORMATION AVAILABLE AT THE TIME OF APPROVAL FOR PRINTING. HONDA MOTOR CO., LTD. RESERVES THE RIGHT TO MAKE CHANGES AT ANY TIME WITHOUT NOTICE AND WITHOUT INCURRING ANY OBLIGATION WHATEVER.

NO PART OF THIS PUBLICATION MAY BE REPRODUCED WITHOUT WRITTEN PERMISSION.

CONTENTS

1. FEATURES 1

2. SPECIFICATIONS 3

3. ENGINE 9

Special Tools for Engine Disassembly and Reassembly 9

3. 1 SECTIONAL VIEW OF ENGINE 11

A. Construction 13

B. Dismounting the Engine 14

C. Remounting the Engine 16

3. 2 CYLINDER HEAD 17

A. Construction 17

B. Disassembly 18

C. Inspection 19

D. Reassembly 19

E. Camshaft Construction 22

F. Cam Follower Construction 23

G. Camshaft and Cam Follower Disassembly 24

H. Camshaft and Cam Follower Inspection 24

I. Camshaft and Cam Follower Reassembly 25

J. Valve and Torsion Bar Spring 26

K. Valve and Torsion Bar Spring Disassembly 28

L. Valve and Torsion Bar Spring Inspection 29

M. Valve and Torsion Bar Spring Reassenbly 30

N. Cam Chain Guide Roller Construction 31

O. Cam Chain Guide Roller Disassembly 31

P. Cam Chain Guide Roller Reassembly 31

Q. Cylinder Construction 32

R. Cylinder Disassembly 32

S. Cylinder Inspection 32

T. Cylinder Reassembly 33

U. Piston Construction 33

V. Piston Ring Construction 34

W. Piston and Ring Disassembly 35

X. Piston and Ring Inspection 36

Y. Piston and Ring Reassembly 37

3. 3 CRANKCASE COVER (RIGHT) 38

A. Construction 38

B. Disassembly 39
C. Reassembly 39
D. Oil Filter Construction 39
E. Oil Filter Disassembly 39
F. Oil Filter Reassembly 40
G. Clutch 42
H. Oil Pump Construction 42
I. Clutch Disassembly 42
J. Clutch Inspection 43
K. Clutch Reassembly 44
3. 4 CRANKCASE COVER (LEFT) 44
A. Construction 44
B. Disassembly 44
C. Reassembly 44
3. 5 UPPER AND LOWER CRANKCASE 45
A. Construction 45
B. Oil Separator Operation 46
C. Upper and Lower Crankcase Disassembly 46
D. Upper and Lower Crankcase Inspection 46
E. Upper and Lower Crankcase Reassembly 46
F. Crankshaft Construction 47
G. Connecting Rod Construction 48
H. Crankshaft Disassembly 49
I. Crankshaft Inspection 49
J. Crankshaft Reassembly 50
K. Transmission Construction 51
L. Transmission Disassembly 53
M. Transmission Inspection 53
N. Transmission Reassembly 54
O. Gear Shift Construction 54
P. Gear Shift Disassembly 55
Q. Gear Shift Inspection 55
R. Gear Shift Reassembly 55
S. Kick Starter Construction 56
T. Kick Starter Disassembly 56
U. Kick Starter Inspection 56
V. Kick Starter Reassembly 56
3. 6 Carburetor 57
A. Construction 57
1. Air System 59
2. Fuel System 59

3. Float Chamber 60
4. Choke 60
B. Carburetor Adjustment 61
1. Idling 61
2. Low and Cruising Speeds 61
3. Medium Speed 61
4. High Speed 63
5. Float Level Adjustment 63

4. FRAME 65

Special Tools Required for Disassembly and Reassembly 66

4. 1 HANDLEBAR 67
A. Construction 67
B. Disassembly 67
C. Inspection 69
D. Reassembly 69

4. 2 FORK TOP BRIDGE 70
A. Construction 70
B. Disassembly 70
C. Inspection 71
D. Reassembly 71

4. 3 FRONT CUSHION 71
A. Construction 71
B. Disassembly 73
C. Inspection 74
D. Reassembly 75

4. 4 STEERING STEM 76
A. Construction 76
B. Disassembly 76
C. Inspection 76
D. Reassembly 77

4. 5 FUEL TANK 77
A. Construction 77
B. Disassembly 77
C. Inspection 78
D. Reassembly 78

4. 6 FRAME BODY 79
A. Construction 79
B. Disassembly 80
C. Inspection 81
D. Reassembly 81

4. 7 SEAT AND AIR CLEANER 82
A. Construction 82
B. Disassembly 82
C. Inspection 83
D. Reassembly 83
4. 8 STAND AND BRAKE SHOE 83
A. Construction 83
B. Disassembly 84
C. Inspection 85
D. Reassembly 85
4. 9 EXHAUST PIPE AND MUFFLER 86
A. Construction 86
B. Inspection 86
C. Reassembly 86
4. 10 AIR CLEANER 87
A. Construction 87
B. Disassembly 88
C. Inspection 88
D. Reassembly 88
4. 11 REAR FORK AND REAR FENDER 89
A. Construction 89
B. Disassembly 89
C. Inspection 90
D. Reassembly 90
4. 12 REAR CUSHION 91
A. Construction 91
B. Disassembly 93
C. Inspection 93
D. Reassembly 93
4. 13 FRONT WHEEL 95
A. Construction 95
B. Disassembly 95
C. Inspection 97
D. Reassembly 98
4. 14 REAR WHEEL 100
A. Constraction 100
B. Disassembly 101
C. Inspection 102
D. Reassembly 103

5. ELECTRICAL PARTS 107

5. 1 ELECTRICAL EQUIPMENT 107

5. 2 POWER SUPPLY SYSTEM 107

5. 3 IGNITION CIRCUIT 107

A. Ignition system 107

B. Ignition coil 107

1. Construction 108

2. Principle of operation 108

3. Testing 109

4. Coil spark characteristics 109

C. Spark Advancer 109

D. Contact Breaker 110

E. Condenser 111

F. Spark Plug 112

1. Spark Plug requirements 112

2. Spark Plug 113

3. Spark Plug themal characteristics 114

4. Spark Plug Reach 115

5. Noise Suppressor 116

5. 4 POWER CIRCUIT 117

A. AC Generator 117

B. Current Limiter 117

1. Inspection 118

2. Operation 118

3. Serving 118

4. Characteristic 118

C. Selenium Rectifier 119

D. Battery 122

Discharge Rates 124

Vacuum Dry Charged Battery 124

Instruction Before Using 127

Precaution During Use 128

Battery Troubles 128

Battery Repair 129

5. 5 ELECTRIC STARTER 130

A. Starting Circuit 130

B. Starting Motor Characteristics 130

C. Stator Reduction 131

D. Removal 131

E. Servicing 131

F. Starting Clutch 133
G. Starter Solenoid 134
5. 6 SAFETY DEVICES 135
A. Horn 135
B. Serving 136
C. Tail-Stoplight 137
D. Pilot Lamp 137
E. Tachometer and Speedometer 137
F. Characteristics of the Speedometer 138
G. Headlight 139
H. Flasher Relay 140
Flasher relay operation 140
Handling 141
5. 7 SWITCH 141
A. Combination Switch 141
B. Starter Lighting Switch 141
C. Winker-Horn Switch 142
5. 8 WIRE HARNESS 142
6. INSPECTION AND ADJUSTMENT 145
6. 1 MAINTENANCE 145
A. Engine Tune-up 145
1. Measuring Compression 145
2. Tappet Adjustment 146
3. Contact Breaker Point Gap and Ignition Timing Adjustment 147
4. Spark Plug 150
5. Fuel System 150
6. Cleaning Oil Filter 151
7. Air cleaner cleaning 152
8. Clutch Adjustment 153
9. Cam Chain Adjustment 154
10. Carburetor Cleaning and Adjustment 154
B. Lubrication 156
1. Part for which there is no periodical lublication 156
2. Engine Oil Change 157
3. Greace 158
4. Front Fork Fluid Change 158
C. Drive Chain Adjustment 158
D. Brake Adjustment 159
1. Front Brake 159
2. Rear Brake 160

E. Battery Inspection 160
F. Checking Parts for Tightness 161
1. Important Nuts and Bolts 161

7. SUPPLEMENT OF CB/CL 450 K1～K7 163
1. COMPARISON OF CB/CL 450 K3 TO CB/CL 450 K1 163
2. COMPARISON OF CB/CL 450 K4 TO CB/CL 450 K3 165
3. COMPARISON OF CL 450 K5 TO CL 450 K3, K4 167
4. COMPARISON OF CB/CL 450 K6 TO CB/CL 450 K5 169
5. COMPARISON OF CB 450 K7 TO CB 450 K6 171
WIRING DIAGRAM 189

1. FEATURES

CB/CL 450 SHOP MANUAL

The Honda CB 450 has been specially designed for use as a sports motorcycle by increasing the engine power output and mounting it on a newly engineered lightweight frame of greater rigidity. The performance and handling is further improved by incorporating a 5-speed transmission to meet the full range of condition from high speed sports riding to operating over rough country roads.

The CL 450 is identical to the CB 450 with the distinct difference being in the setting of the carburetor, and design of the frame components to provide a sports motorcycle suitable for touring and rugged riding.

1. ENGINE

-1 Description

Air-cooled, 4-cycle, vertical side-by-side, twin cylinder gasoline engine with a double overhead camshaft.

-2 Cylinder head and combustion chamber

Cylinder head is a high strength aluminum alloy casting with a special cast iron valve seat inserts. Further, the combustion chamber is a semi spherical design incorporating a squish area for greater efficiency.

-3 Crankshaft

Precisionly balanced crankshaft is mounted on four main roller bearings for minimum friction.

-4 Valve mechanism

Camshaft is driven by and endless chain which is maintained at a constant tension by an adjustable tensioner assembly and guide rollers distributed uniformly over the entire length of the chain for greater operating stability and rugged service. In addition, torsion bar valve springs are used for increasing the power output.

-5 Carburetor

By the use of a dual loaded servo carburetors, a stable and smooth highly efficient engine operation is obtained over the entire speed range.

-6 Lubrication

A pressure lubrication system provided by the efficient plunger pump, and incorporating a dual screen and centrifugal filters provide highly purified oil to the engine moving components (crankshaft, transmission, etc.) assuring a minimum of wear.

-7 Ignition system

A 12 V battery ignition system is used.

-8 Air cleaner

A formed box one piece air cleaner silences the air inlet noise as well as efficiently protecting the engine from rain dust and dirt.

-9 The CL 450 mounts the same engine as the CB 450 with the difference in the exhaust system which is designed to provide a power characteristic favorable in the lower speed range for superior

riding performance on rough terrain. In conjunction with the design in the exhaust system, the carburetor setting is also different.

2. FRAME

-1 Frame body

Main structural member of frame is made of high strength steel tubing and designed as a semi-double cradle frame.

-2 Front and rear suspension

Front wheel suspension is a telescoping oil damper type having an aluminum alloy bottom case for lightness.

Rear wheel suspension is a welded steel tubing, cross member, swing arm type rear fork cushion for both the front and rear are made longer for improved comfort.

-3 Big tires, 3.25-18 for the front and 3.50-18 for the rear are mounted on the CB450 for greater comfort and better stability.

The CL 450 mounts a 3.25-19 on the front and 3.50-18 on the rear wheels with block pattern tread for good stability on rough roads.

-4 Friction type steering damper is used for improved handling.

-5 The frame of the CL 450 is higher to prevent the components from contacting the ground in case of fall.

2. SPECIFICATIONS

CB 450 (AH Type)

mm (in.)

ITEM	CB 450	CB 450 K1	CB 450 K2	CB 450 K3	CB 450 K4	CB 450 K5	CB 450 K6	CB 450 K7
DIMENSION								
Overall length	2115 (83.3)	2065	←	2100 (82.7)	←	2115 (83.3)	←	←
Overall width	775 (30.5)	775 (30.5)	←	800 (31.5)	←	830 (32.6)	←	←
Overall height	1090 (43.0)	←	←	1140 (44.9)	←	1150 (45.2)	←	←
Seat height	790 (31.0)	←	←	815 (32.1)	←	←	←	←
Ground clearance	140 (5.5)	←	←	135 (5.3)	←	140 (5.5)	←	←
FRAME								
Type	Semi-double cradle	←	←	←	←	←	←	←
F. suspension, travel	Telescopic fork	←	←	←	←	←	←	←
R. Suspension, travel	Swing arm	←	←	←	←	←	←	←
F. tire size, pressure	3.25–18 (4 PR)	←	←	←	←	←	←	←
R. tire size, pressure	3.50–18 (4 PR)	←	←	←	←	←	←	←
F. Brake	Internal expansion	←	←	←	←	←	←	←
Fuel capacity	12.5 lit (3.3 US. gal, 2.8 Imp. gal)	←	13.5 lit. (3.6 U.S.gal)	←	←	←	←	←
Fuel reserve capacity	1.8 lit. (0.5 US. gal 0.4 Imp. gal)	←	←	←	←	←	←	←
ENGINE								
Type	D.O.H.C twin cylinder air cooled 4 stroke	←	←	←	←	←	←	←
Cylinder arrengement	Vertical twin cylinder	←	←	←	←	←	←	←
Bore and stroke	70 × 57.8 (2.756 × 2.276)	←	←	←	←	←	←	←
Displacement	444 cc (27.09 cu-in)	←	←	←	←	←	←	←
Compression ratio	9.0 : 1	←	←	←	←	←	←	←
Valve train	Chain driven double over head camshaft	←	←	←	←	←	←	←
Oil capacity	2.8 lit. (3.0 US. qt 2.5 Imp. qt)	←	←	←	←	←	←	←
Lubrication system	Forced and wet sump	←	←	←	←	←	←	←
Intake Opens	10	←	←	←	←	←	←	←
Intake Closes	40	←	←	←	←	←	←	←
Exhaust valve Opens	40	←	←	←	←	←	←	←
Exhaust valve Closes	10	←	←	←	←	←	←	←
Valve tappet clearnce	0.03 (0.0012)	←	←	←	←	←	←	←
Idle speed	1000 rpm	←	←	←	←	←	←	←

ITEM	CB 450	CB 450 K1	CB 450 K2	CB 450 K3	CB 450 K4	CB 450 K5	CB 450 K6	CB 450 K7
DRIVE TRAIN								
Clutch	Wet, multi-plate type	←	←	←	←	←	←	←
Transmission	Five-speed for ward constant mesh	←	←	←	←	←	←	←
Primary reduction	3.304	←	←	←	←	←	←	←
Gear ratio I	2.412	←	←	←	←	←	←	←
Gear ratio II	1.636	←	←	←	←	←	←	←
Gear ratio III	1.269	←	←	←	←	←	←	←
Gear ratio IV	1.000	←	←	←	←	←	←	←
Gear ratio V	0.844	←	←	←	←	←	←	←
Final reduction	2.333	←	←	←	←	←	←	←
Gear shift pattern	Left foot return system	←	←	←	←	←	←	←
ELECTRICAL		←	←	←	←	←	←	←
Ignition	Battery	←	←	←	←	←	←	←
Starting system	Motor and kick pedal	←	←	←	←	←	←	←
Alternator	A.C generator 0.11 kW/4000 rpm	←	←	←	←	←	←	←
Battery capacity	12 V–12 AH	←	←	←	←	0.120 kW/ 4000 rpm	←	←
Spark plug	NGK B–8 ES	NGK B–8 ES	←	←	←	NGK 8 ES ND W 24 ES	←	←

CL 450 (AH Type)

mm (in)

ITEM	CL 450	CL 450 K1	CL 450 K2	CL 450 K3	CL 450 K4	CL 450 K5	CL 450 K6
DIMENSION							
Overall length	2080 (82.0)	←	←	←	←	2115 (83.3)	←
Overall width	830 (32.5)	←	←	860 (34.0)	←	←	←
Overall height	1125 (44.2)	←	←	1115 (45.5)	←	←	←
Wheel base	1375 (54.0)	←	←	←	←	←	←
Seat height	795 (31.0)	←	←	815 (32.1)	←	←	←
General clearance	155 (6.0)	←	←	135 (5.3)	←	←	←
FRAME							
Type	Semi-double cradle	←	←	←	←	←	←
F. suspension travel	Telescopic fork	←	←	←	←	←	←
R. suspension travel	Swing arm	←	←	←	←	←	←
F. tire size, pressure	3.25–19 (4 PR)	←	←	←	←	←	←
R. tire size, pressure	3.50–18 (4 PR)	←	←	←	←	←	←
F. brake	Internal expansion	←	←	←	←	←	←
Fuel capacity	9.0 lit. (2.4 US. gal, 2.0 Imp. gal)	←	←	←	←	10 lit.	10 lit. (2.6 US. gal / 2.2 Imp. gal)
Fuel reserve capacity	1.6 lit.	←	←	←	←	←	←
ENGINE							
Type	D.O.H.C twin cylinder air cooled 4 stroke	←	←	←	←	←	←
Cylinder arrangement	Vertical twin cylinder	←	←	←	←	←	←
Bare and stroke	70 × 57.8 (2.756 × 2.276)	←	←	←	←	←	←
Displacement	444 cc (27.09 cu-in)	←	←	←	←	←	←
Compression ratio	9.0 : 1	←	←	←	←	←	←
Valve train	Chain driven double over head camshaft	←	←	←	←	←	←
Oil capacity	2.8 lit. (6.0 US. qt, 5.0 Imp. qt.)	←	←	←	←	←	←
Lubrication system	Forced and wet sump	←	←	←	←	←	←
Intake valve Opens	10	←	←	←	←	←	←
Intake valve Closes	25	40	←	←	←	←	←
Exhaust valve Opens	40	←	←	←	←	←	←
Exhaust valve Closes	10	←	←	←	←	←	←
Valve tappet clearance	0.03 (0.0012)	←	←	←	←	←	←
Idle speed	1000 rpm	←	←	←	←	←	←
DRIVE TRAIN							
Clutch	Forced and wet sump	←	←	←	←	←	←
Transmission	Five-speed foward, constant mesh	←	←	←	←	←	←

ITEM		CL 450 K1	CL 450 K2	CL 450 K3	CL 450 K4	CL 450 K5	CL 450 K6
Primary reduction	3.304	←	←	←	←	←	←
Gear ratio I	2.412	←	←	←	←	←	←
Gear ratio II	1.636	←	←	←	←	←	←
Gear ratio III	1.269	←	←	←	←	←	←
Gear ratio IV	1.000	←	←	←	←	←	←
Gear ratio V	0.844	←	←	←	←	←	←
Gear ratio VI		←	←	←	←	←	←
Final reduction	2.333	←	←	←	←	←	←
Gear shift pattern	Left foot type return system	←	←	←	←	←	←
ELECTRICAL							
Ignition	Battery	←	←	←	←	←	←
Starting system	Motor and kick pedal	←	←	←	←	←	←
Alternator	A.C generator	←	←	←	←	←	0.11 km/ 4000 rpm
Battery capacity	12 V–12 A	←	←	←	←	←	←
Spark plug	NGK B8ES	←	←	←	←	←	NGK B8ES ND W24ES

CB 450 DRIVING PERFORMANCE CURVE

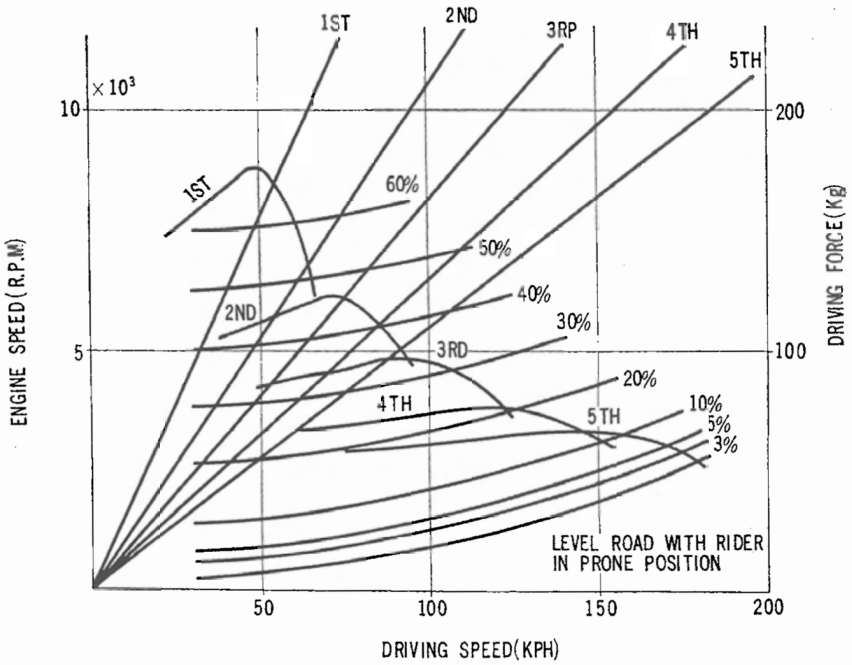

CB450 ENGINE PERFORMANCE CURVE

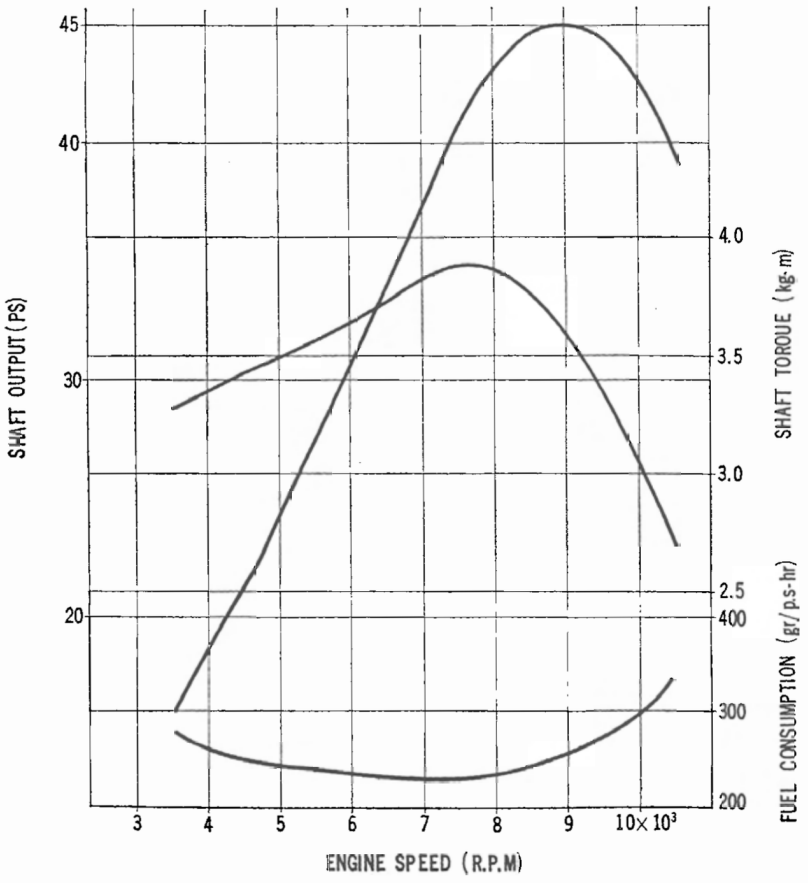

DIMENSIONAL DRAWING (CB 450) UNIT : mm (inch)

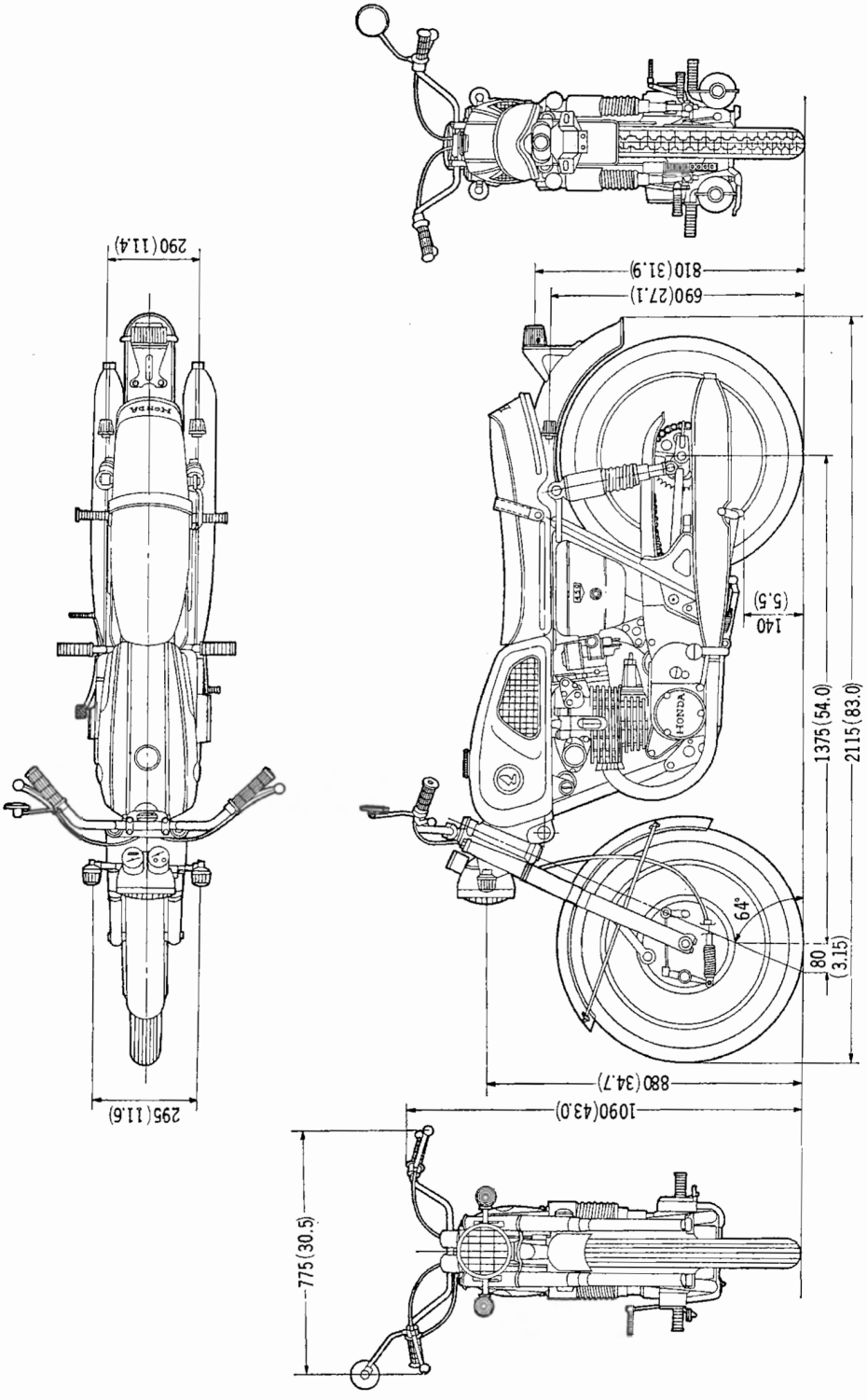

3. ENGINE

Special Tools Required for Disassembly and Reassembly

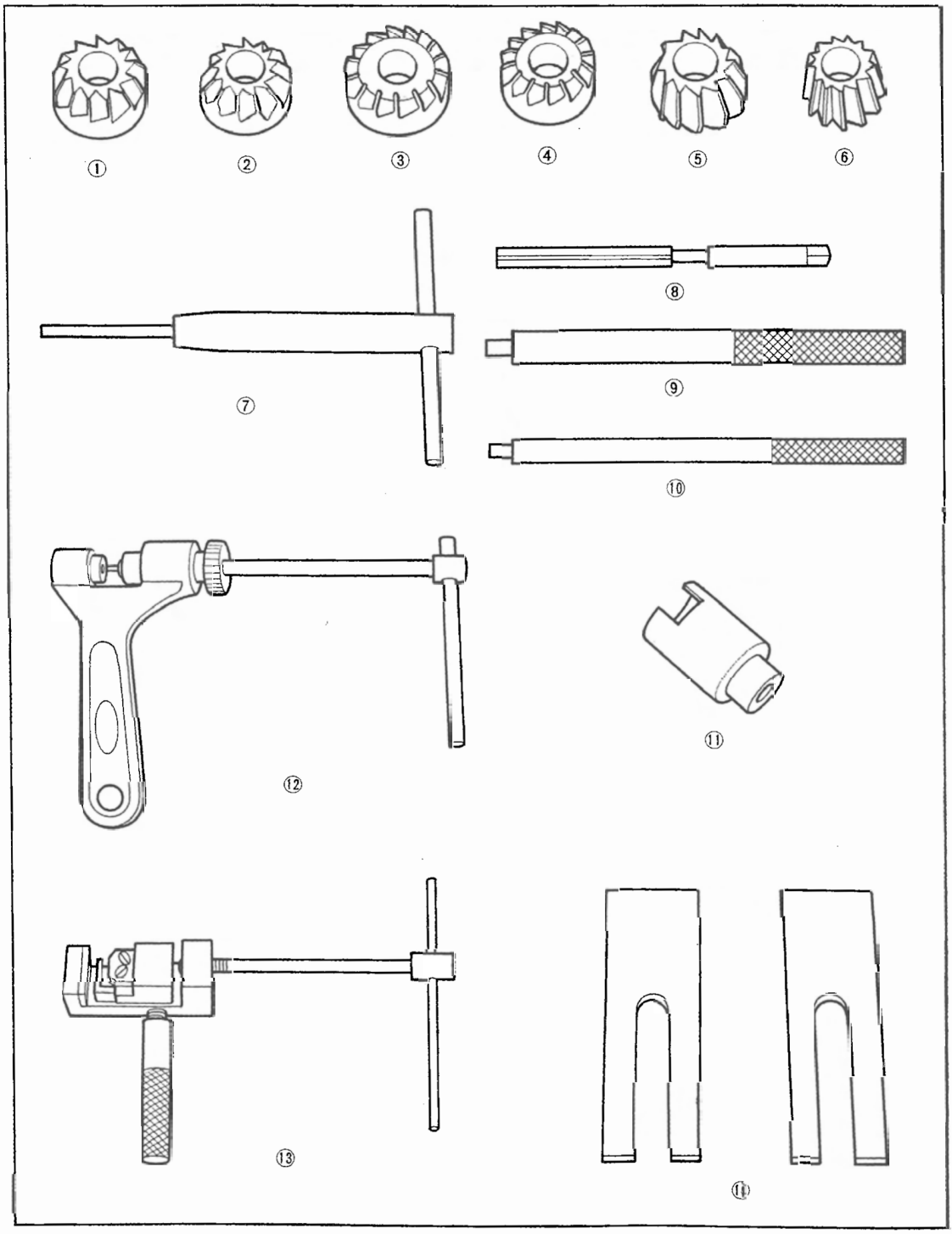

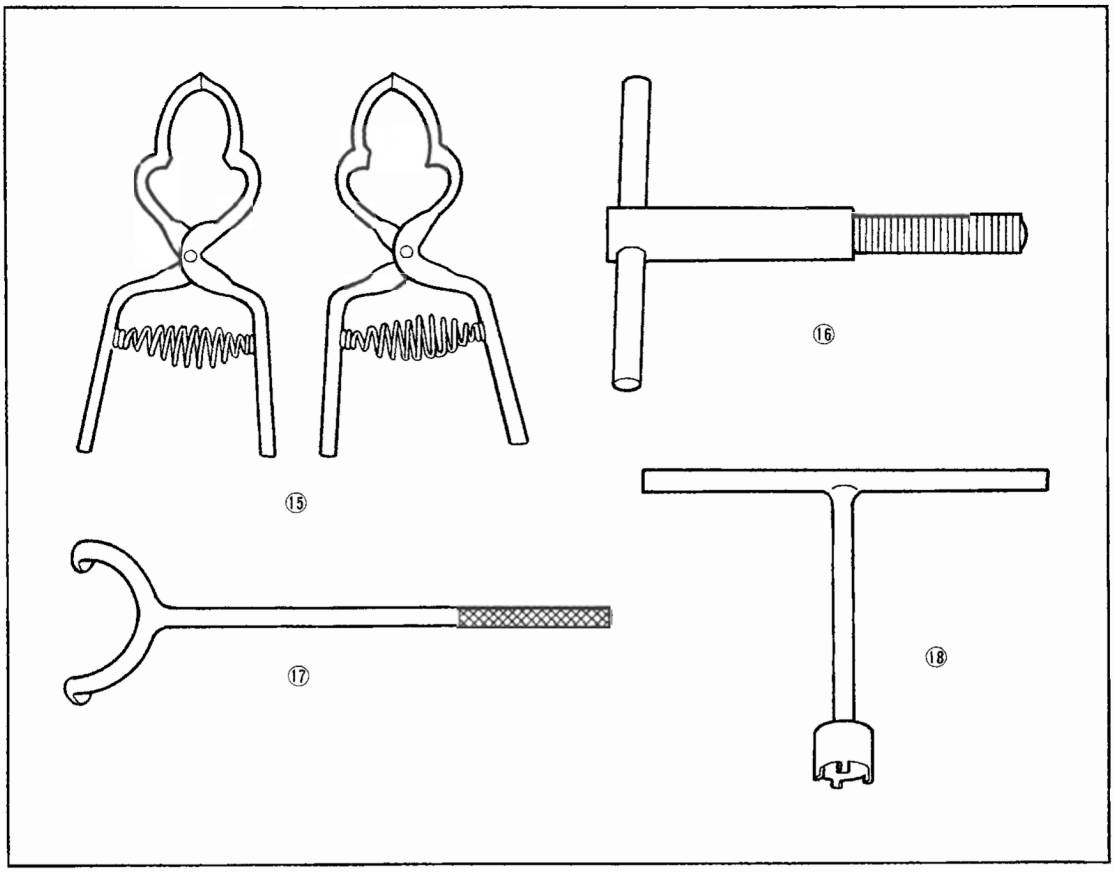

Ref. No.	Tool No.	DESCRIPTION
①	07980-2920100	Inlet valve seat cutter, 90° CB/CL 450 K1
①	07980-2830101	Inlet valve seat cutter, 90°
②	07980-2830200	Exhaust valve seat cutter, 90°
③	07980-2830300	Inlet valve seat flat surface cutter
④	07980-2830400	Exhaust valveseat flat surface cutter
③	07980-2920300	Inlet valve seat flat surface cutter
④	07980-2920400	Exhaust valve seat flat surface cutter
⑤	07980-2830501	Inlet valve interior cutter
⑥	07980-2830601	Exhaust valve interior cutter
⑦	07981-2830000	Valve seat cutter holder
⑧	07984-59000000	Valve guide reamer, 7 mm
⑨	07942-32902000	Valve guide driver
⑩	07942-25902000	Valve guide remover
⑪	07973-2830000	Torsion bar adjusting attachment
⑫	07968-2830100	Cam chain cutter
⑬	07968-2830200	Cam chain pincher
⑭	07958-2500000	Piston base (2 each)
⑮	07954-2830000	Piston ring compressor (2 each)
⑯	07933-2160000	Dynamo rotor puller
⑰	07922-2830000	Drive sprocket holder
⑱	07916-2830000	T-handle lock nut wrench, 16 mm

3.1 Engine

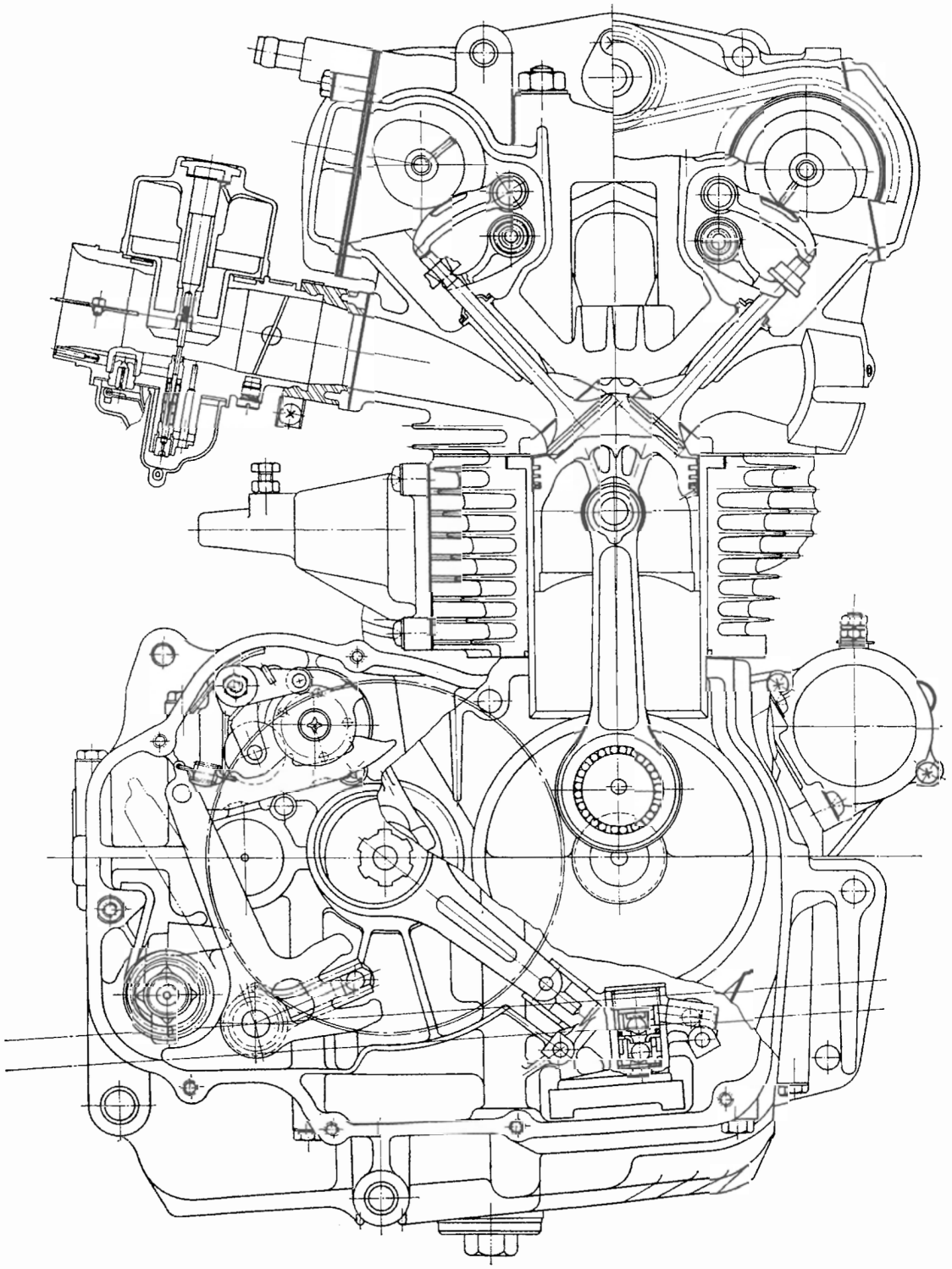

Fig. 3.1 Engine Construction (1)

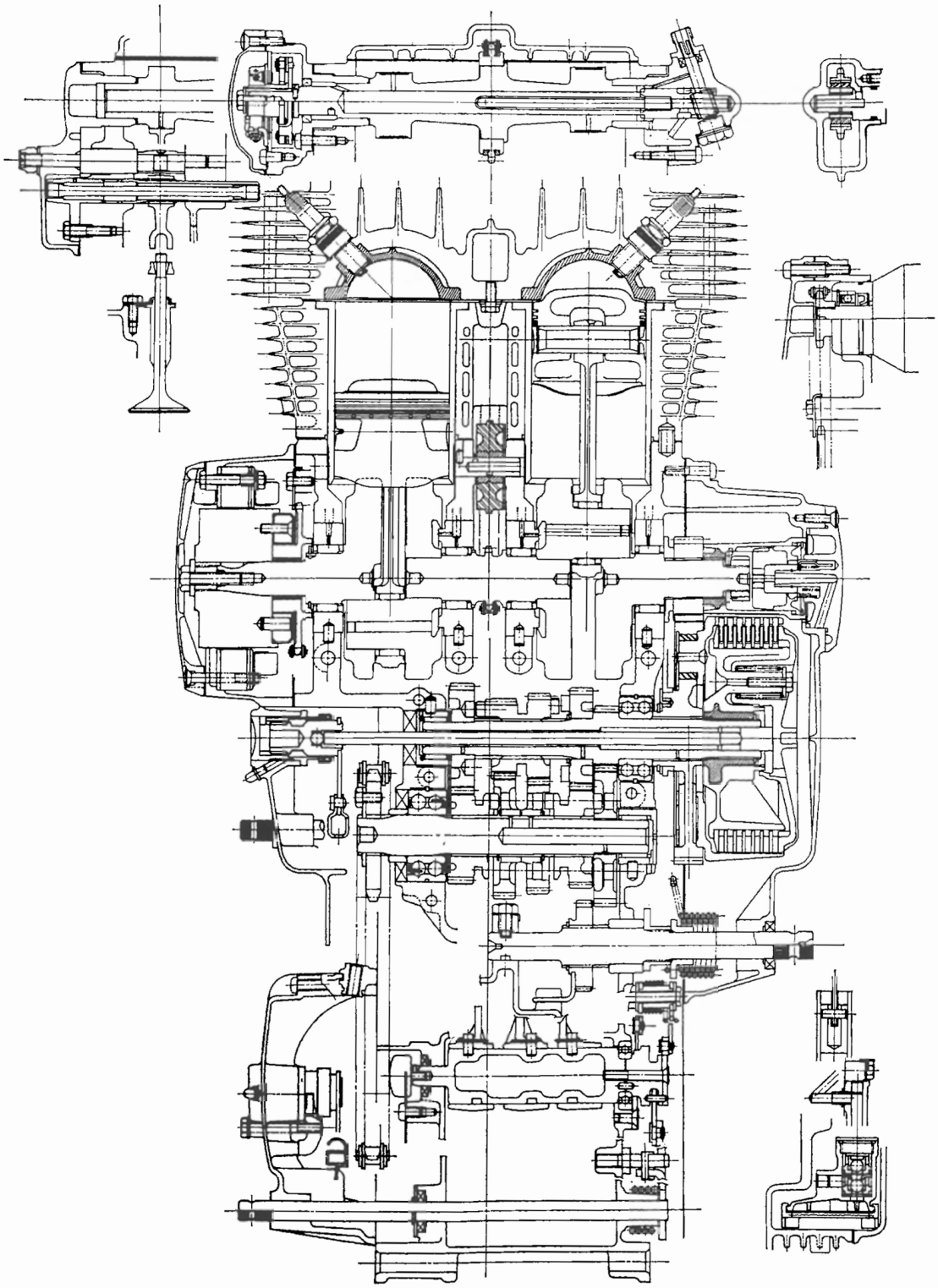

Fig. 3.2 Engine Construction (III)

A. Construction

It is no exaggeration to state that the quality of the engine reflects the superiority of the motorcycle. An engine that is light in weight, compact, and having a large power output is a desireable attribute, however, the engine must have a well balanced appearance which matches the frame, in order to produce a perfect motorcycle.

This model was designed to fulfill this aim by employing many new ideas and the latest in technology. The fruit of the effort is reflected in the motorcycle of high performance and a beautiful piece of machinery much sought after by avid riding fans. Features such as the twin cylinder double overhead cam, torsion bar valve springs (which eliminates surging during high speed), and a regulating mechanism featured with an eccentric cam follower shaft which practically eliminates tappet adjustment, are typical of the revolutionary features of this motorcycle. Also, the system of seven guide rollers suppresses the chain noise to the level which is unnoticeable; extra heavy duty bearings at the crankshaft and the transmission, and the dual oil filtering system incorporating both the centrifugal and the filtering mesh to enhance the durability and the long economical life of the engine. The two variable venturi system of the CV carburetors assures uniform fuel mixture independently to the respective cylinders to provide smooth power output at all speed ranges.

We are proud of the engine's responsive acceleration and its high fuel economy.

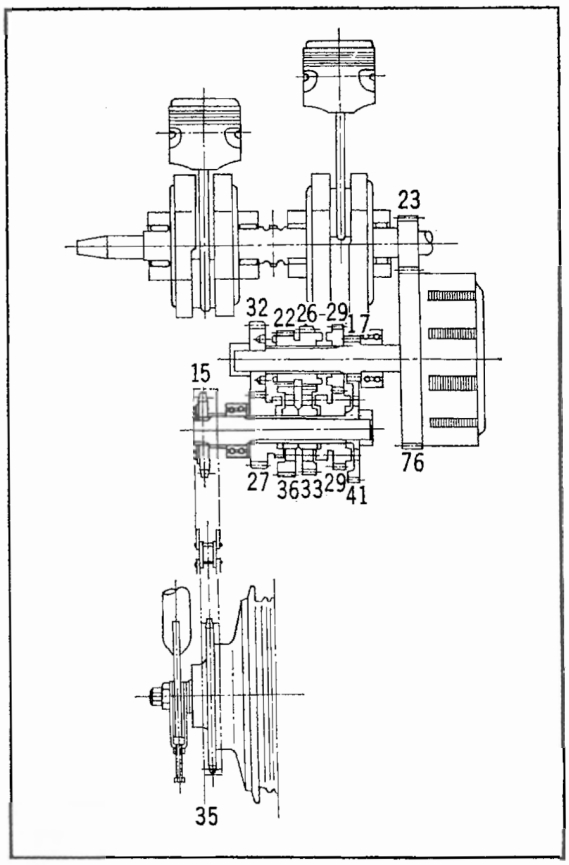

Fig. 3.3 Gear ratio

Law	2.412	(41/17)
2nd	1.636	(36/22)
3rd	1.269	(33/26)
4th	1.000	(29/29)
5th	0.844	(27/32)
Reduction ratio		
Primary	3.304	(76/23)
Secondary	2.333	(35/15)

Power Transmission

The sequence in the generation of power and its transmission to perform useful work at the rear wheel is as follows:

Combustion ⟶ piston ⟶ connecting rod ⟶ crankshaft ⟶ primary drive gear ⟶ (primary driven gear) clutch outer ⟶ seven friction discs ⟶ seven clutch plates ⟶ clutch center ⟶ transmission mainshaft ⟶ mainshaft gear ⟶ countershaft gear ⟶ countershaft ⟶ drive sprocket ⟶ drive chain ⟶ rear wheel. (Refer to **Fig. 3. 3**)

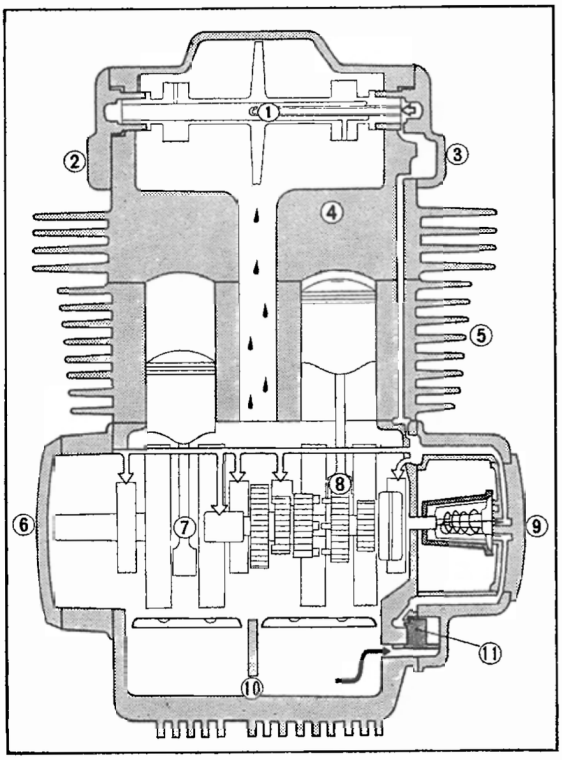

Fig. 3.4 Forced lubrication system
① To camshaft
② Left cover
③ Right cover
④ Cylinder head
⑤ Cylinder
⑥ Left crankcase cover
⑦ To mainshaft
⑧ To crankshaft
⑨ Right crankcase cover
⑩ Lower crankcase
⑪ Oil pump

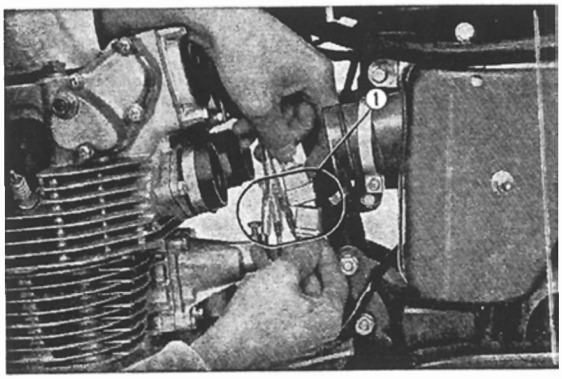

Fig. 3.5 Uncoupling the electrical leads
① Electrical leads

Lubrication

The various sections of the engine are lubricated by oil through the oil routing system :

Lower crankcase oil sump ⟶ filter screen ⟶ oil pump ⟶ lower crankcase ⟶ right crankcase cover ⟶ oil filter ⟶ right crankcase cover ⟶ upper crankcase ⟶ crankshaft, transmission mainshaft, inlet camshaft, and exhaust camshaft. (Refer to **Fig. 3. 4**)

In addition, the cam chain guide roller and torsion bar valve springs are lubricated by oil splashed from the camshaft. The counter shaft and kick starter pinion are also lubricated by oil splashed from the oil pan.

B. Dismounting the Engine

1. Fuel Tank
   Turn the fuel cock to the "STOP" position; remove the two fuel lines from the cock, the fuel level tube, raise the seat and remove the tank.
2. Carburetor
   Remove the throttle cables from the carburetors; remove the left and right air cleaner cases and loosen the carburetor insulating bands.
3. Remove the mufflers.
4. Clutch cable
   Remove the gear change pedal and left side step bar, and take off the drive chain cover.
5. Remove the drive chain.
6. Unplug the electrical cable connection. (Refer to **Fig. 3. 5**)

7. Remove the contact breaker cable connection.
8. Remove the high tension terminal assemblies from the spark plugs.
9. Remove the starting motor cable. (Refer to Fig. 3. 6)

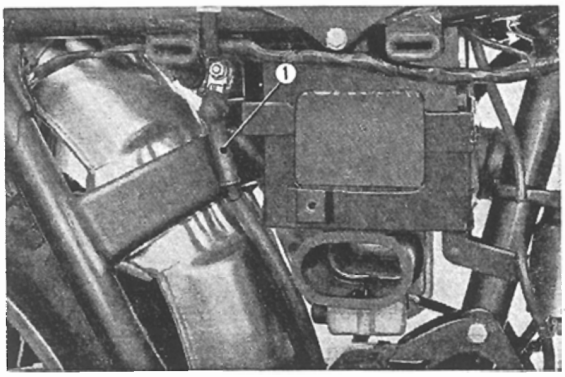

Fig. 3. 6 Removing the starting motor cable
① Starting motor cable

10. Disconnect the tachometer cable at the engine. (Refer to Fig. 3. 7)

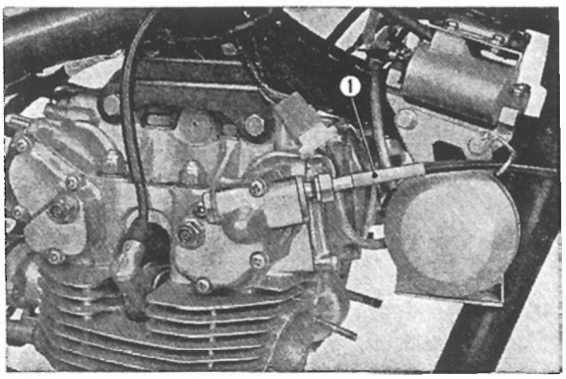

Fig. 3. 7 Removing the tachometer cable
① Tachometer cable

11. Remove the 13 engine hanger bolts and dismount the engine from the left side. (Refer to Fig. 3. 8)

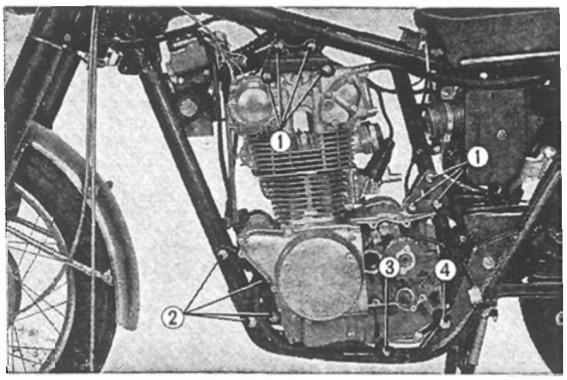

Fig. 3. 8 Removing the engine
① 8 mm bolt
② 10 mm bolt
③ Engine hanger bolt
④ 10 mm bolt

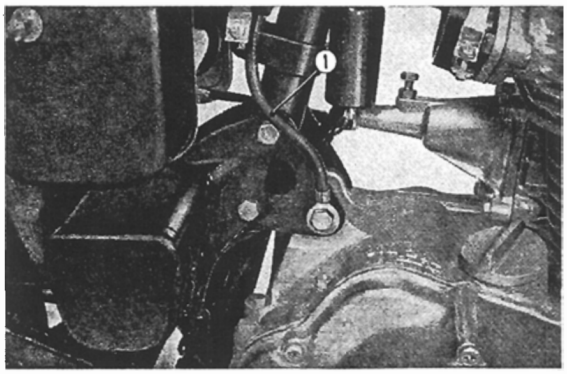

Fig. 3. 9 Installing the battery ground cable
① Battery ground cable

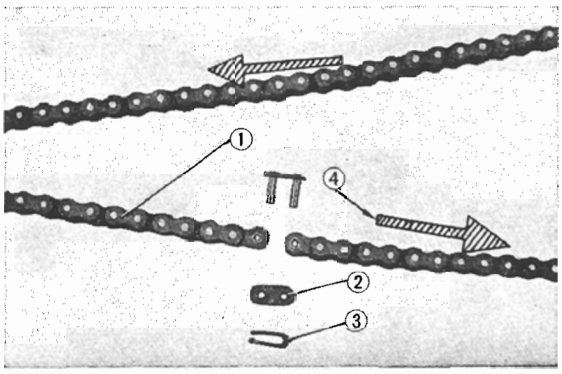

Fig. 3. 10 Drive chain joint clip direction
① Drive chain
② Drive chain joint
③ Drive chain joint clip
④ Rotation of direction

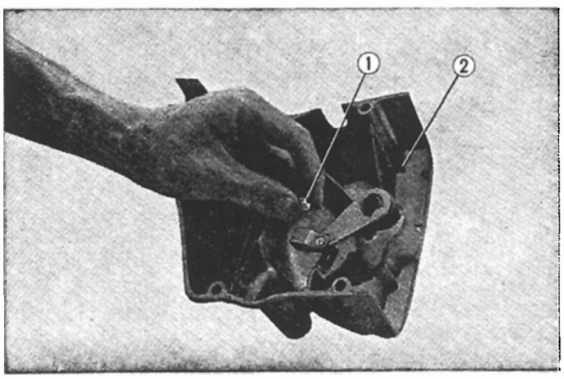

Fig. 3. 11 Steel ball replacement
① Steel ball
② Drive chain cover

C. Remounting the Engine

Remount the engine in the reverse sequence of dismounting.

NOTE :

a. Insert the hanger bolts from the right side of the frame and tighten nuts from the left side. Install the battery ground cable from the right side. (Refer to **Fig. 3. 9**)
b. If the hanger bolts do not go in easily, do not force. Find the cause and correct.
c. When installing the battery ground cable, clean all rust and paint from the hanger bolt as well as from the terminal and the frame mounting area so that good contact is assured. (Refer to **Fig. 3. 9**)
d. Make sure the drive chain joint link clip is facing in the correct direction, the opening opposite to the direction of chain movement. (Refer to **Fig. 3. 10**)
e. Make sure that the steel ball has been assembled in the clutch lifter thread before installing the drive chain cover. (Refer to **Fig. 3. 11**).

3. 2 Cylinder Head

A. Construction

The cylinder head contains the camshafts, cam followers, torsion bar valve springs, valves, cam chain guide rollers, etc., which are assembled on the main part of the head. The main part of the head consists of combustion chamber, intake and exhaust system components, etc. On the right end of the exhaust camshaft is mounted the tachometer gearbox. The contact breaker is installed on the left end.

The combustion chamber is semi-spherical in shape and incorporating a squish area for better cooling and improved combustion efficiency. (Refer to **Fig. 3. 12**)

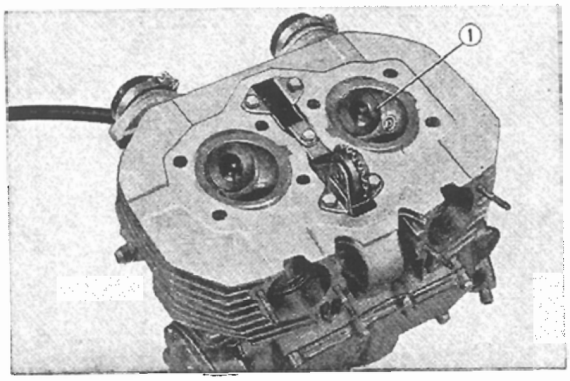

Fig. 3. 12
① Cylinder head

(SQUASH AREA)

This is the area in which part of the fuel mixture between the piston and cylinder head is compressed further at the end of the compression stroke to be injected into the main mixture, creating a swirl. The injected mixture is directed at the spark plug to increase the propagation of combustion. Even a lean or a slow burning fuel mixture will produce a smooth combustion with a reduced tendency toward engine "knock". (Refer to **Fig. 3. 13**)

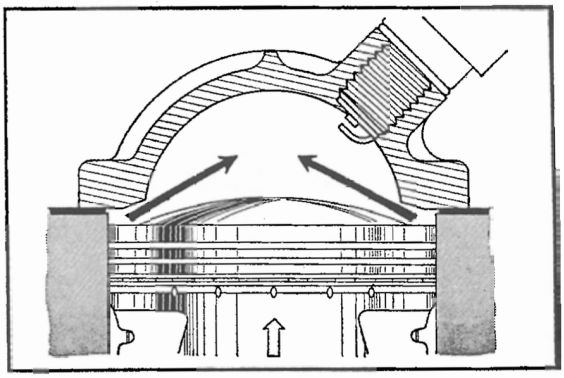

Fig. 3. 13 Squish area

The DOHC (double overhead camshaft) system which is provided with two independent camshafts, has lightended the reciprocating mass of the valve mechanism, increasing engine speed and operating stability at high output. Also, the combustion efficiency has been greatly improved, since the valves may be ideally positioned and the spark plug located in the center of the combustion chamber for greater efficiency.

The flow of cooling air around the upper portion of the combustion chamber is excellent, and together with the good heat transfer of the aluminum alloy head, the cooling efficiency has been increased notably.

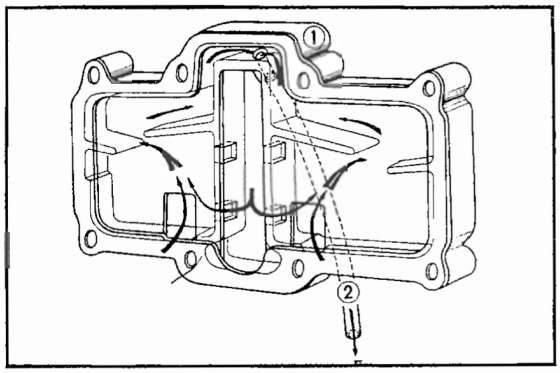

Fig. 3. 14 Breather
① Cylinder head cover A assembly
② Breather pipe

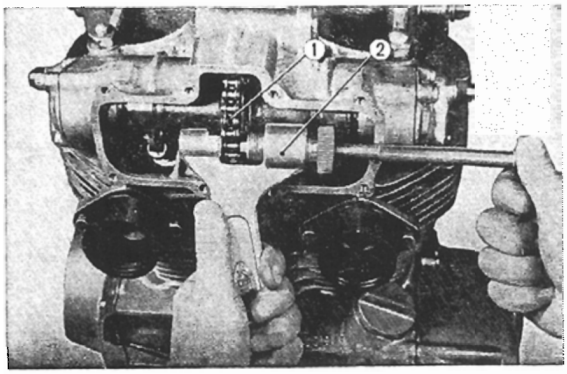

Fig. 3. 15 Removing the cam chain
① Cam chain
② Cam chain cutter

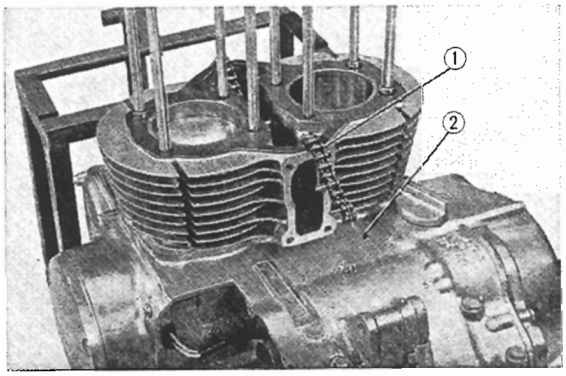

Fig. 3. 16 Hook wires on the chain and hook them on the outside of the cylinder
① Cam chain
② Wire

The breather is installed on the intake cylinder head cover on model with engine serial No. prior to CB 450 E-3000542, CL 450 E-1002569. On engine serial No. CB 450-3000543, CL 450 E-1002570 and subsequent, the breather is on the exhaust cylinder head cover. Inside the crankcase the pressure constantly fluctuates due to the reciprocating motion of the piston. The oil becomes contaminated and deteriorates due to the gas generated by the rise in temperature. Blow-by from the combustion chamber causes a pressure build-up within the crankcase. In order to prevent the undesirable conditions, the breather separates the oil within the labyrinth and exhausts the gas to the outside. Simultaneously, the breather works as an oil cooler. It also prevents the entry of humidity in the atmosphere from entering the engine. (Refer to **Fig. 3. 14**)

B. Disassembly

1. Remove both the intake and exhaust cylinder head covers.
2. Disconnect the cam chain at the joint by using a cam chain cutter. (**Fig. 3. 15**)

NOTE :

a. The side plate of the cam chain joint is lighter in color than the rest of the chain.
b. It is easier to disconnect the chain from the intake side.
c. The crankshaft can be turned easily by removing the spark plugs.
d. Be careful not to drop the cam chain joint in the engine.
e. Hook wires on both ends of the chain so that it does not drop into the crankcase. (Refer to **Fig. 3. 16**)

4. Remove the eight cylinder head retaining 10 mm hex and cap nuts.

NOTE :

It is recommended that the nuts be loosened in the reverse of the tightening sequence. (Refer to **Fig. 3. 19**)

C. Inspection

1. Inspect gasket surfaces for evidence of blow by or distortion. If surfaces are warped by more than 0.05 mm (0.002 in) correct by lapping on a surface plate. (Refer to **Fig. 3. 17**)
2. Remove the carbon from the combustion chamber with a carbon scraper, being careful not to scratch or damage the chamber surface. Wash off the carbon.

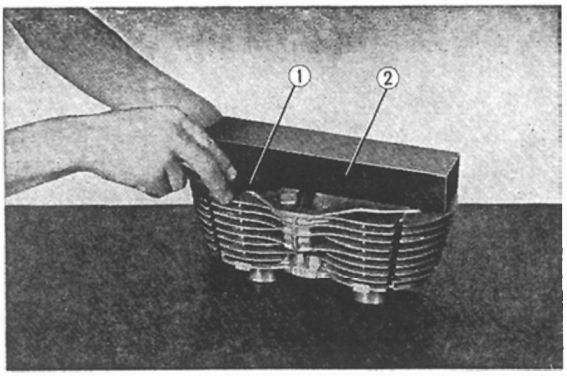

Fig. 3. 17 Measuring flatness of gasket surface
① Thickness gauge
② Square scale

D. Reassembly

1. Insure that the cylinder head gasket, three guide pins, and the two cylinder stud gaskets are properly installed. (Refer to **Fig. 3. 18**)
2. Assemble the component parts of the cylinder head. Route the cam chain through the proper passageway and connect. (Refer to **Fig. 3. 50**)

NOTE :

a. Gently install the head on the cylinder and properly fit the guide pins into the head.
b. Be careful not to allow the ends of the cam chain to fall into the case.

3. Install copper sealing washers and cap nuts on the two right-hand studs, and install flat washers (special item) and hex nuts on the other six studs, and torque the units.

NOTE :

a. The two right-hand stud holes are oil passageways ; therefore, if the copper washer is installed incorrectly, oil leak will occur. (The oil flow to the head can be checked by loosening these cap nuts.)
b. Torquing of the head nuts should be performed starting from the inside and working outward diagonally as shown in **Fig. 3. 19.** Use a

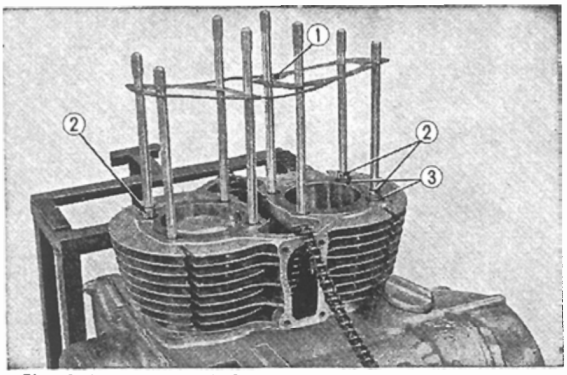

Fig. 3. 18 Insurance before reassembling the cylinder parts
① Cylinder head gasket
② 12 mm guide pins
③ Cylinder stud gaskets

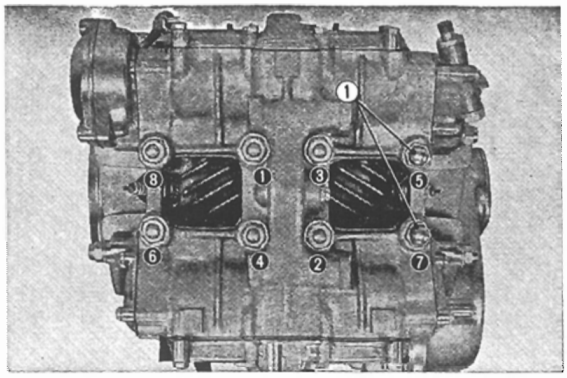

Fig. 3. 19 Tightening sequence
① Cap nuts

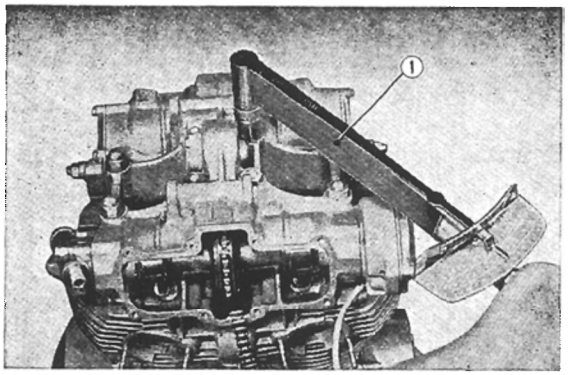

Fig. 3.20 Tightening the 10mm nuts by using a torque wrench
① Torque wrench

torque wrench for uniform torquing to **300 kg-cm (21.7 ft-lb)** (Refer to **Fig. 3. 20**)

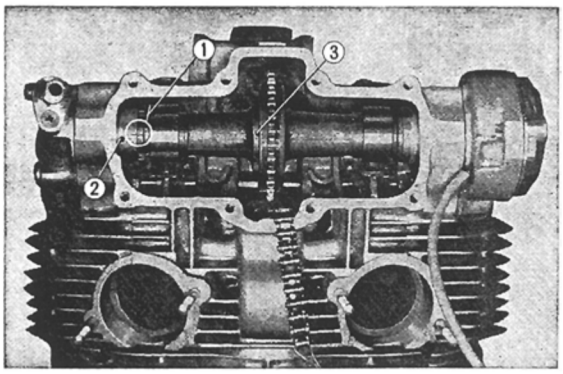

Fig. 3.21 Align the timing index mark
① Matching mark ② Bearing
③ Cam shaft

4. **Valve timing**

(1) Align the timing mark on the right side of the respective camshafts to the timing index mark on the respective bearings (Refer to **Fig. 3. 21**)

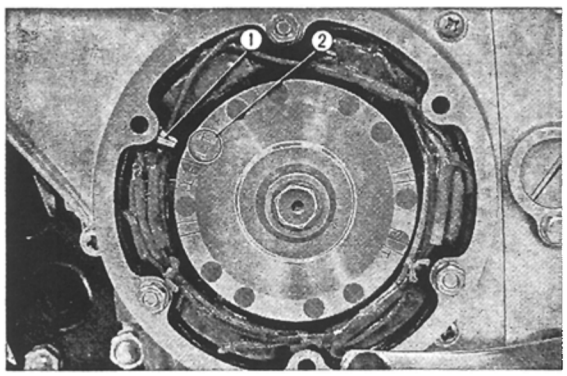

Fig. 3.22 Align the LT mark.
① Index mark ② "LT" mark

(2) Position the left piston to top-dead-center by aligning the "LT" mark on the generator rotor to the index mark on the stator. (Refer to **Fig. 3. 22**)

5. Assemble the cam chain.

NOTE:

a. It is easier to assemble the cam chain from the intake side.
b. A new cam chain joint should always be used.
c. Be careful not to drop the cam chain joint into the valve compartment.

6. Stake the cam chain joint by using the special tool. (Refer to **Fig. 3. 23**)

NOTE :

The special tool cannot be used where the chain passes over the sprocket.

Upon completion of the cam chain assembly, recheck the valve timing.

7. Cam chain tensioner installation

Loosen the lock nut, unscrew the tensioner adjusting bolt, push the tensioner roller against the inside of the cam chain tensioner and screw in the tensioner adjusting bolt to prevent the tensioner roller from popping out. Finally tighten the lock nut. In this condition, install the four 6mm hex bolts on the cylinder.

NOTE :

Always readjust the tensioner upon reassembly.

8. Adjust the cam chain tension. (Refer to **Fig. 3. 24**)

(1) Loosen the lock nut and unscrew the adjusting bolt to free the pushbar.

(2) Tighten the adjusting bolt and lock it with the 6mm nut.

NOTE :

a. Prior to tightening the adjusting bolt, rotate the crankshaft for positive intermeshing of the tensioner roller with the cam chain. This is necessary because the tensioner spring force is so designed to provide the most suitable tension on the chain.

b. Don't depress the pushbar when tightening the adjusting bolt, as it may cause over tightening of the chain which will result in unusual wear of the guide roller or cam chain noise.

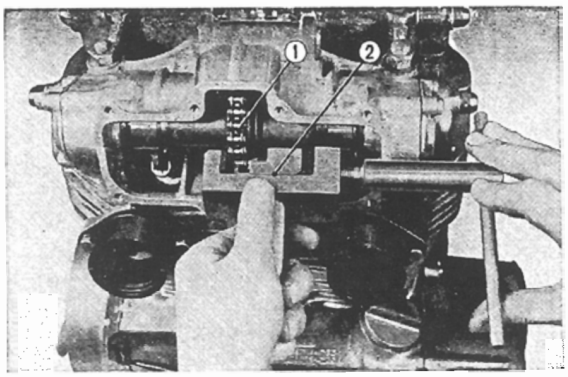

Fig. 3. 23 Staking the cam chain joint
① Cam chain ② Cam chain pincher

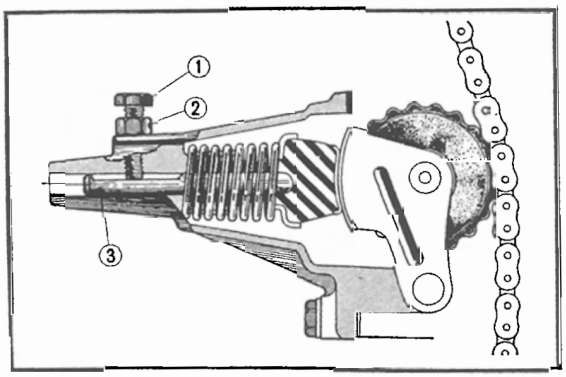

Fig. 3. 24 Cam chain tensioner
① Tensioner adjusting bolt
② Lock nut
③ Push bar

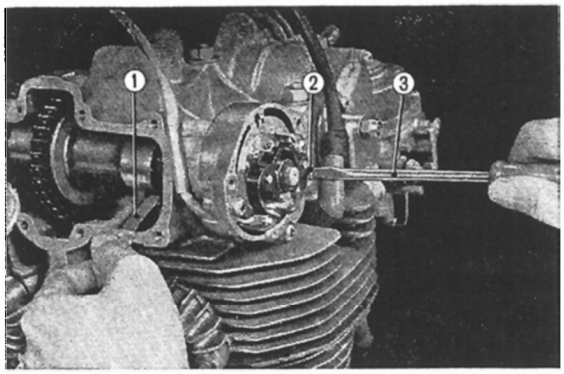

Fig. 3.25-a ① Thickness gauge ② Cam follower shaft ③ Screw driver

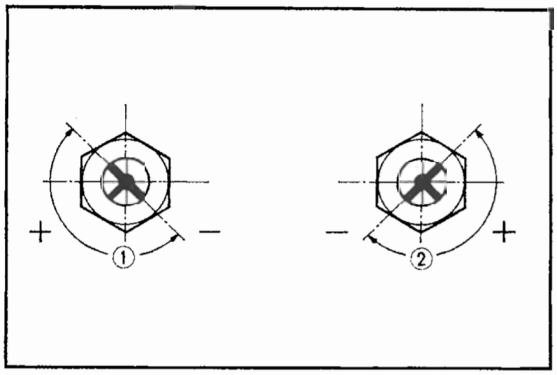

Fig. 3.25-b ① Adjusting range ② Adjusting range

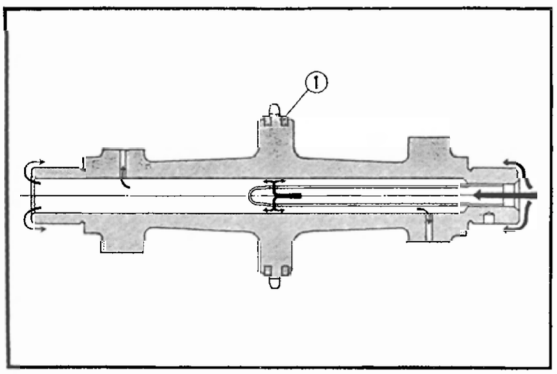

Fig. 3.26 Camshaft construction
① Cam chain damper ring

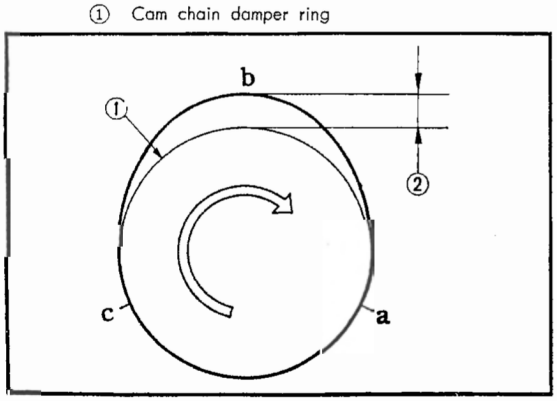

Fig. 3.27 Forming of the cam
① Base circle ② Maximum lift

9. Adjust the tappet clearance. (Refer to **Fig. 3. 25-a** and **b**)
   (1) Position the left piston at top-dead-center on the compression stroke, rotate the cam follower shaft so that it is within the range shown in **Fig. 3. 25-b**. Adjust the clearance and tighten the lock nut.
   (2) Turn the crankshaft through 180°. This will positions the right piston at top-dead-center. Adjust the tappet clearance in the same manner for the left side.

REFERENCE :

Due to the rocker fulcrum ratio, the clearance at the valve stem is about twice as great as the clearance at the cam follower surface.

10. Install the cylinder head covers on both sides.

E. Camshaft Construction

In a four stroke cycle engine the camshaft makes one revolution for every two revolutions of the crankshaft.

Camshaft in this engine is driven from the crankshaft sprocket through a cam chain to the sprocket (incorporating a cam chain damper ring to reduce noise). **(Fig. 3. 26)**

Piston top-dead-center alignment marks for both the inlet and exhaust comshaft are stamped on the right side of the camshaft. Further, a tachometer gear box is mounted on the right side of the exhaust camshaft, the spark advancer and contact breaker are mounted on the left side.

The lubricating oil which is pressure-fed into the right side of the inlet camshaft is forced out of the holes in the cam to uniformly lubricate the cam surface and the rocker arm bearings. **(Fig. 3. 4, 3. 26)**

The lubricating oil to the exhaust camshaft lubricates the tachometer pinion, and uniformly lubricates the cam surfaces, rocker arms and bearings.

The inlet camshaft is made of cast iron alloy with chilled treated cam for greater wear. The exhaust camshaft is made of high carbon steel with the wear resistant alloy welded to the surface of the cam. Bearing contact area for both the inlet and exhaust cams are indication heat treated.

As the cam follower passes point "a" shown in **Fig. 3. 27**, the speed of the valve increases and

at a certain point (reversal point) the movement stops and then starts to recede. At point "b", the movement of the valve is at a standstill.

The tappet clearance should be adjusted between points "a" and "c" on the base circle. The base circle on this model camshaft is larger in comparison to the other types, providing a smaller unit load on the contact surface of the cam follower.

The tappet clearance for cold setting is 0.03 mm (0.0012 in) between the cam and the cam follower. This provides a clearance of 0.05 mm (0.002 in) between the cam follower and the valve stem.

If it is considered that the point of valve opening is when the valve has been lifted 1.0 mm (0.039 in) and that point of valve closing is when the valve has been closed to less than 1.0 mm (0.039 in) lift, the valve operating sequence diagram for this model engine will be as shown in the figure at the right (**Fig. 3. 28**). The angle is in reference to the crankshaft rotation.

The tappet adjustment at cold setting is considered to have been set to 0.03 mm (0.012 in) clearance.

Under this condition, the design tappet clearance is considered to be zero and the lift to be 1.1 mm (0.043 in), with a cold setting.

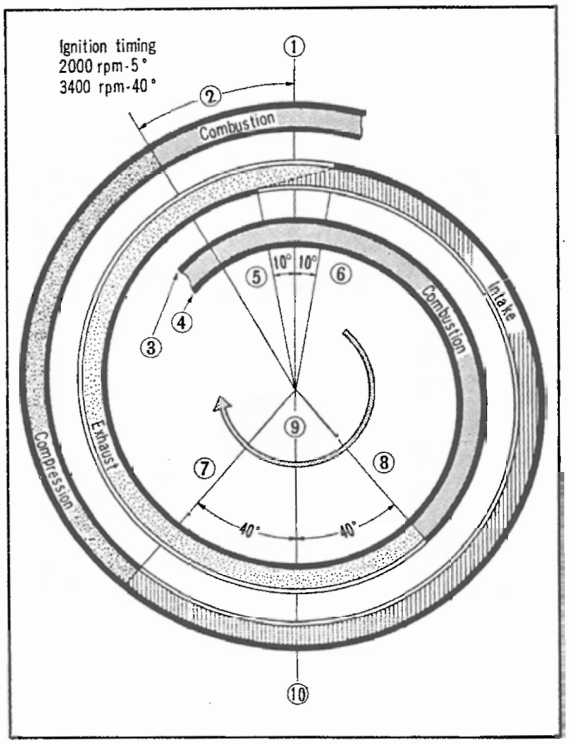

Fig. 3. 28 Valve timing

①	Top dead center	②	Igniting period
③	Exhaust valve	④	Intake valve
⑤	Intake valve opening	⑥	Exhaust valve closing
⑦	Intake valve closing	⑧	Exhaust valve opening
⑨	Crankshaft rotation	⑩	Bottom dead center

F. Cam Follower

The cam follower arm is located between the cam and the valve, and transmits the motion of the cam to the valve by pivoting at the cam follower shaft. **(Fig. 3. 29)**

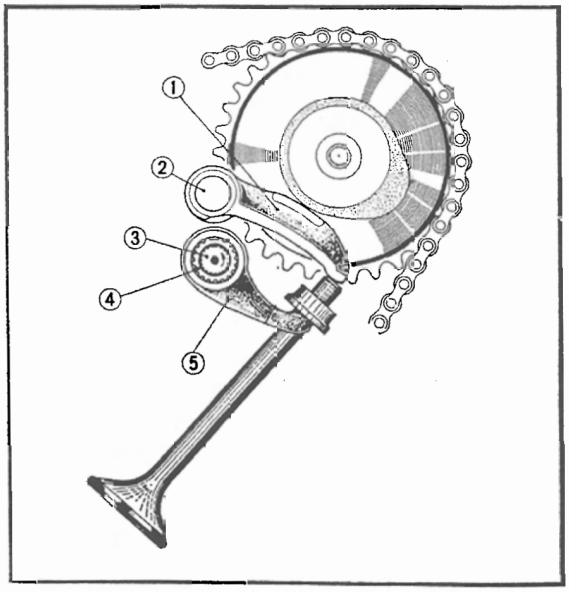

Fig. 3. 29 Cam-Valve mechanism

①	Cam follower	②	Cam follower shaft
③	Torsion bar valve spring	④	Outer torsion bar
⑤	Outer arm		

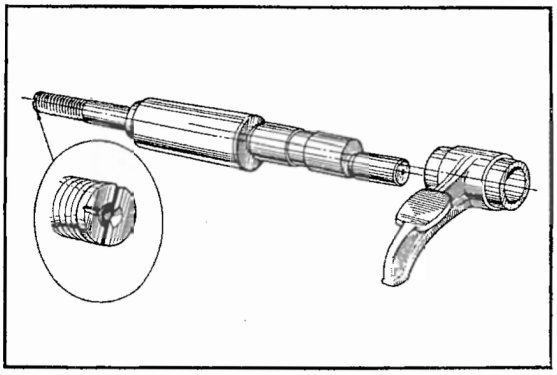

Fig. 3. 30 Cam follower and cam follower shaft

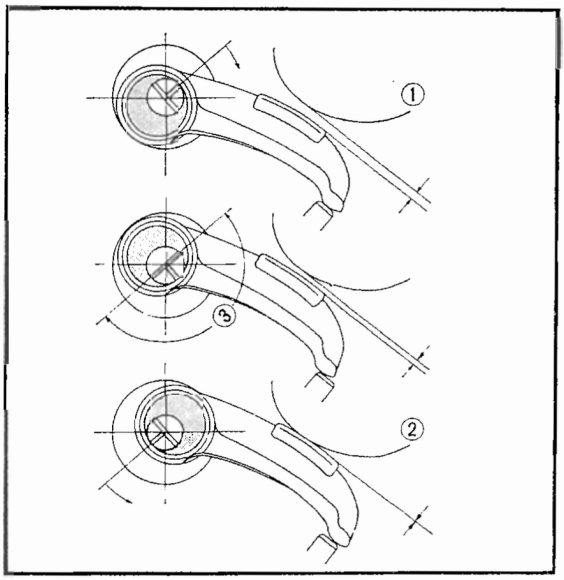

Fig. 3. 31 Tappet clearance adjusting mechanism
① The clearance is maximum
② Adjusting range
③ The clearance is minimum

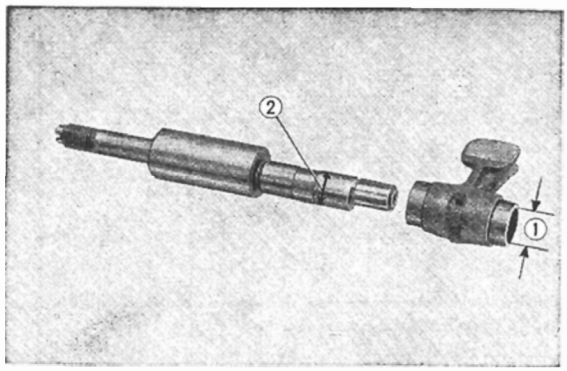

Fig. 3. 32 Cam follower and Cam follower shaft
① Cam follower bearing diameter
② Cam follower shaft journal

The tappet clearance can be easily adjusted by turning the cam follower shaft which is mounted on an eccentric. **(Fig. 3. 30, 3. 31)**

The feature of this valve mechanism simplifies and lightens the operation of the valve and also reduces the load on the valve spring, making it suitable for high speed operation.

Slipper surface of the cam follower is made wear resistant by welding a stellite facing.

The tappect clearance is **0.03 mm (0.0012 in)** between the cam and the cam follower slipper surface.

G. Camshaft and Cam Follower Disassembly

Remove the cylinder head in accordance with Section 3.2B.

Inlet side.

1. Remove the cam follower shaft lock nut from both the right and left side.
2. Remove cylinder head side cover from both the right and left side.
3. Remove inlet camshaft.

Exhaust side

1. Loosen the lock nut from the right side and remove the tachometer gear box.
2. Remove the contact breaker point cover.
3. Loosen the lock nut and remove the contact breaker assembly.
4. Remove the spark advancer and the breaker point base.
5. Remove the exhaust camshaft.

H. Inspection

1. Camshaft **(Fig. 3. 32, 33, 34)**

	Item	Standard value	Serviceable limit
1	Cam follower bearing diamter Fig. 3. 32 ①	10.20～10.218 mm (0.4016～0.4023 in)	Replace if over 10.28 mm (0.4047 in)
2	Cam follower shaft journal Fig. 3. 32 ②	10.166～10.184 mm (0.3992～0.4009 in)	Replace if under 10.10 mm (0.3976 in)
3	Camshaft journals, inlet and exhaust	21.967～21.980 mm (0.8648～0.8654 in)	Replace if under 21.92 mm (0.8622 in)
4	Cam lift. inlet and exhaust Fig. 3. 33	4.688～4.728 mm (0.1846～0.1853 in)	Replace if under 4.65 mm (0.1830 in)
5	Breaker point shaft runout Fig. 3. 34	0.01 mm max (0.0004 in)	Replace if over 0.05 mm (0.002 in)

2. Replace damaged cam sprocket or sprocket with excessively worn teeth and broken damper ring.

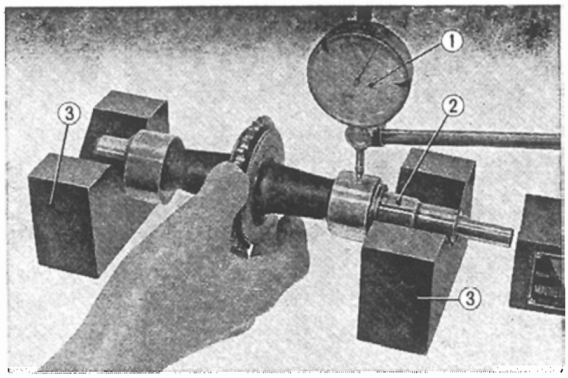

Fig. 3. 33 Measuring the max cam lift
① Dial gauge ② Cam shaft ③ V block

I. Camshaft and Cam Follower Reassembly

INLET SIDE

1. Assemble cam follower and the cam follower shaft.

NOTE :

When performing this, the position of the cam follower shaft should be predermined temporarily in advance.

2. Install the inlet camshaft into the cylinder head. The end with oil pipe fitting must be installed on the right side.
3. Install both the right and left cylinder head side covers.
4. Upon completion of the installation, check to make sure that the camshaft rotates freely.
5. Temporarily tighten the lock nut.

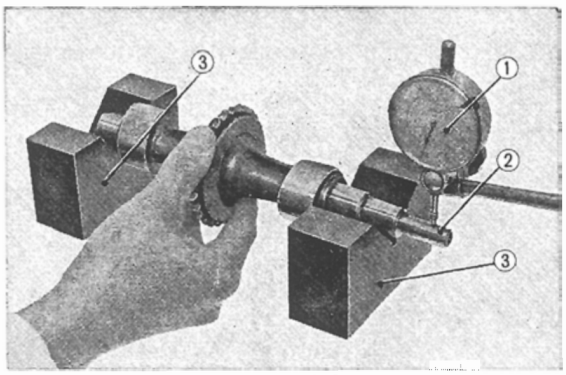

Fig. 3. 34 Measuring the cam shaft runout
① Dial gauge ② Cam shaft ③ V block

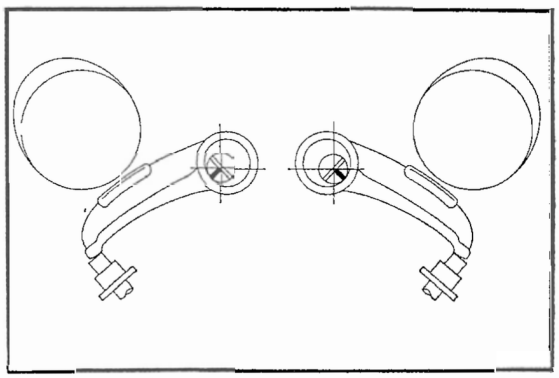

Fig. 3. 35 The cam follower shaft direction in time of the camshaft assembling

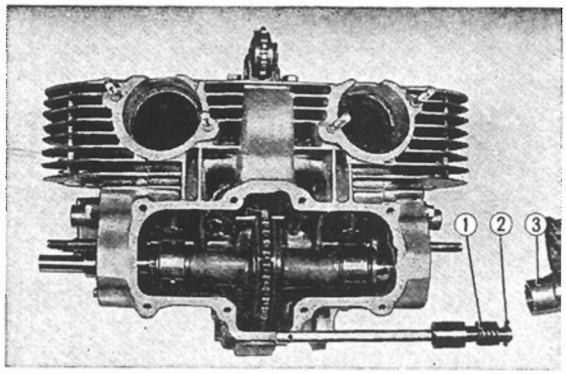

Fig. 3. 36 Techometer gear box, pinion and washer
① Pinion
② Washer
③ Gear box

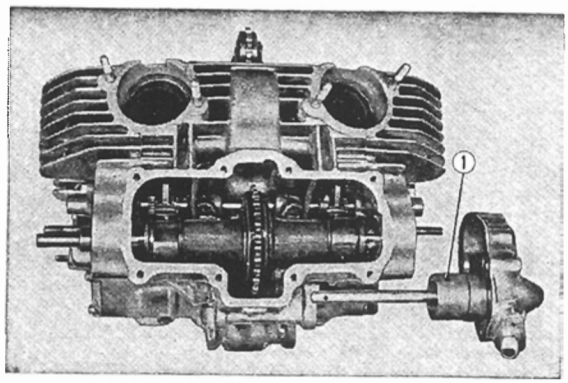

Fig. 3. 37 Installing the gear box assembly
① Gear box assembly

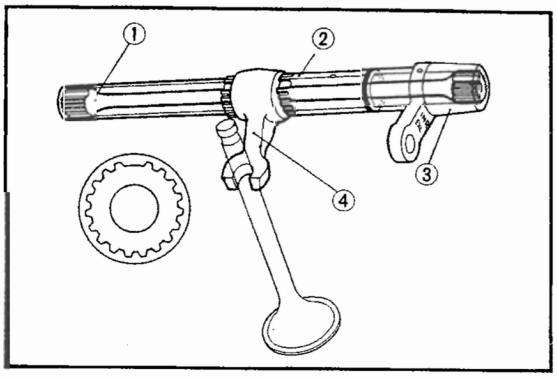

Fig. 3. 38 Valve spring component parts
① Torsion bar (Valve spring)
② Torsion bar outer
③ Torsion bar holder
④ Torsion bar outer arm

EXHAUST SIDE

1. Assemble the cam follower and cam follower shaft into the cylinder head.
2. Install the exhaust camshaft.
3. Assemble the pinion on the tachometer gear box. Do not forget to install the washers. **(Fig. 3. 36)**
4. Install the gearbox assembly. Firmly set the convex section of the tachometer pinion into the camshaft groove. **(Fig. 3. 37)**
5. Install the breaker point base.

NOTE :

Upon completion of the installation, check to make sure that the camshaft rotates freely.

6. Install the spark advancer and the contact breaker assembly.
7. Temporarily tighten the lock nut.

NOTE :

If the side clearance of the camshaft is excessively large, noise will result, and if the clearance is too small the shaft may sieze. The proper clearance is 0.05 to 0.35 mm (0.002～0.014 in). Shims for adjusting the camshaft side clearance are available in 0.1 mm and 0.2 mm (0.004 and 0.008 in) in thickness.

J. Valve and Torsion Bar Spring.

When a bar is subjected to torsion, a reaction to this force is created in the opposite direction. This model utilizes torsion bar principle in the valve spring.

The use of the torsion bar valve spring has eliminated spring surging, and further, the maximum valves spring load of 79 kg (174.2 lb) has been contained in a very small space.

This has enabled the valve mechanism to be made compact. On one end of the torsion bar an arrow is maked, when assembling the valve spring the torsion bar is twisted in the direction of the arrow to provide the spring preload.

This is necessary because the preset has been incorporated in the torsion bar.

Exersize care when handling the torsion bar aasr even a small scratch or scar may cause torsionb to fail.

In order to explain the principle of the torsion bar valve spring, the right side inlet valve is taken as an example. **(Fig. 3. 39)**

The torsion bar applys a torque to the torsion bar holder, the opposite end of the torsion bar is fixed to the cylinder head with guide pin and bolt. The twisting moment of the torsion bar is transmitted to the valve from the left end of the torsion bar through the torsion bar outer and the torsion bar and the torsion bar outer arm. The respective serrated coupling is provided with one ununiform serration so that the fit can be only made in one position.

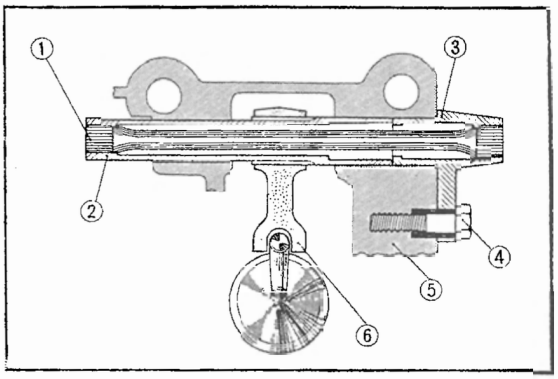

Fig. 3. 39 Valve spring mechanism
① Torsion bar ② Torsion bar outer
③ Torsion bar holder ④ Setting bolt
⑤ Cylinder head ⑥ Torsion bar outer arm

The valve is made of heat resisting steel with the valve face and the end of the valve stem faced with welded stellite for wear resistance **(Fig. 3. 40)**. The valve face is made to an angle of 90° for greater valve strength and to provide smoother contact with valve seat, in addition, the inlet valve has been made larger in diameter than the exhaust valve to improve the volumetric efficiency.

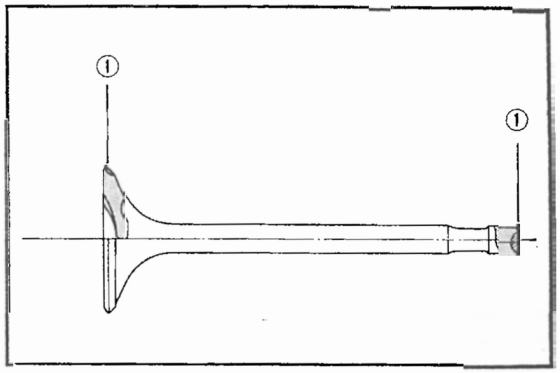

Fig. 3. 40 Sectional view of the valve
① Stellite

The valve guides are pressed into the aluminum alloy cylinder head, and to prevent any possibility of the valve guide becoming loose due to the difference in the heat expansion rate of the cylinder head and valve guide. Valve guide stopper also has been installed on the valve guide. The valve stem clearance for the exhaust valve has been made larger than for the intake valve because of the higher temperature (over 800° C) to which the exhaust valve is exposed. To further prevent any possibility of oil loss through the valve guide, O ring has been installed under the flange of the valve guide and guide seal cap install on the valve stem. **(Fig. 3. 41)**

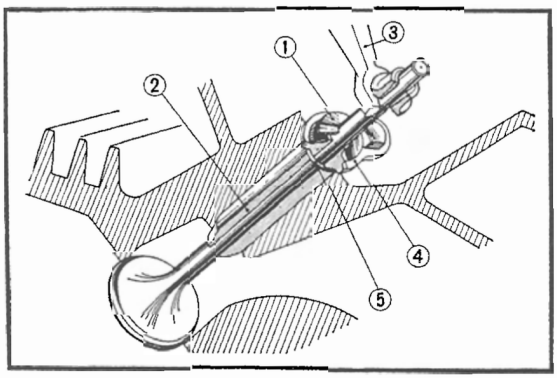

Fig. 3. 41 Valve guide and valve guide seal cap
① Valve guide seal cap
② Valve guide
③ Torsion bar outer arm
④ Valve guide stop
⑤ O ring

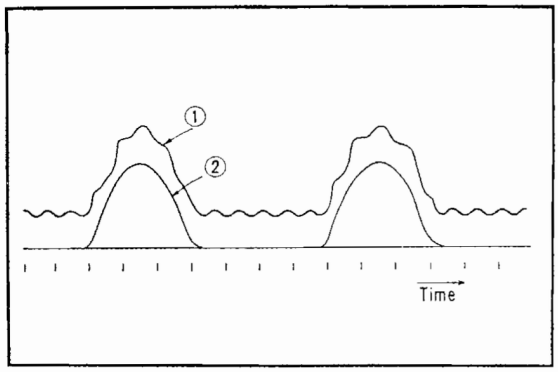

Fig. 3. 42
① Valve spring vibration
② Valve lift

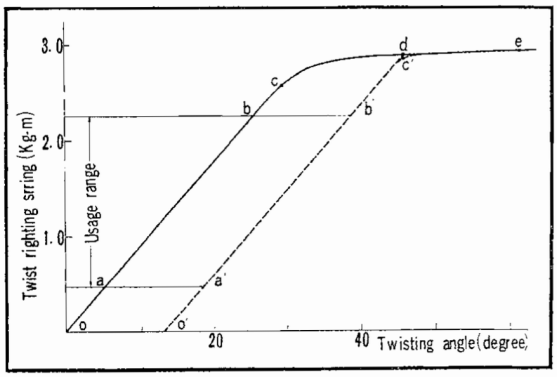

Fig. 3. 43 Preset of torsion bar

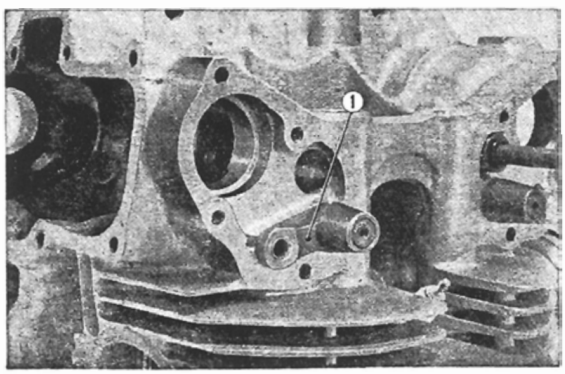

Fig. 3. 44
① Torsion bar holder

(SURGING PHENOMENON)

Surging is a condition which occurs when the neutral frequency of the spring coincides with the operating frequency of the load or it multiples, setting up a resonance. Under such a condition, the spring is subjected to an unusal stress, resuling in breakage due to fatigue of the metal spring. **(Fig. 42)**

PRESET TREATMENT

The normal stress strained curve of torsion bar spring under twisting load is shown by 0-a-b-c-d-e. **(Fig. 4. 43)**

Point c is the yield point, beyond which the material does not return to the original shape. Usage range of the torsion bar spring is between a-b, therefore, the spring should always return to its original shape point o, however, since the upper limit point b is close to the yeild point c, there may be a possibility of the yield point being exceeded even once, to some point d, the torsion bar spring will become permanently distorted to a new shape, o′-a′-b′-c′. However, now the yield point c′ has been raised to a more remote distance from the new usage of a′-b′ making it more difficult to exceed the yield point.

Torsion bars are subjected to a preset treatment to produced the above condition.

The inlet and exhaust torsion bar springs are twisted in the opposite direction, therefore, the inlet and exhaust torsion bars should not be interchanged. Further, when the present treatment is accomplished with the yield point being raised to point d, any cracks in the material can be easily detected prior to installation.

K. Valve and Torsion Bar Spring Disassembly

1. Disassemble the cam follower and camshaft in accordance with Section 3.2 G.
2. Unscrew the torsion bar, hold the torsion bar arm in the direction of the arrow marked on the end of the valve spring so as to relieve the load from the holder bolt. **(Fig. 3. 44)**
3. Remove the torsion bar assembly.

NOTE :

After disassembly, keep the respective torsion bar components together to prevent intermixing the parts.

4. Disassemble valve cotter and valve.

a. Remove the valve cotter and the valve spring retainer.

b. Loosen the 6 mm bolt, remove the guide stopper and then remove the valve guide seal cap.

c. Remove the valve through the combustion chamber.

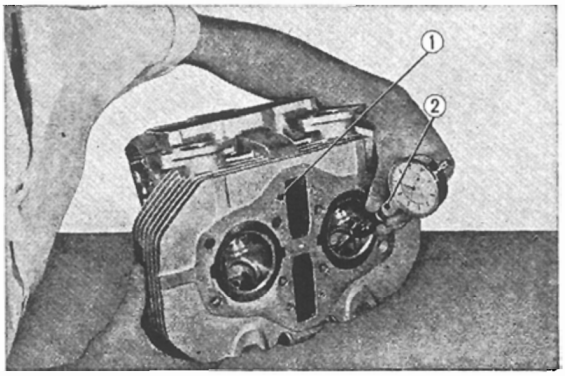

Fig. 3.45 Valve guide inner diameter measuring
① Cylinder head
② Cylinder gauge

L. INSPECTION

1. Valve

	Item	Standard value	Serviceable limit
1	Valve stem diameter, inlet	6.974~6.988 mm (0.2746~0.2751 in)	Replace if under 6.96 mm (0.2740 in)
2	Valve stem diameter, exhaust	6.968~6.982 mm (0.2743~0.2749 in)	Replace if under 6.95 mm (0.2736 in)
3	Straightness of valve stem	Within 0.02 mm (0.0008 in)	Replace if over 0.02 mm (0.0008 in)
4	Concentricity of valve face	0.03 mm TIR (0.0012 in)	Replace if over 0.03 mm (0.0012 in)
5	Valve guide diameter, inlet & exhaust (Fig 3-45)	7.0~7.01 mm (0.2756~0.2760 in)	Replace if over 7.05 mm (0.2776 in)

2. Inspect valve face for blow-by, burning and wear. Repair or replace the valve. When refacing the valve face, the head thickness should not be less than **0.5** mm (**0.020** in).

NOTE :

Replacement valve guide should be slightly oversize and new O ring should be installed. Always ream the guides after installation. If valve is being replaced because of worn stem, the guide should also be replaced since they also would be worn.

3. Valve seat width

Inspect the width of the valve seat by applying a thin coating of bluing or red lead on the valve face and after inserting the valve in the guide, turn the valve while firmly holding the valve against the seat. The impression left on the valve seat will indicate the seat width and also the condition of the seat.

Item	Standard value	Serviceable limit
Seat width	1.0~1.3 mm (0.0394~0.0512 in)	Reprair if over 2.0 mm (0.0787 in)

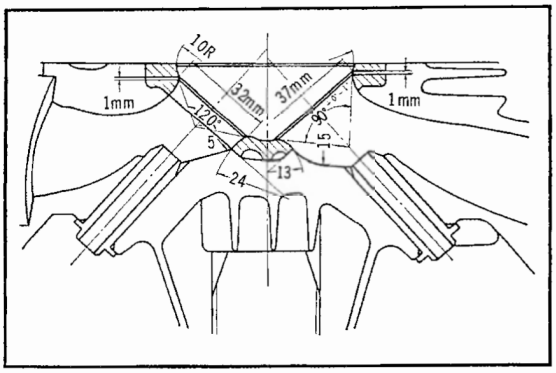

Fig. 3. 46 Valve seat

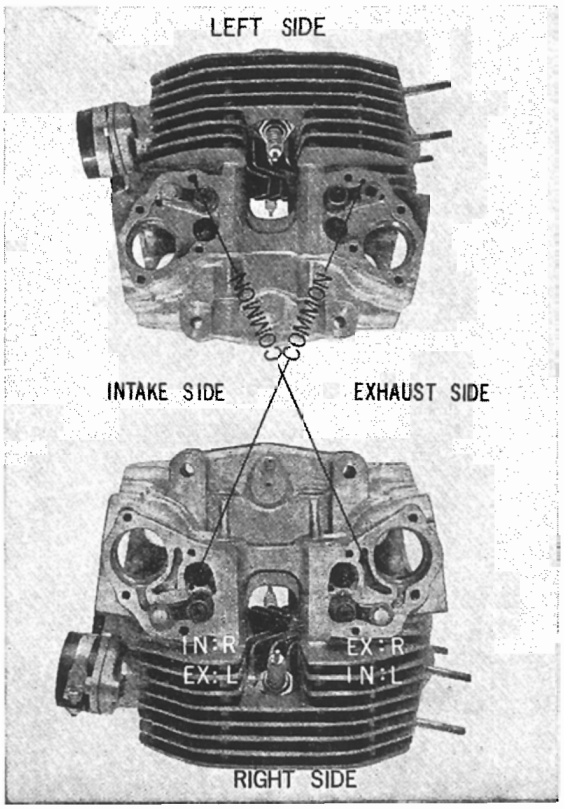

Fig. 3. 47 Valve spring parts combination

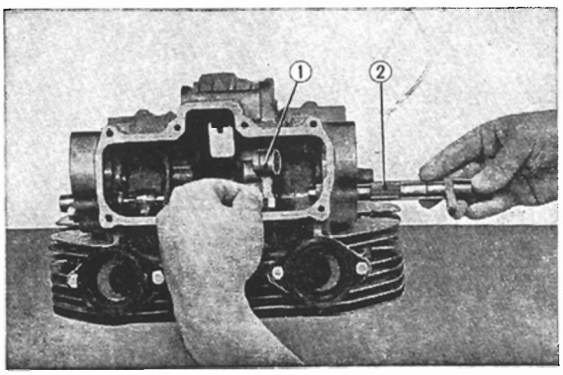

Fig. 3. 48 Assemble valve spring on the head
① Torsion bar outer arm ② Torsion bar valve spring

4. Valve seat

The valve seat is repaired with three types of cutter : valve seat surface cutter, valve seat interior cutter and valve seat 90° cutter.

The relative location and the width of the valve seat contact area is accomplished with the valve seat surface cutter, and valve seat 90° cutter, while the refacing of the valve contact area is preformed by the valve seat interior cutter **(Fig. 3. 46).**

Valve lapping operation is performed last, this is to obtain a leak proof seal between the valve and the valve seat. Place a liberal amount of lapping compound on the valve face and lap the valves, applying a slight pressure while rotating the valve back and forth with a suction cup lapping tool. Wash off the compound thoroughly and inspect the valve seat with bluing.

5. Inspect the torsion bar valve spring for cracks and rust.

CAUTION:

Use the valve seat grinder (tool No. 07782-0020000, A set) to correct the valve seat width and contact from the following serial number.

CB450E-5042941～

CB450E-6021254～

Read carefully the instruction provided with the valve seat grinder.

M. Valve and Torsion bar valve spring Reassembly

1. Assemble the torsion bar valve spring and the outer.

NOTE:

There are two types of torsion bars, therefore, make sure that the torion bars are not interchanged. **(Fig. 3. 47)**

2. Assemble the torsion bar valve spring into the cylinder head. Assemble the outer arm on the inside and the torsion bar valve spring assembly from the outside. **(Fig. 3. 48)**

NOTE:

Make certain that the assemblies are installed in their proper places. **(Fig. 3. 47)**

3. Assemble valve into the head

NOTE:

a. After assembly, check to make sure that the valve stem and the fork of the outer arms is not binding. If they are binding, the valves stem may be bent.

b. The guide seal cap should not be loose.

4. Tighten the torsion bar holder

Use the torque wrench to torque the torsion bar in the direction marked by the arrow and after insuring that it has been torqued to the proper value, insert a dowel pin and then tighten the bolt, torque to 512 to 640 kg-mm (3.7～4.63 ft. lb.). **(Fig. 3. 49)**

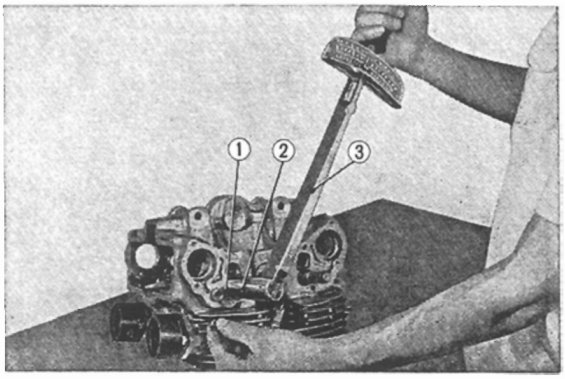

Fig. 3. 49 Insure that it has been tightened with the correct torque
① Torsion bar valve spring ② Attachment
③ Torque wrench

N. Cam Chain Guide Roller Construction

There are seven cam chain guide rollers used in this engine to minimize cam chain noise. To provide greater durability to the cam chain, all the rollers are mounted on rubber. Especially, on those rollers which supports heavy loads, reverse T type rubber bushing are press fitted. Needle bearings are used at the tension area and also at the C areas. The respective guide rollers are lubricated by the oil spray and mist. **(Fig. 3. 50)**

O. Cam Chain Guide Roller Disassembly

T guide roller

1. Remove either the inlet or the exhaust camshaft in accordance with Section 3.2G.
2. Extract the guide roller pin.

Guide rollers A and R

Remove the bracket bolts and remove the rollers.

B guide roller

1. Remove the cylinder in accordance with Section 3.2R.
2. Remove the guide roller pin.

P. Cam Chain Guide Roller Reassembly

NOTE :

a. When assembling the parts into the cylinder head, the movable parts must be oiled before assembly. This is necessary because it will required some time after the engine is in operation before the pressure builds up sufficiently to lubricate the moving parts.

b. Assemble guide rollers A, C and R in that order. After completing the guide rollers installation, check to the make sure that they all operate freely.

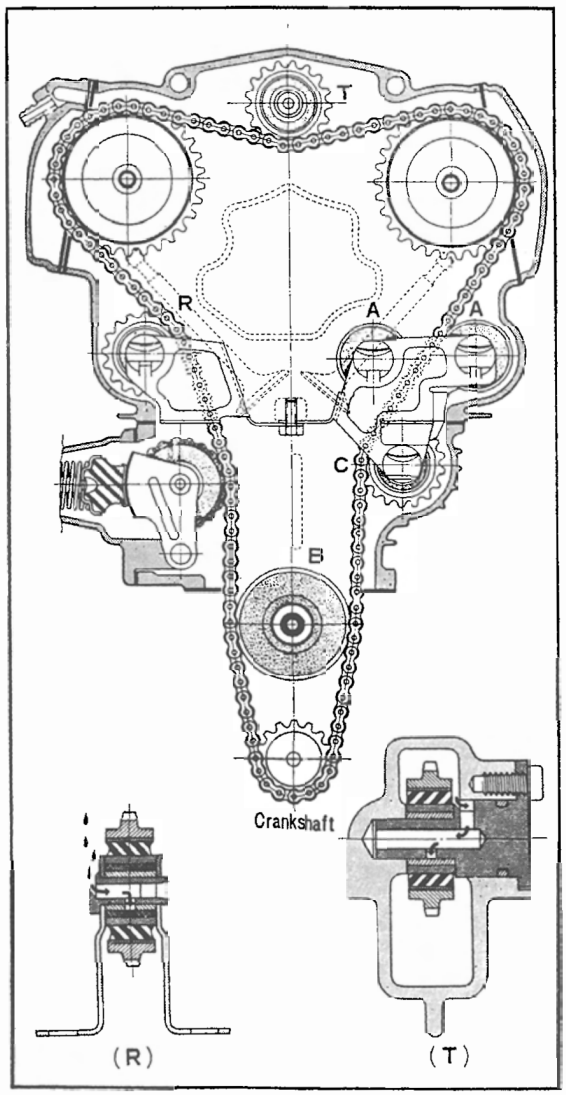

Fig. 3. 50 Cam chain guide roller

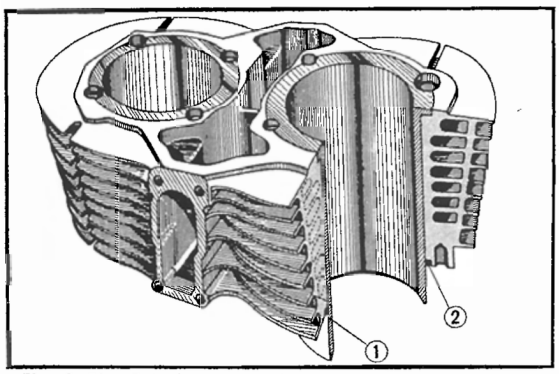

Fig. 3. 51 Cylinder construction
① Cylinder sleeve ② O ring

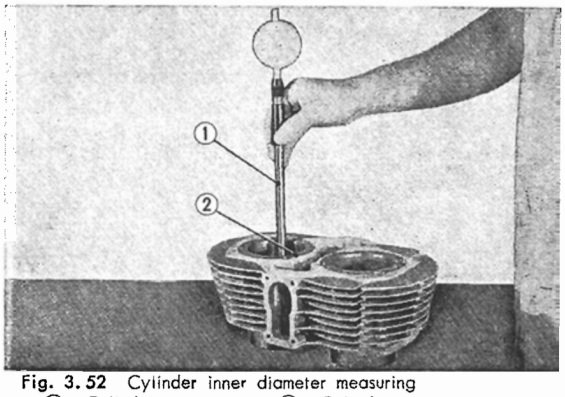

Fig. 3. 52 Cylinder inner diameter measuring
① Cylinder gauge ② Cylinder

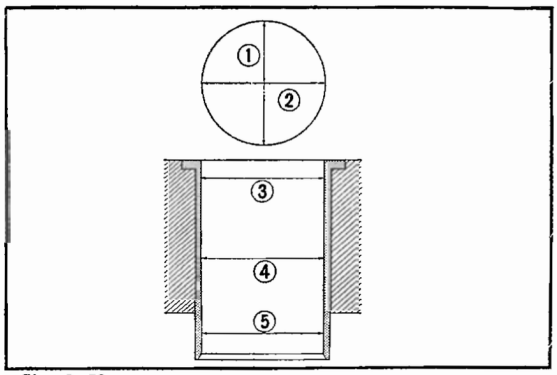

Fig. 3. 53
① Vertical ② Horizontal ③ Upper
④ Middle ⑤ Lower

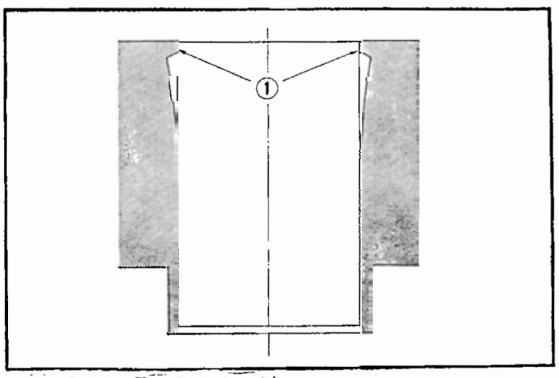

Fig. 3. 54 ① Cylinder ridge

Q. Cylinder Construction

The cylinder sleeve is made of special steel alloy and is press fitted into the cast aluminum body. A compartment is provided between the cylinder barrels to accomodate the cam chain and tensioner. There are two cylinder studs which are hollow and serves as an oil passageway. An O ring is installed on the sleeve skirt to prevent gas leaks. **(Fig. 3. 51)**

R. Cylinder Disassembly

Remove the cylinder head in accordance with Section 3.2B.

S. Cylinder Inspection

Measure the cylinder bore, taper and out-of-round with a precision cylinder gauge. Take measurements at the top, middle and bottom in both diametrical axes. **(Fig. 3. 52, 53)**

Item	Standard value	Serviceable limit
Cylinder barrel	70.0～70.01 mm (2.756～2.7564 in)	Boring necessary when over 70.11 mm (2.76 in)
Cylinder out-of-round	Less than 0.005 mm (0.0002 in)	Boring necessary when over 0.05 mm (0.002 in)
Cylinder taper	Less than 0.005 mm (0.0002 in)	Boring necessary when over 0.05 mm (0.002 in)

NOTE :

a. After reboring the cylinder, finish honing must be performed to provide 1S～1.5S surface finish. The permissible stock removal during the honing operation is approximately 0.01 mm (0.0004 in). The cylinder sleeves are available in oversize up to 1 mm (0.040 in) in 0.25 mm (0.010 in) oversizes increments. Cylinders requiring reboring beyond 1.0 mm (0.040 in) should be replaced with a new cylinder sleeve.

b. When only the piston is to be replaced without the cylinder, the cylinder ridge should be removed with a ridge reamer. **(Fig. 3. 54)**

T. Cylinder Reassembly

1. Check to make sure that the cylinder gasket and the two locating pins on the crankcase are installed in place ; also check to make sure that the O ring is installed on the cylinder skirt.
2. Assemble the cylinder. **(Fig. 3. 55)**

NOTE :

When installing the cylinder, check to make sure that the piston ring gaps are spaced equally apart. This is to prevent gas blow-by. **(Fig. 3. 56)**

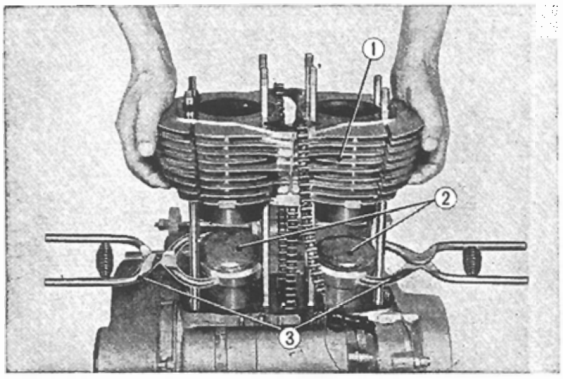

Fig. 3. 55 Assembling the cylinder
① Cylinder ② Piston
③ Piston ring compressor

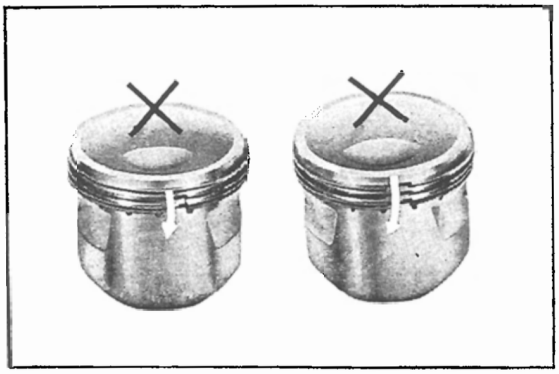

Fig. 3. 56 Avoid straight blow-by

U. Piston Construction

The piston is made from select on aluminum alloy casting, material, SAE 332–T6. This material is light and strong, making it suitable for high speed. In addition, it possess good heat conducting property to rapidly dissipate the heat. Furthermore, the coefficient of heat expansion is small thus minimizing the warpage at elevated temperature and permitting a small piston to cylinder clearance design. The top, compared to the skirt, is exposed to higher temperature and since the expansion is greater, it is tapered smaller toward the top. The tapering of the piston also tends to lessen the piston slap when the throttle is lightly snapped without load on the engine.

The piston employs a four step taper, further the piston pin boss area is made thicker, resulting in greater expansion at high temperature. For this reason, the diameter of the piston skirt is made smaller in the direction of the piston pin so that at the high operating temperature, the piston will expand into a true circular shape. The skirt is constantly provided with flexibility to assure that no deformation will result even from extended continuous driving.

The piston pin is offset 1 mm (0.04 in) from the piston centerline in the direction of the inlet valve so that when the piston approaches the top-dead-center of the compression stroke, the side load from the cylinder moves from the right side to the left. With a "O" offset, the point will move to align with the top-dead-center of the compression stroke. As shown in **Fig. 3. 58**, the point of maximum combustion pressure occurs after the top-dead-center, therefore, the purpose of the offset is to move the

Fig. 3. 57 Cam and tapered shapes of the piston

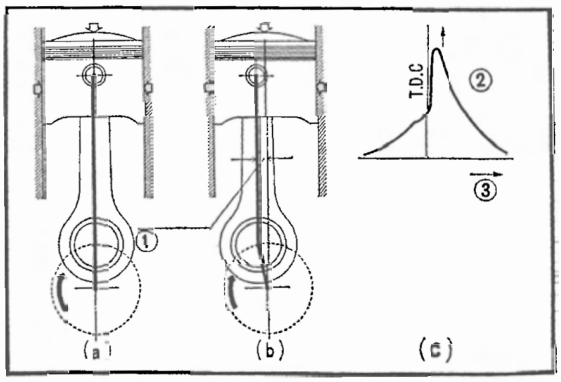

Fig. 3. 58 Offset
① Off-set ② Pressure ③ Crank angle

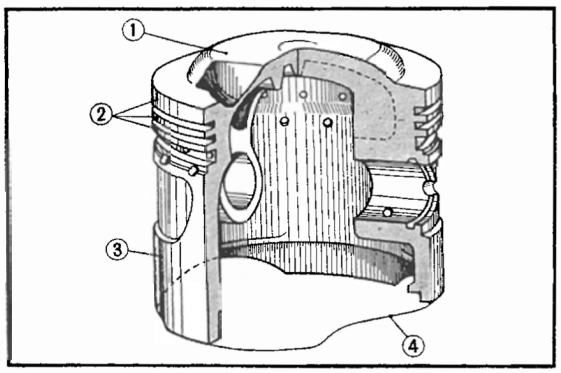

Fig. 3.59 Piston
① Piston head
② Lands
③ Piston skirt
④ Slipper

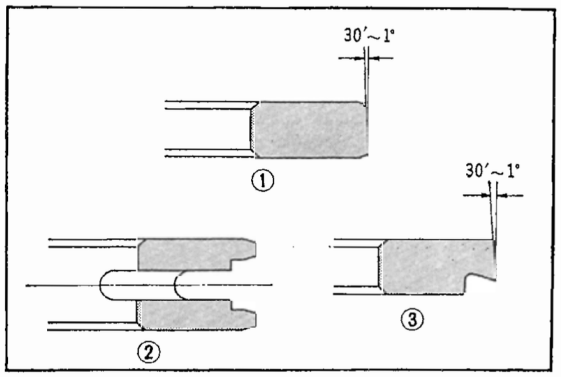

Fig. 3.60 Piston ring sectional view
① Top ring
② Oil ring
③ Second ring

point toward the point of weaker pressure, which, is before top-dead-center. By so doing, the piston can escape the high pressure and makes it possible to eliminate the piston slap.

Piston is made with a dome head to give it extremely high strength. Further, this will enable higher compression ratio and limit overheating of the piston. The skirt of the piston is designed slippered on the side where no side load is applied. This is to reduce weight and also to minimize the frictional area.

Piston pin is of a floating type and is set in place by ring clips. The bottom side of the piston head is provided with reinforcement fins for added strength as well as for a better cooling affect. Oil drain holes are made just below the oil ring groove to allow the oil to flow back into the crankcase. **(Fig. 3. 59)**

V. Piston Ring Construction

The piston rings performs a vital function of forming a seal between the piston and cylinder; controlling the lubrication of the cylinder wall and dissipating the heat of the piston produced by the combustion. The condition of the piston will have considerable effect on the power developed by the engine.

Rings are made of special cast iron for greater strength, wear and heat resistance, and possesses good heat conducting qualities. Further, the cylinder wall contacting surface of the top and oil rings are given a hard chrome plated surface and finished by wet honing for greater wear resistance and good sealing.

To prevent ring flutter, the rings are made thinner and greater in depth to increase the pressure against the cylinder wall. Further, the top and the second rings are made at a slight taper were it contacts the cylinder wall so that the wear-in time is hastened.

Oil ring grooves and the bottom of the second rings are scalloped to improve oil control and preventing oil entry into the combustion chamber which would cause carboning up of the spark plugs, piston, rings and etc.

When assembling the rings, make certain that the ring manufacturer's mark adjacent to the ring gap is on the top and the gaps for the three rings should be spaced equally apart.

(PISTON RING FLUTTER)

At low speed, the piston ring is forced against the upper side of the ring groove only during the intake stroke. At high speed, however, the inertia of the ring overcomes the gas pressure and friction, and floats to the top of the groove immediately before the top-dead-center in the compression stroke. At this moment, combustion occurs and the ring is forced against the bottom side of the ring groove by the combustion pressure. This up and down movement during exhaust-intake-compression becomes more and more intense, coupled with the increasing inertial force. As this sequence is repeated, ultimately, the ring vibrates violently within the ring groove like a pingpong ball between the racket and the table as shown in the **Fig. 3. 62** and thus allow the gas to "blow-by". **(Fig. 3. 61, 3. 62)**

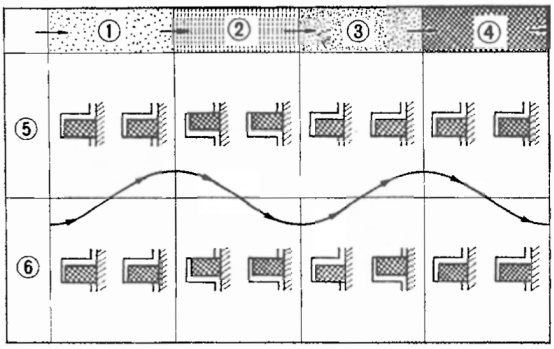

Fig. 3. 61 Piston ring motion
① Exhaust ② Intake
③ Compression ④ Combustion
⑤ Low speed ⑥ High speed

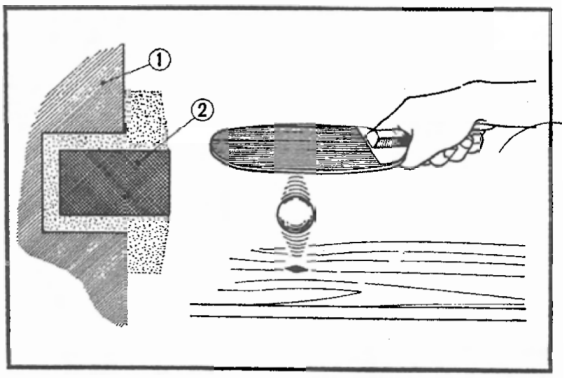

Fig. 3. 62 Piston ring flutter
① Piston ② Piston ring

W. Piston and Piston Ring Disassembly

1. Remove the piston pin clip and push out the piston pin. Disassemble piston from the connecting rod.

NOTE :

When removing the piston pin clip, care should be exercised so that the clip is not dropped into the crankcase. **(Fig. 3. 63)**

2. Remove the piston rings from the piston. If no tool is available, the rings may also be removed with hand by separating ring at the opening with both hands. The ring should not be twisted as it will break.

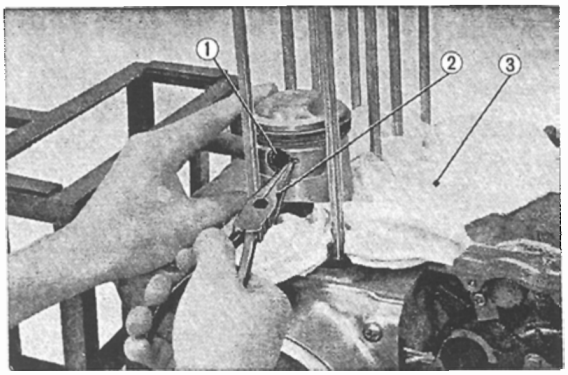

Fig. 3. 63 Removing the piston pin clip
① Piston pin clip ② Long nose pliers ③ Rags

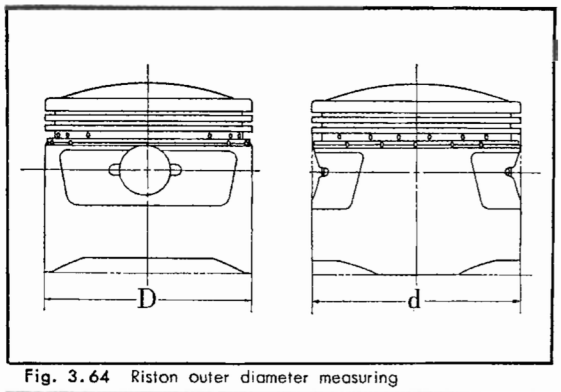

Fig. 3.64 Riston outer diameter measuring

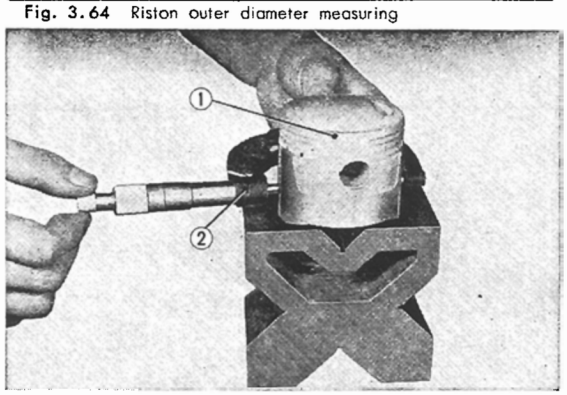

Fig. 3.65 Piston outer diameter measuring
① Piston ② Micrometer

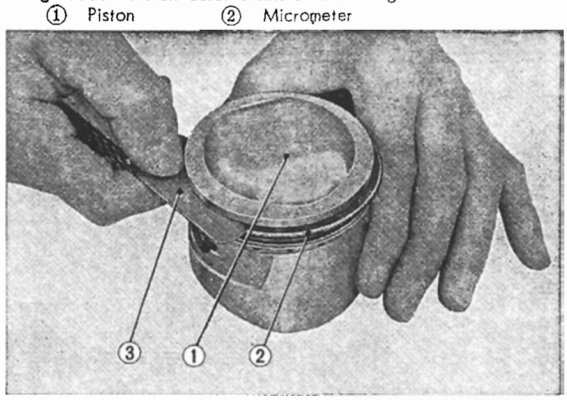

Fig. 3.66 Measuring the clearance between piston and piston ring
① Piston ② Piston ring ③ Thickness gauge

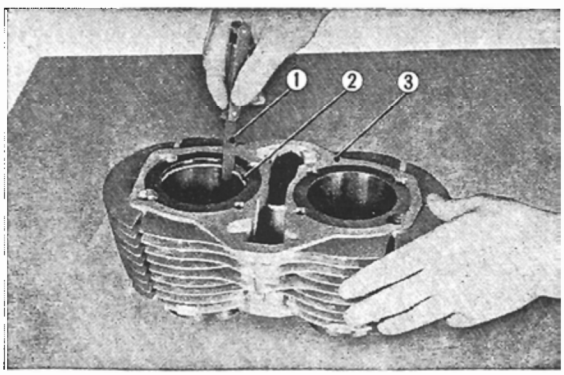

Fig. 3.67 Piston ring end gap measuring
① Thickness gauge ② Piston ring ③ Cylinder

X. Piston and Piston Ring Iinspection

1. Before inspection, carbon adhering to the piston head or ring groove should be removed, using care not to scratch piston.

NOTE:

Emery paper should not be used for removing the carbon, use a carbon scraper.

2. Piston diameter. **(Fig. 3. 64, 3. 65)**
D=69.95~69.97 mm (2.754~2.755 in)
d=D_0 −0.24 (0.0095 in) −0.26 (0102 in)

NOTE:

Oversize piston are available from D=70.22 mm (2.765 in) to 70.97 mm (2.794 in) in four difference sizes at an increment of 0.25 mm (0.01 in).

3. Ring groove clearances
When a new piston ring is fitted. **(Fig. 3. 66)**

Item	Standard value	Serviceable limit
Top ring	0.040~0.070 mm (0.0016~0.0028 in)	Replace if over 0.15 mm (0.006 in)
2nd ring	0.020~0.045 mm (0.0008~0.0018 in)	Replace if over 0.15 mm (0.006 in)
Oil ring	0.010~0.040 mm (0.0004~0.0016 in)	Replace if over 0.1 mm (0.004 in)

4. Piston pin diameter.

Item	Standard value	Serviceable limit
Piston pin dia.	16.994~17.00 mm (0.6690~0.6693 in)	Replace if under 16.95 mm (0.6673 in)
Piston pin bore	17.002~17.008 mm (0.6693~0.6696 in)	Replace if over 17.1 mm (0.6732 in)

5. Piston ring and gap.
Measure the ring gap by inserting the piston ring into the cylinder so that the ring is at right angle to the cylinder axis, the gap should be measured with a thickness gauge. **(Fig. 3. 67)**

Item	Standard value	Serviceable limit
Top, Second ring	0.3~0.5 mm (0.012~0.03 in)	Replace if over 0.8 mm (0.031 in)
Oil ring	0.2~0.4 mm (0.008~0.016 in)	Replace if over 0.8 mm (0.031 in)

6. Ring tension

The piston ring tension is measured with a tension measuring instrument. **(Fig. 3.68)**

Item	Standard value	Serviceable limit
Top, ring	0.92~1.37 kg (2.0~3.0 lb)	Replace if under 0.6 kg (1.3 lb)
Second ring	0.75~1.15 kg (1.65~2.5 lb)	Replace if under 0.5 kg (1.1 lb)
Oil ring	1.47~2.14 kg (3.2~4.7 lb)	Replace if under 1.2 kg (2.6 lb)

7. Ring width and thickness.

Item		Standard value	Serviceable limit
Width	All rings	3.1~3.3 mm (0.122~0.130 in)	Replace if under 2.9 mm (0.1141 in)
Thickness	Top	1.45~1.465 mm (0.057~0.058 in)	Replace if under 1.4 mm (0.0551 in)
	2nd	1.475~1.485mm (0.0580~0.0584 in)	Replace if under 1.43 mm (0.566 in)
	Oil	2.48~2.495 mm (0.0976~0.0982 in)	Replace if under 2.4 mm (0.0944 in)

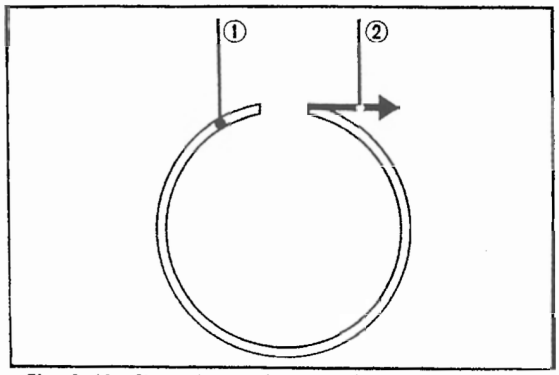

Fig. 3.68 Piston ring tension measuring
① Piston ring ② Load

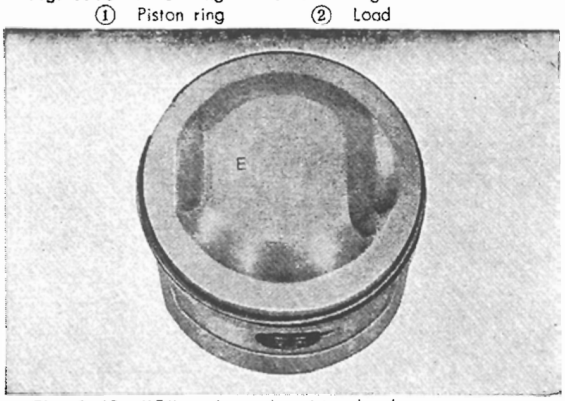

Fig. 3.69 "E" mark on the piston head

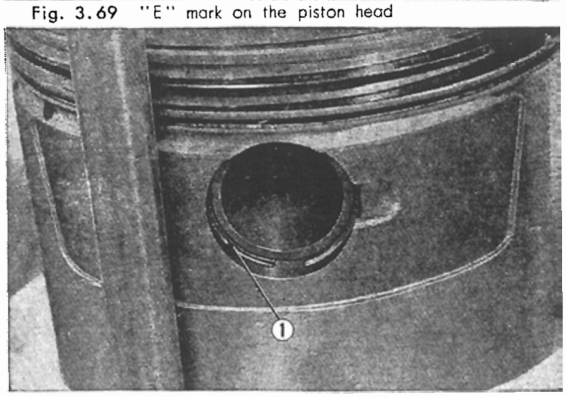

Fig. 3.70 Shift the cut portion of the clip from the cut portion of the clip groove
① Piston pin clip

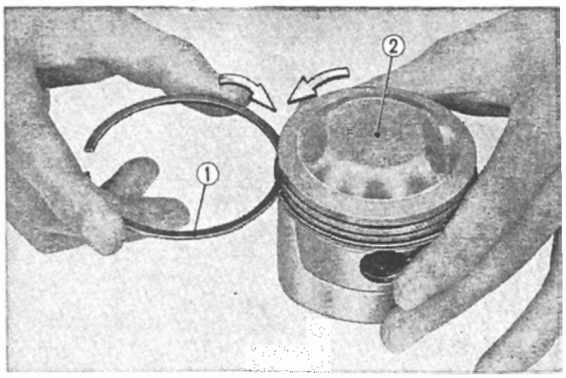

Fig. 3.71 Turn the ring around to the piston and check to contact condition
① Piston ring ② Piston

Y. Piston and Piston Ring Reassembly

1. Assemble the piston to the small end of the connecting rod. Only a slight hand pressure should be required to insert the piston pin. Always install a new piston pin clip.

NOTE:

a. Cover the crankcase with a rag to prevent possibility of the pin clip from dropping into the crankcase.

b. Set the clip so that the opening is away from the groove cutout. **(Fig. 3.70)**

c. The piston must be assembled so that the "E" stamped on the piston head is toward the top when the engine is in the normal attitude. **(Fig. 3.69)**

2. Install the piston rings on the piston in the reverse order of disassembly. The bottom oil ring must be installed first.

NOTE:

a. When new piston ring is installed, a check should be made to assure that the ring fits freely in the groove. This can be done by rolling the piston ring externally in the piston groove. **(Fig. 3.71)**

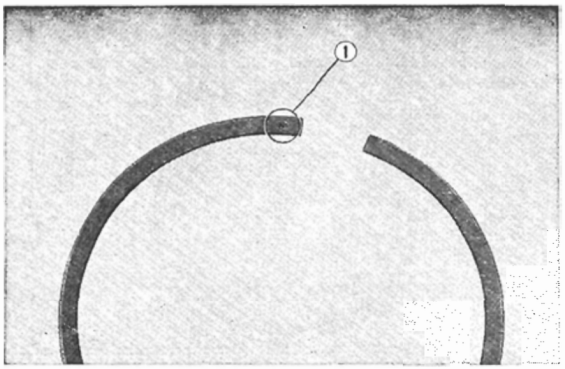

Fig. 3.72 Identifying upper and lower surfaces of the piston ring ① Manufacturer's mark

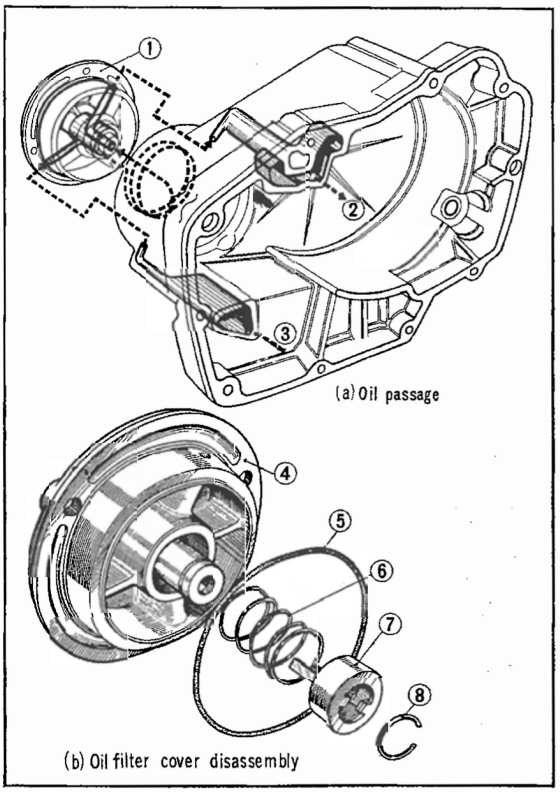

Fig. 3.73 Crankcase cover (right)
① Oil filter cover
② To upper crank case
③ From lower crankcase
④ Oil filter cover
⑤ 57.8×6.2 O-ring
⑥ Oil guide metal spring
⑦ Oil guide metal
⑧ Oil guide metal stop ring

b. The rings must not be installed upside down; this will cause oil pumping. The top side of the ring is etched at the end with the initial of the manufacturer's name. **(Fig. 3.72)**
c. Use of the piston ring setting tool will facilitate installation and prevent possibility of ring breakage.

3. Assemble the cam chain and cam chain guide roller to the cylinder.
4. Install the cylinder.

NOTE:

a. The ring gap of the three piston rings should be staggered 120° apart.
b. Use of the piston ring compressor tool for installing the cylinder will prevent damage to the piston ring and, further, it will simplify the work.
c. Check to make sure that the cam chamber gasket is property seated.

5. Install the cylinder head in accordance with Section **3. 2. D.**

3. 3 Crankcase Cover (Right)

A. Construction

The crankcase is made up of the upper and lower halves aluminum alloy diecasting. Crankcase covers provide housing for the primary engine components. The oil filter cover is fitted to the right crankcase cover and provides the passage for lubricating oil in two direction, the oil is pressurized by the oil pump and routed to the individual section of the engines through the right crankcase cover lower passage, oil filter cover external channel, oil filter, oil filter cover center section, right hand crankcase cover upper passage, and upper crankcase oil sump. **(Fig. 3. 73, 3. 4)**

B. Disassembly

1. Drain the engine oil
2. Remove the kick starter pedal from the kick starter pinion shaft.
3. Remove the mounting screws and disassemble crankcase cover. **(Fig. 3. 74)**

C. Reassembly

1. Before reassembling the crankcase cover, inspect the crankcase and oil filter covers for cracks and also for any damages to the mating surface since they will cause leaks.
2. Inspect the oil ring and the gasket for any damages, replace if necessary.
3. The kick starter arm should be installed on the kick starter spindle by matching the punch mark on the spindle.
4. After assembly, tighten all screws uniformly to prevent the cover from warping and consequent oil leaks.

D. Oil Filter Construction

Oil which flows into the oil filter is picked up by the spinning blade on the filter cap and the foreign matter such as powder, carbon, dust and etc. are separated from the oil by centrifugal force and permitting only the clean oil to pass through the center section of the filter cover. **(Fig. 3. 75, 3. 4)**

E. Oil Filter Disassembly

1. Remove the right crankcase cover in accordance with Section 3. 3 B.
2. Remove the circlip and filter cap. **(Fig. 3. 76)**
3. Straighten the tongue of the spring washer pawls and remove the 16mm lock nut. The filter rotor can then be removed. **(Fig. 3. 77)**

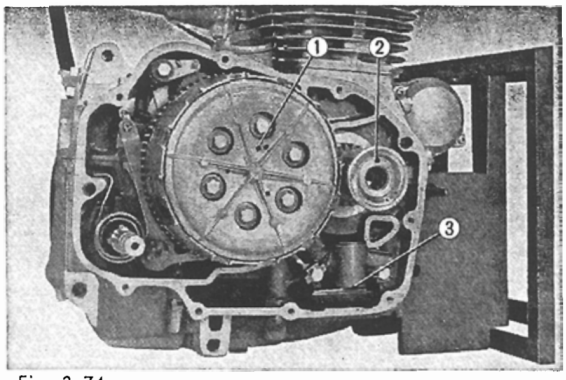

Fig. 3. 74
① Clutch ② Oil filter ③ Oil pump

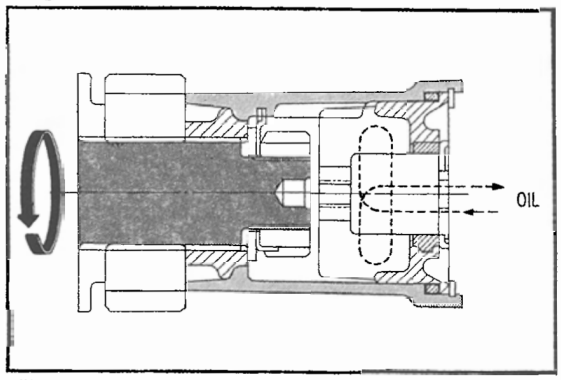

Fig. 3. 75 Sectional view of oil filter

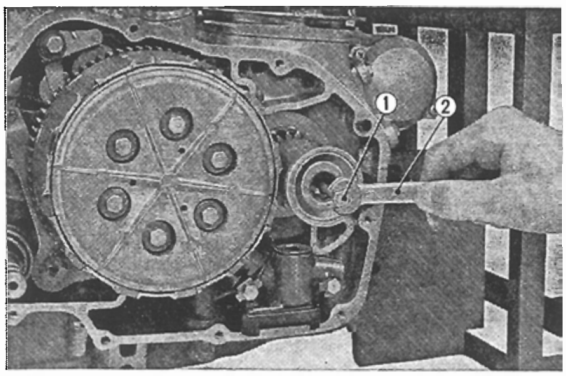

Fig. 3. 76 Removing the oil filter cap
① 8mm bolt ② Spanner

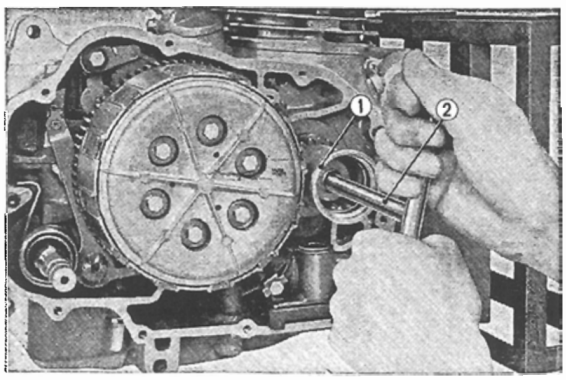

Fig. 3. 77 Removing the oil filter rotor
① Oil filter rotor ② 16mm T-handle lock nut wrench

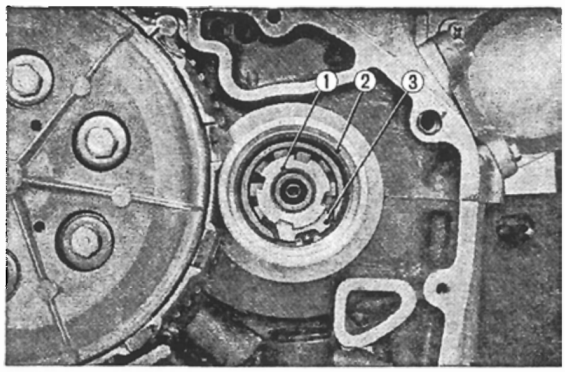

Fig. 3.78 Assembling the oil filter rotor
① 16 mm lock nut ② Oil filter rotor
③ Tongued washer

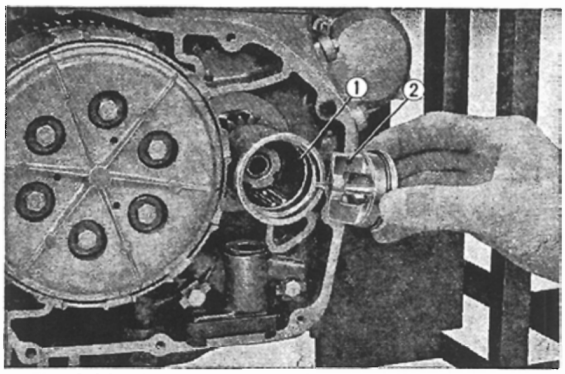

Fig. 3.79 Assembling the oil filter cap
① Oil filter rotor
② Oil filter cap

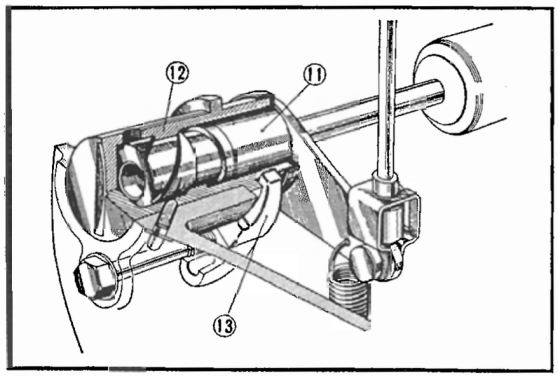

Fig. 3.81 Clutch adjusting mechanism

F. Oil Filter Reassembly

1. Clean the inside of the oil filter rotor and assembly. After cleaning all of the parts, perform reassembly in the reverse order of assembly.
2. Make sure that the 16 mm mounting nut is properly torqued and locked to prevent loosening. **(Fig. 3.78)**
3. Aligned filter cap head to the groove incorporated within the rotor wall, assemble the filter cap, install set the circlip. **(Fig. 3.79)**

G. Clutch

The function of the clutch is to transmit power from the crankshaft to the transmission main shaft by the friction between the clutch friction disc and the clutch plate. The clutch on the 450 is a multiple disc wet type clutch with a friction disc bonded to a core having a good heat dissipating characteristic. When the clutch is engaged, the clutch center rib is locked to the clutch pressure plate ⑦ by the friction between the clutch friction disc ③ and clutch plate ④ due to the force of the clutch spring ⑥. The clutch outer ② and the clutch center ⑤ become an integral unit, transmitting the power from the crankshaft to the transmission main shaft by the way of the primary drive gear ①, clutch outer ②, clutch friction disc ③, clutch plate ④ and clutch center ⑤. **(Fig. 3.80)**

When the clutch lever is pulled, the connecting clutch cable causes the clutch lifter thread ⑪, which incorporates a helical thread to rotate and move inward, applying a force against the clutch pressure plate ⑦ through the ♯10 steel ball ⑩, clutch lifter rod ⑨ and clutch lifter joint piece ⑧. The force applied to the clutch pressure plate compresses the clutch springs ⑥ and disengages the clutch friction discs ③ from the clutch plates ④, resulting in the discontinuity of the power transmission.

The clutch friction discs; clutch outer ② and the primary drive gear ① being integrally connected to the crankshaft, rotates freely, whereas, the clutch plates, clutch center ⑤, clutch spring, clutch pressure plate, clutch lifter piece ⑧ and clutch lifter rod remain stationary or revolve with the transmission mainshaft independent of the crankshaft.

Clutch adjustment is made by loosening the clutch adjuster fixing piece lock bolt ⑬ and turning the clutch adjuster ⑫. **(Fig. 3.81)**

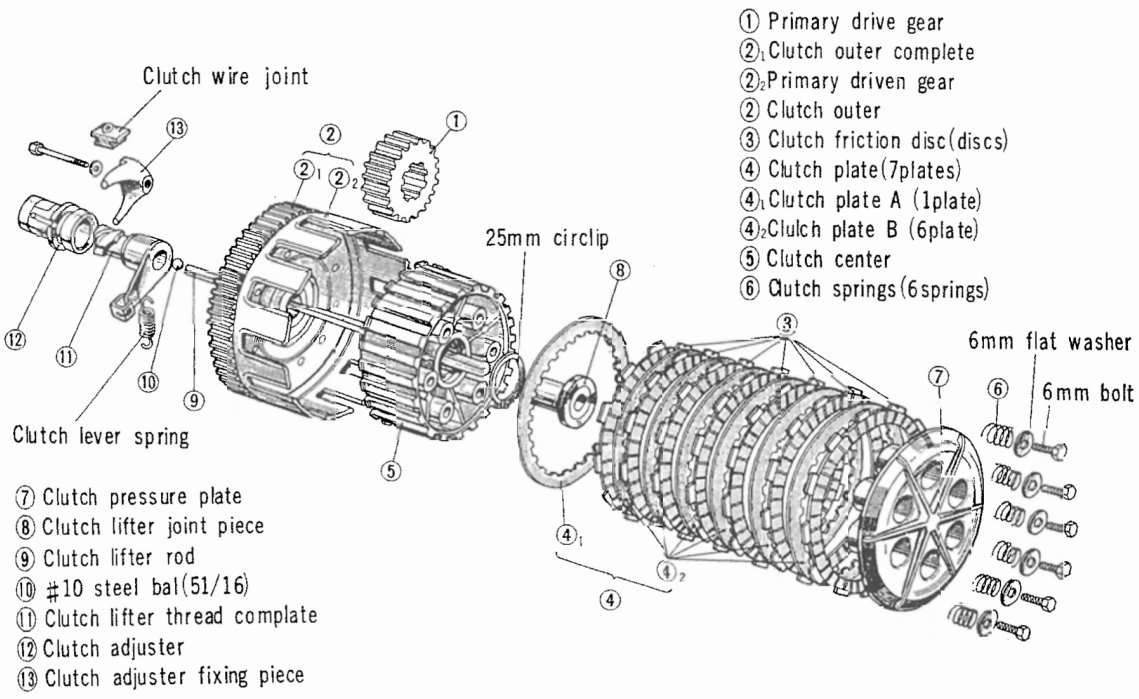

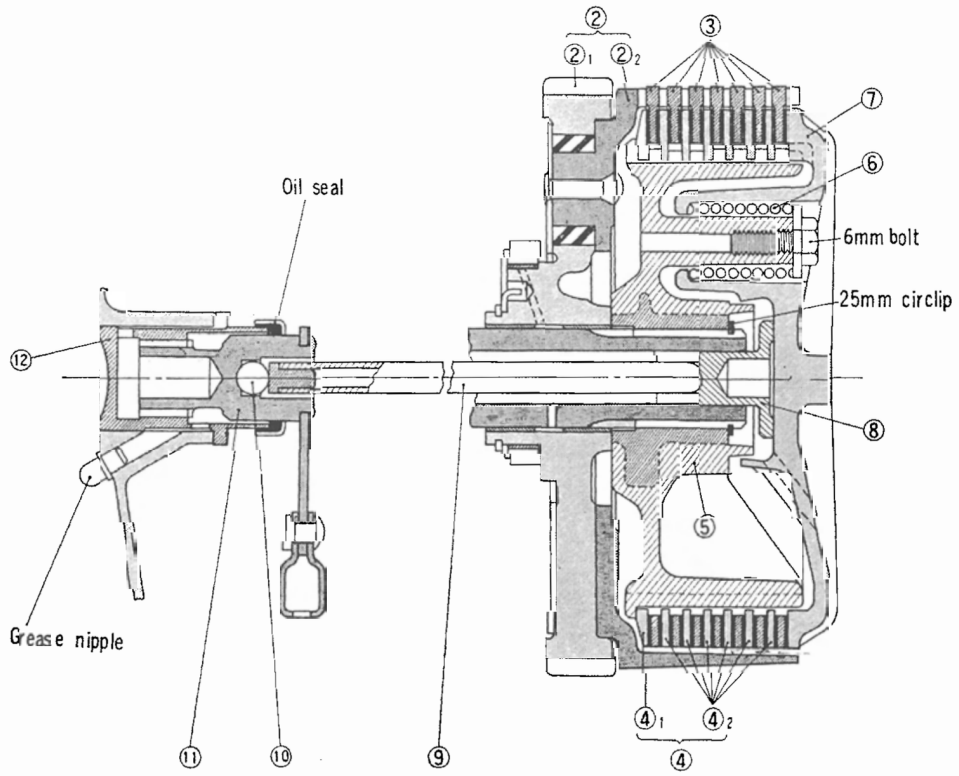

Fig. 3.30 Exploded View of Clutch

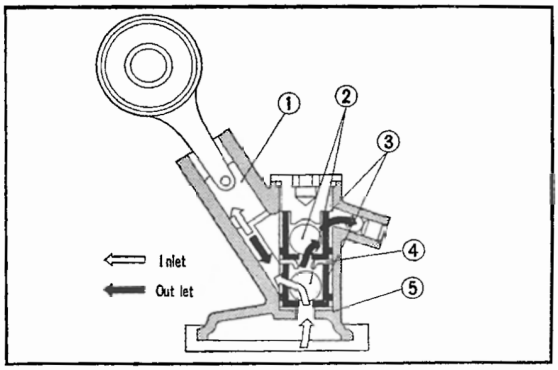

Fig. 3.82 Sectional view of oil pump
① Plunger ② Steel ball ③ Ball seat
④ Ball stopper ⑤ Rubber seat

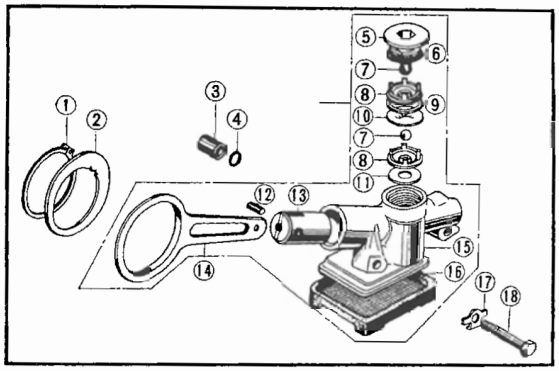

Fig. 3.83 Oil pump exploded view
① 32mm circlip ② Pump rod side washer
③ 8×12 Knock pin ④ 8×1.5 O ring
⑤ Oil pump ball stopper bolt ⑥ 17×2.5 O ring
⑦ #10 Steel ball ⑧ Oil pump ball seat
⑨ Rubber ring ⑩ Oil pump ball stopper
⑪ Rubber seat ⑫ Oil pump plunger pin
⑬ Pump plunger ⑭ Pump rod
⑮ Oil pump body ⑯ Filter screen
⑰ 6mm lock washer ⑱ 6×28 hex bolt

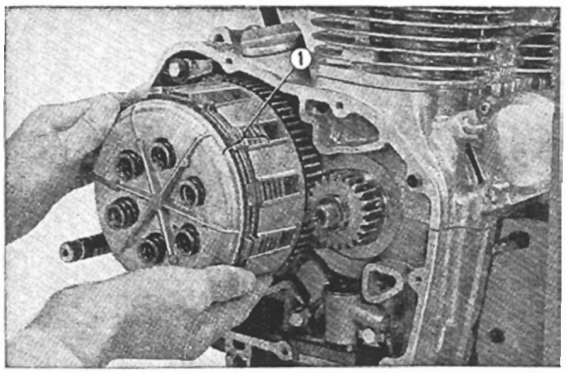

Fig. 3.84 Removing friction disc and clutch plates
① Friction disc and clutch plates

Grease nipple is provided at the clutch adjuster to lubricate the clutch lifter thread.

The primiary driven gear $②_1$ and the clutch outer $②_2$ are coupled through six rubber dampers, forming an assembly which dampens vibration. Holes are incorporated in the clutch pressure plate to allow oil to flow, thus preventing "grabbing" clutch. **(Fig. 3.80)**

H. Oil Pump Construction

The oil pump is durable and of simple construction, employing two steel balls for valves.

Pump plunger is mounted eccentrically on the clutch outer and is operated by the plunger rod. **(Fig. 3.82)**

I. Clutch Disassembly

1. Remove the crankcase right side cover in accordance with Section 3.3 B.
2. Remove the oil filter in accordance with Section 3.3 E.
3. Unscrew the six 6mm bolts and remove the clutch spring pressure plate, friction disc and clutch plate. **(Fig. 3.84)**

4. Remove the 29 mm circlip and disassemble the clutch center. **(Fig. 3.85)**
5. Unlock the oil pump bolts locking washer and remove the bolts.
6. Remove the oil pump together with the clutch outer. **(Fig. 3.86)**

NOTE:

The handle of the special 16mm lock nut wrench is also used as an outlet valve guide tool.

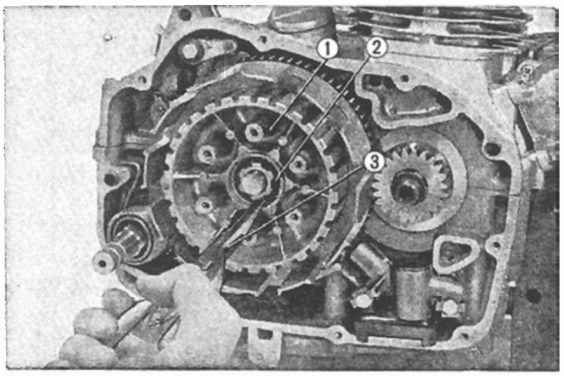

Fig. 3.85 Removing the 25mm circlip
① Clutch center ② 25mm circlip ③ Plier

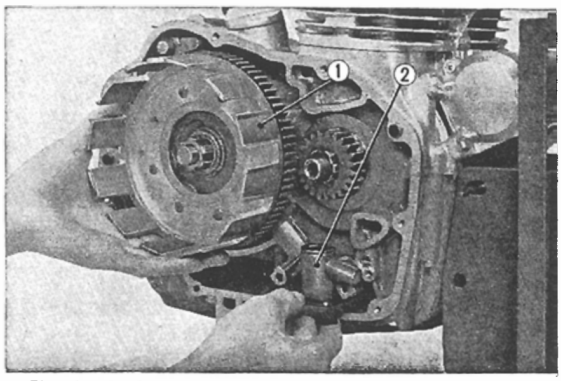

Fig. 3.86 Removing the oil pump together with the clutch outer
① Clutch outer
② Oil pump

J. Clutch Inspection

1. Friction disc

Item	Standard value	Serviceable limit
Friction disc thickness	3.42~3.58 mm (0.135~0.141 in)	Replace if under 3.1 mm (0.122 in)

2. Backlash

Item	Standard value	Serviceable limit
Friction disc and clutch outer	0.3 mm max. (0.012 in)	Replace if over 0.8 mm (0.032 in)

3. Clutch plate distortion. **(Fig. 3.87)**

Item	Standard value	Serviceable limit
Clutch plate A and B	0.15 mm max. (0.006 in)	Repair or replace if over 0.35 mm (0.014 in)

4. Clutch spring

Item	Standard value	Serviceable limit
Free length	40.1 mm (1.575 in)	Replace if under 3.94 mm (1.55 in)
With load	31.6~34.1 kg/56.6 mm (81.585~77.175 lbs/ 1.047 in)	——

5. Clutch center

Item	Standard value	Serviceable limit
Radial clearance between clutch center and main shaft	0.020~0.062 mm (0.0008~0.0024 in)	Replace if over 0.12 mm (0.0047 in)

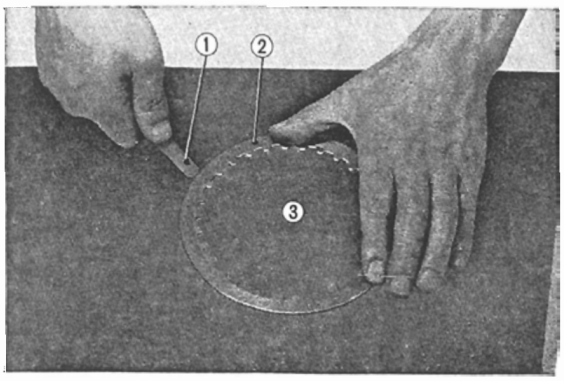

Fig. 3.87 Clutch plate distortion measuring
① Thickness gauge ② Clutch plate
③ Surface plate

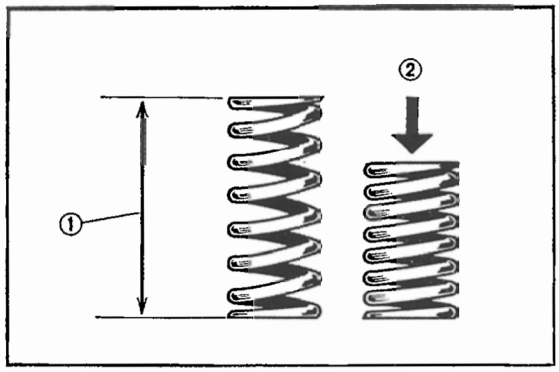

Fig. 3.88 Clutch spring tension measuring

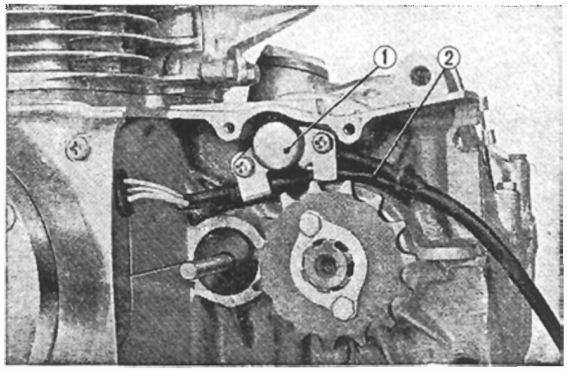

Fig. 3.89 Neutral switch and generator cord clamp
① Neutral switch ② Generator cord

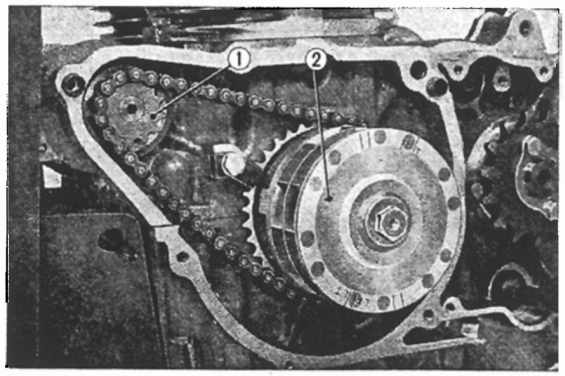

Fig. 3.90 Remove the left crankcase cover
① Starting motor sprocket ② Generator rotor

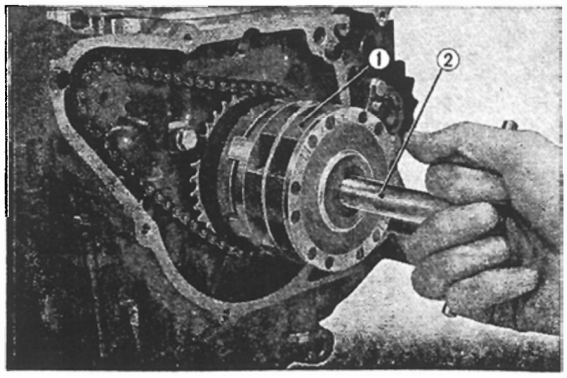

Fig. 3.91 Removing the A C generator rotor
① Generator rotor ② T-handle gererator rotor puller

K. Clutch Reassembly

Reassemble the clutch in the reverse order of disassembly.

NOTE:

a. Exercise care when installing the pump rod, installing pump rod in reverse will render the pump inoperative. **(Fig. 3.82, 3.83)**

b. The oil pump lock washer should be replaced with a new item.

c. Before installing the oil pump, check to make sure that the 8×15 O ring install around the pin at the pump is not missing or damaged. **(Fig. 3.83)**

d. Exercise care not to damage the surfaces of the clutch plate. **(Fig. 3.80)**

3.4 Crankcase Cover (left)

A. Construction

Left crankcase cover houses the generator and the starting clutch. The generator is not shielded from the lubricant and, therefore, the oil seal is not used, thus simplifying construction.

B. Disassembly

1. Remove the neutral switch. **(Fig. 3.89)**
2. Remove the left side crankcase cover. **(Fig. 3.90)**

Remove the generator stator from the left crankcase cover by loosening the mounting nut.

3. Remove the generator rotor by using a generator rotor puller. **(Fig. 3.91)**

4. Remove the starting sprocket set plate, and take out the starting sprocket together with the starting motor sprocket. **(Fig. 3.92)**

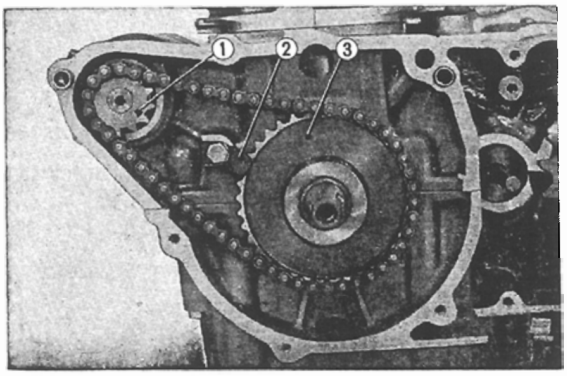

Fig. 3.92 Starting sprocket removing
① Starting motor sprocket
② Starting sprocket set plate
③ Starting sprocket

C. Reassembly

1. Install the chain on the starting motor sprocket and install both sprockets at same time.
2. Install the starting sprocket set plate.
3. Set key and install generator rotor.

NOTE:

Insure that all the parts are free of foreign matter and that the starting clutch rotor has been properly assembly.

4. Check to make sure that the gasket is not damaged and properly installed on the left crankcase cover.
5. Install the neutral switch.

3.5 Upper and Lower Crankcase

A. Construction

The upper and lower crankcase are aluminum alloy die casting and can be separated from the crankshaft, transmission main shaft and counter shaft. The oil under pressure is fed to the upper crankcase where it is branched and lubricate the crankshaft, transmission main shaft and camshaft. **(Fig. 3.4, 3.93)**

The oil which has dropped to the lower crankcase flows into the chamber at the rear through an opening at the drain cock; the oil then flows from the right side through the passage to the right hand chamber. It is then picked up by the pump and delivered under pressure to the various units. In this way, the oil is continually circulating, reducing the deterioration of the oil and maintaining a low oil temperature. **(Fig. 3.94)**

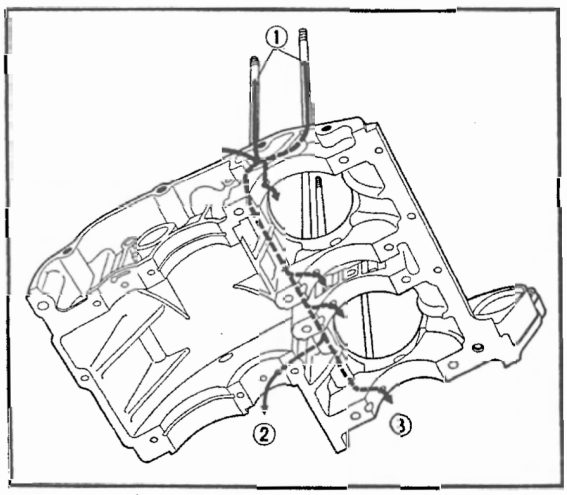

Fig. 3.93 Upper crankcase oil passage
① To camshaft ② To mainshaft
③ To crankshaft

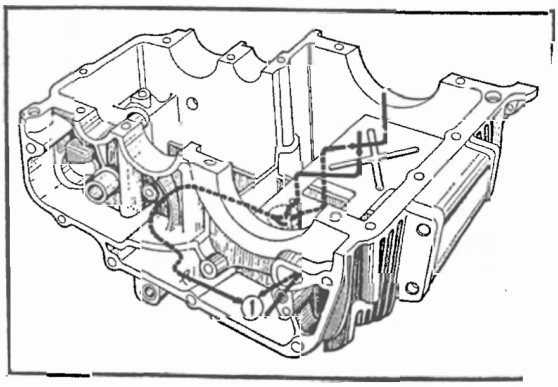

Fig. 3.94 Oil flow in the lower crankcase
① Oil pump

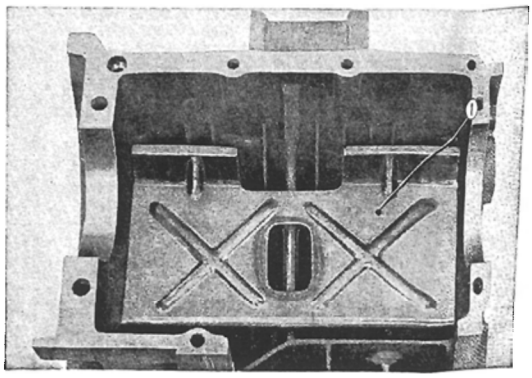

Fig. 3.95
① Oil separator

B. Oil Separator Operation

The oil separator is located in the forward section of the lower crankcase, directly below the crankshaft. Its primary function is to control the splash and oil foaming caused by the counterweights ; prevent the oil from the penetrating into the combustion chamber and also controls oil temperature **(Fig. 3. 95)**

C. Upper and Lower Crankcase Disassembly

1. Remove the left crankcase side cover, the generator, and the starting clutch in accordance with Section 3. 4 B.
2. Remove the right crankcase cover in accordance with Section 3. 3 B.
3. Separate oil filter in accordance with Section 3. 3 E.
4. Remove the clutch in accordance with Section 3. 3 I.
5. Gear shift spindle removal
   Remove the left circlip, pull out the gear shift spindle exercising care not to damage the drum stop cam plate.
6. Loosen the four 6 mm hex bolts on the upper side, the four 8 mm hex bolts and seven 6 mm hex bolts on the under side, and remove the lower case.

D. Upper and Lower Crankcase Inspection

1. Check for damages especially around machine mating surfaces since even a small defect such as scratch will cause oil leaks. Repair should be made with an oil stone.

E. Upper and Lower Crankcase Reassembly

1. Check to make sure that the kick starter is properly engaged in the lower case. Apply liquid packing to the machined mating surface of the lower case.

NOTE :

a. Oil, solvent, unremove gasket should be completely removed from the mating machine surface.
b. Do not permit the liquid gasket to get on the dowel ,pin hole or to surfaces other than the mating parts.
c. Apply the liquid gasket evenly and smoothly.

d. Allow the liquid packing to set before joining the two crankcase halves.

2. Route cam chain over the camshaft and temporaly set.
3. Assemble the lower case.
4. Handle the starting motor cable and dynamo cord with care so as not to damage the clamps; tighten the nuts.

F. Crankshaft Construction

The crankshaft is constructed of high strength carbon steel and together with the connecting rod, converts the reciprocating motion of the piston to the rotary motion and, in addition, performs function of the flywheel by absorbing the fluctuating torque. On the crankshaft, starting sprocket and the AC generator are mounted. The cam chain drive sprocket is mounted and located in the center between the two throws. **(Fig. 3.96)**. The oil under pressure is routed to the four bearing from the upper crankcase to lubricate the roller bearings. **(Fig. 3.4, 3.93)** The oil to the two center bearings is further routed to the center oil passage in the crank pin to lubricate the large end of the connecting rod **(Fig. 3.97)**. Grooves are provided in the oil passages to function as centrifugal filters.

The crankshaft is supported at four points by heavy duty roller bearing; the outer race which is made of high carbon chrominum bearing steel (SUJ-2) for greater strength and service life, are mounted in place with dowel pins. Further, main bearing cre held in place by main bearing holder cap, the right and left crankshaft, counter weight, center crankshaft are individual parts press fitted to make up the crankshaft assembly. It is therefore possible to use the roller bearing in the connecting rod large end and also in the main bearings.

The crankshaft balance which is so important in providing riding comfort, has been designed to a balance of 44% $+3 \sim -5\%$.

(CRANKSHAFT BALANCE)

The balance "A" is computed by the following equation: $A = m/M \times 100$

m: Gyrating mass (m is the unbalanced obtained by subtracting the mass of the crankpin and the connecting rod from the total weight of the counterweight.

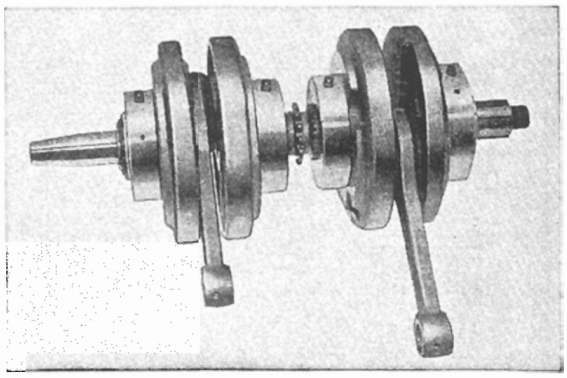

Fig. 3.96 Crankshaft assembly

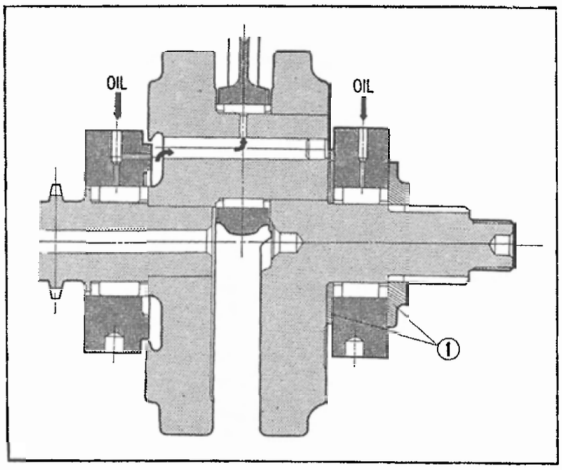

Fig. 3.97 Sectional view of the crankshaft (Right side)
① Washer

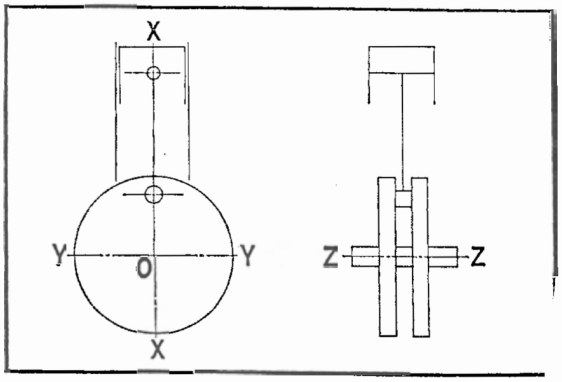

Fig. 3.98 Crankshaft balance

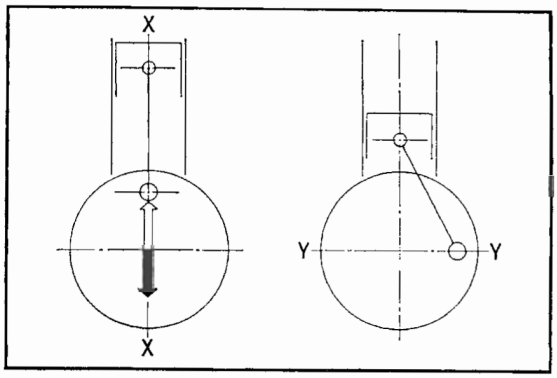

Fig. 3.99 0% Balance

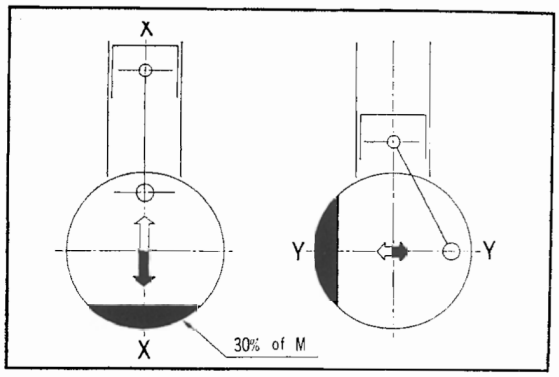

Fig. 3.100 30% Balance

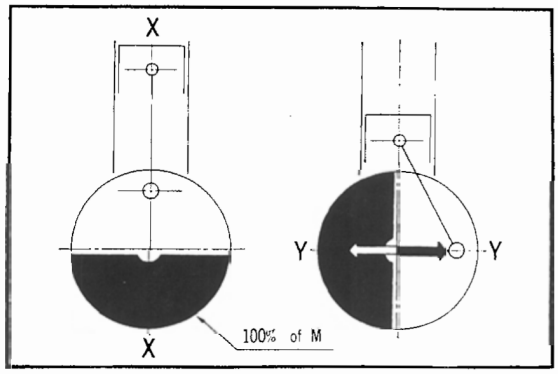

Fig. 3.101 100% Balance

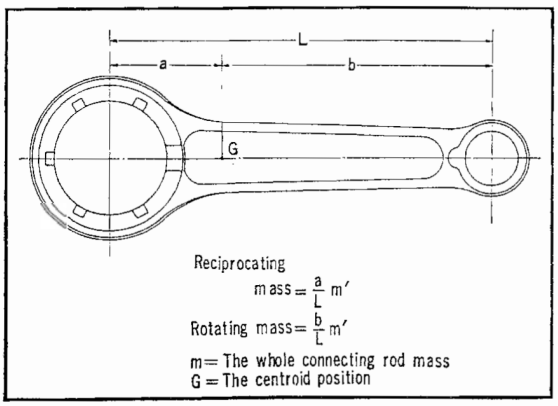

Fig. 3.102 Connecting rod rotating mass and reciprocating mass

M : Reciprocating mass (piston, piston pin and connecting rod)

The X-X and Y-Y axes are shown in **Fig. 3. 98.**

First, consider the case in which the crankshaft is perfectly balanced (m = 0). The cycle of inertial force applied to the shaft "0" due to the reciprocating mass M in the X-X direction develops into engine vibration. This is called 0% balance.

Next, if a weight equal to 30% of M (counterweight) is attached to the opposite side of the crankpin, the size of the inertial force in the direction of X-X is reduced to $0.7 \times M$. However, the crankshaft becomes unbalanced (m — 0.3) and develops a centrifugal force which will produce a vibration in the Y-Y direction. This is called 30% balance. **(Fig. 3. 100)** In other words, the vibration in the X-X direction has diminished but increased in the Y-Y direction by the like amoumt. This total has been expressed in percentage.

If the counterweight is made equal to M, the total vibration in the X-X direction will be transferred to the Y-Y direction. This is called 100% balance. **(Fig. 3. 101)**

G. Connecting Rod Construction

The connecting rod (commonly call conrod) is a link connecting the piston and the crank pin. The small end which is connecting to the piston performs reciprocating motion while the large end connected to the crank pin performs the rotary motion. The connecting rod, therefore, receives a combination of different forces. The connecting rod mass is divided into the rotating mass and the reciprocating mass in the ratio to the distance from the connecting rod centroid. The center of the connecting rod masses is assumed by having the rotating mass concentrate at the large end and the reciprocating mass at the small end. **(Fig. 3. 102)**

The connecting rod is an H shaped forging made of chrome molybdenum steel with needle roller bearings install in the large end.

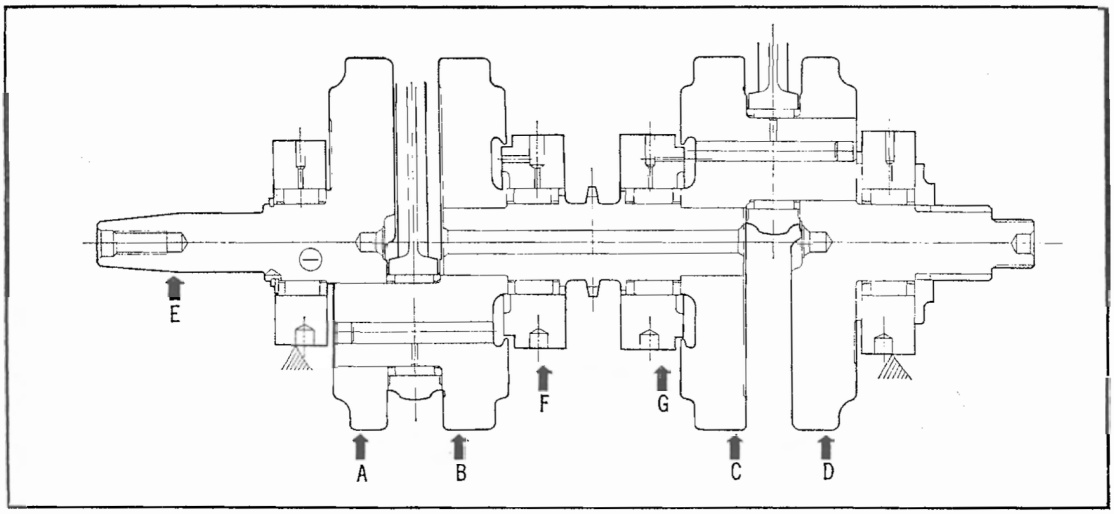

Fig. 3.103 Crankshaft measurement

H. Crankshaft Disassembly

1. Remove the cylinder head and cylinder in accordance with Section 3. 2 B.
2. Separate the piston in accordance with Section 3. 2 W.
3. Separate the lower crankcase in accordance with Section 3. 5 C.
4. Unscrew the center bearing cap bolts and remove the crankshaft.

I. Crankshaft Inspection

Item		Standard value	Serviceable limit
1 Crankshaft run-out (Fig. 3. 103)	A, B, C and D	0.05 mm max. (0.002 in)	Replace if over 0.2 mm (0.008 in)
	E, F and G	0.02 mm max. (0.001 in)	Replace if over 0.1 mm (0.004 in)
2 Main bearing radial clearance (Fig. 3. 104)		0.006～0.014 mm (0.0002～0.0005 in)	Replace if over 0.03 mm (0.001 in)
3 Connecting rod small end		17.016～17.034 mm (0.6699～0.6706 in)	Replace if over 17.07 mm (0.6721 in)
4 Connecting rod large end radial clearance (Fig. 3. 105)		0～0.008 mm (0～0.0003 in)	Replace if over 0.05 mm (0.0020 in)
5 Connecting rod large end side clearance		0.07～0.33 mm (0.0028～0.0130 in)	Replace if over 0.5 mm (0.0197 in)
6 Connecting rod large end tilt (Fig. 3. 106)		0.2～1.0 mm (0.008～0.04 in)	Replace if over 3.0 mm (0.1181 in)

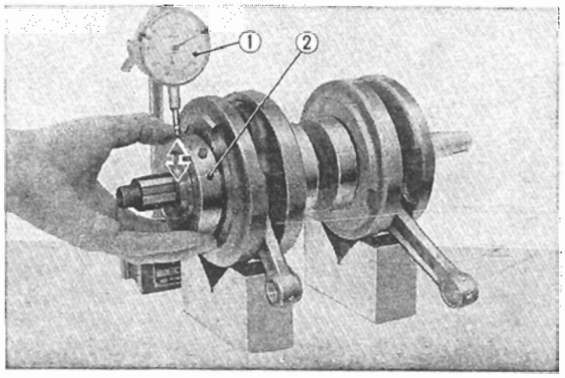

Fig. 3.104 Measuring main bearing diametrical clearance
① Dial gauge
② Outer race

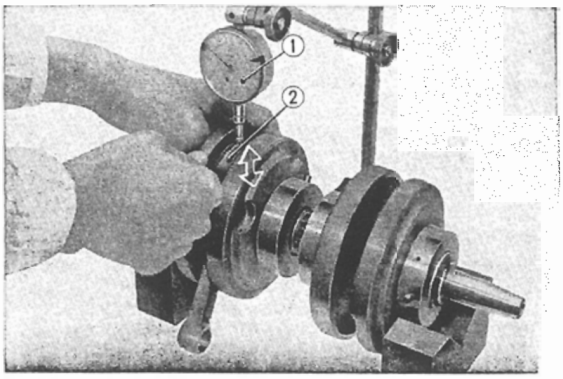

Fig. 3.105 Measuring connecting rod diametrical clearance
① Dial gauge
② Connecting rod

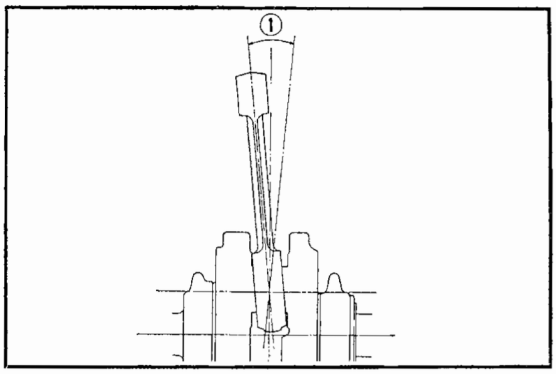

Fig. 3.106 Connecting rod small end swinging measurement
① Maximum swinging

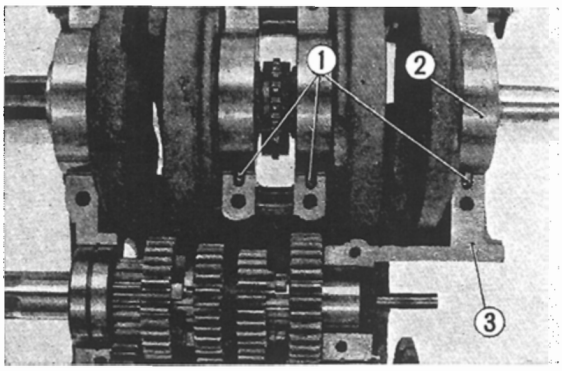

Fig. 3.107 ① Dowel pin
② Crank bearing outer race
③ Upper crankcase

J. Crankshaft Reassembly

1. At this time, the dowel pin on the bearing outer rase is firmly installed into the crankcase.
2. From hereafter, follow the disassembly procedure.

NOTE :

Uniformly tighten the four center bearing cap bolts in a diagonal sequence to **160～210 kg·cm (11.6～15.2 ft. lb)** torque.

a. Align the holder pin to the bearing holder and evenly torque all of the bearing holders.

b. The crank bearing outer race must be installed with the oil hole toward the upper crankcase.

K. Transmission Construction

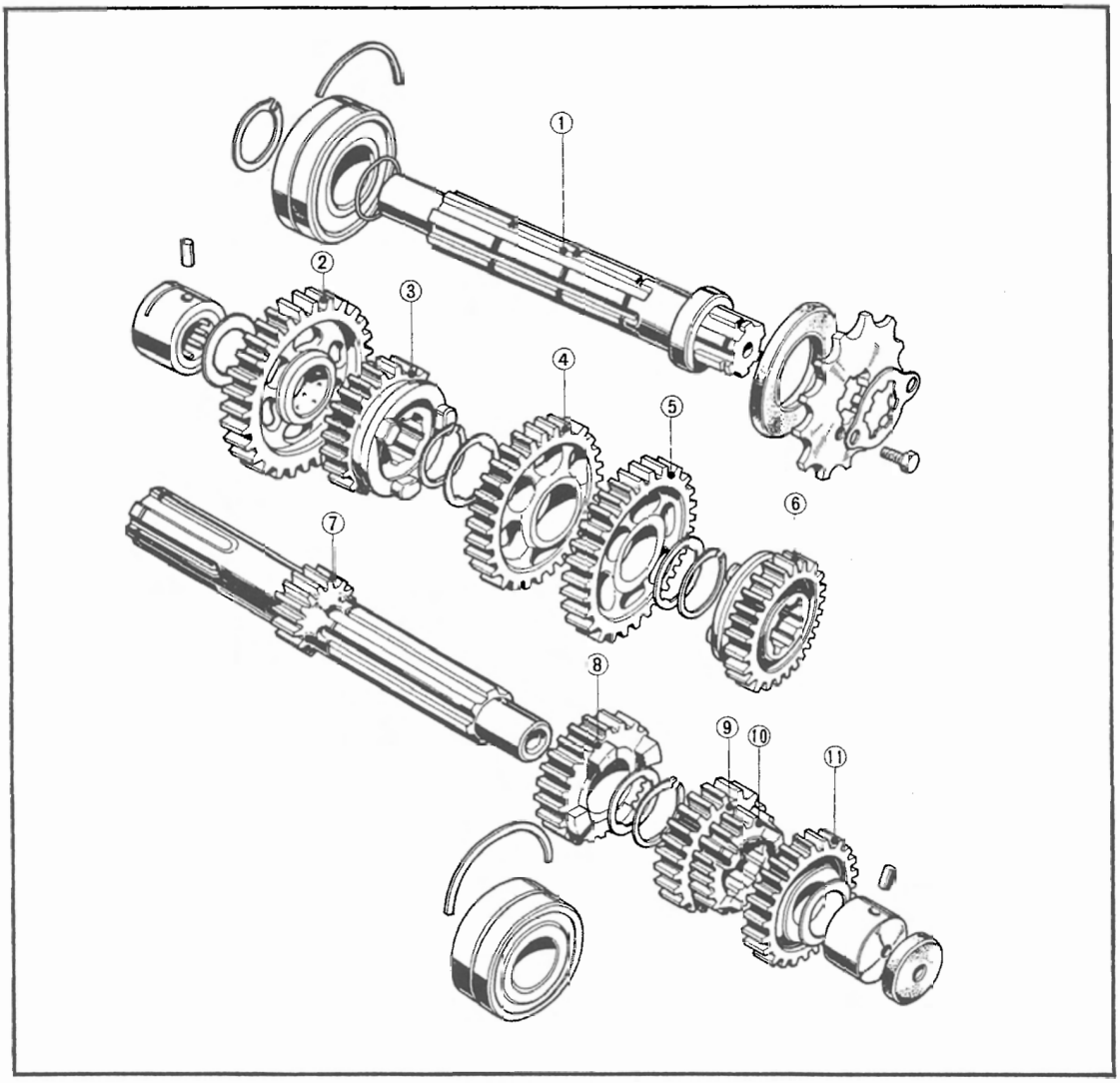

Fig. 3.108 Transmission

① Counter shaft ② Counter shaft low gear ③ Counter shaft fourth gear ④ Counter shaft third gear
⑤ Counter shaft second gear ⑥ Counter shaft top gear ⑦ Main shaft ⑧ Main shaft fourth gear
⑨ ⑩ Main shaft second-third gear ⑪ Main shaft top gear

When the clutch is engaged, the power from the crankshaft is transmitted through the clutch assembly to drive the transmission main shaft (M). During the shifting of the transmission gears, the clutch is disengaged to stop the rotation of the main shaft.

The position of the gears will be described in reference to the neutral gear.

NEUTRAL : **(Fig. 3. 109A)**

When the transmission is in neutral, the gears in the transmission are arranged so that there is no power transmitted from the transmission main shaft (M) to the counter shaft (C). The fixed main shaft

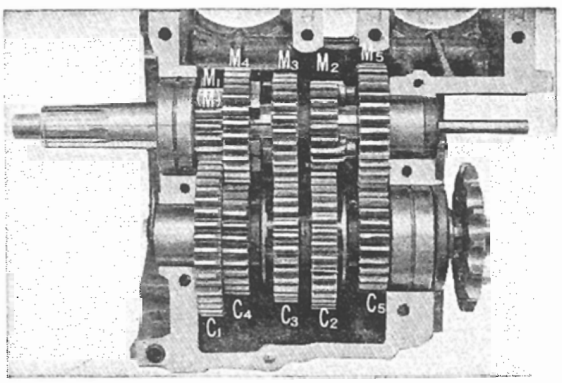

Fig. 3.109A Neutral

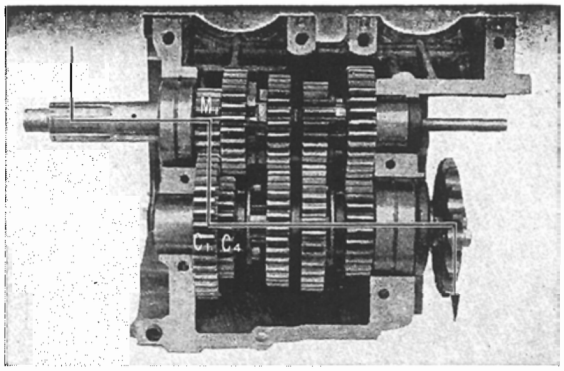

Fig. 3.109B Low

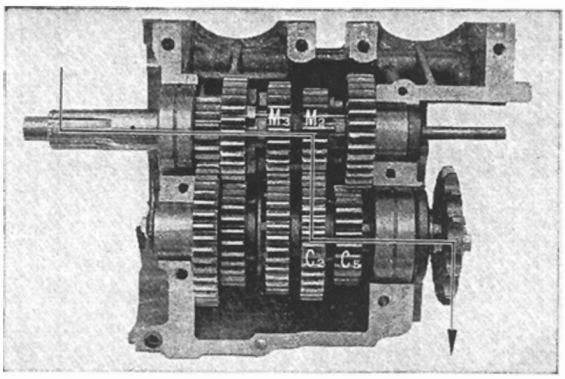

Fig. 3.109C 2nd

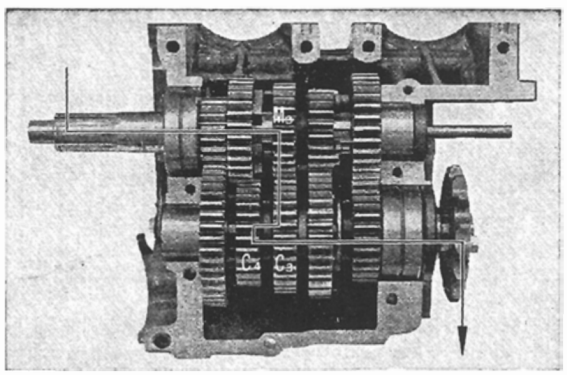

Fig. 3.109D 3rd

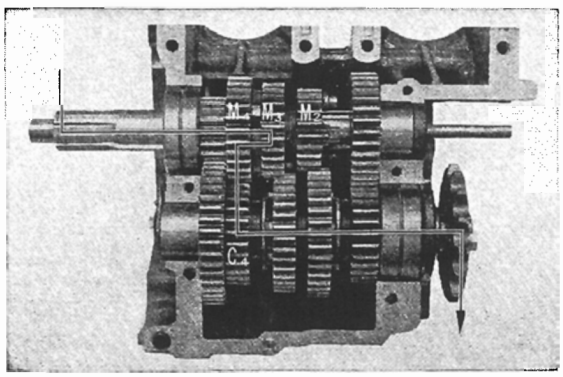

Fig. 3.109E 4th.

low gear (M 1) is meshed with the free rotating counter shaft low gear (C 1), free rotating main shaft top gear (M 5) is meshed with the sliding counter shaft top gear (C 5), sliding main shaft second-third gears (M 2-3) are meshed with the free rotating counter shaft second-third gears (C 2 -3) and the free rotating main shaft fourth gear (M 4) is meshed with the splined counter shaft fourth gear (C 4).

LOW GEAR : **(Fig. 3. 109 B)**

The power from the main shaft low gear (M 1) is transmitted to the free rotating countershaft low gear (C 1), however, the splined countershaft fourth gear (C 4) is engaged to the countershaft low gear through a dog, to drive gear (C 4) is engaged to the countershaft low gear through a dog, to drive the countershaft which has the drive sprocket mounted on the end of the shaft.

SECOND GEAR : **(Fig. 3. 109 C)**

The power from the main shaft second gear (M 2) is transmitted to the free rotating countershaft second gear (C 2), however, the dog on the countershaft top gear (C 5) is engaged with the countershaft second gear so that the power transmits to the countershaft which drives the drive sprocket mounted on the end of the shaft.

THIRD GEAR : **(Fig. 3. 109 D)**

Power from the main shaft third gear (M 3) is transmitted to the free ratating countershaft third gear (C 3). The splined counter shaft fourth gear (C 4) is engaged to the countershaft third gear through a dog and drives the countershaft and the drive sprocket on the end.

FOURTH GEAR : **(Fig. 3. 109 E)**

The free rotating main shaft fourth gear (M 4) receives its drive power by being engaged to the M 2-M 3 gears by a dog. The power of the main shaft is thus transmitted from (M 4) to the countershaft fourth gear (C 4) to drive the countershaft and the drive sprocket on the end.

TOP GEAR : **(Fig. 3. 109 F)**

The free rotating main shaft fifth gear (M 5) receives it drive power by being engaged to M 2 M 3 gears by a dog. The power of the main shaft is thus transmitted from M 5 to the countershaft fifth gear (C 5) to drive the countershaft and the drive sprocket on the end.

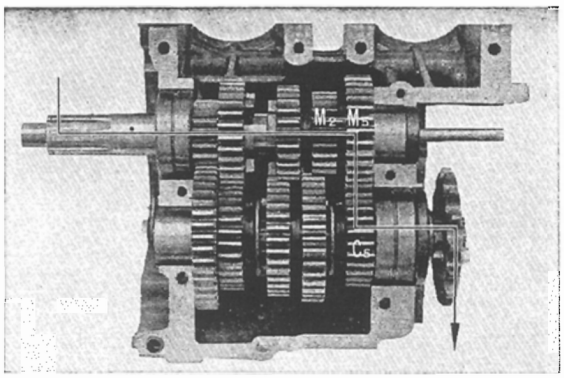

Fig. 3. 109 F Top

L. Transmission Disassembly

The transmission can be disassembled by separating the upper and lower crankcase in accordance with the instructions in section 3. 5. C

M. Inspection

1. Main shaft, countershaft diameter **(Fig. 3. 110 A, 110 B)**

Item	Standard value	Serviceable limit
Shaft O.D.	19.959～19.98 mm (0.7858～0.7866 in)	Replace if under 19.94 mm (0.785 in)

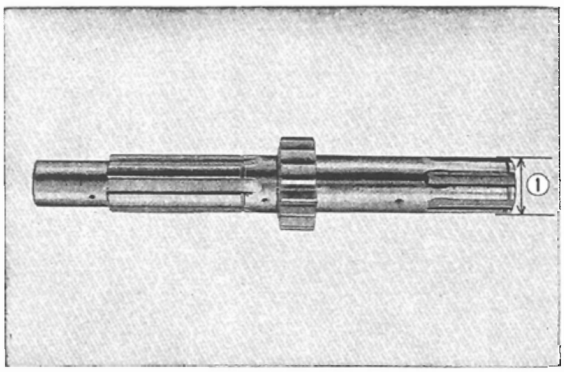

Fig. 3. 110 A
① Main shaft outside diameter

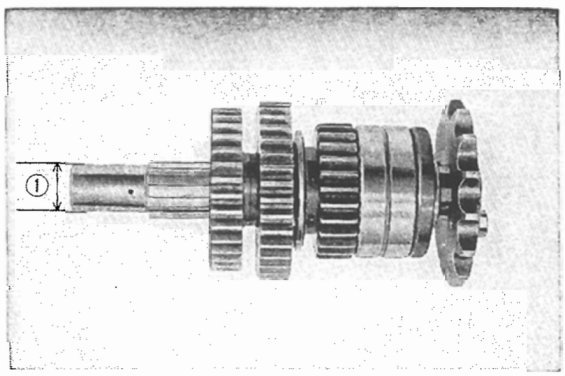

Fig. 3. 110 B
① Counter shaft outside diameter

2. Spline clearances M to M 2–3, C to C 4 and C 5 **(Fig. 3. 111)**

Item	Standard value	Serviceable limit
Spline clearance	0.03～0.096 mm (0.0012～0.0038 in)	Replace if over 0.15 mm (0.0059 in)

3. Backlash **(Fig. 3. 112)**

Item		Standard value	Serviceable limit
Backlash	Low	0.032～0.096 mm (0.0013～0.0038 in)	Replace if over 0.15 mm (0.006 in)
	2nd	0.089～0.179 mm (0.0035～0.0071 in)	Replace if over 0.2 mm (0.08 in)
	3rd, 4th, Top	0.094～0.188 mm (0.0037～0.0074 in)	Replace if over 0.21mm (0.0082 in)

4. Main shaft, counter shaft bearing inside diameter

Item	Standard value	Serviceable limit
Bearing I.D.	20.02～20.033 mm (0.7882～0.7887 in)	Replace if over 20.06 mm (0.789 in)

5. C 1 gear bore

Item	Standard value	Serviceable limit
Bore Dia.	20.0～20.021 mm (0.7874～0.7882 in)	Replace if over 20.05 mm (0.789 in)

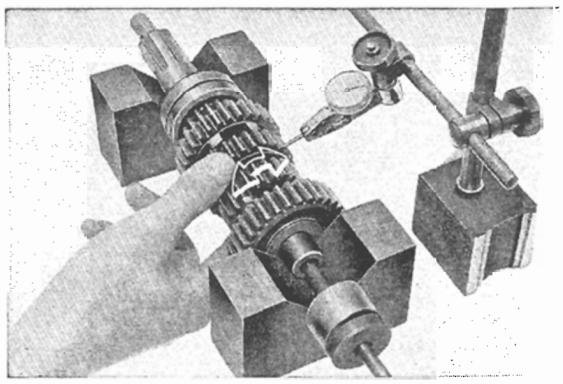

Fig. 3. 111 Measuring spline clearance

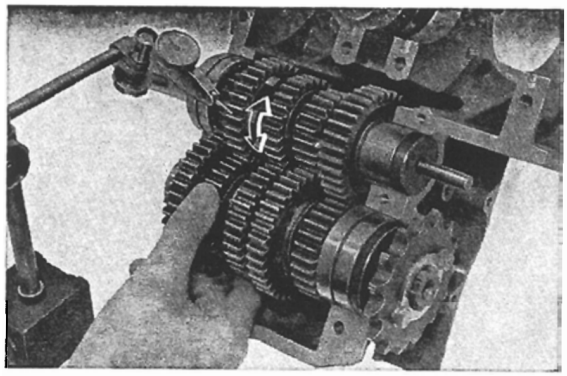

Fig. 3.112 Measuring gear backlash

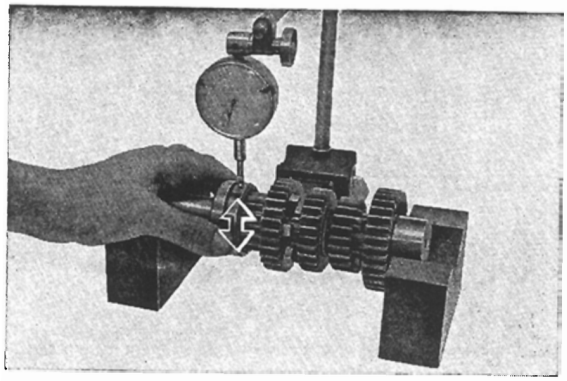

Fig. 3.113 Measuring bearing diametrical clearance

6. Double row ball bearing clearance (M, C) **(Fig. 3.113)**

Item	Standard value	Serviceable limit
Diametrical Clearance	0.01～0.025 mm (0.0004～0.001 in)	Replace if over 0.05 mm (0.002 in)

N. Transmission Reassembly

Reassemble in the reverse sequence of disassembly.

NOTE :

a. Make sure that the thrust washers and circlips are installed on the M 4, C 2 and C 3 gears.

b. When assemblying the bearings to the main shaft and countershaft, make sure that the bearing with the oil groove is installed on the countershaft and the bearing without the oil groove on the main shaft.

c. The installation of the bearing set ring and the dowel pin must not be forgotten.

d. Assemble the left shift fork on gear C 4, right shift fork on gear C 5 and the center shift fork on gear M 2–M 3, and then assem ble the main shaft and the counter shaft in set.

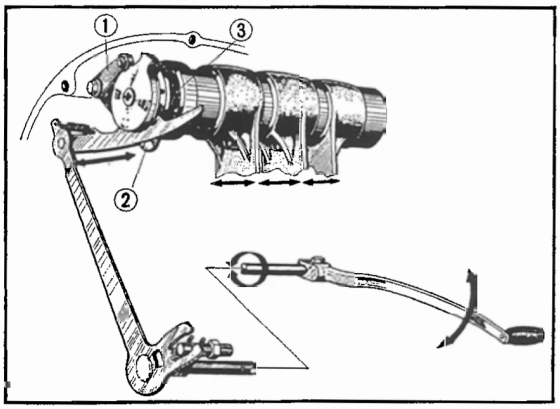

Fig. 3.114 Gear shift mechanism
① Neutral stopper
② Shift drum stopper
③ Ball bearing

O. Gear Shift Construction

The gear shift operation is made very light by mounting the gear shift drum on ball bearings, further, the use of the special neutral stopper permits easy and positive shifting into neutral.

Stopping on the gear shift pedal causes the gear shift spindle to rotate and moves the gear shift fork. The pin on the end of the shift fork turns the gear shift drum and it in turn moves the gear shift fork which is mounted on the drum. The shift drum stopper positively sets the gears in their respective position **(Fig. 3.114)**

P. Gear Shift Disassdmbly

1. Remove the gear shift spindle in accordance with section 3. 5. C.
2. Separate the upper and lower crankcases in accordance with section 3. 5. C.
3. Disassemble the transmission gears.
4. Loosen the 6 mm hex. bolt and disassemble the neutral stopper and shift drum stopper, followed by unscrewing the 6 mm cross screw and removing the bearing set plate.
5. Remove the shift fork guide pin clip and then pull out the guide pin. **(Fig. 3. 115)**
6. Remove the gear shift drum by lightly tapping the case on the side of the neutral switch mounting.

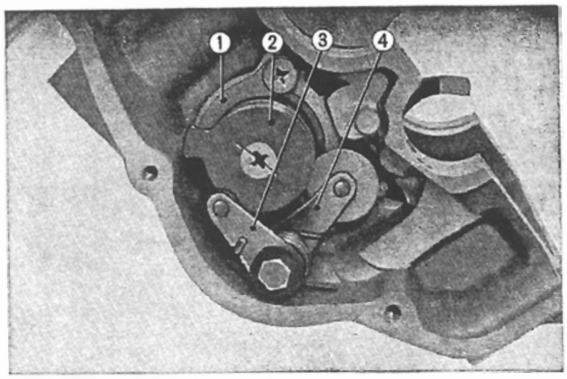

Fig. 3.115 Removing the gear shift drum
① Bearing set plate
② Gear shift drum
③ Shift drum neutral stopper
④ Shift drum stopper

Q. Gear Shift Inspection

1. Gear shift fork

Item		Standard value	Serviceable limit
Inside Dia.		34.0~34.025 mm (1.3385~1.339 in)	Replace if over 34.1 mm (1.3425 in)
End thickness	Left Right	4.93~5.0 mm (0.1941~0.1968 in)	Replace if under 4.6 mm (0.181in)
	Center	5.93~6.0 mm (0.2334~0.236 in)	Replace if under 5.6 mm (0.2205 in)
Bend in fork end (left, right)		Within 0.1mm (0.004 in)	Replace if over 0.8 mm (0.031in)

2. Gear shift drum guide grooves

Item	Standard value	Serviceable limit
Groove width	6.05~6.15 mm (0.238~0.242 in)	Replace if over 6.5 mm (0.256 in)

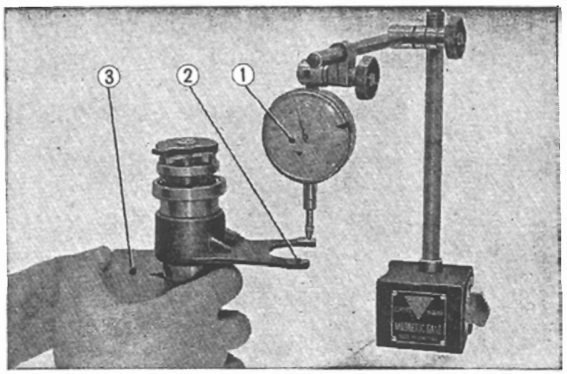

Fig. 3.116 Measnring fork end bending
① Dial gauge
② Gear shift fork
③ V-block

R. Gear Shift Reassembly

1. Assemble the gear shift drum into the upper case. At this time, make sure that the location of the shift fork are in their respective position (gear shift forks are stamped in the center with "R" or "L" to identify the right and left respectively).

NOTE:

When assemblying the gear shift drum, exercise care not to damage the oil seal press fitted into the crankcase.

2. Install the shift fork guide pin into the shift fork and lock with a clip.
3. Reinstall the bearing set plate using the two 6 mm cross screws, and also install the neutral stopper and shift drum stopper.
4. Reinstall the transmission gear assembly.

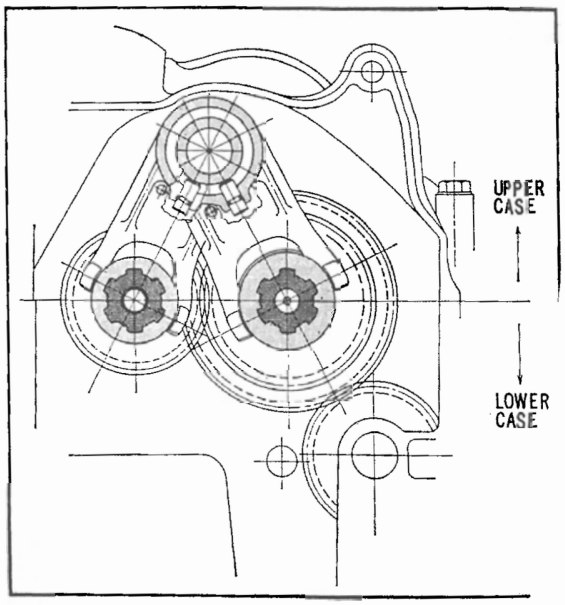

Fig. 3.117 Sectional view of gear shift drum and fork

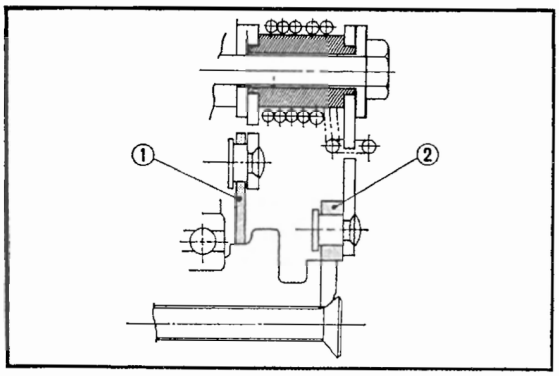

Fig. 3.118 Sectional view of shift drum stopper
① Shift drum stopper
② Shift drum neutral stopper

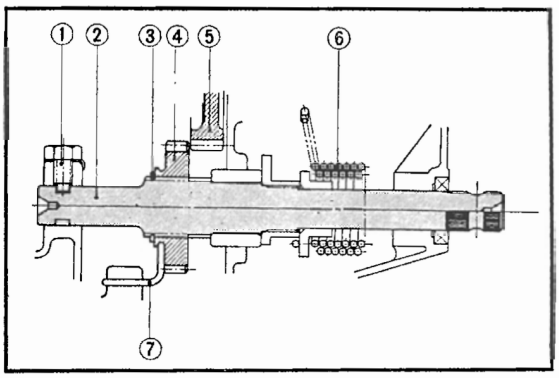

Fig. 3.119 Kick starter construction
① 8 mm set bolt
② Kick starter spindle
③ 25 mm cir-clip
④ Kick starter pinion
⑤ Courter shaft low gear
⑥ Kick starter spring
⑦ Friction spring

5. Assemble the lower crankcase to the upper crankcase.
6. Reinstall the gear shift spindle. Install a washer on the left spindle and set with the circlip.

NOTE :

Check to make sure that the action of the gear shift fork is smooth.

7. Reassemble the remaining components.

S. Kick Starter Construction

The kick starter spindle rotates counter clockwise when the kick starter pedal is pressed by applying the weight of the rider. A kick starter pinion supported by a friction spring is mounted on the center of the kick starter spindle when the left hand screw is machined. When the kick starter is pressed, the kick starter pinion is forced against and meshes with the countershaft low gear by the action of the screw on the spindle, causing the C_1, M_1, (M) gears to be driven and transmitting the pedal force to rotate the crankshaft through the clutch.

Releasing the kick starter pedal causes the kick starter spindle to rotate clockwise and return to normal position by the action of the kick starter spring

T. Kick Starter Disassembly

1. Disassemble the upper and lower crankcase in accordance with Section 3. 5 C.
2. Remove the kick starter spring.
3. Remove the 25 mm circlip.
4. Unscrew the 8 mm lock bolt and remove washer.
5. Disassemble the kick starter spindle.

U. Kick Starter Inspection

Check the kick starter spindle and pinion, if damaged or worn, replace with a new part.

V. Kick Starter Reassembly

Reassemble the kick starter components in the reverse procedure of disassembly.

NOTE :

Always use new 8 mm lock washer.

3. 6 Carburetor

A. Construction

The carburetor gasifies the fuel, provides mixture with air, and supplies the mixture to the engine. To the model 450, the carburetor, called "CV (Constant Vacuum) Carburetor" with which the venturi area is automatically changed by inhal ing negative pressure. With this CV carburetor, the primary and secondary venturi relation becomes very smooth, and for a wide speed range, high output, acceleration, and economy can be maintained. Further, one carburetor is provided individually to one cylinder and there is no air admission interference ; thus, the mixture flow is smooth. In addition, the construction is of single body and very simple. The choke valves of both left and right carburetors are interlocked. **(Fig. 3. 120)**

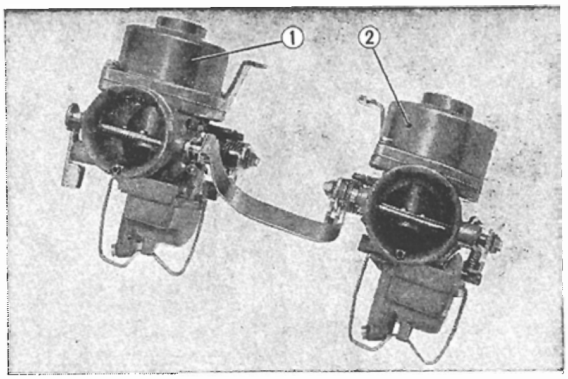

Fig. 3. 120 Constant-pressure single-body compound carburetor
① Left side carburetor
② Right side carburetor

(VENTURI)

The portion where the gas flow route is squeezed and becomes thin is called "venturi". The gas flow in the venturi portion becomes faster than the other portion, and inter-molecular clearance is accomplished ; the pressure is lowered in that portion **(Fig. 3. 121)**. Accordingly, if gasoline outlet in the venturi portion, the sucking is effectively performed, and gasified just like an atomizer. This is the principle of the carburetor ; however, actually, air bleed is provided to improve the gassification.

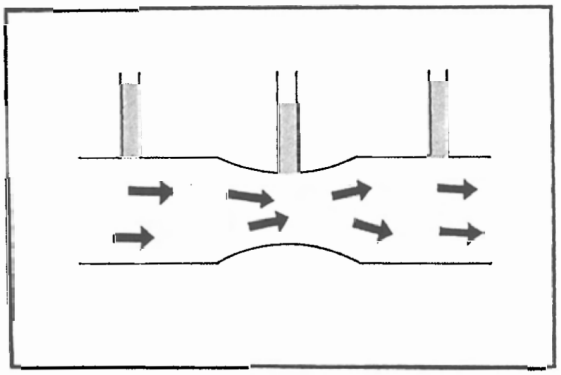

Fig. 3. 121 Venturi

(AIR BLEED)

When sucking water through a straw as shown in **Fig. 3. 122a**, if the mouth is left, the water returns to the cup. If an opening is provided in the middle of the straw in between the mouth and water level as shown in **Fig. 3. 122**, bubbles are simultaneously sucked, but water does not return even if the mouth is left from the straw due to the bubbles. Further, the opening is provided below the water level as shown in **Fig. 3. 122c**, the bubbles become finer. This is the principle of the air bleed. Gasoline coming out to the jet is not returned but held in the position higher than the float chamber oil level, and simultaneously, it is made to bubble ; thus, it is very convenient to gasify.

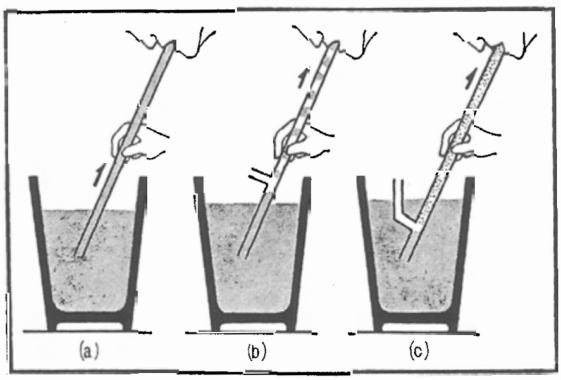

Fig. 3. 122 Air bleed principal

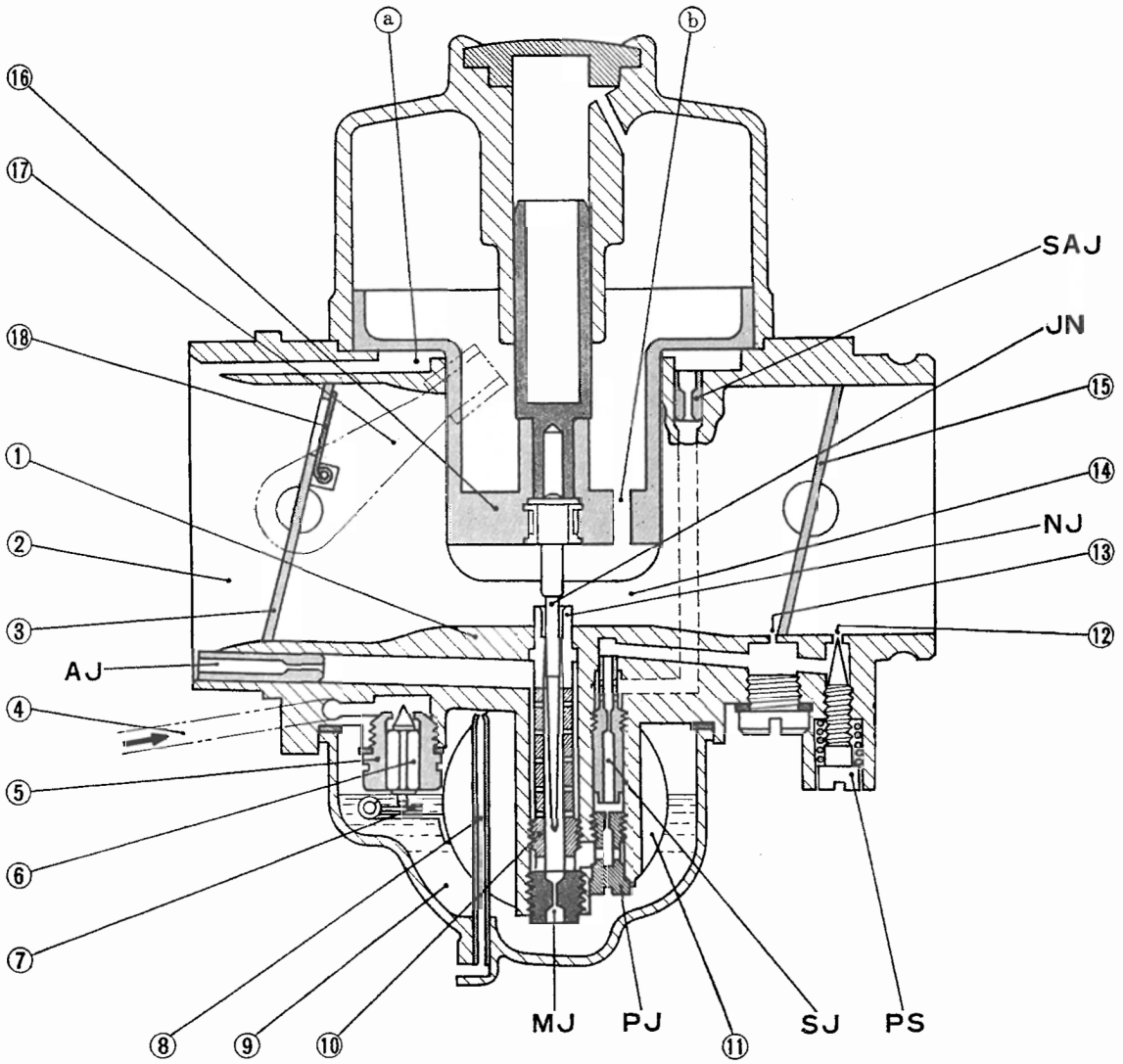

Fig. 3.123 Sectional view of carburetor

1. Air System

Air passed through the air cleaner is inhaled by engine from the air intake (2) through (1) and (15). In the venturi portion (1), (16) is projected and lowered by its own weight to the direction to minimize the venturi area. **(Fig. 3. 124)**

In case when the amount of air inhaled by engine is small, the vacuum piston is generally lowered and forms primary venturi ; thus, maintains the flow speed in the venturi and improves fuel gasifying.

Accordingly with the increase of the air inhaling volume, the flow speed in the narrow venturi portion (1) becomes faster than that of the air intake (2) ; thus, the pressure of the venturi portion (1) becomes lower than that of the air intake (2) (becomes negative pressure), the difference in the pressure is transmitted as the pressure difference in between the upper and lower surfaces of the vacuum piston at portion (a) and portion (b), and the force to pull up the vacuum piston is actuated. The faster the flow speed of air intake and venturi portion (1) an (2), (to be more specific, more the difference of flow speeds of air intake and venturi portion) becomes, the negative pressure becomes larger ; thus the vacuum piston (16) is pulled up in a value suitable to the flow speed, and the venturi area is increased.

Further, the engine speed is raised at high speed, the vacuum piston (16) rises up to the top at least, and forms the secondary venturi sectional surface which is sufficient to maintain the maximum output. **(Fig. 3. 123)**

2. Fuel System

a. Flow system

Flow value of fuel which passed through the main jet is controlled at slow jet through pilot jet, and simultaneously, the fuel is mixed with air from the slow air jet at the air bleed of slow jet. The mixture jets from the pilot outlet (12) and bypass (13) near the periphery of the throttle valve. **(Fig. 3. 125)** On the pilot outlet (12), the pilot screw which regulates the mixture is provided. **(Fig. 3. 129)**

b. Main system

A part of the fuel which passed through the main jet is flowed into the slow system as explained above ; however, the other main portion of the fuel is mixed with air from the air jet within the air bleed of the needle jet holder, and jets out

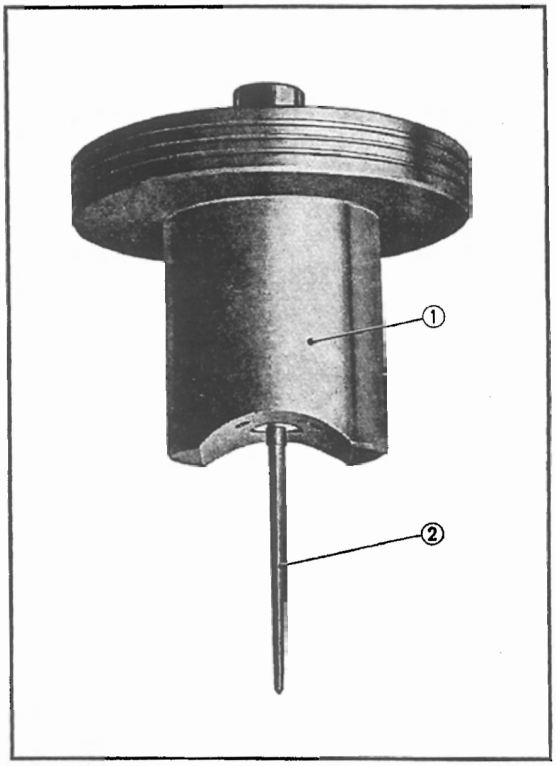

Fig. 3. 124 Vacuum Piston
① Vacuum piston
② Jet needle

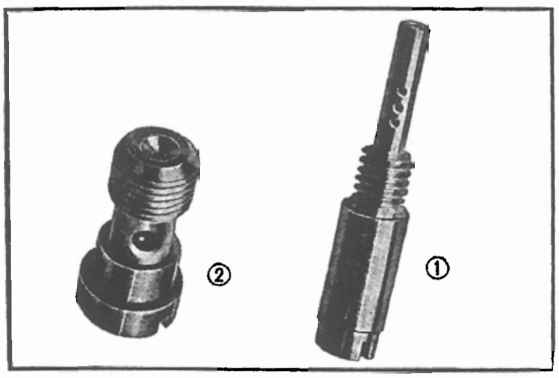

Fig. 3. 125 Pilot jet and slow jet
① Pilot jet
② Slow jet

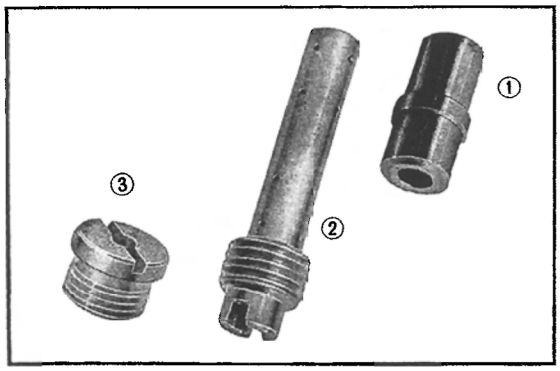

Fig. 3.126 Main jet, needle jet holder, and needle jet
① Main jet
② Needle jet holder
③ Needle jet

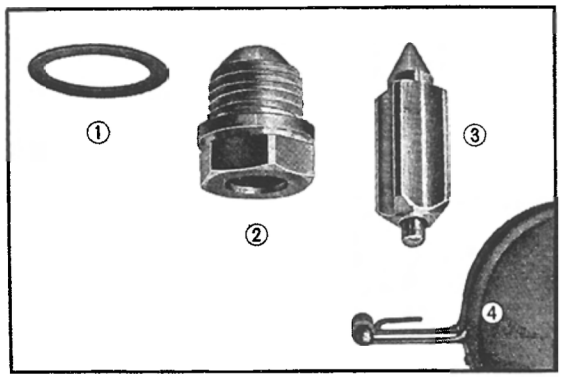

Fig. 3.127
① Gasket
② Valve seat
③ Valve
④ Float

from the needle jet. **(Fig. 3.126).** When the vacuum piston is fully closed (when it works as the primary venturi) or when the vacuum piston is half closed, the tapered portion of the jet needle installed on the vacuum piston (16) squeezes the fuel in order to prevent excessive fuel passage from the needle jet. **(Fig. 3.124)**

3. Float chamber

The carburetor must produce mixtures suitable for individual throttle opening and individual engine speed, and for this purpose, the fuel level must be maintained at a constant level. The float chamber performs this function.

The fuel coming from the fuel tank enters into the float chamber through passage from the fuel tank, float valve seat, and float valve. The float (11) is floated up accordingly with the fuel entry, float valve (6) is lifted by the float arm (7), and when the float valve (6) contacts the float valve seat (5), the fuel inside the float chamber (9) is used, and the fuel level is lowered, the float (11) is also lowered accordingly, the float valve (6) leaves the float valve seat (5) ; thus, the fuel enters into the float chamber (6). By repeating these operations, a constant fuel level can be maintained. The portion of float valve (6) which contacts float arm (7) is provided with spring to increase the durability against vibration **(Fig. 3.127).** Further, when the motorcycle is inclined or foreign matter sticks to the float valve seat, fuel overflows, and the fuel enters the cylinder ; thus, the overflow line (8) has been provided to maintain the specific fuel level. When the fuel level reaches a specific level, the overflow line permits the fuel to be discharged. **(Fig. 3.123)**

4. Choke

When starting engine in cold weather, it is necessary to provide a rich mixture, and for this purpose, choke valve (3) has been provided. When the choke lever (17) is raised, the choke (3) closes and air flow is limited ; thus, the fuel injected from the needle jet is inhaled by the engine as rich mixture as it is.

However, if the operation is improper, fuel is excessively fed to the engine, and the engine stops. For this reason, relief valve (18) is provided on the choke valve (3). The relief valve (18) opens and closes by the inhale nagative pressure, and makes the mixture suitable to a cold engine.

Thus, fully opening the choke valve (3), warm-up operation can be continued. **(Fig. 3. 128)**

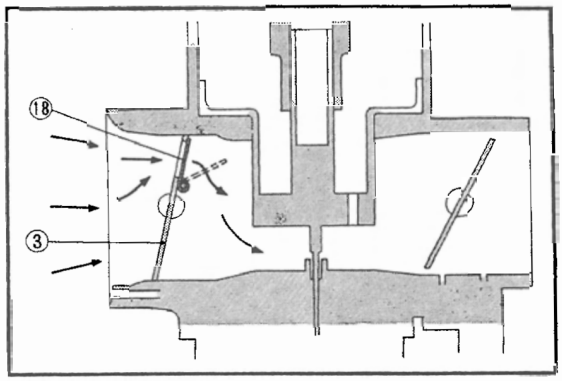

Fig. 3. 128 Relief valve

B. Carburetor Adjustment

1. Idling (Fig. 3. 131)

When idling, the throttle valve (15) is in an almost closed position, and the fuel is jetted from the pilot outlet (12). Accordingly, the mixture regulation is performed at the pilot screw. When the pilot screw is turned in, the mixture becomes rich, and becomes rich when the screw is turned out. The pilot screw should be set at a point $1\sim1^{1}/_{4}$ of a turn out from full close.

The engine rpm at idling point is between 1000~1200 rpm. **(Fig. 3. 129)**

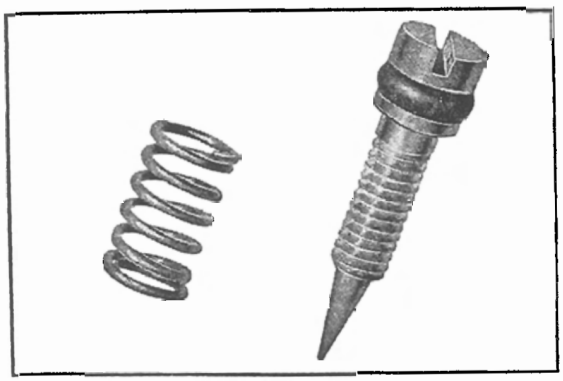

Fig. 3. 129 Pilot screw

2. Low and Cruising Speeds. (Fig. 3. 131-b)

The fuel is mainly jetted from the by pass (13) because the throttle valve (15) is opened in at a specific level. Accordingly, the mixture adjustment is set by the inside diameter of the slow jet.

3. Medium Speed (Fig. 3. 131-c)

The opening of the throttle valve (15) becomes larger, the vacuum piston (16) starts rising, and the fuel starts to jet from the needle jet ; however, the jetting value is requlated by the jet needle. Accordingly, the mixture adjustment is performed by the setting position of the jet needle to the vacuum piston (16).

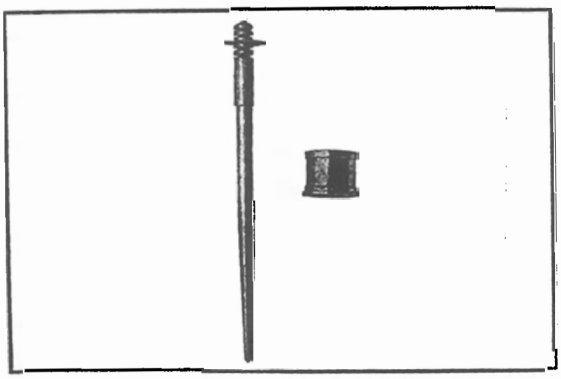

Fig. 3. 130 Jet needle

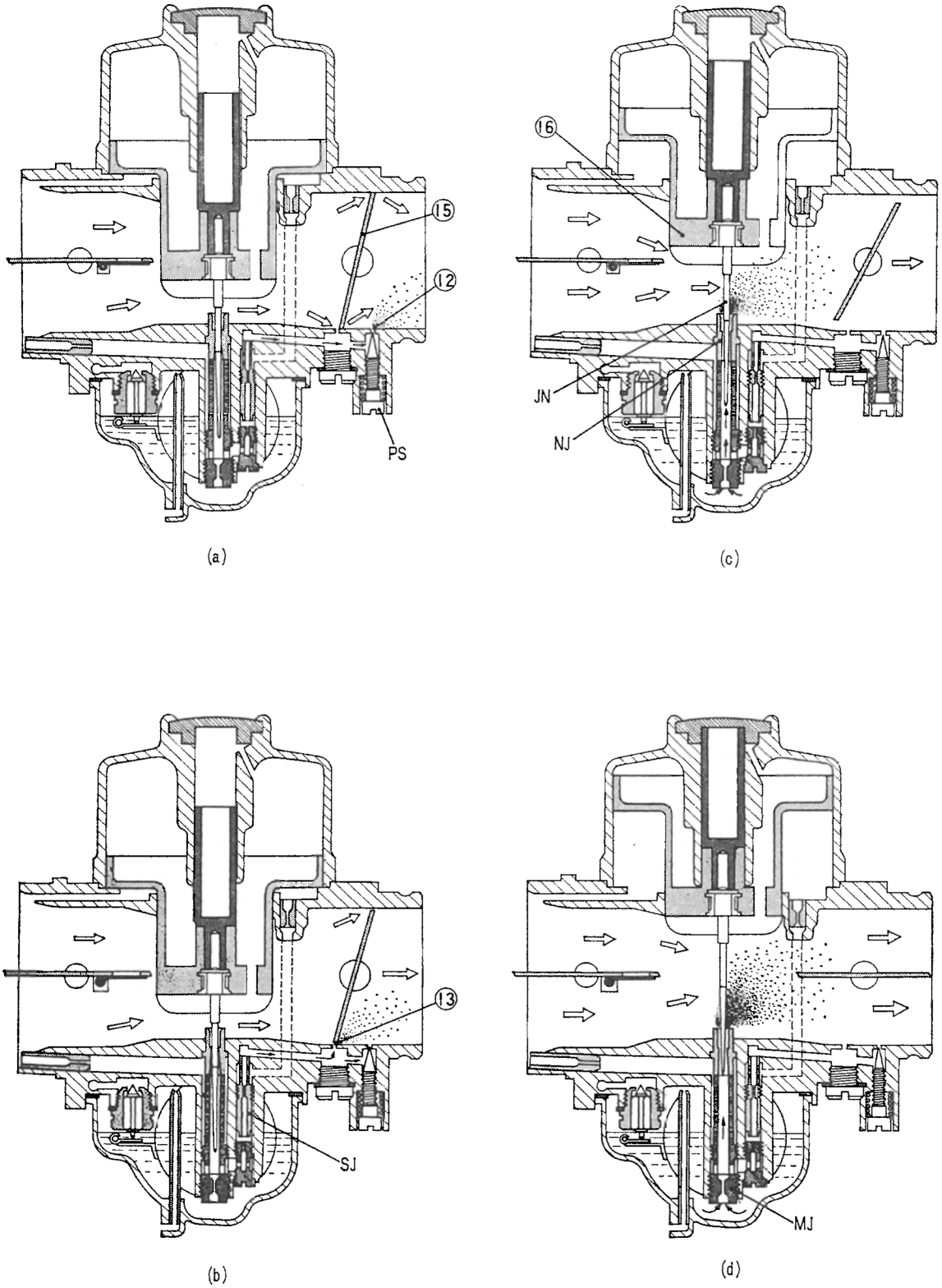

Fig. 3.131 Individual operating condition of the carburetor at the individual speeds a through d

4. High Speed. **(Fig. 3. 131-d)**

Both the throttle valve (15) and the vacuum piston (16) are fully opened, and accordingly, the jet needle's condition is that in which the jet needle is mostly lifted up ; thus, the fuel is jetted out from the needle jet. The mixture adjustment is set at the main jet.

When the motorcycle is delivered, the carburetor has been set in the best adjustment ; however, when readjusting, it should be noted that the individual jet operating ranges are mutually overlapped where they intersect. For the idling adjustment and throttle valve turning, refer to the Section on maintenance and adjustment.

5. Float Level Adjustment

It is difficult to measure the height of the fuel level itself ; thus, the fuel level is decided by the height of the float **(Fig. 3. 132)**. Placing the carburetor vertically as shown in **Fig. 3. 132** and lightly lifting and lowering the float (11) by finger, determine the position where the float valve (6) head contacts slightly the float arm (7) or clearance of about 0. 1 mm is left between them, and then measure "H" with a level gauge. If "H" is distorted from the rated value, adjust it by bending the float arm (7) carefully.

NOTE :

When checking the contact of the float valve (6) and the float arm (7), it must be done very carefully, because the spring is contained in the float valve (6) and if this valve head is pushed, the spring is gone into the inside of the float valve.

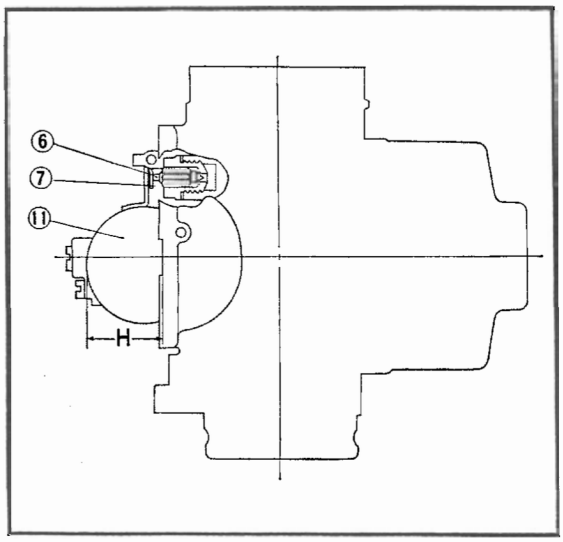

Fig. 3. 132 Fuel level adjustment

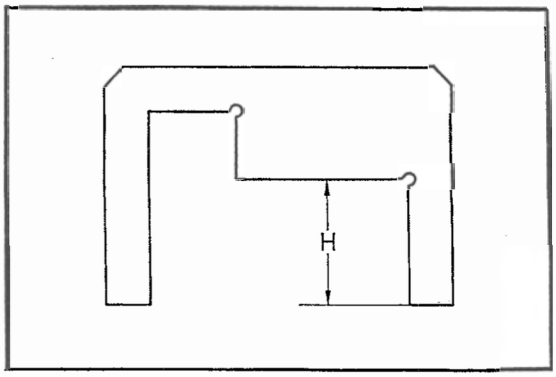

Fig. 3. 133 Fuel level gauge

Carburetor Setting Table

Setting mark	14 H	
MJ (Main jet)	#130	
AJ (Air jet)	#50	
Air breed	AB 1	0.6 mm × 4
	AB 2	0.6 mm × 4
	AB 3	0.6 mm × 4
	AB 4	
	AB 5	0.6 mm × 4
NJ (Needle jet)	2.6 mm	
JN (Jet needle)	2.275 mm—3°00′	
Throttle valve	$\alpha = 14°$	
	t = 0.9 mm	
PO (Pilot outlet)	1.0 mm	
BP (By-pass)	BP 1	1.0 mm
	BP 2	0.7 mm
	BP 3	0.7 mm
SJ (Slow jet)	#38	
	AB 1	0.6 mm × 2
	AB 2	〃
	AB 3	〃
PJ (Pilot jet)	#38	
SAJ (Slow air jet)	#90	
PS (Pilot screw)	1～$1\frac{1}{4}$ return	
VSC	2.0 mm	
Fuel level	20 mm	
Main bore diameter	Primary : 14 mm	
	Secondary : 32 mm	

4. FRAME

Common Tools Required for Disassembly and Reassembly

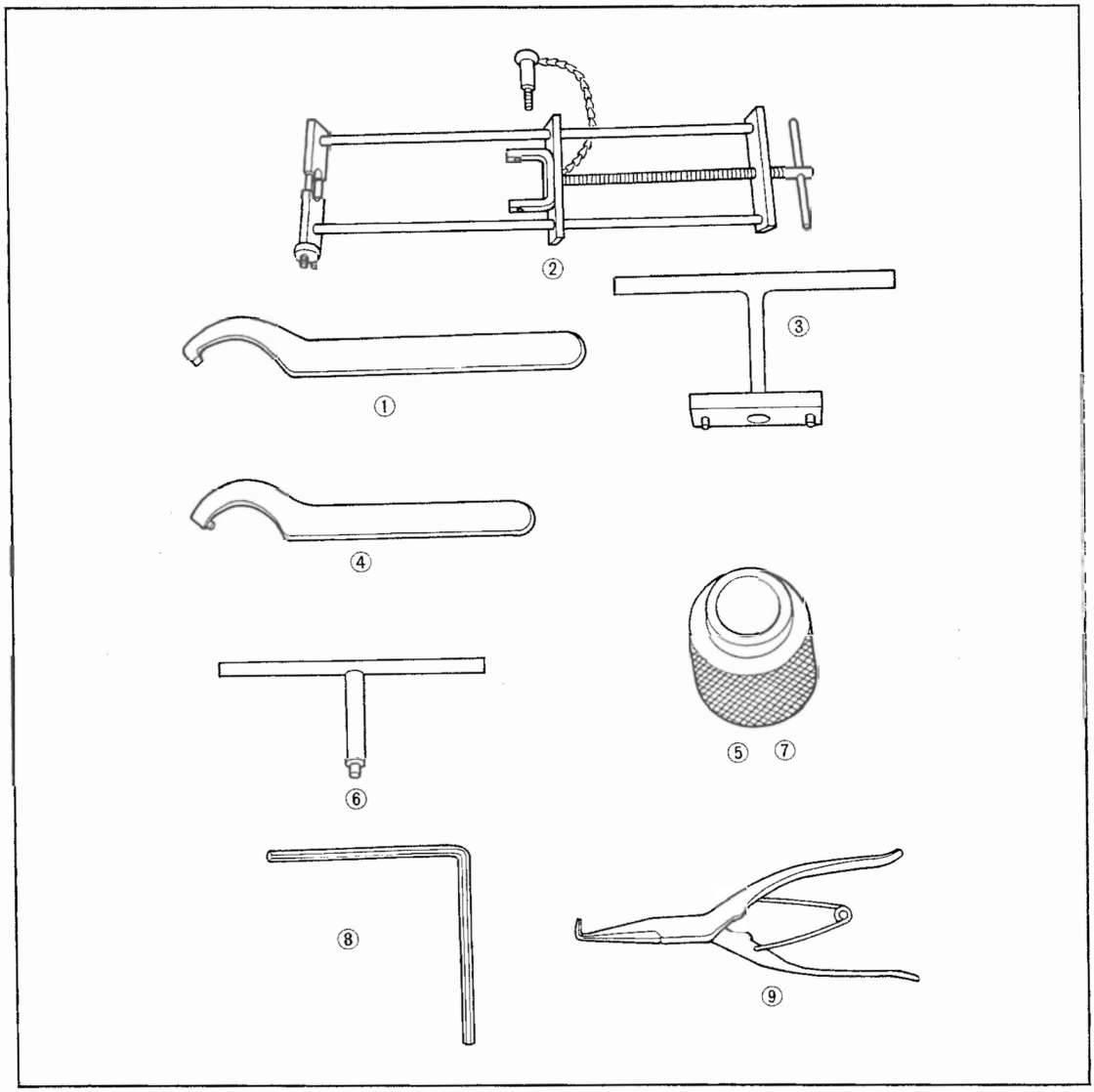

Ref. No.	Tool No.	DESCRIPTION
①	07902-2000000	Pin spanner, 48 mm
②	07959-3290000	Rear cushion disassembling & assembling tool
③	07910-2830000	Rear wheel bearing retainer wrench
④	07902-2500000	Main switch pin spanner
⑤	07947-2730100	Front oil seal driving guide
⑥	07917-3230000	Hollow set wrench 6 mm
⑦	07947-3290000	Front oil seal driving weight
⑧	07917-3000000	Hollow set wrench 8 mm
⑨	07914-3230000	Snap ring pliers

Special Tools Required for Disassembly and Reassembly

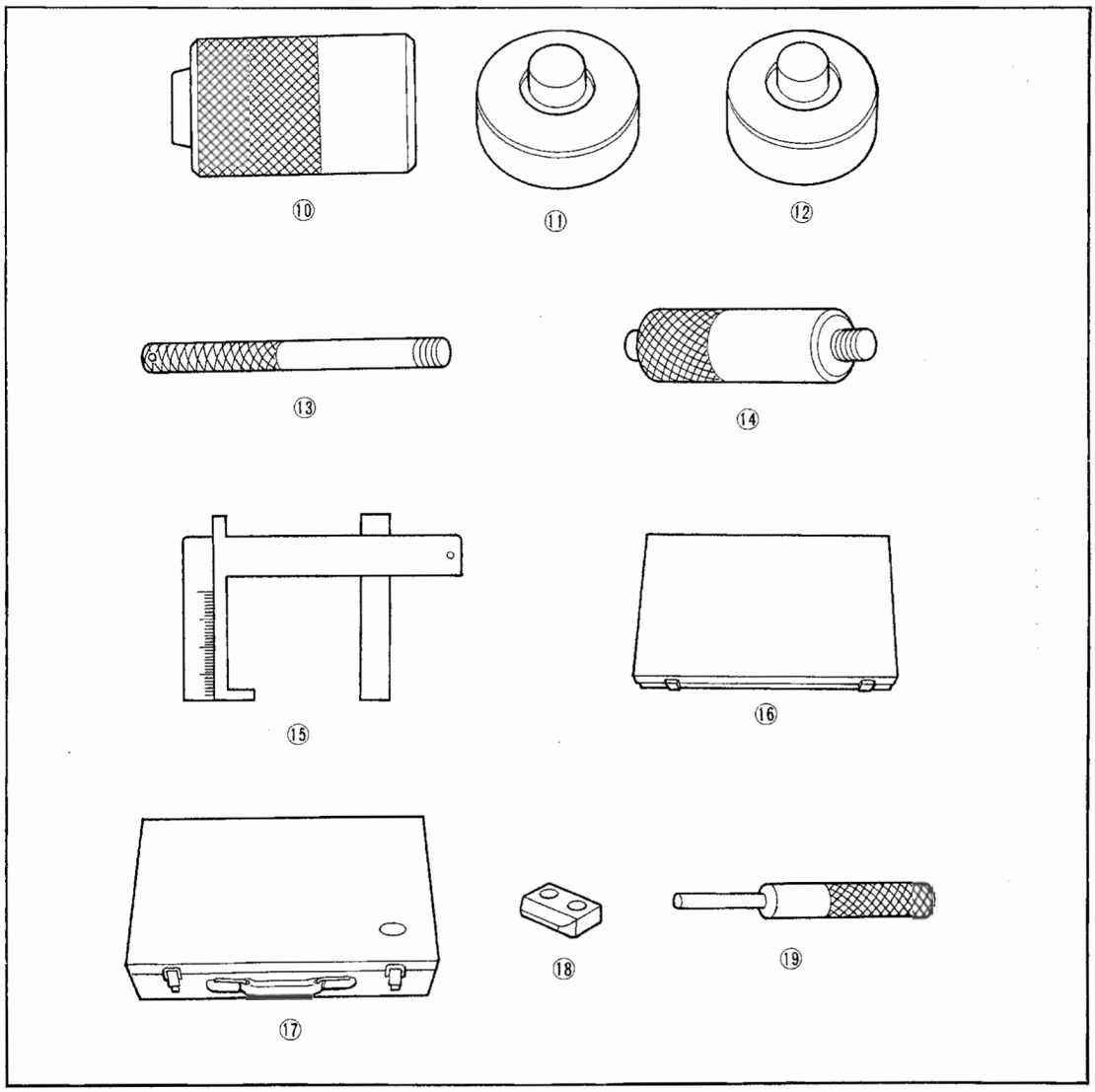

Ref. No.	Tool No.	DESCRIPTION
⑩	07945-3000000	Driver bearing
⑪	07946-3000100	Driver bearing front wheel
⑫	07946-3000200	Driver bearing rear wheel
⑬	07965-2860000	Tool disassembling
⑭	07949-3000000	Handle driver bearing
⑮	07401-0010000	Gauge, float level
⑯	07797-0510100	Cutter case
⑰	07797-2920300	Tool case
⑱	07968-2830500	Cam chain pincher blide
⑲	07968-2830300	Cam chain cutter pin

4. 1 Handlebar

A. Construction

The handlebars on the 450 models have been designed particularly to provide comfort and prevent riding fatigue caused from long distance traveling; high speed riding and operating on rough roads. CB 450 is a semi-raised type handlebar, whereas the CL 450 has the fully raised handlebar.

Handlebar is mounted on the fork top bridge plate and is fixed with two handle pipe holder clamps. **(Fig. 4. 1)**

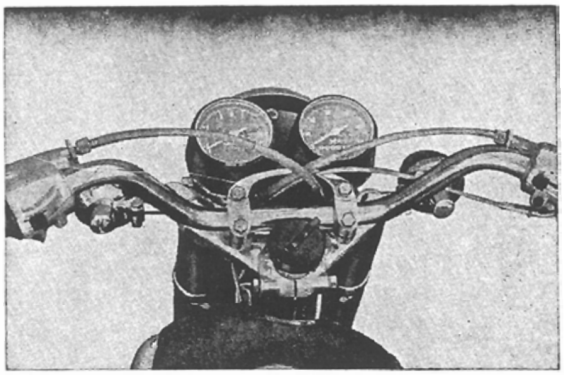

Fig. 4. 1 Handle bar (CB450)

B. Disassembly

1. Disconnect the front brake cable at the lower end by loosening the front brake adjusting bolt nut, move the brake arm toward the braking position to providing slack to the cable, and then disconnect the cable from the brake arm. **(Fig. 4. 2** and **Fig. 4. 3)**

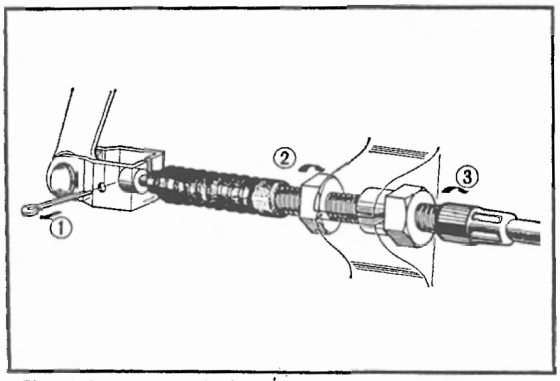

Fig. 4. 2 Removing brake cable

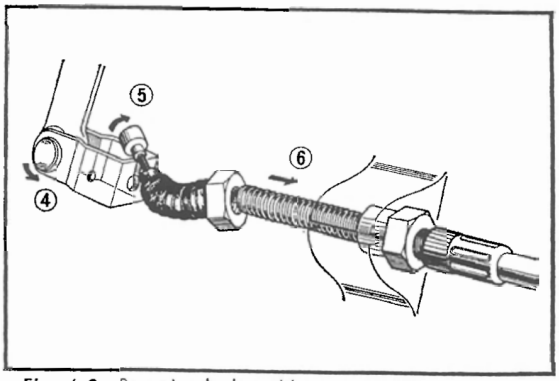

Fig. 4. 3 Removing brake cable

2. Remove the brake and clutch cables from the handle bar by turning the slotted ring adjusting nut so that the slots in the holder and the ring are aligned. Removed inner cable and slide the cable end off of the handle lever. **(Fig. 4. 4)**

NOTE:

When disconnecting the clutch cable at the lower end, remove the gear shift pedal, drive chain cover, and then remove the cable end from clutch cable thread.

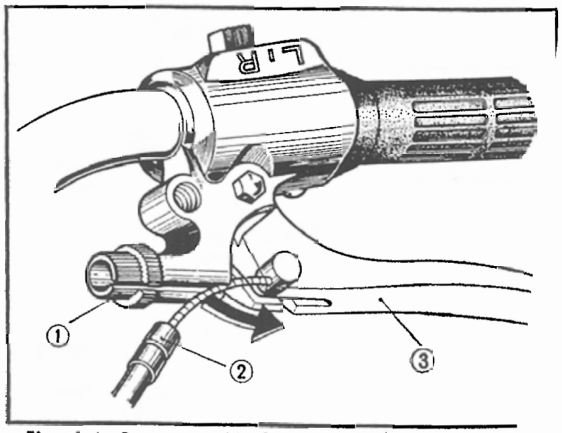

Fig. 4. 4 Removing cable from the handle
① Adjusting bolt ② Clutch cable ③ Clutch le

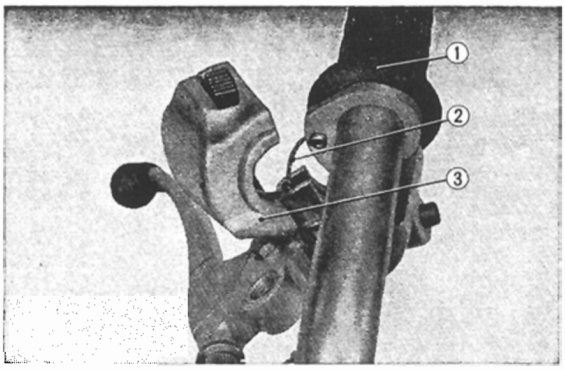

Fig. 4.5 Removing the throttle cable
① Throttle grip
② Throttle cable
③ Starter switch assembly

3. To remove throttle cable from the handle lever, unscrew the setting screw on the starter switch assembly and separate the two halves of the starter switch. The starter cable will be exposed and can be removed from throttle grip pipe. **(Fig. 4. 5)**

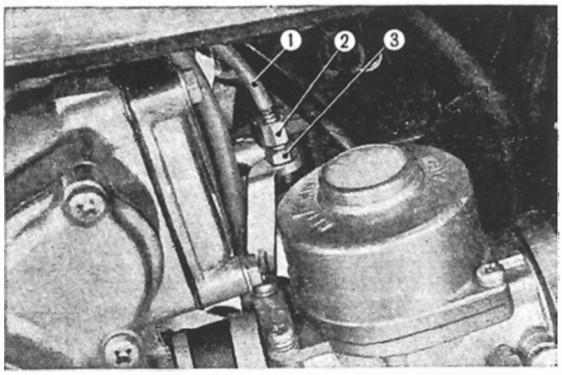

Fig. 4.6 Removing the throttle cable
① Throttle cable
② Throttle cable adjuster
③ Lock nut

4. Disconnect the throttle cable at the lower end by loosening the cable setting nut at the cable support arm on the carburetor and then disconnecting the throttle cable from the carburetor. **(Fig. 4. 6)**

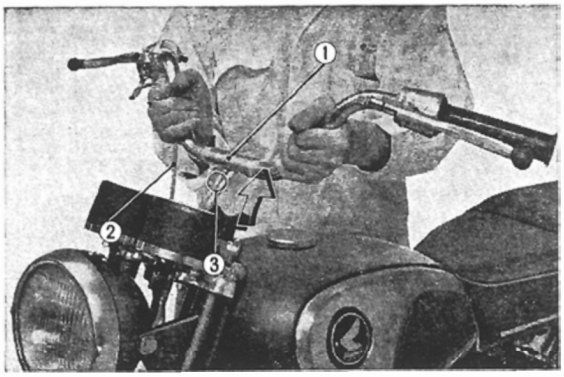

Fig. 4.7 Removing the handlebar
① Handleber cable
② Throttle cable
③ Electrical leads

5. The electrical leads for the horn, starting motor switch and the light dimmer switch can be disconnect by uncoupling the cable junctions from the wire harness located within headlight case.
6. Remove handle bar by unscrewing the four bolts from the handle pipe holder clamps. **(Fig. 4. 7)**

C. Inspection

1. Inspect the throttle, clutch, and front brake cable for damages to the housing and inner cable, also check to see that the cable is operating smoothly. Apply grease before reassembly.
2. Check the operation of the throttle grip ; make sure that the action of the grip is smooth through the entire range.
3. Inspect the hand lever operation for lightness.
4. Inspect the handle pipe for twist, bends or other dameges.
5. Inspect the switches on the handle for proper operation and also the lead wires for breaks and frayed covering.

D. Reassembly

1. Route the electrical leads from the handle bar through the center hole in the top bridge and mount the handle on the top bridge. Fix in place with the handbar holder and lock with the 8 mm bolts.
2. Connect the throttle cable to the throttle grip and adjust the play with the nut ②. **(Fig. 4. 8)**
3. Connect the clutch cable to the left hand lever and the front brake cable to the right hand lever. The adjustment of the clutch cable is made at the crankcase, whereas, the adjustment for the front brake is made with nut "a" and "b" at the lower end of the front brake cable. **(Fig. 4. 9)**
4. Joint the electrical leads from the handle bar at the headlight case and then mount the headlight unit and the headlight rim. **(Fig. 4. 10)**

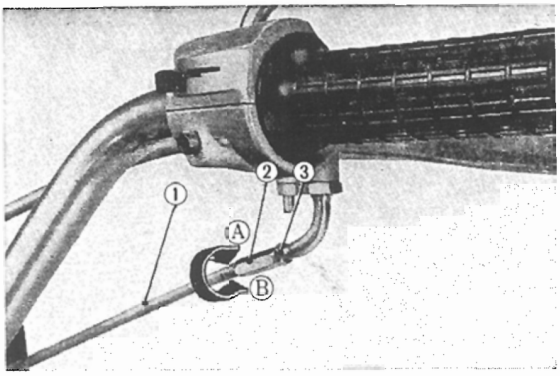

Fig. 4.8 Throttle cable play adjustment
① Throttle cable
② Throttle cable adjuster
③ Lock nut

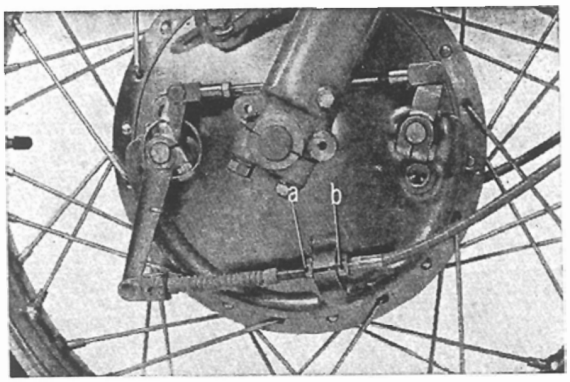

Fig. 4.9 Front brake adjustment

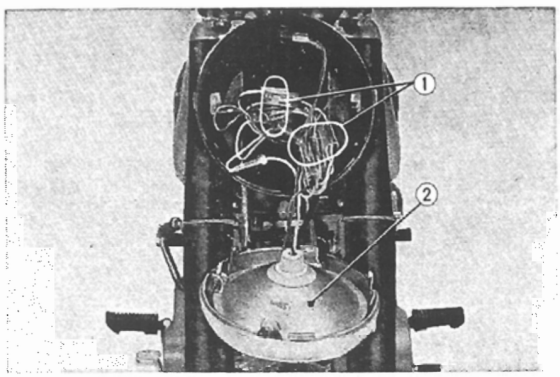

Fig. 4.10 Joint the electrical leads
① Leads conectors
② Head light

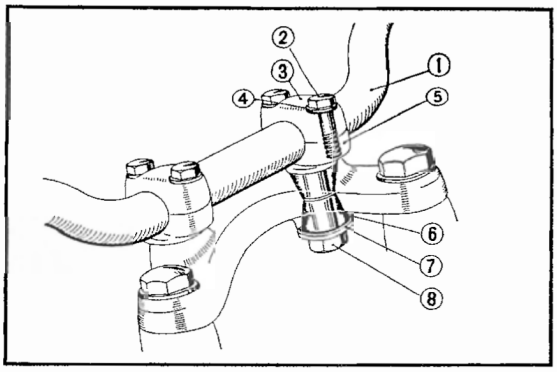

Fig. 4.11 Handlebar cushion rubber
① Handle bar
② 8 mm bolt
③ Handle bar pipe upper holder
④ 8 mm flat washer
⑤ Handle bar pipe under holder
⑥ Handle cushion rubber
⑦ Washer
⑧ 10 mm nut

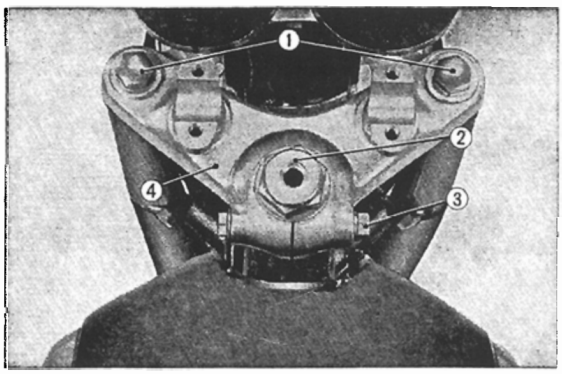

Fig. 4.12 Removing the fork top bridge
① Front fork bolt
② Steering stem nut
③ 8 mm bolt
④ Fork top bridge

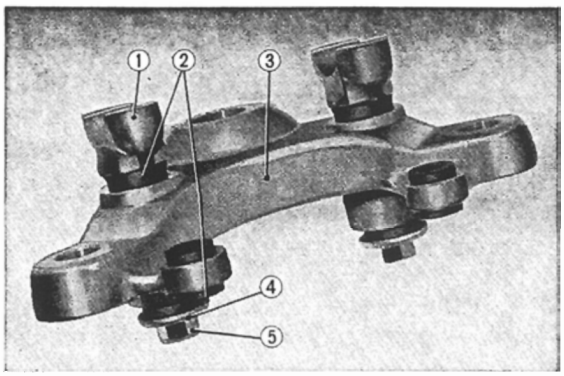

Fig. 4.13 Component parts of fork top bridge
① Under handle bar holder
② Handle bar cushion rubber
③ Fork top bridge
④ Front fork washer
⑤ 10 mm hex nut

4.2 Fork Top Bridge

A. Construction

The top bridge is mounted on the front forks with two front fork bolts, the top bridge in turn is mounted to the steering stem with the steering stem nut. The handle bar is mounted to the top bridge through the handle bar cushion rubber to prevent the transmission of vibration from the front fork to the rider. **(Fig. 4.11)**

B. Disassembly

1. Remove the handle bar in accordance with Section 4.1.
2. Extract the 6 mm lock pin and remove steering damper by pulling in the upward direction.
3. Disconnect the speedometer and the tachometer cables from the respective meters (the meters may be removed from the fork top bridge by unscrewing the 6 mm nuts).
4. Separate the fork top bridge from the fork by unscrewing the front fork bolts, loosening the the steering stem nut and removing the 8 mm lock nut. **(Fig. 4.12)**
5. Unscrew the 10 mm hex nut and remove the front fork washer, handle bar cushion rubbers and the handle bar pipe under holders from the front top bridge. **(Fig. 4.13)**

NOTE :

If the handle bar pipe under holders are to be removed, it is recommended that the 10 mm hex nut on the pipe holders be first removed before removing the handle bar. This is to prevent pipe holder from the turning. **(Fig. 4. 14)**

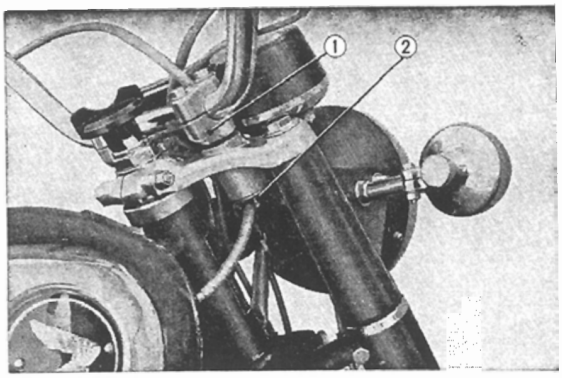

Fig. 4. 14 Removing handle bar under holder
① Handle bar under holder
② 10 mm nut

C. Inspection

1. Inspect the fork top bridge for cracks or other damages.
2. Inspect the handle bar cushion rubber for damages and wear.

D. Reassembly

1. Mount the fork top bridge on the front fork, install the front fork bolts, steering stem nut and tighten the 8 mm locking bolt.
2. Assemble the handle bar according to Section 4. 1D above.
3. After completing the installation, check to make sure that the headlight and the turn signal light are operating properly.

4. 3 Front Cushion

A. Construction

The front fork must not only absorb the vertical shock caused from the road conditions but must also be able to sustain the horizontally applied force resulting from the steering function. The suspension and damping components directly influence the steering characteristics and stability of the motorcycle. The bottom case is made of aluminum to reduce the weight of the front wheel assembly. **(Fig. 4. 15)**

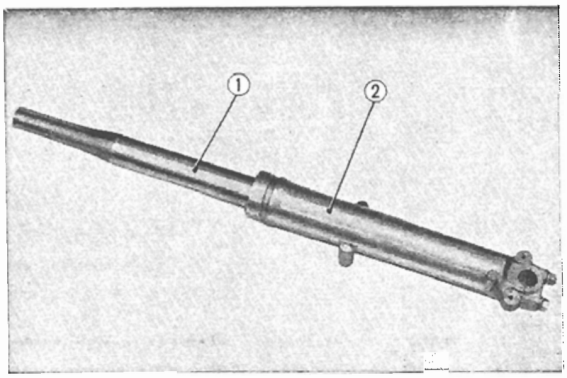

Fig. 4. 15 Front fork assembly
① Front fork pipe
② Front fork bottom case

1. Operation

The front cushion of the CB 450, CL 450 is a telescoping damper type with the externally assembled spring accepting the compressive load and the rebound extension being dampened by the hydraulic damper. **(Fig. 4. 16)**

Hydraulic damper functions in the following manner. **(Fig. 4. 16 C)**

(1) When the frame load is recieved, the fork pipe ① attached to the piston ④ drops and compresses the oil in chamber "A".

(2) The compressed oil in chamber "A" passes to chamber "B" through the orifices "a" located around the fork pipe and lifts the valve ⑤.

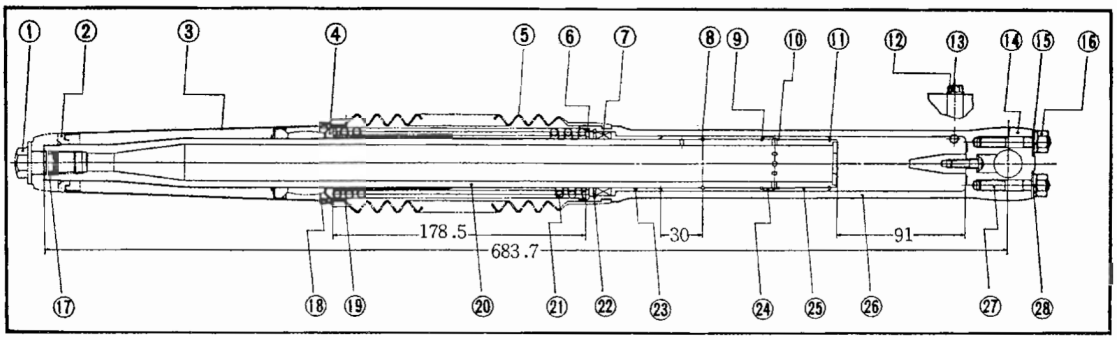

① Front fork bolt
② Front cover upper cushion
③ R. L front fork cover
④ Spring seat
⑤ Front fork boot
⑥ Spring seat
⑦ Oil seal
⑧ Fork pipe stopper ring
⑨ Fork valve stopper ring
⑩ Piston stopper ring
⑪ Fork piston snap ring
⑫ Drain cock packing
⑬ 6×10 hex bolt
⑭ Front axle holder
⑮ 8mm flat washer
⑯ 8mm hex nut
⑰ 12mm O ring
⑱ Front fork rib packing
⑲ Spring seat cap
⑳ Front fork pipe
㉑ Front cushion spring
㉒ 47mm cir-clip
㉓ Front fork pipe guide
㉔ Front damper valve
㉕ Front fork piston
㉖ R. L front fork bottom case
㉗ 8×49 stud bolt
㉘ 8mm spring washer

Compression stroke 91 mm (3.6 in)
Rebound stroke 30 mm (1.18 in)

Fig. 4.16 a (CL 450)

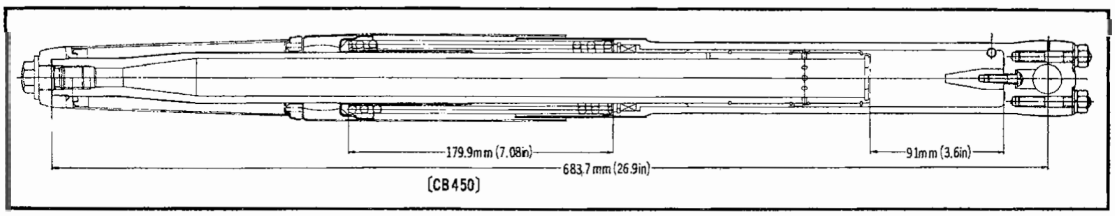

Fig. 4.16 b (CB 450)

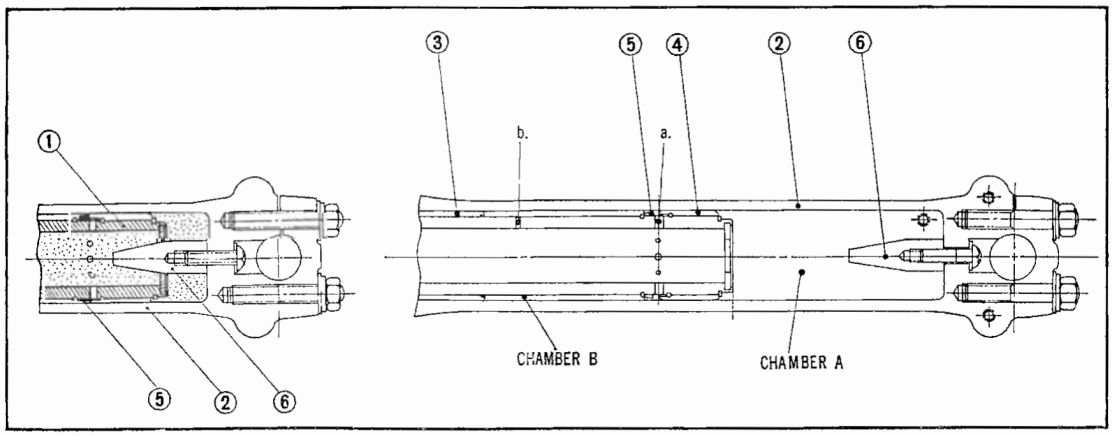

① Front fork pipe
② Front fork bottom case
③ Front fork pipe guide
④ Front fork piston
⑤ Front damper valve
⑥ Lock piece

Fig. 4.16 c

(3) Next, the reaction from the spring causes the fork pipe ① to rise and compress the oil within chamber "B" and then passes through the orifices "b" which is designed to provide dampening and flows back to chamber "A". The viscosity of the oil produces the dampening.

When a load exceeds the capacity of the spring, the fork pipe approaches the bottom of the bottom case ②. The oil becomes sealed between the tapered lock piece ⑥ and the fork pipe to hydraulically absorb the shock.

As the orifice "b" enters the guide ③, the oil becomes sealed within chamber "B" and serves as an oil lock stopper on the extension side.

- Damping force during the measured 50 mm (2 in) : 47～57 kg/0.5 m/s (103.6～125.7 lb/196.85 in/s).
- Oil capacity : 285～295 cc (17.4～18.0 cu. in.)

Cushion rubber is inserted under the head of the front fork upper cover to absorb vibration of the headlight, reducing the shock to the headlight and speedometer, and increasing their reliability.

B. Disassembly

1. Separate the front wheel from the motorcycle in accordance with Section 4.13.
2. Remove the 6 mm fender stay mounting bolt from both sides, 8 mm fender mounting bolt and the front brake stopper arm bolt. The fender can be separated from the fork. **(Fig. 4.17)**
3. Unscrew the headlight case mounting bolts attaching the headlight assembly to the front fork.

   Remove the 10 mm bolt from the back side of the lower bottom bridge and slide the cushion assembly out from the bottom. **(Fig. 2.18)**

NOTE :

The front cushion removal can be facilitated by spreading the mounting ring of the bottom bridge by driving a wedge into the slot on the mounting ring.

4. Drain the oil in the cushion by removing the drain plug at the bottom or inverting the cushion and draining the oil out of the top mounting bolt hole before separating the upper and lower cylinder.
5. Remove the front boot (CB 450 : front fork under cover), front cushion spring and then remove the 47 mm internal circlip using the snap ring plier. Pull out and disassemble the front fork bottom pipe and the front fork pipe assembly. **(Fig. 4.19)**

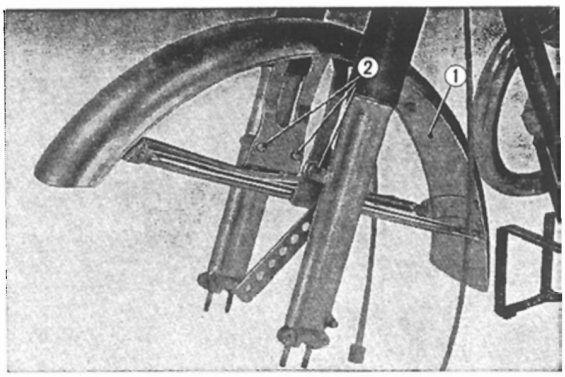

Fig. 4.17 Removing the front fender
① Front fender
② 6 mm hex bolts

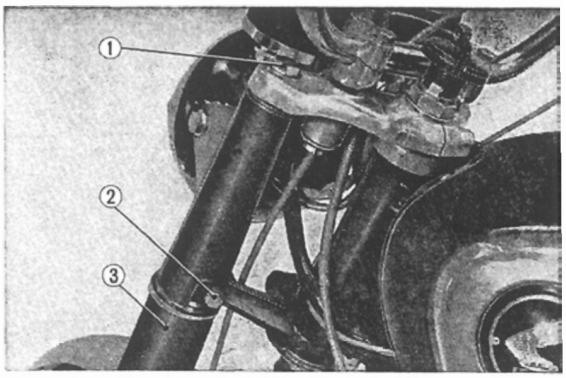

Fig. 4.18 Removing the front fork assembly
① Front fork bolt
② 10 mm bolt
③ Front cushion assembly

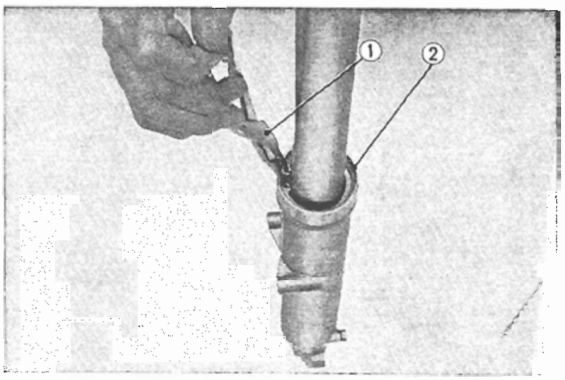

Fig. 4.19 Removing the 47 mm circlip
① Pliers (close)
② 47 mm intenal circlip

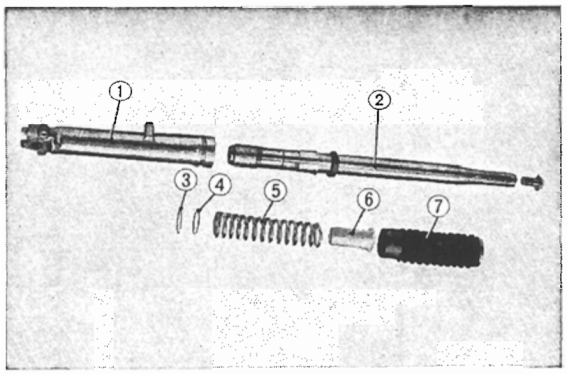

Fig. 4.20 Component parts of fornt fork
① Fork bottom case
② Fork pipe
③ 47 mm internal circlip
④ Spring seat
⑤ Front cushion spring
⑥ Spring guide
⑦ Front fork boot

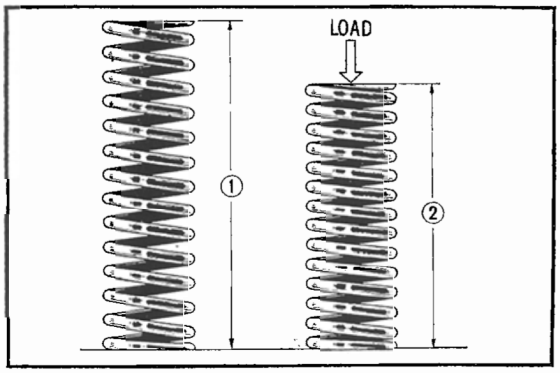

Fig. 4.21 Front cushion spring measurement
① Free length
② Loaded length

6. Disassemble the front fork pipe assembly by removing the fork piston snap ring, front fork piston, piston stopper ring, front damper valve, front valve stopper ring, fork pipe stopper ring, and front fork pipe guide, in that order. **(Fig. 4. 20)**

C. Inspection

1. Front cushion spring **(Fig. 4. 21)**

Item	Standard value	Serviceable limit
Spring load	178.5 mm/26.1～28.9 kg (7.03 in/57.5～63.7 lb)	——
Free length	211.9 mm (8.35 in)	Replace if under 205 mm (8.06 in)
Tilt	Within 1.5°	——

2. Front fork piston

Item	Standard value	Serviceable limit
Outside diameter	39.425～39.45 mm (1.552～1.553 in)	Replace when less than 39.4 mm (1.551 in)
Inside diameter	Within 0.008 mm (0.0003 in)	Replace when more than 0.015 mm (0.0006 in)
Taper	Within 0.015 mm (0.0059 in)	Replace when more than 0.03 mm (0.0012 in)

3. Front fork pipe

Item	Standard value	Serviceable limit
Outside diameter	34.90～34.915 mm (1.551～1.552 in)	
Elliptic wear	0.015 mm (0.00059 in)	Replace when more than 0.03 mm (0.0012 in)
Deflection	Within 0.04 mm (0.0016 in)	Replace when more than 0.1 mm (0.0039 in)

4. Front fork pipe guide

Item	Standard value	Serviceable limit
Full length	35.0 mm (1.378 in)	
Inside diameter	35.0～35.039 mm (1.378～1.380 in)	
Outside diameter	39.466～39.539 mm (1.551～1.556 in)	

5. Front fork bottom case

Item	Standard value	Serviceable limit
Inside diameter	39.5～39.539 mm (1.555～1.557 in)	

NOTE:

Particularly inspect the bottom surface of the damper valve and the upper surface of the piston for any scratches.

D. Reassembly

1. Clean all the part thoroughly before assembling.
2. Assemble the individual components into the front fork pipe assembly. **(Fig. 4.22)**

NOTE:

After completing the assembly of the front damper valve into the front fork pipe, make sure that the damper valve is operating smoothly.

3. Insert the front fork bottom pipe into the front pipe assembly using the following special tools and exercising care not to damage the oil seal:

   Front fork oil seal driving guide
   Tool No. 07054-29201

   Front fork oil seal driving weight
   Tool No. 07057-29201

4. Assemble the front cushion spring and the boot (CB 450 : front fork under cover).
5. Install the front cushion assembly on the steering stem. Fill each cushion with **285~295cc** (17.4~18.0 cu-in) of hydraulic fluid through from the front fork bolt hole and install the front fork bolt upon completing the filling. Lock the cushion at the bottom bridge by tightening the 10mm bolt. **(Fig. 4.23)**
6. Install the front fender and the front wheel.
7. Upon completion of the front cushion assembly, check for proper operation and assure that there is no binding.

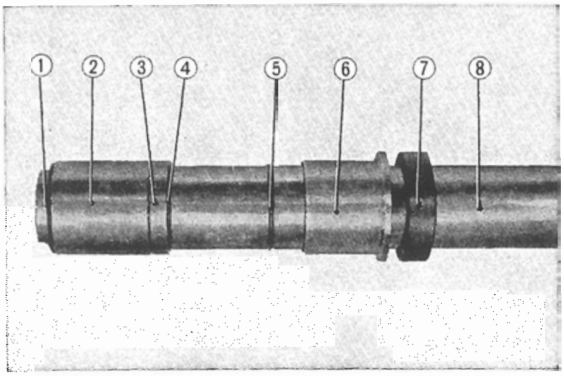

Fig. 4.22 Assembling component parts
① Fork piston snap ring
② Front fork piston
③ Front damper valve
④ Fork valve stopper ring
⑤ Fork pipe stopper ring
⑥ Front fork pipe guide
⑦ Oil seal
⑧ Front fork pipe

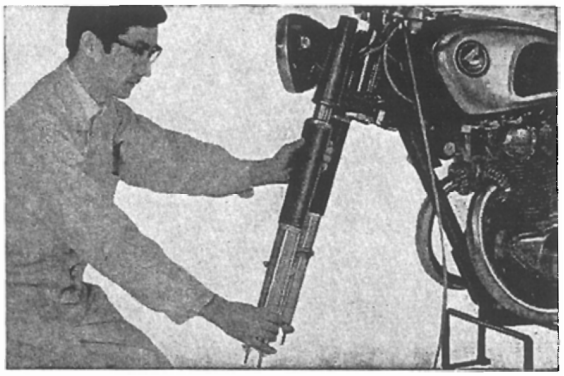

Fig. 4.23 Installing the front fork into the steering

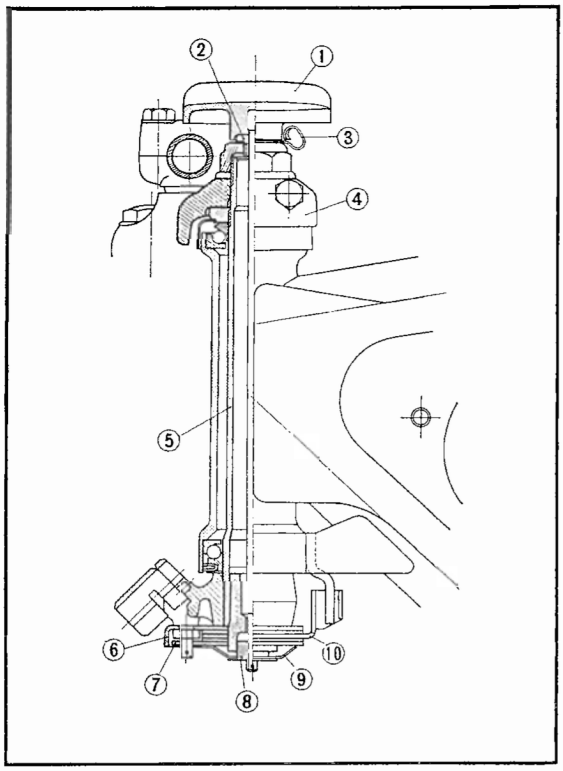

Fig. 4.24 Sectional view of steering stem
① Steering damper knob
② Damper lock spring setting bolt
③ Steering damper lock spring
④ Front fork top bridge
⑤ Steering stem
⑥ Steering damper plate A
⑦ Steering damper plate B
⑨ Steering damper spring
⑩ Steering damper friction disc

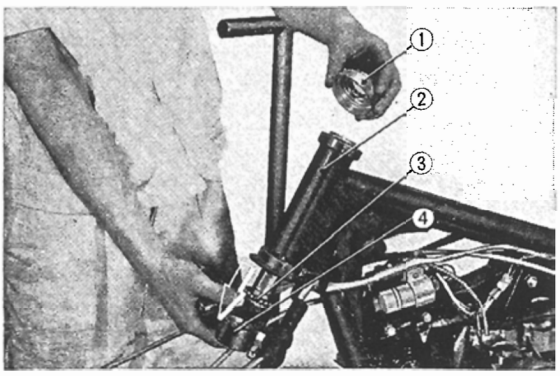

Fig. 4.25 Removing the steering stem
① Steering head top thread
② Head pipe
③ # 8 Steel balls
④ Steering stem

4.4 Steering Stem

A. Construction

The steering stem is mounted to the front cushions by bolt through the fork top bridge. The steering stem is mounted to the frame head pipe and pivots on the upper and lower sets of the ball bearings. Steering stem is equipped with steering damper to provide adjustment of the steering stem. The steering stem can be adjusted for any type of riding or road conditions. If the steering damper knob is turned clockwise, force supply to the friction disc causes the steering to become tight. If the steering damper knob is turned counter clockwise, a tension of the damper spring is relieved, providing less friction between damper plates. The handle bar lock consists of a lock unit and support unit combined with the steering stem. **(Fig. 4. 24)**

B. Disassembly

1. Separate the handle bar in accordance with Section 4. 1 B.
2. Remove the front wheel in accordance with Section 4. 1 B.
3. Disassemble front cushion in accordance with Section 4. 3 B.
4. Remove the top bridge plate in accordance with Section 4. 2 B.
5. With the turn signal lamps remaining mounted on the headlight case, remove the upper cover and lower cover of other fork.
6. Remove the steering stem top thread and withdraw steering stem out of the head pipe, being careful not to drop the steel balls. **(Fig. 4. 25)**

C. Inspection

1. Inspect steel balls for cracks, wear and other damages.
2. Inspect the cone and ball races of both the top and bottom for any wear or damages.
3. Inspect the steering head dust seal for wear and damages.
4. Inspect the top end of steering stem for damaged threads.
5. Check the steering damper fixing disc for wear.
6. Inspect steering handle lock for damages or defects.

D. Reassembly

1. Mount the steering handle lock on the steering stem.
2. Mix the 1/4'' steel balls (37) in grease, lay into the lower and upper ball races, and carefully insert the stem into the head pipe, exercising care not to drop the balls. Tighten the steering head top thread. **(Fig. 4. 26)**

NOTE :

Special attention is required to tighten the top thread. It must be tightened in conjunction with the steering stem nut and the front fork bolt. If the stem nut is properly tightened, the steering assembly will turn to the locks under its own weight assisted only by a slight initial force. Further there should not be any looseness of the stem in either the vertical or the horizontal directions. **(Fig. 4. 27)**

3. Assemble the top bridge front cushion and front wheel.
4. Install the steering handle and damper knob.
5. Adjust the play of the clutch, brake and throttle cable.

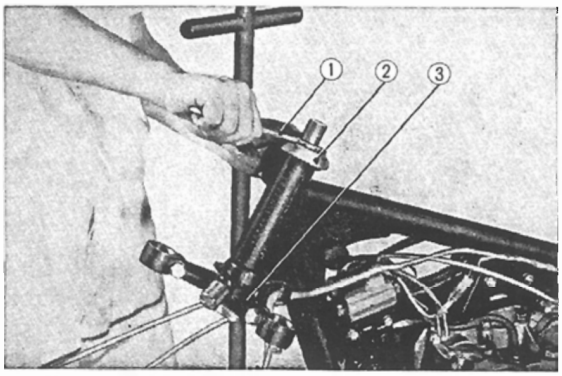

Fig. 4. 26 Ressembling the steering stem
① 48 mm pin spanner
② Steering head top thread
③ Steering stem

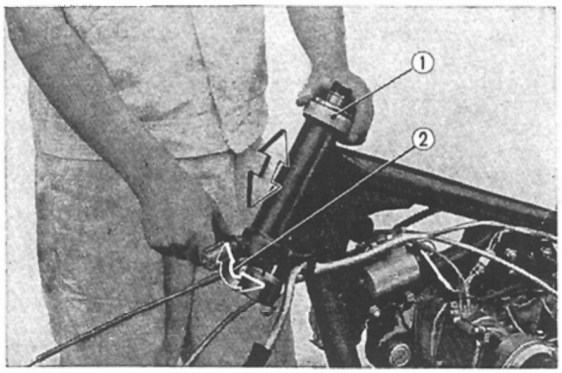

Fig. 4. 27 Check of stem operation
① Steering head top thread
② Steering stem

4. 5 Fuel Tank

A. Construction

The fuel tank is placed on the frame body directly above the engine and is installed on the frame body through the fuel tank cushions. The tank side covers fitted with the knee grip rubber and tank mark, are installed on the fuel tank. **(Fig. 4. 28)**

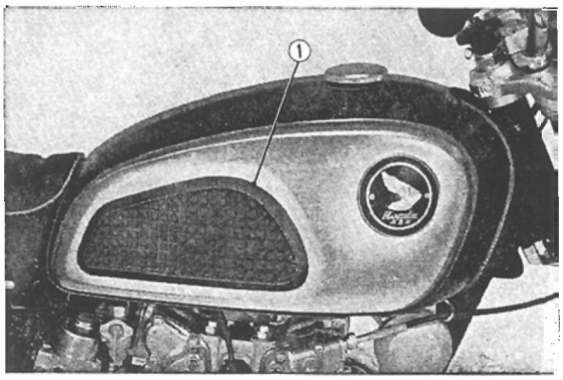

Fig. 4. 28
① Fuel tatk

B. Disassembly

1. Unlock the seat latch located on the left front of the seat side.
2. Position the fuel cock lever to STOP position and remove the fuel tube from the fuel cock.
3. Remove one end of the fuel level tube and apply a clip on the tube to close off the fuel tube. Install a rubber cap or a plug on the tank fitting to prevent the fuel from draining. Detach fuel tank from the fuel tank rear cushion and carefully remove to the rear side.
4. Tank side cover can be separated by removing the emblem and side cover mounting bolt, and then sliding the side cover toward the front.

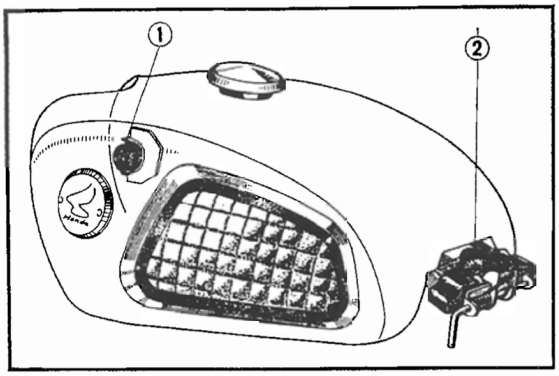

Fig. 4.29 Fuel tank mounting cushions
① Fuel tank front cushion
② Fuel tank rear cushion

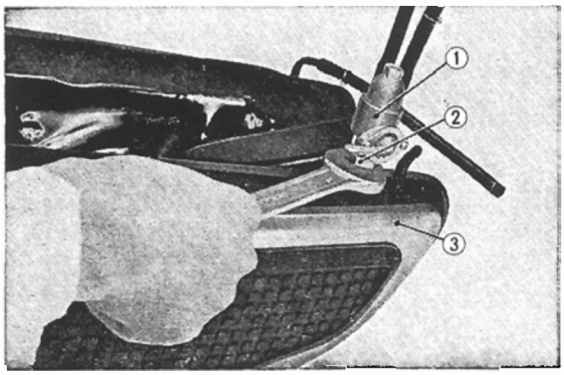

Fig. 4.30 Removing the fuel cock
① Fuel cock assembly
② Joint nut
③ Fuel tank

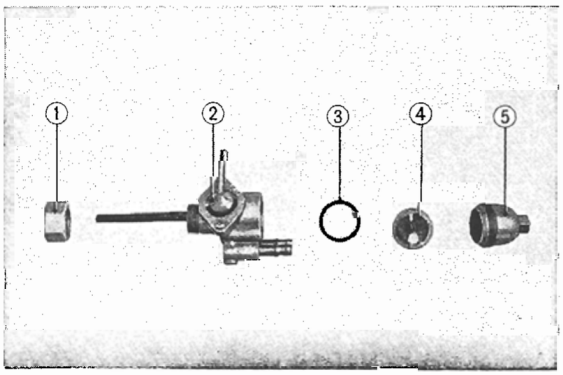

Fig. 4.31 Component parts of fuel strainer
① Joint nut ② Fuel cock body
③ Cock packing ④ Screen
⑤ Fuel strainer cup

5. The fuel cock assembly can be removed from the tank by loosening the joint nut and unscrewing the fuel tank assembly. **(Fig. 4. 30)**

C. Inspection

1. Inspect the fuel tank for leaks.

NOTE :

Normally an air pressure test is performed by immersing the tank in water. However, exercise precaution since excessive pressure will cause rupture at the tank seam.

2. Inspect for clogging of the filler cap vent hole.
3. Inspect the front and rear cushion rubbers for deterioration, wear or other damages.
4. Inspect for damage to the valve cock O ring, and the filler cap gasket.
5. Inspect the fuel line for defects.

D. Reassembly

1. Install the fuel cock assembly on the tank.
2. Install the side covers.

NOTE :

The side cover for CB 450 is hooked to the rear of tank and the forward end is attached to the tank by a bolt ; make sure that the bolt is of the proper length (6 × 8 mm hex head bolt) to prevent puncturing the tank. **(Fig. 4.32)**

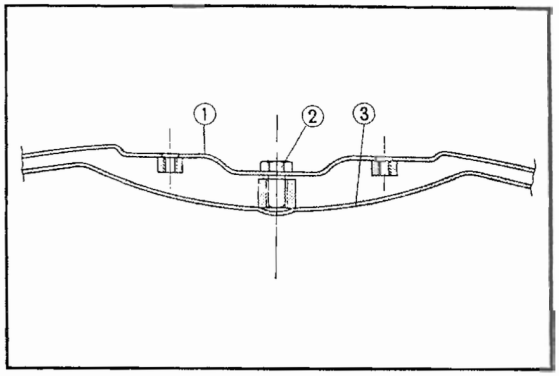

Fig. 4.32 Sectional view of tank side cover
① Side cover ② 6 × 8 mm hex bolt
③ Full tank

3. Fit the front and rear rubber cushions to the frame body. The front rubber cushion should be inserted by pushing the fuel tank from the rear. Install the fuel tank rear bracket on the rear cushion. **(Fig. 4.33)**

NOTE :

When installing the tank, particular attention should be given to the condition of the leads and their routing.

4. Install the two fuel lines using fuel line clips, also connect the fuel level tube to the tank valve.
5. Install the seat and secure with the seat latch.

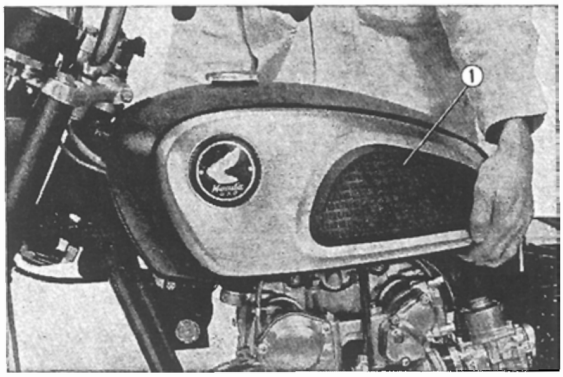

Fig. 4.33 Installing the fuel tank
① Fuel tank

4.6 Frame Body

A. Construction

The frame body is the main structural member around which the motorcycle is assembled. It mounts the engine and is supported on the front and rear wheels. The frame is made sturdy to support the weight of the engine, rider and carrier load ; in addition, it must be substantial to receive the dynamic reaction imposed by the road and riding conditions while carrying a full load.

The frame must be rigid to provide good steering characteristic and at the same time lightness and flexibility are desirable for ease of handling and for good riding performance.

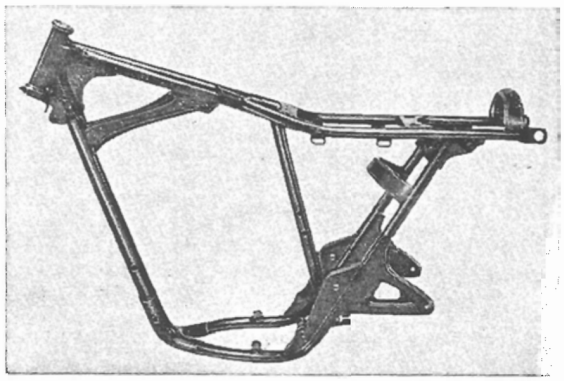

Fig. 4.34 Frame body

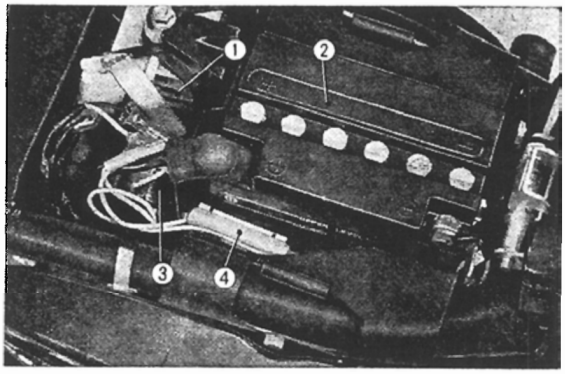

Fig. 4.35
① Selenium rectifier
② Battery
③ Magnetic starter switch
④ Fuse

The 450 employs a semi-cradle double frame of high strength steel tubing. This type of frame is both light and flexible. Combining the front guard frame type rear fork in single unit, further increases the flexibility of the frame. **(Fig. 4. 34 and 4. 35)**

B. Disassembly

1. Remove the seat and fuel tank in accordance with Sections 4. 7 B and 4. 5 B.
2. Remove the air cleaner case, air cleaner and tool box in accordance with Sections 4. 7 B and 4. 10 B.
3. Separate the handle bar in accordance with Section 3. 1 B.

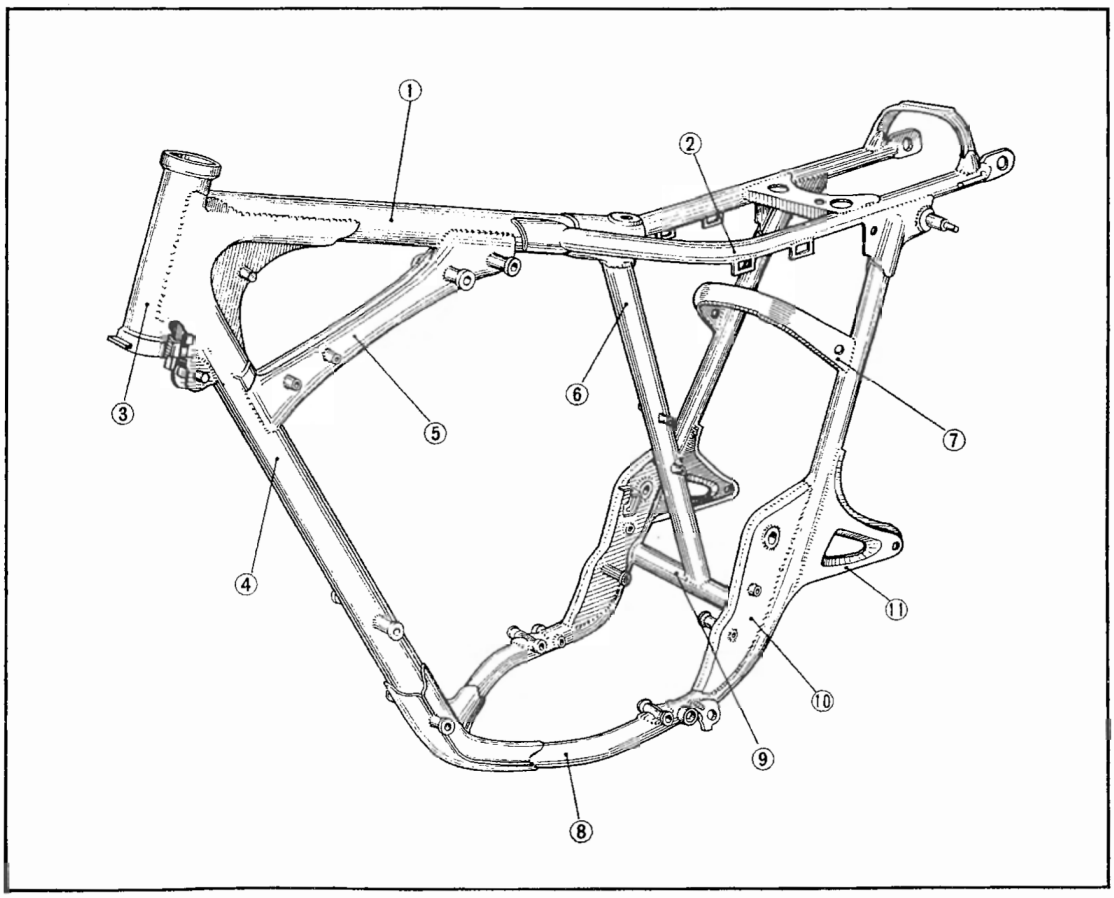

① Main pipe (back bone)
② Sub tube
③ Head pipe
④ Front down tube
⑤ Down tube brace
⑥ Center pipe
⑦ Battery box stay
⑧ Sub tube holder
⑨ Under cross pipe
⑩ Bottom plate
⑪ Muffler fitting stay

Fig. 4.36

4. Dismount the engine from the frame in accordance with Section 3. 1B.
5. Disassemble the front wheel in accordance with Section 4. 13 B.
6. Disassemble the front cushion in accordance with Section 4. 3 B.
7. Remove the top bridge in accordance with Section 4. 2 B.
8. Remove the steering stem in accordance with Section 4. 4 B.
9. Disassemble rear fork and rear fender in accordance with Section 4. 11B.
10. Remove the electric equipment from the frame body (see figure 4. 35 through 4. 37).
11. Detached the main stand accordance with Section 4. 8 B and then the frame can be disassembled.
12. Knock out the ball races from the head pipe by using a wooden drift. **(Fig. 4. 38)**

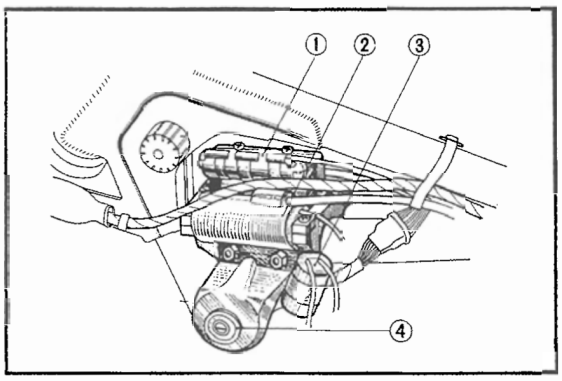

Fig. 4. 37 Mounting positions of electrical items
① Condenser
② Ignition coil
③ Winker relay
④ Ignition switch

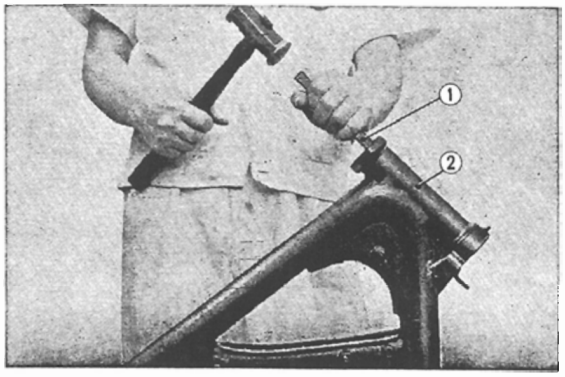

Fig. 4. 38 Removing the ball race
① Wooden drift
② Head pipe

C. Inspection

1. Inspect the weld joints for any breaks or cracks.
2. Inspect the steering head pipe for twist, bends and misalignment.
3. Inspect the top and bottom steering head ball races for signs of wear and scratches.

NOTE :

The ball races should be fitted to the steering head pipe with light driving (+0.084～+0.034 in) and must be bottomed squarely.

(Fig. 4. 39)

4. Inspect the frame paint coating for any chips and rust spots.

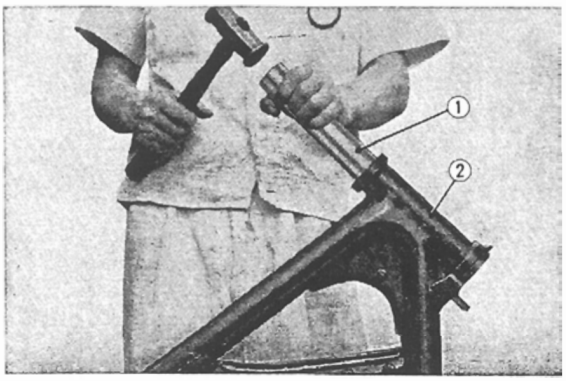

Fig. 4. 39 Driving the ball race
① Ball race driving tool
② Head pipe

D. Reassembly

Perform the assembly in the reverse order of disassembly.

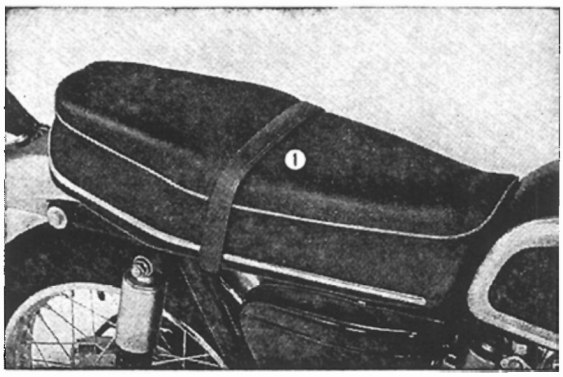

Fig. 4.40
① Seat

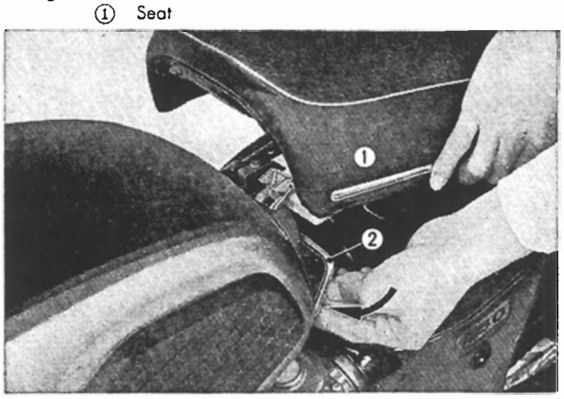

Fig. 4.41
① Seat ② Seat latch lever

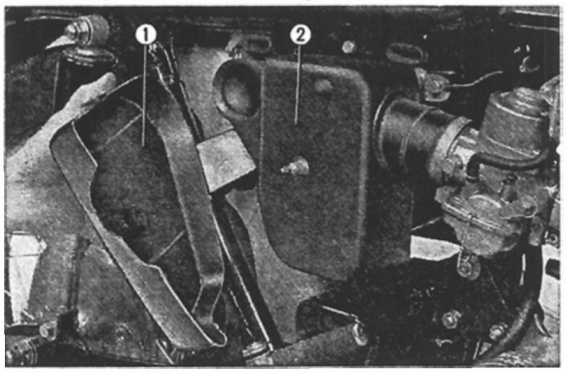

Fig. 4.42
① Air cleaner cover ② Air cleaner case

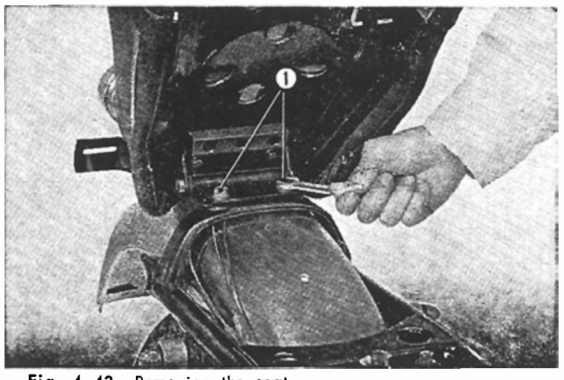

Fig. 4.43 Removing the seat
① Seat setting bolts

4.7 Seat and Air Cleaner Case

A. Construction

The motorcycle is equipped with a double seat consisting of 4 layers of sponge rubber padding to isolate the vibration from being transmitted to the rider. The rear and center sections of the seat are padded thicker to prevent the rider from sliding on the seat during sudden starting and acceleration. Seat covering is a viñyl leather for greater strength, further, it is easier to keep clean.

The inspection and replacement of the electric equipment such as the battery, selenium rectifier and magnetic starter switch can be easily performed by unlatching the seat lever located at the front left side and raising the seat which is hinged at the back. **(Fig. 4.40~41)**

The air cleaner case which houses the air cleaner element made of corrugated cellulose fiber is constructed of pressed steel sheet to adequately protect the cleaner. **(Fig. 4.42)**

B. Disassembly

1. Raise the seat and remove the two bolts at the seat hinge and separate seat from the frame. **(Fig. 4.43)**
2. The seat stay a can be separated from the seat by unscrewing the 6mm nuts.
3. Air cleaner cover is removal by pulling out on the cover.

C. Inspection

1. Inspect the seat covering for wear, cracks and tear.
2. Inspect the hinge and the rubber seal to insure that they are not damaged or cracked.
3. Inspect the air cleaner case to insure that the case is not deformed or dented.
4. Air cleaner which is clogged with dust should be blown off with dry compressed air or cleaned by light brushing. **(Fig. 4. 44)**
5. Inspect the filter element for tear, defect or condition which would make it unserviceable.

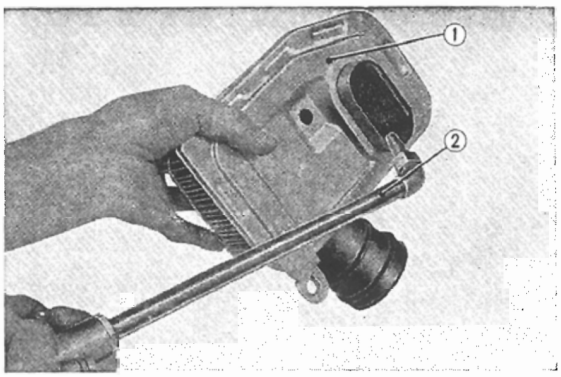

Fig. 4. 44 Cleaning the air cleaner
① Air cleaner element
② Air gun

D. Reassembly

1. Bolt seat stay to the seat with the two 6 mm nuts.
2. Mount the seat hinge to the frame.
3. Assure that the seat front end is properly hooked by the latch.

4. 8 Stand and Brake Shoe

A. Construction

For reducing weight, a formed steel tube is used for the stand. The section which contacts the ground when the stand is erected has an oval plate welded to increase the contact area. The brake pedal is mounted on the right side of the main stand pivot pipe. **(Fig. 4. 45, 4. 46)**

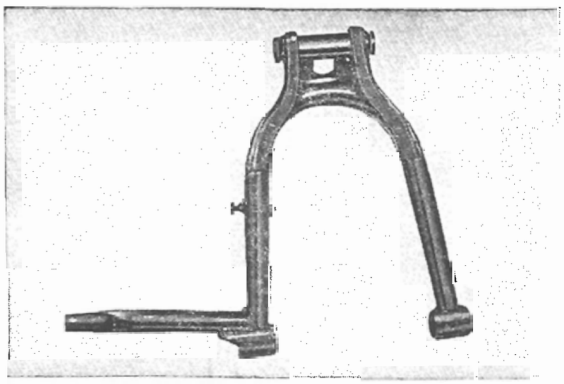

Fig. 4. 45 Main stand

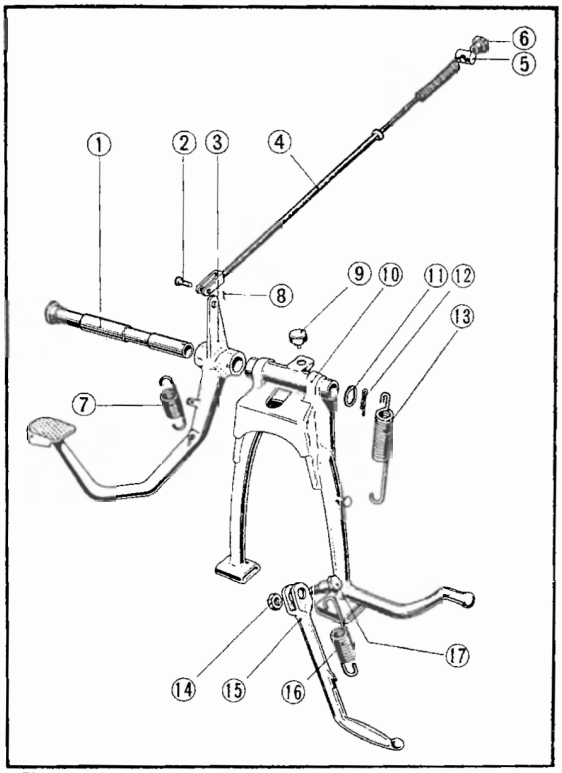

Fig. 4.46 Exploded view of stand and brake pedal
① Main stand pivot pipe
② Brake rod joint pin
③ Brake pedal
④ Rear brake rod
⑤ Rear brake arm joint
⑥ Rear brake adjusting nut
⑦ Rear brake spring
⑧ 1.6 mm split pin
⑨ Main stand stopper rubber (For CL 450)
⑩ Main stand
⑪ 19 mm washer
⑫ 2.5 mm split pin
⑬ Main stand spring
⑭ 10 mm hex nut
⑮ Side stand bar
⑯ Side stand spring
⑰ Side stand pivot screw

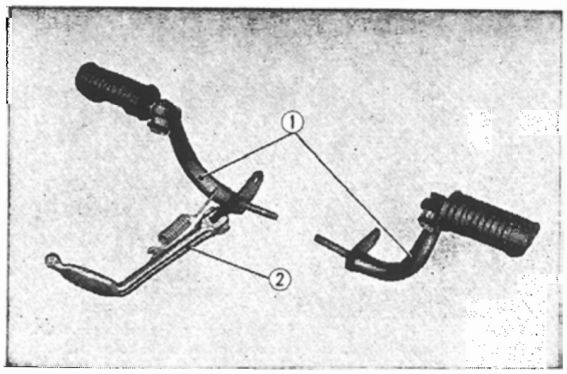

Fig. 4.47
① Step bar ② Side step

The step bar has been designed to provide comfort to the rider. They are also made of formed steel tubing and mounted by 10 mm nuts, further, it has been made easy to install and remove. **(Fig. 4.47)**

B. Disassembly

1. Remove the right and left mufflers.
2. Remove the rear brake adjusting nut.
3. Raise the front wheel off the ground by placing a block underneath engine. Unhook the main stand spring, brake pedal spring, the stop switch spring, remove the cotter pin and

the 6 mm nut. Pull up the main stand pivot pipe to disassemble the brake pedal. The brake rod can be separated from the brake pedal by removing the brake joint pin. **(Fig. 4. 48)**

4. Rear brake rod can be separated from the brake pedal by removing the brake rod joint pin. **(Fig. 4. 49)**
5. Remove the step bar by loosening the two 10 mm nuts mounting the step bar. The side stand can be removed from the frame by unhooking the side stand spring and then unscrewing the side stand pivot screw.

C. Inspection

1. Check the main stand pivot pipe for damage.

Standard outside diameter	Serviceable limit
18.747~18.78 mm (0.7281~0.7365 in)	Replace if under 18.7 mm (0.7302 in)

2. Check the bore of the brake pedal pivot hole for wear.

Item	Standard value	Serviceable limit
Inside diameter	18.80~18.852 mm (0.70079~6.74220 in)	Replace if over 19 mm (0.74803 in)

3. Check main stand mounting hole for wear.

Item	Standard value	Serviceable limit
Inside diameter	19.0~19.1 mm (0.7480~0.752 in)	Replace if over 19.3 mm (0.7598 in)

4. Inspect the stand, step and brake pedal to insure that they are not bent or deformed.
5. Inspect all springs for breakage or loss of tension.

D. Reassembly

1. Clean all parts and grease all shaft areas. Fill the inside of the pivot pipe with grease and perform reassembly in the reverse order of disassembly.
2. Join the brake rod and brake pedal with the rod joint pin and cotter pin. **(Fig. 4. 50)**
3. Align the main stand, brake pedal and insert the pivot from the pedal side. Install 6 mm bolts from the top side, tighten the nut and lock with a cotter pin.

NOTE:

Do not overtorque the 6 mm bolt. **(Fig. 4. 51)**

4. Install the main stand spring, brake pedal spring, stop switch spring and rear brake adjusting nut.

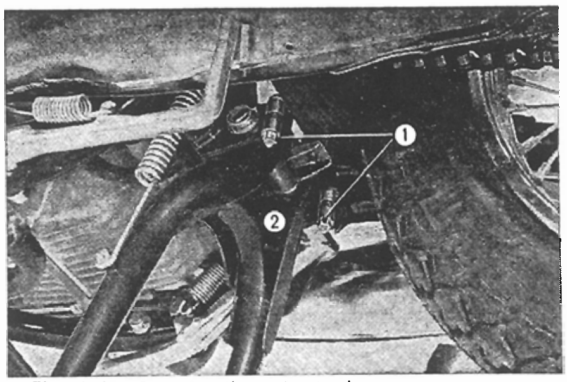

Fig. 4. 48 Removing the main stand
① 6 mm nut ② Main stand

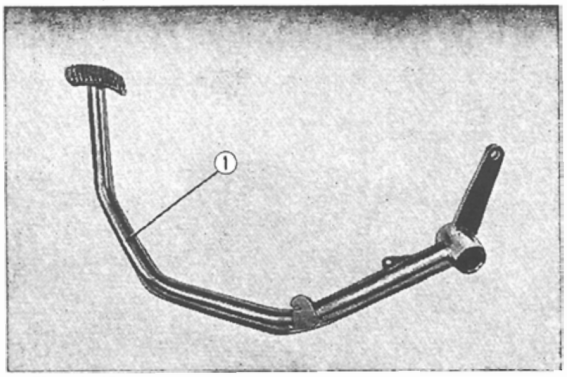

Fig. 4. 49
① Rear brake pedal

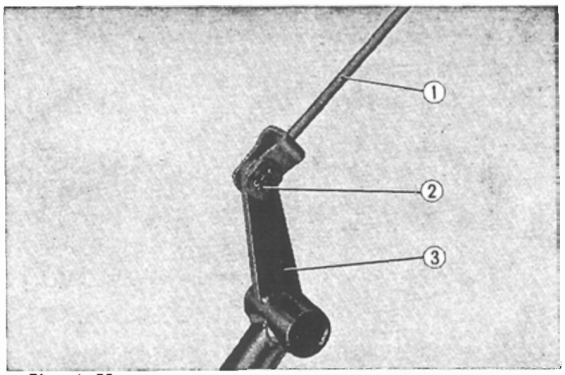

Fig. 4. 50
① Rear brake rod ② Cotter pin ③ Rear brake pedal

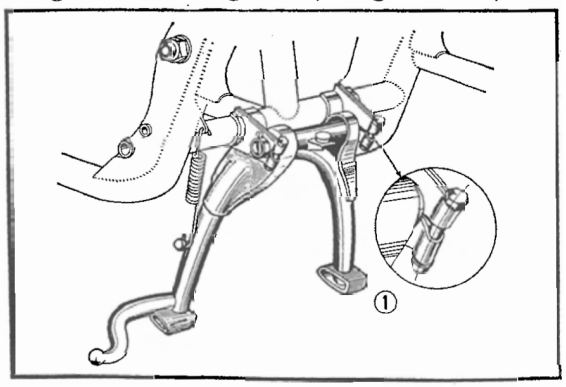

Fig. 4. 51 Fixing the main stand with 6 mm bolt

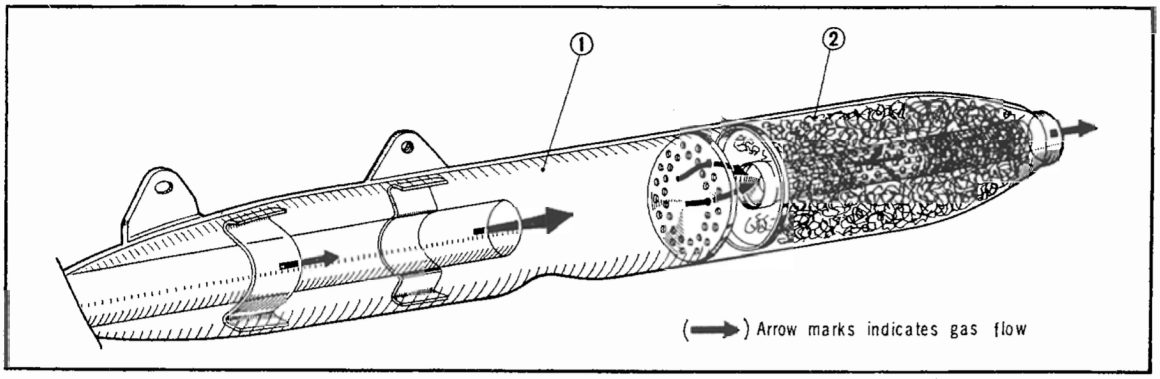

Fig. 4.52 Internal construction of muffler
① Expansion chamber ② Silencer

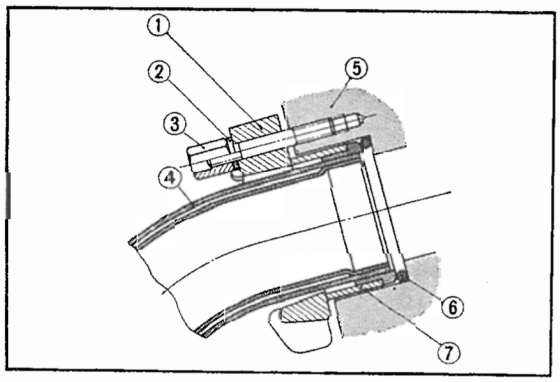

Fig. 4.53
① Exhaust pipe joint
② 6 mm lock washer
③ Exhaust pipe joint nut
④ Exhaust pipe
⑤ Cylinder head
⑥ Exhaust pipe gasket
⑦ Exhaust pipe joint collar

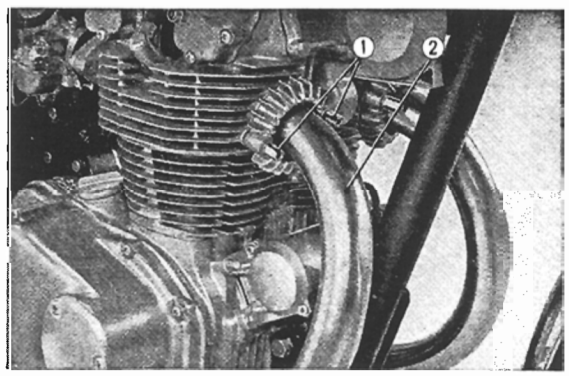

Fig. 4.54 nstalling the exhaust pipe
① Exhaust pipe joint nut
② Exhaust pipe

5. Install the exhaust muffler and the step bar. Upon completion of the above, adjust the stop switch and the rear brake.

4.9 Exhaust Pipe and Muffler

A. Construction

The exhaust pipe transmits exhaust gas from the cylinder head to the muffler. Pipe should have minimum of bends as this will restrict flow of the gas which will reduce the power output. On the 450 exhaust pipe is constructed of double walled steel tubing to prevent the discoloration of the chrome plates exhaust pipe. The exhaust noise is reduced as it passes through the expansion chamber, separator in the muffler and the remaining noise is absorbed as it passes through the silencing chamber packed with steel wool. **(Fig. 4.52 and 4.53)**

B. Inspection

1. Inspect the muffler gasket for damage.
2. Inspect the muffler for cracks, dents and other defects.

C. Reassembly

1. Install the exhaust pipe gasket on the cylinder head and temporarily tighten the pipe joint with the collar and special 6 mm heat resisting nut.
2. After completing the muffler installation, tighten the exhaust pipe joint nut. **(Fig. 4.54)**

NOTE :

If the exhaust pipe joint nut is tightened first, it will be difficult to install the muffler.

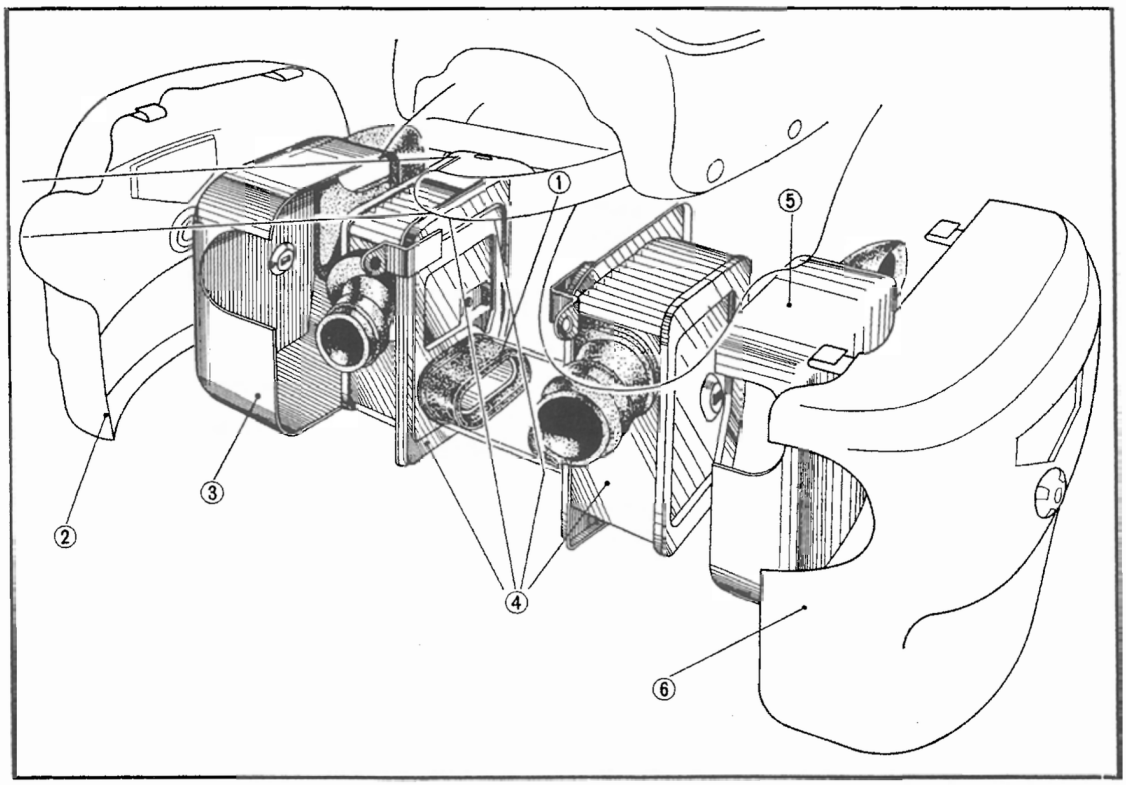

① Air cleaner joint tube
② Air cleaner case
③ R. air cleaner cover
④ Air cleaner element
⑤ L. air cleaner cover
⑥ L. air cleaner case

Fig. 4. 55

4. 10 Air Cleaner

A. Construction

The air cleaner filters the air which passes through the carburetor and to the cylinder. A cellulose filter is used as a filtering element. The Honda 450 models utilize the compensating filtering system where a filter element is incorporated on the right and also on the left side with interconnecting passage. With this type of a system either one of the filter can be clogged without sacrifice to the engine performance. This is because any one of the filters will have sufficient capacity to perform the filtering function. This arrangement has the advantage of requiring less space and providing an affective air flow. (Fig. 4. 55 and 4. 56)

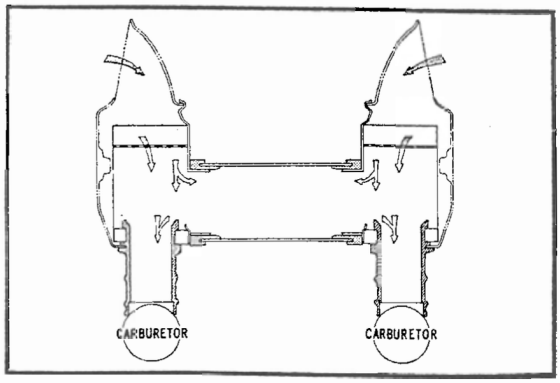

Fig. 4. 56 Air flow of air cleaner

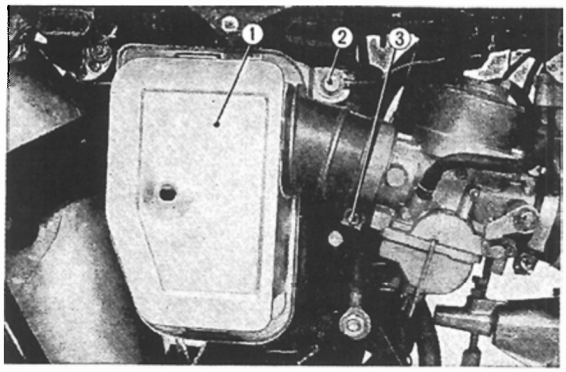

Fig. 4.57 Removing the air cleaner
① Air cleaner element
② Air cleaner mounting bolt
③ 5mm cross screw

B. Disassembly

1. Remove the air cleaner case.
2. Remove the air cleaner cover mounting bolt and separate the air cleaner cover.
3. Air cleaner element can be separated from the frame by removing the air cleaner connecting tube clamp and the air cleaner mounting bolt. **(Fig. 4. 57)**

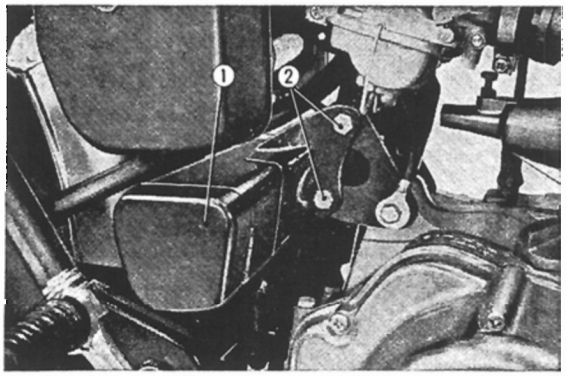

Fig. 4.58 Romoving the tool box
① Tool box
② 8mm hex bolt

4. The tool box can be removed from the frame by unscrewing the 8mm nut on the rear engine hanger plate and pulling out the 8mm hex bolts. **(Fig. 4. 58)**

C. Inspection

1. Dust on the air cleaner element can be removed by tapping lightly and blowing off the loose dust particles with compressed air.
2. Inspect the filter element to make sure that it is not damaged or clogged by soilage.
3. Also inspect the bonded section to make sure that the joints are not cracked or open.

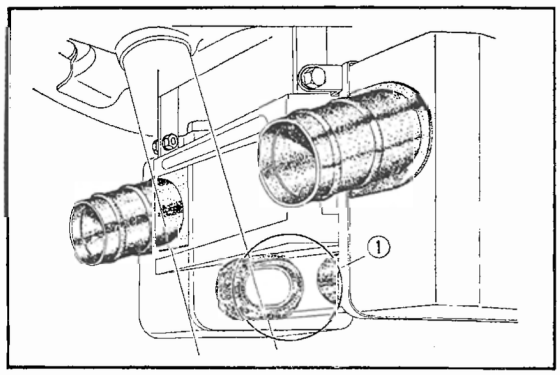

Fig. 4.59 Check of left and right connection
① Check this point

D. Reassembly

1. After locating the position of the tool box, insert the engine hanger plate between frame and and tool box, insert two 8mm bolts from the right side and torque the nuts.
2. Mount the air cleaner with the 6mm bolts, install the air cleaner connecting tube on the carburetor with the clamp.

NOTE :

After completing the installation of the air cleaner, check to make sure that the right and left air cleaners are interconnected. If there are any leaks in the system, unfiltered air will be drawned into the cylinder and causing rapid wear to the cylinder walls. **(Fig. 4. 59)**

3. Install the air cleaner case.

4.11 Rear Fork and Rear Fender

A. Construction

One end of the rear fork is fitted to a section on the frame and the other end is fitted to the the frame through the rear cushion. When the rear wheel moves in the vertical direction, the section which is fitted to the frame becomes the pivot point and the rear wheel moves in an arc.

The close proximity of the pivot point to the drive sprocket posses negligible effect on the chain tension. (Fig. 4.60 and 4.61)

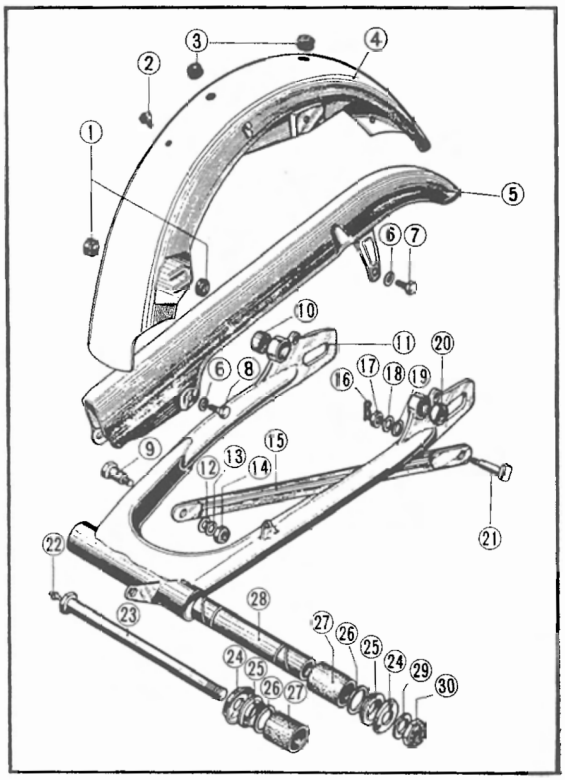

Fig. 4.60 Exploded view of rear fork and rear fender

① Front fuel tank cushion
② Wire cord grommet
③ Wire cord grommet
④ Rear fender
⑤ Drive chain case
⑥ 6mm flat washer
⑦ 6×16 hex bolt
⑧ 6×12 hex bolt
⑨ Rear brake stopper arm bolt
⑩ Rear cushion under rubber bushing
⑪ Rear fork
⑫ 10mm spring washer
⑬ Flat washer
⑭ 8mm self lock nut
⑮ Rear brake stopper arm
⑯ 8mm lock pin
⑰ 8mm hex nut
⑱ Rear fork thrust bushing
⑲ 10mm spring washer
⑳ Rear cushion under rubber bushing
㉑ Rear brake panel stopper bolt
㉒ Grease nipple
㉓ Rear fork pivot bolt
㉔ Rear fork dust-seal cap
㉕ Rear fork thrust bushing
㉖ Rear fork felt ring
㉗ Rear fork pivot bushing
㉘ Rear fork center collar
㉙ Rear fork pivot bolt washer
㉚ 14mm self lock nut

B. Disassembly

1. Remove the rear wheel in accordance with section 4.14 B.
2. Disassemble the rear cushion in accordance with section 4.12 B.
3. Remove the 14mm self locking nut from the rear fork pivot bolt and extract the pivot bolt; the rear fork can be separated from the frame.
4. Lightly tap to remove the rear fork center collar from the rear fork.
5. Separate the drive chain cover and the rear brake stopper arm from the rear fork.
6. Raise or remove the seat, separate the taillight.
7. Then unscrew the rear fender mounting bolts (rear turn signal is also mounted together) and remove the rear fender.

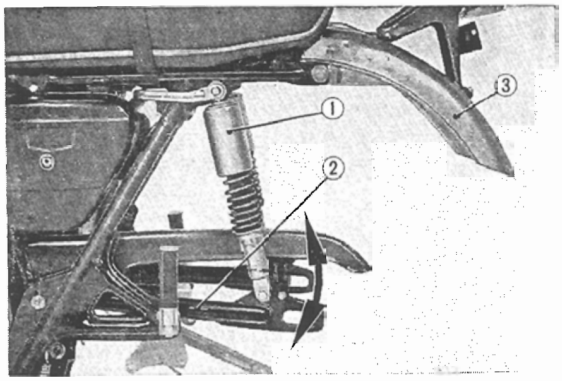

Fig. 4.61

① Rear cushion assembly
② Rear fork
③ Rear fender

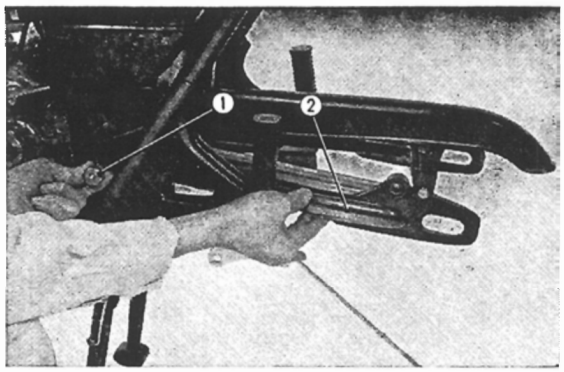

Fig. 4.62 Removing the rear fork
① Rear fork pivot bolt
② Rear fork

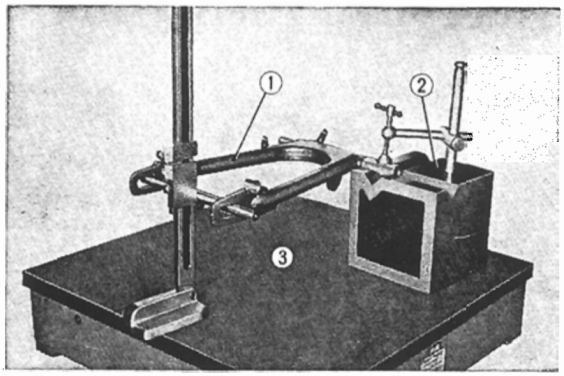

Fig. 4.63
① Rear fork
② Square block
③ Surface plate

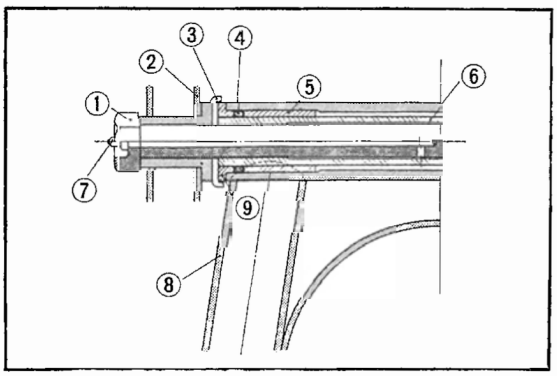

Fig. 4.64 Cross-section of the rear fork pivot portion
① Rear fork pivot bolt
② Frame body
③ Rear fork dust seal cap
④ Rear fork felt ring
⑤ Rear fork pivot bushing
⑥ Rear fork center collar
⑦ Grease nipple
⑧ Rear fork
⑨ Rear fork thrust bushing

C. Inspection

1. Rear fork center collar

Item	Standard value	Serviceable limit
Overall length	201.75～201.95 mm (7.9429～7.9508 in)	
Inside diameter	14.0～14.027 mm (0.5518～0.5522 in)	Replace when more than 14.1 mm (0.5551 in)
Outside diameter	21.472～21.493 mm (0.8454～0.8462 in)	Replace when less than 21.4 mm (0.8425 in)

2. Rear fork pivot bushing

Item	Standard value	Serviceable limit
Inside diameter	21.5～21.533 mm (After pressing in) (0.8465～0.8478 in)	Replace when more than 21.6 mm (0.85039 in)
Inside width	42.8～42.9 mm (1.6850～1.6890 in)	

3. Rear fork pivot bolts

Item	Standard value	Serviceable limit
Outside diameter	13.925～13.968 mm (0.54822～0.54992 in)	——
Bending	0.01/100 mm (0.0004/3.9370 in)	0.02/100 mm (0.0008/3.9370 in)

4. Rear fork **(Fig. 4. 63)**

NOTE:

Measurement should be made with the rear fork pivot bushing and the center collar inserted into the rear fork.

5. Inspect the rear fender and the drive chain case for dents and other defects.

D. Reassembly

1. Install the rear fender together with the turn signal light.
2. Drive in the pivot bushing and the center collar. Insert the rear fork seal cap. **(Fig. 4. 64)**
3. Insert the pivot bolt through the side bracket and assemble the rear fork to the frame.
4. Install the rear wheel.
5. Install the drive chain.
6. When the assembly is completed, adjust the rear brake pedal and the chain tension.
7. Install the drive chain case.

4. 12 Rear Cushion

A. Construction

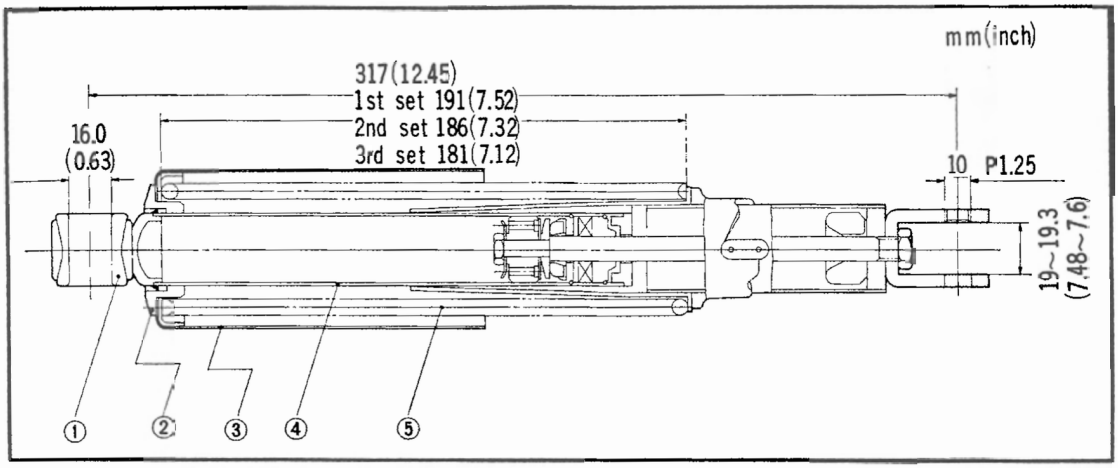

Fig. 4.65 Sectional view of rear cushion

① Joint rubber
② Spring seat stopper
③ Rear cushion upper case
④ Rear damper assy
⑤ Rear cushion spring

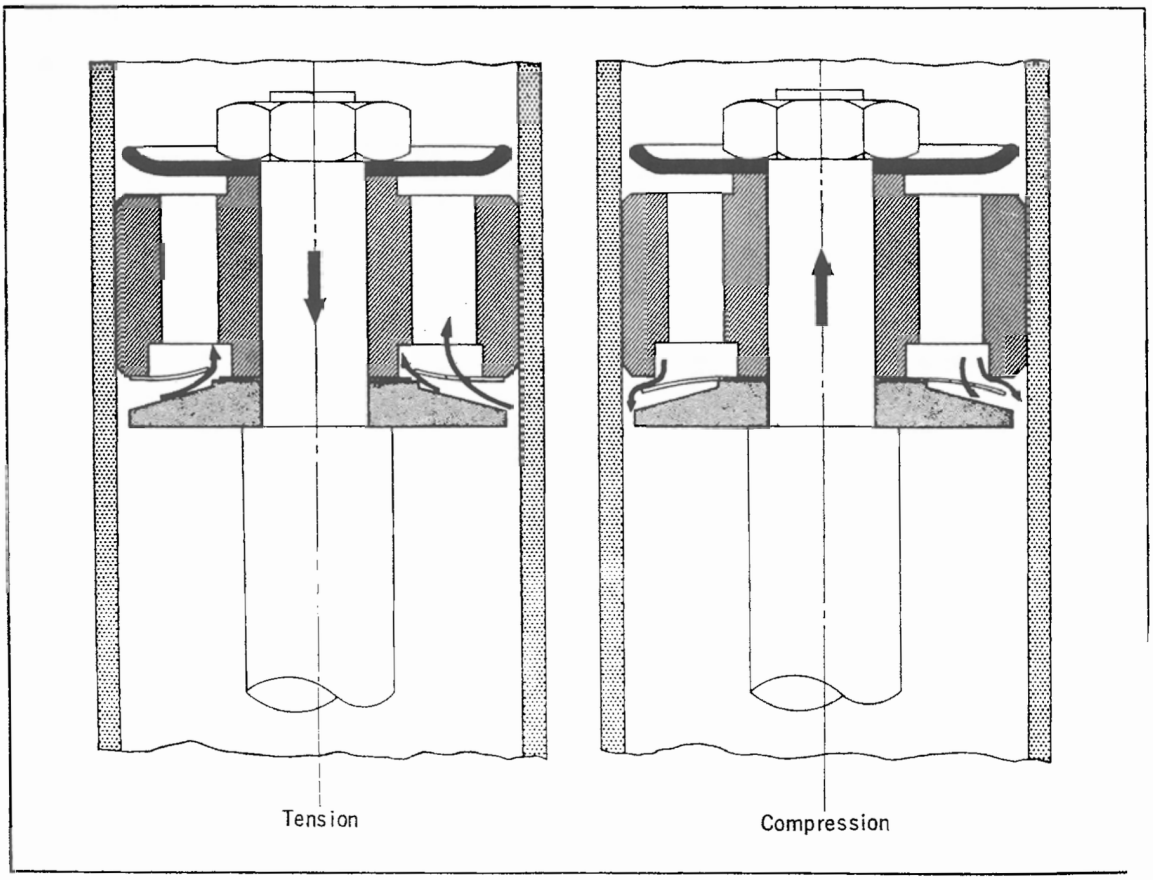

Fig. 4.66

A Do Carbon type rear damper is employed on the 450 which is of a single cylinder double acting type in contrast to the double cylinder single acting type commonly used.

Nitrogen gas and oil are sealed within the cylinder under pressure to constantly maintain an internal pressure.

During extension and compression of the cushion, the oil flows through a small passage in the piston in either direction to operate the valve which controls the dampening for both the compression and extension. **(Fig. 4. 65)**

Dampening force :

Extension	70 kg/0.5 m/sec (154 lbs/20 in/sec)
Compression	16 kg/0.5 m/sec (35 lbs/20 in/sec)

Feature and Performance

a. Simple type of a construction

Due to the lack of outside tubular shell, the heat radiation is good and the oil changes are small. Therefore, the performance does not degrade.

The number of parts have been reduced, simplifying the costruction ; minimizing valve noise and increasing its service life.

The dampening force is dependent upon the piston speed ; performance being especially good at low speed. Further, vibration stabilizes very quickly.

b. Internal pressure constantly maintained

Air and oil mixture (erasion) will not occur ; function will not deteriorate even when operated for extended period over adverse road condition.

Since the oil seal is constantly under pressure, there is no problem with leak ; service life is greatly extended.

The differerence in pressure between the front and rear of the valve is small ; since foam does not form, noise is minimized ; deterioraton of the dampening force is prevented.

NOTE : Do not disassemble the damper.

The use of pressurized nitrogen gas eliminates any havard.

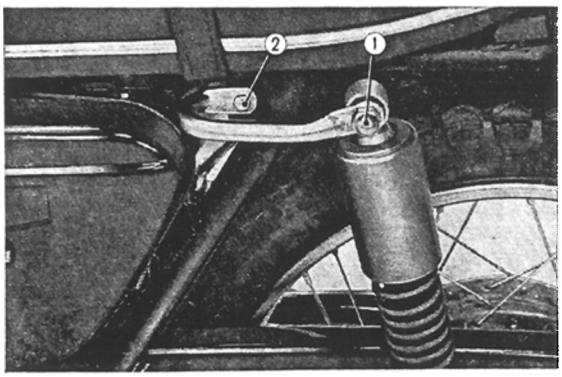

Fig. 4. 67 Removing the rear cushion assembly
① 10 mm cap nut
② 6 mm bolt

B. Disassembly

1. Remove the 6mm bolt from the forward end of the side hand hold, loosen the 10mm cap nuts and remove the rear cushion assembly. **(Fig. 4.67)**
2. Compress the rear cushion upper case by using a special tool and remove the rear cushion seat, lift off the upper case and then remove the cushion spring. **(Fig. 4.68)**
3. Disassembly of the rear cushion damper is not necessary. **(Fig. 4.69)**

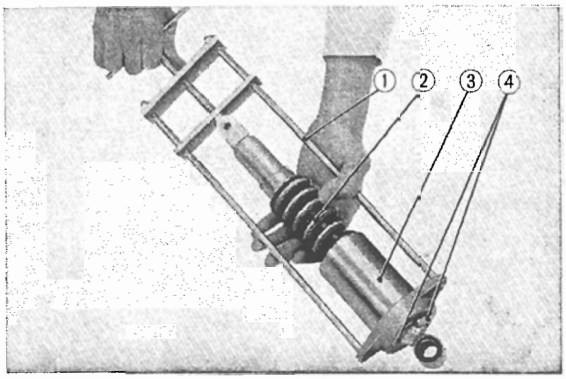

Fig. 4.68 Disassembling the rear cushion
① Rear cushion disassembly tool
② Rear cushion spring
③ Rear cushion upper case
④ Rear cushion spring seat stopper

C. Inspection

1. Rear cushion spring

Item	Standard value	Serviceable limit
Load	109.3~123.3 kg/142 mm (241.65~271.88 lbs/5.591 in) 174.4~196.6 kg/116 mm (384.55~433.50 lbs/4.567 in)	
Free length	201.1 mm (7.917 in)	Replace if under 195 mm (7.678 in)
Tilt	Within 1.5°	

2. Inspect the cushion damper to insure that there is no fluid leakage.
3. Inspect the damper case and rod to insure that they are not damaged or deformed.
4. Inspect the rear cushion stopper to insure that it is not damaged or deformed.

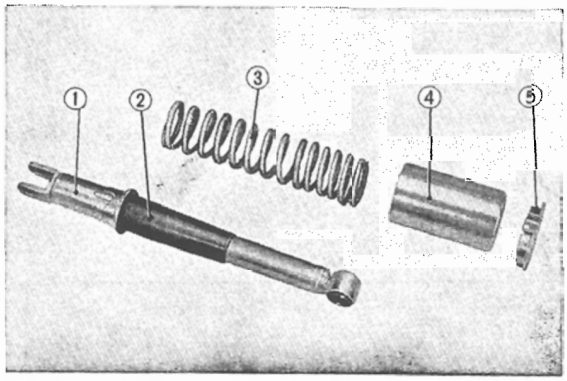

Fig. 4.69 Component parts of rear cushion
① Rear damper assy
② Spring guide
③ Rear cushion spring
④ Rear cushion upper case
⑤ Rear cushion spring seat stopper

D. Reassembly

1. Assemble the under seat, spring and upper case to the damper. Compress the assembly using a special tool and lock the assembly with the cushion spring seat. **(Fig. 4.70)**

NOTE :

(1) When installing the spring seat stopper, extend the cushion assembly, otherwise, difficulty will be encountered.

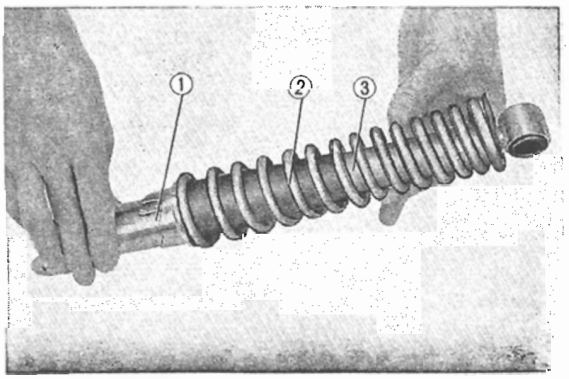

Fig. 4.70 Assembling the rear cushion
① Rear damper assy
② Spring quide
③ Rear cushion spring

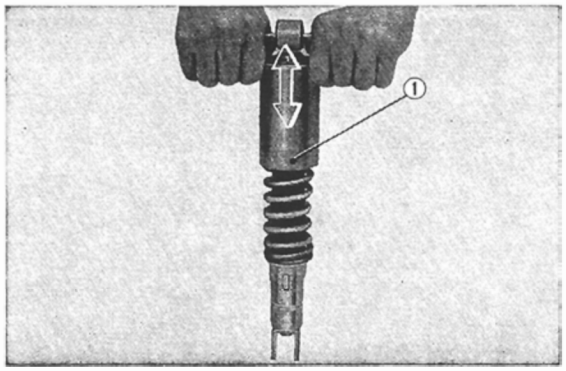

Fig. 4.71 Check of rear cushion
① Rear cushion assembly

(2) Upon completing the assembly, actuate the cushion assembly by hand to make sure that they are not binding. **(Fig. 4.71)**

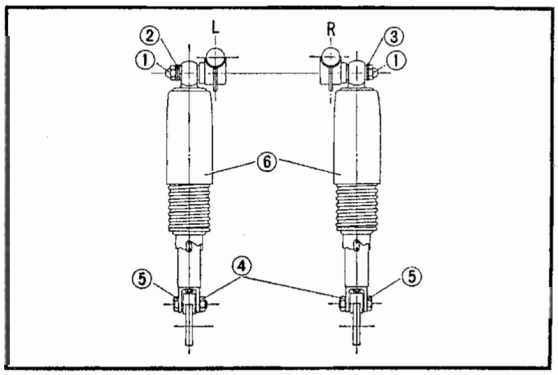

Fig. 4.72 Mounting bolt and nuts of rear cusnion
① 10mm cap nut
② Side grip
③ Special washer
④ 10mm thin nut
⑤ 10×36 hex bolt
⑥ Rear cushion

2. Install the cushion in the reverse order of disassembly. **(Fig. 4.72)**

NOTE:

After installing the cushion, check the alignment of the right and left cushion and also the alignment of the cushion mounting bolt for right and left side.

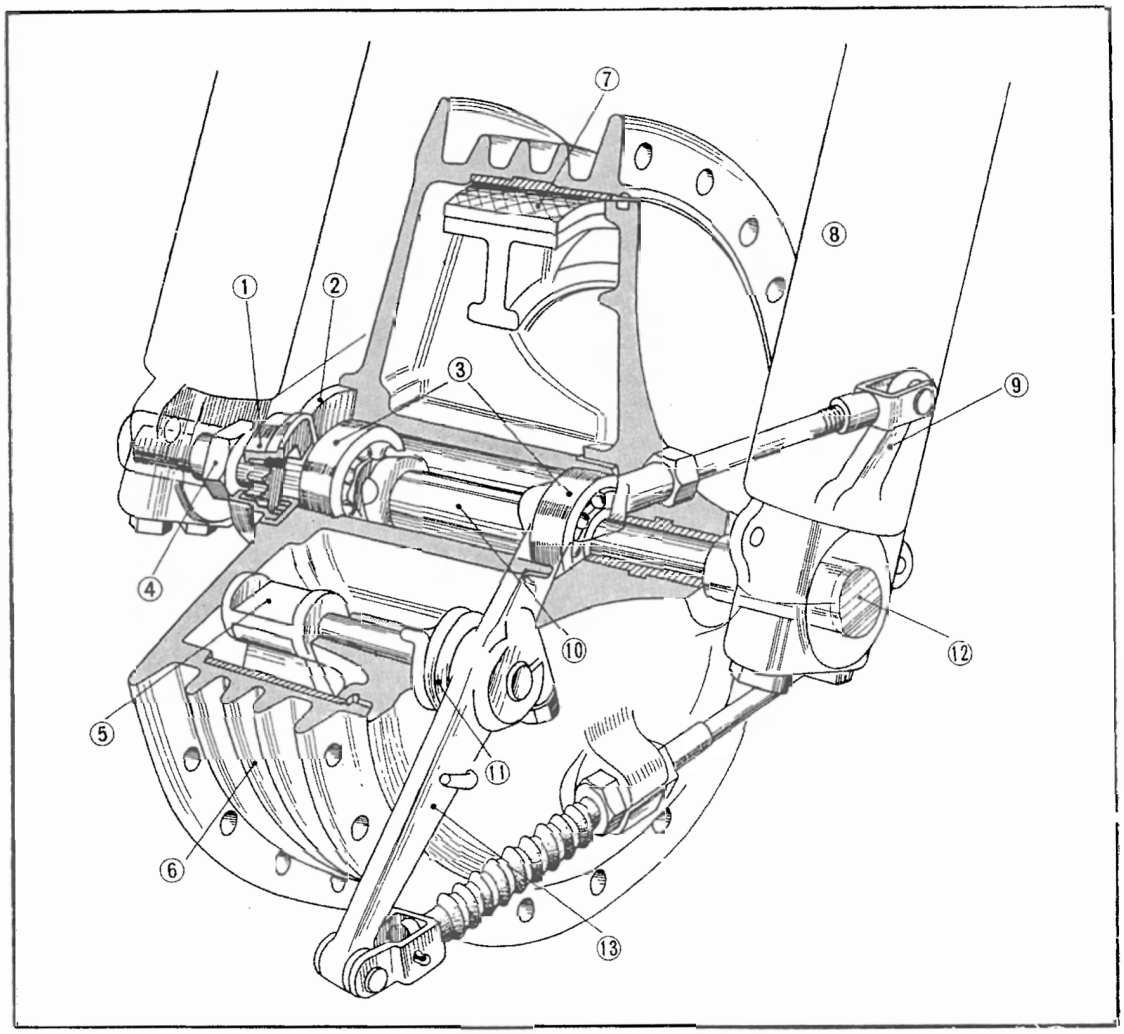

Fig. 4.73 Cross-section of front wheel

① Speedometer gear box
② Front wheel bearing retainer
③ 6302 Z ball bearing
④ Front wheel axle nut
⑤ Front brake cam
⑥ Front wheel hub
⑦ Front brake shoe
⑧ Brake rod
⑨ Front brake arm B
⑩ Front axle spacing collar
⑪ Brake arm spring
⑫ Front wheel axle
⑬ Front brake arm

4. 13 Front Wheel

A. Construction

The cast aluminum hub and brake panel houses the brake assembly, front axle distance collar, two 6302Z ball bearings and the speedometer gear box. The reaction to the braking force is received by the brake panel stopper arm located on the left side. (Fig. 4.73)

B. Disassembly

1. Place a suitable support block under the engine to raise front wheel off the ground.

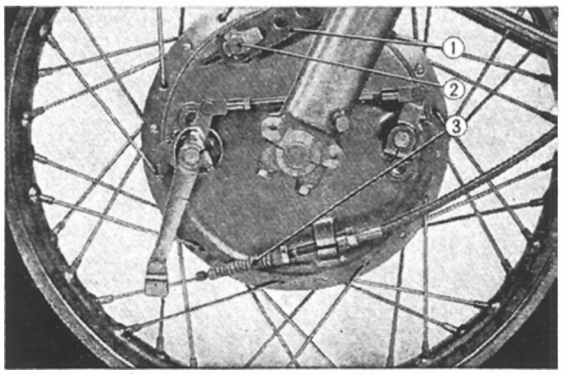

Fig. 4.74 Removing the front brake cable & torque link
① Front brake torque link
② Front brake torque link bolt
③ Front brake cable

2. Disconnect the front brake cable and the brake torque link. **(Fig. 4.74)**
3. Disconnect the speedometer cable from the speedometer gear box.
4. Remove the 8 mm nuts which support the lower axle holder on both the right and left sides. The wheel will then drop away from the fork.

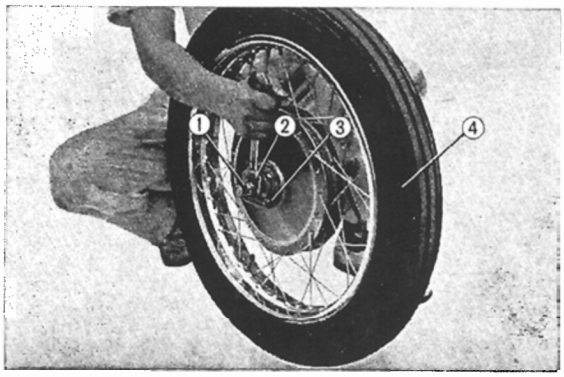

Fig. 4.75 Removing the front wheel axle
① Front wheel axle
② Front wheel axle nut
③ Speedometer gear box
④ Front wheel tire

5. Remove the front wheel axle nut and pull out the axle. The speedometer gear box and brake panel can be separated from the front wheel. **(Fig. 4.75)**

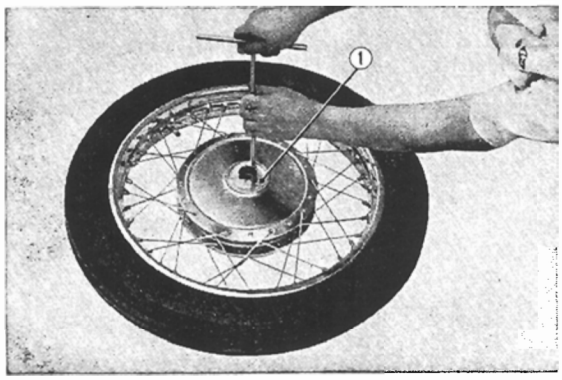

Fig. 4.76 Removing the bearing retainer
① Front wheel bearing retainer

6. Remove the panel, bearing retainer, two 6302 Z ball bearings, front axle distance collar and dis assemble the front wheel hub. **(Fig. 4.76)**

7. Remove the front brake arm and pull out the front brake cam ; the brake shoes can be removed from the panel by spreading the shoes apart by hand. **(Fig. 4. 77)**
8. Separate the tire and tube from the rim with the aid of the tire iron.

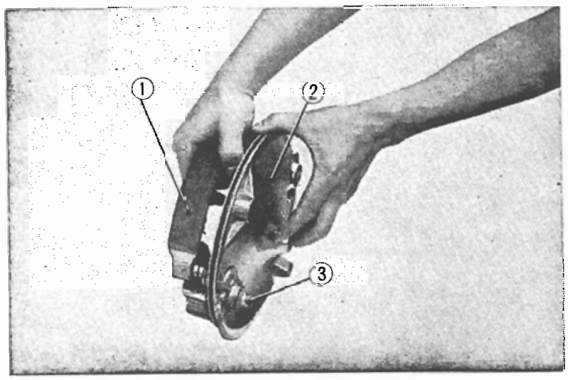

Fig. 4.77 Removing the front brake shoe
① Front brake shoe
② Front brake panel
③ Front brake cam

C. Inspection

1. Rim runout **(Fig. 4. 78)**

Item	Standard value	Servicealbe limit
Side runout	Dial runout within 0.5 mm (0.020 in)	Replace or repair if over 2.0 mm (0.079 in)
Vertical runout	Dial runout within 0.5 mm (0.020 in)	Replace or repair if over 2.0 mm (0.079 in)

2. Axle bend and wear. **(Fig. 4. 79)**

Item	Standard value	Serviceable limit
Inside diameter	14.996~14.984 mm (0.589~0.590 in)	
Bend	Within 0.05 mm (0.002 in)	Replace if more than 0.2 mm (0.0079 in)

3. 6302Z ball bearings axial and radial clearance.

Item	Standard value	Serviceable limit
Axial clearance	Not more than 0.05 mm (0.002 in)	Replace if over 0.1 mm (0.004 in)
Radial clearance	0.007~0.002 mm (0.0003~0.0009 in)	Replace if over 0.05 mm (0.002 in)

4. Brake shoe spring.

Item	Standard value	Serviceable limit
Free length	67.4 mm (2.6535 in)	Replace if over 70 mm (2.765 in)
Tension	6 kg (75 mm) (13.32 lds) (2.953 in)	

5. Front brake shoe diameter and lining thickness.

Item	Standard value	Serviceable limit
Outside diameter	199.8~200 mm (7.866~7.844 in)	
Thickness	4.5 mm (0.1722 in)	Replace if under 2.0 mm (0.079 in)

6. Front brake cam thickness.

Item	Standard value	Serviceable limit
Thickness	10 mm (0.394 in)	If worn, deformed, or unusual, replace.

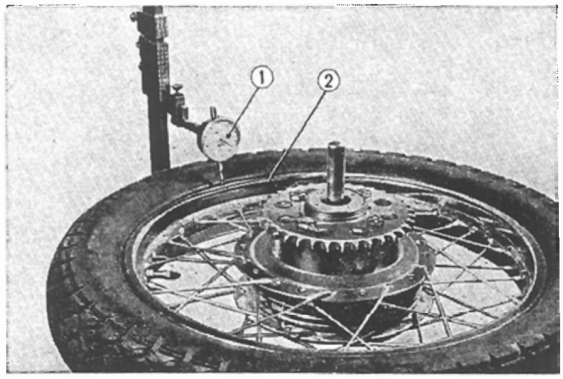

Fig. 4.78 Cheking the front wheel rim for runout
① Dial gauge
② Front wheel rim

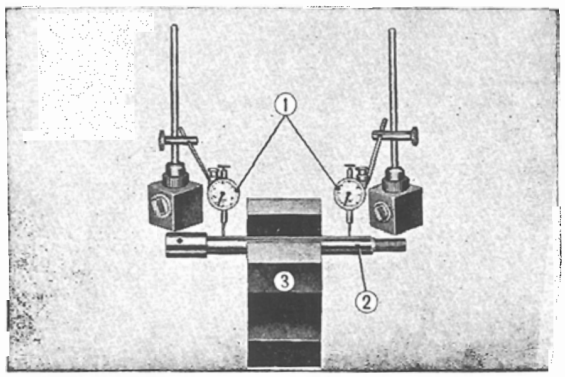

Fig. 4.79 Checking the front axle for bend
① Dial gauge
② Front wheel axle
③ V block

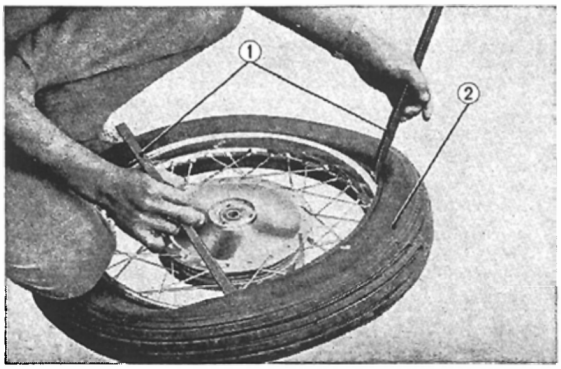

Fig. 4.80 Installing the tire
① Tire lever ② Front tire

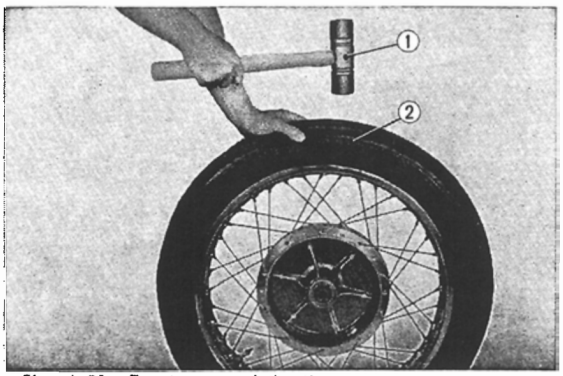

Fig. 4.81 Tapping around the tire
① Wooden hammer ② Front wheel tire

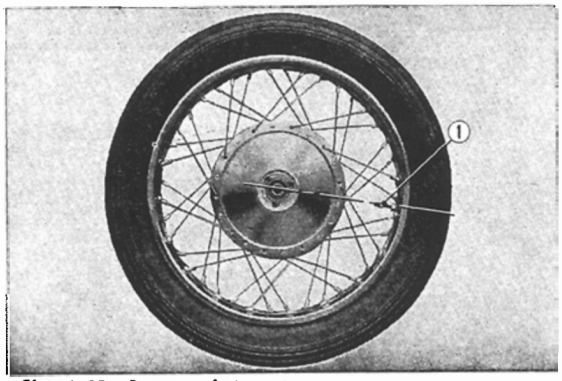

Fig. 4.82 Position of the valve stem
① Valve stem

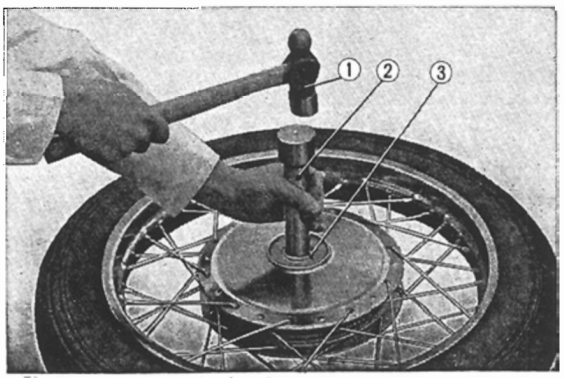

Fig. 4.83 Driving the bearing
① Hammer ② Bearing driver ③ Ball bearing

7. Inspect anchor pin for bend.
8. Inspect and tighten any loose spokes. [15～40 kg-cm] (1.1～2.9 ft-lbl]
9. Check for air leak by submerging the tube in water.
10. Check the tire for damage to casing, both inside and outside.
11. Balance wheel assembly.

D. Reassembly

1. The tube can be easily mounted by inflating with small amount of air to make the tube firm. **(Fig. 4.80)**

NOTE :

(a) After the tire is mounted, inflate with approximately 1/3 the designated pressure and lightly tap around the tire with a wooden hammer to eliminate any pinching of the tube. **(Fig. 4.81)**

(b) The valve stem should be positioned pointing toward the axle to prevent damage to the tube. **(Fig. 4.82)**

(c) Inflate the tire to the specified pressure.
For normal riding : **1.8 kg/cm² (25.6 lbs/in²)**
2.0 kg/cm² (28.4 lbs/in²)

2. Grease the 6302Z ball bearing and pack the inside of the front wheel hub with grease, and insert the spacing collar. Drive in the ball bearing using the bearing installer. **(Fig. 4 83)**

NOTE :

The 6302Z ball bearing incorporates a seal on the outside, therefore, make sure that the bearing is not installed in the inverted position.

3. Hook the spring on the front brake shoe and then install the anchor pin and brake cam. Assemble the unit to the front brake panel.

NOTE:

Punch marks on the brake arm and brake cam must be aligned. **(Fig. 4.84)**

4. Assemble the panel together with the distance collar to the front wheel.

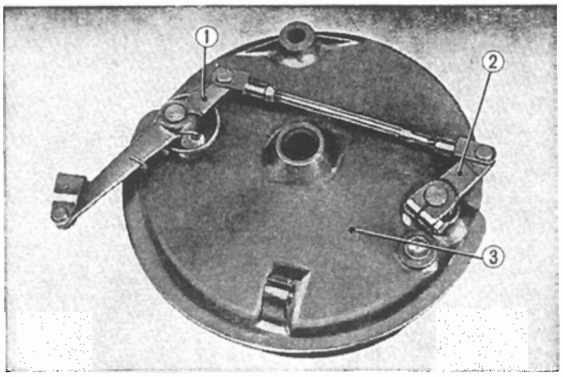

Fig. 4.84 Installing the front brake arm
① Front brake arm A ② Front brake arm B
③ Front brake panel

NOTE:

Speedometer cable end must be parallel to the brake rod. **(Fig. 4.85)**

5. After tightening the front axle nut, mount the front wheel on the fork, connect the front brake stopper arm and assemble the front axle holder with 8 mm nut.
6. Connect the speedometer cable to the gear box.

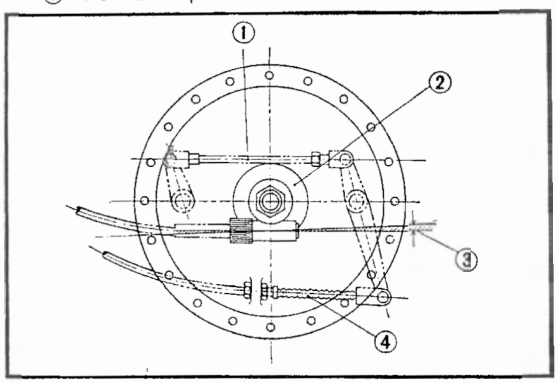

Fig. 4.85
① Front brake arm rod ② Speedmeter gear box
③ Installing range ④ Front brake cable

7. Connect the front brake cable to the brake arm and adjust the free travel. The specified free travel is 15~30 mm (0.6~1.2 in). Make the adjustment with nuts "a" and "b". **(Fig. 4.86)**

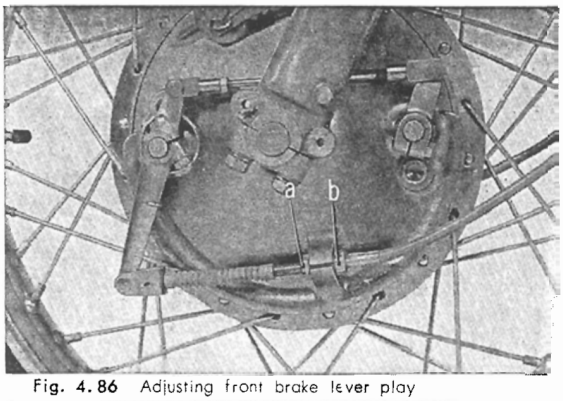

Fig. 4.86 Adjusting front brake lever play

8. Front wheel baiancing
   (1) Raise the front wheel off the ground and revolve the wheel slowly and allow the wheel to stop naturally.
   (2) Attach an appropriate weight on the spoke nipple which is at the highest point. (4 different weights are available) **(Fig. 4.87)**
   (3) Repeat this operation until the balance weight no longer stops in the same position.
   (4) When the balancing is completed, fasten the weight securely.

NOTE:

1. After the wheel is balanced, do not move or change weights.

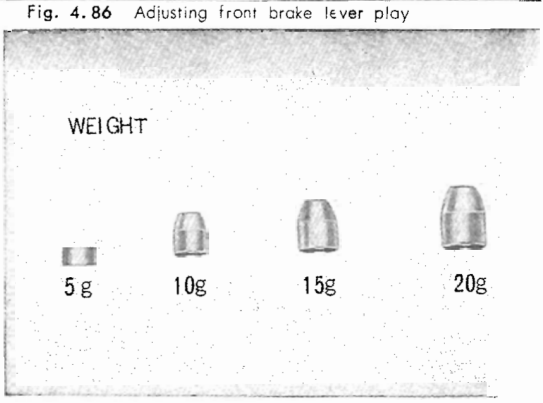

Fig. 4.87 Balance weight

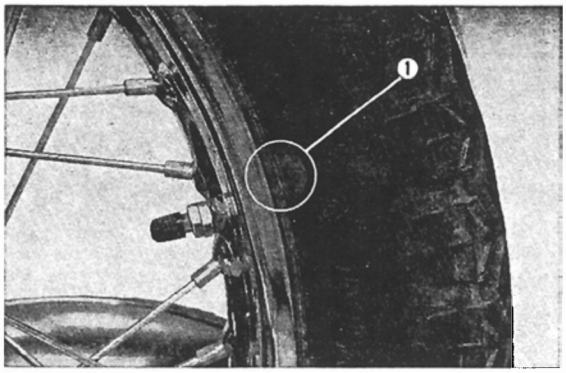

Fig. 4.88
① Balance mark

2. When the tire is replaced, the balance mark of the tire (yellow) and the tube stem valve must be matched **(Fig. 4.88)**. Rebalancing must be performed.

4.14 Rear Wheel

A. Construction

The rear wheel consists of an aluminum casting rear wheel hub which contains 6304Z and 6305Z ball bearings, brake drum, and the brake panel. A single cam rear brake panel is installed on the right side through the panel collar. The hub and final driven sprocket are mounted on the left side of the wheel hub by the drive sprocket bolts. **(Fig. 4.89)**

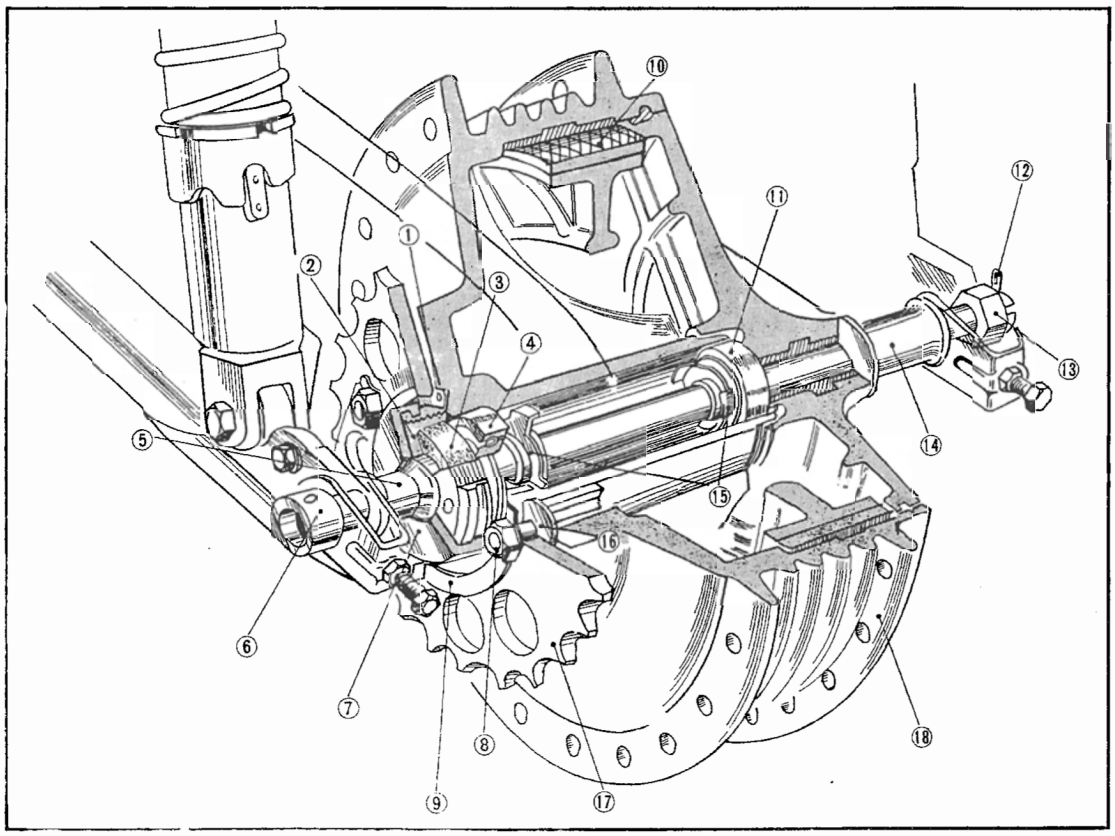

Fig. 4.89 Cross-section of rear wheel

① 73.8 mm circlip
② Rear wheel bearing ratainer
③ 34559 dust seal
④ 6305 Z ball bearing
⑤ Rear wheel side collar
⑥ Rear wheel axle
⑦ Bearing retainer
⑧ 10 mm nut
⑨ 10 mm tongue washer
⑩ Rear brake shoe
⑪ 6304 Z ball bearing
⑫ 4.0×10 mm center pin
⑬ Rear axle nut
⑭ Rear brake panel collar
⑮ Rear axle spacing collar
⑯ Driven sprocket bolt
⑰ Final driven sprocket
⑱ Rear wheel hub

B. Disassembly

1. Remove the drive chain joint, and disconnect the chain. **(Fig. 4.90)**
2. Remove the rear brake adjusting nut; separate the brake rod from the brake arm; remove the rear brake stop bolt, and separate the stop arm from the panel.

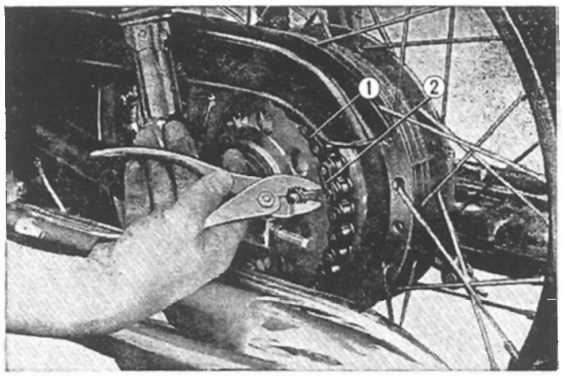

Fig. 4.90 Removing the drive chain clip
① Drive chain ② Drive chain clip

3. Extract the cotter pin from the axle.
4. Remove the rear axle nut and extract the rear wheel axle. Tilt the rear wheel, and remove. **(Fig. 4.91)**

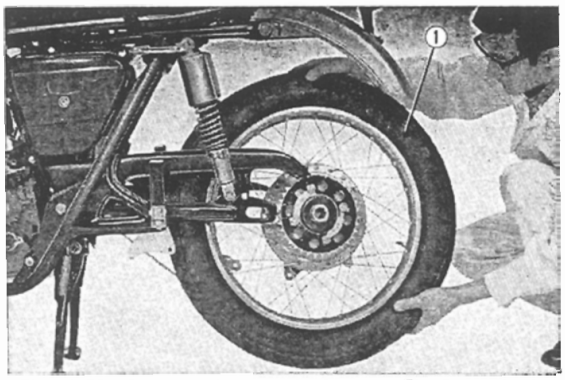

Fig. 4.91 Removing the rear wheel ① Rear wheel

5. Remove hub bearing retainer cap and 73.8 mm circlip, straighten the tongue washer, and remove the 10 mm nut. The final driven sprocket can then be separated from the rear wheel hub. **(Fig. 4.92)**

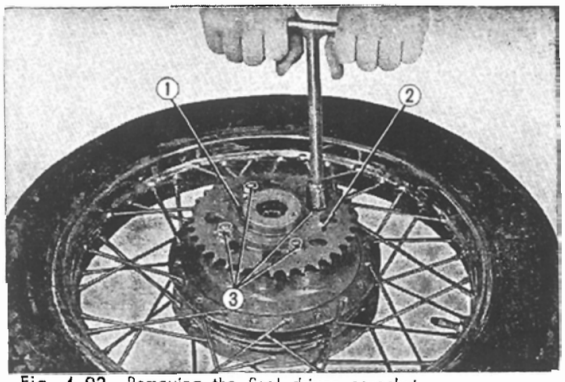

Fig. 4.92 Removing the final driven sprocket
① 73.8 mm circlip ② Final driven sprocket
③ 10 mm nut

6. Use the special tool (rear weel bearing retainer wrench) and remove the rear wheel bearing retainer. Pull out the 6304Z and 6305Z ball bearings, and rear axle spacing collar. **(Fig. 4.93)**

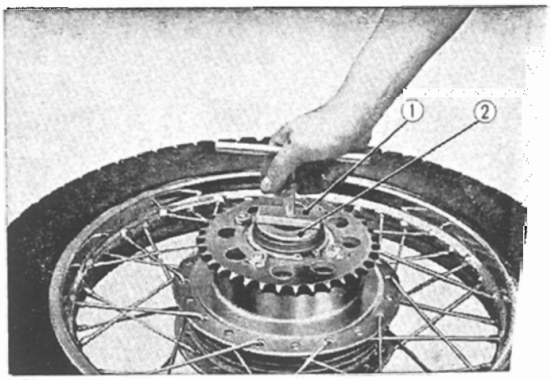

Fig. 4.93 Removing the bearing retainer
① Bearing retainer extractor ② Bearing retain

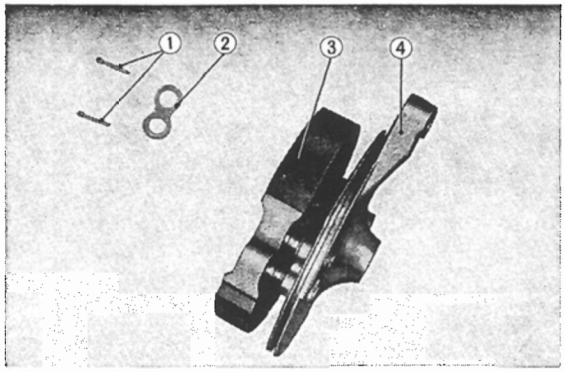

Fig. 4.94 Removing the rear brake shoe
① 2.5×20mm cotter pin
② Rear brake ancher pin washer
③ Rear brake shoe
④ Rear brake panel

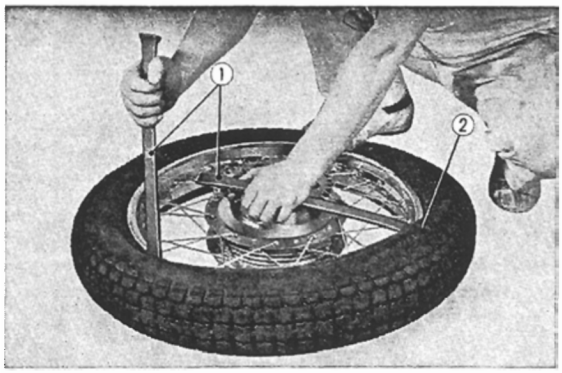

Fig. 4.95 Removing tire
① Tire lever
② Tire

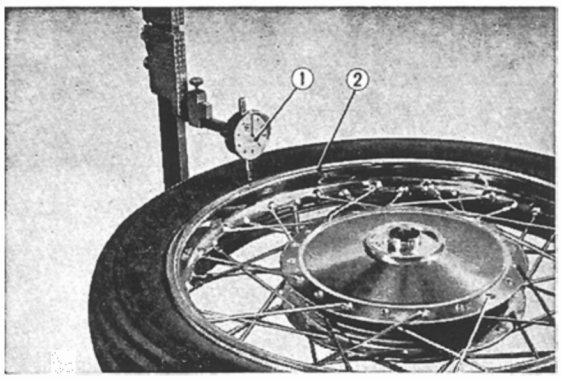

Fig. 4.96 Checking the rear wheel rim for runout
① Dial gauge
② Rear wheel rim

7. Remove 2.5×20mm cotter pin and anchor pin washer. Separate the brake arm from the panel in order to extract the rear brake shoe. **(Fig. 4.94)**

C. Inspection

1. Rim runout. **(Fig. 4.96)**

Item	Standard value	Serviceable limit
Side runout	Within 0.5mm (0.0197 in) (dial deflection)	Replace or repair if over 2.0mm (0.0787 in)
Vertical runout	Within 0.5 mm (0.0197 in)	Replace or oepair if over 2.0mm (0.0787 in)

2. Axle bend and wear. **(Fig. 4.97)**

Item	Standard value	Serviceadle limit
Outside diameter	19.947~19.98 mm (0.785~0.787 in)	
Bend	Within 0.05mm (0.0020 in)	Replace if under 0.2mm (0.0079 in)

3. Final driven sprocket root diameter.

Item	Standard value	Serviceable limit
Root diameter	167.23~167.37 mm (6.5757~6.5763 in)	Replace if over 166.3mm (6.5472 in)

4. Ball bearing axial and radial clearance.

Item	Standard value	Serviceable limit
Axial clearance	Within 0.05mm (0.0020 in)	Replace if over 0.01 mm (0.0004 in)
Radial clearance	0.01~0.02 mm (0.0004~0.0008 in)	More than 0.05mm (0.0020 in)

5. Rear brake shope spring.

Item	Standard value	Serviceable limit
Free length	56.4 mm (0.2205 in)	Replace if over 59.5mm (2.3425 in)

6. Rear brake shoe diameter.

Item	Standard value	Serviceable limit
Outside diameter	179.8~180.0 mm (7.078~7.087 in)	
Shoe thickness	5.0 mm (0.197 in)	Replace if under 2.0 mm (0.079 in)

7. Rear brake cam thickness.

Item	Standard value	Serviceable limit
Diameter	10 mm (0.39 in)	Replace if worn, deformed or unusual.

8. Check the anchor pin for bend.
9. Inspect and tighten all loose spokes.
10. Inspect tube for air leak by inflating and immersing it in water.
11. Inspect the casing for any damage on the inside and outside.
12. Adjust the wheel balance.

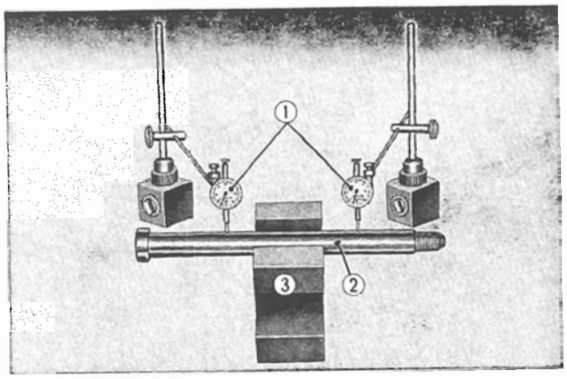

Fig. 4.97 Checking the rear axle for bend
① Dial gauge ② Rear wheel axle ③ V-block

D. Reassembly

1. The tube can be easily mounted by inflating with small amount of air to make the tube firm.

NOTE:

(a) After the tire is mounted, inflate with approximately 1/3 the designated pressure; lightly tap around the tire with a wooden hammer to eliminate any pinching of the tube.

(b) The valve stem should be pointed toward the axle.

(c) Inflate the tire to the specified pressure.
For normal riding: **2.0 kg/cm² (28.4 lbs/in²)**
For high speed riding: **2.2 kg/cm² (31.3 lbs/in²)**

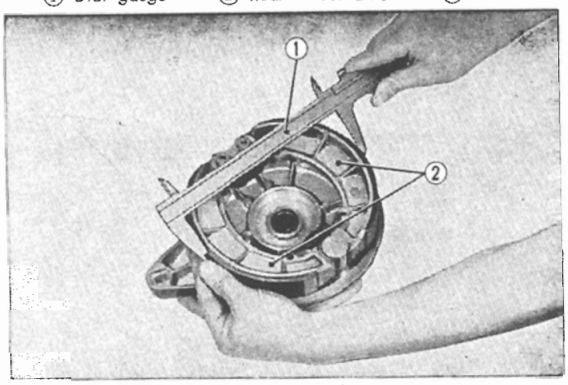

Fig. 4.98 Measuring the outside of the rear brake shoes
① Vernier caliper ② Rear brake shoes

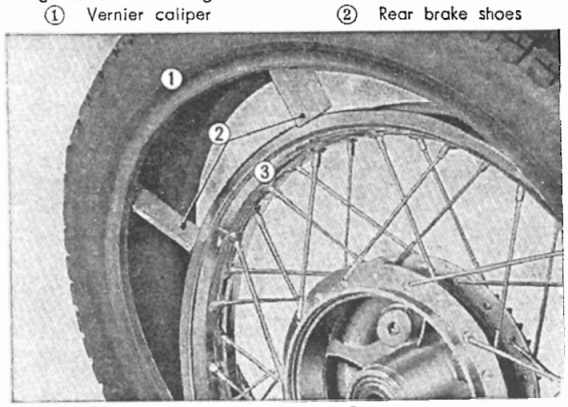

Fig. 4.99 Inspecting
① Rear wheel tire
② Wood spacer piece
③ Rear wheel rim

2. Grease the ball bearing and pack the rear wheel hub with grease. Insert the spacer and drive the bearing into place using a bearing installer. **(Fig. 4.100)**

NOTE:

The 6304Z and 6305Z ball bearing incorporate a seal on the outside, therefore, make sure that the bearing is not inverted.

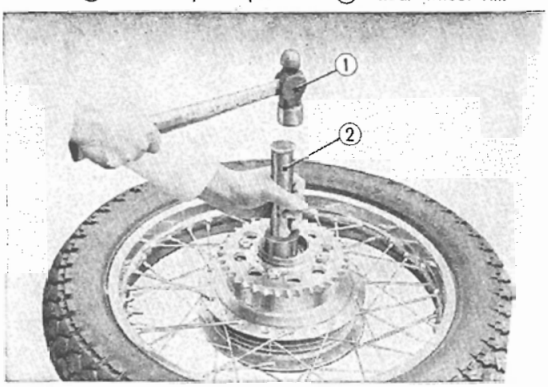

Fig. 4.100 Installing the bearing
① Hammer ② Bearing driver

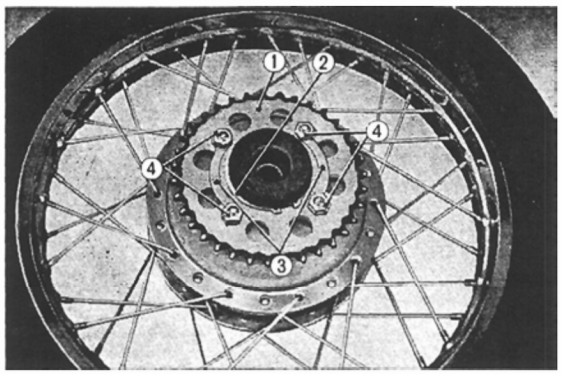

Fig. 4.101 Assembling the final driven sprocket
① Final driven sproket
② 73.8 mm circlip
③ Tongued washer
④ 10 mm sprocket retaining bolt

3. Mount the final driven sprocket on the drive flange with the sprocket retaining bolts, nut and tongued washer. **(Fig. 4.101)**

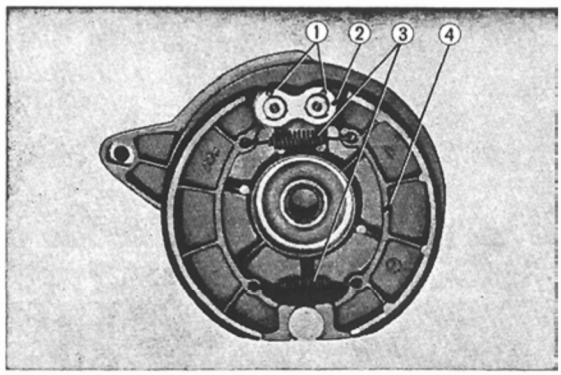

Fig. 4.102 Assembling the rear brake shoe
① 2.5×20 mm cotton pin
② Rear brake anchor
③ Rear brake spring
④ Rear brake shoe

4. Assemble the rear brake shoe to the brake panel and install the spring to hold the shoe in place.

Install the rear brake cam and brake arm on the panel. Assemble the anchor pin washer and lock with the cotter pin. **(Fig. 4.102)**

NOTE :

When installing the brake arm on the panel, align the punch marks on the brake arm and brake cam.

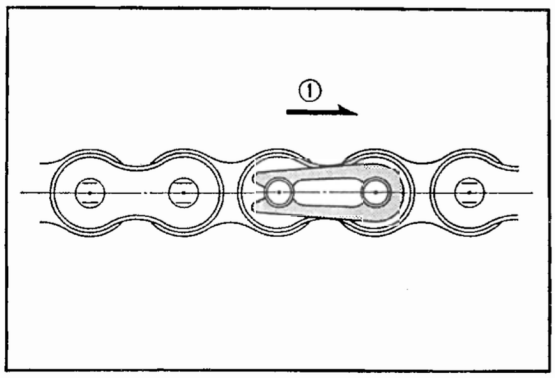

Fig. 4.103
① Direction of rotation

5. Assemble the panel on the rear wheel and mount the wheel assembly on the frame. Install the drive chain and make the proper adjustment before final torquing of the rear wheel axle. **(Fig. 4.103)**

NOTE :

Adjust the chain so that there is 1 to 2 cm (0.4 to 0.8 in) of slack and make sure that the chain adjuster on both sides are in the same relative position. **(Fig. 4.104)**

6. Install the rear brake stopper arm to the rear brake panel.
7. Install the rear brake rod to the brake arm. Set the rear brake panel on its side and adjust rear brake play. **(Fig. 4.106)**

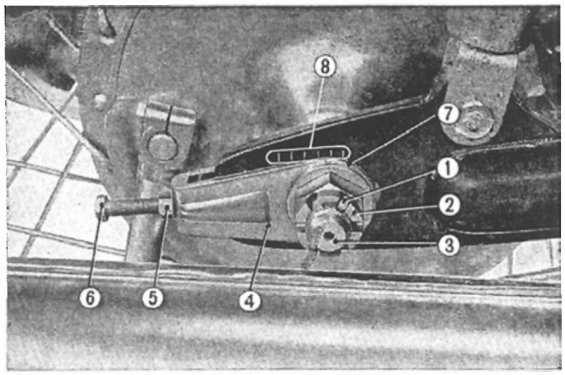

Fig. 4.104 Adjusting the slack of drive chain
① Cotter pin
② Axle nut
④ Rear wheel axle
④ Chain adjuster
⑤ Lock nut
⑥ Adjusting bolt
⑦ Index mark
⑧ Reference mark

NOTE :

The free travel of the rear brake pedal should be from 2 to 3 cm (0.8 to 1.2 in). **(Fig. 4.105, 4.106)**

8. Install the chain case.

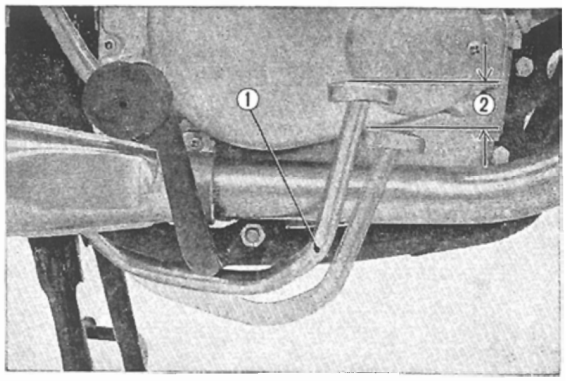

Fig. 4.105 Adjusting rear brake pedal play
① Rear brake pedal ② Free play

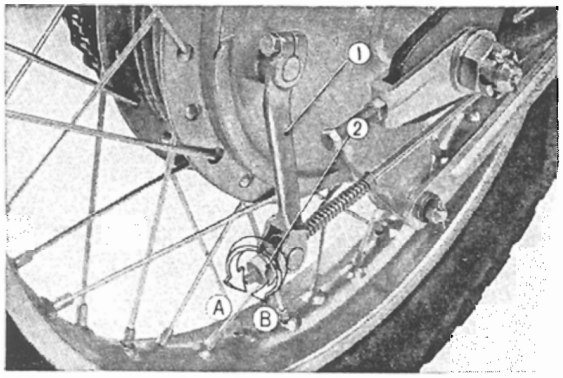

Fig. 4.106 Adjusting rear brake pedal play
① Rear brake arm
② Adjusting nut

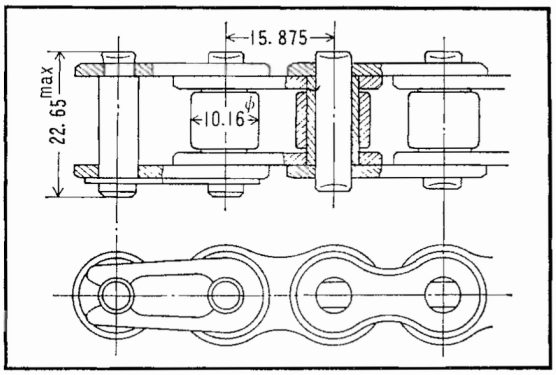

Fig. 4.107

5. ELECTRICAL PARTS

5.1 Electrical Equipment

1. Ignition system (ignition coil, condenser, contact breaker, spark plug)
2. Generating system (A. C. dynamo)
3. Rectifying system (selenium rectifier)
4. Battery
5. Connected load (lights, horn, starter)

The electrical equipment are the nerve system of the motorcycle and perform the vital functions of providing engine ignition, lighting for night riding and horn; the malfunction of any one of these will adversely effect the motorcycle operation. Therefore, careful attention must be given to their maintenance.

5.2 Power Supply System

Honda 450 employs the battery ignition system, utilizing the ignition coil and contact breaker. The generating system is a special A. C. dynamo for greater output. A selenium rectifier is incorporated for battery charging and supplying power to the connected loads.

5.3 Ignition Circuit

A. Ignition system

In a gasoline engine, the air-fuel mixture is ignited by some means at a precise time during the end of the compression cycle of the piston to produce combustion to operate the engine. This motorcycle utilizes a high voltage battery ignition system (Fig. 5.1)

B. Ignition coil

This motorcycle incorporates a 180° type crankshaft. The left and right cylinders are equipped with an independent ignition coil. (Fig. 5.2)

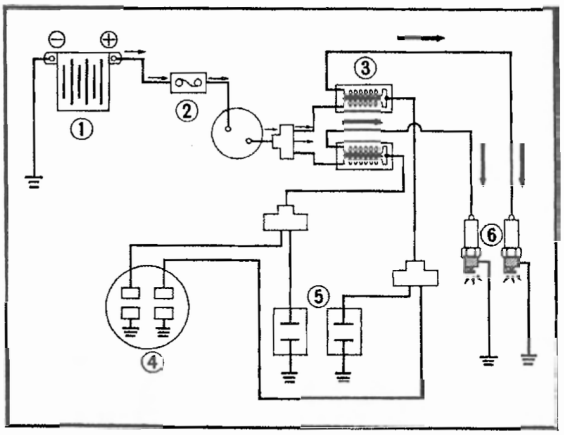

Fig. 5.1 Ignition system

① Battery	② Fuse
③ Ignition coil	④ A. C generator
⑤ Condenser	⑥ Spark plug

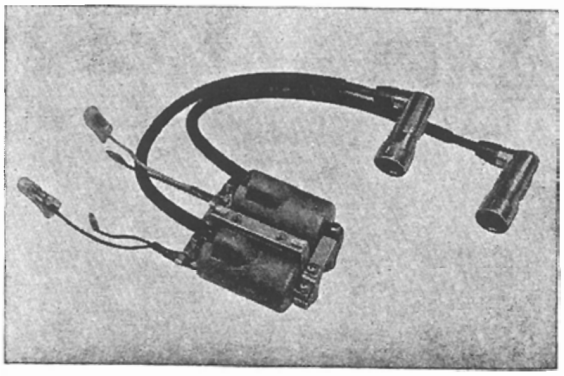

Fig. 5.2 Ignition coil

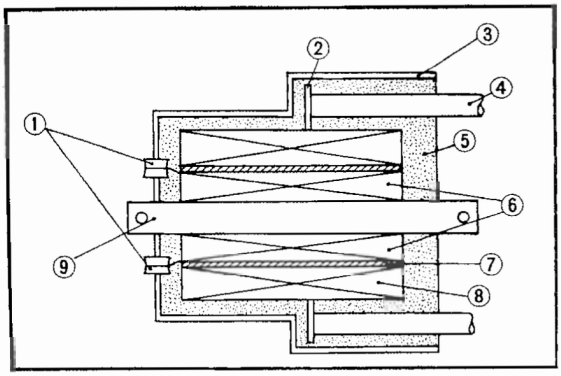

Fig. 5.3 Cross-section of ignition coil
① Primary terminal
② High tension terminal
③ Case
④ High tension cable
⑤ Synthetic resin
⑥ Primary coil
⑦ Bobbin
⑧ Secondary coil
⑨ Iron core

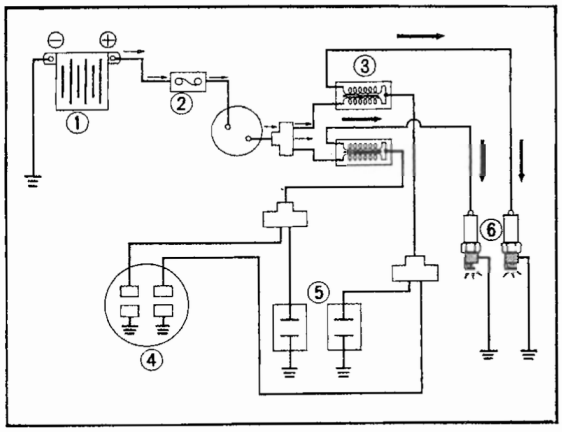

Fig. 5.4 Ignition system
① Battery ② Fuse
③ Ignition coil ④ A. C generator
⑤ Condenser ⑥ Spark plug

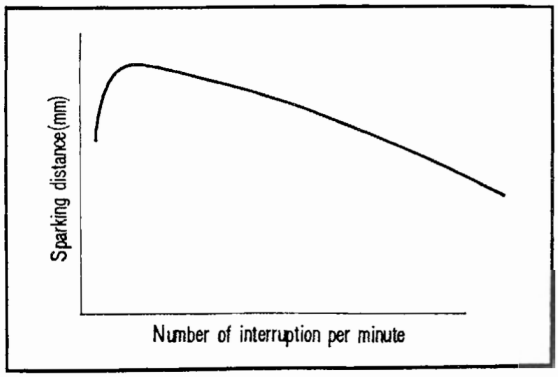

Fig. 5.5 Sparking distance diagram

1. Construction

The primary coil has 200 to 300 turns of 0.6 mm (0.024 in) enamel lead copper wire wound on an iron core. The secondary coil has 10,000 to 20,000 turns of fine enamelled copper wire of 0.08 mm (0.003 in) diameter wire wound on top of the primary coil and covered with dielectric material; and the complete unit is then molded in synthetic resin with two exposed output teminals **(Fig. 5.3)**

2. Principle of operation

When the camshaft is rotated in a direct cyclic relation to the crankshaft, a high voltage is induced in the secondary coil by the following sequence of events. **(Fig. 5.4)**

a. With the contact breaker points closed, current which flows through the primary coil in the direction shown by the arrow induces a magnetic field and energizes the iron core.

b. Next, when the breaker points are opened by the cam, the magnetic field induced by the primary coil suddenly starts to collapse.

c. Due to the sudden change in the magnetic field and the large number of windings in the secondary coil, a high voltage is induced in the secondary coil.

d. The induced high voltage initially energizes the secondary coil and as the voltage rises, it flows through the high tension cord and to the spark plug.

e. When the voltage rises to a certain level, the current jumps across the spark plug electrode gap and ignites the fuel mixture in the combustion chamber. After the voltage build-up has been discharged, the voltage drops suddenly and discharges the entire voltage build-up which was charged in paragraph .d above. This is followed by the discharge of the energy stored in the coil.

f. The magnetic field rapidly falls to the point that the arcing across the spark plug gap can no longer be sustained and consequently ceases.

g. The residual energy in the coil due to the weakened magnetic field produces a damped oscillation in the secondary and the primary coils and is dissipated in the circuit as resistance.

h. This operation is repeated by the preset angle of the cam and the sequence of events is recycled back to paragraph a.

3. Testing

The performance of the ignition coil does not normally deteriorates provided that the coil is not damaged by a hard blow or the terminal areas kept free of dirt, oil and other foreign matters. Refer to Section P.139 of the Servicing Section for testing of the coil. **(Fig. 4.6, 5.7)**

4. Coil spark characteristics

Engine rpm	Spark	Battery voltage
300	7 mm (0.276 in) Min	8 volts
10,000	7 mm (0.276 in) Min	14 volts

For right and left ignition coil for engine with 180° type crankshaft

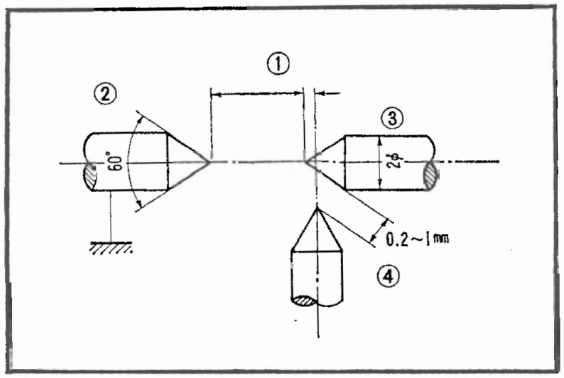

Fig. 5.6 Vertical type electrode space
① Sparking space
② Secondary electrode
③ Primary electrode
④ Tartiary electrode

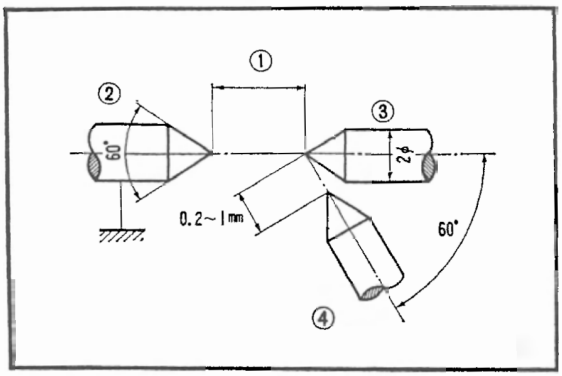

Fig. 5.7 60 degree type electrode space
① Sparking space
② Secondary electrode
③ Primary electrode
④ Tartiary electrode

C. Spark Advancer

The spark advancer is a device which automatically advances the ignition timing with the increase in engine speed. To do this, the breaker arm is held stationary and the position of the cam is changed corresponding to the engine speed. The spark advancer which is used, utilizes the centrifugal force to move the cam. The spark advancer when static is held in the zero advance position (5° BTDC) by the force of the spring as shown in **Fig. 5.8.** As the speed of the engine increases, the centrifugal force of the advancer weight overrides the force of the spring and starts to move outward, moving the cam in the direction of rotation, in other words, advances the cam to produce an early ignition.

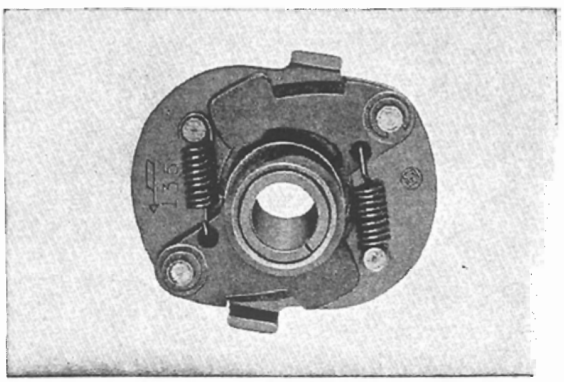

Fig. 5.8 Spark advancer

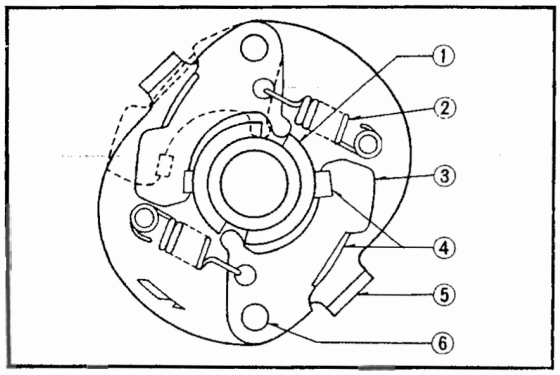

Fig. 5.9 Spark advancer
① Breaker cam
② Governor spring
③ Governor weight
④ Rubber
⑤ Stopper
⑥ Governor weight support

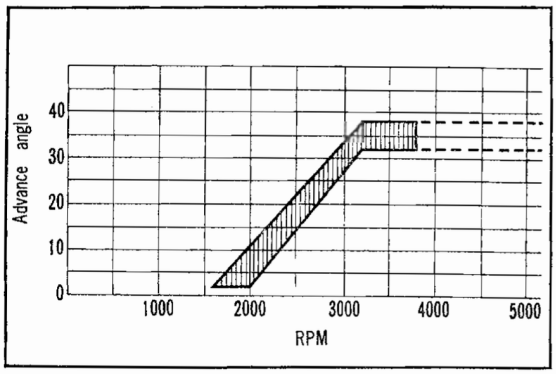

Fig. 5.10 Graph for advance angle

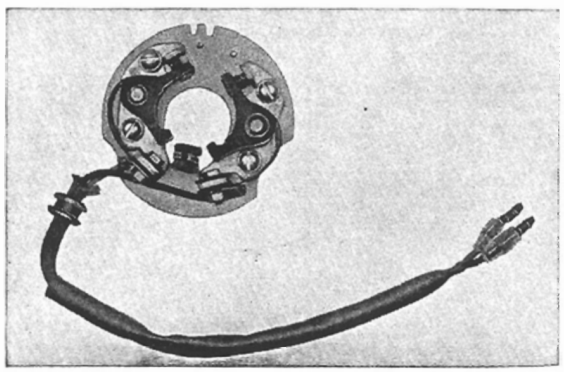

Fig. 5.11 Contact Breaker

The dotted lines in **Fig. 5.9** show the cam in full advanced position. Spark advancer starts functioning at an engine speed of approximately 2000 rpm and becomes fully advanced at 3400 rpm, advancing the spark 40°. The spark advancer is assembled on the cam shaft and at the exposed breaker point area, only the breaker point cam is visible. The major portion of the spark advancer mechanism is located below the breaker point assembly plate and is not easily accessible. The entire assembly is mounted on the left front side of the cylinder head, providing good stability. The spark advance characteristics are shown in **Fig. 5.10.**

Start of spark advance: 2000 rpm engine speed
Spark fully advanced: 3400 rpm engine speed
Total spark advance angle: 35°

D. Contact Breaker

The contact breaker is mounted on the camshaft together with the spark advancer and performs an important function of positively disrupting the primary ignition circuit.

The contact breaker is mounted on a base plate and is composed of a breaker arm, points (fixed and movable), primary terminal, spring and lubricating felt. A movable contact point is mounted on one side of the breaker and is electrically insulated from the base **(Fig. 5.11)**

It is essential that the action of the breaker arm always be smooth and in order to minimize the inertia, it must also be light and compact in addition to being strong. A strong spring tension is required on the breaker arm to prevent chattering during the collapse of the primary circuit, however, on the other hand, tension must not be excessived so as to cause wear of the friction areas. This would then result in change to the ignition timing. It should normally be between 500-700 g (17.64-24.70 oz,).

To prevent wear to the friction areas, apply a small amount of grease to the felt lubricating wick and also remove the breaker arm and apply grease to the groove in the shaft or to the lubrication hole.

On this model, a camshaft with a single profiled cam lobe incorporating a spark advancer is installed in the cylinder head. Two contact breakers are mounted on the base plate directly opposite

and forming an angle of 90°. It is designed to operate with their respective right and left cylinder to provide the proper ignition timing.

Note :

1. Oil on the point surface will cause:
   a. Darkened points, resulting in excessive wear.
   b. If oil is left for a long time without removal, a hard film will be formed and eventually result in misfiring.
2. Dress the pitted or dirty point with either a point file or emery paper, however, if the condition is relatively severe, remove the breaker arm and dress the points on both the arm and the stationary point with an oil stone, making sure that the points will have parallel contact when assembled. The point gap should be adjusted to 0.3~0.4 mm (0.012~0.016 in)
3. Replace the breaker arm if the pivot hole is worn excessively.
4. Always maintain the contact breaker terminal and insulators as well as the wiring free from water, oil, and foreign matters.
5. After the points have been dressed, clean the surfaces with a clean rag soaked in small amount of trichloroethylene, further, oil or other foreign matters should not be permitted on the breaker assembly

E. Condenser

The purpose of the condenser is to prevent unwanted sparking across the points, however, if the condenser capacity is too large, ignition spark will deteriorate. The condenser should normally have a capacity of $0.24 \pm 10\%$ μF. Further, a high voltage of several hundred volts will be applied to the condenser at the moment that the points open and therefore, it must be able to withstand a high surge voltage. **(Fig. 5.12)**

A simple condenser test can be performed during the insulation resistance test with the megger. Remove the condenser from the megger and use a piece of wire to short across the condenser body and the lead terminal. If a good strong spark is produced, the condenser can be considered in satisfactory condition. It is unlikely that the capacitance value of the condenser will change. With the use of the service tester, an accurate measurement can be made of the capacity and resistance value.

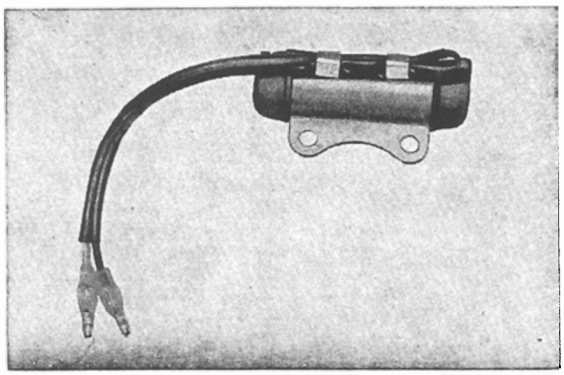

Fig. 5.12 Condenser

F. Spark Plug

Spark plug performs one of the most important functions of the engine ignition system. The high voltage produced by the ignition coil is routed through the high tension lead to the spark plug and causes the current to discharge across the center electrode to the side electrodes in a form of a spark within the combustion chamber of the engine. This spark ignites the compressed fuel mixture which produces the energy to operate the engine. Since it must perform under different adverse conditions, durability and reliability are primary requirements. Honda 450 uses the spark plug type **NGK B-8 ES.**

1. Spark plug requirements

In order for the spark plug to perform satisfactorily. it must fulfill the following conditions.

a. Electrical insulation: Electrical current follows the path of least resistance and, therefore, it is constantly seeking a path having less than that of having to jump across the spark plug gap. The resistance of the insulator under normal temperature is high but it deteriorates with increases in temperature, therefore, the insulator must be made of material that does not change with the temperature.

b. Mechanical property: The pressure within the cylinder during combustion is from 35 to 45 kg/cm^2. If the spark plug is inadequately sealed, the pressure will leak through the spark plug and also causing the plug to heat up, resulting in loss of efficiency. The spark plug must possess superior mechanical properties so that it is able to withstand high temperature and pressure as well as vibration and shock.

c. Heat conduction: The combustion temperature of the fuel mixture exceeds 2,000°C (3,632°F) within the cylinder and this heat must be dissipated as rapidly as possible or the plug will overheat, causing preignition as well as damaging the electrodes. This will prevent effecient performance of the engine. Spark plug must, therefore, be able to withstand rapid temperature changes and further must also be able to dissipate the heat produced by the combustion gas and electrical discharge.

d. Carbon deposit: When carbon deposits build up around the insulator due to improper com-

bustion, part of the high voltage is lost and a poor spark is produced at the spark plug electrodes, causing engine malfunction.

e. Lead compound: Tetraethyl lead is added to the gasoline as an antiknock additive. Lead oxide is formed during combustion and adheres to the insulator of the spark plug. This becomes an electrical conductor at high temperature and causes the partial loss of the high voltage current; resulting in engine malfunction. It is required that the insulator and the electrodes be free from being chemically affected under high heat condition.

2. Spark Plug

The construction of the type spark plug most commonly used today is shown in cross section by **Fig. 5. 13**

a. Electrode

The material of which the electrode is made should be one that is highly resistant to wear, possess low discharge voltage, high heat conductivity, acid resistance and must be a good electrical conductor; further, it must be readily workable. Nickel alloy and metal having high heat and corrosion resistant is used **(Fig. 5. 14)**

b. Insulator

The insulator is usually made of high quality alumina. Since voltage of 6 to 15 KVA is applied to the electrode and exposed to temperature exceeding 2000°C, the insulator must be able to withstand these conditions. The chief benefits derived from using this type insulator are:

(1) The insulating property under high temperature condition is superior and the possibility of flashover is reduced due to the ribs formed on the head of the insulator body. Misfire of the ignition under high speed and loaded condition is eliminated.

(2) Due to its good heat conducting property, the heat of the plug is rapidly dissipated, preventing any overheated condition.

(3) Its high resistance to thermal shock prevents damages to it from sudden heating and cooling.

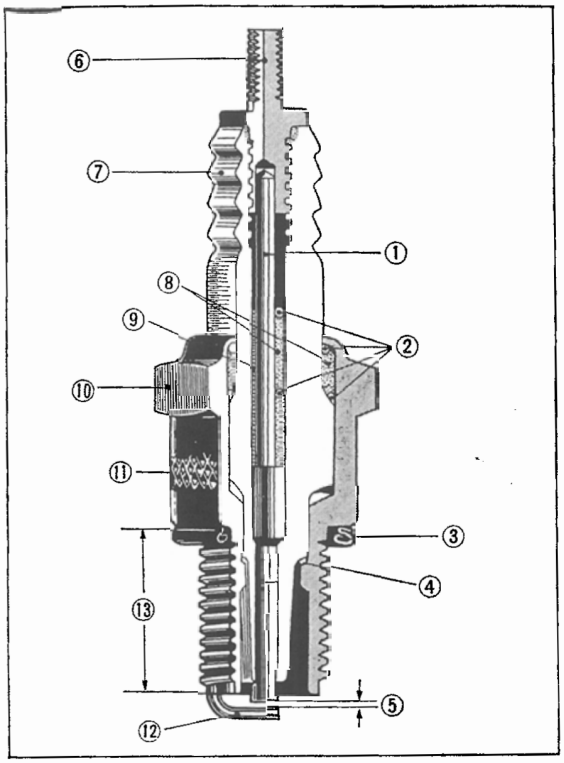

Fig. 5. 13 Cross-section of spark plug
① Center electrode
② Wire packing
③ Gasket
④ Plate packing
⑤ Spark clearance (gap)
⑥ Terminal
⑦ Insulation (with corrugation)
⑧ Filled powder
⑨ Bonding
⑩ Hex nut
⑪ Metallic main body
⑫ Ground electrode
⑬ Length of thread (reach)

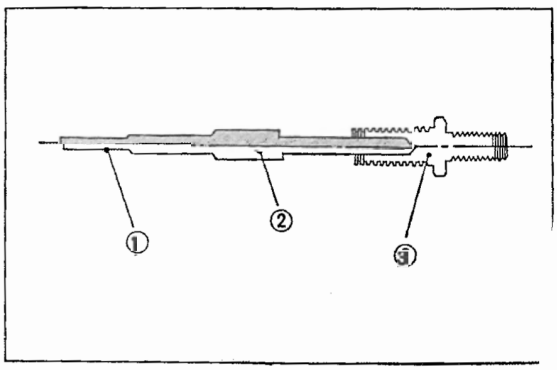

Fig. 5. 14 Electrode construction
① Special nickel alloy material
② Copper wire material
③ Iron wire material

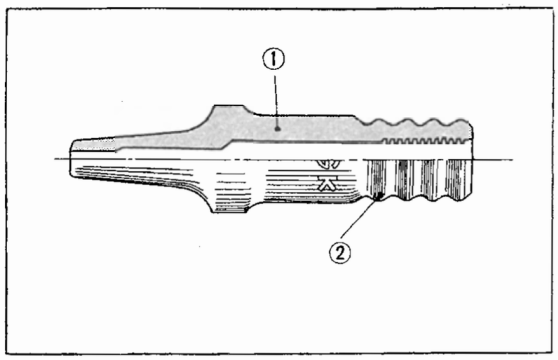

Fig. 5.15 Insulator construction
① High quality alumina
② Corrugation (flashover prevention)

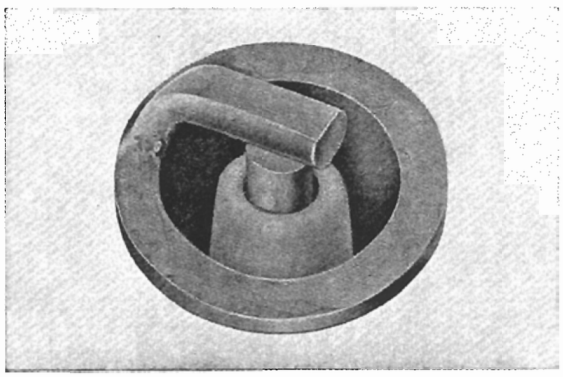

Fig. 5.16 Satisfactory condition

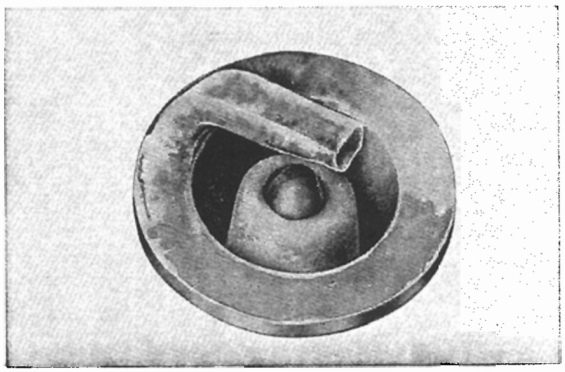

Fig. 5.17 Excessively burned condition

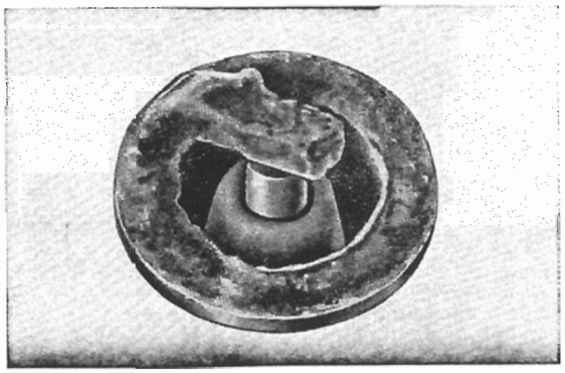

Fig. 5.18 Sooty condition (dry

Powdered Filler

Different types of powder filler are used to form a seal between the insulator and the center electrode as well as between the insulator and the metal shell. The heat of the center electrode is uniformly dissipated to provide a product having a uniform quality heat range. A special alloy having a high heat resistant value is used for the center electrode to minimize the wear and meet the high compression pressure of the engine. Further, a large center electrode is used for rapid heat dissipation and also to reduce wear.

3. Spark plug thermal characteristics

The thermal characteristics of the plug are the most important factor of the spark plug operating efficiency. Suitability of the spark plug for an engine is based on its thermo characteristics.

a. Ideal condition for plug performance

The tip of the spark plug extended into the cylinder head is constantly exposed to contamination by the carbon produced as a product of fuel combustion and also to the oil entering the combustion chamber. These foreign matters are electrical conductor and when it forms on the electrodes, a short circuit path for the high voltage is produced. As the result, the ignition spark becomes deteriorated causing engine to misfire, resulting in loss of power and in extreme case, the engine becomes inoperative. In order to prevent this condition, the insulator firing area must be maintained at a temperature which will burn off the carbon. This temperature will vary with different type engine, riding condition and type fuel used, but it is generally between 450°C and 600°C (842°F and 1,112°F). This temperature is referred to as the self-cleaning temperature. If this temperature is too high, the insulator firing area will become overheated, igniting the fuel mixture and causing a phenomena called pre-ignition. This will cause loss of power in the engine, therefore, the insulator firing area should be held below 800°C (1,472°F), with some degree of variance for different type engine, to prevent pre-ignition. In other words, the firing area of the insulator should be neither too cold nor too hot.

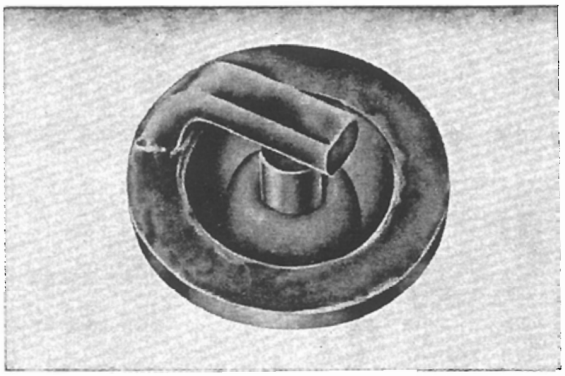

Fig. 5.19 Sooty condition (wet)

b. Heat dissipation

The spark plug heated by the heat of combustion from the engine is dissipated by the path shown in **Fig. 5.20**. The heat from the combustion must be equal to the heat dissipated; by so doing, the insulator firing area can be maintained at a constant temperature **(Fig. 5.20)**

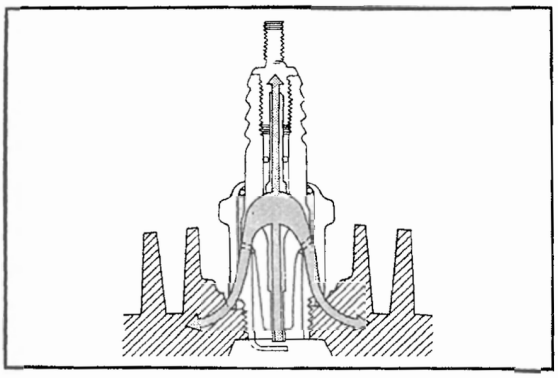

Fig. 5.20 Heat dissipation

c. Heat Range

The temperature of the spark plug in the engine will differ largely with the condition such as, the type of engine (whether air or liquid cooled, 2 or 4 cycle), design (compression ratio, shape of the combustion chamber, location of the spark plug etc.), operating condition (speed, load, type fuel).

The spark plug must function satisfactory under these varying conditions. The rate of heat dissipation of the plug is called the "heat range". The heat range is determined by the shape, construction, dimension, and the characteristics of the spark plug. A plug which readily dissipates the heat and which is difficult to overheat is referred to as the "cold type" (high temperature use) and the plug which retains the heat and burns readily is referred to as the "hot type" (cold temperature use). On engine operating with high temperature, a plug which is difficult to overheat, in other words, the cold type is used and for engine operating with low operating temperature, a hot type plug is used **(Fig. 5.21)**. CB 450 and CL 450 uses an **NGK B-8 ES** type 14 mm spark plugs.

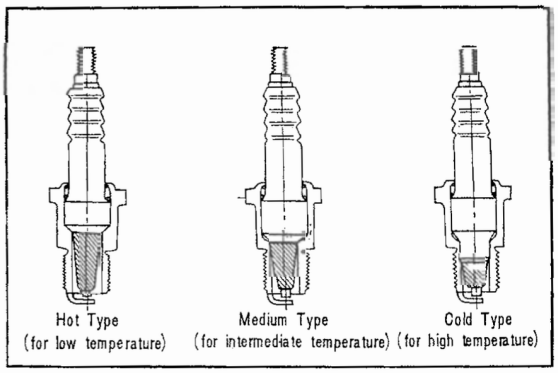

Fig. 5.21 Cross-section for comparison of heat Characteristics

4. Spark Plug Reach

The reach of the spark plug refers to the length of the threaded section. Plug should be selected which has the proper reach.

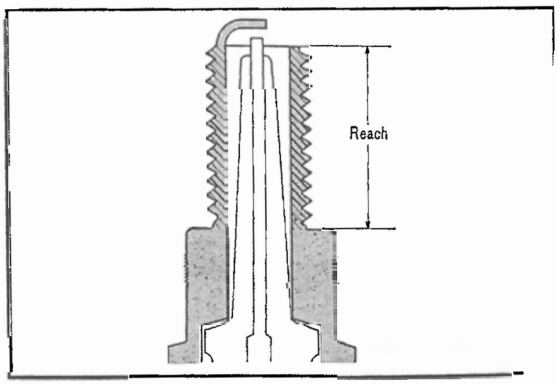

Fig. 5.22 Reach

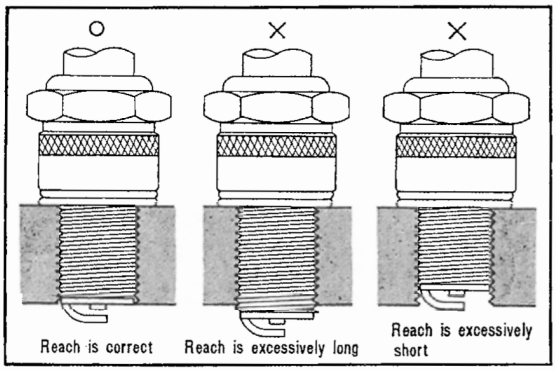

Fig. 5.23 Spark plug reach

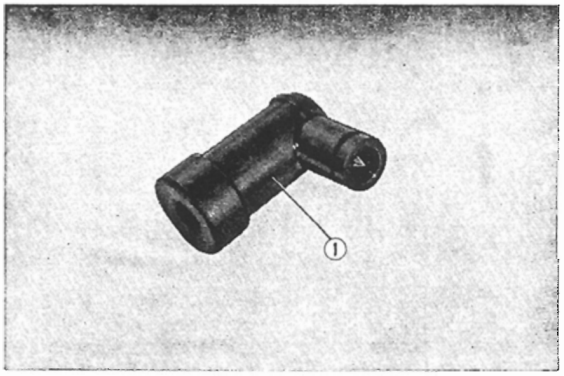

Fig. 5.24 Noise suppressor cap

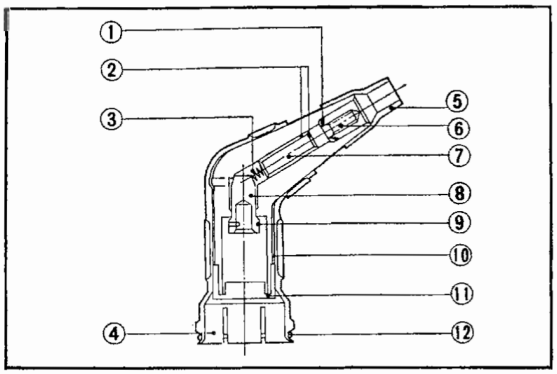

Fig. 5.25 Cross-section of noise suppressor
① Screw
② Resistance cap
③ Contact spring
④ Seald cover
⑤ Water proof terminal cap
⑥ Screw weed
⑦ Resistor
⑧ Terminal connector
⑨ Spring
⑩ Noise suppressor body cap
⑪ Terminal seal
⑫ Spring

The following undesirable condition will develop if plug of improper reach is used.

(1) Reach too long
   a. Carbon will be deposited on the exposed thread of the plug and cause damages to the threads in the spark plug hole during plug removal.
   b. Tip of the spark plug will become overheated and cause pre-ignition.

(2) Reach too short
   a. Carbon will be deposited on the threads at the bottom of the plug hole and when the spark plug of the proper reach is installed, the threads in the plug hole will be damaged.
   b. Due to the cavity left by the short reach, exhaust gas will accumulate, causing a decrease in power output, overheating and engine malfunction.

The consequence of using improper reach plug can be detrimental, therefore, make sure that the specified plugs shall be used **(Fig. 5.23)**

5. Noise Suppressor

The oscillating current which contains the high frequency radio wave produced by the high tension ignition circuit is radiated from the high tension circuit and the vehicle chassis to cause interference to the reception of the radio and television sets. To prevent this undesirable condition, the spark plug is fitted with a suppressor.

The suppressor consists of a resistor incorporated within the plug cap and housed in the shield cover. The resistor functions as a diminishing resistor, the shield cover increases the high frequency suppressing characteristics as a combined part of the suppressor.

(Caution)

1. The suppressor should be handled in the same manner as the plug cap, however, provide adequate care to the junction of the high tension cord and make sure that the cord is fully screwed in.
2. If the resistance value should accidentally change or if the value should become infinate, it should not effect the performance; (discoloration of the outer insulated coating) it is recommended, however, that it be changed with a new item.
3. Suppressor with missing waterproof caps should never be used (flashover with consequent malfunction of the ignition system will result).

5. 4 Power Circuit

A. AC generator

The operating principle of the AC generator is the same as for the flywheel magneto or the DC generator. Electricity is produced by the iron core cutting across the magnetic field.

In an AC generator, the voltage produced changes direction alternately, the frequency per revolution being dependent upon the number of magnetic pole pieces. One frequency change cycle occur each revolution for two pole pieces. As an example, a six pole AC generator will have 3 frequency change cycle occuring every revolution.

The change in output voltage is dependent upon the strength of the magnetic field. This change is brought about by the number of poles, magnetic strength of poles, speed of the generator, or by the number of windings in the coil.

The advantage of the A. C. generator is that the malfunction as compared to the other type generator is far less due to its simple construction and fewer moving parts which are subject to wear.

Another major advantage is that the kick starter can be employed as an auxiliary starting method whenever the battery is completely discharged.

This is possible since the A. C. generator induces a large voltage which when fed through the rectifier to the ignition coil or when fed directly to the ignition coil will produce spark sufficiently large to produce an ignition spark.

This feature is for the fact that since the battery mounted on motorcycle is a low capacity type and the battery often becomes completely discharged due to carelessness. (Fig. 5. 26, 27. 28)

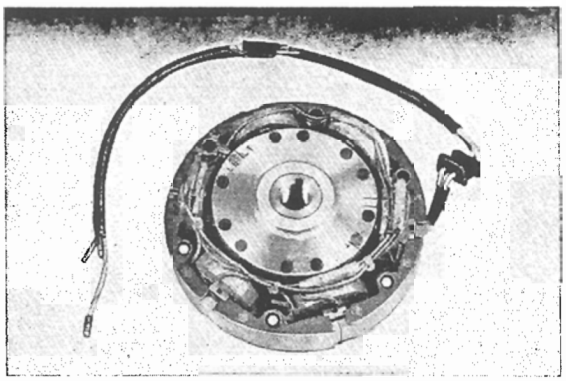

Fig. 5. 26 A. C generator

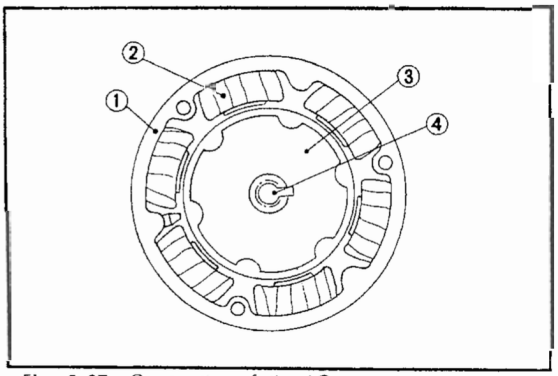

Fig. 5. 27 Construction of the AC generator
① Stator ② Coil ③ Rotor
④ Crankshaft

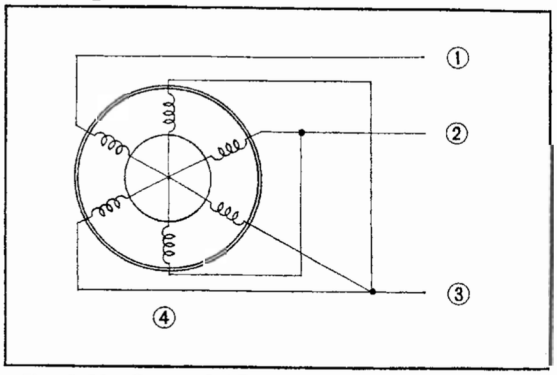

Fig. 5. 28 Circuit of AC generator
① Yellow (daytime) ② Pink (night time)
③ Brown (common) ④ Generator

B. Current Limiter

The current limiter is used to prevent the battery from overcharging during long period of driving at high speed. Current limiter used on the 450 is a new SCR (Silicon controlled rectifier) type which has no moving parts, an electronic relay utilizing the special features of the semi-conductor. It is compact, light and easy to install. Its biggest advantage is that it provides very stable control of the output voltage and its use is semi-permanent. (Fig. 5. 29)

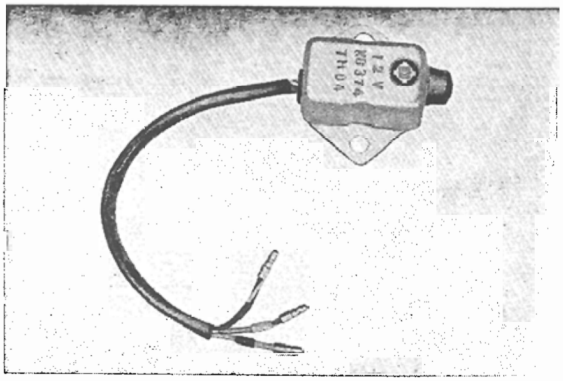

Fig. 5. 29 Current limiter

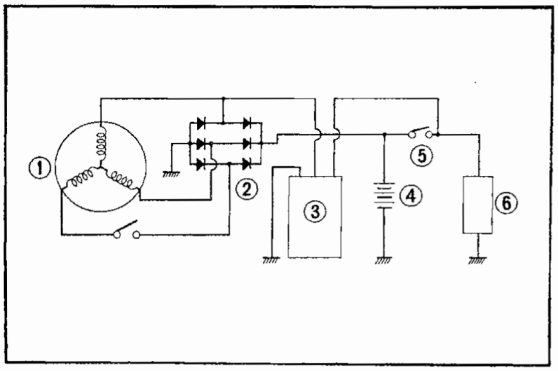

Fig. 5.30 Charging wiring with current limiter
① AC generator ② Selenium rectifier
③ Current limiter ④ Battery
⑤ Ignition switch ⑥ Load

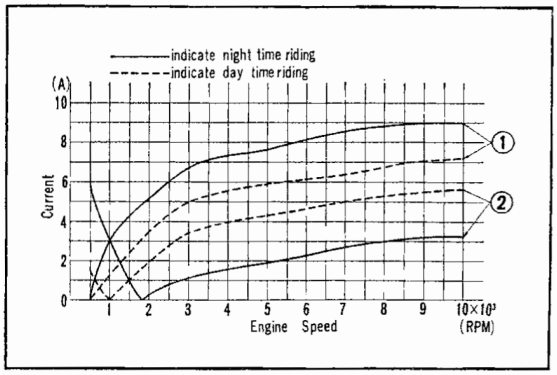

Fig. 5.31 AC generator characteristic
① Full wave rectifying current
② Battery discharging-charging current

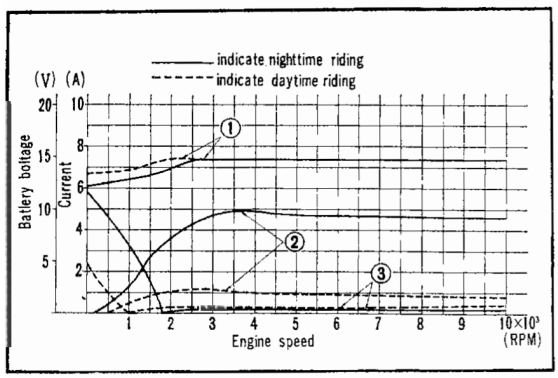

Fig. 5.32 AC generator with current limiter
① Battery voltage
② Full wave rectifying current
③ Battery discharging-charging current

1. Installation

This type current limiter can be installed on any engine circuit which utilizes A. C generator for charging the battery, however, make sure that the correct type is used.

The construction and the wiring are practically the same with all types; however, since the capacities will differ, one which has the proper capacity must be used or else, it may become damaged.

2. Operation

As the battery continues to become charged, the resistor within the current limiter senses the current flow and as overcharge condition develops, the excess charge current is controlled by grounding.

3. Servicing

(1) Do not remove the rubber cap installed on the outside of the current limiter body. The nut under the rubber cap should not be tampered with. Rubber cap is to prevent grounding and if used without the cap, a possibility of accidental grounding may result.

(2) When servicing, make sure that the key switch is in the OFF position.

(3) During installation, make sure that the unit is properly mounted, and perform the wiring properly.

(4) Improperly wired current limiter will not only cause damage to the unit, but will also damage the battery.

(5) Use only the current limiter which has been specified.

4. Characteristic

Fig. 5.31 and 32 shows the comparative difference in battery voltage and the battery charging current between the use of the SCR current limiter and without its use. **(Fig. 5.31, 32)**

This current limiter senses the battery terminal voltage and controls the input from the generator, therefore, the battery terminal voltage is maintained constant without regards to the generator rpm.

When the battery charge is low, the limiter will not function and the battery will be charged with the current as if the limiter had not been connected into the circuit. As the battery becomes charged and approaches and exceeds the value controlled by the limiter, the limiter will start functioning. **(Fig. 5.30, 31, 32)**

A. C. generator capacity for 450

The generator charging characteristics under the normal rated electrical load is as follows A.C generator specifications

1. Speed and direction of rotation
   Normal : 300 to 11, 000 rpm
   Counter'clockwise rotation
   Maximum : 22, 000 rpm
2. Normal load
   Battery capacity : 12V/12AH (10 Hr. rating)
3. Night load
   In addition to the normal load, one 35W, two 3W and one 8W lamps loads are added.
4. Charging Characteristics

Load	Charging initial rpm	Charging current (A)		
		3000 rpm	5000 rpm	10000rpm
Day: Ignition coil	1000 rpm Max	3.5±0.5	4.5±0.5	5.7 Max
Night (I) Ignition coil +12V 35W (H•L) +8W (T•L) +3W (B•L) +3W×2 (M•L)	1800 rpm Max	1.1 $^{+0.5}_{-0.1}$	1.9 $^{+0.5}_{-0.3}$	3.2 Max
Night (II) Ignition coil +12V 25W (H•L) +8W (T•L) +3W×2 (M•L)	1500 rpm Max	2.1±0.5	2.9±0.5	4.0 Max

5. Cable Color Code
   Normal circuit : Yellow
   Night circuit : White
6. Ignition timing mark
   Timing marks LT and LF are marked in black.

C. Selenium Rectifier

Rectifier is a device which changes the A. C (alternating) current to D. C (direct) current and is used in conjunction with an alternator or A. C generating coil.

The principle of its rectification function is that it permits the current to flow in one direction but allows only a very small amount to flow in the reverse direction. The type rectifier most commonly used are the selenium, silicon and geranium rectifiers.

The rectifying element of the selenium rectifier is an assembly consisting of selenium wafers as terminal plates and spacers in the proper quantity and connected in either parallel or series, depending upon the direction of rectification. **(Fig. 5. 33)**

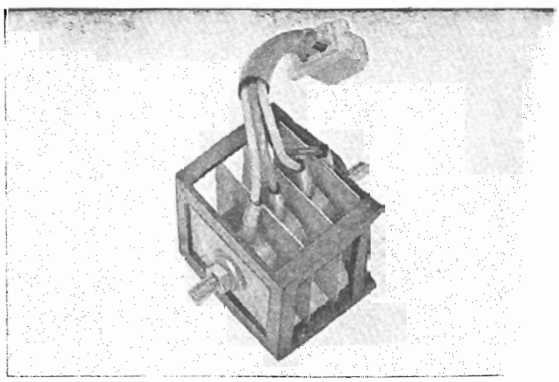

Fig. 5. 33 Selenium rectifier

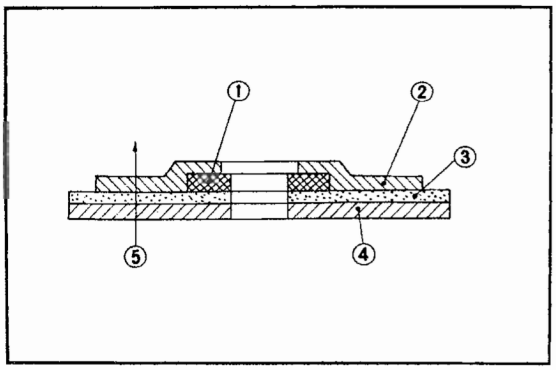

Fig. 5.34 Construction of selenium rectifier
① Coating which presents short circuits
② Antielectrode ③ Selenium
④ Sheet ⑤ Positive direction

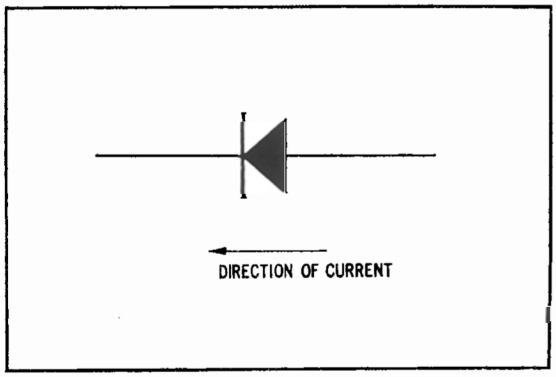

Fig. 5.35 Selenium symbol

As shown in the figure to the left, the rectifier wafers are either circular or square nickel plated steel or aluminum sheet, vacuum coated with highly purified selenium, combined with proper amount of foreign element and heat treated under controlled condition to produce a metallic selenium on which cadmium, bismuth and tin are applied. An electric charge is passed in the opposite direction to the arrow shown in figure 5.34 to set up an electro-chemical reaction. This will allow the current to readily flow in one direction while creating a large resistance of several thousand times in the opposite direction, permitting only a negligible flow. This is the rectifying function of the selenium wafer. It is known as the rectification function of selenium and is due to the formation of displayed by the lamination effect created by the surface between the semi-conductive metallic selenium wafer and dielectric layer.

Humidity has a deteriorating effect on the selenium wafer, therefore, waterproof coating is applied to the rectifier, this will also prevent corrosion.

The symbol shown in **Fig. 5.35** is used to designate the rectifer. This indicates that the rectifier consists of one or more selenium wafers arranged in either series or parallel, and the direction of the arrow indicates the normal direction of current flow. **(Fig. 5.35)**

Selenium rectifier is durable and since it does not deteriorate with age or usage, its life is practically indefinate.

It is relatively efficient for use with low voltage load, therefore, it has found broad usage as a small rectifier.

Further, it has a high overload capacity for a short period of time as compared to the silicon or geranium type rectifiers, and its long service life is another advantage.

Note :

Rectifier is normally referred to an equipment which performs the complete rectifying function and including such accemssories such as the transformer, switches, filter, meter, and etc.

There are several rectifying circuits used in automobiles. In both the CB 450 and CL 450, the same type rectifying curcuit is used, the bridge circuit shown in Fig. 5. 36. In this system, a greater number of selenium wafers are used, however, the feature of this type is that a full wave rectification can be achieved rather than a half wave rectification as is the case with other systems. **(Fig. 5. 36)**

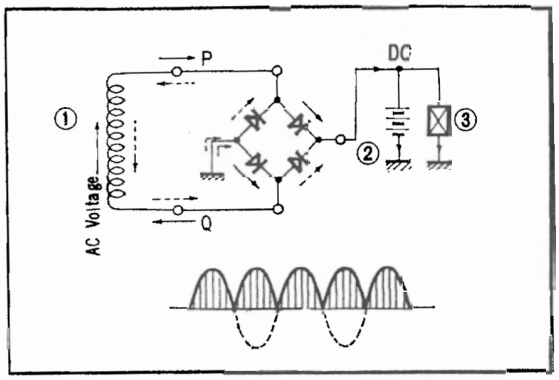

Fig. 5. 36 Full wave rectification
② Generating coil ② Battery
③ Load

Heat will have great effect on the life of the selenium rectifier ; it should never be exposed to heat greater than 30°C (86. 0°F) for any great length of time. Further, excessive current should not be allowed to flow for any extended period, likewise, voltage exceeding the capacity should not be permitted to flow in the reverse direction as this will puncture the rectifier. However, insulation will quickly form over the punctured area, but with repeated puncturing, the effective rectifying area will be reduced and will eventually result in the overheating of the rectifier. Therefore, in order to handle the voltage generated by the coil, the wafers must be increased to provide for sufficient reverse capacity.

Note :

Handling the selenium rectifier

1. Do not allow water to get on the rectifier, make a wrong wiring connection or subject it to abuse. (selenium rectifier usage is semi-permanent)
2. Using the rectifier without any load connected such as without the battery, will cause a high voltage generated in the coil to flow in the reverse direction and cause puncturing of the rectifier.
3. If this condition is permitted to continued for a long period, the rectifier will be completely destroyed.
4. After a long period of usage, the rectifier will age.

   When this happens, the internal resistance will increase, output voltage drops and the rectifier will heat up.

   The major cause of aging is exposure to high temperature.

   When the temperature of the rectifier exceeds 70°C (158. 0°F), the aging is greatly accelerated, therefore, attention should be given to prevent the rectifier from overheating, the rec-

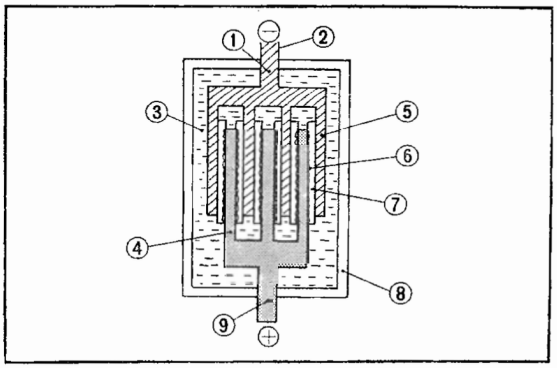

Fig. 5. 37 Construction of battery

①	Ellectrode post	②	Ground terminal
③	Dilute sulfuric acid	④	Anode plate
⑤	Cathode plate	⑥	Glass mat
⑦	Separator plate	⑧	Case
⑨	Positive terminal		

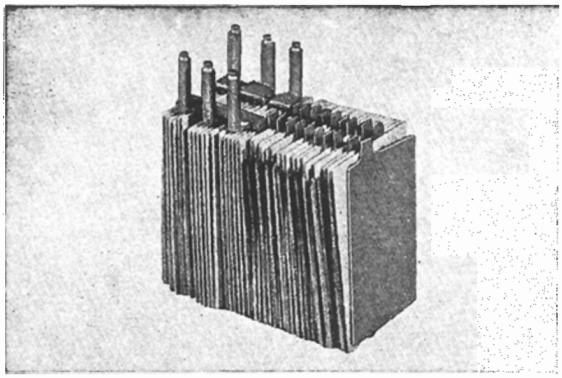

Fig. 5. 38 Plates group

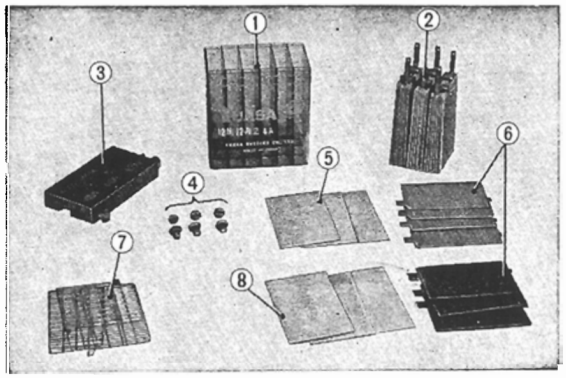

Fig. 5. 39 Plates and Separator

①	Case	②	Plates group
③	Case cover	④	Caps
⑤	Separator plate	⑥	Plates
⑦	Grid Plate	⑧	Glass mat

tifier should be mounted where there is sufficient flow of air for cooling.

5. Selenium rectifier when left unused for a long period of time will have a large reverse current flow. This condition can be corrected by applying about half the normal voltage initially and increasing the voltage to the full rating over a period of one hour, before using the rectifier.

D. Battery

Batteries used on automobiles and motorcycles are of the lead storage type as shown in **Fig. 5. 37** which consists of interconnected anode plates nested with the interconnected cathode plates (one more cathode than anode plates), with separators installed between the plates, forming an element which is encased in a cell within the styrol case and immersed in an electrolyte of diluted sulfuric acid.

Each cell produces a flow of current of approximately 2. 1V (reaching over 2. 5V during full charge).

A 6 volt battery consists of three cells connected in series by cell connectors.

The 450 model uses a 12V battery which consists of 6 cells connected in series.

The plate consists of grid framework made of lead-antimony allay forming a horizontal and vertical pattern over which applied a paste compounded of lead oxide and sulfuric acid.

The anode plate contains dark brown lead peroxide, whereas, the cathode plates contains the gray sponge lead. In addition, an inflation agent has been added to prevent shrinkage during use. **(Fig. 5. 38)**

The plates are insulated from each other by suitable separators made from this ribbed cypress wood of recently, from perferated rubber and synthetic resin sheet. Fiber glass mat is placed between the anode plate and the separetor prevent the sulfated anode particles from dropping to the bottom of the case. **(Fig. 5. 39)**

Battery Case

The 450 like other models, uses a transparent styrol battery case which permits the electrolyte and the plate conditions to be visible.

After assemblying the plate elements into the case, the cover is sealed to the case with synthetic resin cement and upon connecting the cell terminals with pole connectors, synthetic resin, pitch are used to set the plate elements in place to prevent their loosening from vibration or develop leaking of the electrolyte. **(Fig. 5. 40)**

When a load such as the lights is connected across the battery terminals, the battery will start and continue to discharge.

The active lead peroxide of the anode and the sponge lead of the cathode will generate sulfation causing the specific gravity of the electrolyte to gradually drop with a resultant decrease in the battery terminal voltage. Since the specific gravity is approximately proportional to the discharge condition of the battery, the measure of this vaule will provide the relation duscharge state of the battery. The specific gravity of the battery electrolyte when fully charged is 1. 26 and when completely discharged is 1. 10 **(Fig. 5. 41)**

The sulfuric acid used for the electrolyte will vary with the temperature, but normally sulfuric acid having a specific gravity of 1. 260 at 20°C (68°F) is used with slight difference with types of battery.

When an electrical current is made to flow into the battery in the reverse direction of descharging, the battery becomes charged and the lead sulfate both the anode and cathode plates resent lock to the original lead peroxide and sponge lead respectively. The specific gravity of the electrolyte increases with a resultant rise in the terminal valtage.

Capacity and Discharge Ratio (Charging ratio).

The capacity of the battery is determined by discharging a fully charged battery at a constant discharge rate to a specified terminal voltage value. (average of 1. 75 volt per cell).

It is expressed by the discharge current and the time duration as AH (ampere-hour). However, the capacity of the battery will vary with discharge rate, temperature and specific gravity, therefore, the condition for testing automobile and motorcycle batteries are specified.

JIS (Japan Industrial Standard) TEST CONDITION.

Electrolyte specific gravity : 1. 260±0. 005 at 20°C (68°F)

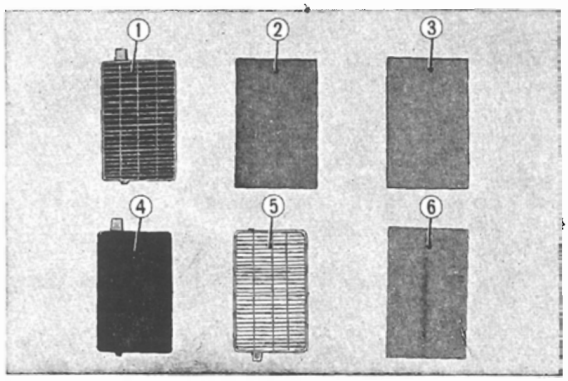

Fig. 5. 40 Battery components

① Cathode plate	② Separator
③ Glass mat	④ Anode plate
⑤ Gride plate	⑥ Glass mat

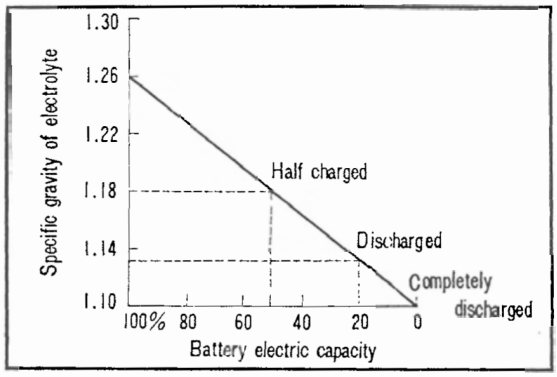

Fig. 5. 41 Specific gravity and electric capacity relation

Discharge rate : 10 hours current factor

Electrolyte temperature during test : to be constant.

Discharge Rates

If it takes T hours for a fully charged battery to reach the final discharge voltage, the T hour discharge rates of this battery is considered to be XT ampere-hour (Ah), a discharge rates of X ampere for T hours. Therefore, a battery having a capacity of 12 Ah at discharge rates of 10 hours will have the capacity for discharging at a rate of 1.2 A (12/10=1.2 A), for 10 hours to reach the final discharge voltage.

The charging current is also defined for a 10 hour charging rate current. In other words, the discharging or charging current of the battery, is that time required to discharged a battery to the final voltage under a specified current.

Vacuum Dry Charged Battery

The present dry battery in use (dry charged battery) will produce a certain amount of charge when the electrolyte is added, however, it will not be a 100% charge. Normally, it requires charging for approximately 10 hours at a charging current of 10–15 hour rate to obtain a full charge.

A recently developed new type battery (vacuum sealed dry charged battery) has simplified the servicing of the battery by eliminating the necessity for the initial charge. Honda 450 is being equipped with the new type battery.

The difference between the two type batteries are that, though the filler caps and other areas are sealed, after a period of extended storage, moisture will enter the dry charged battery and produce sulfation of the lead sponge, deteriorating the dry charge effectiveness. In contrast, the vacuum sealed dry charged battery is fully sealed so that it is not affected by the atmosphere, or long period of storage. Further, the plates are of different design which improves the preservation of the electrical charge. Each battery is sealed in vinyl package under vacuum and encased in a cardboard carton to prevent damage. During handling, care should be exercised not to damage the packing so that the vacuum sealing is rendered ineffective.

1. Comparison of the Performances
   a. The batteries when initially filled with electrolyte will produce the following electrical charge.

Table : 1

Storage period			No Storage period	3 month	6 month	12 month
Dry charge battery	Capacity of 10 Hr discharge rate (%)		85	80	75	65
	High rate discharge capacity test	Continuous discharge test (%)	20~40	15~35	15~30	10~20
		5-sec. voltage test (%)	75~90	75~90	70~85	65~80
Vacuum sealed dry charged battery	Capacity of 10 Hr discharge rate (%)		90	90	-	-
	High rate discharge capacity test	Continuous discharge test (%)	70~80	70~80	-	-
		5-sec. voltage test (%)	90	90	-	-

Table : 2

Battery type	Voltage (V)	10 hr cap, (Ah)	Charging rate (A)	Charging time (H)	Refreshing charge time (H)	Capacity Sp. Gr/60°F (20°C)	
						(l)	(20°C)
6N2-2A	6	2	0.2	30	5	0.1	1.260~1.280
6N2-2A-1	6	2	0.2	30	5	0.1	1.260~1.280
B43-6	6	2	0.2	30	5	0.1	1.260~1.280
6N4-2A-4	6	4	0.4	30	5	0.19	1.260~1.280
6N5.5-1D	6	5.5	0.6	30	5	0.24	1.260~1.280
6N6-1B (C) (D)	6	6	0.6	30	5	0.27	1.260~1.280
B41-6	6	10.5	1.1	30	5	0.38	1.260~1.280
6N11-2D	6	11	1.1	30	5	0.46	1.260~1.280
B54-6	6	12	1.2	30	5	0.44	1.260~1.280
12N5-4B	12	5	0.5	30	5	0.4	1.260~1.280
12N9-4A (4B)	12	9	0.9	30	5	0.6	1.260~1.280
12N12A-4A	12	12	1.2	30	5	0.72	1.260~1.280

b. Comparison of affect to the charge capacity for storage.

2. Care during storage

a. The battery is vacuum sealed to prevent its exposure to the outside air, therefore, the seal should not be broken until ready for use. Battery stored with its seal broken will have its plates exposed to the air, causing chemical action to take place on the battery plates which will deteriorate the initial charging rate. These batteries will then require charging on the charger before use, as required for the dry charge batteries.

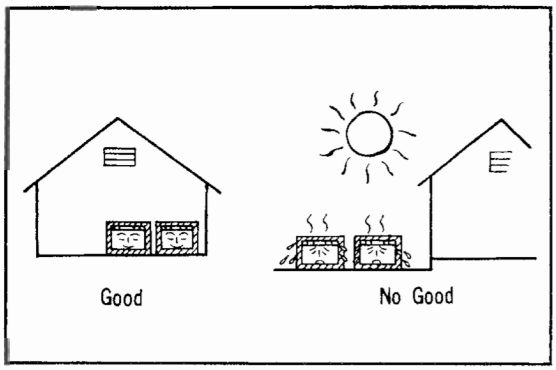

Fig. 5.42

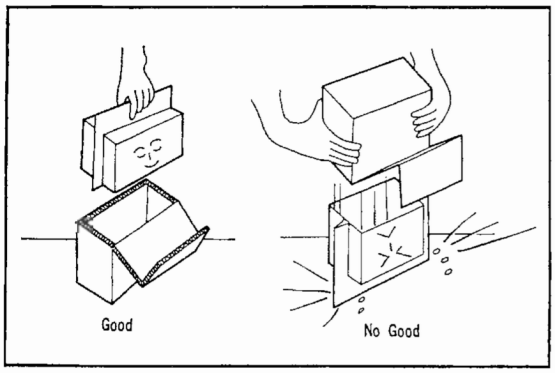

Fig. 5.43

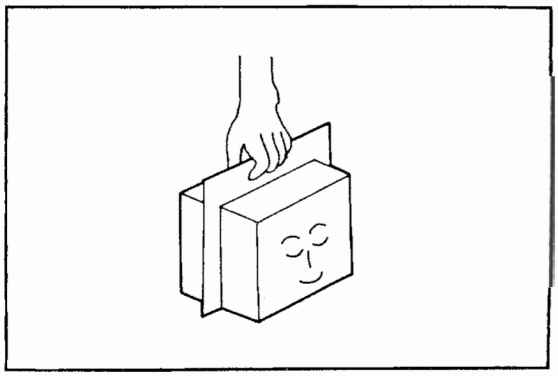

Fig. 5.44

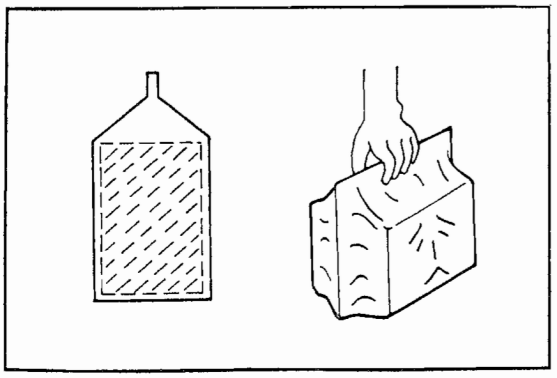

Fig. 5.45

b. The batteries should be stored without unpacking carton in a dark, dry, cool place where the temperature is constant and does not exceed 120°F (49°C). **(Fig. 5.42)**

3. Instruction before use

a. When removing the battery from the cardboard carton, gently lift out the sealed edge. **(Fig. 5.43)**

b. Inspect the battery to make sure that the seal (plastic bag is sticked to the battery), it can be assumed to be in good condition. This battery will be ready for use after filling with electrolyte (specific gravity 1.260~1.280 @ 68°F or 20°C). **(Fig. 5.44)**

c. However, if upon inspection, the seal is as shown in **Fig. 5.45**, it can be assumed that the seal had been broken and, therefore, the battery should be charged in accordance with **Table 3** after filling with electrolyte.

Table 3

		Dry charged battery	Vacuum sealed dry charged bettery
Capacity of 10 Hr discharge rate (%)		85	90
High rate discharge capacity test	Continuous discharge test (%)	20~40	70~80
	5 sec. voltage test (%)	75~90	90

Note: 1. The discharge capacity for full charge is taken as 100.
2. Discharge capacity is for temperature of 25°C (77°F)
3. For the dry charged battery, the discharged capacity is measured one hour stabilizing period after the electrolyte has been added. The vacuum sealed dry charged battery is measured 10 minutes after the electrolyte has been added.

d. Upon completing the battery installation, the initial starting should not be made with the starting motor, but with the kick starter. The reason for this is to allow sufficient time for the battery to build up to full charge, otherwise, the heavy current that the starting motor would draw from the battery would impose a rapid drain in the event that the battery is not fully charged and would have a damaging effect.

e. In cold weather such as 30°F (−1°C) or lower, the instant charging function can be greatly improved if the electrolyte is warmed to about 85°F (30°C) before filling the battery.

4. Instruction during use

After adding the electrolyte to the battery, the battery can be used in the same identical manner as the present dry cell battery.

a. When the electrolyte level drops to the lower level mark, add distilled water to bring the electrolyte level to the upper level mark. Using the battery with insufficient electrolyte, so that the plates are exposed, will cause sulfation of the plates ; resulting in damage to the battery.

b. During the use of the battery, if the specific gravity of the electrolyte should drop below 1.200 @ 68°F or 20°C, the battery should be charged as soon as possible. The use of the battery in a discharged condition (indicated by dimming of the lights) will shorten the service life of the battery.

c. Exercise care that the vent tube is not blocked or pinched when installing the battery.

d. When the motorcycle is placed in storage or is not to be used for an extended period, the battery ground (earth) cable should be disconnected or the battery removed from the motorcycle and stored. In either case, the battery should be charged at least once a month to preserve the life of the battery

Instruction Before Using :

Prior to putting an initially charged battery into service, the following points should be checked.

1. Check for any shipping damages or any unusual conditions, especially broken or cracked case and leaking electrolyte.
2. Inspect to make sure that the electrolyte for all of the cell is at the proper level. If any of the cells are found to be low, check to determine whether the cells are not damaged and if face from damage, add electrolyte of the same specific gravity as contained in the other cells and fill to the proper level.
3. When a battery is left unused for over two weeks often receiving an initial charge, the battery should be given a supplement charge to bring it back to full charge. After giving the battery a supplement charge, check to make sure that the electrolyte is up to the proper level and then it is recommended that a record to kept of the voltage, specific gravity and electrolyte

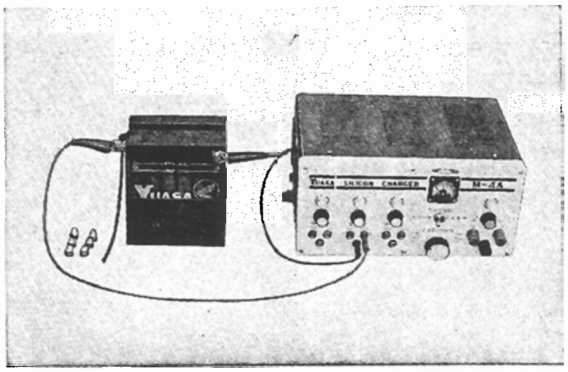

Fig. 5.46 Battery replenish charging

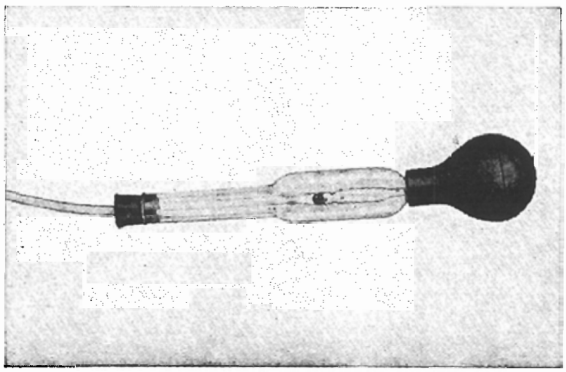

Fig. 5.47 Hydrometer

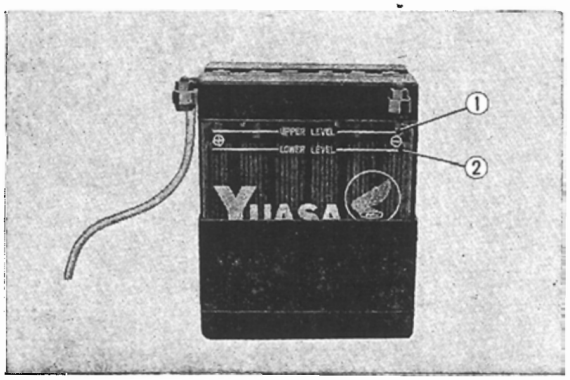

Fig. 5.48 Electrolyte level indication
① Upper level mark ② Lower level mark

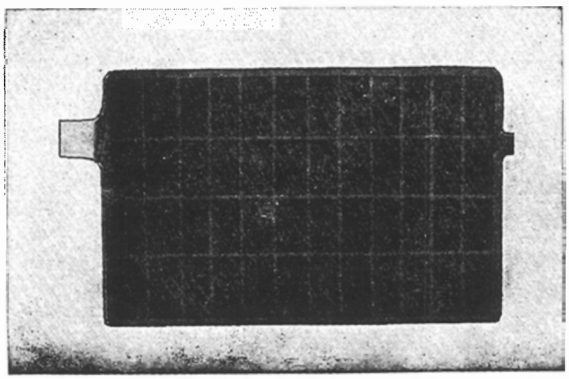

Fig. 5.49 Anode Plate

temperature of each cell to use as reference at a later date.

Precaution During Use :

1. Check the battery periodically. The battery should be checked weekly but no less than twice a month or every 1,000 to 2,000 km (620 to 1,300 mile).
2. Always maintain a proper electrolyte level Whenever the level is low, and distilled water (never use water containing mineral) and maintain a level so that the anode and cathode plates, and separater plates are completely submerged. Electrolyte level is clearly visible through the transparent casing, however, the proper level is usually 10 to 13 mm above the separator plates. If the electrolyte level is low and the plates exposed to the air, lead sulfate will be formed on the exposed portion, lowering the battery capacity. Exposed portion of the separator plates will deteriorate and will result in internal shorting of the battery. Majority of the battery trouble are of this nature and it constitutes the greater percentage of the reduced service life of the battery.
3. Always maintain a full charge, a battery used in a state of insufficient charge will cause excessive sulfation on the plates and becomes difficult to restore the plates to the original condition ; such plated become warped and cause internal short. Further, the electrolyte specific gravity lowers due to excessive discharge and if continued to be used under this condition, the separators will also become damaged. For this reason, the battery should be recharged before reaching a complete discharge condition.

   When greater percentage of driving is done at night at slow speed or when light usage is excessive, charging rate will be insufficient, and therefore, the battery should be removed and charged frequently.
4. Maintain the battery clean-greater the exterior, especially the terminals and pole connectors clean to prevent current leakage which would result in excessive discharging. **(Fig. 5.46~5.48)**

Battery Troubles :

1. Anode plates **(Fig. 5.49)**
   a. Causes for cracks and breaks

(a) Deterioration due to aging
(b) Electrolyte specific gravity excessively high
(c) Battery temperature excessively high
(d) Overcharging
(e) Electrolyte contaminated with harmful foreign substances.

b. Cause of battery internal short due to warped plates. Overcharging, particularly often excessive discharge.

2. Cathode plates **(Fig. 5.50)**

Sulfation

(a) Battery neglected in discharged condition
(b) Excessive discharging
(c) Electrolyte specific gravity excessively high
(d) Battery internally shorted
(e) Electrolyte level too low, exposing the plates
(f) Electrolyte contaminated with harmful foreign substances.

3. Separator **(Fig. 5.51)**

a. Causes for deterioration (increased rate of self discharge)
(a) Used repeatedly under high temperature
(b) Electrolyte specific gravity too high

b. Causes for deterioration (loss of insulating quality)
(a) Battery negleated in discharged condition
(b) Repeated under charging
(c) Electrolyte level too low, exposing the separators

c. Cause of damage (holes develop)

Excessive warping of the plates

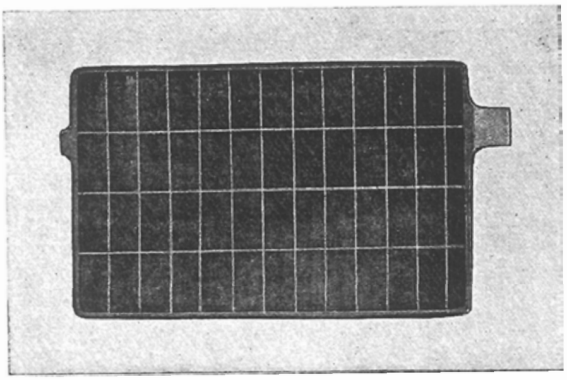

Fig. 5.50 Cathode plate

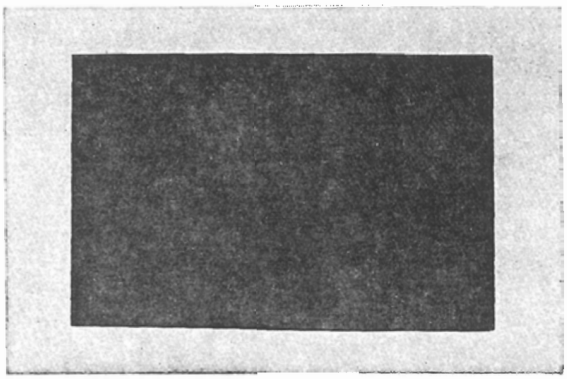

Fig. 5.51 Separator plate

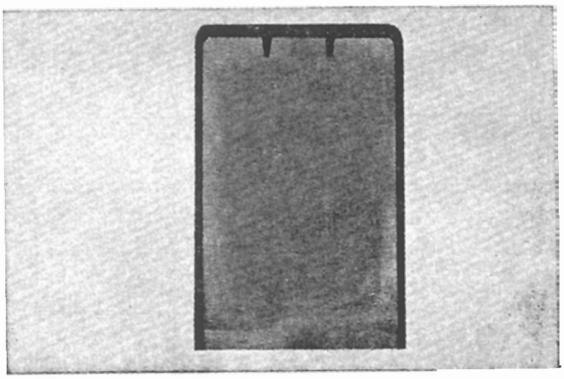

Fig. 5.52 Sulfation

Battery Repair

Battery repair should be performed by a specialist, however, sulfation is the most common throuble and this can be restored provided that the condition is not excessive. Change the battery normally fallowed by continued charging at 1/2 the normal charging rate (10 hour rate). Battery in advance state of sulfation will be difficult to restore fully. **(Fig. 5.52)**

Sulfate deposits from the plates at the bottom of the cells due to repeated overcharging will cause internal short. These may be removed by cleaning the interior of the battery case and restoration to a certain degree is possible, however, it is difficult to perform a through cleaning.

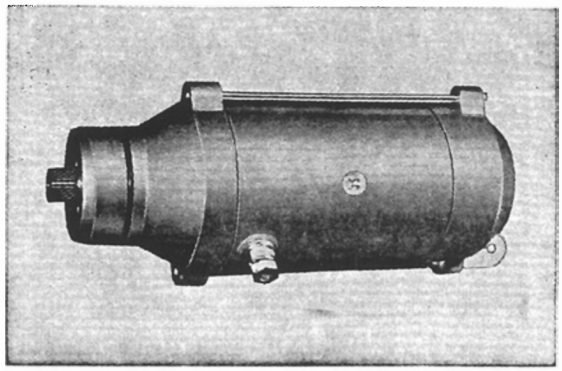

Fig. 5.53 Starting motor

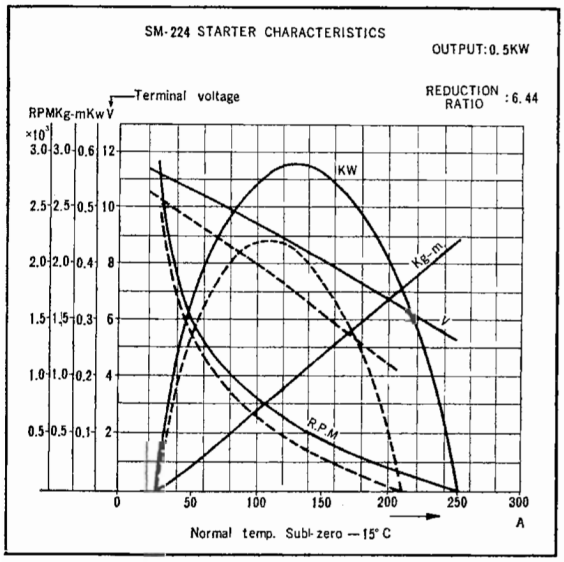

Fig. 5.54 Starting motor characteristic

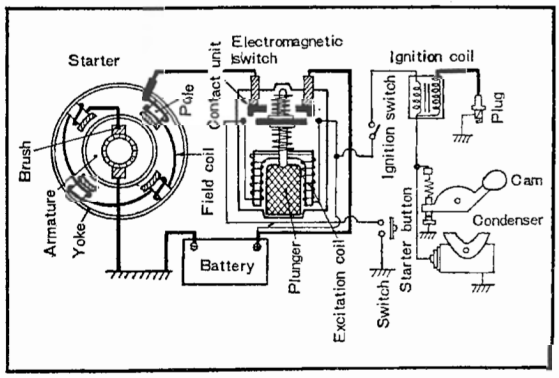

Fig. 5.55 Starter circuit diagram

5.5 Electric Starter

A. Starting Circuit

A pushbutton type starter switch is located on the right handle bar which engages the solenoid switch in the starter circuit to close the starting circuit. Approximately 120 A of current flows from the battery to turn the starting motor.

The starting motor is mounted on the front of the crankcase and drives the engine through a starting clutch and chain. **(Fig. 5.53~56)**

B. Starting Motor Characteristics

A small powerful electric motor is required to perform the starting function, therefore, most commonly used series type 12V electric motor is used which has a capacity of 0.5kw. This motor is powerful enough to enable starting even in subzero temperature.

CAO starter

1. Rated voltage : 12V
2. Rated output : 0.5kW
3. Rated operation : 30 seconds
4. Reduction ratio : 6.44
5. Direction of rotation : Clock wise (Viewing into the pinion)
6. Weight : 2.7kg (5.95lb) Max.

Starter performance

Item	without load	with load	Stalling load
Voltage	11V	9V	5V
Amperage	35A Max	120A	280A
RPM at sprocket shaft	1,700Min	500Min	
Torque at sprocket shaft		0.7kg. m (5.06ft. lb)Min	1.8kg. m (13.02ft. lb)Min

C. Starter Reduction

A mechanical reduction system is required to reduce the speed of the starter to provide the necessary torque for turning over the engine for starting. The primary reduction is accomplished by the planetary reduction gear which is both light and compact : the secondary reduction is by the sprocket and chain. **(Fig. 5. 56)**

primary reduction ratio
(planetary gear) ..... 6.44 : 1
Secondary reduction ratio
(sprocket and chain) ..... 2.77 : 1
Total reduction ratio ..... 7.84 : 1

The starting motor is not in constant use, therefore, wear to their component parts is very rare, however, if unusual noise should develop during its operation, disassemble the starter and check the following points.

1. Condition of the carbon brushes and commutator
2. Excess accumulation of carbon particles. (remove with compressed air)
3. Check for adequate lubricant in the gear case **(Fig. 5. 57~5. 58)**

D. Removal

1. Remove left crankcase cover.
2. Disconnect starting cable at the terminal.
3. Unscrew two 6mm bolts from the right side and while removing the starting motor, disconnect the chain from the sprocket.

NOTE :

Do not forcibly remove, as it may cause damage to the crankshaft.

E. Servicing

1. Carbon brush removal.
   a. Unscrew the two 5mm—bolts and separate the end bracket from the motor, unscrew the 3mm screw attaching the brush holder to the field coil and remove the brush holder bracket.
   b. Remove the carbon brush from the brush holder on the positive side and from the negative side, disconnect the brush holder and then pull out the brush.
   c. Perform the installation in the reverse order of removal.
   d. During assembly, make sure that the brush lug and the positive side dose not come in

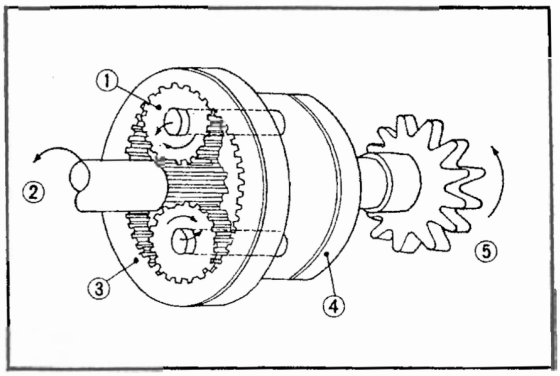

Fig. 5. 56 Starter cutawaly
① Planetary gear ② Motor shaft
③ Internal gear ④ Sprocket shaft
⑤ Starting sprocket

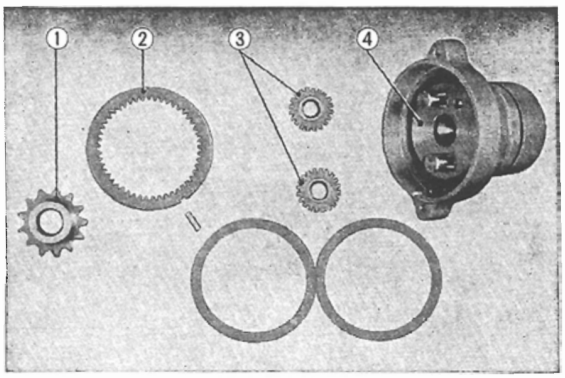

Fig. 5. 57 Starter reduction gear component
① Starting Sprocket ② Internal gear
③ Planetary gears ④ Sprocket shaft

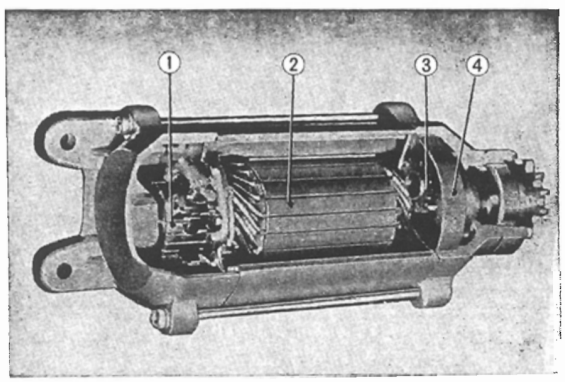

Fig. 5. 58 A Stater cutaway
① Commutator ② Armature
③ Planetary gear ④ Internal gear

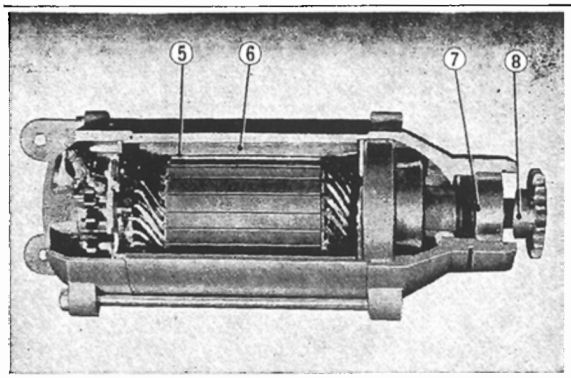

Fig. 5.58 B Stater cutaway
⑤ Pole core ⑦ Ball bearing
⑥ Field coil ⑧ Sparting sprocket

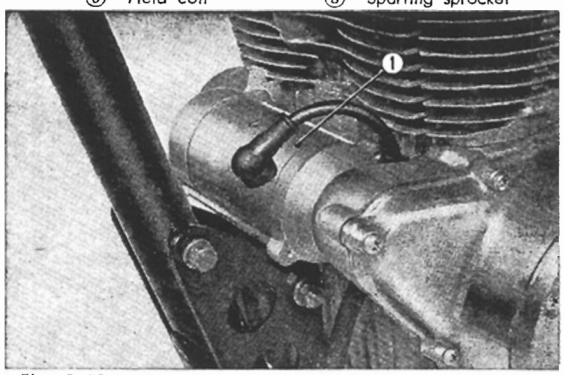

Fig. 5.59
① Starting motor

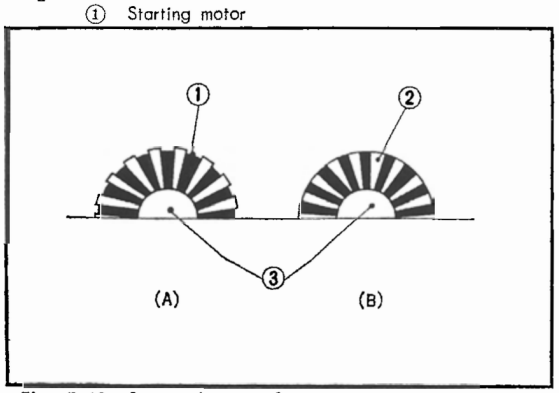

Fig. 5.60 Sectional view of commutator
① Mica piece ② Commutator (copper)
③ Motor shaft

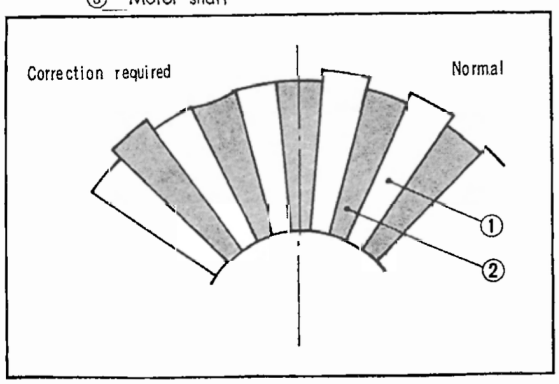

Fig. 5.61 Commutator correction
① Commutator (copper) ② Mica

contact with the inside surface of the end bracket, also, assure that the lead dose not interfere with the action of the brush.

e. The starting motor is completely sealed and designed to be waterproof, therefore, excersize care that the O ring and gaskets are not damaged during installation.

2. Commutator

The normal condition of the commutator is as shown is **Fig. 5.60 (A)** and after a period of use, the copper contacts become worn to a shape shown in (B). When this condition develops, the commutator must be restored to the original condition. This rework (under-cutting the mica) requires special skill and tooling, therefore, it should be referred to a specially shop. **(Fig. 5.60, 5.61)**

Whenever the commutator is worn to an extent that the difference between the copper contact and the mica is greater that 0.3 mm (0.012 in), the rotor should be replaced.

F. Starting Clutch

The function of the starting clutch is to transmit the torque of the starting motor to the crankshaft but prevent the torque of the crankshaft from motorizing the starting motor. **(Fig. 5. 62, 5. 63)**

1. When the starting motor is operated, the following sequence of events take place.
   a. The chain is driven in the direction of arrow (a) in the figure. **(Fig. 5. 64)**
   b. As the sprocket revolves, the rollers move into the narrowing space between the clutch outer and the starting sprocket as indicated by arrow (b) and the clutch outer starts revolving together with the starting sprocket, likewise with the dynamo rotor which is assembled to the clutch outer.
   c. The rotor is fixed to the crankshaft by a 4 mm key and in this way, the rotation of the clutch outer is transmitted to the crankshaft.
   d. The starting clutch roller spring and cap permits the rollers to affect a smooth locking between the starting sprocket and the clutch outer.
2. When the engine starts the following sequence of events will take place.
   a. The crankshaft RPM will exceed the speed of the sprocket.
   b. The rollers are moved toward the wider space between the starting sprocket and the clutch outer by the centrifugal force and the friction, overriding the force of the spring.

      This causes a discontinuity between the starting motor and the crankshaft.
3. Lubrication oil which has been supplied to the left crankshaft main bearing flows through the groove of the starting sprocket bushing and returns to the crankcase by the clearance between the clutch outer and the AC dynamo.
4. Servicing

   The serviceability of the starting clutch is dependent upon the function of the roller, therefore, exercise the following precautions when handling the rollers.
   a. Use only the specified silicone grease as lubircant on the rollers.

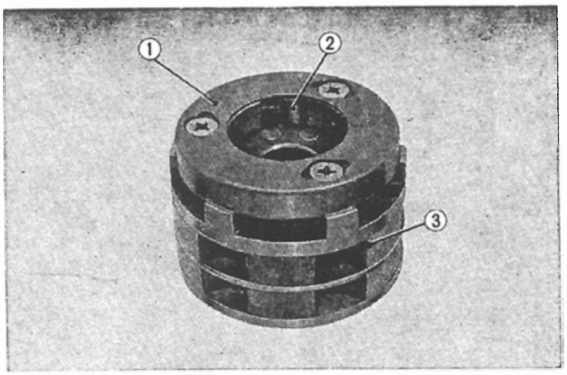

Fig. 5. 62 Generator rotor and starting clutch
① Starting clutch outer
② 10.2×11.5 roller
③ AC generator rotor

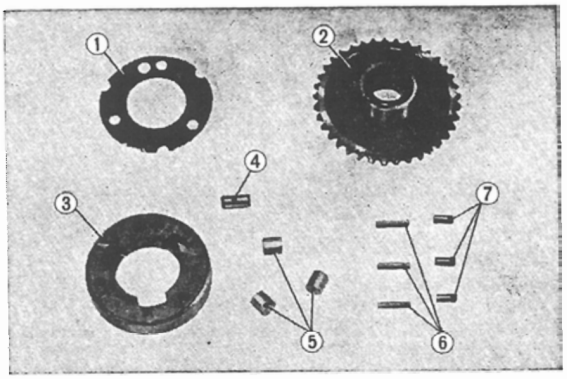

Fig. 5. 63 Starting clutch component
① Starting clutch side plate
② Starting sprocket
③ Starting clutch outer
④ 8×18 knock pin
⑤ 10.2×11.5 rolier
⑥ Starting clutch roller spring
⑦ Starting clutch roller spring cap

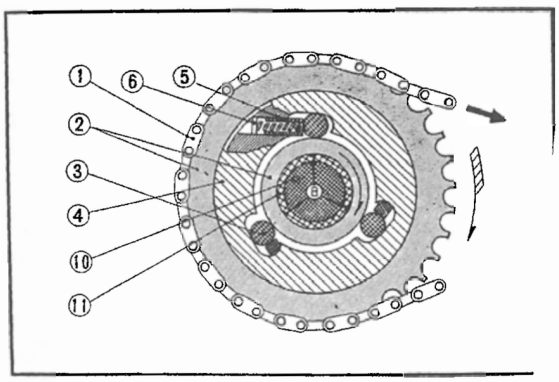

Fig. 5. 64 Starting clutch operating principle

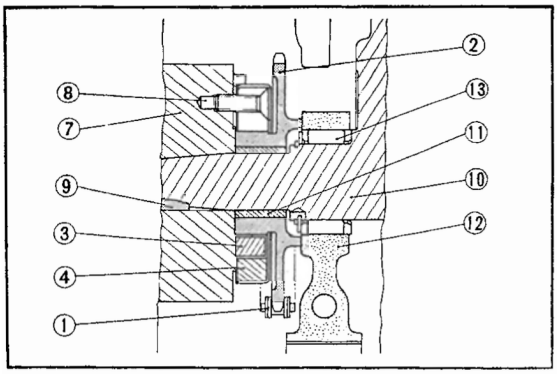

Fig. 5.65 Stating clutch operating principle

b. Clean the rollers in gasoline and dry thoroughly before applying a light coating of silicone grease to entire surface of the rollers before assembly, using a fine hair brush.

c. Characteristics of the silicone grease

(a) Little change quality from low temperature through high temperature.

(b) Temperature causes very little change to the friction coefficient (on coated metal surface).

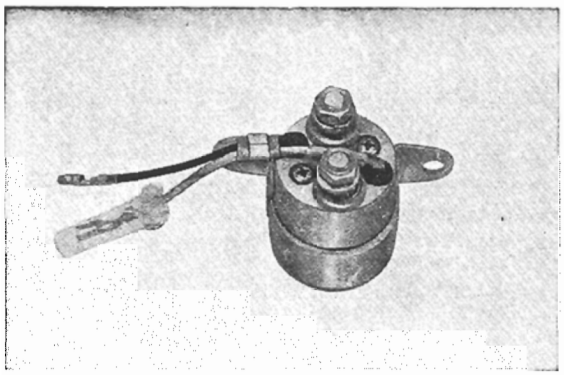

Fig. 5.66 Starter magnetic switch

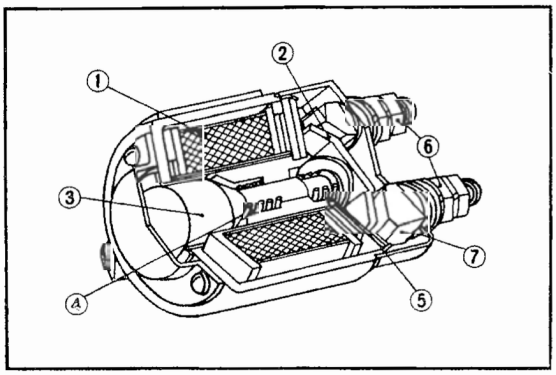

Fig. 5.67 Solenoid construction
① Magnetic coil (primary coil)
② Contact (operating side)
③ Plunger
④ Return spring
⑤ Contact return spring
⑥ Terminals
⑦ Contact (fixed side)

G. Starter Solenoid

A large electrical current is required to operate the starter. This will require a large cable, however, the length of this cable must be kept as short as possible to reduce the electrical resistance.

One convenient way to accomplish this is to install a starter solenoid (electromagnetic switch) at a convenient location between the battery and the starter and another small starter switch where it is easily accessible.

By the use of this configuration it is possible to control the flow of large current remotely by using only a small current. **(Fig. 5.66)**

1. Operating principle

a. Depressing the starter switch energizes the magnetic coil of the starter solenoid switch sets up a magnetic field and draws the plunger into the center of the coil, overriding the spring compressive force.

The moving contact plate attached to the end of the plunger produces a bridge across the starter cable terminals and the starter solenoid by contacting the two contact points. **(Fig. 5.67)**

b. This closes the starter circuit and allows heavy current to flow to the starter. As long as the starter switch is held closed, the starter solenoid will remain energized and the heavy current will continue to flow from the battery to the starter.

2. Malfunction

a. When the starter switch is depressed a "click" in the starter solenoid is heard; this indicates the movement of the plunger and closing of the terminal contacts.

b. If the starter does not operate even the starter solenoid is energized, it is probable that the starter circuit terminal contacts are burnt and preventing the flow of battery current to the starter. In such a case, disassemble the starter solenoid and clean the contact areas with file or sandpaper so that good contact is being made.

When the points are not burnt but covered with oil film or moisture, check the condition of the O ring and if damaged, replace with a new part.

c. When the starter solenoid is not energizing, check for the following conditions.

a) Starter switch defective
b) Defective solenoid coil
c) Plunger binding
d) Defective wiring

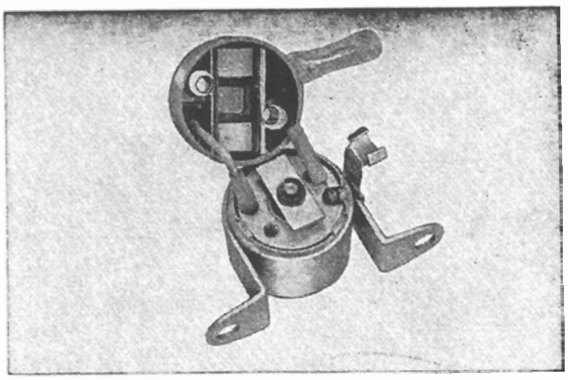

Fig. 5.68 Solenoid disassembly (when the cover is opened)

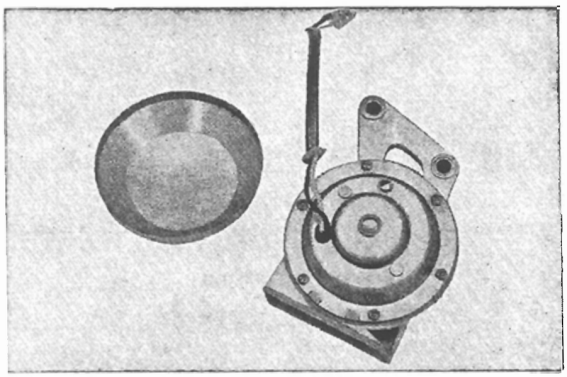

Fig. 5.69 Horn

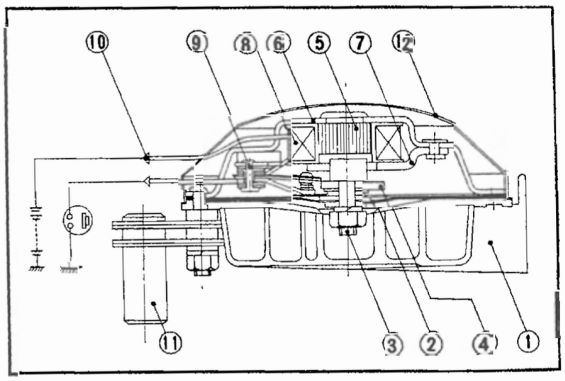

Fig. 5.70 Construction of horn

5.6 Safety Devices

A. Horn

There are three different types of horn in common use. They are the flat, spiral and the trumpet types. The spiral type horn is used on the 450. **(Fig. 5.69)**

Operating principle and construction of the horn. **(Fig. 5.70)**

(1)	Curling horn	Amplification and radiation
(2)	Diaphragm	Vibrating plate (to produce sound)
(3)	Pole B	Connector between armature and vibrating diaphragm
(4)	Armature	Core (source of vibration)
(5)	Pole A	Core
(6)	Case	Case for housing the component parts

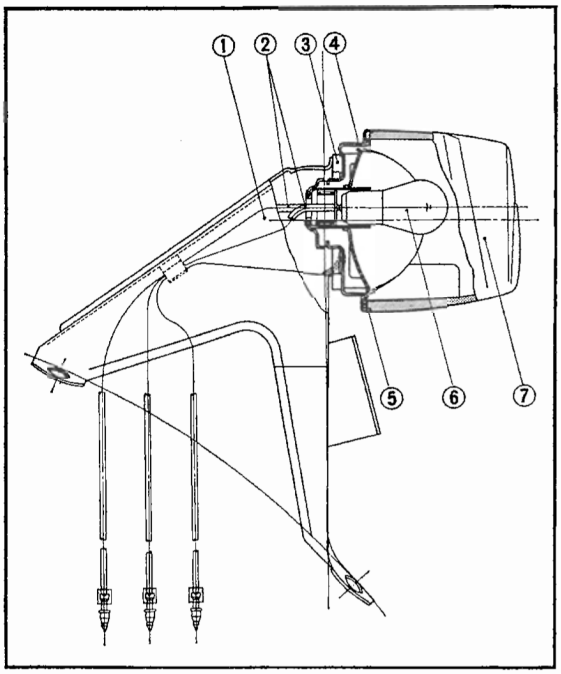

Fig. 5.71 Cross-section of tail-stop light
① Number plate bracket
② Cord
③ Tail light base packing
④ Tail light base
⑤ Tail light lens packing
⑥ Tail-stop light bulb
⑦ Tail light lens

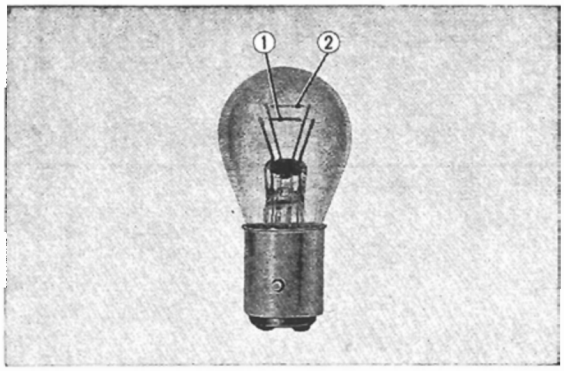

Fig. 5.72 Double filament bulb for tail-stop lamp
① Filament for stop light
② Filament for tail light

(7)	Core	Core
(8)	Coil	Generate magnetic field to attract the core
(9)	Contact assembly	Circuit breaker
(10)	Terminal	Electrical connection
(11)	Clamp assembly	Attachment brakcet (Made of spring steel so that the sound will not be affected by the frame)
(12)	Cover	Apprearance consideration and protection

The principle of operation is as follows. When the horn switch is closed, the current flows to the terminal (10), Coil (8), Contact assembly (9) (contact Plate B, contact points, contact Plate A), terminal (10) and then the battery.

As the current flows through the coil, a magnetic field is set up, pulling the armature.

The armature which is connected to the diaphragm by the pole, causes the diaphragm to flex and at the same time, opens the contact points to disrupt the horn circuit.

This permits the diaphragm to snap back due to the tension of the diaphragm and again closing the contact points, which energizes the coil to restart the sequence of the cycle.

The cycle is repeated continuously as long as the horn switch is held closed. This causes the diaphram to vibrate, producing the sound of the horn. The curling horn amplified this sound to the proper loudness.

B. Servicing

1. The component parts of the horn have been accurately adjusted and assembled with test equipment, therefore, do not attempt to disassemble the horn.
2. Do not permit water of dust to interior of the horn through the opening during washing as this will render the horn inoperative.
3. If the horn is not operating properly due to loss of loundness or change in the tone, diconnect the wires at the terminal and connect the lead from the fresh battery direction to the horn terminal. Resteration of the proper sound indicates that the battery voltage is low, horn switch is defective, or that the electrical wiring or connection is defective. If the above procedure does not correct the problem, remove the horn

cover and adjust the horn by turning the adjusting screw slowly a notch at a time in both direction until properly adjusted. (there are 20 notches for each turn of the adjusting screw)

Turning in the clockwise direction will increase the loundness, turning counter clockwise will reduce the laudness and eliminate the vibrating noise. Do not turn the adjusting screw more that two turn in either direction.

C. Tail-Stoplight

The tail-stoplight incorporates two within the bulb,

Bulb specification

For USA export	12V-23/7W
For general export	12V-25/8W

When replacing bulbs, always use a balb of the specified rating.

D. Filot Lamp

The following pilot lamps are installed in the speedometer and the tachometer. **(Fig. 5.73)**

- Neutral indicator lamp is at the left of the tachometer
- Turn signal indicator lamp is at the right of the tachometer
- There are also illuminating lamps for the respective meters

All of the bulbs are 12V-3W

E. Tachometer and Speedometer

With the increase in speed of the motorcycle, the vibration and also the vibration transmitted from the road surface become greater. If this vibration is transmitted directly to the tachometer, the control spring will set up a resonance, and the shaft will be exposed to excess wear and the indicator needle will be subject to oscillation.

For this reason, the CB450 and CL450 tachometer and speedmeter have been designed light in weight to minimize vibration and further, the meter cases are made of synthetic material (ABS, acrylic resin) to further absorb any residual vibration.

The speedmeter is of a magnetic coupling of a needle indicating type. The rotation of the wheel is transmitted by the speedometer shaft to the speedmeter in the definite ratio of the wheel speed.

The tachometer also of the magnetic coupling needle indicating type. The rotation of the camshaft is transmitted in definite ratio by the tachometer cable to the tachometer. **(Fig. 5.75)**

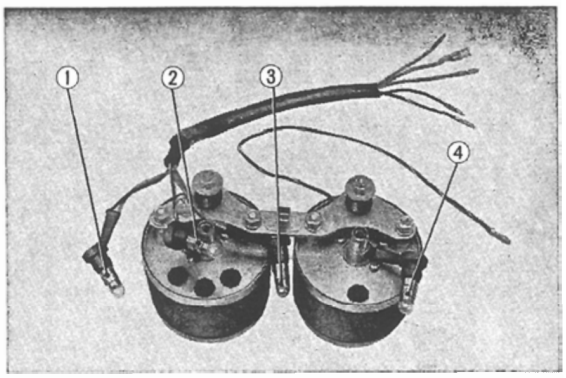

Fig. 5.73 Pilot lamps
① Neutral meterlamp bulb
② Tachometer lamp bulb
③ Turnsignal indicator bulb
④ Speedometer lamp bulb

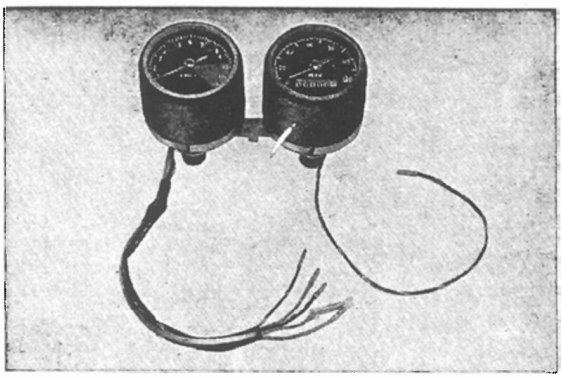

Fig. 5.74 Speedometer/Tachometer

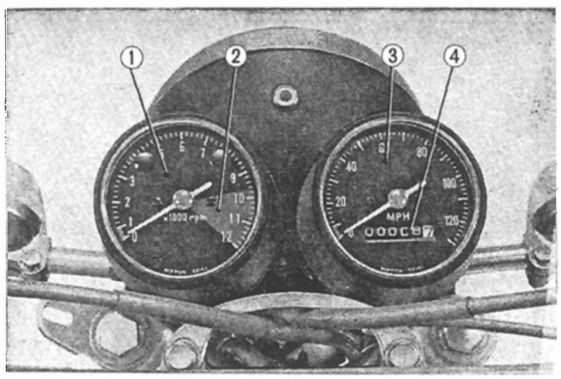

Fig. 5.75 Speedometer/Tachometer dial
① Tachometer ② Red zone
③ Speedometer ④ Odometer

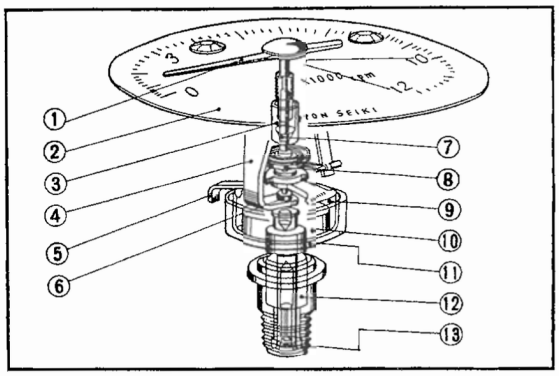

Fig. 5.76 Interior construction

①	pointer	②	Dial
③	Braking mechanism	④	Bearing bracket
⑤	Stopper	⑥	Pointer bearing
⑦	Pointer shaft	⑧	Braking spring
⑨	Induction disc	⑩	Magnet
⑪	Case	⑫	Magnet bearing
⑬	Magnet shaft		

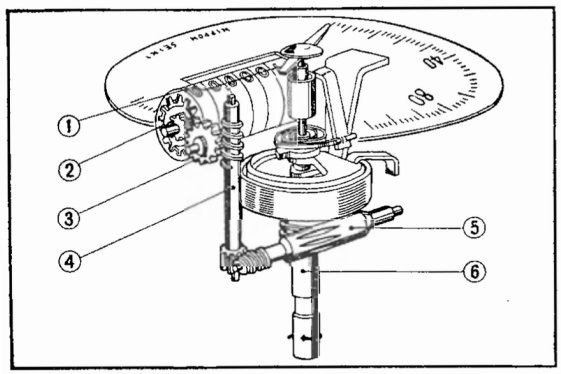

Fig. 5.77 Speedometer construction

①	Total	②	5th gear
③	4th gear	④	3rd shaft
⑤	2nd shaft	⑥	1st shaf (magnet shaft)

F. Characteristics of the Speedmeter

1. To prevent the transmission of the frame vibration and the flexible shaft vibration to the speedmeter needle indicating shaft, the needle indicating shaft is suspended independently from the magnetic shaft.
2. A special damping feature is used by employing silicone oil on the needle indicating shaft to eliminate any vibration which is not eliminated by the above paragraph.
3. The meter case is made of lightweight synthetic material which will also absorb vibration, reducing the vibration which will be transmitted to the meter, and because of its lightness, the tendency for the case to oscillate is minimized, further reducing the vibration.
4. The meter case, glass, and the dial is made of an integral synthetic resin unit eliminating any possiblity of water leaks.
5. Speedometer and tachometer are independent, with both having wide angular indicating dials, making it easy to read. Further, its gives and and addes sporty appearance. **(Fig. 5.76)**

The speedometer system is designed so that the rotation of the front wheel is transformed in the gear box so that the travelling distance of one kilometer will provide 1,400rpm of the flexible speedmeter shaft. On the other hand, the rotation of the camshaft is further reduced when converted to the flexible shaft speed. The reduction ratio between the tachometer shaft and the crankshaft is 3 : 20. **(Fig. 5.77)**

The odometer is constructed as shown in figure 5.77. A worm gear is cut on the magnet shaft and the rotation is transmitted to the 2nd shaft and to the 3rd shaft and further transmitted from the 4th shaft to the 5th shaft. The respective wheel of the odometer is number from 0 to 9 in sequence.

The odometer is geared in such a manner that complete revolution of any of the wheel will move the adjacent wheel of the higher digit by 1/10 revolution. **(Fig. 5.77)**

G. Headlight

Headlight performs an important function during night riding.

The CB/CL 450 employs a semi-sealed type headlight. This type greatly reduced the deterioration and the variation to the light intensity is hardly non-existant during the life for the bulb. **(Fig. 5.78, 5.79)**

A good headlight must fully satisfy the following requirements.

1. Sufficient brightness and accurate intensity
2. Should be both waterproof and dustproof
3. Fully vibrationproof
4. Available switching between high and low beam

The headlight beam adjustment is adjustable in both vertical and horizontal direction for USA type.

Horizontal adjustment of the headlight is made by the adjusting screw at the front of the headlight. Turning this screw clockwise will move the beam toward the left of the road and the beam will move toward the right if turned counterclockwise. Adjustment in the vertical direction is made by loosening the headlight mounting bolts and tilting the headlight assembly. The general export type can be adjusted only in the vertical direction ; the adjustment being made with the adjusting screw.

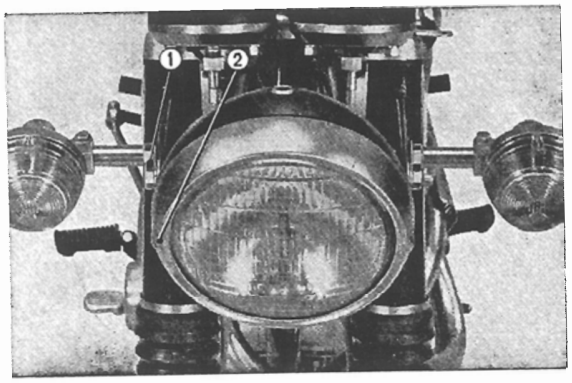

Fig. 5.78 Headlight
① Headlight fixing bolt ② Adjusting screw

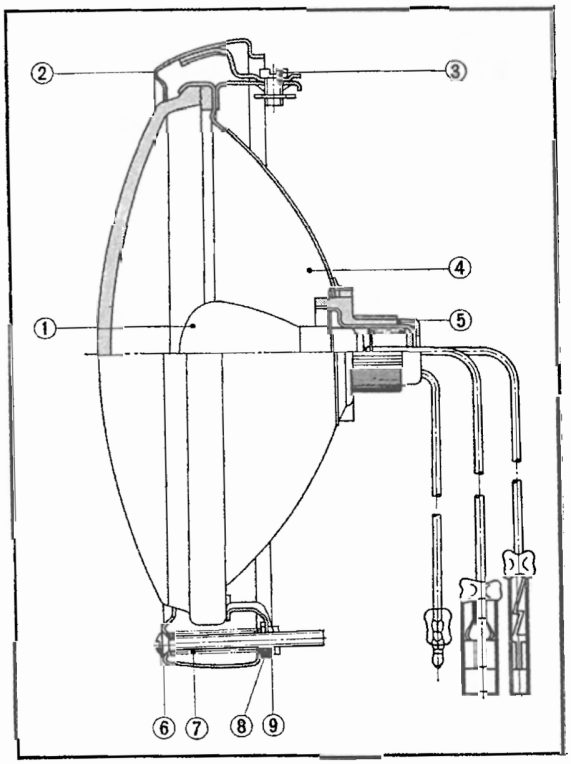

Fig. 5.79 Headlight construction
① Headlight bulb ② Headlight rim
③ Unit holder screw ④ Headlight unit
⑤ Headlight socket ⑥ Beam adjust screw
⑦ Beam adjust spring ⑧ Washer
⑨ Beam adjust nut

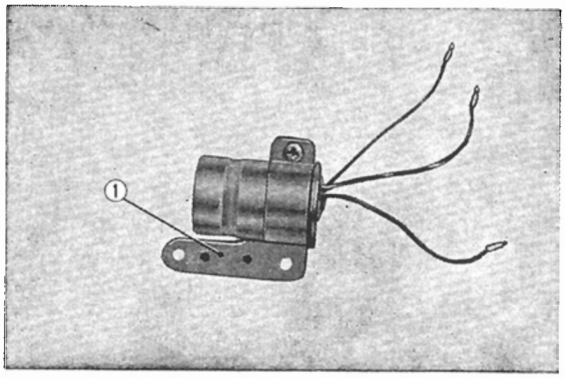

Fig. 5.80 Flasher relay
① Flasher relay assembry

H. Flasher Relay

Flasher relay operation

In the flasher relay, charging and discharging currents of the condenser and load current which flows to the flasher bulb are skillfully activated.

In the flasher relay, the point is repeatedly closed and interrupted by the relay to which the charging and discharging currents of the condenser and load current which flows to the flasher bulb are skillfully actuated. (Refer to **Fig. 5.80**)

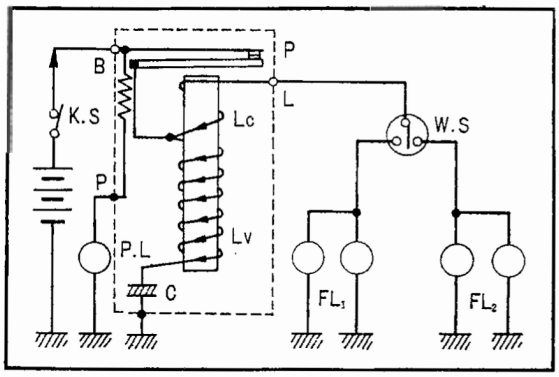

Fig. 5.81 Key switch is closed

In the flasher circuit shown in **Fig. 5.81**, if key switch "KS" is closed, charging current flows from the battery to condenser "C" through voltage condenser coil "Lv", i.e., whenever the key switch is closed, the condenser is always under fully charge. **(Fig. 5.81)**

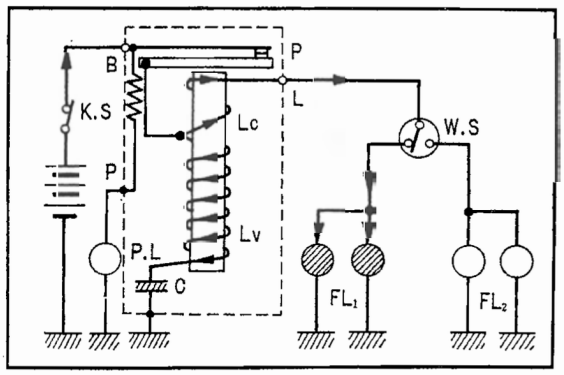

Fig. 5.82 Flasher switch is closed (lamp lights)

In **Fig. 5.82**, when switch "WS" is turned to flasher lamp "EL_1" side, current flows to flasher lamp lights. **(Fig. 5.82)**

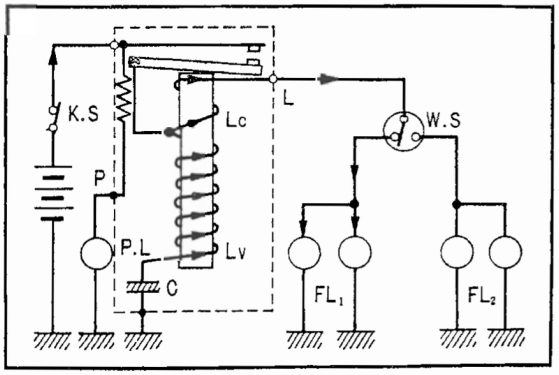

Fig. 5.83 Point (lighting off)

The current which flows to the flasher lamp i.e., the current which flows to coil "Lc" activates the coil ; thus, the point is opened by traction and the lamp is turned off. When the point is opened, the Condenser "C" discharging begins current is almost discharged by the traction of the both "Lc" and "Lv" coils. **(Fig. 5.83)**

When this discharging current is reduced, point "P" is closed under is own spring tension, charging current flows to coil "Lv", and load current is passed to coil "Lc". These currents flow inversely, and for this reason, the traction does not work; thus, the lamp remains on as shown in **Fig. 5.84. (Fig. 5.84)**

However, the charging current which flows to coil "Lv" decreases when condenser "C" becomes almost fully charged the traction working on both coils is unbalanced, and the point is opened turning off the flasher lemp.

The above operations are repeated and the flasher continues to operate.

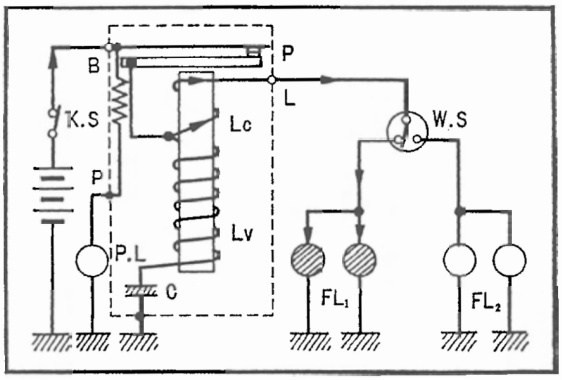

Fig. 5.84 Point closes (lamp lights)

Handling Note:

1. Always use a bulb with the specified capacity.
2. This flasher is negative grounding only. If used for motorcycles designed with positive grounding, the flasher will break and will not operate.
3. The flasher unit case grounded. Particular caution should be given to paint and rust on the installing portion; and when installing, it should be installed firmly.
4. When key or flasher switch is turned on, a buzzer sounds. This does not mean that the flasher is broken.
5. When the flasher switch is turned on, if the lamp does not flash, flasher bulb breakdown is probable. Check the bulb immediately.

NOTE:

This type is not applied to U.S.A. type.

5.7 Switches

A. Combination Switch

This switch control the entire electrical circuit. Combination switch on the CB/CL450 has the OFF, ON (riding) and the parking position.

B. Starter Lighting Switch

The starter-lighting switch is located on the right handle bar adjacent to the grip. Headlight control switch is at the top; the red position is for day riding (headlight does not come on), "H" is for high beam and "L" is for low beam. The starter switch button is below the headlight control switch.

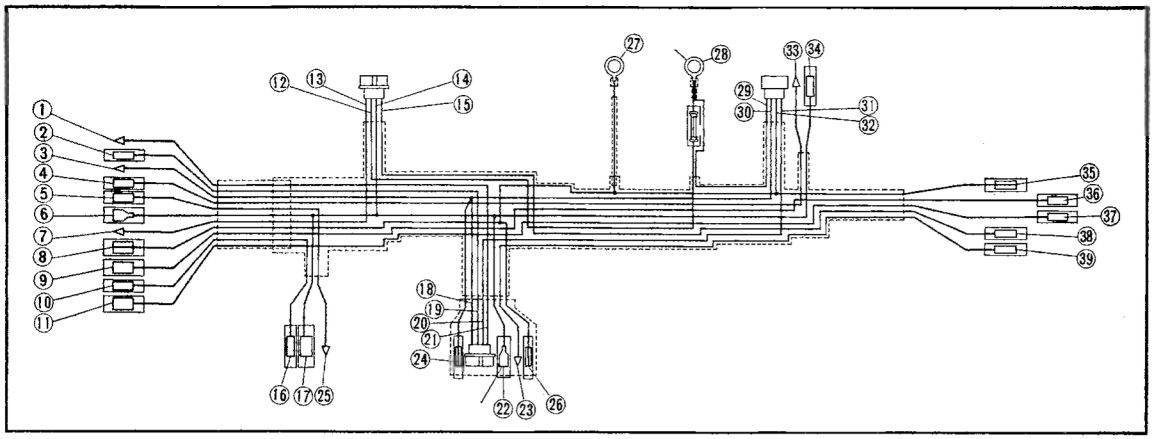

Fig. 5.85 Wire harness

Ref. No.	Wire color	Connected to
①	Lt. green/red	Neutral pilot lamp.
②	White/yellow tube	Lighting dimmer switch
③	Yellow	Lighting dimmer switch
④	Yellow/red	Starter button switch
⑤	Gray	Turn signal switch
⑥	Black	Lighting-dimmer switch, neutral pilot lamp.
⑦	Brown/white	Speedometer lamp, Lighting dimme rswitch.
⑧	Green	High beam hedlight, R. L. turnr signal lamp.
⑨	Lt. blue	R. front turn signal lamp, turn signal switch.
⑩	Lt. green	Horn button switch
⑪	Orange	L. front turn signal lamp, turn signal switch.
⑫	Red	Main ignition switch
⑬	Brown/white	Main ignition switch
⑭	Black	Main ignition switch
⑮	Brown	Main ignition switch
⑯	Lt. green	Horn
⑰	Black	Horn, flasher relay ignition coil
⑱	Yellow	A. C. generator
⑲	White	A. C. generator
⑳	Pink	A. C. generator
㉑	Lt. green/red	A. C. generator
㉒	Black	Regulator, stop switch
㉓	Green/Yellow	Regulator, stop switch
㉔	Yellow	Regulator
㉕	Gray	Flasher relay
㉖	Green	Regulator
㉗	Green	Battery (negative terminal)
㉘	Red	Battery (positive terminal)
㉙	Red/white	Selenium rectifier
㉚	Yellow	Selenium rectifier
㉛	Pink	Selenium rectifier
㉜	Green	Selenium rectifier
㉝	Yellow/red	Starter magnetic switch
㉞	Black	Starter magnetic switch
㉟	Green	R. L. rear turn signal lamp, tail light
㊱	Lt. bule	R. rear turn signal lamp
㊲	Orange	L. rear turn signal lamp
㊳	Brown	Tail light
㊴	Green/Yellow	Stop light

C. Winker-Horn Switch

The winker-horn switch is licated on the left handle bar adjacent to the grip. The upper button is the winker switch and the lower is the horn button switch.

Majority of the switch troubles are broken wire or poor switch contact.

5.8 Wire Harness

The wire harness is the artery between electric parts. It is important for electrical part functions, and if not properly maintained, it may cause fire. For this reason, makeshift patching should be avoided. The wiring system consists of the wire harness, the backbone of the system, the auxiliary cord which

connects two places, partially attached terminals, terminal sleeves, nipple cords, connectors, and other small parts.

The wire harness is combined in one bundle and required junctions are provided on the harness to ease and confirm the network of wires and cables which make up the main electrical circuits. In order to protect the main electrical circuits, the surface has been covered with mesh wire, waxed wire, or vinyl tubing.

The wire harness has the above described features; however on other hand, inconveniences, (i.e., unfamiliar babel arranged in the harness. make it difficult to inspect, or if one cable is broken, the broken wire cannot be replaced only by itself but the whole harness must be replaced.) cannot be avoided. Thus, if only one cable is broken an additional separate cable must be attached to the wire harness.

Not only for the cables which make up the wire harness, but also for all other auxiliary cords, the core cables are colored for ease in identification.

On the positive battery terminal (+)' there is a fuse to prevent hazardous occurences such as excessive battery discharge, burning, etc., due to ground short-circuit of wiring or electric parts damage. However, when the AC generator coil and selenium rectifier are combined for the power supply, the selenium rectifier output terminal and battery should be directly connected to prevent selenium breaking, since if the engine is operated under the condition in which the fuse is removed or broken, the selenium rectifier plate may be broken due to high voltage reversal. **(Fig. 5. 86)**

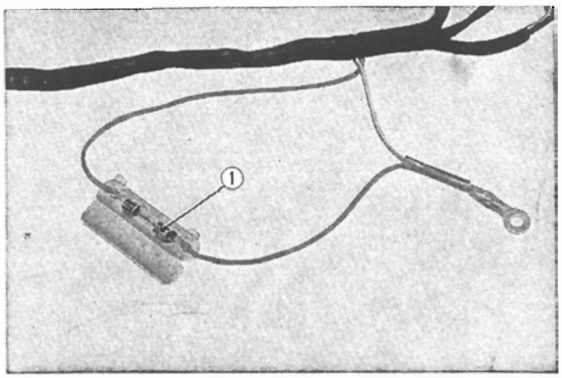

Fig. 5. 86
① Fuse

6. INSPECTION AND ADJUSTMENT

6. 1 Maintenance

Preventive maintenance is periodical maintenance combining checking, repairing, and adjusting various parts and systems for the vehicle, and sometimes the term "preventive maintenance" is also used for maintenance of vehicle components to maintain efficiency.

A. Engine Tune-up

Engine tune-up is a method to recover the normal engine condition. This is corrective action and different from inspection. The engine condition is decided by the following, and by checking and taking necessary action, the recovery can be accomplished.

Compression System
Ignition System
Power System
Fuel System

As long as these four major systems are satisfactory, the engine is in good condition. In the following, measurements and corrective action to be taken are explained by the individual item.

1. Measuring Compression

If the compression is insufficient, the engine loses power. If there is weak compression, engine rotation decreases and engine may stall at low speeds.

a. Remove the spark plug.
b. Inserting compression gauge head into the plug opening, holding it firmly so that compression is not lost. **(Fig. 6. 1)**
c. Fully opening the throttle grip and choke, kicking repeatedly, quickly and powerfully.

NOTE :

(1) Remember to open the throttle grip and choke fully otherwise, the value on the compression gauge will be small.
(2) The compression gauge value will rise gradually with each kick ; continue kicking until the gauge pointer reaches maximum.

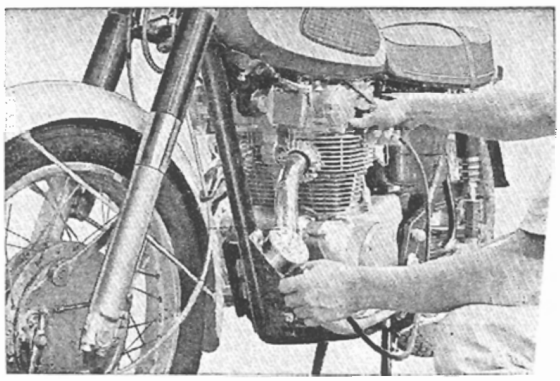

Fig. 6. 1 Compression measurement

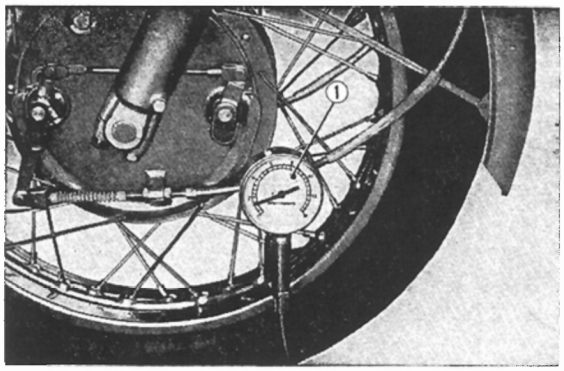

Fig. 6.2 Rated compression
① Compression gauge

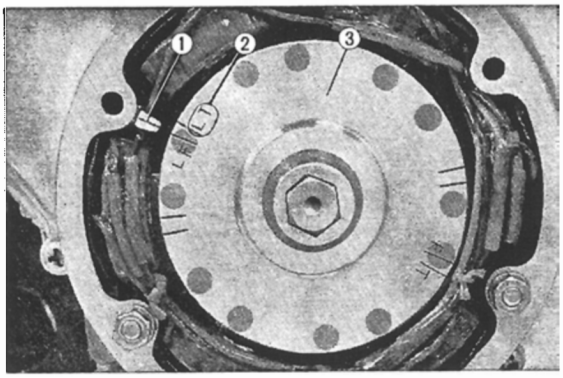

Fig. 6.3 Matching mark LT
① Index mark ② "LT" mark
③ AC generator rotor

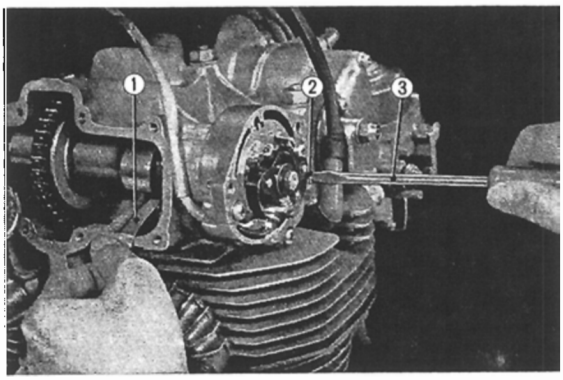

Fig. 6.4 Adjusting tappet clearance
① Thickness gauge ② Cam follower shaft
③ Screw driver

(3) To measure the specified compression, measurement should be performed with the engine warm.

d. The rated compression is 13 kg/sq•cm. (185 p.s.i.) **(Fig. 6. 2)**

e. When the compression measures over 15 kg/sq•cm (213 p.s.i.), the combustion chambe or piston head are probaby carboned. Disassemble the cylinder head and cylinder, and clean off the carbon.

f. When the compression is below 11. 5 kg/sp•cm, (164 p.s.i.) value, piston ring, head or cylinder gasket may be leaking. In this case, adjust the tappets, or disassembling the engine, inspect the piston ring, gasket, and other related parts.

2. Tappet Adjustment

The tappet clearance greatly affects the valve opening and closing timing, when the tappet clearance is excessive, the tappet striking noise become larger, and results in a noisy engine. This clearance affects an engine power, idling, and noise.

1. Raise the seat and remove the fuel tank.
2. Remove the cylinder head cover A (inlet side) and B (exhaust side).
3. Remove the contact breaker point cover and the dynamo cover.
4. Align the "LT" mark on the dynamo rotor with the index mark on the stator. If the timing marks of both the inlet and exhaust camshafts are aligned to the index mark on the bearing holder, this position is the top-dead-center of the intake stroke, and therefore, the rotor should be turned one complete revolution to bring it to the top-dead-center of the compression stroke, in other words, the purpose is to place the left hand piston at the top-dead-center of the compression stroke. **(Fig. 6. 3)**
5. Adjust the left hand cylinder tappet clearance. The standard clearance between the cam and the cam follower for both the intake and exhaust valves is **0. 03 mm (0. 0012 in)**. Perform the adjustment by loosening the cam follower shaft lock nut and turn the cam follower shaft with a screw driver as shown in figure. The adjustment can be made between the range of 180°. **(Fig. 6. 4, 6. 5)**

NOTE :

The tappet clearance should be set when the engine is cold. Upon completion of the clearance adjustment, when locking the nut, tighten the nut carefully so that the cam follower shaft does not rotate. Recheck the clearance following completion of the nut tightening.

6. Next, ratate the dynamo rotor 180° counter clockwise to bring the right hand piston to the top-dead-center of the compression stroke, and then adjust both the right intake and exhaust valve tappet clearances in the same manner as for the left hand side.

The table below shows the method for closing the clearance of the valve tappets. **(Fig. 6.6)**

Right side	IN —— Turn counter clockwise EX —— Turn clockwise
Left side	EX —— Turn counter clockwise IN —— Turn clockwise

3. Contact Breaker Point Gap and Ignition Timing Adjustment

Adjustment of the point gap and ignition timing should be made for both R/H and L/H cylinder at one time. To adjust, proceed as follows:

● Contact Breaker Point Gap:

Turn the generator rotor counterclockwise and check the point gap when it is maximum. The correct gap is 0.012～0.016 in. (0.3～0.4 mm) for the L/H and R/H points. Loosen the contact breaker plate locking screws ⑤ when the point cam ① is at maximum lift and move the contact breaker point plate ④. Tighten the locking screws when the correct gap is obtained. Adjust both L/H and R/H points in the same manner. Recheck the gap after tightening the locking screws.

Note :

Wipe the contact breaker point surfaces with a clean rag if dirty.

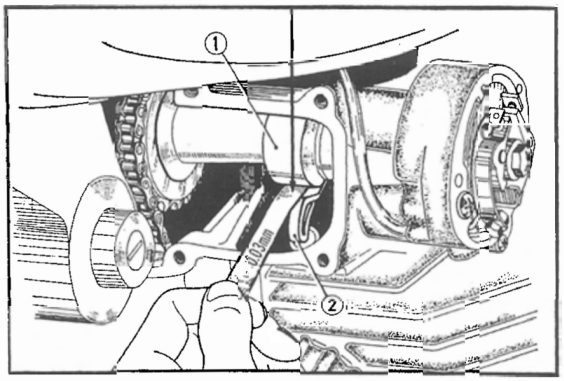

Fig. 6.5 Tappet clearance
① Camshaft ② Cam follower

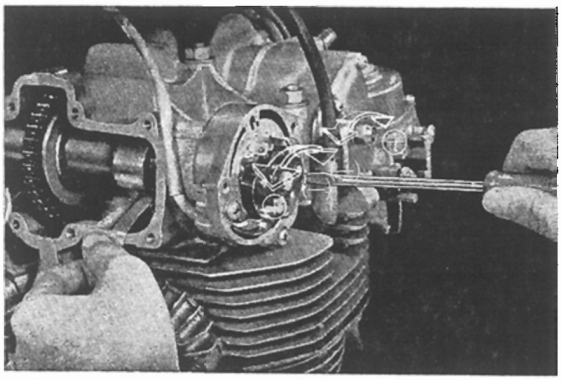

Fig. 6.6 Cam follower shaft turning direction

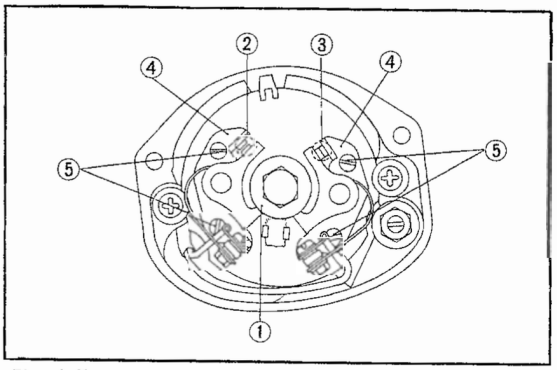

Fig. 6.7
① Point Cam
② L/H contact breaker point
③ R/H contact breaker point
④ Contact breaker plate
⑤ Contact breaker plate locking screws

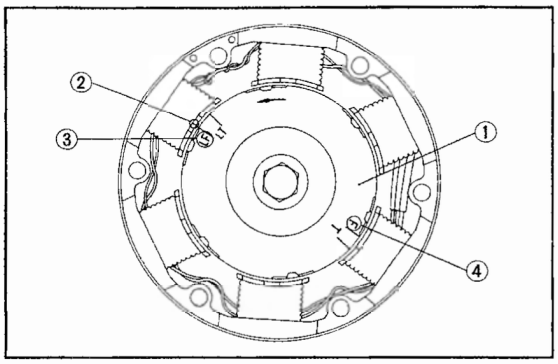

Fig. 6.8
① Generator rotor
② Timing mark
③ "LF" mark
④ "F" mark

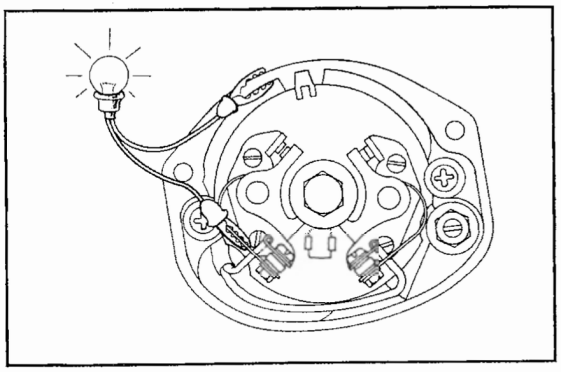

Fig. 6.9

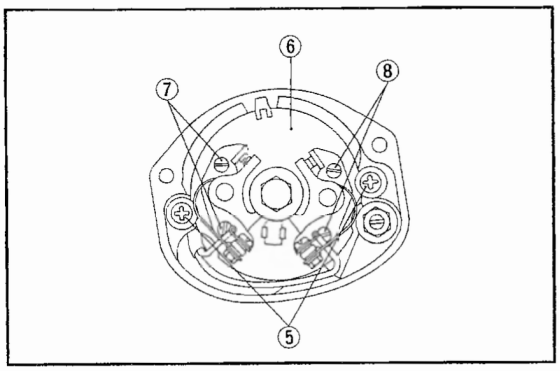

Fig. 6.10
⑤ Base plate locking screws
⑥ Base plate
⑦ L/H contact breaker base plate locking screws
⑧ R/H contact breaker base plate locking screws

● Ignition Timing:

Adjust the ignition timing after completing the adjustment of the contact breaker point gap.

● L/H side

1. Turn the generator rotor ① counterclockwise and align "LF" mark ③ (on L/H cylinder) to timing mark ②. The ignition timing correct if the L/H contact breaker point ② starts opening. To check the ignition timing, connect a 12V–3W bulb as shown in the figure and note the moment the bulb comes on.
2. If the ignition timing is incorrect (either advanced or retarded), align the "LF" mark with the timing mark, loosen base plate locking screws ⑤ and slowly turn base plate ⑥ until the bulb comes on.

NOTE:

The ignition timing will be advanced if the base plate is turned clockwise; it will be retarted if the base plate is turned counterclockwise.

Tighten the base plate locking screws upon completion of the adjustment. Turn the generator rotor again and check if the contact breaker point gap of 0.012~0.016 in. (0.3~0.4 mm) is maintained for the L/H breaker point.

● R/H side

3. Connect the bulb to the R/H contact breaker point. Turn the generator rotor counterclockwise 180 degrees (1/2 turn) and align the "F" mark ④ with the timing mark ②. If the bulb comes on when the marks are aligned, the ignition timing is correct. If the ignition timing is incorrect, loosen contact breaker base plate locking screw ⑧ and vary the R/H point gap within the range of correct gap to adjust the ignition timing.
4. When the correct ignition timing is not obtained even if the R/H point gap is varied within the range of correct gap, a readjustment is required in conjunction with the ignition timing of the L/H cylinder.

When this is the case, proceed as follows:

1) Move the R/H contact breaker plate within the range where the R/H point gap of 0.012~0.016 in. (0.3~0.4 mm) is maintained, and tighten the plate lock screws. (reduce the point gap if the ignition timing is advanced and increase the gap if it is retarded.) Loosen

the base plate locking screws and turn the base plate until the correct ignition timing is obtained for the R/H cylinder.

2) Move the L/H contact breaker plate within the range where th L/H correct point gap in maintained.

Repeat the operation outlines in pars. 1) and 2) until the correct ignition timing is obtained for both L/H and R/H cylinders. If the correct ignition timing is not obtained for either L/H or R/H cylinder within the point gap range of correct gap, replace the contact breaker point assembly with a new one and make a readjustment.

NOTE :

- Make sure to turn the rotor counterclockwise. Do not reverse the rotor.
- It is advisable that L/H and R/H contact point gap be identical in setting.

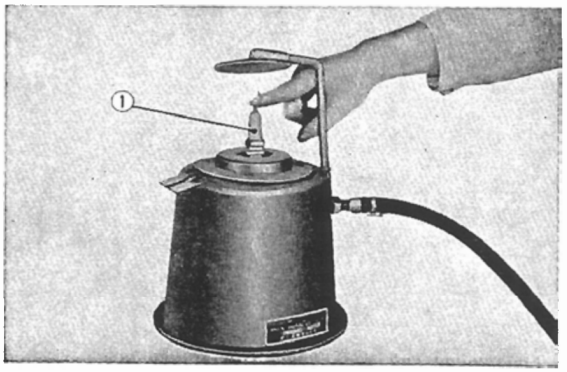

Fig. 6.12 Spark plug cleaning
① Spark plug

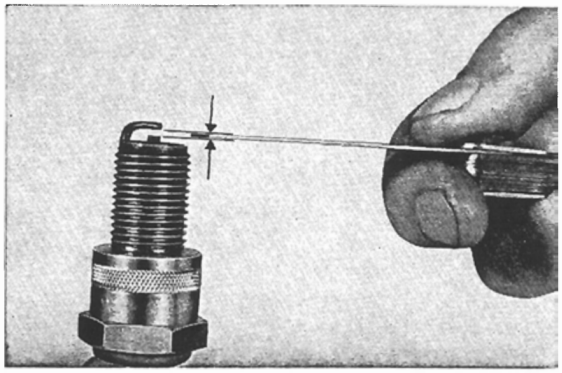

Fig. 6.13 Spark plug measuring (0.7～0.8 mm)

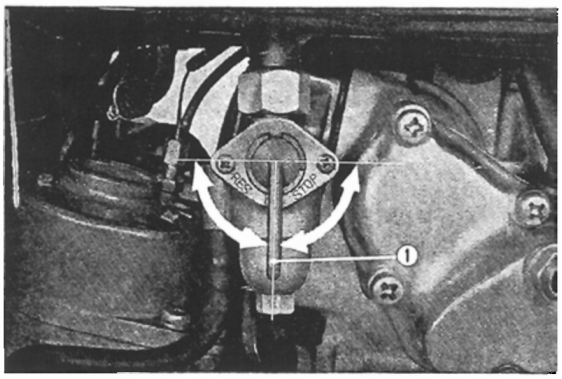

Fig. 6.14
① Fuel cock lever

4. Spark Plugs

The engine condition may be determined by the condition of the spark plugs. If the spark plugs are contaminated or broken, or the electrodes are worn, a spark is not produced efficiently, and the best engine operation cannot be obtained. For this reason, cleaning and adjustment should be done periodically. When carbon or other matter exists on the electrodes, or the electrodes are wet, the high voltage passes through the mediums, and perfect sparking cannot be made.

a. It is best to use spark plug cleaner for the cleaning, however, when a cleaner is not available, after scraping with a piece of wire or needle, wash with gasoline and wipe off with a dry rag. **(Fig. 6.12)**

b. After cleaning, adjust the electrode gap. Adjust with a thichness gauge so that the gap is **0.7 to 0.8 mm. (0.028～0.32 in) (Fig. 6.13)**

NOTE :

(1) Under no circumstance should a torch be used to remove the deposit.

(2) When reinstalling the spark plug, wipe off oil and dust around the spark plug opening on the cylinder head.

(3) When installing the spark plugs, first thread in by hand, and then tighten firmly with spark plug wrench.

(4) Spark plugs should be periodically inspected. When tne spark plug is used for a long time, the electrode gradually burns and the sparking efficiency lowers.

c. The spark plug efficiency can be detected with a spark plug tester. Applying rated voltage, inspect the sparking condition by changing the tester internal pressure.

5. Fuel System

When the fuel system is clogged, enough fuel is not fed to the carburetor ; and when engine speed is raised, the engine does not operate smoothly, and sometimes stalls at high speed.

a. Check the fuel level.

b. Remove the feed line from the carburetor and check the flow when the fuel cock lever is "ON" or "RES". **(Fig. 6.14)**

c. When the flow is defective, dismount the tank from the body and clean inside. Disassemble and clean the fuel cock too.

NOTE :

(1) Note that afulty flow is also caused by the dirty tank filler opening or lines. **(Fig. 6. 15)**

(2) The position "RES" is used when the fuel level is low. When the lever is turned from "ON" to "RES" the motorcycle may be driven from 50 to 60 km with the 1. 8 liter reserve.

d Cleaning gasoline strainer

If there is dust or water in the cock, gasoline will not flow smoothly, and will cause defective engine operation and lower the carburetor efficiency. Inspect the cock, strainer, and filter screen periodically. **(Fig. 6. 16)**

6. Cleaning Oil Filter

If the oil filter is clogged, the cylinders and inside the cylinder heads are damaged, the engine efficiency is lowered and the engine service life is shortened.

a. The oil filter is accessible by removing the oil filter cover located on the right crankcase cover.

b. Remove the circlip and disassemble the oil filter cap ③ from the oil filter rotor ②.

c. Wash the oil filter rotor cap ③ and the oil filter rotor ① internally in solvent or gasoline.

NOTE :

(1) A little oil will come out when the oil filter cover is removed.

(2) When reinstalling the rotor cap, the rotor cap vane should be matched to the groove on the inside wall of the rotor. **(Fig. 6. 17)**

(3) Make sure that the spring loaded oil guide metal is perfectly clean and free in the oil filter cover.

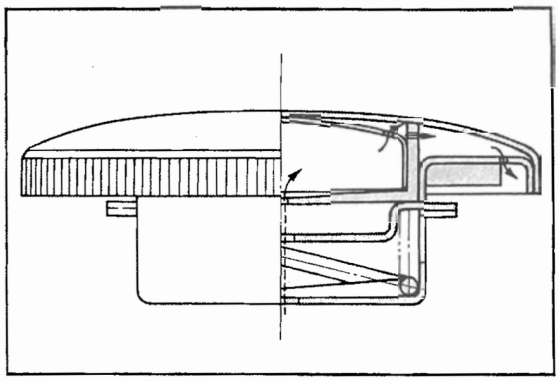

Fig. 6.15 Filler cap cross-section showing breath path

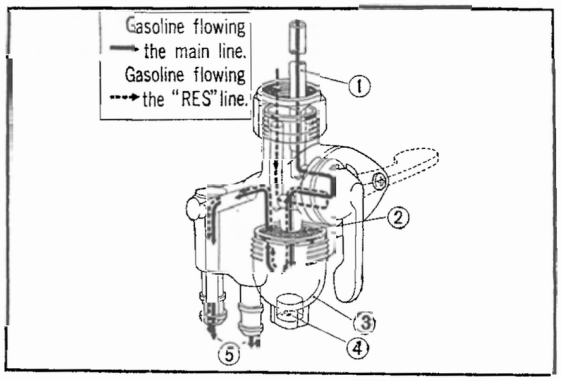

Fig. 6.16 Gasoline flow through the fuel cock
① Main line ② Screen
③ Strainer cup ④ Dust, water, etc.
⑤ To the carburetor

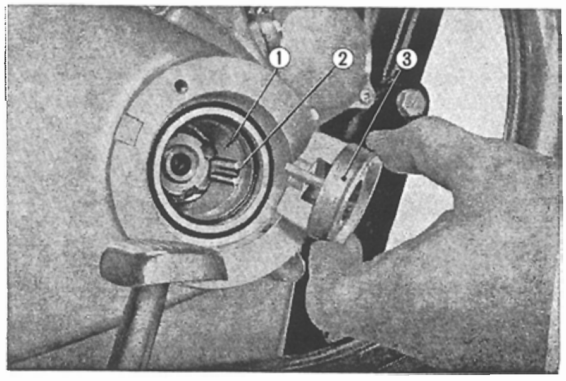

Fig. 6.17 Oil filter rotor cap installation
① Oil filter rotor ② Groove
③ Oil filter cap

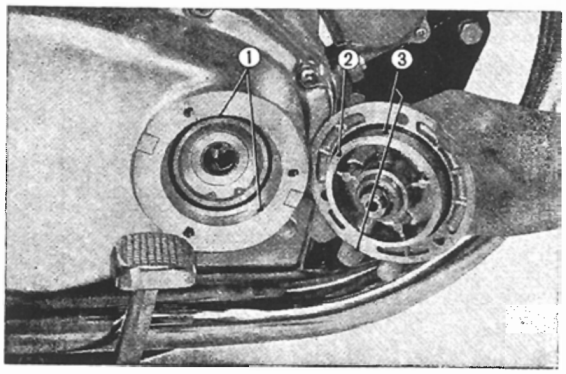

Fig. 6.18 Oil filter cover installation
① Oil filter opening
② Oil filter cover
③ Oil filter opening

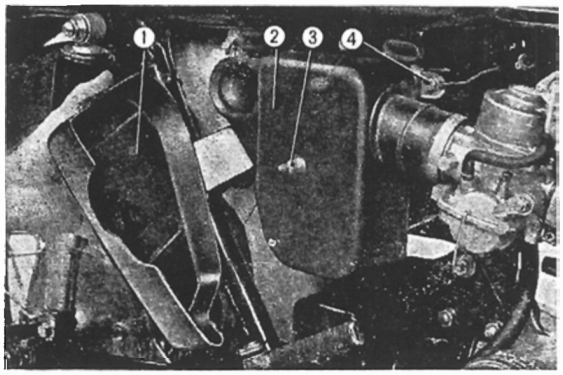

Fig. 6.19 Air cleaner cover removing
① Air cleaner case
② Air cleaner cover
③ Air cleaner setting bolt
④ 6×10 hex bolt

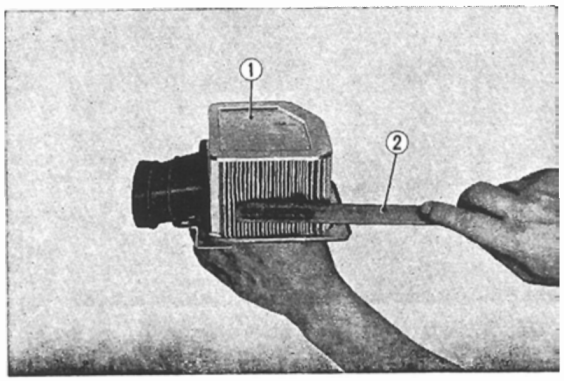

Fig. 6.20 Air cleaner cleaning
① Air cleaner element
② Brush

(4) When reinstalling the oil filter cover, match the right crankcase cover oil filter opening and the filter cover oil opening. **(Fig. 6.18)**

7. Air cleaner cleaning

When the air cleaner is clogged with dirt, air is not taken in freely, sufficient engine power cannot be obtained and acceleration is faulty. Clean the air cleaner periodically.

1. Remove air cleaner case.
2. Unscrew air cleaner cover setting bolt and then remove the air cleaner cover.
3. Unscrew the 6 mm hex bolt, loosen the air cleaner connecting tube setting screw and remove the air cleaner element. **(Fig. 6.19)**
4. Tap the element to loosen the dust and then apply dry compressed air from the inside to remove the dust. **(Fig. 6.20)**

NOTE:

(1) The air cleaner is paper. When broken, replace.

(2) Do not leave oil on the filter element as it prevents air filteration.

(3) Inspect the filter element connecting line and connector for peeling, breakage, broken rubber, and other damage.

(4) When reassembling, join the right and left air cleaners with the connecting line. If done incorrecting dirty air is taken in, and cylinder and piston will soon wear. **(Fig. 6. 21)**

(5) Insure that air is not taken in from outside anywhere.

8. Clutch Adjustment

If the clutch is not completely disengaged when engine is started, the engine may stall and the motorcycle start to move. If the clutch slips, the driving speed will not increase when engine is accelerated.

a. The clutch lever play is the distance from the normal lever condition to the position in which the clutch begins to disenage. The proper clutch lever play is 1. 0 to 2. 5 cm. (0. 4～1. 0 in) **(Fig. 6. 22)**

The clutch lever play is adjusted by loosening the bolt and by turning the adjuster. **(Fig. 6. 23)**

b. Insure that there is no slipping and that the clutch is disengaged completely.

(1) Does the engine start easily when the kick pedal is kicked ?

(2) When the engine is started, clutch grabs, and when shifting to low, does the motorcycle start moving or does the engine stall

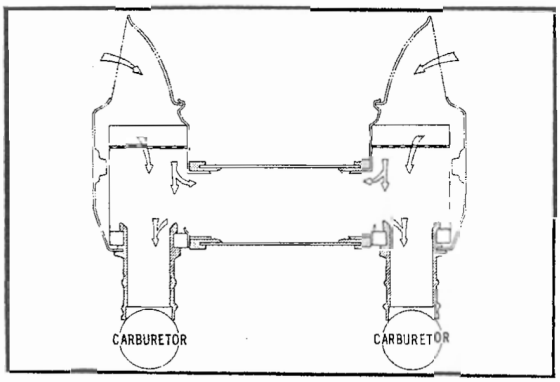

Fig. 6. 21 Air cleaner airflow

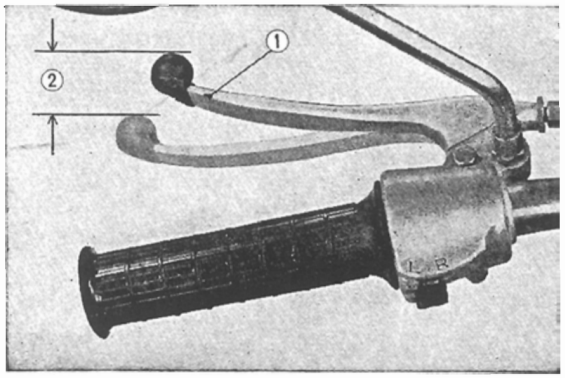

Fig. 6. 22 Clutch lever play
① Clutch lever ② Free play

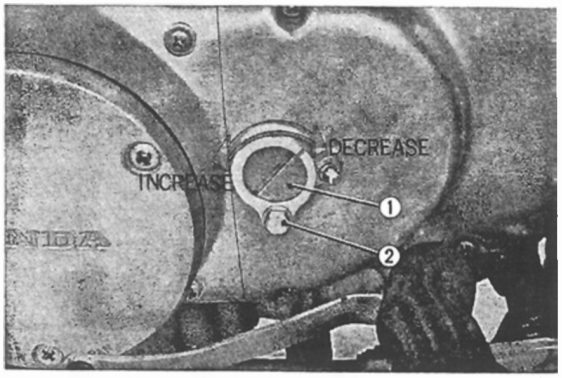

Fig. 6. 23 Clutch adjustment
① Clutch adjuster ② Locking bolt

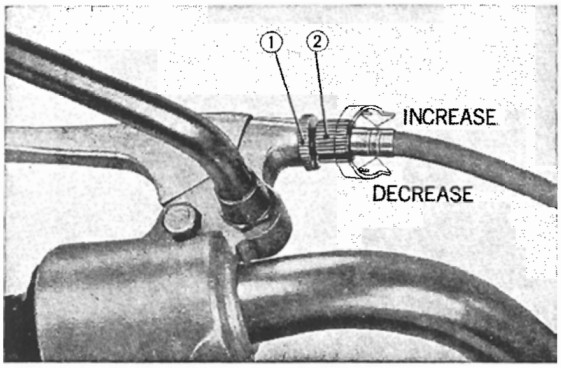

Fig. 6.24 Clutch cable adjutment
① Locking nut ② Circular adjusting bolt

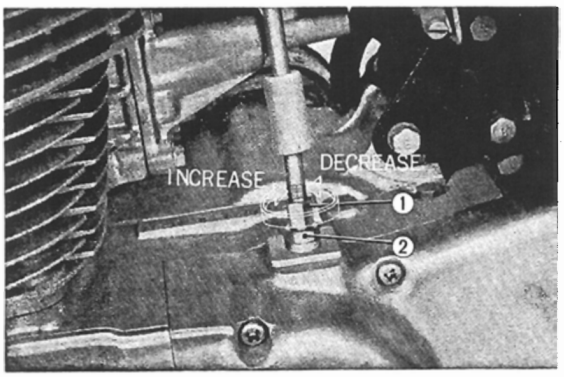

Fig. 6.25 Clutch cable adjustment
① Cable adjuster ② Locking nut

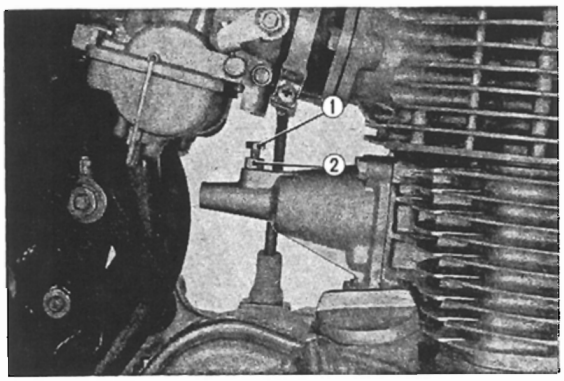

Fig. 6.26 Cam chain adjustment
① Tensioner adjusting bolt
② Locking nut

(3) When the clutch lever is released gradually and the engine is accelerated, does the motorcycle start smoothly ?

c. The clutch cable is also adjusted by loosening the nuts and the adjusters. **(Fig. 6. 24 and 25)**

9. Cam Chain Adjustment

For Honda 450, a light endless chain is used to improve efficiency and reduce noise.

If the cam chain becomes loose, the valve timing will be off, and engine efficiency lowered, i.e., the horsepower is reduced and engine noise increased.

a. Remove the dynamo cover, turn the dynamo rotor counter-clockwise and align the "LT" mark with the index mark on the stator.

b. Loosen the lock nut and the adjust screw. The chain is automatically tightened. **(Fig. 6. 26)**

c. Retighten the adjusting screw and lock nut firmly.

NOTE :

(1) It should be noted that the tensioner push rod should not be pushed in with finger and the cam chain should not be tightened excessively. This shortens the chain service life and lessens the guide roller durability.

(2) Removing the cylinder head cover, inspect the chain wear and seals.

10. Carburetor Cleaning and Adjustment

If the carburetor is contaminated or improperly adjusted, the engine efficiency is noticeably lowered. For example, if the mixture is too lean, the engine overheats, and if too rich, engine operation becomes heavy and defective. When fuel overflows, it may cause fire. For these reasons, the carburetor must be disassembled, inspected, and adjusted periodically.

a. Remove both left and right air cleaner case.

b. Removing the 6 mm hex head bolt and air cleaner connecting tube band screws, take off the left and right air cleaners.

c. Loosening the throttle cable adjusting bolt and nut, remove the throttle cables from the carburetors.

d. Remove the carburetors.

e. Disassemble and clean the carburetors with gasoline.

f. Use compressed air to clean the individual nozzles, and after cleaning, reassemble, reinstall, and adjust.

g. Idling adjustment.

(1) Idle adjustment

a. Adjust the stop screw ② so that the exhaust back pressure is the same for both the right and left side. If the engine speed does not decrease when the stop screw is screwed out, loosen the lock nut and screw in the cable adjuster by about one turn. The engine rpm at this point is between 1,000～1,200 rpm.

b. Starting with either the right or left carburetor, manipulate the pilot screw ① and find the point of highest rpm; the same should be done with the opposite carburetor. Turning the pilot screw in will give a high fuel air mixture, turning the screw out will give a lean mixture. The pilot screw ① should be set at a point $1 \sim 1\frac{1}{4}$ of a turn out out from full close.

c. After completing the adjustment in paragraph (b) above, recheck the exhaust pipe back pressure on both the right and left side and if necessary, readjust the stop screw as was done in paragraph (a).

d. Repeat the procedures from paragraph (a) through (c) several times so that the pilot screw is set to provide the specified rpm and that the same exhaust back pressure is obtained at both the right and left sides. **(Fig. 6. 27)**

(2) Synchronizing the throttle valve

Make the adjustment so that the right and left throttle valves will both move by the same amount when the throttle grip is moved slightly. This adjustment can be made by placing a hand under the carburetor and noting the movement of the throttle lever or by observing the movement while the throttle grip is slowly moved and checking to see that the throttle levers start moving at the same time. If adjustment is required, loosen the lock nut **(Fig. 6. 28)** and perform the adjustment with the cable adjuster. **(Fig. 6. 28)**

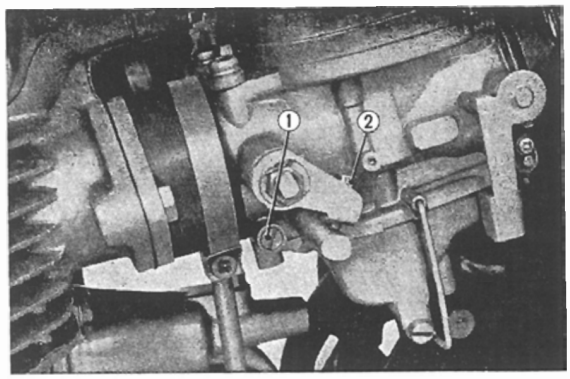

Fig. 6. 27 Idling adjuster
① Stop screw ② Pilot screw

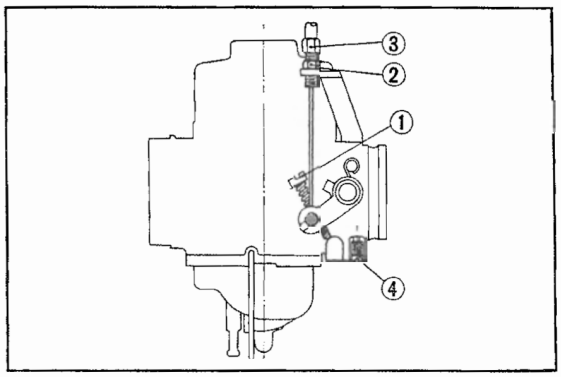

Fig. 6. 28 Idling adjustment

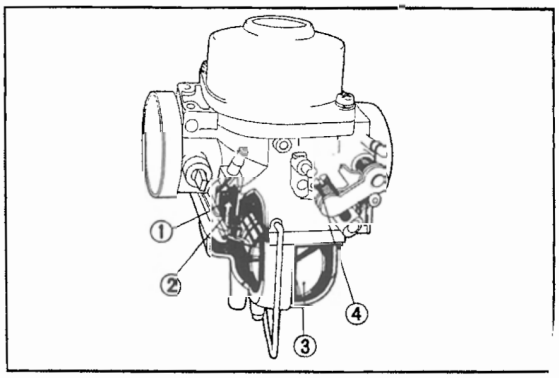

Fig. 6. 29 Carburetor cross-section
① Valve seat ② Valve ③ Float
⑤ Stop screw

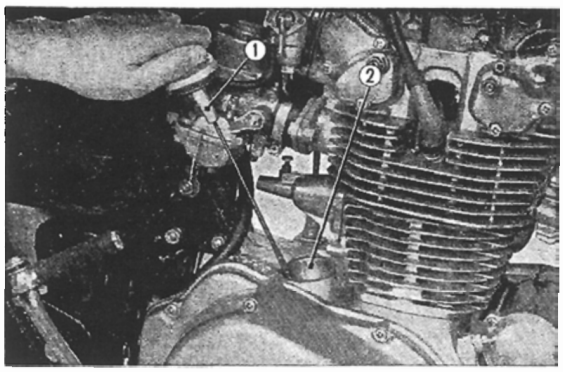

Fig. 6.30 Oil cap
① Oil filler cap ② Oil filler opening

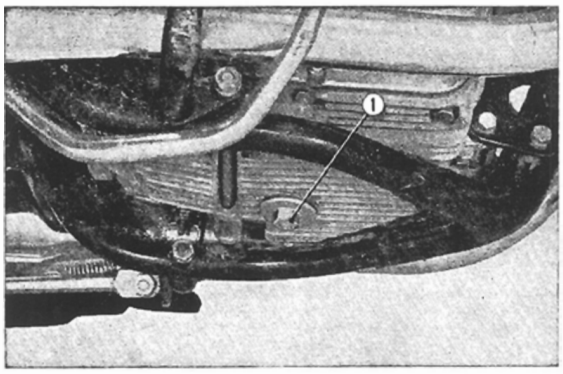

Fig. 6.31
① Drain plug

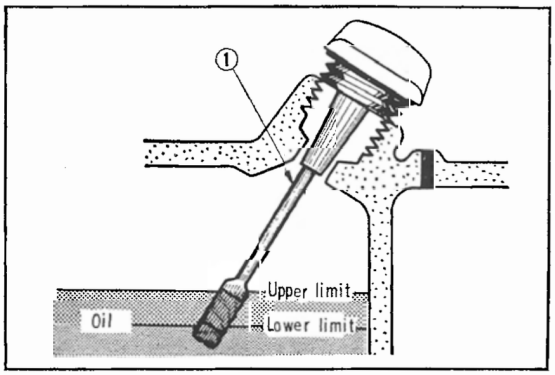

Fig. 6.32
① Oil level gauge

B. Lubrication

Rotating units require lubricant to reduce wear and heat and prevent seizure. If not lubricated the machine service life is shortened, and breakdowns will occur.

1. Parts for which there is no periodical lubricating schedule.

   There are parts which do not require periodic lubrication, but only when disassembled or overhauled. These parts are the steering ball, cone race, and throttle grip.

2. Engine Oil Change

   The engine oil is changed after the motorcycle is driven the first 500 km (300 miles) and every 3200 km (2000 miles) thereafter.

   a. Remove the oil cap and drain plug on the bottom of the crankcase and drain all the engine oil. **(Fig. 6. 30 and 31)**

NOTE :

Draining should be done when the engine is warm.

b. After draining, retighten the drain plug and pour new oil into the engine through the filler.

c. If the oil level is between lower and upper limits on the oil gauge, with the filler cap not threaded in but just inserted, it is correct **(Fig. 6. 32)**

NOTE :

1. Do not operate the engine if the oil level is below the lower oil level mark on the dipstick.
2. Overfilling the crankcase with oil will cause the oil to be blown out of the breather.
3. When operating the motorcycle in unusually dusty condition, it is recommended that the oil change be performed at more frequent intervals than that which is specified in the maintenance schedule ; this will have a very beneficial effect on the engine.

3. Grease

Fittings are greased with a grease pump. Continue greasing until grease appears around the nipple. The proper grade of grease to be used is multi purpose type **NLGI No. 2. (Fig. 6.33 and 34)**

4. Front Fork Fluid Change

To the telescopic type cushion, side pressure is applied to the front and rear directions during driving in addition to the vertical vibration, and accordingly, the oil is contaminated by fine metal pouder created by initial wear ; thus, it is desirable to replace after the first 500 km (300 miles) Following this second fluid change, fluid is changed every 5, 000 km (3, 100 mile).

a. Removing the front fork bolt and drain plug, drain the fluid. When doing this, work the shock absorber to drain oil completely.

b. Clean inside with oily solvent.

NOTE :

(1) Do not use gasoline for cleaning inside.

(2) Drain the solvent in the same manner as for the oil.

c. Tighten the drain plug, and pour 290 cc (1. 78 cu-in) of corrosion resistant oil into each shock absorber oil.

C. Drive Chain Adjustment

If the drive chain is too loose, it causes chain knock during driving ; and if too tight, the chain offers resistance and sufficient power is not transmitted to the rear wheel. The drive chain should be tightened properly.

a. The maximum slackness when measured by moving the drive chain vertically is 1 to 2 cm (0. 4～0. 8 in). **(Fig. 6. 35)**

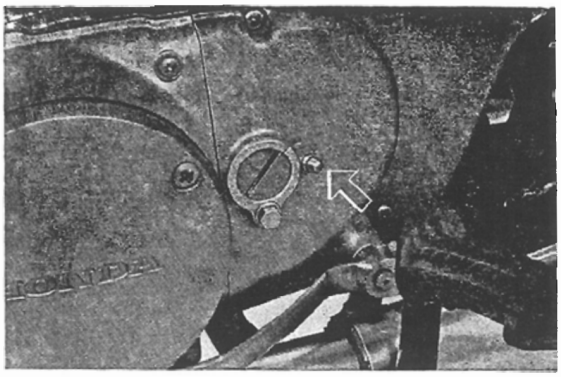

Fig. 6.33 Greasing nipple

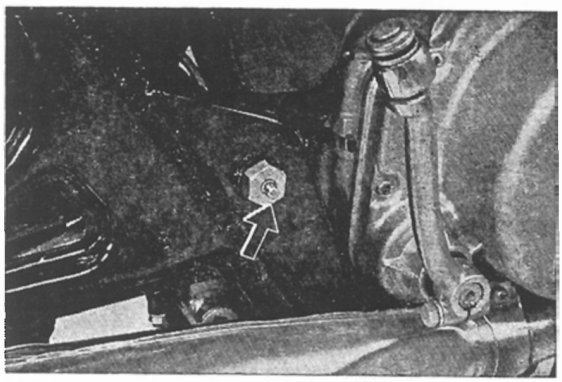

Fig. 6.34 Greasing nipple

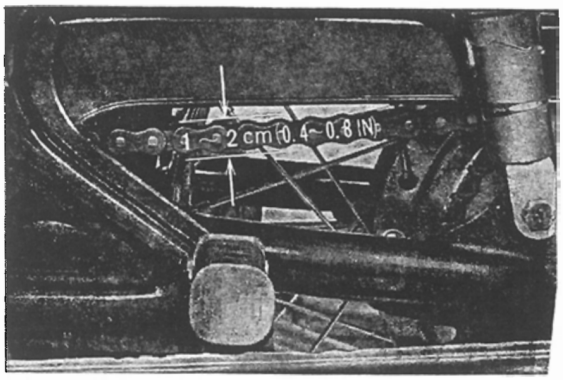

Fig. 6.35 Drive chain slackness

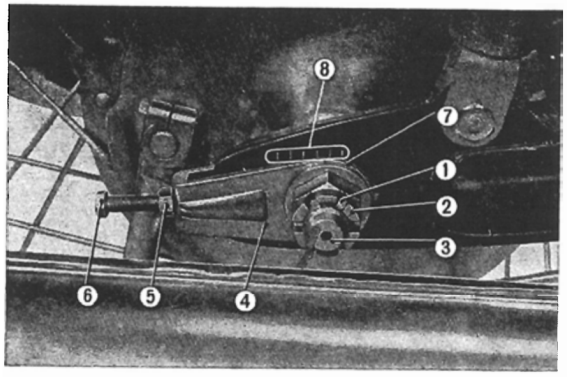

Fig. 6.36 Drive chain adjustment
① Cotter pin
② Axle nut
③ Rear wheel axle
④ Chain adjuster
⑤ Lock nut
⑥ Adjusting bolt
⑦ Index mark
⑧ Reference mark

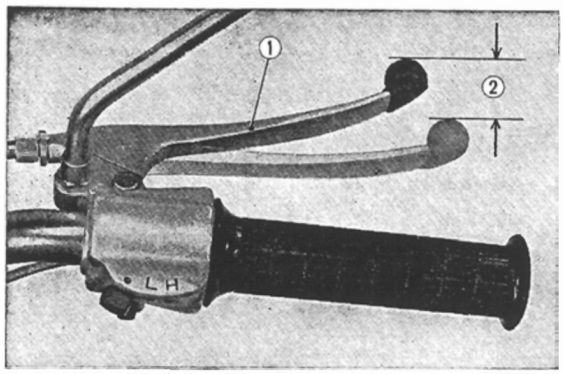

Fig. 6.37 Front brake lever play
① Front brake lever ② Free play

The drive chain is adjusted by loosening the rear axle nut and the lock nut and turning the adjusting bolt. **(Fig. 6.36)**

• CLEANING THE DRIVE CHAIN

1. The drive chain should be disassembled and cleaned to remove the old grease and dirt which cause excessive wear to the chain. Wash the chain in solvent, using a stiff brush to remove all the old grease and dirt. After rinsing in clean solvent, hang the chain in a dust free area and allow to dry thoroughly. Place the chain in a vessel containing a mixture of good grade engine oil and petrolatum (ratio of 300 gr of petrolatum to 1 liter of engine oil. SAE #30~50) and heat for 10 minutes at a temperature of 50 to 120°C (120° to 250°F) while agitating.

Remove the chain and hang ; after the grease hardens, wipe off the excess with a clean rag and assemble on the motorcycle.

A loss of up to 10% power could result from improperly lubricated chain. It is recommended that the chain be cleaned every 10, 000 km (6, 000 miles) or at more frequent intervals if motorcycle is ridden in dusty or adverse road condition.

NOTE :

(1) The notches on the drive chain adjuster and the rear fork should be matched at the same positions for both left and right sides.

(2) Adjusting the chain, upon retightening the axle nut, retighten the adjuster lock nut firmly.

b. Perform the periodical cleaning and lubrication. If not sufficiently lubricated, the individual chain links may bind, and drive sprocket may also be affected.

In bad weather particular attention should be paid to chain lubrication.

D. Brake Adjustment

The driver's life depends much on the brake ; inspect the brake not only at the periodical inspections, but daily before use.

1. Front Brake

a. Raise the front wheel off the ground by placing a support block under the engine, spin the front wheel by hand and measure the

amount the front brake lever ① must be moved before the brake starts to take hold. The lever free play ② should be 15～30 mm (0.6～1.2 in) at the end of the brake lever,

b. If the brake requires adjustment, there are two places where this adjustment can be made. Normally the adjustment can be made at the brake lever arm ① on the front brake panel. First, loosen the lock nut ② and then turn the adjusting nut ③. Turning the nut ③ in the clockwise direction Ⓐ will decrease the brake lever play and turning in the counter clockwise direction Ⓑ will increase the play.

c. Minor adjustment can also be made with the circular adjusting bolt on the front brake lever by turning in the same direction as above. **(Fig. 6.37, 38)**

2. Rear Brake

a. Raise the rear wheel off the ground and check the free play ② of the brake pedal ① in the same way as for the front brake, the play should be 0.8～1.2 in (2～3 cm). **(Fig. 6.39)**

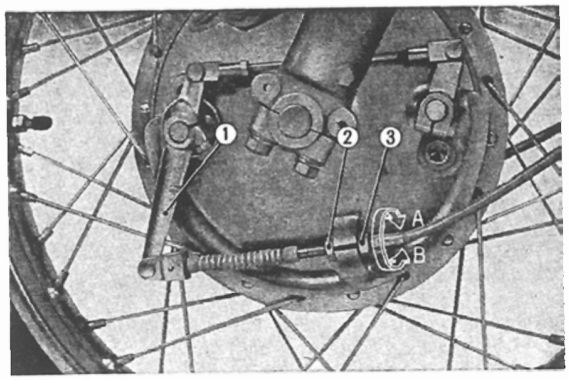

Fig. 6.38 Front brake adjustment
① Front brake arm ② Lock nut
③ Adjusting nut

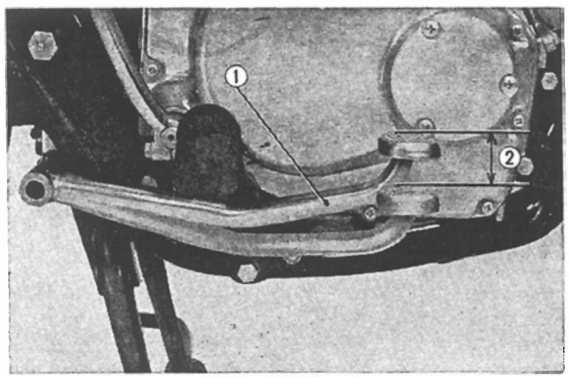

Fig. 6.39 Brake pedal free play
① Rear brake pedal ② Free play

b. The adjustment is made with the brake arm on the rear brake panel. Turning the adjusting nut ① clockwise will decrease the free play of the brake pedal, and turning counter clockwise will increase the free play. **(Fig. 6.40)**

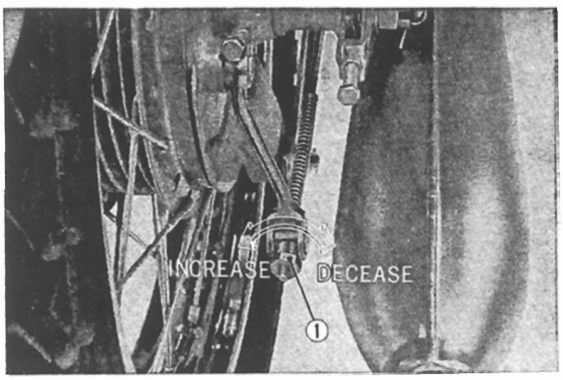

Fig. 6.40 Rear brake adjustment
① Rear brake adjusting nut

E. Battery Inspection

The battery electrolyte decreases after long usage, and should be replenished periodically. When the level is lower, and the plates are exposed, the charge is reduced. For this reason, the electrolyte must always be maintained at the proper level.

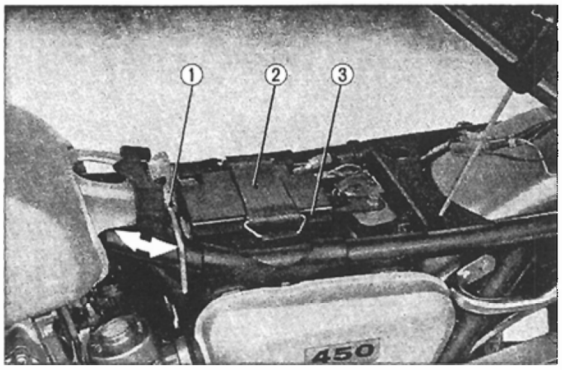

Fig. 6.41
① Seat latch
② Battery strap
③ Battery

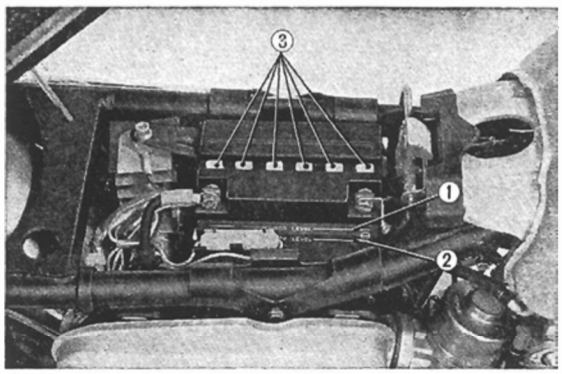

Fig. 6.42
① Upper level mark
② Lower level mark
③ Yellow cap

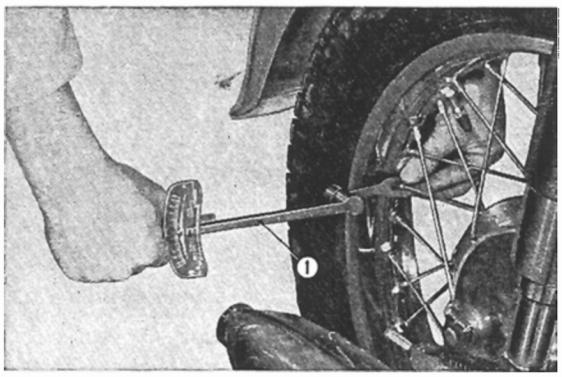

Fig. 6.43 Retightening spoke
① Torque wrench

a. Access to the battery is by releasing the seat latch ① on the front end under the seat and raising at the front. Use the stay which is attached to the under side of the seat to hold the seat in the raised position. **(Fig.6. 41)**

b. Electrolyte level must be above the lower level. When the level is low pour in distilled water to the upper level. **(Fig. 6. 42)**

c. Distilled water should be poured into the fillers after removing the battery strap and the yellow cap. The level of all six should be the same.

NOTE :

(1) When replenishing electrolyte, do not use dilute sulfuric acid.

(2) When the electrolyte decreases quickly, check the charge.

(3) Insure that the breather tube is not clogged.

(4) When removing the battery, first remove the (—) side terminal, and then the (+) side terminal. If not, it may cause shortcircuit, shock or apply an unreasonable load to the battery.

(5) Grease around the terminals slightly to prevent corrosion.

(6) Battery (+) or (—) side lead wire should be firmly tightened.

F. Checking Parts For Tightness

1. Important Nuts and Bolts

Some nuts and bolts loosen due to vibration or normal wear. To prevent this, the major parts (shown in the following table) must be retightened. Use a torque wrench for retightening, and tighten with the proper torque.

2. Spokes

If the motorcycle is driven with loose wheel spokes the rims and other spokes are weakened. For this reason, loose spokes should be retightened every 9600 km (6000 miles).

With the front wheel lifted, turn the wheel, and retighten loose spoke nipples properly so that all are tightened equally. Use the nipple wrench. **(Fig. 6.43)**

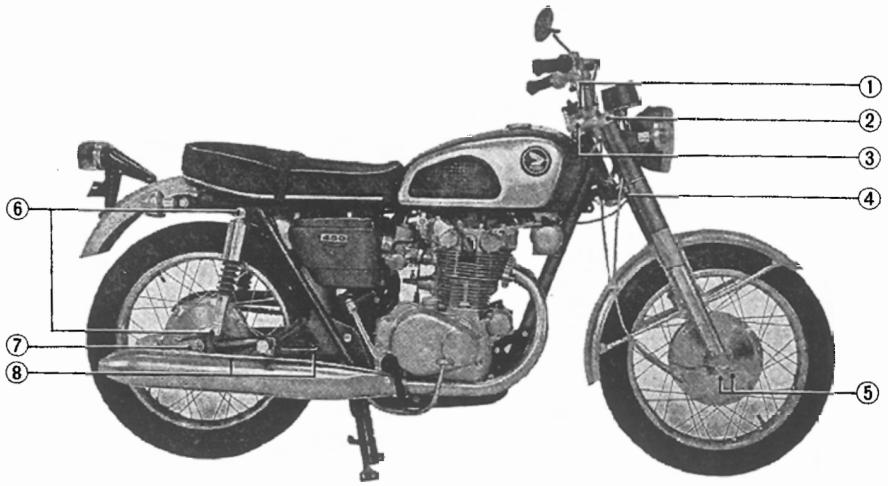

Fig. 6.44 Right side

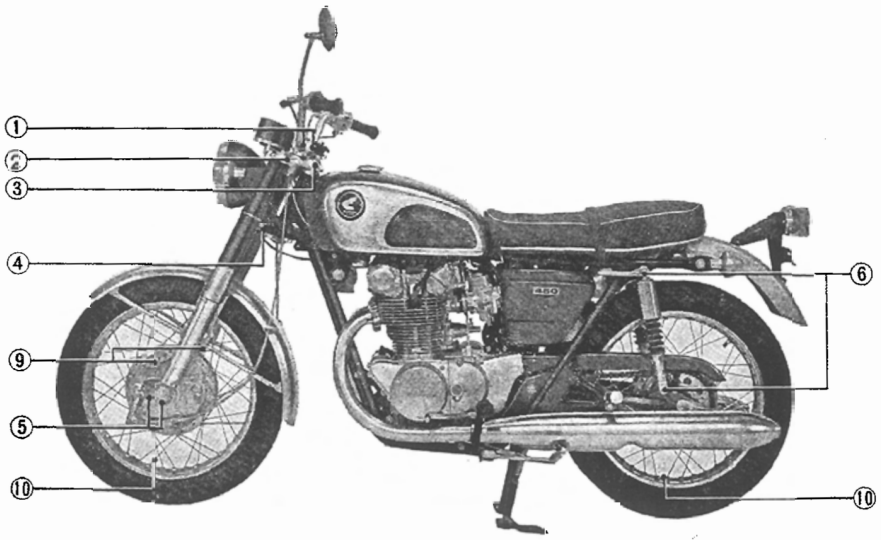

Fig. 6.45 Left side

① Handlebar mounting bolts
② Front fork bolts
③ Steering stem nut
④ 10×36 hex bolts
⑤ Front wheel axle holder nuts
⑥ Rear cushion mounting nuts
⑦ Rear wheel axle nut
⑧ Rear brake stopper arm mounting nuts
⑨ Front brake stopper arm mounting bolts
⑩ Front and rear brake spokes

Tightening Torque Standard

Classification	No.	Location	Part tightened	Tightening torque	
Front fork	1	Front wheel axle	Front axle nut	750~850 kg cm	(54~61 lb ft)
	2	Front brake stopper arm	Front brake torque bolt	180~280 〃	(13~20 〃)
	3	Head light	Light case mounting bolt	400~500 〃	(29~58 〃)
	4	Fork top bridge	Front fork bolt	650~800 〃	(47~58 〃)
	5	Steering stem	Steering stem head nut	900~1200 〃	(65~87 〃)
	6	Fork top bridge	8×74 hex bolt	250~350 〃	(18~25 〃)
	7	Front fork bottom case	8 mm hex nut	180~280 〃	(13~20 〃)
	8	Steering case	Steering stem bottom bolt	400~500 〃	(29~58 〃)
	9	Front fender	6×16 hex bolt	80~120 〃	(6~ 9 〃)
Steering Handle	1	Handle pipe holder	8×32 hex bolt	250~350 〃	(18~25 〃)
	2	Handle lever	6 mm hex nut	80~120 〃	(6~ 9 〃)
	3	Handle pipe lower holder	8 mm hex nut	250~350 〃	(18~25 〃)
Frame	1	Engine monting	Engine hanger bolt (10 mm)	400~500 〃	(29~58 〃)
	2	Engine monting	Engine hanger bolt (8 mm)	180~280 〃	(13~20 〃)
	3	Main switch, Horn, IG bracket	6×90 hex bolt	80~120 〃	(6~ 9 〃)
	4	Side stand	10 mm hex nut	400~500 〃	(29~58 〃)
	5	Rear cushion upper joint	10 cap nut	400~500 〃	(29~58 〃)
	6	Rear cushion lower	10 thin nut	400~500 〃	(29~58 〃)
	7	Rear cushion lower	Rear cushion lower bolt	400~500 〃	(29~58 〃)
	8	Rear fork pivot bolt	14 mm self-locking nut	700~900 〃	(51~65 〃)
	9	R. L. pillion step	10 mm hex nut	400~500 〃	(29~58 〃)
	10	Rear brake stopper arm	8 mm self-locking nut	200~280 〃	(15~20 〃)
	11	Rear whell axle	Rear axle nut	800~1200 〃	(58~87 〃)
	12	Handle lever pivot bolt	6 mm hex bolt	80~120 〃	(6~ 9 〃)
	13	Air cleaner	6 mm hex bolt	80~120 〃	(6~ 9 〃)
	14	Kick arm	8×32 hex bolt	180~280 〃	(13~20 〃)
	15	Exhaust pipe joint	Joint nut	80~120 〃	(6~ 9 〃)
	16	Final driven sprocket	10 mm thin nut	400~500 〃	(25~58 〃)
	17	Drive chain adjuster	Adjusting nut	150~190 〃	(11~14 〃)
	18	Drive chain case	6 mm hex bolt	80~120 〃	(6~ 9 〃)
	19	Fuel cock body	Joint nut	150~250 〃	(11~18 〃)

7. SUPPLEMENT OF CB/CL 450 K1~K7

1. COMPARISON OF CB/CL 450 K3 TO CB/CL 450 K1

Part or item	CB/CL 450 K1	CB/CL 450 K3	Modified part
Tank cap	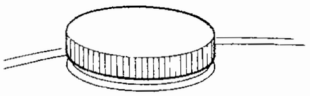 **Fig. 7.1** • The tank cap is of a screw-in type	 **Fig. 7.2** • The tank cap can be opened by pressing it down and by moving the operating	
Kill switch	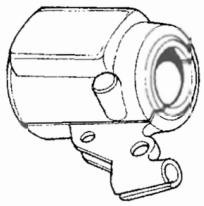 **Fig. 7.3** • The kill switch is not used. The surface of the switch assembly finished by buffing.	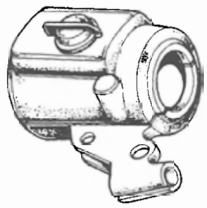 **Fig. 7.4** • The kill switch is used. The surface of the switch assembly is finished by black, semi-delustered painting.	
Front brake	• Drum type	• Disc type (See page 169.)	
Front forks	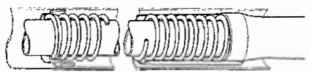 **Fig. 7.5** • Springs: External installation • Oil Condor No. 3 hydraulic oil • Pistons: Fixed type • Damping force: 52k g/0.5 m/sec.	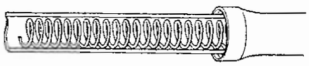 **Fig. 7.6** • Springs: Internal installation • Oil: Ultra 10 W–30 • Pistons: Oscillating type • Damping force: 40 kg/0.5 m/sec.	
Steering dampers	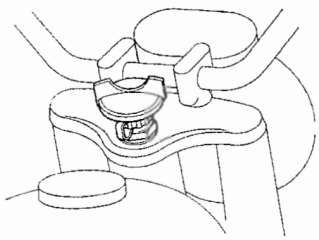 **Fig. 7.7** • with friction damper	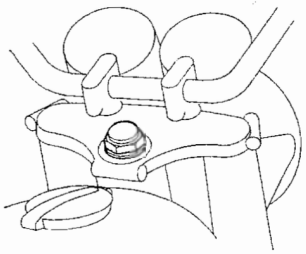 **Fig. 7.8** • Without friction damper	

Part or item	CB/CL 450 K1	CB/CL 450 K3	Modified part
Transmission countershaft	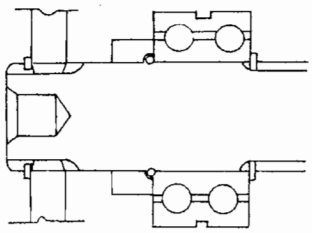 Fig. 7.9	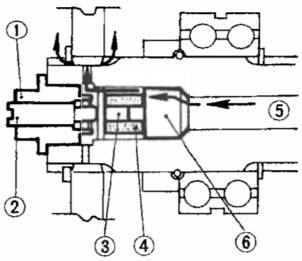 **Fig. 7.10** ① Oil reserving plug ② Adjusting screw ③ Stopper ④ Rubber orifice ⑤ Oil ⑥ Oil reserving element	
	For the operation see page 180		
Oil pump assembly	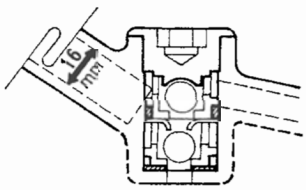 **Fig. 7.11** • Plunger diameter: 16 mm (0.6299 in.)	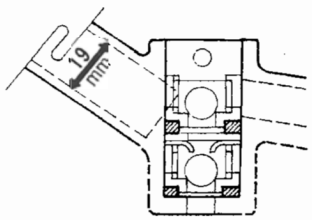 **Fig. 7.12** • Plunger diameter: 19 mm (0.7480 in.)	

2. COMPARISON OF CB/CL 450 K4 TO CB/CL 450 K3

Part or item	CB/CL 450 K3	CB/CL 450 K4	Modified part
Fuel tank	(CB type) 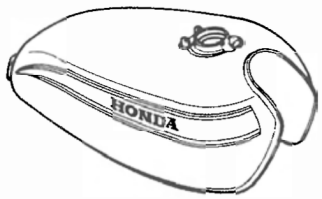 Fig. 7.13	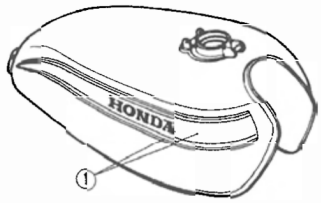 Fig. 7.14 ① Black Color of strips are changed	
	(CL type)  Fig. 7.15	Shape of strips is changed 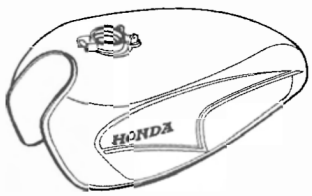 Fig. 7.16	
Duble seat	(CB type) 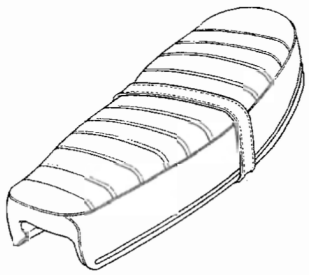 Fig. 7.17	Pattern is changed 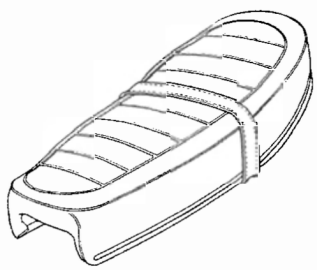 Fig. 7.18	
	(CL type) 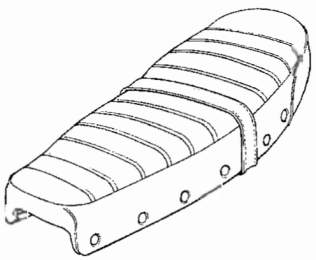 Fig. 7.19	Pattern is changed 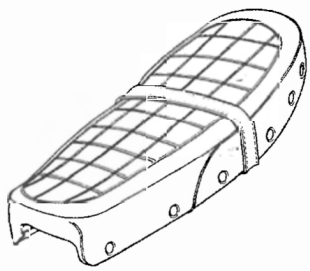 Fig. 7.20	

Part or item	CB/CL 450 K3	CB/CL 450 K4	Modified part
Air cleaner emblem	 Fig. 7.21	 Fig. 7.22 • DOHC is changed to double overhead cam • Emblem plate changed from one to two pieces • Double Over Head Cam emblem is applicable to K3 model by providing two hole on air cleaner cover	
R.L. exhoust maffler	(CL type) 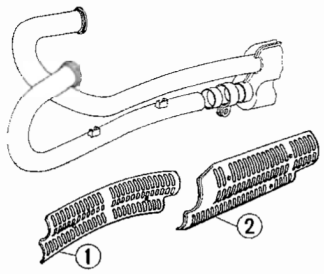 Fig. 7.23 ① Exhaust pipe protector ② Mafflar protector	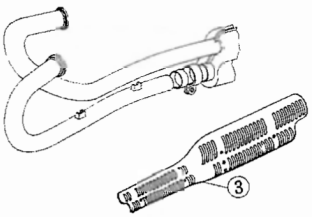 Fig. 7.24 ③ Exhaust pipe maffler protector • Protect or is changed from two to one piece • Stay tightening protectes is transfered from lower to upper exhaust pipe	
	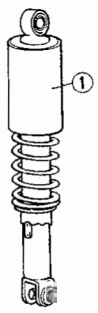 Fig. 7.25 ① Upper cover	 Fig. 7.26 Rubber mount is discontinued	

3. COMPARISON OF CL 450 K5 TO CL 450 K3, K4

Part or item	CB/CL 450 K3, K4	CB/CL 450 K5	Modified part
Fuel tank	(CL only) 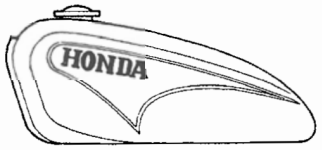 Fig. 7.27	(CL only) 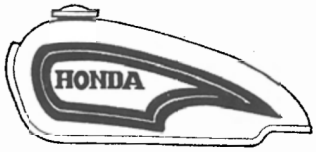 Fig. 7.28 • The body and stripes were changed in type	• Stripes
Speedometer	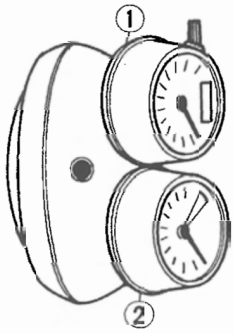 Fig. 7.29 ① Speedometer	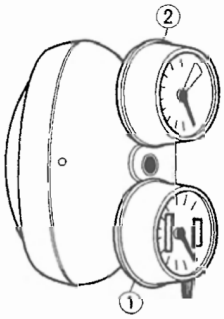 ② Tachometer Fig. 7.30 • The speedometer and tachometer were reversed in position. (The tachometer is interchangeable with the model CL 450 K3 tachometer.)	• Speedometor cable • Tachometer cable
Exhaust mufflers	(CL only) 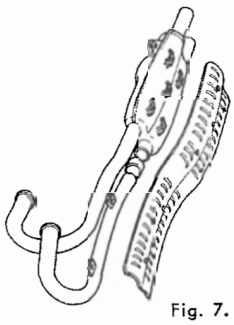 Fig. 7.31	(CL only) 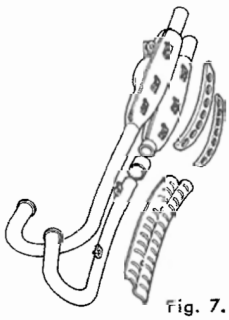 Fig. 7.32 • The right and left mufflers can be separated from the exhaust pipes and each protector separated into half. The components are not interchangeable as a single part, but they are interchangeable as an assembly.	• Muffler protectors • Exhaust pipe protectors • Muffler stays A and B • Muffler brackets
Brake pedal	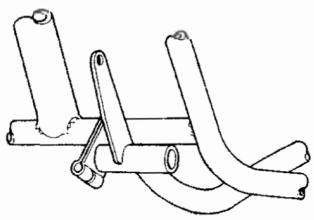 Fig. 7.33	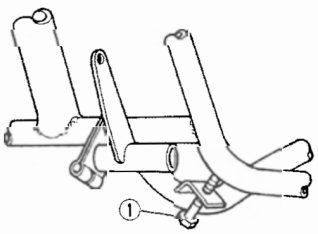 ① Adjust bolt Fig. 7.34 • An adjuster was added to the brake pedal to adjust the pedal up and down.	

<table>
<tr><th>Part or item</th><th>CB/CL 450 K3, K4</th><th>CB/CL 450 K5</th><th>Modified part</th></tr>
<tr><td>Front forks</td><td colspan="2">
Fig. 7. 35
• Type: Piston type
• Oil: ATF
• Internal construction: Same as the model CB 750 K1
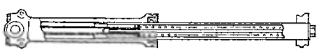
Fig. 7. 36
• Type:Rod type
• Oil: ATF
• Internal construction: Same as the model CB 500
The front forks of both models are not interchangeable. For the operation see page 181.</td><td>• Frame body
• Seat catch
• Helmet holder
• Seat hinges
• Seat lower lid</td></tr>
<tr><td>Rear shock absorbers</td><td colspan="2">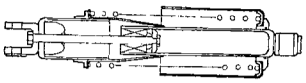
Fig. 7. 37
• Do carbon type
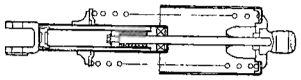
Fig. 7. 38
• Double tube, double acting type (The upper covers are removed from the model CB 500 rear shock absorbers.)
The rear shock absorbers of both models are not interchangeable in appearance, but they may be interchangeable on either side in performance. For the operation see page 185.</td><td></td></tr>
<tr><td>Seat</td><td colspan="2">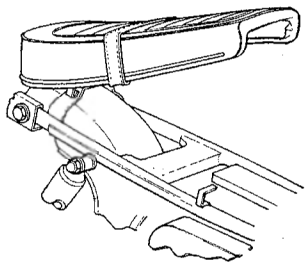
Fig. 7. 39
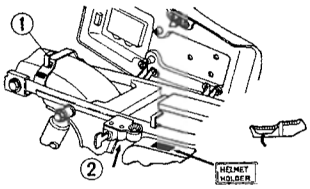
Fig. 7. 40
① Helmet ② Seat catch
• The seat is opened or closed sideways.
• The seat catch is of a one-chuck type.
• A helmet holder was added to hang a helmet.
• The seat and frame body are not interchangeable with those of the model CL 450 K3.</td><td></td></tr>
<tr><td>Fixing bolt</td><td colspan="2">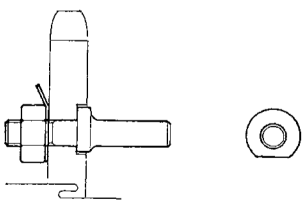
Fig. 7. 41
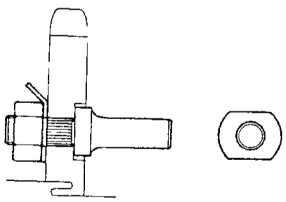
Fig. 7. 42
① Knurled
• The final driven sprocket fixing bolt is knurled.
The fixing bolt is not interchangeable as a unit, but it is interchangeable as an assembly including a sprocket, fixing bolt, tongued washer and nut.</td><td></td></tr>
</table>

4. COMPARISON OF CB/CL 450 K6 TO CB/CL 450 K5

Part or item	CB/CL 450 K5	CB/CL 450 K6	Modified part
Fuel tank	(CB type)  (CL type) 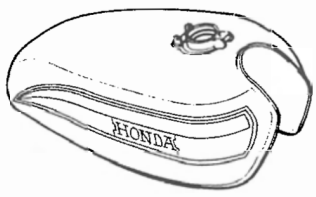 Fig. 7. 43	(CB type) 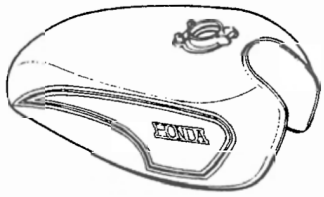 (CL type) 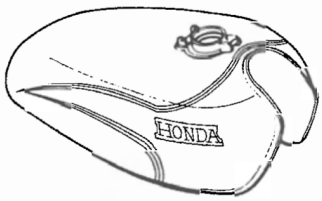 **Fig. 7. 44** • The stripes wear changed in shape.	
Speedometer Tachometer	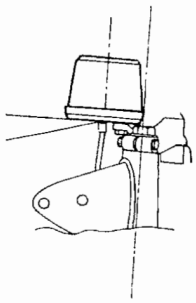 Fig. 7. 45	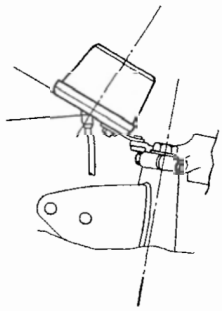 **Fig. 7. 46** • The speedometer and tachometer were changed in mounting angle and their dial plates were changed to the transparent illumination type for better visibility.	
Disc cover	 **Fig. 7. 47** • The disc cover and stays are not used.	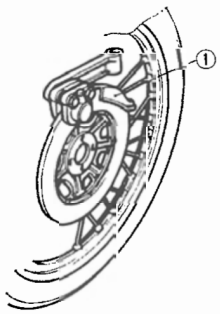 **Fig. 7. 48** ① Disk cover	

Part or item	CB/CL 450 K5	CB/CL 450 K6	Modified part
Sprocket side plate	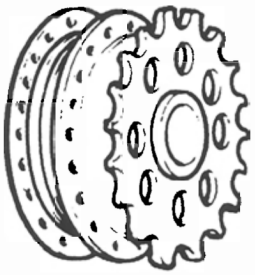 Fig. 7. 49 • The side plate is not used.	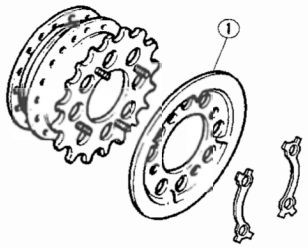 Fig. 7. 50 ① Sproket side plate	
Kill switch	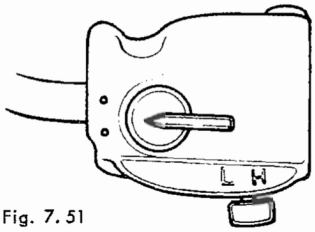 Fig. 7. 51	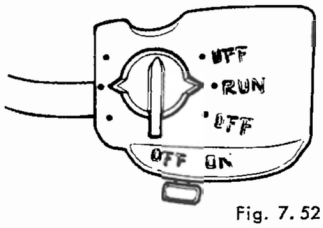 Fig. 7. 52 • The kill switch knob was changed in shifting pattern from the up-down motion to the right-left motion.	
Pilot box	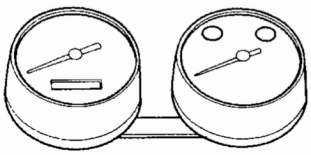 Fig. 7. 53 • The pilot box is not used.	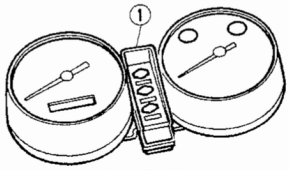 Fig. 7. 54 ① Pilot box • The pilot lamps are grouped for improved serviceability.	
Silicon rectifier	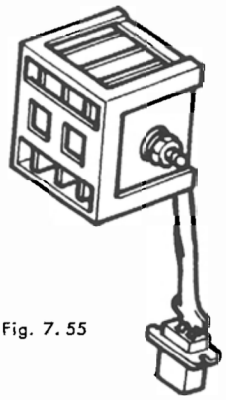 Fig. 7. 55	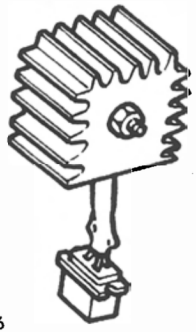 Fig. 7. 56 • The silicon rectifier was changed in shape. The new rectifier can also be used in the model CB 350 K5.	
Fuel tube cover	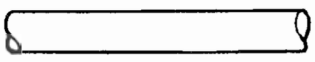 Fig. 7. 57	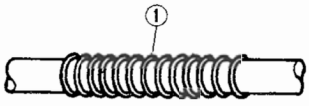 Fig. 7. 58 ① Fuel tube cover • A tube cover was added.	

5. COMPARISON OF CB 450 K7 TO CB 450 K6

Part or item	CB 450 K6	CB 450 K7	Modified part
Rear fork pivot bushings	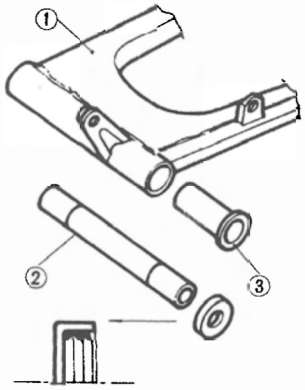 Fig. 7.59 ① Rear fork ② Rear fork center collar ③ Rear fork pivot bush	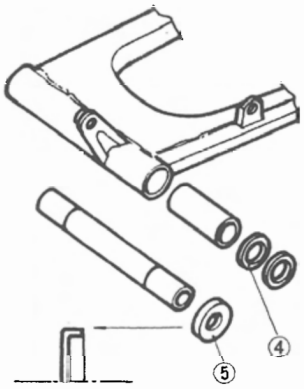 Fig. 7.60 ④ Felt ⑤ Dust seal cap	• Rear fork • Rear fork center collar • Dust seal caps • Felt rings
Fuel tank	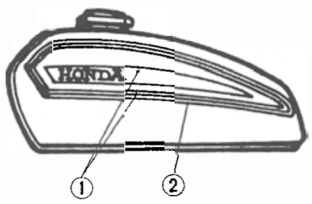 Fig. 7.61 ① Gold	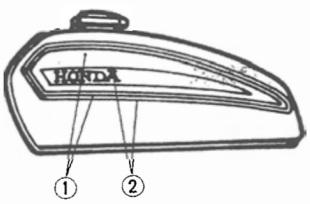 ② Black Fig. 7.62 • The stripes were changed in color.	
Driven sprocket	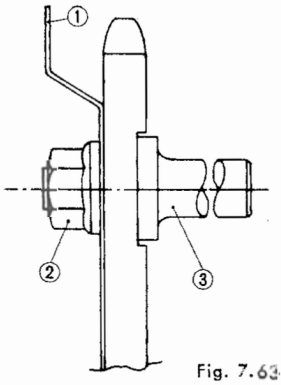 Fig. 7.63 ① Side plats ② U.B.S. nut ③ Fixing bolt	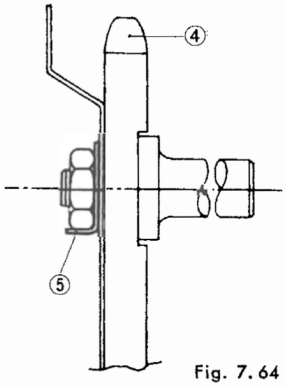 Fig. 7.64 ④ Sprocket ⑤ Tanged washer • The hitherto-used tongued washer was abolished and a U.B.S. nut was newly employed.	
Rear grip pipe	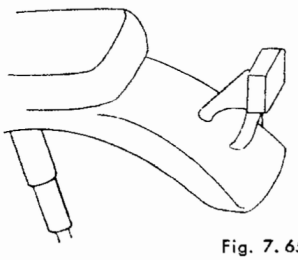 Fig. 7.65	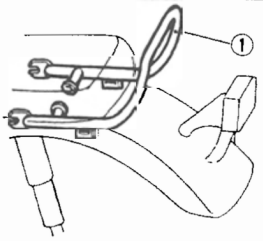 ① Rear grip pipe Fig. 7.66 • A rear grip pipe was added.	

Front Disc Brake

The disc brake system consists of the brake lever and master cylinder on the right handle bar, caliper mounted on the front left side, and the special stainless steel brake disc mounted on the wheel hub.

(Operation)

1. When the brake lever ① is pripped, the cam ② at the base of the lever actuates a piston of the master cylinder.
2. The piston moves the primary cup ③ which blocks the passage to the reservoir and pressurizes the fluid within the master cylinder. This pressure is transmitted to the caliper chamber through brake hose B ④, 3 way joint ⑤, and brake hose A ⑦. Also, the stop light pressure switch ⑥ mounted on the 3 way joint is actuated.
3. The hydraulic pressure within caliper chamber A applies pressure against piston ⑨, which forces pad A ⑩ against the brake disc. Since the caliper assembly is mounted on an arm which pivots at the front fork, it is free to swivel, therefore, the reaction from pad A ⑩ is transmitted to pad B, resulting in equalized pressure being applied by the pads to both sides of the brake disc.

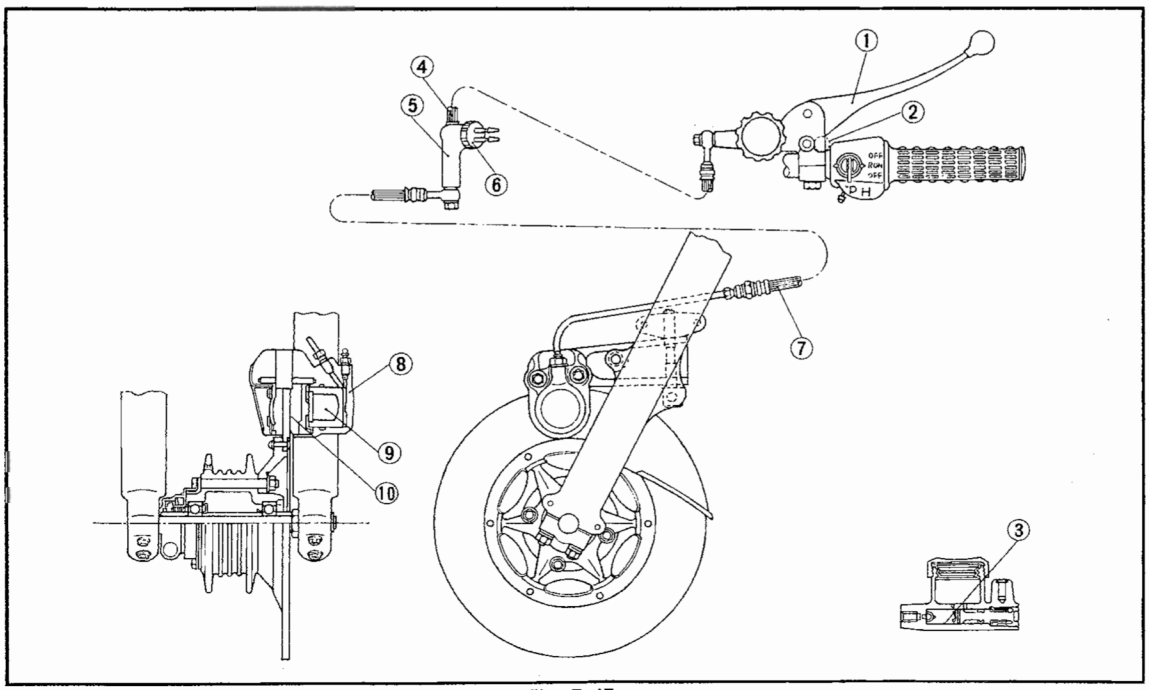

Fig. 7.67

① Front brake lever
② Front brake lever cam
③ Primary cup
④ Front brake hoses B
⑤ Three way joint
⑥ Stop switch
⑦ Front brake hose A
⑧ Caliper A
⑨ Piston
⑩ Pad A

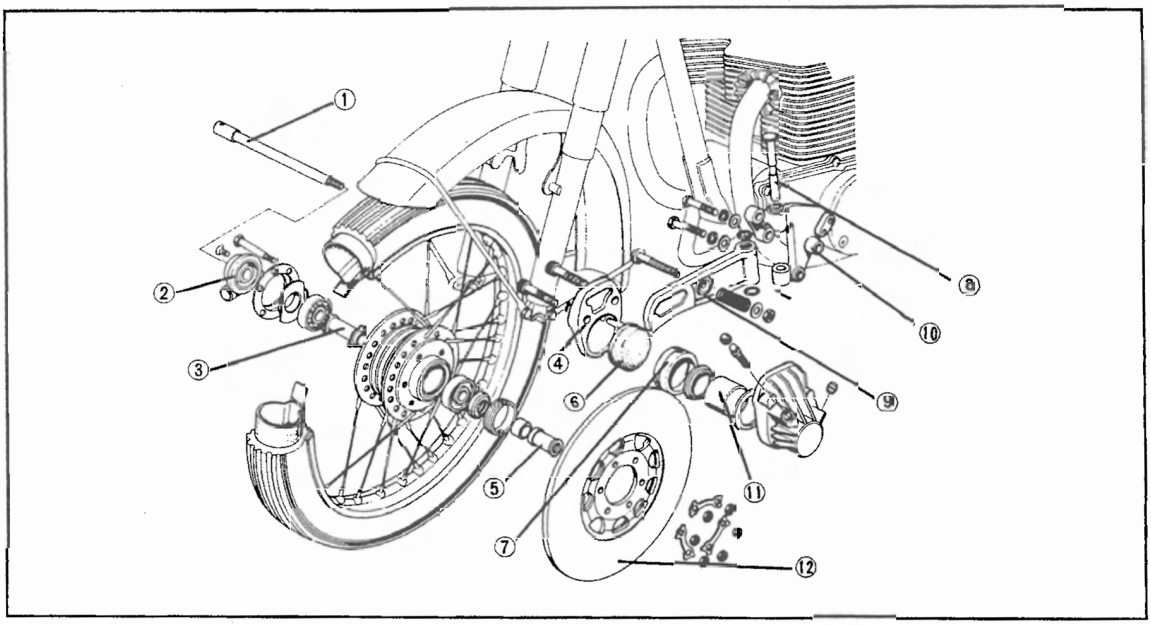

Fig. 7.68 Front wheel disassembled

① Front wheel axle
② Speedometer gear box
③ Front axle distance collar
④ Caliper B
⑤ Front wheel axle nut
⑥ Pad B
⑦ Pad A
⑧ Caliper holder pin
⑨ Caliper holder
⑩ Calper holder joint
⑪ Piston
⑫ Front brake disc

To Serve Front Wheel

Standard tools:

10mm wrench 12mm box wrench
14mm wrench Standard type screwdriver No. 3
12mm wrench Pliers
Caliper hollow set wrench

Torque Specifications

Unit : kg-cm (lb-ft)

Part	Thread dia. (mm)	Torque
Front brake disc	6	180～230 (13～17)
Caliper	8	300～400 (22～29)
Holder joint	8	180～230 (13～17)

Disassembly

No.	Disassembly procedure	Note
1	Place wood block(s) under engine	
2	Speedometer cable	*1
3	Axle holder attaching nut	*2
4	Front axle shaft	
5	Front wheel bearing retainer	*3
6	Hold engine with jack and remove front wheel	
7	Remove dust seal from front wheel bearing retainer	
8	Remove nuts and lock plate and remove brake disc	*4
9	Front wheel bearings	
10	Gear box and retainer cover	

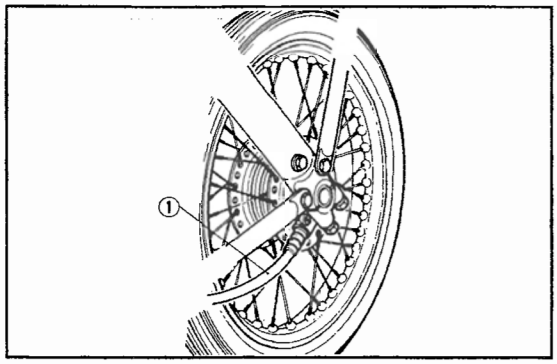

Fig. 7.69
① Speedometer cable

*1. Disconnect the speedometer cable by removing 5mm oval head screw and disconnecting cable.

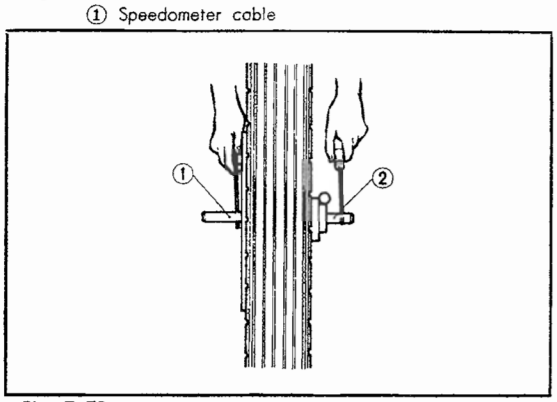

Fig. 7.70
① Axle nut ② Axle shaft

*2. Using the two screwdrivers as shown, remove the axle nut and remove the axle shaft.

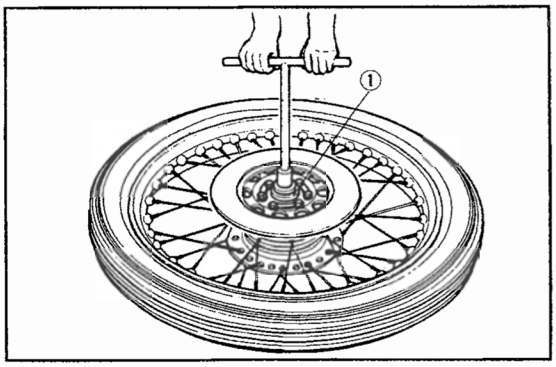

Fig. 7.71
① Bearing rtainer

*3. Remove the front wheel bearing retainer from the wheel hub and the dust seal from the bearing retainer.

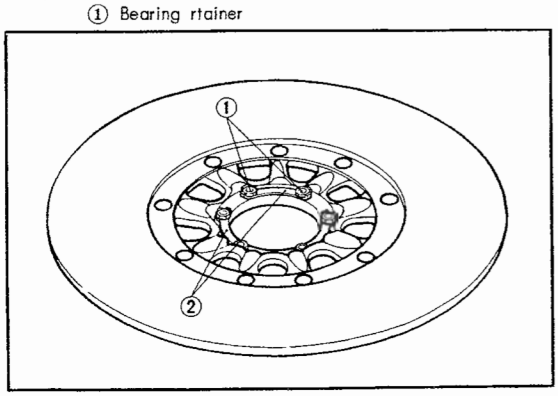

Fig. 7.72
① Nuts ② Lock plate

*4. Straighten tabs of washers remove the nuts and lock plate and remove the front brake disc from the wheel. Remove the gear box and retainer cover from the other side.

B. Inspection

• Measure the brake disc

Place the brake disc on a level stand. Using a dial gauge, measure the brake disc at several points as shown.

If the face runout exceeds 0.3mm (0.0118in.), replace the disc.

Measure the disc thickness. If the thickness is below 6mm (0.2362in.), replace the disc.

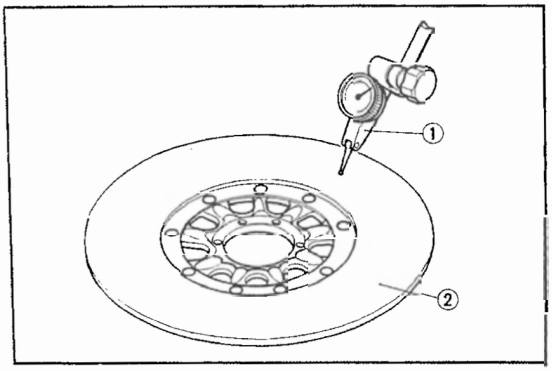

Fig. 7.73
① Dial guage ② Brake disc

• Check the wheel rim for leteral runout and radial clearance.

Rotate the wheel and check the wheel rim for lateral runout and radial clearance using a dial gauge.

Unit : mm (in)

	Standard	Repair limit
Lateral runout	0.5 (0.0197), max.	2.0 (0.0787), min.
Radial clearance	0.5 (0.0197), max.	2.0 (0.0787), min.

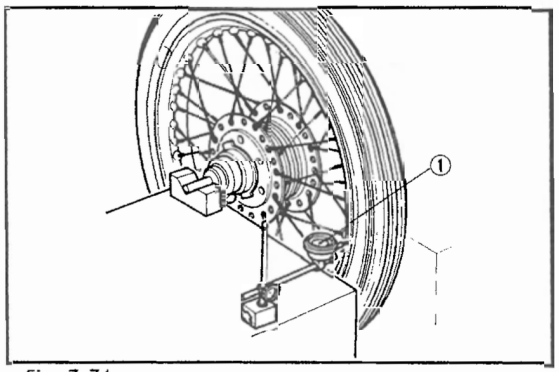

Fig. 7.74
① Dial guage

• Measure the front wheel ball bearings.

Unit : mm (in)

	Standard	Repair limit
Axial clearance	0.07 (0.0027)	0.1 (0.0039)
Radial clearance	0.003 (0.0001)	0.05 (0.0020)

Check the spokes for looseness.

Check the tire tube for leaks.

Check the tire for entry of foreign material or damage.

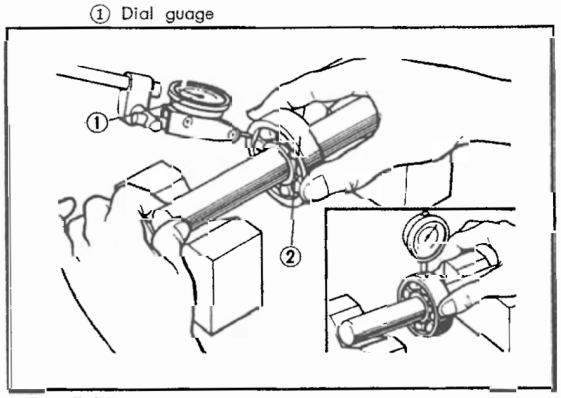

Fig. 7.75
① Dial guage ② Ball bearing

C. Assembly

• Install the 6302Z ball bearings to the wheel hub.

• Install the dust seal to the bearing retainer and then install the bearing retainer in place. Install the O-ring to the wheel hub.

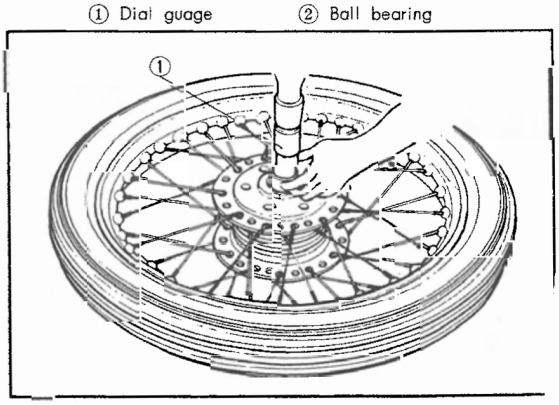

Fig. 7.76
① Bearing driver

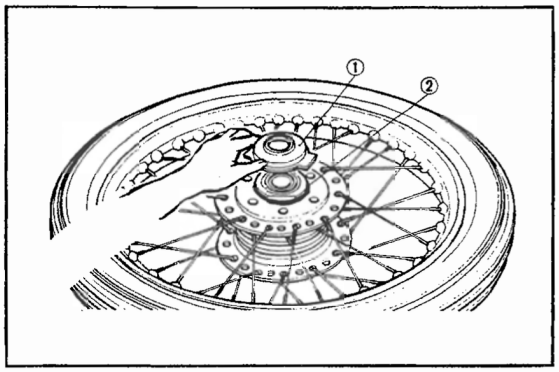

Fig. 7.77
① Gear box retainer ② O-ring

- Fit the tab of gear box retainer in the recess in gear box retainer cover properly and install them to the wheel hub.

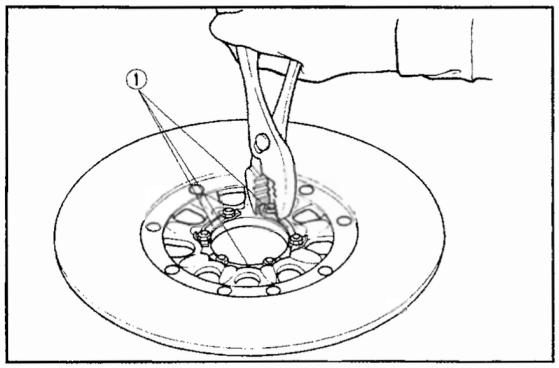

Fig. 7.78
① Lock plate

- Install the brake disc to the wheel.

Note:

After tightening the nuts, lock them by bending the tabs of the lock plate.

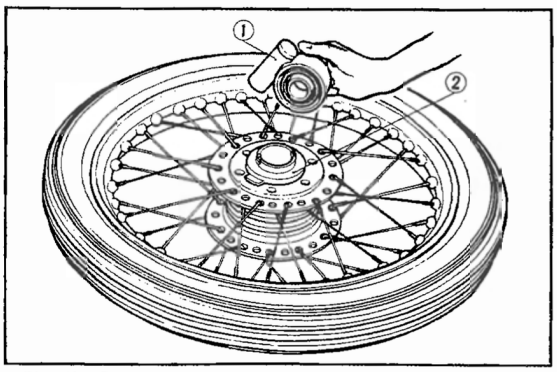

Fig. 7.79
① Gear box retainer ② Speedometer gear box

- Install the speedometer gear box from the right side and install the front axle.
- Install the front wheel to the front forks and tighten the axle holder bolts and nuts properly.

Note:

Be sure the speedometer gear box is installed correctly. To tighten the axle holder bolts and nuts, begin on the left side (disc plate side) ones first.

- Connect the speedometer cable to the gear box.

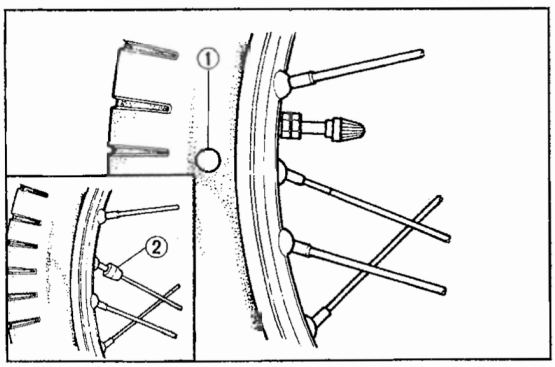

Fig. 7.80
① Balance mark ② Balance weight

- Check the wheel for balance.
  a. Make chalk marks on the circumference of the wheel and slowly rotate the wheel two or three turns.
  b. If the wheel is unbalanced, it always stops rotating when the same part (the heaviest part) comes to the bottom.
  c. To rebalance the wheel, install a balance weight to the part opposite to the heaviest part.

d. Install the balance weight to a spoke. Rotate the wheel two or three turns to check for balance. If the wheel stops rotating when different parts come to the bottom, it is balanced. The balance weights are available in four different weights, 5g (0.176oz.), 10g (0.353oz.), 15g (0.529oz.) and 20g (0.705oz.)

e. The front wheel balance should be checked with the brake disc installed.

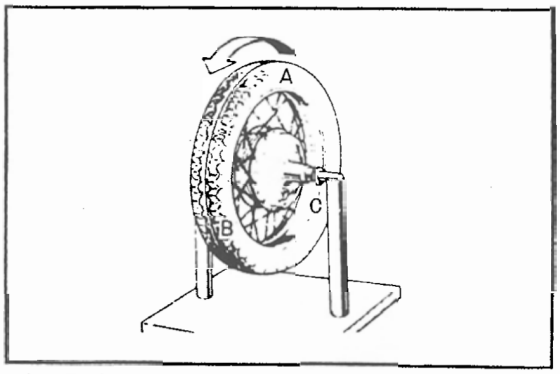

Fig. 7. 81

Front disc brake

- The disc brake system mainly consists of the brake lever, master cylinder, calipers and brake disc.

A. Disassembly of Calipers and Master Cylinder

Disassemaly precautions

1. Clean dirt and dust off the parts. Take care not to allow the foreign materials to enter tye parts.
2. Set aside the disassembled component parts in groups to facilitate assembly.

No.	Disassembly procedure	Note
1	Front wheel	
2	Drain brake fluid from master cylinder	
3	Oil joint bolt and brake hose	*1
4	Calipers A and B	*2
5	Holder setting bolts	*3
6	Boot stopper	*4
7	18mm snap ring	*5
8	Primary cup	*6

*1. Remove the oil joint bolt and disconnect the brake hose.

*2. Remove the three caliper attaching bolts and one adjusting bolt and remove the calipers A and B as an assembly.

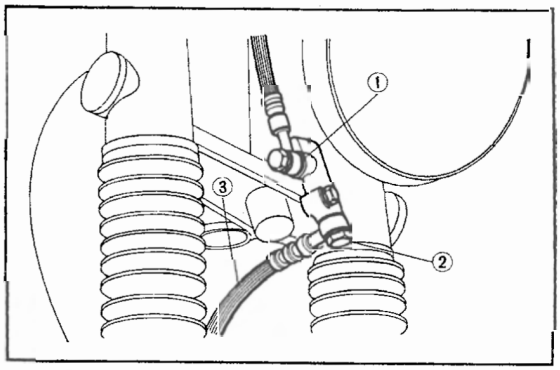

Fig. 7. 82
① Joint ② Oil joint bolt ③ Brake hose

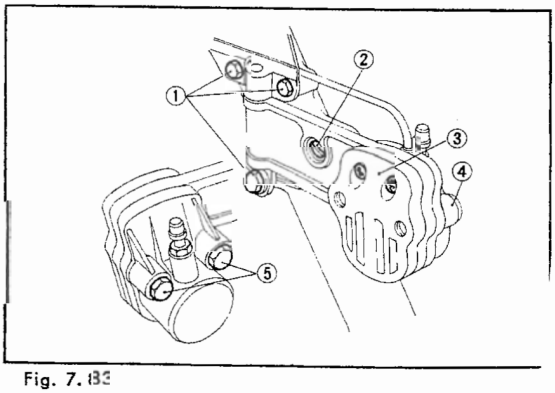

Fig. 7. 83
① Bolts ③ Caliper B ⑤ Caliper bolts
② Adjusting bolt ④ Caliper A

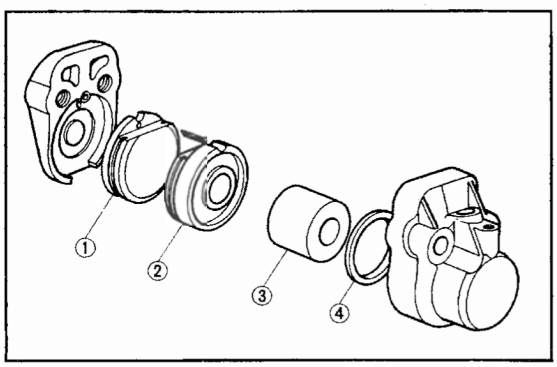

Fig. 7. 84
① Pad B ③ Piston
② Pad A ④ Piston seal

*3. Remove the two caliper setting bolts and separate the caliper assembly into two parts A and B.
- Remove the pad A and piston from the caliper A.
- Remove the pad B from the caliper B.

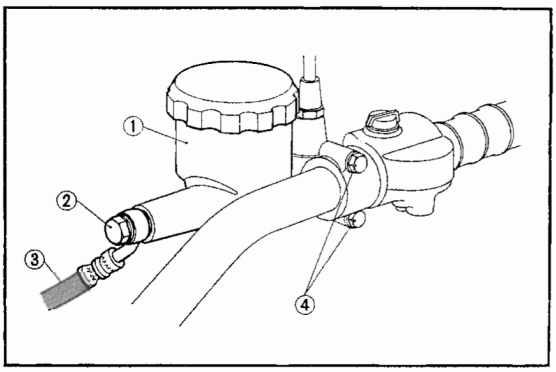

Fig. 7. 85
① Master cylinder body ③ Brake hose
② Joint bolt ④ Setting bolts

*4. Loosen the master cylinder joint bolt and disconnect the brake hose.
- Loosen the master cylinder bolts and remove the master cylinder from the handleber.
- Disassemble the master cylinder.

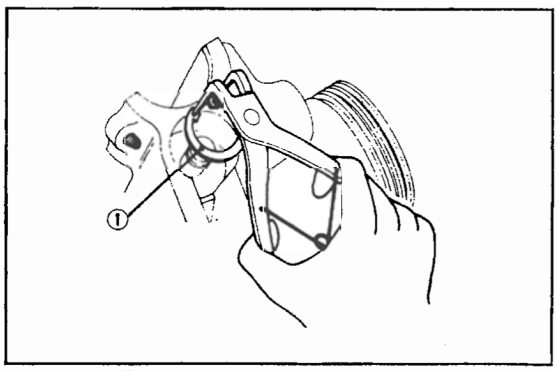

Fig. 7. 86 ① 18 mm snap ring

*5. Remove the 18 mm internal snap ring using the special tool.

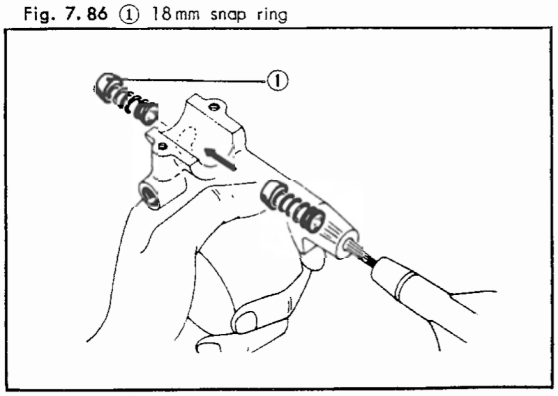

Fig. 7. 87 ① Primary cup

*6. Remove the 10.5 mm washer, piston, primary cup, spring and check valve in this order.
To remove the primary cup easily, direct compressed air of 2～3 kg/cm² (28～43 lb/in²) in pressure to the cylinder union (brake hose joint). Unless the check valve is damaged, any other tool may be used to remove the primary cup.

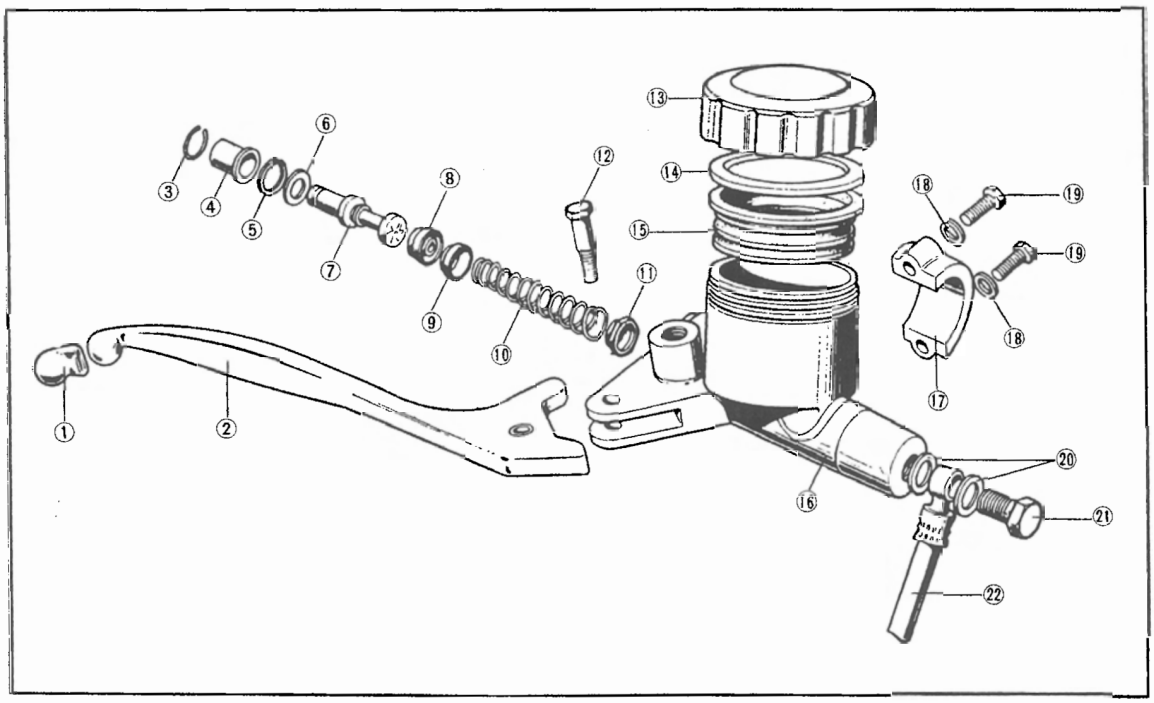

Fig. 7.88 Master cylinder disassembled

① Lever cap	⑨ Primary cup	⑯ Master cylinder body
② Brake lever	⑩ Spring	⑰ Master cylinder holder
③ Stopper washer	⑪ Check valve	⑱ Spring washer
④ Boot	⑫ Handleber lever joint bolt	⑲ 6 mm bolts
⑤ 18 mm internal snap ring	⑬ Cap	⑳ Oil bolt washers
⑥ 10.5 mm washer	⑭ Master cylinder plate	㉑ Oil bolt
⑦ Piston	⑮ Diaphragm	㉒ Brake hose

Notes:

1. Wash all disassembled metal parts in trichloroethylene or equivalent fluid and dry them thoroughly.
2. The check valve must be washed in brake fluid.
3. Never wash the brake parts in mineral oils such as gasoline and cleaning fluid.

B. Inspection of Calipers and Master Cylinder

Notes:

1. Check the piston for wear or damage and replace if necessary.
2. Check the inside surface of the master cylinder for scores or scratches and replace if necessary.
3. Check the spring for cracks or any other damage and replace if necessary.

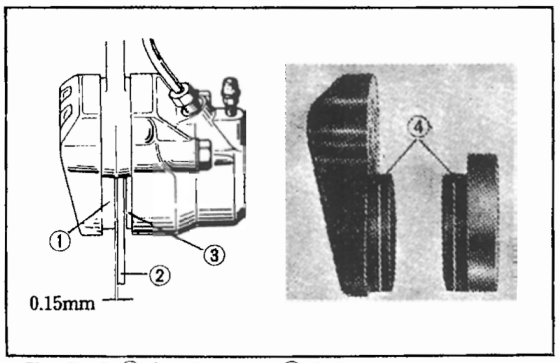

Fig. 7. 89 ① Pad B ③ Pad A
② Brake disk ④ Service limit lines

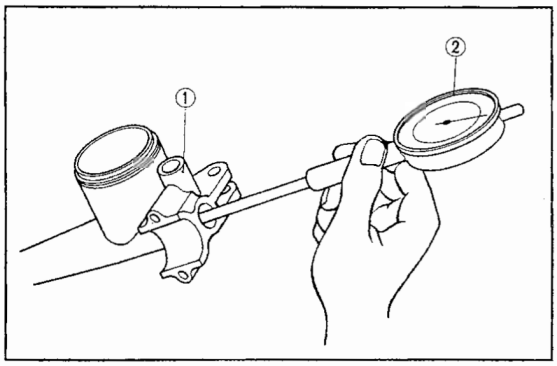

Fig. 7. 90 ① Master cylinder ② Cylinder gauge

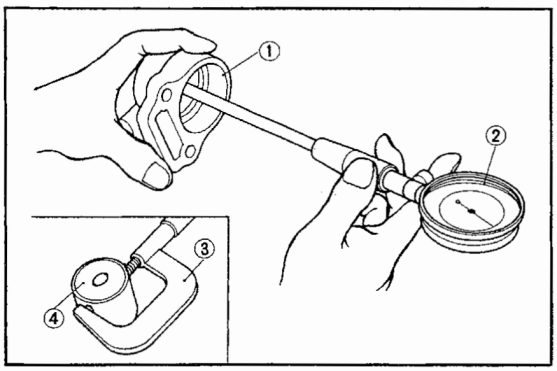

Fig. 7. 91
① Caliper cylinder ③ Micrometer
② Cylinder gauge ④ Piston

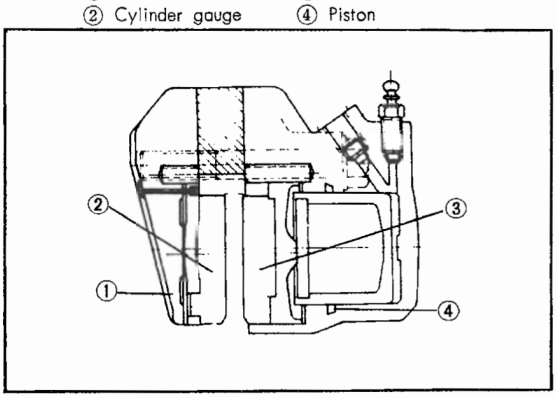

Fig. 7. 92
① Caliper B ② Pad B ③ Pad A ④ Caliper

1. Check the brake disc pads for wear

Red lines are scribed in the pads A and B. If the pads wear down to the lines, replace them with new ones. Install new pads so that the brake disc to pad clearance is 0.15mm (0.0059 in.). To adjust the clearance, turn the caliper adjusting bolt counterclockwise until the pad bears on the disc. Then back off the adjusting bolt 1/2 turn and tighten the lock nut.

2. Measure the caliper cylinder and piston

Using a cylinder gauge, measure the cylinder bore and piston O.D. If the clearance between the two exceeds 0.11 mm (0.0043 in.), replace.

Unit : mm (in.)

	Standard	Repair limit
Cylinder bore	38.18～38.20 (1.5031～1.5039)	38.215 (1.5045)
Piston O.D.	38.115～38.48 (1.5006～1.5150)	38.105 (1.5002)

3. Measure the master cylinder and piston

Using a cylinder gauge, measure the cylinder bore and piston O.D. If the clearance between the two exceeds 0.11 mm (0.0043 in.), replace.

Unit : mm (in.)

	Standard	Repair limit
Cylinder bore	14.0～14.043 (0.5512～0.5529)	14.055 (0.5533)
Piston O.D.	13.957～13.984 (0.5495～0.5506)	13.940 (0.5488)

C. Assembly of Calipers and Master Cylinder

To assemble, reverse the disassembly procedures.

Calipers

- Install the pads A and B.

Note:

When installing the pads, apply a coat of grease to the calipers to prevent entry of dirt or water. When repairing, apply a coat of grease to the sliding surfaces and rear faces of the calipers and pads and to the dowel pin as shown.

- Install the caliper assembly to the front forks.

Master Cylinder

Assembly precaution

The brake system is the most important for the safe riding. Especially, rubber parts play a critical role. Whener any damage or deterioration to the rubber parts is noted, they must be replaced immediately. Take care not to allow foreign materials to enter the brake parts when assembling.

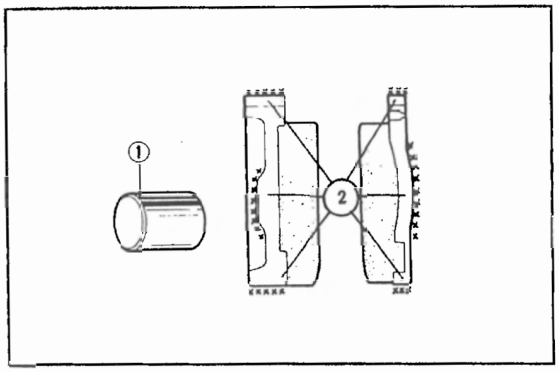

Fig. 7. 93
① 11×15 dowel pin, full-sized
② Apply grease to areas marked (×).
Quantity of grease :
About 1g (0.0353 oz.)/unit (equivalent to 11×15 dowel pin)

- Wash the component parts and thoroughly dry them using compressed air.
- Apply a coat of brake fluid to the inside of the cylinder.
- Install the check valve to the return spring and install them in the cylinder as a unit. When installing, be sure to install the spring with a end having a larger dia, inward. Take care not to allow the check valve to come out of the spring.

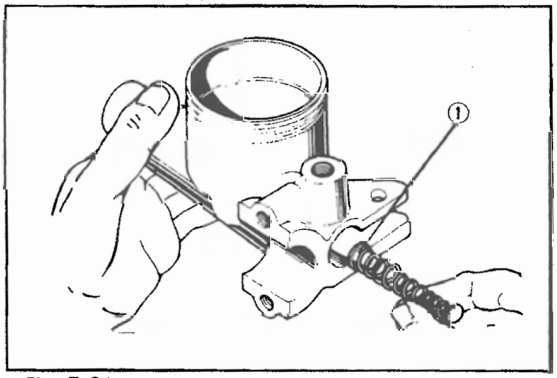

Fig. 7. 94
① Check valve

- Applying a thin coat of brake fluid to the outer surface of the primary cup and install it, taking care not to damage it by fingers. Be sure that the cup is correctly positioned in the cylinder. Install the secondary cup to the piston.
- Install the 18 mm snap ring and rotate the snap ring to check for proper fit.
- Install the boot.

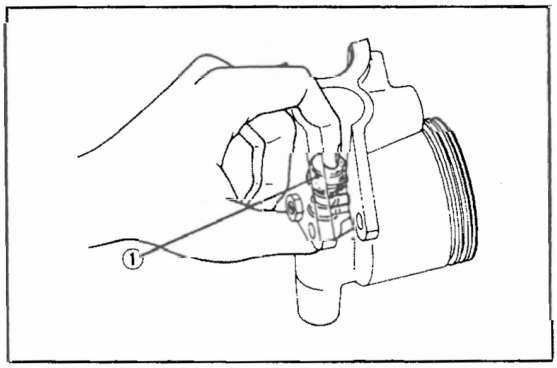

Fig. 7. 95
① Primary cup

Notes :

1. Connect the brake pipe.
2. Install the cylinder to the handlebar.
3. Bleed the brake lines.
4. Road-test the motorcycle to check for air or oil leaks and for operation.
5. Check the brake fluid level.

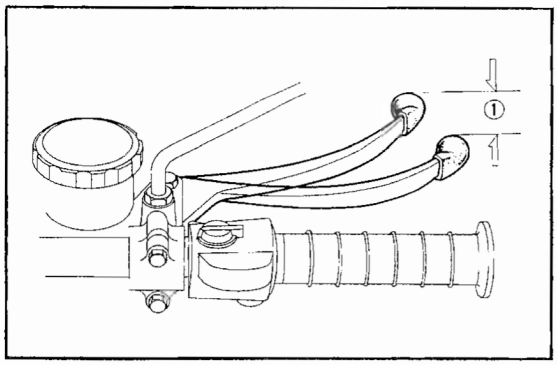

Fig. 7.96
① 2～5mm

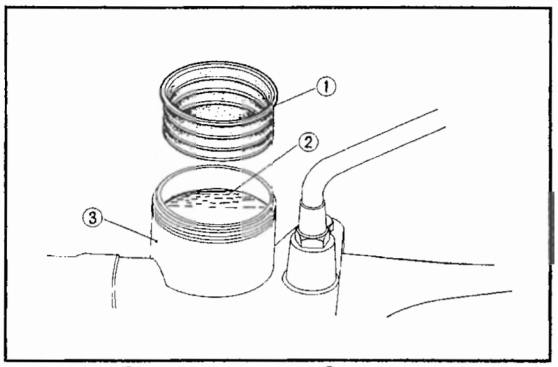

Fig. 7.97 ① Diaphragm ③ Master cylinder
② Brake fluid

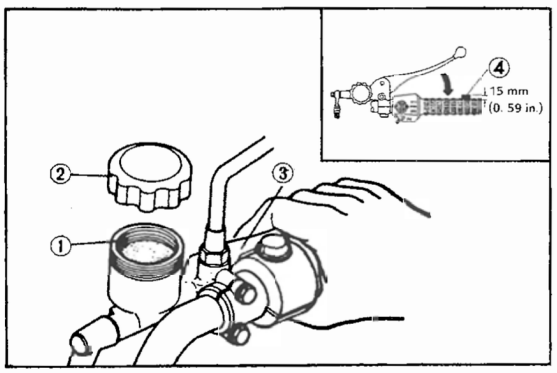

Fig. 7.98 ① Diaphragm ③ Lever
② Reservoir cap ④ Rubber

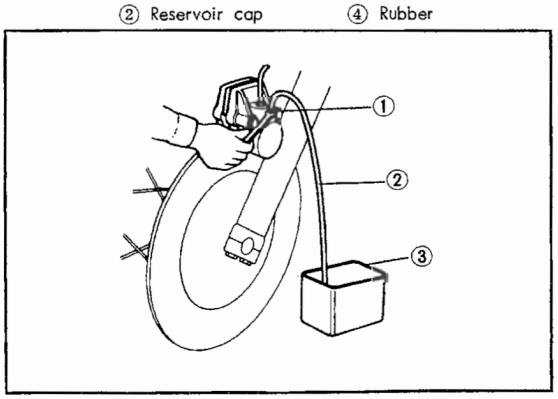

Fig. 7.99
① Bleeder screw ② pipe ③ Oil can

D. Adjustment of Disc Brake

When the brake is disassembled, it must be adjusted and bled completely.

1. Check the brake lever free play

The lever free play is specified to be 2～5 mm (0.0787～0.1969 in.) at the tip of the lever. If the free play is out of specification, check and replace if necessary.

2. Check the brake fluid level

Fill the master cylinder oil resevoir up to the level line.

Caution:

Do not allow the brake fluid to come in contact with the painted surfaces, rubber parts and instruments.

3. Bleed the brake lines

In the hydraulic brakes, air trapped in the brake lines will reduce the braking effect to result in dangerous riding. If the brake lever is felt spongy when it is squeezed or if the brake fluid level lowers excessively, bleed the brake lines. To bleed, proceed as follows:

a. Fill the master cylinder oil reservoir up to the level line.
b. Install the diaphragm to prevent the fluid from splashing.
c. Put a pipe on the bleeder screw located to the caliper. Prepare an oil can.
d. As shown at right, attach a rubber of about 15 mm thick to the end of the handle grip to decrease the stroke as measured at the tip of the handle lever.
e. Squeeze the brake lever and operate it several times until a resistance is felt. With the lever squeezed, loosen the bleeder screw about 1/2 turn. As soon as the lever bears on the handlebar pipe, tighten the bleeder screw. Continue the bleeding operation until air bubbles are no longer noted in the fluid flowing out of the bleeder hole.

Note:

While bleeding, add brake fluid.

Drive Chain Oiler

The oil which lubricates the chain is fed from the center of the shaft, through the porous sintered oil reserve element ⑦, along the outer surface of the rubber orifice ⑤, out the oil passage ④ and along the surface of the drive sprocket.

To simplify the procedure for regulating the feed of the lubricant, it is performed by the adjusting screw ① in the chain oiler. Turning the screw clockwise (A direction) will force the rubber orifice against the oil reserve element, causing it to expand and restricting the flow of oil around the rubber orifice. Turning the adjusting screw counter clockwise (B direction) will permit the rubber orifice to serink toward its normal size and allow greater oil flow. In other words, the change in the diameter of the rubber orifice regulaters the amount of oil to lubricate the drive chain.

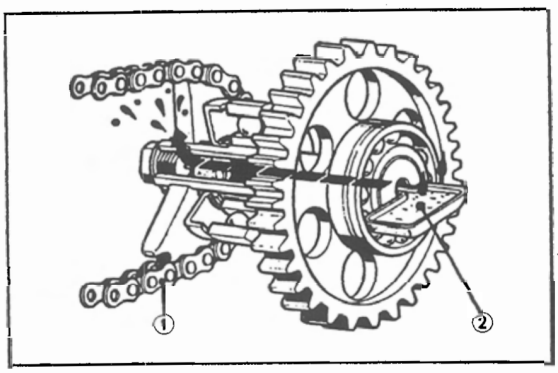

Fig. 7. 100
① Drive chain ② Oil guide

Adjustment Procedure

1. Remove the rear crankcase.
2. Wipe the oil on the drive chain thoroughly with a rag.
3. The adjusting screw is adjusted to maximum oil flow on all motorcycles leaving the factory. After riding for a short period, if excessive oil is noticed by indication of chain oil on the rim, fender, spokes etc., turn the adjusting screw about 1/4 turn in the clockwise direction and recheck the oil flow condition after riding for one minute at 50～70 mph (80～110 kph). The adjustment is proper if the chain link plates and rollers are wet with oil and the other areas are free from excessive oil.
4. Readjust the screw if necessary until the proper oiling condition is obtained.

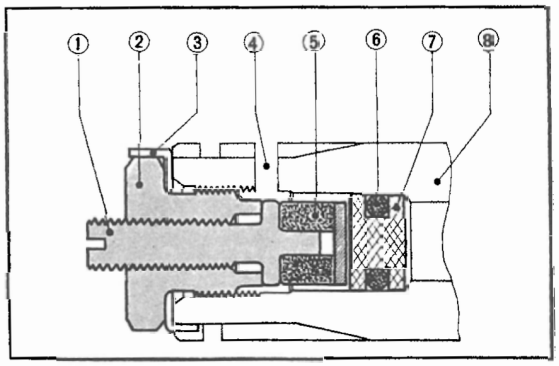

Fig. 7. 101
① Adjusting screw
② Final shaft plug
③ 14 mm lock washer
④ Oil passage
⑤ Rubber orifice
⑥ 6.5×3 O-Ring
⑦ Oil reserve element
⑧ Final driven shaft

Supplement Lubrication

Drive chain rollers and side plates must be properly lubricated at all times. Sustained high-speed driving or improper adjustment of the chain oiler may cause inadequate lubrication. If the rollers or side plates are dry or show evidence of rust, apply a high-quality chain lubricant according to the manufacturer's instructions.

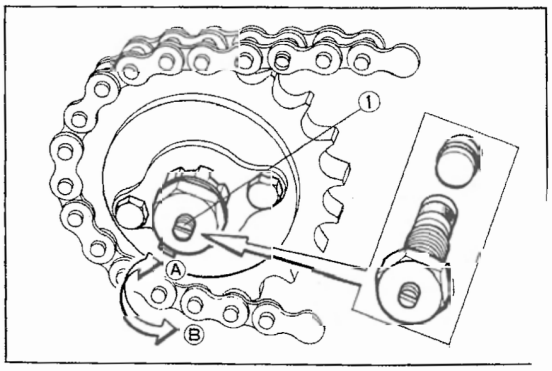

Fig. 7. 102
① Adjusting screw

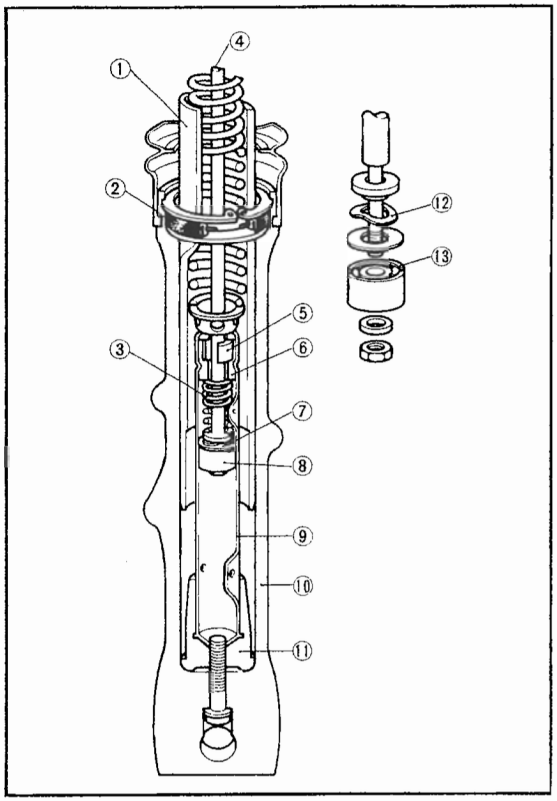

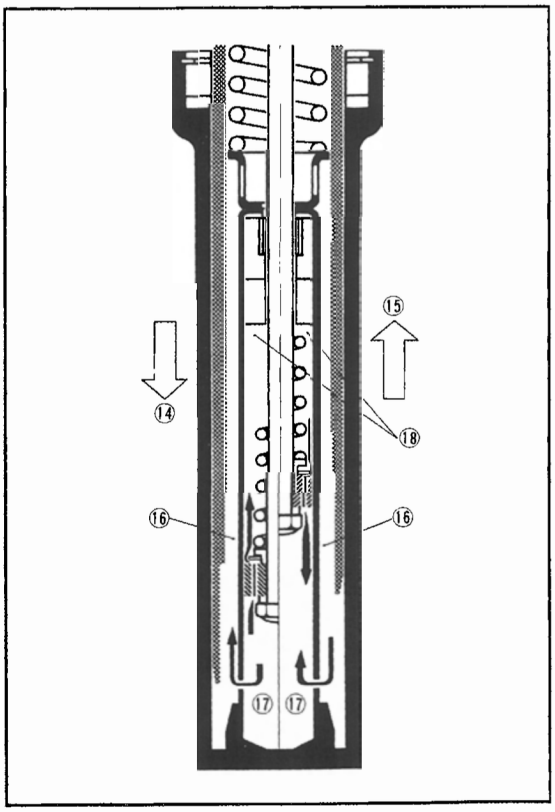

The Rod Type Front Fork

The rod type telescopic shock absorber is the most advanced absorber ever produced—so called because the spring under seat incorporates a damper actuated by a long rod. The rod is screwed in the bottom of the fork bolt. One of the distinguishing features of this latest unit is its higher ability to absorb shocks and vibrations.

The fork pipe is in direct contact with the cylinder without piston.

Operation:

- The piston, as it goes down, pushes a part of the fluid from the chamber "B" into "C". Most fluid can flow into the chamber "A" through the valve in the piston freely.
- As the piston travels up on its extension, the fluid is returned from the chamber "C" through the small opening into the chamber "A". This imposes a restrcint on the spring and wheel actions as noted in the previous section.
- Near the end of the compression, the fork pipe is placed over the oil lock piece. This holds the fork in place, thereby preventing it from dashing against the bottom.
- Damping increase as the piston reaches the end of the extension stroke. This feature plus a rebound stop spring combine to achieve an exceptionally smooth cushioning.

Fig. 7. 103 ① Fork pipe
② Oil seal
③ Rebound stopper spring
④ Piston rod
⑤ Piston rod guide
⑥ Lock guide housing
⑦ Valve
⑧ Piston
⑨ Cylinder
⑩ Bottom case
⑪ Oil lock piece
⑫ Valve set spring
⑬ Second power hole

Fig. 7. 104 ⑭ Compression
⑮ Extension
⑯ Chamber C
⑰ Chamber B
⑱ Chamber A

A. Disassembly

1. Loosen the fork, bolt, remove the drain pulg and drain the damper oil.
2. Remove the front wheel.
3. Unscrew the three caliper mounting bolts and an adjusting screw, and remove the caliper from fork

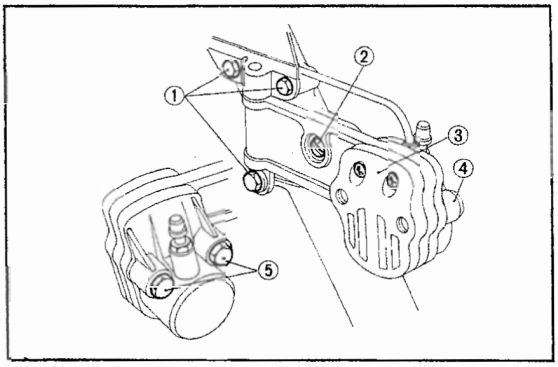

Fig. 7. 105
① Caliper mounting bolts
② Adjusting screw
③ Caliper B
④ Caliper A
⑤ Caliper set bolts

4. Unscrew the 8×56mm and the 10×35mm bolts, and pull the forks off the bottom.

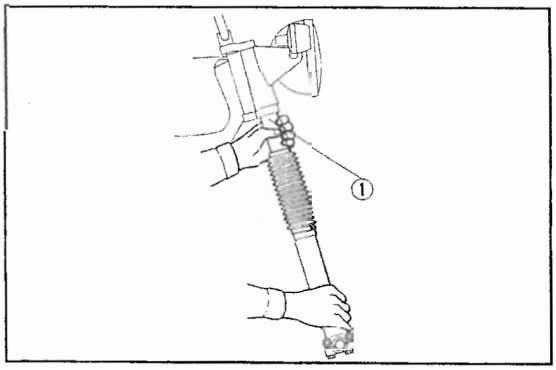

Fig. 7. 106
① Front fork

5. Unscrew the front fork bolt, loose from the piston rod lock nut, and remove the front fork spring and cushion spring seat.
Separate the front fork pipe and bottom case.

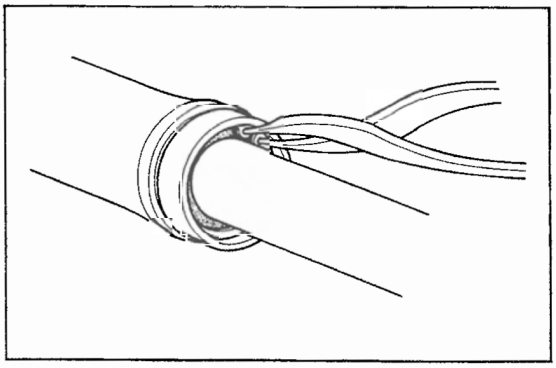

Fig. 7. 107
① Snap ring

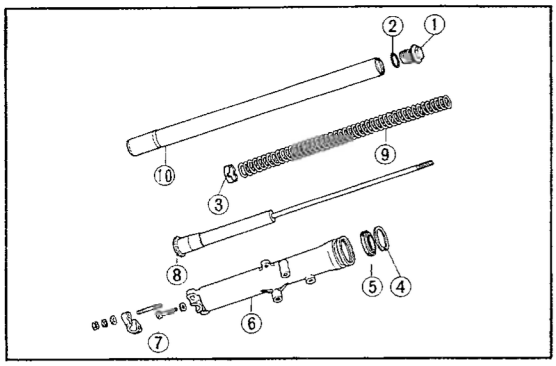

Fig. 7. 108

① Front fork bolt
② O ring
③ Cushion spring seat
④ Snap ring
⑤ Oil seal
⑥ Bottom case
⑦ 8mm bolt
⑧ Damper unit
⑨ Fork spring
⑩ Fork pipe

6. Unscew the 8mm bottom case bolt using a hollow set wrench (Tool No. 07917-3230000) and remove the damper unit from the bottom case.

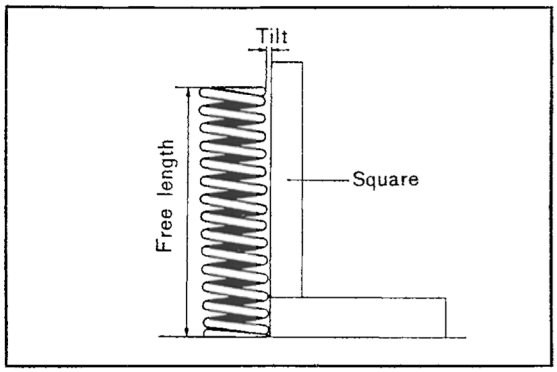

Fig. 7. 109 Measuring the free length

B. Inspection

1. Check the front suspension spring.
2. Check the fork pipe and bottom case for damage or looseness.
3. Check the oil seal for scratches and damage.
4. Check for excessive clearance between the shock absorber piston and the cylinder.

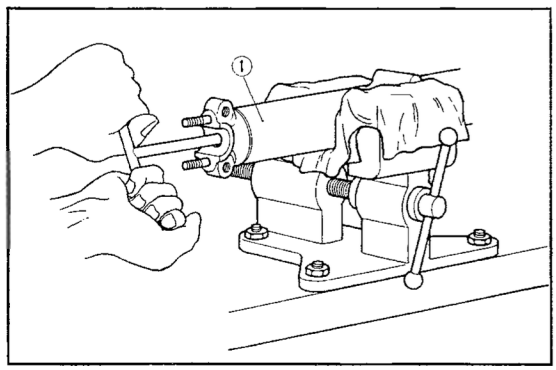

Fig. 7. 110

① Forke pipe

D. Reassembly

1. Reassemble in the reverse order of disassembly. Take care not to allow dust, or other foreign matters to adhere to the component parts.
2. Install the fork pipe into the bottom case. Apply a coat of thread lock cement to the socket bolt and tighten it using a socket wrench.
3. Apply a coat of Honda ATF to both sides of the oil seal and install it using a fork seal guide (Tool No. 07947-3290000).

Note:

- Do not forget to install the snap ring.
- Replace the removed seal with a new one.

4. Apply a coat of thread lock cement to the threaded part of the damper. Making sure that the 8 mm lock nut is completely screwed on the threaded part of the damper, tighten the fork bolt.
5. Remove the front fork bolt and pour a specified amount of Honda ATF into the front fork pipe.
   Capacity:
   CB450K5 155～165 cc (5.3～5.6 oz)
   CB450K6 135～145 cc (4.6～4.9 oz)
   CB450K7 135～145 cc (4.6～4.9 oz)
   CL450K5 155～165 cc (5.3～5.6 oz)
   CL450K6 155～165 cc (5.3～5.6 oz)
   (at disassembly)
6. Install and tighten the front fork bolt.
7. Route the front forks through the holes in the fork top bridge and tighten them with the 8 mm setting bolts and 10 mm setting bolts.
   Note:
   Remove oil, it any, from around the front forks.
8. After reassembling, check the front forks for smooth movement. Also check if oil leaks from the oil seals.

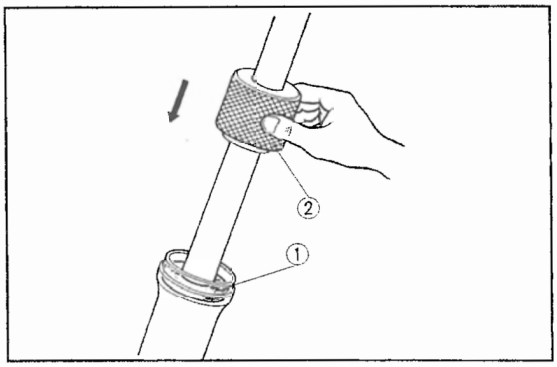

Fig. 7. 111
① Oil seal
② Fork seal guide

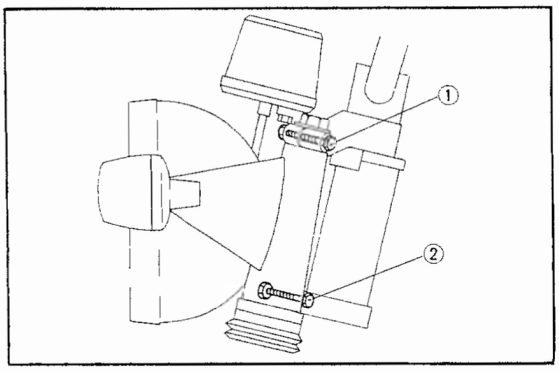

Fig. 7. 112
① 8 mm setting bolt
② 10 mm setting bolt

9. Adjust the front brake caliper.
   Adjust the clearance between brake disc and pad B to 0.15 mm (0.006 in.) with the chliper adjusting screw.

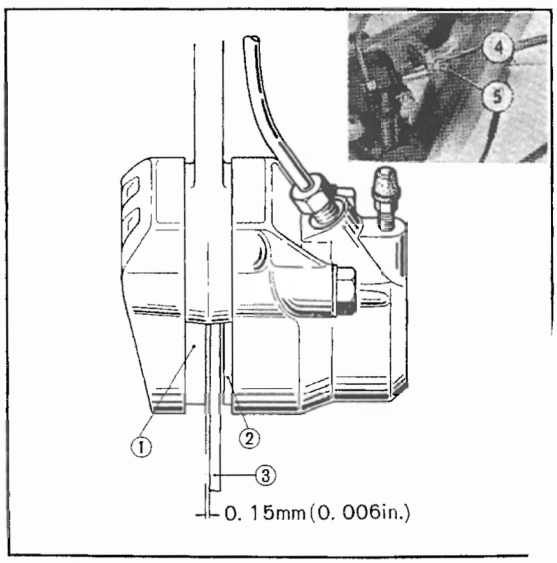

Fig. 7. 113
① Pad B
② Pad A
③ Brake disc
④ Nut
⑤ Caliper adjusting screw

Double tube, double acting type rear shock absorber

The rear shock absorber assemblies feature the telescopic type oil dampers with bottom valve to give an optimum damping performance under all bumping and rebounding conditions. The damping performance on the extension side is well matched with that on the compression side, providing maximum damping.

Stroke of rear shock absorber: **77.3 mm (3.04 in.)**

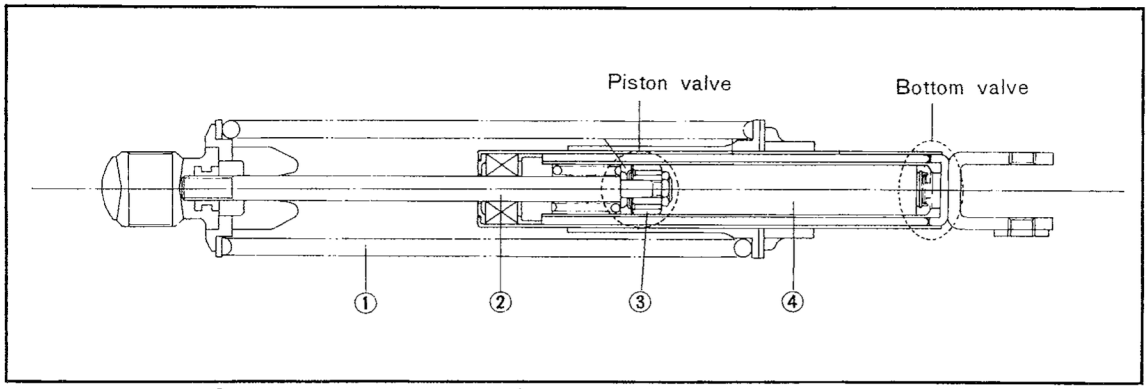

Fig. 7.114 ① Rear shock absorber spring ② Damper rod ③ Damper piston ④ Damper cylinder

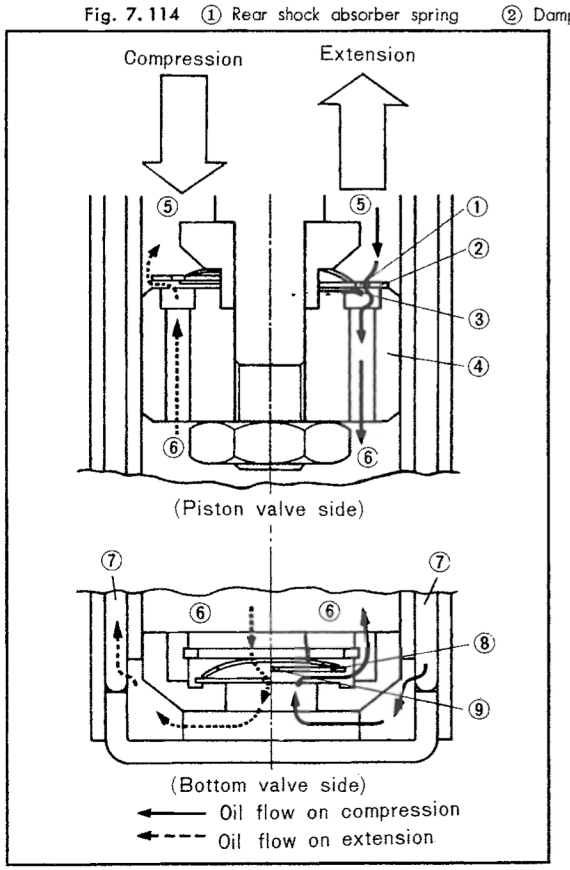

Fig. 7.115

① Orifice (I) ④ Piston ⑦ Chamber "c"
② Valve "A" ⑤ Chamber "a" ⑧ Bottom valve
③ Valve "B" ⑥ Chamber "b" ⑨ Orifice (II)

Operation

Each oil damper is equipped with the piston valves A and B and bottom valve. On the extension side, the damping action is provided by means of the piston valves. While, on the compression side, the damping action is provided by means of the bottom valve.

On extension side :

The oil in the chamber [a] flows into the chamber [b] through the orifice (I) in the valve A (sheet metal). By the resisting force of this oil, the damping action is provided. The valve A is overlapped with the valve B (leaf spring) which covers the half of the orifice. The damping action is regulated by the deflection of the valve B. Under such a condition, the bottom valve is opened and the oil in the chamber [c] flows into the chamber [b] smoothly to prevent air bubbles from being produced.

On compression side :

The oil in the chamber [b] flows by amount of oil equivalent to the volume of damper rod into the chamber [c] through the orifice in the bottom valve. By the resisting force of this oil, the damping action is provided. At this time the piston valves are opened and the oil flows from the chamber [b] into the chamber [a] smoothly.

WIRING DIAGRAM (For U.S.A.)

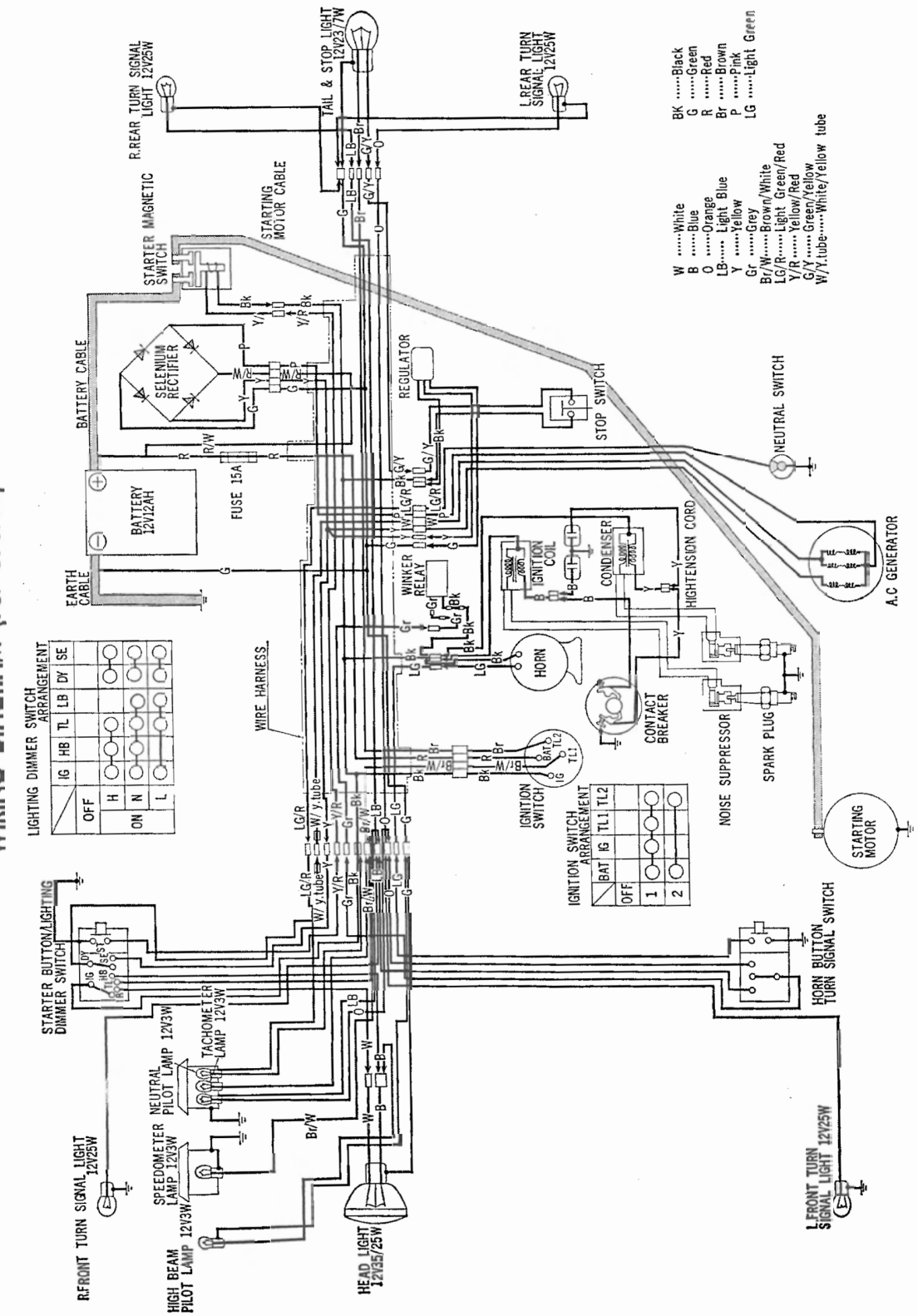

WIRING DIAGRAM

This wiring diagram is applicable to the U. S. A. models which are equipped with stoplight switch on the front brake.

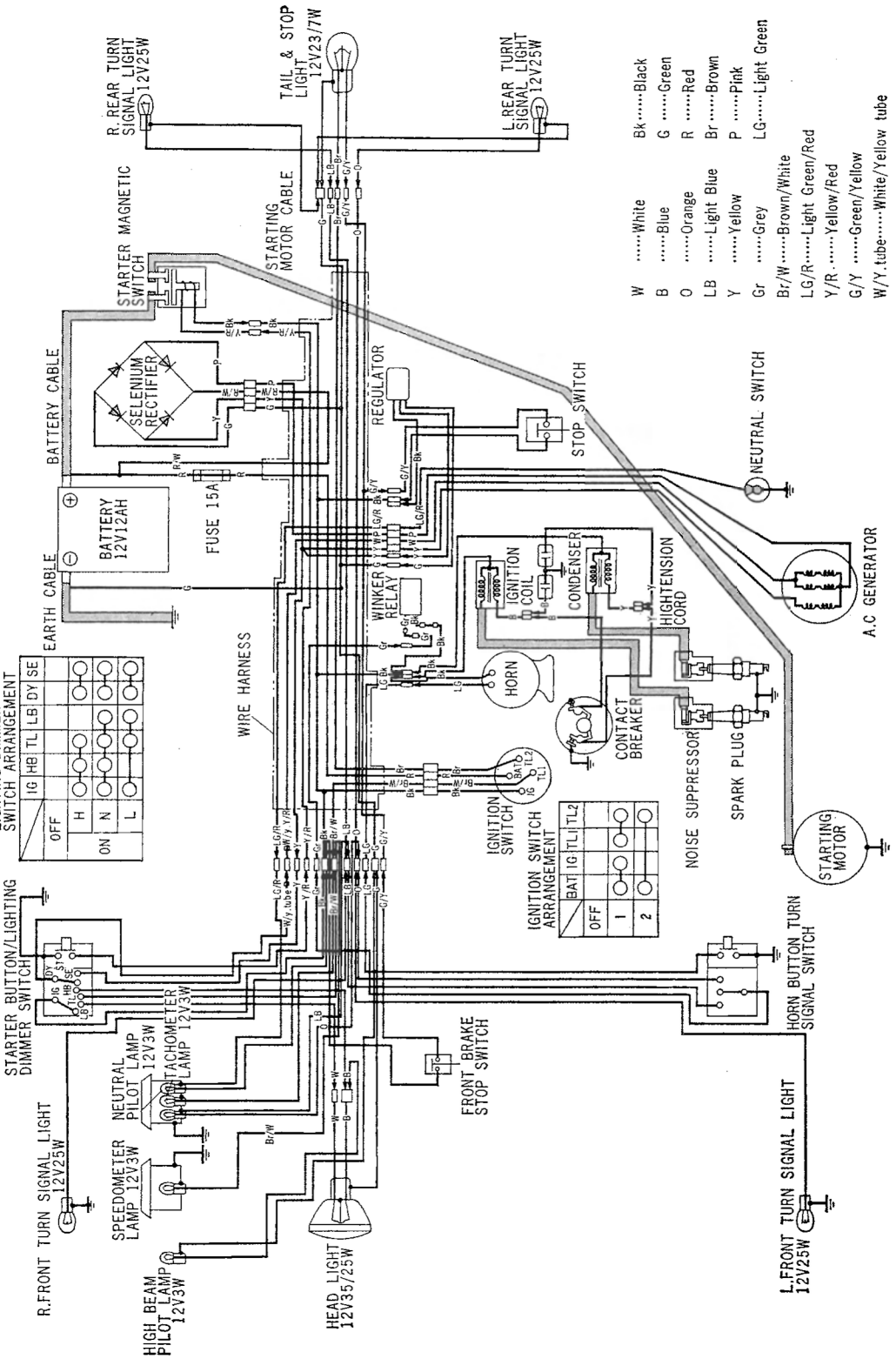

WIRING DIAGRAM (For general export)

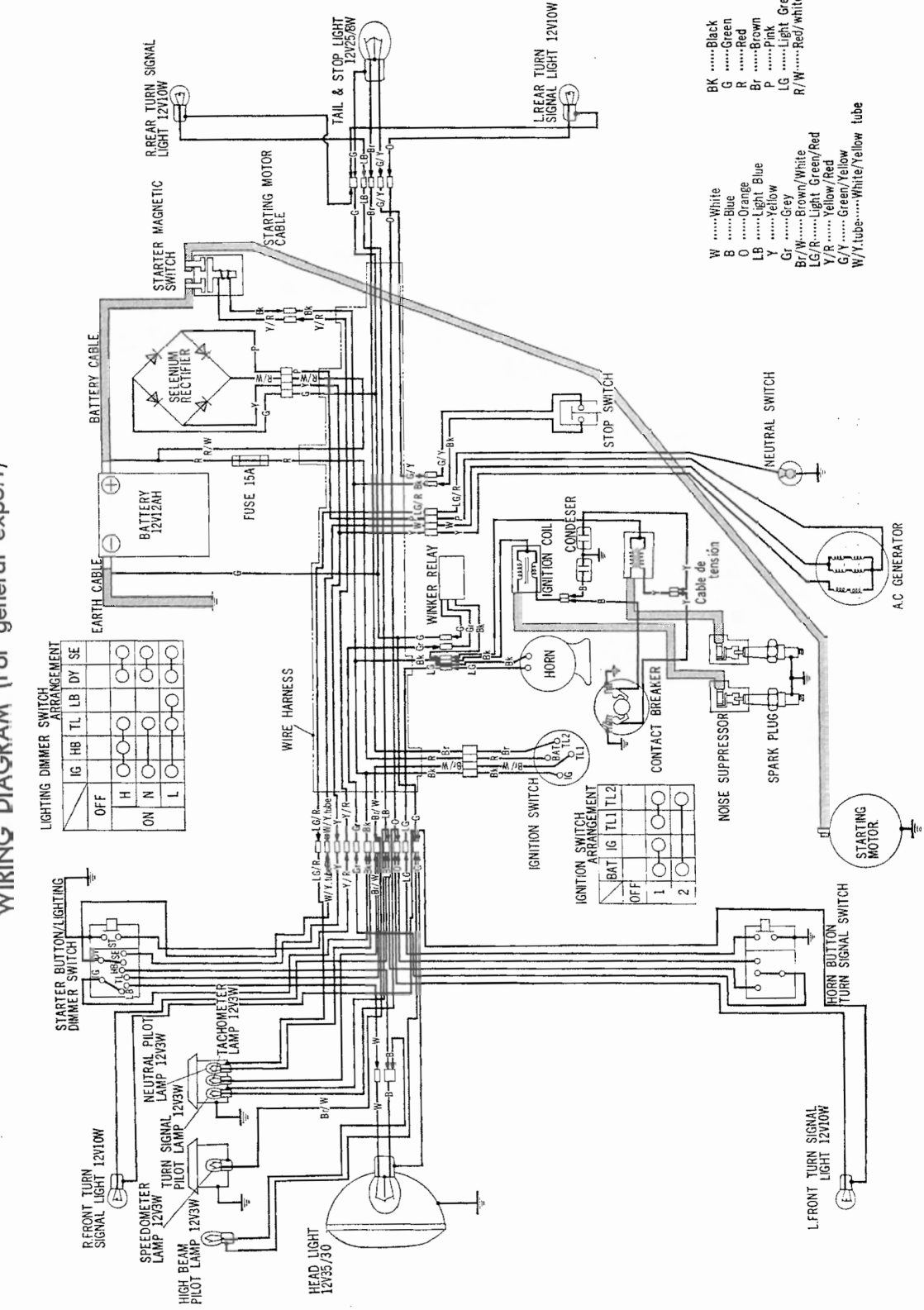

WIRING DIAGRAM (for U.K & SWEDEN)

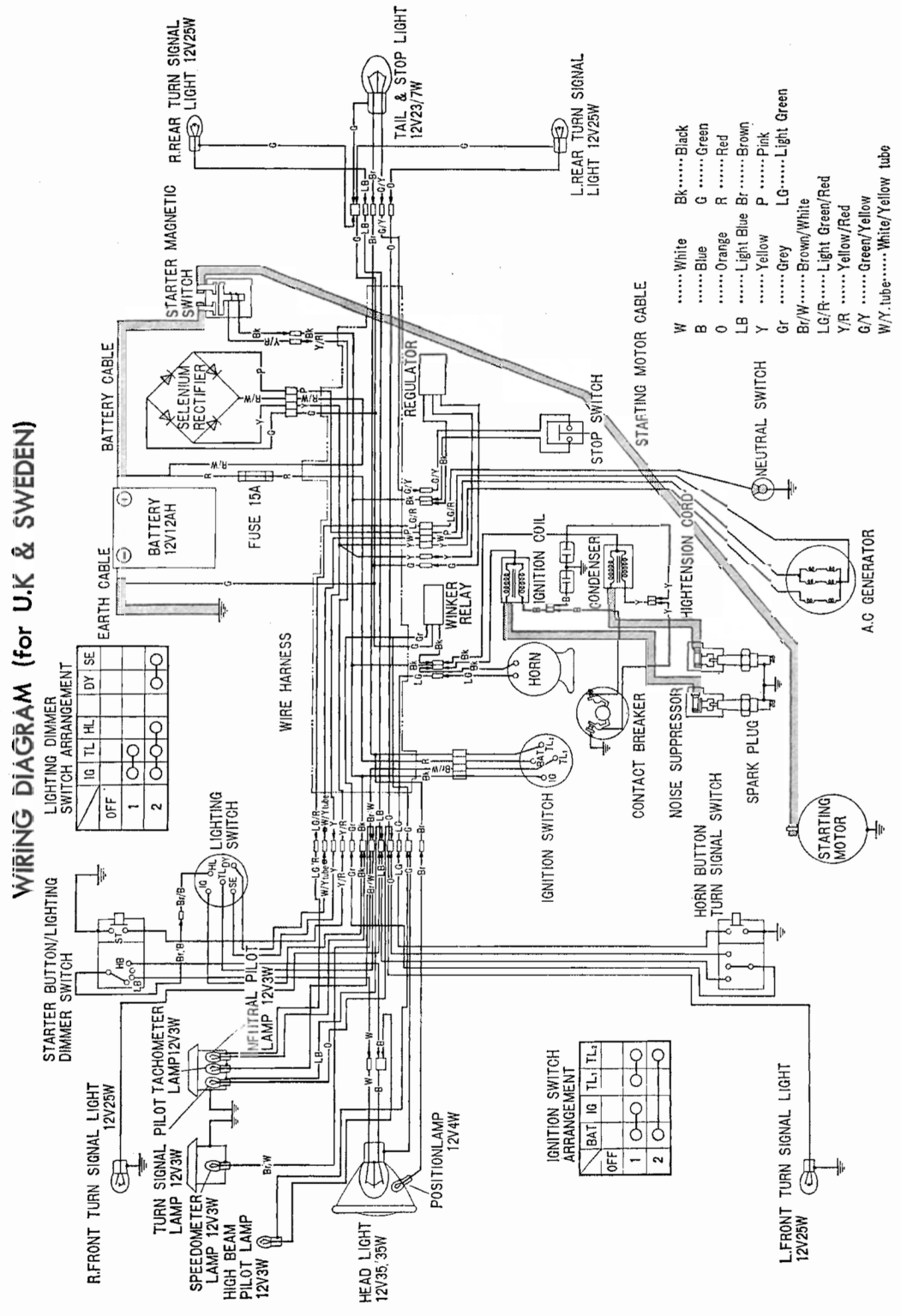

CB 450 K7 WIRING DIAGRAM

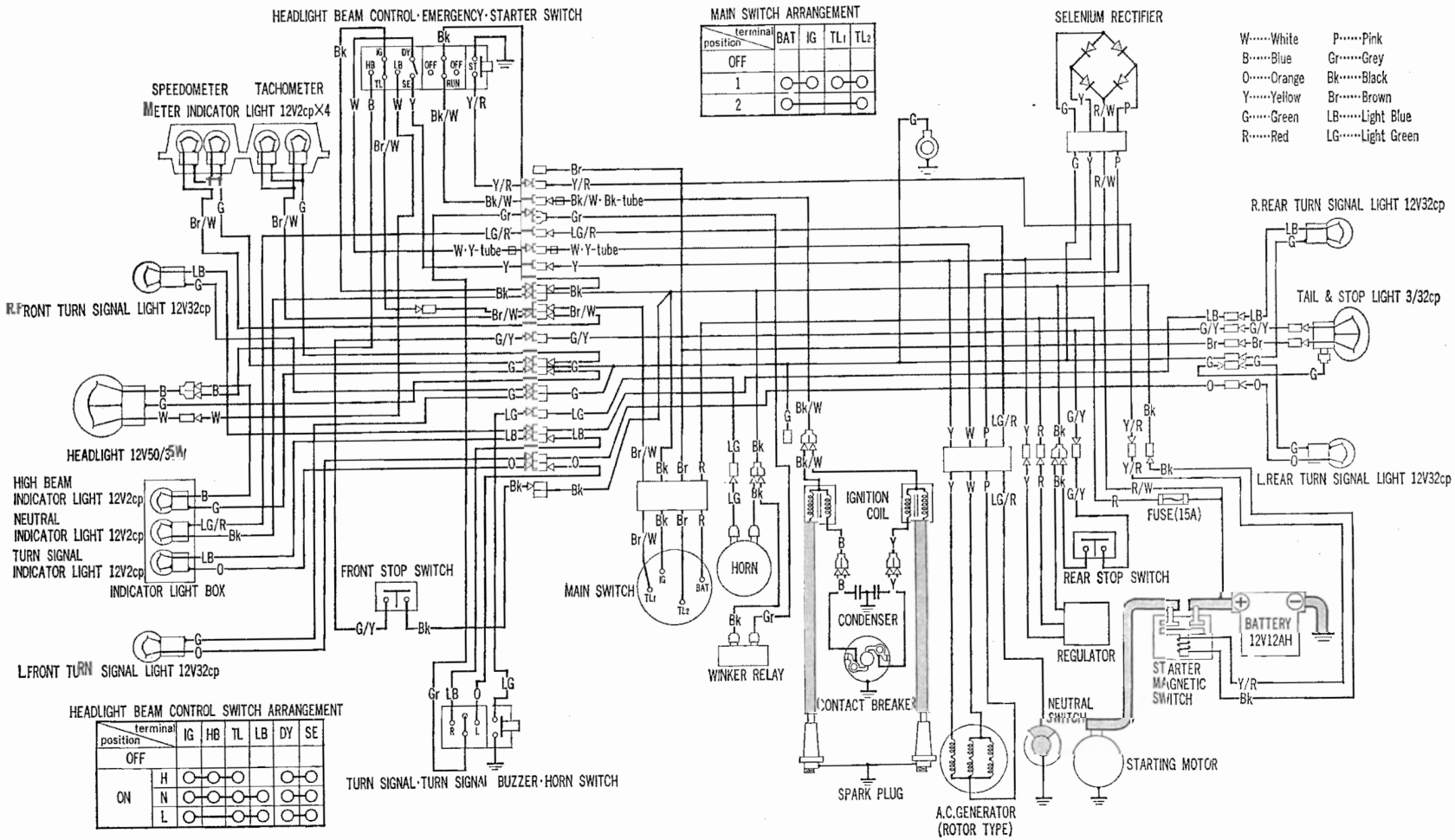

CL 450 K6 WIRING DIAGRAM

