SUZUKI

GS750E/T

SUPPLEMENTARY SERVICE MANUAL

USE THIS MANUAL WITH:
*GS750 SERVICE MANUAL (99500-37011-28E)

99501-37010-28E
(英)

FOREWORD

This supplementary service manual has been produced to aid Suzuki mechanics in properly maintaining and repairing the 1982 "Z" model.
This manual has been written primarily for the experienced Suzuki mechanic but will also be very useful even for the apprentice mechanic and do-it-yourself mechanic. The entire manual should be thoroughly reviewed before any servicing is performed.

Please also refer to the GS750 "T" MODEL (1980 MODEL) Service Manual (99500-37011-01E) for all other areas of information not covered in this publication.

NOTE:
1. *How the manual is compiled*
   - *This supplementary service manual lists only the points relating to maintenance work which differ from those applying to the GS750 "T", and "X" models.*
   - *However, in order to make this manual easier to use, some parts have the same information as provided in the service manual (99500-37011-28E) for the GS750 model.*
   - *Any differences in service data, service specifications and tightening torque tables with those that apply to the GS750 "X" model is clearly indicated with an asterisk (*).*
2. *How to use the manual*
   - *Give precedence to this supplementary service manual when using it as the service manual for the GS750EZ and 750TZ models.*
   - *Refer to the service manual for details which are not given in this supplementary service manual.*

SUZUKI MOTOR CO., LTD.
Administration Department
Overseas Service Division

Quoting, copying or otherwise using any part of this manual without explicit authorization from Suzuki Motor Co., Ltd. is not permitted as all rights to the publication are reserved under copyright law.

CONTENTS

VIEW OF SUZUKI GSX750EZ 1
VIEW OF SUZUKI GSX750TZ 2
SPECIFICATIONS 3
SERVICE DATA 5
    GSX750EZ 5
    GSX750TZ 15
TORQUE TABLE 25
SPECIAL MATERIALS 28
PERIODIC MAINTENANCE SCHEDULE 30
SPECIAL FEATURES 32
CYLINDER HEAD AND HEAD COVER 37
COVER TIGHTENING BOLT 37
CRANKSHAFT 38
VALVE TIMING 40
METER 41
FUEL GAUGE 42
OIL TEMPERATURE GAUGE 43
FRONT MASTER CYLINDER 44
FRONT FORK 48
WIRE AND CABLE ROUTING 59
BRAKE HOSE ROUTING 62
WIRING DIAGRAM 65

VIEW OF SUZUKI GS750EZ

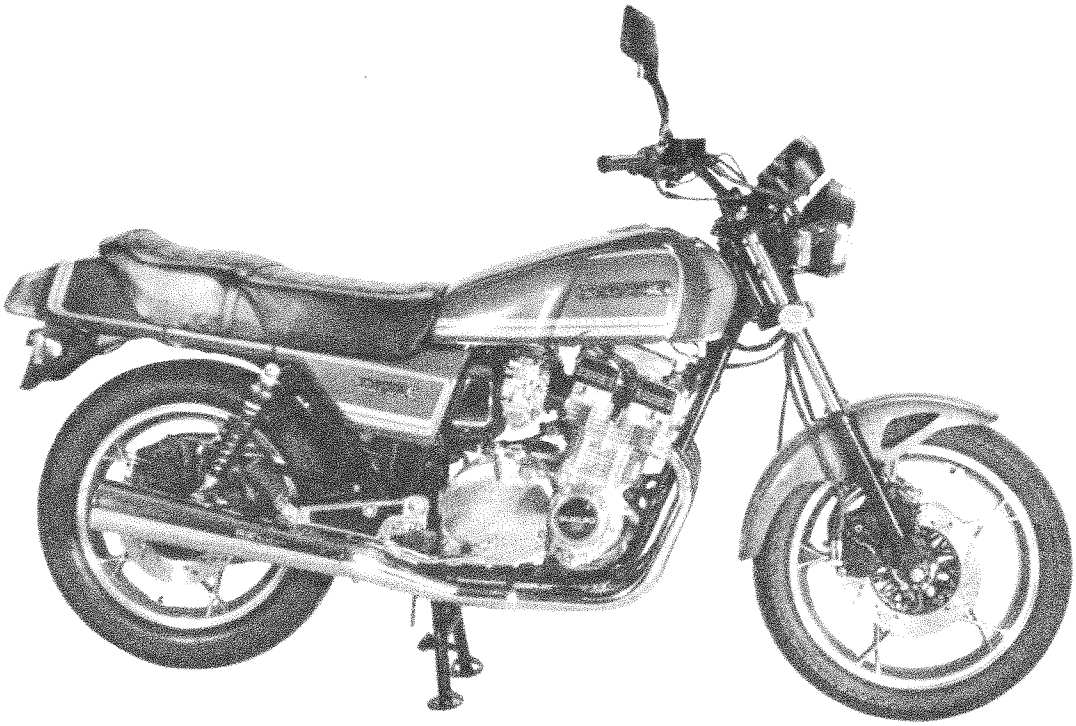

RIGHT SIDE

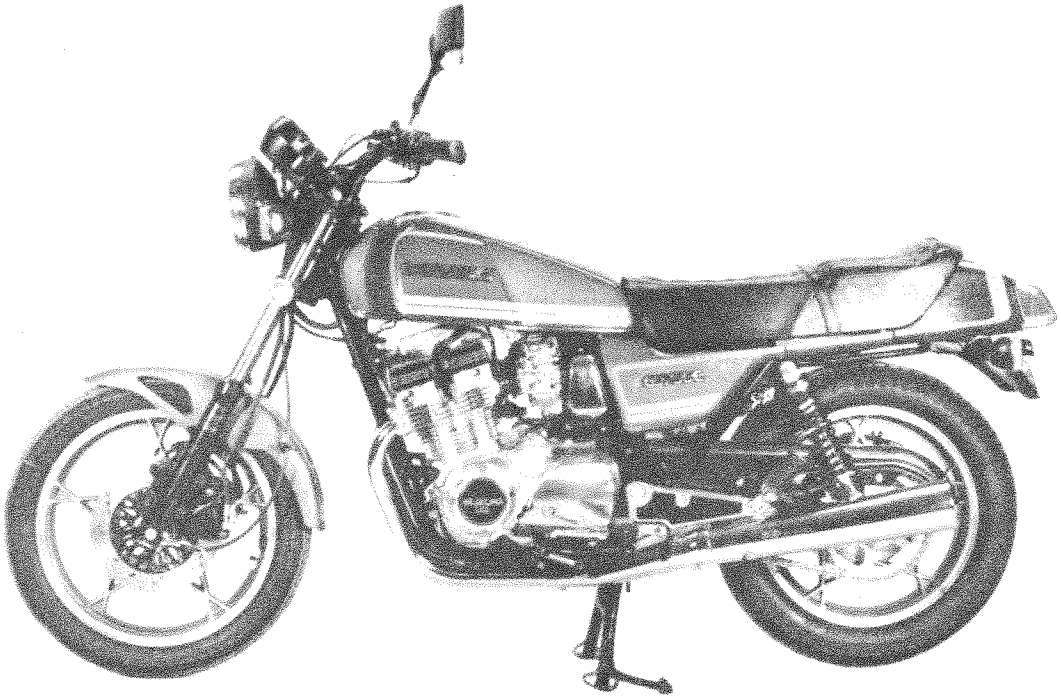

LEFT SIDE

VIEW OF SUZUKI GS750TZ

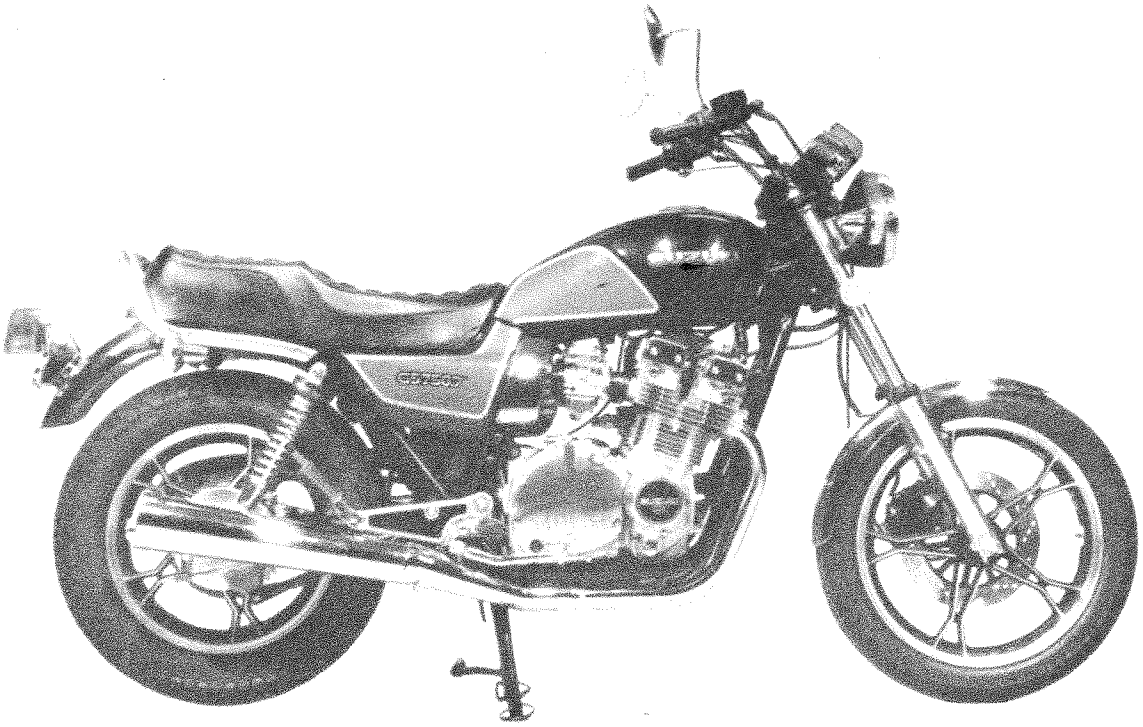

RIGHT SIDE

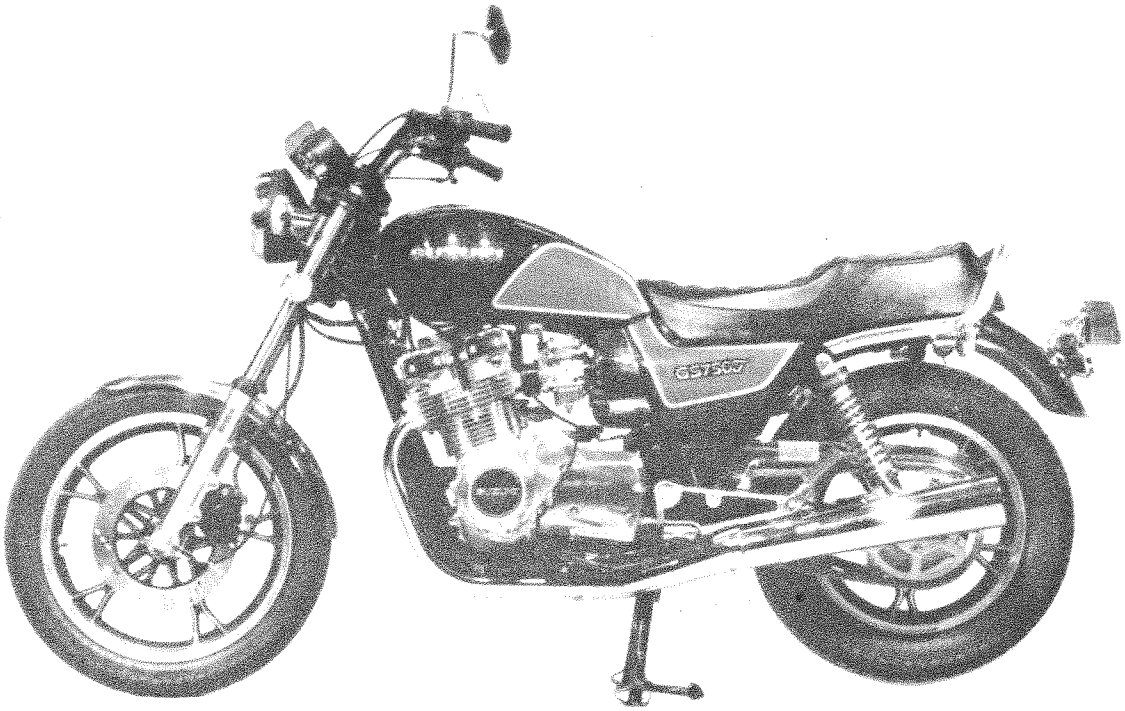

LEFT SIDE

SPECIFICATIONS

DIMENSIONS AND DRY MASS

	GS750EZ	GS750TZ
Overall length	2 240 mm (88.2 in)	2 250 mm (88.6 in)
Overall width	* 850 mm (33.5 in)	855 mm (33.7 in)
Overall height	1 170 mm (46.1 in)	1 190 mm (46.9 in)
Wheelbase	*1 510 mm (59.8 in)	←
Ground clearance	160 mm (6.3 in)	←
Dry mass	233 kg (514 lbs)	226 kg (498 lbs)
Seat height	* 820 mm (32.3 in)	790 mm (31.1 in)

ENGINE

Type	Four-stroke, air-cooled, DOHC	←
Number of cylinder	4	←
Bore	67.0 mm (2.638 in)	←
Stroke	53.0 mm (2.087 in)	←
Piston displacement	747 cm^3 (45.6 cu.in)	←
Compression ratio	9.4 : 1	←
Carburetor	MIKUNI BS32SS, four	←
Air cleaner	Paper element	←
Starter system	Electric	←
Lubrication system	Wet sump	←

TRANSMISSION

Clutch	Wet multi-plate type	←
Transmission	5-speed constant mesh	←
Gearshift pattern	1-down, 4-up	←
Primary reduction	2.162 (93/43)	←
Final reduction	2.733 (41/15)	←
Gear ratios, Low	2.571 (36/14)	←
2nd	1.777 (32/18)	←
3rd	1.380 (29/21)	←
4th	1.125 (27/24)	←
Top	0.961 (25/26)	←
Drive chain	DAIDO D.I.D. 630V or TAKASAGO RK630SO, 96 links	←

* Asterisk indicates new Z model specifications

CHASSIS

	GS750EZ	GS750TZ
Front suspension	*Telescopic, pneumatic/coil spring, oil dampened, with ANTI-DIVE	Telescopic, pneumatic/coil spring oil dampened
Rear suspension	Swinging arm, oil dampened, damper 4-way/spring 5-way adjustable	←
Steering angle	40° (right & left)	←
Caster	62°00′	←
Trail	*114 mm (4.49 in)	←
Turning radius	*2.7 m (8.9 ft)	←
Front brake	Disc brake, twin	Disc brake
Rear brake	Disc brake	Internal expanding
Front tire size	3.25H19 4PR	←
Rear tire size	4.00H18 4PR	4.50H17 4PR
Front fork stroke	160 mm (6.30 in)	←
Rear wheel travel	107 mm (4.21 in)	←
Front tire pressure	175 kPa (1.75 kg/cm^2, 24 psi) (Normal solo riding)	←
Rear tire pressure	200 kPa (2.00 kg/cm^2, 28 psi) (Normal solo riding)	←

ELECTRICAL

Ignition type	Transistorized	←
Ignition timing	*13° B.T.D.C. below 1 500 r/min and 35° B.T.D.C. above 2 350 r/min	←
Spark plug	NGK DR8ES-L or NIPPON DENSO X24ESR-U	←
Battery	12V 50.4kC (14Ah)/10HR	←
Generator	Three-phase A.C. generator	←
Fuse	10/10/10/10/15A	←

CAPACITIES

Fuel tank including reserve	24 L (6.3/5.3 US/Imp gal)	16 L (4.2/3.5 US/Imp gal)
reserve	4.0 L (4.2/3.5 US/Imp qt)	3.0 L (3.2/2.6 US/Imp qt)
Engine oil	3.2 L (3.4/2.8 US/Imp qt)	←
Front fork oil (each leg)	*214 ml (7.23/7.53 US/Imp oz)	209 ml (7.06/7.36 US/Imp oz)

* Asterisk indicates new Z model specifications.

** Specifications subject to change without notice.

SERVICE DATA (GS750EZ)

VALVE + GUIDE

Unit: mm

ITEM	STANDARD		LIMIT
Valve diam.	IN.	23.0	———
	EX.	20.0	———
Valve lift	IN.	7.5	———
	EX.	6.5	———
Valve clearance or tappet clearance (when cold)	IN. & EX.	0.09–0.13	———
Valve guide to valve stem clearance	IN.	0.025–0.052	0.35
	EX.	0.040–0.067	0.35
Valve guide I.D.	IN. & EX.	5.500–5.512	———
Valve stem O.D.	IN.	5.460–5.475	———
	EX.	5.445–5.460	———
Valve stem runout	IN. & EX.	———	0.05
Valve head thickness	IN. & EX.	———	0.5
Valve stem end length	IN. & EX.	———	3.6
Valve seat width	IN. & EX.	0.9–1.1	———
Valve head radial runout	IN. & EX.	———	0.03
Valve spring free length (IN. & EX.)	INNER	———	31.9
	OUTER	———	35.6
Valve spring tension (IN. & EX.)	INNER	4.4–6.4 kg (9.7–14.1 lbs) at length 28.5 mm	———
	OUTER	6.5–8.9 kg (14.3–19.6 lbs) at length 32.0 mm	———

CAMSHAFT + CYLINDER HEAD

Unit: mm

ITEM	STANDARD		LIMIT
Cam height	IN.	34.940–34.980	34.660
	EX.	34.360–34.400	34.080
Camshaft journal oil clearance	IN. & EX.	0.032–0.066	0.150
Camshaft journal holder I.D.	IN. & EX.	22.012–22.025	———
Camshaft journal O.D.	IN. & EX.	21.959–21.980	———
Camshaft runout	IN. & EX.	———	0.10
Cam chain 20 pitch length		———	157.80
Cam chain pin (at arrow "3")		20 th pin	———
Rocker arm I.D.	IN. & EX.	12.000–12.018	———
Rocker arm shaft O.D.	IN. & EX.	11.973–11.984	———
Cylinder head distortion		———	0.2

CYLINDER + PISTON + PISTON RING

Unit: mm

ITEM	STANDARD	LIMIT
Compression pressure	10–14 kg/cm² (142–199 psi)	8 kg/cm² (114 psi)
Compression pressure difference	———	2 kg/cm² (28 psi)
Piston to cylinder clearance	0.050–0.060	0.120
Cylinder bore	67.000–67.015	67.080
Piston diam.	66.945–66.960 Measure at 15.0 from the skirt end.	66.880
Cylinder distortion	———	0.2

Unit: mm

ITEM	STANDARD			LIMIT
Piston ring free end gap	1st	N	Approx. 9.5	7.6
		R	Approx. 9.5	7.6
	2nd	N	Approx. 10.0	8.0
		R	Approx. 10.0	8.0
Piston ring end gap	1st		0.10–0.30	0.70
	2nd		0.10–0.30	0.70
Piston ring to groove clearance	1st		———	0.180
	2nd		———	0.150
Piston ring groove width	1st		1.21–1.23	———
	2nd		1.21–1.23	———
	Oil		2.51–2.53	———
Piston ring thickness	1st		1.175–1.190	———
	2nd		1.170–1.190	———
Piston pin bore	18.002–18.008			18.030
Piston pin O.D.	17.995–18.000			17.980

CONROD + CRANKSHAFT

Unit: mm

ITEM	STANDARD	LIMIT
Conrod small end I.D.	18.006—18.014	18.040
Conrod big end side clearance	0.10—0.20	0.30
Conrod big end width	20.95—21.00	———
Crank pin width	21.10—21.15	———
Conrod big end oil clearance	0.024—0.048	0.080
Crank pin O.D.	35.976—36.000	———
Crankshaft journal oil clearance	*0.016—0.040	0.080
Crankshaft journal O.D.	*35.980—36.004	———
Crankshaft thrust clearance	0.08—0.24	0.50
Crankshaft journal holder width	20.95—21.03	———
Crankshaft journal width	24.00—24.05	———
Crankshaft thrust bearing thickness	———	2.80
Crankshaft runout	———	0.05

OIL PUMP

ITEM	STANDARD	LIMIT
Oil pump reduction ratio	1.650 (93/43 x 29/38)	———
Oil pressure (at 60°C, 140°F)	Above 2.5 kg/cm² (36 psi) Below 5.5 kg/cm² (78 psi) at 3000 r/min.	———

CLUTCH

Unit: mm

ITEM	STANDARD	LIMIT
Clutch cable play	2–3	———
Drive plate thickness	2.7–2.9	2.4
Drive plate claw width	11.8–12.0	11.0
Driven plate thickness	2.0 ± 0.06	———
Driven plate distortion	———	0.1
Clutch spring free length	———	38.5

TRANSMISSION + DRIVE CHAIN

Unit: mm

ITEM	STANDARD		LIMIT
Primary reduction ratio	2.162 (93/43)		———
Final reduction ratio	2.733 (41/15)		———
Gear ratios	Low	2.571 (36/14)	———
	2nd	1.777 (32/18)	———
	3rd	1.380 (29/21)	———
	4th	1.125 (27/24)	———
	Top	0.961 (25/26)	———
Shift fork to groove clearance	0.40–0.60		0.80
Shift fork groove width	5.45–5.55		———
Shift fork thickness	4.95–5.05		———
Counter shaft length (Low to 2nd)	109.5 $\pm^{0}_{0.1}$		———
Drive chain	Type	D.I.D.: 630V TAKASAGO: RK630SO	———
	Links	96	———
	20 pitch length	———	383.0
Drive chain slack	20–30		———

CARBURETOR

Unit: mm

ITEM	SPECIFICATION
Carburetor type	MIKUNI BS32SS
Bore size	32
I. D. No.	45430
Idle r/min.	1050 ± 100 r/min.
Fuel level	5.0 ± 0.5
Float height	22.4 ± 1.0
Main jet (M. J.)	# 112.5
Main air jet (M. A. J.)	1.7
Jet needle (J. N.)	5C32-3rd
Needle jet (N. J.)	Y-5
Throttle valve (T.V.)	# 135
Pilot jet (P. J.)	# 42.5
By pass (B. P.)	0.8, 0.8, 0.8
Pilot outlet (P. O.)	0.7
Valve seat (V. S.)	2.0
Starter jet (G. S.)	# 50
Pilot screw (P. S.)	PRE-SET
Pilot air jet (P. A. J.)	#150
Throttle cable play	0.5—1.0
Choke cable play	0.5—1.0

ELECTRICAL

Unit: mm

ITEM	SPECIFICATION			NOTE
Ignition timing	13 ° B.T.D.C. Below 1500 ± 150 r/min and 35 ° B.T.D.C. Above 2350 ± 150 r/min.			
Firing order	1 · 2 · 4 · 3			
Spark plug	Type	NGK: DR8ES-L N.D.: X24ESR-U		
	Gap	0.6 – 0.7		
Spark performance	Over 8 (0.3) at 1 atm			
Signal coil resistance	Approx.	290 – 360 Ω		(Bl-G)
Ignition coil resistance	Primary	O/W – W or B/Y Approx. 3 – 5 Ω		
	Secondary	Plug cap – Plug cap Approx. 31 – 33 kΩ		
Generator no-load voltage	More than 80 V (AC) at 5000 r/min.			
Regulated voltage	14.0 – 15.5 V at 5000 r/min.			
Starter motor	Brush length	MITSUBA	Limit: 6	
	Commutator under cut		Limit: 0.2	
Starter relay resistance	Approx.	3 – 4 Ω		
Battery	Type designation	YB14L-A2		
	Capacity	12V50.4kC(14Ah)/10HR		
	Standard electrolyte S. G.	1.28 at 20°C (68°F)		
Fuse size	Headlight	10 A		
	Turn signal	10 A		
	Ignition	10 A		
	Main	15 A		
	Output terminal	10 A		

BRAKE + WHEEL

Unit: mm

ITEM	STANDARD		LIMIT
Rear brake pedal height	20		—
Brake disc thickness	Front	5.0 ± 0.2	4.5
	Rear	6.7 ± 0.2	6.0
Brake disc runout	—		0.30
Master cylinder bore	Front	15.870–15.913	—
	Rear	14.000–14.043	—
Master cylinder piston diam.	Front	15.827–15.854	—
	Rear	13.957–13.984	—
Brake caliper cylinder bore	Front	38.180–38.256	—
	Rear	38.180–38.256	—
Brake caliper piston diam.	Front	38.098–38.148	—
	Rear	38.098–38.148	—
Wheel rim runout	Axial	—	2.0
	Radial	—	2.0
Wheel axle runout	Front	—	0.25
	Rear	—	0.25
Tire size	Front	3.25H19 4PR	—
	Rear	4.00H18 4PR	—
Tire tread depth	Front	—	1.6
	Rear	—	2.0

SUSPENSION

Unit: mm

ITEM	STANDARD		LIMIT
Front fork stroke	160		———
Front fork spring free length	Upper	———	* 63
	Lower	———	439
Front fork oil level	201		———
Front fork air pressure	40 kPa (0.4 kg/cm², 5.69 psi)		———
Rear wheel travel	107		———
Swing arm pivot shaft runout	———		0.3

FUEL + OIL

ITEM	SPECIFICATION		NOTE
Fuel type	Gasoline used should be graded 85-95 octane or higher. An unleaded or low-lead gasoline type is recommended.		
Fuel tank including reserve	19 L (5.0/4.2 US/Imp gal)		
reserve	4.0 L (4.2/2.5 US/Imp qt)		
Engine oil type	SAE 10W/40		
Engine oil capacity	Change	3200 ml (3.4/2.8 US/Imp qt)	
	Filter change	3800 ml (4.0/3.3 US/Imp qt)	
	Overhaul	4000 ml (4.2/3.5 US/Imp qt)	
Front fork oil type	Fork oil # 15		
Front fork oil capacity (each leg)	214 ml (7.23/7.53 US/Imp oz)		
Brake fluid type	DOT3 or DOT4		

TIRE PRESSURE

COLD INFLATION TIRE PRESSURE	NORMAL RIDING						CONTINUOUS HIGH SPEED RIDING					
	SOLO RIDING			DUAL RIDING			SOLO RIDING			DUAL RIDING		
	kPa	kg/cm²	psi	kPa	kg/cm²	psi	kPa	kg/cm²	psi	kPa	kg/cm²	psi
FRONT	175	1.75	24	175	1.75	24	200	2.00	28	200	2.00	28
REAR	200	2.00	28	225	2.25	32	225	2.25	32	280	2.80	40

WATTAGE

Unit: W

ITEM		SPECIFICATION
Headlight	HI	60
	LO	55
Tail/Brake light		8/23
License light		8
Turn signal light		23
Speedometer light		3.4
Tachometer light		3.4
Fuel meter light		2
Oil temperature gauge light		2
Turn signal indicator light		3.4
High beam indicator light		3.4
Neutral indicator light		3.4
Oil pressure indicator light		3.4
Side stand check light		3.4

SERVICE DATA (GS750TZ)

VALVE + GUIDE

Unit: mm

ITEM	STANDARD		LIMIT
Valve diam.	IN.	23.0	———
	EX.	20.0	———
Valve lift	IN.	7.0	———
	EX.	6.5	———
Valve clearance or tappet clearance (when cold)	IN. & EX.	0.09–0.13	———
Valve guide to valve stem clearance	IN.	0.025–0.052	0.35
	EX.	0.040–0.067	0.35
Valve guide I.D.	IN. & EX.	5.500–5.512	———
Valve stem O.D.	IN.	5.460–5.475	———
	EX.	5.445–5.460	———
Valve stem runout	IN. & EX.	———	0.05
Valve head thickness	IN. & EX.	———	0.5
Valve stem end length	IN. & EX.	———	3.6
Valve seat width	IN. & EX.	0.9–1.1	———
Valve head radial runout	IN. & EX.	———	0.03
Valve spring free length (IN. & EX.)	INNER	———	31.9
	OUTER	———	35.6
Valve spring tension (IN. & EX.)	INNER	4.4–6.4 kg (9.7–14.1 lbs) at length 28.5 mm	———
	OUTER	6.5–8.9 kg (14.3–19.6 lbs) at length 32.0 mm	———

CAMSHAFT + CYLINDER HEAD

Unit: mm

ITEM	STANDARD		LIMIT
Cam height	IN.	34.940–34.980	34.660
	EX.	34.360–34.400	34.080
Camshaft journal oil clearance	IN. & EX.	0.032–0.066	0.150
Camshaft journal holder I.D.	IN. & EX.	22.012–22.025	———
Camshaft journal O.D.	IN. & EX.	21.959–21.980	———
Camshaft runout	IN. & EX.	———	0.10
Cam chain 20 pitch length		———	157.80
Cam chain pin (at arrow "3")		20 th pin	———
Rocker arm I.D.	IN. & EX.	12.000–12.018	———
Rocker arm shaft O.D.	IN. & EX.	11.973–11.984	———
Cylinder head distortion		———	0.2

CYLINDER + PISTON + PISTON RING

Unit: mm

ITEM	STANDARD	LIMIT
Compression pressure	10–14 kg/cm² (142–199 psi)	8 kg/cm² (114 psi)
Compression pressure difference	———	2 kg/cm² (28 psi)
Piston to cylinder clearance	0.050–0.060	0.120
Cylinder bore	67.000–67.015	67.080
Piston diam.	66.945–66.960 Measure at 15.0 from the skirt end.	66.880
Cylinder distortion	———	0.2

Unit: mm

ITEM	STANDARD			LIMIT
Piston ring free end gap	1st	N	Approx. 9.5	7.6
		R	Approx. 9.5	7.6
	2nd	N	Approx. 10.0	8.0
		R	Approx. 10.0	8.0
Piston ring end gap	1st		0.10–0.30	0.70
	2nd		0.10–0.30	0.70
Piston ring to groove clearance	1st		———	0.180
	2nd		———	0.150
Piston ring groove width	1st		1.21–1.23	———
	2nd		1.21–1.23	———
	Oil		2.51–2.53	———
Piston ring thickness	1st		1.175–1.190	———
	2nd		1.170–1.190	———
Piston pin bore	18.002–18.008			18.030
Piston pin O.D.	17.995–18.000			17.980

CONROD + CRANKSHAFT

Unit: mm

ITEM	STANDARD	LIMIT
Conrod small end I.D.	18.006—18.014	18.040
Conrod big end side clearance	0.10—0.20	0.30
Conrod big end width	20.95—21.00	———
Crank pin width	21.10—21.15	———
Conrod big end oil clearance	0.024—0.048	0.080
Crank pin O.D.	35.976—36.000	———
Crankshaft journal oil clearance	0.016—0.040	0.080
Crankshaft journal O.D.	35.980—36.004	———
Crankshaft thrust clearance	0.08—0.24	0.50
Crankshaft journal holder width	20.95—21.03	———
Crankshaft journal width	24.00—24.05	———
Crankshaft thrust bearing thickness	———	2.80
Crankshaft runout	———	0.05

OIL PUMP

ITEM	STANDARD	LIMIT
Oil pump reduction ratio	1.650 (93/43 x 29/38)	———
Oil pressure (at 60°C, 140°F)	Above 2.5 kg/cm² (36 psi) Below 5.5 kg/cm² (78 psi) at 3000 r/min.	———

CLUTCH

Unit: mm

ITEM	STANDARD	LIMIT
Clutch cable play	2–3	———
Drive plate thickness	2.7–2.9	2.4
Drive plate claw width	11.8–12.0	11.0
Driven plate thickness	2.0 ± 0.06	———
Driven plate distortion	———	0.1
Clutch spring free length	———	38.5

TRANSMISSION + DRIVE CHAIN

Unit: mm

ITEM		STANDARD	LIMIT
Primary reduction ratio		2.162 (93/43)	———
Final reduction ratio		2.733 (41/15)	———
Gear ratios	Low	2.571 (36/14)	———
	2nd	1.777 (32/18)	———
	3rd	1.380 (29/21)	———
	4th	1.125 (27/24)	———
	Top	0.961 (25/26)	———
Shift fork to groove clearance		0.40–0.60	0.80
Shift fork groove width		5.45–5.55	———
Shift fork thickness		4.95–5.05	———
Counter shaft length (Low to 2nd)		$109.5 \pm {}^{0}_{0.1}$	———
Drive chain	Type	D.I.D.: 630V TAKASAGO: RK630SO	———
	Links	96	———
	20 pitch length	———	383.0
Drive chain slack		20–30	———

CARBURETOR

Unit: mm

ITEM	SPECIFICATION
Carburetor type	MIKUNI BS32SS
Bore size	32
I. D. No.	45430
Idle r/min.	1050 ± 100 r/min.
Fuel level	5.0 ± 0.5
Float height	22.4 ± 1.0
Main jet (M. J.)	# 112.5
Main air jet (M. A. J.)	1.7
Jet needle (J. N.)	5C32-3rd
Needle jet (N. J.)	Y-5
Throttle valve (T.V.)	# 135
Pilot jet (P. J.)	# 42.5
By pass (B. P.)	0.8, 0.8, 0.8
Pilot outlet (P. O.)	0.7
Valve seat (V. S.)	2.0
Starter jet (G. S.)	# 50
Pilot screw (P. S.)	PRE-SET
Pilot air jet (P. A. J.)	# 150
Throttle cable play	0.5 – 1.0
Choke cable play	0.5 – 1.0

ELECTRICAL

Unit: mm

ITEM	SPECIFICATION			NOTE
Ignition timing	13 ° B.T.D.C. Below 1500 ± 150 r/min and 35 ° B.T.D.C. Above 2350 ± 150 r/min.			
Firing order	1 · 2 · 4 · 3			
Spark plug	Type	NGK: DR8ES-L N.D.: X24ESR-U		
	Gap	0.6—0.7		
Spark performance	Over 8 (0.3) at 1 atm			
Signal coil resistance	Approx.	290—360 Ω		(Bl-G)
Ignition coil resistance	Primary	Approx. 3—5 Ω		
	Secondary	Plug cap — Plug cap Approx. 31—33 kΩ		
Generator no-load voltage	More than 80 V (AC) at 5000 r/min.			
Regulated voltage	14.0—15.5 V at 5000 r/min.			
Starter motor	Brush length	MITSUBA	Limit: 6	
	Commutator under cut		Limit: 0.2	
Starter relay resistance	Approx.	3—4 Ω		
Battery	Type designation	YB14L-A2		
	Capacity	12V50.4kC(14Ah)/10HR		
	Standard electrolyte S. G.	1.28 at 20°C (68°F)		
Fuse size	Headlight	10 A		
	Turn signal	10 A		
	Ignition	10 A		
	Main	15 A		
	Output terminal	10 A		

BRAKE + WHEEL

Unit: mm

ITEM		STANDARD	LIMIT
Rear brake pedal free travel		20–30	———
Rear brake pedal height		20	———
Brake disc thickness	Front	6.0 ± 0.2	5.5
Brake drum I.D.	Rear	———	180.7
Brake lining thickness	Rear	———	1.5
Brake disc runout	Front	———	0.30
Master cylinder bore	Front	14.000–14.043	———
Master cylinder piston diam.	Front	13.957–13.984	———
Brake caliper cylinder bore	Front	38.180–38.256	———
Brake caliper piston diam.	Front	38.098–38.148	———
Wheel rim runout	Axial	———	2.0
	Radial	———	2.0
Wheel axle runout	Front	———	0.25
	Rear	———	0.25
Tire size	Front	3.25H19 4PR	———
	Rear	4.50H17 4PR	———
Tire tread depth	Front	———	1.6
	Rear	———	2.0

SUSPENSION

Unit: mm

ITEM	STANDARD		LIMIT
Front fork stroke	160		———
Front fork spring free length	Upper	———	156
	Lower	———	360
Front fork oil level	180		———
Front fork air pressure	40 kPa (0.4 kg/cm², 5.69 psi)		———
Rear wheel travel	107		———
Swing arm pivot shaft runout	———		0.3

FUEL + OIL

ITEM	SPECIFICATION	NOTE
Fuel type	Gasoline used should be graded 85-95 octane or higher. An unleaded or low-lead gasoline type is recommended.	
Fuel tank including reserve	16 L (4.2/3.5 US/Imp gal)	
reserve	3.0 L (3.2/2.6 US/Imp qt)	
Engine oil type	SAE 10W/40	
Engine oil capacity	Change 3200 ml (3.4/2.8 US/Imp qt)	
	Filter change 3800 ml (4.0/3.3 US/Imp qt)	
	Overhaul 4000 ml (4.2/3.5 US/Imp qt)	
Front fork oil type	Fork oil # 15	
Front fork oil capacity (each leg)	209 ml (7.06/7.36 US/Imp oz)	
Brake fluid type	DOT3 or DOT4	

TIRE PRESSURE

COLD INFLATION TIRE PRESSURE	NORMAL RIDING						CONTINUOUS HIGH SPEED RIDING					
	SOLO RIDING			DUAL RIDING			SOLO RIDING			DUAL RIDING		
	kPa	kg/cm²	psi	kPa	kg/cm²	psi	kPa	kg/cm²	psi	kPa	kg/cm²	psi
FRONT	175	1.75	24	175	1.75	24	200	2.00	28	200	2.00	28
REAR	200	2.00	28	225	2.25	32	225	2.25	32	280	2.80	40

WATTAGE

Unit: W

ITEM		SPECIFICATION
Headlight	HI	60
	LO	55
Tail/Brake light		8/23
Turn signal light		23
Speedometer light		3.4
Tachometer light		3.4
Fue lmeter light		1.7
Turn signal indicator light		3.4
High beam indicator light		3.4
Neutral indicator light		3.4
Oil pressure indicator light		3.4

TORQUE TABLE

ENGINE

ITEM	N·m	kg-m	lb-ft
Cylinder head cover bolt	9 – 10	0.9 – 1.0	6.5 – 7.0
Cylinder head bolt	7 – 11	0.7 – 1.1	5.0 – 8.0
Cylinder head nut	35 – 40	3.5 – 4.0	25.5 – 29.0
Rocker arm shaft stopper bolt	8 – 10	0.8 – 1.0	6.0 – 7.0
Valve clearance adjuster lock nut	9 – 11	0.9 – 1.1	6.5 – 8.0
Camshaft holder bolt	8 – 12	0.8 – 1.2	6.0 – 8.5
*Camshaft sprocket bolt	24 – 26	2.4 – 2.6	17.5 – 19.0
Cam chain tensioner fitting bolt	6 – 8	0.6 – 0.8	4.5 – 6.0
Cam chain tensioner shaft ass'y	31 – 35	3.1 – 3.5	22.0 – 25.5
Cam chain tensioner lock shaft nut	8 – 10	0.8 – 1.0	6.0 – 7.0
Cam chain tensioner adjuster lock nut	9 – 14	0.9 – 1.4	6.5 – 10.0
Generator rotor bolt	60 – 70	6.0 – 7.0	43.5 – 50.5
Starter clutch allen bolt	15 – 20	1.5 – 2.0	11.0 – 14.5
Con rod nut	30 – 34	3.0 – 3.4	21.5 – 25.0
Crank web No. 4 nut	26 – 30	2.6 – 3.0	19.0 – 21.5
Governer center bolt	13 – 23	1.3 – 2.3	9.5 – 16.5
Crankcase bolt (6 mm)	9 – 13	0.9 – 1.3	6.5 – 9.5
(8 mm)	20 – 24	2.0 – 2.4	14.5 – 17.5
Starter motor bolt	4 – 7	0.4 – 0.7	3.0 – 5.0
Oil pan bolt	10	1.0	7.0
Oil pressure switch	13 – 17	1.3 – 1.7	9.5 – 12.5
Oil filter cover nut	6 – 8	0.6 – 0.8	4.5 – 6.0
Neutral stopper housing	18 – 28	1.8 – 2.8	13.0 – 20.0
Gearshift arm stopper	15 – 23	1.5 – 2.3	11.0 – 16.5
Clutch sleeve hub nut	50 – 70	5.0 – 7.0	36.0 – 50.5
Clutch spring bolt	11 – 13	1.1 – 1.3	8.0 – 9.5
Engine sprocket nut	100 – 150	10.0 – 15.0	72.5 – 108.5
Engine mounting bolt (8 mm)	20 – 30	2.0 – 3.0	14.5 – 21.5
(10 mm)	30 – 37	3.0 – 3.7	21.5 – 27.0
Ⓐ	45 – 55	4.5 – 5.5	32.5 – 40.0
Gearshift lever bolt	13 – 23	1.3 – 2.3	9.5 – 16.5
Clutch release arm bolt	6 – 10	0.6 – 1.0	4.5 – 7.0

* Asterisk indicates new Z model specification.

CHASSIS

ITEM	N·m	kg-m	lb-ft
Disc bolt	15 – 25	1.5 – 2.5	11.0 – 18.0
Front axle nut	36 – 52	3.6 – 5.2	26.0 – 37.5
Front axle holder nut	15 – 25	1.5 – 2.5	11.0 – 18.0
Front caliper mounting bolt	25 – 40	2.5 – 4.0	18.0 – 29.0
Front caliper axle bolt	15 – 20	1.5 – 2.0	11.0 – 14.5
Brake hose union bolt	20 – 25	2.0 – 2.5	14.5 – 18.0
*Caliper bleeder	6 – 9	0.6 – 0.9	4.5 – 6.5
Damper rod bolt	15 – 25	1.5 – 2.5	11.0 – 18.0
Front fork lower clamp bolt	15 – 25	1.5 – 2.5	11.0 – 18.0
Front fork upper clamp bolt	20 – 30	2.0 – 3.0	14.5 – 21.5
Front fork cap bolt	15 – 30	1.5 – 3.0	11.0 – 21.5
*Anti-dive device air bleeder	6 – 9	0.6 – 0.9	4.5 – 6.5
*Anti-dive device fitting bolt	6 – 9	0.6 – 0.9	4.5 – 6.5
*Anti-dive device modulator fitting bolt	3 – 5	0.3 – 0.5	2.0 – 3.5
*Anti-dive device hose union bolt	20 – 25	2.0 – 2.5	14.5 – 18.0
Steering stem nut	40 – 50	4.0 – 5.0	29.0 – 36.0
Steering stem clamp bolt	15 – 25	1.5 – 2.5	11.0 – 18.0
Steering stem head nut	36 – 52	3.6 – 5.2	26.0 – 37.5
Handlebar clamp bolt	12 – 20	1.2 – 2.0	8.5 – 14.5
Master cylinder clamp bolt	5 – 8	0.5 – 0.8	3.5 – 6.0
Front master cylinder clamp bolt	5 – 8	0.5 – 0.8	3.5 – 6.0
Front footrest bolt	27 – 43	2.7 – 4.3	19.5 – 31.0
Swinging arm pivot nut	50 – 80	5.0 – 8.0	36.0 – 58.0
Brake pedal arm bolt	10 – 15	1.0 – 1.5	7.0 – 11.0
Rear master cylinder mounting bolt	15 – 25	1.5 – 2.5	11.0 – 18.0
Rear torque link nut (Front & Rear)	20 – 30	2.0 – 3.0	14.5 – 21.5
Rear caliper mounting bolt	25 – 40	2.5 – 4.0	18.0 – 29.0
Rear caliper bolt	20 – 30	2.0 – 3.0	14.5 – 21.5
Muffler bracket nut	15 – 20	1.5 – 2.0	11.0 – 14.5
Rear shock absorber fitting bolt or nut	20 – 30	2.0 – 3.0	14.5 – 21.5
Rear footrest bolt	27 – 43	2.7 – 4.3	19.5 – 31.0
Rear sprocket nut	25 – 40	2.5 – 4.0	18.0 – 29.0
Rear axle nut	85 – 115	8.5 – 11.5	61.5 – 83.0
Chain adjuster support bolt	15 – 20	1.5 – 2.0	11.0 – 14.5

* Asterisk indicates new Z model specifications.

TIGHTENING TORQUE CHART

For other bolts and nuts not listed, refer to this chart:

Thread Diameter	Conventional or "4" marked Bolt			"7" Marked Bolt		
Ⓐ (mm)	N·m	kg-m	lb-ft	N·m	kg-m	lb-ft
4	1.0 – 2.0	0.1 – 0.2	0.7 – 1.5	1.5 – 3.0	0.15 – 0.3	1.0 – 2.0
5	2.0 – 4.0	0.2 – 0.4	1.5 – 3.0	3.0 – 6.0	0.3 – 0.6	2.0 – 4.5
6	4.0 – 7.0	0.4 – 0.7	3.0 – 5.0	8.0 – 12.0	0.8 – 1.2	6.0 – 8.5
8	10.0 – 16.0	1.0 – 1.6	7.0 – 11.5	18.0 – 28.0	1.8 – 2.8	13.0 – 20.0
10	22.0 – 35.0	2.2 – 3.5	16.0 – 25.5	40.0 – 60.0	4.0 – 6.0	29.0 – 43.5
12	35.0 – 55.0	3.5 – 5.5	25.5 – 40.0	70.0 – 100.0	7.0 – 10.0	50.5 – 72.5
14	50.0 – 80.0	5.0 – 8.0	36.0 – 58.0	110.0 – 160.0	11.0 – 16.0	79.5 – 115.5
16	80.0 – 130.0	8.0 – 13.0	58.0 – 94.0	170.0 – 250.0	17.0 – 25.0	123.0 – 181.0
18	130.0 – 190.0	13.0 – 19.0	94.0 – 137.5	200.0 – 280.0	20.0 – 28.0	144.5 – 202.5

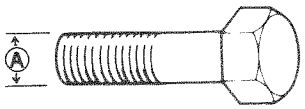

Conventional Bolt

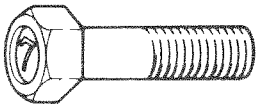

"7" Marked Bolt

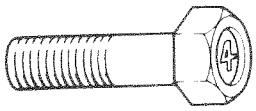

"4" Marked Bolt

SPECIAL MATERIALS

The materials listed below are needed for maintenance work on the GS750, and should be kept on hand for ready use. They supplement such standard materials as cleaning fluids, lubricants, emery cloth and the like. How to use them and where to use them are described in the text of this manual.

MATERIAL	PART
 SUZUKI BRAKE FLUID 99000-23021 (0.5L)	●Brake fluid (front and rear)
 SUZUKI SUPER GREASE "A" 99000-25030	●Oil seals ●Throttle grip ●Cables (speedometer and tachometer) ●Gearshift lever linkage and shaft ●Wheel bearings ●Center stand spacer ●Swinging arm bearing and dust seal ●Brake pedal shaft ●Governor link
 SUZUKI SILICONE GREASE 99000-25100	●Caliper axle shaft
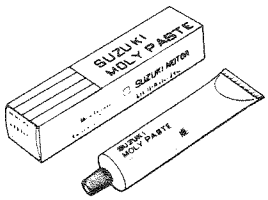 SUZUKI MOLY PASTE 99000-25140	●Valve stem ●Cam shaft journal ●Chain tensioner adjuster shaft ●Crankshaft journal ●Crank pin ●Drive shaft
 SUZUKI BOND NO. 4 99000-31030	●Mating surface of upper and lower crankcase ●Oil pressure switch ●Mating surface of crankcase and clutch cover, generator cover ●Front fork damper rod bolt

MATERIAL	PART
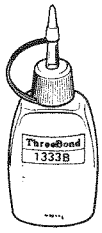 THREAD LOCK SUPER "1333B" 99000-32020	●Gearshift shaft stopper ●Cam chain guide bolt ●Cam chain guide screw ●Starter clutch allen bolt ●Engine sprocket damper screw ●Muffler cover screw
THREAD LOCK SUPER "1303B" 99000-32030	●Countershaft 2nd drive gear ●Cam sprocket bolt
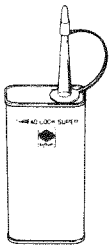 THREAD LOCK CEMENT 99000-32040	●Carburetor plate set screw ●Carburetor starter shaft lock screw ●Front fork damper rod bolt ●Cam shaft end cap screw ●Oil separater plate screw ●Cylinder stud bolt ●Oil filter cap nut ●Engine sprocket spacer inner surface
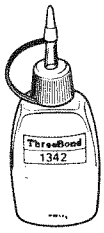 THREAD LOCK "1342" 99000-32050	●Generator stator securing screw ●Generator stator lead wire screw ●Gearshift cam stopper bolt ●Starter motor securing bolt ●Drive shaft plate screw ●Countershaft bearing retainer screw ●Engine oil pump set bolt ●Gearshift cam pawl screw ●Gearshift cam guide screw ●Engine oil sump filter screw ●Oil gallery plate screw ●Carburetor throttle stop plate screw ●Starter motor housing screw ●Anti-dive device fitting bolt ●Anti-dive device modulator fitting bolt
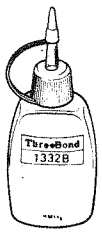 THREAD LOCK SUPER "1332B" 99000-32090	●Generator rotor bolt

PERIODIC MAINTENANCE SCHEDULE

The chart below lists the recommended intervals for all the required periodic service work necessary to keep the motorcycle operating at peak performance and economy. Mileages are expressed in terms of kilometers and miles.

NOTE:
More frequent servicing may be performed on motorcycles that are used under severe conditions.

PERIODIC MAINTENANCE CHART

ENGINE

Interval / Item	Initial 1 000 km (600 miles)	Every 5 000 km (3 000 miles)	Every 10 000 km (6 000 miles)
Air cleaner	Clean every 3 000 km (2 000 miles), and replace every 12 000 km (8 000 miles)		
Battery	Inspect	Inspect	—
Engine bolts and nuts	Inspect	Inspect	—
Valve clearance	Inspect	Inspect	—
Compression	Inspect	Inspect	—
Spark plug	Inspect	Inspect	Replace
Ignition timing	Inspect	Inspect	—
Carburetor	Inspect	Inspect	—
Fuel lines	Replace every 4 years		
Engine oil	Change	Change	—
Engine oil filter	Replace	Replace	—
Oil pressure	—	Inspect	—
Oil sump filter	—	—	Clean
Clutch	Inspect	Inspect	—

CHASSIS

Interval / Item	Initial 1 000 km (600 miles)	Every 5 000 km (3 000 miles)	Every 10 000 km (6 000 miles)
Drive chain	Inspect and clean every 1 000 km (600 miles)		
Brake	Inspect	Inspect	—
Brake hose	Replace every 4 years		
Brake fluid	Change every 2 years		
Tires	Inspect	Inspect	—
Steering	Inspect	Inspect	—
Front fork oil	Change	—	Change

LUBRICATION CHART

The maintenance schedule, which follows, is based on this philosophy. It is timed by odometer indication, and is calculated to achieve the ultimate goal of motorcycle maintenance in the most economical manner.

Item \ Interval	Initial and every 5 000 km (3 000 miles)	Every 10 000 km (6 000 miles)
Throttle cable	Motor oil	–
Throttle grip	–	Grease
Clutch cable	Motor oil	–
Choke cable	Motor oil	–
Speedometer cable	–	Grease
Tachometer cable	–	Grease
Drive chain	Motor oil every 1 000 km (600 miles)	
Brake pedal shaft	Grease or oil	–
Governor link	–	Grease
Steering stem bearings	Grease every 2 years or 20 000 km (12 000 miles)	
Swinging arm bearings		

NOTE:

* **Lubricate exposed parts which are subject to rust, with either motor oil or grease whenever the motorcycle has been operated under wet or rainy conditions.**
* **Before lubricating each part, clean off any rusty spots and wipe off any grease, oil, dirt or grime.**

SPECIAL FEATURES

ANTI-DIVE FRONT FORK (only for GS750EZ)

THE PHENOMENON OF DIVING

Consider the case of the motorcycle that is stopped suddenly. Excepting the rider, the machine itself cannot automatically counteract the momentum of its center of gravity moving forward to maintain its balance. At the point of "stoppage" the momentum continues its forward motion to exert its weight through the front fork on the point of contact of the front wheel. Simultaneously, the rear wheel tends to lift as the weight on it is reduced proportionately to the forward momentum. This has the effect of compressing the front fork and extending the rear shock absorber.

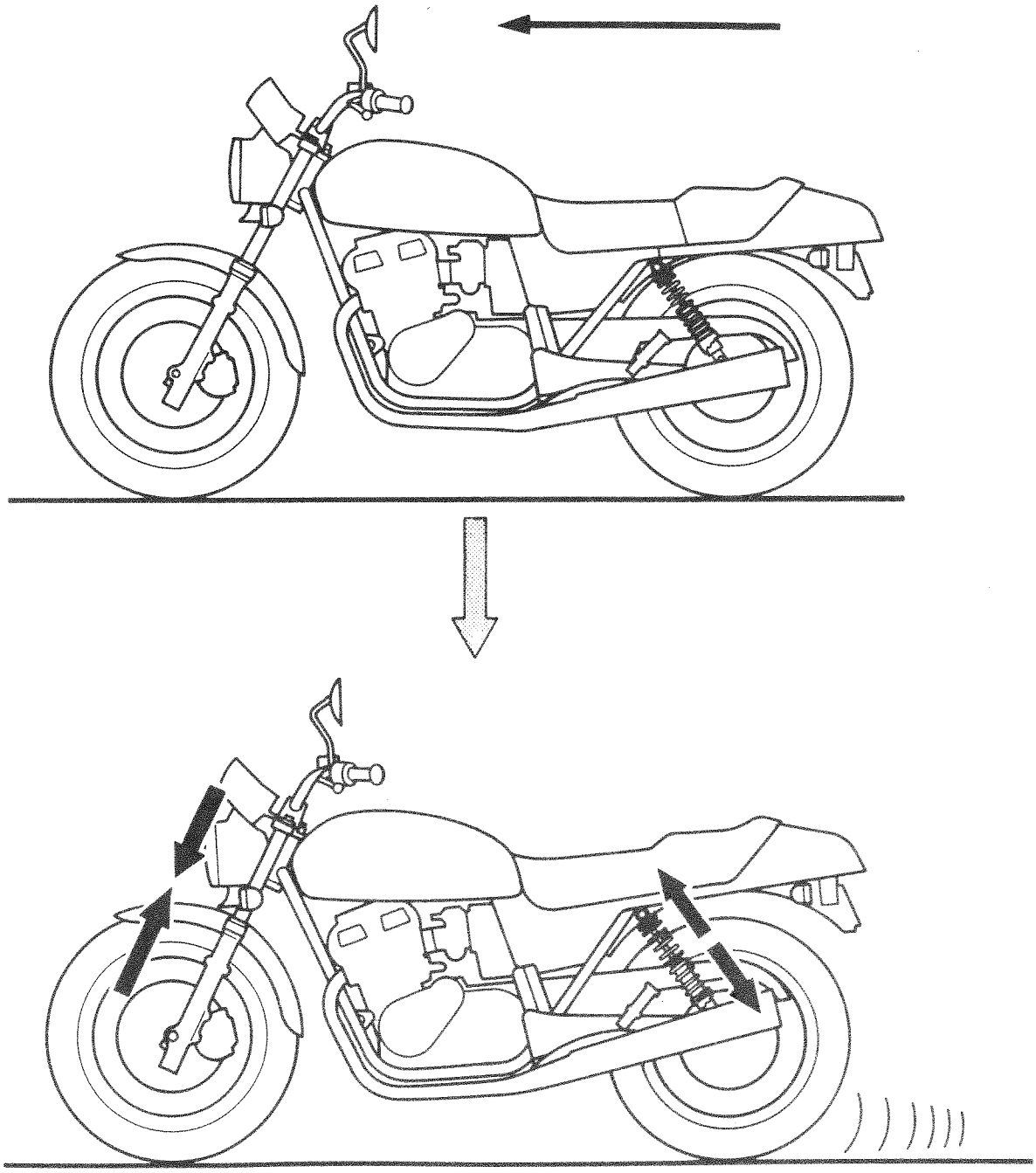

ANTI-DIVE DIVICE

When a speeding motorcycle is stopped, it is impossible to prevent the front fork dive because the momentum of the machine's center of gravity continues forward. The front fork is compressed and extended, as it is braked before cornering and full throttle applied coming out of the corner, which naturally changes its cornering clearance (motorcycle-to-ground clearance and balance). In order to minimize this change of the front fork length on a racing motorcycle, the spring of the front fork has to be stiffened, while the damping force of the rear shock absorber must be strengthened. However, the suspension system of the street motorcycle is generally set soft for absorbing the bump and shock of the road to ensure riding comfort. However, when the bike's cornering performance requires improvement, the suspension system must be reinforced.

Suzuki's hydraulic anti-dive fork was developed to provide exceptional handling performance and a smooth ride. It ensures the bike's stability during high-speed cornering by preventing the caster angle from being changed during braking and preventing loss of cornering clearance, while assuring riding comfort on the road.

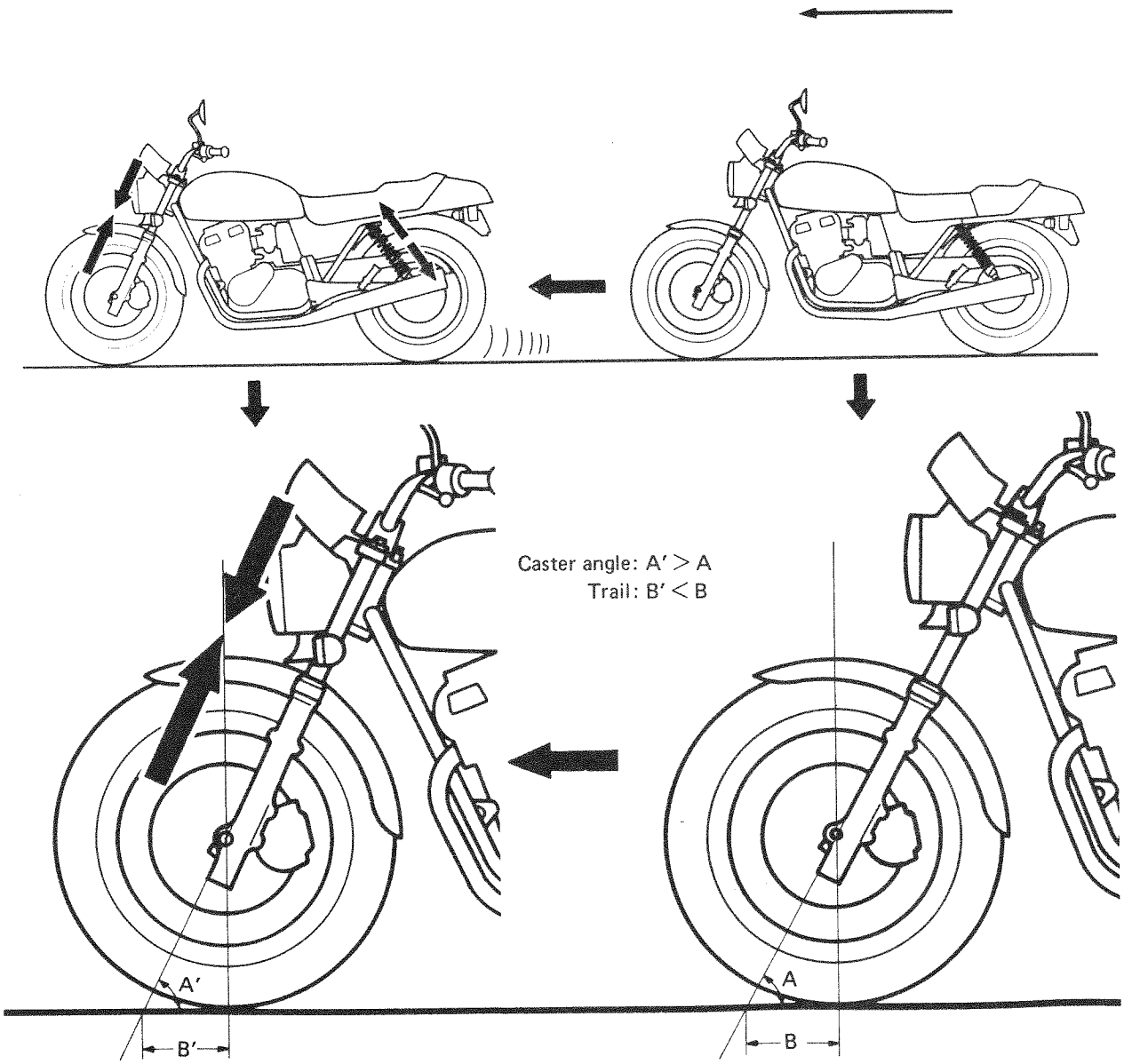

ANTI-DIVE SYSTEM

Suzuki's anti-dive system, developed from the feedback of racing technology, is now equipped on many of Suzuki's 1982 models. The new system is attached to the outer tube of the front fork. The brake line of the front brakes master cylinder leading to the caliper is connected by a hose to the anti-dive device. When the master cylinder's hydraulic line functions to brake the front wheel, it simultaneously operates the anti-dive device's plunger, which regulates and limits the flow of oil in the front fork. This reduces the compression of the front fork, which also reduces the extension of the rear shock absorber. Hence, the device serves to counteract the change in the motorcycle's attitude during braking.

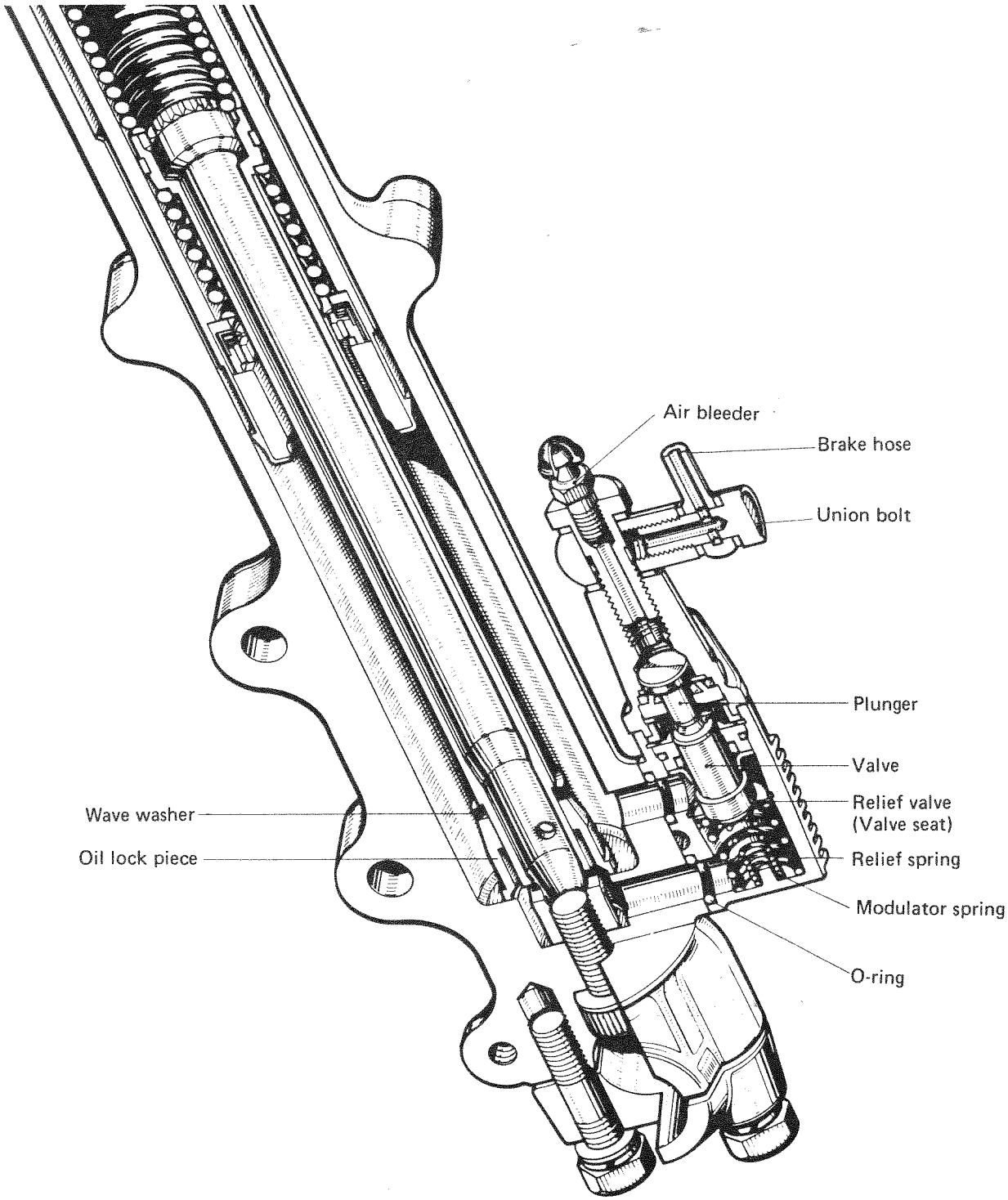

THE ANTI-DIVE SYSTEM IS INACTIVE, WHILE THE FRONT BRAKE IS INACTIVE.

As long as the front brake remains inactive, the oil in the front fork passes through the clearance between the valve and valve seat (relief valve) without restriction. Consequently, the telescopic front fork functions normally.

WHEN THE ANTI-DIVE SYSTEM IS ACTIVATED:

When the rider squeezes the lever of the front brake, pressure is exerted on the brake's master cylinder, then transmitted through the brake hose to pressurize the plunger of the anti-dive system. The plunger then lowers the valve, which reduces the clearance between the valve and the valve seat (relief valve). This in turn reduces the flow of fork oil, which reduces the allowable compression of the fork; stiffening it. As a result, the front fork is compressed less, while the extension of the rear shock absorber is also reduced. This stabilizes the motorcycle's braking attitude, and braking during cornering becomes much more controllable.

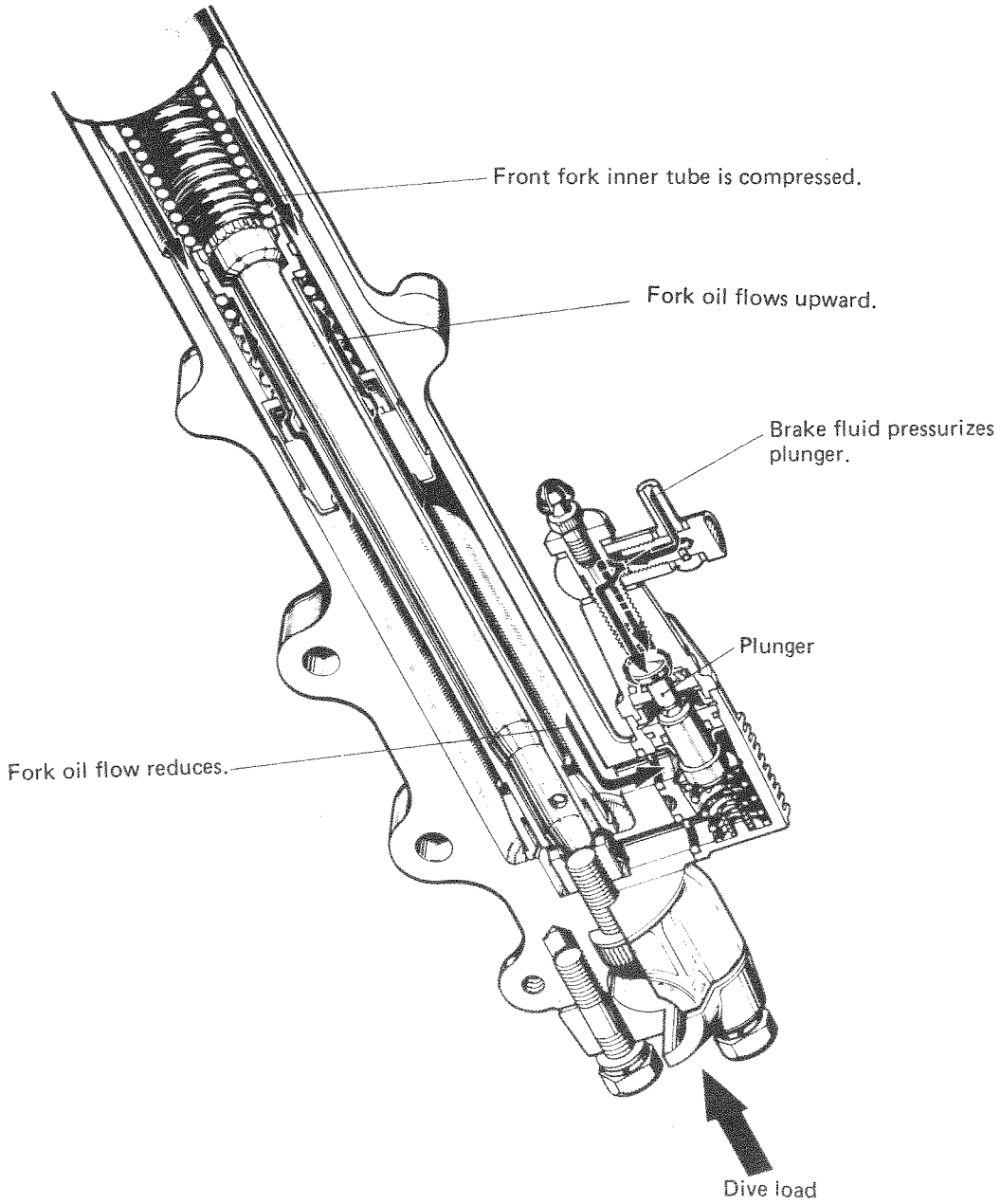

WHAT HAPPENS WHEN THE MOTORCYCLE RECEIVES A JOLT FROM THE ROAD, WHILE THE ANTI-DIVE DEVICE IS ACTIVE?

While the anti-dive device is restricting fork oil flow, any road shock could be directly transmitted to the chassis because the front fork would react as if it were equipped with very stiff springs. However, the road shock is reduced by the following mechanism: The relief valve, mounted on a spring, is compressed and opened in direct proportion to the pressure on the front-fork oil, permitting the oil to progressively flow through the clearance between the valve and valve seat. Hence the pressure of the fork oil is automatically regulated at a predetermined level. In other words, the clearance at the relief valve represents the difference of fork oil pressure developed by the upward load from the road and the strength of the relief valve's spring.

In order to ensure safety, separate chambers are provided for the fork oil and brake fluid to prevent their mixture.

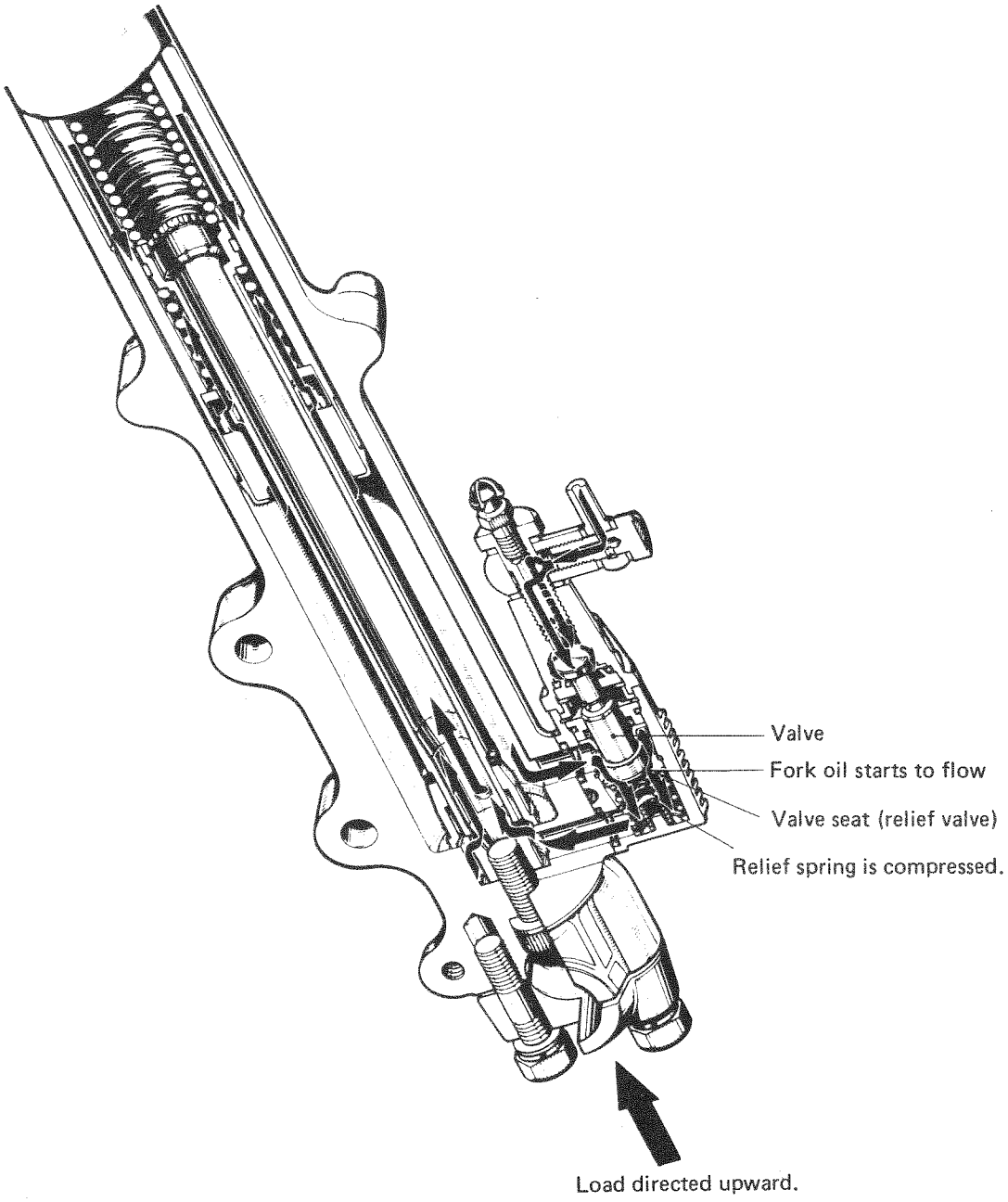

CYLINDER HEAD AND HEAD COVER

The cylinder head and head cover have been modified as illustrated below to improve sealing between cylinder head and head cover.

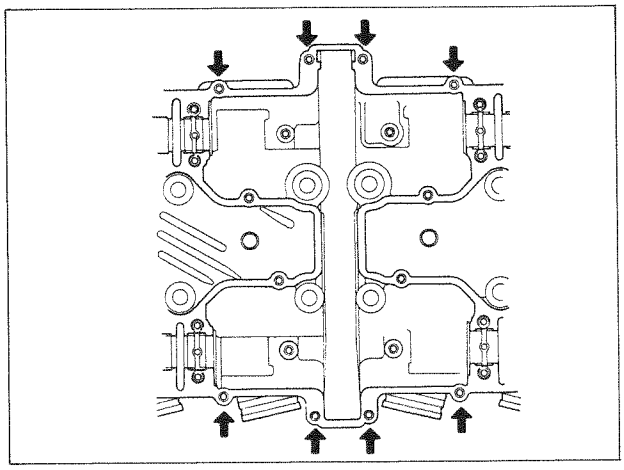

LATE

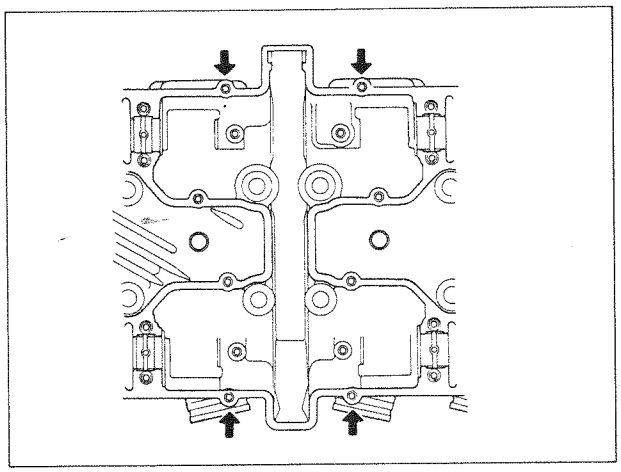

EARLY

COVER TIGHTENING BOLT

The engine case covers fasteners have been changed from screws to bolts.

- Clutch cover
- Signal generator cover
- Generator cover
- Engine sprocket cover
- Starter motor cover

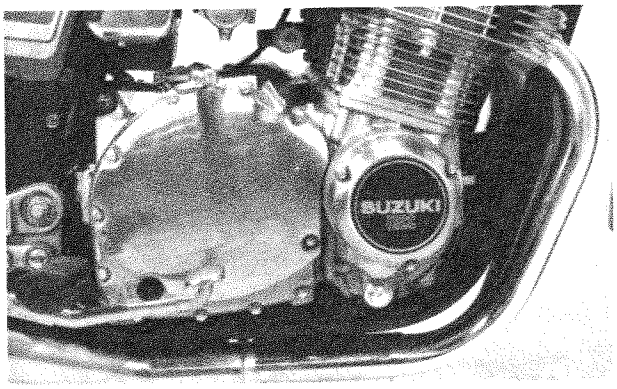

NOTE:
When unscrewing or tightening bolt use a special tool.

09900-06711	"T" type box wrench (7 mm)
09900-00302-015	"T" type box wrench (8 mm)

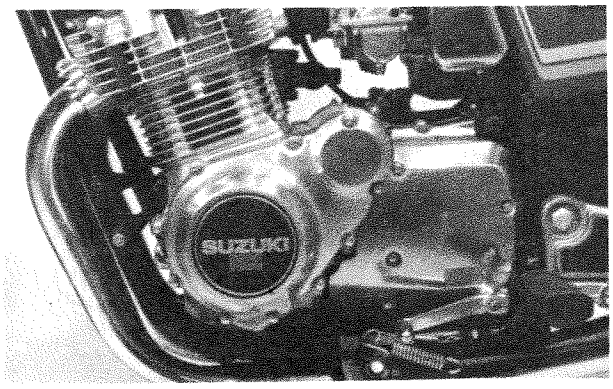

CRANKSHAFT

CRANKSHAFT JOURNAL BEARING SELECTION

Check the corresponding crankcase journal I.D. code number ① "A" or "B" which are stamped on the rear of upper crankcase.

Check the corresponding crankshaft journal O.D. code number ② "A", "B" or "C".

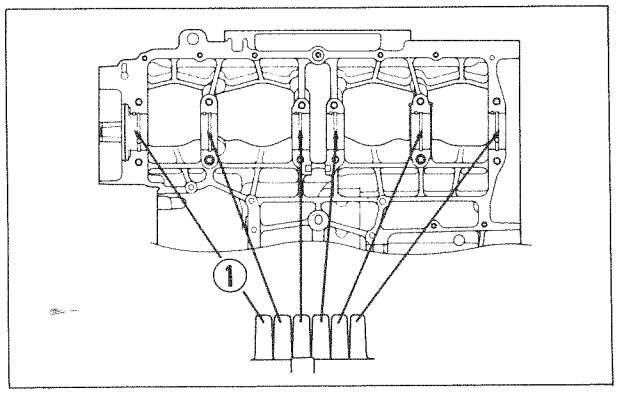

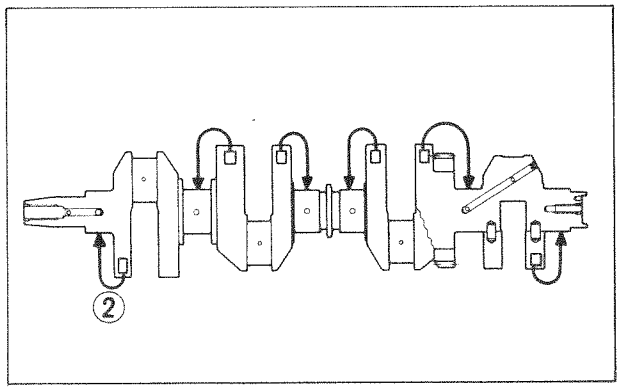

Bearing selection table

	Crankshaft			
	Code	A	B	C
Crankcase	A	Green	Black	Brown
	B	Black	Brown	Yellow

Crankcase I.D. specification

Code	I.D. specification
A	39.000–39.008 mm
B	39.008–39.016 mm

Crankshaft journal O.D. specification

Code	O.D. specification
A	35.996–36.004 mm
B	35.988–35.996 mm
C	35.980–35.988 mm

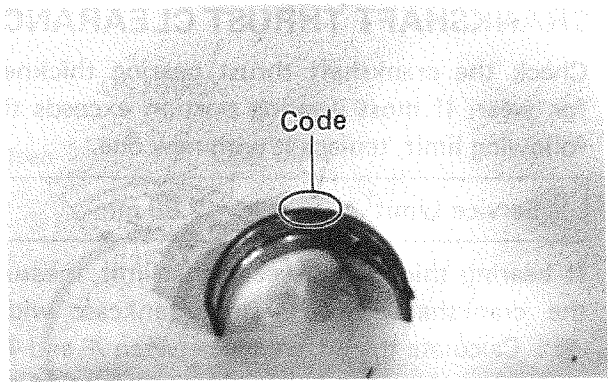

Bearing thickness specification

Color	Part number	Thickness Specification
Green	12229-45410-010 (12229-45400-010)	1.486–1.490 mm
Black	12229-45410-020 (12229-45400-020)	1.490–1.494 mm
Brown	12229-45410-030 (12229-45400-030)	1.494–1.498 mm
Yellow	12229-45410-040 (12229-45400-040)	1.498–1.502 mm

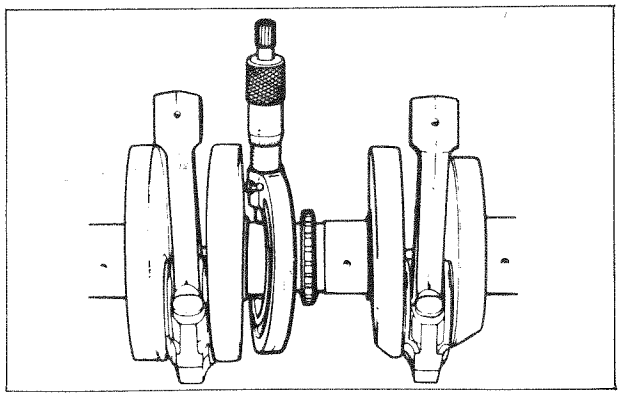

CAUTION:
Make sure that 45410 has no oil groove and 45400 has oil groove.

CRANKSHAFT JOURNAL BEARING

Identify the two kinds of crankshaft journal bearings, one has an oil groove ① and the other ② has no oil groove on its surface. Grooved one should be fixed to the lower crankcase and both side of the cam chain drive sprocket for the upper crankcase as shown.

For the other parts, no oil grooved bearings are located.

① : oil grooved bearing
② : no oil grooved bearing

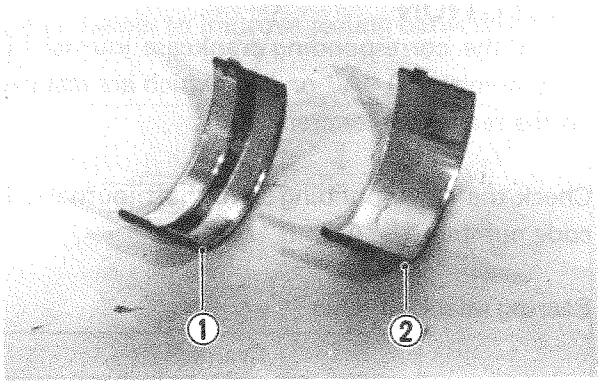

CAUTION:

* **The above instruction is applied for all GS750 models. When overhauling engine, apply the new location of the bearings.**
* **After fixing new bearing, keep the engine r/min as follows.**
  Up to 1000 km ..... Below 4000 r/min
  Up to 2000 km ..... Below 5000 r/min

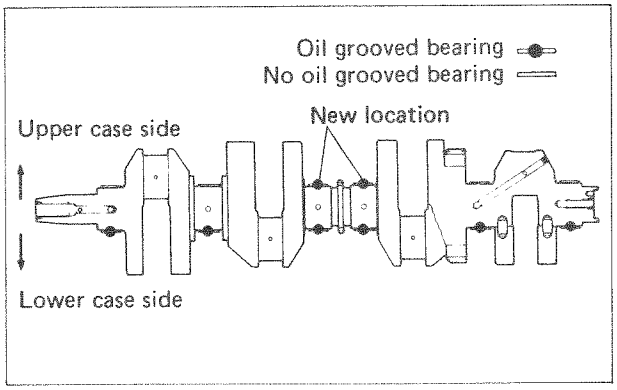

CRANKSHAFT THRUST CLEARANCE

Check the crankshaft thrust bearing thickness for wear. If most wearing portion exceeds the following limit, replace it with new one.

Service Limit	2.80 mm

If bearing thickness exceeds the limit, measure the crankshaft width Ⓐ and crankcase width Ⓑ. Calculate the difference between Ⓐ and Ⓑ, and select the proper size thrust bearing in the following table.

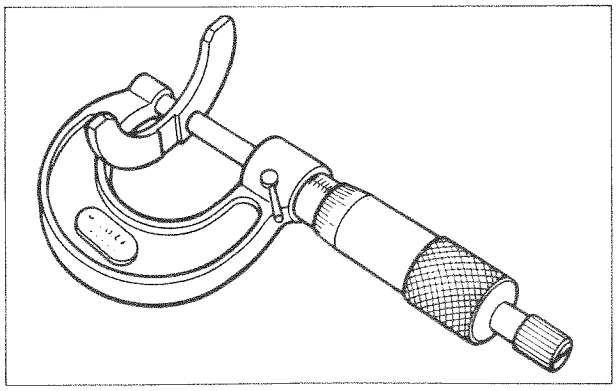

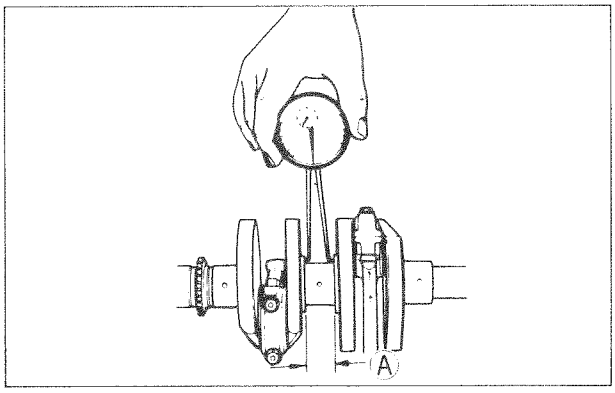

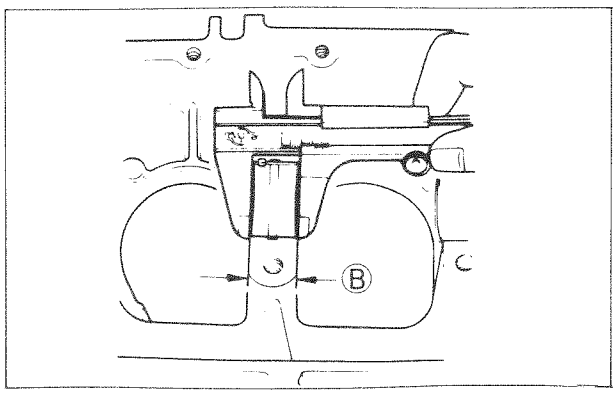

Ⓐ – Ⓑ (mm)	Part No.	Color Code	Thickness (mm)
2.97–3.01	12228-45403	Black	2.87–2.91
3.01–3.05	12228-45402	Green	2.91–2.95
3.05–3.10	12228-45401	NIL	2.95–2.98

EXAMPLE:

Crankshaft width Ⓐ is: 24.01 mm

Crankcase width Ⓑ is: –21.02 mm

Clearance Ⓐ – Ⓑ is: 2.99 mm

so, select the Black color bearing.

NOTE:
When reinstalling the thrust bearing, oil grooved side should face crank web.

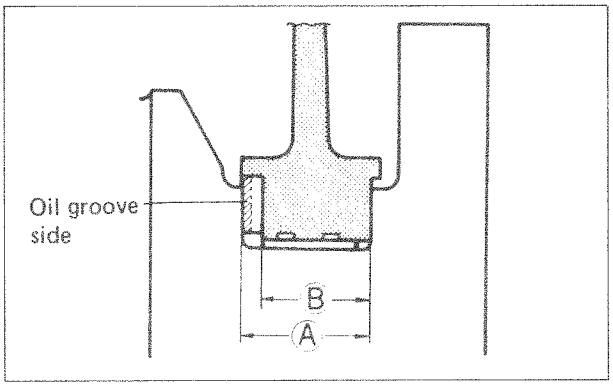

VALVE TIMING

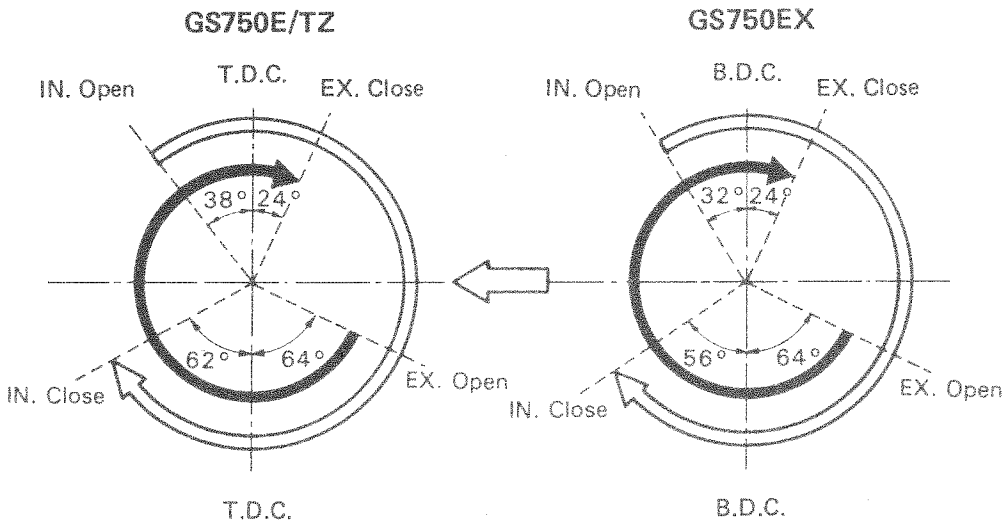

METER (only for GS750EZ)

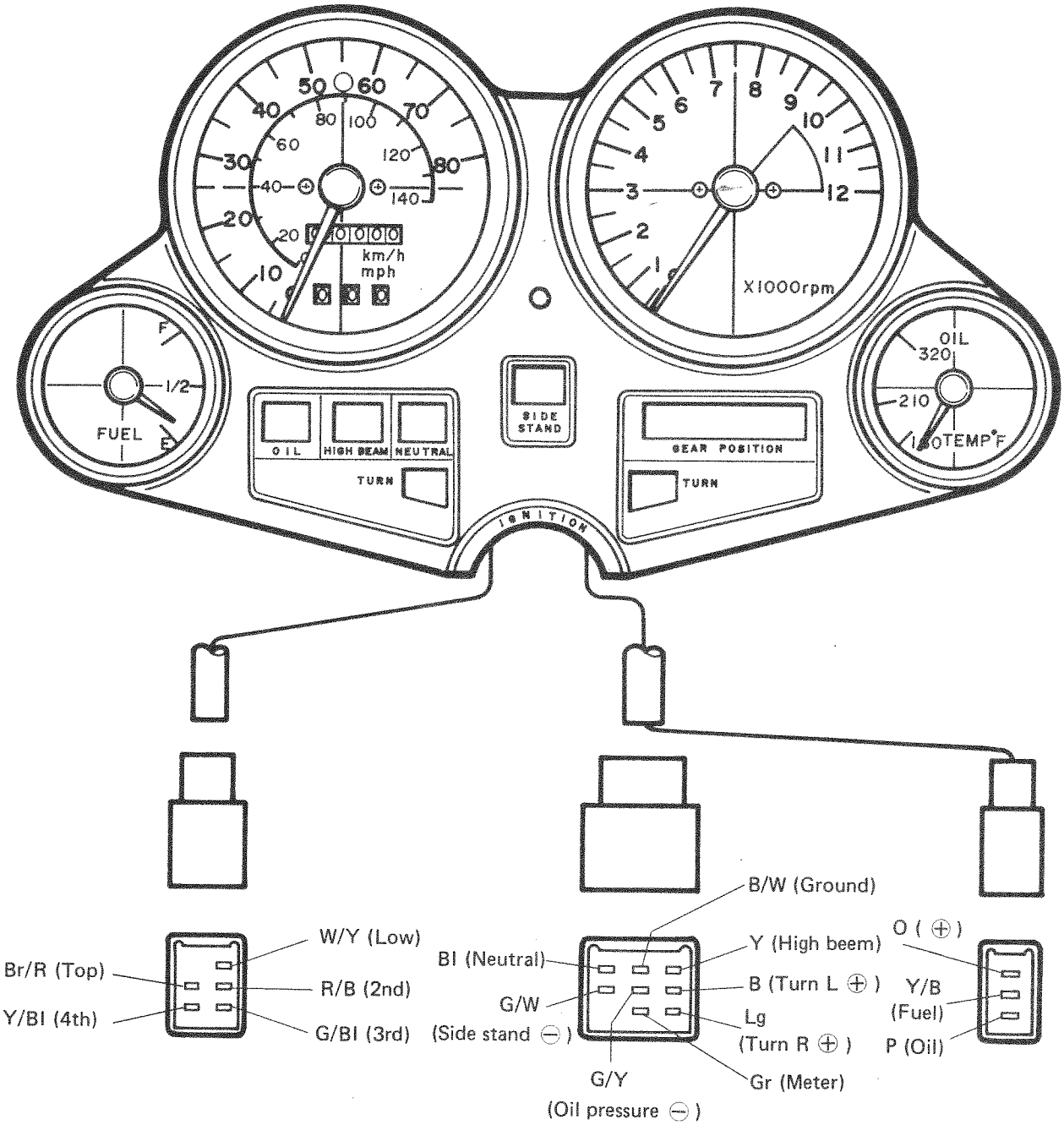

FUEL GAUGE

As shown in Fig. 1, coils n1, n2, n3 and n4 are set in the fuel gauge. When the ignition switch is ON, the float in the tank is displaced in proportion to the change in the amount of gasoline, the resistance of the fuel gauge sending unit varies, currents I_1 and I_2 vary, strength of the magnetic field generated by the coils vary, compound vector H (Fig. 2) varies, and the magnet of the flow meter rotates to deflect the pointer.

Even when the ignition switch is turned off, the pointer remains in the position where it was when the switch was ON. This function is displayed by using high-viscosity oil and a balanced magnet.

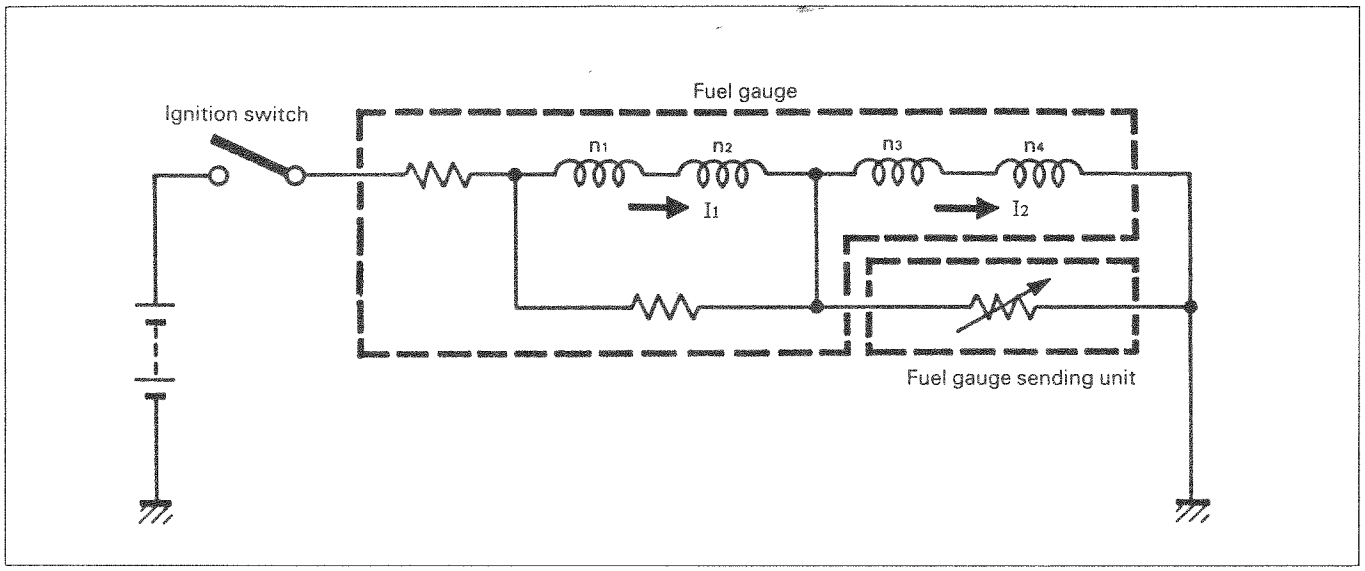

Fig. 1

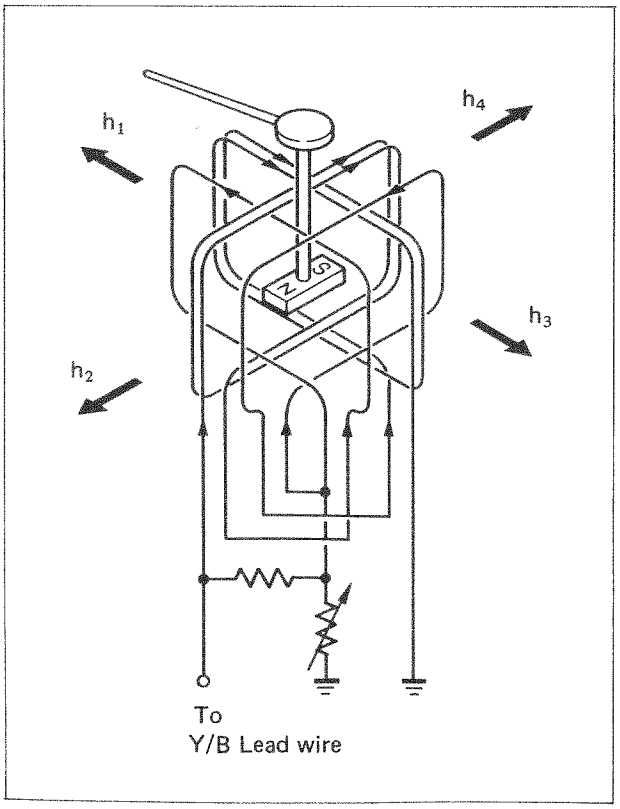

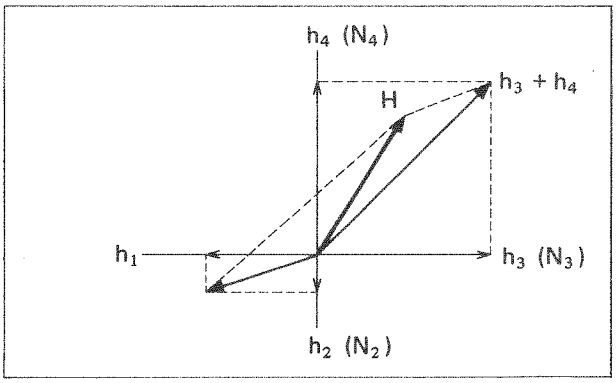

Fig. 2

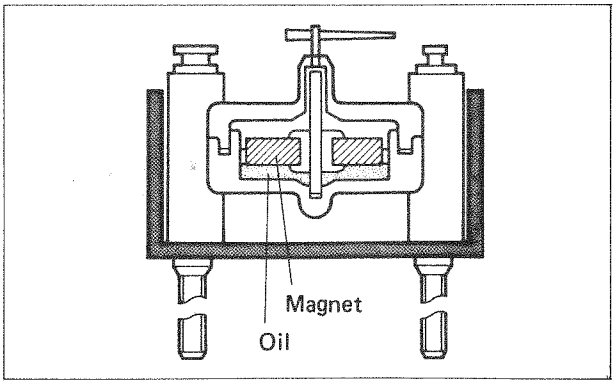

Fig. 3

INSPECTION

With the igntion switch turned on, disconnect two lead wires going into the fuel gauge sending unit, connect the lead wires on the main wiring harness side and check the fuel gauge. If "F" is indicated, the fuel gauge is in good condition.

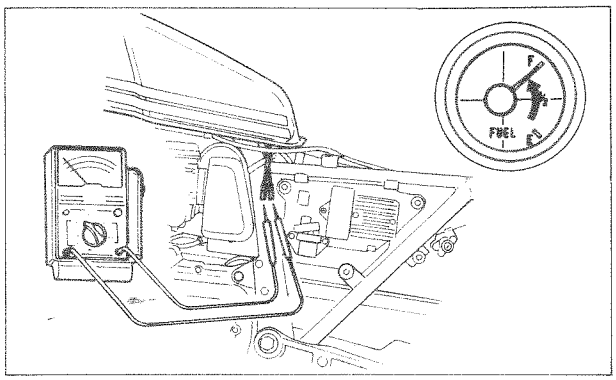

FUEL GAUGE SENDING UNIT

Remove the lead wires coming out of the fuel gauge sending unit and check resistance of each of them.

If the resistance measured is incorrect, replace the fuel gauge sending unit assembly with new one.

FULL	Approx. 2 – 7Ω
HALF (1/2)	Approx. 25 – 40Ω
EMPTY	Approx. 90 – 110Ω

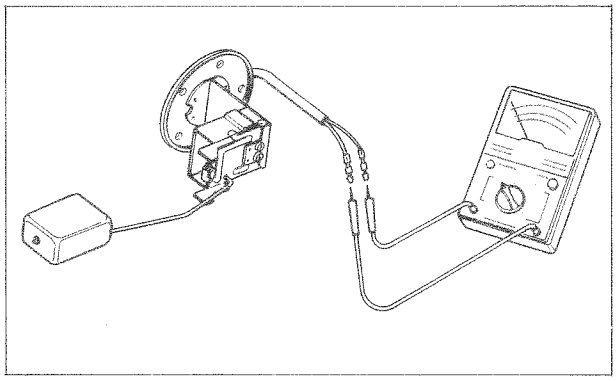

OIL TEMPERATURE GAUGE

With the ignition switch turned on, disconnect lead wire from oil temperature gauge unit, ground the lead wire and check the temperature gauge. If "160°C" is indicated, the temperature gauge is in good condition.

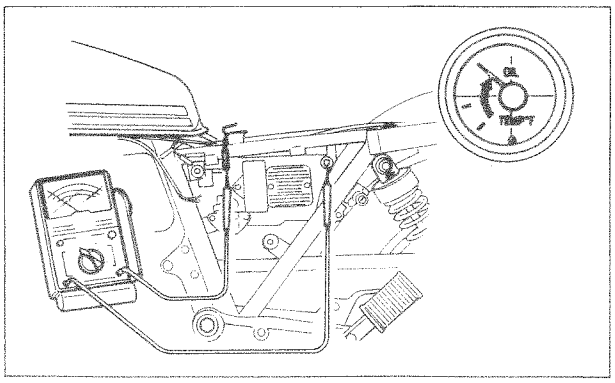

FRONT MASTER CYLINDER

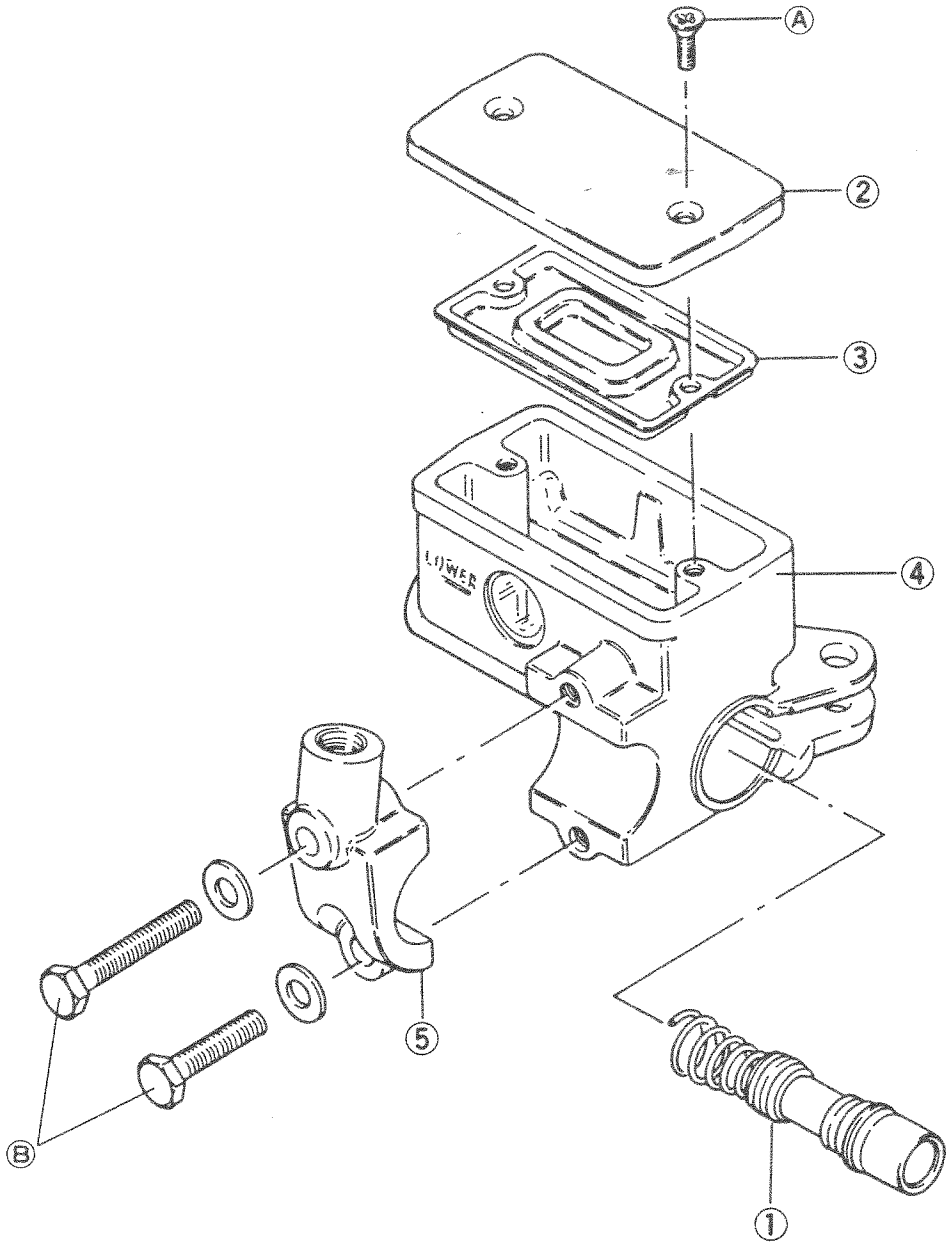

① Piston and cup set
② Cap
③ Diaphragm
④ Body
⑤ Holder

Tightening torque		
	N·m	kg-m
Ⓐ	0.8 – 1.5	0.08 – 0.15
Ⓑ	5 – 8	0.5 – 0.8

REMOVAL AND DISASSEMBLY

- Remove the front brake light switch and front brake lever.

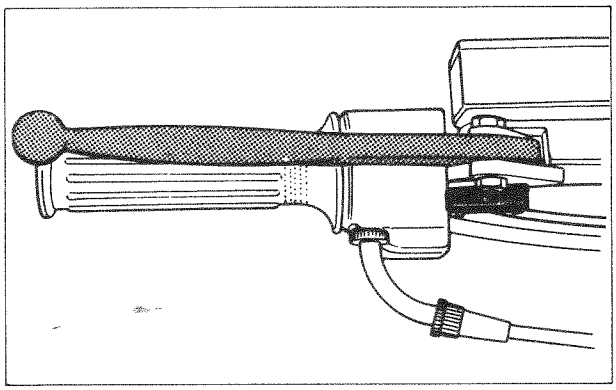

- Place a cloth underneath the union bolt on the master cylinder to catch spilled drops of brake fluid. Unscrew the union bolt and disconnect the brake hose/master cylinder joint.

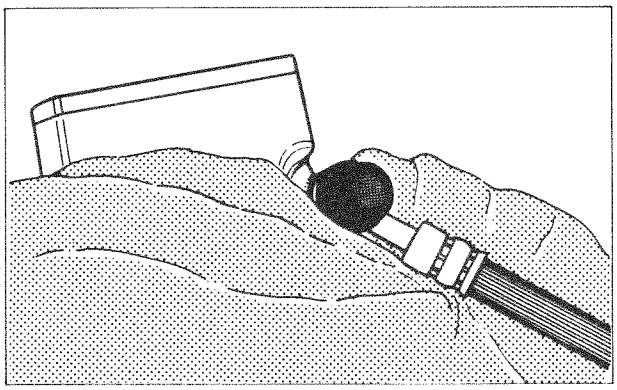

> **CAUTION:**
> **Immediately and completely wipe off any brake fluid contacting any part of the motorcycle. The fluid reacts chemically with paint, plastics, rubber materials, etc. and will damage them severely.**

- Remove two clamp bolts and take off master cylinder.

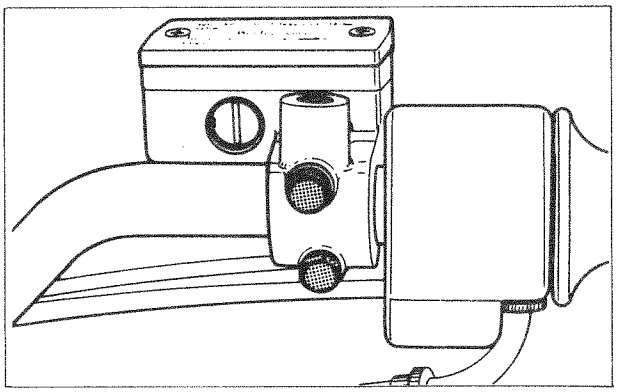

- Remove two fitting screws, and remove the cap and diaphragm.
- Drain brake fluid.

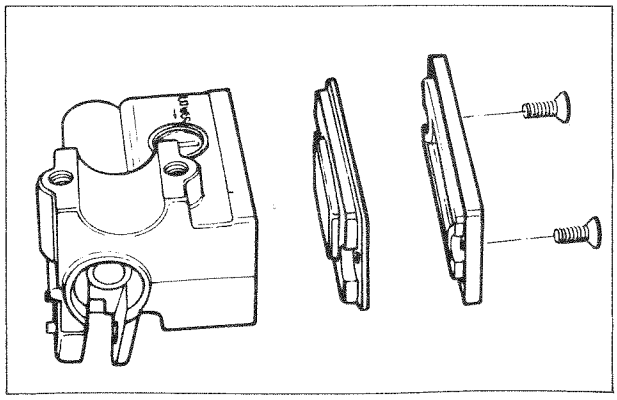

- Remove the dust seal boot.
- Remove the circlip by using special tool.

09900-06108	Snap ring pliers

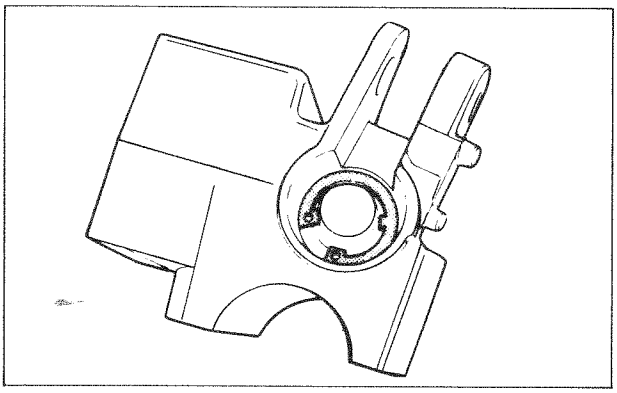

- Remove the piston, primary cup and spring.

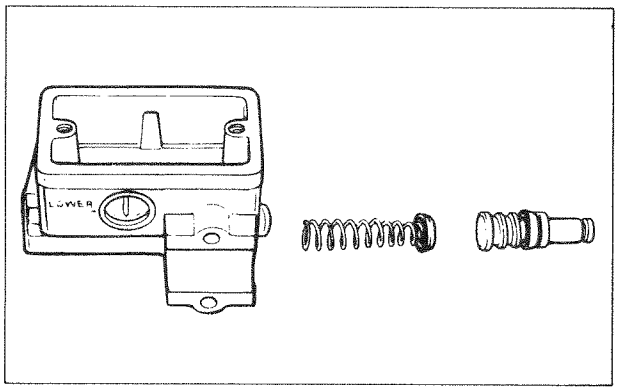

MASTER CYLINDER INSPECTION

- Inspect the master cylinder bore for any scratches or other damage.

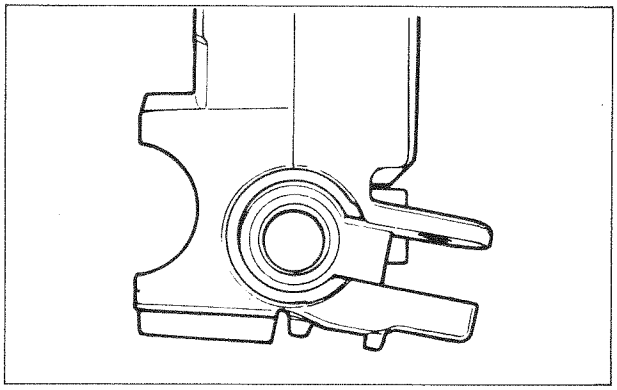

- Inspect the piston surface for scratches or other damage.
- Inspect the primary cup, secondary cup, and dust seal boot for wear or damage.

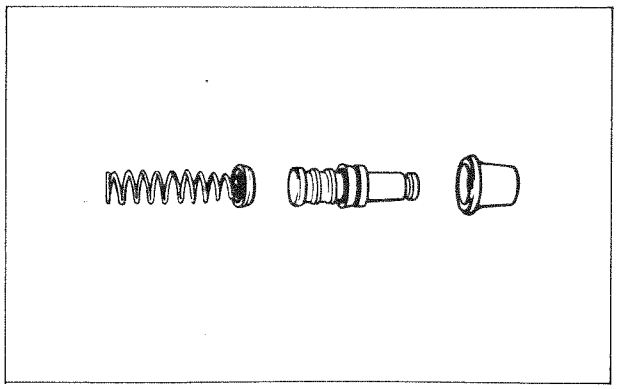

MASTER CYLINDER REASSEMBLY

Reassemble the master cylinder in the reverse orders of disassembly and by taking the following steps.

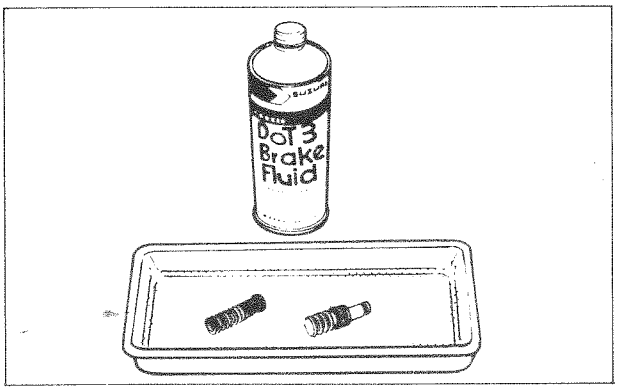

> **CAUTION:**
> **Wash the master cylinder components with fresh brake fluid before reassembly. Never use cleaning solvent or gasoline to wash them. Apply brake fluid to the cylinder bore and all internal parts before inserting into the bore.**

- When remounting the master cylinder on the handlebars, secure the clamp so that the clearances Ⓐ of both upside and downside of the handlebars stay equally.

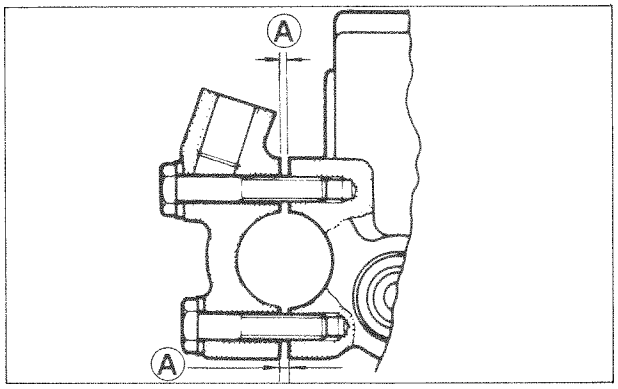

> **CAUTION:**
> **Bleed the air after reassembling master cylinder.**
> **Adjust the front brake light switch after installation.**

FRONT BRAKE AIR BLEEDING PROCEDURE

Bleed the air from the anti-dive components in an ascending order as shown in illustration. Always start with the left side.

① Left anti-dive device
⇩
② Left caliper
⇩
③ Right anti-dive device
⇩
④ Right caliper

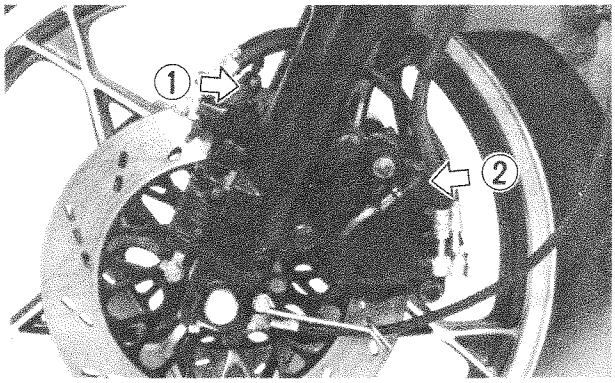

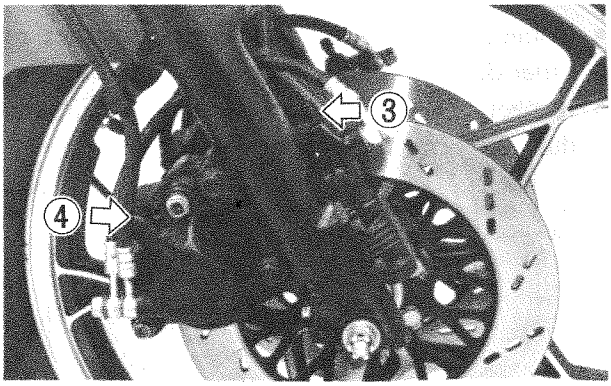

FRONT FORK (GS750EZ model)

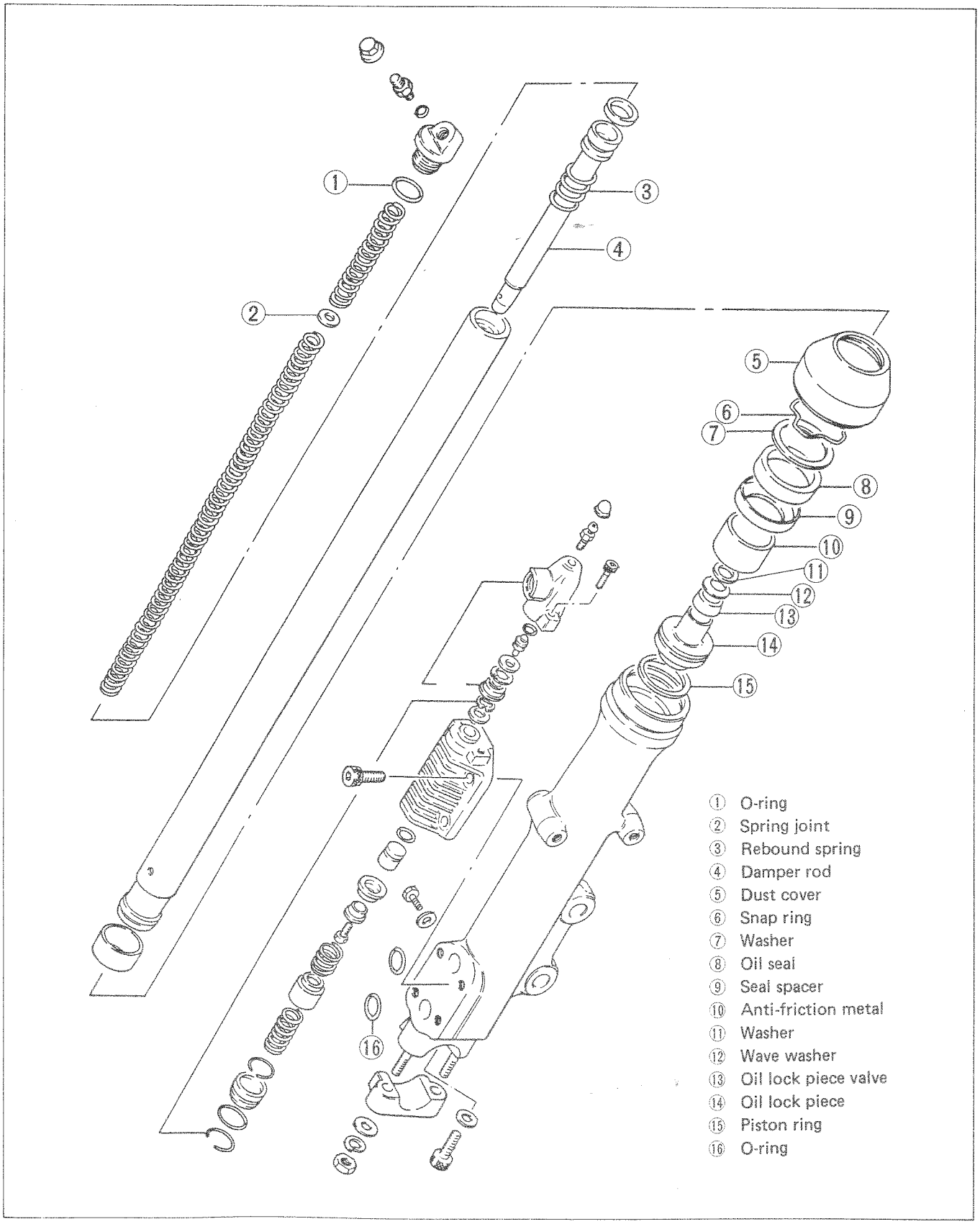

CAST WHEEL MODEL

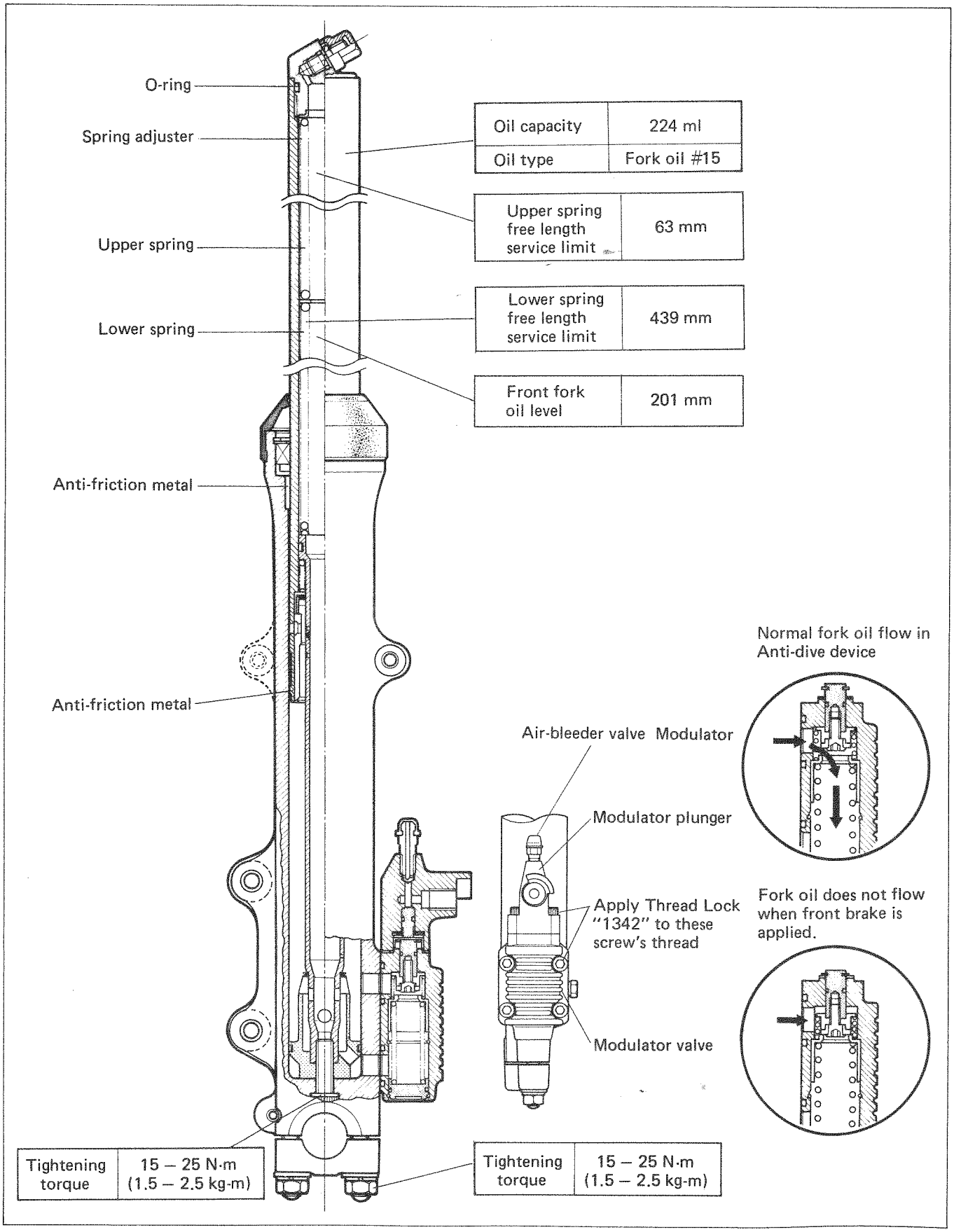

FRONT FORK (GS750TZ model)

Oil capacity	209 ml
Oil type	Fork oil #15
Upper spring free length service limit	156 mm
Lower spring free length service limit	360 mm
Front fork oil level	180 mm

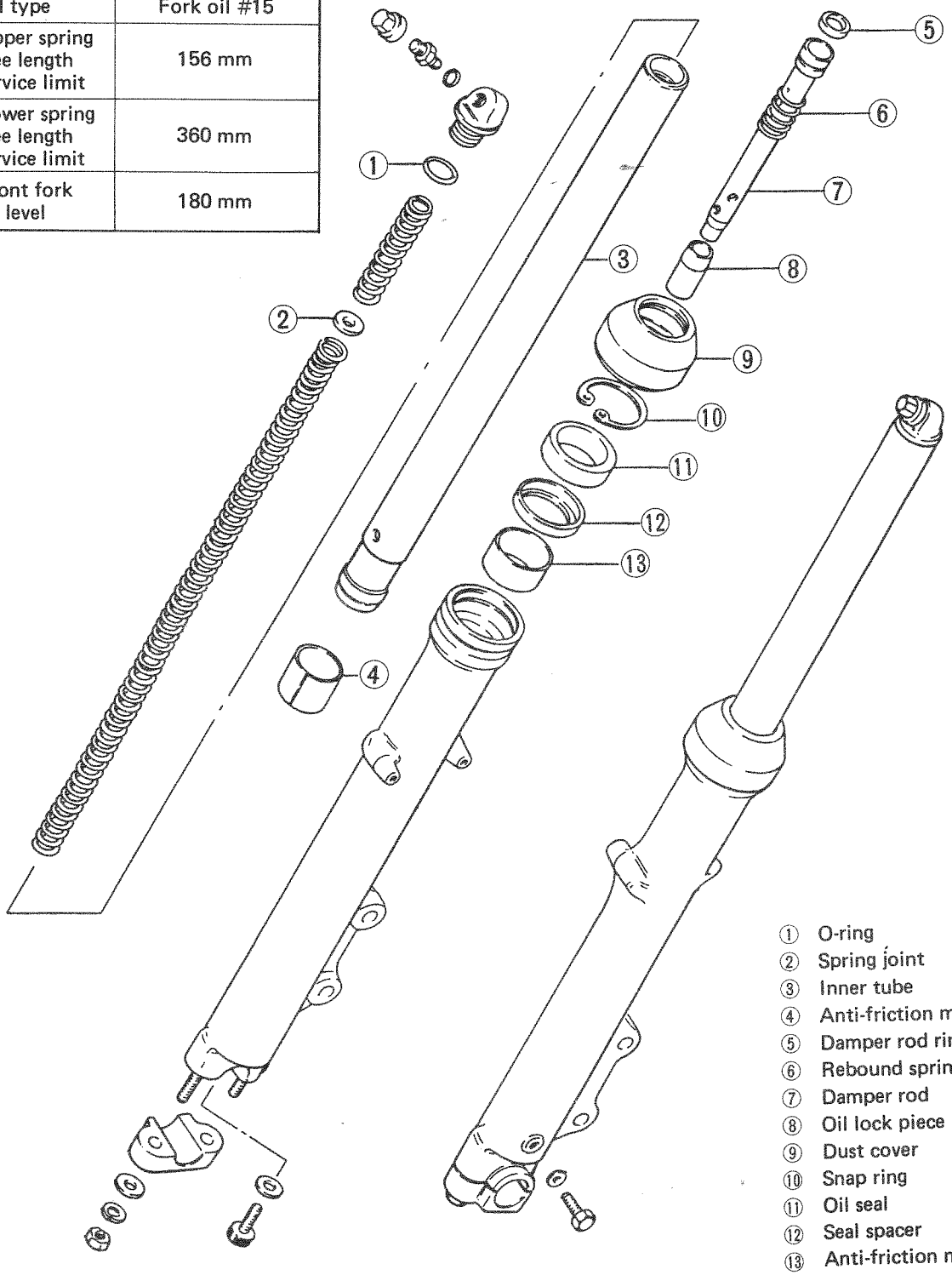

① O-ring
② Spring joint
③ Inner tube
④ Anti-friction metal
⑤ Damper rod ring
⑥ Rebound spring
⑦ Damper rod
⑧ Oil lock piece
⑨ Dust cover
⑩ Snap ring
⑪ Oil seal
⑫ Seal spacer
⑬ Anti-friction metal

REMOVAL AND DISASSEMBLY

- Support the machine by center stand and a jack.

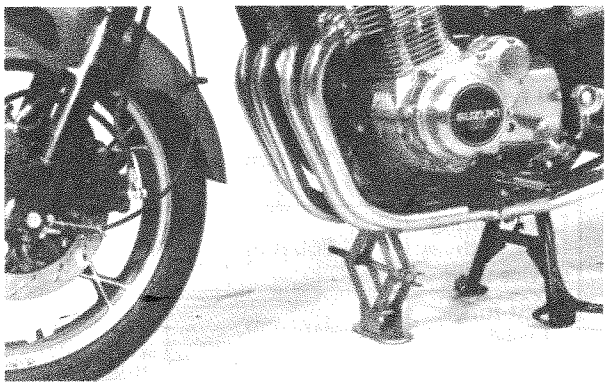

- Remove the four bolts and take off the front fender.

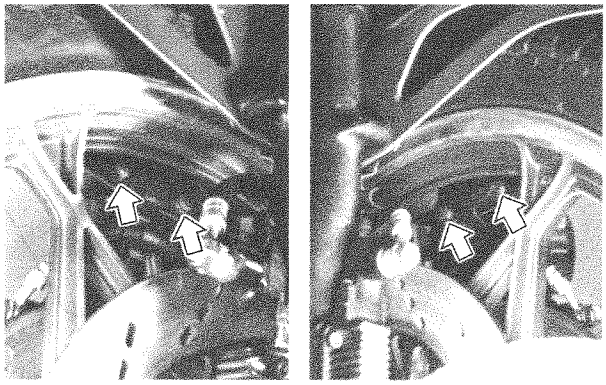

- Separate each modulator plunger from the forks, by using hexagon wrench.
  (Except for spoked wheel model).

09911-70130	4 mm hexagon wrench

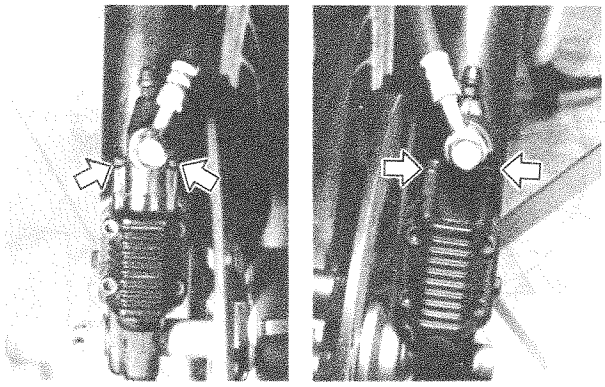

- Remove the caliper mounting bolts, cable guide bolt and dismount the right and left calipers.

> NOTE:
> **Do not operate the brake lever while dismounting the calipers.**

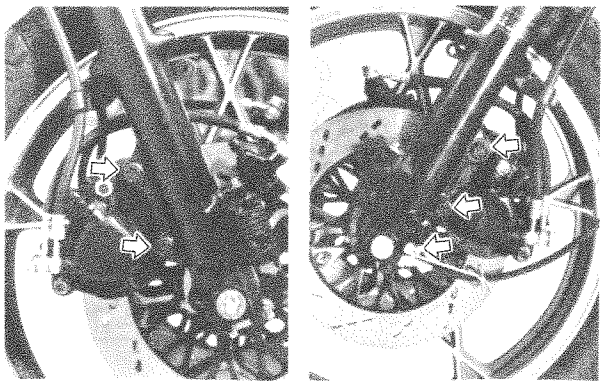

- Pull off the cotter pin ① and remove axle nut ② and axle holder nuts, right and left.

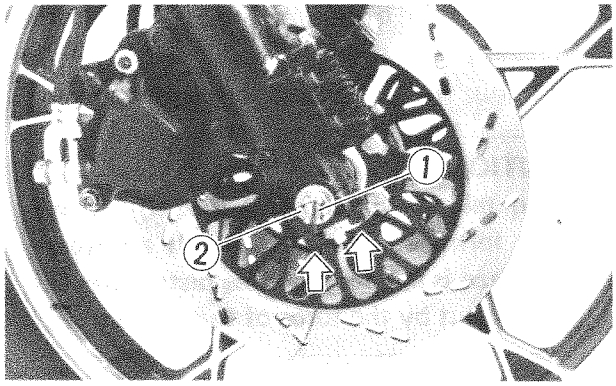

- Draw out the axle shaft and take off the front wheel.

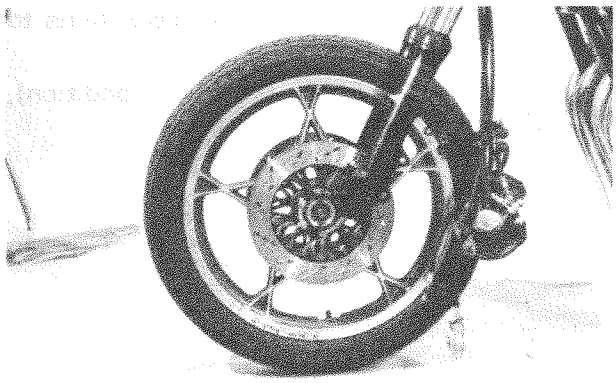

- Loosen the steering stem upper and lower clamp bolts, right and left.

> **NOTE:**
> **Slightly loosen the front fork cap bolts to facilitate later disassembly before loosening upper and lower clamp bolts.**

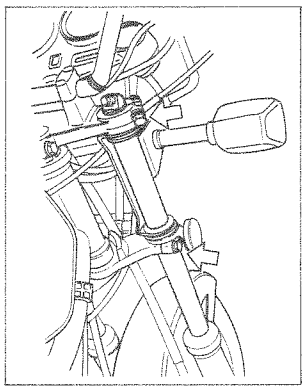

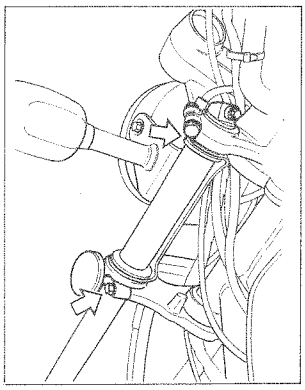

- Pull down right and left front fork assemblies.

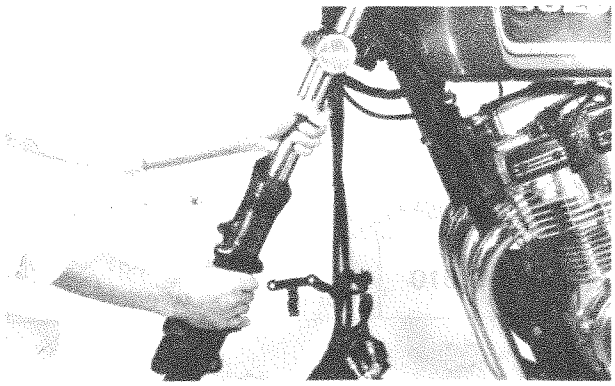

- Remove the front fork cap bolt (spring adjuster).
- Draw out free piston and fork spring.

CAUTION:
When taking out the free piston, lift the front fork outer tube slowly. If an excessive force is applied, the free piston may be popped out by the force of the fork spring.

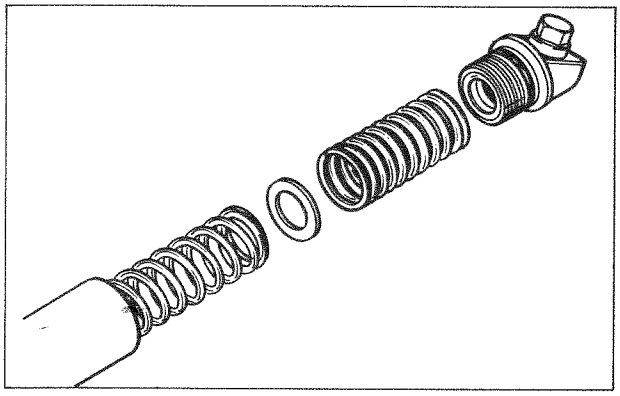

- Invert the fork and stroke it several times to let out the inside oil.
  Under this condition (inverted condition), hold the fork for a minutes.

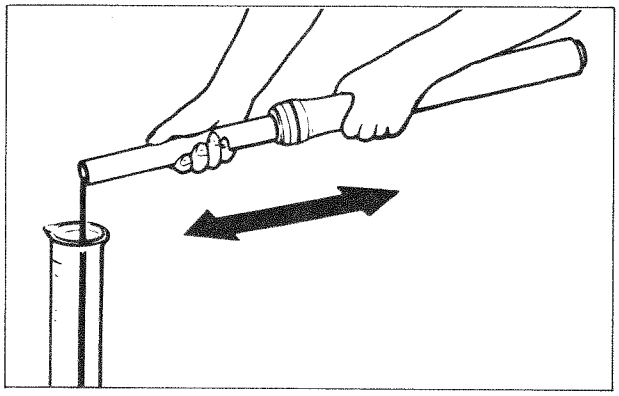

- Remove the dust seal, circlip and washer.

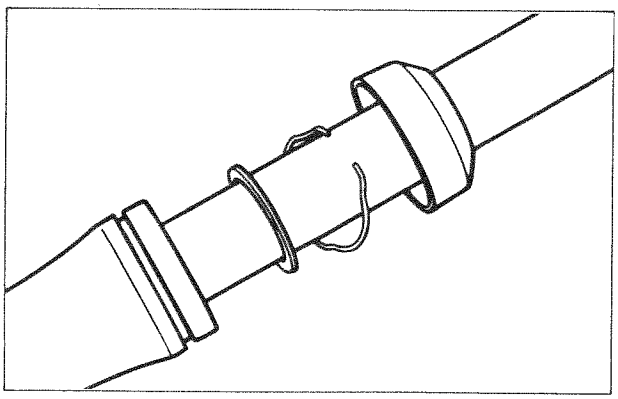

- Remove damper rod securing bolt by using special tools.

09940-34520	"T" handle
09940-34561	Attachment "D"
09941-03610	8 x 10 mm hexagon combination wrench

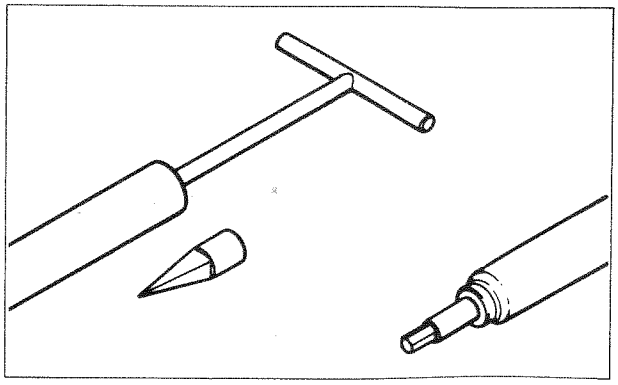

- Draw out damper rod and rebound spring.

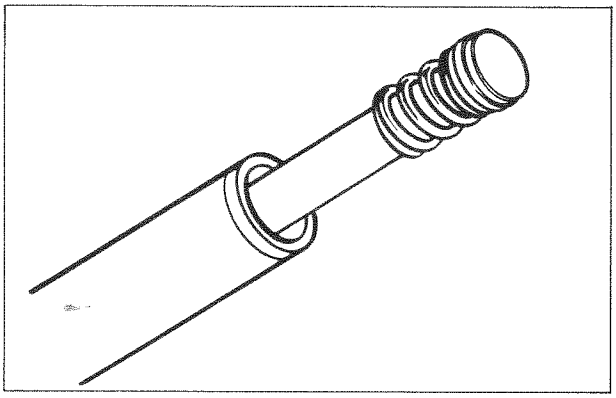

- While holding the caliper mounting portion of the outer tube by vise, separate the inner tube from the outer tube as shown.

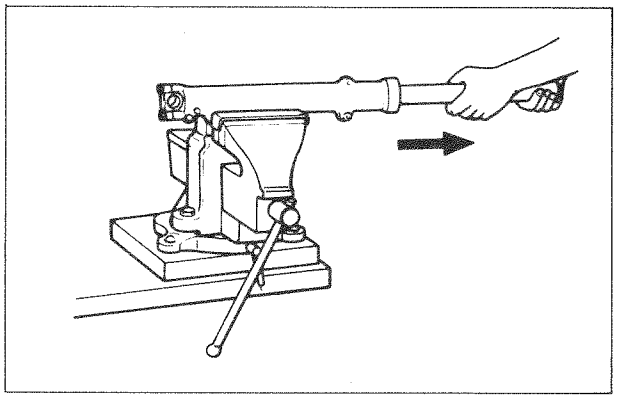

CAUTION:
The outer tube and inner tube "anti-friction" metals must be replaced along with the oil seal any time the fork is disassembled.

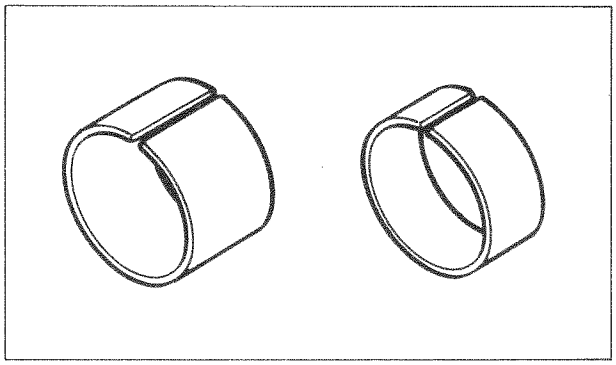

INSPECTION

DAMPER ROD RING

Inspect the damper rod ring for wear and damage.

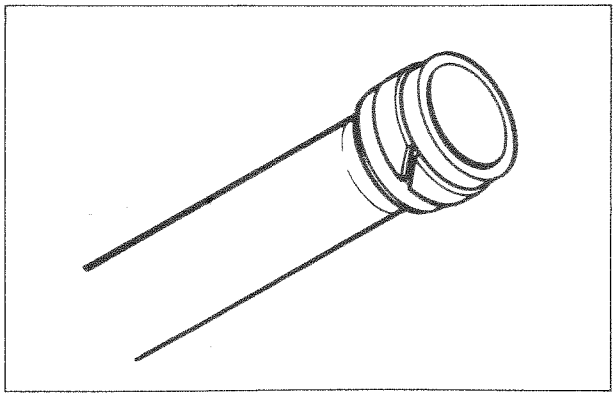

FORK SPRING

Measure the fork spring free length. If it is shorter than service limit, replace it.

	Service Limit		
GS750EZ	Cast	Short	63 mm
		Long	439 mm
GS750TZ	Short		156 mm
	Long		360 mm

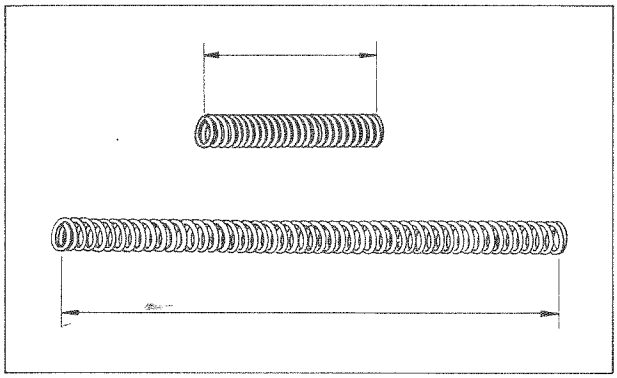

INNER TUBE

Inspect the inner tube outer surface for any scuffing.

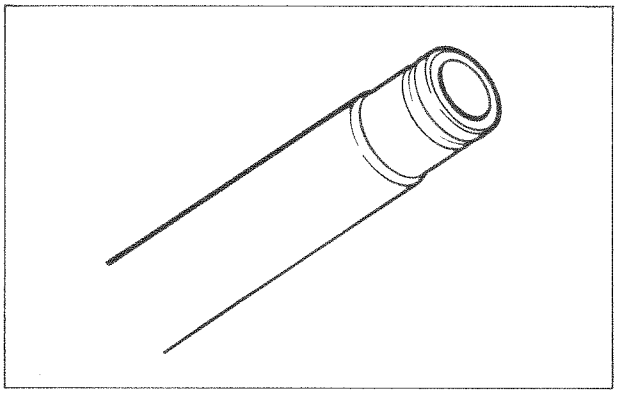

OUTER TUBE

Inspect the outer tube inner surface for any scuffing.

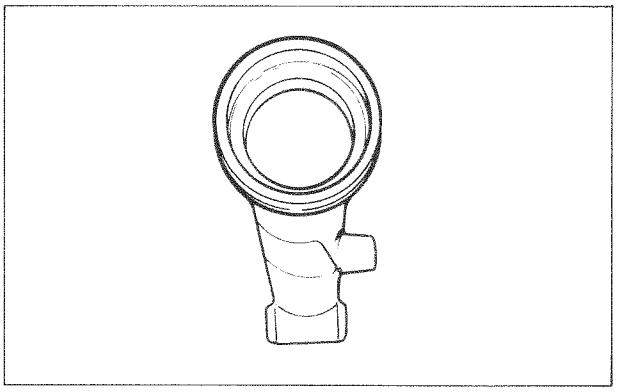

FREE PISTON

Inspect the free piston O-ring for wear or damage.

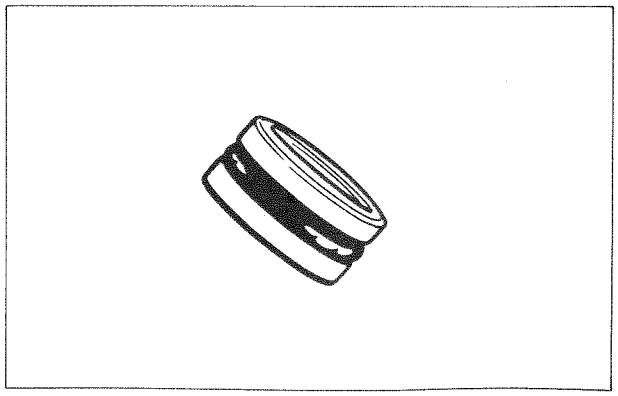

MODULATOR VALVE
(GS750EZ model)

Tighten the four bolts with specified torque.

> **NOTE:**
> **Make sure that new O-rings should be used.**

Tightening torque	6 – 8 N·m (0.6 – 0.8 kg-m)

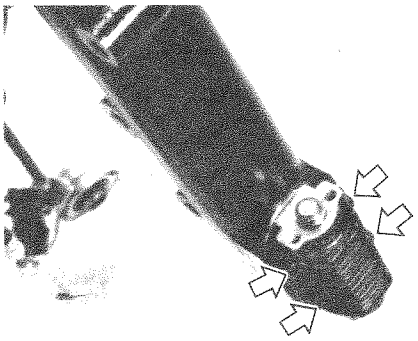

FORK OIL

For the fork oil, be sure to use a front fork oil whose viscosity rating meets specifications below.

Fork oil	Fork oil # 15

Capacity	GS750E cast wheel: 214 ml
	GS750T model: 209 ml

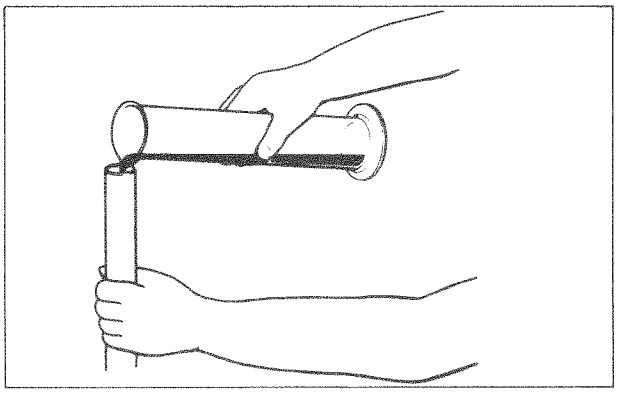

- Hold the front fork vertical and adjust the fork oil level with a special tool.

> **NOTE:**
> **When adjusting oil level, remove the fork spring and compress the inner tube fully.**

09943-74111	Fork oil level gauge

Oil level	201 mm GS750E (cast wheel)
	180 mm GS750T

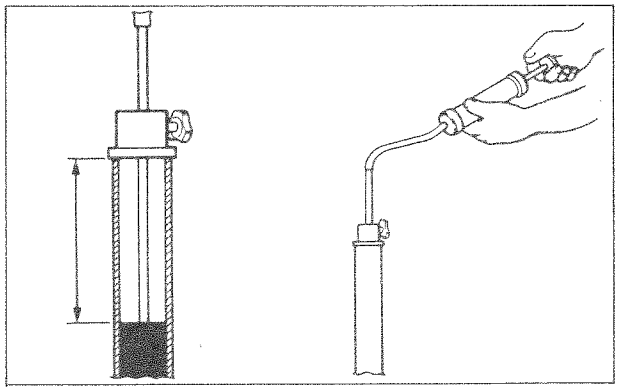

FORK SPRING

Install the fork spring, small diameter end should position in bottom.

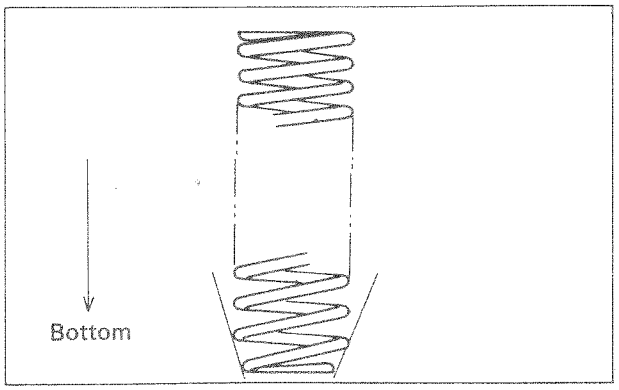

REASSEMBLY

Reassemble and remount the front fork in the reverse order of disassembly and removal, and also carry out the following step;

INNER TUBE METAL

Install the metal by hand as shown.

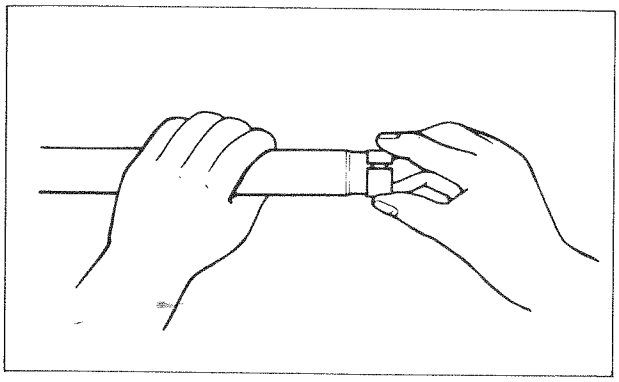

> **CAUTION:**
> **Use special care to prevent damage to the teflon coated surface of the Anti-friction metal when mounting it.**

OIL LOCK PIECE
(Only for GS750E model)

Install the oil lock piece, washer, and wave washers as shown in figure.

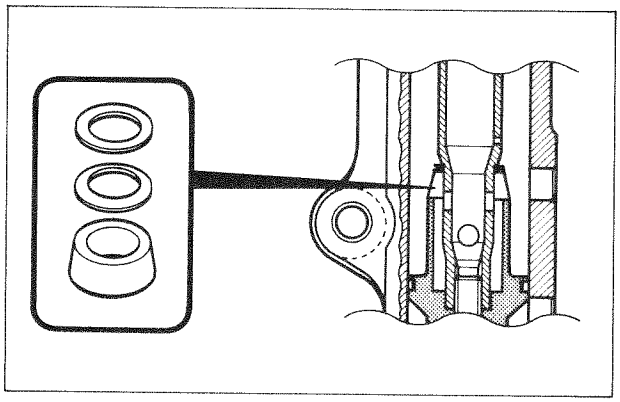

DAMPER ROD BOLT

Apply Suzuki Bond No. 4 and Thread Lock cement to the damper rod bolt and tighten with specified torque.

99000-31030	Suzuki Bond No. 4
99000-32040	Thread Lock Cement

09940-34520	"T" handle
09940-34561	Attachment "D"
09941-03610	8 x 10 mm hexagon combination wrench

Tightening torque	15 – 25 N·m (1.5 – 2.5 kg-m)

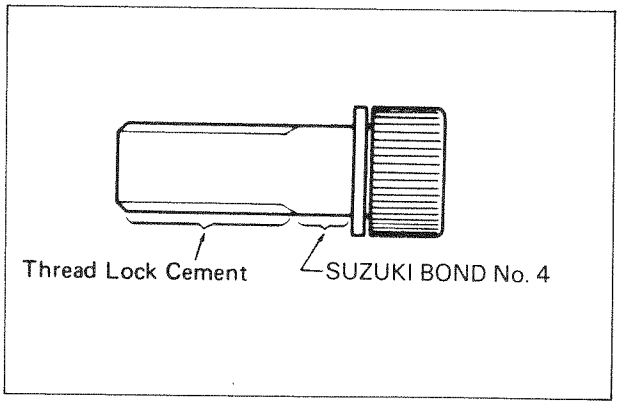

OUTER TUBE METAL, WASHER AND OIL SEAL

Install outer tube metal, washer and oil seal by using special tool as shown.

> **CAUTION:**
> **Use special care to prevent damage to the Teflon coated surface of the anti-friction metal when mounting it.**

09940-50112	Front fork oil seal installer

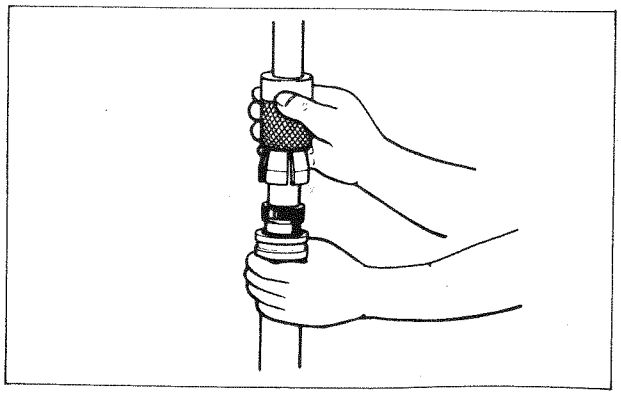

INNER TUBE

- Install the front fork assembly with aligning upper surface ① of the inner tube with the upper surface ② of the steering stem upper bracket.

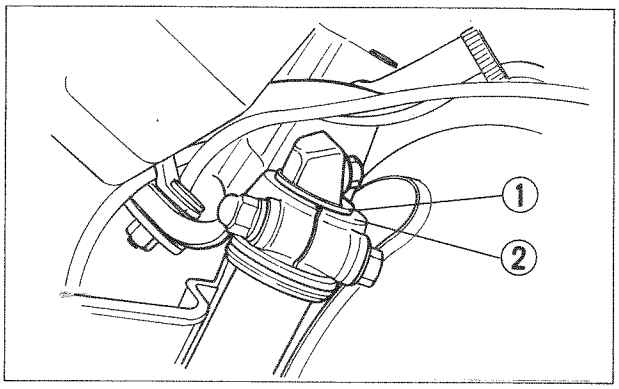

- Tighten the upper and lower clamp bolts.

Tightening torque	Upper	20 – 30 N·m (2.0 – 3.0 kg-m)
	Lower	15 – 25 N·m (1.5 – 2.5 kg-m)

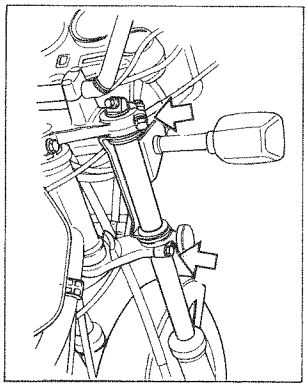

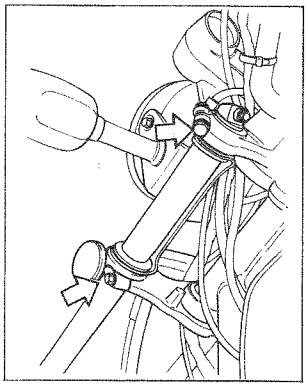

FRONT FORK SPRING SETTING

Check the damping force adjuster position and spring adjuster setting position.

Standard spring setting	1st position (softer)

WARNING:
Set the each spring adjuster at same position for both right and left forks.

REAR SHOCK ABSORBER SETTING

Check the damping force adjuster position and the spring pre-load.

Standard setting	
Damping force	II position (softest)
Spring preload	III position

Be sure to adjust the springs and dampers of the two shock absorbers equally and balance the spring and damping force as follows.

Spring setting	Damping force
I	1 or 2
II	2 or 3
III	3 or 4
IV	3 or 4
V	4

WIRE AND CABLE ROUTING (GS750E)

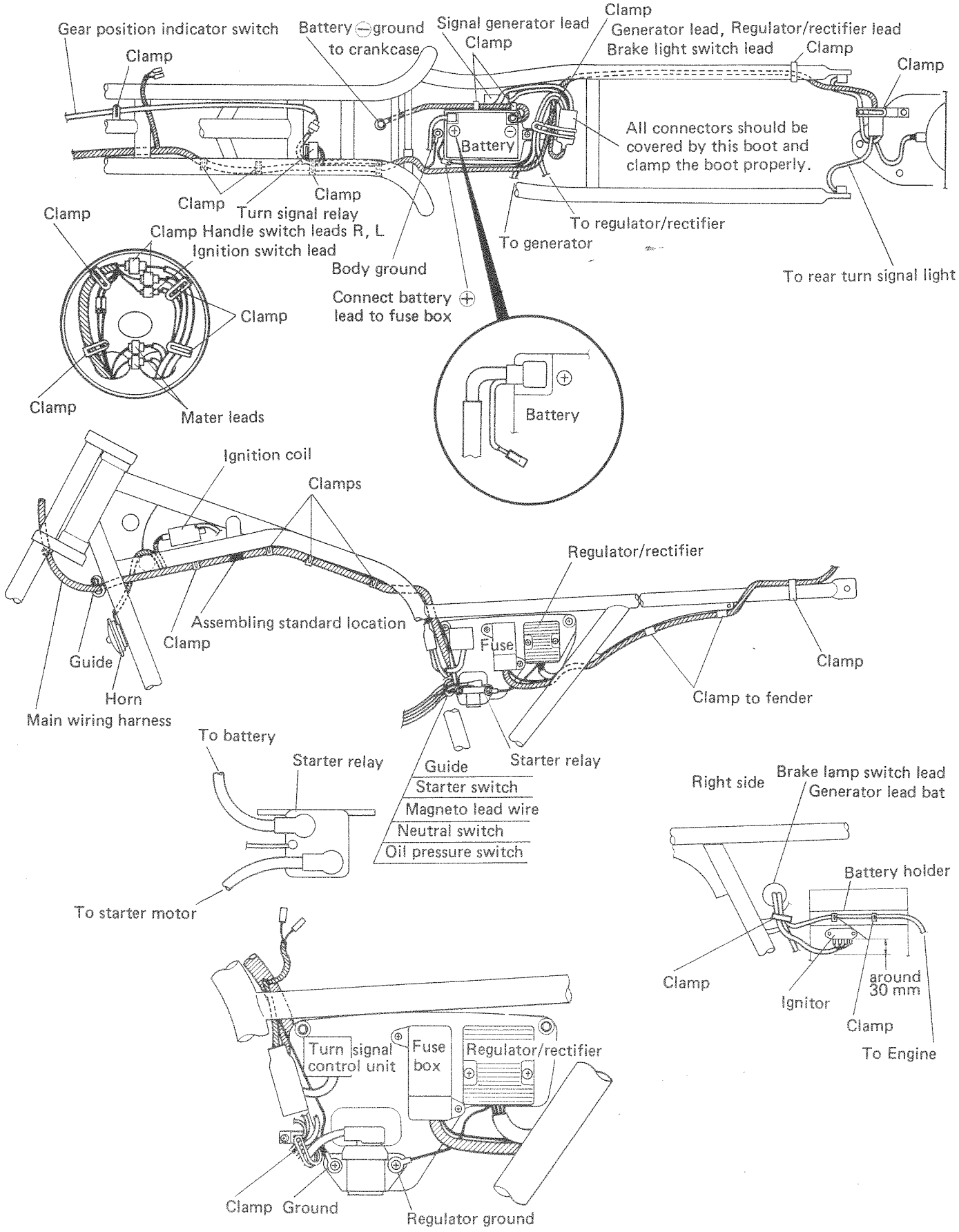

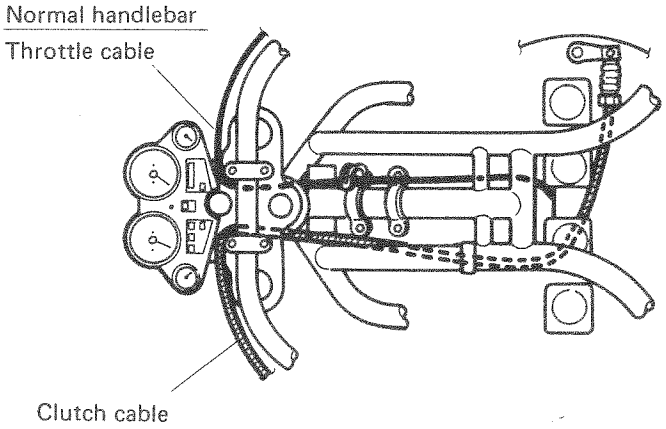
Normal handlebar
Throttle cable
Clutch cable

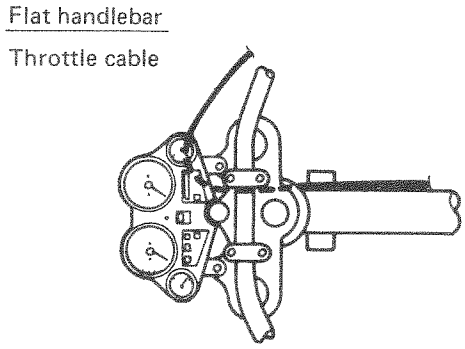
Flat handlebar
Throttle cable

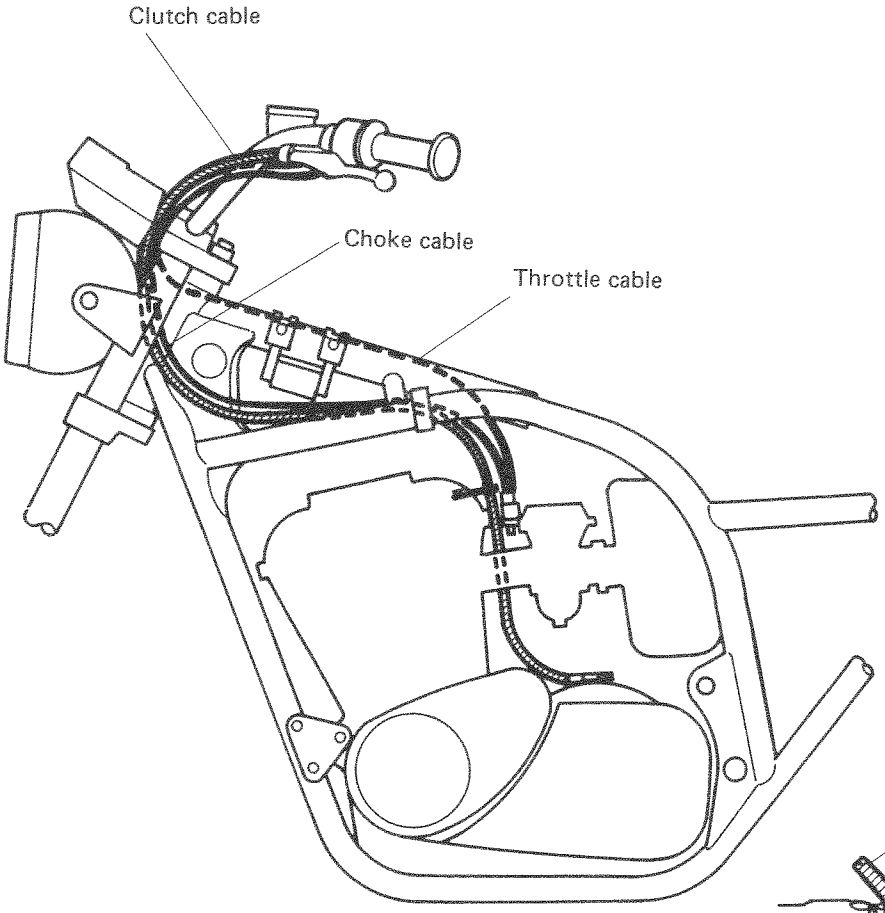
Clutch cable
Choke cable
Throttle cable

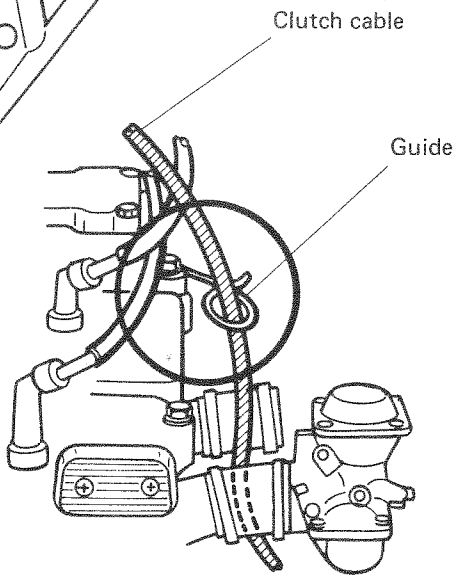
Clutch cable
Guide

HARNESS ROUTING (GS750T)

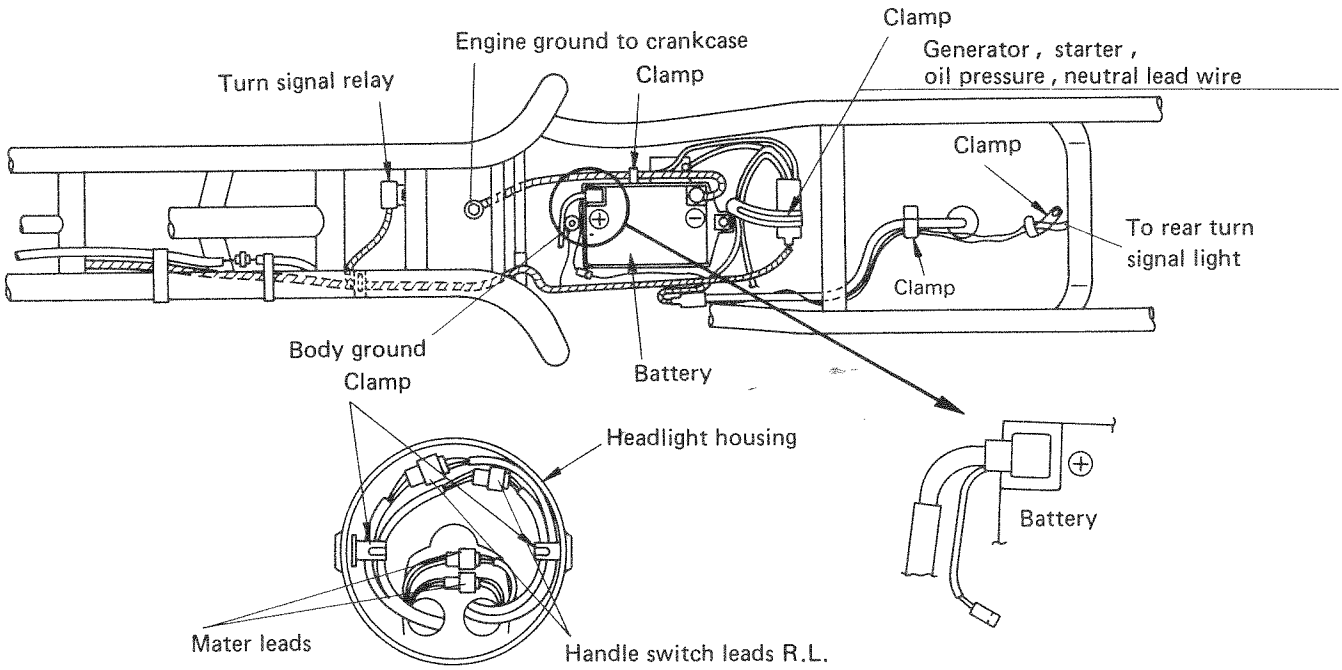

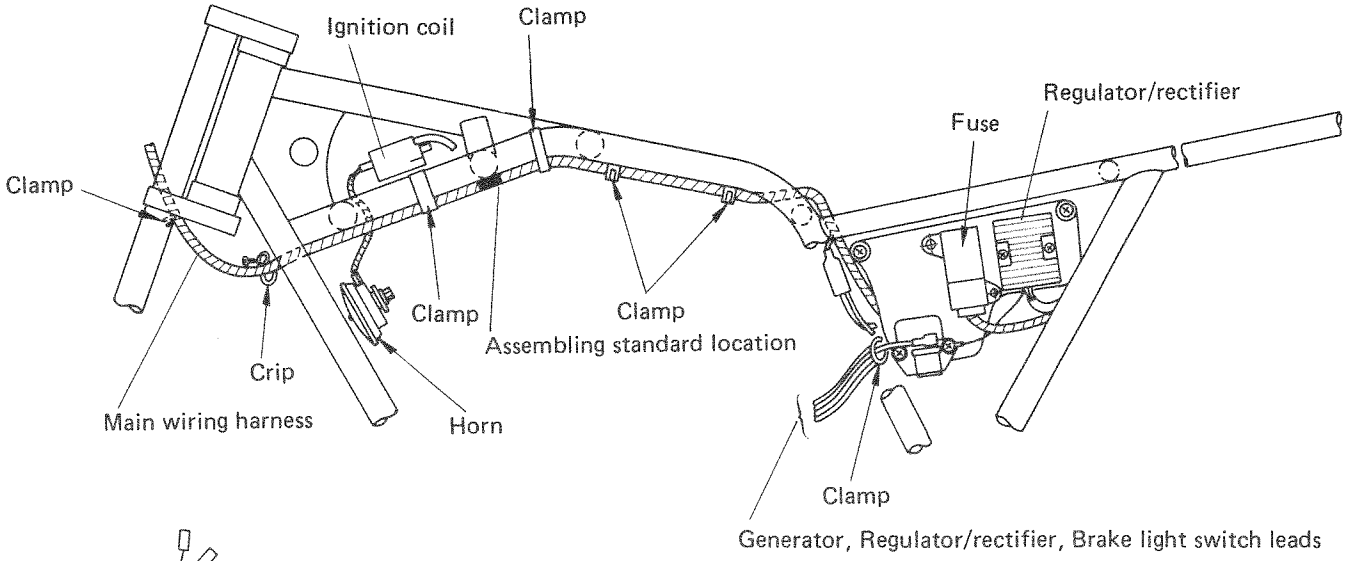

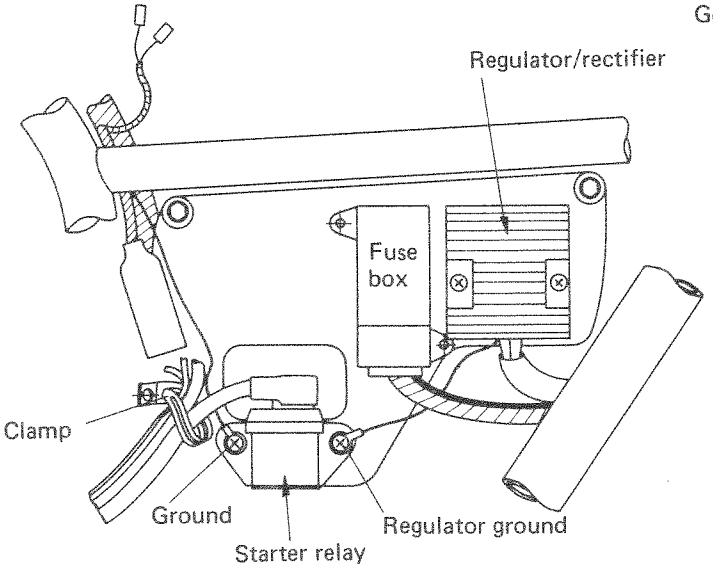

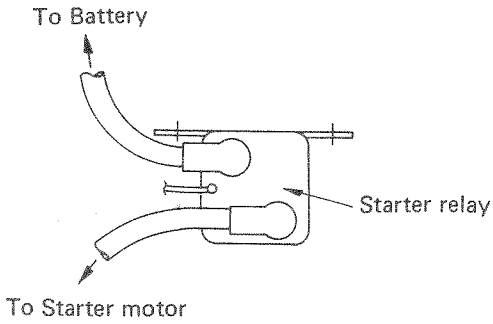

BRAKE HOSE ROUTING (GS750EZ)

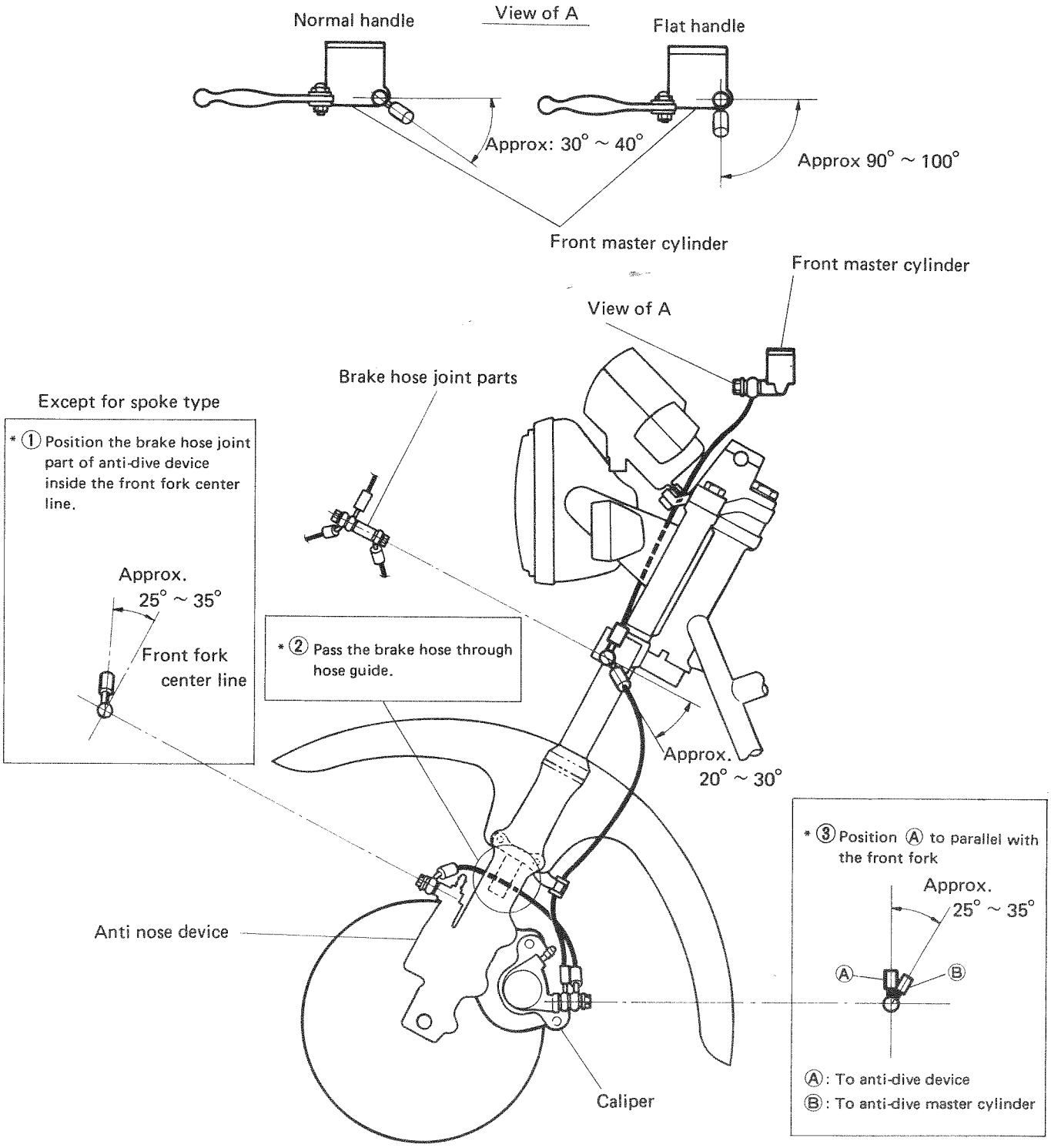

CAUTION:

1. Turning radius of the brake hose should be more than 30 mm at the center of brake hose.
2. Degrees of hose winding should be less than 15° at the length of 300 mm.
3. Do not fix the hoses of the caliper/master cylinder/anti-dive device with extended condition.
4. Make sure that no protective part does not contact with the other parts.

(GS750EZ)

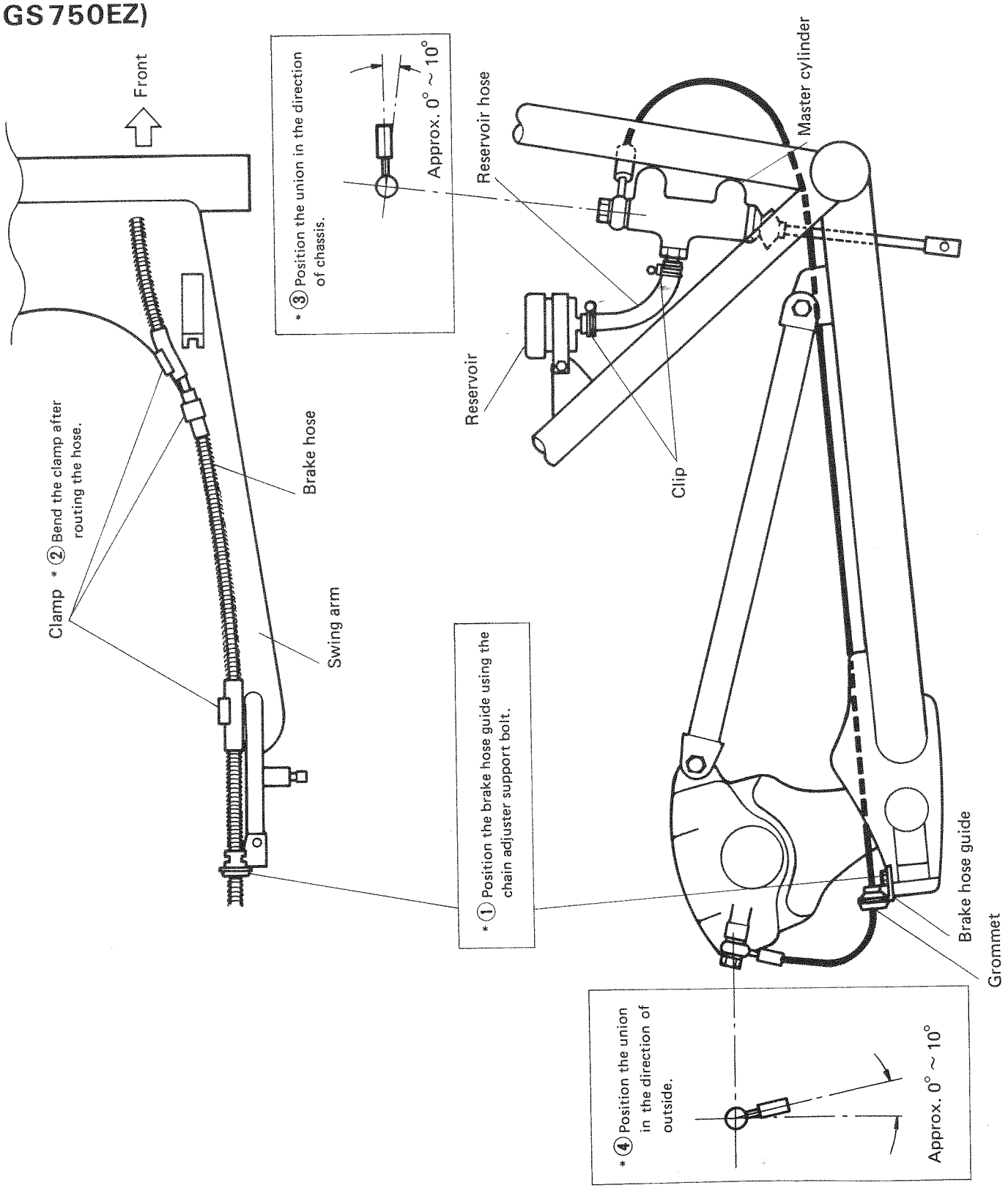

CAUTION:

1. Turning radius of the brake hose should be more than 30 mm at the center of brake hose.
2. Degrees of hose winding should be less than 15° at the length of 300 mm.
3. Do not fix the hose to the caliper/master cylinder with the extended condition.
4. Make sure that no protective part does not contact with the other parts.

(GS750TZ)

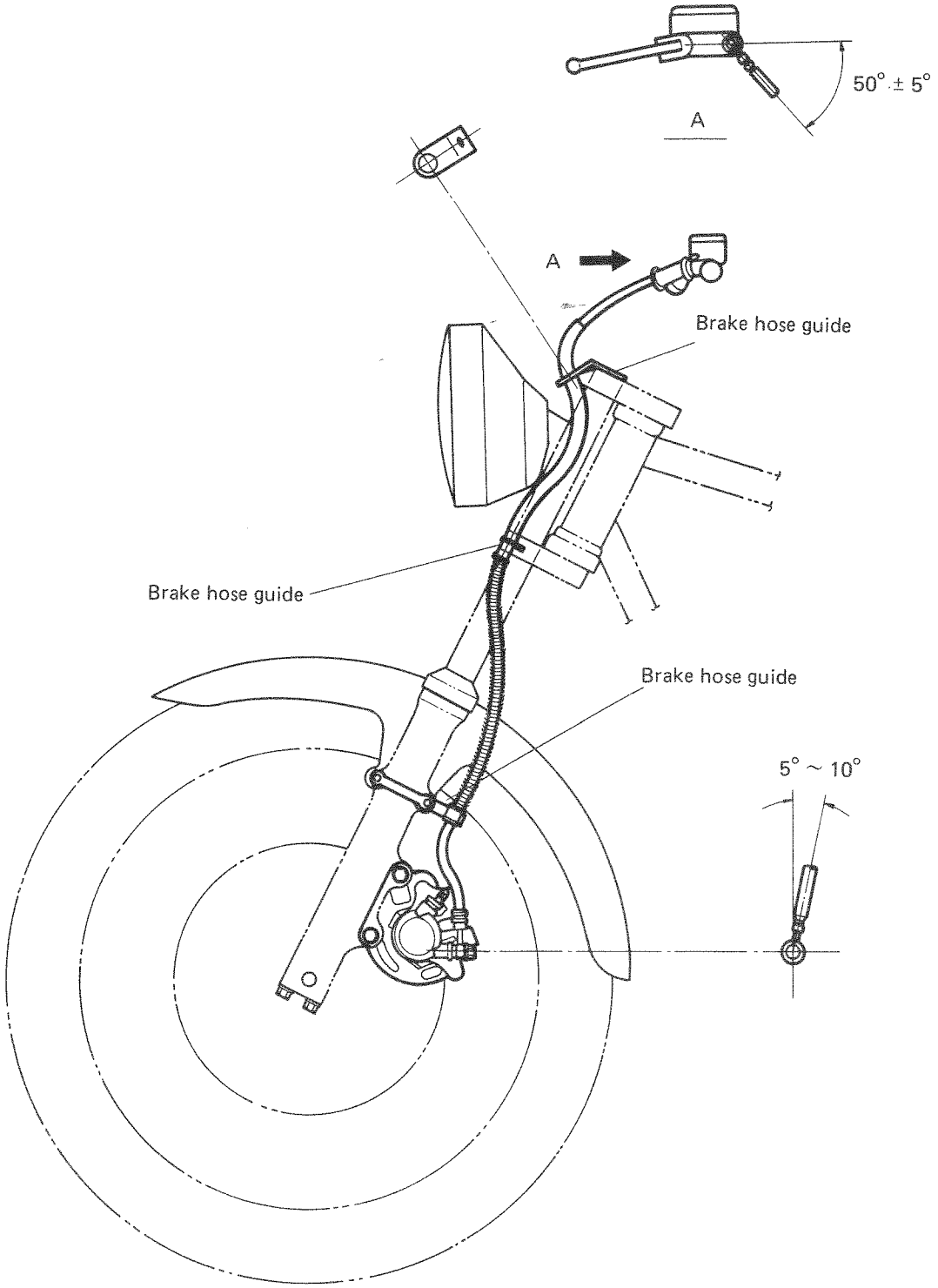

CAUTION:

1. Turning radius of the brake hose should be more than 30 mm at the center of brake hose.
2. Degrees of hose winding should be less than 15° at the length of 300 mm.
3. Do not fix the hoses of the caliper/master cylinder with extended condition.
4. Make sure that no protective part does not contact with the other parts.

8 1/2" x 11 3/4" (21.59 cm x 29.85 cm)

WIRING DIAGRAM

GS750E(Z)

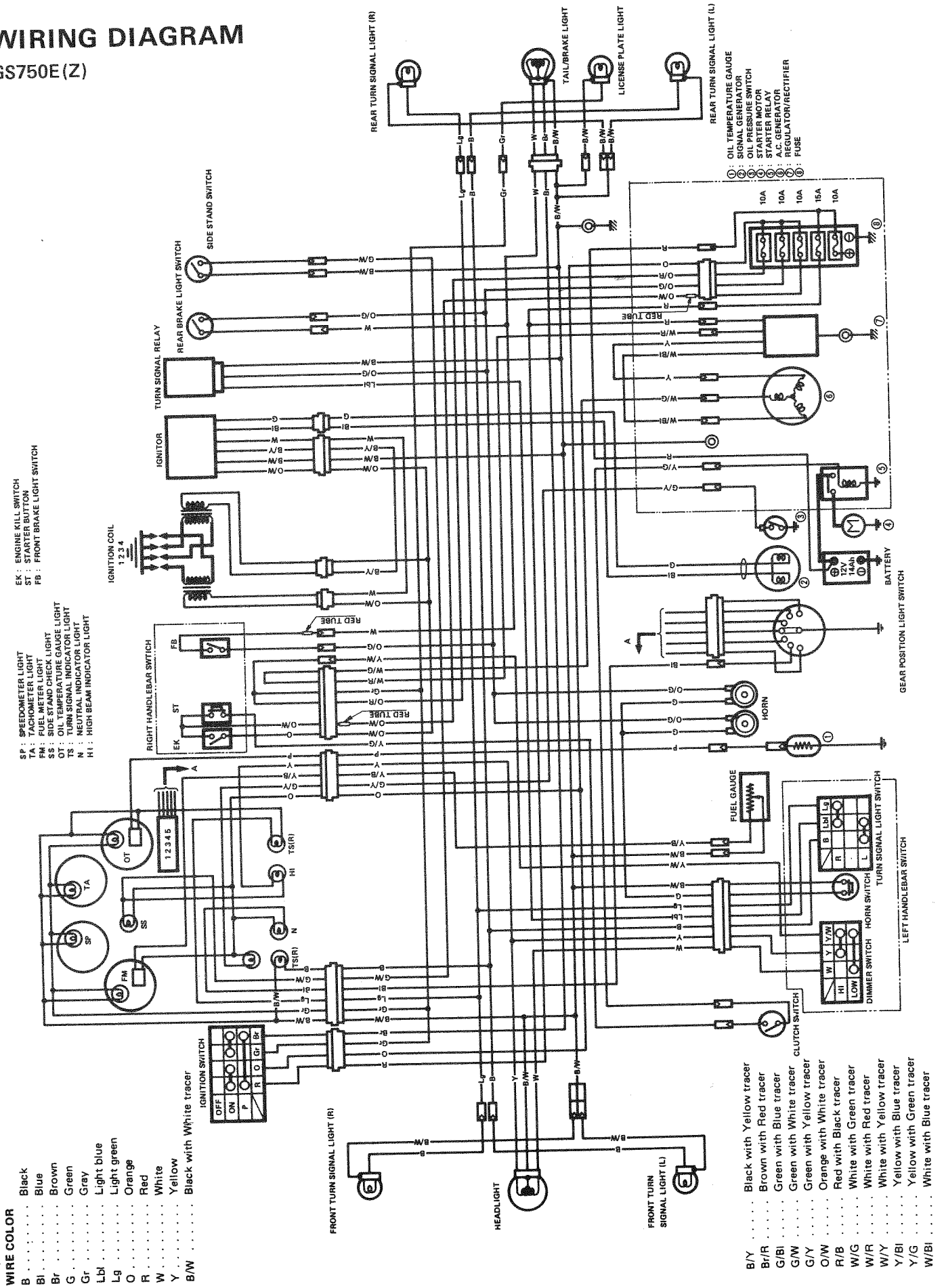

GS750T(Z)

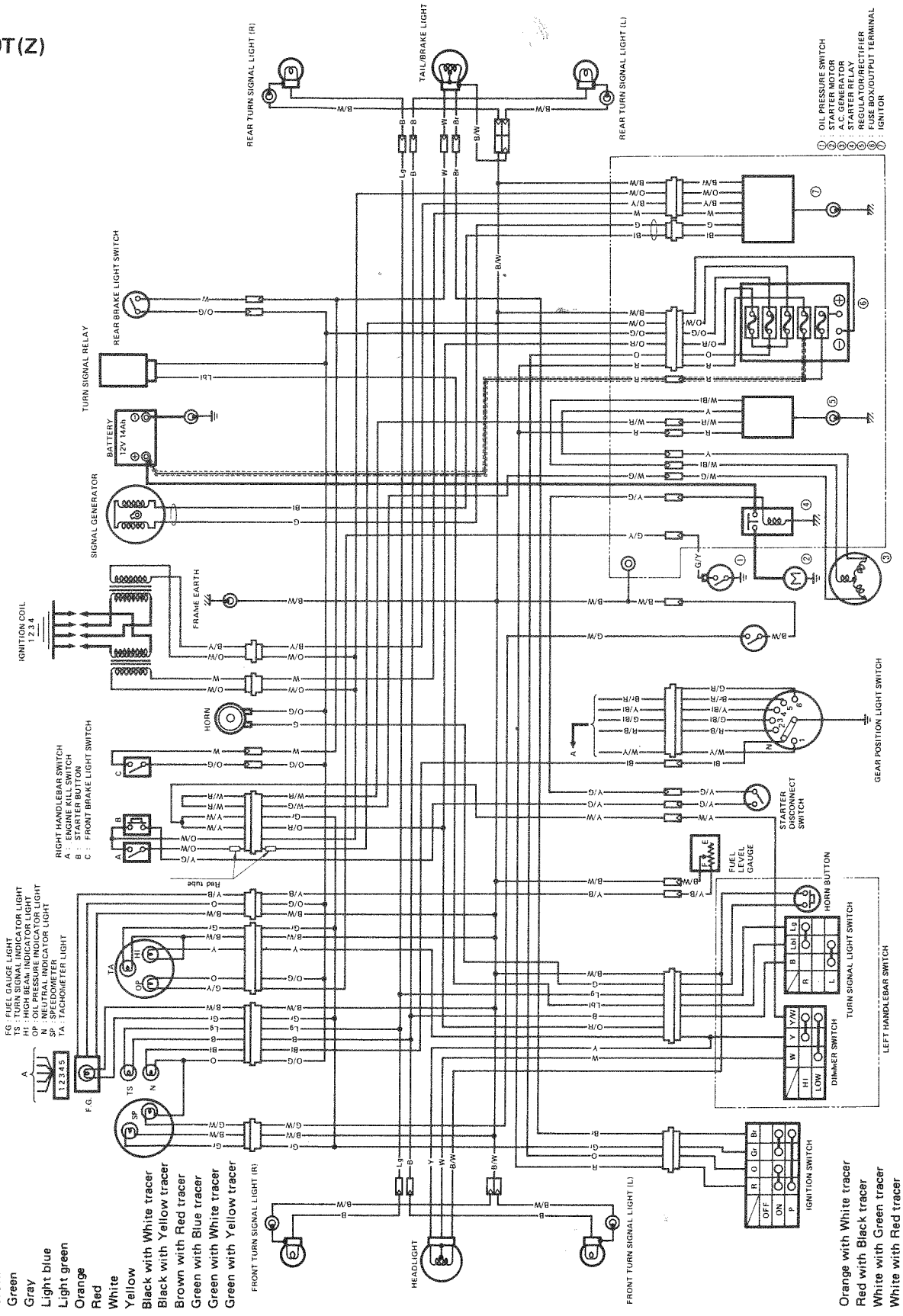

WIRE COLOR

B	Black
Bl	Blue
Br	Brown
G	Green
Gr	Gray
Lbl	Light blue
Lg	Light green
O	Orange
R	Red
W	White
Y	Yellow
B/W	Black with White tracer
B/Y	Black with Yellow tracer
Br/R	Brown with Red tracer
G/Bl	Green with Blue tracer
G/W	Green with White tracer
G/Y	Green with Yellow tracer
O/W	Orange with White tracer
R/B	Red with Black tracer
W/G	White with Green tracer
W/R	White with Red tracer
W/Y	White with Yellow tracer
Y/Bl	Yellow with Blue tracer
Y/G	Yellow with Green tracer
W/Bl	White with Blue tracer

Prepared by

SUZUKI MOTOR CO., LTD.

Service Department
Overseas Operations Division

August, 1982

Part No. 99501-37010-28E(英)
Printed in Japan