SUZUKI

GS750E/ES

SERVICE MANUAL

99500-37020-03E

SUZUKI MOTOR CO., LTD. PRINTED IN JAPAN MAY, '83
©

FOREWORD

The Suzuki GS750E/ES has been developed as a further refinement of the GS model line. It features highly advanced design concepts including a full floater suspension system. The GS750E/ES provides excellent performance, precise control and handling plus outstanding riding comfort.

This service manual has been produced primarily for experienced Suzuki mechanics. Apprentice and do-it-yourself mechanics will also find this manual to be an extremely useful repair guide. This manual contains the most up-to-date information at the time of publication. The rights are reserved to update or make corrections to this manual at any time.

IMPORTANT

All GS model SUZUKI motorcycles that were manufactured after January 1, 1978 are subject to Environmental Protection Agency emission regulations. These regulations set specific standards for exhaust emission output levels as well as particular servicing requirements. This manual includes specific information required to properly inspect and service the GS750E/ES in accordance with all EPA regulations. It is strongly recommended that the chapter on Emission Control, Periodic Servicing and Carburetion be thoroughly reviewed before any type of service work is performed.

Further information concerning the EPA emission regulations and U.S. SUZUKI's emission control program can be found in the U.S. SUZUKI EMISSION CONTROL PROGRAM MANUAL/SERVICE BULLETIN.

SUZUKI MOTOR CO.,LTD.
Administration Department
Overseas Service Division

Quoting, copying or otherwise using any part of this manual without explicit authorization from Suzuki Motor Co., Ltd. is not permitted as all rights to the publication are reserved under copyright law.

VIEW OF SUZUKI GS750ES

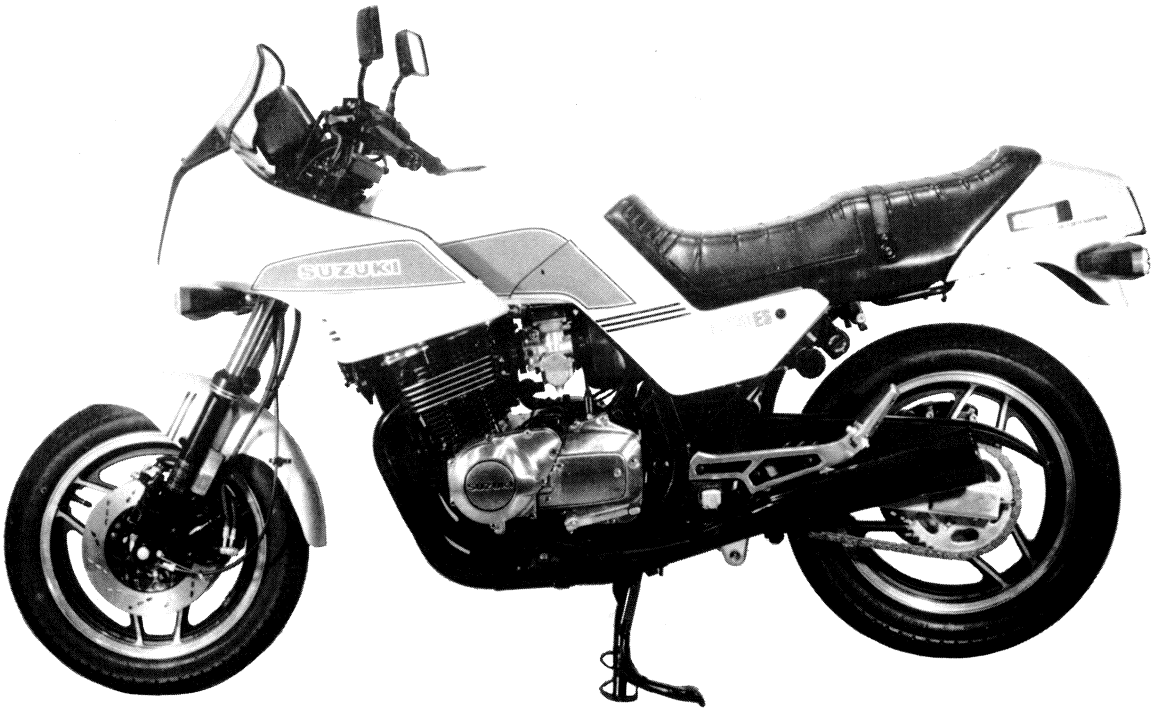

VIEW OF SUZUKI GS750E

GROUP INDEX

GENERAL INFORMATION	1
PERIODIC MAINTENANCE AND TUNE-UP PROCEDURES	2
SERVICING ENGINE	3
FUEL AND LUBRICATION SYSTEM	4
EMISSION CONTROL & REGULATIONS	5
ELECTRICAL SYSTEM	6
CHASSIS	7
SERVICING INFORMATION	8

GENERAL INFORMATION

1

CONTENTS

SERIAL NUMBER LOCATIONS 1- 1
FUEL AND OIL RECOMMENDATIONS 1- 1
BREAKING-IN PROCEDURES 1- 2
CYLINDER IDENTIFICATION 1- 2
SPECIAL FEATURES 1- 3
- TSCC (TWIN SWIRL COMBUSTION CHAMBER) 1- 3
- CAMSHAFT DRIVE CHAIN TENSIONER 1- 7
- FULL TRANSISTORIZED IGNITION SYSTEM 1- 8
- ANTI-DIVE FORK 1- 9
- FULL-FLOATING SUSPENSION SYSTEM 1-14

PRECAUTIONS AND GENERAL INSTRUCTIONS 1-15
SPECIAL MATERIALS 1-16
SPECIFICATIONS 1-18

SERIAL NUMBER LOCATIONS

FRAME NUMBER

The frame serial number ① is stamped on the steering head pipe.

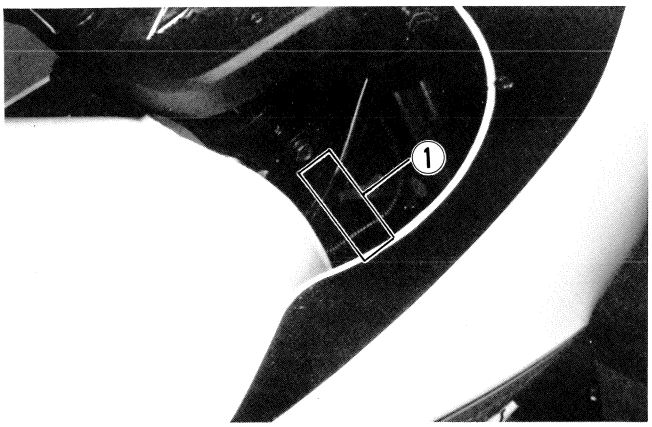

ENGINE NUMBER

The engine serial number ② is located on the right side of the crankcase.

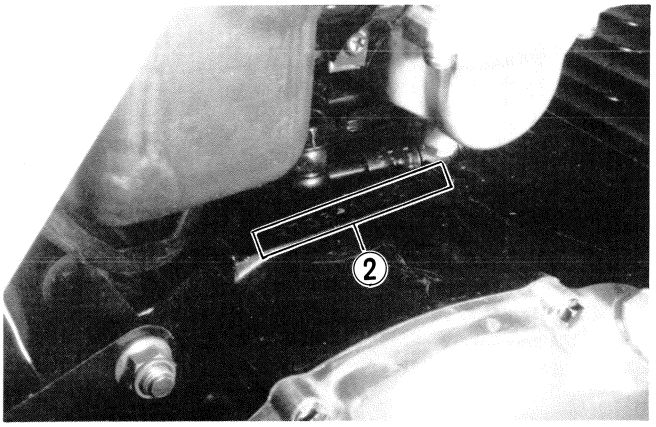

FUEL AND OIL RECOMMENDATIONS

FUEL

Use only unleaded or low-lead type gasoline of at least 85 – 95 pump octane ($\frac{R+M}{2}$ method) or 89 octane or higher rated by the Research method.

ENGINE OIL

SUZUKI recommends the use of SUZUKI PERFORMANCE 4-MOTOR OIL or an oil which is rated SE or SF under the API (American Petroleum Institute) classification system. The viscosity rating should be SAE 10W-40. If an SAE 10W-40 oil is not available, select an alternate according to the chart below.

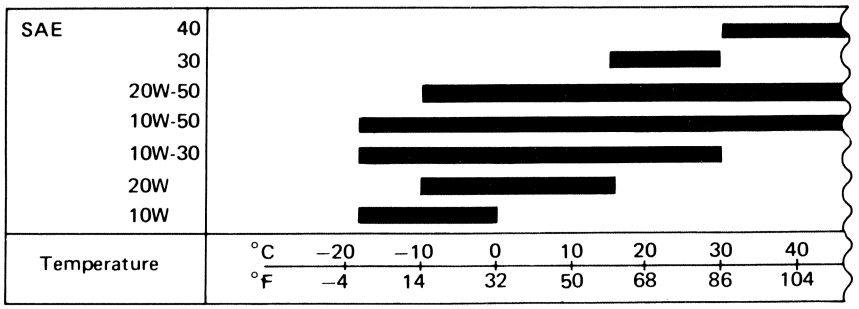

BRAKE FLUID (for front and rear brakes)

Specification and classification	DOT3, DOT4

NOTE:

* **Since the brake system of this motorcycle is filled with a glycol-based brake fluid by the manufacturer, do not use or mix different types of fluid such as silicone-based and petroleum-based fluid for refilling the system, otherwise serious damage will result.**

* **Do not use any brake fluid taken from old, used or unsealed containers.**
* **Never re-use brake fluid left over from the previous servicing and stored for a long period.**

FRONT FORK OIL

Use fork oil #10.

BREAKING-IN PROCEDURES

During manufacture only the best possible materials are used and all machined parts are finished to a very high standard but it is still necessary to allow the moving parts to "BREAK-IN" before subjecting the engine to maximum stresses. The future performance and reliability of the engine depends on the care and restraint exercised during it early life. The general rules are as follows:

- Keep to these breaking-in engine speed limits:

Initial 500 miles (800 km)	Below 4 000 r.p.m.
Up to 1 000 miles (1 600 km)	Below 6 000 r.p.m.
Over 1 000 miles (1 600 km)	Below 10 000 r.p.m.

- Upon reaching an odometer reading of 1 000 miles (1 600 km), you can subject the motorcycle to full throttle operation.
  However, do not exceed 10 000 r.p.m. at any time.
- Do not maintain constant engine speed for an extended time period during any portion of the break-in. Try to vary the throttle position.

CYLINDER IDENTIFICATION

The four cylinders of this engine are identified as No. 1, No. 2, No. 3 and No. 4 cylinder, as counted from left to right (as viewed by the rider on the seat).

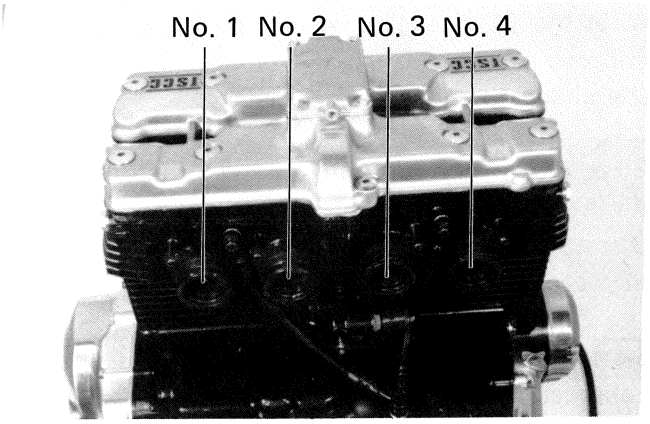

SPECIAL FEATURES

TSCC (TWIN SWIRL COMBUSTION CHAMBER)

SUZUKI has introduced a new breed of 4-valves-per-cylinder high-performance 4-stroke engines--the TSCC series. TSCC describes the heart of the engine, the Twin Swirl Combustion Chamber.

What the TSCC engine series does better than conventional 4-stroke engines, either 2 valve or 4 valve, is to improve on the two major factors which affect engine performance, charge burning efficiency and intake charging efficiency.

First, charge burning efficiency. The TSCC* system consists of a subtle, yet unique shape machined into the head. Each of the two intake valves is set into adjoining semi-hemispherical depressions in the head. During the intake stroke these depressions channel the incoming fuel/air mixture to form two separate high-speed swirls.

During the compression stroke the squish areas machined in the front and the rear of the cylinder head's combustion chamber accelerate the speed of the swirls. Thus, when the spark plug ignites the mixture, the flame spreads rapidly and completes the combustion more quickly.

To further aid burning efficiency, the spark plug is centrally located, the ideal location. This results in the shortest possible path for the flame to travel.

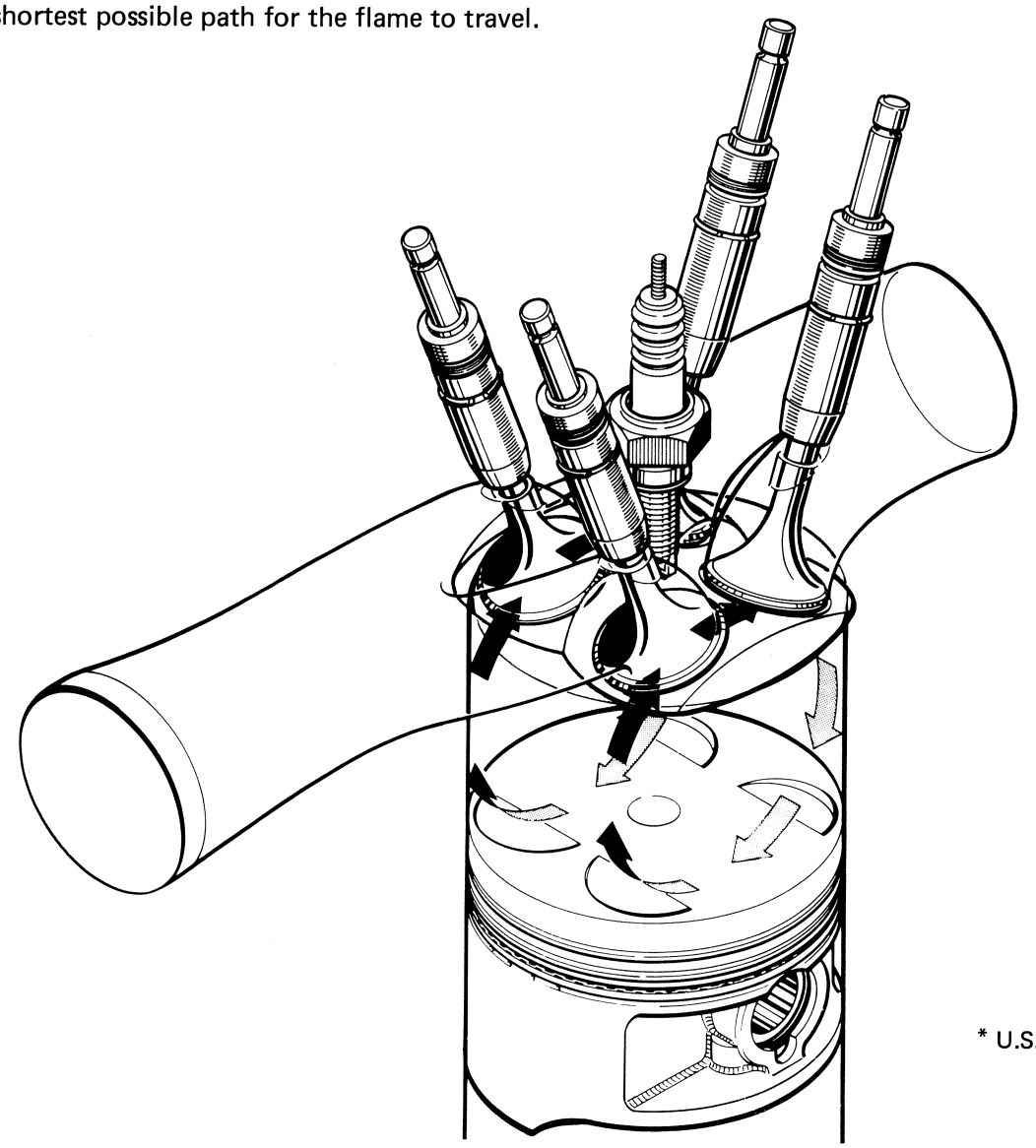

* U.S. PATENT NO. 3633577

The quick completion of burning results in more energy being developed while the piston is in position to transmit maximum power to the crankshaft.
High burning efficiency results in more power, improved throttle response at all rpm's, more complete combustion of the air/fuel mixture (cleaner combustion) and less chance of detonation.
Second, charging efficiency. The benefits of increased burning efficiency are further multiplied if intake charging efficiency is also increased. Basically, increasing the charging efficiency results in more fuel and air being drawn into the engine during each intake stroke. Thus, greater energy potential.
To achieve this, the four valve head was adopted. Two smaller diameter intake valves can flow more than one large valve. Additionally, two smaller valves run cooler due to increased valve seat area and two valve guides to increase heat transfer.

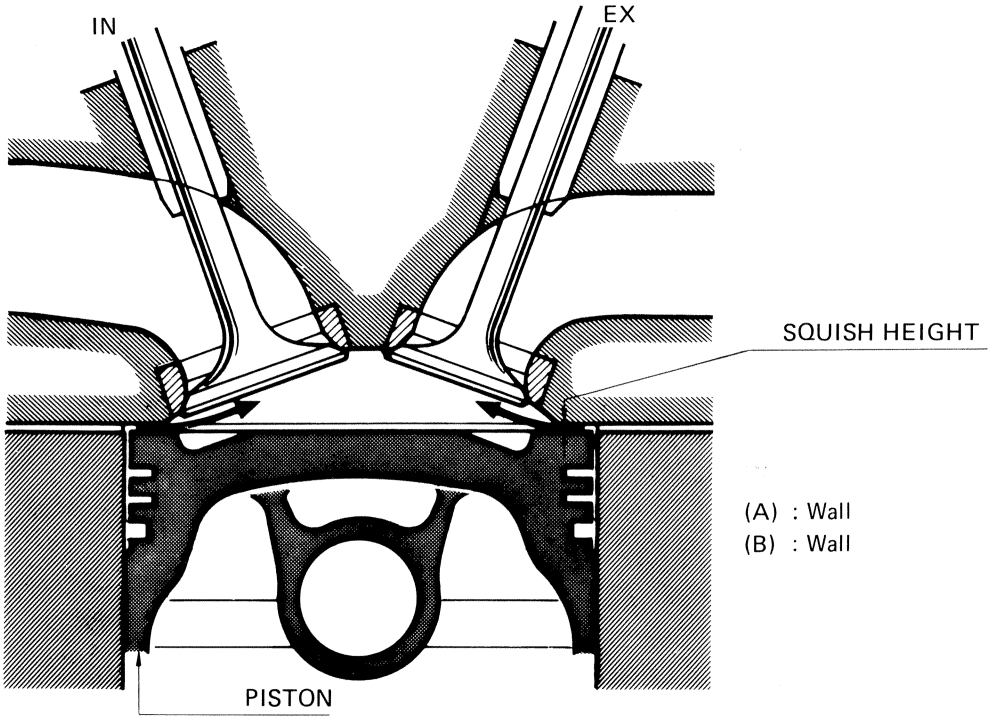

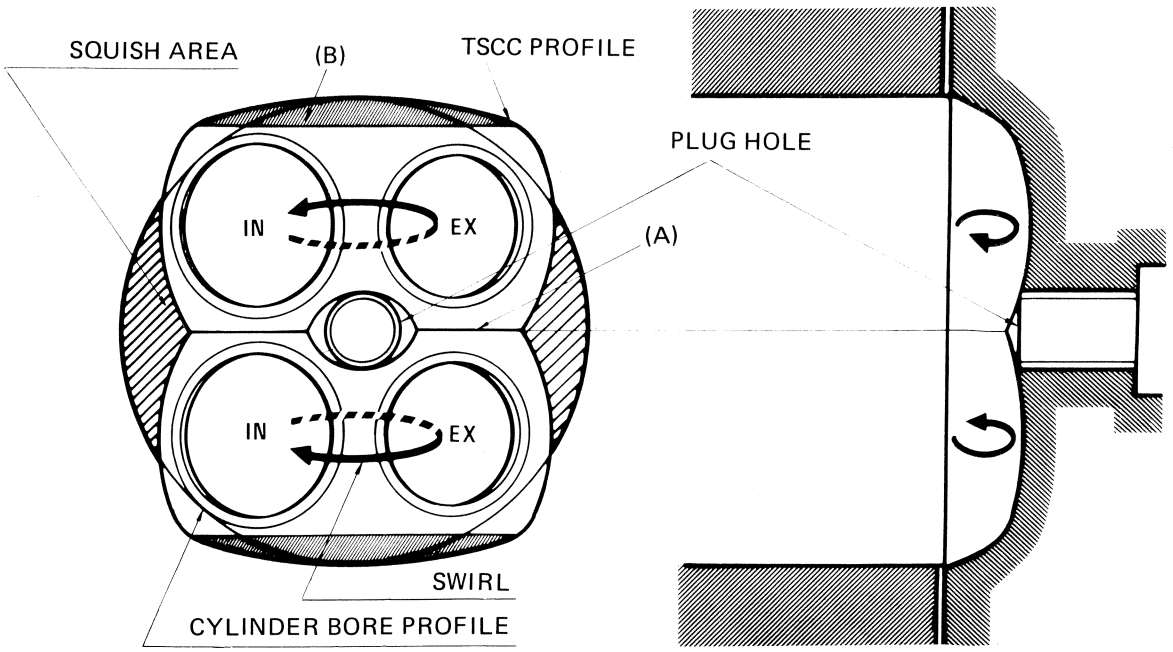

U.S. PATENT NO. 3633577

But, SUZUKI went one step further. The valves are set in at a much shallower angle than other engines. The result is a smoother intake tract with less valve guide protrusion than in conventional cylinder heads. Therefore, increased flow, and smoother, less turbulant flow which contributes to more power and improved throttle response at all engine speeds.

There are several other benefits. This design is more efficient and will flow more air/fuel mixture than a conventional 4 valve head. Therefore, even smaller, lighter valves can be used with no decrease in power. Also, the valves can be shorter due to the placement angle. This allows more precise valve control since shorter, lighter valves are more easily controlled--especially at higher rpm's.

Yet another benefit of valves set at shallower angles is that the volume of the cylinder head combustion area is decreased. This allows the use of racing type flat-topped pistons since the desired compression ratio can be achieved without resorting to domed pistons. Flat topped pistons offer no restriction to the incoming air/fuel mixture and a flat-topped piston exposes the minimum amount of surface area to the hot burning mixture. This means that the flat piston absorbs less heat and therefore has to dissipate less heat through the rings and to the oil than a conventional domed piston. The result is a cooler running engine. Flat-topped pistons can also be made lighter resulting in less vibration and stress.

Increased burning efficiency. Increased charging efficiency. The result is more power throughout, from idle to redline. Throttle response is instant and clean. Displacement for displacement, no conventional engine, 2 valve or 4 valve, can compare. This could be enough, but SUZUKI went even further to ensure reliability and ease of maintenance.

A direct acting rocker arm is utilized to activate the valves. Each rocker arm, when depressed by the cam lobe, directly activates two valves at one time. With this system, engine height is reduced and tappets are not necessary. This system allows more room for cooling air flow and allows the use of larger valve springs which increases spring life by reducing stress. Valve adjustment is accomplished without special tools--quickly and easily.

Special sintered steel valve seats are incorporated, manufactured from premium alloys to ensure even more reliability under higher heat loads.

The patented TSCC combustion system combined with SUZUKI's high efficiency charging design results in power and throttle response found only in this new generation 4-stroke engine.

The SUZUKI TSCC engine series--performance without compromise.

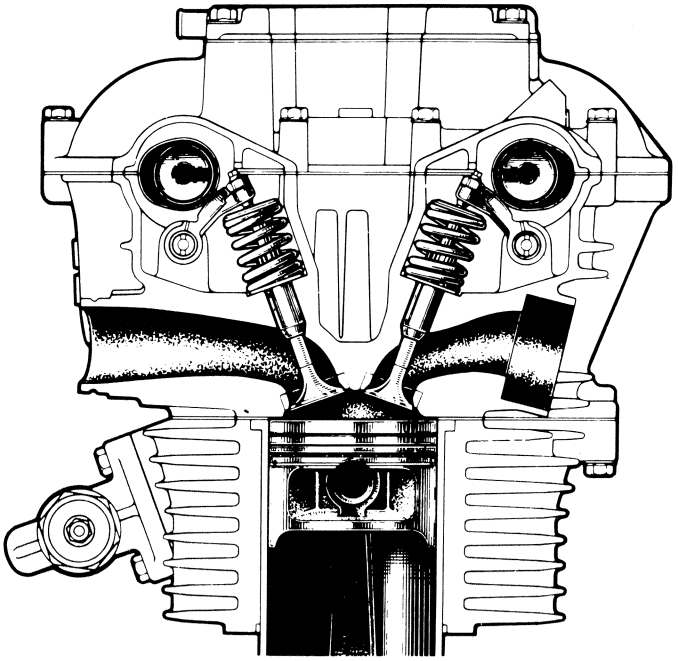

If valve pitch Ⓐ is the same, spring diameter Ⓑ is larger than Ⓒ

TSCC 4-valve

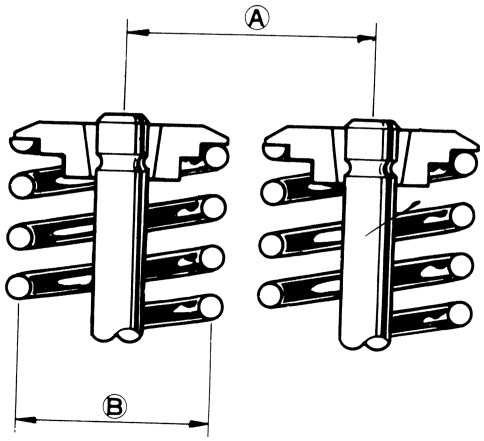

Conventional 4-valve

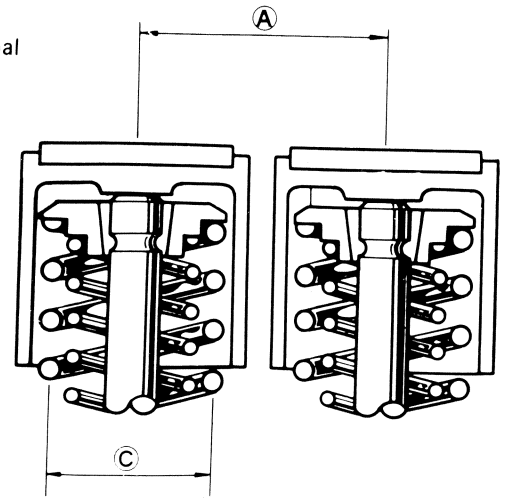

TSCC valve angle α is smaller than β.

TSCC valve angle

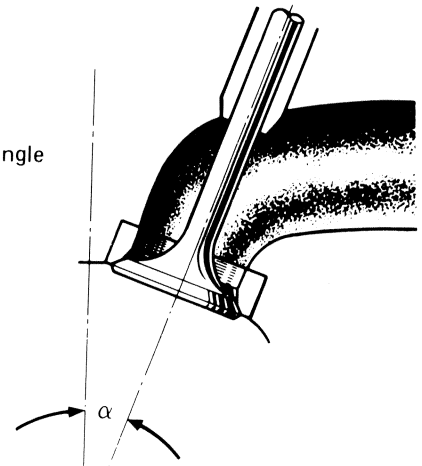

Conventional valve angle

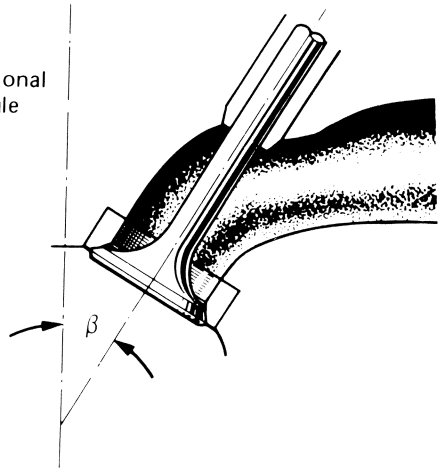

*U.S. PATENT NO. 3633577

CAMSHAFT DRIVE CHAIN TENSIONER

The chain tensioner used in the Model GS750E/ES is of self-adjusting type in that it adjusts itself to apply a constant tensioning force to the chain by compensating for the stretch of the chain.

PUSH ROD AND LOCK SCREW

During normal service the cam drive chain will stretch. A spring controlled push rod is used to constantly reposition the cam chain guide firmly against the chain to prevent slack from occurring. A lock screw and nut are utilized to eliminate the constant, high spring pressure exerted on the push rod. The lock screw is only used during either removal or installation of the adjuster push rod to ease the procedures.

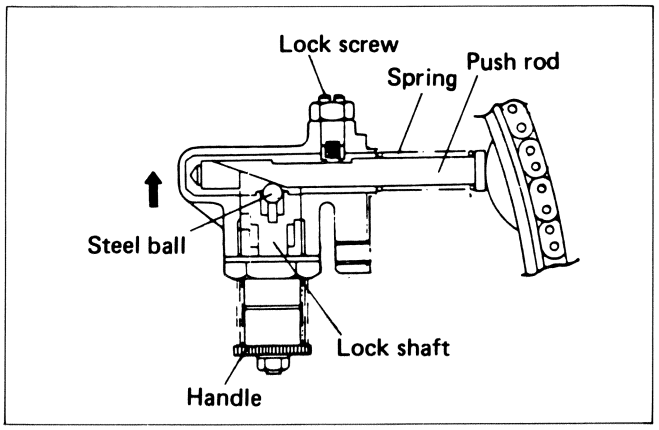

LOCK SHAFT

The cam drive chain tension tries to vary during engine operation. The spring controlled push rod is designed so as to only move in, towards the chain guide preventing slack from occurring if the spring pressure on the push rod were overcome. A steel ball is "jammed" against a angled surface preventing backwards movement of the push rod. The lock shaft is preloaded with a light spring ① which keeps the ball in contact with the push rod and angled surface ② .

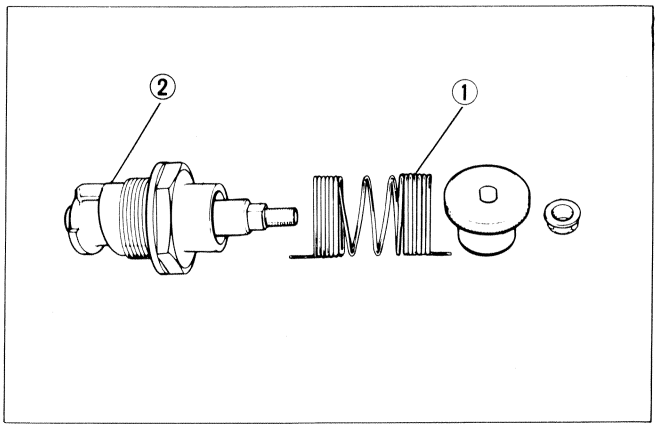

TRANSISTORIZED IGNITION SYSTEM WITH ELECTRONIC ADVANCE

On the Model GS750E/ES, the timing advance characteristics of the ignition timing have been changed from the previously-employed mechanical timing advance system incorporating a centrifugal advance governor to an electronic timing advance system. The introduction of this new electronic timing advance system minimizes fluctuations in the ignition timing and also has improved the timing advance performance during high-speed operations.

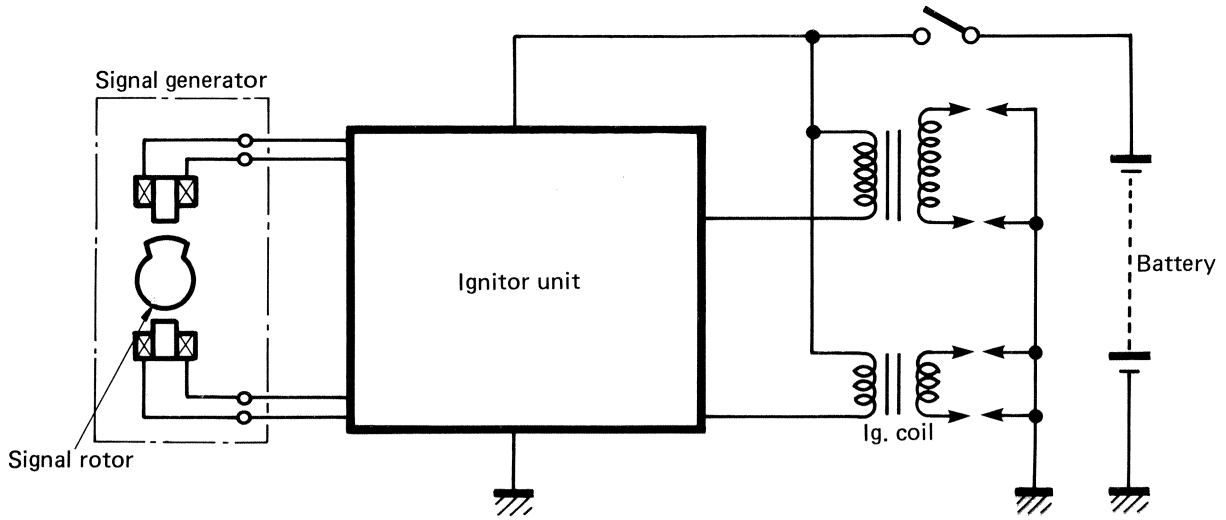

When the signal rotor is rotated in the system block diagram above, the signal "A" is generated in the pick-up coil. The thus-generated signal will be converted to the signal waveform "B" at the inside of the ignitor unit. Based on this "B" waveform, control is made by means of the advancing control circuit and the closing angle control circuit. As a result, the timing advance takes place, as shown in Fig. "C".

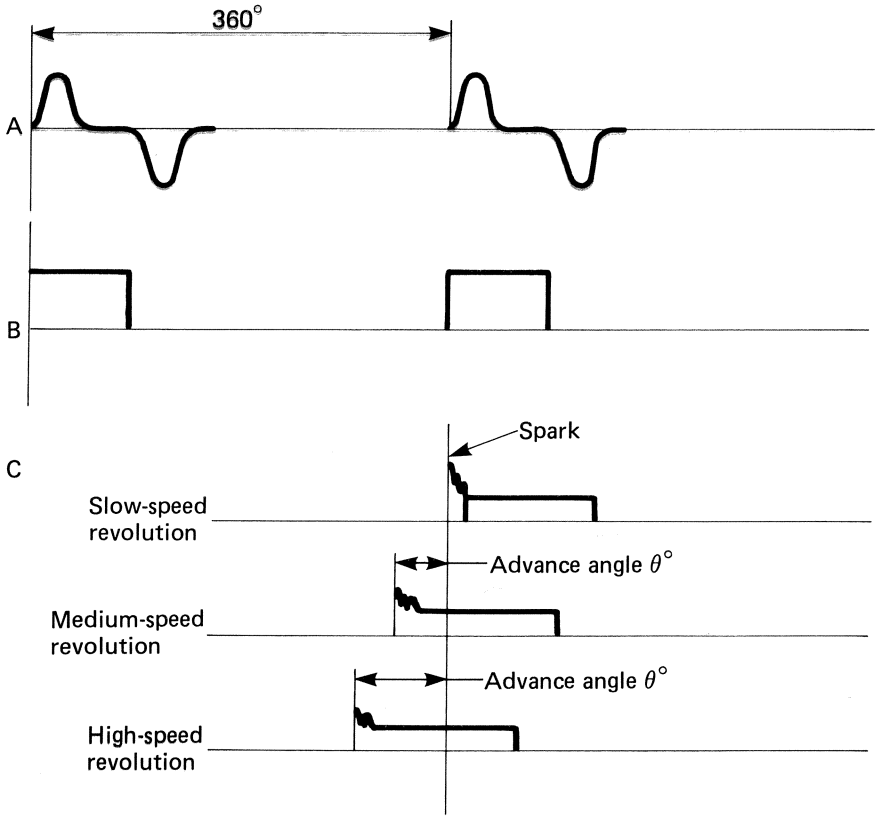

WHAT HAPPENS WHEN THE MOTORCYCLE RECEIVES A JOLT FROM THE ROAD, WHILE THE ANTI-DIVE DEVICE IS ACTIVE?

While the anti-dive device is restricting fork oil flow, any road shock could be directly transmitted to the chassis because the front fork would react as if it were equipped with very stiff springs.

However, the road shock is reduced by the following mechanism: The relief valve, mounted on a spring, is compressed and opened in direct proportion to the pressure on the front-fork oil, permitting the oil to progressively flow through the clearance between the valve and valve seat. Hence the pressure of the fork oil is automatically regulated at a predetermined level. In other words, the clearance at the relief valve represents the difference of fork oil pressure developed by the upward load from the road and the strength of the relief valve's spring.

In order to ensure safety, separate chambers are provided for the fork oil and brake fluid to prevent their mixture.

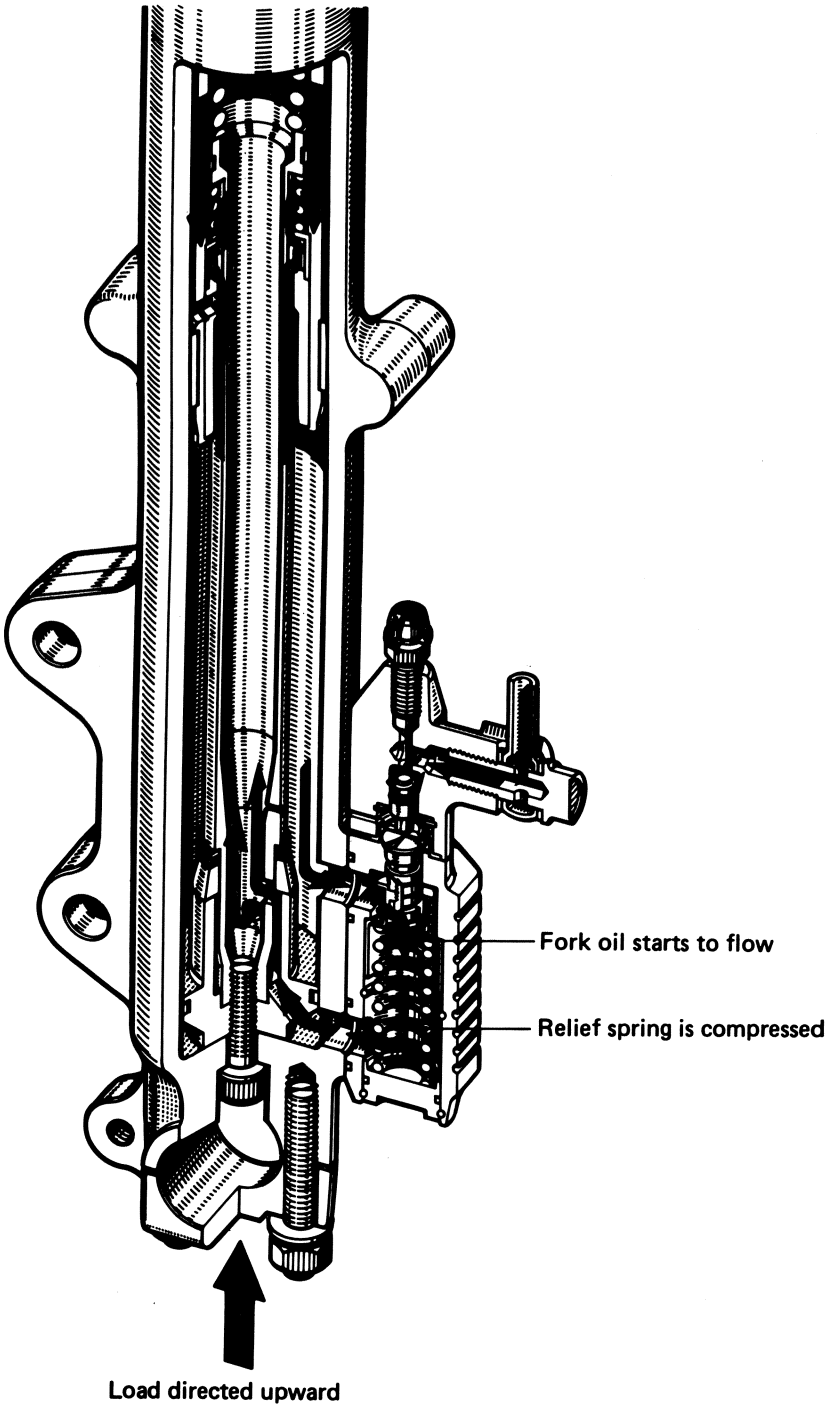

FULL-FLOATING SUSPENSION SYSTEM

Suzuki's exclusive Full Floater rear suspension has been acclaimed the best. Its dominance on motcross and roadrace tracks around the world has proven it. The Full Floater is a remarkable step forward in suspension technology. It is compact and lightweight with the majority of its weight low and near the motorcycle's center of gravity. Its geometry is such that it is responsive to small bumps and road irregularities, yet it will soak up vicious pot holes and ledges without bottoming out. Shock absorber control is superior for stable handling under all conditions.

The Full Floater of the GS750E/ES has also been designed with the single shock absorber.

Suzuki Full Floater features remote controlled hydraulic spring pre-load adjustment and remote controlled damping force adjustment. This is a description for a simple device.

The remote controlled damping force is comprised of a knob driven cable. A rotation of the knob and cable turns the damping adjuster to one of four positions.

ber spring via a piston. This allows quick adjustment of spring preload to the rider's requirements.

The remote controlled damping force is comprised of a knob driven cable. Rotation of the knob and cable turns the damping adjuster to one of four positions.

Stable handling, a smooth ride, light weight, convenience and a natural and comfortable riding position — all with Suzuki's exclusive Full Floater.

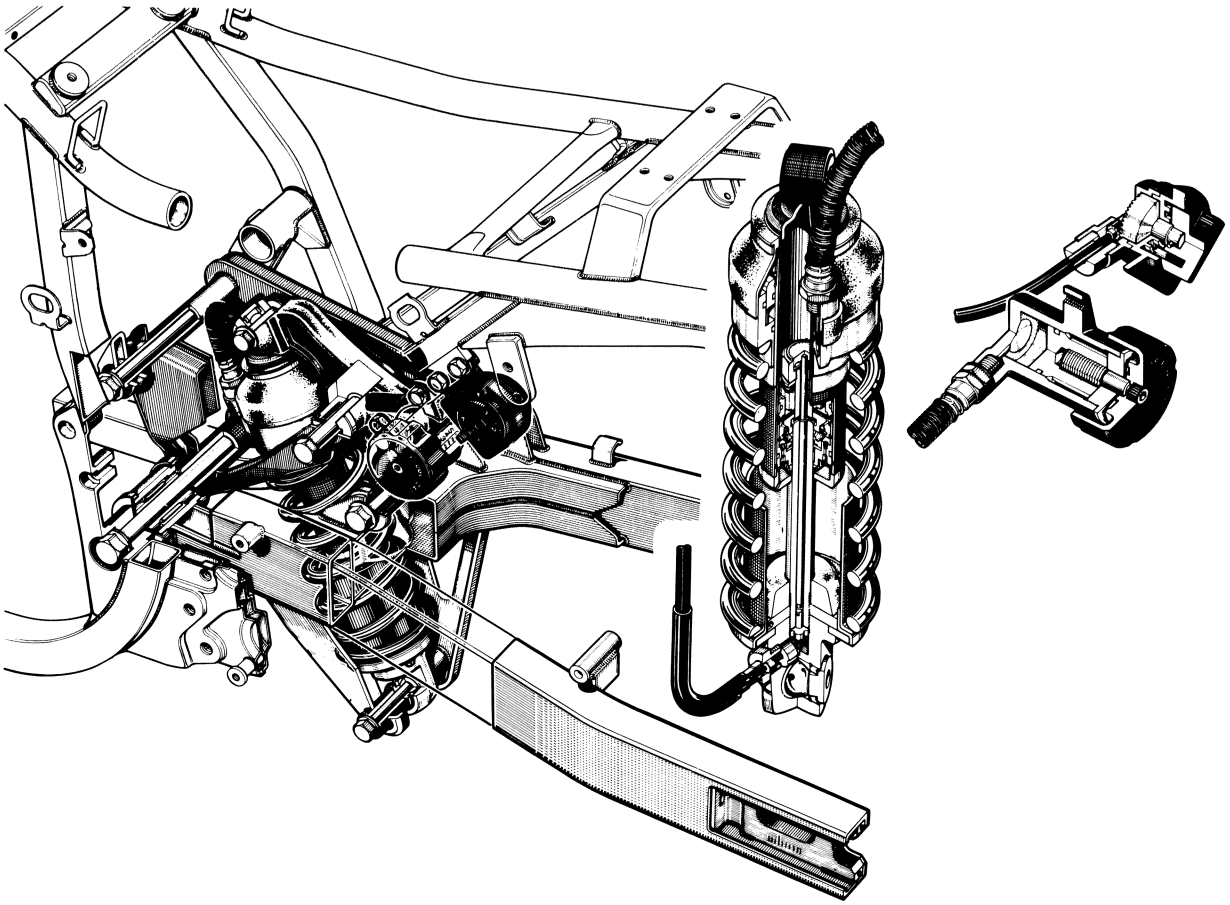

PRECAUTIONS AND GENERAL INSTRUCTIONS

Observe the following items without fail when disassembling and reassembling motorcycles.

- Be sure to replace packings, gaskets, circlips, O rings and cotter pins with new ones.

CAUTION:
Never reuse a circlip after a circlip has been removed from a shaft, it should be discarded and a new circlip must be installed.
When installing a new circlip, care must be taken not to expand the end gap larger than required to slip the circlip over the shaft.
After installing a circlip, always insure that it is completely seated in its groove and securely fitted.

- Tighten cylinder head and case bolts and nuts beginning with larger diameter and ending with smaller diameter, and from inside to out-side diagonally, to the specified tightening torque.
- Use special tools where specified.
- Use specified genuine parts and recommended oils.
- When more than 2 persons perform works together, pay attention to the safety of each other.
- After the reassembly, check parts for tightness and operation.
- Treat gasoline, which is extremely flammable and highly explosive, with greatest care. Never use gasoline as cleaning solvent.

Warning, caution and note are included in this manual occasionally, describing the following contents.

WARNING ..... Personal safety of the rider is involved, and disregard of the information could result in his injury.
CAUTION ..... For the protection of the motorcycle, the instruction or rule must be strictly adhered to.
NOTE ..... Advice calculated to facilitate the use of the motorcycle is given under this heading.

USE OF SUZUKI GENUINE PARTS

To replace any part of the machine, use a genuine SUZUKI replacement part. Imitation parts or parts supplied from any other source than SUZUKI, if used to replace SUZUKI parts, can reduce the machine's performance and, even worse, could induce costly mechanical trouble.

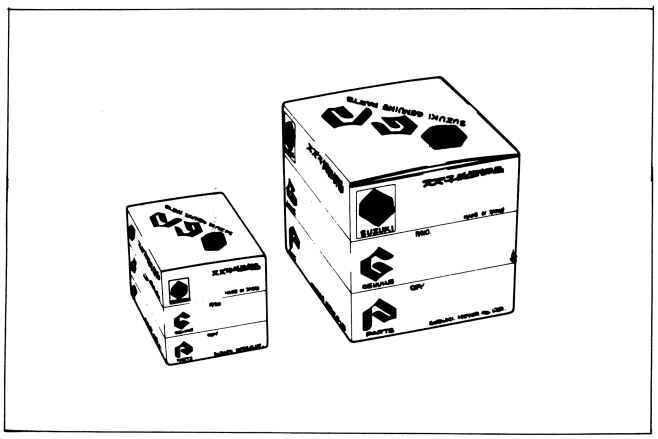

SPECIAL MATERIALS

The materials listed below are needed for maintenance work on the GS750E/ES, and should be kept on hand for ready use. They supplement such standard materials as cleaning fluids, lubricants, emery cloth and the like. How to use them and where to use them are described in the text of this manual.

MATERIAL	PART	PAGE	PART	PAGE
 SUZUKI SUPER GREASE "A" 99000-25030	●Oil seals ●Throttle grip ●Speedometer cable ●Gearshift lever shaft ●Wheel bearings ●Center stand spacer ●Wheel bearing dust seal	3-60 7- 6 7-51 7-56	●Brake pedal shaft	
 SUZUKI SILICONE GREASE 99000-25100	●Caliper axle shaft ●Swing arm bearings	7-25 7-56		
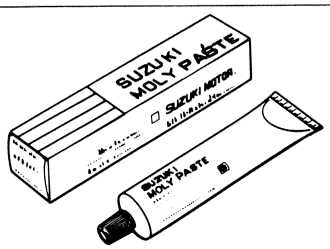 SUZUKI MOLY PASTE 99000-25140	●Valve stem ●Camshaft journal ●Chain tensioner adjuster shaft ●Crankshaft journal ●Crank pin ●Drive shaft	3-36 3-76 3-41 3-63 3-50 3-59		
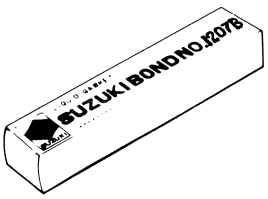 SUZUKI BOND NO. 1207B 99104-31140	●Oil pressure switch ●Mating surface of crankcase and clutch cover, generator cover ●Mating surface of upper and lower crankcase. ●Mating surface of cylinder head and cylinder head cover	3-70 3-67 3-70 3-64 3-81	●Damper rod bolt ●Cylinder stud bolt (X-mark) Front 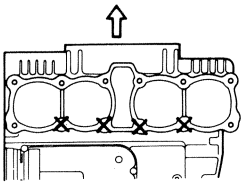	7-15
 THREAD LOCK SUPER "1361A" 99104-32020	●Cam chain guide bolt ●Cam chain guide screw ●Gearshift shaft stopper	3-43 3-43		

MATERIAL	PART	PAGE	PART	PAGE
THREAD LOCK SUPER "1363A" 99104-32030	●Countershaft 2nd drive gear ●Cam sprocket bolt ●Starter motor securing bolt ●Oil pump case screw	3-58 3-39 3-56 3-57		
THREAD LOCK CEMENT 99000-32040	●Carburetor plate set screw ●Carburetor starter shaft lock screw ●Throttle valve screws ●Front fork damper rod bolt ●Cylinder stud bolt ●Oil filter cap nut ●Engine sprocket spacer inner surface	4-19 4-19 4-20 7-23 2-18 3-59		
THREAD LOCK "1363C" 99104-32050	●Generator stator securing screw ●Generator stator lead wire screw ●Gearshift cam stopper bolt ●Starter motor securing bolt ●Drive shaft plate screw ●Countershaft B/g retainer screw ●Engine oil pump set screw ●Gearshift cam pawl screw ●Gearshift cam guide screw ●Modulator valve set bolt	3-56 3-56 6-13 3-60 3-67 3-67 3-62 3-62 7-16	●Engine oil sump filter screw ●Oil gallery plate screw ●Carburetor throttle stop plate screw ●Starter motor housing bolt	3-53 3-60 4-15 6-66
THREAD LOCK SUPER "1332B" 99104-32090	●Generator rotor bolt	3-66		

SPECIFICATIONS

DIMENSIONS AND DRY MASS

Overall length	2 200 mm (86.6 in)	
Overall width	760 mm (29.9 in)	
Overall height	1 190 mm (46.9 in)	
Wheelbase	1 495 mm (58.9 in)	
Ground clearance	140 mm (5.5 in)	
Dry mass (weight)	213 kg (469 lbs)	GS750E
	214 kg (471 lbs)	GS750ES

ENGINE

Type	Four-stroke, air-cooled, DOHC
Number of cylinders	4
Bore	67.0 mm (2.638 in)
Stroke	53.0 mm (2.087 in)
Piston displacement	747 cm^3 (45.6 cu.in)
Compression ratio	9.6 : 1
Carburetor	MIKUNI BS32SS, four
Air cleaner	Polyurethane foam element
Starter system	Electric
Lubrication system	Wet sump

TRANSMISSION

Clutch	Wet multi-plate type
Transmission	5-speed constant mesh
Gearshift pattern	1-down, 4-up
Primary reduction	1.895 (91/48)
Final reduction	3.071 (43/14)
Gear ratios, Low	2.500 (35/14)
2nd	1.750 (28/16)
3rd	1.368 (26/19)
4th	1.130 (26/23)
Top	0.956 (22/23)
Drive chain	DAIDO D.I.D. 50V or TAKASAGO RK50GO
Links	112 links

CHASSIS

Front suspension	Telescopic, pneumatic/coil spring oil damped, with ANTI-DIVE
Rear suspension	Full-floating suspension system, damper 4-way adjustable, spring 5-way adjustable
Steering angle	37° (right & left)
Caster	62° 10′
Trail	105 mm (4.49 in)
Turning radius	2.8 m (9.2 ft)
Front brake	Disc brake, twin
Rear brake	Disc brake
Front tire size	100/90-16 54H
Rear tire size	120/90-17 64H
Front fork stroke	160 mm (5.91 in)
Rear wheel travel	107 mm (4.21 in)
Front tire pressure	1.75 kg/cm^2 (25 psi) (Normal solo riding)
Rear tire pressure	2.00 kg/cm^2 (28 psi) (Normal solo riding)

ELECTRICAL

Ignition type	Transistorized
Ignition timing	13° B.T.D.C. below 1 500 r/min and 35° B.T.D.C. above 2 350 r/min
Spark plug	NGK D8EA or NIPPON DENSO X24ES-U
Battery	12V 50.4kC (14Ah)/10HR
Generator	Three-phase A.C. generator
Fuse	10/10/10/10/15A

CAPACITIES

Fuel tank including reserve	19.5 L (5.2 US gal)
reserve	4.0 L (1.1 US gal)
Engine oil	3.2 L (3.4 US qt)
Front fork oil (each leg)	307.6 ml (10.40 US oz)

* These specification are subject to change without notice.

PERIODIC MAINTENANCE AND TUNE-UP PROCEDURES

2

CONTENTS

PERIODIC MAINTENANCE SCHEDULE 2-1
MAINTENANCE AND TUNE-UP PROCEDURES 2-2

PERIODIC MAINTENANCE SCHEDULE

IMPORTANT: The periodic maintenance intervals and service requirements have been established in accordance with EPA regulations. Following these instructions will ensure that the motorcycle will not exceed emission standards and it will also ensure the reliability and performance of the motorcycle.

> NOTE:
> **More frequent servicing may be performed on motorcycles that are used under extreme severe conditions, however, it is not necessary for ensuring emission level compliance.**

The chart below lists the recommended intervals for all the required periodic service work necessary to keep the motorcycle operating at peak performance and to maintain proper emission levels. Mileages are expressed in terms of kilometers, miles and time for your convenience.

PERIODIC MAINTENANCE CHART

INTERVAL: THIS INTERVAL SHOULD BE JUDGED BY ODOMETER READING OR MONTHS WHICHEVER COMES FIRST	mile	600	4 000	7 500	11 000	15 000
	km	1 000	6 000	12 000	18 000	24 000
	month	2	12	24	36	48
Battery		–	I	I	I	I
Cylinder head nuts and exhaust pipe bolts		T	T	T	T	T
Air cleaner element		–	C	C	C	C
Valve clearance		I	I	I	I	I
Spark plug		–	C	R	C	R
Carburetor		I	I	I	I	I
Fuel line		Replace every four years.				
Engine oil and oil filter		Ch	Ch	Ch	Ch	Ch
Clutch		I	I	I	I	I
Drive chain		I	I	I	I	I
		Clean and lubricate every 1 000 km (600 miles)				
Brake		I	I	I	I	I
Brake hose		Replace every four years.				
Brake fluid		Change every two year				
Tire		I	I	I	I	I
Steering stem		I	I	I	I	I
Front fork		–	–	I	–	I
		Check air pressure every 6 months.				
Chassis bolts and nuts		T	T	T	T	T

NOTE: T = Tighten, I = Inspect, R = Replace, C = Clean, Ch = Change

MAINTENANCE AND TUNE-UP PROCEDURES

This section describes the service procedures for each section of the Periodic Maintenance requirements.

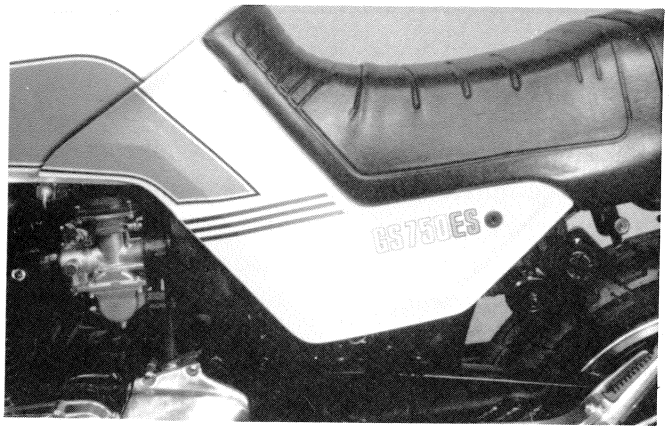

BATTERY

Inspect Every 6 000 km (4 000 mi)

- Remove the right and left frame covers.
- Remove the seat.
- Check electrolyte for level and specific gravity. Add distilled water, as necessary to keep the surface of the electrolyte above the LOWER level line but not above the UPPER level line.
- For checking specific gravity, use a hydrometer to determine the charged condition.

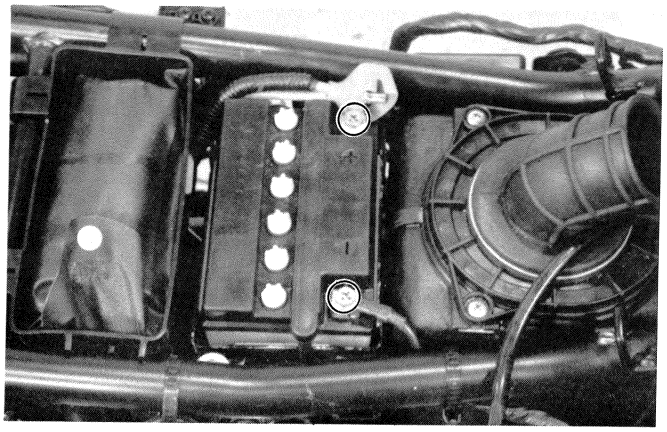

09900-28403	Hydrometer
Standard specific gravity	1.28 at 20°C

An S.G. reading of 1.22 (at 20°C) or under means the battery needs recharging.
Remove the battery from the machine and charge it with a battery charger.

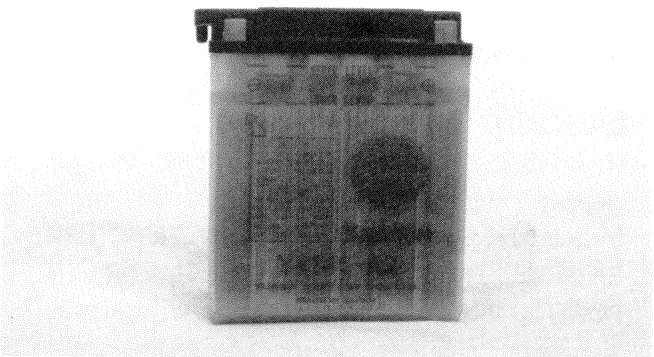

CAUTION:
Be careful not to bend, obstruct, or change the routing of the air vent tube from the battery. Make certain that the breather pipe is attached to the battery vent fitting and that the opposite end is always open.

CAUTION:
Never charge a battery while still in the machine as damage may result to the battery or regulator/rectifier.

- Check that the breather pipe is tightly secured and undamaged, and is routed as shown.

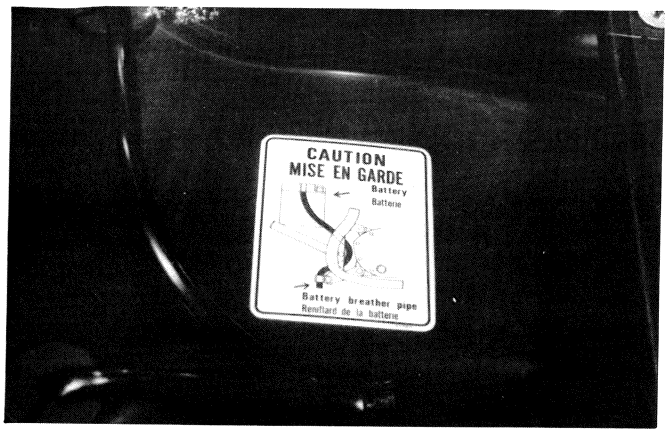

AIR CLEANER

Clean Every 6 000 km (4 000 mi)

- Open the seat and remove the air cleaner case cover complete with element frame by loosening two screws.
- Remove the polyurethane foam element from the element frame.

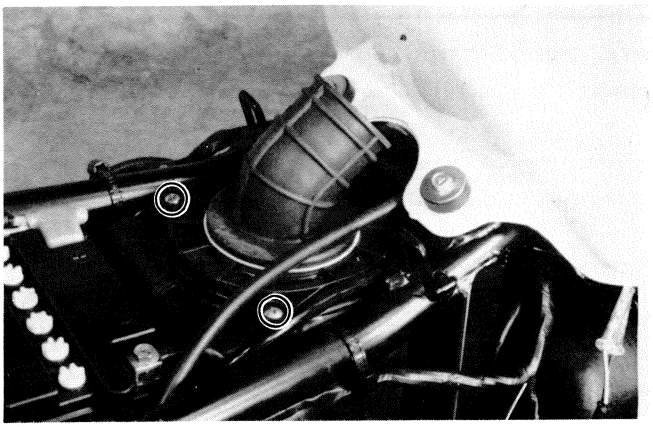

WASHING THE ELEMENT

Wash the element as follows:

- Fill a washing pan of a proper size with non-flammable cleaning solvent. Immerse the element in the solvent and wash it clean.
- Squeeze the solvent off the washed element by pressing it between the palms of both hands: Do not twist and wring the element, or it will tear.
- Immerse the element in a pool of lightweight motor oil, and squeeze the oil off the element to make it slightly wet with the oil.

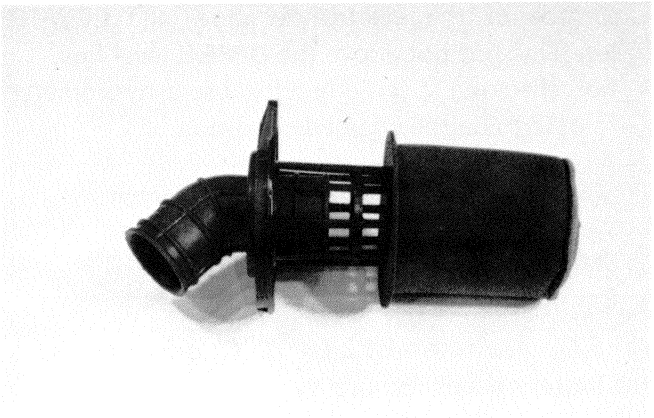

CAUTION:
Before and during the cleaning operation, carefully examine the element for any tears in the material. A torn element must be replaced with a new one.

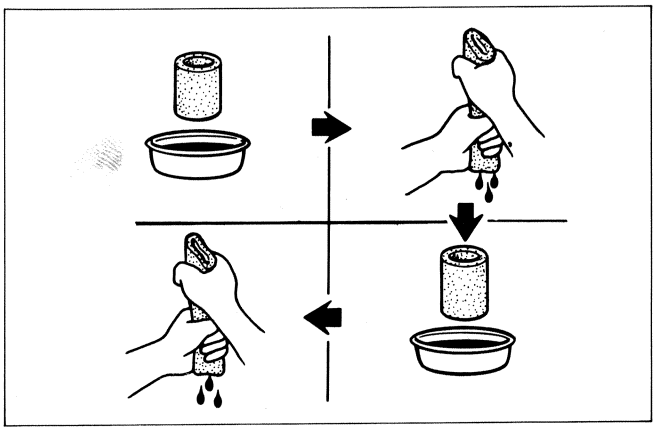

CAUTION:
If driving under dusty conditions, the air cleaner element must be cleaned more frequently. NEVER OPERATE THE ENGINE WITHOUT THE ELEMENT IN POSITION. Operating the engine without the air cleaner element will increase engine wear. Always be sure that the air cleaner element is in excellent operational condition at all times. The life of the engine depends largely on this single component.

Reinstall the cleaned element in reverse order of removal and carry out the following steps. Be absorutely sure that the element is securely in position.

- Install the element fame into the air cleaner case groove.

VALVE CLEARANCE

Inspect Initial 1 000 km (600 mi) and Every 6 000 km (4 000 mi)

The valve clearance specification is the same for both intake and exhaust valves.

Valve clearance adjustment must be checked and adjusted 1) at the time of periodic inspection, 2) when the valve mechanism is serviced, and 3) when the camshafts are disturbed by removing them for servicing.

Valve clearance (when cold)	0.09–0.13 mm (0.004–0.005 in)

- Remove the fairing covers.
- Remove the fairing retaining screws and take off the fairing.
- Disconnect the headlight and turn signal lead wires.
- Remove the ignition coil and coil cap.
- Loosen and remove the fairing mounting bolts, and then take off the fairing bracket.
- Remove the fuel tank.
- Remove the breather pipe from the cylinder head cover cap.
- Remove the cylinder head cover.

NOTE:
- **The cam must be at position Ⓐ or Ⓑ in order to check the valve clearance or to adjust valve clearance. Clearance readings should not be taken with the cam in any other position than this Ⓐ position.**
- **The clearance specification is for COLD state.**
- **To turn the crankshaft for clearance checking, be sure to use a 19-mm wrench and to rotate in normal running derection. All spark plugs should be removed.**

- Turn the crankshaft to bring the "T" mark on the signal generator to timing mark on the Nos. 1 and 4 pick up coil and also bring the notches ① in the both camshaft (EX and IN) of the right ends to the position as shown. In this condition, read the valve clearance at the valves Ⓒ (IN and EX of No. 1 cylinder, EX of No. 2 and IN of No. 3).

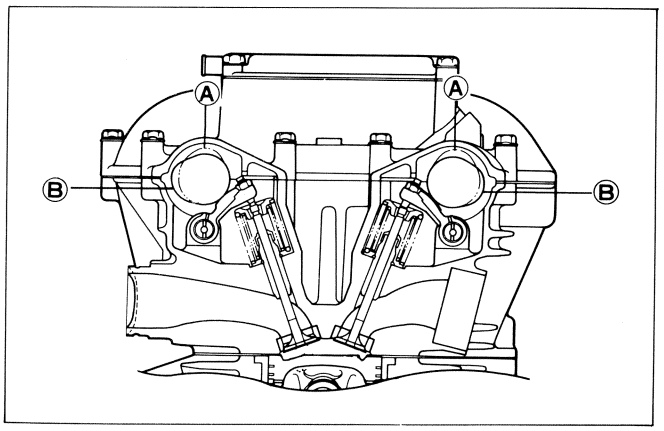

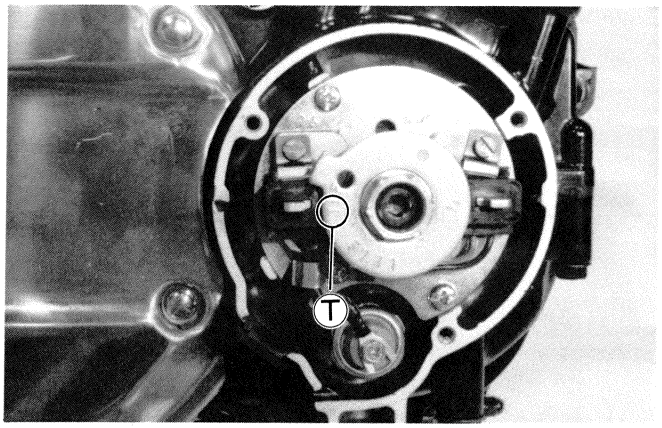

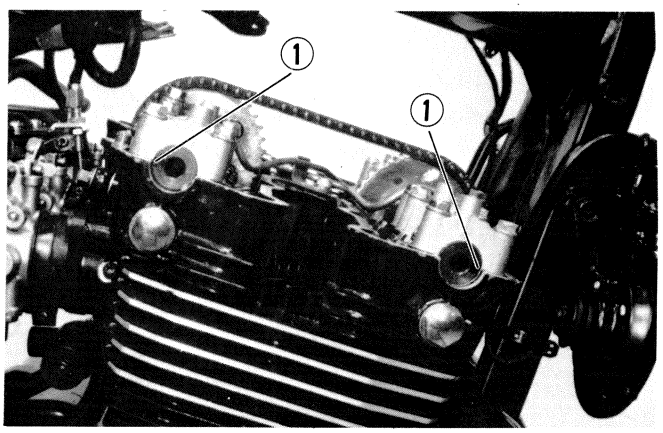

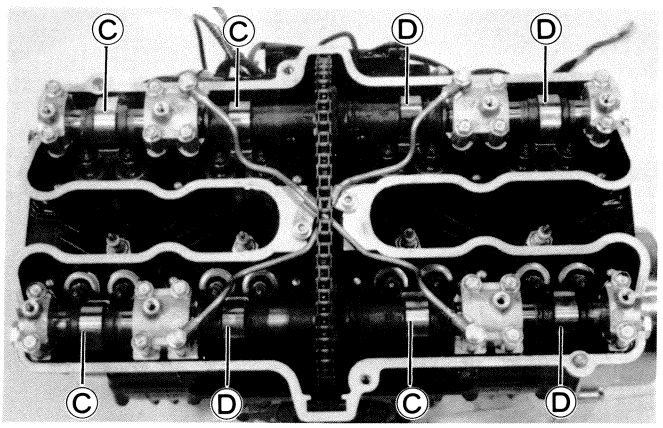

- Use thickness gauge between rocker arm and valve. If clearance is off the specification, bring it into the specified range by using the tappet adjusting driver ② .

09900-20803	Thickness gauge
09917-14910	Tappet adjust driver

- Rotate the crankshaft in the clockwise direction 360° and realign the "T 1.4" mark. In this position the notches in the right ends of the camshafts should be facing towards each other. The valves Ⓓ can be checked and adjusted if necessary.

	Notch ① position	
Cam Position	Intake Camshaft	Exhaust Camshaft
Ⓒ	⊖	⊖
Ⓓ	⊖	⊖

NOTE:
The cylinder head cover gasket should be replaced with new one whenever valve adjustment is performed. A thin film of SUZUKI Bond No. 1207B on cylinder head cover groove and gasket will ensure an oil tight seal. The O-ring, utilized under the ten special cap bolts that help ensure an oil leakage, should also be replaced with new one at this time.

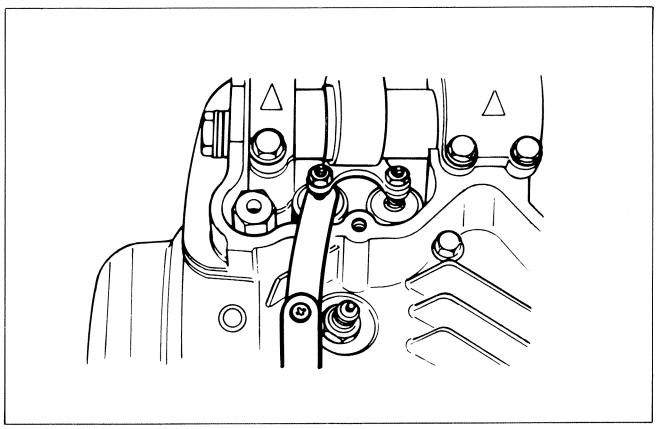

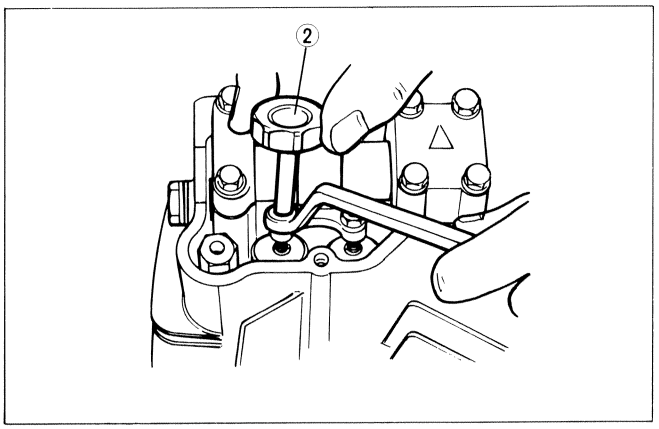

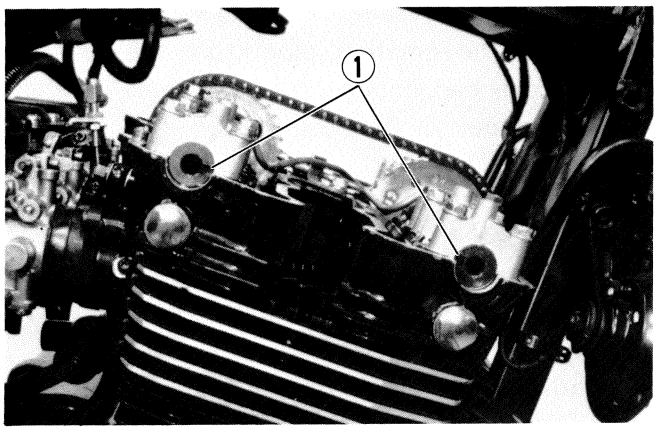

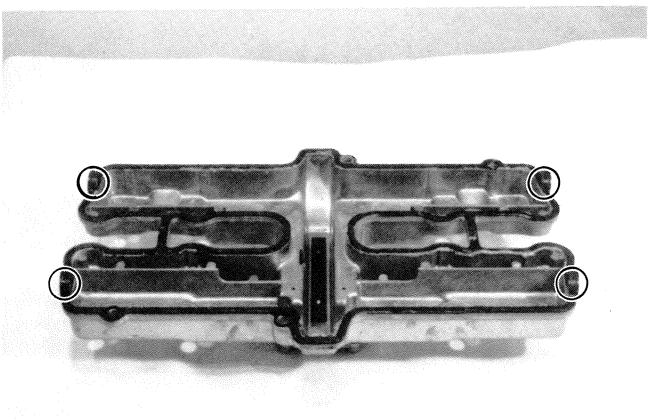

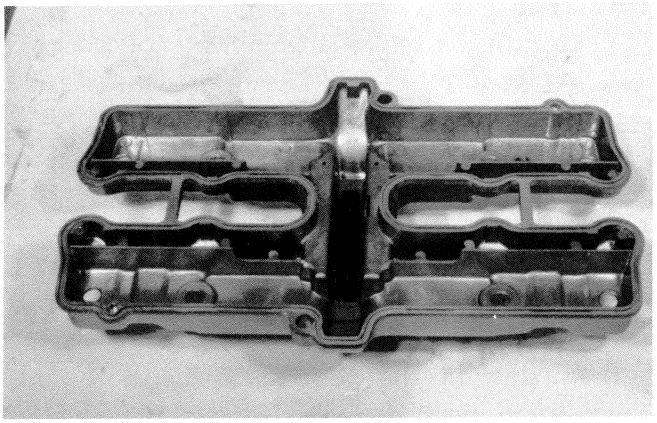

SPARK PLUG

Clean and Adjust Every 6 000 km (4 000 mi), Replace Every 12 000 km (7 500 mi)

The plug gap is adjusted to 0.6 – 0.7 mm (0.024 – 0.028 in). The gap is correctly adjusted using a thickness gauge (special tool). When carbon is deposited on the spark plug, remove the carbon with a spark plug cleaning machine. If electrodes are extremely worn or burnt, replace the plug. Also replace the plug if it has a broken insulator, damaged thread, etc.

09930-13210	Socket wrench
09930-14530	Universal joint
09914-24510	T handle
09900-20803	Thickness gauge

NGK D8EA or NIPPON DENSO X24ES-U listed in the table should be used as the standard plug. However, the heat range of the plug should be selected to meet the requirements of speed, actual load, fuel, etc. If the plugs need to be replaced, it is recommended that ones having a heat range closest to the standard plug in the table be selected.
Remove the plugs and inspect the insulators. Proper heat range would be indicated if all insulators were light brown in color. If they are blackened by carbon, they should be replaced by a hot type NGK D7EA or NIPPON DENSO X22ES-U and if backed white, by NGK D9EA or NIPPON DENSO X27ES-U.
Plugs with high heat range number are used for high speed running. These plugs are designed to be sufficiently cooled to prevent overheating and are called cold type plugs.

NOTE:
To check the spark plugs, keep the engine running on unleaded gasoline, and after test ride if the plugs are either sooty with carbon or burnt white, replace them altogether.

CAUTION:
Confirm the thread size and reach when replacing the plug. If the reach is too short, carbon will be deposited on the screw portion of the plug hole and the engine will be damaged.

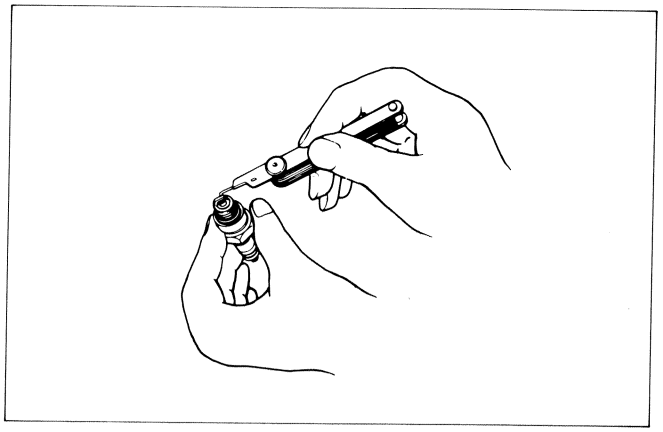

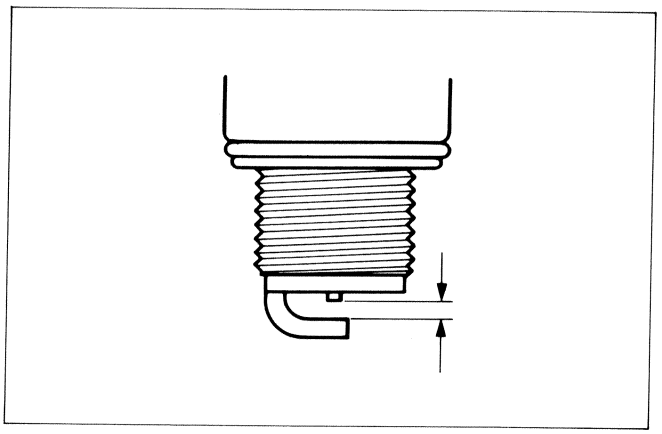

NGK	NIPPON DENSO	REMARKS
D7EA	X22ES-U	If the standard plug is apt to get wet, replace with this plug. Hot type.
D8EA	**X24ES-U**	**Standard**
D9EA	X27ES-U	If the standard plug is apt to overheat, replace with this plug. Cold type.

CARBURETOR

Inspect Initial 1 000 km (600 mi) and Every 6 000 km (4 000 mi)

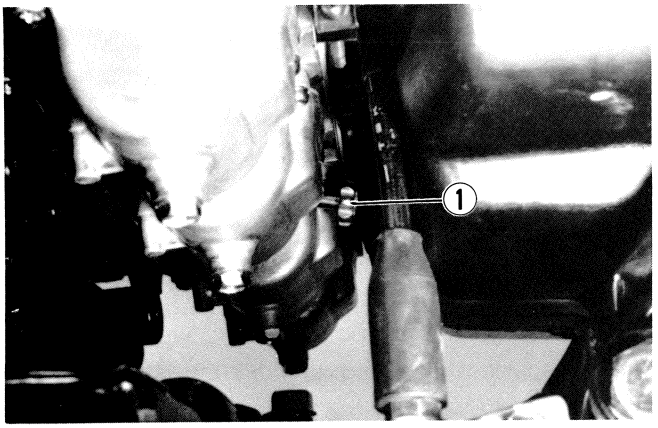

IDLING ADJUSTMENT

NOTE:
Make this adjustment when the engine is hot.

- Set idle rpm at anywhere between 1 100 and 1 200 r/min by turning throttle stop screw ① .

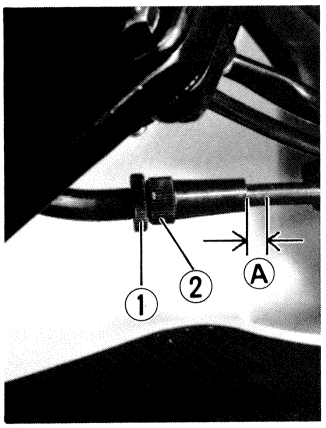

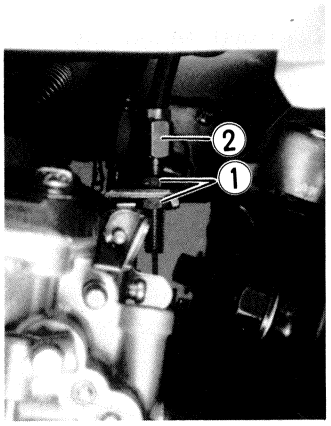

THROTTLE CABLE PLAY

There should be 0.5 – 1.0 mm (0.02 – 0.04 in) play Ⓐ on the throttle cable. To adjust the throttle cable play:

- Loosen the lock nut ① and turn the adjuster ② fully in on the lock nut side.
- Tug on the throttle cable to check the amount of play.
- Loosen the lock nut ① and turn the adjuster ② in or out until the specified play is obtained.

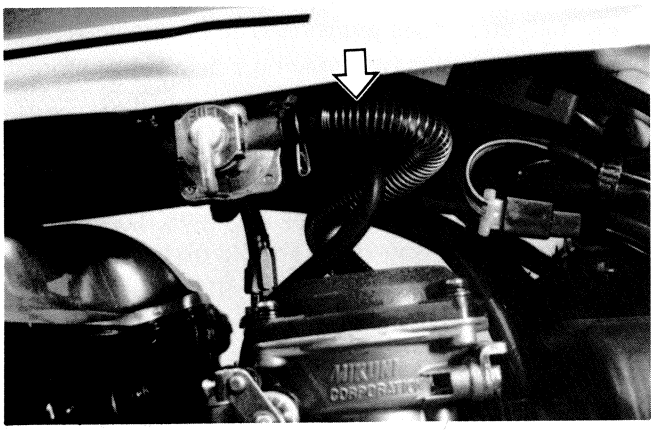

FUEL LINE

Replace every four years

ENGINE OIL AND OIL FILTER

Change Initial 1 000 km (600 mi) and Every 6 000 km (4 000 mi)

ENGINE OIL

The oil should be changed while the engine is hot.

- Keep the motorcycle upright, supported on the center stand.
- Place an oil pan below the engine and drain the oil by removing drain plug ① and filler cap ② .

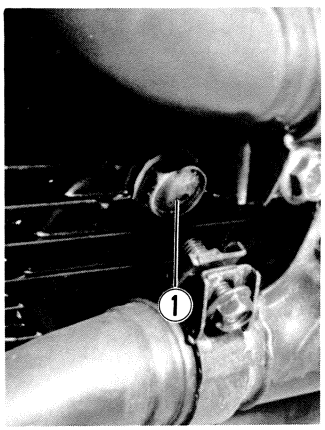

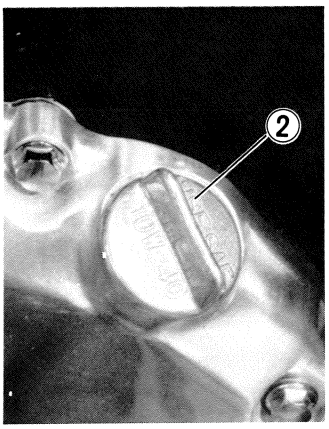

- Fit drain plug ① securely, and add fresh oil through the filler. The engine will hold about 3.2 L (3.4 US qt) of oil.
  Use API classification of SF or SE oil with SAE 10W/40 viscosity.
- Start up the engine and allow it to run for several seconds at idling speed.
- Turn off the engine and wait about one minute, then check the oil level through the inspection window ③ . If the level is below mark "F", supply oil to that level.

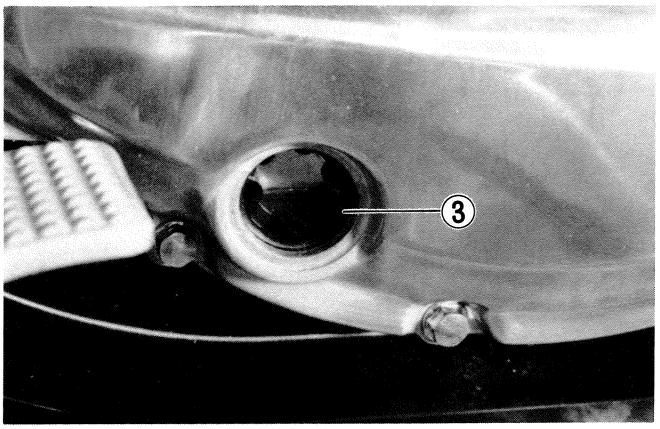

ENGINE OIL FILTER

Oil filter replacement at the above intervals should be done together with engine oil change. After draining engine oil and securely tightening the engine oil drain plug, perform the following:

- Remove three nuts ④ and remove the cover and drain oil.
- Pull out old filter ⑤ , and replace with new one.
- Replace O-ring and filter cover, and secure nuts ④ with applying thread lock cement.

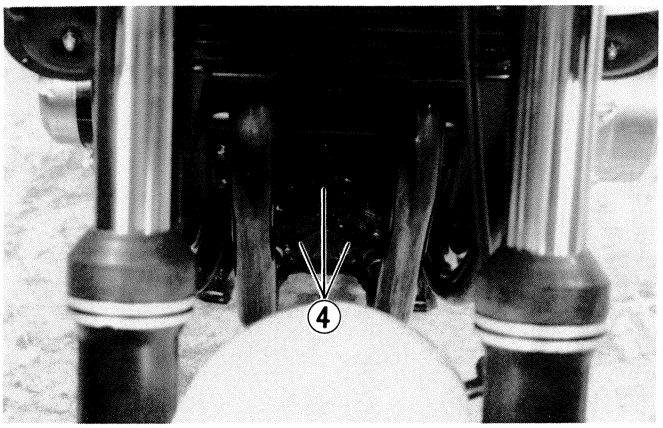

99000-32040	Thread lock cement

NECESSARY AMOUNT OF ENGINE OIL

Oil change	3.2 L (3.38 US qt)
Filter change	3.8 L (4.02 US qt)
Overhaul engine	4.0 L (4.23 US qt)

NOTE:
Be sure to take care of O-ring ⑥ to prevent any damage.

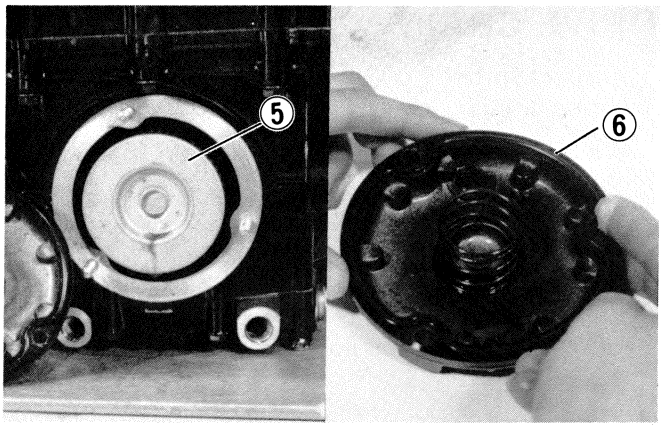

CLUTCH

Inspect Initial 1 000 km (600 mi) and Every 6 000 km (4 000 mi)

- Loosen lock nut ① on the lever side of the clutch cable and screw adjust nut ② fully in on the clutch lever side.

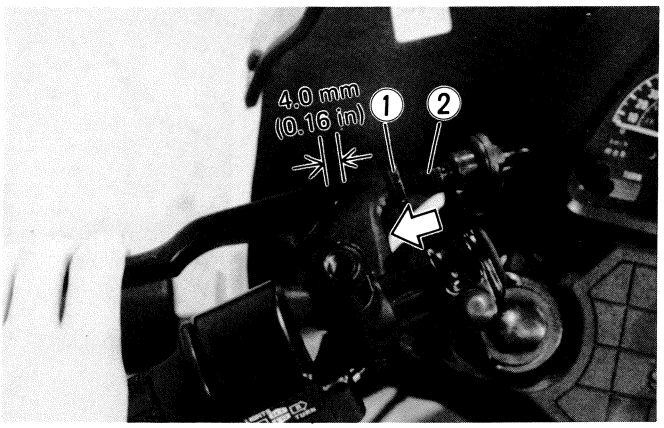

- Loosen the lock nut ③ and adjust the clutch play by turning the adjuster ④ in or out to acquire the specified play 4 mm (0.16 in).
- Tighten the lock nut while holding the adjuster in position.
- Temporarily loosen the lock nut ⑤ and tighten the release adjusting screw ⑥ until resistance is felt, then loosen it 1/4 – 1/2 turn.
- Secure the lock nut ⑤ .

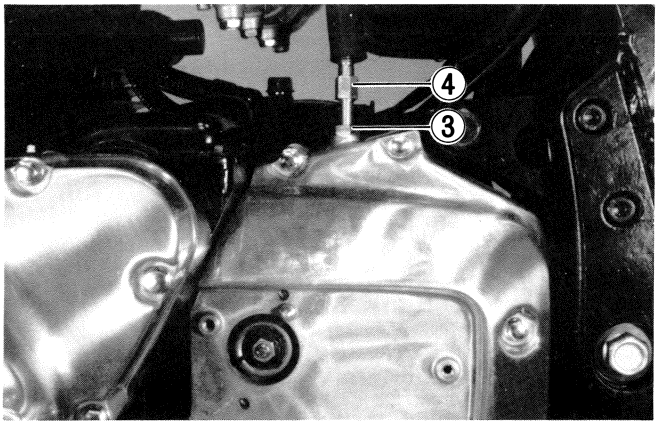

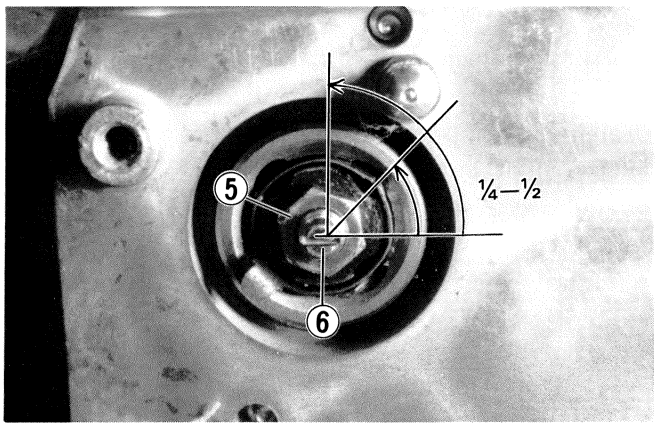

DRIVE CHAIN

Inspect Initial 1 000 km (600 mi) and Every 6 000 km (4 000 mi)
Clean and Lubricate Every 1 000 km (600 mi)

Visually check the drive chain for the below-listed possible malconditions. (Set up the machine on its center stand, and turn the rear wheel slowly by hand with the transmission shifted to Neutral.)

* Loose pins
* Damaged rollers
* Dry or rusted links
* Kinked or binding links
* Excessive wear
* Improper chain adjustment
* Missing O-rings

If any defects are found, the drive chain must be replaced.

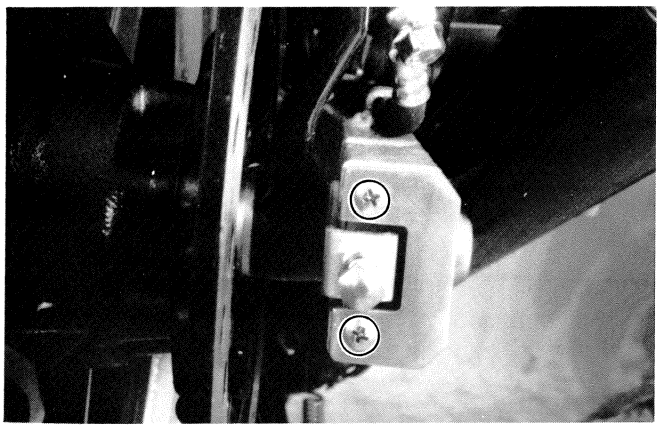

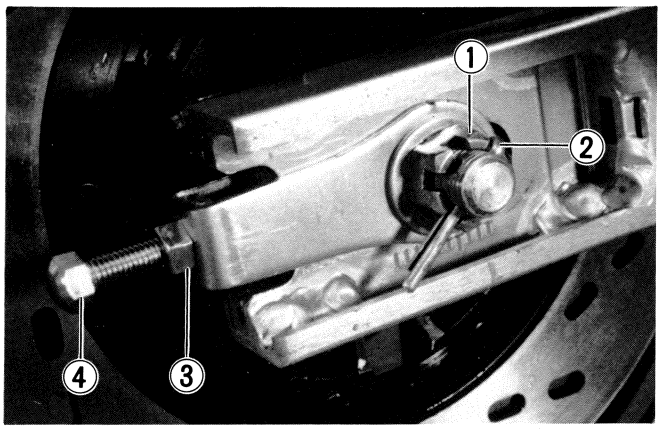

CHECKING

- Remove the axle cap by unscrewing the two screws.
- Loosen axle nut ① after pulling out cotter pin ② .
- Loosen chain adjuster support bolt ③ .
- Tense the drive chain fully by tightening the adjusters ④ .
- Remove the chain case. Count out 21 pins (20 pitch) on the chain and measure the distance between the two. If the distance exceeds following limit, the chain must be replaced.

Service Limit	319 mm (12.6 in)

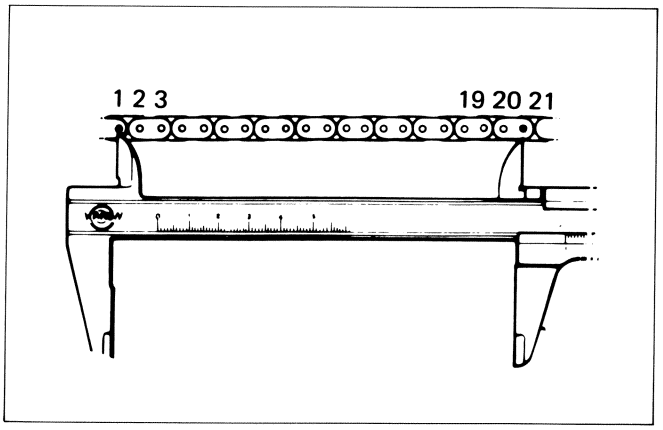

ADJUSTING

- Loosen the adjuster ④ until the chain has 30 – 40 mm (1.2 – 1.6 in) of sag at the middle between engine and rear sprockets. The mark ⑤ on both chain adjusters must be at the same position on the scale to ensure that the front and rear wheels are correctly aligned. Place on center stand for accurate adjustment.

Standard	30 – 40 mm (1.2 – 1.6 in)

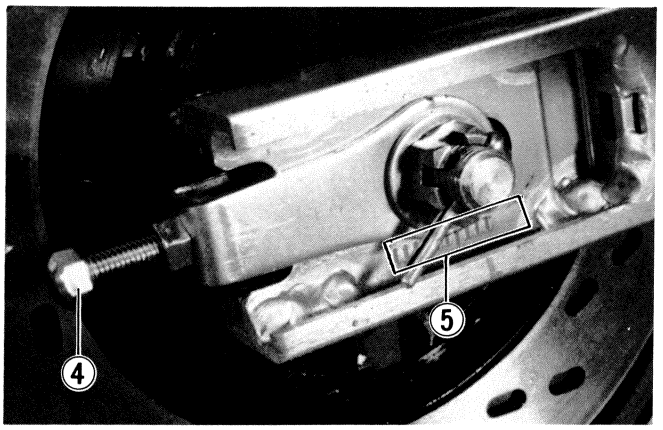

- After adjusting the drive chain, tighten the axle nut ① securely, and lock with cotter pin ② . Always use a new cotter pin.
- Tighten the chain adjuster support bolts and adjuster lock nuts good and hard.

Rear axle nut tightening torque	8.5 – 11.5 kg-m (61.5 – 83.0 lb-ft)

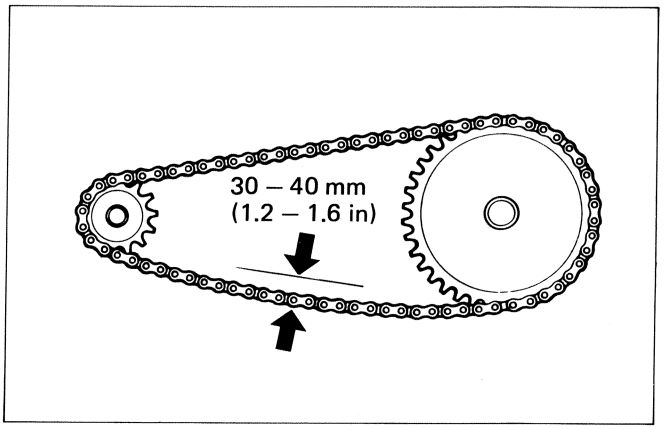

CLEANING AND LUBRICATING

Wash the chain with kerosene. If the chain tends to rust faster, the intervals must be shortened.

CAUTION:
Do not use trichlene, gasoline or any similar fluids. These fluids have too great a dissolving power for this chain and, what is more important, can spoil the "O" rings confining the grease in the bush-to-pin clearance. Remember, high durability comes from the presence of grease in that clearance.

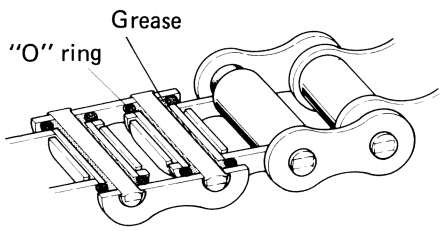

After washing and drying the chain, oil it with a heavy-weight motor oil.

CAUTION:
Do not use any oil sold commercially as "drive chain oil". Such oil too can spoil the "O" rings.

CAUTION:
The standard drive chain is DAIDO D.I.D.50V or TAKASAGO RK50GO. SUZUKI recommends that the above-mentioned standard drive chain be used for the replacement.

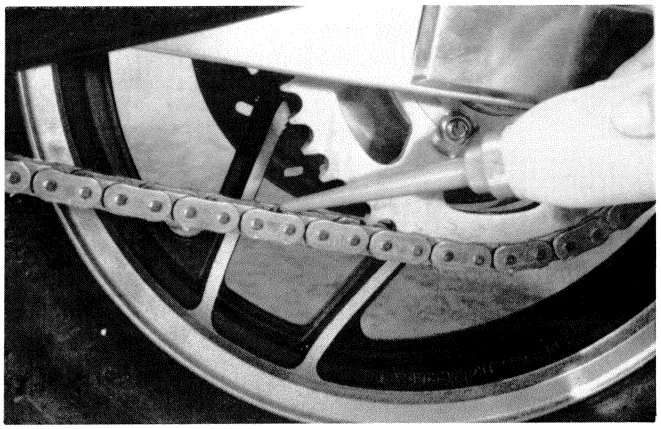

BRAKES

Inspect Initial 1 000 km (600 mi) and
Every 6 000 km (4 000 mi)
Replace hose Every four years
Change fluid Every two years

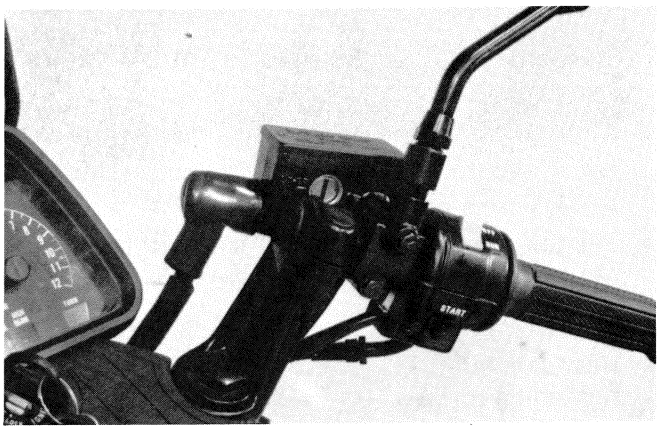

BRAKE FLUID LEVEL

- Support the motorcycle body on the center stand and place the handlebars straight.
- Remove the right frame cover.
- Check the brake fluid level by observing the upper and lower limit lines on the brake fluid reservoirs, both front and rear.
- When the level is below the lower limit line, replenish with brake fluid that meets the following specification.

Specification and Classification	DOT3, DOT4

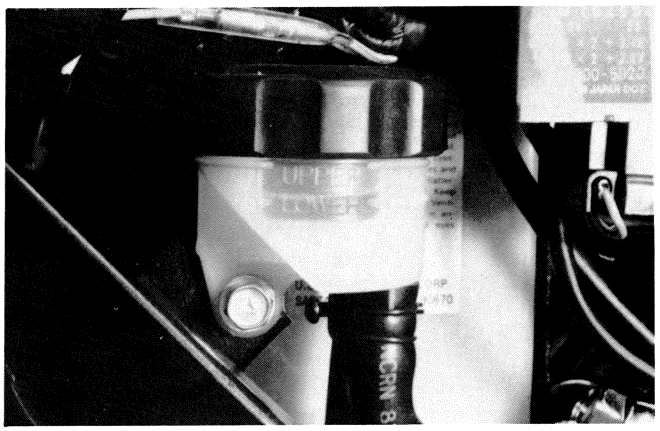

CAUTION:
The brake system of this motorcycle is filled with a glycol-based brake fluid. Do not use or mix different types of fluid such as silicone-based and petroleum-based fluid for refilling the system, otherwise serious damage will be caused. Do not use any brake fluid taken from old or used or unsealed containers. Never re-use the brake fluid left over from the last servicing and stored for long periods.

WARNING:
Brake fluid, if it leaks, will interfere with safe running and discolor painted surfaces. Check the brake hose for cracks and hose joint for leakage before riding.

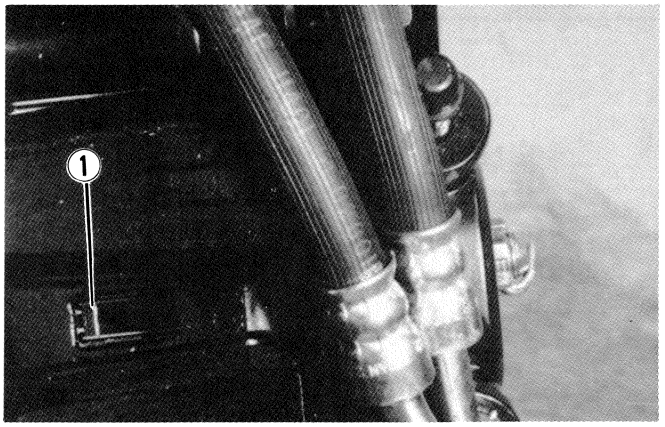

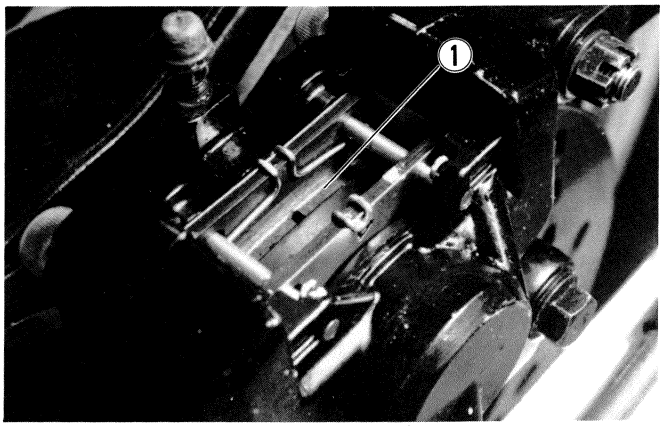

BRAKE PADS

Wearing condition of brake pads can be checked by observing the red limit line ① marked on the each pad. When the wear exceeds the limit line, replace the pads with new ones. (see page 7-25)

BRAKE PEDAL HEIGHT

- Loosen lock nut ①, and turn stopper bolt ② away from the stopper.
- Loosen lock nut ③, and rotate push rod ④ to locate brake pedal 40 mm (1.6 in) below the top face of the footrest.
- Turn the stopper bolt ② in so that the clearance between the stopper bolt and stopper is zero.
- Retighten both lock nuts ① and ③.

Brake pedal height	40 mm (1.6 in)

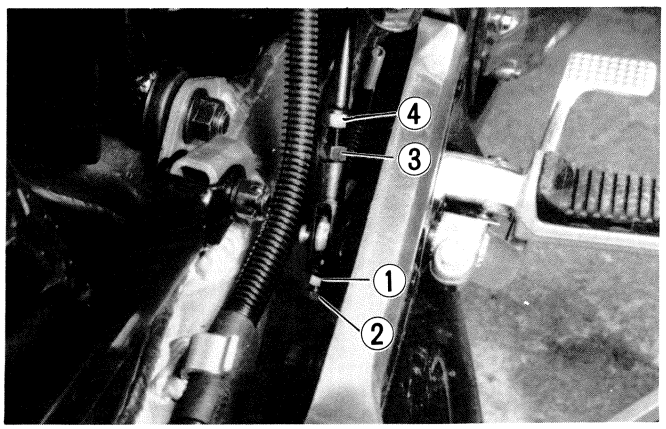

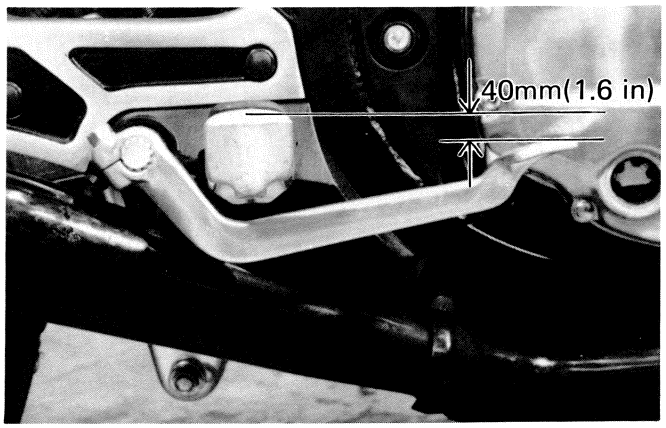

BRAKE LIGHT SWITCHES

Adjust both brake light switches, front and rear, so that brake light will come on just before a pressure is felt when the brake lever is squeezed, or the brake pedal is depressed.

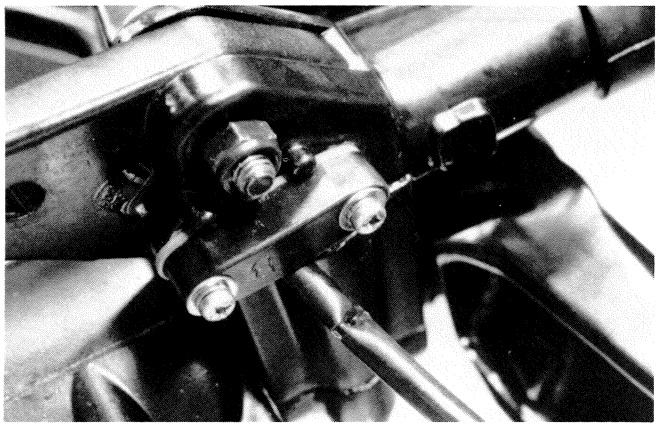

AIR BLEEDING THE BRAKE FLUID CIRCUIT

Air trapped in the fluid circuit acts like a cushion to absorb a large proportion of the pressure developed by the master cylinder and thus interferes with the full braking performance of the caliper brake. The presence of air is indicated by "sponginess" of the brake lever and also by lack of braking force. It is essential that, after remounting the brake and restoring the brake system to the normal condition, the brake fluid circuit be purged of air in the following manner:

- Fill up the master cylinder reservoir to the "HIGH" level line. Replace the reservoir cap to prevent entry of dirt.
- Attach a pipe to the bleeder valve, and insert the free end of the pipe into a receptacle.

Bleeder valve tightening torque	0.6 – 0.9 kg-m (4.5 – 6.5 lb-ft)

- Bleed the air as following order. Always start with the left side.
  ① Left anti-dive ⟶ ② Left caliper ⟶
  ③ Right anti-dive ⟶ ④ Right caliper
- Squeeze and release the brake lever several times in rapid succession, and squeeze the lever fully without releasing it. Loosen the bleeder valve by turning it a quarter of a turn or so that the brake fluid runs into the receptacle; this will remove the tension of the brake lever causing it to touch the handlebar grip. Then, close the valve, pump and squeeze the lever, and open the valve. Repeat this process until the fluid flowing into the receptacle no longer contains air bubbles.

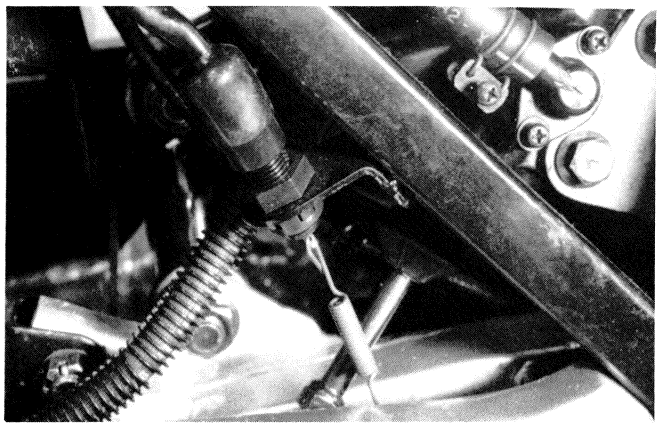

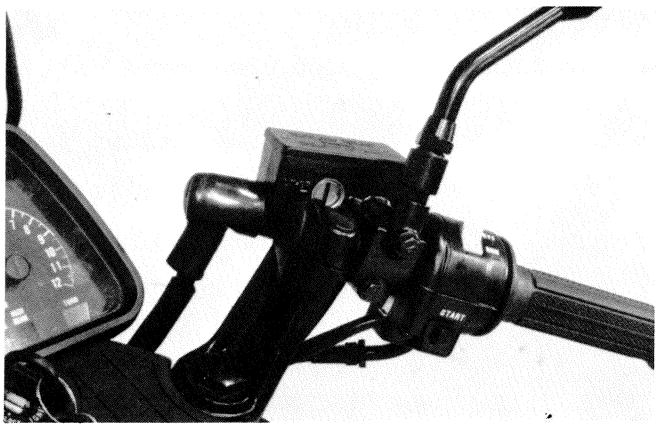

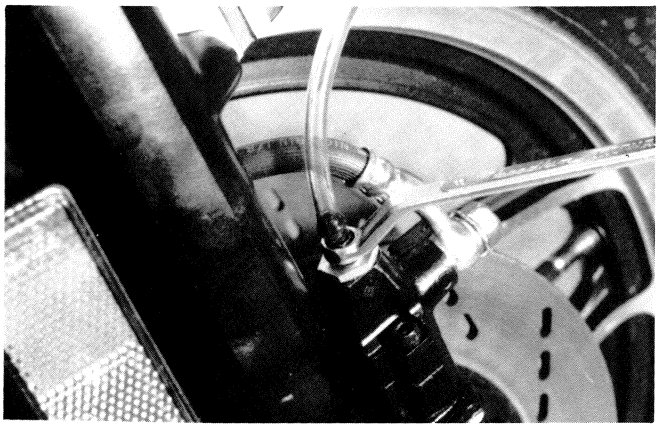

It is common for air to become "trapped" in the extra hoses or valves of the anti-dive system. Repeating the sequence of brake bleeding will remove most of this air. If the lever feel is still spongy after several bleeding sequences it may be necessary to remove the anti-dive modulator from the anti-dive assembly. This will allow the modulator from the anti-dive assembly. This will allow the modulator to be "tipped" upwards, enabling the trapped air to be purged from the system.

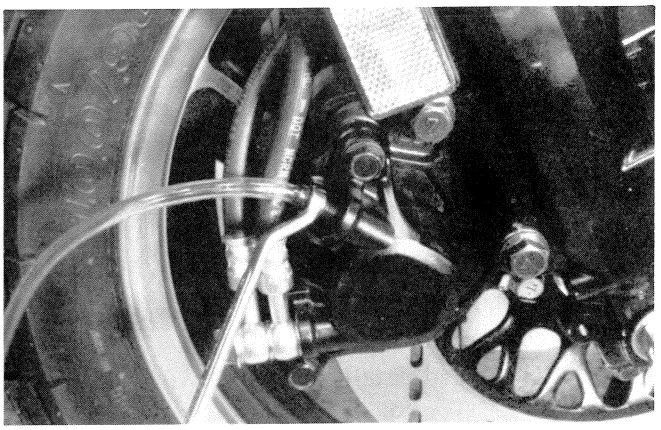

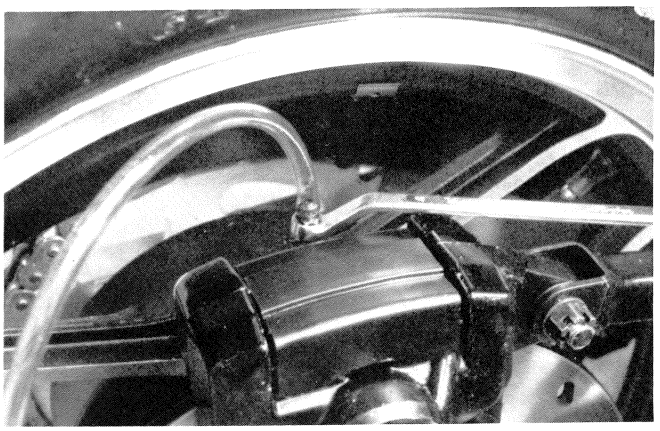

> CAUTION:
> **Be certain to retorque the modulator mounting screws after remounting onto the anti-dive assembly body. Thread lock cement (99000-32040) should be used when reinstalling the bolts. (Refer to page 7-16)**

> NOTE:
> **Replenish the brake fluid reservoir as necessary while bleeding the brake system. Make sure that there is always some fluid visible in the reservoir.**

- Close the bleeder valve, and disconnect the pipe. Fill the reservoir to the "HIGH" level line.

> CAUTION:
> **Handle the brake fluid with care: the fluid reacts chemically with paint, plastics, rubber materials, etc.**

- Differences between front and rear are that the master cylinder is actuated by a pedal.

CYLINDER HEAD NUTS AND EXHAUST PIPE BOLTS

> **Tighten initial 1 000 km (600 mile) and every 6 000 km (4 000 mile)**

TIGHTENING TORQUE

	kg-m	lb-ft
Cylinder head nut	3.5 – 4.0	25.5 – 29.0
Cylinder head bolt	0.8 – 1.2	6.0 – 8.5
Exhaust pipe bolt	1.0 – 1.6	7.0 – 11.5
Muttler mounting bolt	2.2 – 3.5	16.0 – 25.5

TIRES

Inspect Initial 1 000 km (600 mi) and Every 6 000 km (4 000 mi)

TIRE TREAD CONDITION

Operating the motorcycle with excessively worn tires will decrease riding stability and consequently invite a dangerous situation. It is highly recommended to replace the tire when the remaining depth of tire tread reaches the following specifications.

FRONT	REAR
1.6 mm (0.06 in)	2.0 mm (0.08 in)

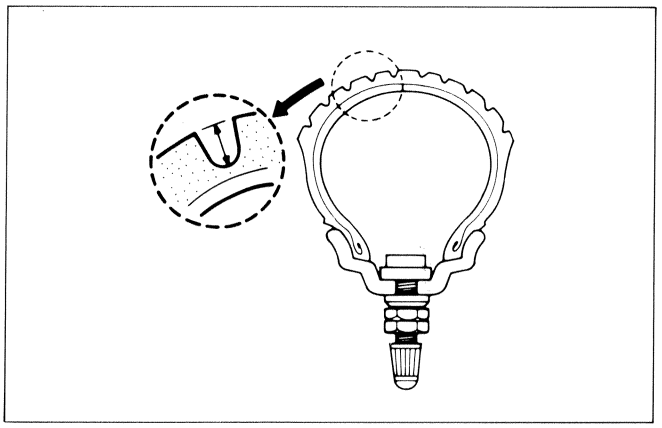

TIRE PRESSURE

If the tire pressure is too high or too low, steering will be adversely affected and tire wear increased. Therefore, maintain the correct tire pressure for good roadability or shorter tire life will result. Cold inflation tire pressure is as follows.

	Normal riding				High speed riding			
	Solo		Dual		Solo		Dual	
	kg/cm²	psi	kg/cm²	psi	kg/cm²	psi	kg/cm²	psi
FRONT	2.00	28	2.25	32	2.00	28	2.00	28
REAR	2.50	36	2.80	40	2.25	32	2.80	40

CAUTION:
The standard tire fitted on this motorcycle is 100/90-16 54H for front and 120/90-17 64H for rear. The use of a tire other than the standard may cause instability. It is highly recommended to use a SUZUKI Genuine Tire.

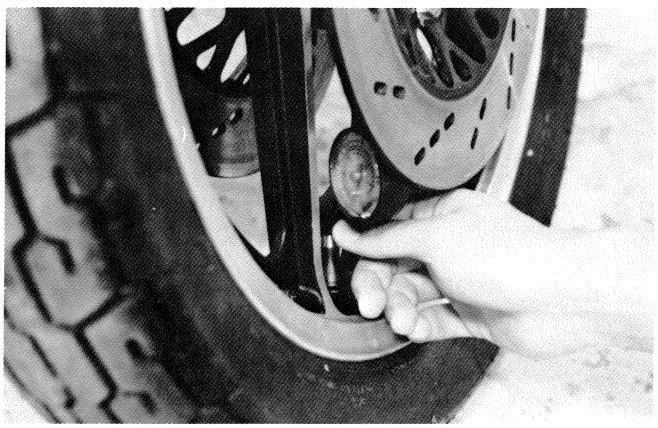

STEERING STEM

Inspect Initial 1 000 km (600 mi) and Every 6 000 km (4 000 mi)

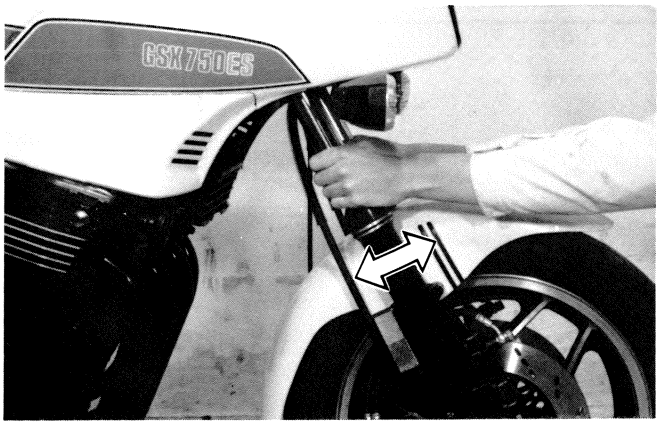

Taper roller type bearing are applied on the steering system for better handling.
Steering should be adjusted properly for smooth manipulation of handlebars and safe running. Too stiff steering prevents smooth manipulation of handlebars and too loose steering will cause poor stability.
Check that there is no play in the front fork assembly by supporting the machine so that the front wheel is off the ground, with wheel straight ahead, grasp lower fork tubes near the axle and pull forward. If play is found, perform steering bearing adjustment as described in page 7-31 of this manual.

FRONT FORK

Inspect Every 12 000 km (7 500 miles)
Check air pressure Every 6 months

FRONT FORK OIL

- Place a jack under the engine and lift the front wheel off the floor and remove the front wheel.
- Remove the front fender.
- Remove front fork top caps ① , both right and left.
- Unscrew front fork oil drain bolts ② , right and left, and drain oil in the fork tube completely by moving the front fork outer tube up and down.
- Loosen the lower clamp bolts and remove the front fork assembly. (See page 7-8)
- Mount the drain screw and washer onto the outer tube and pour specified amount of oil into the top of the inner tube.

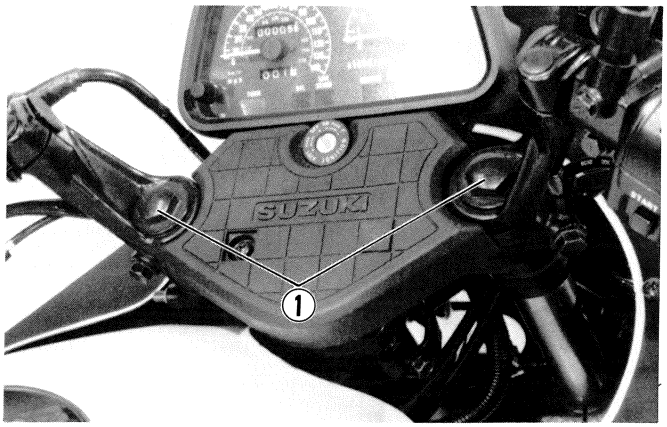

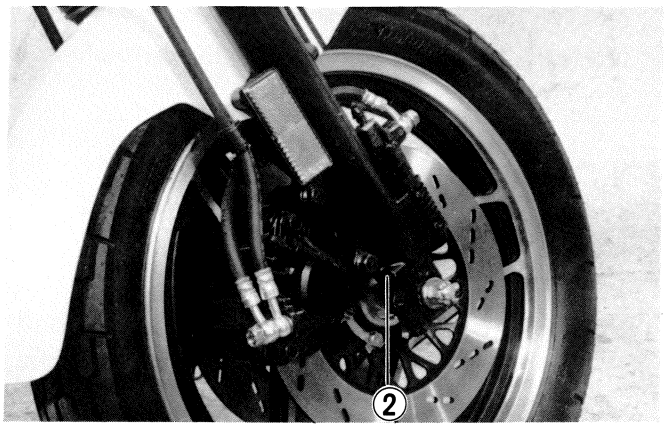

Specified amount (each leg)	308 ml (10.4 US oz)

Specification	Fork oil #10

TIGHTENING TORQUE

Item	kg-m	lb-ft
Handlebar clamp bolt	1.5 – 2.0	11.0 – 14.5
Handlebar mounting bolt	2.5 – 3.5	18.0 – 25.5
Upper clamp bolt	1.5 – 2.0	11.0 – 14.5
Fork top cap	2.5 – 3.0	18.0 – 21.5
Steering stem head bolt	2.0 – 3.0	14.5 – 21.5
Steering stem clamp bolt	1.5 – 2.5	11.0 – 18.0

FRONT FORK AIR PRESSURE

Check the front fork air pressure, when the fork is cold.

- Place the motorcycle on the center stand and keep the front wheel off the ground.
- Measure the air pressure by placing the pressure gauge on the valve as shown.

09940-44120	Air pressure gauge

Standard air pressure	0.2 kg/cm^2 (2.84 psi)

- If necessary, use a hand air pump to raise the front air pressure. (See page 7-18).

CAUTION:
Do not exceed 2.5kg/cm^2 (35 psi) when servicing.

NOTE:
Just before charging air confirm that the valve is tight.

Inspect the front fork for oil leakage, scoring and scratches on the outer surface of the inner tube and replace the defective parts, if necessary.

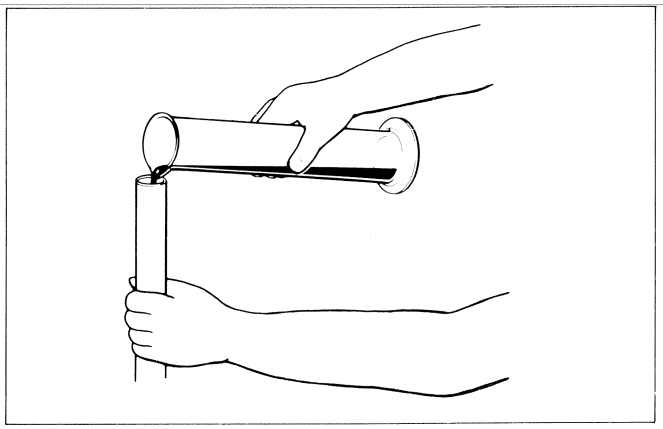

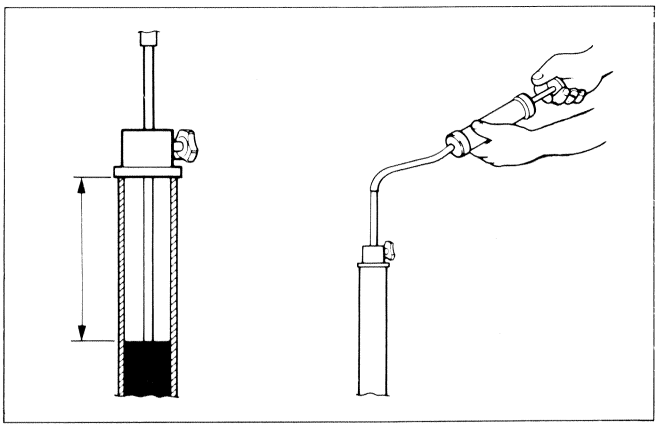

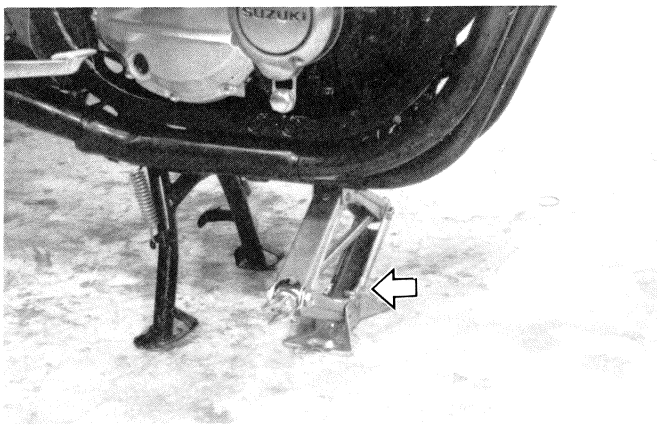

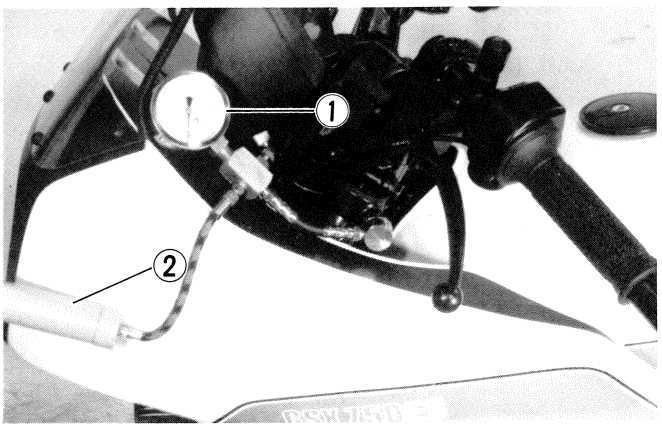

① Air pressure gauge
② Hand air pump

CHASSIS BOLTS AND NUTS

Inspect Initial 1 000 km (600 mi) and Every 6 000 km (4 000 mi)

The bolts and nuts listed hereunder are important safety parts. They must be retightened, as necessary, to the specified torque with a torque wrench. Refer to the photograph for position of the following bolts and nuts.

	ITEM		kg-m	lb-ft
①	Front axle nut		3.6 – 5.2	26.0 – 37.5
②	Front axle holder nut		1.5 – 2.5	11.0 – 18.0
③	Disc plate bolt		1.5 – 2.5	11.0 – 18.0
④	Front caliper mounting bolt		2.5 – 4.0	18.0 – 29.0
⑤	Caliper axle bolt		2.5 – 3.5	18.0 – 25.5
⑥	Front fork lower clamp bolt		1.5 – 2.5	11.0 – 18.0
⑦	Front fork upper clamp bolt		2.0 – 3.0	14.5 – 21.5
⑧	Steering stem clamp bolt		1.5 – 2.5	11.0 – 18.0
⑨	Steering stem head bolt		2.0 – 3.0	14.5 – 21.5
⑩	Handlebar clamp bolt		1.2 – 2.0	14.5 – 21.5
⑪	Brake hose union bolt		2.0 – 2.5	14.5 – 18.0
⑫	Master cylinder clamp bolt		0.5 – 0.8	3.5 – 6.0
⑬	Brake pedal arm bolt		0.6 – 0.7	4.5 – 5.0
⑭	Swing arm pivot bolt lock nut		5.0 – 8.0	36.0 – 58.0
⑮	Torque link nut		2.0 – 3.0	14.5 – 21.5
⑯	Rear axle nut		5.0 – 8.0	36.0 – 58.0
⑰	Modulator planger bolt		0.3 – 0.5	2.0 – 3.5
⑱	Modulator valve bolt		0.6 – 0.9	4.5 – 6.5
⑲	Rear caliper bolt		2.0 – 3.0	14.5 – 21.5
⑳	Rear cushion lever bolt		7.0 – 10.0	50.5 – 72.5
㉑	Rear cushion rod upper and lower bolts		1.8 – 2.8	13.0 – 20.0
㉒	Rear master cylinder mounting bolt		4.0 – 6.0	29.0 – 43.5
㉓	Rear shock absorber unit fitting	Lower	4.0 – 6.0	29.0 – 43.5
㉔		Upper	4.8 – 7.2	34.5 – 52.0
㉕	Handlebar holder mounting bolts		2.5 – 3.5	18.0 – 25.5

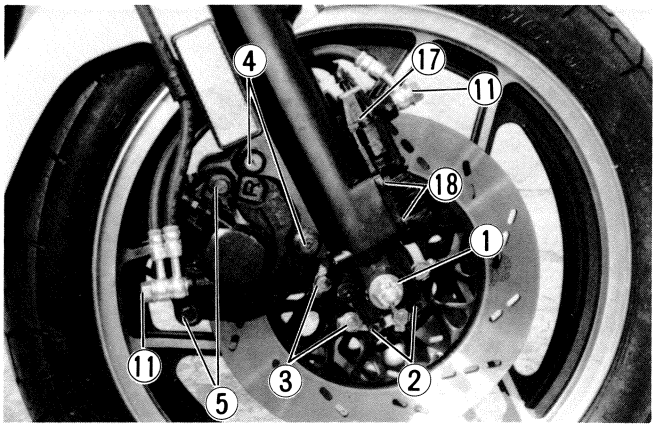

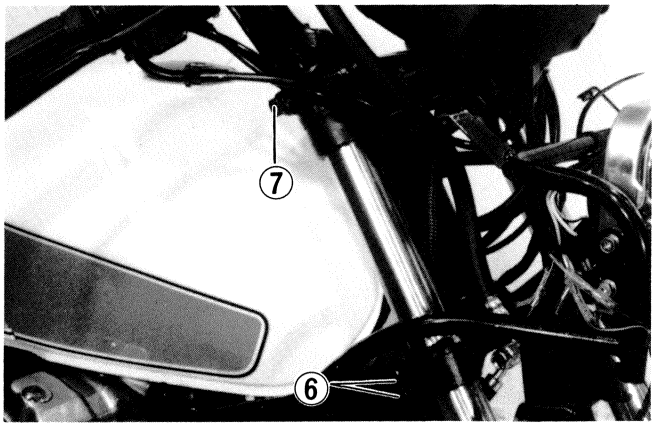

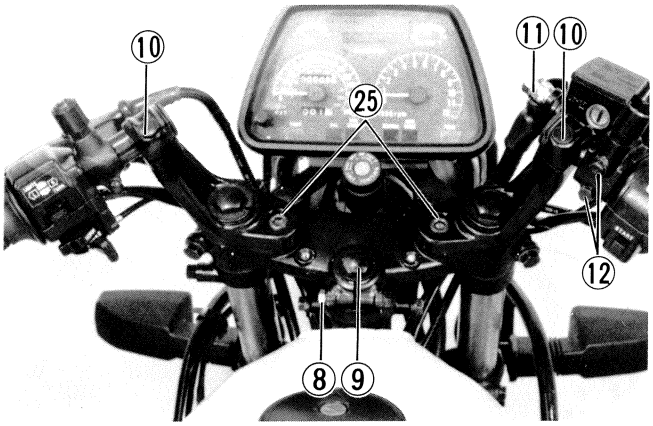

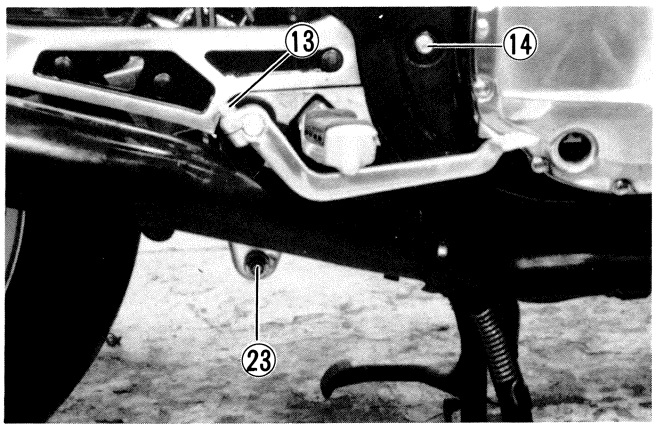

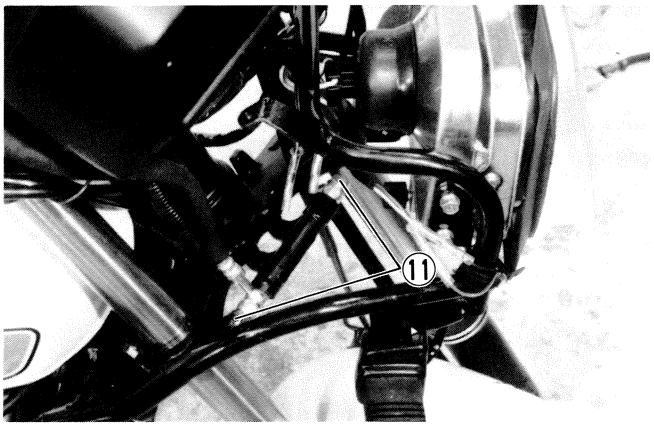
11

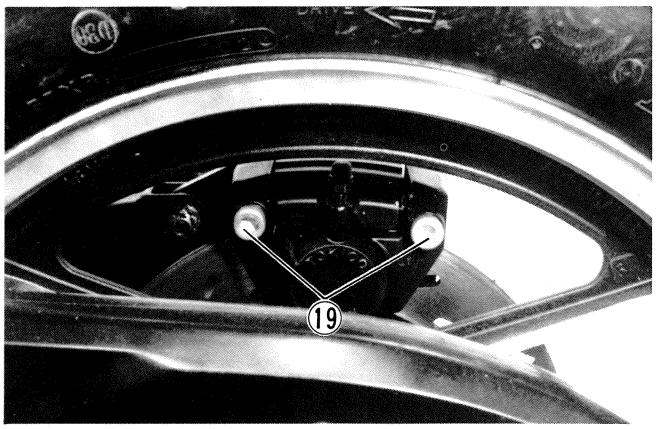
19

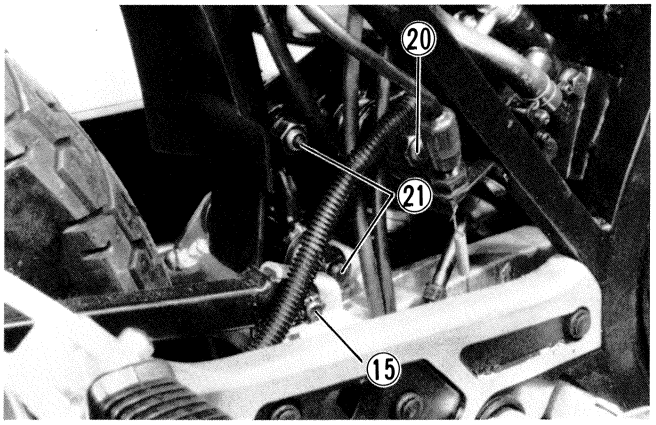
20
21
15

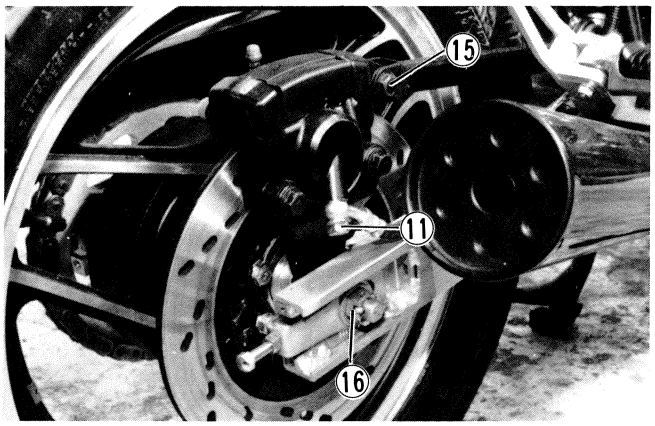
15
11
16

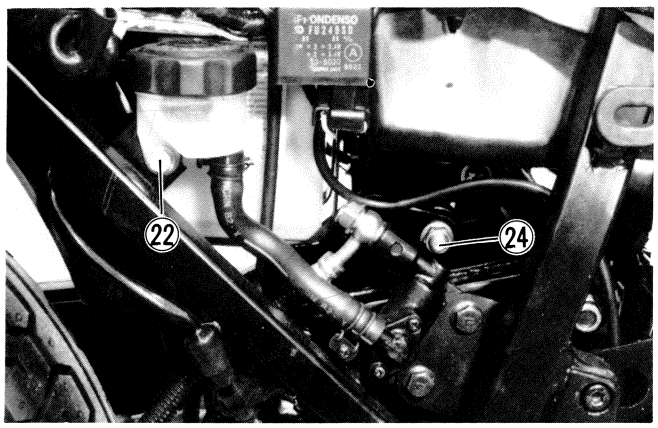
22
24

SERVICING ENGINE

CONTENTS

COMPRESSION CHECK 3- 1
ENGINE COMPONENTS REMOVABLE WITH ENGINE IN PLACE ... 3- 2
ENGINE REMOVAL AND REINSTALLATION 3- 3
ENGINE DISASSEMBLY 3- 14
ENGINE COMPONENTS INSPECTION AND SERVICING 3-27
ENGINE REASSEMBLY 3-61

COMPRESSION CHECK

COMPRESSION

Standard	Limit	Difference
9 – 13 kg/cm² (128.0–184.9 psi)	7 kg/cm² (99.5 psi)	2 kg/cm² (28.4 psi)

Low compression can indicate any of the following malconditions:

* Excessively worn cylinder wall
* Worn-down piston or piston rings
* Piston rings stuck in the grooves
* Poor sealing of valves
* Leaking or otherwise defective cylinder head gasket

Overhaul the engine in the following cases:

* Compression pressure in any one of cylinders is less than 7 kg/cm²
* Difference in compression pressure between the two, highest and lowest, is more than 2 kg/cm²
* All compression pressures are below 9 kg/cm² (standard) even when they measure more than 7 kg/cm²

COMPRESSION TEST PROCEDURE

NOTE:
* **Before testing the compression of the engine, make sure that the cylinder head nuts and bolts are torqued to the specified torque value.**
* **Warm up the engine before testing.**

- Remove the fairing cover.
- Unscrew the fairing retaining screws and take off the fairing.
- Loosen and remove the fairing bracket mounting bolts, and then take off the fairing bracket.
- Remove the seat and frame covers (left and right).
- Remove fuel tank.
- Remove all spark plugs. Ground all plug leads.

09930-13210	Socket wrench
09930-14530	Universal joint
09914-24510	T handle

- Fit the compression gauge ① to one of the plug holes, taking care that the connection is absolutely tight.

09915-64510	Compression gauge
09915-63210	Compression adapter

- Twist the throttle grip into full-open position.
- Crank the engine a few seconds with the starter, and read the maximum gauge reading as the compression of that cylinder. Repeat this procedure with the other cylinders.

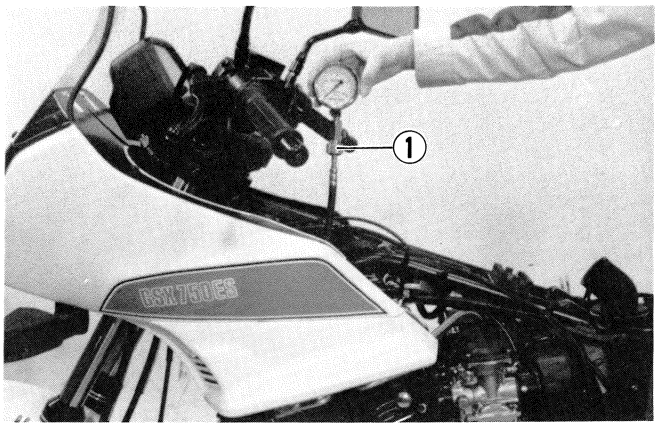

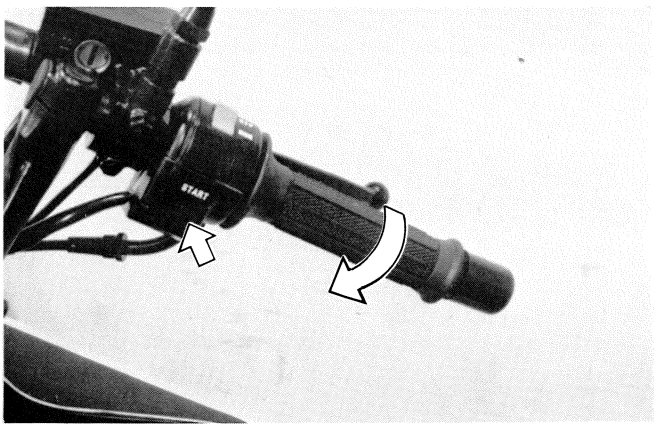

ENGINE COMPONENTS REMOVAL WITH ENGINE IN PLACE

- Parts that may be removed without dismounting the engine.

The following sections describe operational contents from top end to carburetor, following the previous sections dealing with engine removal. Parts which can be removed without dismounting the engine are described here. See reference pages with respect to their operations.

ENGINE LEFT SIDE

	See page
Gear shift lever	3- 9
Engine sprocket cover	3- 9
Engine sprocket and drive chain	3- 9
Gear position indicator switch body	3-21
Generator cover	3-22
Generator rotor	3-22
Generator stator	3-56
Starter clutch	3-22
Starter clutch idle gear	3-22

ENGINE CENTER

	See page
Exhaust and muffler	3- 8
Oil filter	2-17
Oil pressure switch	2-18
Oil pan	3-23
Sump filter	3-23
Cylinder head breather cover	3-14
Clutch cable	3- 9
Carburetor	3- 7
Throttle and choke cables	3- 7
Air cleaner	3- 7
Cam chain tensioner	3-14
Cylinder head cover	3-14
Camshaft	3-14
Cylinder head	3-14
Cylinder	3-16
Piston	3- 7
Starter motor	3-21
Oil cooler	3- 8

- Generator cover and starter motor lead wire should be removed from the starting motor relay side.

ENGINE RIGHT SIDE

Signal generator

	See page
Signal generator cover	3-15
Signal generator	3-18
Clutch cover	3-19
Clutch release bearing	3-19
Clutch pressure, drive and driven plates	3-19
Oil pump drive gear	3-19
Primary driven gear	3-19
Oil pump ass'y	3-20
Gear shifting shaft	3-20
Gear shifting pawl and cam drive gear	3-26

ENGINE REMOVAL AND REINSTALLATION

ENGINE REMOVAL

Before taking the engine out of the frame, wash the engine with a steam cleaner and drain engine oil. The procedure of engine removal is sequentially explained in the following steps, and engine installation is effected by reversing the removal procedure.

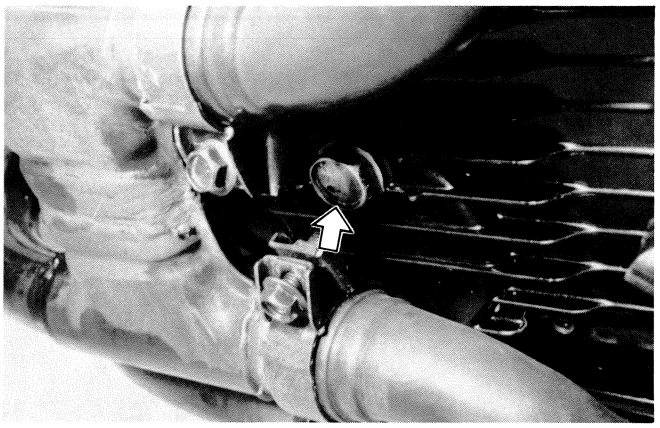

- Place an oil pan under the engine and drain oil by removing oil drain plug.

- Remove the right and left frame cover.
- Remove the seat.

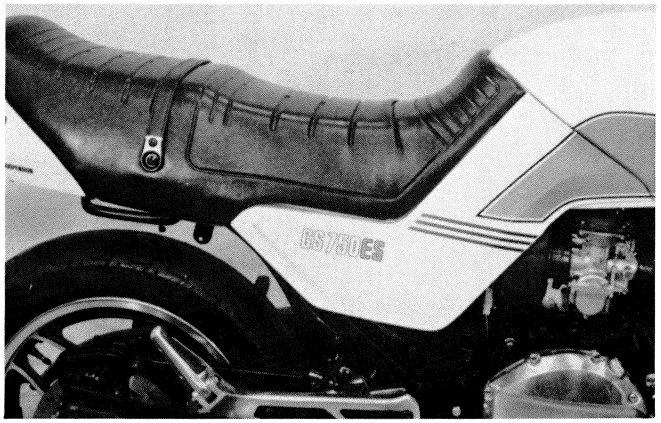

- Disconnect the battery ⊕ and ⊖ cable.
- Remove the battery.

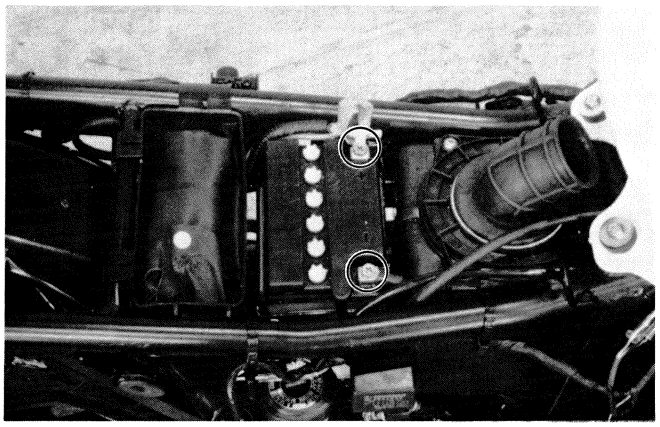

- Take off the tool case and battery holder.

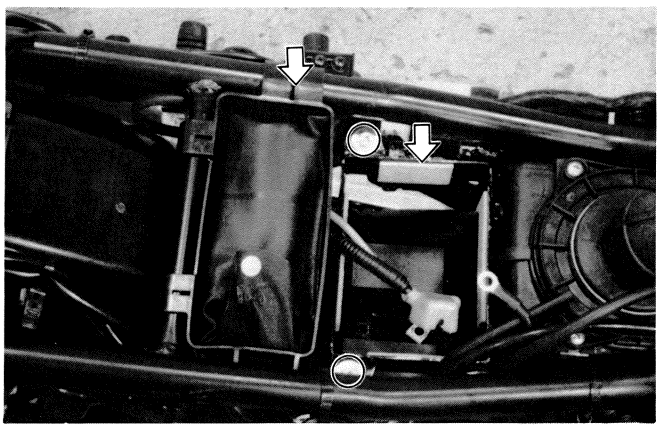

- Loosen the fuel tank mounting bolts.

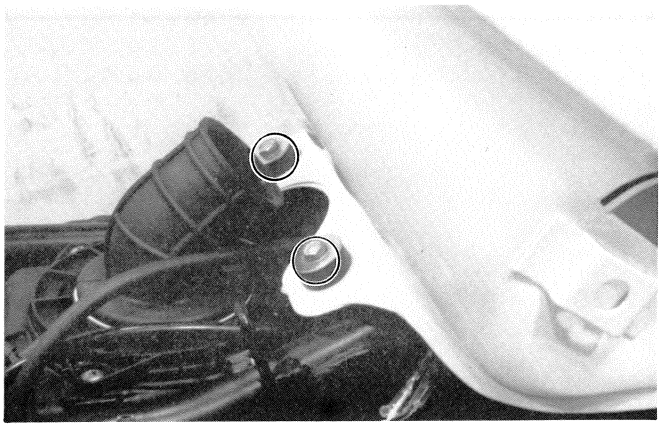

- Disconnect the fuel gauge lead.

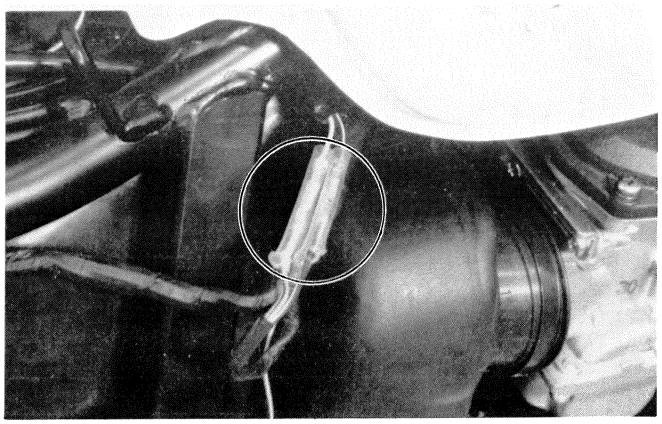

- Turn the fuel cock to "ON" or "RES" positions.
- Disconnect fuel hose and vacuum hose.
- Remove the fuel tank.

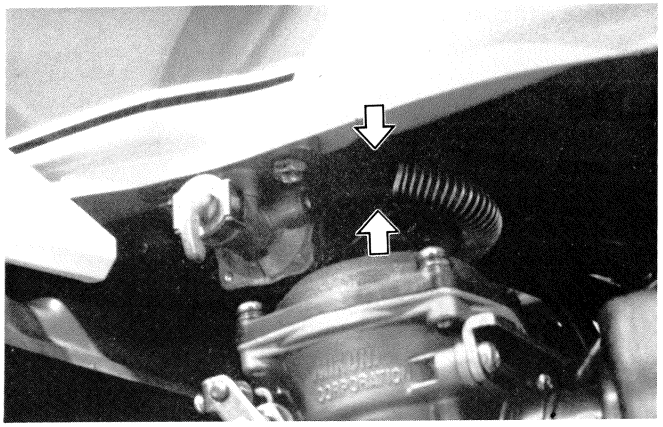

- Take off the fairing cover (right and left).

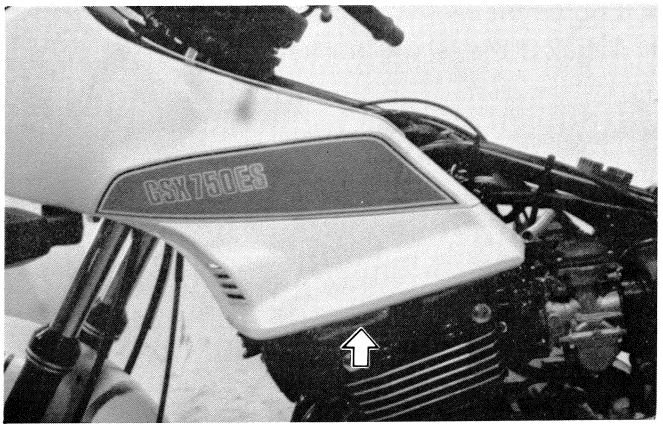

- Remove the fairing mounting screws.

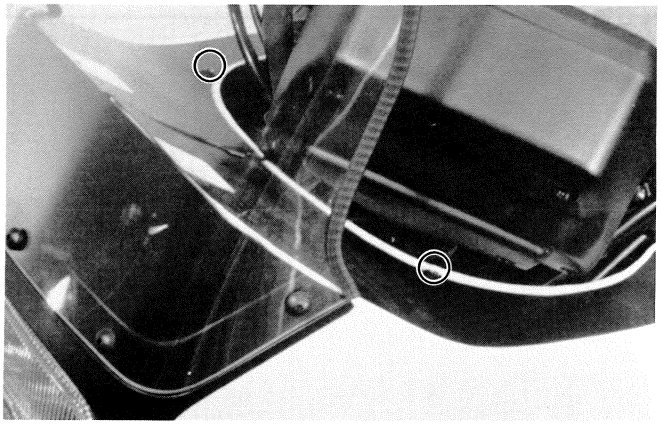

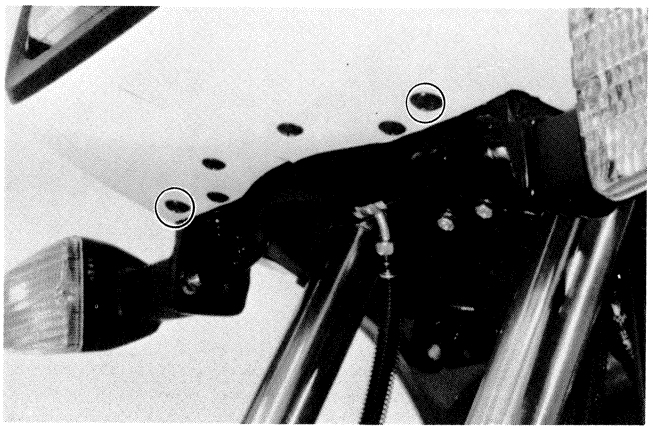

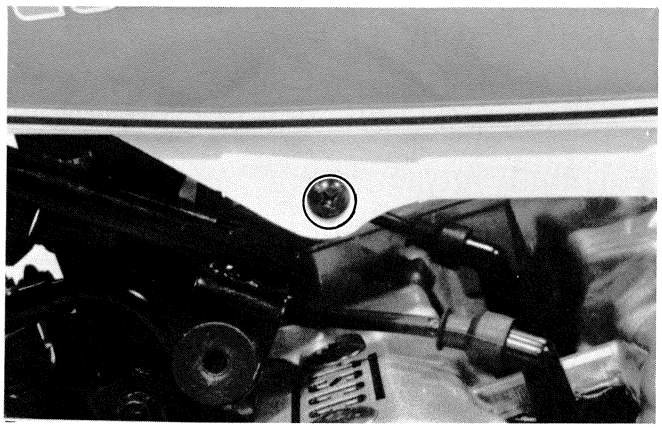

- Take off the harness clamp.

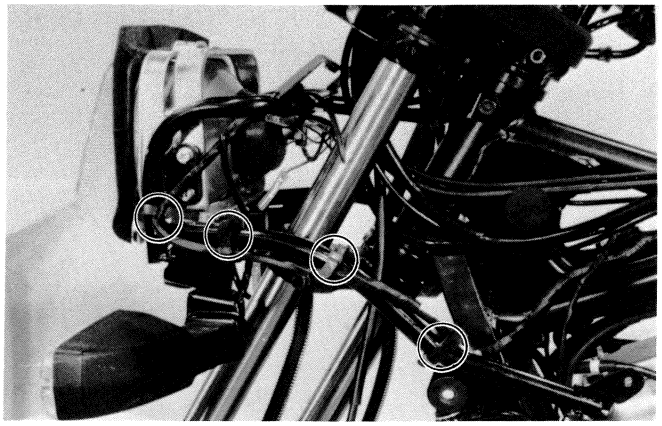

- Loosen the fairing bracket mounting bolts.
- Take off the fairing bracket.

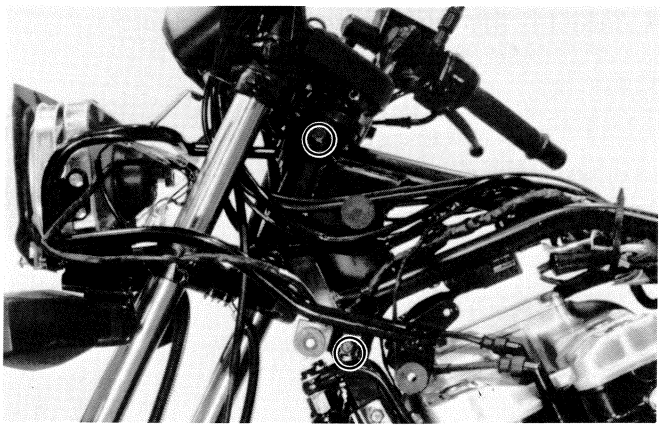

NOTE:
Do not forget the spacer.

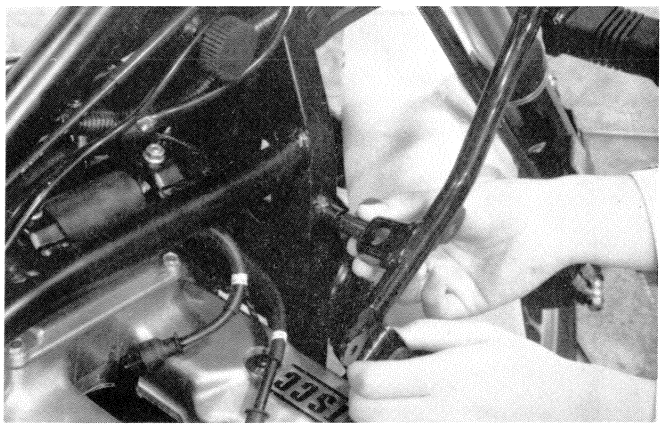

- Disconnect the gear position lead wire, signal generator lead wire and generator lead wire.

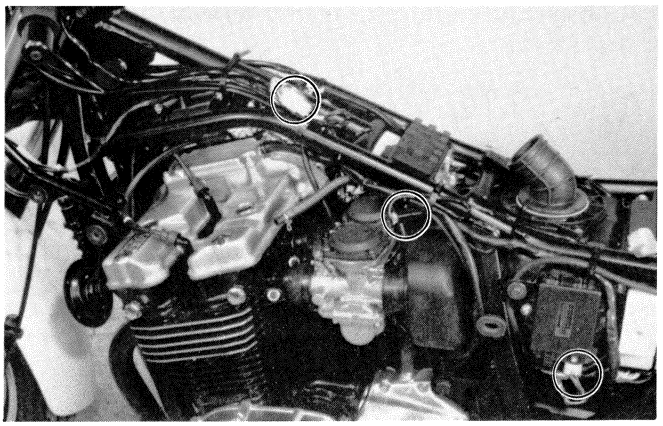

- Disconnect the starter lead wire (to starter motor).

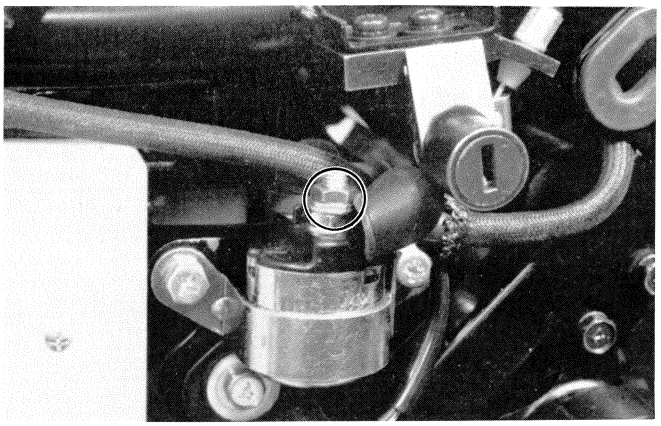

- Disconnect the ⊖ lead wire.

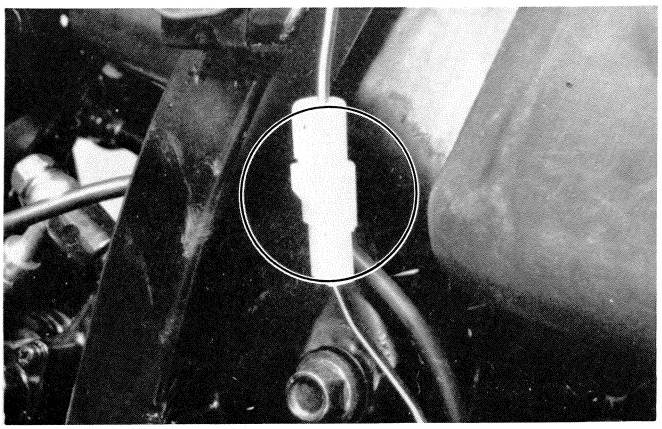

- Disconnect the breather pipe.

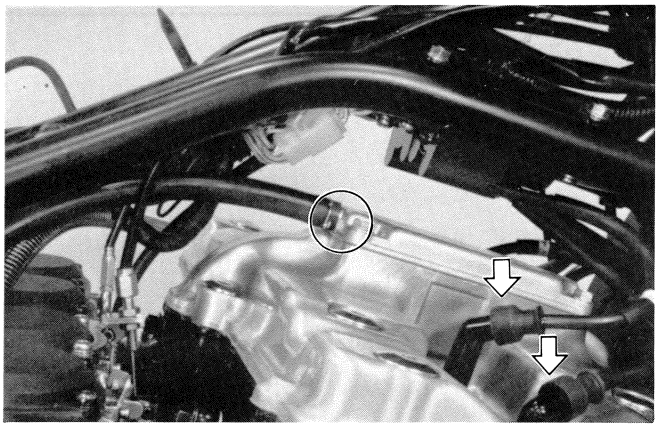

- Loosen the carburetor clamp screws.

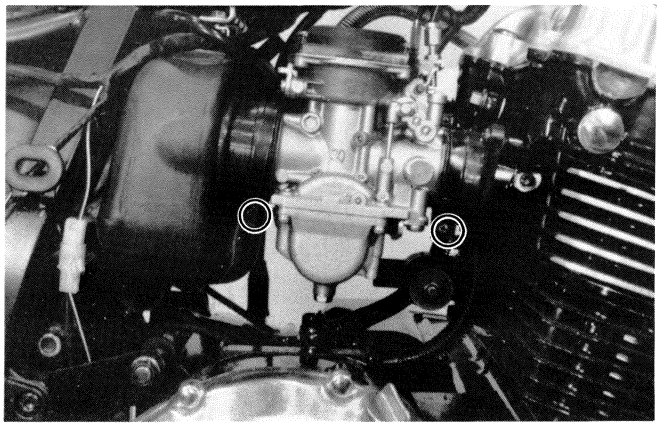

- Loosen and remove the air cleaner mounting screws.
- Remove the air cleaner mounting bracket.

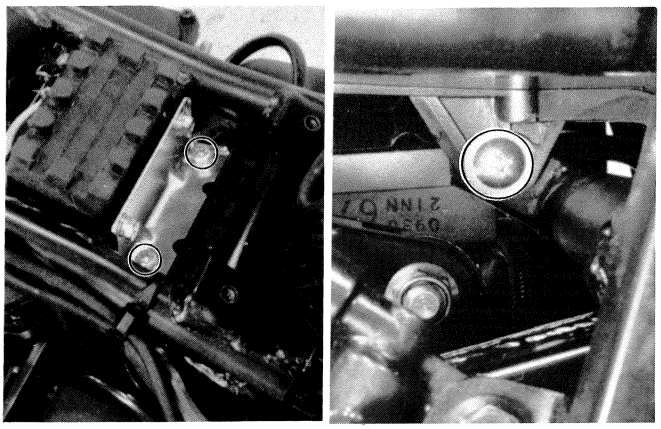

- Take off the carburetors.
- Loosen the lock nuts and take off the throttle cable.
- Remove the choke cable.

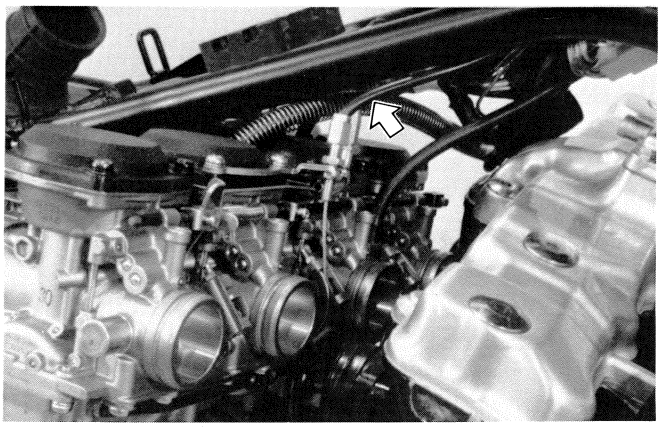

- Loosen and remove the exhaust pipe clamp bolts.

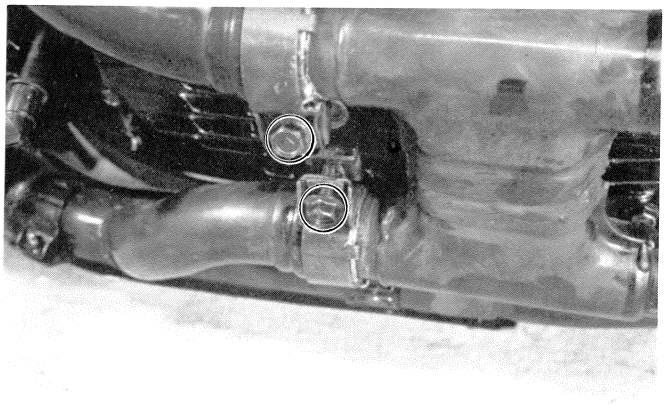

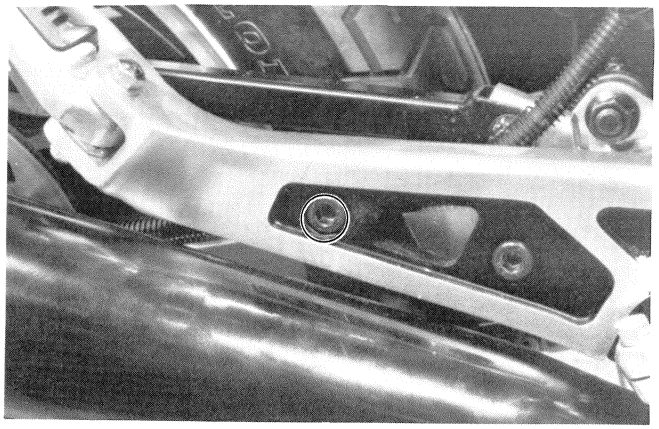

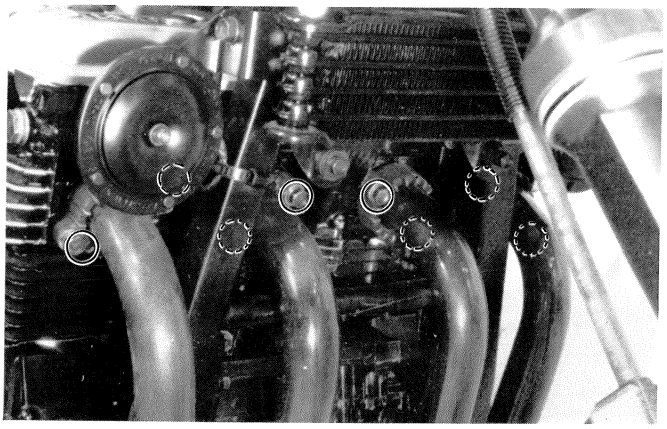

- Remove the ignition coils by loosening the nuts.

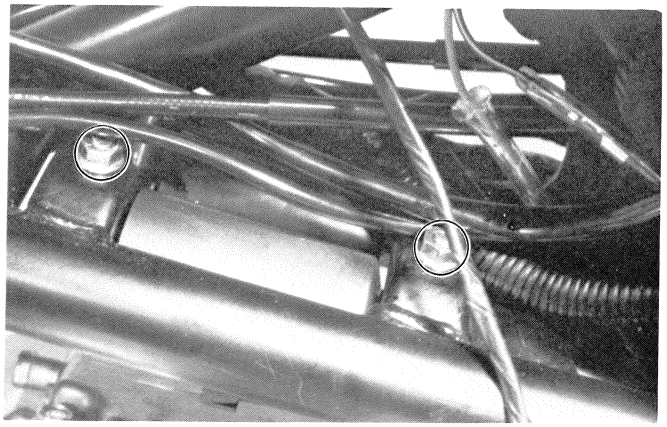

- Remove the oil cooler joint hoses.

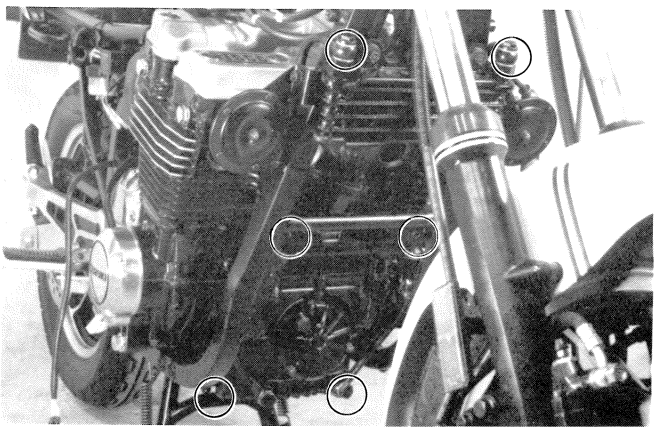

- Remove the gearshift lever and engine sprocket cover.

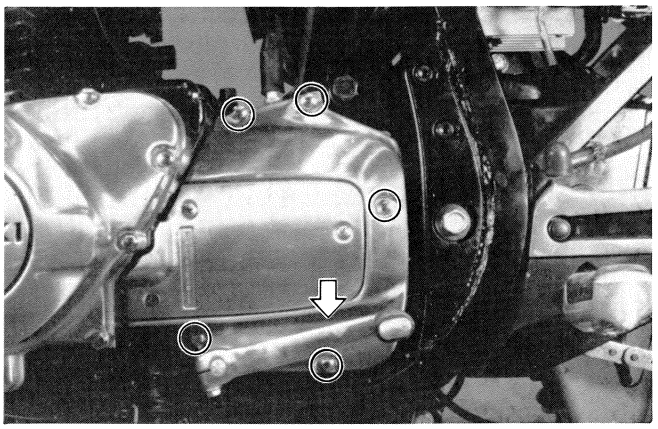

- Flatten the lock washer.
- Loosen the engine sprocket nut by applying the rear brake.

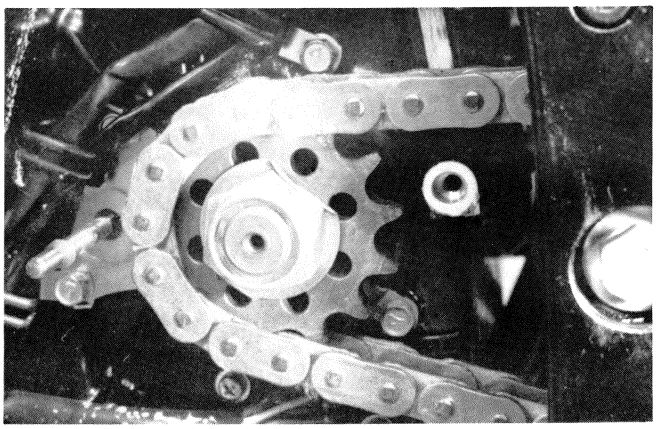

- Remove the axle cap.
- Remove the cotter pin and loosen the axle nut.
- Loosen the lock nut and adjuster.

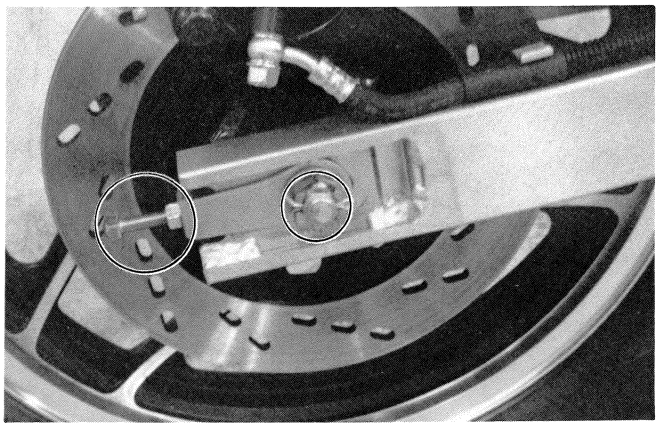

- Remove the rear brake.

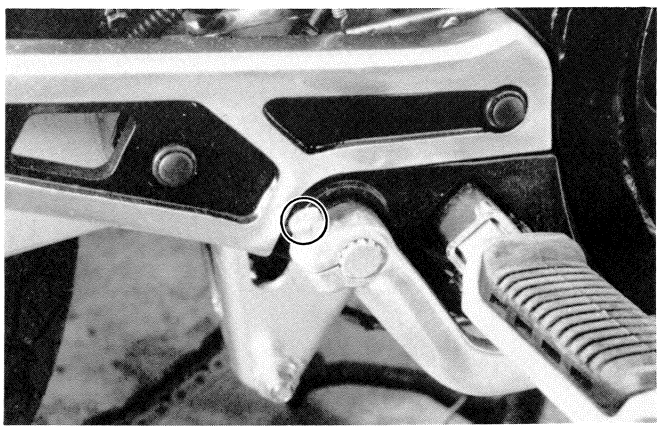

- Remove the engine mounting bolts.

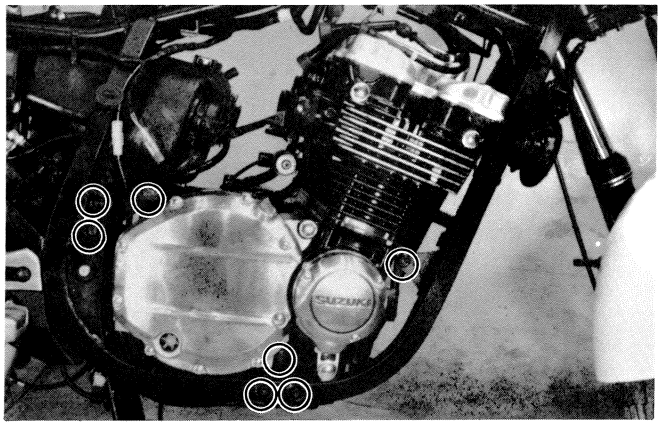

- Gradually lift up the engine and lower the engine ass'y on the right side making sure that it does not make contact with the rear bracket.

ENGINE REINSTALLATION

Reinstall the engine in the reverse order of engine removal.

- After inserting the engine mounting bolts, tighten engine mounting bracket bolts and engine mounting bolts. Insert all three long bolts from the left side, and insert the rear upper bolt through the spacers (Right side: 50 mm, Left side: 45 mm).

> **NOTE:**
> **The engine mounting nuts are self-lock nuts. Once the nut has been removed, it is no longer of any use. Be sure to use new nuts and tighten them to the specified torque.**

Tightening torque

	Length	kg-m	lb-ft
1	35 mm	5.0–6.0	36.0–43.5
2	165 mm	6.0–7.2	43.5–52.0
3	205 mm	6.7–8.0	48.5–58.0
4	255 mm	5.5–6.6	40.0–47.5

- The nut ① takes its position in the place indicated.
- The engine sprocket should be installed on the drive shaft beforehand as shown in the figure at the same time of the installation of drive chain. If it is difficult to assemble the engine sprocket, remove the rear axle cotter pin, loosen the axle nut, torque link mounting nut, and chain adjuster bolt to push the wheel forward, and give the drive chain some play. When replacing the engine sprocket nut, stepped side should be faced inside. After completing tightening of the engine mounting bolts, adjust free play of the drive chain.
  (see page 2-10).

Tightening torque

	kg-m	lb-ft
Engine sprocket nut	10.0–13.0	72.5–94.0
Rear axle nut	8.5–11.5	61.5–83.0

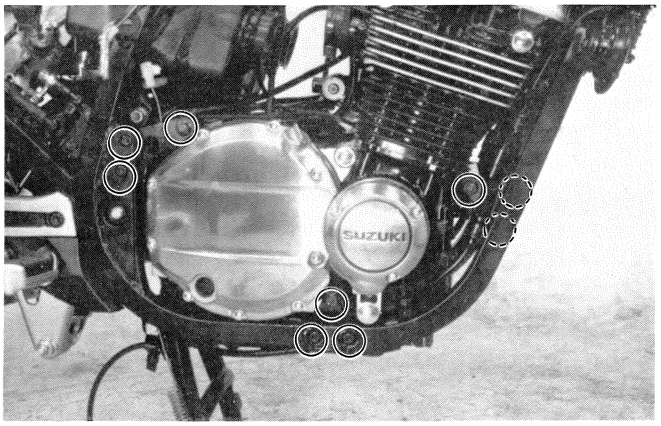

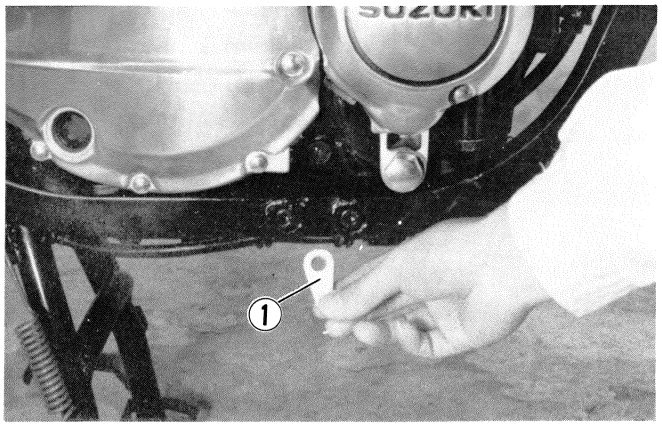

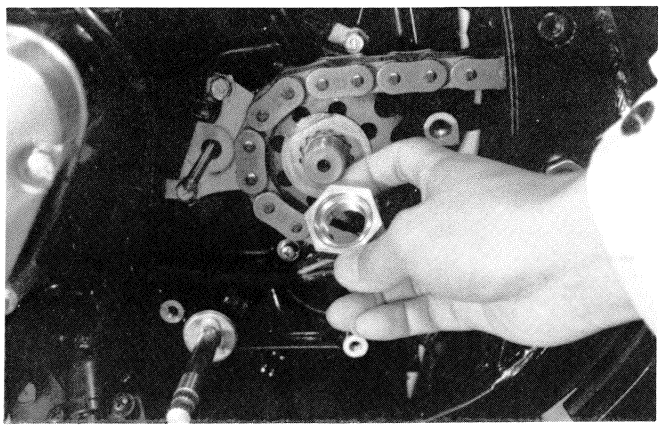

- Install the oil cooler hose with specific torque.

	kg-m	lb-ft
Oil cooler side	1.5–1.8	11.0–13.0
Crankcase side	2.5–3.0	18.0–21.5

NOTE:
Be sure to install the washers on both side of hose union.

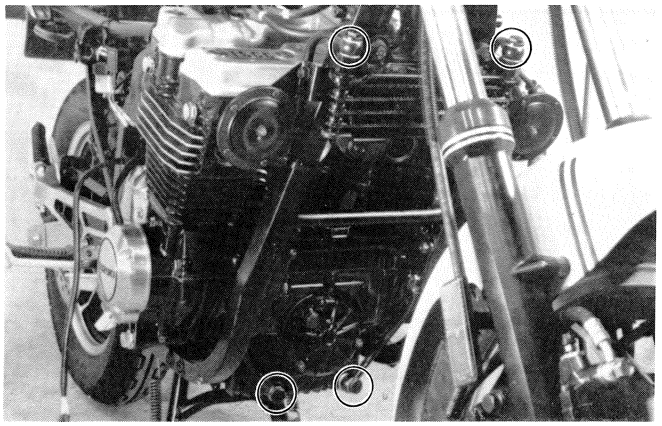

- Securely tighten bolts ① connecting exhausts and muffler of No. 2 and 3 to prevent gas leakage.

Tightening torque	0.9 – 1.4 kg-m (6.5 – 10.0 lb-ft)

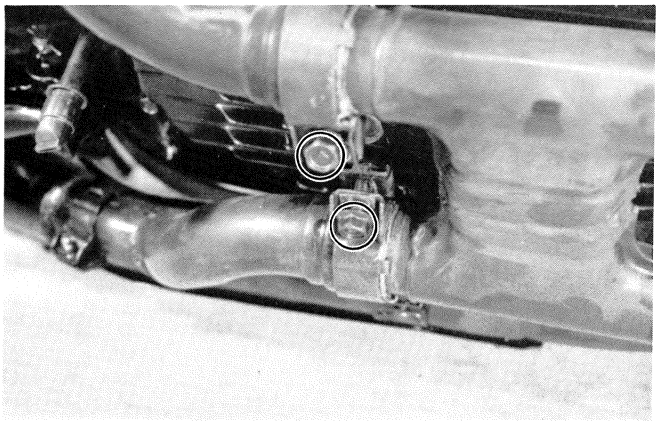

- Install exhaust pipe gasket ①, and tighten exhaust pipe bolts.
- Mount mufflers and gearshift lever, and tighten bolts with specified torque.

Tightening torque

	kg-m	lb-ft
Muffler mounting bracket bolt	2.2–3.5	16.0–25.5
Exhaust pipe clamp bolts	1.0–1.6	7.0–11.5

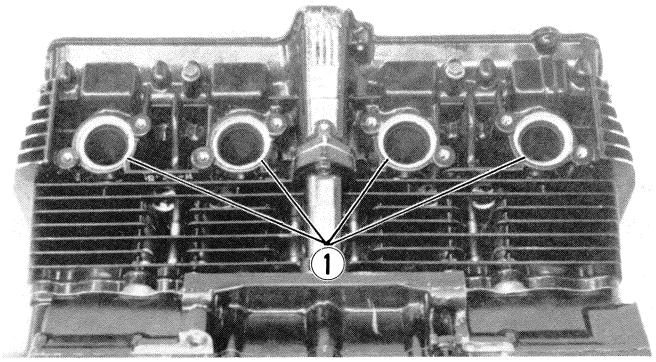

- Replace the plug caps on the spark plugs so that their code markings correspond to the cylinder numbers arranged in the order of 1, 2, 3 and 4 from the left.

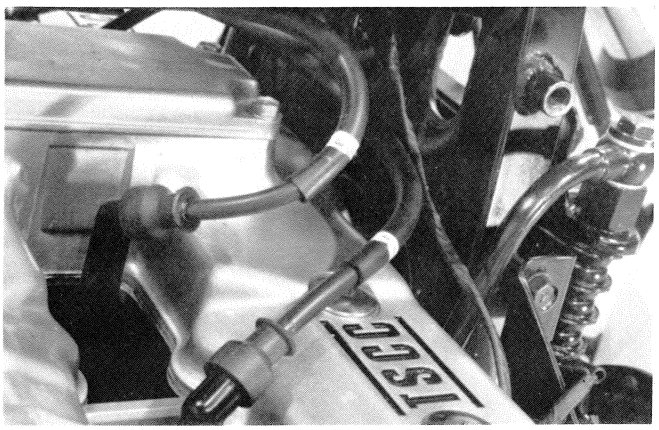

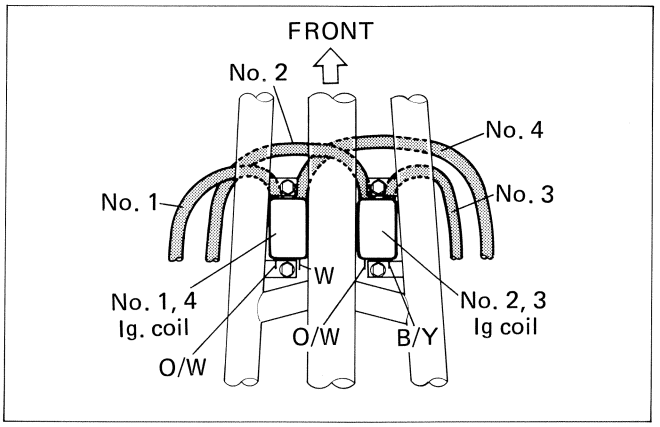

- Connect the fuel hose correctly.

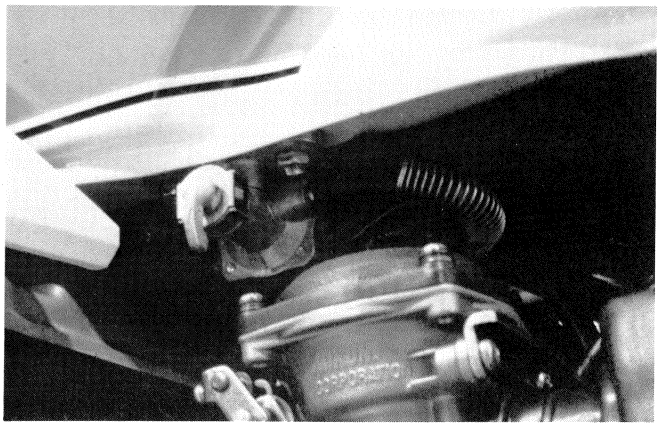

- Install 3.8 L (4.0 US qt) of engine oil SAE 10W/40 under API classification SF or SE into the engine. Several minutes after starting and stopping the engine, check that the oil level remains between the marks of oil level window.

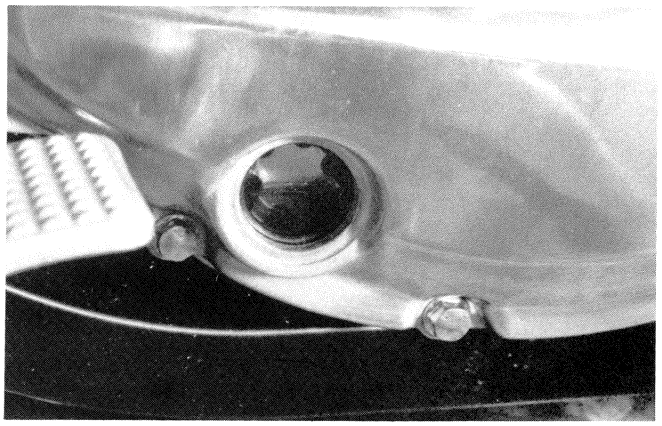

- After remounting the engine, route wiring harness and cables properly by referring to the sections, wire routing and cable routing, and adjust the following items to the specification.

	Page
* Rear brake pedal	2-12
* Brake light switch	2-13
* Clutch cable	2- 8
* Throttle cable	2- 7
* Drive chain play	2-12
* Balancing carburetor	4-12
* Idling adjustment	2- 7

ENGINE DISASSEMBLY

- Loosen the oil hose union bolts, and the remove the oil hose.

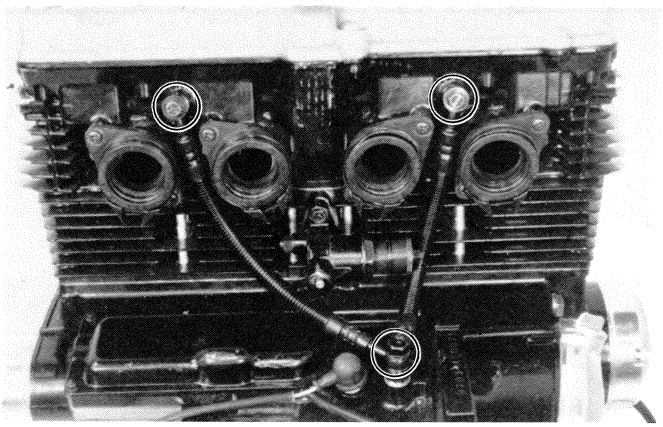

- Remove cylinder head cover.

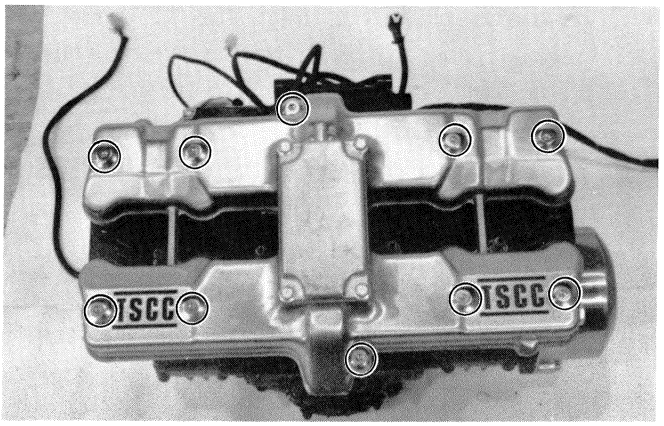

- This is accomplished by first loosen lock nut ① and tightening screw ② and then removing two mounting bolts ③ of cam chain tensioner.

> **NOTE:**
> **Tightening screw ② prevents an inside spring from leaving out of the push rod.**

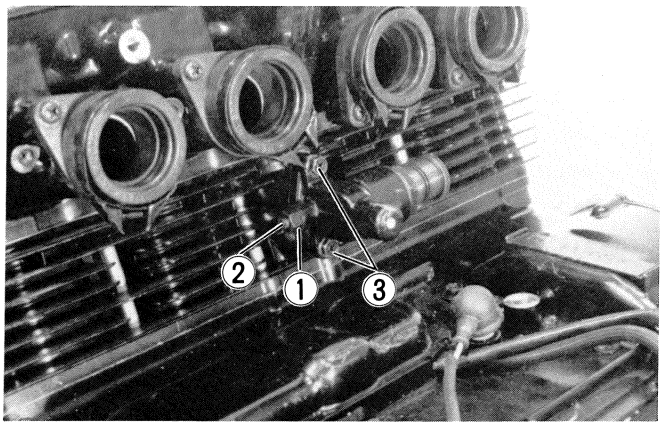

- Remove the oil pipe.

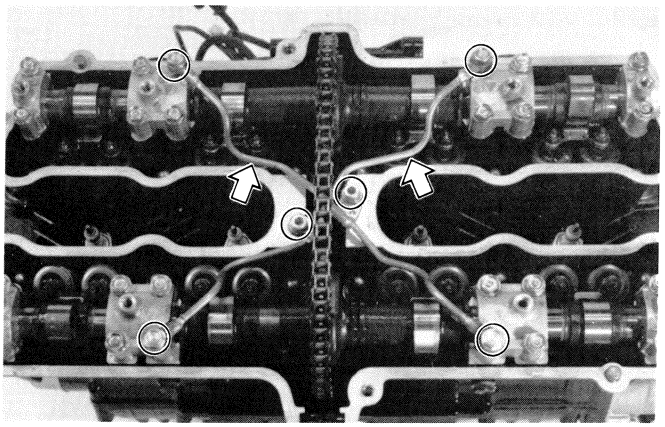

- Remove the signal generator cover.

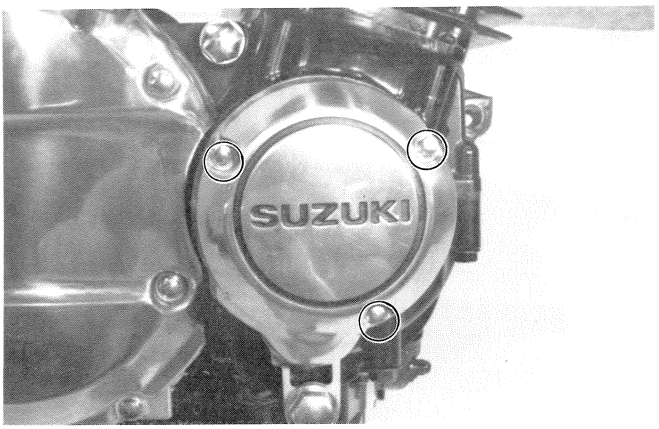

- Turn the crankshaft to align the "T" mark on the signal generator with timing mark of No. 1 and No. 4 pick up coil.

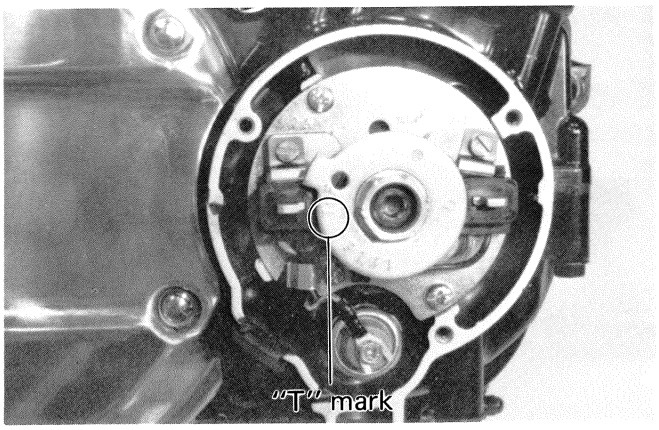

- Remove the two camshafts, intake and exhaust.

> **NOTE:**
> * **Be sure to loosen camshaft holder bolts evenly by shifting the wrench diagonally.**
> * **Hold down each camshaft with vice pliers ① , and remove the bolts securing the camshaft holders, four on each camshaft. Then, remove the pliers and take off the camshaft.**

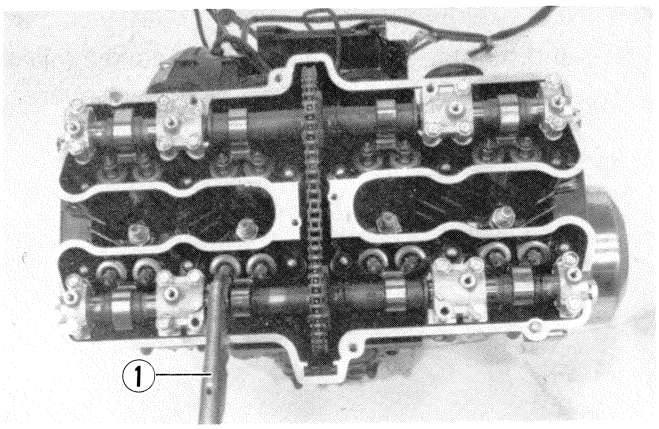

- Pull out cam chain guide ① .

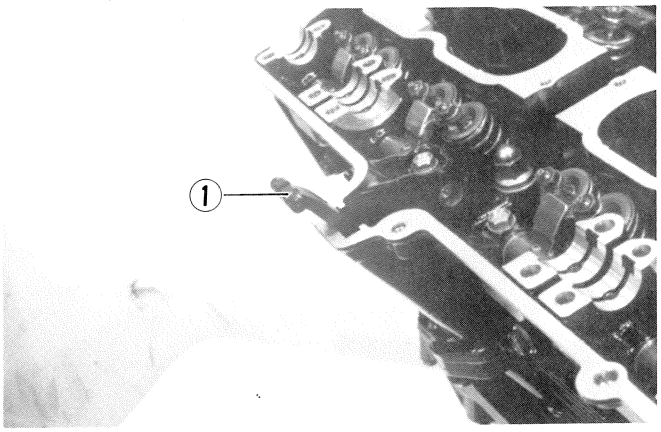

- The cylinder head becomes free for removal when its 6-mm bolt ① and twelve 10-mm nuts are removed.

09911-74510	Long socket 14 mm
09914-24510	T handle

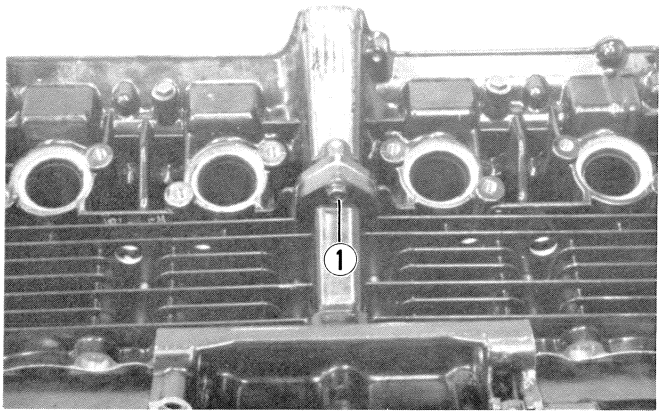

NOTE:
Be sure to use the special tool ("T" wrench) designed to enter the pockets formed in the head and reach the nuts down below to loosen the 10-mm nuts, and to shift the tool sequentially in the nuts descending order of numbers in order to reduce the pressure equally and evenly.

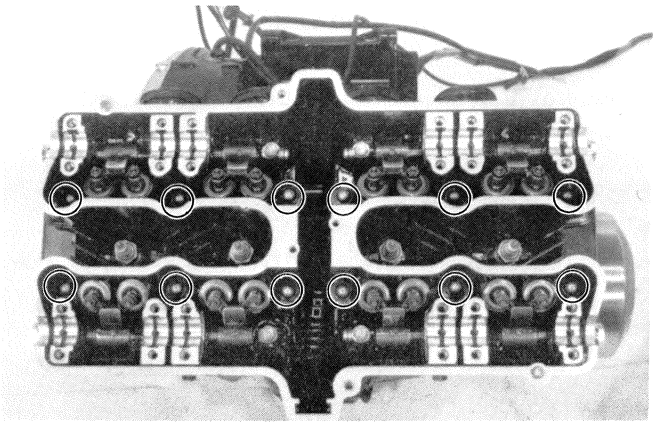

- Mark the piston number on the piston.

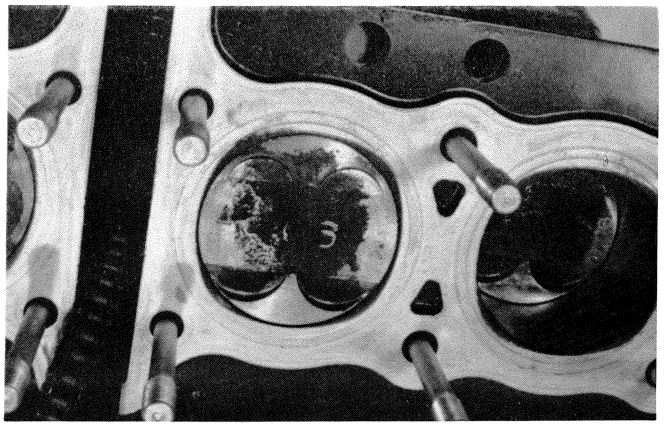

- Firmly grip the cylinder block at both ends, and lift it straight up. If the block does not come off, lightly tap on the finless portions of the block with a plastic mallet to shake the gasketed joint loose.

NOTE:
Cylinder removal from crankcase is made easier by the use of the cylinder disassembling tool. This tool can be used on the cylinder head and crankcase, too.

09912-34510	Cylinder disassembling tool

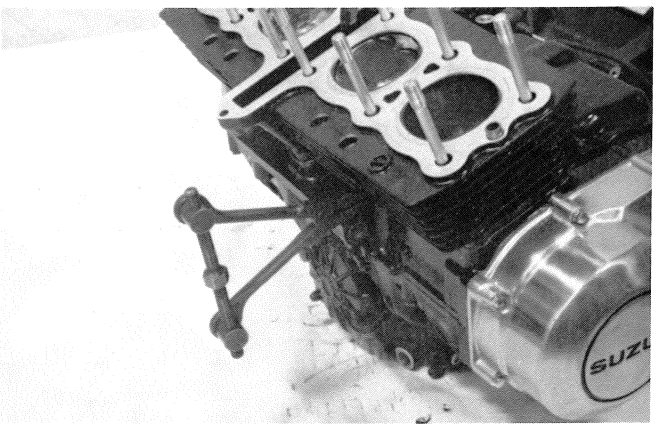

- Place a cloth beneath the piston so as not to drop the parts in the crankcase, and remove the circlip with pliers.

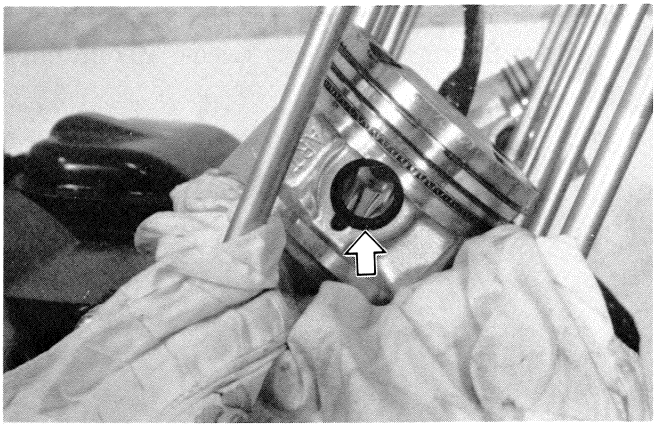

- Draw out the piston pin with the special tool ①. Place the drawn-out piston pin in the same place as that given the cylinder No. on the head of the piston.

09910-34510	Piston pin puller
09910-33210	Attachment

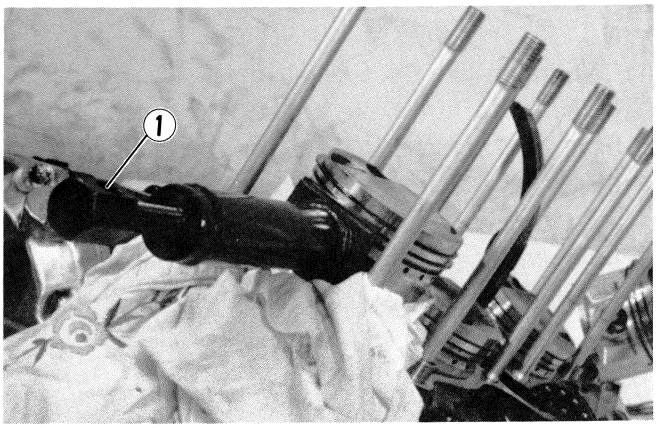

- Remove the filter cap by loosening the three nuts.
- Take off the filter.

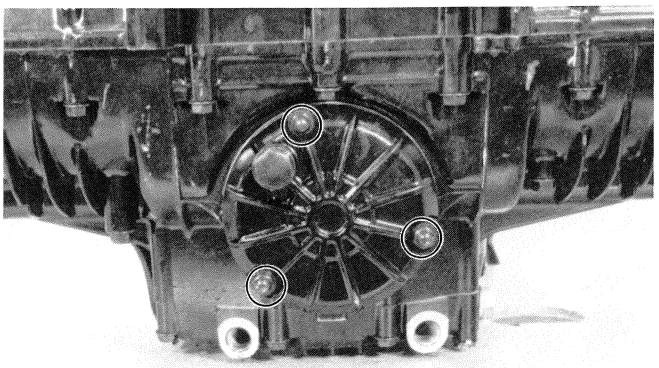

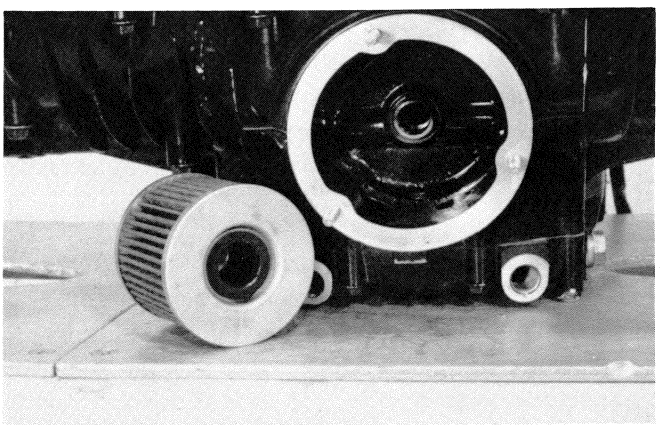

- Remove the signal generator by using 19-mm off set wrench and the special tool.

09914-25811	T-type hexagon wrench

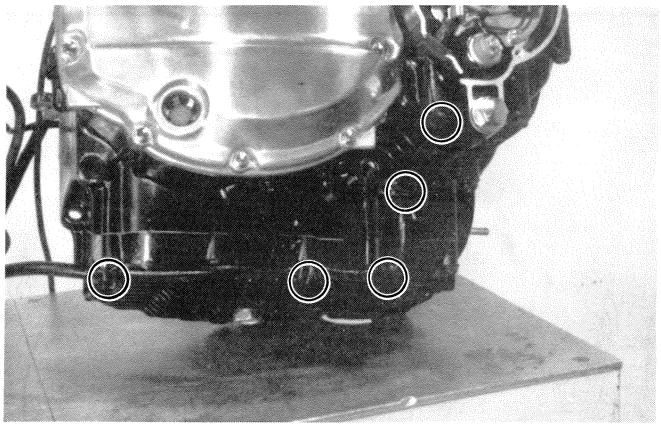

- Unclamp the signal generator rotor lead wire.

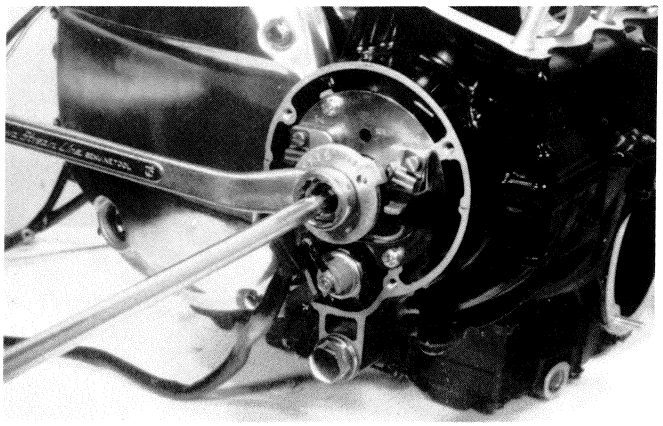

- Remove the signal generator assembly by removing the screws.

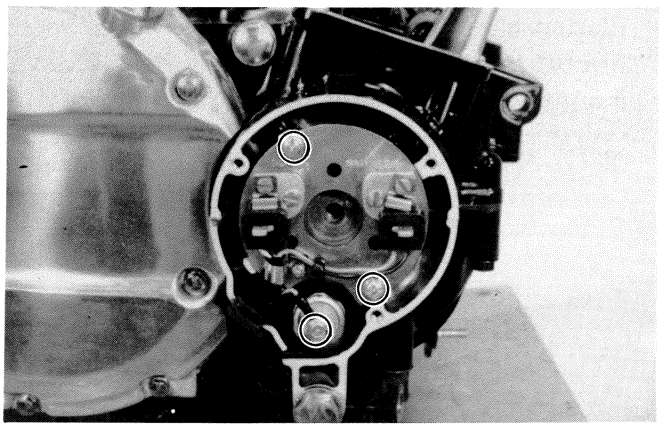

- Remove the oil pressure switch.

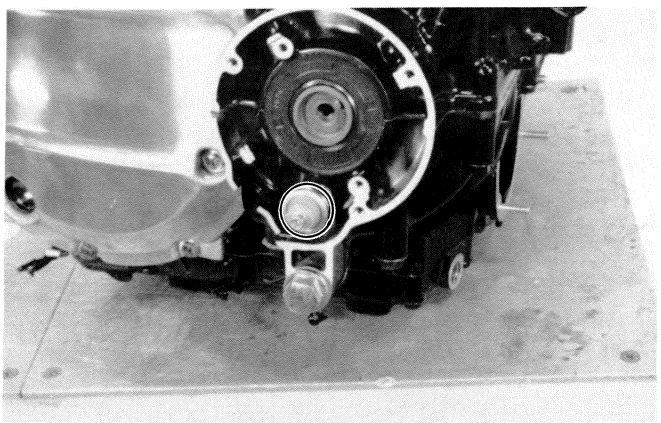

- Remove clutch cover and gasket.

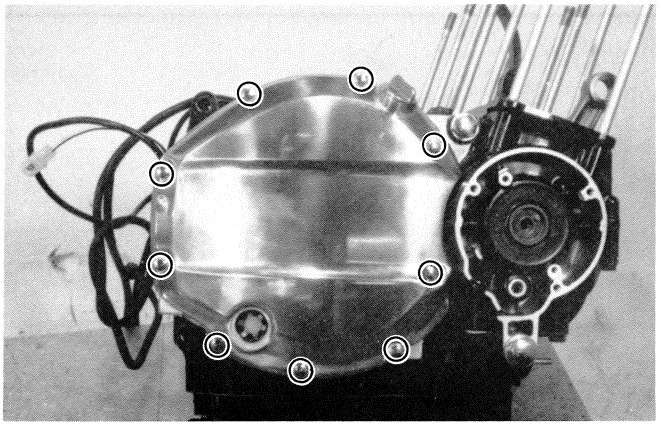

- Using special tool, remove the clutch spring mounting bolts in a criss cross manner.
  Remove the spring, pressure plate, push piece, thrust bearing, drive plate and driven plate.

09910-20116	Conrod holder

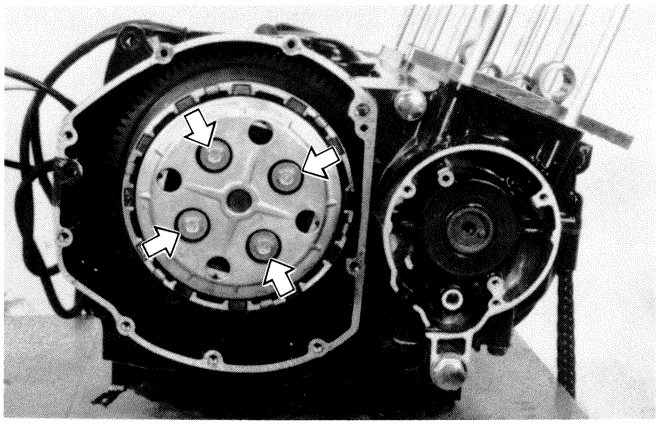

- Flatten clutch sleeve hub nut lock washer, and firmly secure clutch sleeve hub to remove mounting nut with clutch sleeve hub holder ① .

09920-53710	Clutch sleeve hub holder

- Remove clutch sleeve hub and retaining washer.

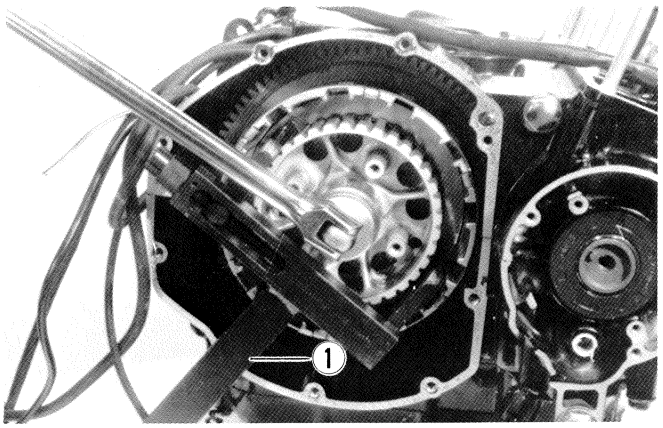

- Push the spacer and bearing backward, and then remove the clutch housing with oil pump drive gear.

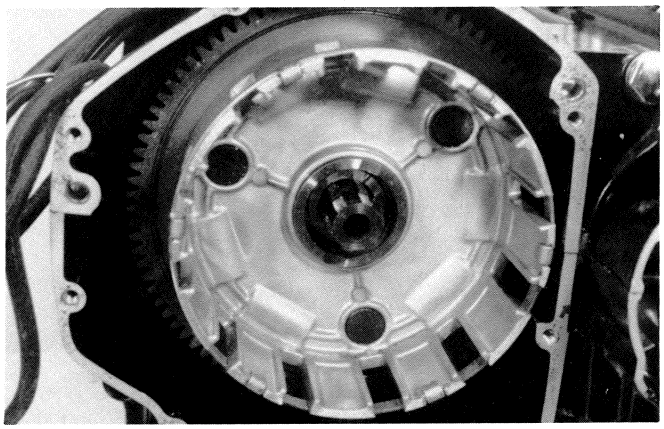

- Separate the clutch housing and oil pump drive gear.

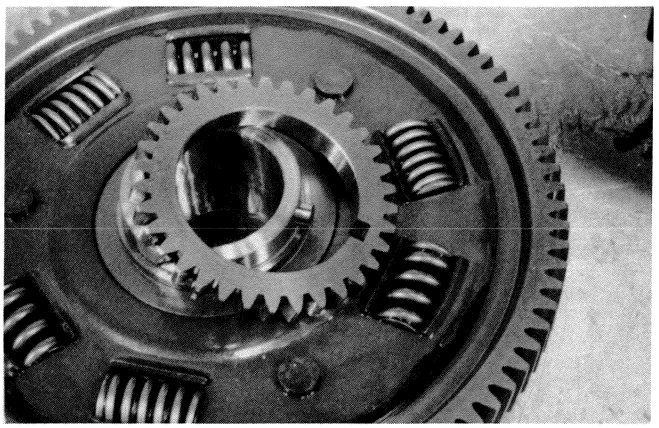

- Remove the spacer, bearing and thrust washer.

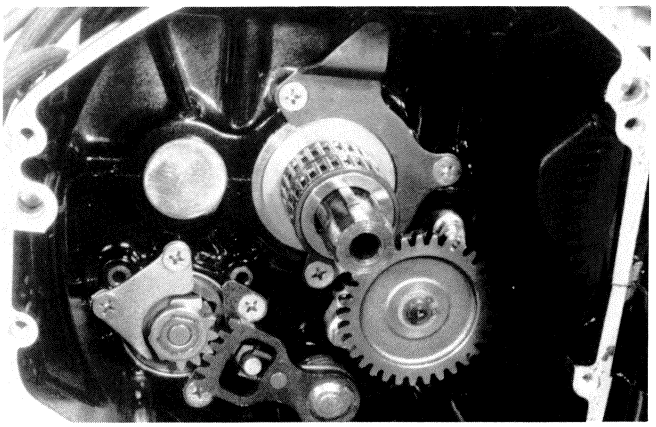

- Remove the gearshift shaft by removing the circlip and washer.

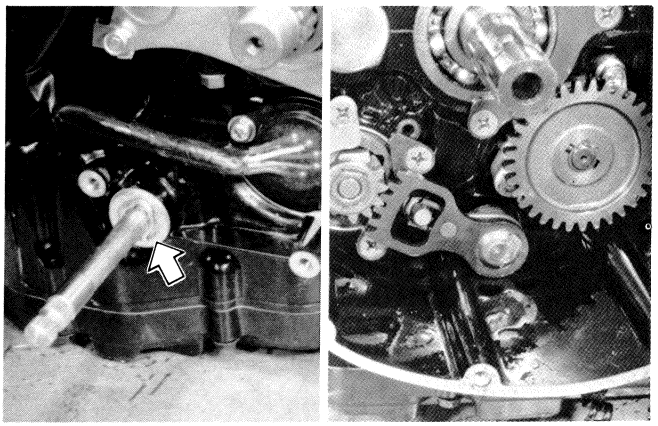

- Using the special tool, remove oil pump driven gear and its drive pin. Then remove oil pump with O-ring.

09900-06107	Snap ring pliers

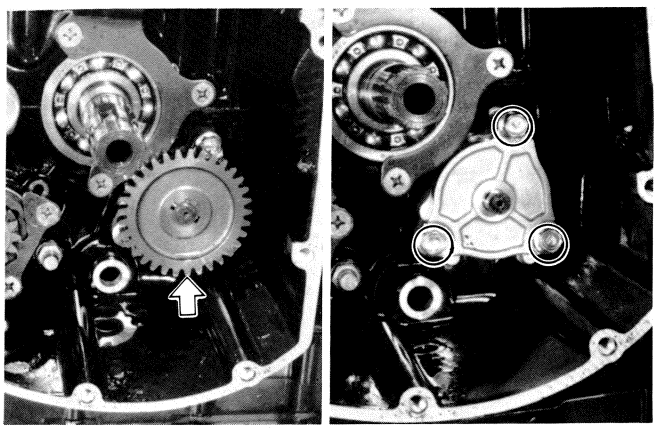

- Remove the counter shaft bearing retainer by removing the retaining screws.

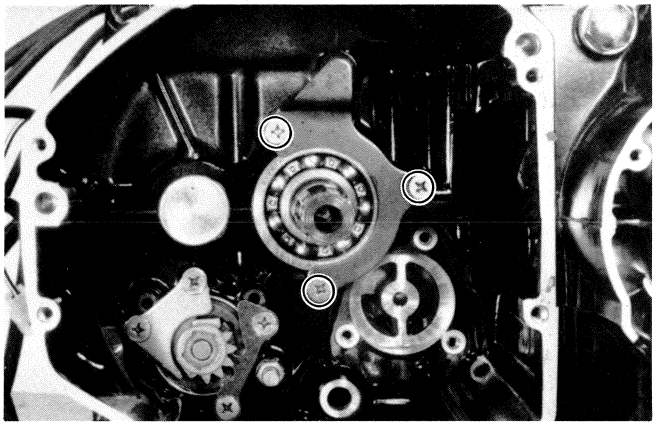

- After flattening the lock plate, loosen and remove the bolts.
- Remove the oil seal retainer plate.
- Remove the gear position switch, contact point and spring.

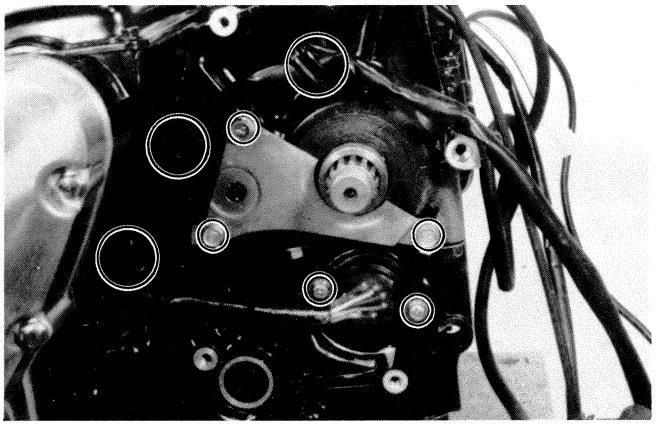

- Remove the starter motor cover.

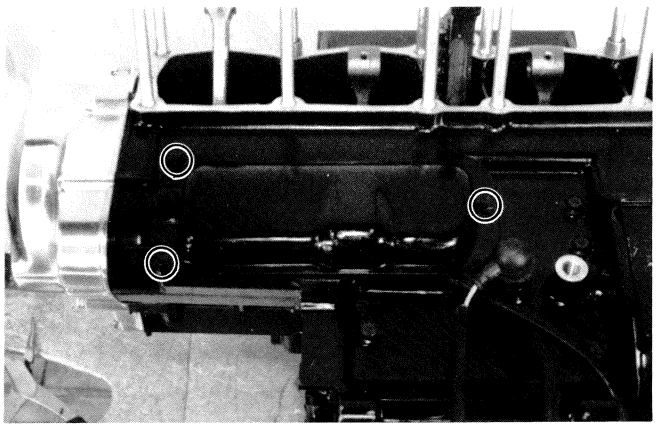

- Remove the starter motor by loosening the mounting bolts.

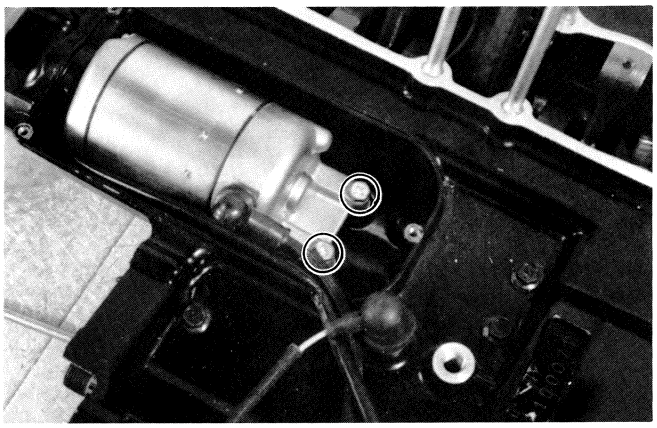

- Remove generator cover and gasket.

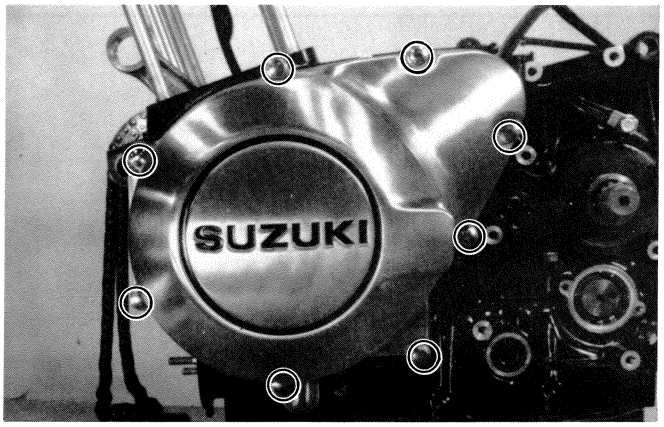

- Extract starter motor idle gear shaft ① and remove washer and idle gear.

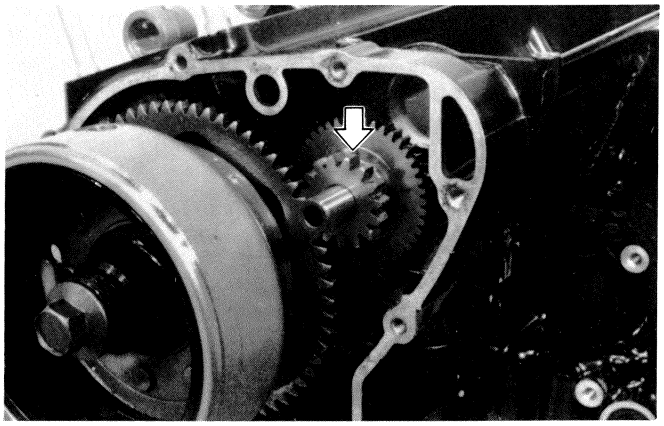

- Using rotor holder ①, remove rotor securing bolt.

09930-44911	Rotor holder

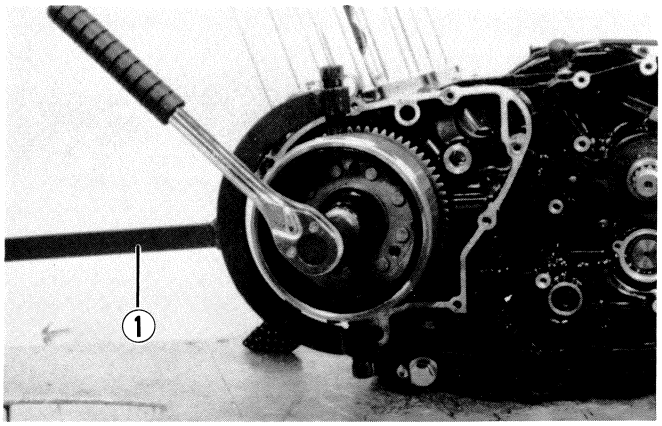

- Install rotor remover attachment ① and sliding hammer assembly ② into the boss of rotor and remove rotor with starter clutch assembly while sliding the remover.

NOTE:
Do not hit the rotor with a hammer.

09930-30102	Rotor remover shaft
09930-30180	Attachment E

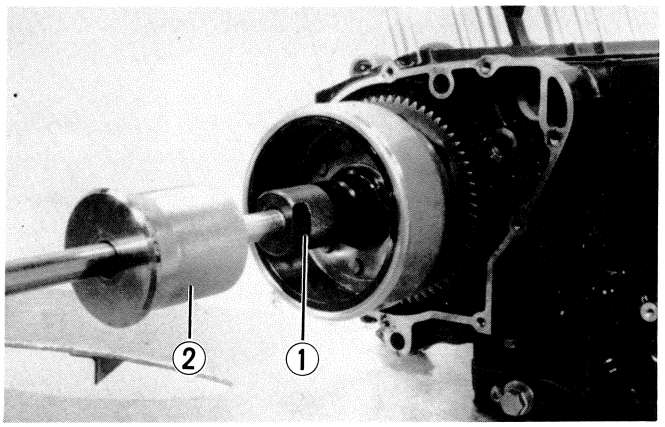

- Remove crankcase securing nut ① .

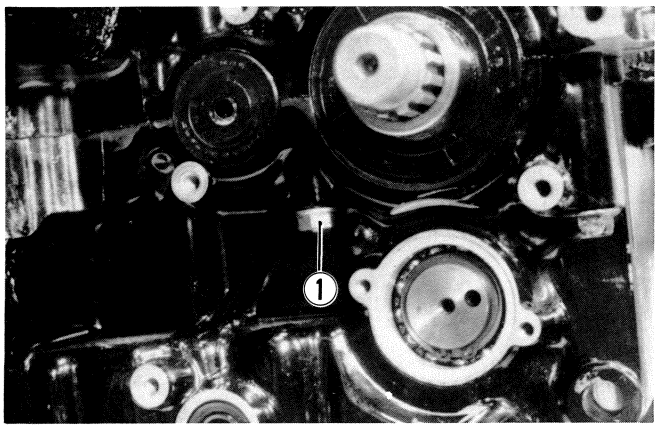

- Remove crankcase securing bolts from upper crankcase.
- Remove the oil temperature lead wire.

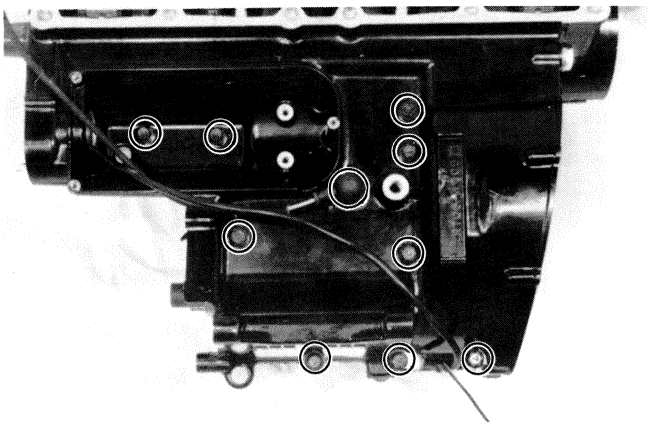

- Turn engine up side down and remove oil pan.

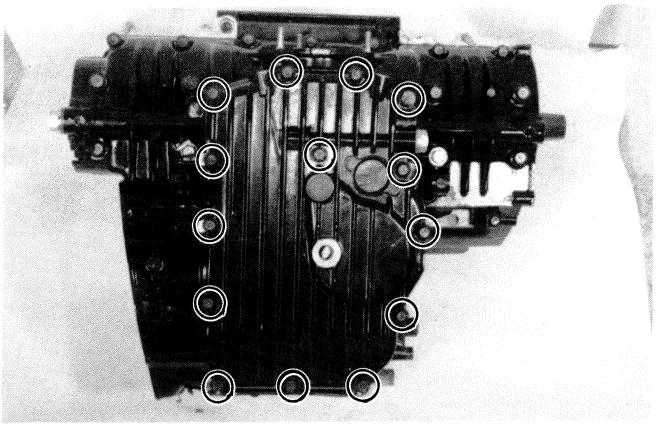

- Remove the O-ring and oil sump filter.

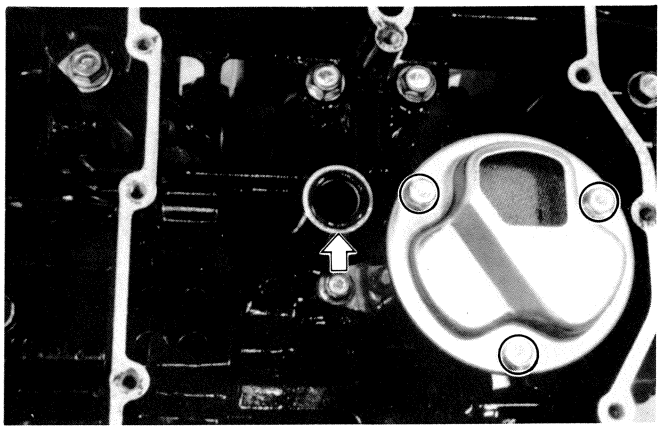

- Remove the oil strainer protector by loosening the mounting bolts.
- Take off the O-ring.

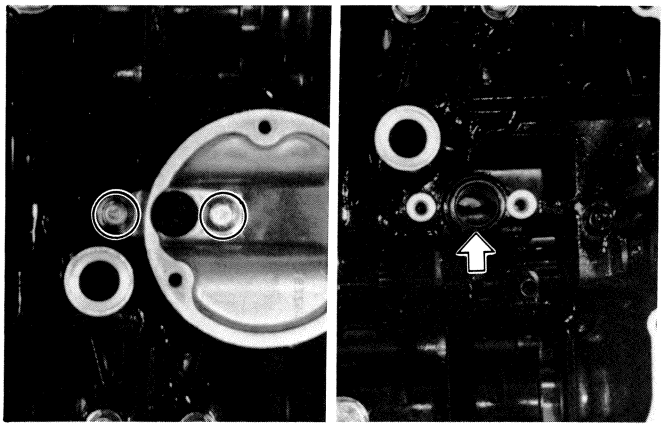

- Remove the neutral cam stopper.

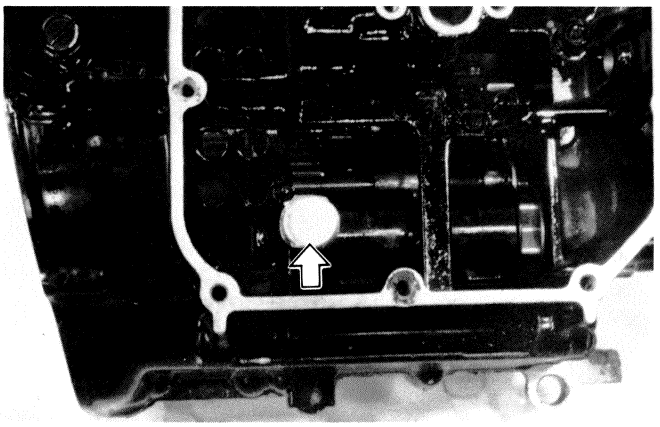

- Make sure that all bolts are removed without fail. Loosen in a criss-cross manner. Hammer lightly the lower crankcase side with a plastic hammer to separate the upper and lower crankcase halves and then lift the latter.

NOTE:
Two allen bolts are used for securing crankcase at the portion Ⓐ .

09914-25811	"T" type hexagon wrench
09912-34510	Cylinder disassembling tool

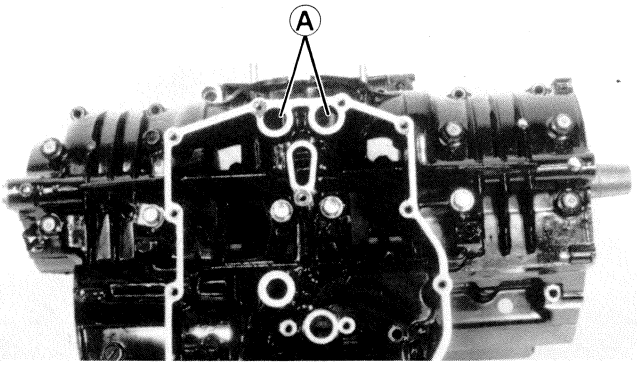

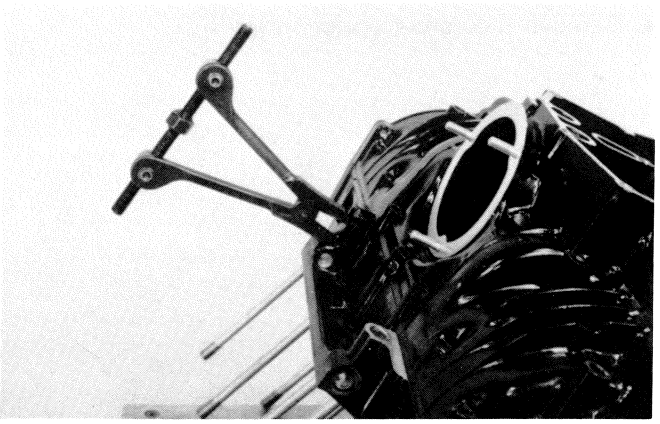

- Remove the counter shaft and drive shaft.

> **NOTE:**
> **Be careful not to drop two "C" rings and the like.**

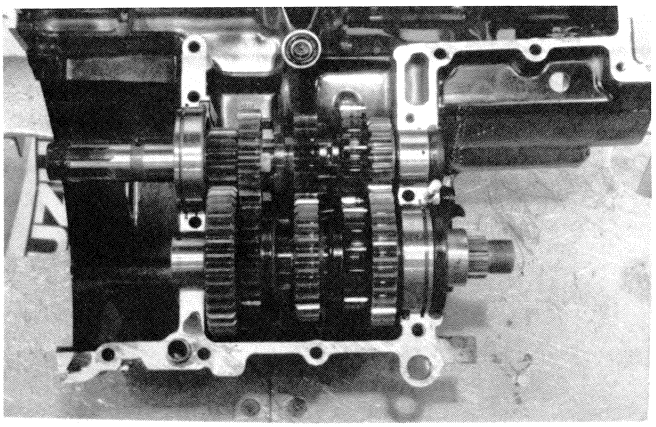

- Remove the crankshaft.

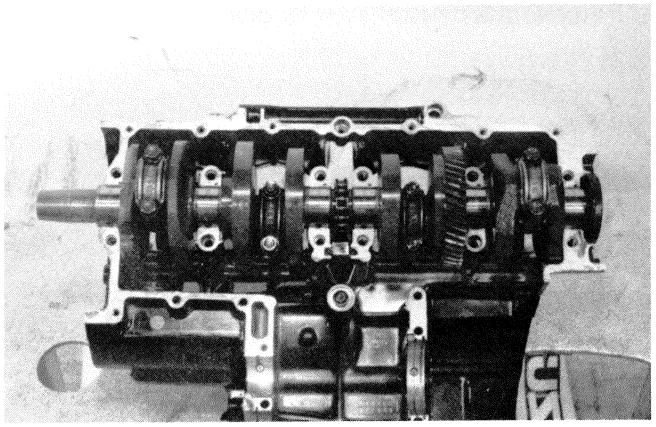

- Pull out the chain guide and two dampers.

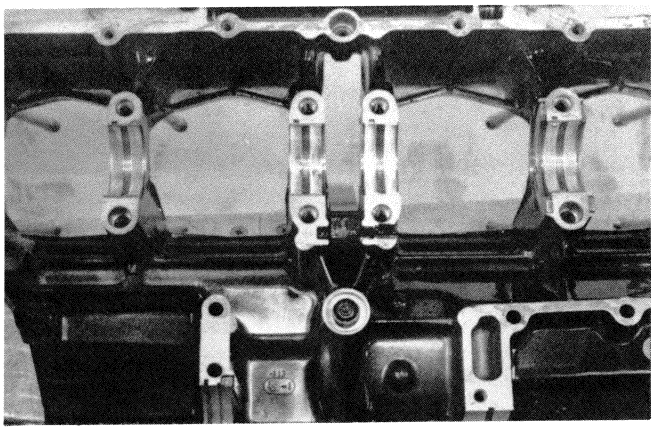

- Remove the cam stopper spring.

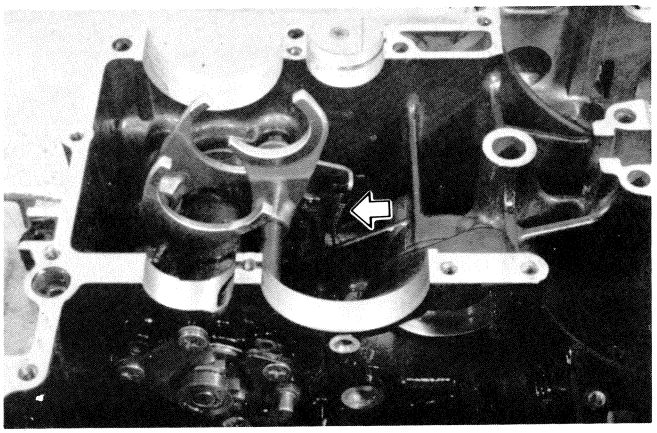

- Remove gearshift cam guide and gearshift pawl screws ① .
- Remove the cam driven gear.

NOTE:
When removing the cam driven gear, do not loose the gear shifting pawl, pin, and spring.

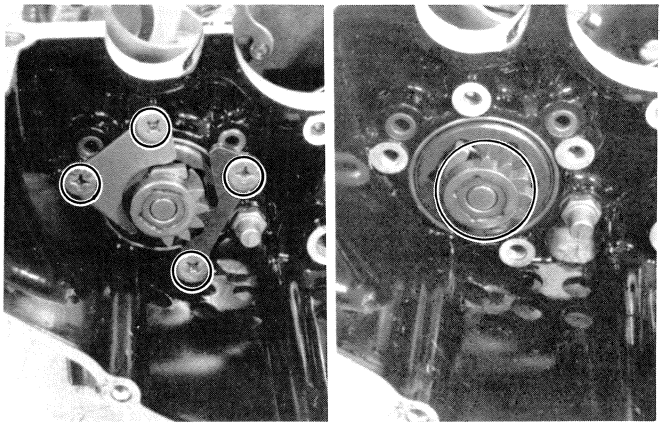

- Hold gear shifting forks by hand and extract the gear shifting fork shafts from the lower crankcase.

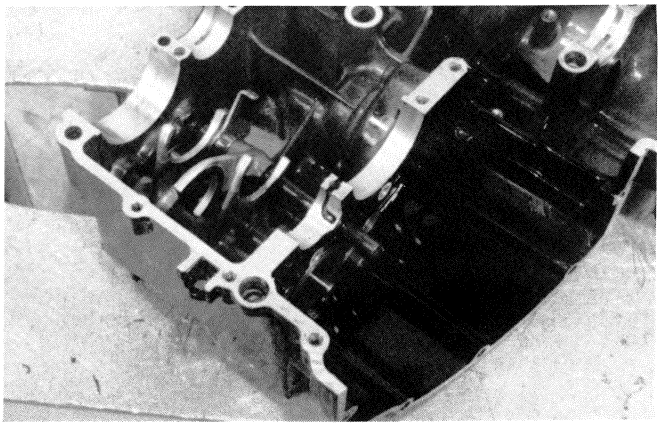

- Remove the gearshift cam circlip.
- Slid the gearshift cam.

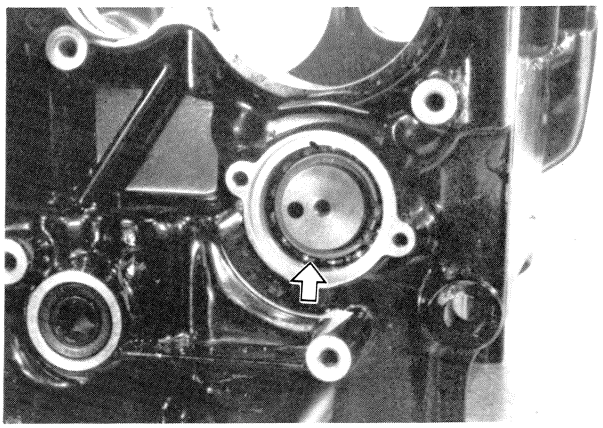

- Remove the washer, spacer, cam stopper retainer and washer.
- Extract gearshift cam from the right side.

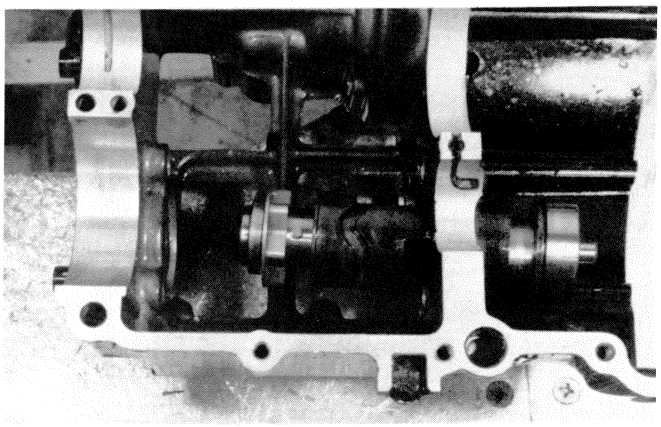

ENGINE COMPORNENTS INSPECTION AND SERVICING

CYLINDER HEAD

- After removing the rocker arm shaft stop bolt, pull the rocker arm shaft by using the 6 mm bolt.

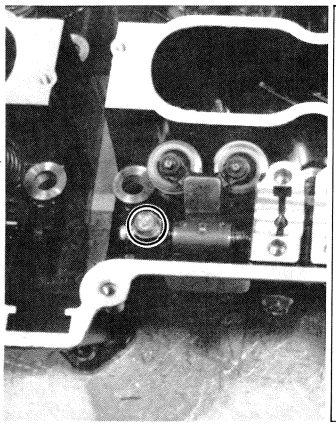

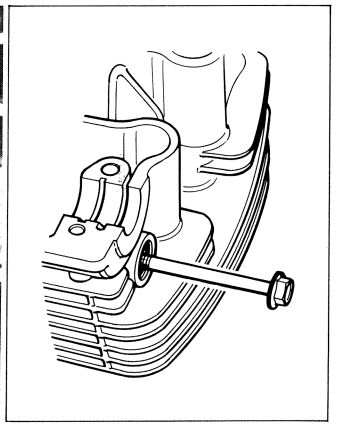

- Using valve lifter and its attachment, compress the valve springs.

09916-14510	Valve lifter
09916-14910	Valve lifter attachment

- Take off the two cotter halves ① from the valve stem, using tweezer.

09916-84510	Tweezer

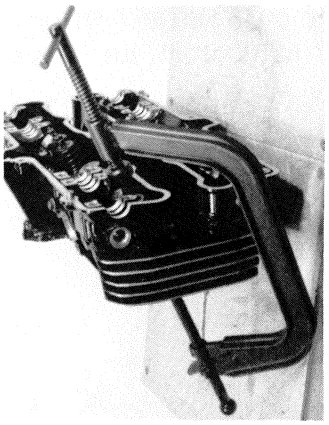

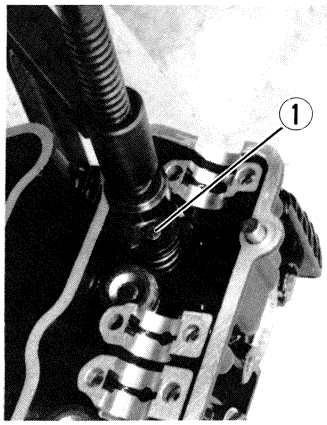

- Take out the valve spring retainer and spring.

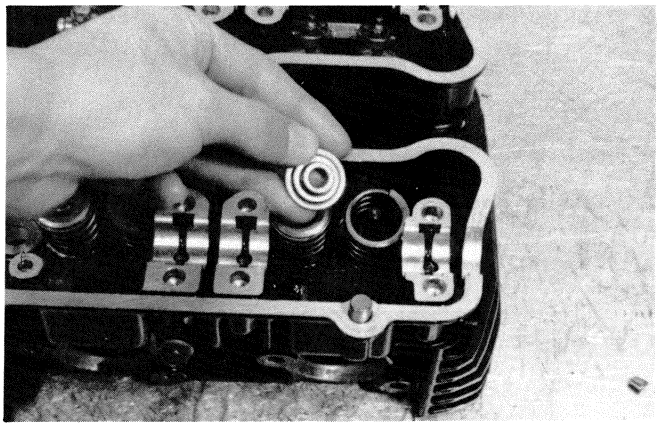

- From the other side, pull out the valve.

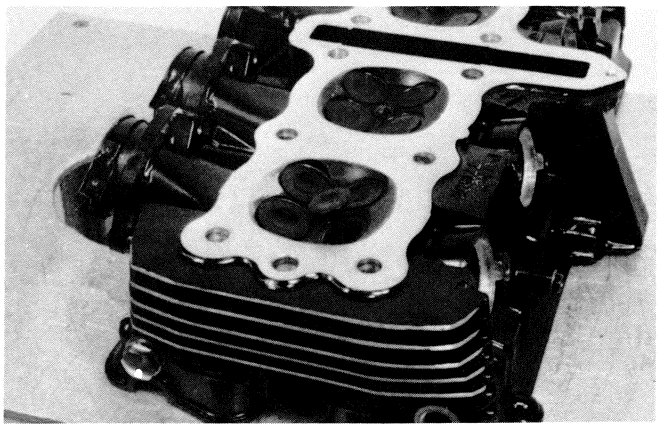

- Remove oil seal by using long-nose pliers.
- Take out the lower spring seat.

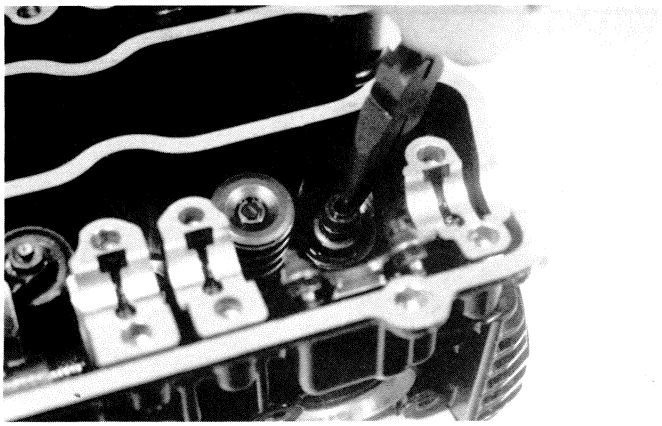

- Remove valve guide.

09916-44910	Valve guide remover

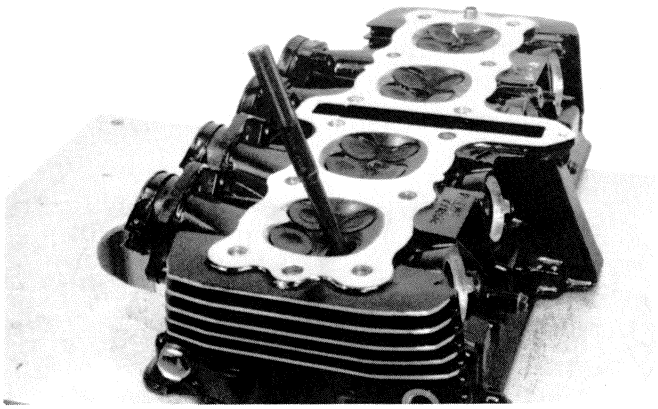

CYLINDER HEAD DISTORTION

- Decarbonize the combustion chambers.
- Check the gasketed surface of the cylinder head for distortion with a straightedge and thickness gauge, taking a clearance reading at several places indicated. If the largest reading at any position of the straightedge exceeds the limit, replace the cylinder head.

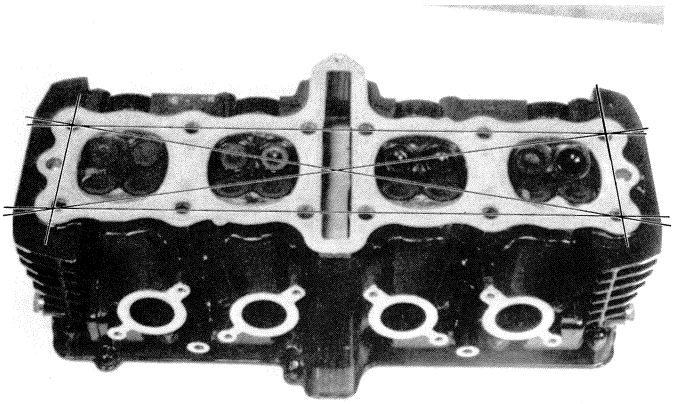

09900-20803	Thickness gauge

Service Limit	0.2 mm (0.008 in)

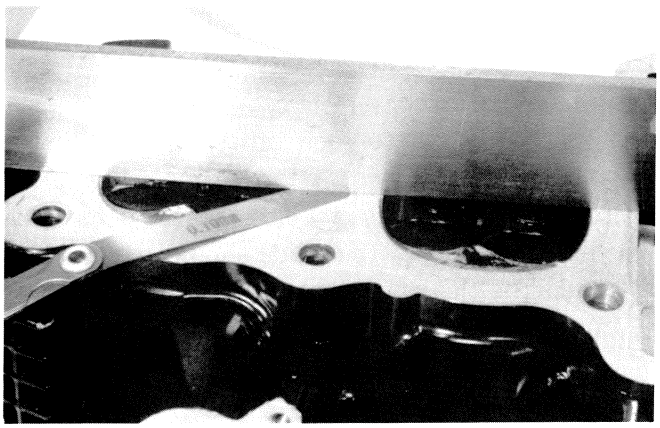

VALVE FACE WEAR

- Visually inspect each valve for wear of its seating face. Replace any valve with an abnormally worn face.
- The thickness Ⓣ decreases as the wear of the face advances. Measure the thickness and, if the thickness is found to have been reduced to the limit, replace it.

Service Limit	0.5 mm (0.02 in)

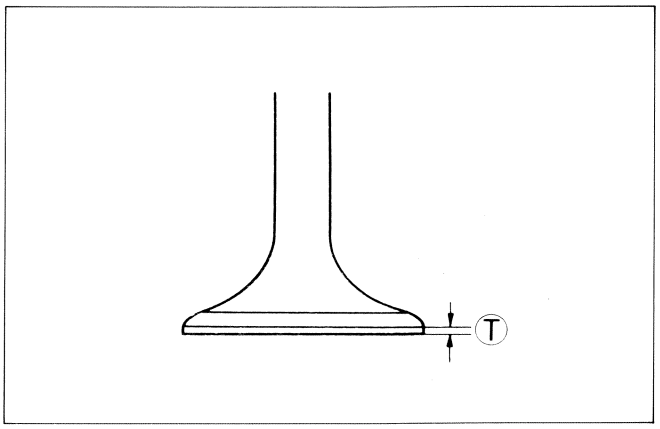

VALVE STEM RUNOUT

- Support the valve with "V" blocks, as shown, and check its runout with a dial gauge.
  The valve must be replaced if the runout exceeds the limit.

Service Limit	0.05 mm (0.002 in)

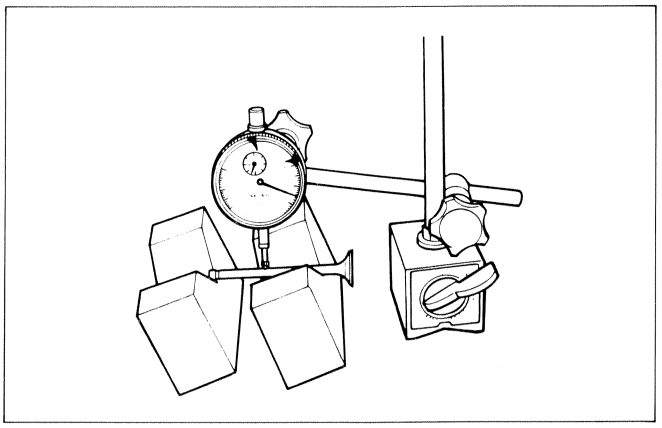

VALVE HEAD RADIAL RUNOUT

- Place the dial gauge at right angles to the valve head face, and measure the valve head radial runout.
  If it measures more than limit, replace the valve.

Service Limit	0.03 mm (0.001 in)

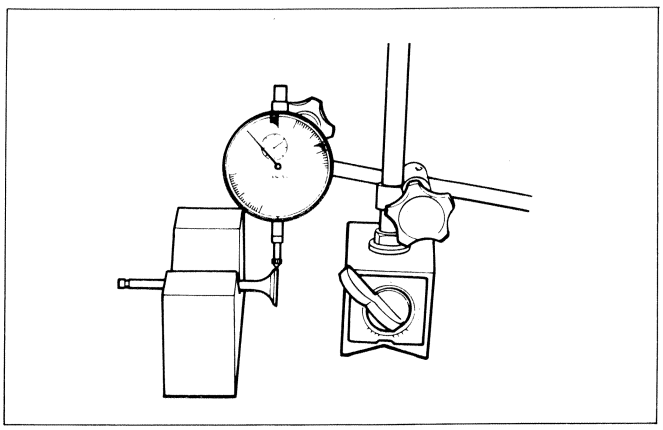

VALVE GUIDE–VALVE STEM CLEARANCE

Measure the clearance in two directions, "X" and "Y", perpendicular to each other, by positioning the dial gauge as shown. If the clearance measured exceeds the limit, (see below) then determine whether the valve or the guide should be replaced to reduce the clearance to the standard range:

Valve	Service Limit
Intake valves	0.35 mm (0.0138 in)
Exhaust valves	0.35 mm (0.0138 in)

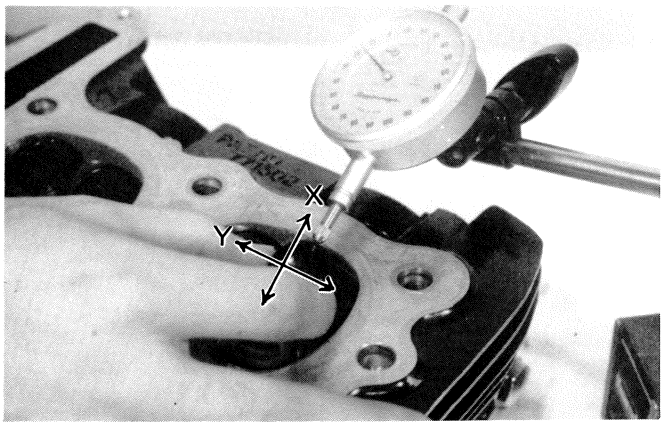

VALVE STEM WEAR

If the valve stem is worn down to the limit, as measured with a micrometer, where the clearance is found to be in excess of the limit indicated, replace the valve; if the stem is within the limit, then replace the guide. After replacing valve or guide, be sure to recheck the clearance.

09900-20205	Micrometer (0 – 25 mm)

Valve	Standard
Intake valves	5.460 – 5.475 mm (0.2150 – 0.2156 in)
Exhaust valves	5.445 – 5.460 mm (0.2144 – 0.2150 in)

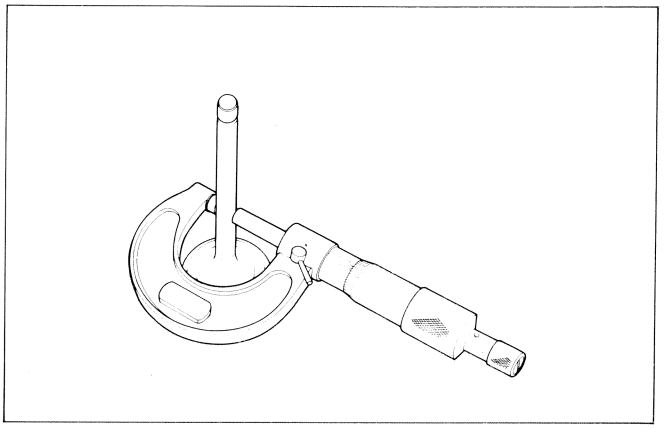

VALVE GUIDE SERVICING

- Using valve guide remover ①, drive the valve guide out toward intake or exhaust port side.

09916-44910	Valve guide remover

NOTE:
* **Discard the removed valve guide sub-assemblies.**
* **Only oversized valve guide is available.**

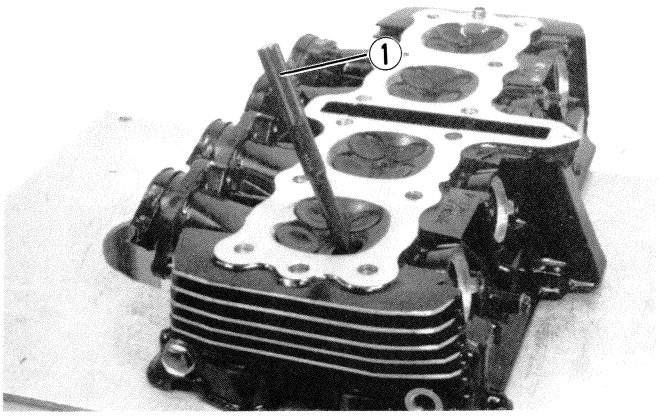

- Re-finish the valve guide holes in cylinder head with a 11.2 mm reamer.

09916-34560	Valve guide hole reamer
09916-34540	Reamer handle

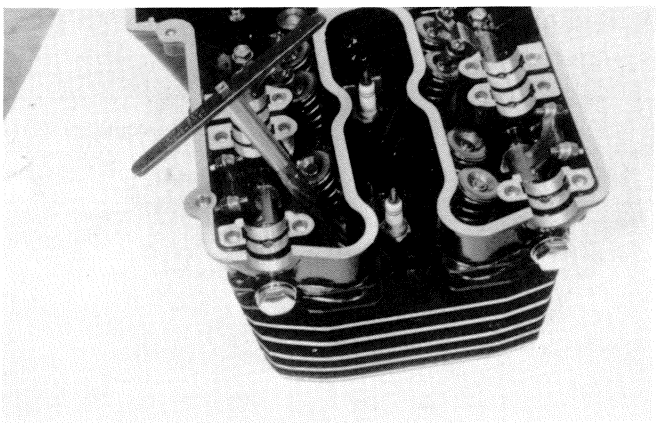

- Fit a ring to each valve guide. Be sure to use new rings and valve guides. Reuse of rings and valve guides removed during disassembly is prohibited. Remember that the guide for intake valve differs in shape from that of the exhaust valve in production, however, the replacements of valve guide and oil seal are identical in shape.

11115-49290	Valve guide
09289-05003	Valve guide oil seal

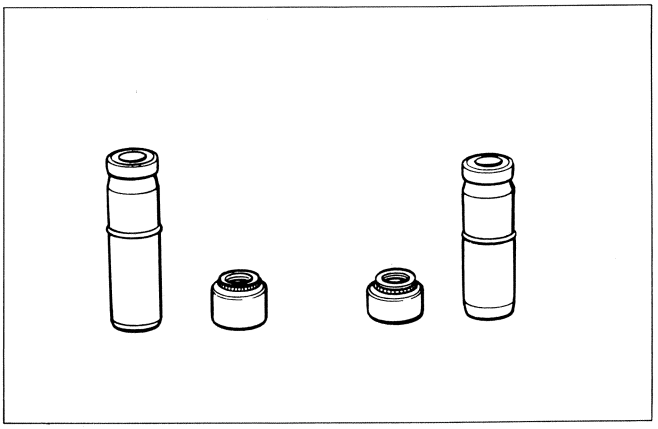

- Oil the stem hole, too, of each valve guide and drive the guide into the guide hole with the valve guide remover and attachment.

09916-44910	Valve guide remover
09916-44920	Valve guide installer attachment

CAUTION:
Failure to oil the valve guide hole before driving the new guide into place many result in a damaged guide or head.

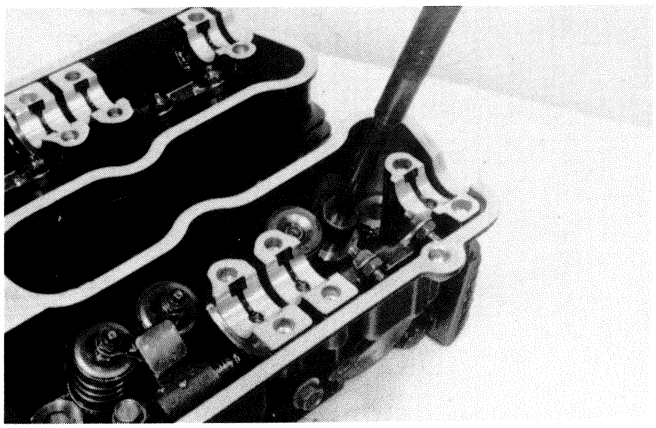

- Install the valve spring guide.

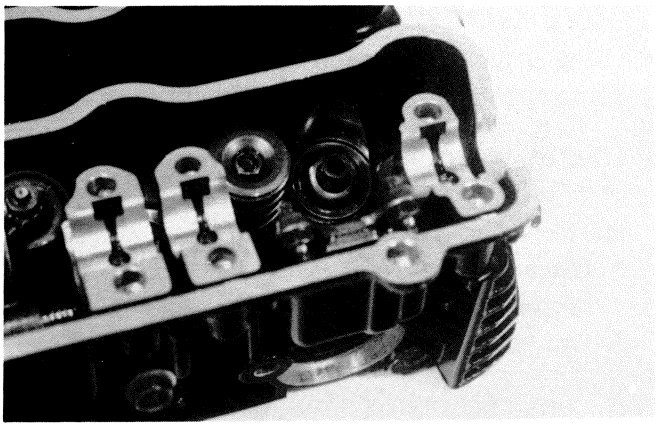

- Re-finish the valve guide inner surface with a 5.5 mm reamer.

09916-34550	Valve guide reamer
09916-34540	Reamer handle

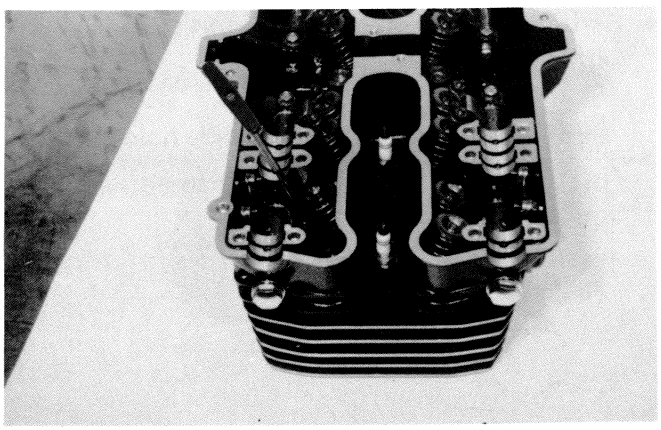

- Oil each oil seal, and drive them into position with the valve guide remover.

09916-44910	Valve guide remover

NOTE:
Do not use the oil seals removed once. Use new seals.

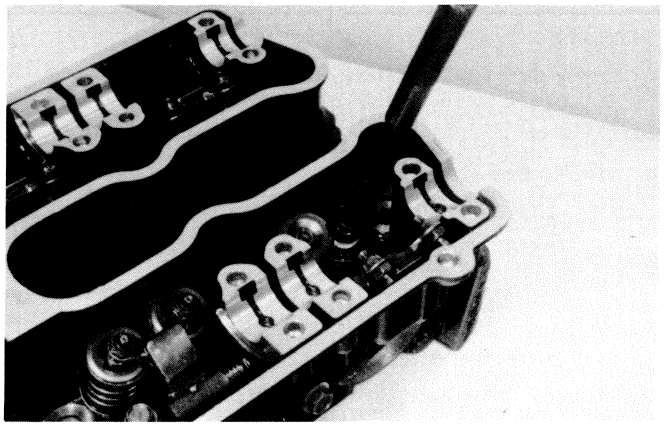

VALVE SEAT WIDTH

- Coat the valve seat with Prussian blue uniformly. Fit the valve and tap the coated seat with the valve face in a rotating manner, in order to obtain a clear impression of the seating contact. In this operation, use the valve lapper to hold the valve head.
- The ring-like dye impression left on the valve face must be continuous—without any break—and, in addition to this requirement, the width of the dye ring, which is the visualized seat "width", must be within the following specification:

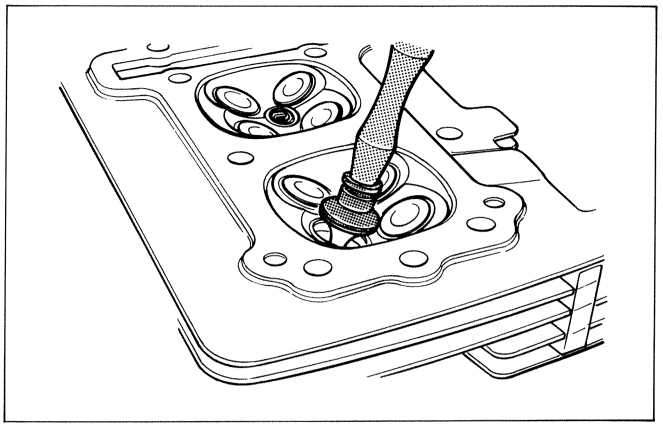

Valve seat width

Seat width	Standard
Ⓦ	0.9 – 1.1 mm (0.035 – 0.043 in)

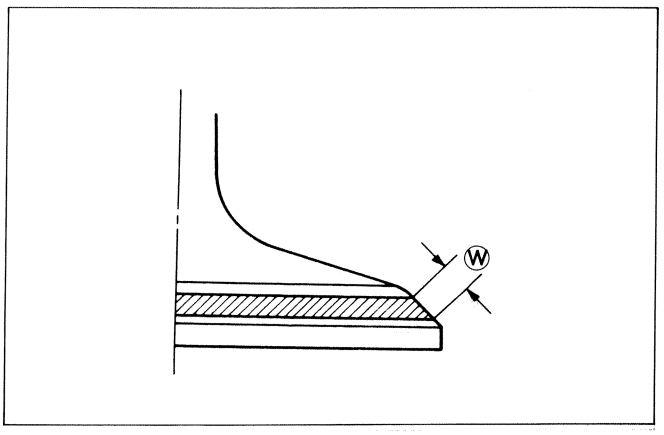

If either requirement is not met, correct the seat by servicing it as follows:

VALVE SEAT SERVICING

- The valve seats for both intake and exhaust valves are angled to present two bevels, 45° (seat contact surface) and 15° (top). To reface the seat, proceed as follows:

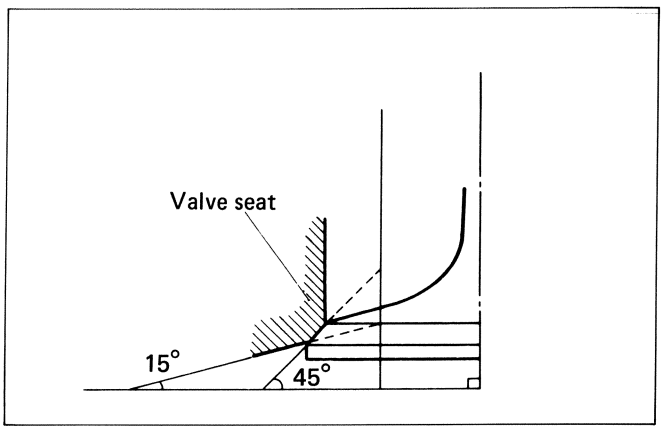

NOTE:
The valve seat contact area must be inspected after each cut.

- Insert the pilot ① with a slight rotation, and then tighten the bottom screw that gives a snug fit. Install the 45° cutter, attachment and T handle.
- Using the 45° cutter, descale and cleanup the seat with one or two turns.
- Inspect the seat by the previous seat width measurement procedure. If the seat is pitted or burned, additional seat conditioning with the 45° cutter is required.

NOTE:
Cut the minimum amount necessary from the seat to prevent the possibility of the valve stem becoming too close to the rocker arm for correct valve contact angle.

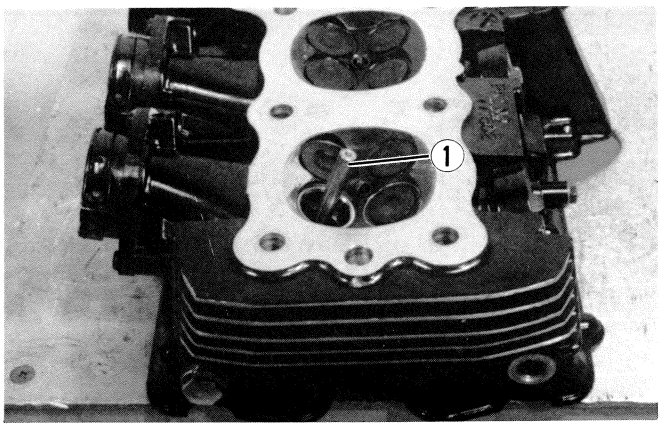

Contact area too high and too wide on face of valve

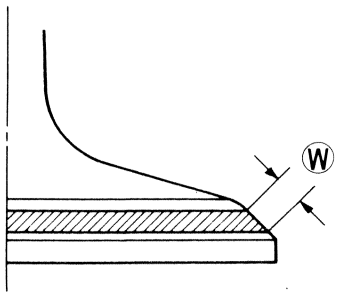

If the contact area is too low, use 15° cutter to raise and narrow the contact area. If the contact area is too high, use 45° cutter to lower the contact area. After cutting the 15° angle, it is possible that the valve seat (45°) is too narrow.

If so, re-cut the seat to the correct width.

- After the desired seat position and width is achieved, use the 45° cutter very lightly to clean up any burrs caused by the previous cutting operations. DO NOT use lapping compound after the final cut is made. The finished valve seat should have a velvety smooth finish and not a highly polished or shiny finish. This will provide a soft surface for the final seating of valve which will occur during the first few seconds of engine operation.

Contact area too low and too narrow on face of valve

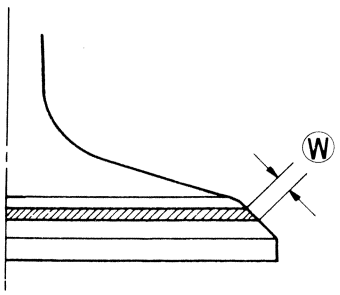

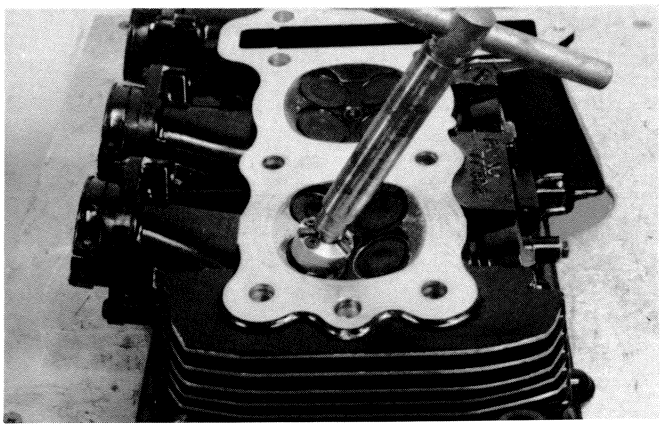

Using part list of valve seat servicing

		IN	EX
Valve seat cutter head	45°	N-116 15°x45° cutter	←
	15°	N-116 15°x45° cutter	N-120 15° cutter
Solid pilot		N-100-10	←
Adapter		N-503-1	←
T-handle		N-503	←

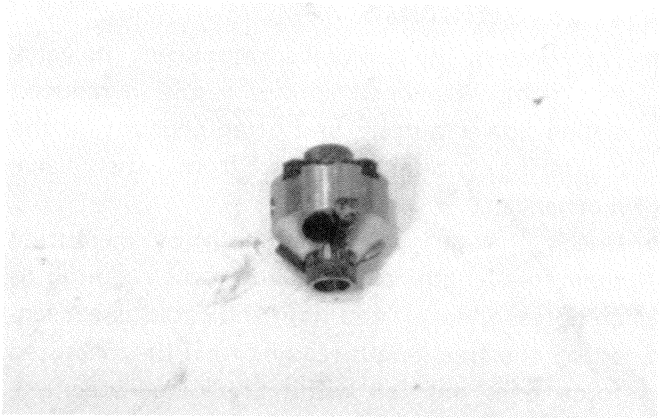

- Clean and assemble the head and valve components. Fill the intake and exhaust ports with gasoline to check for leaks. If any leaks occur, inspect the valve seat and face for burrs or other things that could prevent the valve from sealing.

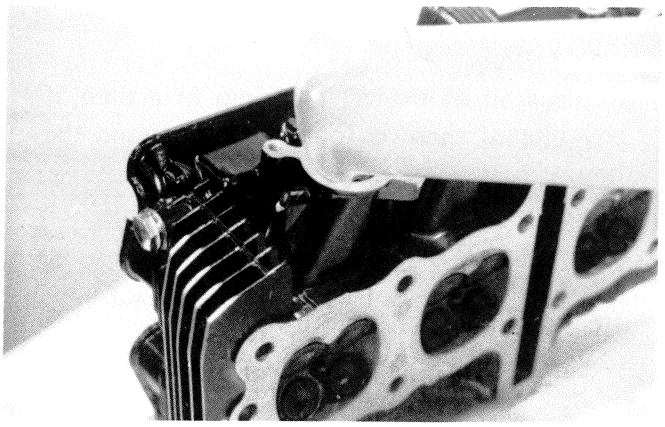

NOTE:
- **Always use extreme caution when handling gasoline.**
- **After servicing the valve seats, be sure to adjust the valve clearance after the cylinder head has been reinstalled. (see page 2-4)**

CAUTION:
- **Refacing valve stem end face is permissible where the length ① will not be reduced to less than 3.6 mm(0.14 in). If this length becomes shorter than 3.6 mm (0.14 in), then the valve must be replaced.**
- **After installing the valve whose stem end has been ground off as above, check that the face ② of valve stem end is above the valve cotter ③ .**

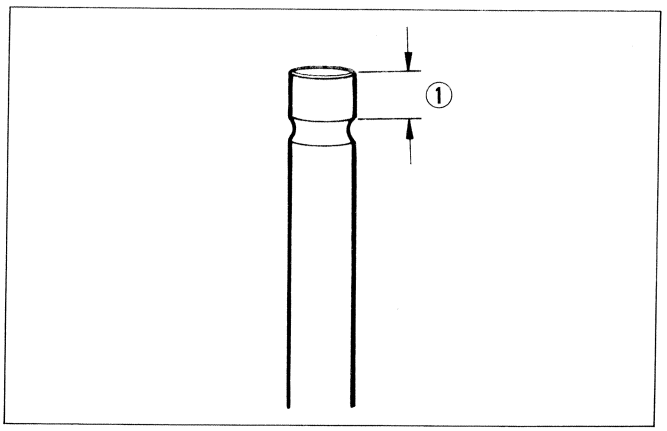

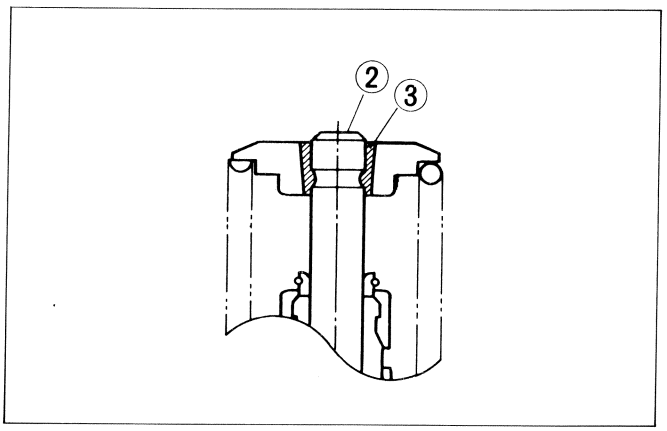

VALVE SPRINGS

- The force of the two coil springs keeps the valve seat tight. Weakened springs result in reduced engine power output, and often account for the chattering noise coming from the valve mechanism.
- Check the springs for strength by measuring their free lengths and also the force required to compress them. If the limit indicated is exceeded by the free length reading or if the measured force does not fall within the range specified, replace with a SUZUKI spring.

CAUTION:
Replace all of the valve springs at a time, if any one of these is found to be beyond the limit.

	Service limit
Valve spring free length	37.95mm (1.494 in)

	Standard
Valve spring tension	11.7 – 15.3 kg (25.79 – 33.73 lbs) at length 32.5 mm (1.30 in)

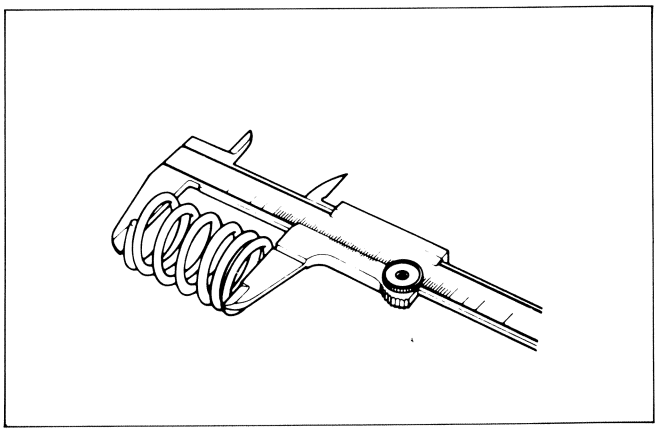

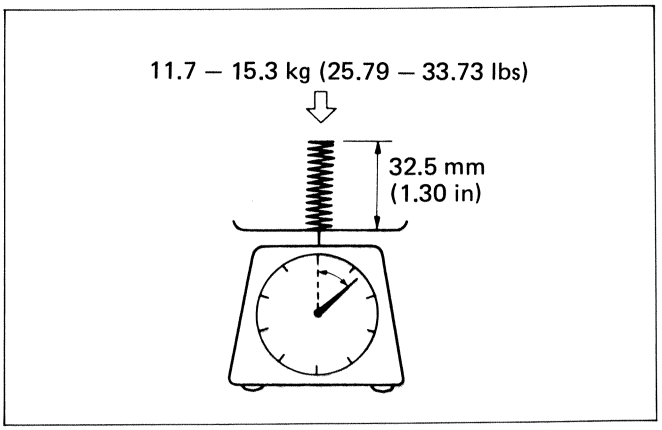

REASSEMBLY

- Install valve spring lower seats ①. Be careful not to confuse the lower seats with the spring retainer ②.

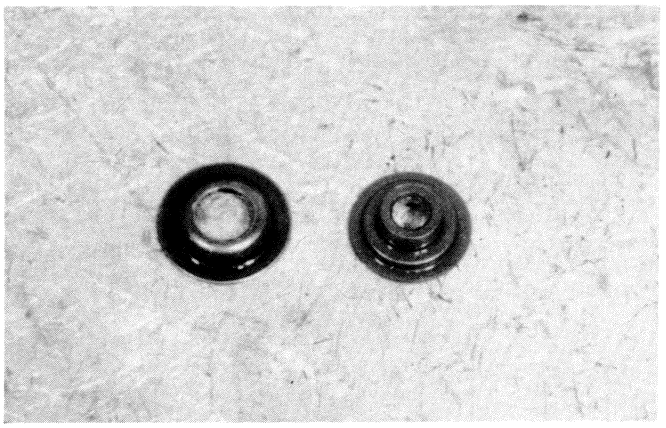

- Insert the valves, with their stems coated with high quality molybdenum disulfide lubricant (SUZUKI MOLY PASTE) all around and along the full stem length without any break.

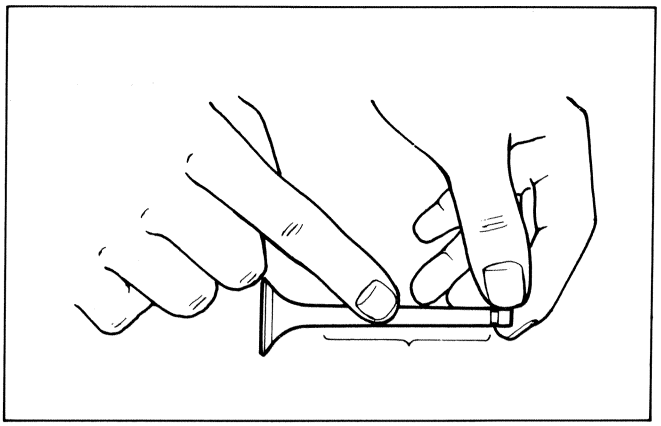

CAUTION:
When inserting each valve, take care not to damage the lip of the stem seal.

99000-25140	SUZUKI Moly Paste

- Position valve spring in place, making them rest on lower spring seat ① by their closed-pitch end ③. Spring has varied coil pitches: the coil pitch progressively becomes shorter from one end to the other. Large-pitch portions are indicated as ② : small-pitch portions as ③.
- Put on the valve retainer and, using the valve lifter, press down the springs, fit the cotter halves to the stem end, and release the lifter to allow the cotter ① to wedge in between retainer and stem. Be sure that the rounded lip ② of the cotter fits snugly into the groove ③ in the stem end.

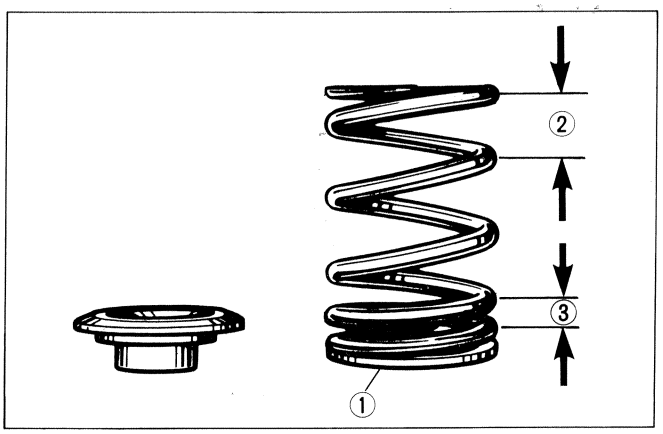

09916-14510	Valve lifter
09916-14910	Valve lifter attachment
09916-84510	Tweezer

CAUTION:
Be sure to restore each spring and valve to their original positions.

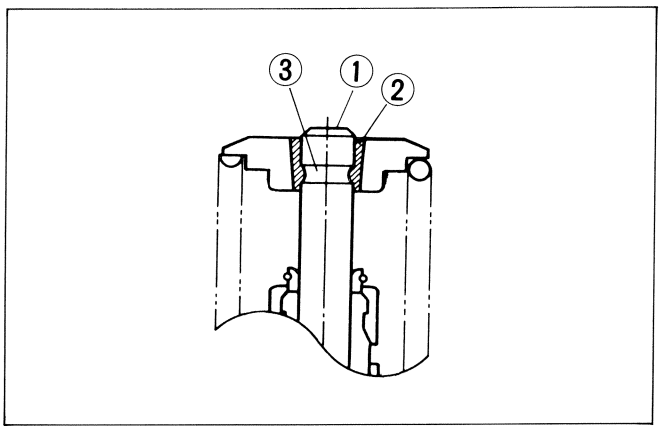

CAMSHAFT

- Both camshafts should be checked for deflection and also for wear of cams and journals if the engine has been noted as giving abnormal noise or vibration or lack power output. Any of these conditions may be caused by camshafts worn down or distorted to the service limit.

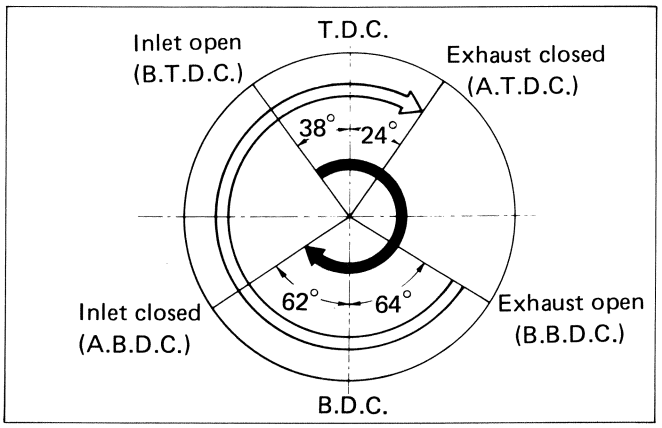

- The exhaust camshaft can be distinguished from that of the intake by the embossed letters "EX" (for exhaust) as against letters "IN" (for intake). Similarly, the right end can be distinguished by the notch from the left end.

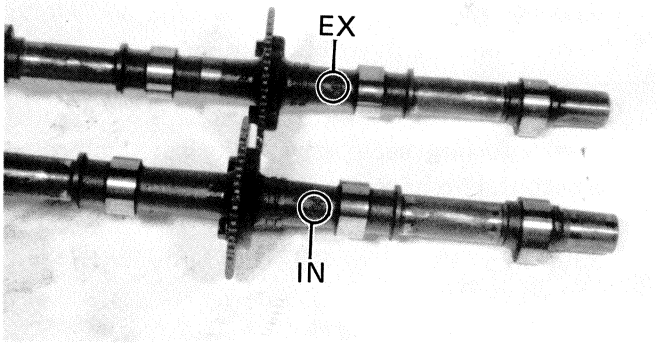

CAM WEAR

- Worn-down cams are often the cause of mistiming valve operation resulting in reduced power output. The limit of cam wear is specified for both intake and exhaust cams in terms of cam height Ⓗ, which is to be measured with a micrometer. Replace camshafts if found worn down to the limit.

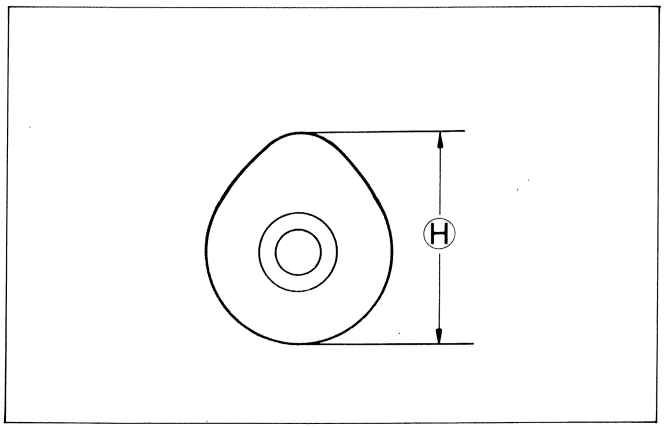

Cam height

Height Ⓗ	Service Limit
Intake cams	34.910 mm (1.3744 in)
Exhaust cams	34.060 mm (1.3409 in)

CAMSHAFT JOURNAL WEAR

- Determine whether or not each journal is worn down to the limit by measuring the running clearance with the camshaft installed in place. Use plastigauge ① to read the clearance at the widest portion, which is specified as follows:

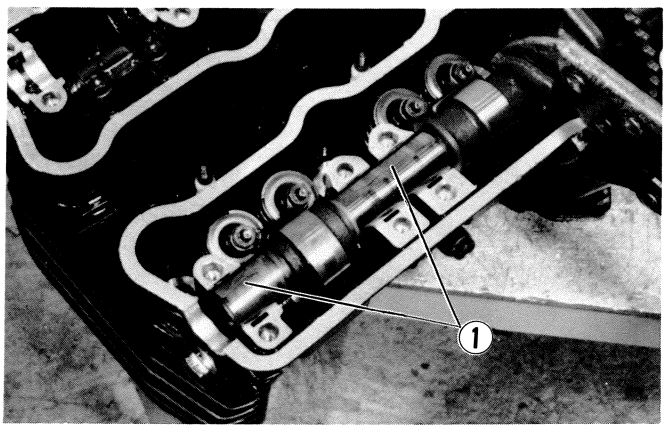

Camshaft—Journal clearance

Service Limit	0.15 mm (0.0059 in)

NOTE: **Install each holder to their original positions.**

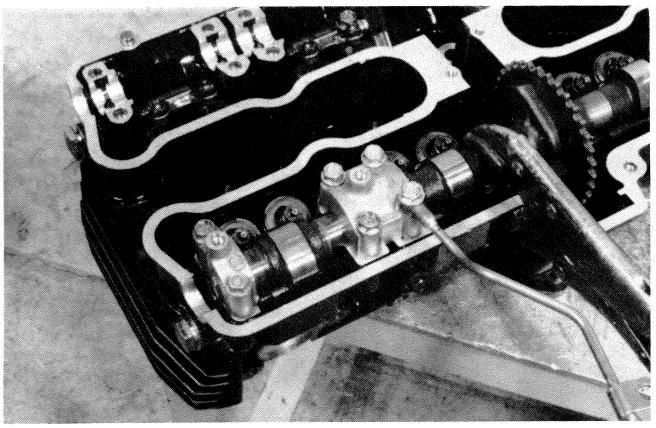

- Tighten the camshaft holder bolts evenly and diagonally to the specified torque.

Tightening torque	0.8 – 1.2 kg-m (6.0 – 8.5 lb-ft)

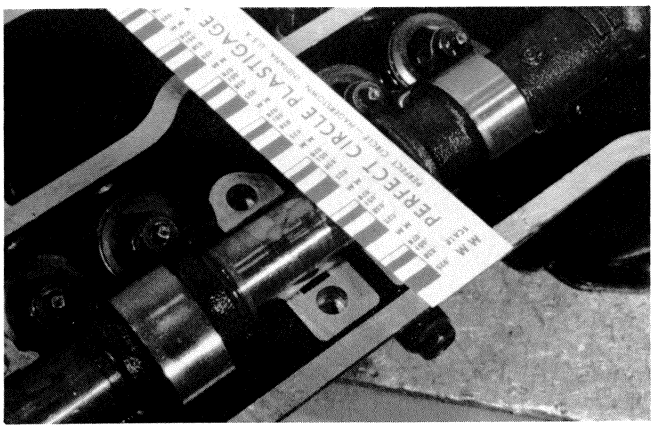

- If the camshaft journal clearance measured exceed the limit, measure the inside diameter of camshaft journal holder and outside diameter of the camshaft journal. Replace the camshaft or holder which exceed the specification.

09900-20205	Micrometer (0 – 25 mm)

	Standard
Journal holder I.D. (In & Ex)	22.015 – 22.025 mm (0.8667 – 0.8671 in)
Camshaft journal O.D. (In & Ex)	21.959 – 21.980 mm (0.8645 – 0.8654 in)

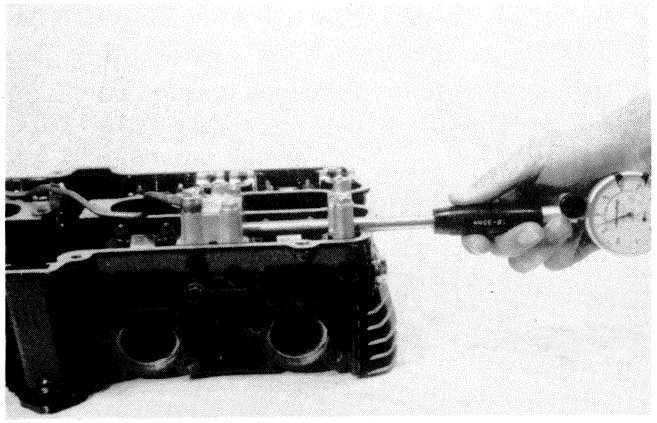

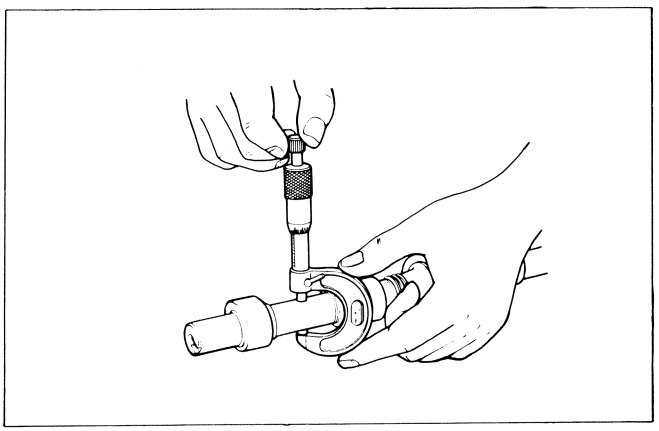

CAMSHAFT RUNOUT

- Measure the runout with a dial gauge. Replace the camshaft if the runout exceeds the limit.

Camshaft runout (IN & EX)

Service Limit	0.1 mm (0.004 in)

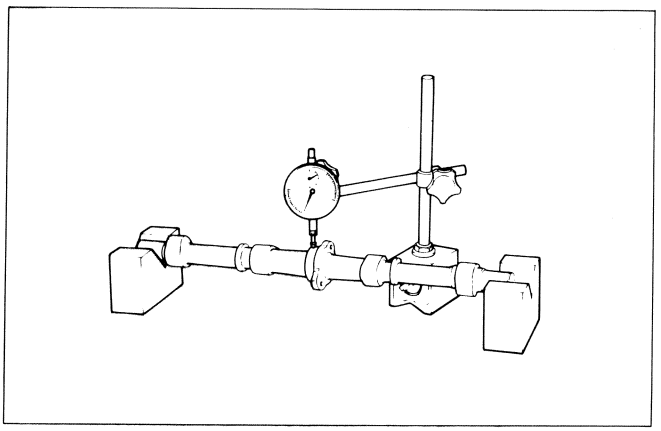

CAM SPROCKET REASSEMBLY

- It is very important that each sprocket be positioned angularly on its camshaft as illustrated. Its correct position is determined by arrow mark "3" (on INTAKE sprocket) or arrow marks "1" and "2" (on EXHAUST sprocket) located (as shown) in reference to the notch ① in the camshaft end.

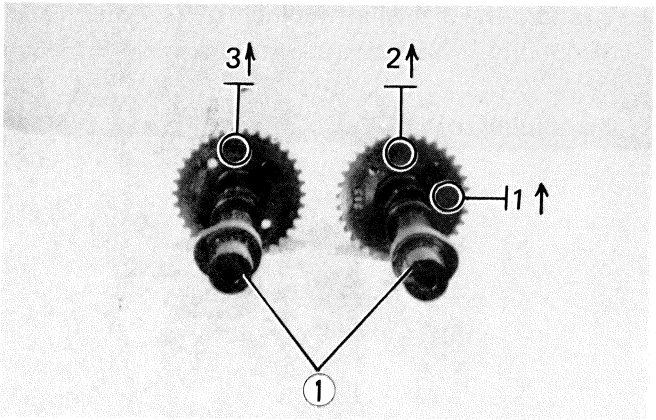

- Apply THREAD LOCK SUPER 1363A (99104-32030) to the threads of Flange bolts, and tighten them to the following torque value.

99104-32030	Thread lock super 1363A

Tightening torque	2.4 – 2.6 kg-m (17.5 – 19.0 lb-ft)

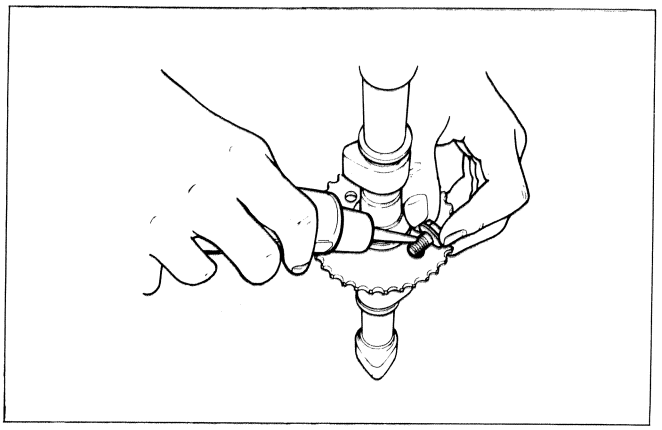

CAM CHAIN TENSIONER DISASSEMBLY

- The tension adjuster is an automatic type that adjusts itself to apply a constant tensioning force to the chain by compensating for the stretch of the chain.

- The spring-loaded pushrod exerts a constant pressure on the camshaft chain. As the chain stretches, it yields to this pressure and remains in a state of tension. Once the adjuster is set after installation, there is no need to make any further adjustment.

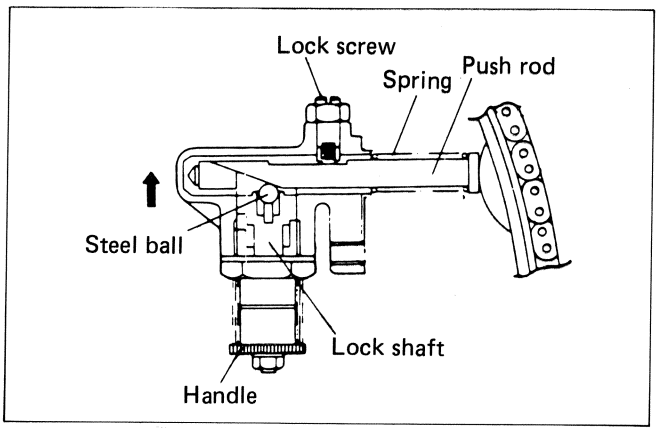

- The pushrod effectively contends with the tendency of the camshaft chain tension to vary during driving condition as it may move in one direction only.

- While holding the push rod ① , loosen the lock screw ② and extract the push rod.

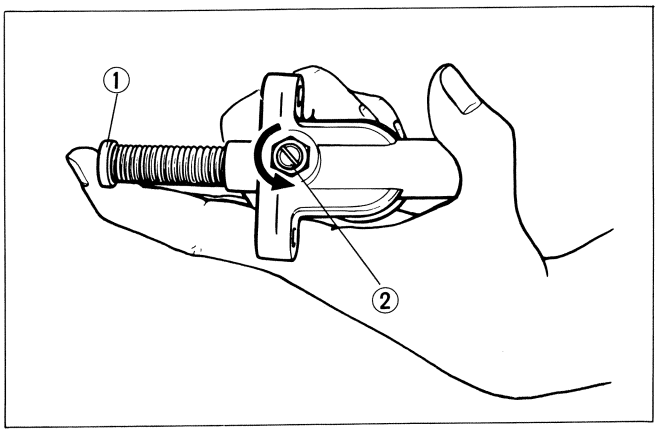

INSPECTION

- Turn the handle ① all the way counterclockwise after loosening the lock screw, and move the push rod ② to see if it slides smoothly. If any stickness is noted, remove the rod for inspection. A bent or scratched push rod must be replaced.

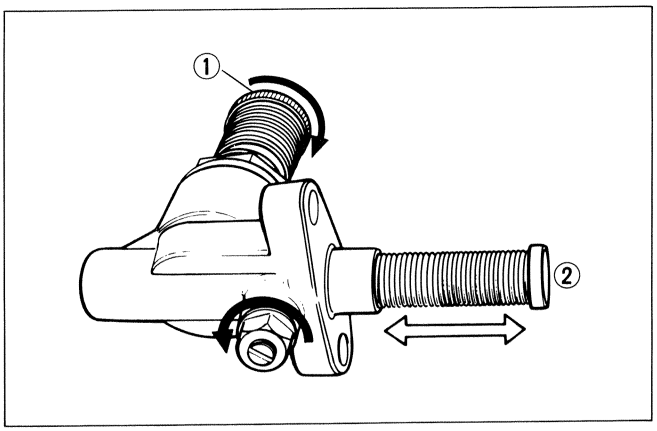

- Turn handle ① all the way counterclockwise against the force of its coil spring and then turn it back as assisted by spring force to see if the handle returns to the original position ② without exhibiting any sticking. Repeat this process several times. If any excessive sticking is felt or if the self-adjusting action is faulty, replace the whole tensioner.

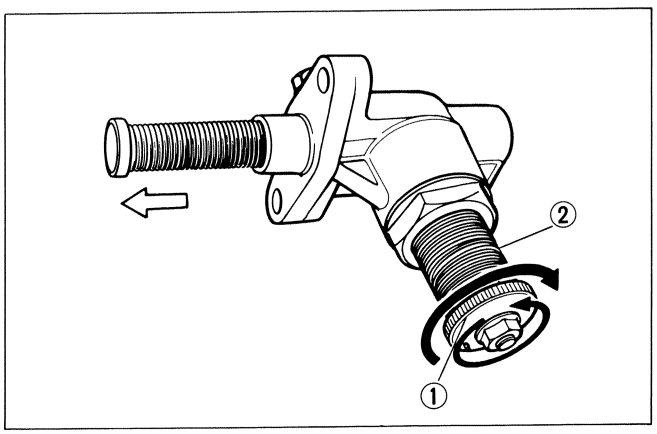

REASSEMBLING

- Apply engine oil to the lock shaft ① . Insert the shaft into the holder ② , and bring the two into the relative position indicated.

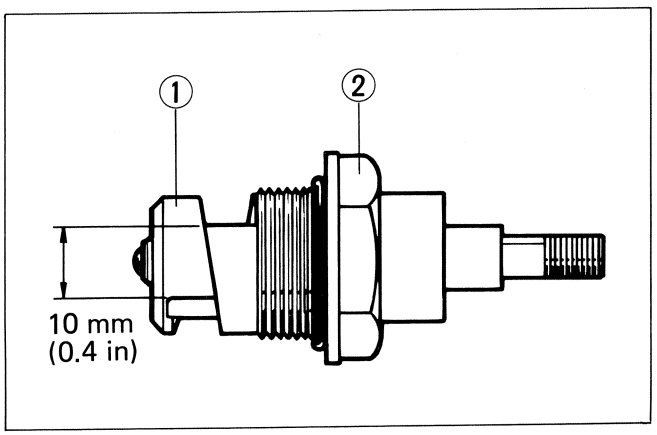

- Hook the spring onto the holder and handle ③, twist the spring by one complete rotation counterclockwise Ⓐ, fit the handle onto the shaft, and then tighten the nut ④.

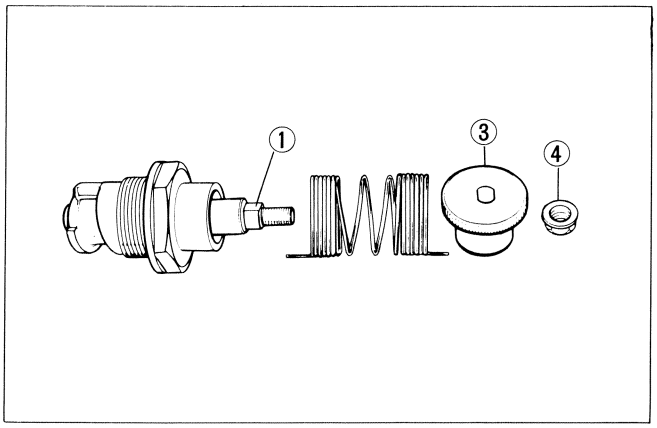

- After tightening the lock shaft nut ④, install the lock shaft assembly ⑤ on the tensioner body ⑥. Be sure to adhere to the following torque specifications:

Lock shaft nut tightening torque	0.8–1.0 kg-m (6.0–7.0 lb-ft)

Shaft assembly tightening torque	3.1–3.5 kg-m (22.5–25.5 lb-ft)

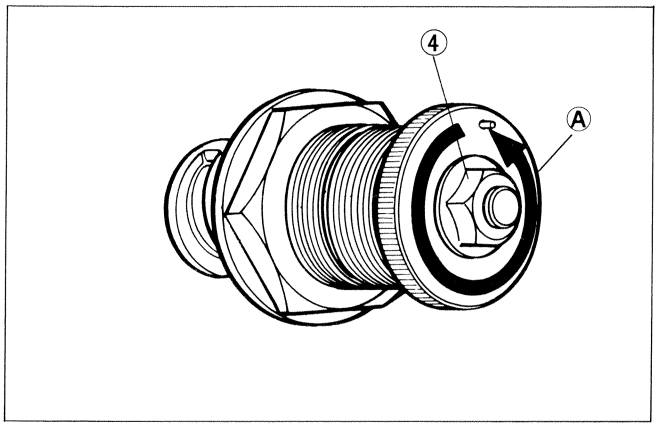

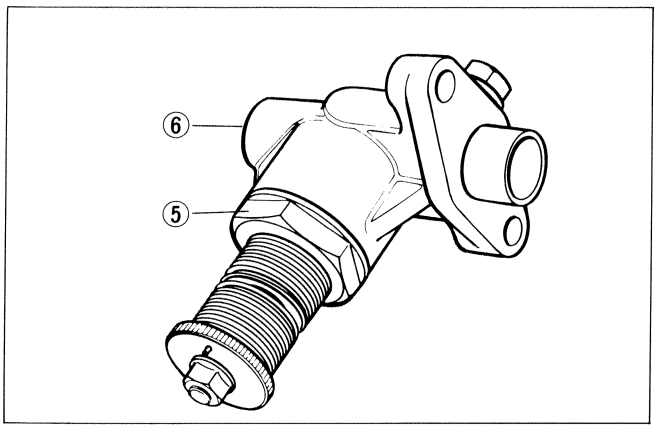

- Apply a high quality molybdenum disulfide lubricant (SUZUKI MOLY PASTE) to the push rod and engine oil to the push rod guide hole.

99000-25140	SUZUKI Moly Paste

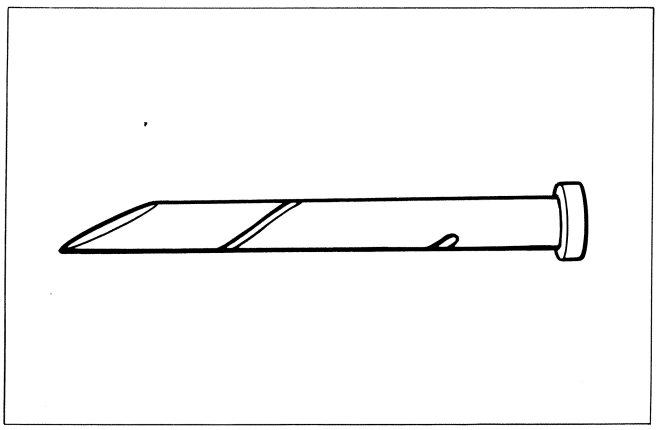

- Match the lock screw hole ① to the long groove ② in the push rod, as shown.
- Slide the push rod spring on to the pushrod.

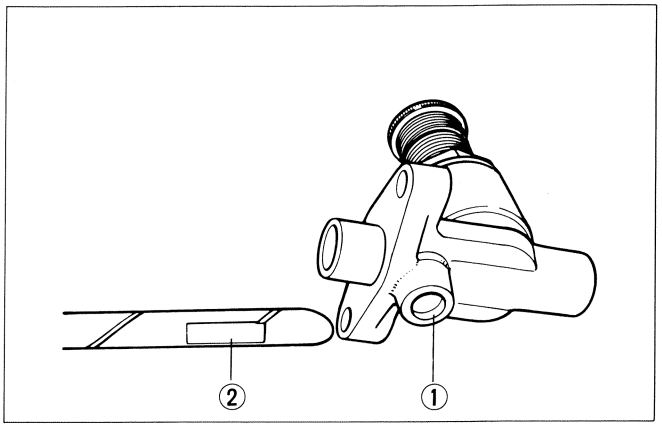

- While turning lock shaft handle counterclockwise, push in the pushrod all the way. Keep on turning the handle until it refuses to turn further.

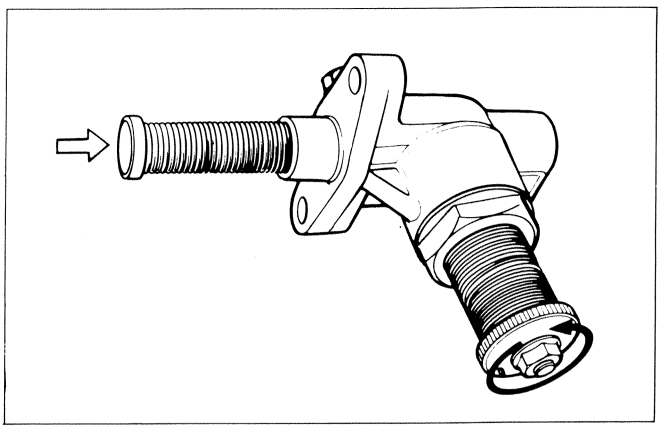

- Tighten the lock screw to lock the pushrod, so that the pushrod will not plunge out.

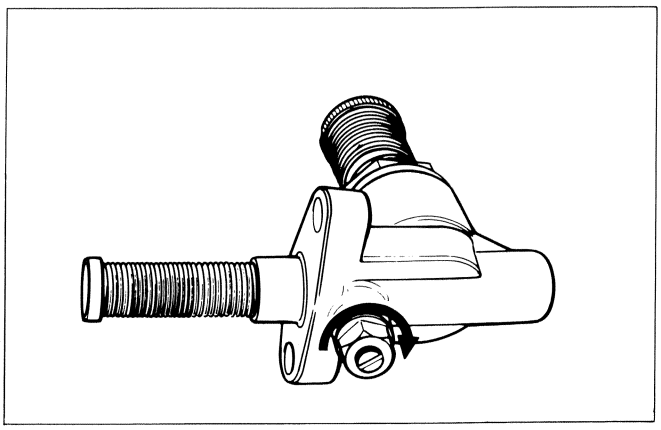

CAM CHAIN 20-PITCH LENGTH

Pull the chain tight to remove any slack, then using vernier calipers, measure the 20 pitch length of cam chain. If it measures more than limits, replace the cam chain.

Service Limit	157.80 mm (6.213 in)

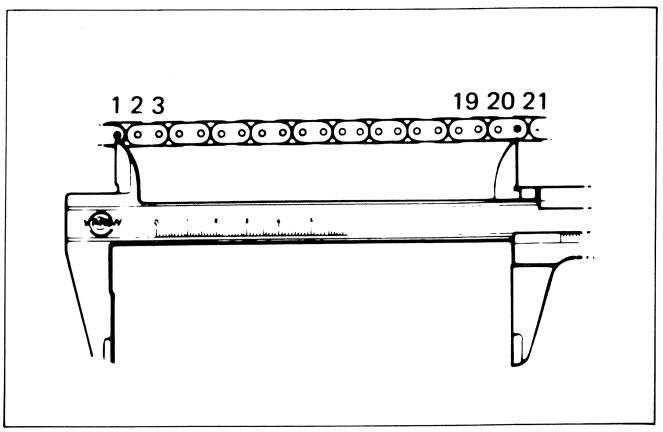

CAM CHAIN GUIDE

NOTE:
When replacing following chain guides, apply SUZUKI Thread lock cement 1361A to screws and bolts thread.

99104-32020	Thread lock super 1361A

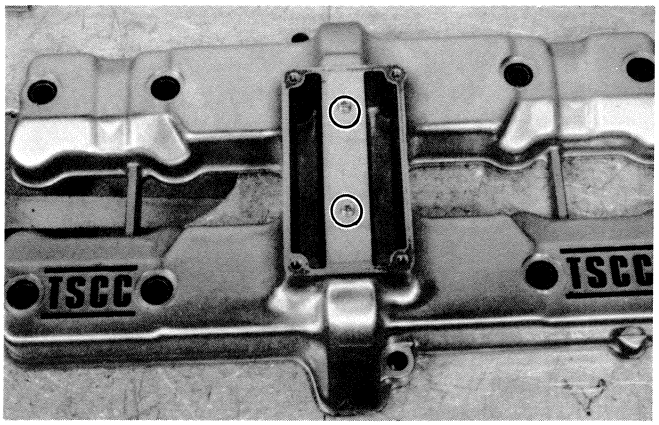

CYLINDER DISTORTION

Check the gasketed surface of the cylinder for distortion with a straightedge and thickness gauge, taking a clearance reading at several places indicated. If the largest reading at any position of the straightedge exceeds the limit, replace the cylinder.

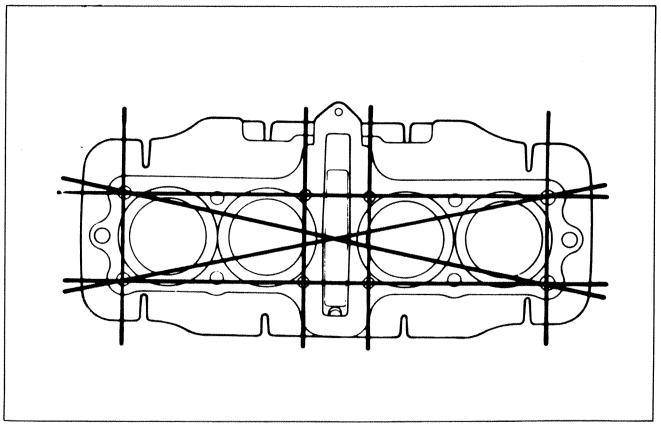

Cylinder distortion specification

Service Limit	0.20 mm (0.008 in)

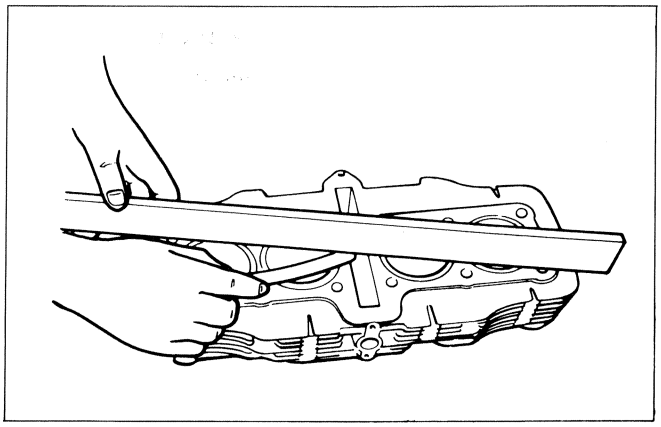

CYLINDER BORE

Measure the cylinder bore diameter at six places. If any one of the measurements exceeds the limit, overhaul the cylinder and replace the piston with an oversize, or replace the cylinder. Once the reboring is done on any one cylinder which measurement is beyond the limit, the remaining cylinders must be also rebored accordingly. Otherwise the imbalance might causes excess vibration.

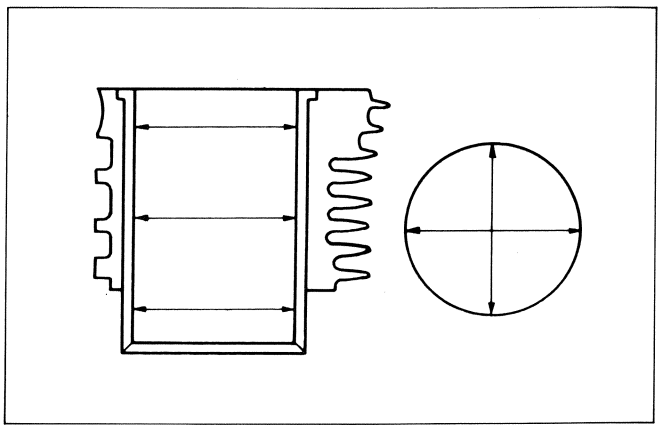

Cylinder bore

Service Limit	67.080 mm (2.6409 in)

09900-20508	Cylinder gauge set.

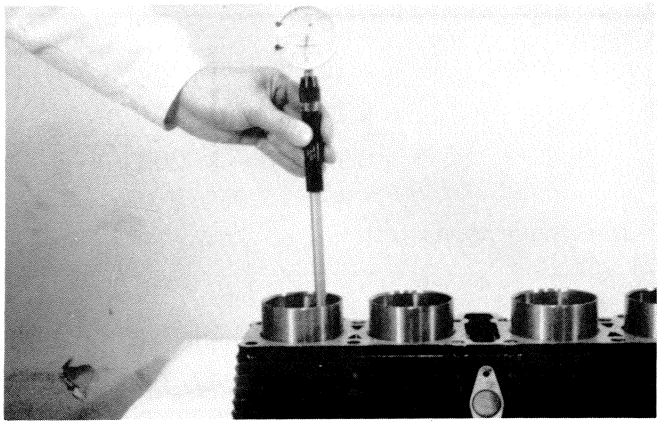

PISTON DIAMETER

Using a micrometer, measure the piston outside diameter at the place shown in Fig. If the measurement is less than the limit, replace the piston.

Piston oversize	0.5, 1.0 mm
Service Limit	66.880 mm (2.6331 in)
09900-20203	Micrometer (50-75 mm)

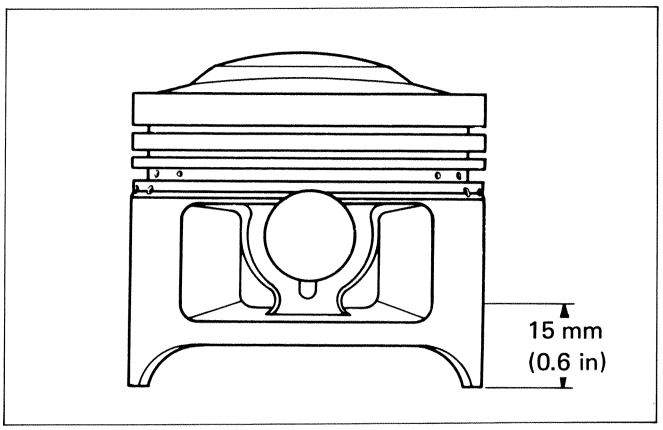

PISTON – CYLINDER CLEARANCE

As a result of the above measurement, if the piston clearance exceeds the following limit, overhaul the cylinder and use an oversize piston, or replace both cylinder and piston.

Service Limit	0.120 mm (0.0047 in)

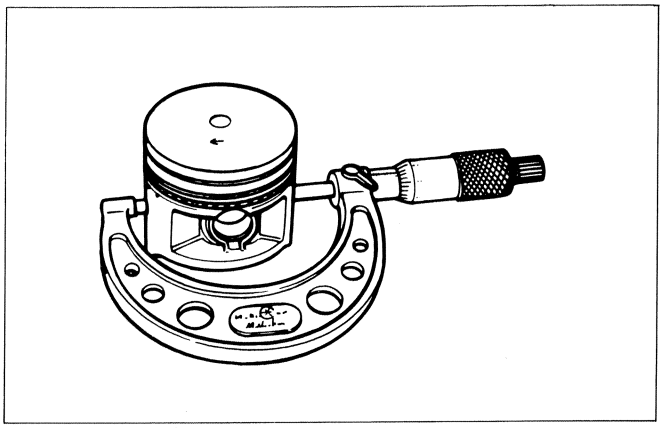

PISTON RING – GROOVE CLEARANCE

Using a thickness gauge, measure the side clearances of the 1st and 2nd rings. If any of the clearances exceeds the limit, replace both piston and piston rings.

09900-20803	Thickness gauge

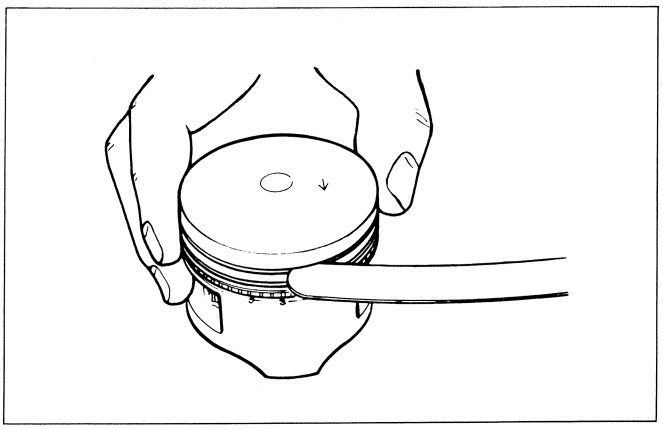

Piston ring—groove clearance

Piston ring	Service Limit
1st	0.180 mm (0.0071 in)
2nd	0.150 mm (0.0059 in)

Piston ring groove width

Piston ring	Standard
1st	1.21–1.23 mm (0.047–0.048 in)
2nd	1.21–1.23 mm (0.047–0.048 in)
Oil	2.51–2.53 mm (0.0988–0.0996 in)

Piston ring thickness

Piston ring	Standard
1st	1.170–1.190 mm (0.0461–0.0469 in)
2nd	1.170–1.190 mm (0.0461–0.0469 in)

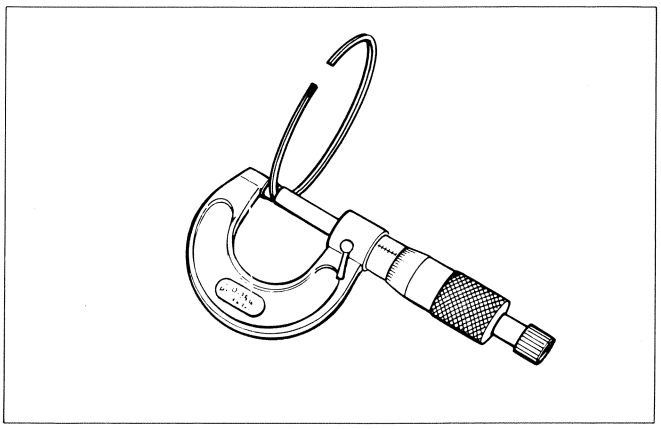

PISTON RING FREE END GAP AND PISTON RING END GAP

Before installing piston rings, measure the free end gap of each ring using vernier calipers. Next, fit the ring in the cylinder, and measure each ring end gap using a thickness gauge.
If any ring has an excess end gap, replace the ring.

Piston ring free end gap Unit : mm (in)

Piston ring		Service limit
1st	N	7.6 (0.30)
	R	7.2 (0.28)
2nd	N	8.0 (0.31)
	R	8.0 (0.31)

Piston ring end gap

Piston ring	Service Limit
1st & 2nd	0.7 mm (0.03 in)

09900-20803	Thickness gauge

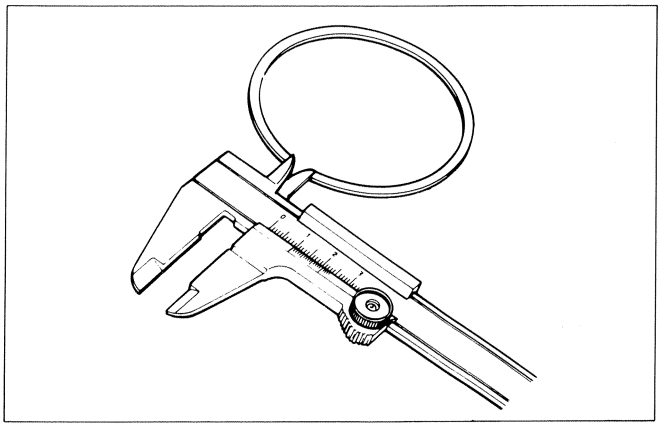

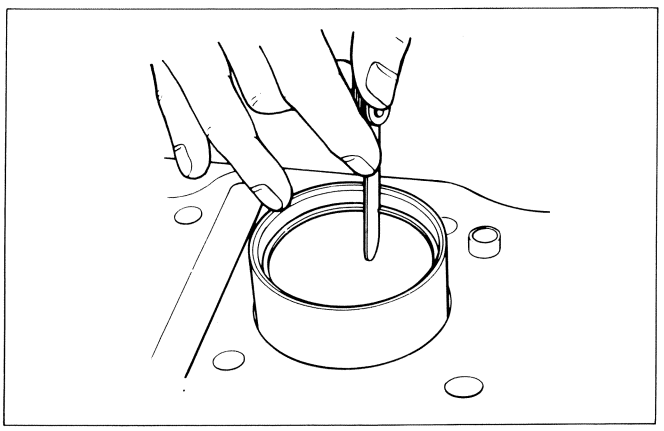

- **Oversize piston rings**
  The following two types of oversize piston rings are used. They bear the following identification numbers.

	1st	2nd
0.5 mm	50	50
1.0 mm	100	100

- **Oversize oil rings**
  The following two types of oversize oil rings are available as optional parts. They bear the following identification marks.

0.5 mm	Painted red
1.0 mm	Painted yellow

- **Oversize side rail**
  Just measure out side diameter.

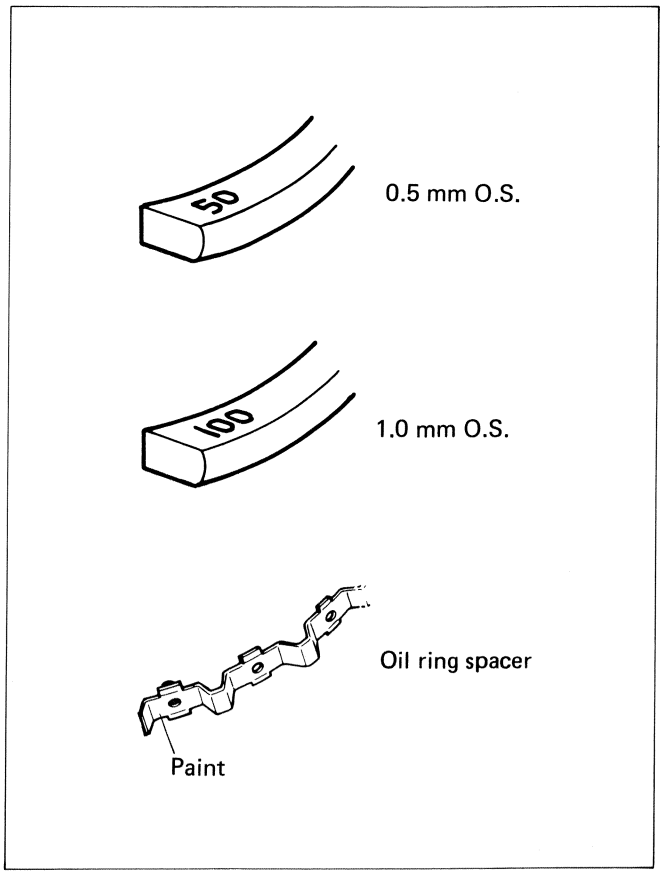

PISTON PIN AND PIN BORE

Using a small bore gauge, measure the piston pin bore inside diameter, and using a micrometer, measure the piston pin outside diameter. If the reading exceeds the following limit, replace both piston and piston pin.

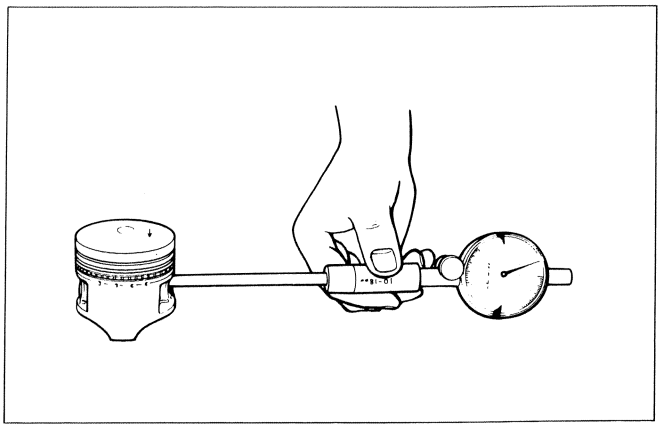

Piston pin bore I.D.

Service Limit	18.035 mm

Using a micrometer, measure the piston pin outside diameter at three positions.

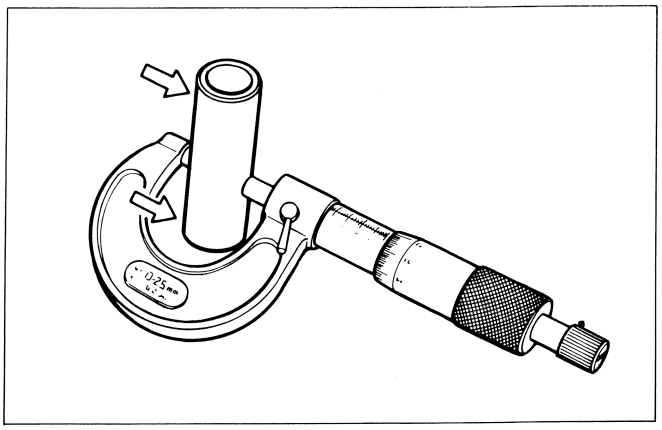

Piston pin O.D.

Service Limit	17.980 mm

09900-20205	Micrometer (0 – 25 mm)

CONNECTING ROD SMALL END BORE I.D.

Using a caliper gauge, measure the connecting rod small end inside diameter.

Connecting rod small end bore I.D.

Standard	18.010–18.018 mm (0.7091–0.7094 in)

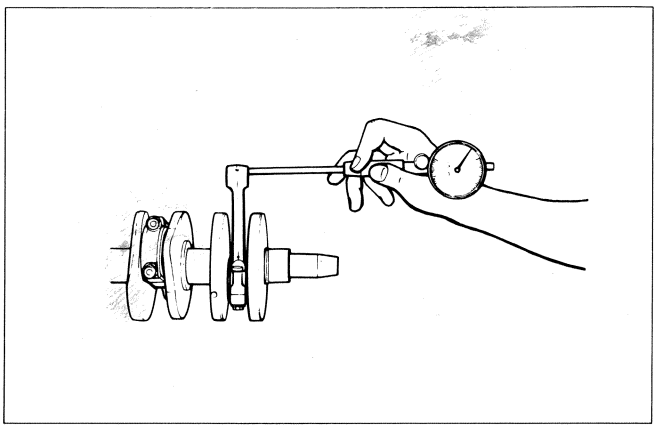

- If the connecting rod small end bore inside diameter exceeds the above-mentioned limit, replace the connecting rod.

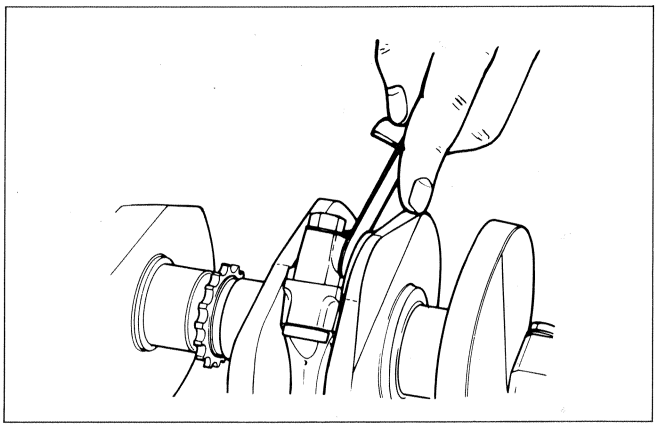

CONNECTING ROD BIG END THRUST CLEARANCE

Check the connecting rod side clearance by using thickness gauge. If the clearance exceeds the limit, replace connecting rod or crankshaft.

	Standard
Big end width	22.95–23.00 mm (0.904–0.905 in)
Crank pin width	23.10–23.15 mm (0.909–0.911 in)

09900-20803	Thickness gauge

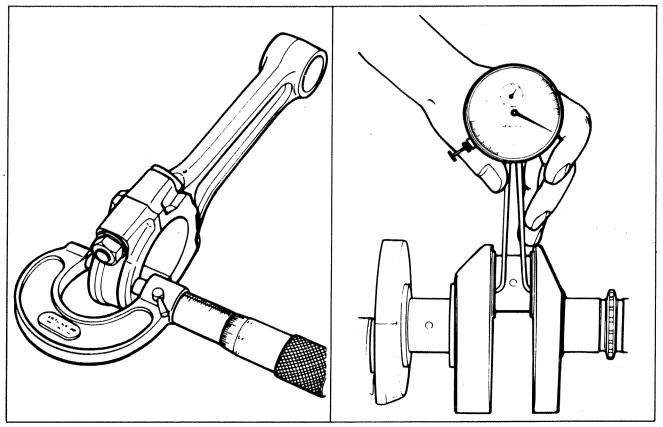

CONNECTING ROD–CRANKPIN BEARING SELECTION

- Loosen bearing cap nuts, and tap the bolt end lightly with plastic hammer to remove bearing cap.
- Remove rods, and mark them to identify the cylinder position.
- Inspect bearing surfaces for any sign of fusion, pitting, burn, or flaws. If any, replace them with specified set of bearings.

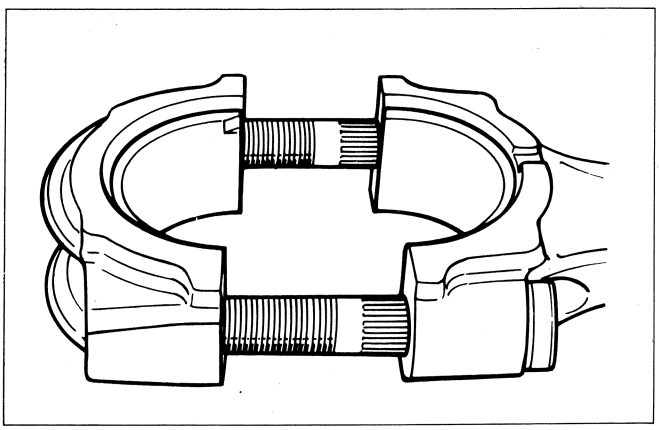

NOTE:
Never try to remove or loosen the connecting rod cap bolts due to their possible loosening. Once displaced, the bearing cap will not be fitted properly.

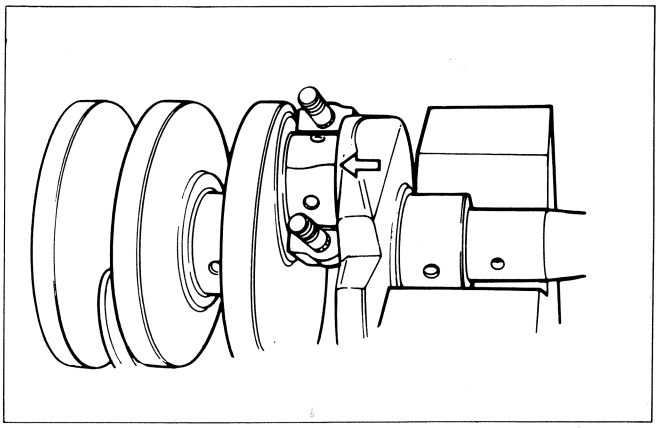

- Place plastigauge axially on the crank pin, avoiding oil hole and at the TDC or BDC side as shown.
- Tighten the bearing cap with two-step torque values.

NOTE:
When fitting bearing cap to crank pin, be sure to discriminate one end from the other, namely front and rear.

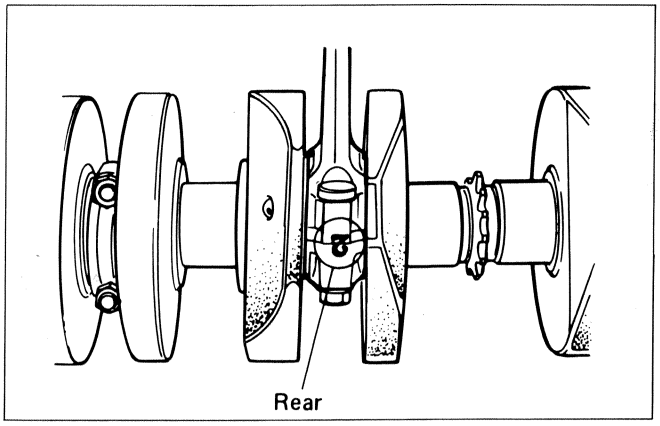

Initial tightening torque	1.2–1.8 kg-m (8.5–13.0 lb-ft)

Final tightening torque	3.3–3.7 kg-m (24.0–27.0 lb-ft)

NOTE:
Never rotate crankshaft or connecting rod when a piece of Plastigauge is in the clearance.

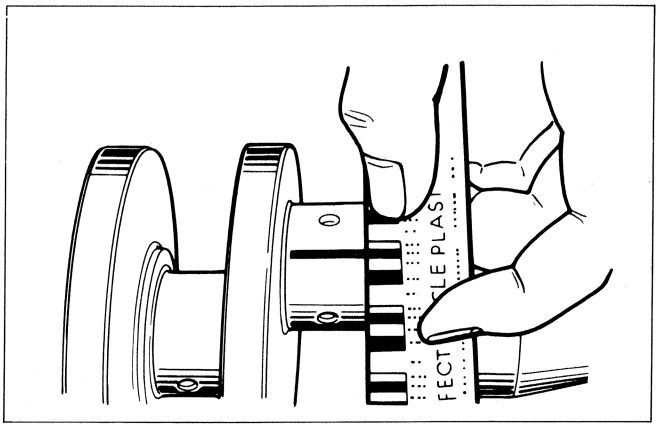

- Remove the caps, and measure the width of compressed plastigauge with envelop scale. This measurement should be taken at the wides part.

Service Limit	0.080 mm (0.0031 in)

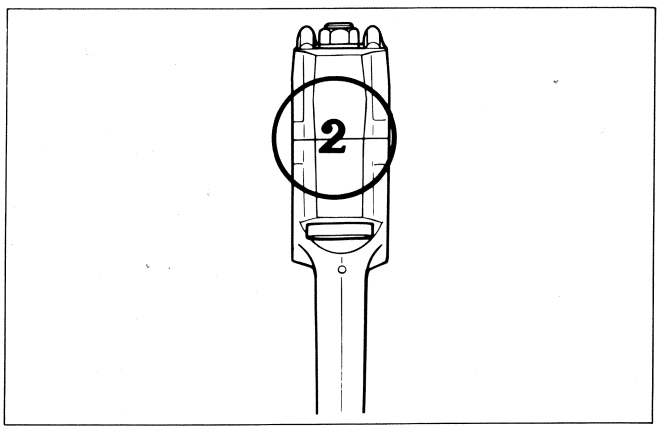

- If oil clearance is exceeded service limit, select the specified bearings from the following table.
- Check the corresponding rod I.D. code number ① , "1" or "2".

- Check the corresponding crank pin O.D. code number, "1", "2" or "3".

Bearing selection table

		Crank pin		
	Code	1	2	3
Conrod	1	Green	Black	Brown
	2	Black	Brown	Yellow

Bearing oil clearance

Standard	0.032–0.056 mm (0.0013–0.0022 in)

Connecting rod I.D. specification

Code	I.D.
1	39.000–39.008 mm (1.5354–1.5357 in)
2	39.008–39.016 mm (1.5357–1.5361 in)

Crank pin O.D. specification

Code	O.D.
1	35.992–36.000 mm (1.4170–1.4173 in)
2	35.984–35.992 mm (1.4167–1.4170 in)
3	35.976–35.984 mm (1.4164–1.4167 in)

Bearing thickness

Color (Part No.)	Thickness
Green (12164-31300-010)	1.480–1.484 mm (0.0583–0.0584 in)
Black (12164-31300-020)	1.484–1.488 mm (0.584–0.0586 in)
Brown (12164-31300-030)	1.488–1.492 mm (0.0586–0.0587 in)
Yellow (12164-31300-040)	1.492–1.496 mm (0.0587–0.589 in)

CAUTION:
Bearing should be replaced as a set.

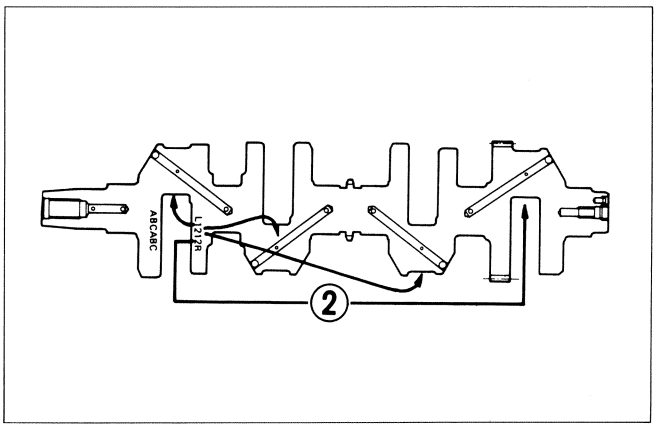

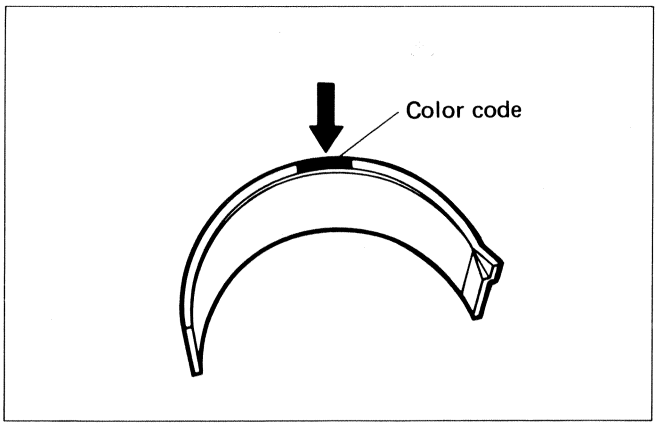

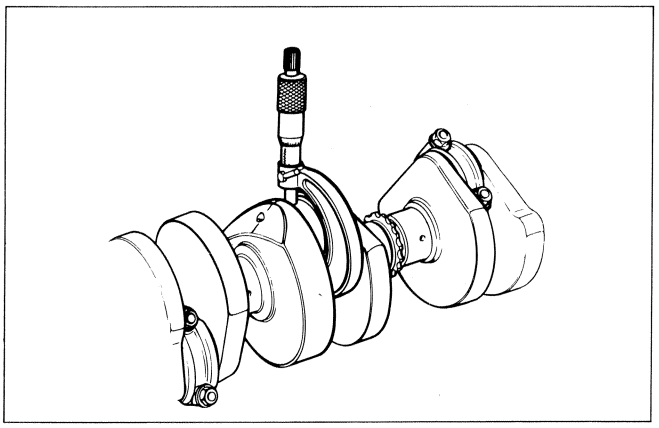

BEARING ASSEMBLY

- When fitting the bearings to the bearing cap and connecting rod, be sure to fix the stopper part first, and press the other end.

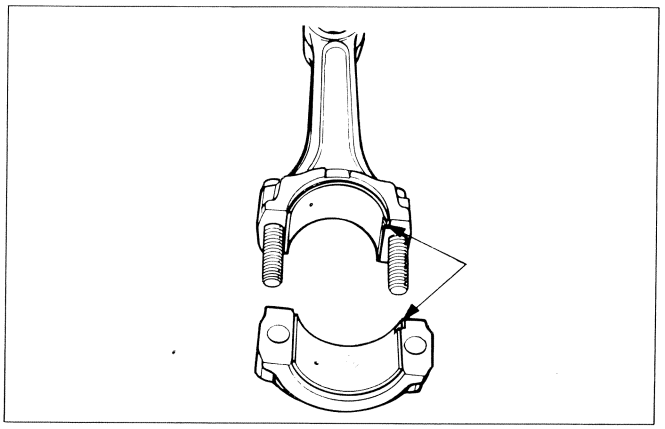

- Apply engine oil or SUZUKI Moly Paste to the crank pin and bearing surface.

99000-25140	SUZUKI Moly Paste

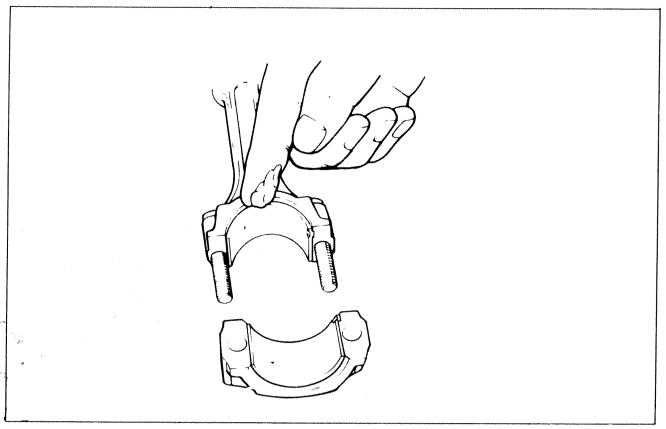

- Tighten the connecting rod fitting nuts with specified torque.

Tightening torque	3.3–3.7 kg-m (24.0–27.0 lb-ft)

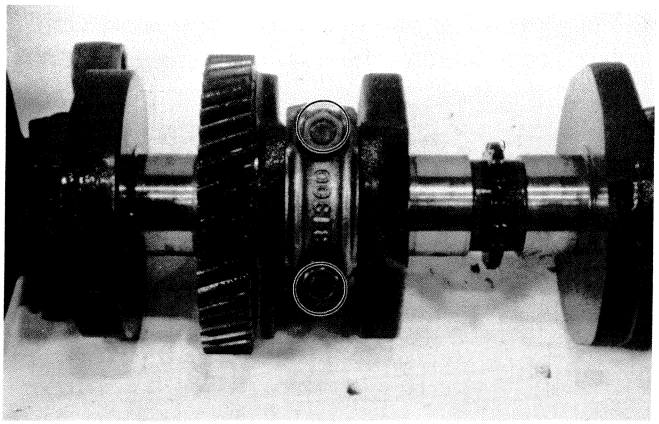

- Check the connecting rod for smooth turning.

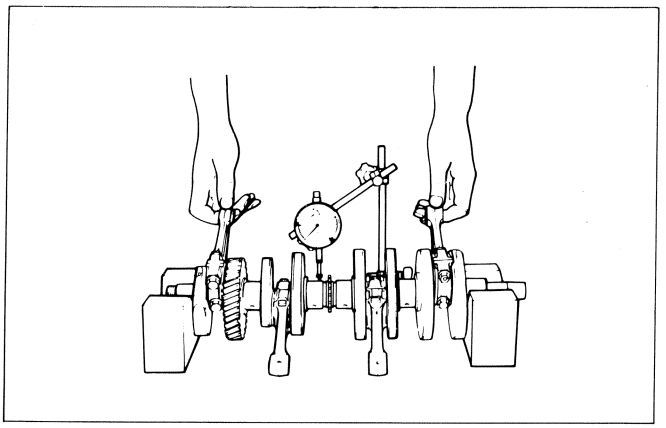

CRANKCASE – CRANKSHAFT BEARING SELECTION

- Inspect each bearing of upper and lower crank cases for any damage.

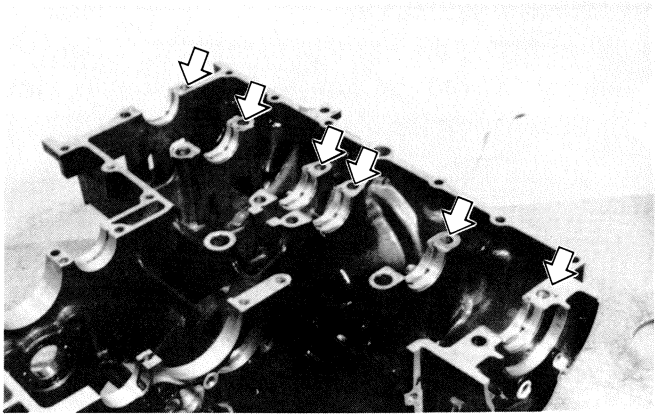

- Place plastigauge on each crankshaft journal in the usual manner.

> **NOTE:**
> **Do not place the plastigauge on the oil hole, and do not rotate the shafts when plastigauge is in place.**

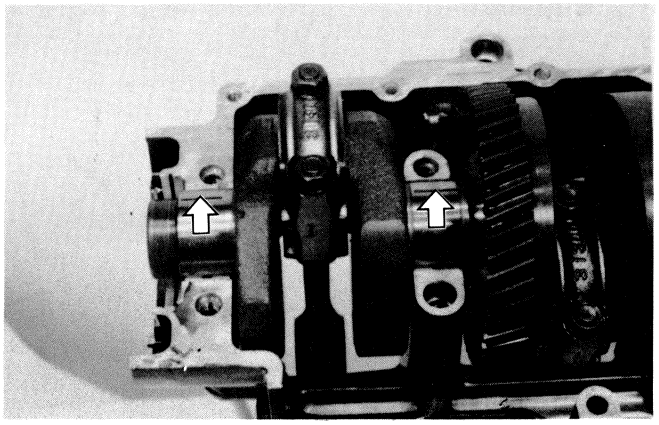

- Mate the lower crankcase with the upper crankcase, and tighten the crankcase securing bolts with specified torque value in the indicated order.

	Initial Tightening	Final Tightening
6 mm bolt	0.6 kg-m (4.5 lb-ft)	1.0 kg-m (7.0 lb-ft)
8 mm bolt	1.3 kg-m (9.5 lb-ft)	2.0 kg-m (14.5 lb-ft)

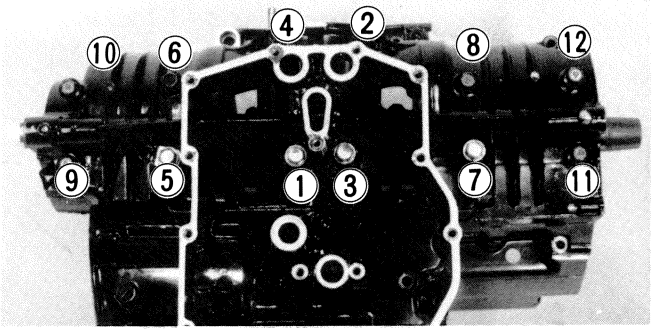

- Remove the lower crankcase, and measure the width of compressed plastigauge in the usual manner.

Service Limit	0.080 mm (0.0031 in)

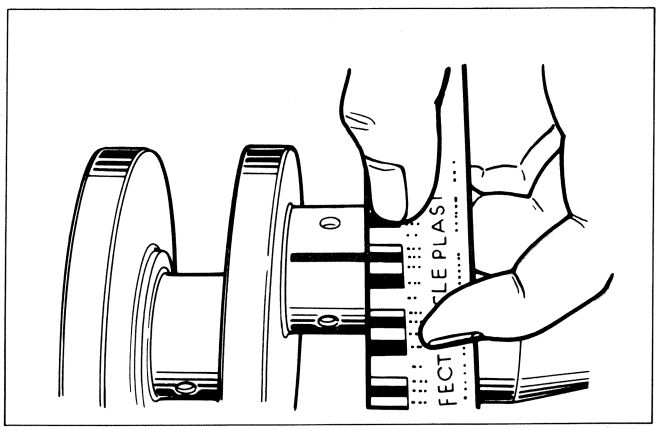

- If the width at the widest part exceeds the limit, replace the set of bearing with new ones by referring to the selection table.
- Check the corresponding crankcase journal I.D. code number ① "A" or "B" which are stamped on the rear of upper crankcase.
- Check the corresponding crankshaft journal O.D. code number ② "A", "B" or "C".

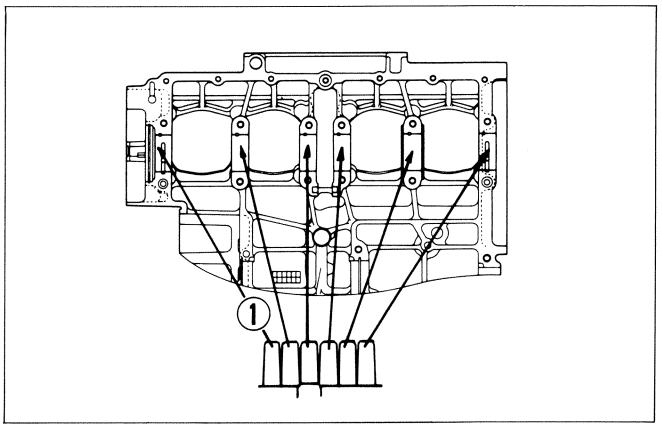

Bearing selection table

	Crankshaft			
	Code	A	B	C
Crankcase	A	Green	Black	Brown
	B	Black	Brown	Yellow

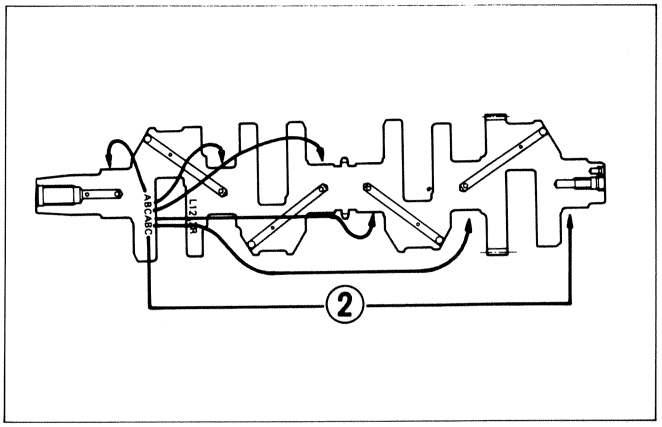

Crankcase I.D. specification

Code	I.D.
A	39.000–39.008 mm (1.5354–1.5357 in)
B	39.008–39.016 mm (1.5357–1.5361 in)

Bearing thickness specification

Color	Part Number		Specification Unit : mm (in)
	Upper	Lower	
Green	12229-09310 -010	12229-09300 -010	1.486–1.490 (0.0585–0.0587)
Black	12229-09310 -020	12229-09300 -020	1.490–1.494 (0.0587–0.0588)
Brown	12229-09310 -030	12229-09300 -030	1.494–1.498 (0.0588–0.0590)
Yellow	12229-09310 -040	12229-09300 -040	1.498–1.502 (0.0590–0.0591)

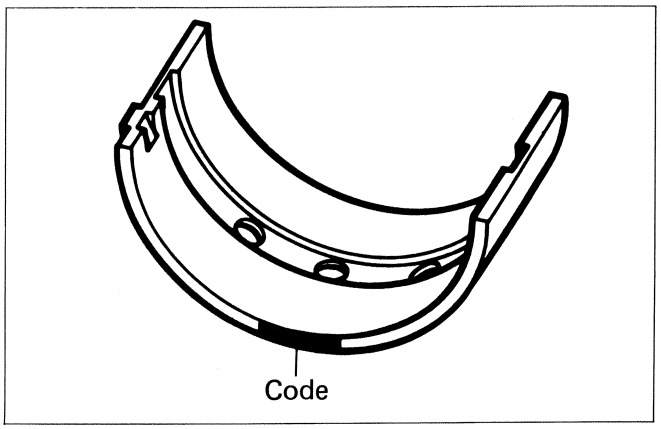

Crankshaft journal O.D. specification

Code	O.D.
A	35.992–36.000 mm (1.4170–1.4173 in)
B	35.984–35.992 mm (1.4167–1.4170 in)
C	35.976–35.984 mm (1.4164–1.4167 in)

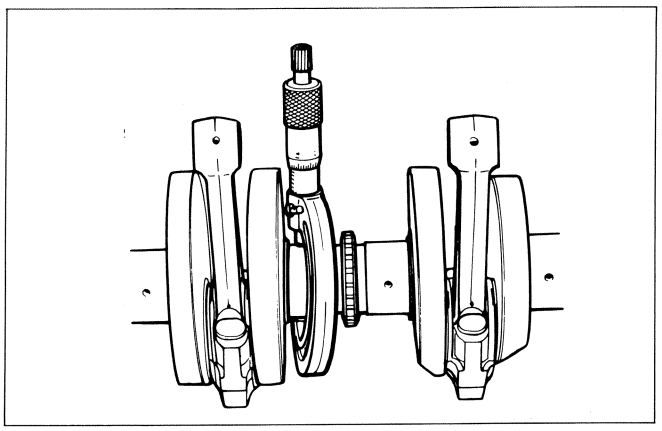

NOTE:
* **The upper crankcase bearings do have an oil groove. The lower bearings also have an oil groove, but in addition the lower bearings also have 3 holes for oil flow from the lower case to the crankshaft journals.**
* **Upper bearings have the same specification as the lower bearings except 3 oil holes.**

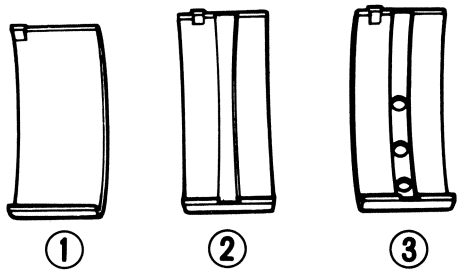

① Crank pin bearing (for conrod)
② Crank journal upper bearing (for upper crankcase)
③ Crank journal lower bearing (for lower crankcase)

CRANKSHAFT THRUST CLEARANCE

With the crankshaft, right-side thrust bearing, and left-side thrust bearing inserted in the upper crankcase, use a thickness gauge to measure the thrust clearance on the left side.

NOTE:
Push the crankshaft to the generator side, so that there is no clearance on the right-side thrust bearing.

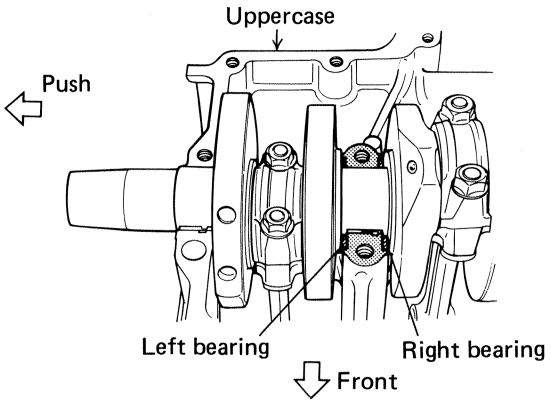

If the thrust clearance exceeds the standard range, adjust the thrust clearance by the following procedures:

S.T.D. clearance	0.04–0.08 mm (0.0015–0.0031 in)

1. Remove the right-side thrust bearing, and measure its thickness with a micrometer. If the thickness of the right-side thrust bearing is below standard, replace with a new bearing, and once again perform the thrust clearance measurement listed above, checking to make sure it is within standards.
2. If the right-side thrust bearing is within the standard range, reinsert the right-side thrust bearing, and remove the left-side thrust bearing.
3. As shown in the illustration, use a thickness gauge to measure the clearance without the left-side thrust bearing, and select a left-side thrust bearing from the selection table.
4. After selecting a left-side thrust bearing, insert it and again perform the thrust clearance measurement to make sure it falls within the standard range.

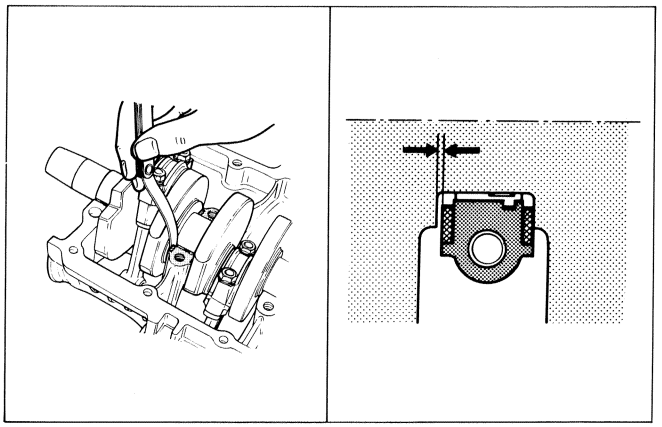

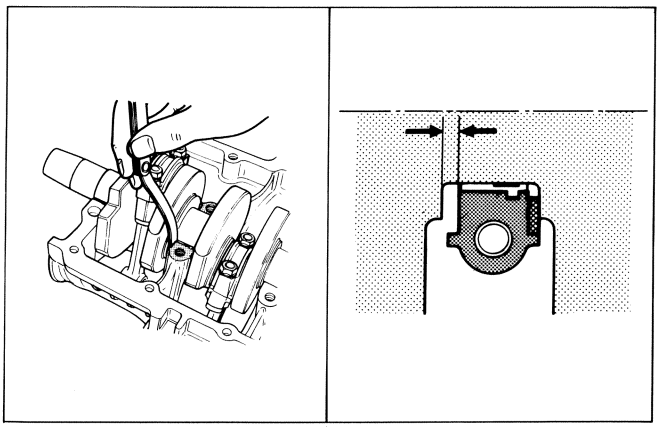

Clearance without left-side thrust bearing Unit : mm (in)	Color		Part No.	Thrust bearing thickness Unit : mm (in)
	Left-side	Right-side		
2.92–2.94 (0.1150–0.1157)	Red	—	12228-31301	2.86–2.88 (0.1125–0.1134)
2.94–2.96 (0.1157–0.1165)	Black	—	12228-31302	2.88–2.90 (0.1134–0.1142)
2.96–2.98 (0.1165–0.1173)	Blue	—	12228-31303	2.90–2.92 (0.1142–0.1150)
2.98–3.00 (0.1173–0.1181)	Green	—	12228-31304	2.92–2.94 (0.1150–0.1157)
3.00–3.02 (0.1181–0.1189)	Yellow	Yellow	12228-31305	2.94–2.96 (0.1157–0.1165)
3.02–3.04 (0.1189–0.1197)	White	—	12228-31306	2.96–2.98 (0.1165–0.1173)
3.04–3.06 (0.1197–0.1205)	Brown	—	12228-31307	2.98–3.00 (0.1173–0.1181)
3.06–3.07 (0.1205–0.1209)	Pink	—	12228-31308	3.00–3.02 (0.1181–0.1189)

CRANKSHAFT RUNOUT

Support the crankshaft with "V" blocks as shown, with the two end journal resting on the blocks. Rig up the dial gauge, as shown, and rotate the crankshaft slowly to read the runout. Replace the crankshaft if the runout is greater than the limit.

Crankshaft runout specification

Service limit	0.05 mm (0.002 in)

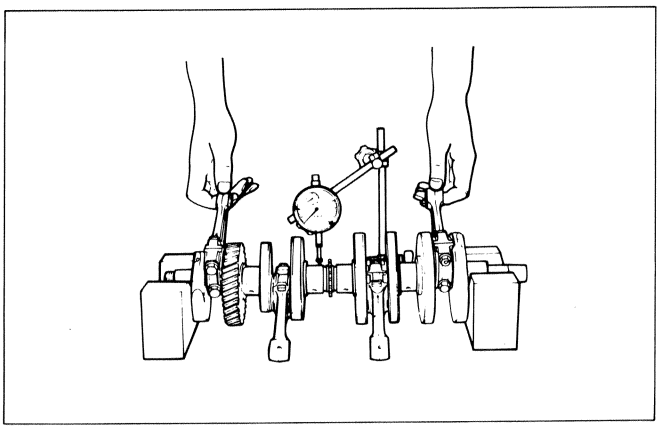

CLUTCH DRIVE PLATES AND DRIVEN PLATES

Clutch plates in service remain in oily condition as they are lubricated with oil. Because of this condition, both drive and driven plates are subject to little wearing action and therefore last much longer. Their life depends largely on the quality of oil used in the clutch and also on the way the clutch is operated.

These plates are expendable: they are meant to be replaced when found worn down or distorted to the respective limit: use a caliper to check thickness and a thickness gauge and surface plate to check distortion.

09900-20101	Vernier calipers
09900-20803	Thickness gauge

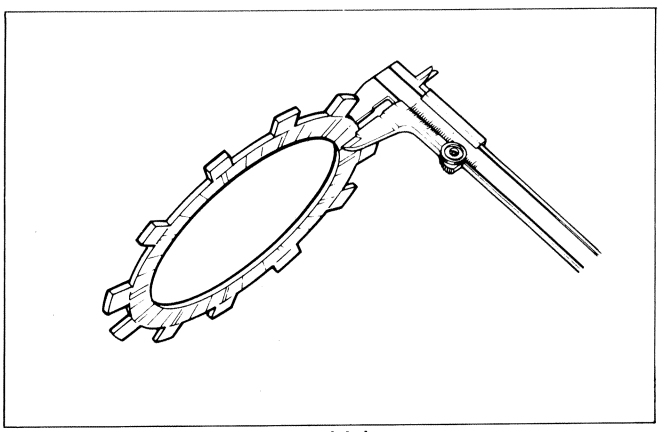

Checking thickness

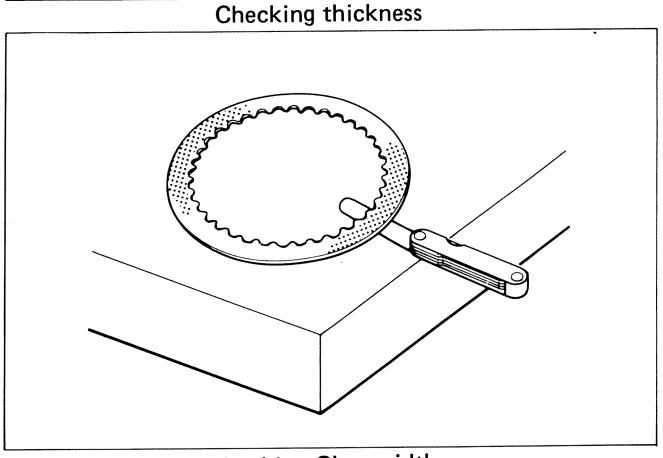

Checking Claw width

Unit: mm(in)

Service Limit	Drive plate	Driven plate
Thickness	2.6 (0.102)	———
Distortion	———	0.10 (0.004)
Claw width	11.2 (0.44)	———

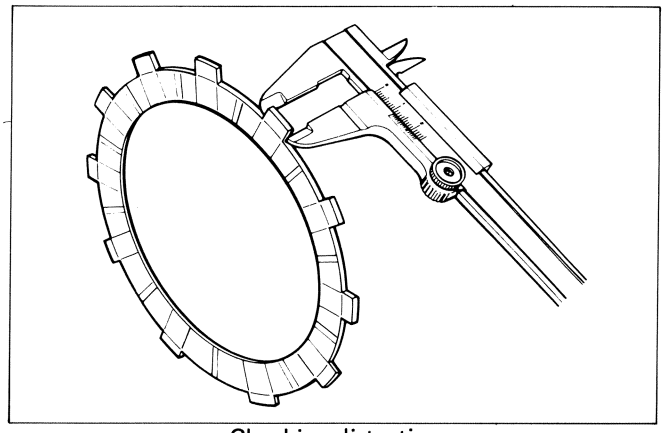

Checking distortion

CLUTCH SPRING FREE LENGTH

Measure the free length of each coil spring with vernier calipers, and compare the spring strength of each with the specified limit. Replace all coil springs, if any one of springs is not within the limit.

Clutch spring free length

Service Limit	33.97 mm (1.337 in)

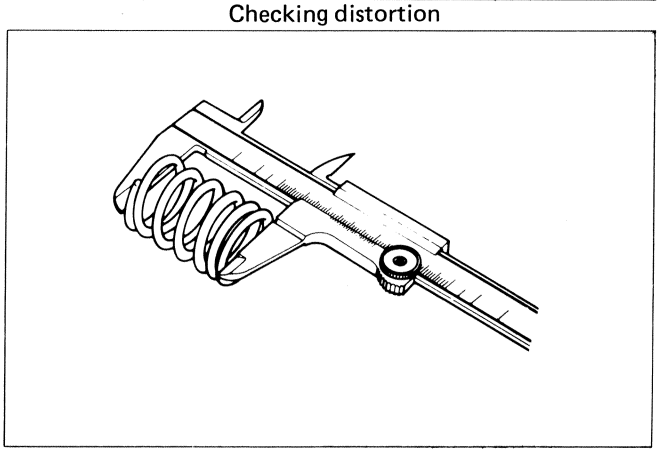

CLUTCH BEARINGS

Inspect clutch bearing for any abnormality, particularly cracks, upon removal from the clutch, to decide whether it can be reused or should be replaced.

Smooth engagement and disengagement of the clutch depends much on the condition of bearing.

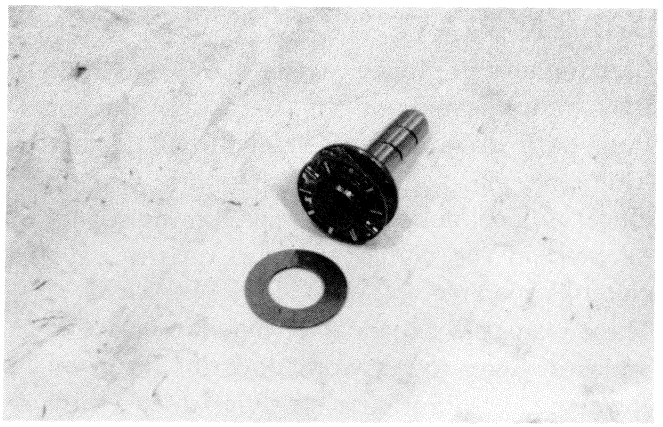

SLEEVE HUB WAVE WASHER

- Install the spring seat, spring, and driven plate in the clutch sleeve hub. Check that these three parts are positioned correctly as illustrated.
  While holding the driven plate with pliers, install the piano wire clip.

> **NOTE:**
> **Always use a new piano wire clip.**

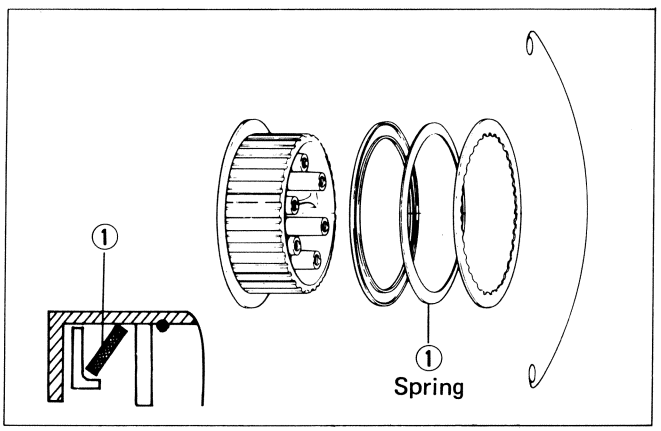

STARTER CLUTCH REMOVAL

- Remove roller ①, spring ②, and push piece ③ from starter clutch.

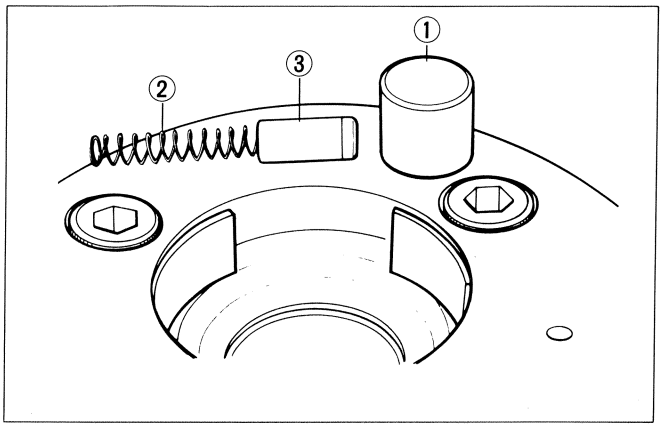

- Clamp the rotor with the special tool and a vise taking care not to damage it and separate starter clutch from the rotor using the T type hexagon wrench ④.

09914-25811	"T" type hexagon wrench (6 mm)
09930-44911	Rotor holder

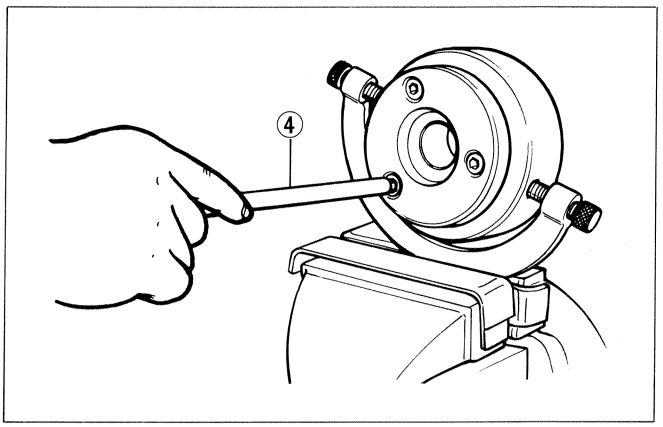

ASSEMBLY

- Apply THREAD LOCK "1363C" (99104-32050) to the stator set screws and its lead wire guide screws.

> **NOTE:**
> **Wipe off oil and grease on screw completely, and then apply the screw lock.**

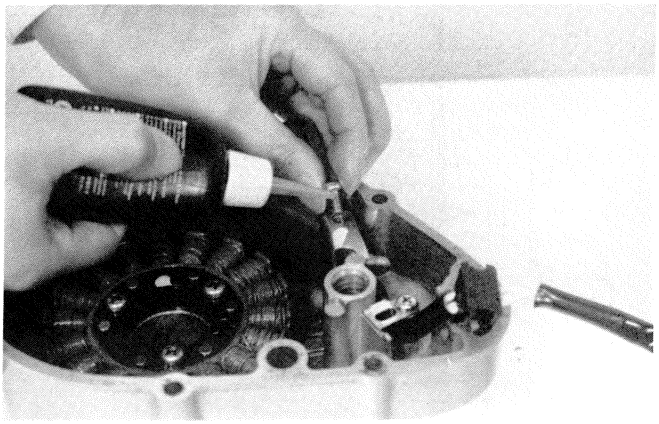

- Mount the lead wire clamp as shown in the photo.
- Locate the shim ⑤ to the proper position.

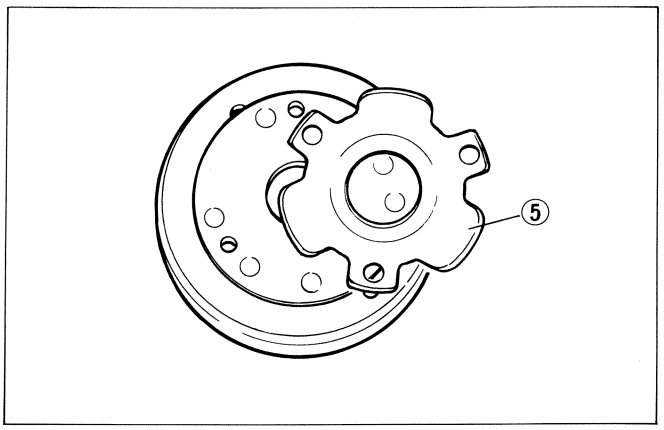

- Apply THREAD LOCK SUPER 1363A to allen bolts. Tighten with specified torque while holding the rotor using special tool and vice.

99104-32030	Thread lock super "1363A"
09914-25811	T-type hexagon wrench (6 mm)
Tightening torque	1.5 – 2.0 kg-m (11.0 – 14.5 lb-ft)

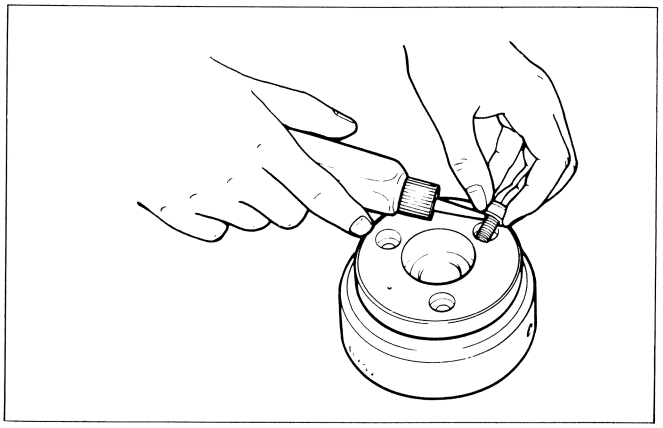

TRANSMISSION

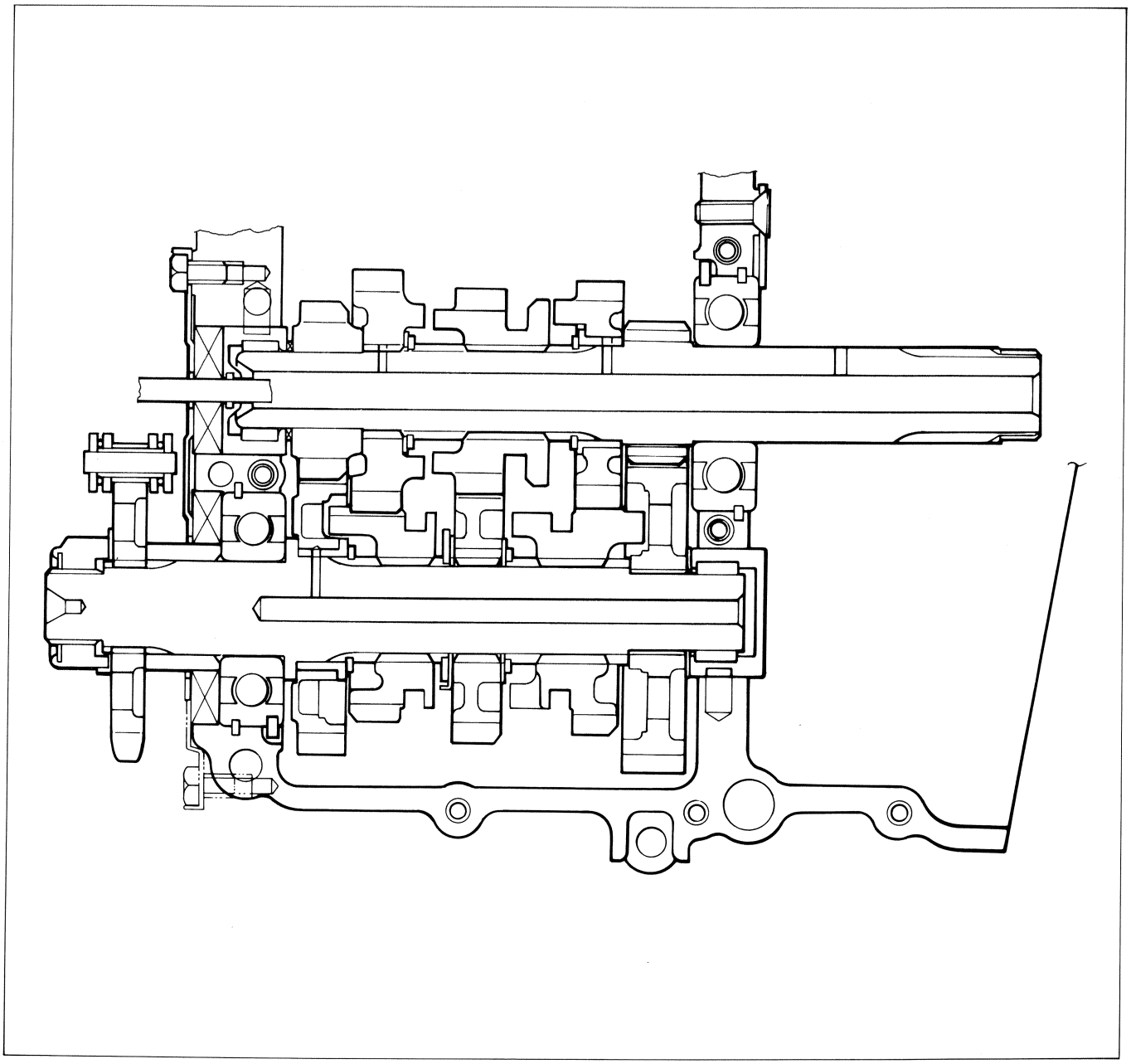

OIL PUMP

CAUTION:
The oil pump case securing screw is applied with SUZUKI THREAD LOCK SUPER "1363A". If an attempt is made to overhaul the oil pump assembly, the screw may be damaged. As a replacement, only the oil pump unit is available.

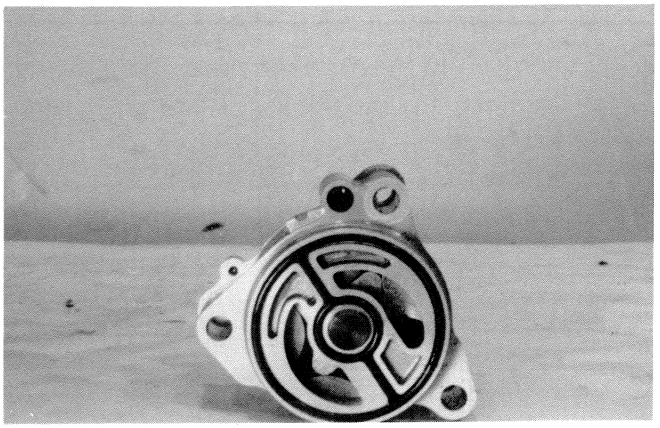

MOUNTING 2ND DRIVE GEAR

Force-fit 2nd drive gear to a position where the distance between this drive gear and the 1st drive gear assumes the value indicated:

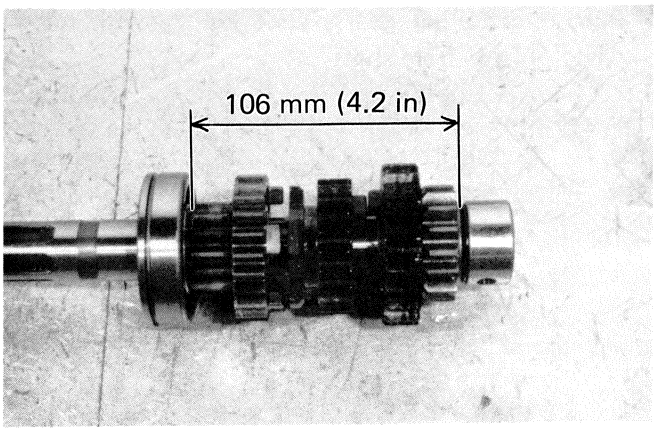

NOTE:
* **Before mounting 2nd drive gear, apply THREAD LOCK SUPER 1363A to its bore, taking care not to smear Top drive gear with "SUPER 1363A".**
* **After mounting the 2nd drive gear, check that Top drive gear spins smoothly by moving it with your fingers.**
* **2nd drive gear may be replaced twice before it becomes necessary to also replace the countershaft.**

SHIFT FORK-GROOVE CLEARANCE

Using a thickness gauge, check the shifting fork clearance in the groove of its gear.
This clearance for each of the three shifting forks plays an important role in the smoothness and positiveness of shifting action.

If the clearance checked is noted to exceed the limit specified, replace the fork or its gear, or both.

09900-20803	Thickness gauge

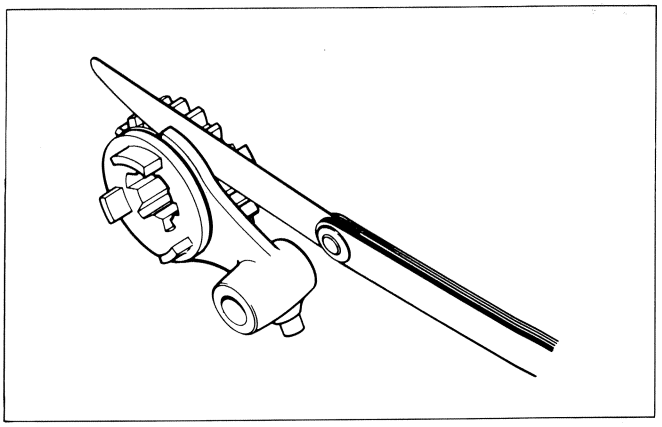

Shift fork-Groove clearance

		Service Limit
No. 1	for 4th and 5th driven gears	0.50 mm (0.020 in)
No. 2	for 3rd drive gear	

Shift fork groove width

Standard	5.50 – 5.60 mm (0.216 – 0.220 in)

Shift fork thickness

Standard	5.30 – 5.40 mm (0.20 – 0.21 in)

DRIVEN GEAR REASSEMBLY

- Fix O-ring ① to the drive shaft and apply thread lock cement to the inner surface of engine sprocket spacer ② .

99000-32040	Thread lock cement

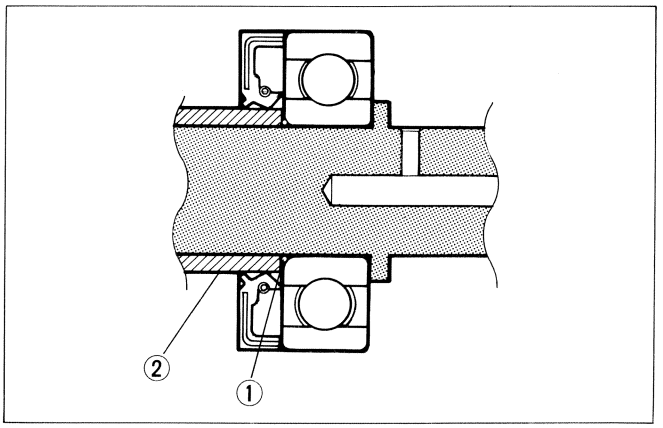

- Before installing gears, coat lightly with moly paste on the drive shaft.

99000-25140	SUZUKI Moly Paste

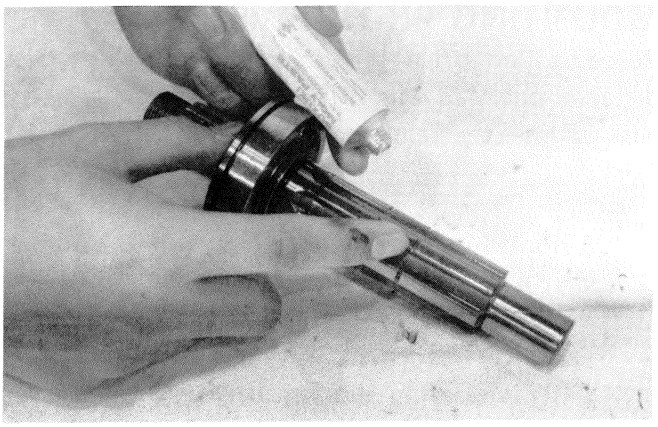

- When mounting circlip, pay attention to the direction of the circlip. Fit it to the side where the thrust is as shown in the figure with the rounded side against the gear surface.

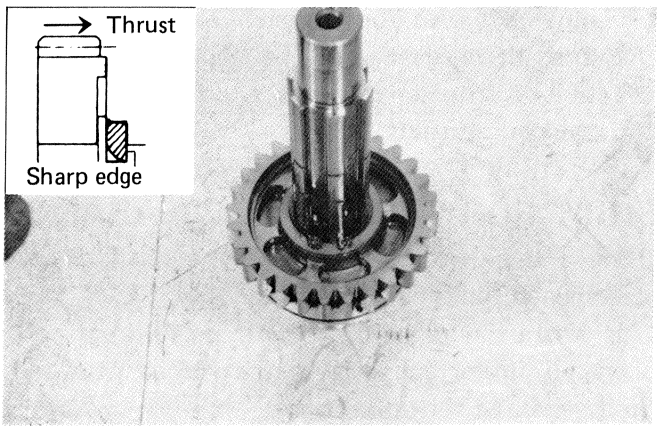

CAUTION:
Never reuse a circlip after a circlip has been removed from a shaft, it should be discarded and a new circlip must be installed. When installing a new circlip, care must be taken not to expand the end gap larger than required to slip the circlip over the shaft.
After installing a circlip, always insure that it is completely seated in its groove and securely fitted.

TOP DRIVEN GEAR

When mounting the top driven gear on the drive shaft, insert lock washer No. 2 ① into the drive shaft, and turn to fit it into the groove. Then, fit the lock washer No.1 ② in the lock washer No.2 ① .

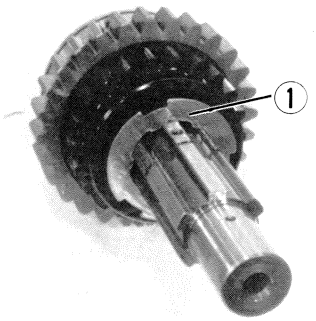

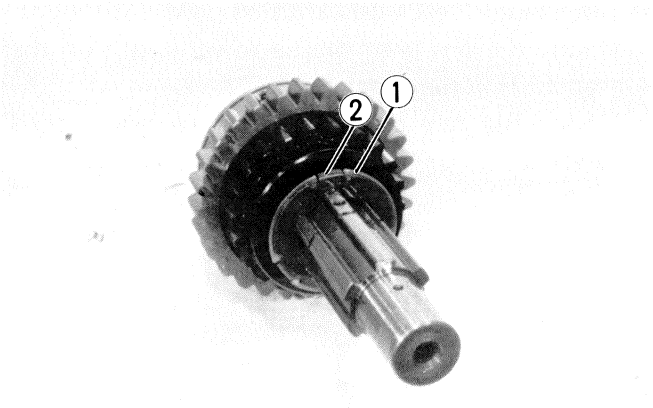

3RD DRIVEN GEAR

- When installing the 3rd driven gear bushing, align its oil hole ① with drive shaft oil hole ② .

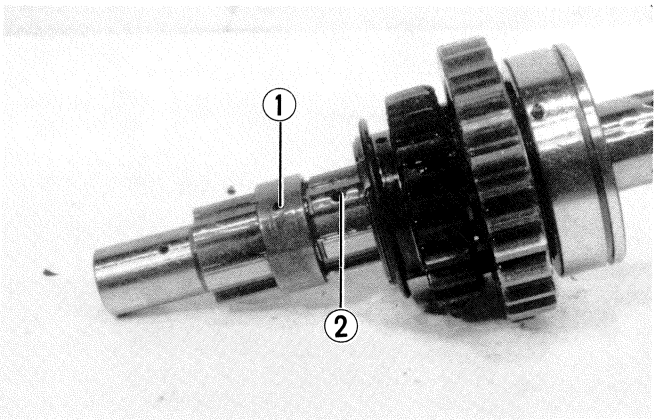

- Coat SUZUKI super grease "A" to the lip of oil seal.

99000-25030	SUZUKI Super grease "A"

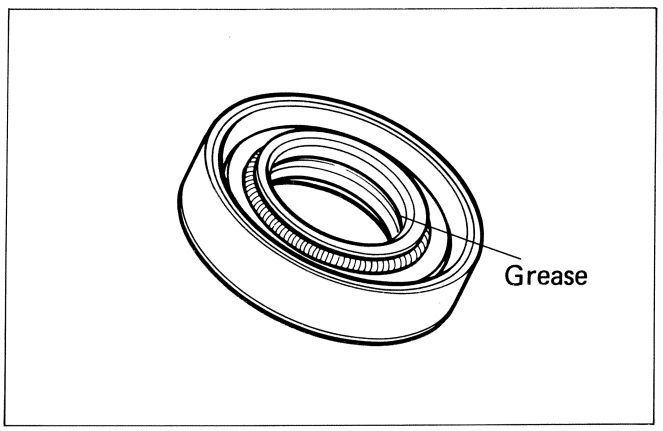

ENGINE REASSEMBLY

The engine is reassembled by carrying out the steps of disassembly in the reversed order, but there are a number of steps which demand special descriptions or precautionary measures.

> **NOTE:**
> **Apply engine oil to each running and sliding part before reinstalling.**

- The shape of each gear shifting pawl is different. Mount the one with the narrower width on the gear shifting cam side.
- Mount the cam driven gear to the gearshifting cam.

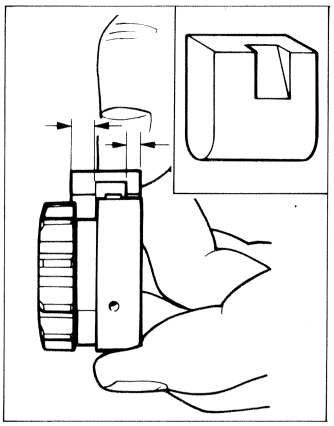

- Mount the gearshifting cam on the lower crankcase. Then, install the stopper plate, spacer and thrust washer. Position the gearshifting cam using the circlip.

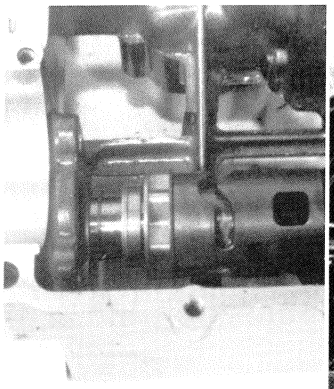

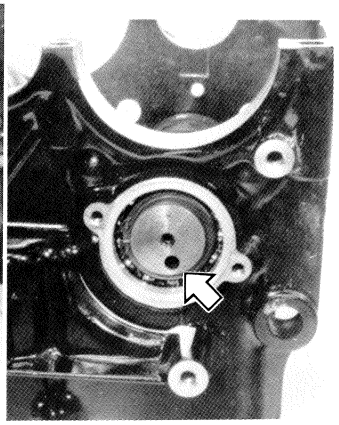

- Install the gearshifting cam with the dent for the neutral stopper directed downward, and meet the neutral stopper ① with this dent ② .

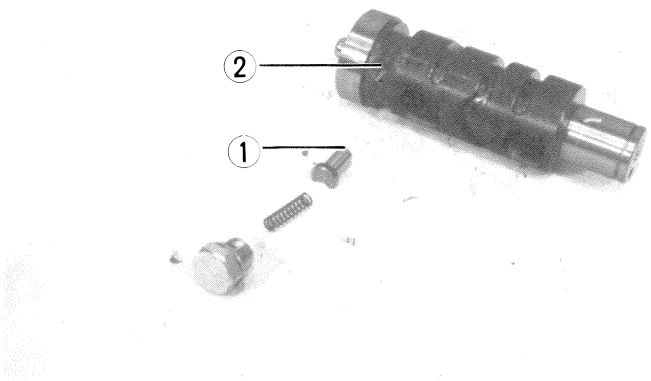

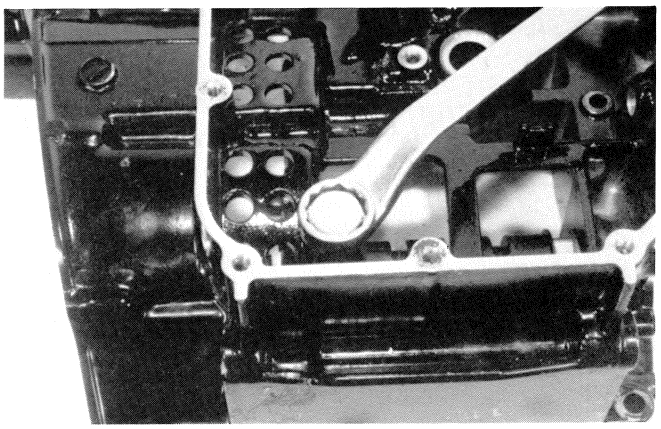

- Refer to the following figure in regard to the correct positions and orientations of the forks when installing these parts.
  ① Gear shifting fork for 3rd drive gear.
  ② Gear shifting forks for 4th and 5th driven gears.
  ③ Cam stopper.

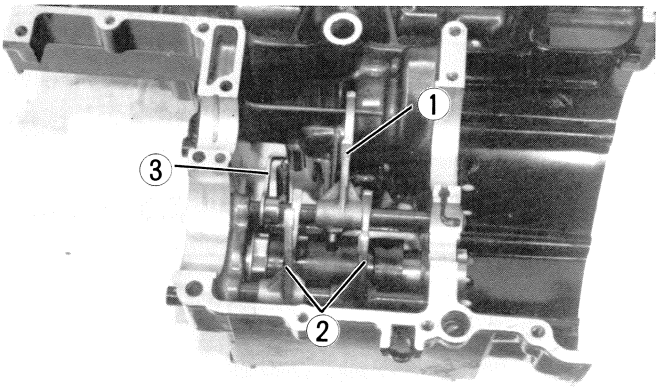

> **NOTE:**
> **Hitch the cam stopper spring to the correct position.**

- Install both gearshift cam guide and gearshift pawl screws (overall length 12mm) with applying thread lock "1363C".

99104-32050	Thread lock "1363C"

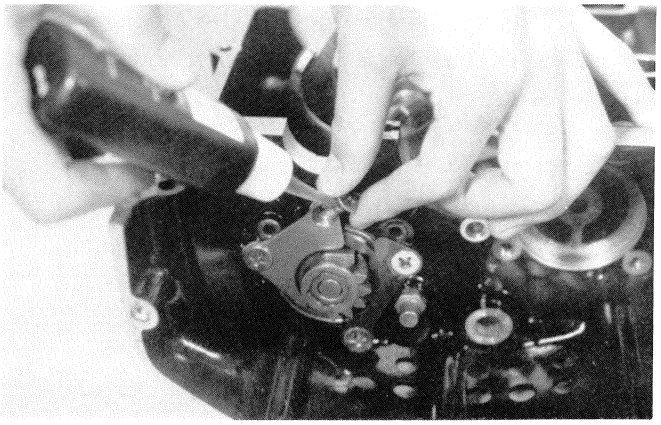

- Install two C-rings ① to the upper crankcase.
- Check the two jet ② fitted on the upper crankcase for clogging.

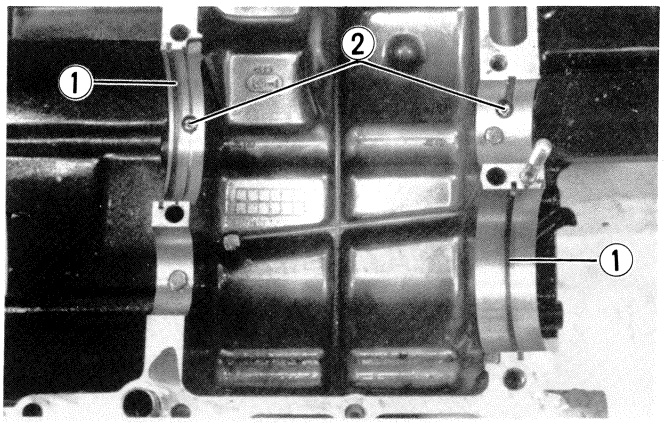

- Mount both counter and drive shafts on the upper crankcase.

> **NOTE:**
> **Be sure to install the bearing dowel pins ① in the respective positions.**

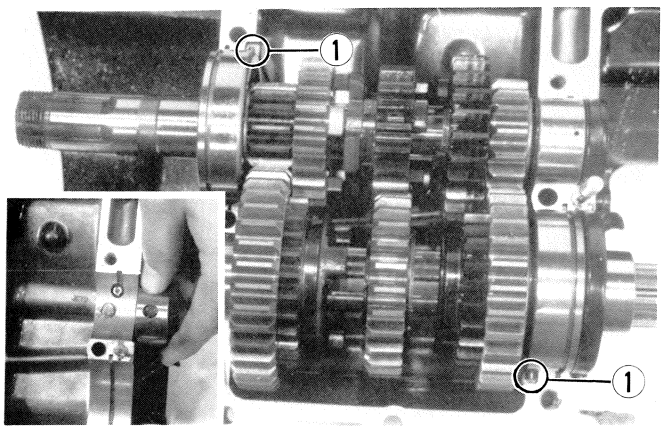

- Check oil jet ① for clogging. Locate the O-ring ② to the respective position.

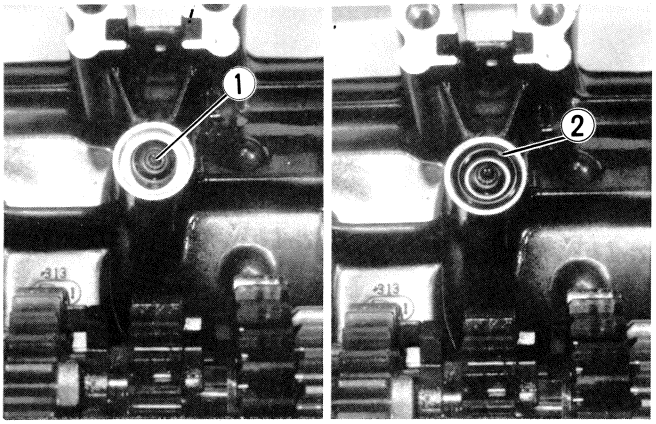

- When fitting the bearings to the crankcase, be sure to fix the stopper part ① first and press the other end.

CAUTION:
Do not touch the bearing surfaces with your hands. Grasp by the edge of the bearing shell.

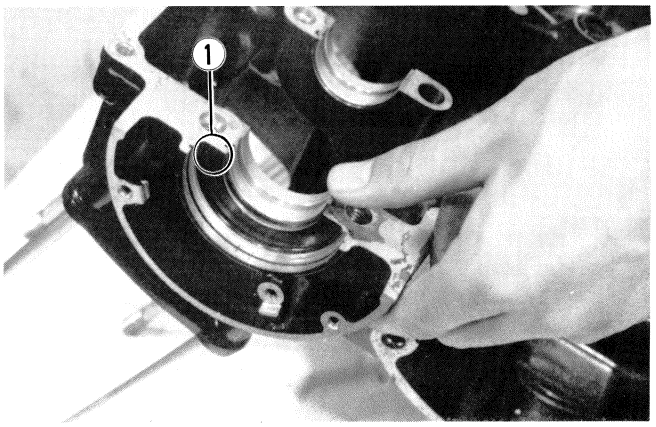

- Place cam chain guide ① properly, and fix two dampers ② so that iron side faces to the chain guide pin (inside).

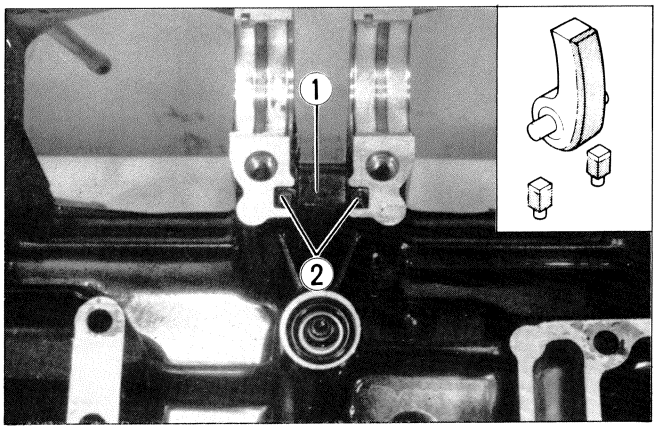

- Apply SUZUKI Moly Paste to each bearing with the camel's hair brush and journal portions of crankshaft.
- Mount the crankshaft with cam drive chain to the upper crankcase.

99000-25140	SUZUKI Moly Paste

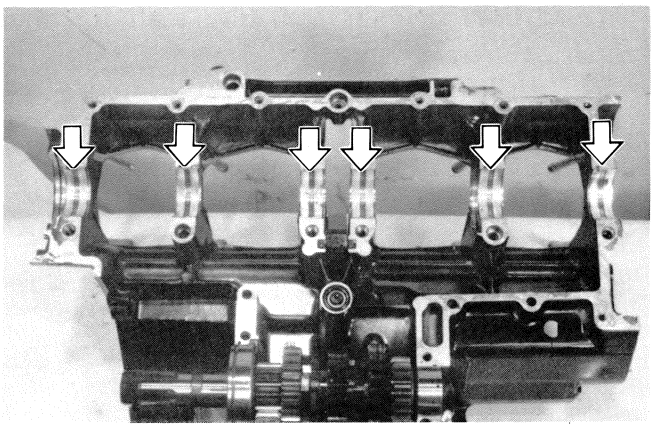

- Insert the right and left-thrust bearings with the oil grooved facing the crank web.

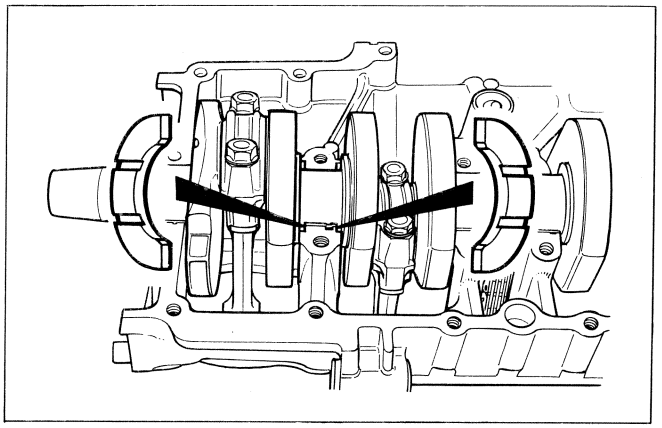

- Clean the mating surfaces of the crankcases before matching the upper and lower ones.
- Apply SUZUKI BOND No. 1207B to the mating surface of the lower crankcase in the following procedure.

99104-31140	Suzuki Bond No. 1207B

NOTE:
Use of SUZUKI BOND No. 1207B is as follows:
- *** Make surfaces free from moisture, oil, dust and other foreign materials.**
- *** Spread on surfaces thinly to form an even layer, and wait for around 10 minutes before assembling.**
- *** Take extreme care not to apply any bond No. 1207B to the bearing surfaces.**
- *** Apply to distorted surface as it forms a comparatively thick film.**

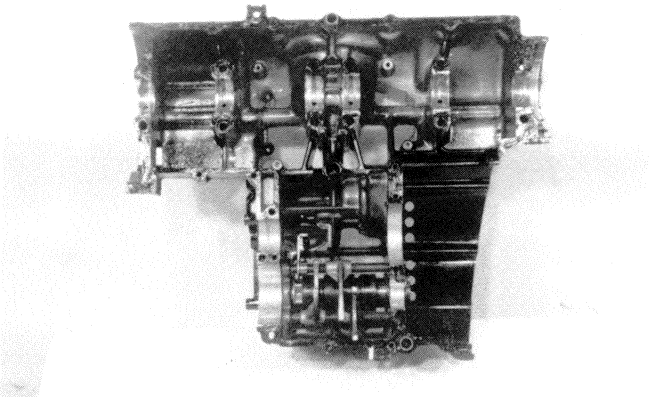

- Locate the two allen bolts at position Ⓐ and ten 8 mm bolts.

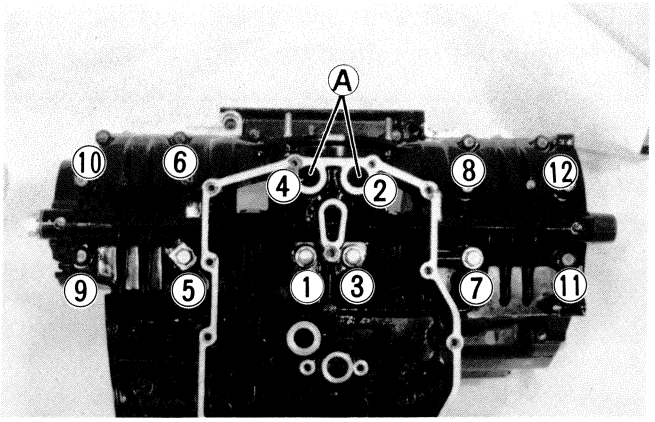

- When securing the lower crankcase, tighten the 8-mm bolts and the 6-mm bolts in the ascending order of numbers assigned to these bolts, tightening each bolt a little at a time to equalize the pressure. Tighten all the securing bolts to the specified torque values.

09914-25811	6 mm T-type hexagon wrench

Tightening torque	Initial tightening		Final tightening	
	kg-m	lb-ft	kg-m	lb-ft
6mm bolt	0.6	4.5	1.0	7.0
8mm bolt	1.3	9.5	2.0	14.5

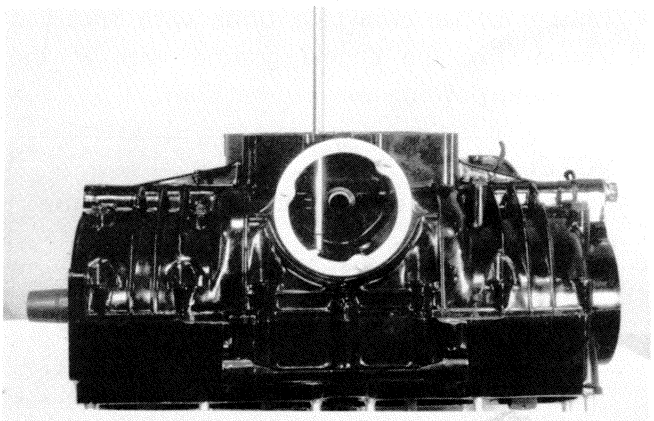

- Install sump filter to face the oil inlet ① to the front.

99104-32050	Thread Lock "1363C"

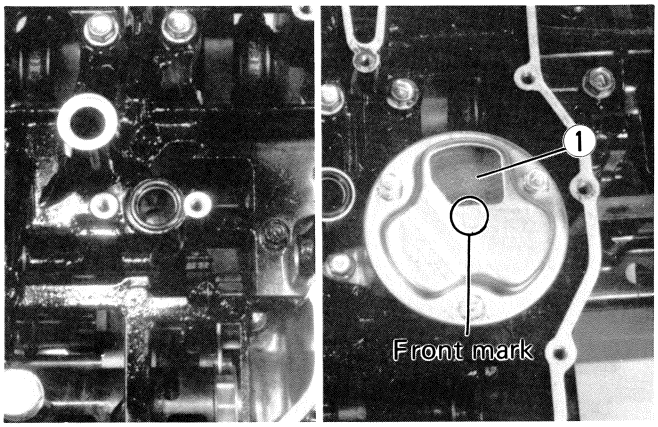

- Install oil pressure regulator ① .

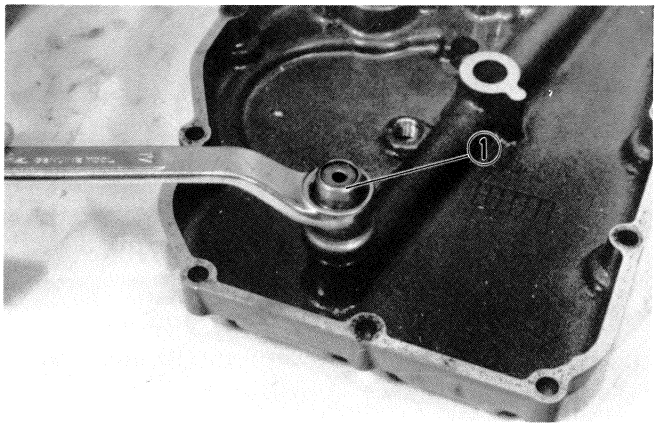

- Locate oil pan and new gasket, and tighten 6 mm bolts with specified torque.

Tightening torque	1.0 kg-m (7.0 lb-ft)

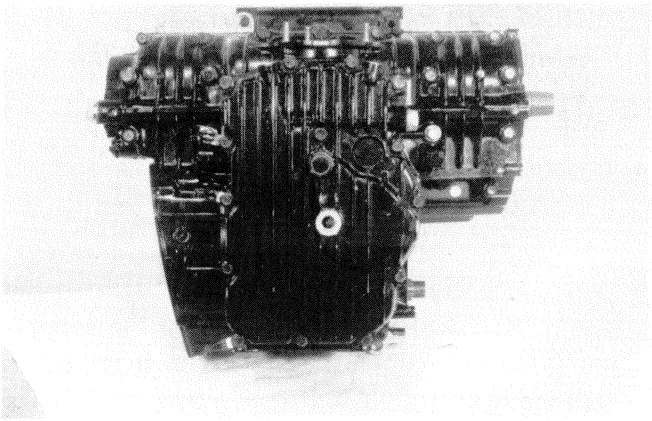

- Tighten upper crankcase bolts with specified torque. Fix the engine ground wire at the respective position Ⓐ .

NOTE:
Do not forget the gasket as shown in the photo.

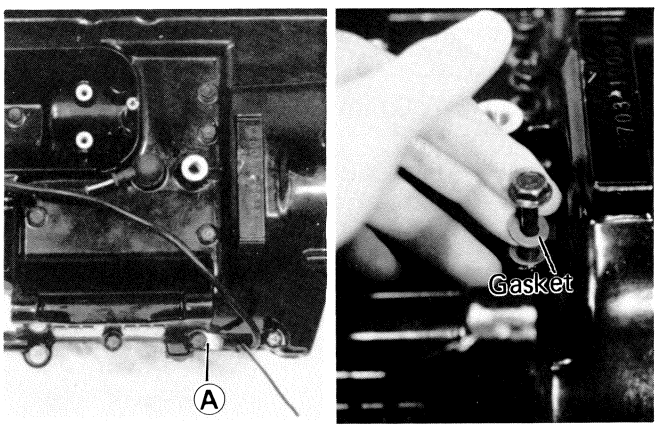

- Mount starter motor, and route the lead wire properly.

99104-32050	Thread lock "1363C"

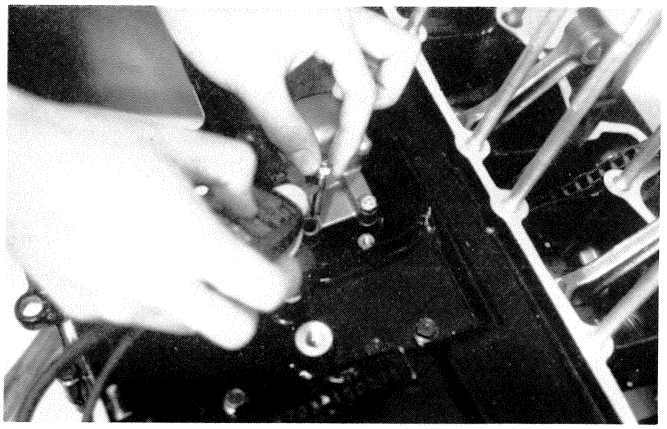

- Fit generator stator to generator cover, and route its lead wire correctly with 5 screws applying thread lock cement "1363C".

99104-32050	Thread lock "1363C"

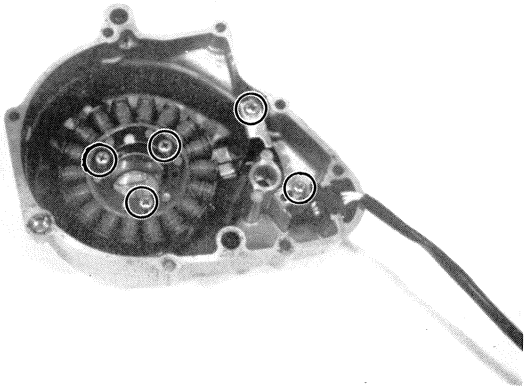

- Degrease the tapered portion of the rotor and also the crankshaft. Use nonflammable cleaning solvent to wipe off the oily or greasy matter to make these surfaces completely dry.
- After mounting the rotor, secure the rotor by tightening the center bolt to the specified torque value.

Tightening torque	14.0–16.0 kg-m (101.5–115.5 lb-ft)

09930-44510	Rotor holder

99104-32030	Thread lock super "1363A"

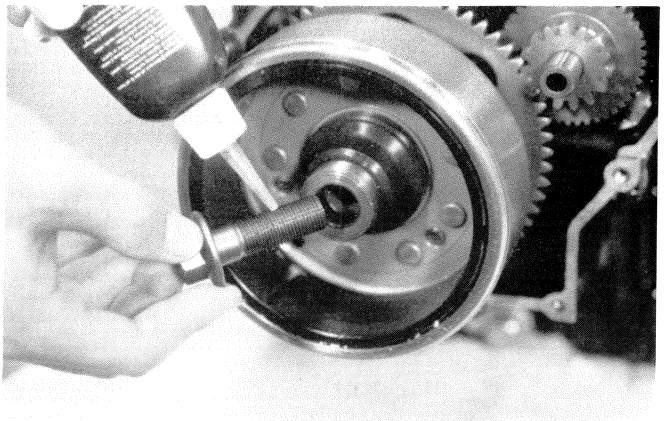

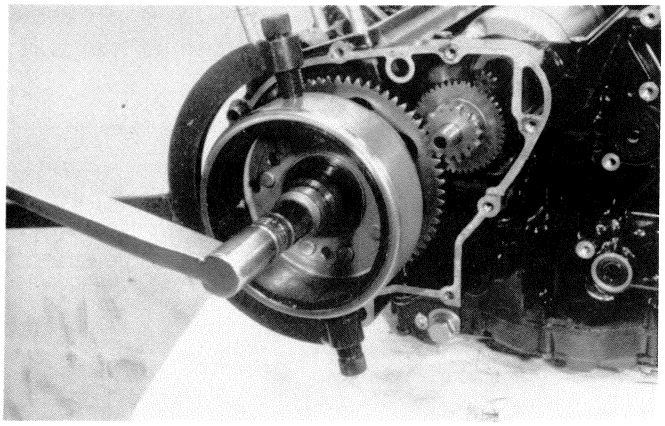

- Coat SUZUKI Bond No. 1207B lightly to the portion around mating surface between upper and lower crankcase as shown.

99104-31140	SUZUKI Bond No. 1207B

NOTE:
Do not forget the gasket.

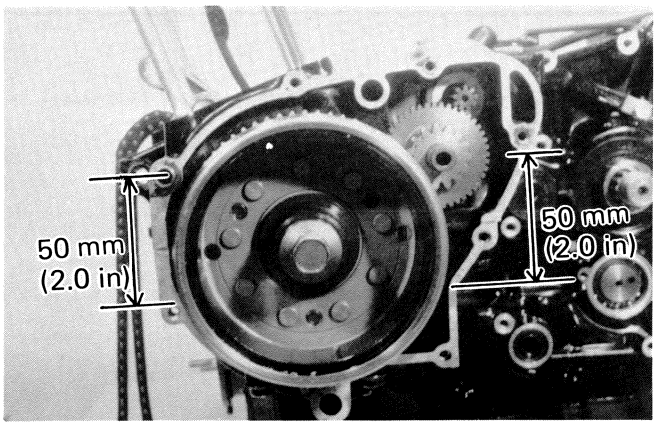

- Tighten crankcase securing nut ① and install gear position indicator switch ② .

NOTE:
When installing gear position indicator switch, be sure to locate spring, switch contact, and O-ring.

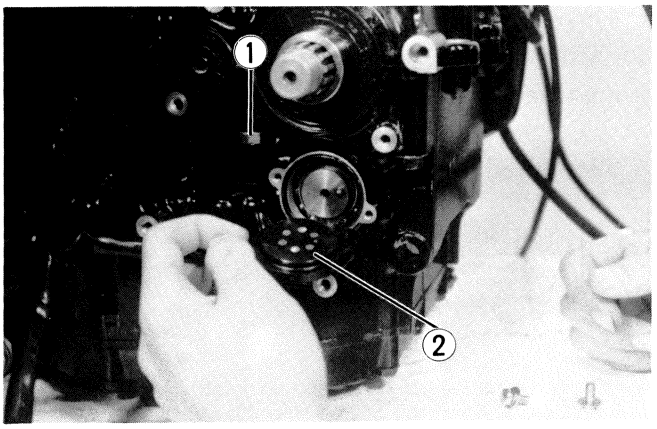

- Route the lead wire ①, and clamp it with countershaft oil seal retainer ② .

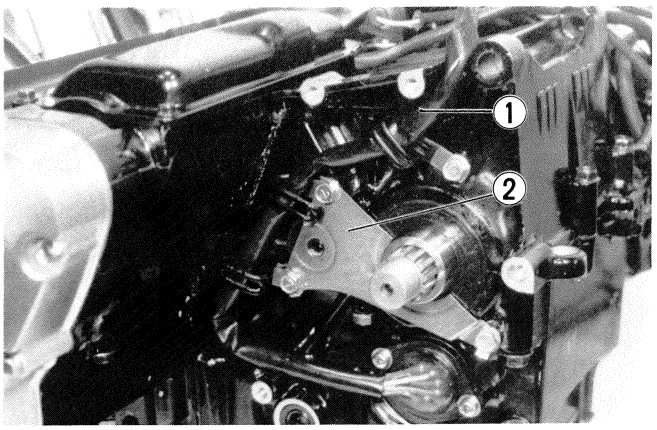

- Pass the generator stator lead wire through gasket and upper crankcase. Route its lead wire properly.

NOTE:
Always use new gasket, and install knock pin.

- Clamp the lead wire (starter motor generator and gear position) refer to wire routing.

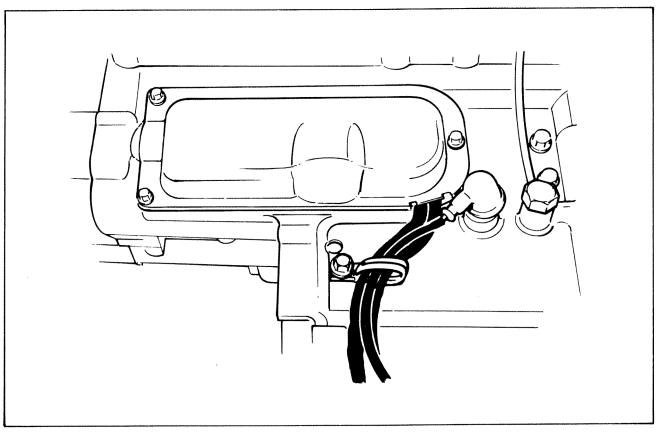

- Install the following items.
  Counter shaft bearing retainer screw
  . . . . . 3 pcs (overall length 16 mm)

99104-32050	Thread lock "1363C"

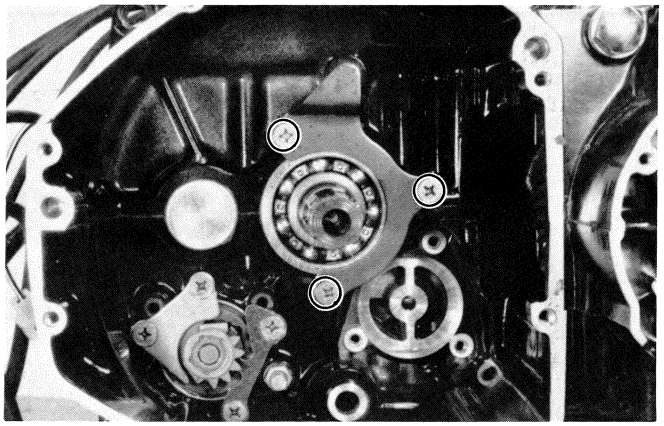

- Install oil pump assembly. Always install a new O-ring ①.
- Apply the thread lock 1363C to bolts.

99104-32050	Thread lock "1363C"

- Install the oil pump driven gear with positioning pin and circlip by using circlip pliers.

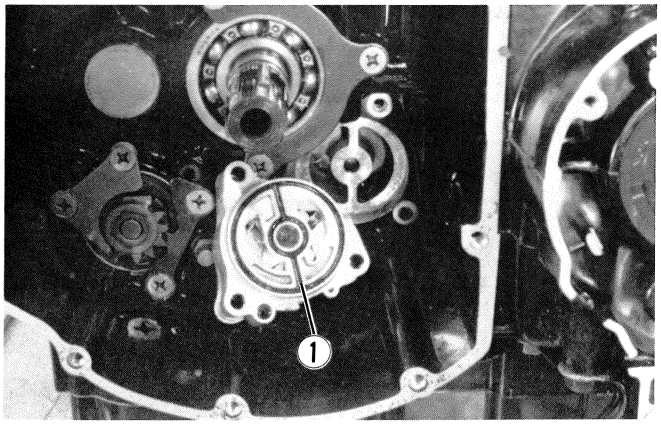

- Install the gearshift shaft with the center of the gear on shaft side aligned with center of gearshift cam driven gear.

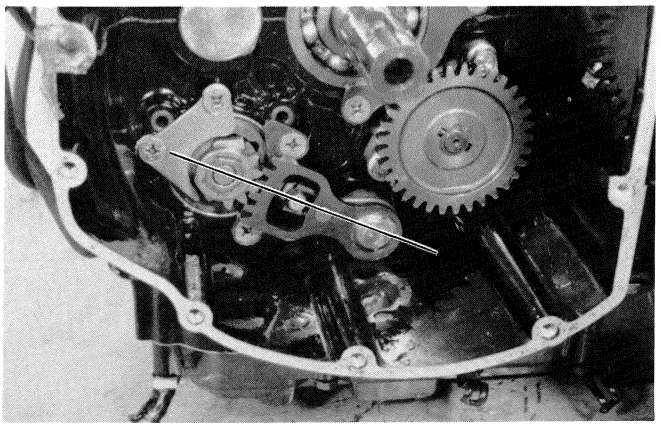

- Fix washer ① and clip ② to the gearshift shaft.

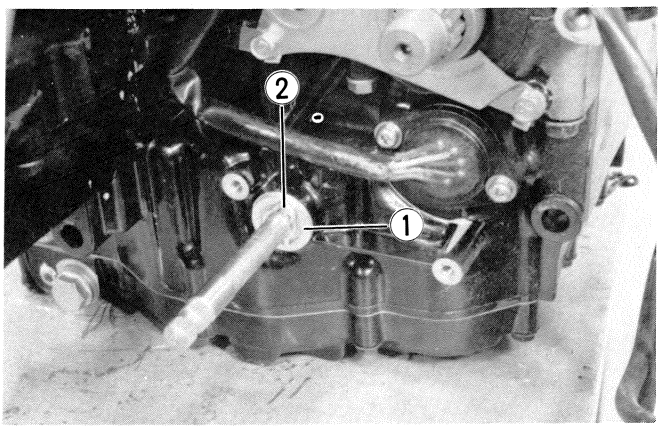

- Install the washer ①.

> **NOTE:**
> **Flat surface of washer ① is positioned outside.**

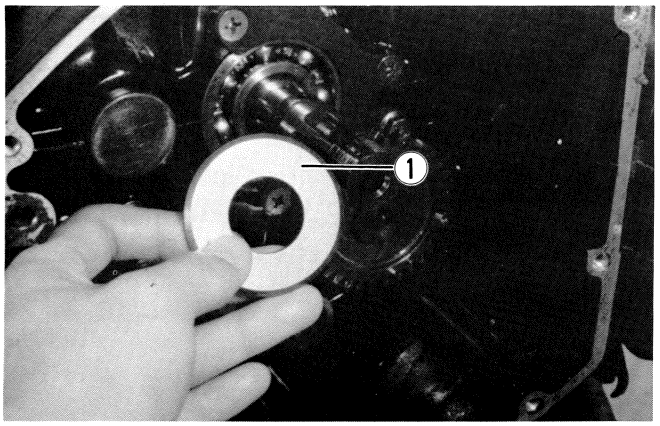

- Install the oil pump drive gear on the primary driven gear.

> **NOTE:**
> **Align the knockpin of primary drivengear with groove of oil pump drive gear.**

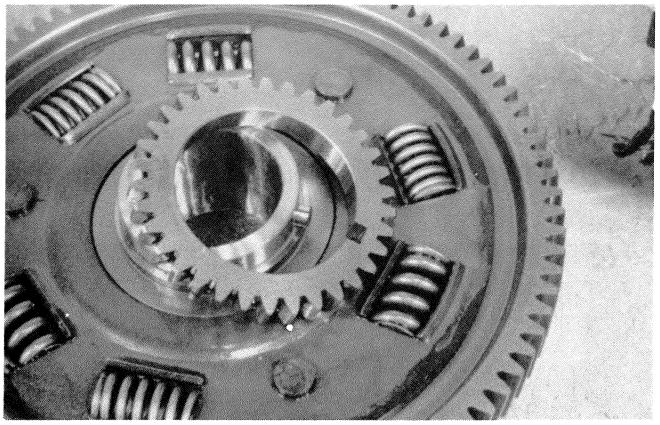

- Assemble the primary driven gear ①, and apply engine oil to the needle bearing ② and its spacer with oil groove facing inside.

> **NOTE:**
> **Check that the rubber damper plug is in position behind the clutch hub.**

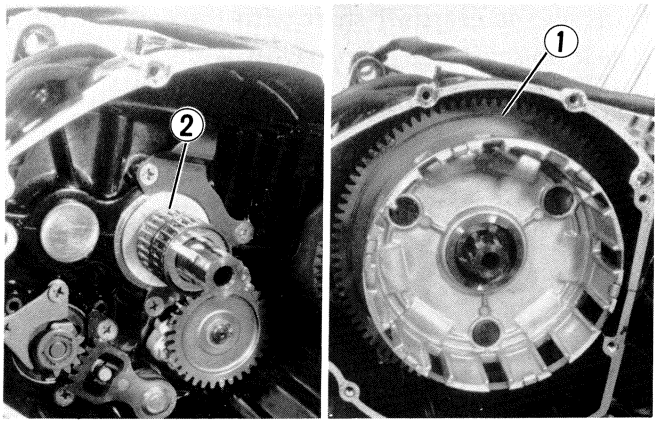

- Install the thrust washer and clutch sleeve hub.

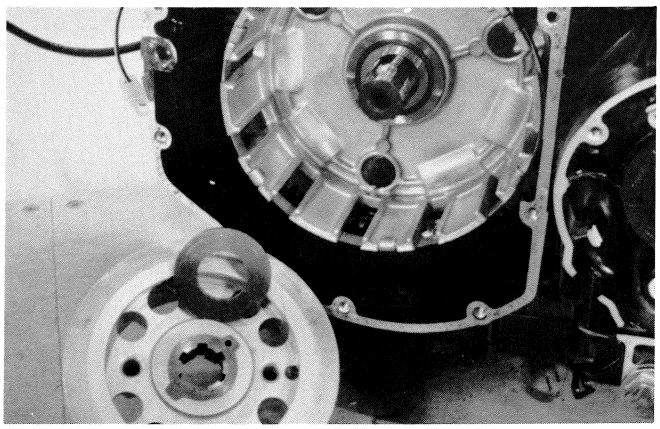

- After tightening the clutch sleeve hub nut, be sure to lock the nut by firmly bending the tongue of the washer. Tightening torque for the nut is specified.

Clutch sleeve hub nut tightening torque:	5.0–7.0 kg-m (36.0–50.5 lb-ft)

09920-53710	Clutch sleeve holder

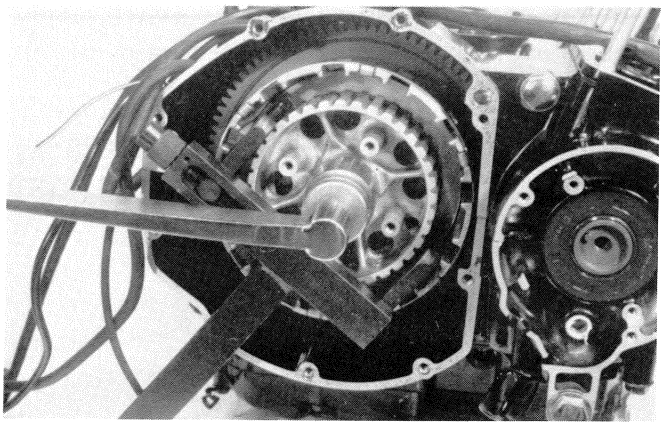

- Insert clutch driven plate and drive plate one by one into sleeve hub in the prescribed order, cork plate first. Insert clutch release rack, bearing and thrust washer into countershaft, making sure that the thrust washer is between the bearing and the pressure plate. Then fit pressure plate into sleeve hub.

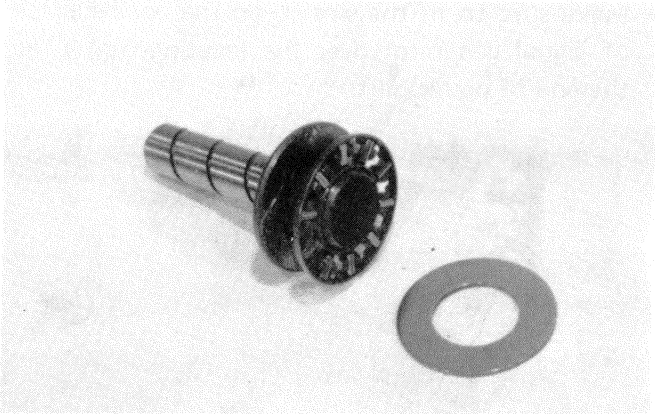

- Tighten clutch spring bolts in the order shown in the photo.

NOTE:
Tighten the clutch spring set bolts in the manner indicated, tightening them by degrees until they attain a uniform tightness.

Clutch spring bolt tightening torque:	1.1–1.3 kg-m (8.0–9.5 lb-ft)

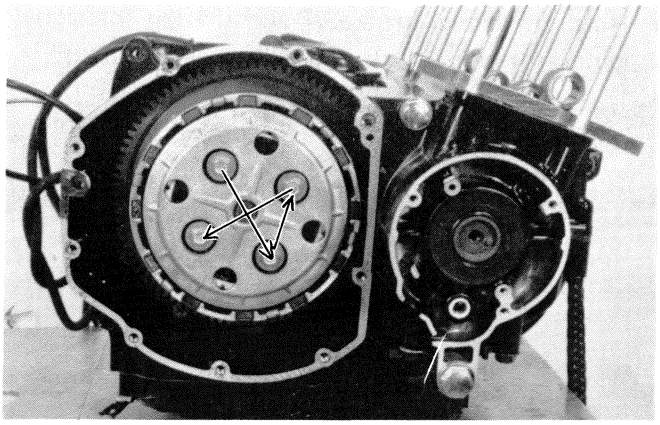

- Coat SUZUKI Bond No. 1207B lightly to the portion around mating surface between crankcases as shown.

99104-31140	SUZUKI Bond No. 1207B

- Replace clutch cover gasket with new one to prevent oil leakage.

NOTE:
Do not forget the gasket.

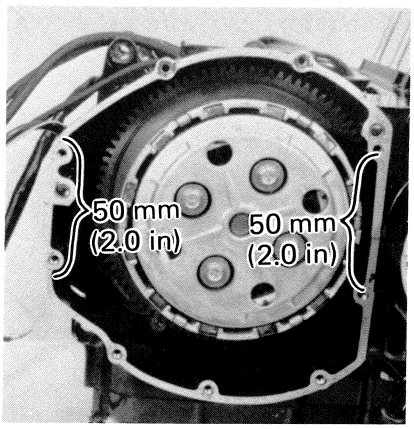

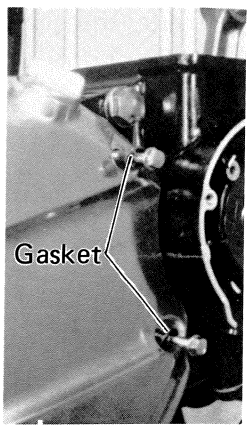

- Before installing the oil pressure switch, apply bond No. 1207B around the thread of oil pressure switch.

99104-31140	SUZUKI bond No. 1207B

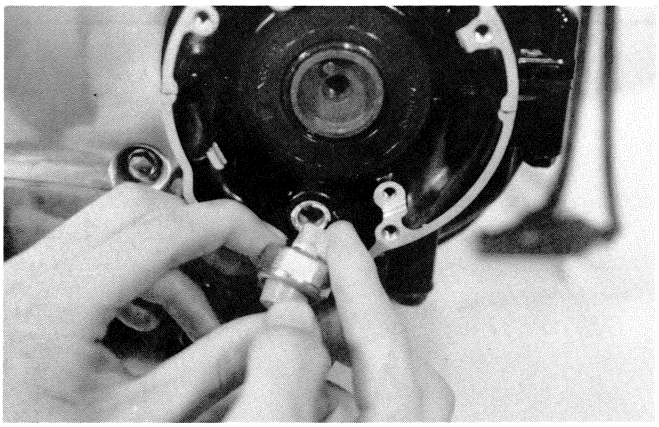

- Make sure to fit the slot ① on the back surface of signal generator over the locating pin ② at the end of crankshaft.

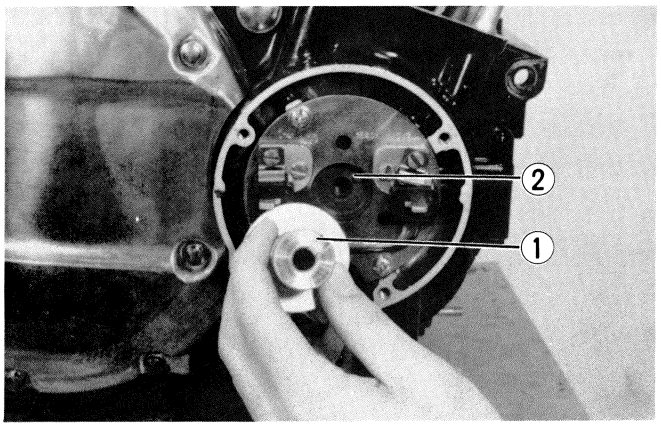

- Hold the signal generator and tighten the signal generator center bolt with specified torque.

Tightening torque	2.5–3.5 kg-m (18.0–25.5 lb-ft)

09914-25811	T-type hexagon wrench

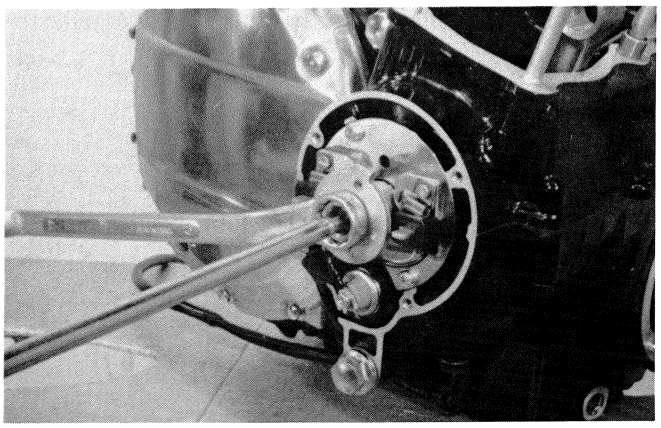

- Route the signal generator lead wire as shown in the photo.

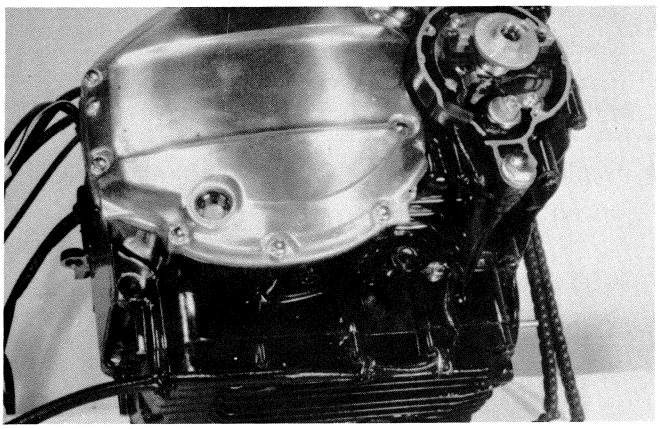

- Mount the piston ring in the order of oil ring, 2nd ring, and top ring.
- Top ring and 2nd (middle) ring differ in the shape of ring face, and the face of top ring is chrome-plated whereas that of 2nd ring is not. The color of 2nd ring appears darker than that of the top one.

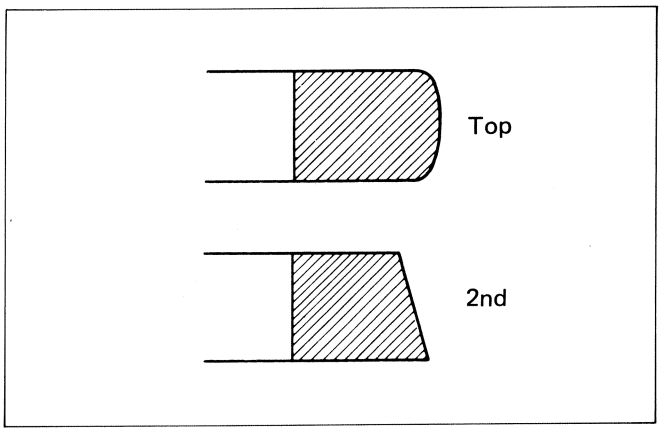

- Top and 2nd (middle) rings have letter "N" or "R" marked on the side. Be sure to bring the marked side to top when fitting them to the piston.

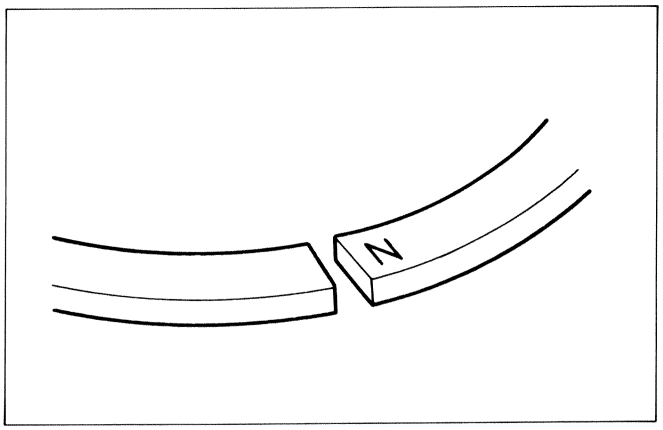

- The spacer of bottom ring (oil ring) is either of "N" type or of "R" type. Be sure that the three rings (top, 2nd, and oil) for a piston are all "N" rings or "R" rings: use of one or two "N" rings and two or one "R" rings on a piston is not permitted.

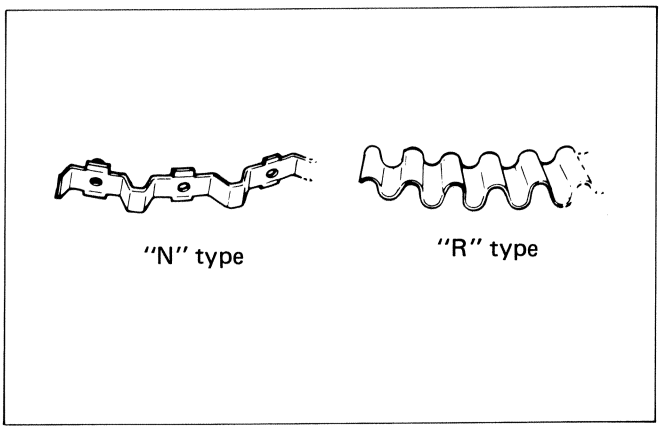

- The first member to go into the ring groove is spacer ① . After placing spacer, fit the two side rails ② . Side designations, top and bottom, are not applied to the spacer and side rails: you can position each either way.

CAUTION:
If the spacer is of "N" type, be careful not to allow its two ends to overlap in the groove.

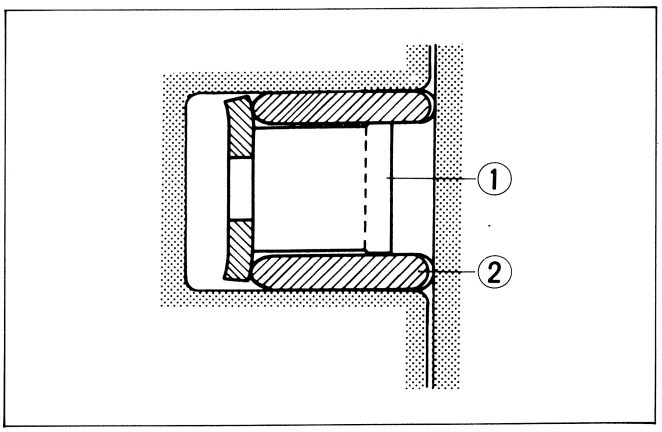

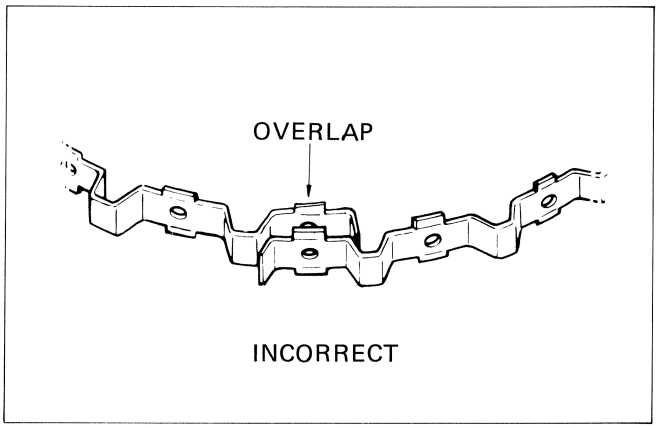

- Position the gaps of the three rings as shown. Before inserting each piston into the cylinder, check that the gaps are so located.

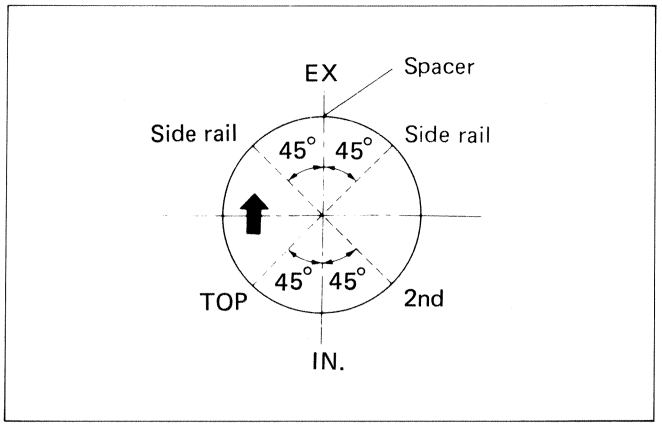

- The piston is in correct position when its arrow (on the crown) points forward.
- Be sure to install the pistons in the cylinder from which they were taken out in disassembly, refer to the letter mark, "1" through "4", scribed on the piston.

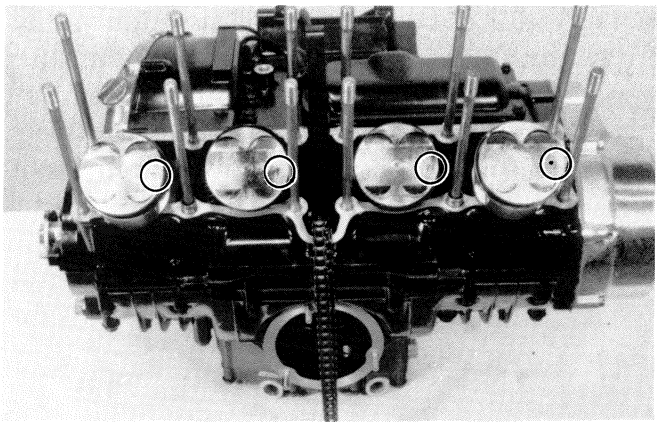

- Have each piston oiled lightly before installing it.
- Place a rag beneath the piston, and install the circlips.
- Be sure to use new circlips.

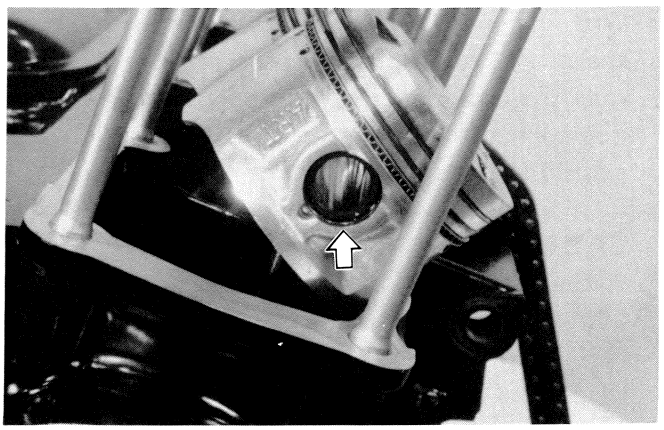

- Before putting on the cylinder block, oil the big and small ends of each connecting rod and also the sliding surface of each piston. Check to be sure that the "O" rings ① are accurately positioned in the groove.
- Place the new cylinder gasket on the crankcase.

NOTE:
"UP" marked surface is top surface.

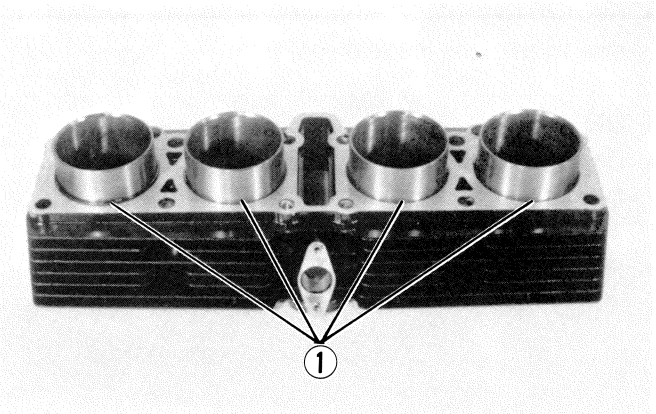

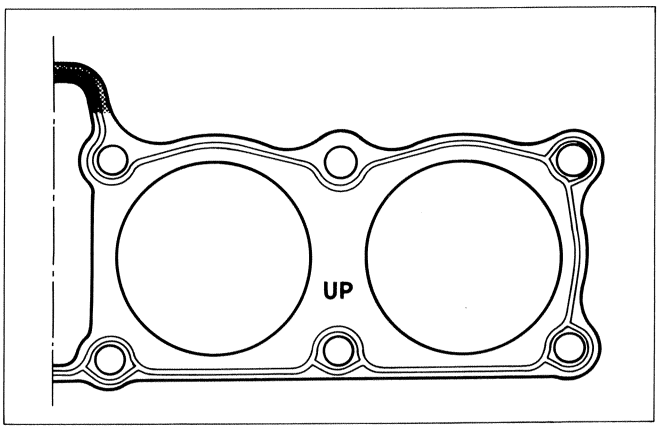

- Install piston ring holders in the indicated manner. Some light resistance must be overcome to lower the cylinder block.
- With No. 2 and No. 3 pistons in place, install No. 1 and No. 4 pistons, and insert them into the cylinder.

09916-74520	Holder body
09916-74540	Band (bore 63–75 mm)

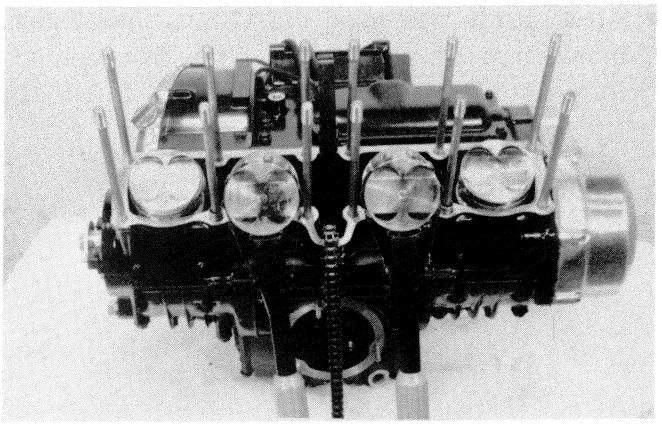

NOTE:
* **Do not overtighten the special tool bands or the cylinders will resist to admit the pistons.**
* **Each band has a number punchmarked on it. The number refers to a particular range of piston sizes.**

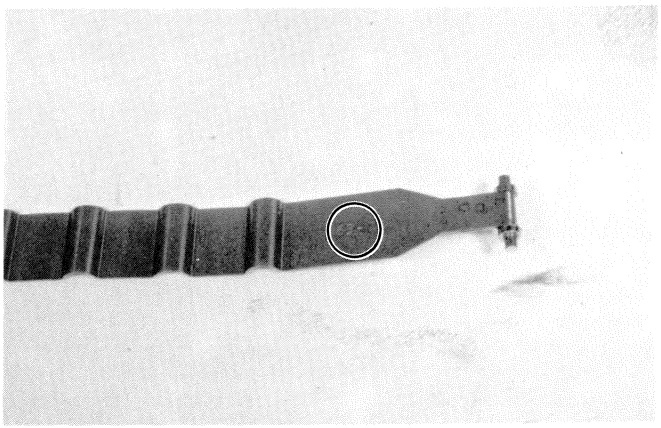

- Be sure to replace cylinder head gasket with new one to prevent gas leakage.

> **NOTE:**
> **Be sure to identify that "HEAD" marked surface is top surface.**

- Fix two knock pins properly.

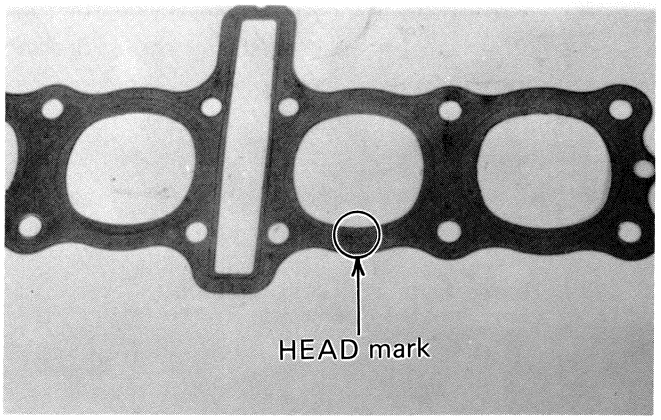

- Mount the cylinder head on the cylinder block.
- Install four kinds of cylinder head nuts in the respective positions indicated.
- Tighten the twelve 10-mm nuts to specification with a torque wrench sequentially in the ascending order of numbers.

Cylinder head nut tightening torque	3.5–4.0 kg-m (25.5–29.0 lb-ft)

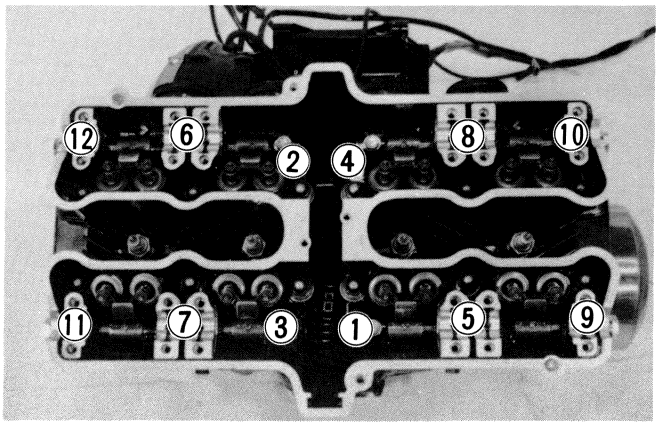

- After firmly tightening the 12-nuts, install the 6-mm bolt Ⓔ and tighten it with specified torque.

Tightening torque	0.8–1.2 kg-m (6.0–8.5 lb-ft)

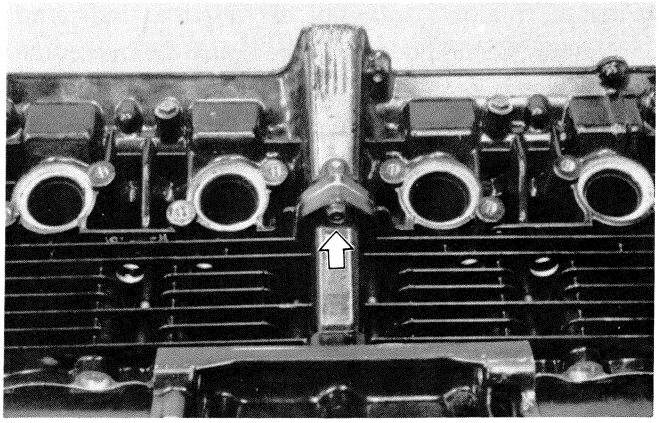

- Place chain guide ① properly.

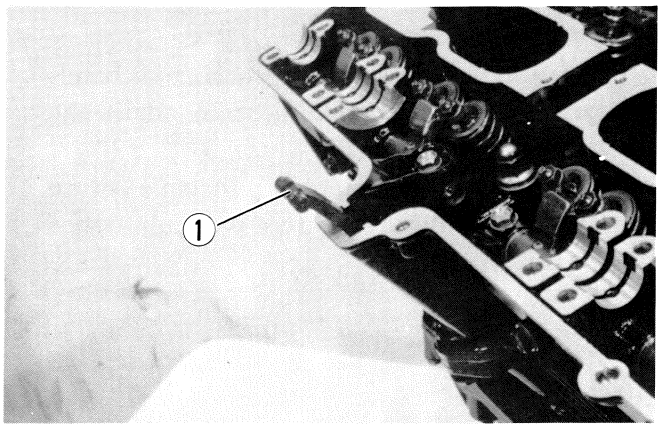

- While holding down the timing chain, rotate the crankshaft in normal direction to bring the "T" mark (on Nos. 1 and 4 cylinder side of the signal generator) to the timing mark.

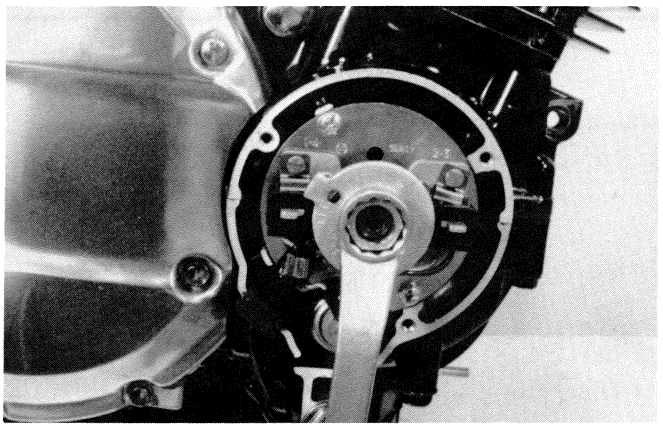

CAUTION:
To turn over crankshaft, turn with a 19 mm wrench. Never try to rotate crankshaft by putting a 6mm T-type wrench to bolt.

NOTE:
Just before placing the camshaft on the cylinder head, apply high quality molybdenum disulfide lubricant to its journals, fully coating each journal ① with the paste taking care not to leave any dry spot. Apply engine oil to the journal bearings.

09900-25140	Suzuki Moly Paste

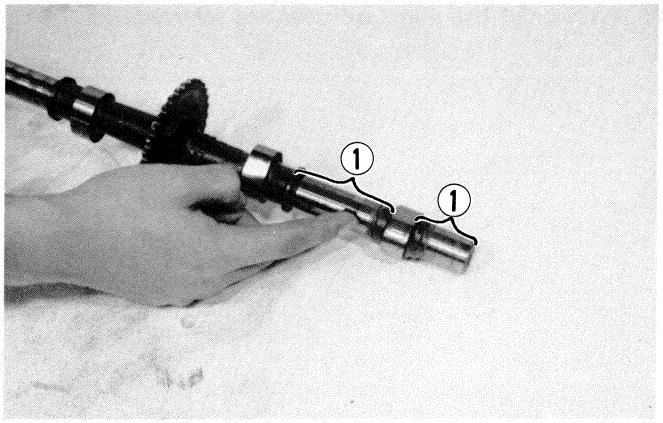

- The exhaust camshaft can be distinguished from that of the intake by the embossed letters "EX" (for exhaust) as against letters "IN" (for intake). Similarly, the right end can be distinguished by the notch ① at the right end.

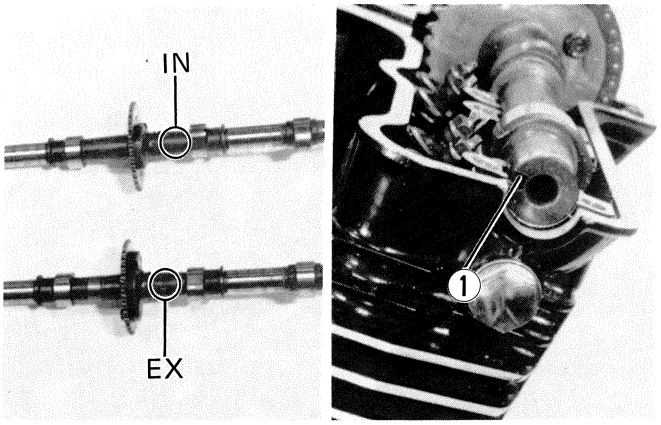

- With "T" mark accurately lined up with the timing mark, hold the crankshaft steady and lightly pull up the chain to remove the slack between the crank sprocket and exhaust sprocket.
- Exhaust sprocket bears an arrow marked "1" indicated as ① . Turn over the exhaust camshaft so that the arrow points flush with the gasketed surface of the cylinder head. Engage the timing chain with this sprocket.

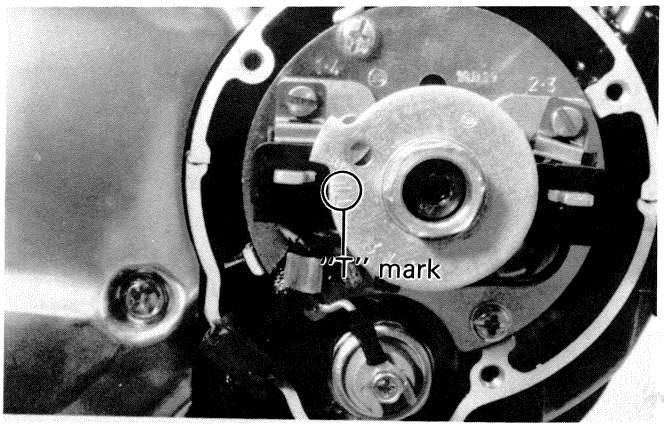

- The other arrow marked "2" ② is now pointing straight upward. Count the chain roller pins toward the intake camshaft, starting from the roller pin directly above this arrow marked "2" and ending with the 20th roller pin. Engage the chain with intake sprocket, locating the 20th pin at and above the arrow marked "3" ③ on the intake sprocket.

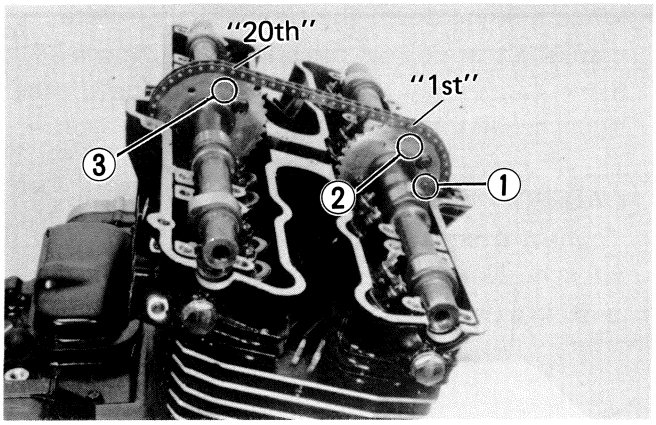

NOTE:
The timing chain is now riding on all three sprockets. Be careful not to disturb the crankshaft until the eight holders are secured.

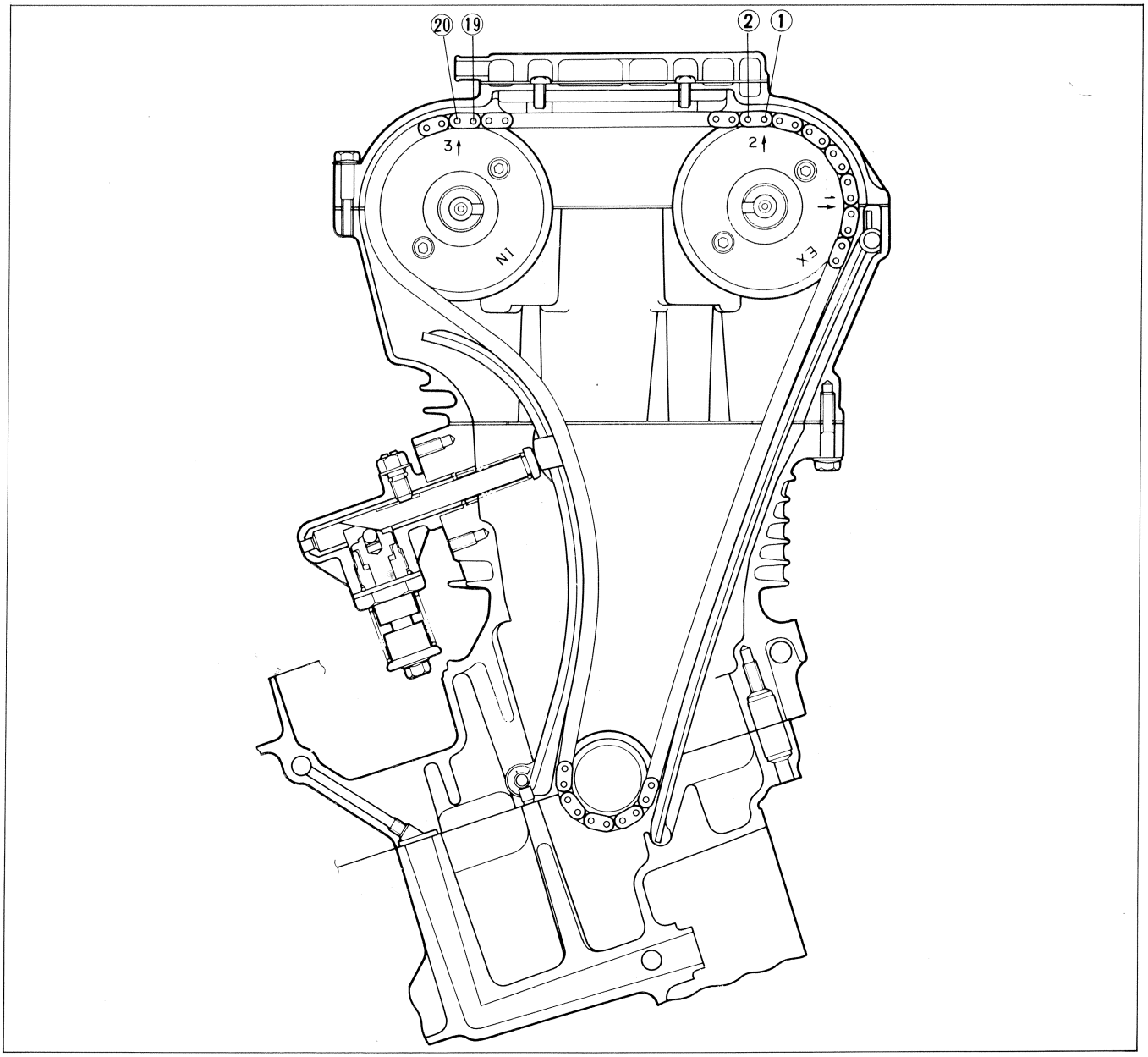

- Each camshaft holder is identified with a cast-on letter with a triangle. A matching cast-on symbol appears on the head. Install each holder at it's matching letter, with triangle symbols pointing forward.

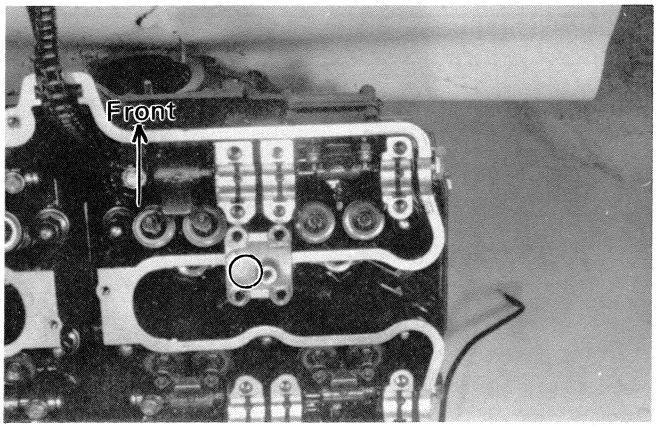

- Route the oil pipe as shown.

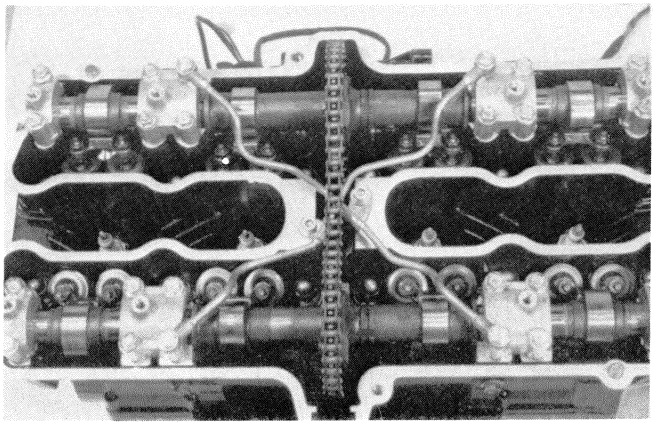

NOTE:
Oil pipe union bolts have two type.
Ⓐ bolt is exhaust side, and Ⓑ bolt is intake side.

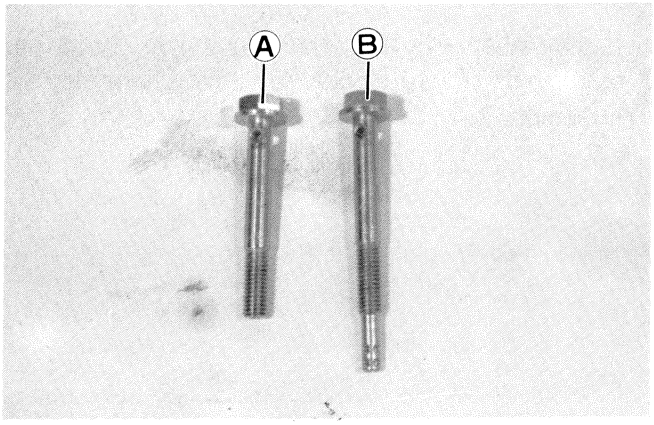

- Secure the eight camshaft bearing holders evenly by tightening the camshaft bearing holder bolts sequentially. Try to equalize the pressure by moving the wrench diagonally from one bolt to another and from one camshaft bearing holder to another, to push shafts down evenly.

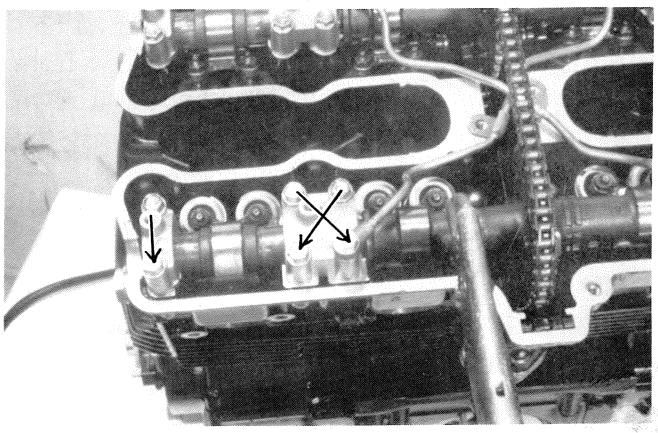

NOTE:
Damage to head or cam bearing holder thrust surfaces may result in the situation that cam bearing holders are not drawn down evenly.

- Tighten the camshaft bearing holder bolts to the following torque value:

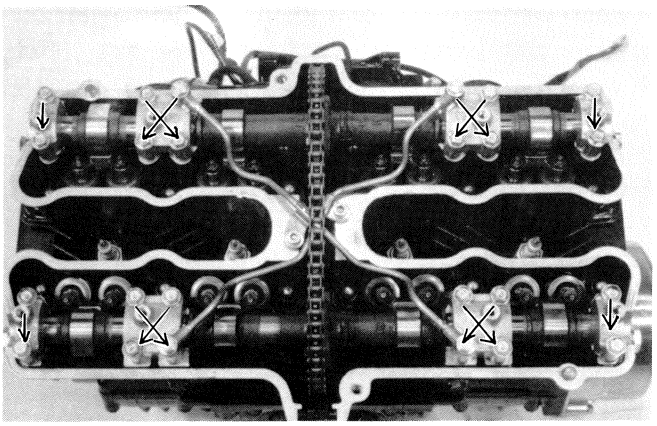

CAUTION:
The camshaft bearing holder bolts are made of a special material and much superior in strength campared with other type of high strength bolts.
Take special care not to use other types of bolts instead of these special bolts. To identify these bolts, each of them has a figure "9" on its head.

Camshaft bearing holder bolt tightening torque	0.8–1.2 kg-m (6.0–8.5 lb-ft)

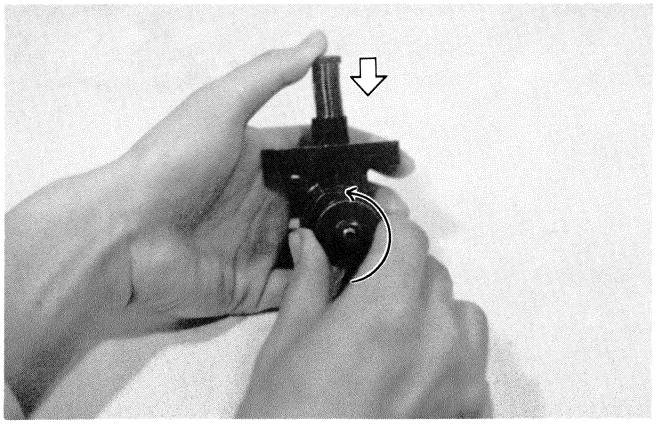

- While turning lock shaft handle counterclockwise, push in the pushrod all the way. Keep on turning the handle until it refuses to turn further.
- Tighten the lock screw to lock the pushrod, so that the pushrod will not plunge out.
- Secure the adjuster to the cylinder block.

- If tensioner adjuster is not going in, turn the crankshaft slowly clockwise to get chain play at inlet side.

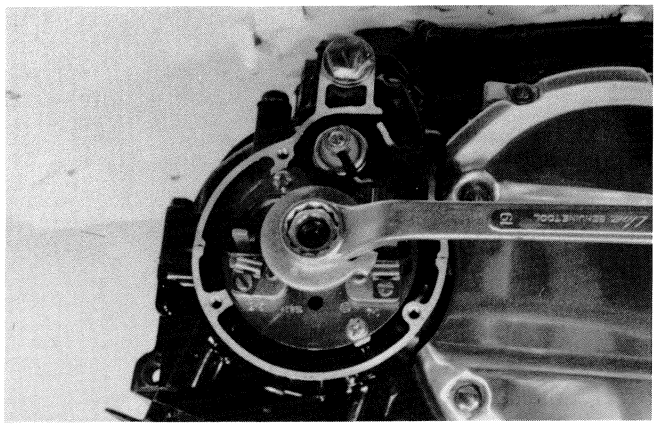

- Withdraw the lock screw by one-quarter to half a turn: this separates the tip of the screw from the pushrod, thereby allowing the pushrod to advance under spring force and to press the tensioner against the camshaft chain.
- Tighten the lock nut ① .

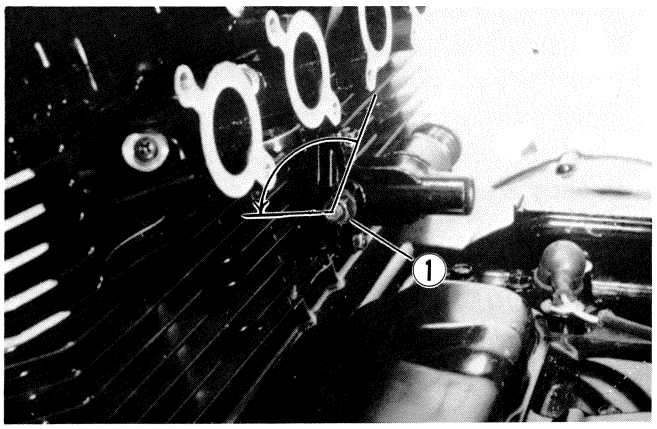

NOTE:
When tightening the lock nut, take care to prevent the lock screw from turning.

- While turning the handle ① counterclockwise, slowly rotate the crankshaft in reverse direction (thus causing the chain to push back the tensioner).

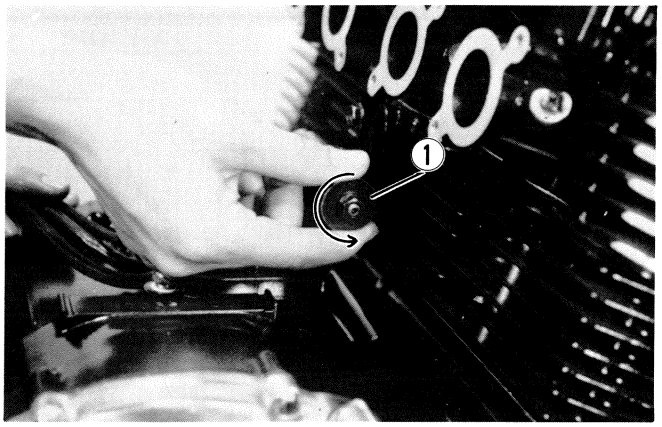

- Release the handle and slowly turn back the crankshaft in normal running direction (to slacken that portion of the chain extending along the tensioner). See if the handle rotates by itself as the chain becomes progressively slackened; if it does, then the pushrod inside is obviously moving forward under spring force as it should, thus signifying that the tensioner is in good operable condition. If the handle rotates, but sluggishly, it means that the pushrod or lock shaft is sticking and, in such a case, remove the tensioner and service the pushrod and lock shaft to make them move smoothly.

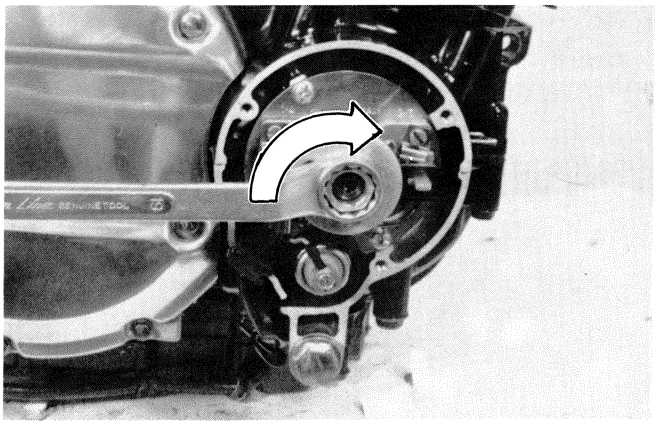

CAUTION:
After installing the tensioner and checking it in initially set condition for operation, do not attempt to turn the handle in either direction until the next overhaul.

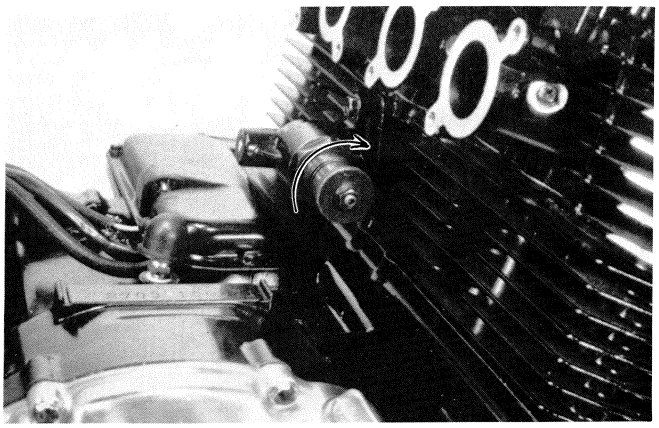

- Adjust the valve clearance. (see page 2-4)
- In fitting the seal ring to the oil filter chamber cap, lightly coat grease on the seal ring groove ① to avoid any chance of dropping or mislocating the ring during the installation work.
- Tighten engine oil drain plug.

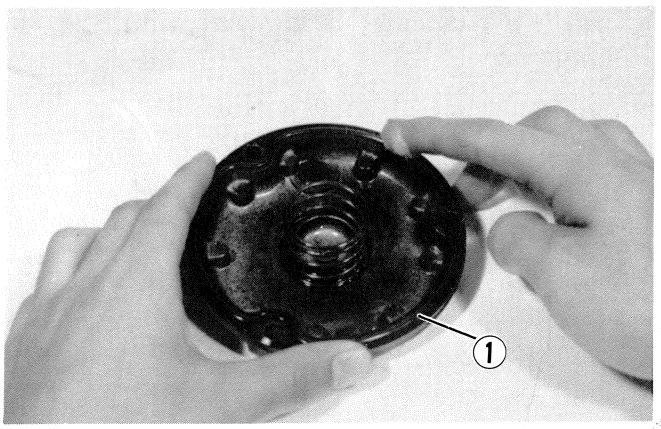

- Pour 50 ml of engine oil in four oil pockets.

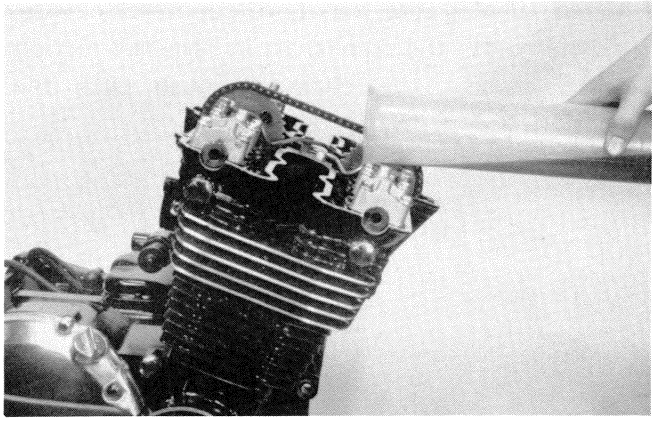

- Before install the cylinder head cover gasket on the cylinder head cover, apply the bond No. 1207B to the head cover as shown.

99104-31140	SUZUKI bond No. 1207B

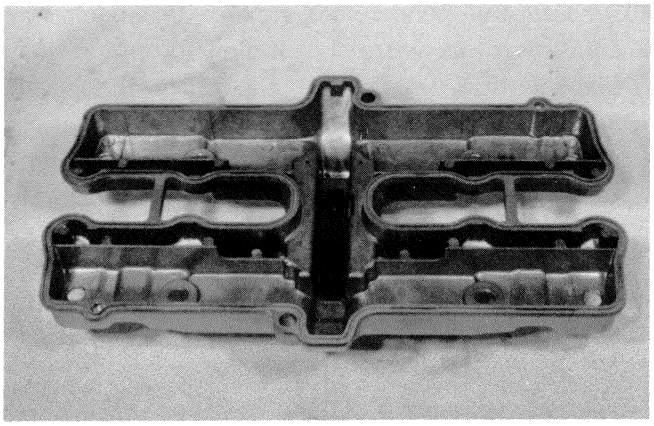

- Apply the SUZUKI Bond No. 1207B to the cylinder head cover gasket as shown.

99104-31140	SUZUKI bond No. 1207B

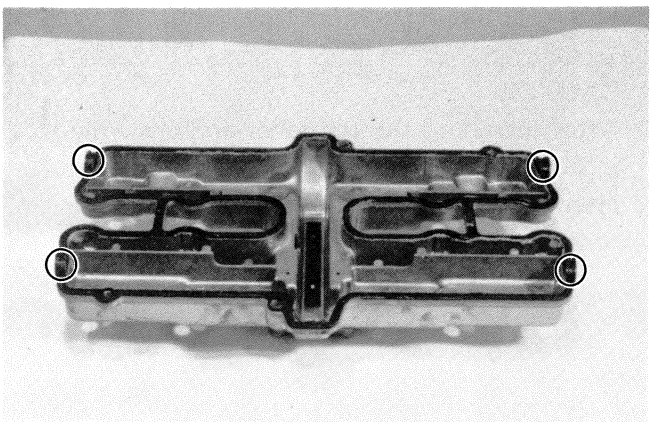

- Install the cylinder head cover with specific torque value.

NOTE:
Be sure to identify that O-ring is installed on the head cover.

Tightening torque	1.3 – 1.5 kg-m (9.5 – 11.0 lb-ft)

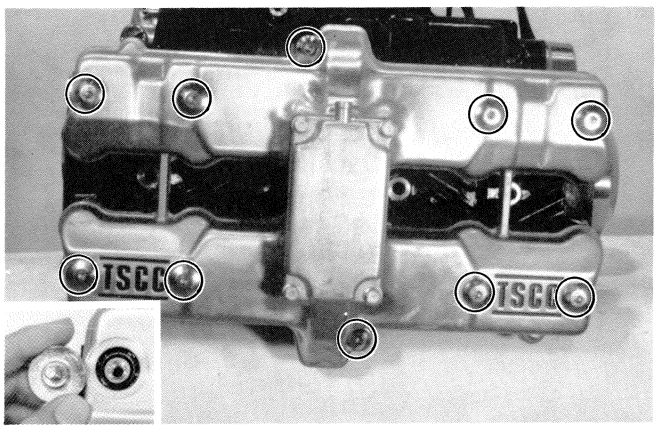

- Each cylinder head intake pipe is identified with a letter "R" or "L" on it. Fit each pipe to cylinder head properly.

> **CAUTION:**
> **"MADE IN JAPAN" mark on the intake pipe faces to the cylinder side.**

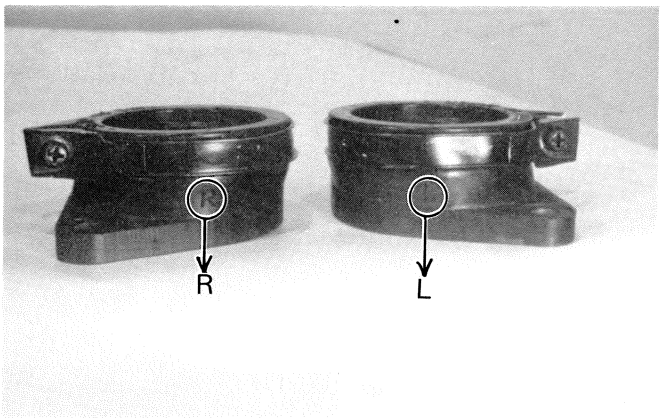

- Route and install the oil hose correctly.

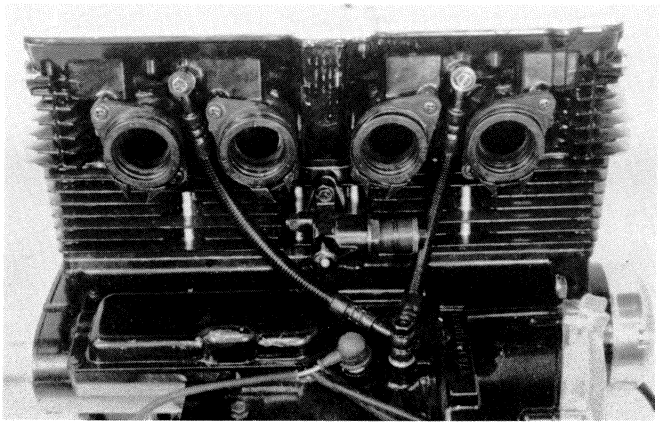

FUEL AND LUBRICATION SYSTEM

CONTENTS

FUEL SYSTEM 4- 1
FUEL COCK 4- 2
CARBURETOR 4- 3
- SPECIFICATIONS 4- 4
- DIAPHRAGM AND PISTON OPERATION 4- 5
- SLOW SYSTEM 4- 6
- MAIN SYSTEM 4- 7
- STARTER SYSTEM 4- 8
- FLOAT SYSTEM 4- 8
- FUEL LEVEL INSPECTION 4- 9
- BALANCING CARBURETORS 4- 9
- REMOVAL 4-12
- DISASSEMBLY 4-14
- INSPECTION 4–17
- REASSEMBLY 4–18

LUBRICATION SYSTEM 4-22

FUEL SYSTEM

When starter motor is engaged, negative pressure is generated in the combustion chamber. This negative pressure works on the diaphragm of fuel cock through passageway provided in the carburetor main bore and vacuum pipe, and diaphragm builds up a negative pressure which is higher than the spring pressure. Fuel valve is forced to open due to diaphragm operation, and thus allows fuel to flow into carburetor float chamber.

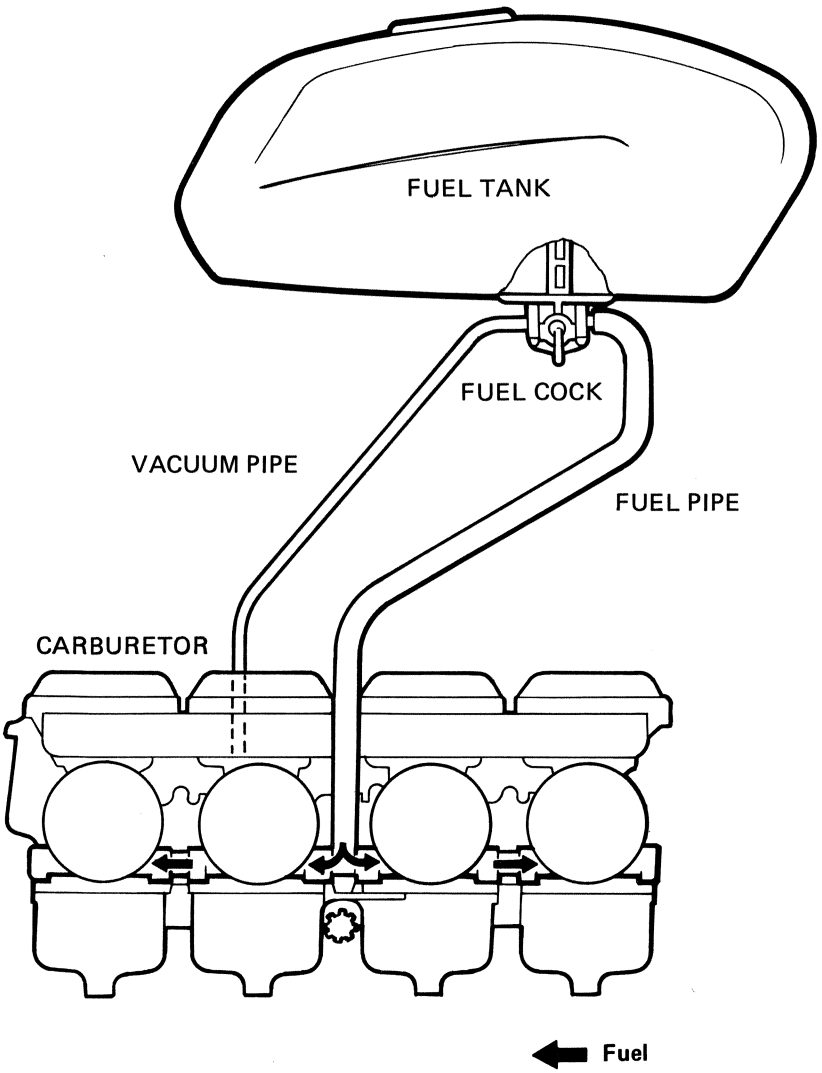

FUEL COCK

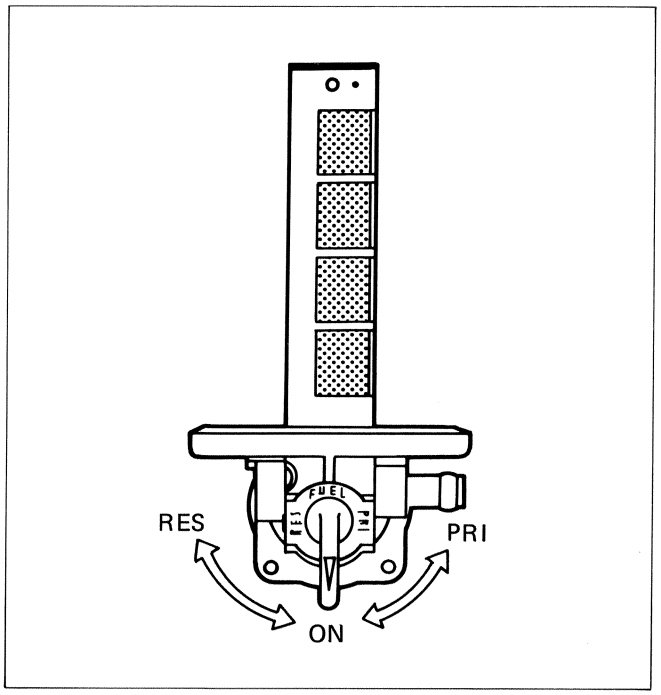

When the engine is not running and the valve is the ON or RES position, the fuel valve is kept in the closed position by applying pressure utilizing a spring so that no fuel will flow to the carburetors. When the engine is started, a negative pressure is generated in the diaphragm chamber "C" through the vacuum (negative pressure) pipe which is connected to the No. 2 carburetor, and builds up a negative pressure which is higher than the spring pressure so that the diaphragm is forced to open the fuel valve and thus allow the fuel to flow to the carburetors.

When the lever is set to PRI position, the protrusion ⑥ located on the lever end pushes back the fuel valve mechanically against the spring force and it allows fuel to flow to the carburetors directly, whether the engine is running or not, through the RES side fuel filter and fuel valve clearance.

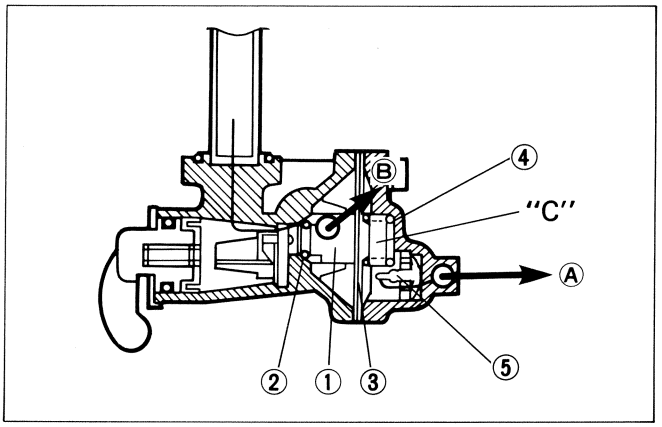

"ON"

① Fuel valve ② O-ring ③ Diaphragm
④ Spring ⑤ One way valve
Ⓐ Vacuum Ⓑ Fuel flow

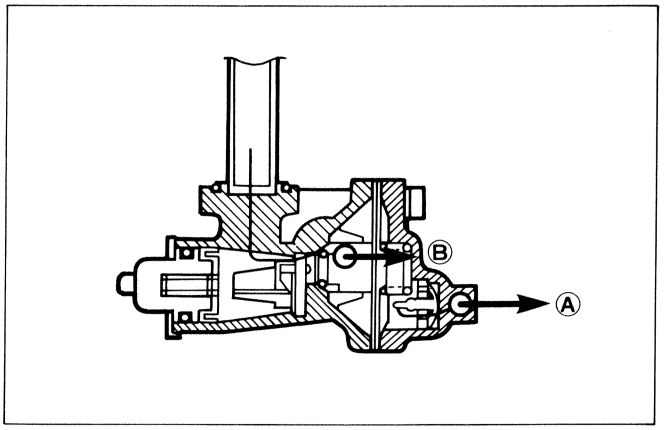

"RES"

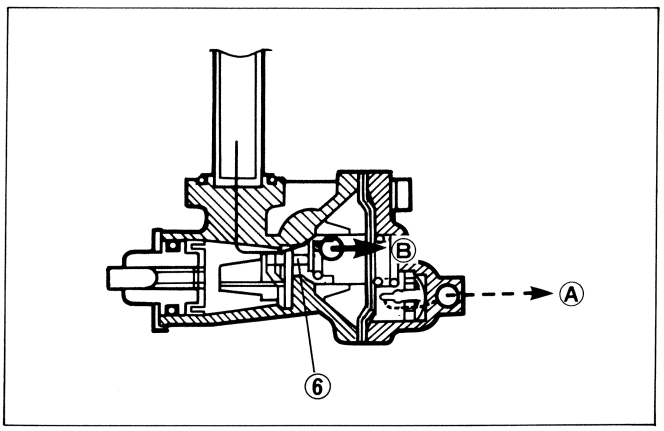

"PRI"

CARBURETOR

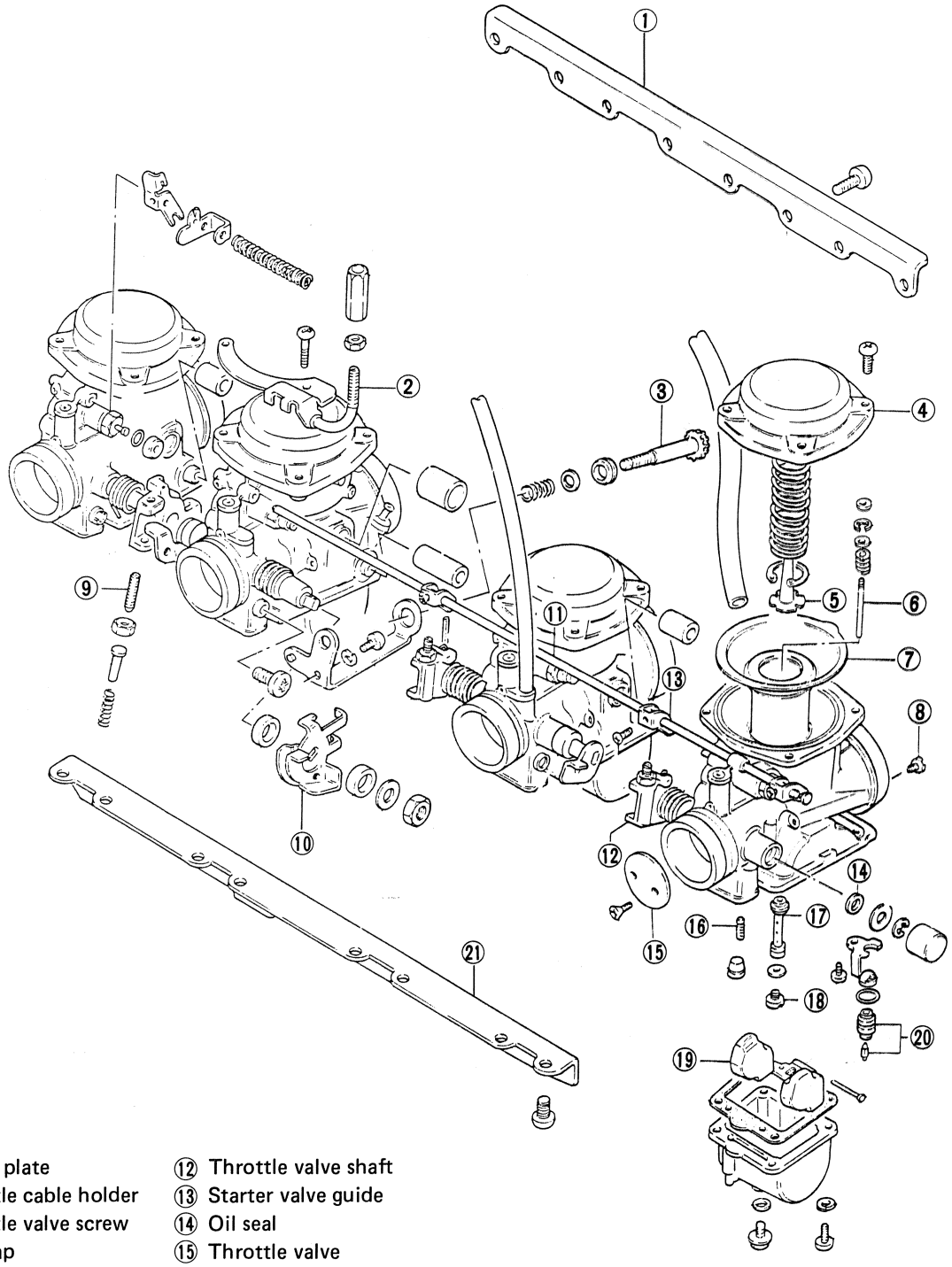

① Upper plate
② Throttle cable holder
③ Throttle valve screw
④ Top cap
⑤ Jet needle stopper
⑥ Jet needle
⑦ Diaphragm and piston
⑧ Pilot air jet
⑨ Synchronizer screw
⑩ Throttle lever
⑪ Starter valve shaft
⑫ Throttle valve shaft
⑬ Starter valve guide
⑭ Oil seal
⑮ Throttle valve
⑯ Pilot jet
⑰ Needle jet
⑱ Main jet
⑲ Float
⑳ Needle valve
㉑ Lower plate

SPECIFICATIONS

ITEM	SPECIFICATIONS
Type	MIKUNI BS32SS
I.D. No.	31300
Bore	32 mm (1.26 in)
Idle r/min	1 150 ± 50 r/min
Fuel level	5.0 ± 0.5 mm (0.20 ± 0.02 in)
Float height	22.4 ± 1.0 mm (0.88 ± 0.04 in)
Main jet	# 117.5
Main air jet	1.7 mm (0.07 in)
Jet needle	5D12
Needle jet	Y–6
Pilot jet	# 37.5
By pass	0.8, 0.8, 0.8 mm (0.03, 0.03, 0.03 in)
Pilot outlet	0.7 mm (0.03 in)
Valve seat	2.0 mm (0.08 in)
Starter jet	#45
Pilot screw	Pre-set
Throttle cable play	0.5 – 1.0 mm (0.02 – 0.04 in)
Starter cable play	0.5 – 1.0 mm (0.02 – 0.04 in)

Each carburetor has I.D. Number ① printed on the carburetor body according to its specifications.

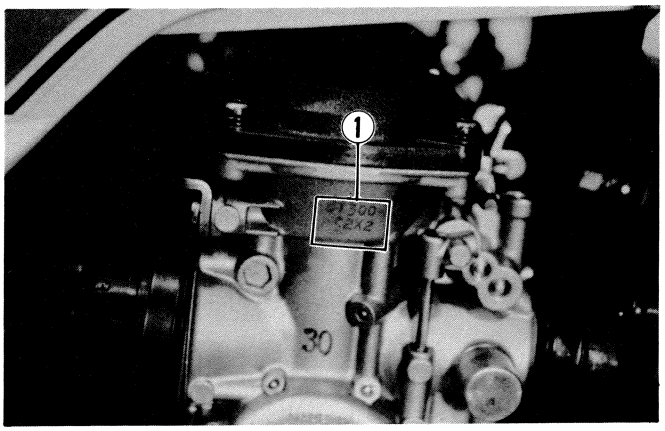

DIAPHRAGM AND PISTON OPERATION

The carburetor is of a variable-venturi type, whose venturi cross section area is increased or decreased automatically by the piston according to the vacuum present on the downstream side of the venturi. Vacuum is admitted into the diaphragm chamber through an orifice provided in the piston.

Rising vacuum overcomes the spring force, causing the piston to rise to increase the said area and thus to prevent the air velocity from increasing. Therefore, air velocity in the venturi passage is kept relatively constant for improved fuel atomization and for securing an optimum ratio of fuel to air in the mixture.

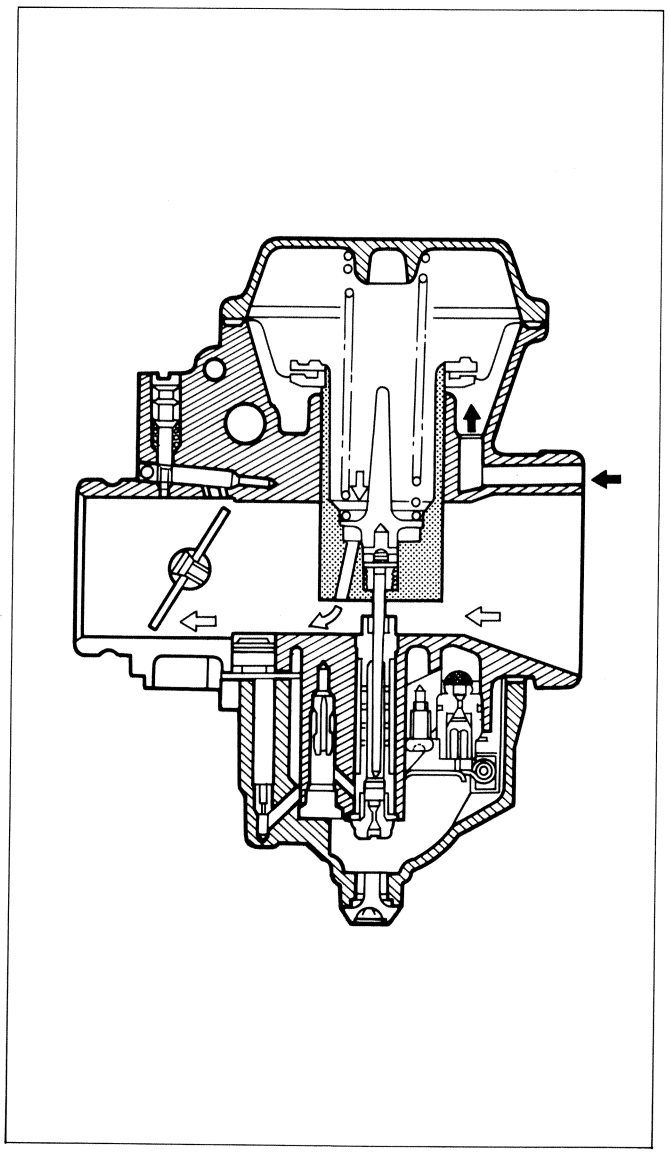

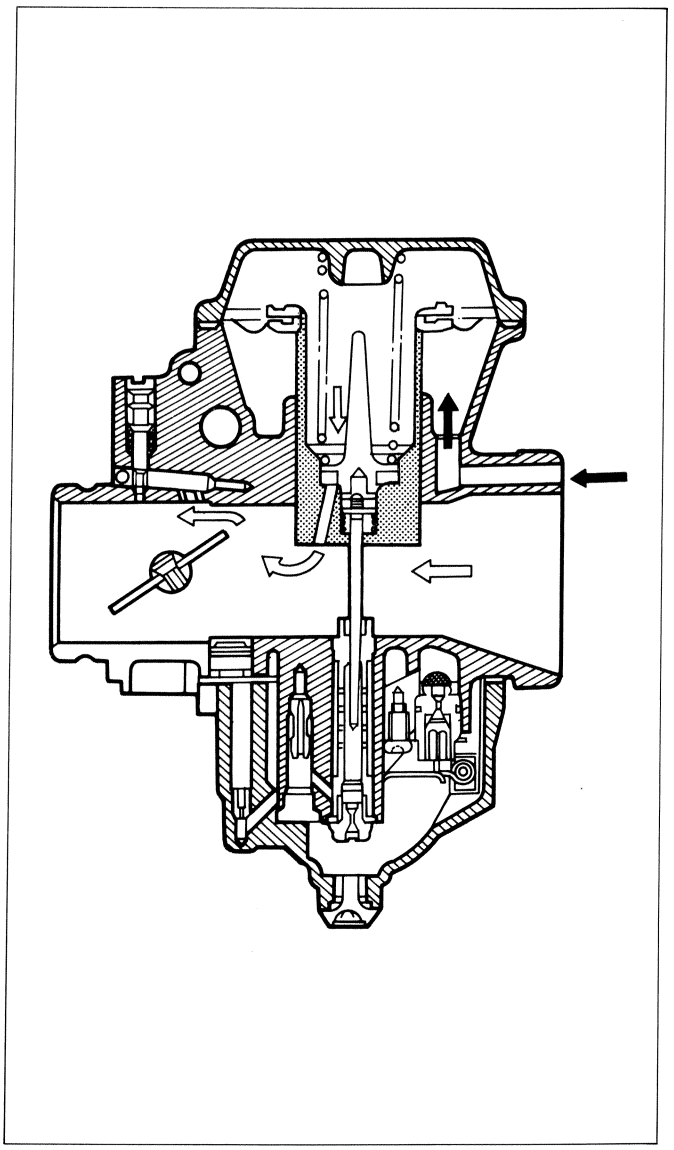

SLOW SYSTEM

This system supplies fuel during engine operation with throttle valve closed or slight opened.
The fuel from float chamber is first passed through main jet and metered by pilot jet where it mixes with air coming in through pilot air jet.
This mixture, rich with fuel, then goes up through pilot pipe to pilot screw. A part of the mixture is discharged into the main bore out of bypass ports. The remainder is then metered by pilot screw and sprayed out into the main bore through pilot outlet.

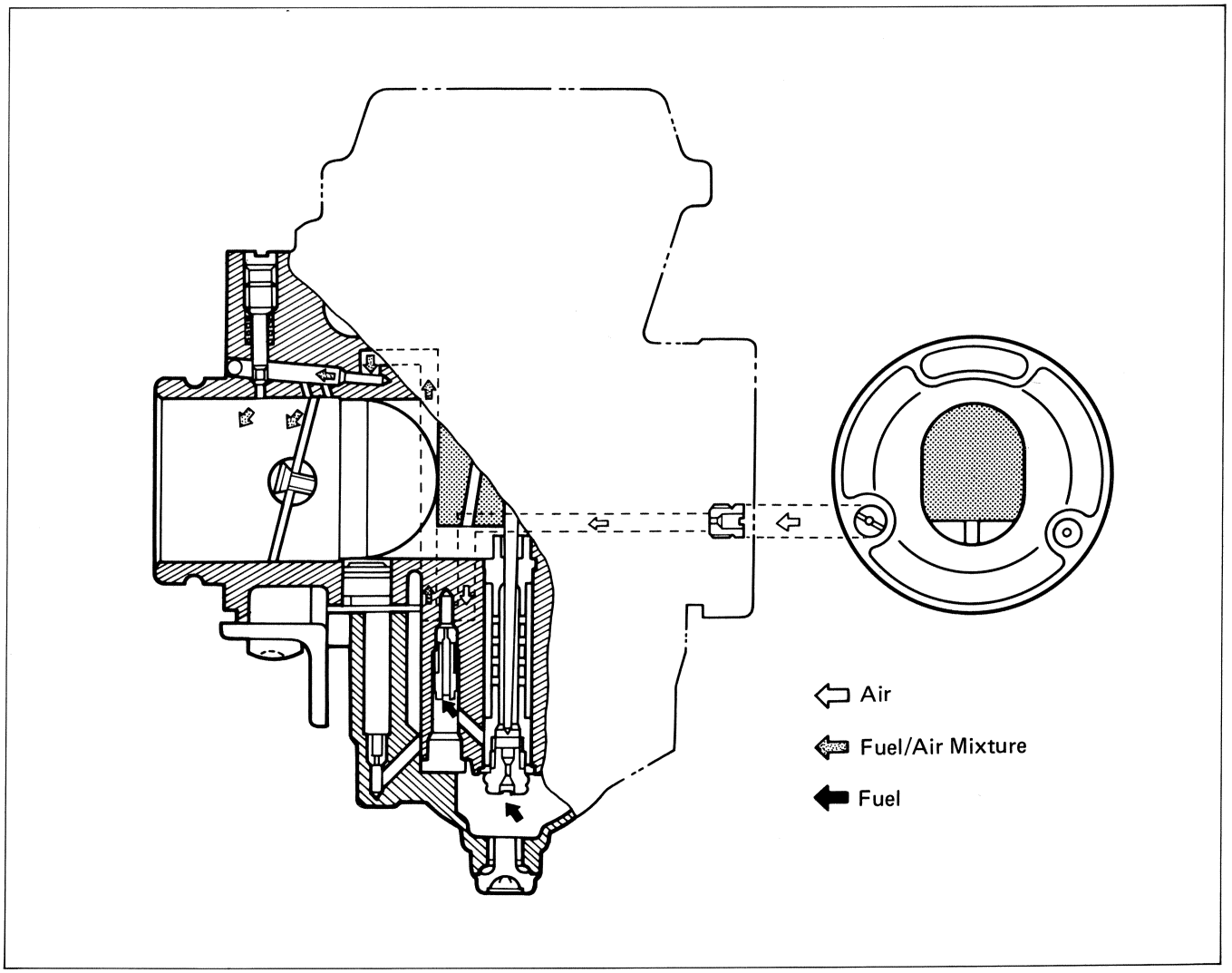

MAIN SYSTEM

As throttle valve is opened, engine speed rises, and this increases vacuum in the venturi. Consequently the piston valve moves upward.

Meanwhile, the fuel in float chamber is metered by main jet, and the metered fuel enters needle jet, in which it mixes with the air admitted through main air jet to form an emulsion.

The emulsified fuel then passes through the clearance between needle jet and jet needle, and is discharged into the venturi, in which it meets main air stream being drawn by the engine.

Mixture proportioning is accomplished in needle jet; the clearance through which the emulsified fuel must flow is either large or small, depending ultimately on throttle position.

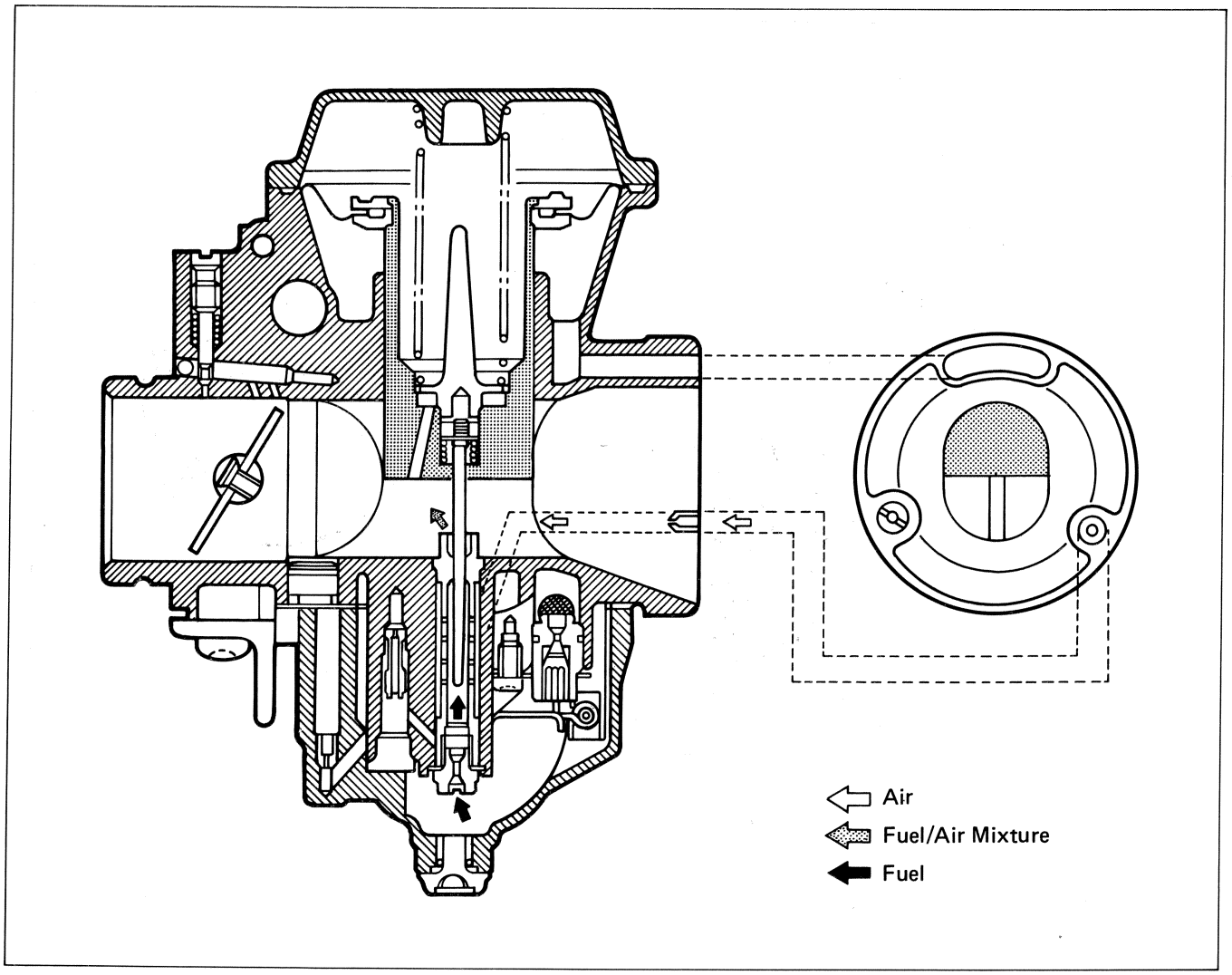

STARTER SYSTEM

Turning the choke knob all the way left, slides starting plunger to draw fuel into the starter circuit from the float chamber through starter jet.

Starter jet meters this fuel, which then flows into starter pipe and mixes with the air coming from the float chamber. The mixture, rich in fuel content, reaches starting plunger and mixes again with the air coming through a passage extended from behind the diaphragm.

The two successive mixings of fuel with air are such that proper air/fuel mixture for starting is produced when the mixture is sprayed out through starter outlet into the main bore.

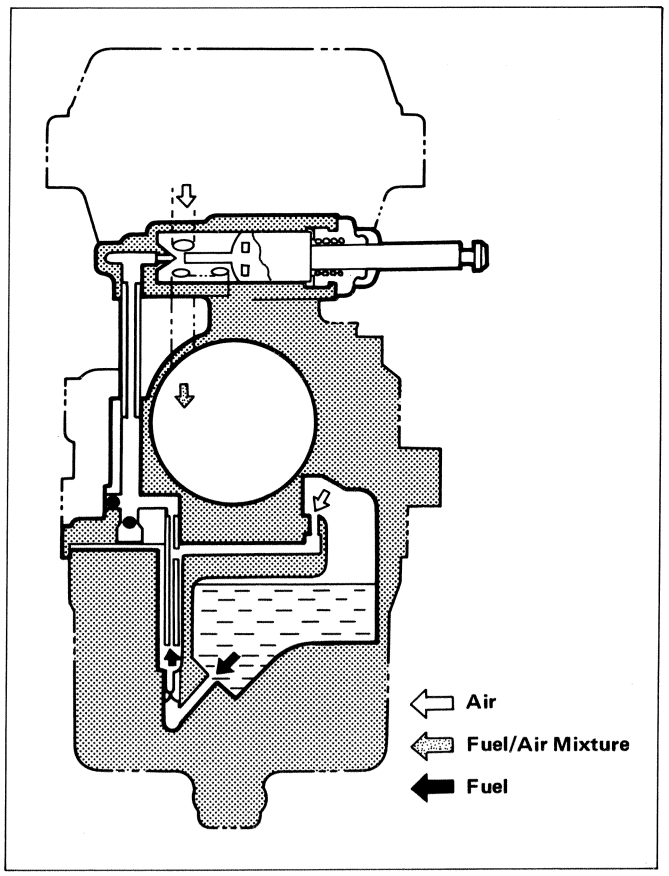

FLOAT SYSTEM

Floats and needle valve are associated with the same mechanism, so that, as the floats move up and down, the needle valve too moves likewise. When fuel level is up in float chamber, floats are up and needle valve remains pushed up against valve seat. Under this condition, no fuel enters the float chamber.

As the fuel level falls, floats go down and needle valve unseats itself to admit fuel into the chamber. In this manner, needle valve opens and shuts off fuel alternately to maintain a practically constant fuel level inside the float chamber.

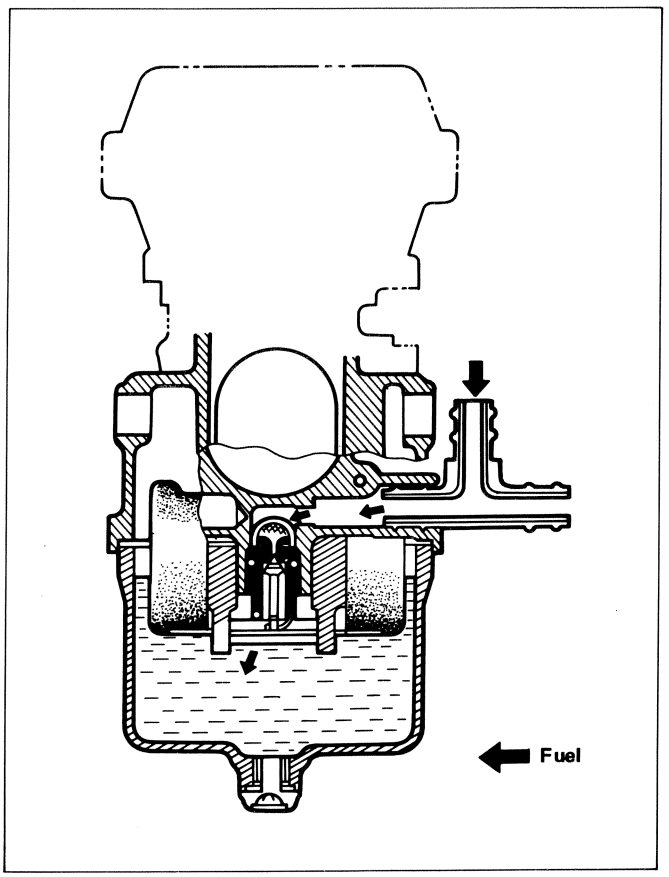

FUEL LEVEL INSPECTION

- Place machine on center stand.
- Remove carburetor drain plug ① and install the fuel level gauge ② .

09913-14511	Fuel gauge set

- Run the engine at the idling speed (1 100 – 1 200 r/min), and measure the distance with the middle line of the level gauge aligned with the lower surface of carburetor body as shown in photo. Ⓐ should be within the specified range.

Distance Ⓐ	5.0 ± 0.5 mm (0.20 ± 0.02 in)

- Repeat the procedure on each carburetor.

> NOTE:
> **When refitting the screw, be sure to reinstall the gasket ③ .**

- If fuel level readjustment is necessary, see page 4-17 for adjusting float height.

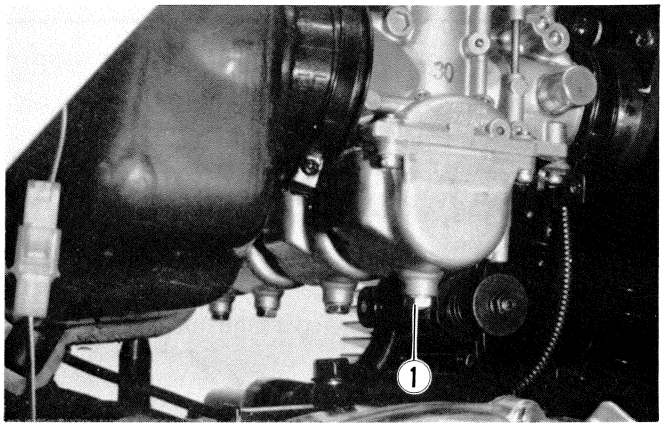

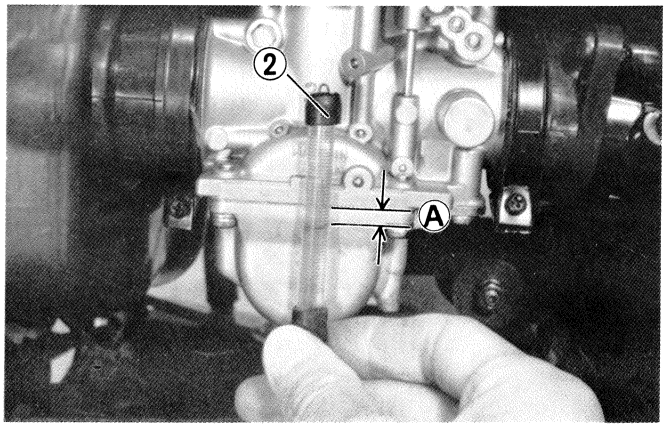

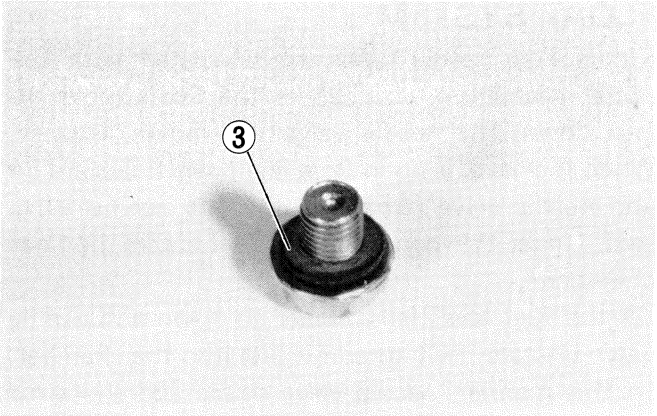

BALANCING CARBURETORS

Check the four carburetors for balance according to the following procedures.
As the first step, calibrate the carburetor balancer gauge as follows:

09913-13121	Carburetor balancer
09913-13140	Adapter

- Start up the engine and run it in idling condition for warming up.
- Stop the warmed-up engine.
- Remove vacuum inlet screw for No. 1 or No. 4 cylinder and install adapter ① with O ring.

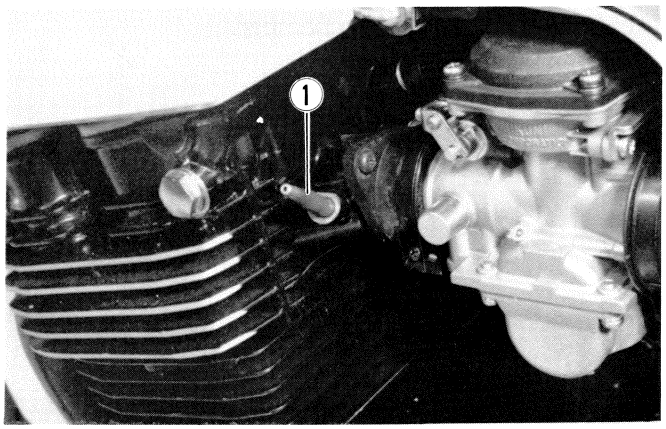

- Connect one of the four rubber hoses of the balancer gauge to this adapter, and start up the engine, and keep it running at 1 750 r/min by turning throttle stop screw ① .

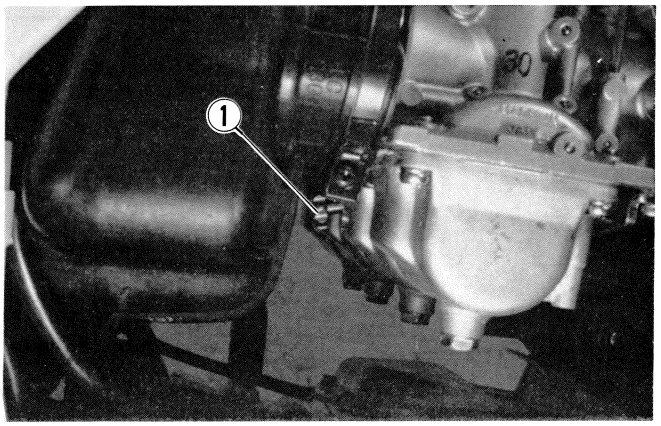

- Turn the air screw ② of the gauge so that the vacuum acting on the tube of that hose will bring the steel ball ③ in the tube to the center line ④ .

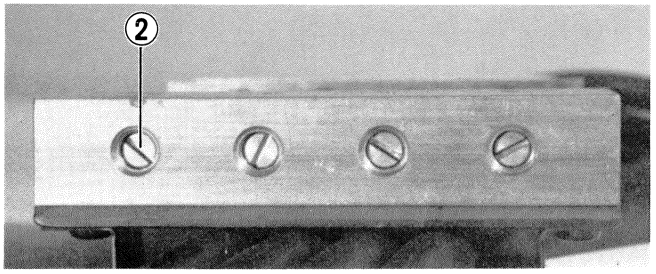

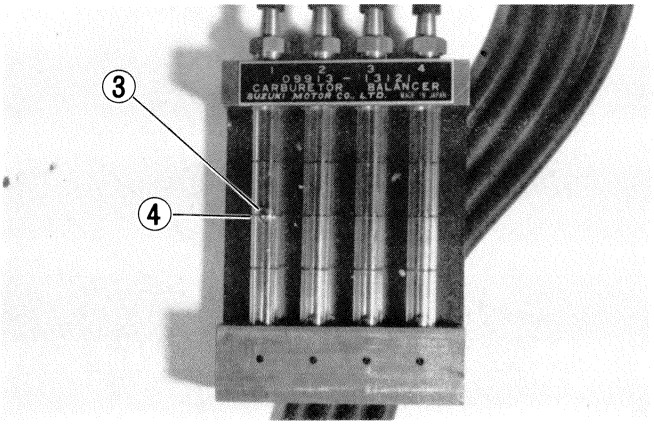

- After making sure that the steel ball stays steady at the center line, disconnect the hose from the adapter and connect the next hose to the adapter. Turn air screw to bring the other steel ball ⑤ to the center line.
- Repeat the process on the third and fourth tubes. The balancer gauge is now ready for use in balancing the carburetors.

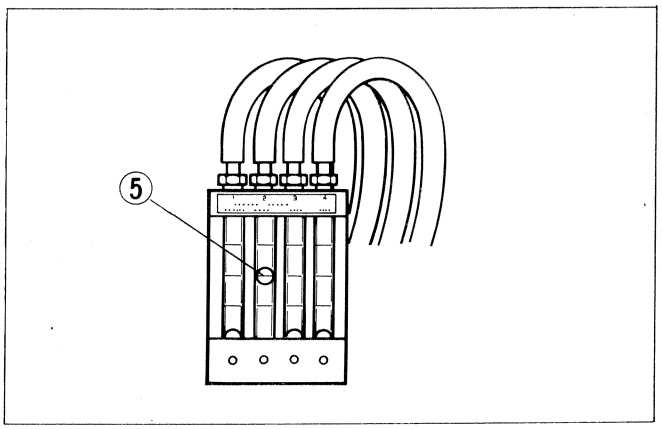

Remove the respective vacuum inlet screws and insert the adapters in the holes. Connect the balancer gauge hoses to these adapters, and balance the four carburetors as follows:

- Start up the engine, and keep it running at 1 750 r/min.
- A correctly adjusted carburetor has the steel balls in the Nos. 1 and 4 tubes at the same level, and those in the Nos. 2 and 3 tubes also at the same level, but lower by one half of the ball diameter than the Nos. 1 and 4 tubes as shown.

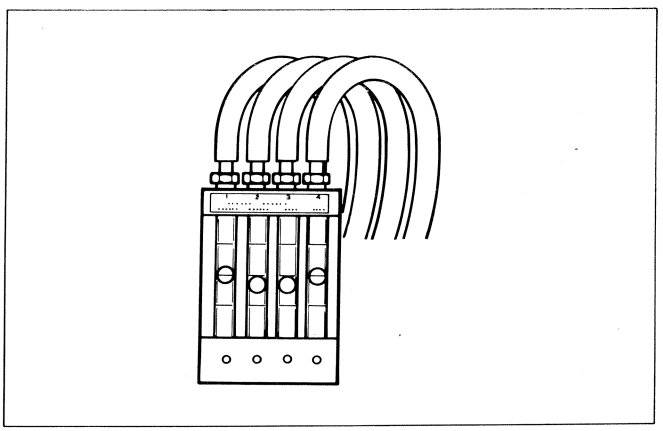

- If the steel balls are not in correct positions, remove the bracket ① and adjust the throttle valve adjusting screw correctly by using throttle valve adjust wrench.

09913-14911	Throttle valve adjust wrench

Adjusting order:

Ⓐ (for No. 2 Carb) ⟶ Ⓑ (for No. 1) ⟶ Ⓒ (for No. 4)

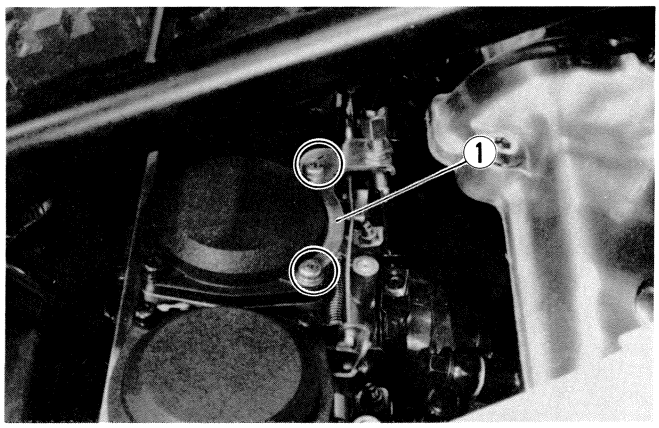

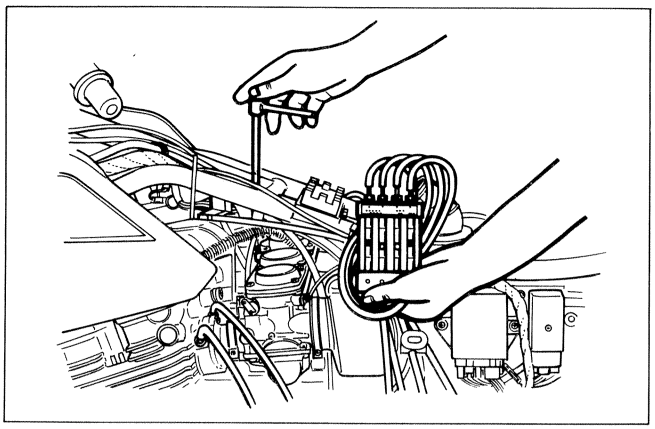

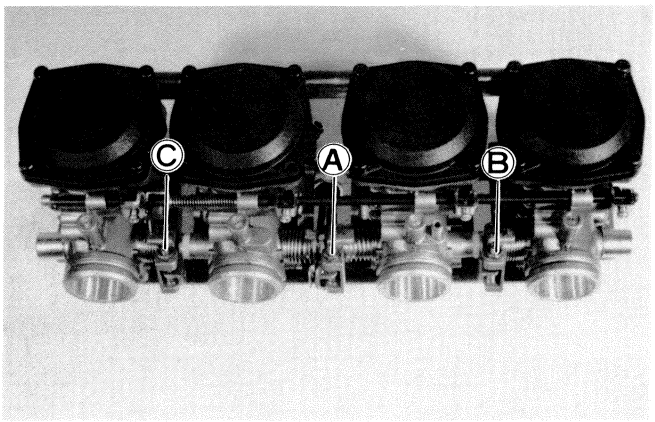

NOTE:
- **If an adjustment is required, it is suggested that the fuel tank is removed, and fuel should be supplied by a separate fuel tank.**
- **Be sure to plug the fuel cock vacuum line.**
- **Each vacuum inlet screw has a gasket. Be careful not to leave out this gasket ② .**

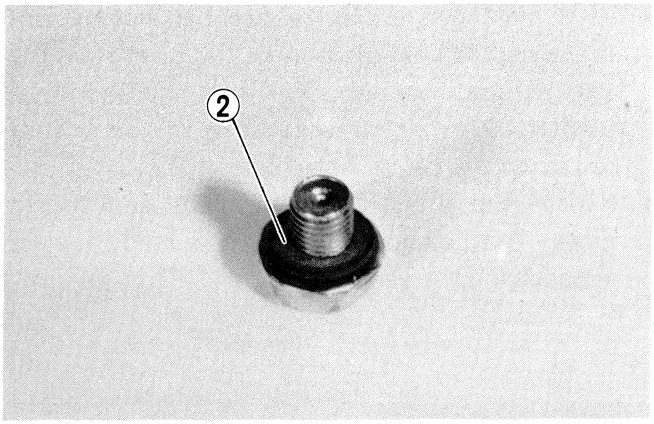

- After balancing carburetors, set its speed at anywhere between 1 100 and 1 200 r/min by turning throttle stop screw ③ .

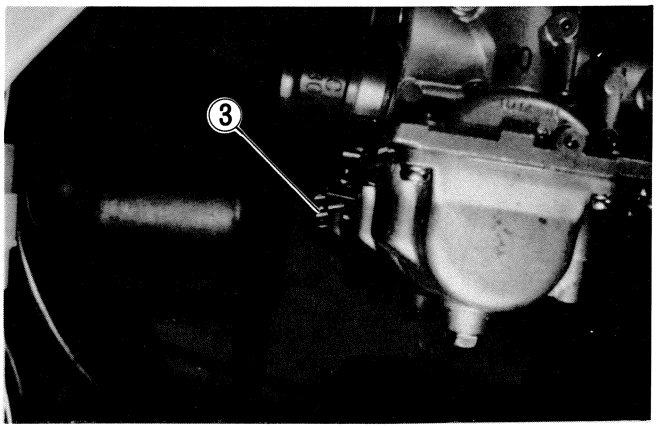

REMOVAL

- Remove the frame covers and seat.
- Take off the fuel tank.

> **NOTE:**
> **When taking off fuel tank, disconnect fuel hose and vacuum hose and turn the fuel cock lever to "ON" or "RES" position.**

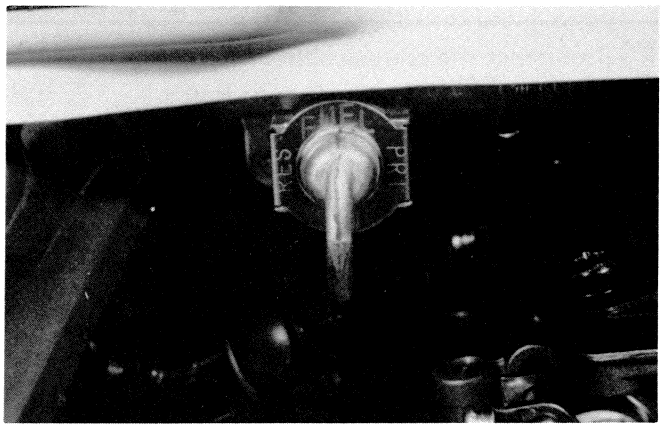

- Remove the tool holder.
- Remove the battery.

> **NOTE:**
> **First, remove the ⊖ lead wire.**

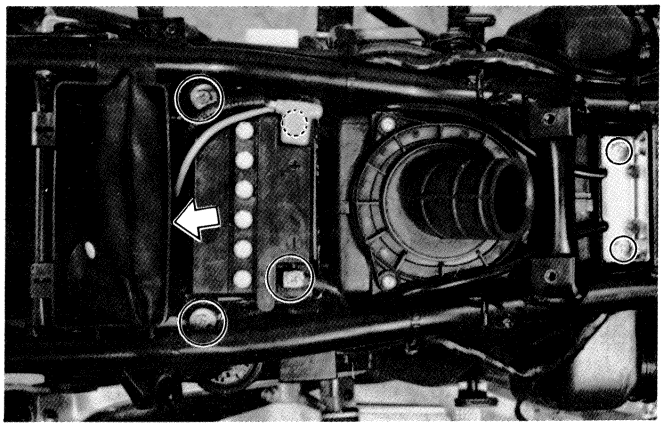

- Remove the battery holder securing bolts.
- Remove the air cleaner assembly securing bolts and screw.

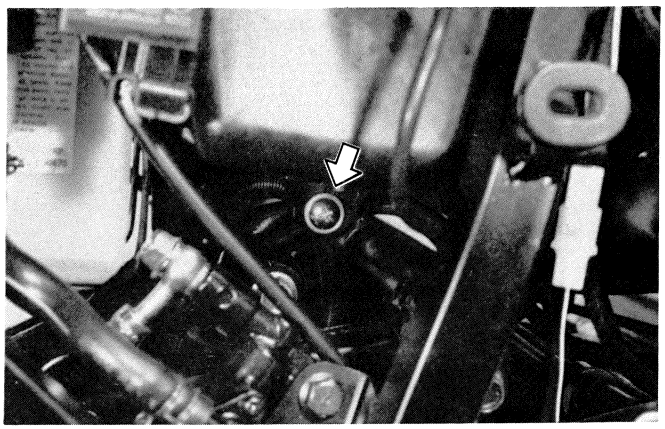

- Disconnect the breather hose from air cleaner.

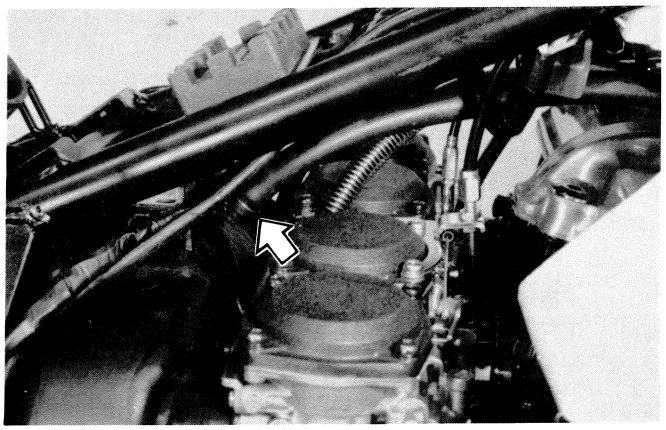

- Remove the throttle cable from bracket.
- Disconnect the choke cable from carburetor.
- Remove the bracket from carburetor.

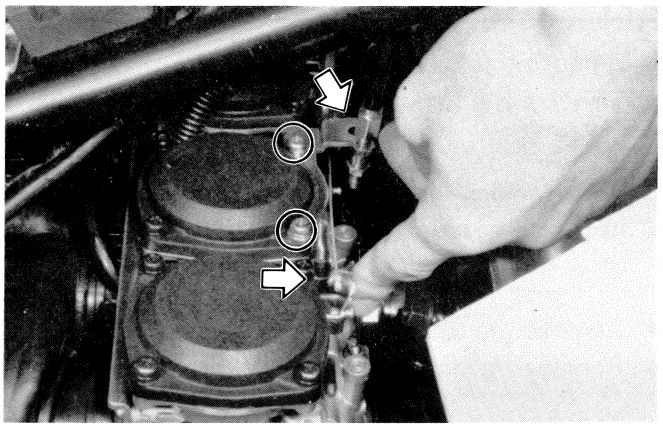

- Loosen respective clamps for carburetor insulator and chamber body.
- Move the air cleaner and battery holder a little rearward, and remove the carburetors.

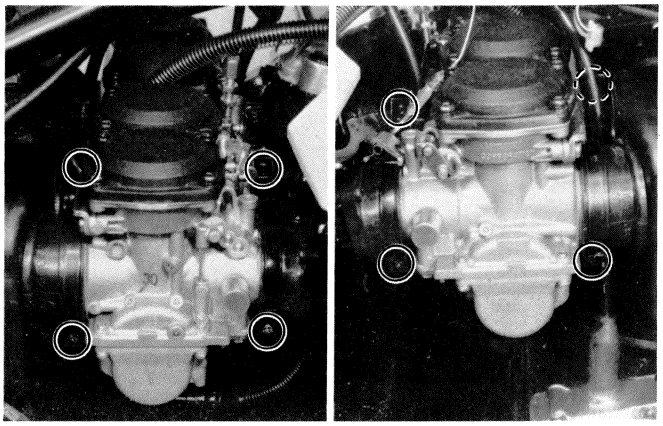

- Disconnect the throttle cable from carburetor.

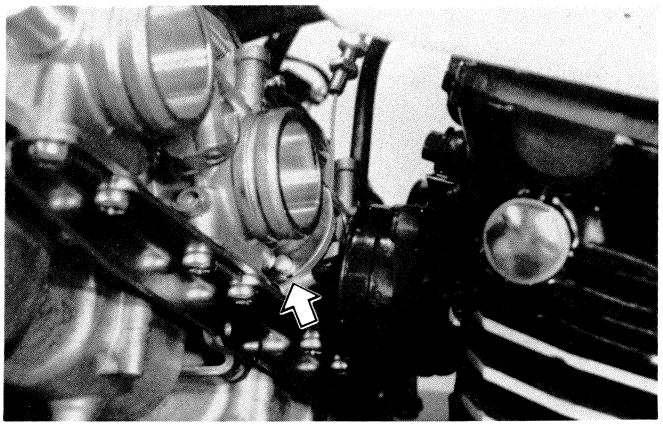

DISASSEMBLY

- Loosen 4 tightening screws ① of the starter shaft and pull out the starter shaft to the right.
- Remove carburetor set lower plate ② by unscrewing 8 screws.

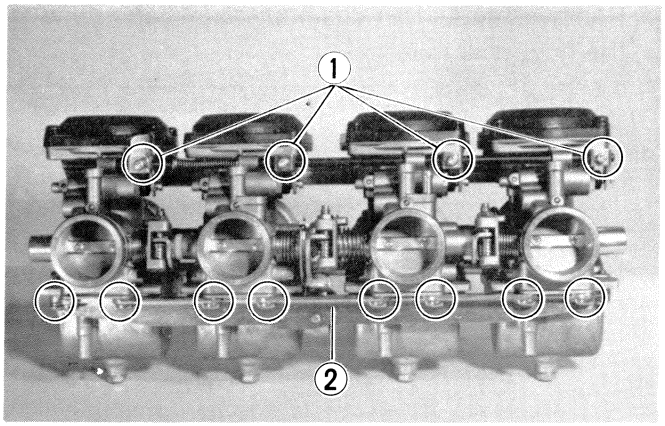

- Remove the carburetor set upper plate ③ by unscrewing 8 screws.

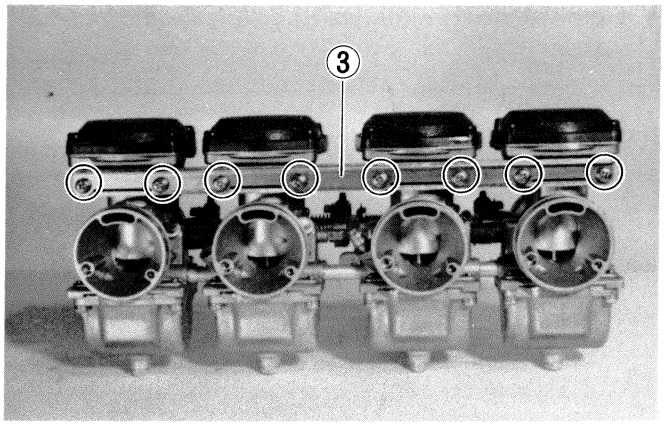

- Flatten the lock washer.
- Take off the adjuster lever by removing nut ④ .

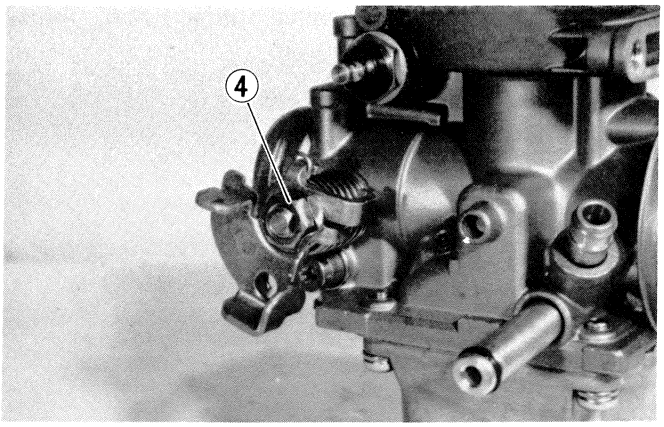

- Remove two throttle valve screws ⑤ , and pull out the valve by turning throttle valve shaft.

> **CAUTION:**
> **This two screws are locked by punching its end. Once remove the screws, they will be damaged.**

- Remove the throttle valve shaft.

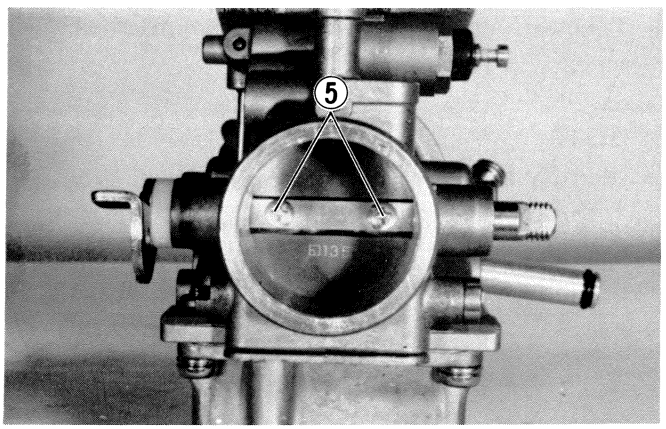

- Remove the 4 float chamber screws and remove the float chamber.

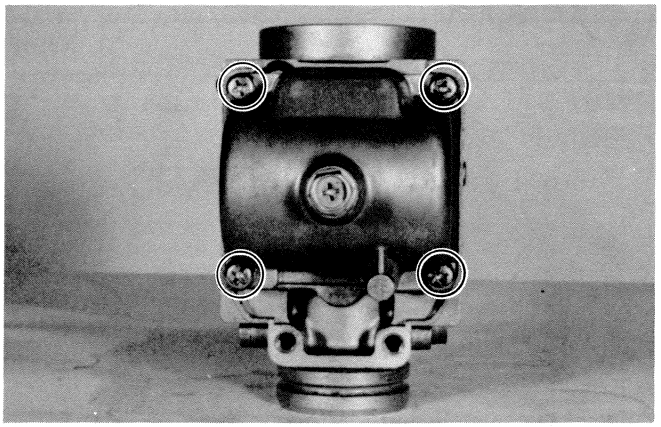

- Remove float, main jet ①, plug ② and pilot jet ③.

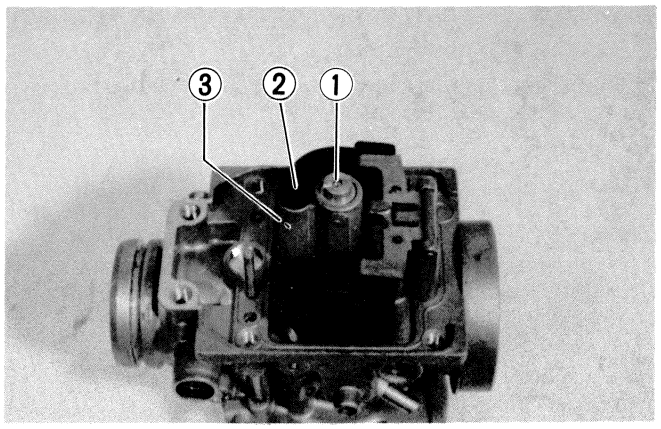

- Unscrewing the needle valve holder screw.
- Remove the needle valve ④.

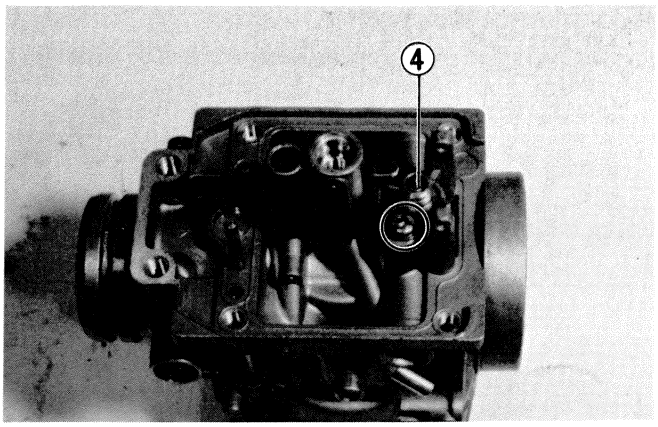

- Take off carburetor top cap by unscrewing 4 screws.

NOTE:
Identify the four piston valves removed as No. 1 through No. 4 in order to make sure each will be restored to the carburetor from which it was taken out.

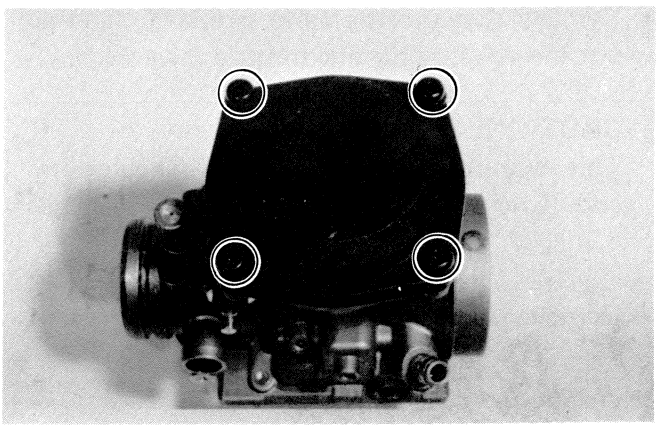

- Remove circlip ① from piston.

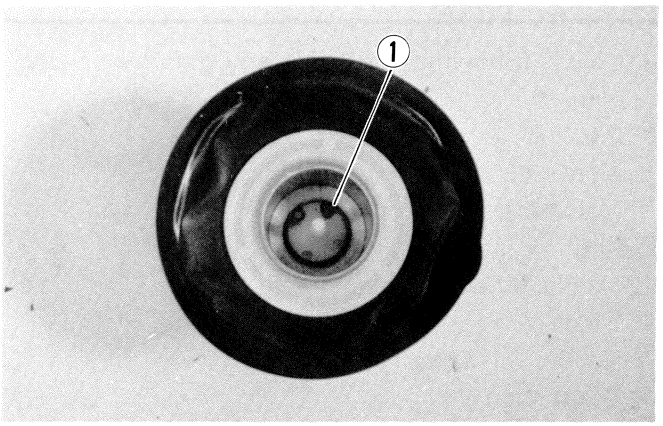

- Remove needle jet ② from the top side.

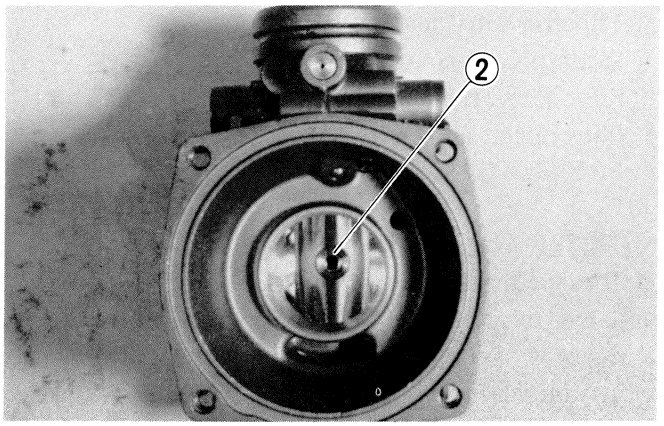

- Remove starter valve housing.

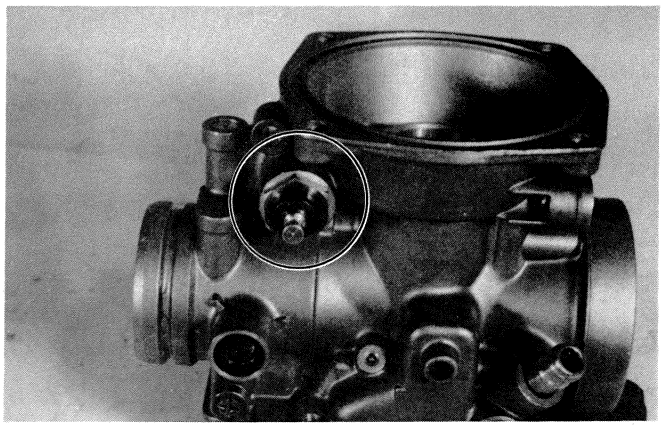

INSPECTION

- Check following items for any damage or clogging.

* Pilot jet
* Main jet
* Main air jet
* Pilot air jet
* Needle jet air bleeding holes
* Float
* Needle valve mesh and O-ring
* Diaphragm
* Gasket and O-ring
* Throttle valve shaft oil seals
* Drain plug O-ring
* Pilot screw bleeding hole and rubber cap
* Pilot outlet and bypass holes
* Fuel pipe O-rings

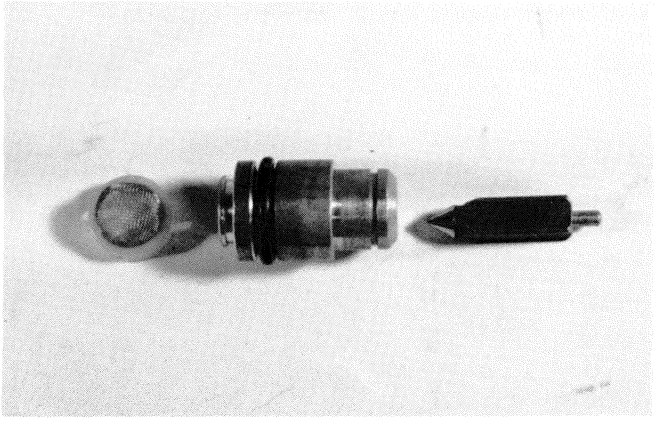

NEEDLE VALVE

If foreign matter is caught between the valve seat and the needle, the gasoline will continue to flow and result in overflowing. If the seat and needle are worn out beyond the permissible limits, similar trouble will occur. Conversely, if the needle sticks, the gasoline will not flow into the float chamber. Remove the carburetor, float chamber and floats, and clean the float chamber and float parts with gasoline. If the needle is worn as shown below, replace it together with a valve seat. Clean the fuel passage of the mixing chamber with compressed air.

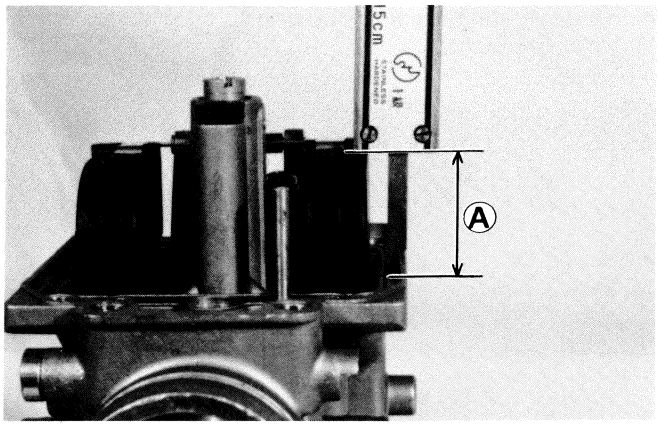

FLOAT HEIGHT ADJUSTMENT

To check the float height, invert the carburetor body, with the float arm kept free, measure the height Ⓐ while float arm is just in contact with needle valve by using calipers. Bend the tongue ① as necessary to bring the height Ⓐ to this value.

> **NOTE:**
> **Be sure to remove the gasket before measuring the height.**

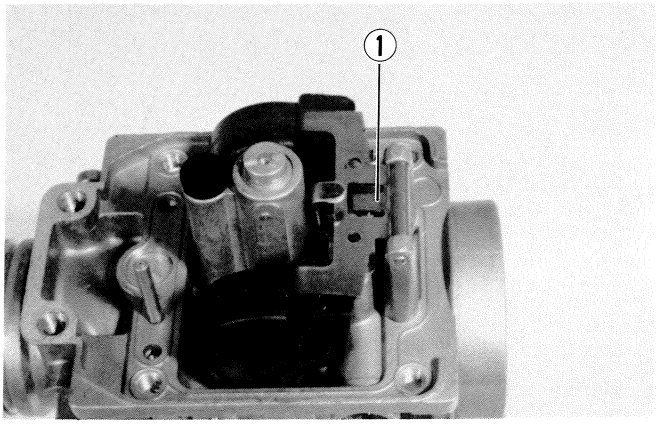

REASSEMBLY

- Align the groove ① of the needle jet with the pin ② and replace it and install the main jet, washer, pilot jet and plug.

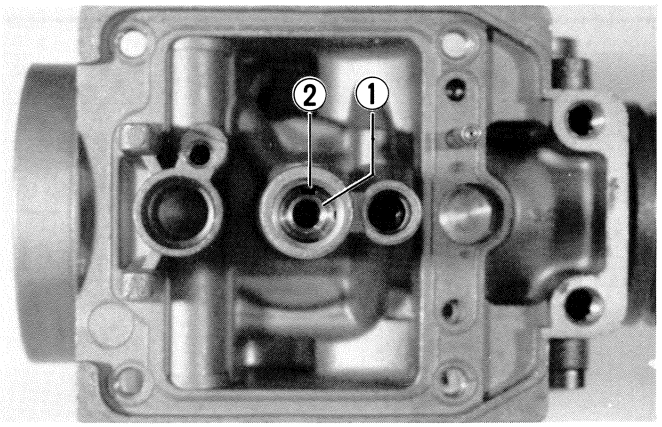

- Place tongue ③ of diaphragm to carburetor body properly.

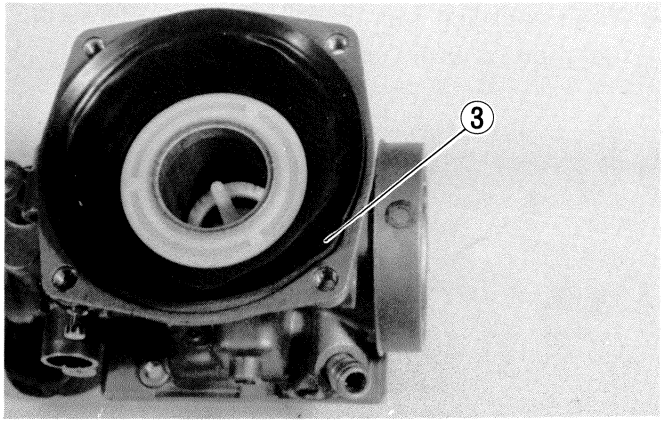

- When fitting throttle valve shaft oil seals, groove should be faced outside ④ .

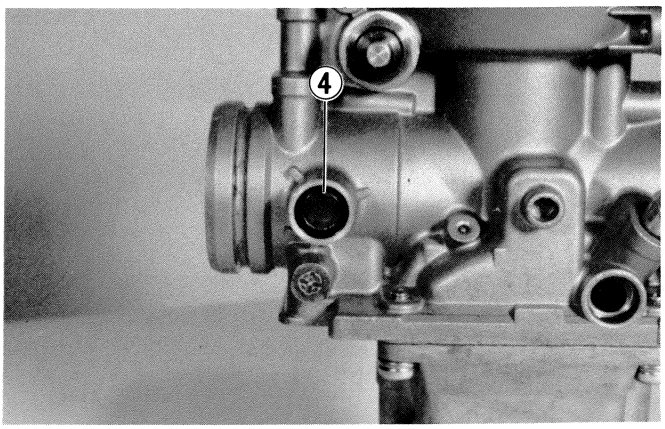

- Hook one end of spring to the boss ⑤ , turn the other end ⑥ clockwise by 1/2 turn, and hook it to the cable guide properly.
- Tighten lock nut and bend up lock washer.

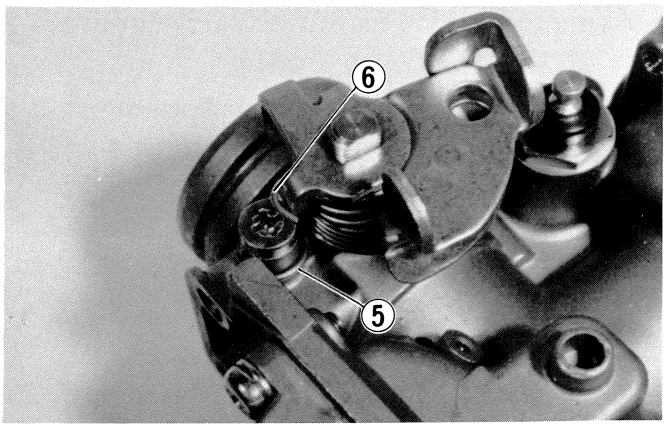

- Apply thread lock cement to two screws for securing throttle valve.

99000-32040	Thread Lock cement

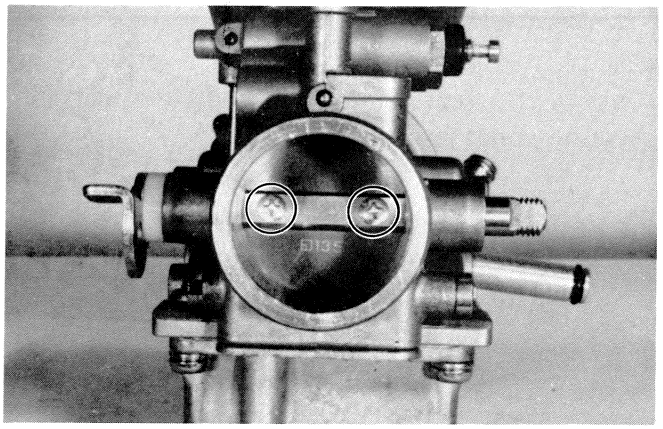

- When engaging four carburetors, be sure to fix fuel pipe ① with O-rings ② .

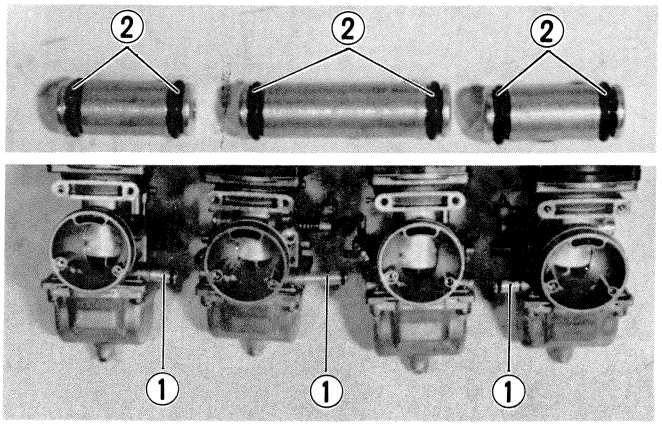

- Position throttle valve control lever correctly.

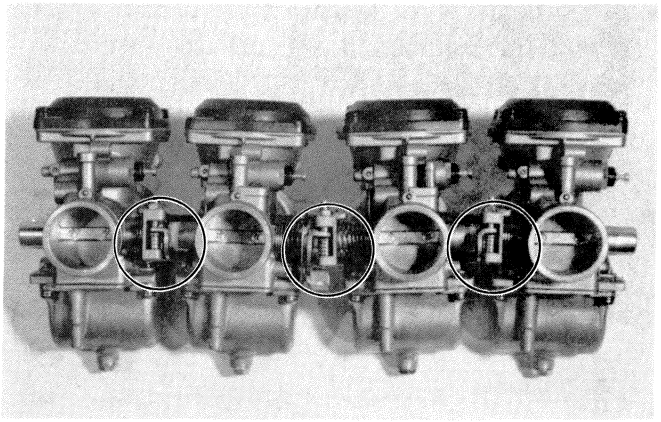

- Apply thread lock cement to lower plate screws.

99000-32040	Thread lock cement

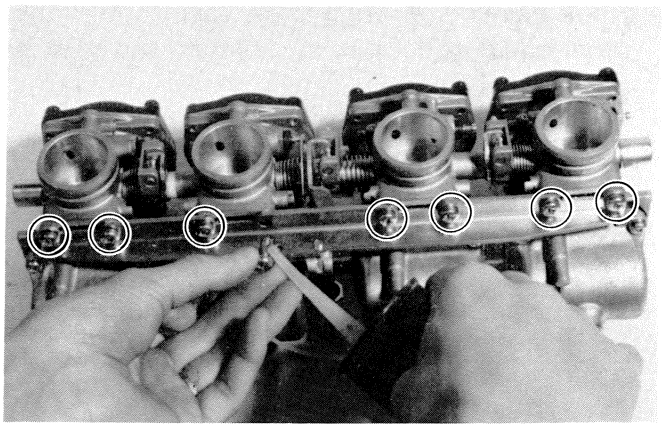

- Apply thread lock cement to the upper plate screws.

99000-32040	Thread Lock cement

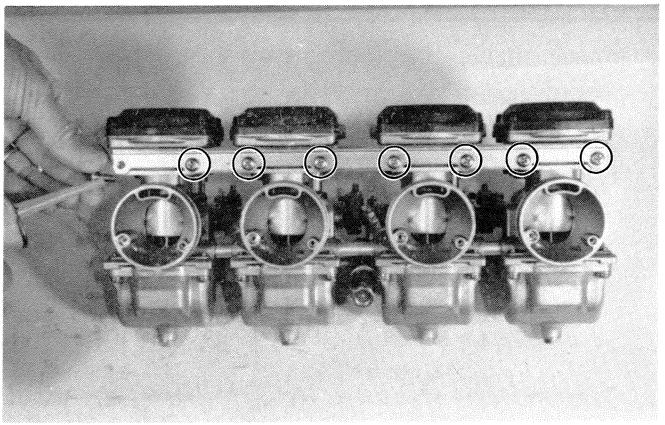

- When mounting starter shaft, align starter valve screw ① with dent mark ② on starter shaft and grease sliding portions, and align starter valve boss with the starter cable guide slit.

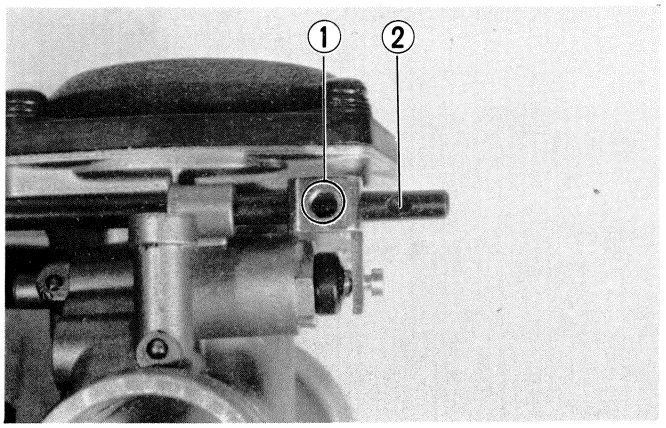

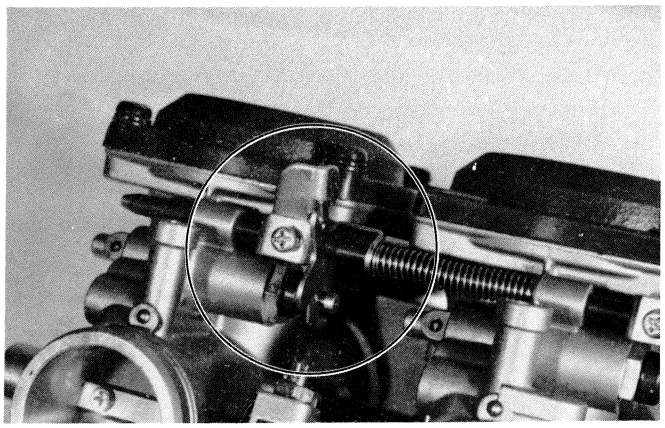

- Apply thread lock cement to starter shaft securing screws.

99000-32040	Thread lock cement

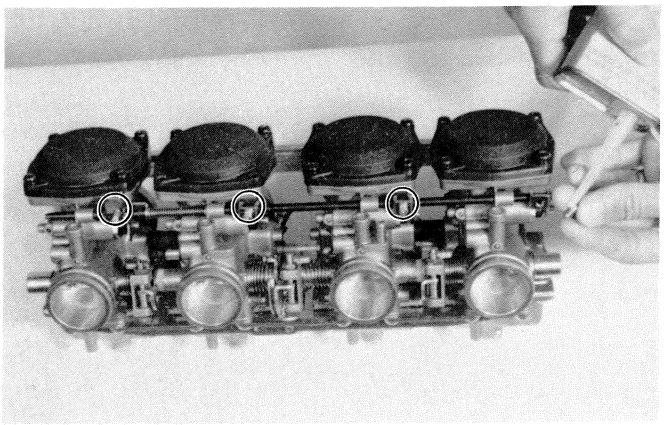

- Set each throttle valve in such a way that its top end ① meets the foremost bypass ② . This is accomplished by turning throttle valve stop screw ③ and balance screws Ⓐ , Ⓑ , Ⓒ .

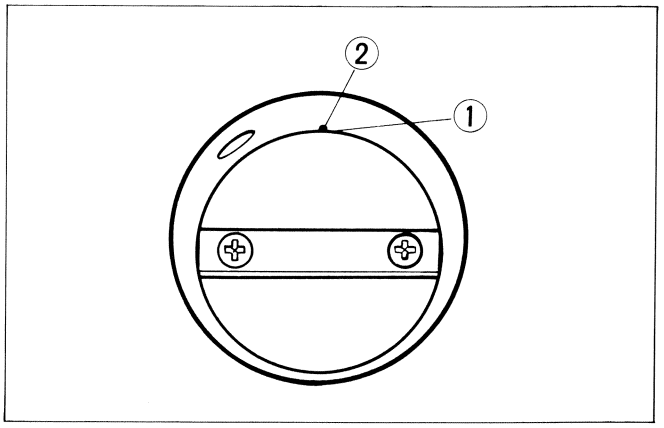

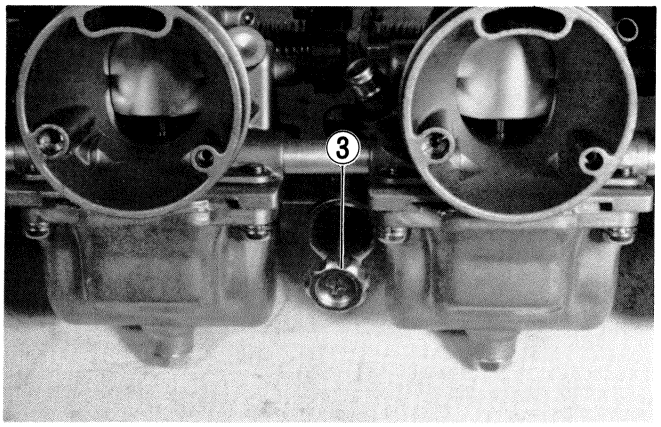

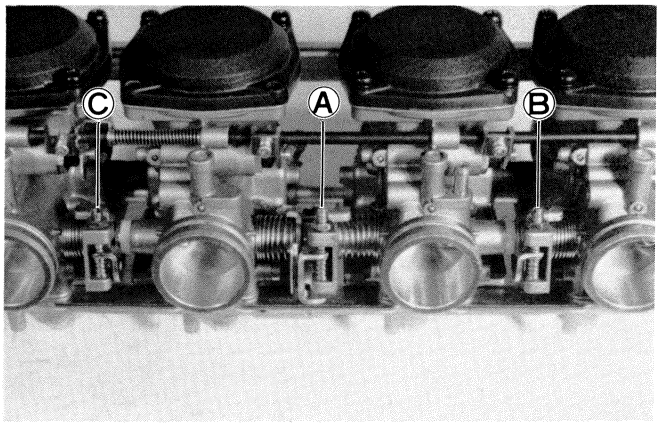

NOTE:
When adjusting the throttle balance screws, adjusting order is as follows:
Ⓐ (for No. 2 Carb.) ⟶ Ⓑ (for No. 1) ⟶ Ⓒ (for No. 4)

After each job is completed, mount the carburetor on the engine, and the following adjustments are necessary.

Page
* Engine idle rpm . . . . . 2 – 7
* Throttle cable play . . . . . 2 – 7
* Balancing carburetor . . . . . 4 – 9

LUBRICATION SYSTEM

OIL PRESSURE

Start the engine and check if the oil pump pressure indicator light is turned on. If it keeps on lighting, check the oil pump pressure indicator light circuit. If it is in good condition, check the oil pump pressure in the following manner:

- Install the oil pressure gauge ① in the position shown in the figure.
- Warm up the engine as follows:
  Summer 10 min. or so at 2 000 r/min
  Winter 20 min. or so at 2 000 r/min
- After warming up operation, increase the engine speed to 3 000 r/min, and read the oil pressure gauge.

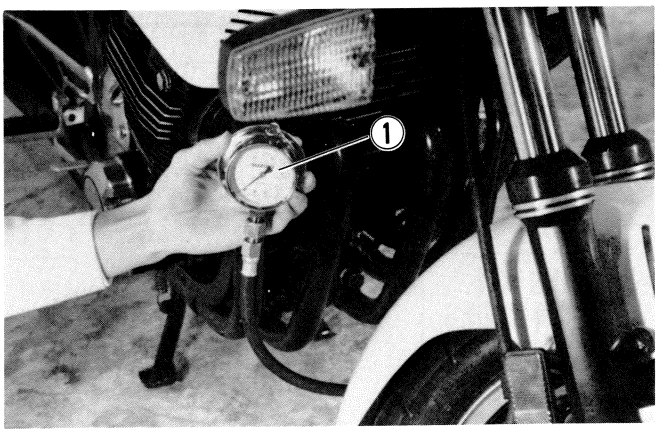

09915-74510	Oil pressure gauge

OIL PUMP PRESSURE SPECIFICATION

Above 2.5 kg/cm^2 (36 psi) Below 5.5 kg/cm^2 (78 psi) at 3 000 r/min

If the pressure is too low, it means that the oil pump is internally worn or otherwise defective and needs to be replace with new one.

ENGINE LUBRICATION SYSTEM

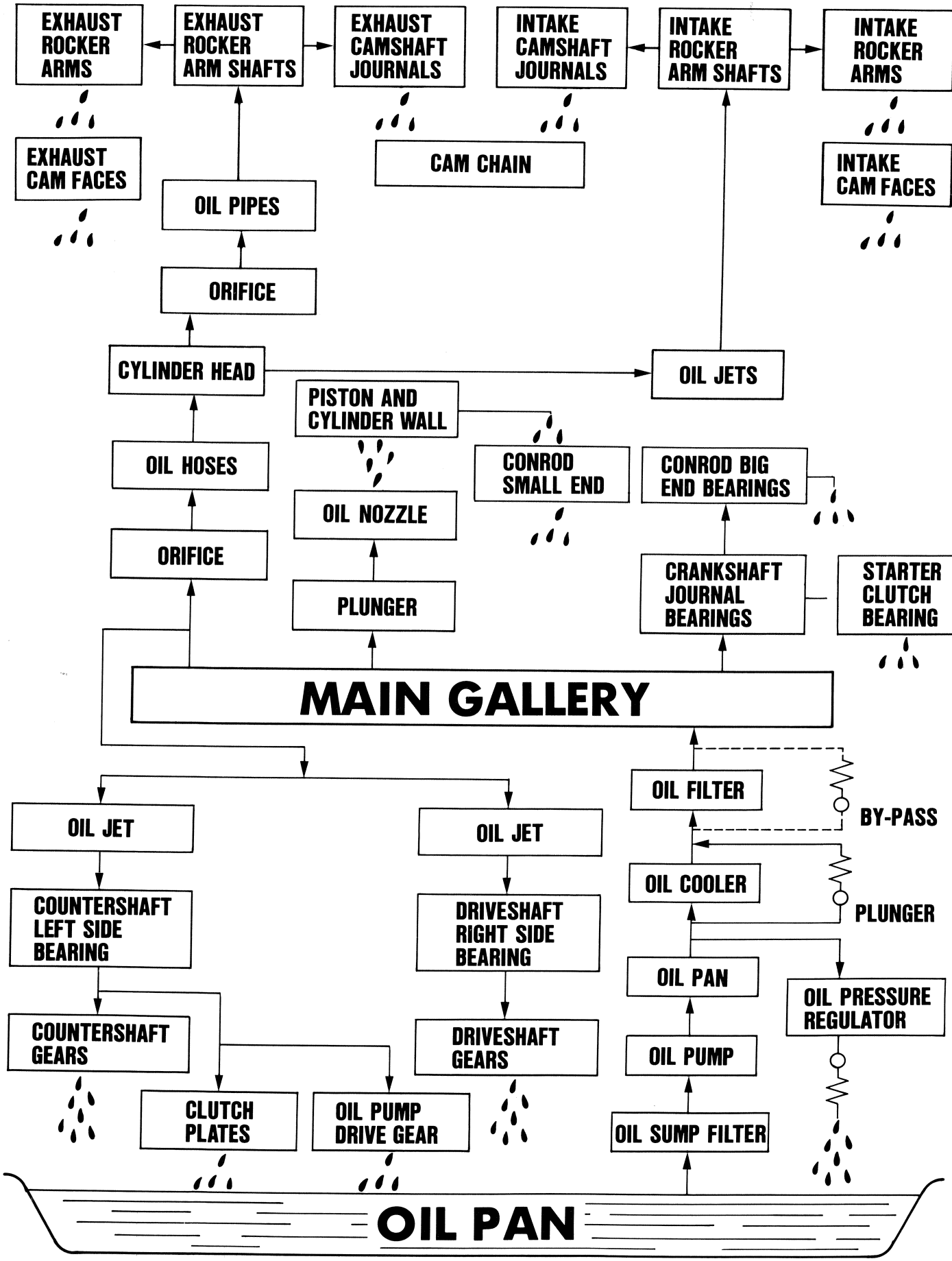

OIL JET

- On the side surface of the crankcase journal, an oil jet is mounted to aid in piston cooling. An engine oil pressure check valve is provided in the passage from the main gallery to stop flowing low-pressurized engine oil to the jet. When engine oil pressure exceeds the operating pressure of the valve (1.6 kg/cm^2), the valve opens to allow oil to spray from the oil jet and thus cooling pistons and lubricating cylinder walls.
- In order to control heating up of the cylinder head by the combustion chamber and exhaust ports which are heated by the exhaust gas, oil passages are provided at the exhaust side of the cylinder head, and oil is driven into these passages to cool the cylinder head.

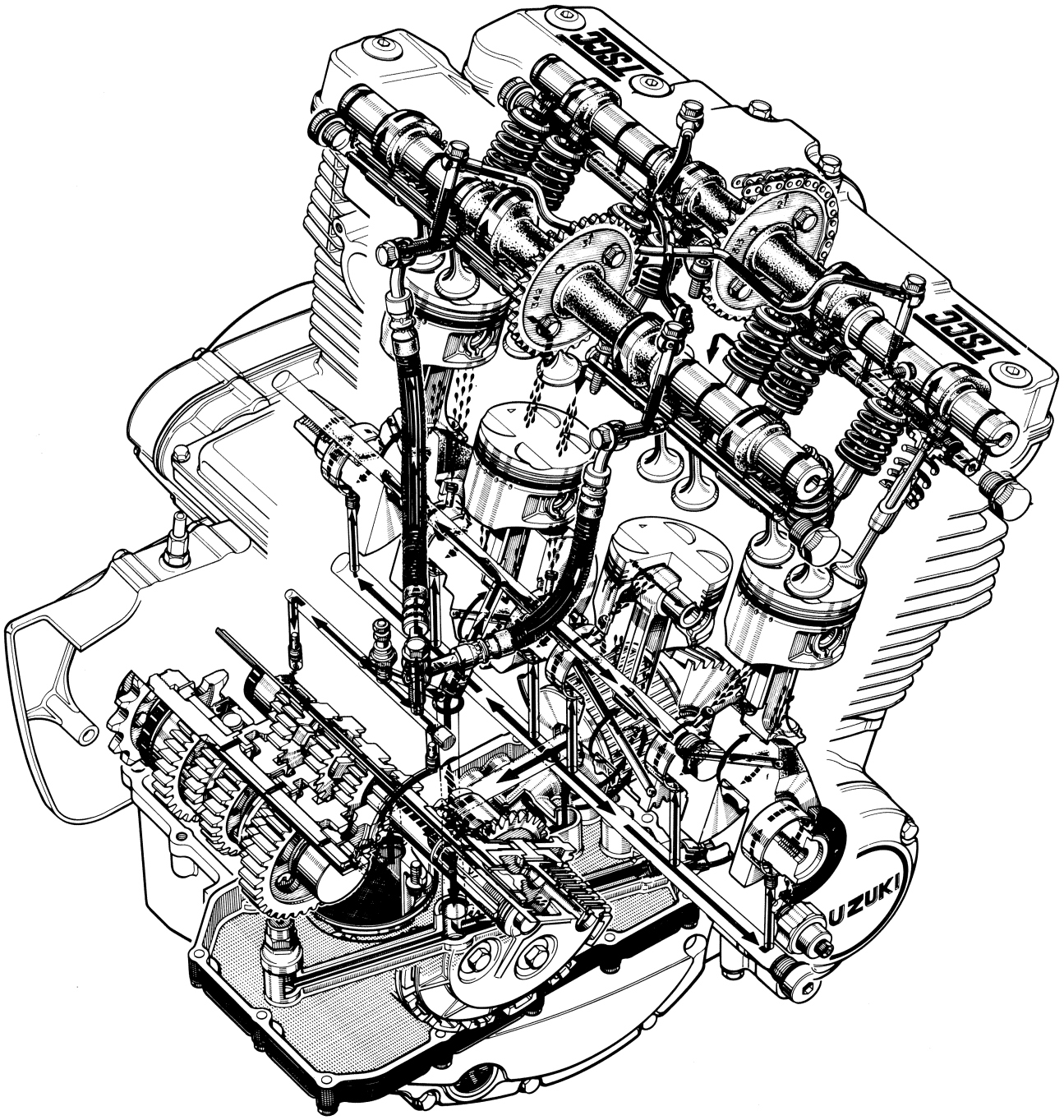

OIL COOLER

- Oil Pressure Regulator: Oil pressure regulator is threaded into the oil passage in the oil pan. There is an O-ring used to seal the oil passage from the crankcase to the oil pan.
- Plunger: A plunger is mounted in the oil pan, in a parallel circuit with the oil cooler; when the relative oil pressure between the entrance and exit to the oil cooler exceeds 1 kg/cm^2, the plunger operates.
  Low Engine Oil Temperature
  When engine oil temperature is low, oil viscosity is high, and there is a great loss of pressure inside the oil cooler. When the relative pressure of the entrance and exit is greater than 1 kg/cm^2, the plunger operates, bringing oil directly from the oil pump to the oil filter.
  High Engine Oil Temperature
  When engine oil temperature is high, oil viscosity is low, and the relative pressure drops below 1 kg/cm^2. In this case, the plunger does not operate; this allows the oil to be cooled by flowing through the oil cooler before passing on to the oil filter.
- Oil Cooler: An oil cooler is use to maintain engine oil temperature within the optimum range by compensating for the heat produced by the engine.

TIGHTENING TORQUE

ITEM	kg-m	lb-ft
①	1.5 – 1.8	11.0 – 13.0
②	2.5 – 3.0	18.0 – 21.5
③	2.5 – 3.0	18.0 – 21.5
④	3.3 – 4.0	24.0 – 29.0

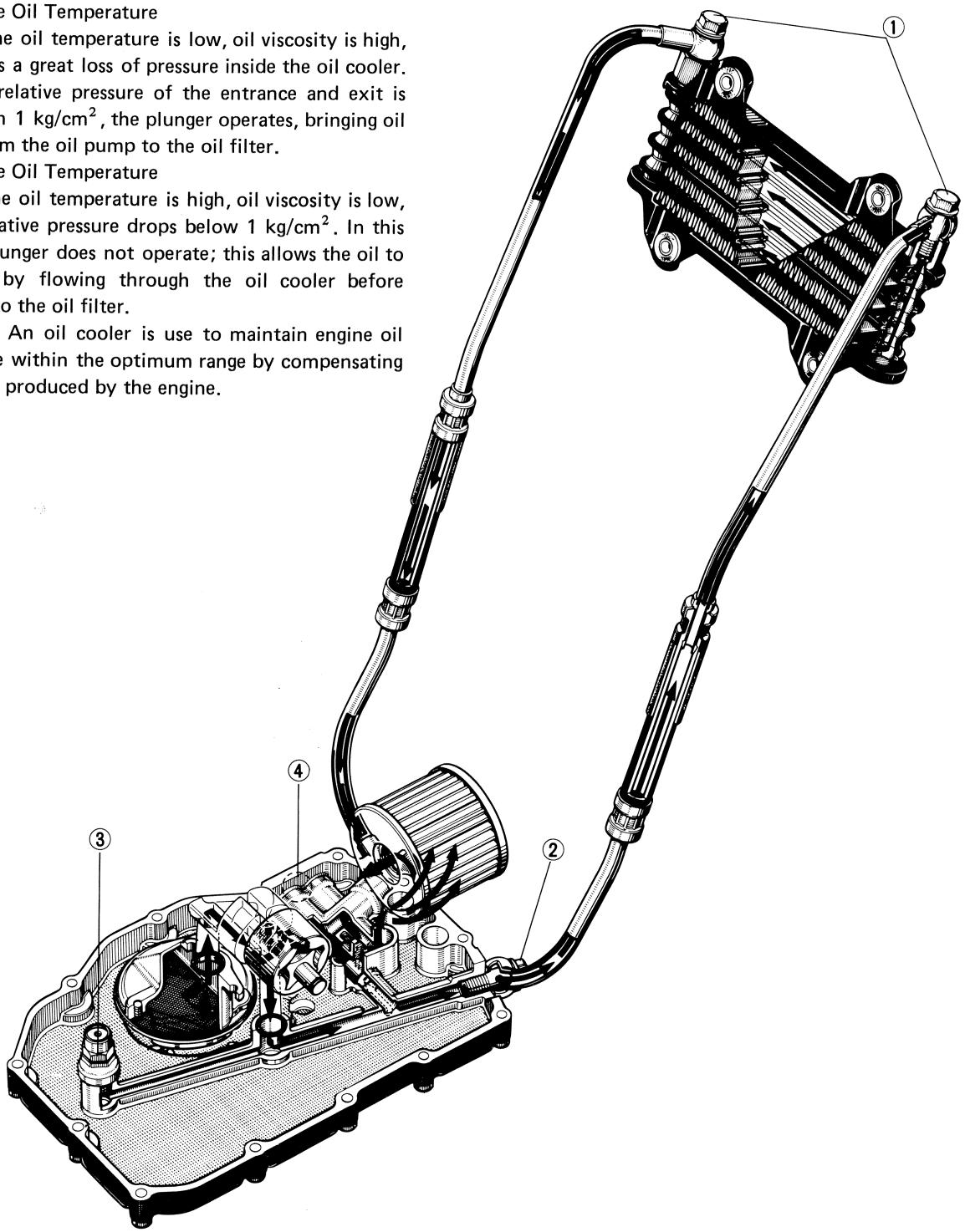

EMISSION CONTROL & REGULATIONS

CONTENTS

EMISSION REGULATIONS 5-1
EMISSION CONTROL CARBURETOR COMPONENTS 5-2
GENERAL EMISSION INFORMATION 5-3

EMISSION REGULATIONS

On February 4, 1977, Federal Emission Regulations for motorcycles that may be licensable took effect. The regulations provided for a gradual, multi-step application of stricter emission limits beginning with all effected motorcycles manufactured after January 1, 1978, culminating with the present 1980 emission level restrictions. For the 1980 and succeeding years one set of emission limits will be in effect. They are as follows:

1980 EMISSION LIMITS

CATEGORIES	HYDROCARBONS (HC)	CARBON MONOXIDE
All motorcycles 50 cc – Larger	5.0 Grams/Kilometer (8.0 Grams/Mile)	12 Grans/Kilometer (19.3 Grams/Mile)

Emission-controlled motorcycles which are subject to the emission regulations are those motorcycles which are equipped with a headlight, taillight, stop light and which have an engine displacement larger than 50 cc.

Suzuki Motor Company performed all the necessary testing and certification of emission-controlled models in strict compliance with the E.P.A. testing regulations. Suzuki motorcycle dealers are not to either test or certify emission levels on any motorcycles as Suzuki Motor Company is legally responsible for the entire certification procedure.

E.P.A. regulations also provide fines for individuals who alter, render inoperative or improperly service emission-controlled motorcycles ranging up to $10,000.00 per motorcycle. It is essential that the individual servicing this emission-controlled motorcycle review thoroughly all the service procedures presented in this manual. Under no circumstances should the recommended service procedures be deviated from nor adjustments made which are not in accordance with the factory specifications or service procedures.

EMISSION CONTROL CARBURETOR COMPONENTS

GS750 motorcycles are equipped with precision, manufactured carburetors for emission level control. These carburetors require special mixture control components and other precision adjustments to function properly.

There are several carburetor mixture control components in each carburetor assembly. Three (3) of these components are machined to much closer tolerances than standard machined carburetor jets. These three (3) particular jets – MAIN JET, NEEDLE JET, PILOT JET – must not be replaced by standard jets. To aid in identifying these three (3) jets a different design of letter and number are used. If replacement of these close tolerance jets becomes necessary, be sure to replace them with the same type close tolerance jets marked as in the examples shown below.

The jet needle is also of special manufacture. Only one clip position is provided on the jet needle. If replacement becomes necessary the jet needle may only be replaced with an equivalent performing replacement component. Suzuki recommends that Genuine Suzuki Parts be utilized whenever possible for the best possible performance and durability.

Conventional Figures Used on Standard Tolerance Jet Components	1 2 3 4 5 6 7 8 9 0
Emission Type Figures Used On Close Tolerance Jet Components	1 2 3 4 5 6 7 8 9 0

The carburetor specification for the emission-controlled GS750 are as follows.

Carburetor I.D. No.	Main Jet	Needle Jet	Jet Needle	Pilot Jet	Pilot Screw
31300	# 117.5	Y-6	5D12	# 37.5	PRE-SET DO NOT ADJUST

The pilot screw is pre-set by the factory utilizing specialized testing and adjusting procedures. The pilot screw is not adjustable as the idle circuit is "sealed" after factory adjustment. Adjusting, interferring with, improper replacement, or resetting of any of the carburetor components may adversely affect carburetor performance and cause the motorcycle to exceed the exhaust emission level limits. If persons, who are unaware of these special carburetor servicing requirements tamper with the carburetors the Suzuki dealer should restore the carburetors to their original condition or if unable to effect repairs, contact the distributors representative for further technical information and assistance.

GENERAL EMISSION INFORMATION

There are three different types of regulated exhaust emissions. They are:

Hydrocarbons (HC)
Carbon Monoxide (CO)
Oxides of Nitrogen (NOx)

Automobiles must meet specific emission standards for all three of these pollutants. Motorcycles must only meet the requirements for the following:

Hydrocarbons (HC)
Carbon Monoxide (CO)

HC exhaust emissions are basically unburned fuel vapors which have passed through the engine and escaped the combustion process.

CO exhaust emissions are formed during an incomplete combustion cycle as a result of a rich air/fuel mixture. The only way that CO can be produced is by the combustion cycle.

Total NOx emissions from all motorcycles is considered negligible. The EPA states that total NOx emission from motorcycles by 1990 will only amount to approximately 0.5%. NOs is formed during the combustion process at high combustion chamber temperatures.

CARBON MONOXIDE

Carbon monoxide is a product of an incomplete combustion cycle. CO is measured in grams per mile or kilometer and also in percentage (%).

The most common cause of CO is rich carburetion. As the mixture is richened excessively, the CO amount increases proportionately. Engine oil is also a hydrocarbon, so engine problems which lead to oil burning increase carbon monoxide.

CARBURETION MALFUNCTION

1. Air Cleaner — Dirty or over oiled.
2. Idle Mixture — Adjusted incorrectly.
3. Idle Speed — Too high or low.
4. Fuel Level — Sticking float, leaking needle, incorrect setting.
5. Choke — Leaking or linkage sticking.
6. Synchronization — Improper balance on multi cylinders.

ENGINE MALFUNCTION

1. Valve Seals — Leaking or torn.
2. Valve Guide — Worn and leaking excess oil.
3. Gaskets — Leaking oil into combustion chamber.

HYDROCARBONS

Hydrocarbons are unburnt gasoline vapors and can be measured in two different ways. The first is to measure the weight of the pollutants over a specific distance such as grams per mile or grams per kilometer. The second method is to measure the concentration of HC in the exhaust gas in parts per million (PPM).

The most common cause of high HC emissions are ignition system problems. If the ignition system fails to ignite the fuel mixture properly, then raw gasoline vapors will pass through the engine into the exhaust system. Listed are the most common ignition problems which occur and which can affect HC emission output.

IGNITION SYSTEM MALFUNCTIONS

1. Spark Plugs — Fouled, dirty, improper type or improperly gapped.
2. Ignition Timing — Advanced or Retarded.
3. Timing Advance — Too fast or too slow an advance rate.
4. Battery — Low charge or faulty.

Carburetion can also lead to high HC emissions if the mixture is either excessively rich or excessively lean.

MIXTURE-RELATED MALFUNCTIONS

1. Air Cleaner — Dirty, over oiled or torn.
2. Jets — Clogged, restricted or incorrect size.
3. Float Level — Level too low (lean) or too high (rich).
4. Choke — Leaking choke plunger or sticking linkage.
5. Air Leaks — Intake manifolds, engine gaskets and other sealing surfaces.
6. Synchronization — Unbalanced on multi-cylinder machines.
7. Exhaust System — Restricted flow or improper exhaust system.

Engine wear or damage can also cause high HC emissions.

1. Rings — Low compression, leakage into crankcase.
2. Valves — Improper adjustment, bent stem or burnt.
3. Gaskets — Leaking, loss of compression.
4. Crank Seals — Leaking.
5. Oil Consumption — Worn valve guides, worn rings, clogged crankcase breather.
6. Oil — Improper engine oil.

ELECTRICAL SYSTEM

CONTENTS

CHARGING SYSTEM 6- 1
IGNITION SYSTEM 6- 5
BATTERY 6- 8
STARTER SYSTEM 6-11
COMBINATION METER AND GAUGES 6-15
LAMPS 6-20
SWITCHES 6-22

CHARGING SYSTEM

DISCRIPTION

The circuit of the charging system is indicated in figure, which is composed of an AC generator, regulator/rectifier unit and battery.

The AC current generated from AC generator is converted by rectifier and is turned into DC current, then it charges the battery.

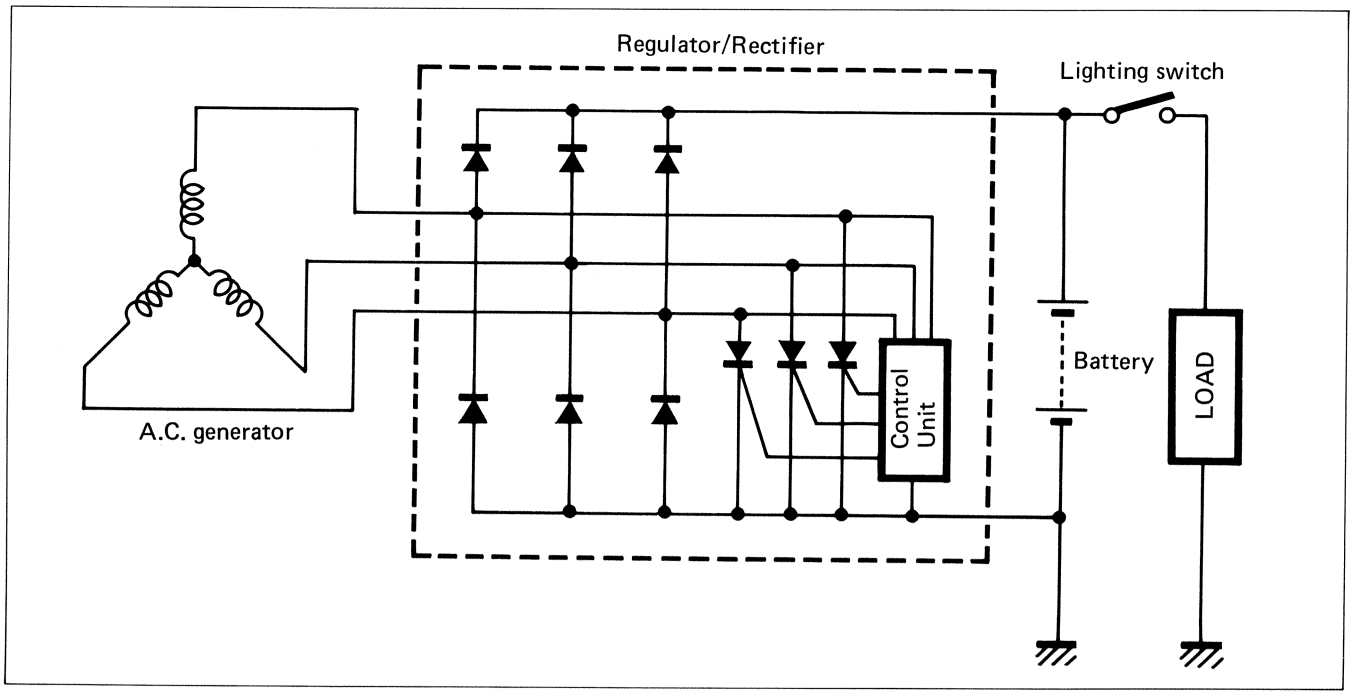

FUNCTION OF REGULATOR

While the engine r/min is low and the generated voltage of AC generator is lower than the adjusted voltage of regulator, the regulator does not function.

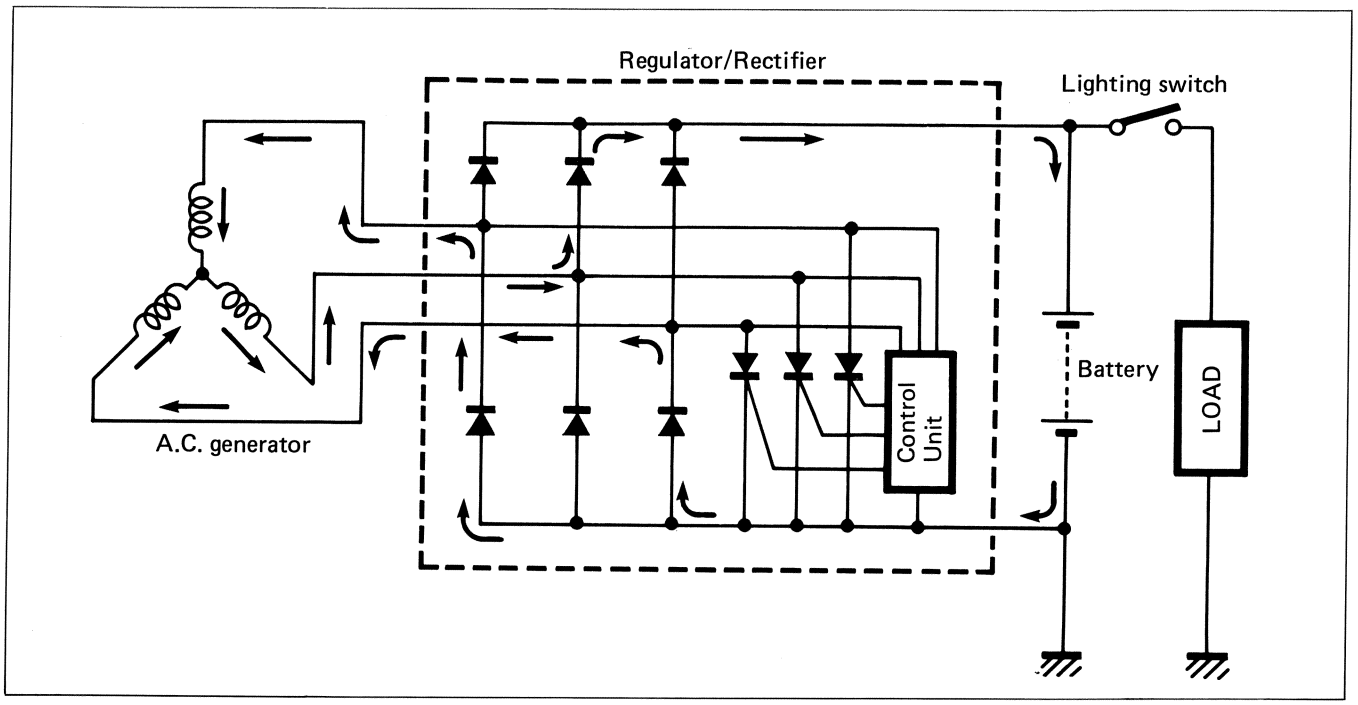

When the engine r/min becomes higher, the generated voltage of AC generator also becomes higher and the voltage between points Ⓐ and Ⓑ of regulator becomes high according, and when it reaches the adjusted voltage of control unit, control unit becomes "ON" condition consequently. On the "ON" condition of control unit, signal will be seat to the SCR (Thyristor) gate probe and SCR will become "ON" condition. Then the SCR becomes conductive to the direction from point Ⓐ to point Ⓒ . Namely at the state of this, the current generated from the AC generator gets through SCR without charging the battery and returns to AC generator again. At the end of this state, since the AC current generated from AC generator flows into the point Ⓑ , reverse current tends to flow to SCR, then the circuit of SCR turns to OFF mode and begins to charge the battery again. Thus these repetitions maintain charging voltage to the battery constant and protect it from overcharging.

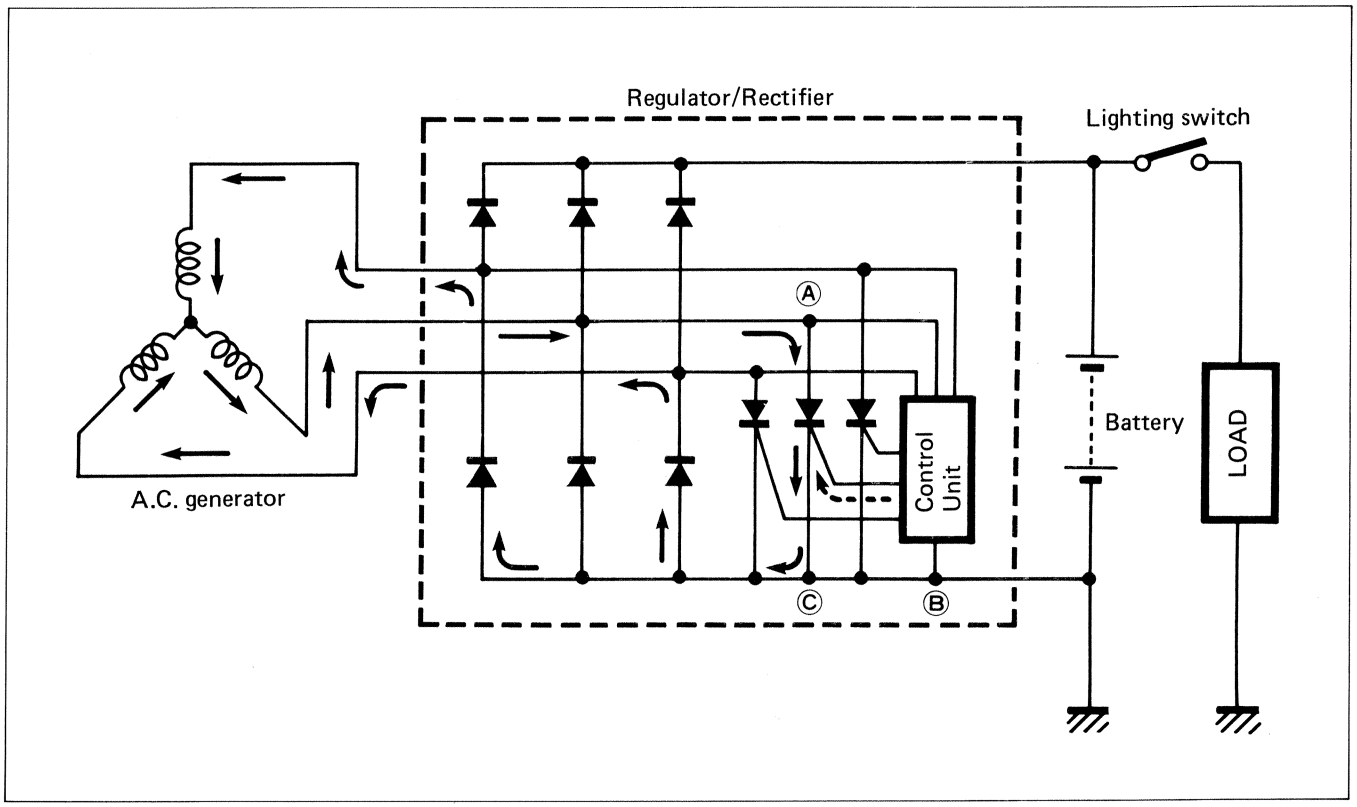

INSPECTION

CHARGING OUTPUT CHECK

- Remove the seat.
- Start the engine and keep it running at 5 000 r/min with dimmer switch in HI position.
- Using the pocket tester, measure the DC voltage between the battery terminal ⊕ and ⊖ .
- If the tester reads under 13.5V or over 15.5V, check the AC generator no-load performance and regulator/rectifier.

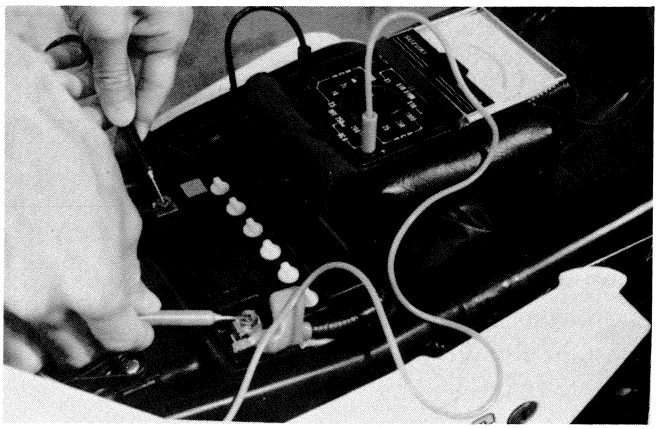

NOTE:
When making this test, be sure that the battery is fully-charged.

STD charging output
13.5 – 15.5V (DC) at 5 000 r/min

09900-25002	Pocket tester

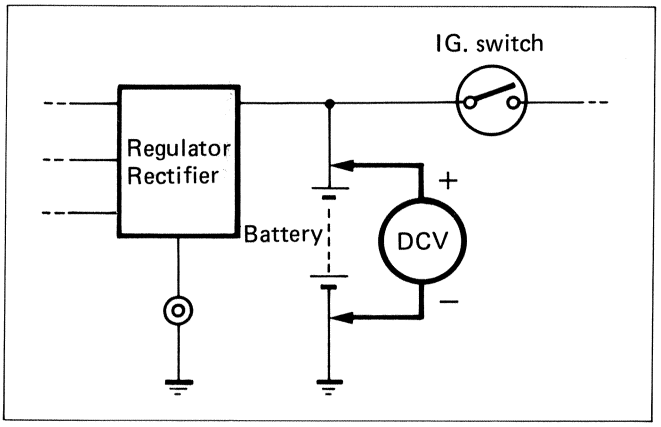

AC GENERATOR NO-LORD PERFORMANCE

- Disconnect the three lead wires from the AC generator terminal.
- Start the engine and keep it running at 5 000 r/min.
- Using the pocket tester, measure the AC voltage between the three lead wires.
- If the tester reads under 80V, the AC generator is faulty.

STD No-load performance
More than 80V (AC) at 5 000 r/min

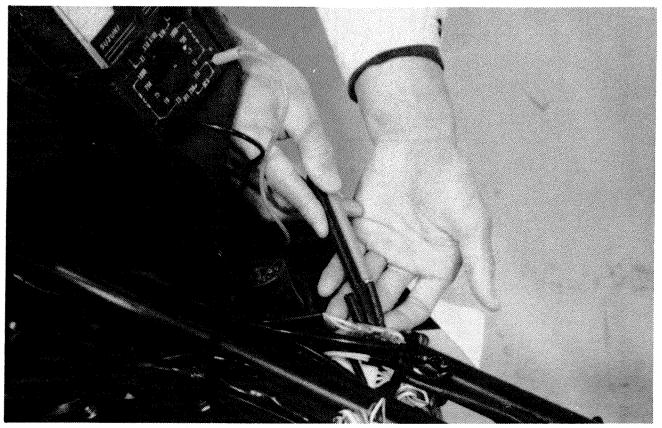

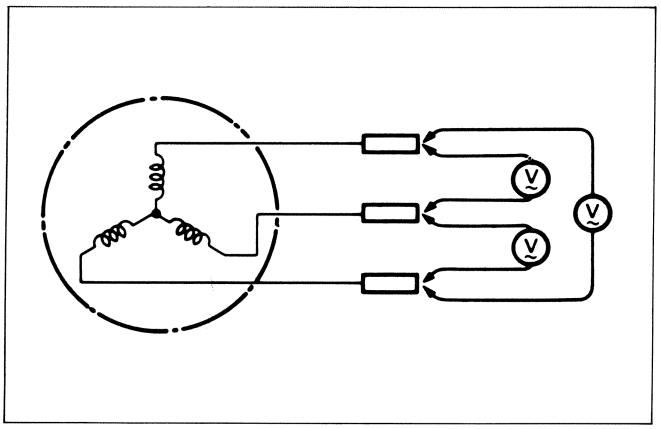

AC GENERATOR CONTINUITY CHECK

- Using the pocket tester, check the continuity between the lead wires of the stator.
- Also check that the stator core is insulated.

> **NOTE:**
> **When making this test, it is not necessary to remove the AC generator.**

09900-25002	Pocket tester

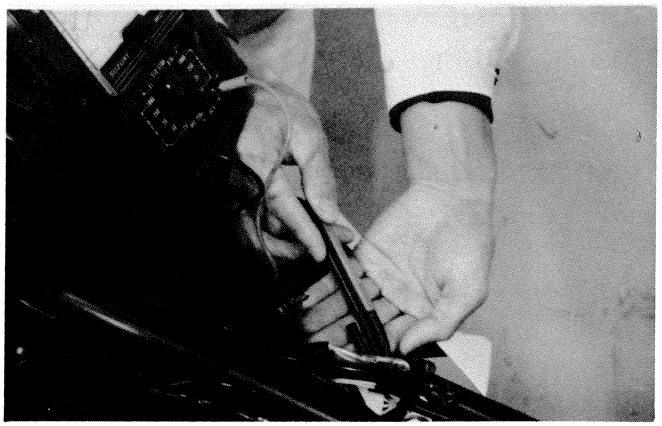

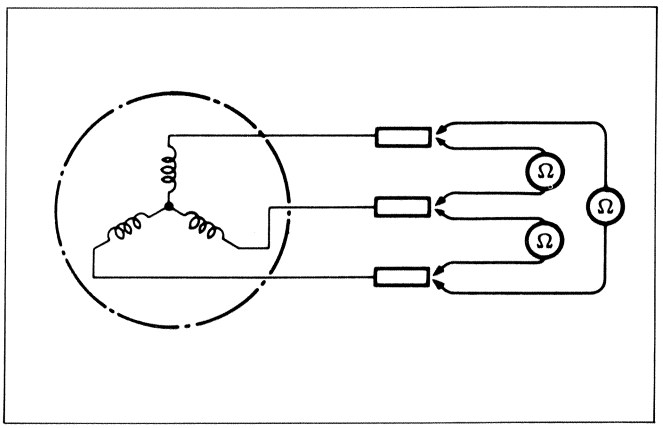

REGULATOR/RECTIFIER

- Using the pocket tester (X1Ω range), measure the resistance between the lead wires in the following table.
- If the resistance checked is incorrect, replace the regulator/rectifier.

09900-25002	Pocket tester

Probe of tester ⊖ \ ⊕ Probe of tester	A	B	C	D	E
A		6.0–7.5	6.0–7.5	6.0–7.5	50–70
B	OFF		OFF	OFF	6.0–7.5
C	OFF	OFF		OFF	6.0–7.5
D	OFF	OFF	OFF		6.0–7.5
E	OFF	OFF	OFF	OFF	

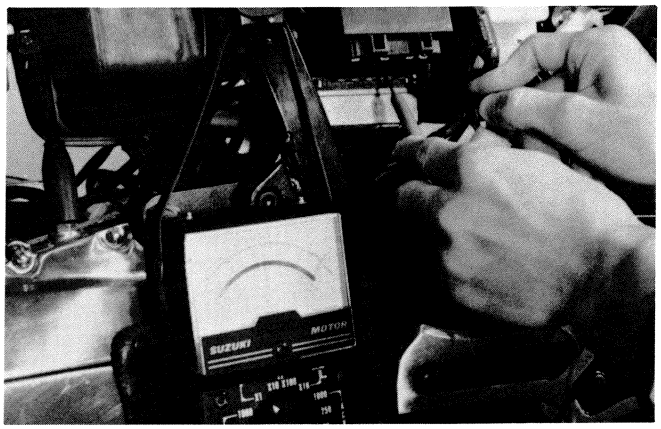

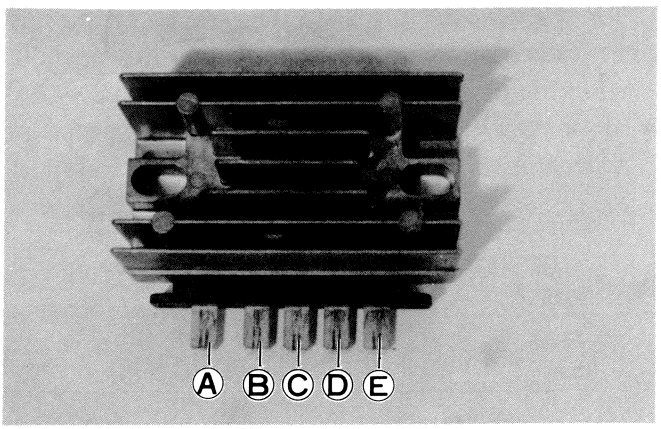

IGNITION SYSTEM

DESCRIPTION

The fully transistorized ignition system consists of a signal generator, igniter unit, ignition coils, and spark plugs. The signal generator comprises one rotor and two pick-up coils.

The signal generator is mounted at the right end of the crankshaft. The output of the signal generator goes to the igniter unit, where it turns ON and OFF the transistor alternately. As the transistor is turned ON and OFF, the current passing through the primary winding of the ignition coil is also turned OFF and ON accordingly, thus it induces the secondary current on the ignition coil secondary windings and produce the spark between spark plug gaps.

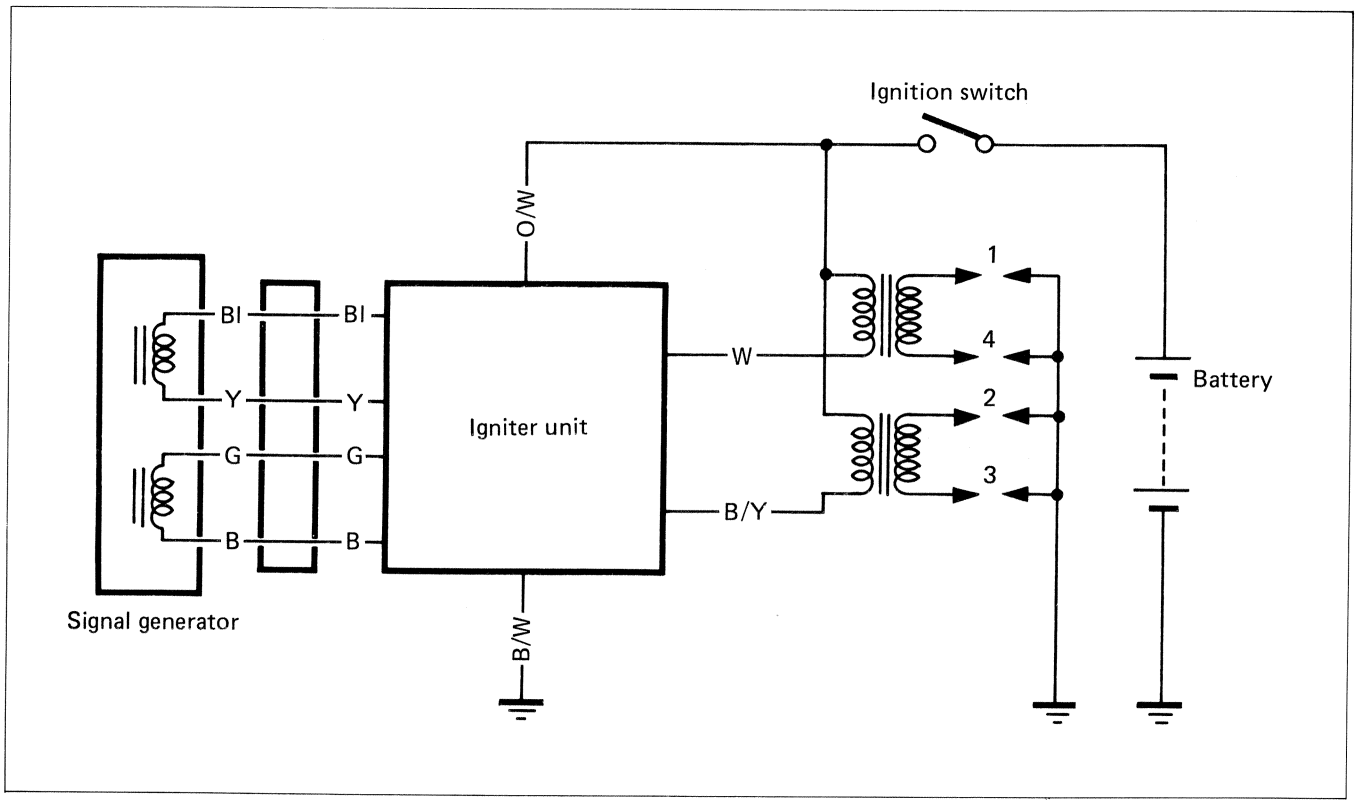

INSPECTION

IGNITION COILS

CHECKING WITH ELECTRO TESTER

- Using the electro tester, test each ignition coil for sparking performance. The test connection is as indicated. Make sure that the three-needle sparking distance is at least 8 mm (0.3 in).
- If no sparking or orange color sparking occurs with this much gap, then it is defective and must be replaced.

09900-28106	Electro tester
STD Spark performance	8 mm (0.3 in)

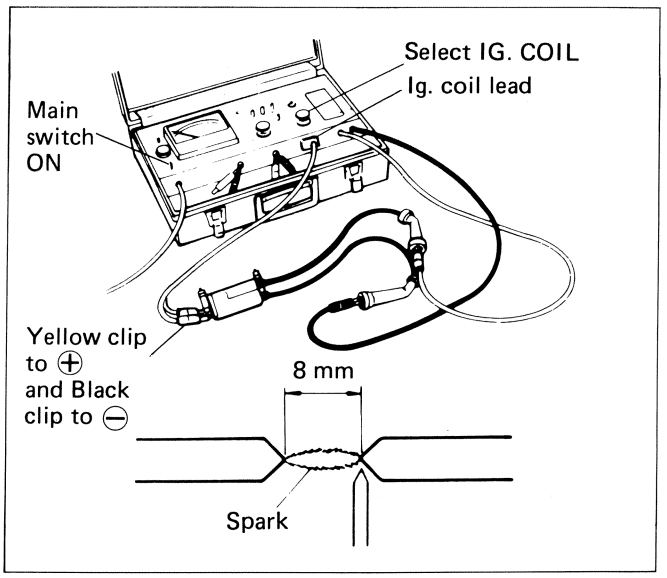

CHECKING WITH POCKET TESTER

- A SUZUKI pocket tester or an ohm meter may be used, instead of the electro tester. In either case, the ignition coil is to be checked for continuity in both primary and secondary windings. Exact ohmic readings are not necessary, but, if the windings are in sound condition, their continuity will be noted with these approximate ohmic values.

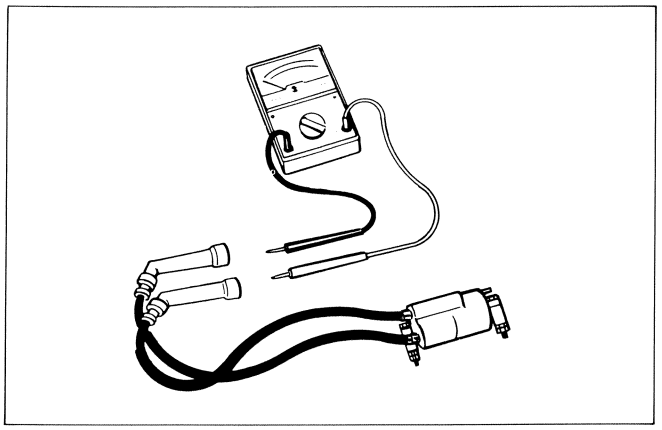

09900-25002	Pocket tester

Ignition coil resistance	
Primary	3 – 5Ω
Secondary	30 – 50kΩ

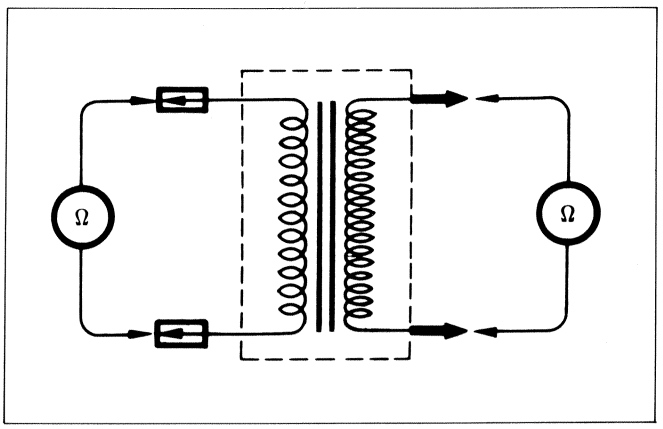

SIGNAL GENERATOR

- Measure the resistance between lead wires.
- If the resistance is infinity or less than the specifications, the signal generator must be replaced.

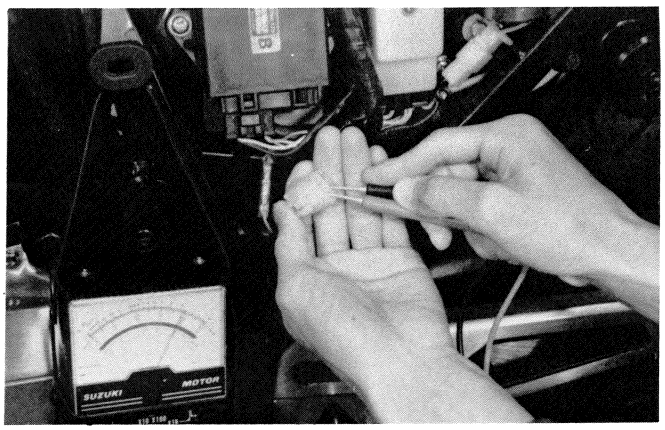

09900-25002	Pocket tester

STD resistance	
Green – Black	130 – 200Ω
Blue – Yellow	

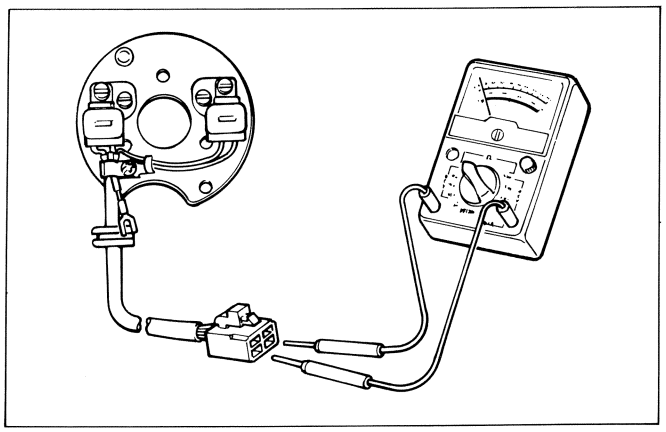

IGNITER UNIT

- Remove the spark plugs from Nos. 1 and 2 cylinders. Install the respective plug caps and place the spark plugs on the cylinder head.
- Remove the frame cover on the left side and disconnect the lead wire from the signal generator. Turn the ignition switch ON.
- First, check the No. 1 spark plug.
- Connect ⊕ pin of SUZUKI Pocket Tester (X1Ω range) with terminal ① on the transistor unit side and ⊖ pin with terminal ② .
- The transistor unit is in good condition if the following is observed:
- The moment the test pins are connected the spark plug of No. 1 cylinder sparks. Next, check the No. 2 spark plug.
- Connect ⊕ pin of SUZUKI Pocket Tester (X1Ω range) with terminal ③ on the transistor unit side and ⊖ pin with terminal ④ .

09900-25002	Pocket tester

NOTE:
This checking presupposes that the ignition coil used for checking is a good one.

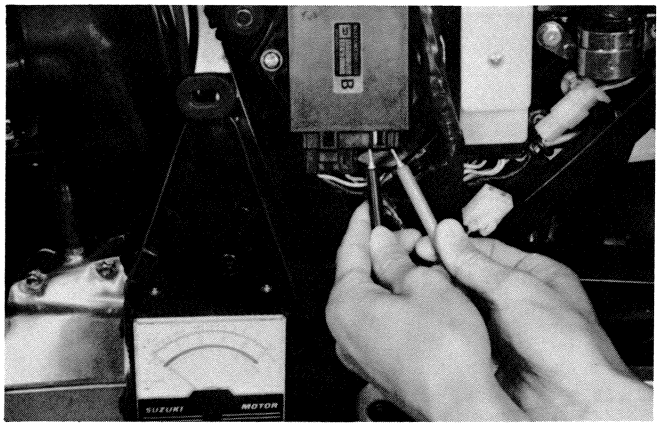

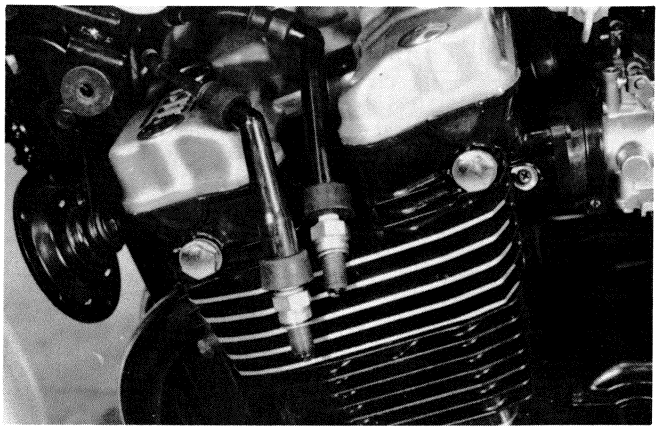

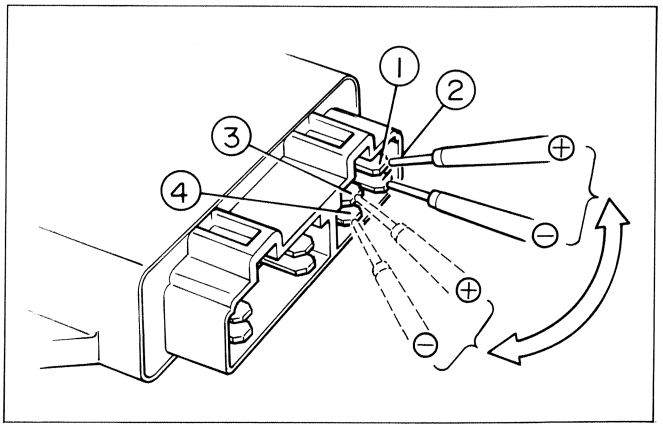

BATTERY

SPECIFICATION

Type designation	YB14L-A2
Capacity	50.4kC (14 Ah)
Standard electrolyte S.G.	1.28 at 20°C (68°F)

In fitting the battery to the motorcycle, connect the breather tube to the battery vent.

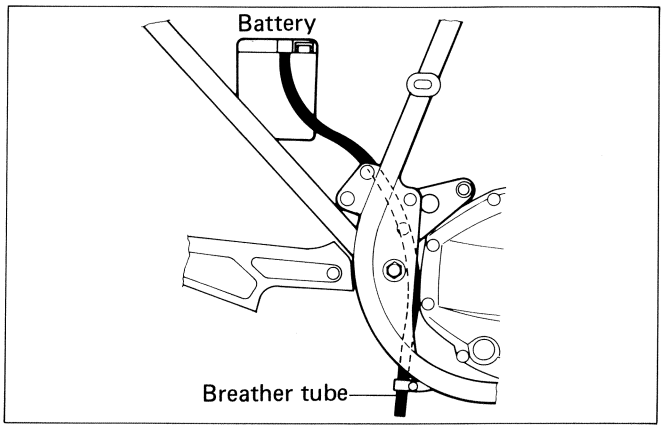

INITIAL CHARGING

FILLING ELECTROLYTE

Remove short sealed tube before filling electrolyte. Fill battery with electrolyte (dilute sulfuric acid solution with acid concentration of 35.0% by weight, having a specific gravity of 1.28 at 20°C (68°F) up to indicated UPPER LEVEL. Filling electrolyte should be always cooled below 30°C (86°F) before filling into battery. Leave battery standing for half an hour after filling. Add additional electrolyte if necessary.

Charge battery with current as described in the tables shown below.

Maximum charging current	1.4A

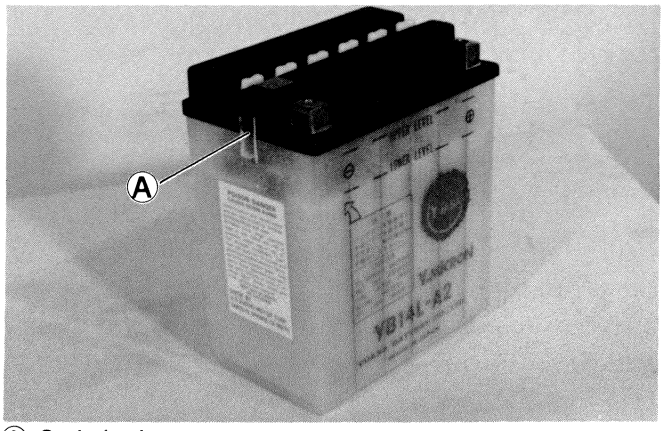

Ⓐ Sealed tube

CHARGING TIME

The charging time for a new battery is determined by the number of months that have elapsed since the date of manufacture.

CONFIRMATION FOR DATE OF MANUFACTURE

Date of manufacture is indicated by a three-part number ①, as follows, each indicating month, date and year.

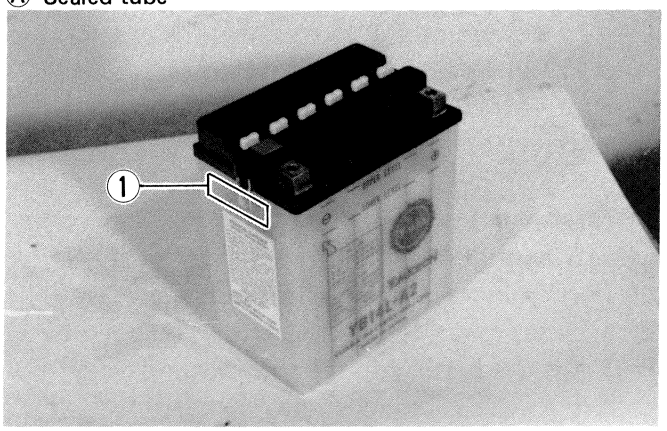

Months after manufacturing	Within 6	Within 9	Within 12	Over 12
Necessary charging hours	20	30	40	60

Near the end of charging period, adjust the specific gravity of electrolyte to value specified. After charging, adjust the electrolyte level to the UPPER LEVEL with DISTILLED WATER.

SERVICING

Visually inspect the surface of the battery container. If any signs of cracking or electrolyte leakage from the sides of the battery have occurred, replace the battery with a new one.

If the battery terminals are found to be coated with rust or an acidic white powdery substance, then this can be cleaned away with sandpaper.

Check the electrolyte level and add distilled water, as necessary, to raise the electrolyte to each cell's upper level.
Check the battery for proper charge by taking an electrolyte S.G. reading. If the reading is 1.22 or less, as corrected to 20°C (68°F), it means that the battery is still in a run-down condition and needs recharging.

> **NOTE:**
> **First, remove the ⊖ lead wire before charging.**

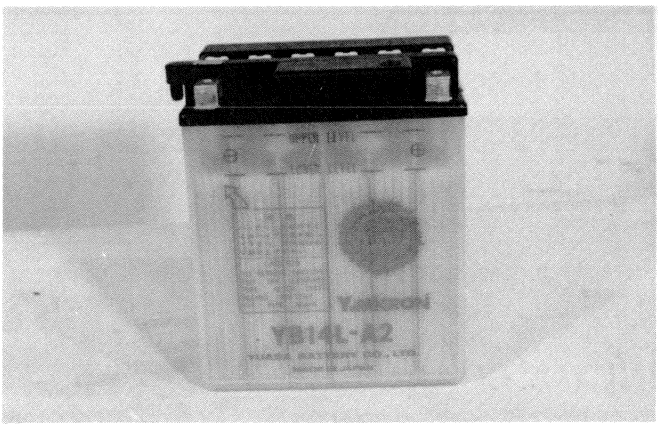

BASED ON S.G. READING RECHARGING OPERATION

To correct an S.G. reading 20°C (68°F), use following table.

To read the S.G. on the hydrometer, bring the electrolyte in the hydrometer to eye level and read the graduations on the float scale bordering on the meniscus (curved-up portion of electrolyte surface), as shown in figure.

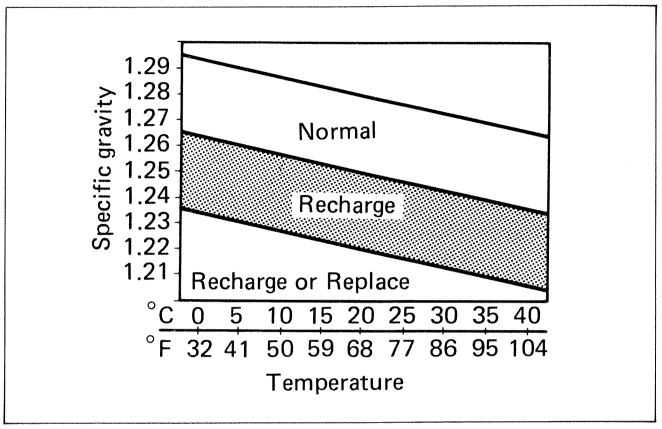

Check the reading (as corrected to 20°C) with chart to determine the recharging time in hours by constant-current charging at a charging rate of 1.4 amperes (which is a tenth of the capacity of the present battery).

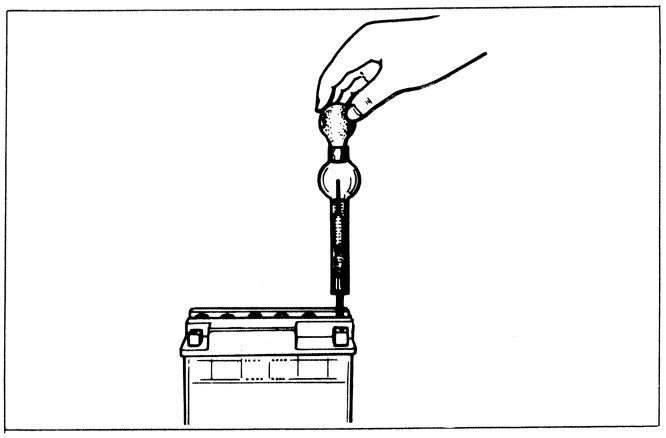

Be careful not to permit the electrolyte temperature to exceed 45°C (113°F), at any time, during the recharging operation. Interrupt the operation, as necessary, to let the electrolyte cool down. Recharge the battery to the specification.

Electrolyte specific gravity	1.28 at 20°C (68°F)

> **CAUTION:**
> **Constant-voltage charging, otherwise called "quick" charging, is not recommendable for it could shorten the life of the battery.**

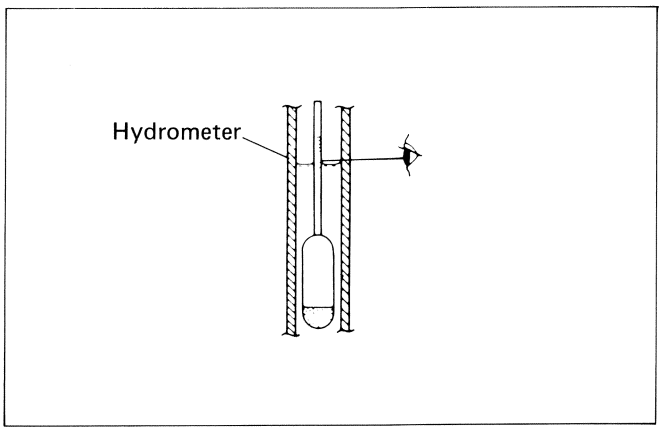

09900-28403	Hydrometer

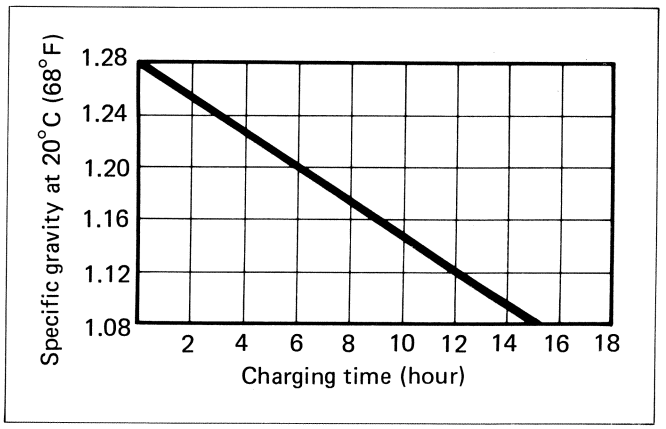

SERVICE LIFE

Lead oxide is applied to the pole plates of the battery which will come off gradually during the service. When the bottom of the battery case becomes full of the sediment, the battery cannot be used any more. If the battery is not charged for a long time, lead sulfate is generated on the surface of the pole plates and will deteriorate the performance (sulfation). Replace the battery with new one in such a case.

When a battery is left for a long term without using, it is apt to subject to sulfation. When the motorcycle is not used for more than 1 month (especially during the winter season), recharge the battery once a month at least.

WARNING:

* **Before charging a battery, remove the seal cap from each cell.**
* **Keep fire and sparks away from a battery being charged.**
* **When removing a battery from the motorcycle, be sure to remove the ⊖ terminal first.**

STARTER SYSTEM

DESCRIPTION

The starter system is shown in the diagram below: namely, the starter motor, starter relay, starter disconnect switch, starter button, engine kill switch, fuse, IG switch and battery. Depressing the starter button (on the right handlebar switch box) energizes the relay, causing the contact points to close which connects the starter motor to the battery. The motor draws about 80 amperes to start the engine.

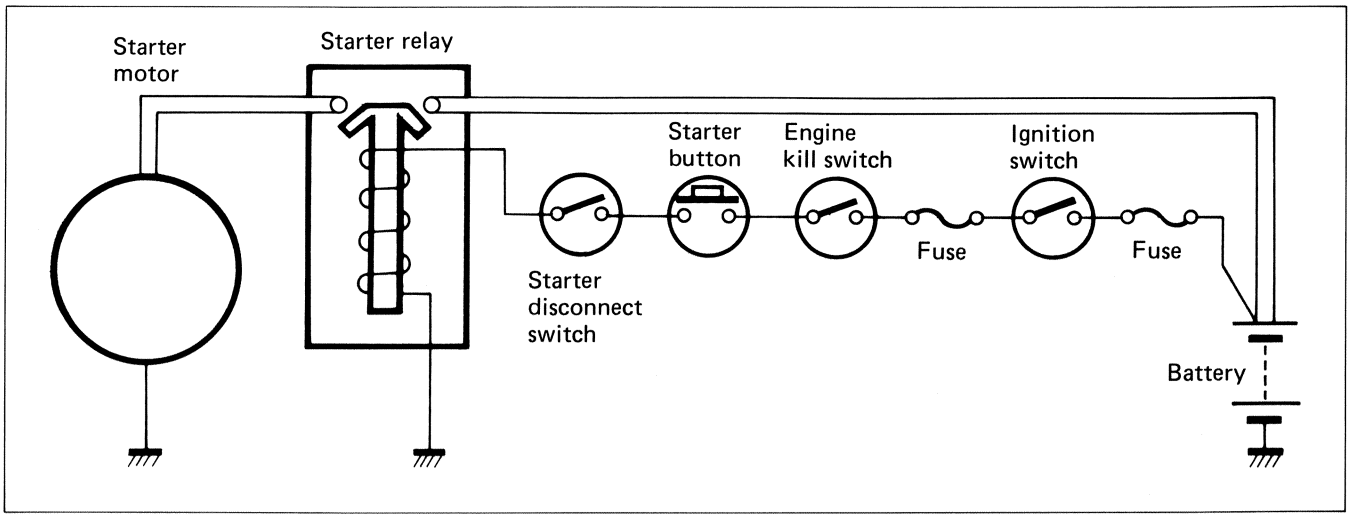

STARTER MOTOR REMOVAL AND DISASSEMBLY

- Remove the starter motor (See page 3-21).
- Disassemble the starter motor by referring to the chart.

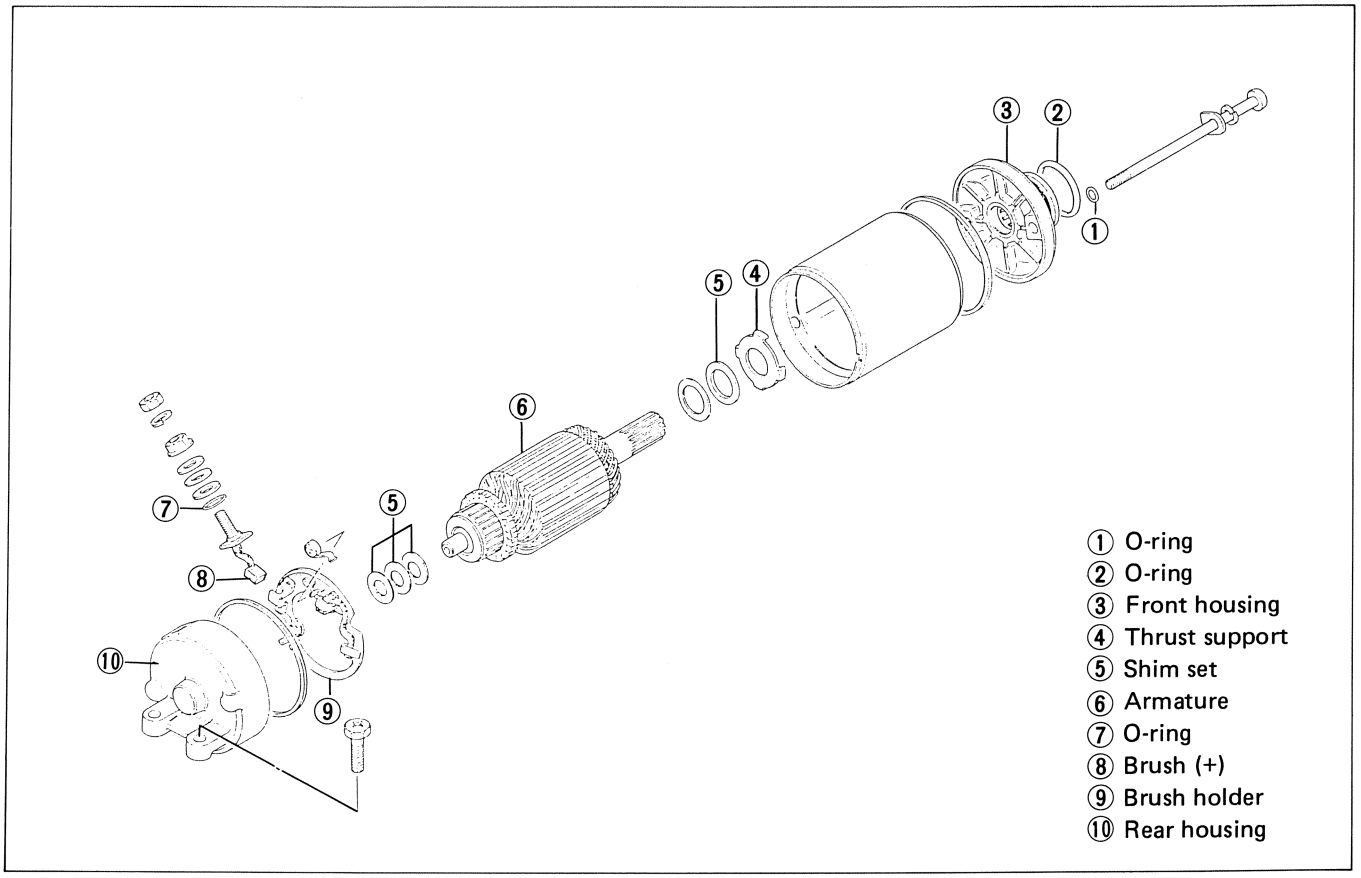

STARTER MOTOR INSPECTION

CARBON BRUSHES

- When the brushes are worn, the motor will be unable to produce sufficient torque, and the engine will be difficult to turn over. To prevent this, periodically, inspect the length of the brushes, replacing them when they are too short or chipped.

Service Limit	6 mm (0.24 in)

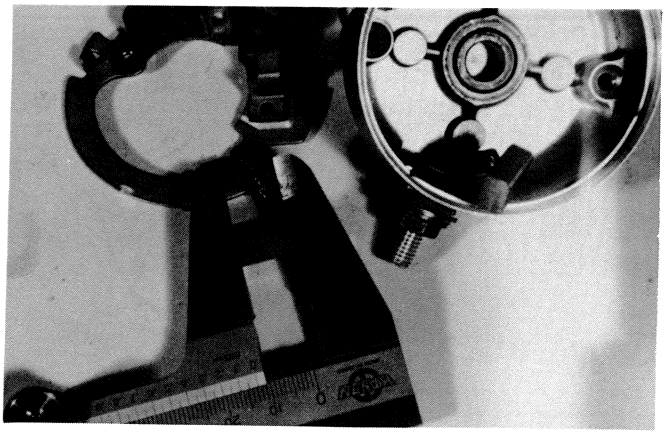

COMMUTATOR

- If the commutator surface is dirty, starting performance decreases. Polish the commutator with #400 or similar fine emery paper when it is dirty. After polishing it, wipe the commutator with a clean dry cloth.
- Measure the commutator under cut ①.

Service Limit	0.2 mm (0.008 in)

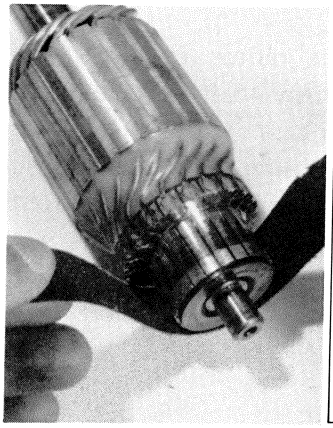

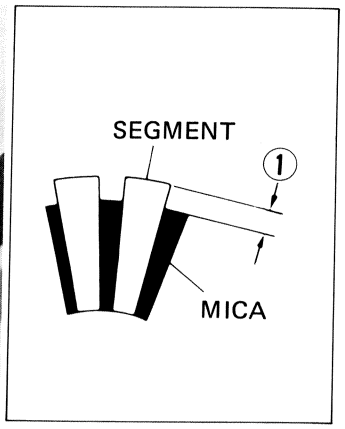

ARMATURE COIL

- Using a pocket tester, check the coil for open and ground by placing probe pins on each commutator segment and rotor core (to test for ground) and on any two segments at various places (to test for open), with the brushes lifted off the commutator surface.
- If the coil is found to be open-circuited or grounded replace the armature. Continuous use of a defective armature will cause the starter motor to suddenly fail.

09900-25002	Pocket tester

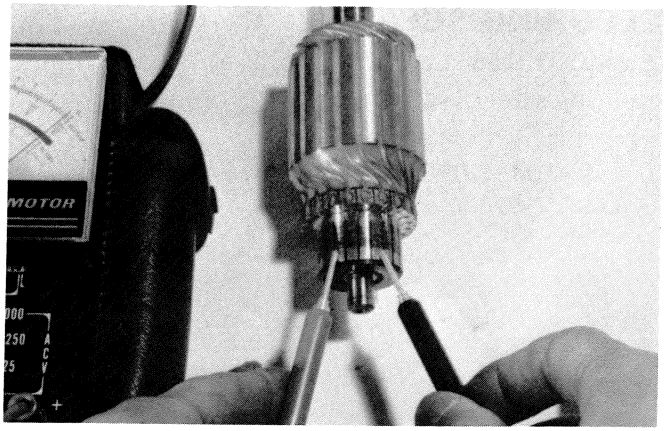

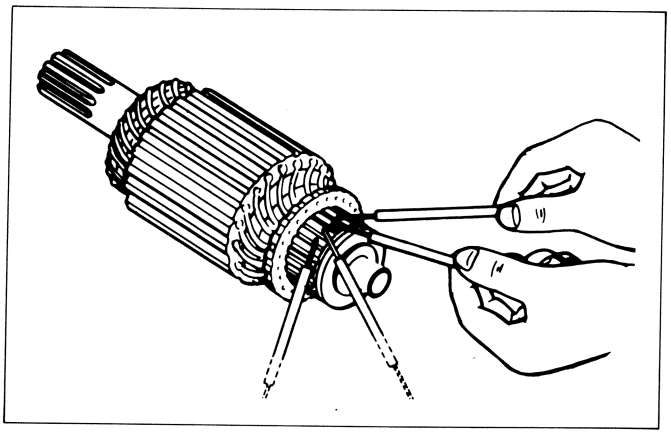

STARTER MOTOR REASSEMBLY

BRUSH HOLDER

When fixing brush holder to rear housing, align the protrusion ① of the brush holder with the hole ② of the rear housing.

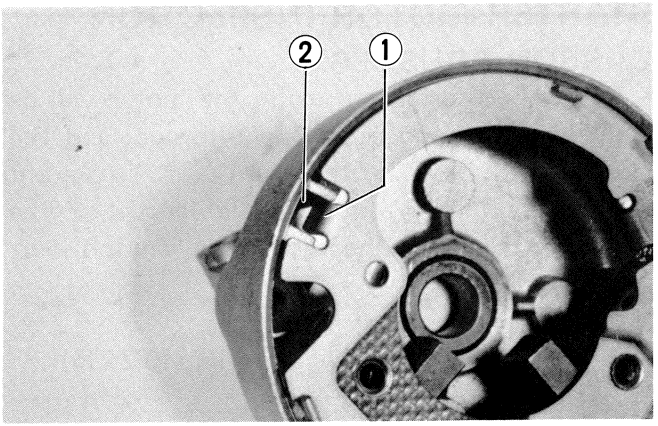

HOUSING END

- When installing starter motor case, fix the protrusion ③ of the brush holder to the notch ④ on the starter motor case.
- When installing front housing, align the mark ⑤ of rear housing to the mark ⑥ on the front housing.

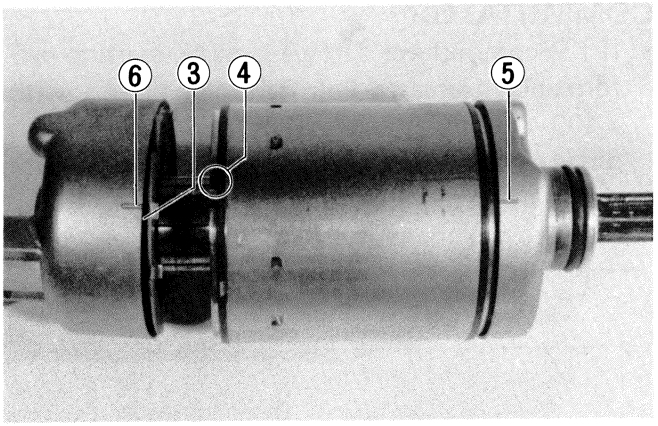

SECURING SCREWS

Apply Thread Lock "1363C" to starter motor securing screws.

99104-32050	Thread Lock "1363C"

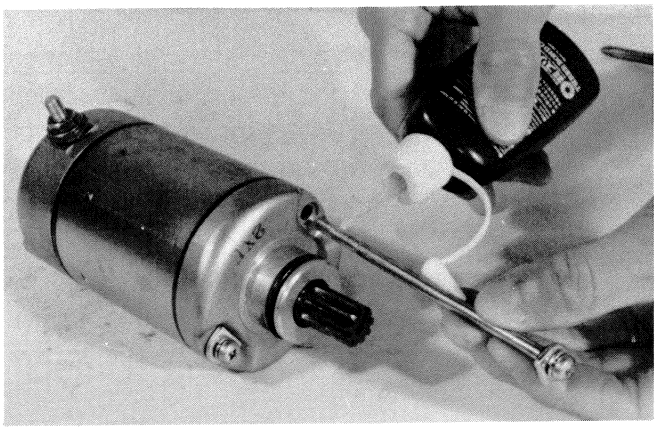

STARTER RELAY INSPECTION

- Disconnect lead wire of the starter motor at starter relay.
- Turn on the ignition switch, inspect the continuity between the terminals, positive and negative, when pushing the starter button.
- If the starter relay is in sound condition, continuity is found.

09900-25002	Pocket tester

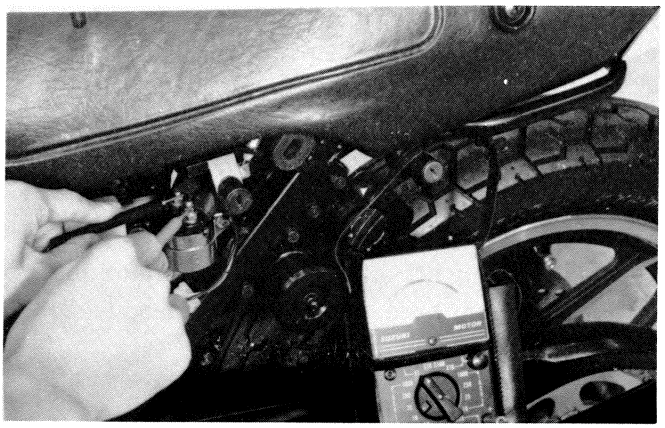

- Check the coil for "open", "ground" and ohmic resistance. The coil is in good condition if the resistance is as follows.

09900-25002	Pocket tester
STD resistance	3 – 4Ω

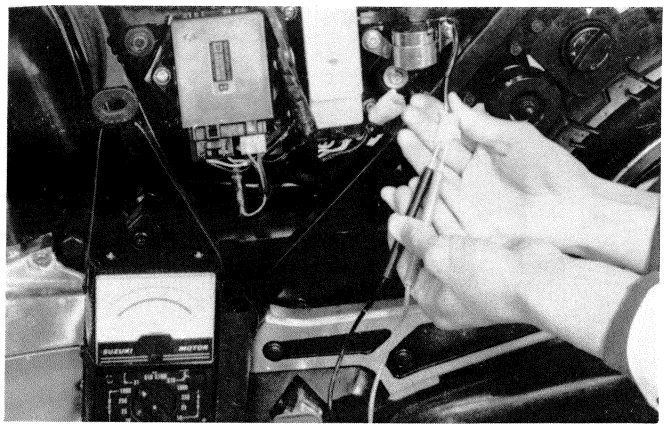

COMBINATION METER AND GAUGES

REMOVAL

- Remove the fairing (See page 7-1). (GS750ES)
- Remove the right and left frame covers.
- Remove the seat.
- Take off the fuel tank.

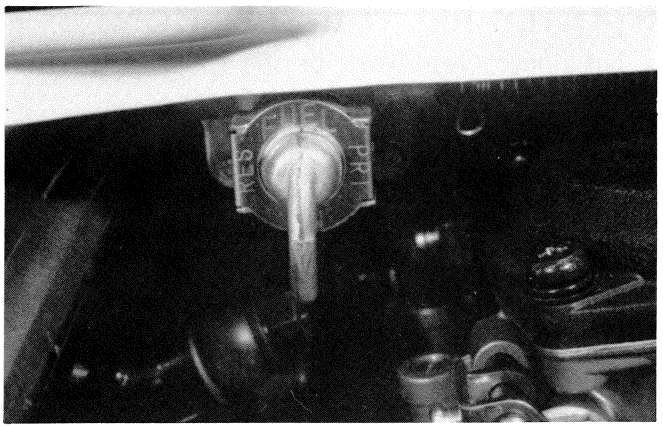

> **NOTE:**
> **When taking off fuel tank, disconnect fuel hose, vacuum hose, and fuel gauge lead wires. Fuel cock must be in ON position.**

- Disconnect the gear position indicator light lead wires and remove two clamps ① .

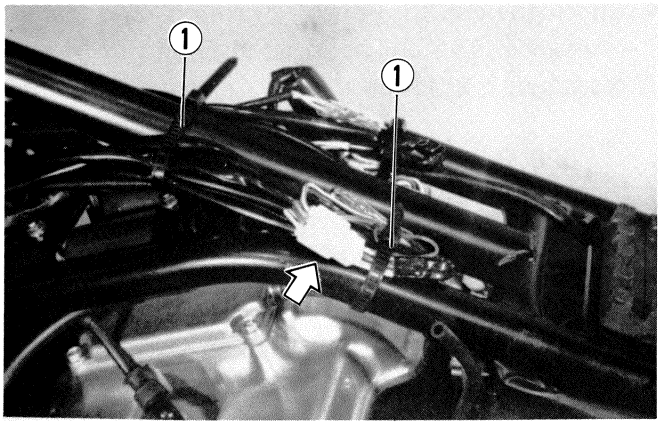

- Remove the combination meter cover.

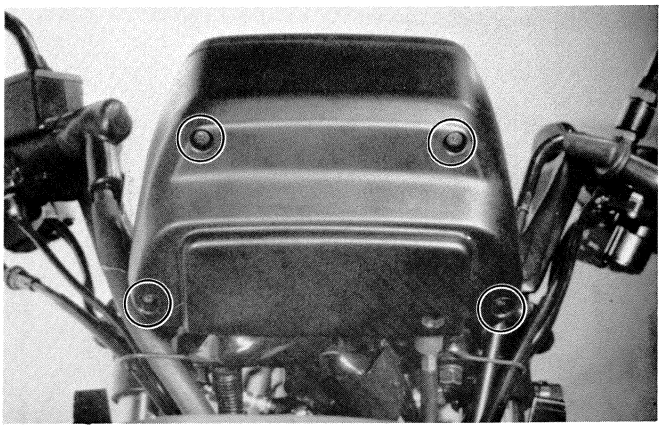

- Disconnect the combination meter lead wires and the speedometer cable.

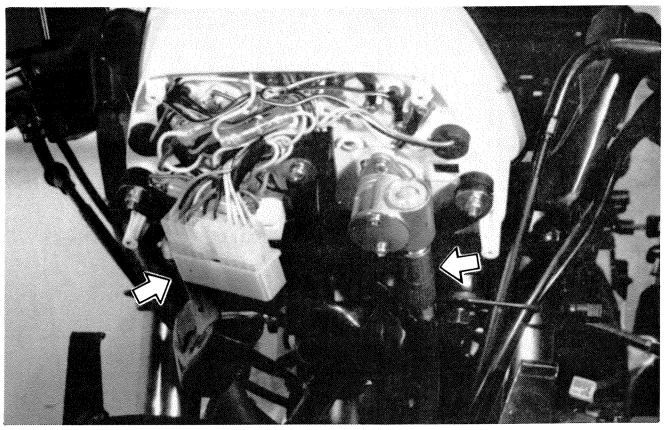

- Remove two mounting nuts and take off combination meter.

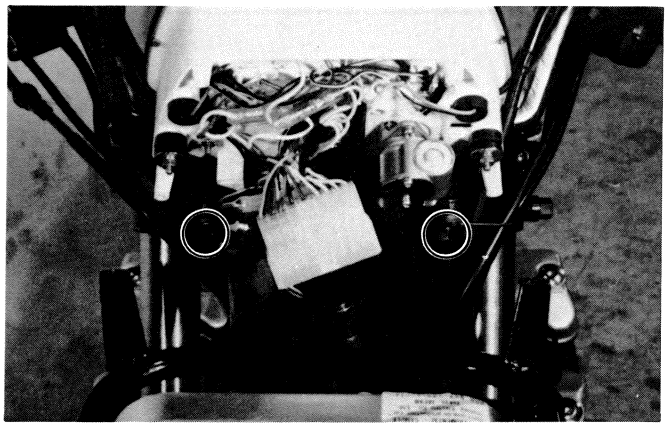

DISASSEMBLY

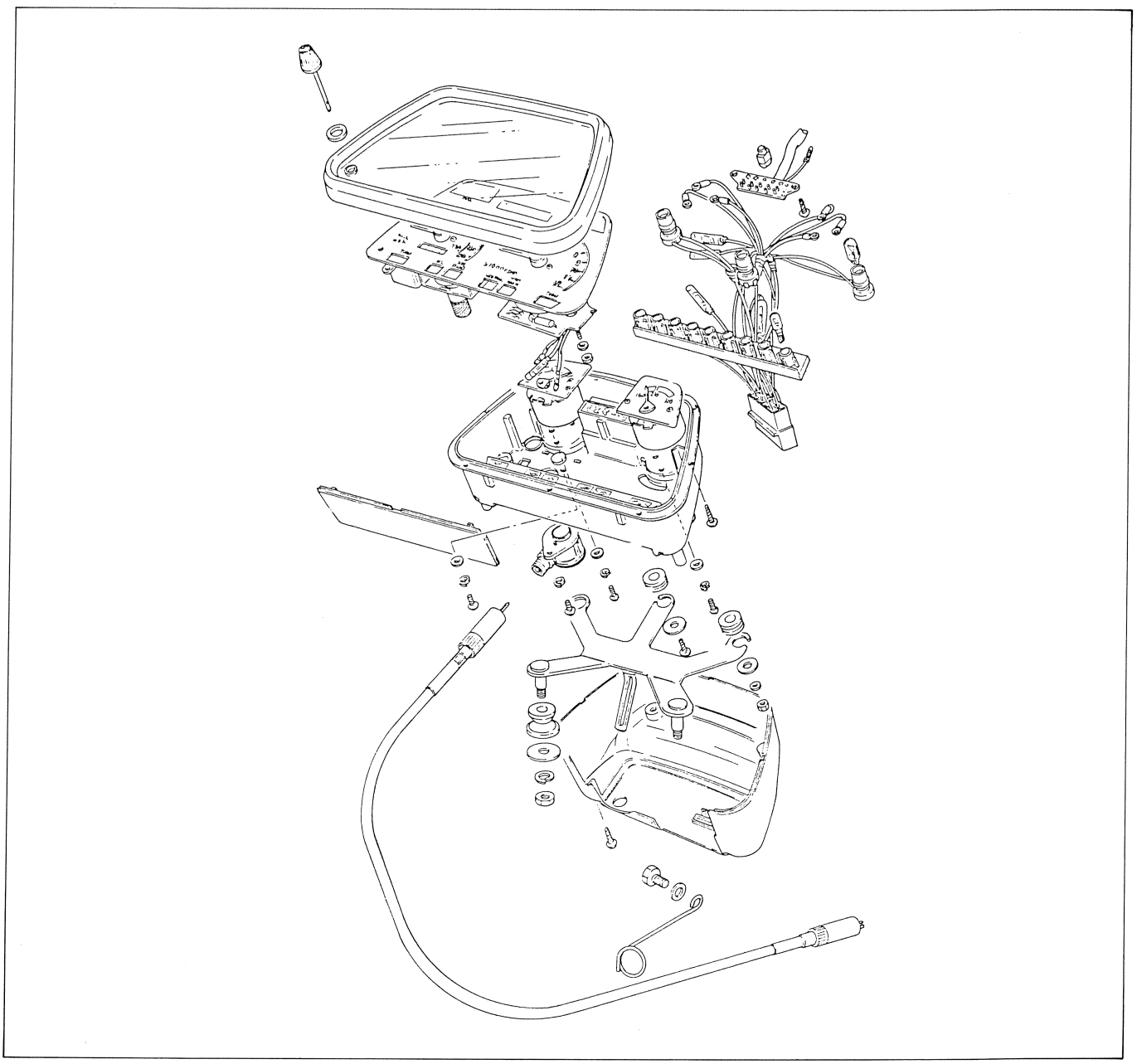

INSPECTION
DIAGRAM

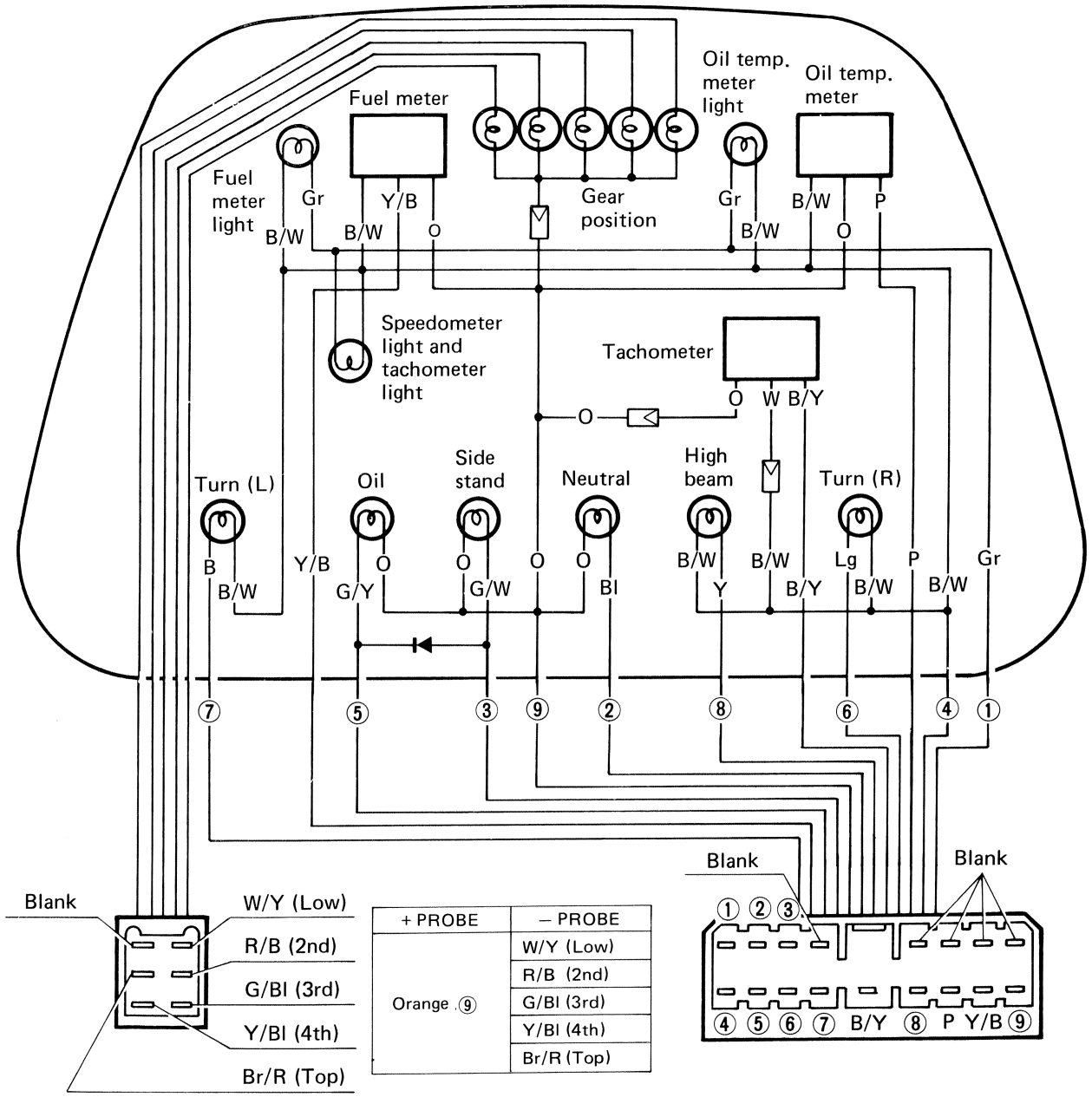

+ PROBE	– PROBE
Orange ⑨	W/Y (Low)
	R/B (2nd)
	G/Bl (3rd)
	Y/Bl (4th)
	Br/R (Top)

+ PROBE		– PROBE	
①	Gr(+)	B/W (–)	④
⑦	B (+)	B/W (–)	④
⑥	Lg(+)	B/W (–)	④
⑧	Y (+)	B/W (–)	④
⑨	O (+)	Bl (–)	②
⑨	O (+)	G/W (–)	③
⑨	O (+)	G/Y (–)	⑤

① Gr(+) : Fuel meter light, Oil temp. meter light, Speedometer light and Tachometer light
② Bl(–) : Nuetral indicator light
③ G/W(–): Side stand check light
④ B/W(–): Fuel meter light, Oil temp. meter light, Speedometer light and Tachometer light, Turn signal indicator light (Rand L), High beam indicator light
⑤ G/Y(–): Oil pressure indicator light (R)
⑥ Lg(+) : Turn signal indicator light (L)
⑦ B(+) : Turn signal indicator light
⑧ Y(+) : High beam indicator light
⑨ O(+) : Gear position indicator light, Neutral indicator light, Oil pressure indicator light, Side stand check light

BULBS

- Using the pocket tester, check the continuity between lead wires by referring to the diagram in page 6-17.
- If there is no continuity, replace the respective part.

09900-25002	Pocket tester

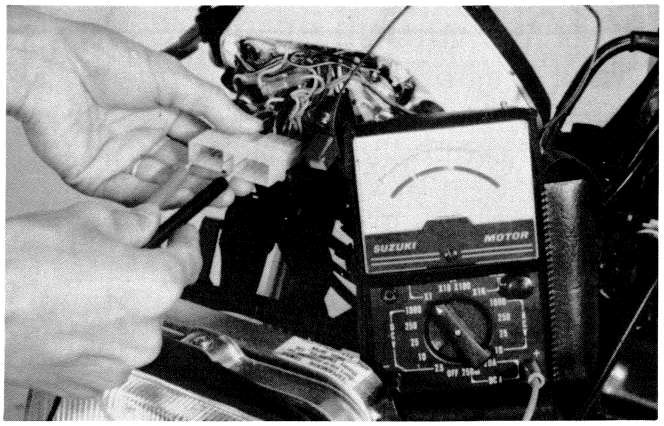

FUEL METER

- With the ignition switch turned on, remove two lead wires going into the fuel gauge, connect the lead wires on the main wiring harness side and check the fuel meter.
- If "F" is indicated, the fuel meter is in good condition.

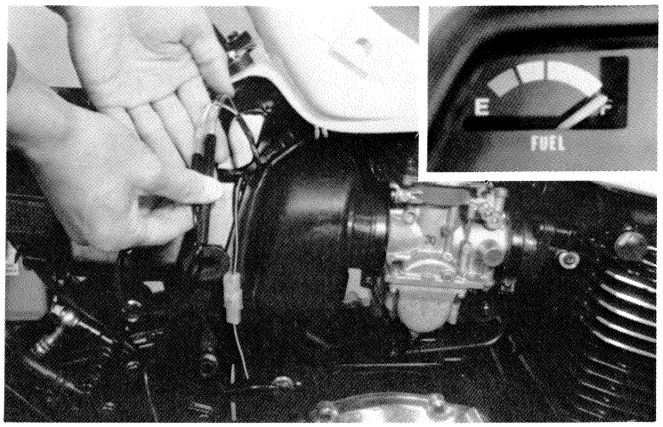

FUEL GAUGE SENDING UNIT

- Remove the lead wires coming out of the fuel gauge and check resistance of each of them.
- If the resistance measured is incorrect, replace the fuel gauge assembly with new one.
- The relation between position of the fuel gauge float and resistance is shown in the following table.

POSITION	RESISTANCE
FULL	1 – 5Ω
1/2	25 – 40Ω
EMPTY	100 – 120Ω

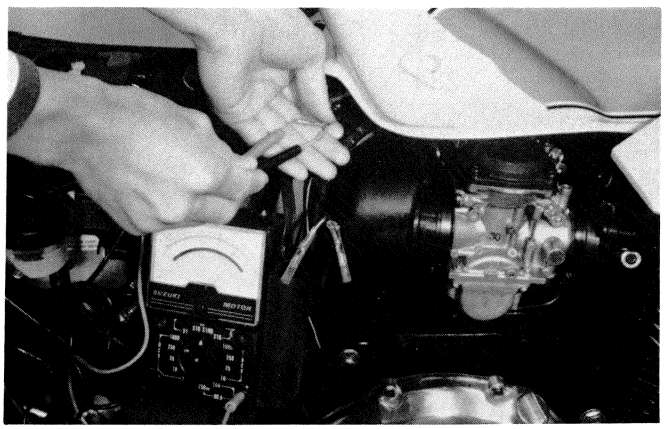

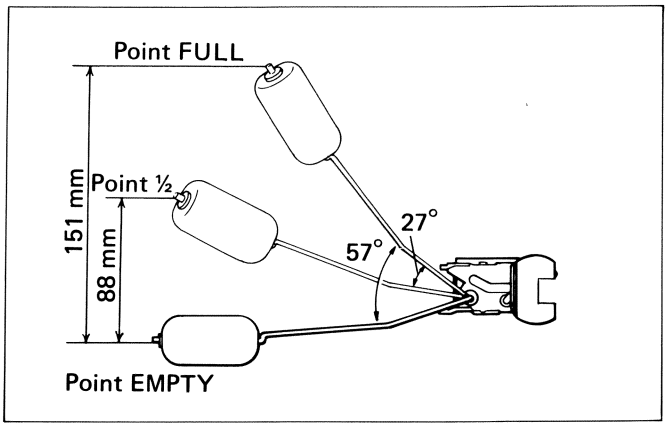

OIL TEMP. GAUGE SENDING UNIT

- Warm up the engine as follows:
  Summer 10 min. or so at 2 000 r/min
  Winter 20 min. or so at 2 000 r/min

- Remove the connection of the pink lead wire, and use the pocket tester (x100Ω range) to measure the resistance.

Pink – Ground	30 ~ 85 Ω

- The relation between oil temperature and resistance is shown in the following table.

Oil temp.		Resistance (Ω)
°C	°F	
60	140	Approx. 117
70	158	Approx. 85
80	176	Approx. 64
90	194	Approx. 48
100	212	Approx. 37
110	230	Approx. 30
120	248	Approx. 23
130	266	Approx. 19
140	284	Approx. 15
150	302	Approx. 13

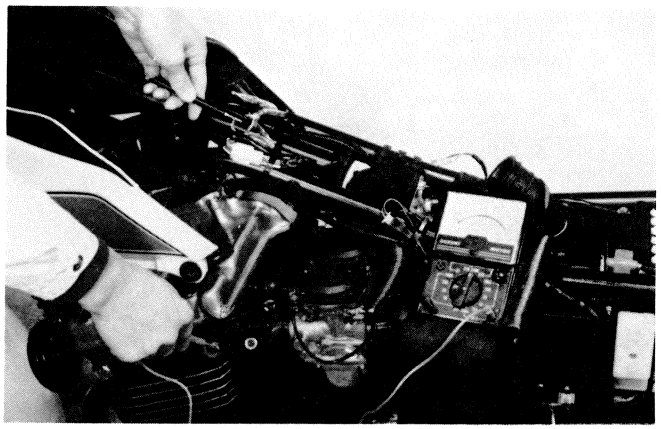

LAMPS

HEADLIGHT

- Remove the fairing (Refer to page 7-1). (GS750ES)
- Remove the headlight assembly.
- Disassemble the headlight as follows.

> NOTE:
> **After remounting the headlight assembly, be sure to check the horizontal and vertical adjustment.**

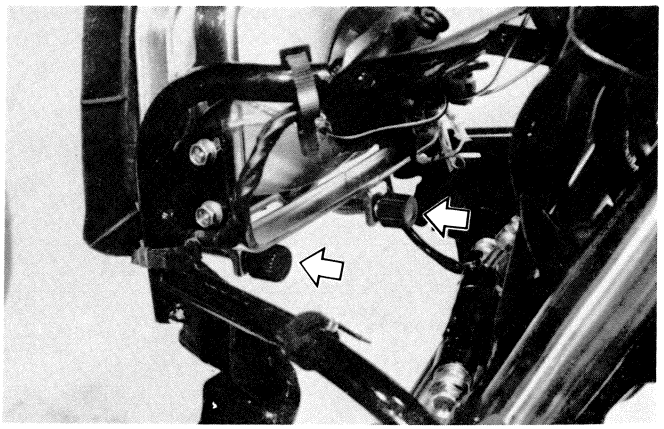

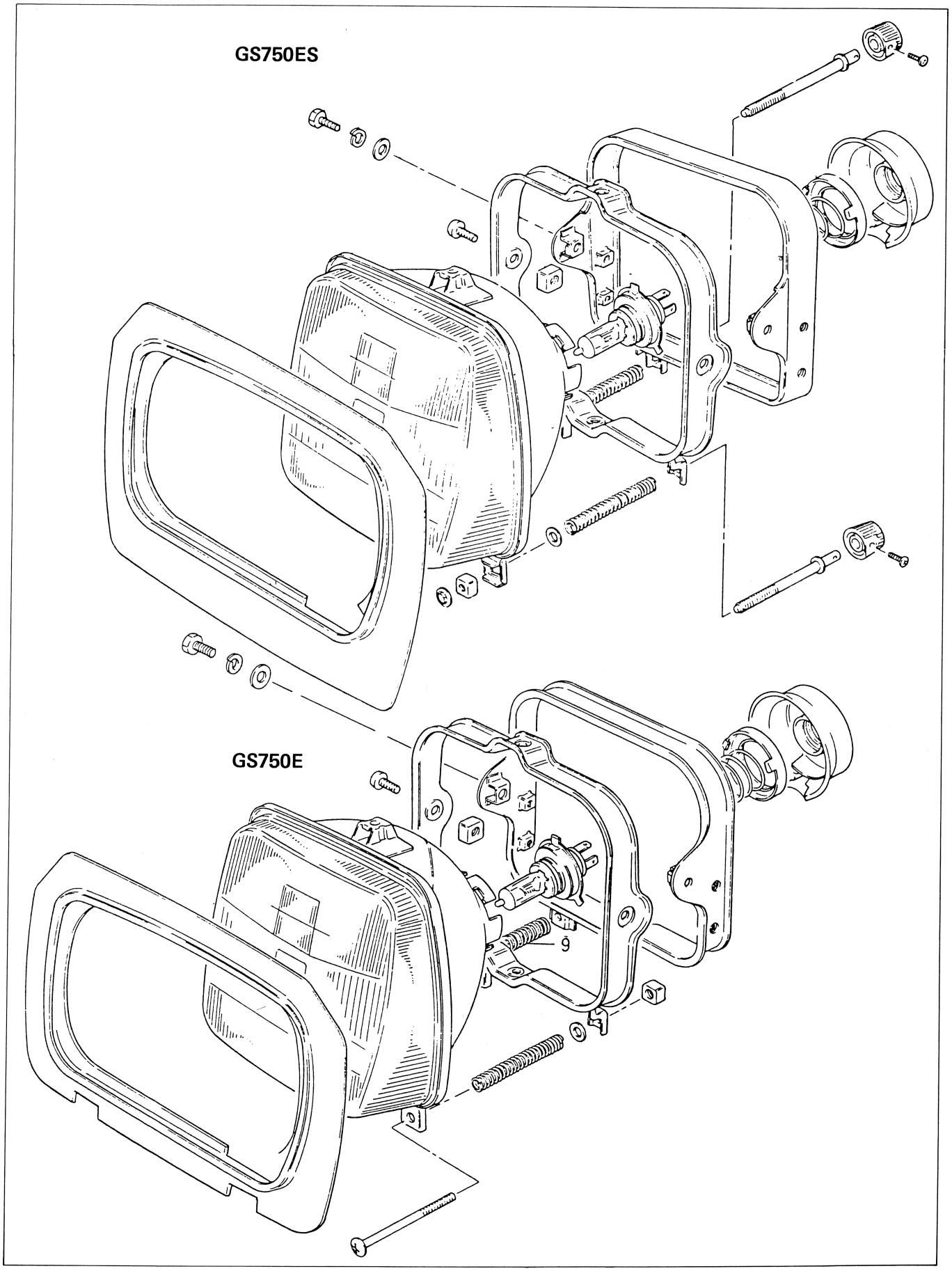
GS750ES
GS750E
9

TAIL/BRAKE LIGHT

CAUTION: Do not overtighten the lens fitting screws.

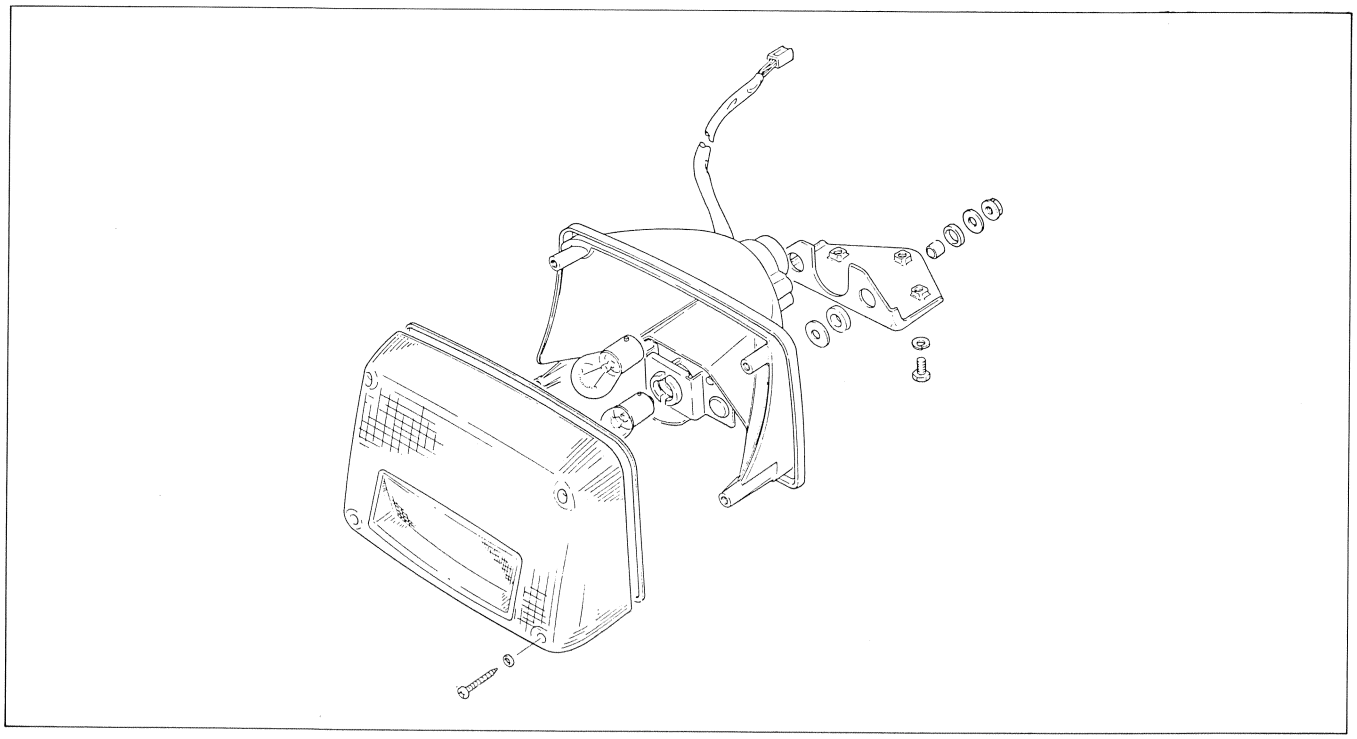

TURN SIGNAL LIGHT

CAUTION: Do not overtighten lens fitting screws.

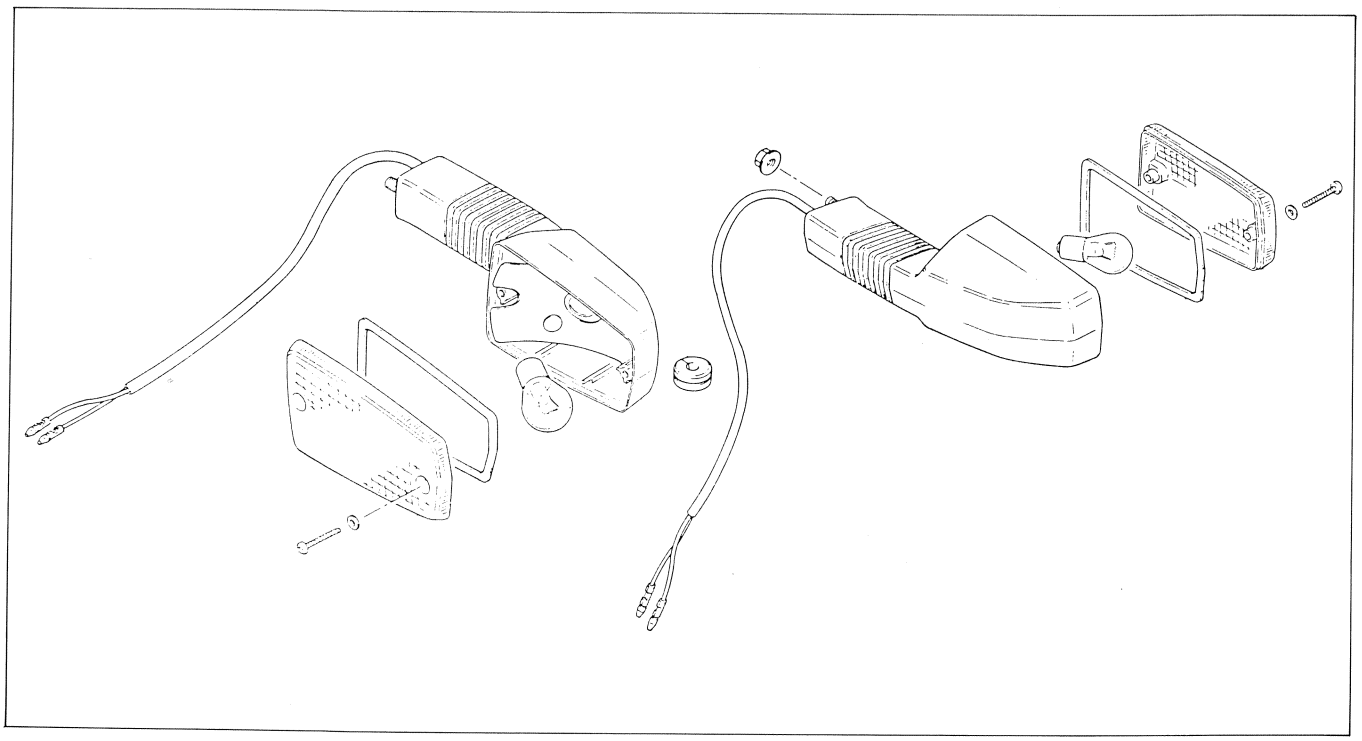

SWITCHES

- Inspect each switch for continuity with the pocket tester referring to the chart.
- If it is found any abnormality, replace the respective switch assembly with new one.

09900-25002	Pocket tester

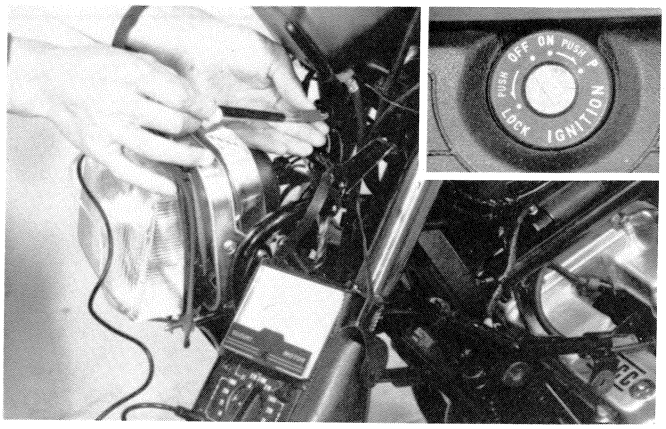

IGNITION SWITCH

	R	O	Gr	Br
OFF				
ON	○	○	○	○
P	○			○

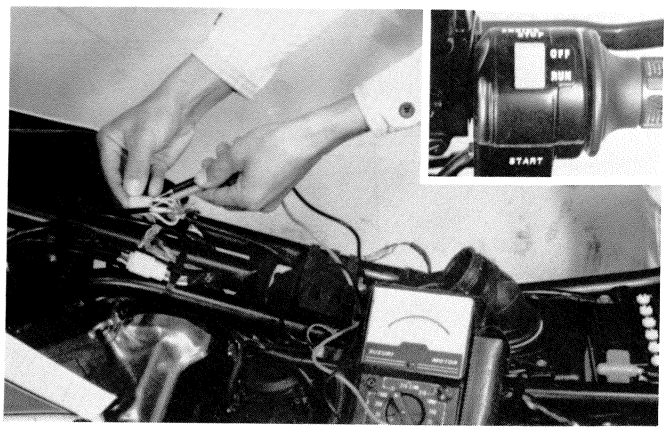

ENGINE STOP SWITCH

	O	O/W
OFF		
RUN	○	○

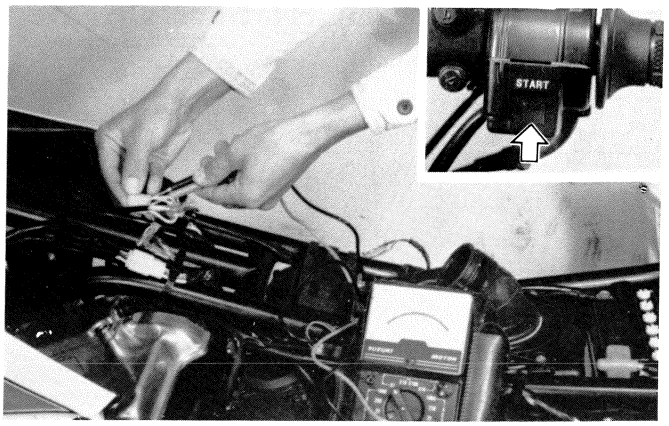

STARTER SWITCH

	Y/G	O/W
OFF		
ON (Push)	○	○

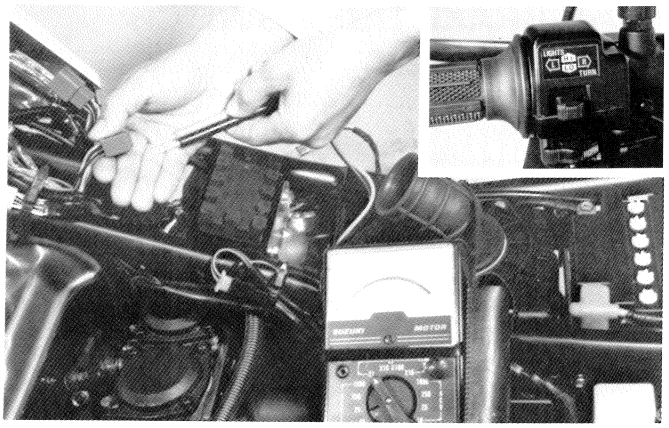

DIMMER SWITCH

	W	Y	Y/W
HI		○	○
LO	○		○

TURN SIGNAL LIGHT SWITCH

	B	Lbl	Lg
R		○	○
●			
L	○	○	

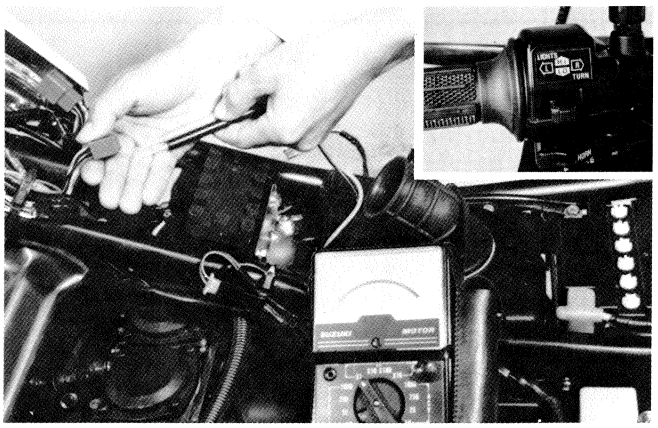

HORN SWITCH

	G	B/W
OFF		
ON (Push)	○	○

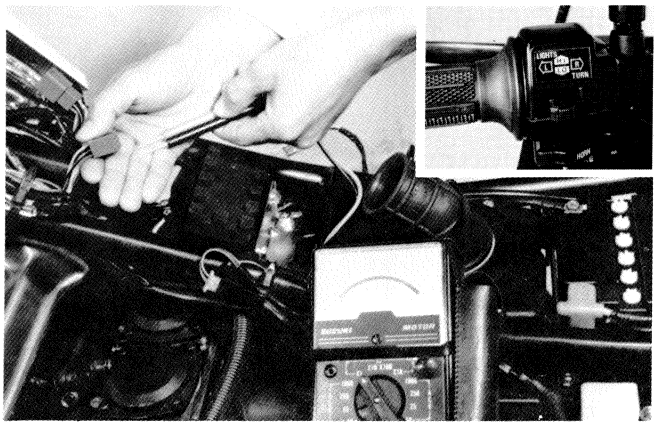

FRONT BRAKE LIGHT SWITCH

	W	O/G
OFF		
ON	○	○

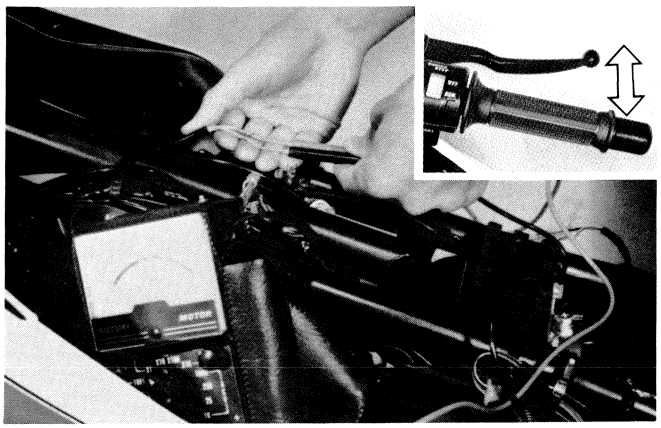

REAR BRAKE LIGHT SWITCH

	W	O/G
OFF		
ON	○	○

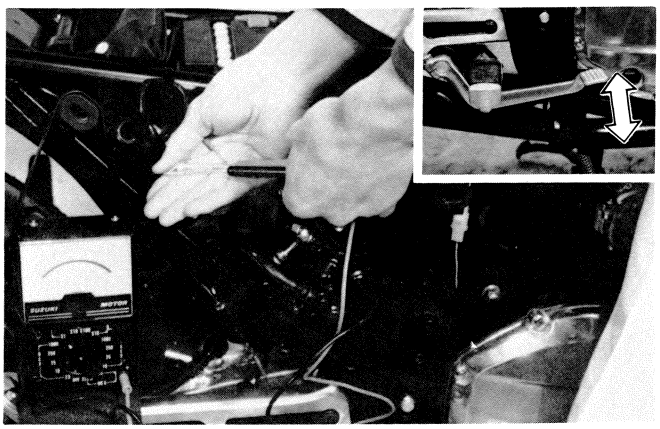

GEAR POSITION INDICATOR LIGHT SWITCH

Gear position	Wire color	
1st	W/Y	Ground
Neutral	Bl	
2nd	R/B	
3rd	G/Bl	
4th	Y/Bl	
Top	Br/R	

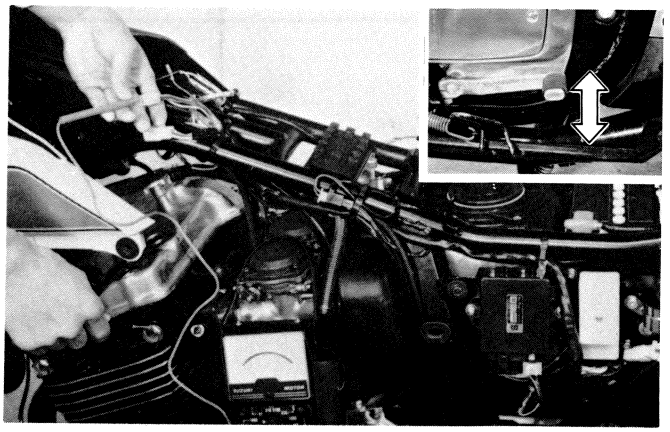

OIL PRESSURE SWITCH

- Continuity, when engine is stopped.
- No continuity, when engine is running.

> **NOTE:**
> **Before testing the oil pressure switch, check the engine oil level.**

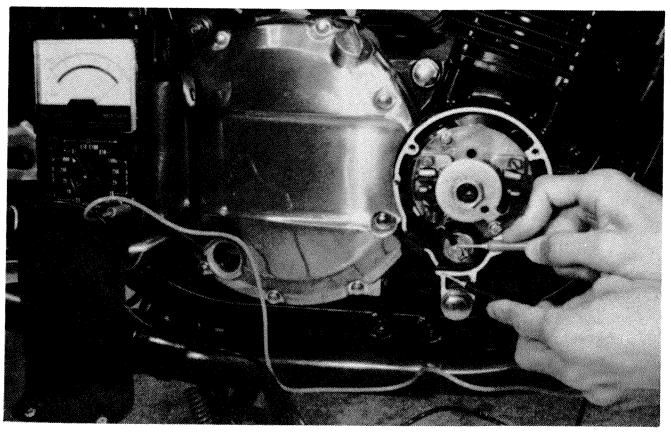

SIDE STAND CHECK LIGHT SWITCH

	G/W	B/W
ON	○	○
OFF		

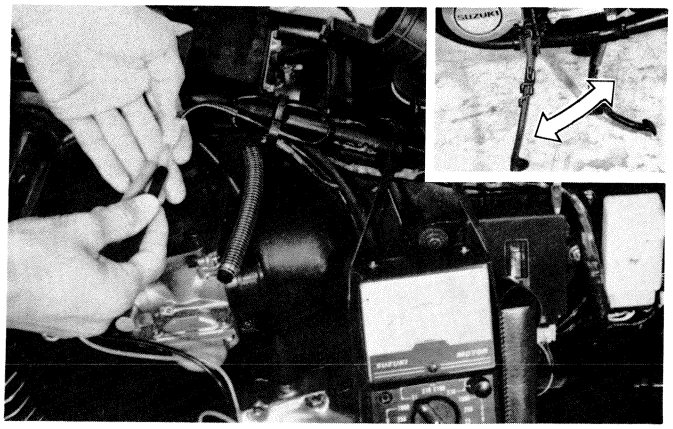

CHASSIS

CONTENTS

FAIRING (GS750ES) 7- 1
FRONT WHEEL 7- 3
FRONT FORK 7- 8
STEERING STEM 7-19
FRONT BRAKE 7-24
REAR WHEEL 7-32
REAR BRAKE 7-39
REAR SWING ARM 7-48
FULL FLOATING SUSPENSION 7-52

FAIRING (GS750ES)

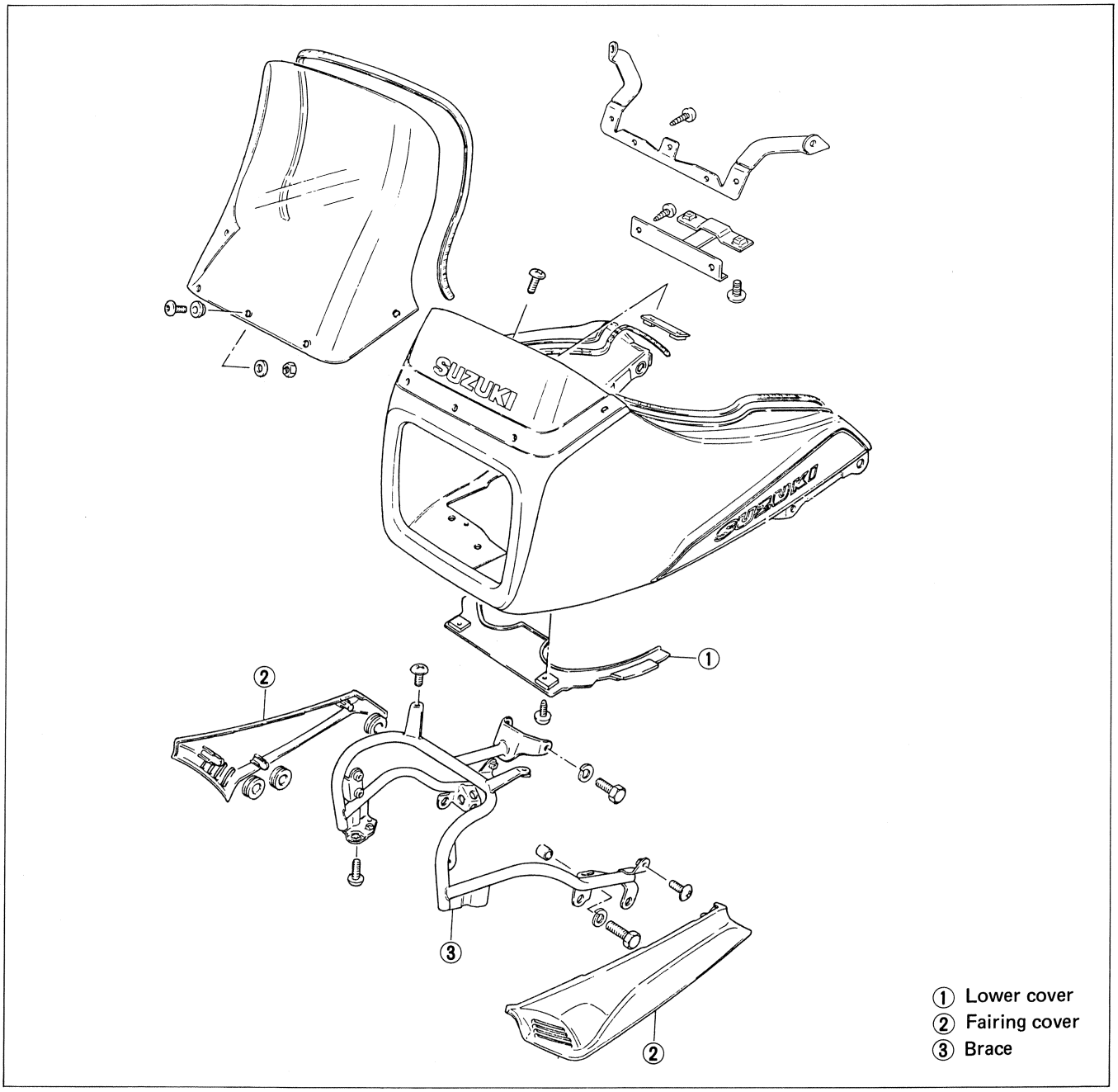

REMOVAL

- Remove right and left fairing covers.
- Remove the 8 screws.
- Remove the fairing from motorcycle.

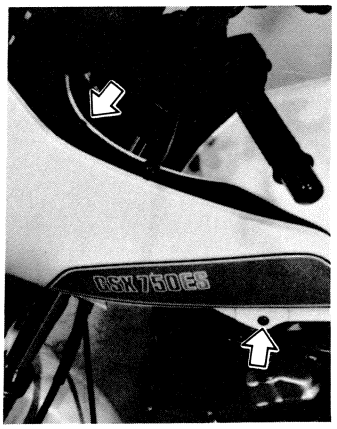

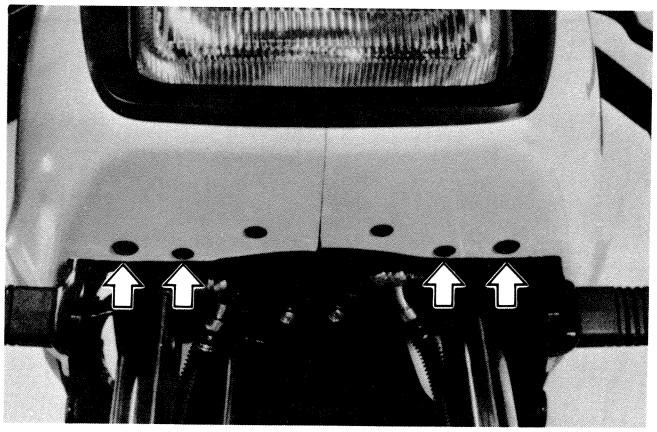

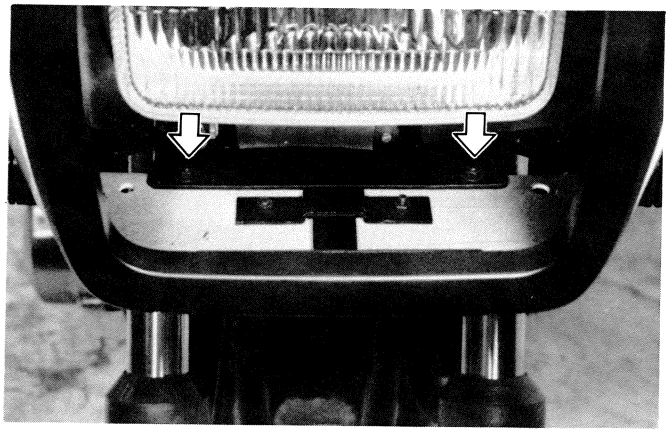

- Remove the 4 clamps ① .
- Disconnect the headlight and front turn signal lead wires.
- Remove the headlight mounting bolt ② and take off the headlight.

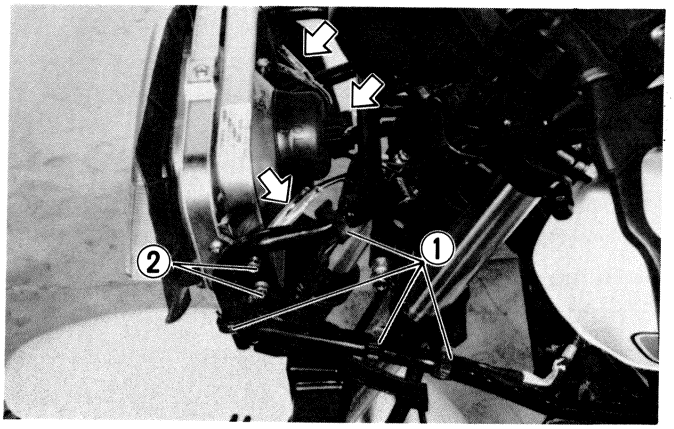

- Take off the lower cover ③ .

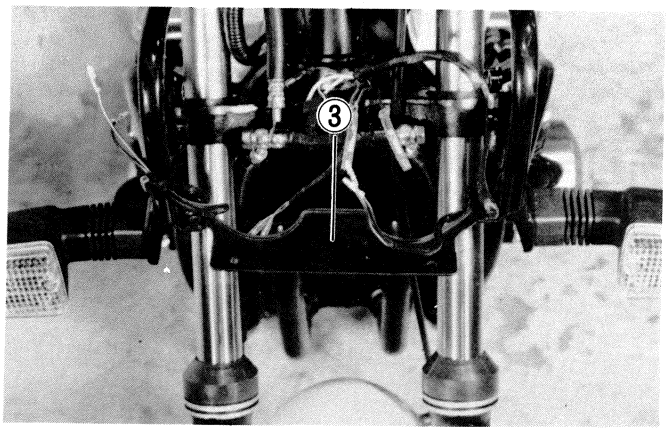

- Remove the brace mounting bolts ④ and take off the brace.

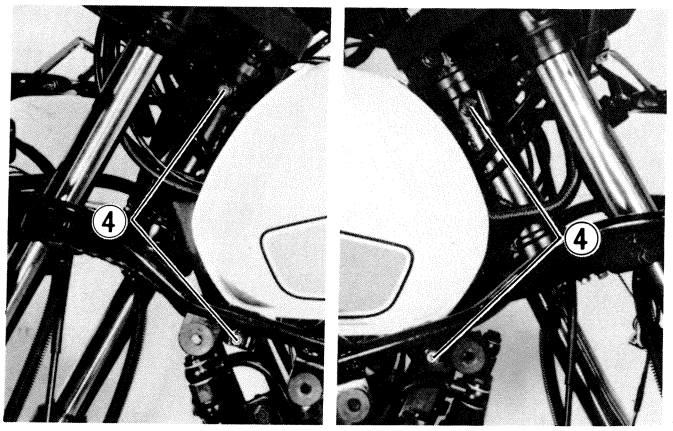

FRONT WHEEL

REMOVAL

- Support the machine by center stand and jack.

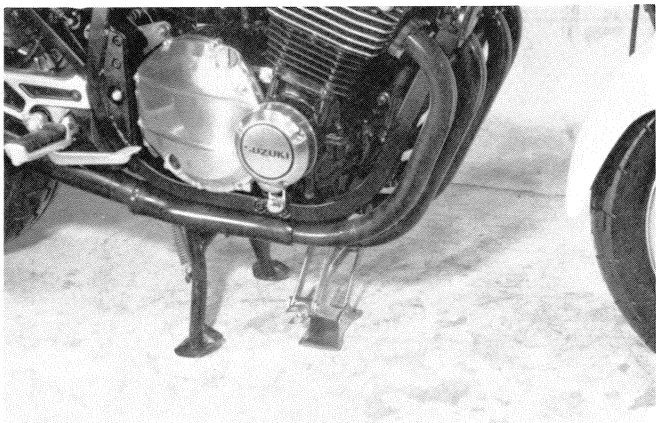

- Remove the caliper mounting bolts ① and dismount the caliper.

> **NOTE:**
> **Do not operate the brake lever after dismounting the caliper.**

- Remove the axle nut ② and loosen the axle holder nuts ③

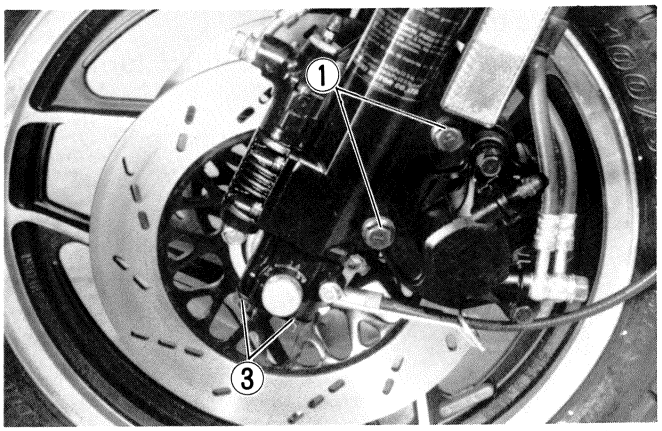

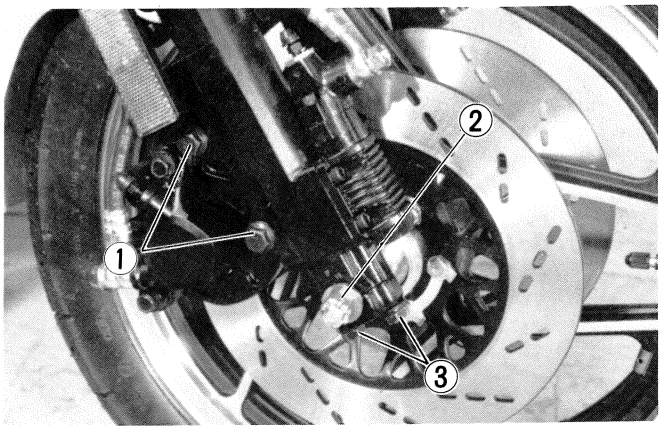

- Draw out the axle shaft and take off the front wheel.

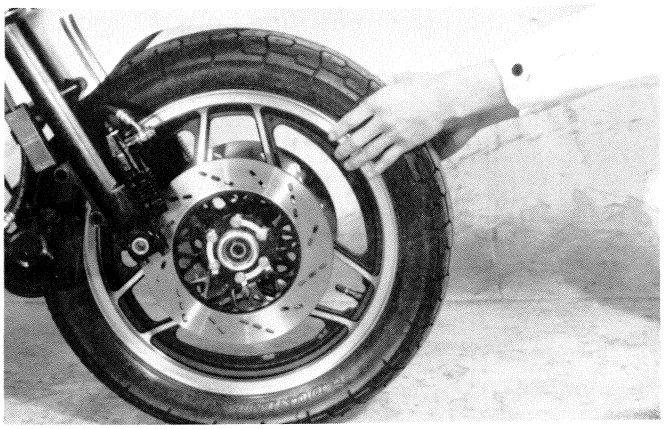

DISASSEMBLY

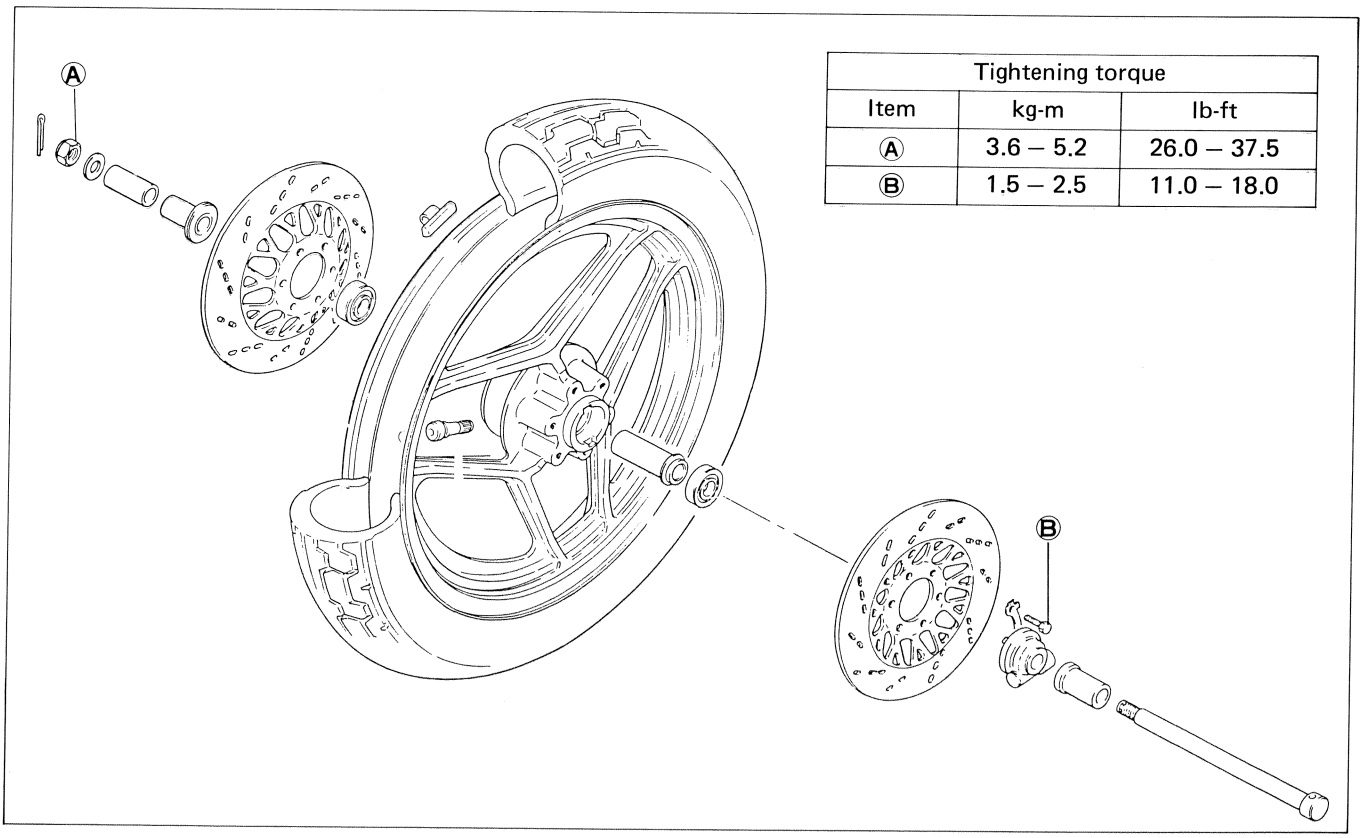

Tightening torque		
Item	kg-m	lb-ft
Ⓐ	3.6 – 5.2	26.0 – 37.5
Ⓑ	1.5 – 2.5	11.0 – 18.0

- Unlock the lock washer.
  Remove the securing bolts and separate the disc from wheel (Right and Left).

CAUTION:
Do not reuse the lock washer.

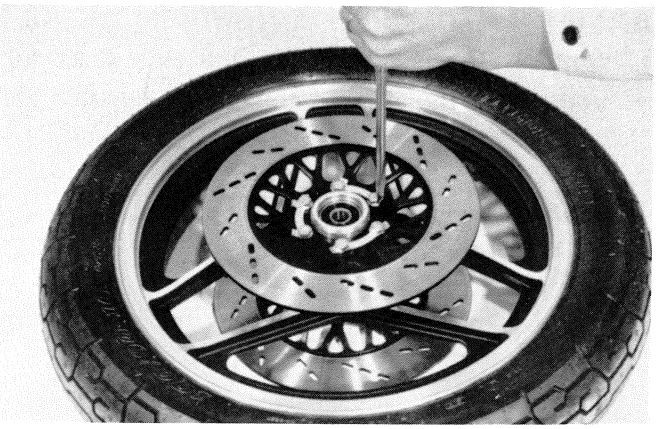

- Draw out the right and left wheel bearings by using special tool.

09941-50110	Wheel bearing remover

CAUTION:
The removed bearing should be replaced.

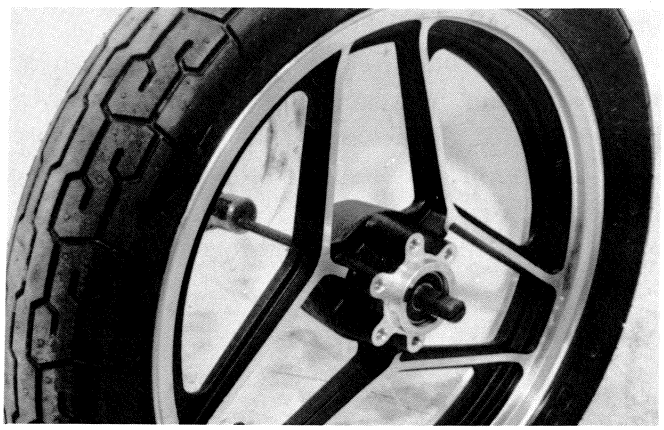

INSPECTION

WHEEL BEARINGS

- Inspect the play of wheel bearings inner race by hand while fixing it in the wheel.
- Rotate the inner race by hand to inspect whether abnormal noise occurs or rotating smoothly.
- Replace the bearing if there is any problem.

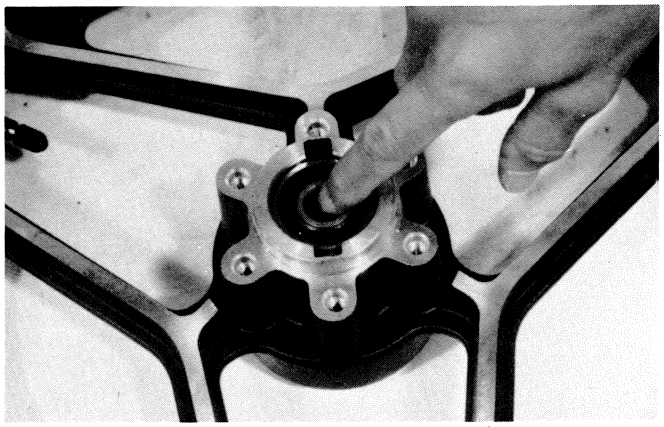

TIRE

- (See page 2-20)

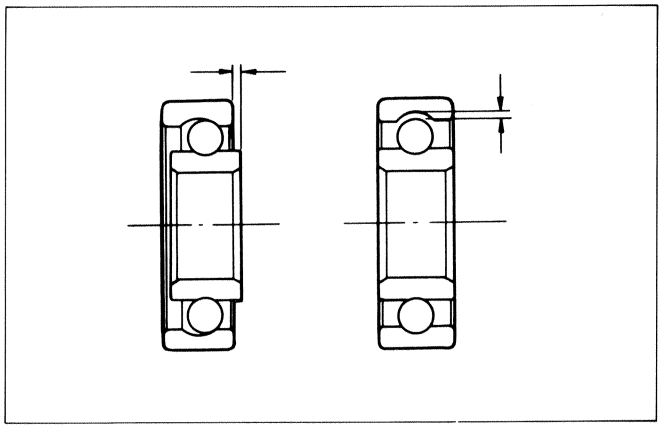

AXLE SHAFT

- Using a dial gauge, check the axle shaft for runout and replace it if the runout exceeds the limit.

09900-20606	Dial gauge (1/100)
Service Limit	0.25 mm (0.010 in)

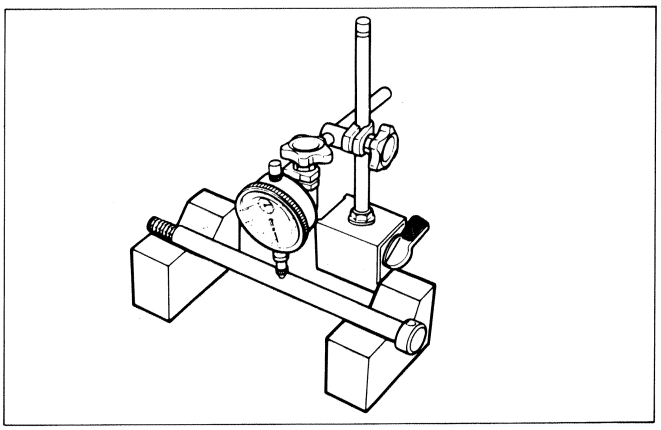

WHEEL

- Make sure that the wheel runout checked as shown, does not exceed the service limit. An excessive runout is usually due to worn or loose wheel bearings and will be reduced by replacing the bearings.
- If bearing replacement fails to reduce the runout, replace the wheel.

Service Limit (Axial and Radial)	2.0 mm (0.08 in)

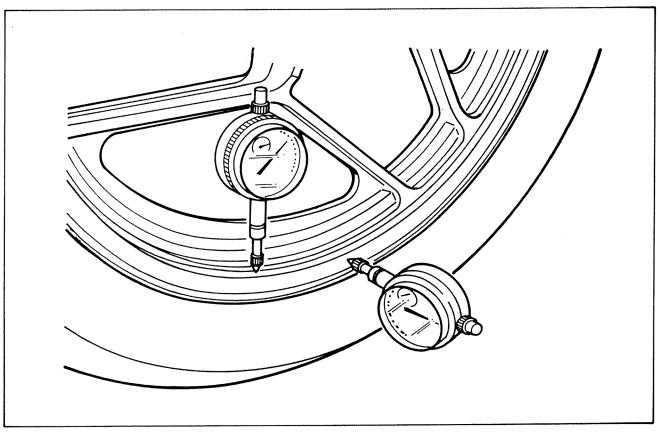

REASSEMBLY

Reassemble and remount the front wheel in the reverse order of disassembly and removal, and also carry out the following steps:

WHEEL BEARING

- Apply grease before install the bearings.

99000-25030	Suzuki super grease "A"

- Install the wheel bearings as follows by using the special tool.

CAUTION:
First install the wheel bearing for left side.

09924 - 84510	Bearing installer set

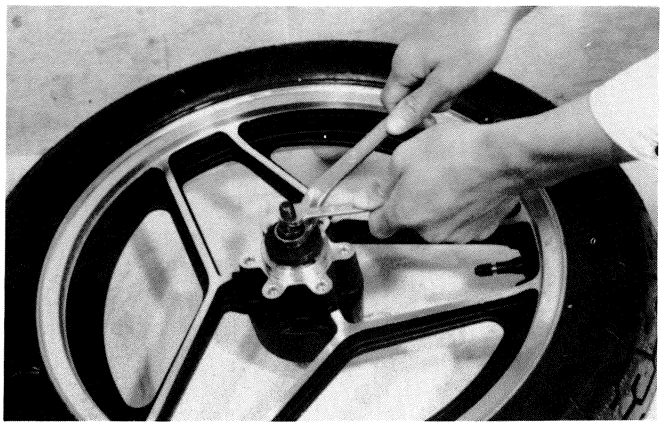

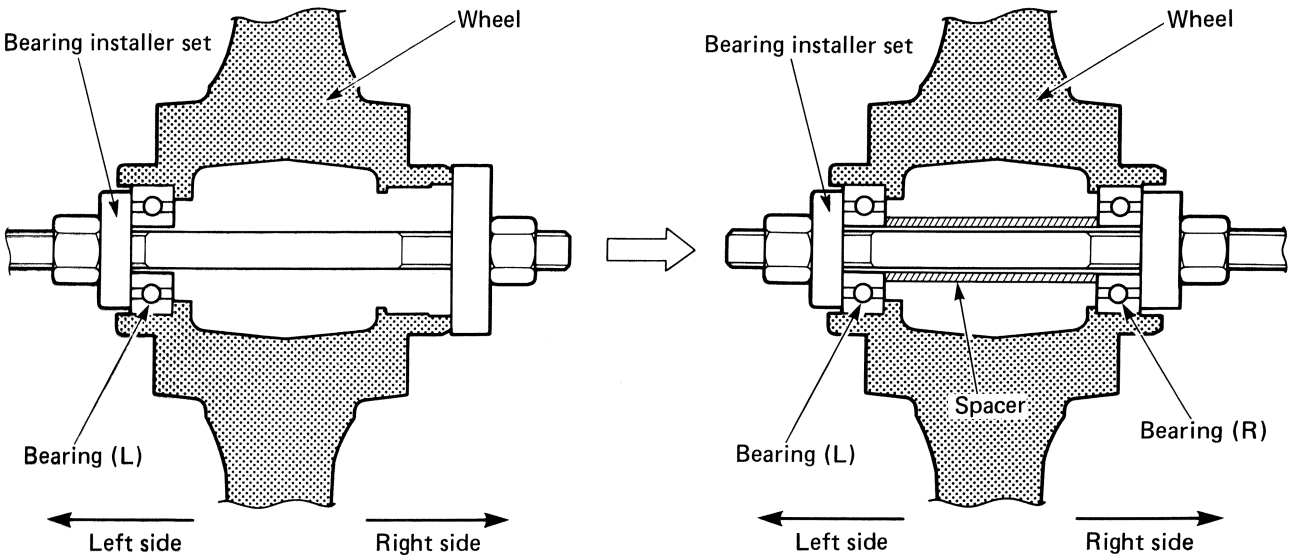

- Mount each brake disc properly according to the stampted marks, "R" or "L", on the respective disc plate.

"R"	Right side
"L"	Left side

NOTE:
There is a dust seal on left disc plate.

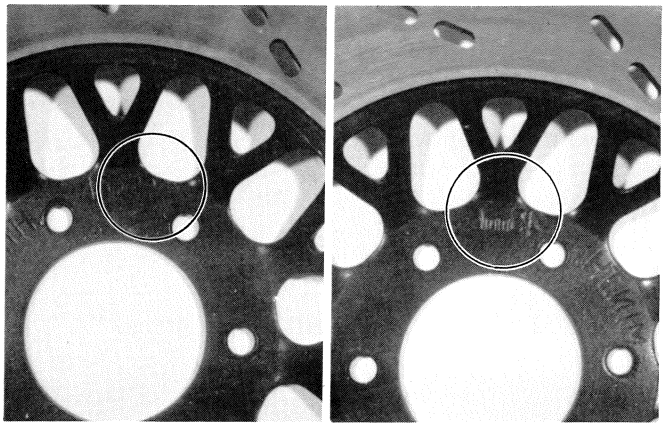

- Make sure that the brake disc is clean and free of any greasy matter. After securing it in place by tightening its bolts, be sure to lock each tongue.

Tightening torque	1.5 – 2.5 kg-m (11.0 – 18.0 lb-ft)

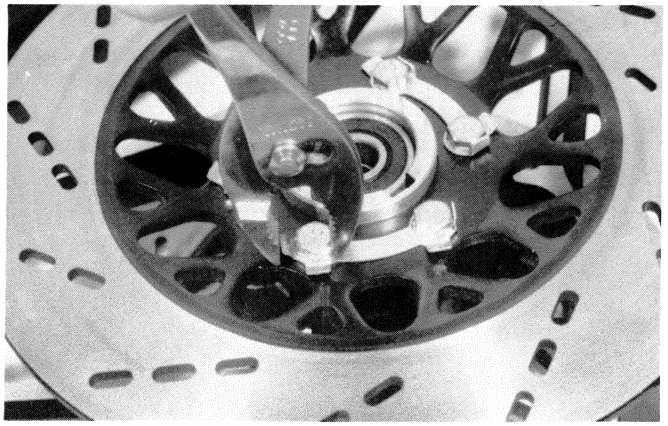

- Before installing the speedometer gearbox ① grease it and align the two drive pawls (for fitting them into the two recesses ② of the wheel hub) and attach the speedometer gearbox to the wheel hub.

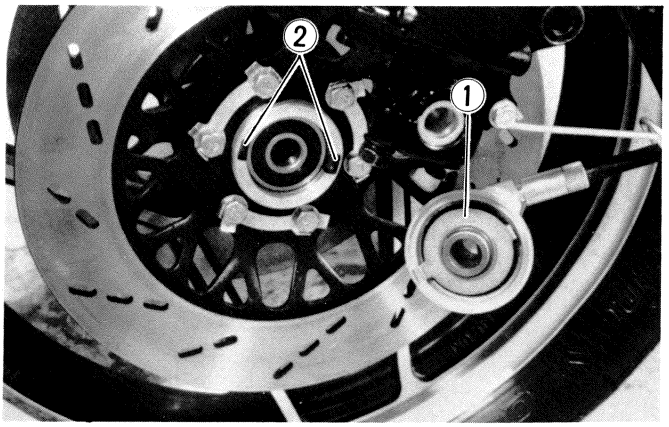

TIGHTENING TORQUE

	kg-m	lb-ft
Axle nut	3.6 – 5.2	26.0 – 37.5
Axle holder nut	1.5 – 2.5	11.0 – 18.0

FRONT FORK

REMOVAL

- Remove the fairing. (See page 7-1)
- Take off the front wheel. (See page 7-3)
- Remove the speedometer cable guide and axle holder.

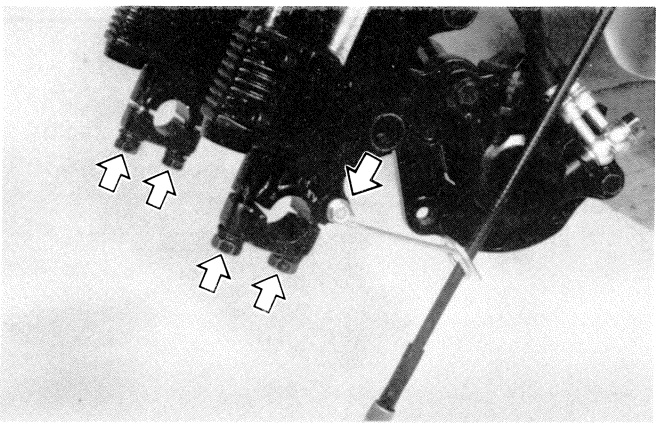

- Remove the modulator plunger from the forks by using the 4 mm hexagon wrench.

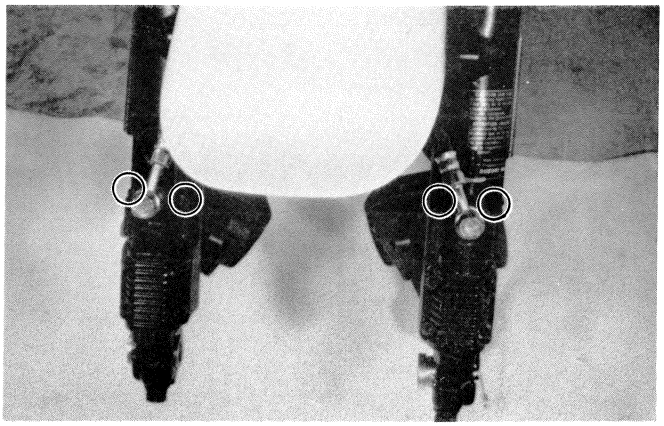

- Remove the fender.

> **CAUTION:**
> **Hang the calipers from the motorcycle frame using string, etc., taking care not to bend the brake hoses.**

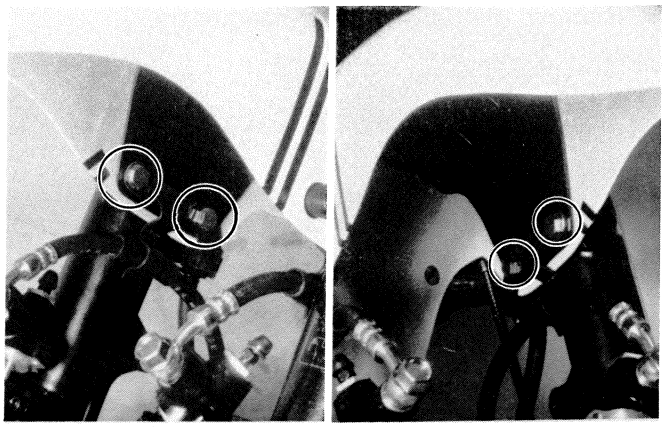

- Remove the valve cap and push in the air valve to relieve the air pressure completely.

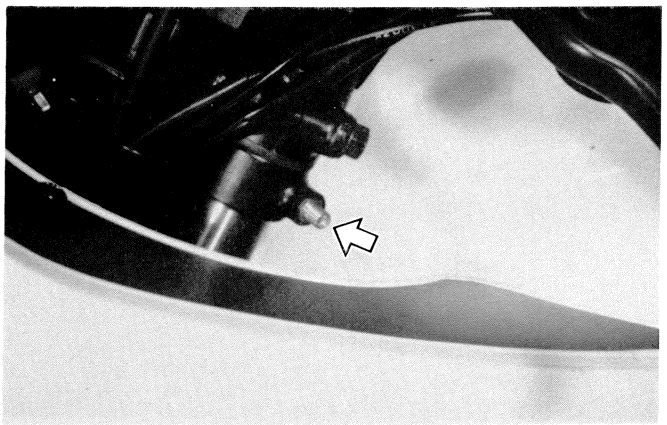

- Loosen the front fork caps.

> **NOTE:**
> **Slightly loosen the front fork caps to facilitate later disassembly before loosening front fork upper and lower clamp bolts.**

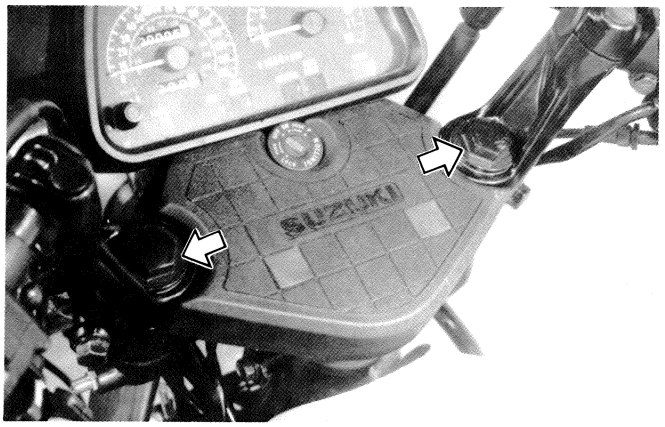

- Remove the steering stem cover.

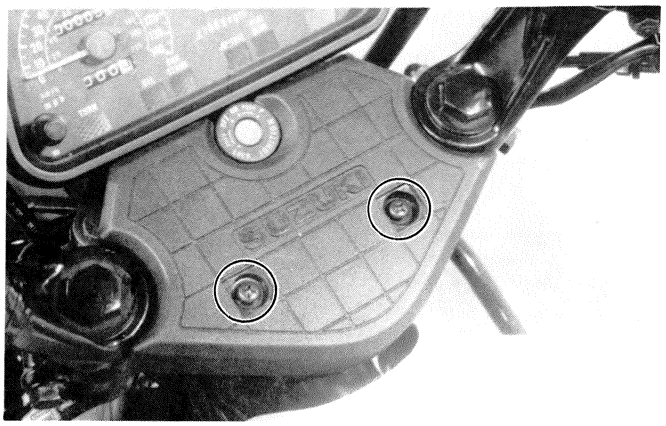

- Remove the right and left handlebars.

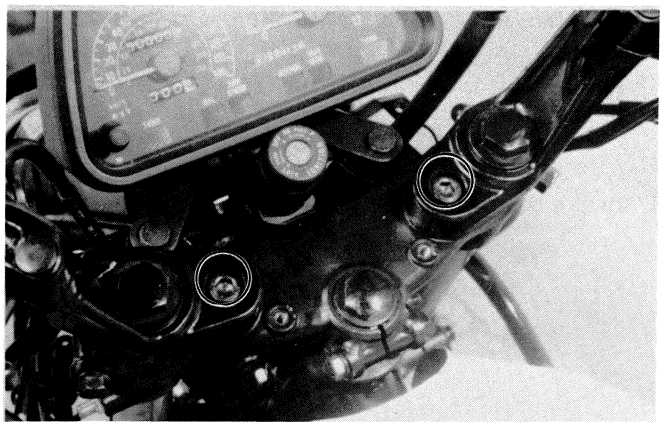

- Loosen the front fork upper and lower clamp bolts.

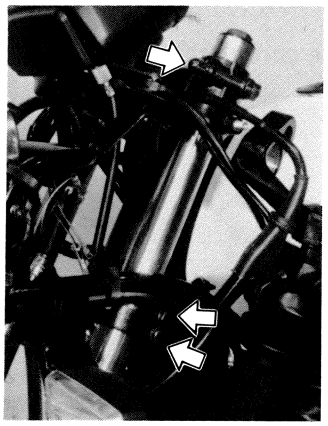

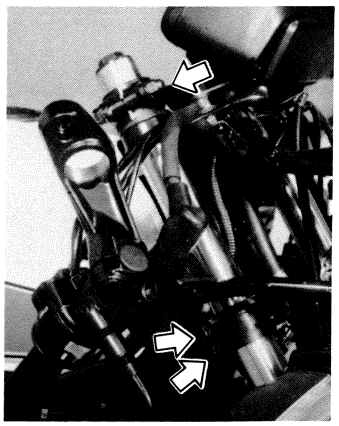

- Remove the stopper ring ① and pull down the right and left front fork assemblies.

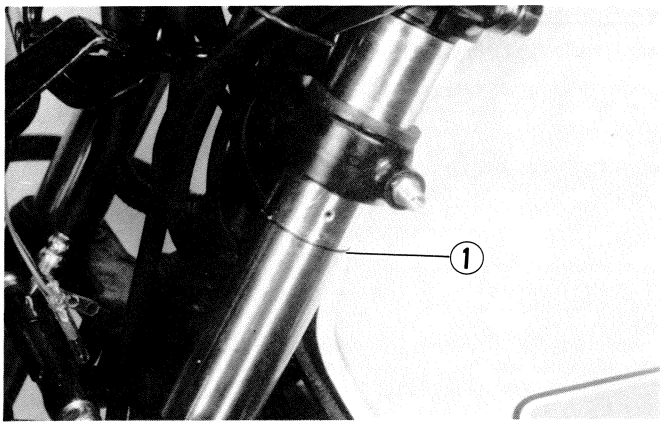

DISASSEMBLY

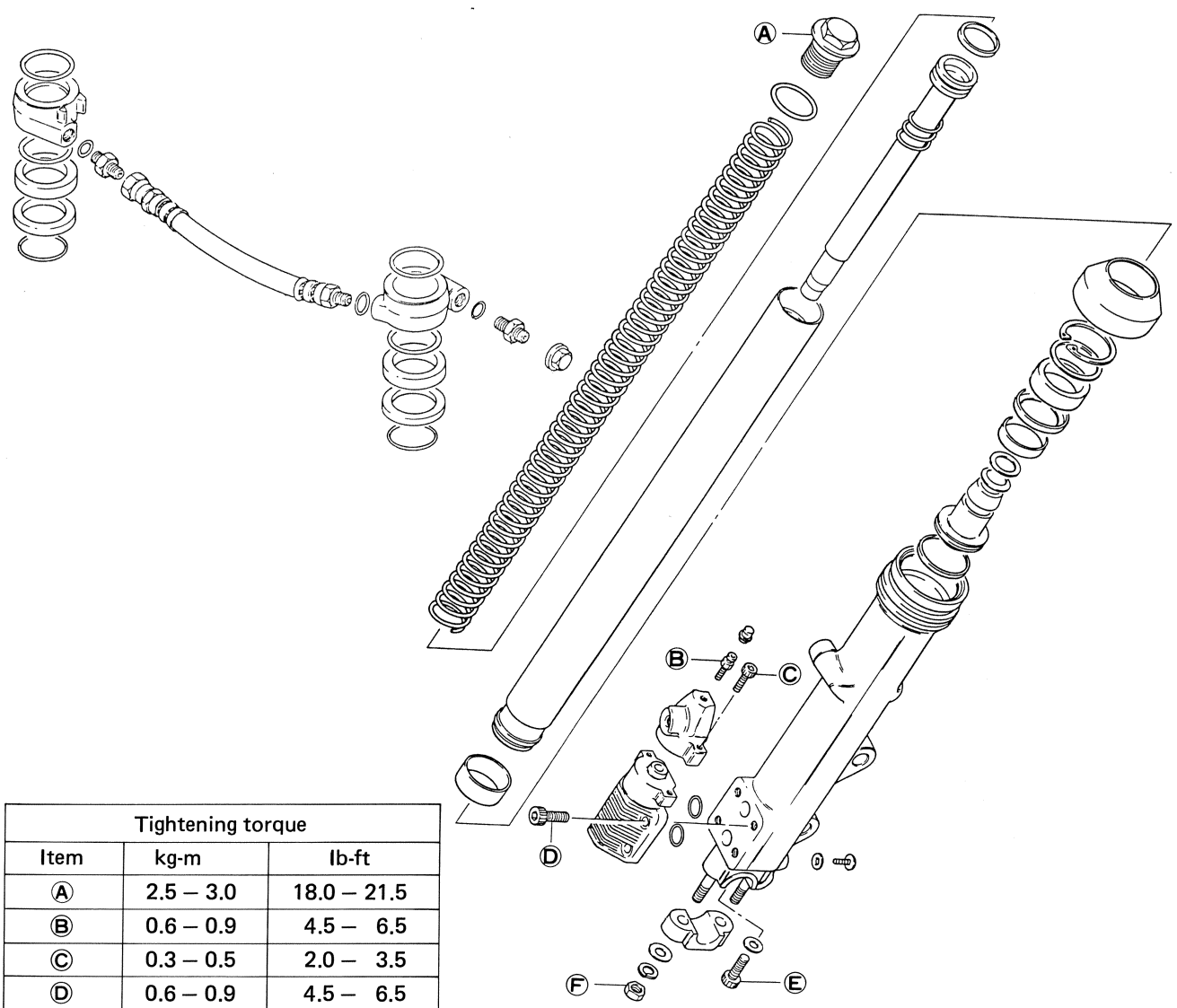

Tightening torque		
Item	kg-m	lb-ft
Ⓐ	2.5 – 3.0	18.0 – 21.5
Ⓑ	0.6 – 0.9	4.5 – 6.5
Ⓒ	0.3 – 0.5	2.0 – 3.5
Ⓓ	0.6 – 0.9	4.5 – 6.5
Ⓔ	1.5 – 2.5	11.0 – 18.0
Ⓕ	1.5 – 2.5	11.0 – 18.0

- Remove the front fork cap.
- Draw out the fork spring.

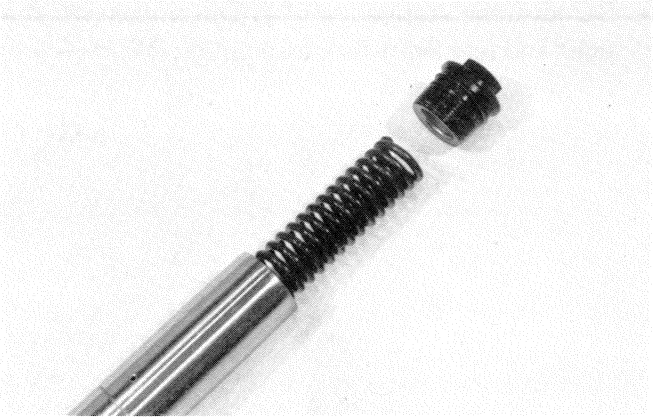

- Invert the fork and stroke it several times to remove the oil.
- Hold the fork inverted for a few minutes.

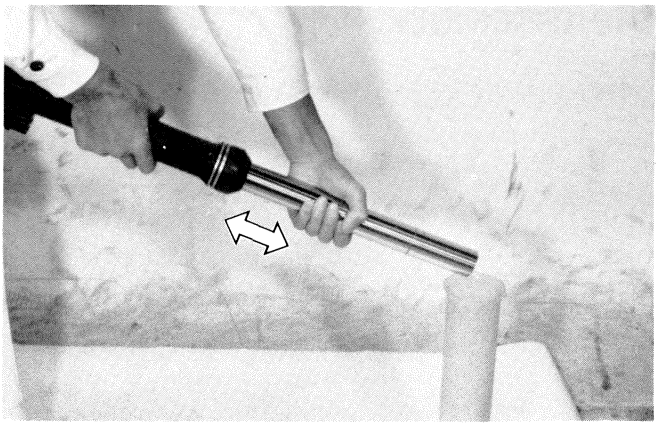

- Remove damper rod securing bolt by using the special tools.

09940-34520	"T" handle
09940-34561	Attachment "D"
09914-25811	"T" type hexagon wrench

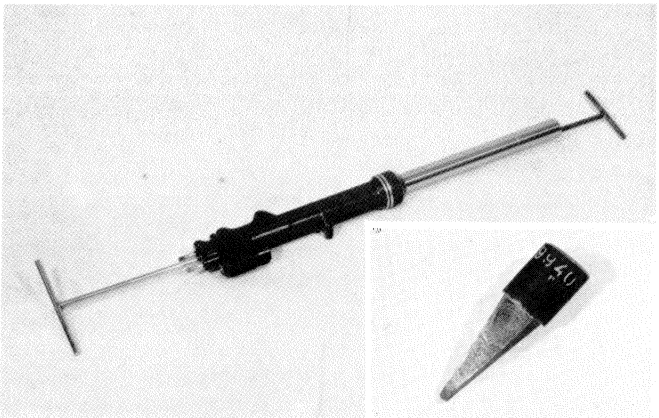

- Draw out the damper rod ① and rebound spring ② .

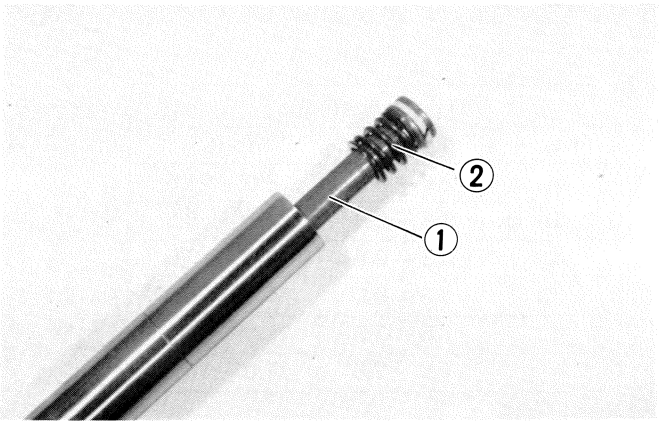

- Draw out dust seal ①
- Remove circlip ② by using special tool and back up ring ③

09900 - 06107	Snap ring pliers

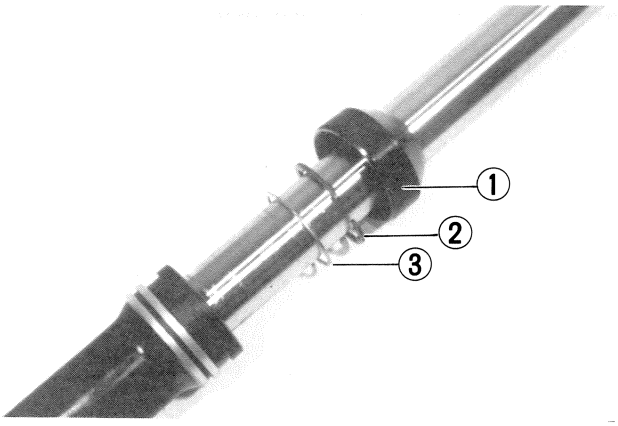

- Separate the inner tube from the outer tube.

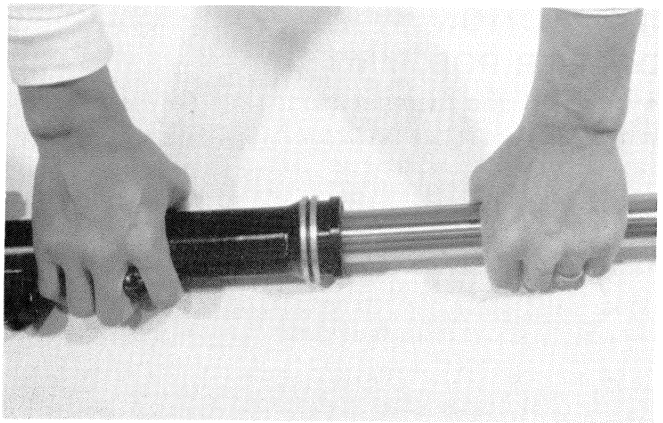

- Draw out the valve ④ , valve spring ⑤ and oil lock piece valve ⑥

CAUTION:
The inner tube "anti-friction" metal ⑦ must be replaced along with the oil seal any time the fork is disassembled.

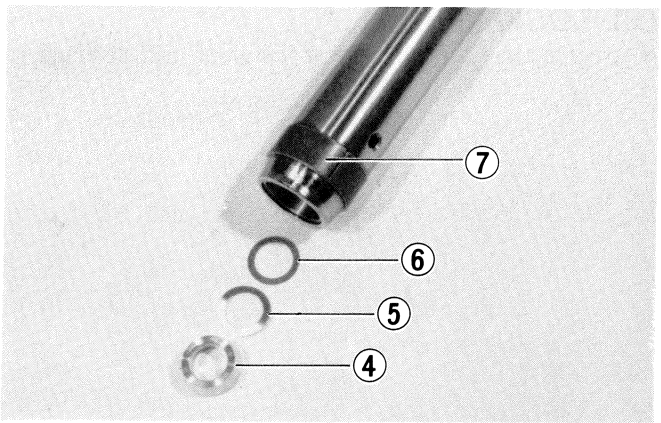

- Draw out oil seal ⑧ by using special tool.

09913 - 50121	Oil seal remover

- Draw out spacer ⑨ metal ⑩ and oil lock piece ⑪

CAUTION:
The removed oil seal should be replaced. The "anti-friction" metal ⑩ must be replace along with the oil seal ⑧ any time the fork is disassembled.

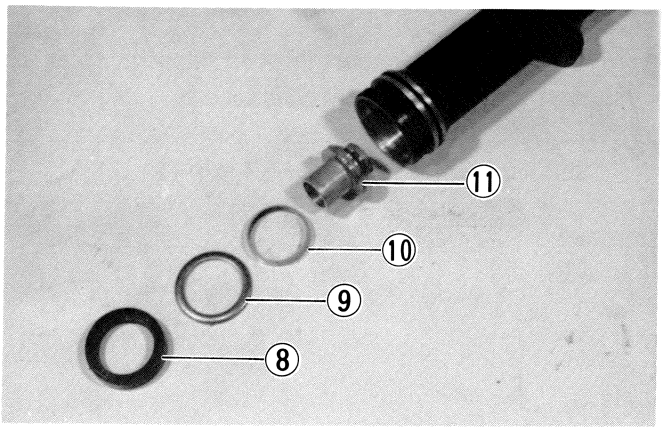

- Remove the modulator valve assembly, by using 5 mm hexagon wrench.

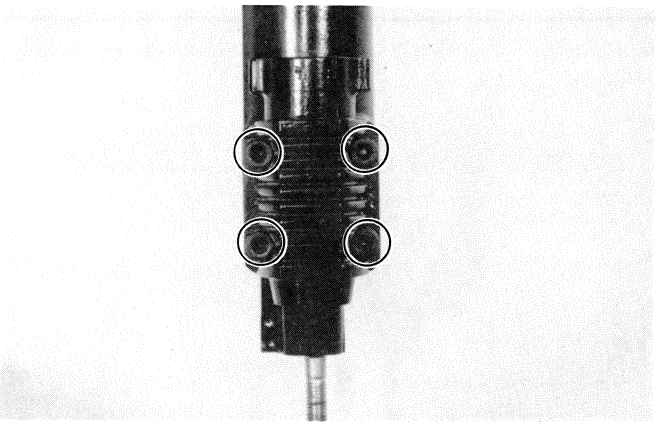

INSPECTION

DAMPER ROD RING

- Inspect the damper rod ring for wear and damage.

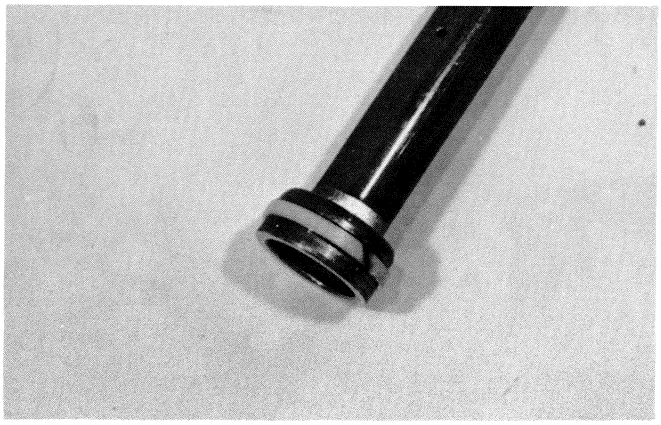

OIL LOCK PIECE

- Inspect the oil lock piece for wear and damage.

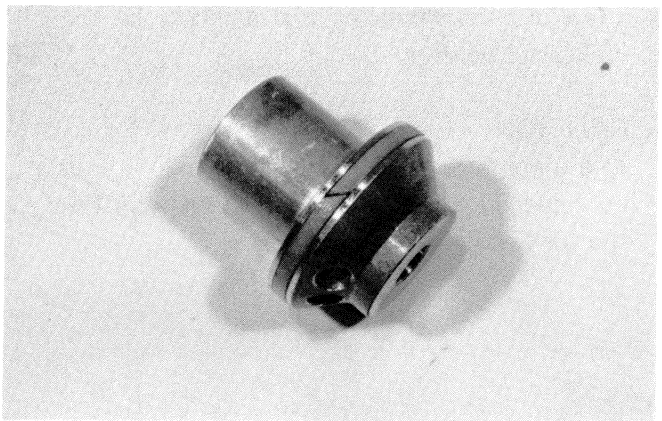

FORK SPRING

- Measure the fork spring free length. If it is shorter than service limit, replace it.

Service Limit	533 mm (21.0 in)

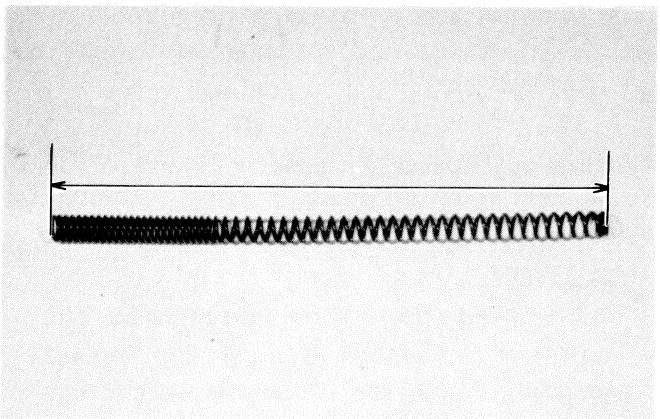

INNER TUBE

- Inspect the inner tube outer surface for any scuffing.

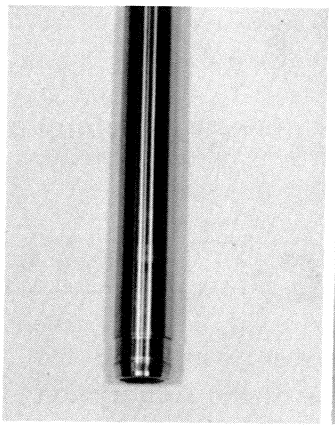

OUTER TUBE

- Inspect the outer tube inner surface for any scuffing.

MODULATOR PLUNGER ASSEMBLY AND VALVE ASSEMBLY

- After separating the modulator plunger from the modulator valve, inspect each sliding part for leakage of brake fluid or fork oil.
- If any defect is found, replace affected unit with new one.

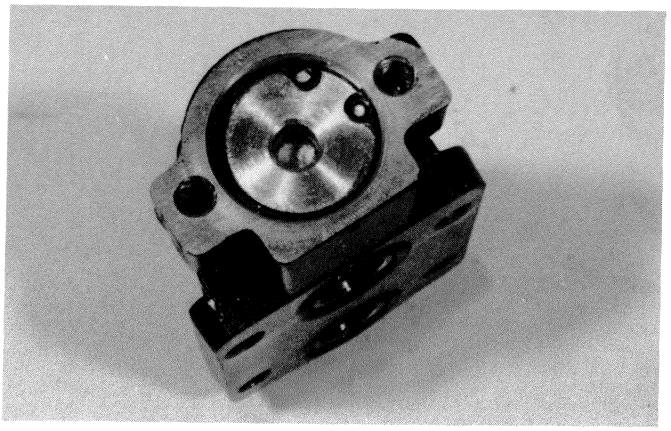

> **NOTE:**
> **Modulator plunger and valve is only available as a replacement unit.**

MODULATOR VALVE O-RINGS

- Inspect the O-rings located between modulator valve and front fork for wear or damage.

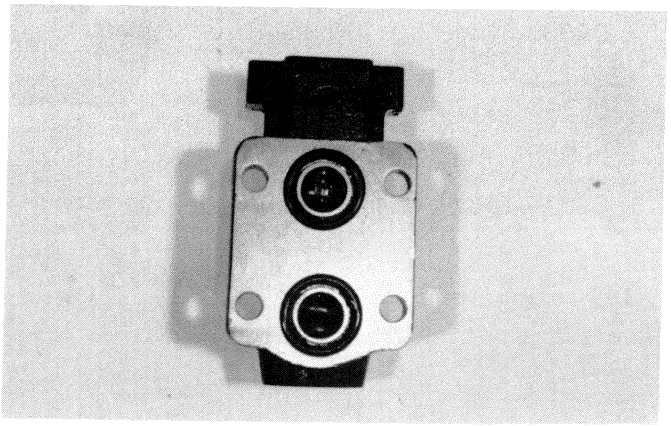

AIR JOINT

- Inspect the air joint O-rings for damage or wear.

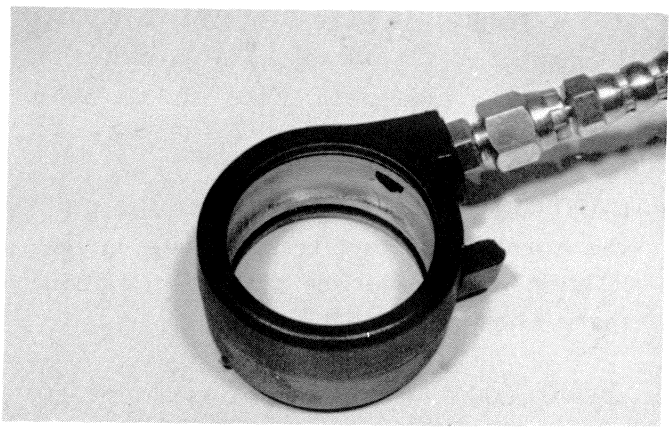

REASSEMBLY

Reassemble and remount the front fork in the reverse order of disassembly and removal, and also carry out the following steps.

INNER TUBE METAL

- Install the metal by hand as shown.

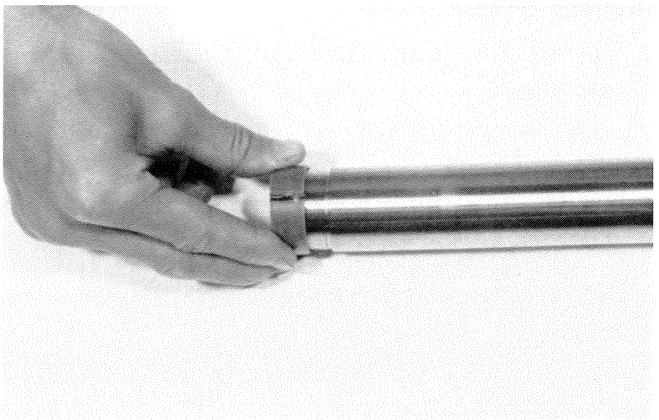

> **CAUTION:**
> **Use special care to prevent damage to the "Teflon" coated surface of the Anti-friction metal when mouting it.**

OIL LOCK PIECE, VALVE AND VALVE SPRING

- Install the oil lock piece, valve and valve spring as shown in figure.

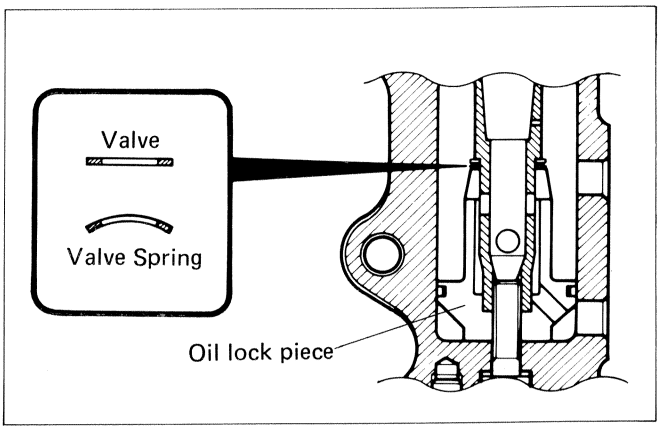

DAMPER ROD BOLT

- Apply SUZUKI Bond No. 1207B and Thread Lock Cement to the damper rod bolt and tighten with specified torque.

99104-31140	SUZUKI Bond No. 1207B
99000-32040	Thread Lock Cement

09940-34520	"T" handle
09940-34561	Attachment "D"
09914-25811	"T" type hexagon wrench

Tightening torque	1.5 – 2.5 kg-m (11.0 – 18.0 lb-ft)

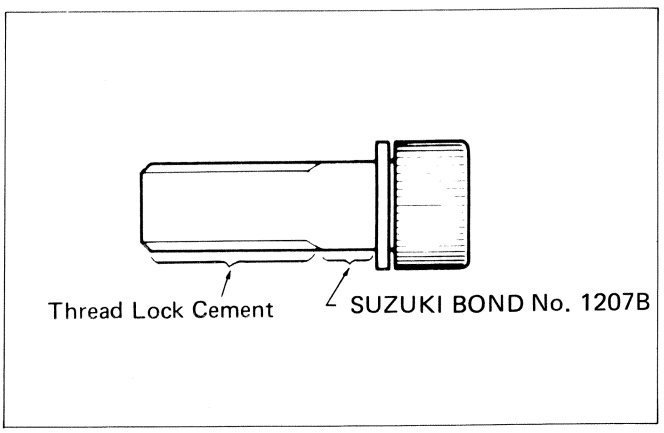

OUTER TUBE METAL, SPACER AND OIL SEAL

- Install outer tube metal, spacer and oil seal by using special tool as shown.

> **CAUTION:**
> **Use special care to prevent damage to the "Teflon" coated surface of the anti-friction metal when mounting it.**

09940-50112	Front fork oil seal installer

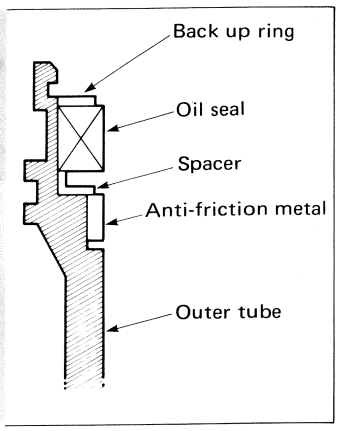

MODULATOR VALVE

- Apply Thread Lock "1363C" to the bolts and tighten to the specified torque.

99104-32050	Thread Lock "1363C"

Tightening torque	0.6 – 0.9 kg-m (4.5 – 6.5 lb-ft)

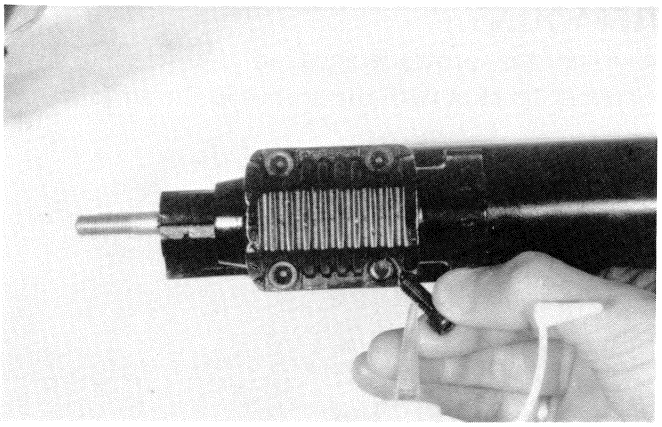

FORK OIL

- For the fork oil, be sure to use a motor oil whose viscosity rating meets specifications below.

Fork oil	Fork oil #10
Capacity	308 ml (10.4 US oz)

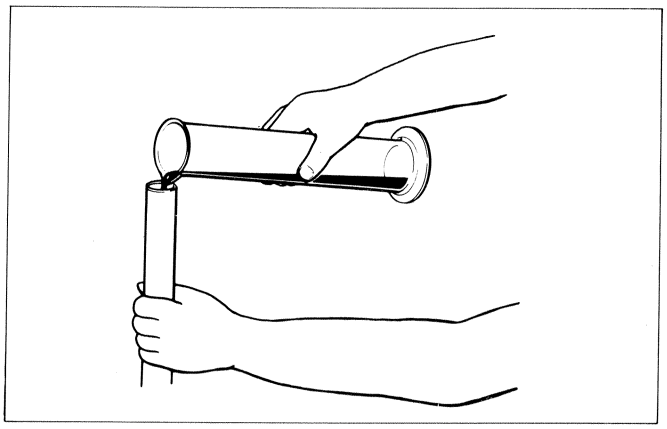

- Hold the front fork vertical and adjust the fork oil level with the special tool.

NOTE:
When adjusting oil level, remove the fork springs and compress the inner tube fully.

09943-74111	Fork oil level gauge
Oil level	170 mm (6.7 in)

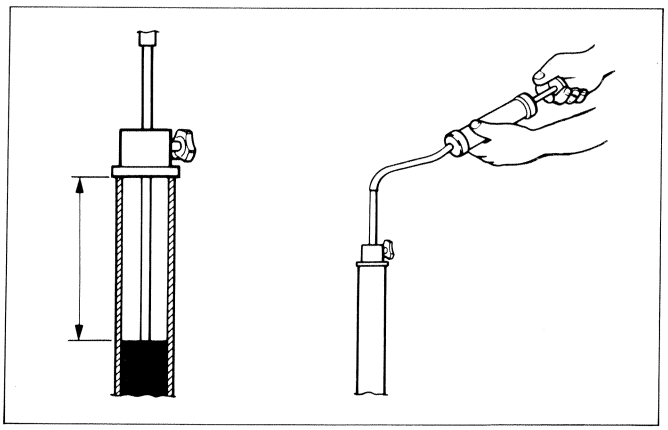

FORK SPRING

- Install the fork spring, as shown in figure.

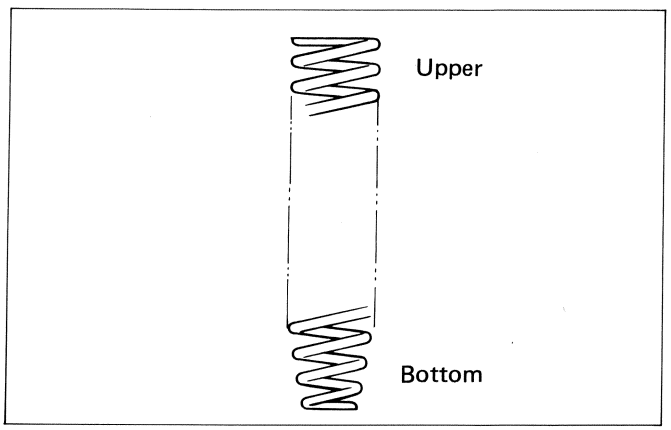

REMOUNT

- Align the protruberance on the steering stem upper bracket with the groove in the air joint.

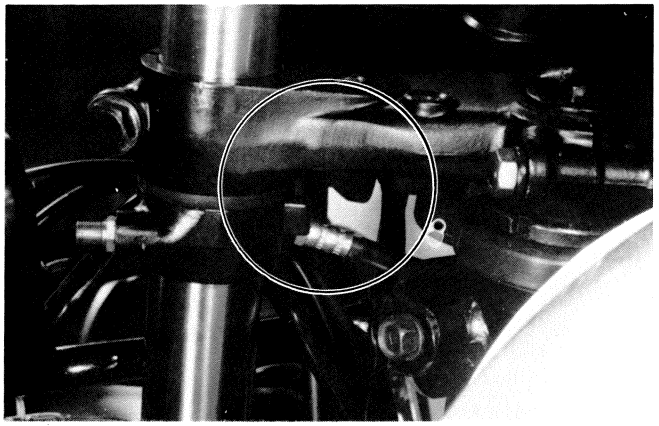

- When attaching the handlebar, align the upper surface of the inner tube ① and the upper surface of the handlebar holder ② .

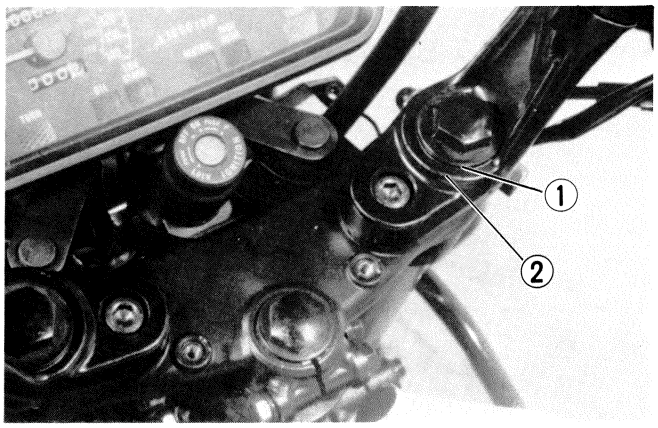

- Tighten the upper and lower clamp bolts to the specified torque.

Tightening torque	Upper	2.0 – 3.0 kg-m (14.5 – 21.5 lb-ft)
	Lower	1.5 – 2.5 kg-m (11.0 – 18.0 lb-ft)

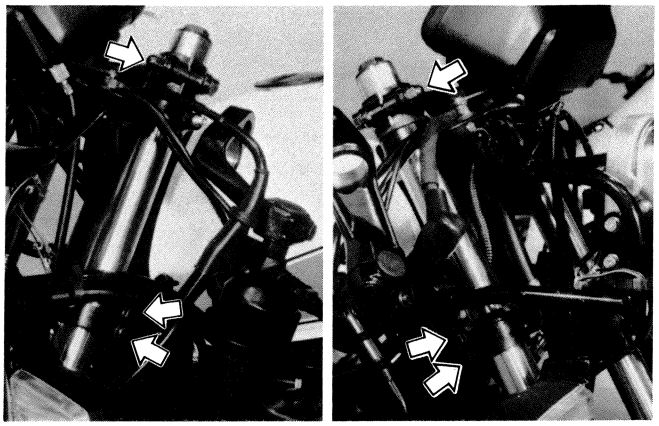

- Tighten the front fork cap.

Tightening torque	2.5 – 3.0 kg-m (18.0 – 21.5 lb-ft)

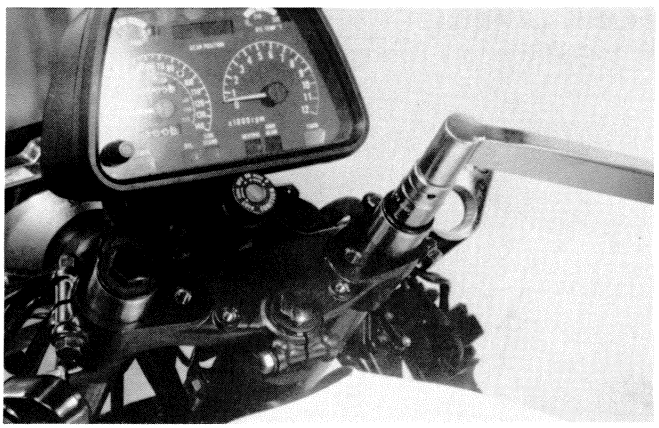

- Tighten the handlebar holder bolts to the specified torque.

Tightening torque	2.5 – 3.5 kg-m (18.0 – 25.5 lb-ft)

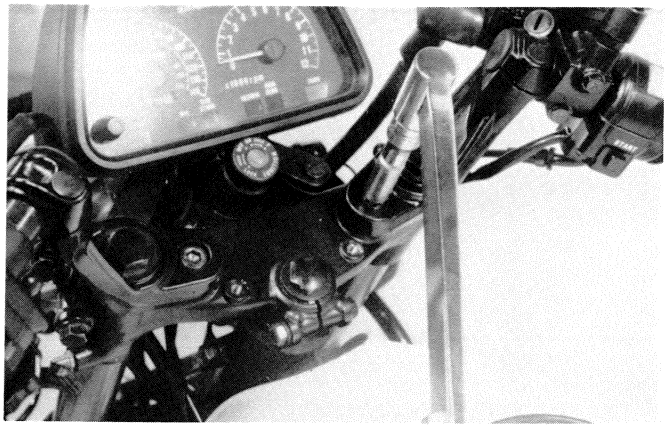

AIR PRESSURE ADJUSTMENT

- Lift up the front wheel by a jack till it becomes free from any burden, and remove the valve cap ① .

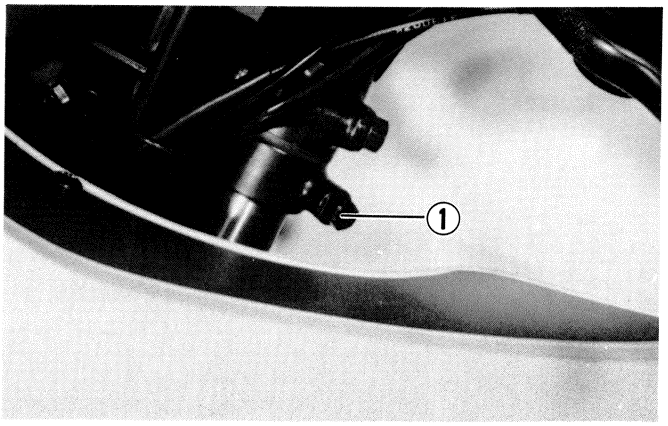

- Set the air pressure gauge to the valve ② . Set the hand pump to the valve ③ , turn the valve handle ④ clockwise, and charge the air.
  Let the air out by loosening the handle ④ till the specified air pressure is left inside.

STD Air pressure	0.2 kg/cm² (2.8 psi)

CAUTION:
Do not charge air more than 2.5 kg/cm² (35.5 psi).

09940-44120	Air pressure gauge

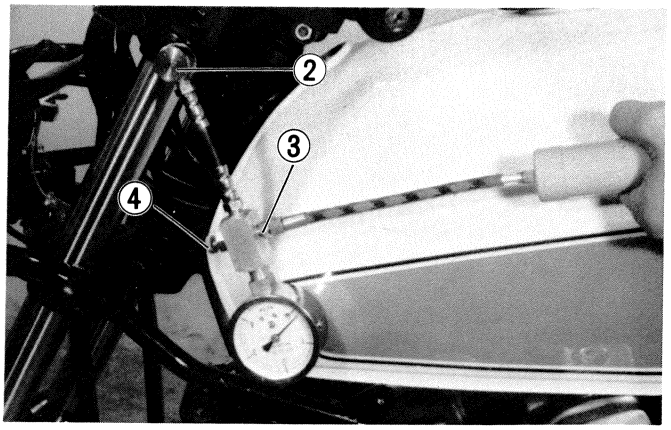

STEERING STEM

REMOVAL AND DISASSEMBLY

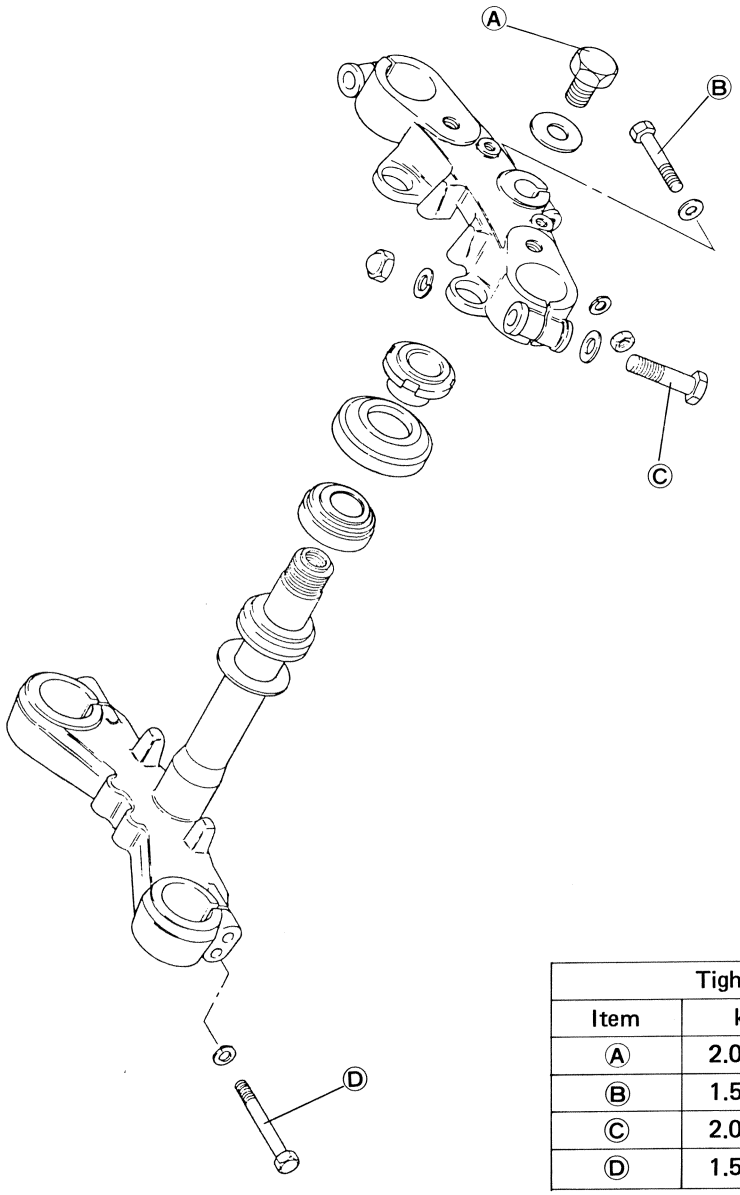

Tightening torque		
Item	kg-m	lb-ft
A	2.0 – 3.0	14.5 – 21.5
B	1.5 – 2.5	11.0 – 18.0
C	2.0 – 3.0	14.5 – 21.5
D	1.5 – 2.5	11.0 – 18.0

- Remove the fairing and brace (See pages 7-1 and 7-2). (GS750ES)
- Remove the front wheel. (See page 7-3)
- Remove the front fork. (See page 7-8)
- Remove the combination meter cover.

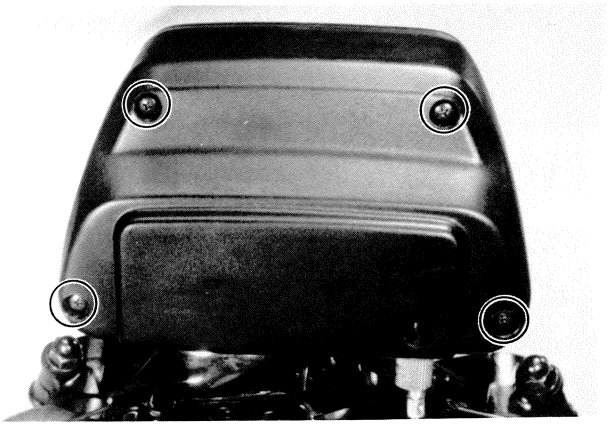

- Disconnect the combination meter coupler and speedometer cable.
- Remove the combination meter and ignition switch from steering stem upper bracket.

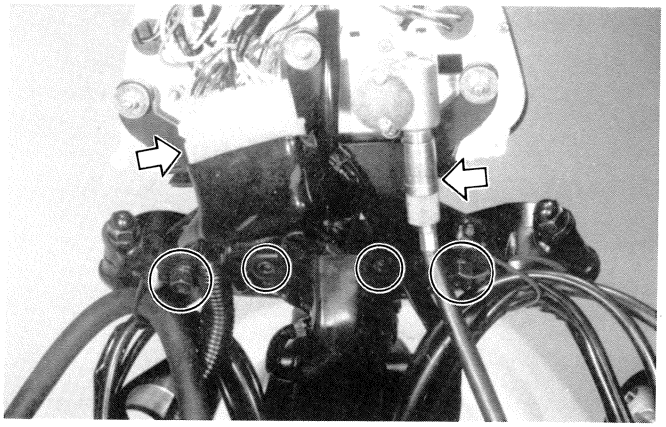

- Remove the brake hose joint bolts.

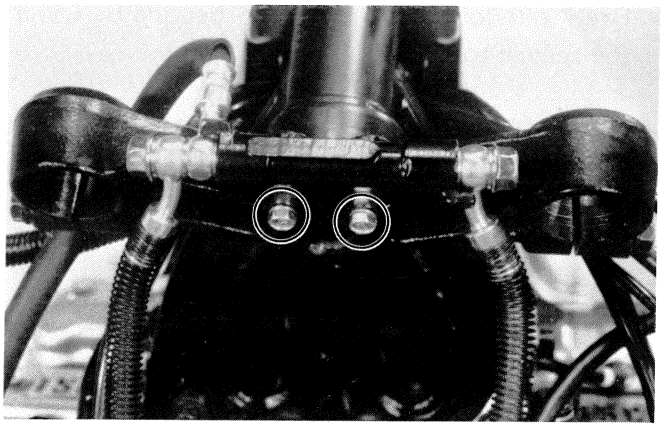

- Remove the steering stem head bolt ① and loosen the clamp bolt ②, then take off the steering stem upper bracket.

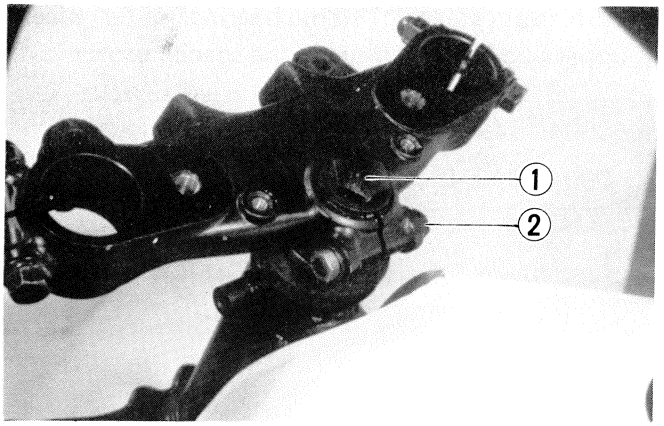

- Remove the steering stem nut by using the special tool, then draw out the steering stem.

09940-14911	Steering nut socket wrench

NOTE:
Hold the steering stem lower bracket by hand to prevent from falling.

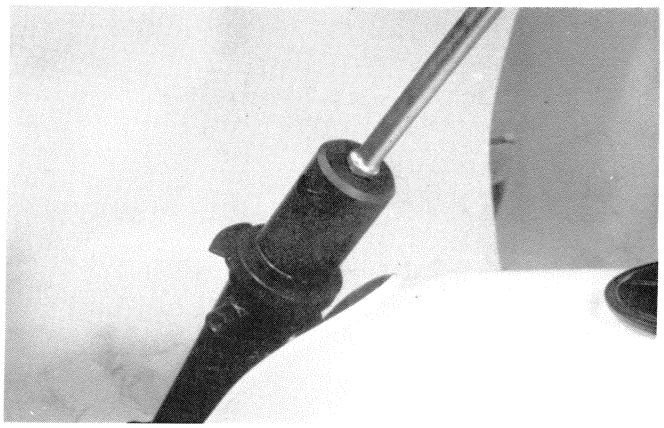

- Draw out the steering stem upper bearing.

- Draw out lower steering stem bearing by using the special tool.

CAUTION: The removed bearing should be replaced.

09941-84510	Bearing inner race remover

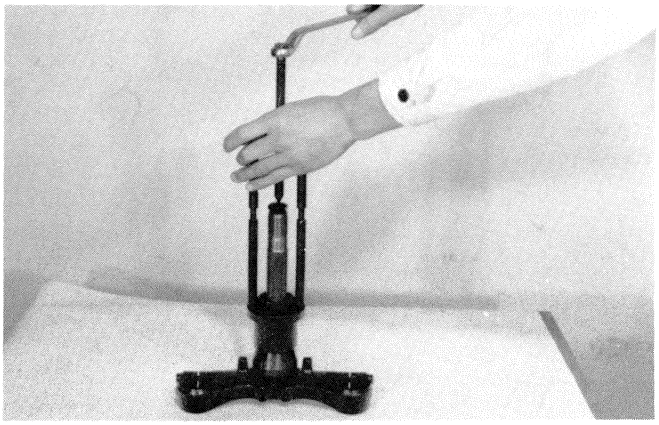

- Push out steering stem bearing outer races, upper and lower, by using the special tools.

09941-54911	Steering race remover
09941-74910	Steering bearing installer

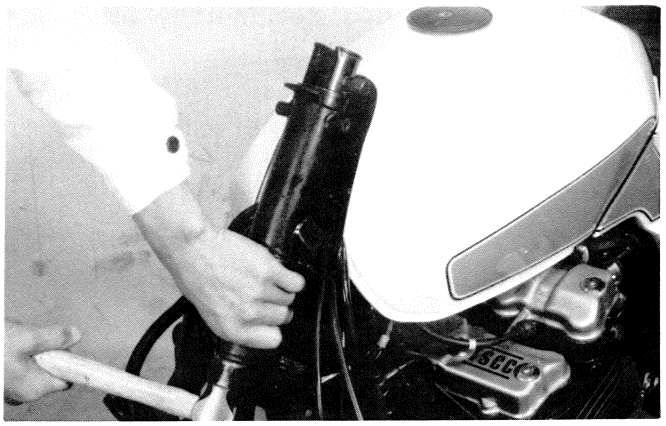

REASSEMBLY

Reassemble and remount the steering stem in the reverse order of disassembly and removal, and also carry out the following steps:

OUTER RACES

Press in the upper and lower outer races using the special tool.

09941-34511	Steering race installer

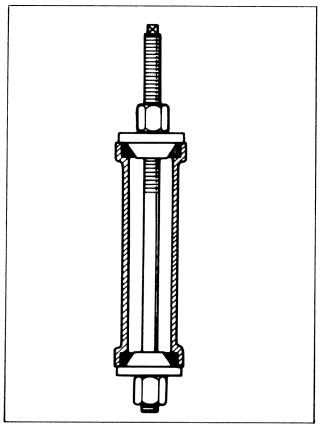

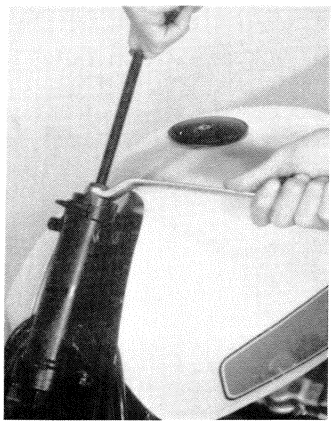

BEARING

- Press in the lower bearings by using the special tool.

09941-74910	Steering bearing installer

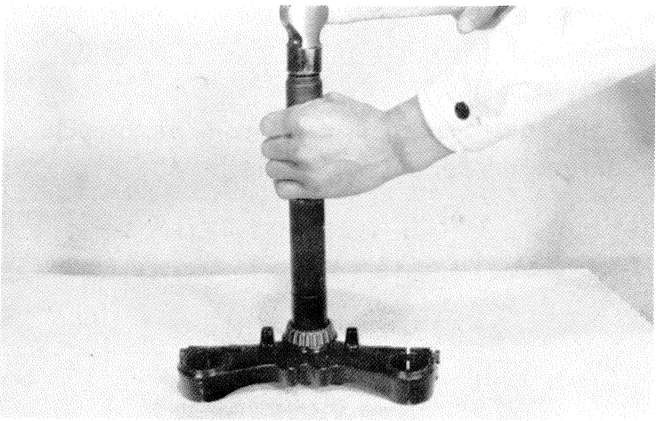

- Apply grease to the upper and lower bearings before remounting the steering stem.

99000-25030	SUZUKI Super grease "A"

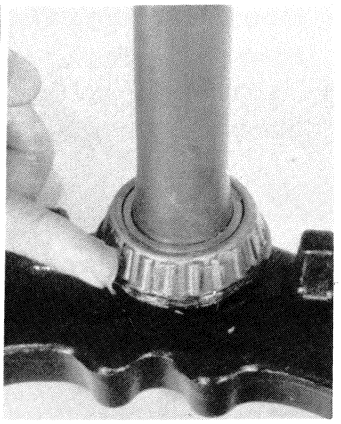

STEERING STEM NUT

- Tighten the steering stem nut to 4.0 – 5.0 kg-m (29.0 – 36.0 lb-ft) by using the special tool.

09940-14911	Steering nut socket wrench

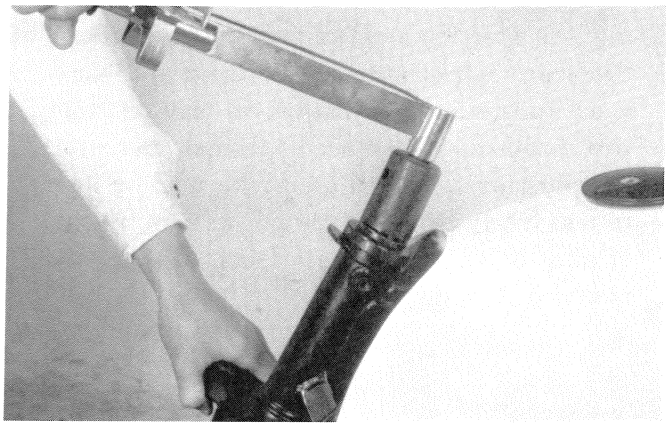

- Turn the steering stem right and left, lock-to-lock, five or six times to "seat" the bearings.

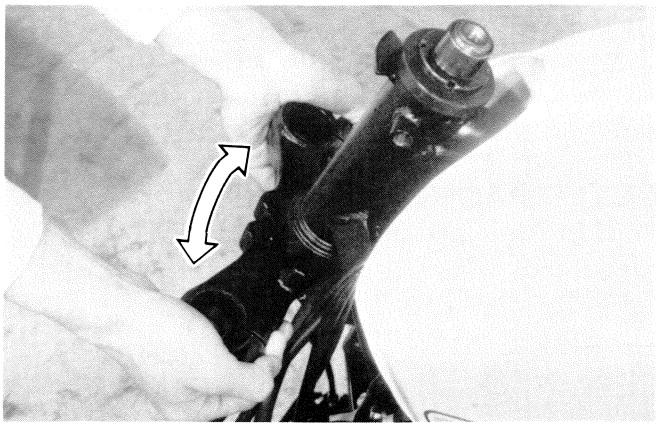

- Turn back the stem nut by 1/4 – 1/2 turn.

NOTE:
This adjustment will vary from motorcycle to motorcycle.

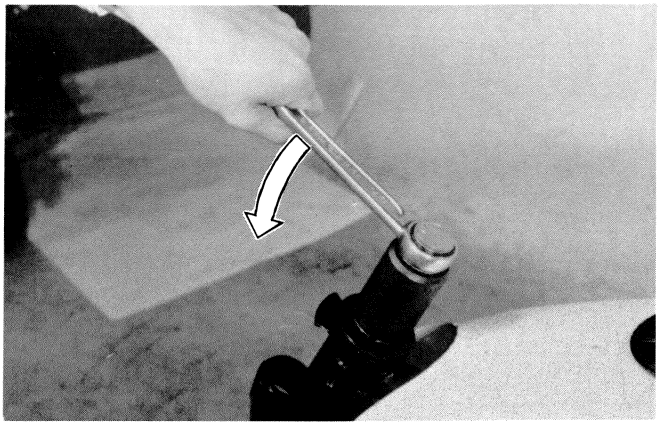

- Mount the front fork to the steering stem upper bracket.
- Tighten the steering stem head bolt ① and clamp nut ② with specified torque.

Tightening torque	①	2.0 – 3.0 kg-m (14.5 – 21.5 lb-ft)
	②	1.5 – 2.5 kg-m (11.0 – 18.0 lb-ft)

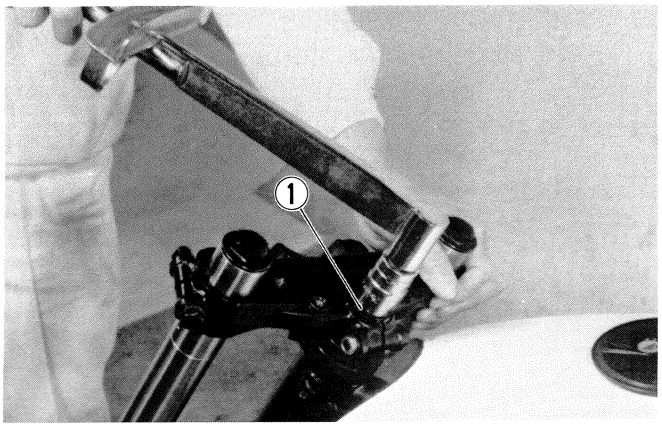

CAUTION:
After performing the adjustment and installing the steering stem upper bracket, "rock" the front wheel assembly forward and backward to ensure that there is no play and that the procedure was accomplished correctly. Finally check to be sure that the steering stem moves freely from left to right its own weight. If play or stiffness is noticeable, re-adjust the steering stem nut.

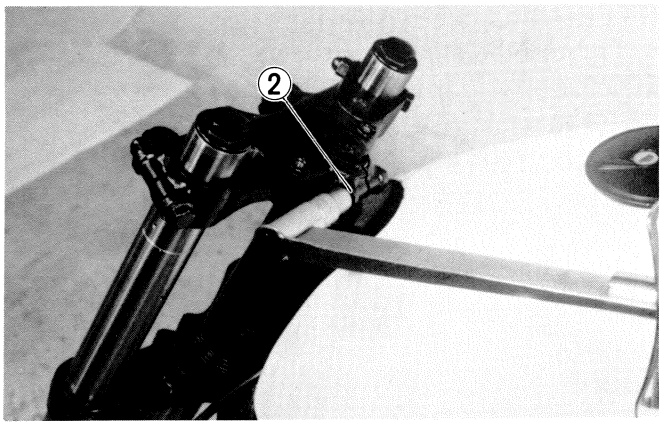

FRONT BRAKE

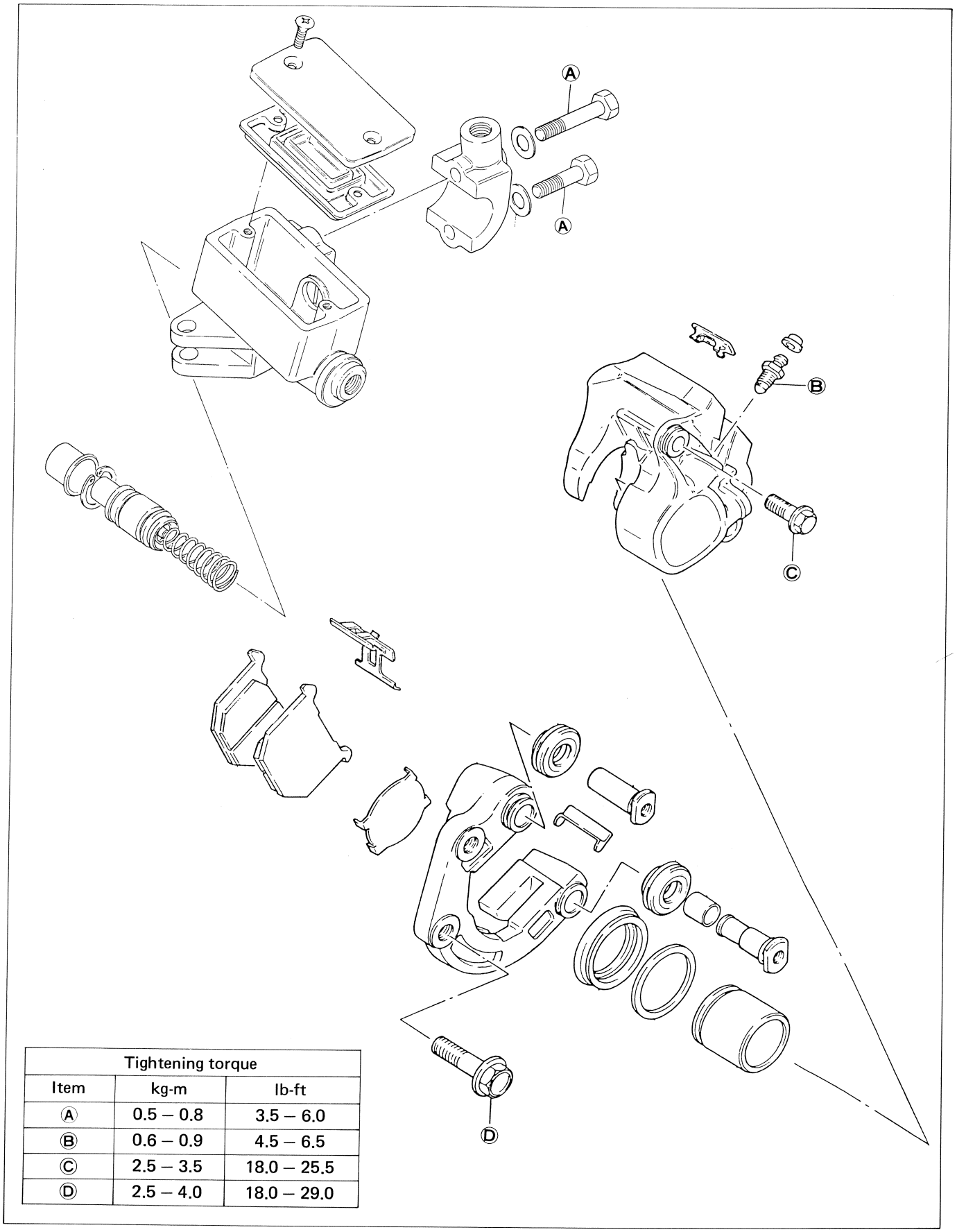

Tightening torque		
Item	kg-m	lb-ft
Ⓐ	0.5 – 0.8	3.5 – 6.0
Ⓑ	0.6 – 0.9	4.5 – 6.5
Ⓒ	2.5 – 3.5	18.0 – 25.5
Ⓓ	2.5 – 4.0	18.0 – 29.0

BRAKE PAD REPLACEMENT

- Remove the caliper axle bolts and take off the caliper.

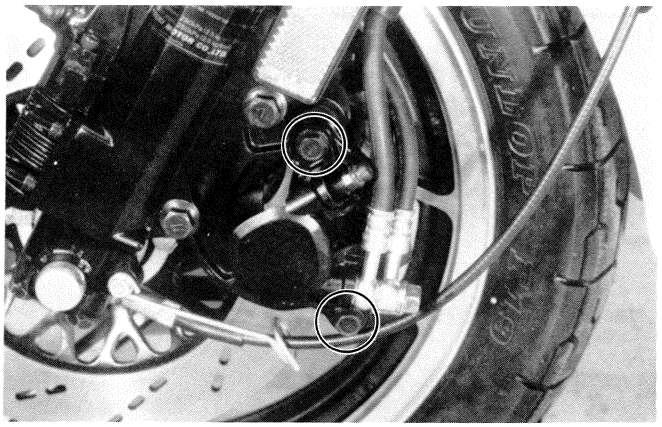

> **CAUTION:**
> **Do not operate the brake lever while dismounting the caliper.**

- Take off the brake pads.

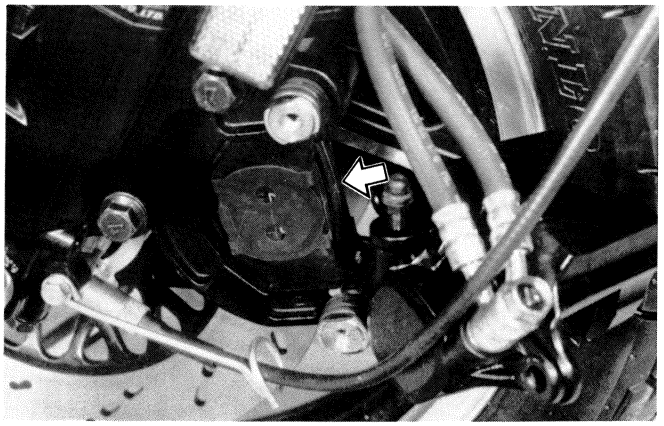

> **CAUTION:**
> **Replace the brake pad as a set, otherwise braking performance will be adversely affected.**

- Push in the piston all the way to the caliper when remounting the caliper.

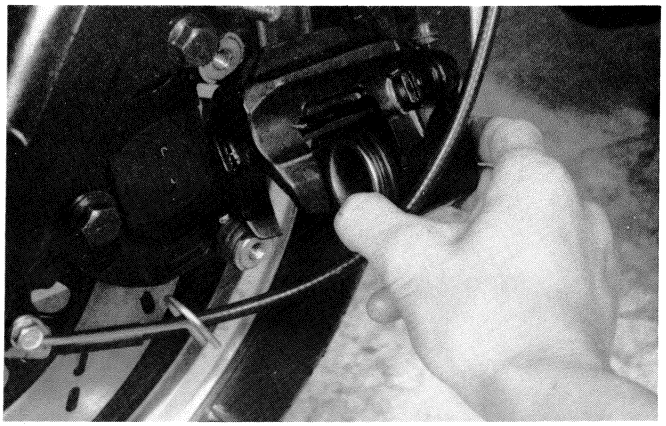

- Apply SUZUKI Silicone grease to the caliper axles.
- Tighten the caliper axles to the specified torque.

99000-25100	SUZUKI Silicone grease

Tightening torque	2.5 – 3.5 kg-m (18.0 – 25.5 lb-ft)

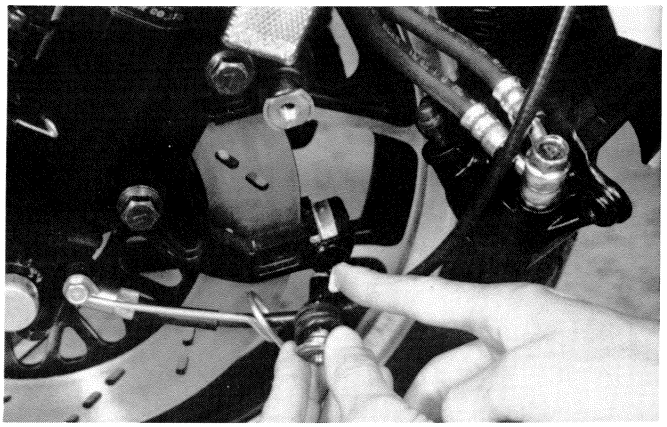

CALIPER REMOVAL AND DISASSEMBLY

- Disconnect the brake hoses and catch the brake fluid in a suitable receptable.
- Remove the caliper mounting bolts and take off the caliper.

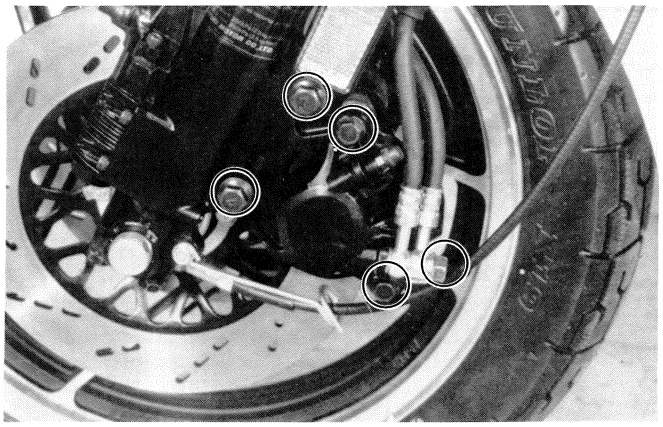

> **NOTE:**
> **Slightly loosen the caliper axle bolts to facilitate later disassembly before loosening the caliper mounting bolts.**

- Remove the caliper axle bolts, separate the caliper and caliper holder.

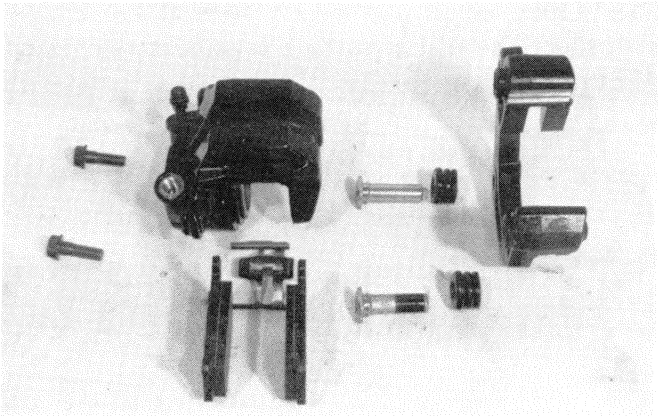

- Place a rag over the piston to prevent the piston from popping up.
  Force out the piston by using air gun.

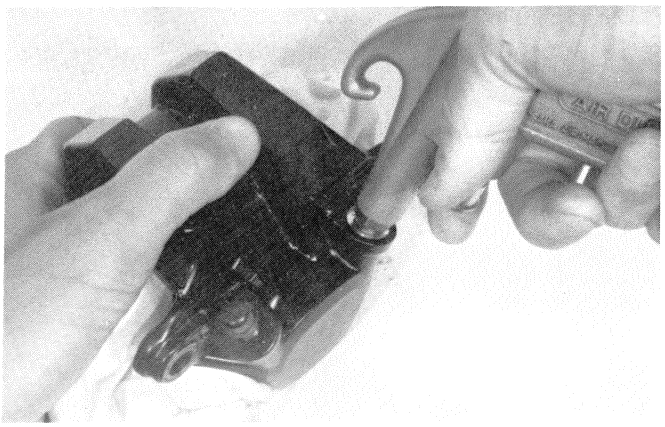

> **CAUTION:**
> **Do not use high pressure air to prevent piston damage.**

- Remove dust boot and piston seal.

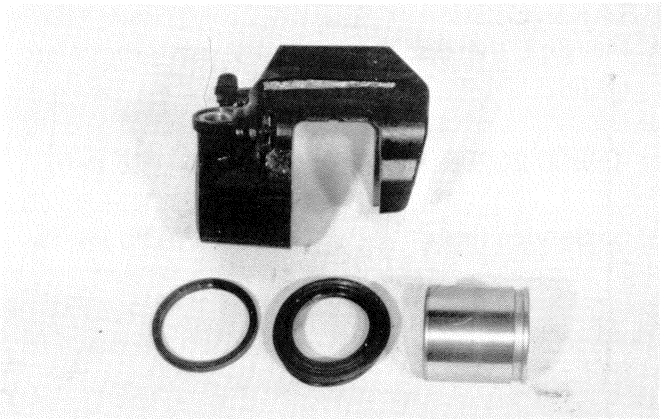

CALIPER AND DISC INSPECTION

CALIPER CYLINDER

- Inspect the cylinder bore wall for nick, scratch or other damage.

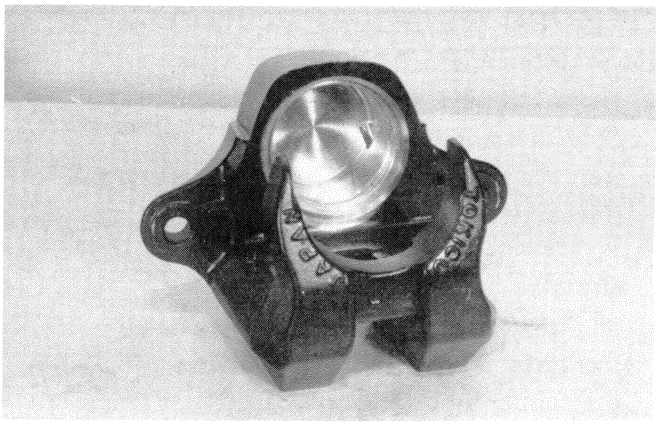

PISTON

- Inspect the piston surface for any scratches or other damage.

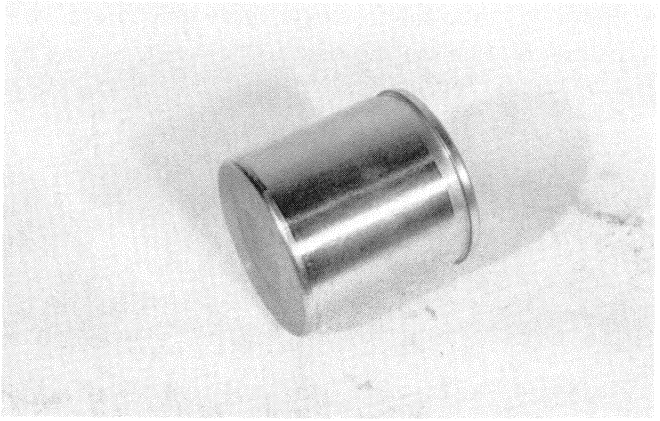

RUBBER PARTS

- Inspect the each rubber part for damage and wear.

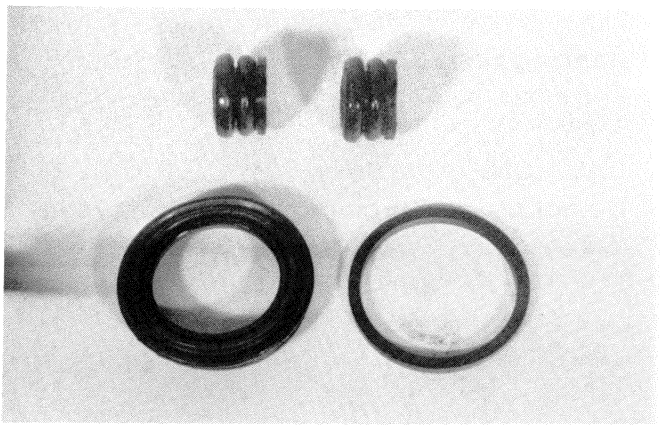

BRAKE DISC

- Measure the disc thickness by using the micrometer.

09900-20205	Micrometer (0 – 25 mm)
Service limit	5.0 mm (0.20 in)

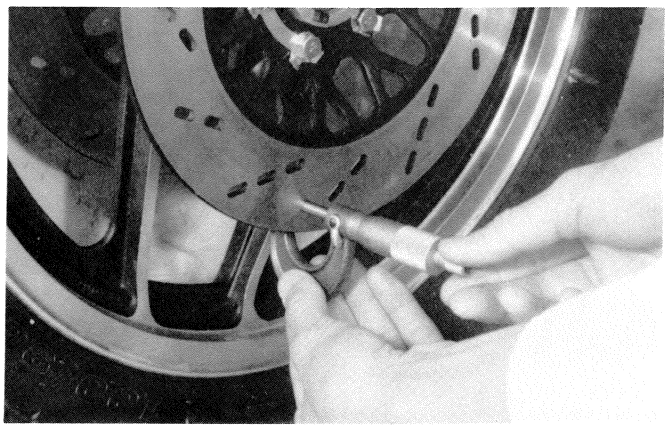

- With the disc mounted on the wheel, check the disc for face runout with a dial gauge, as shown.

09900-20606	Dial gauge (1/100)
Service limit	0.30 mm (0.012 in)

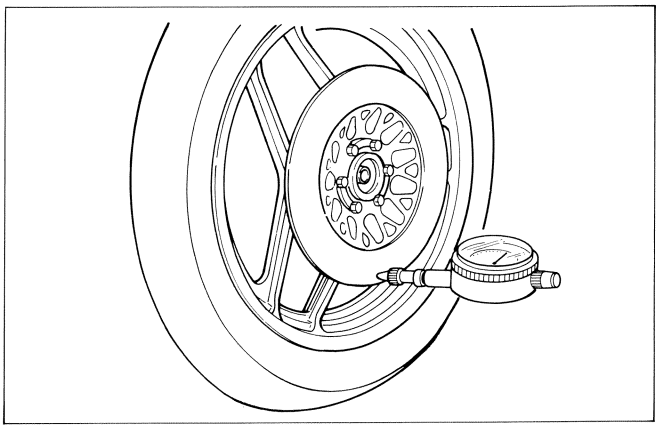

CALIPER REASSEMBLY

Reassemble and remount the caliper in the reverse orders of disassembly and removal, and also carry out the following steps:

CAUTION:
Wash the caliper components with fresh brake fluid before reassembly.
Never use cleaning solvent or gasoline to wash them.
Apply brake fluid to the caliper bore and all internal parts before inserting into the bore.

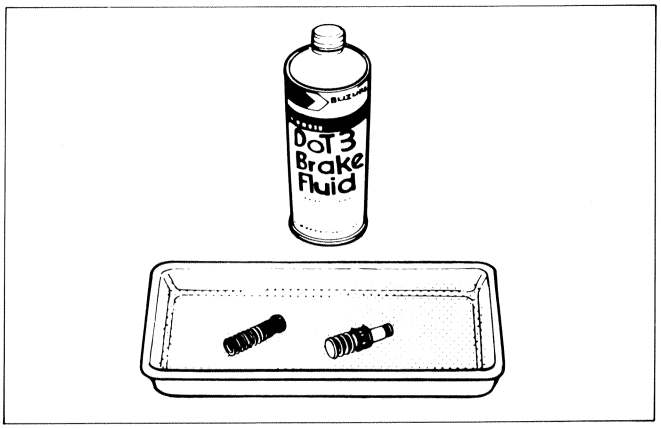

- Apply SUZUKI Silicone grease to the caliper axles.

99000-25100	SUZUKI Silicone grease

Tightening torque

Item	kg-m	lb-ft
① Union bolt	2.0 – 2.5	14.5 – 18.0
② Caliper axle bolt	2.5 – 3.5	18.0 – 25.5
③ Caliper mounting bolt	2.5 – 4.0	18.0 – 29.0

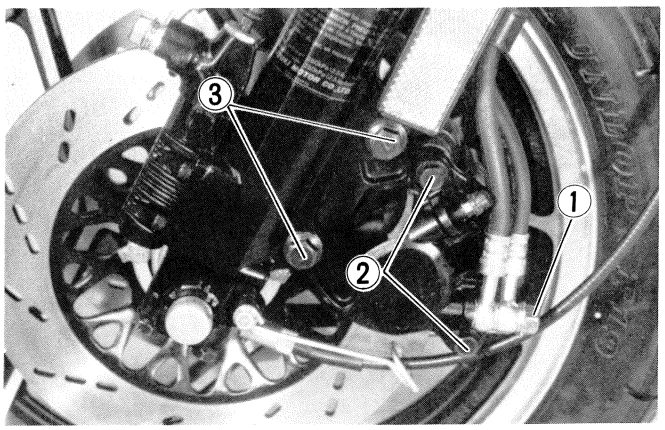

WARNING:
Bleed the air after reassembling the caliper (See page 2-13).

MASTER CYLINDER REMOVAL AND DISASSEMBLY

- Remove the front brake light switch and front brake lever.

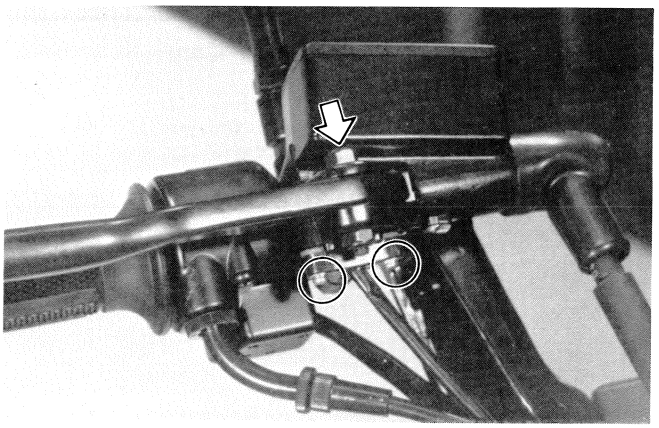

- Place a cloth underneath the union bolt on the master cylinder to catch spilled drops of brake fluid. Unscrew the union bolt and disconnect the brake hose from the master cylinder joint.

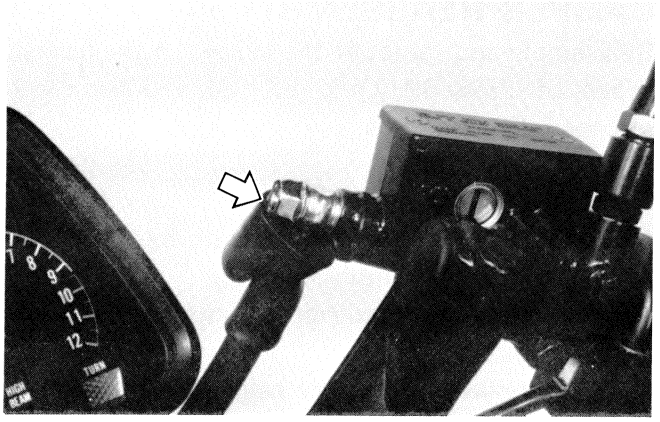

> **CAUTION:**
> **Immediately and completely wipe off any brake fluid contacting any part of the motorcycle. The fluid reacts chemically with paint, plastics and rubber materials, etc. and will damage them severely.**

- Remove two clamp bolts and take off master cylinder.

- Remove two fitting screws, and remove the cap and diaphragm.
- Drain brake fluid.

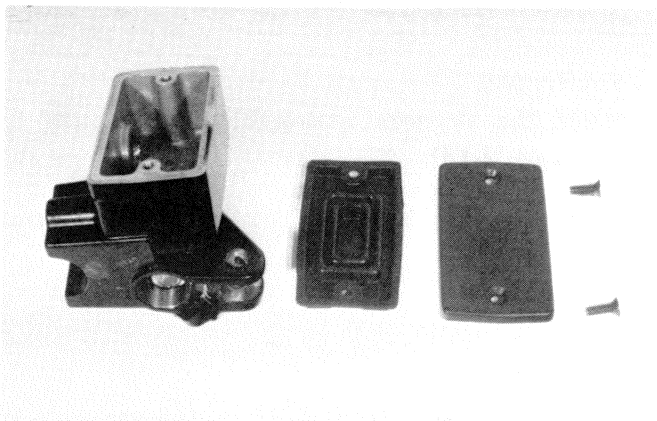

- Remove the dust seal boot.
- Remove the circlip by using the special tool.

09900-06108	Snap ring pliers

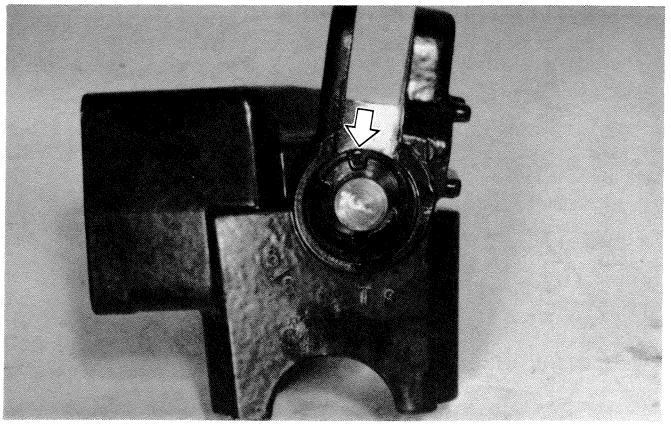

- Remove the piston, primary cup and spring.

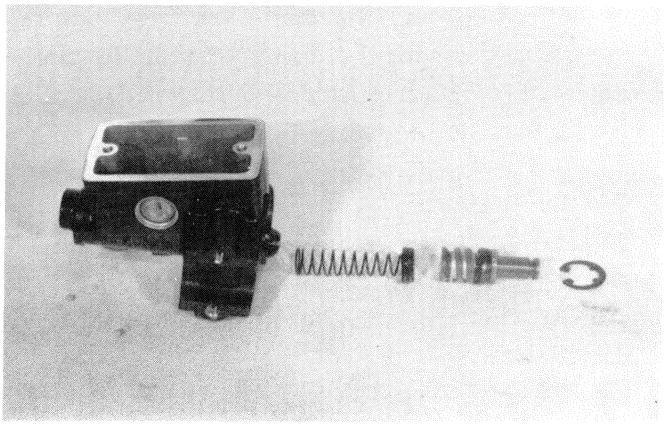

MASTER CYLINDER INSPECTION

- Inspect the master cylinder bore for any scratches or other damage.

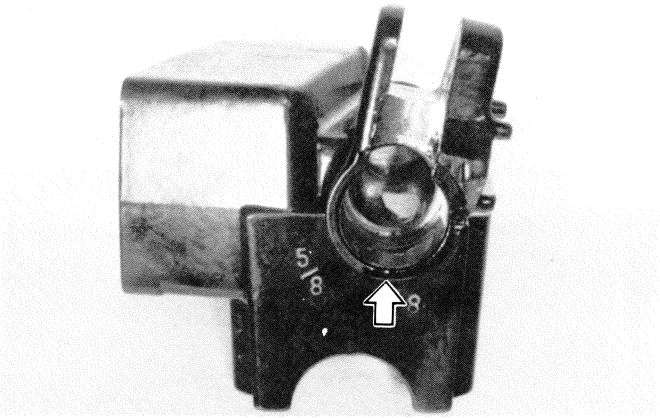

- Inspect the piston surface for scratches or other damage.
- Inspect the primary cup, secondary cup and dust seal boot for wear or damage.

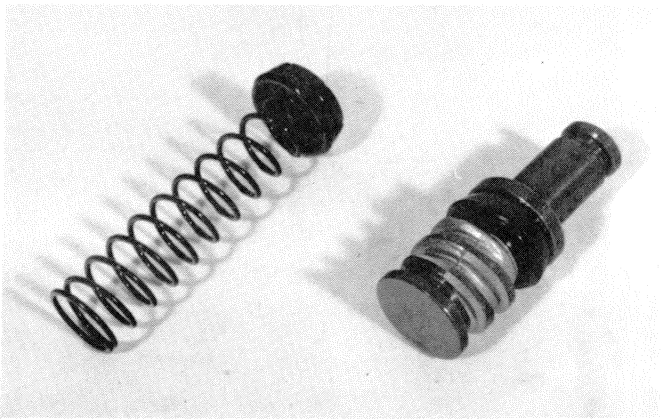

MASTER CYLINDER REASSEMBLY

Reassemble the master cylinder in the reverse oders of disassembly and by taking the following steps.

CAUTION:
Wash the master cylinder components with fresh brake fluid before reassembly. Never use cleaning solvent or gasoline to wash them. Apply brake fluid to the cylinder bore and all internal parts before inserting into the bore.

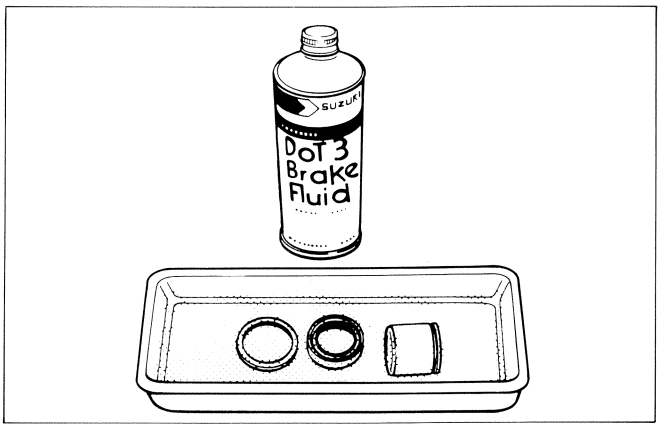

- When remounting the master cylinder on the handlebars, secure the clamp so that the clearances Ⓐ of both upside and downside of the handlebars stay equally.

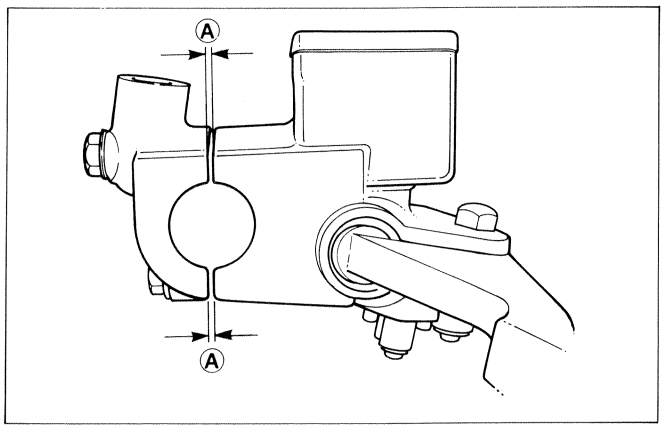

WARNING:
Bleed the air after reassembling master cylinder (See page 2-13).
Adjust the front brake light switch after installation.

REAR WHEEL

REMOVAL

- Support the machine by the center stand.
- Remove the pillion footrest.

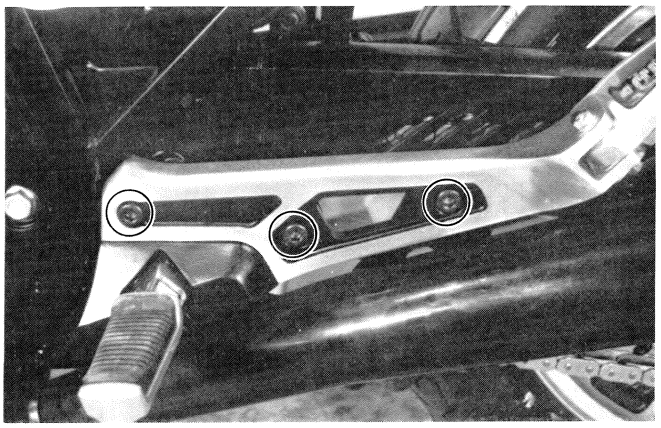

- Loosen the exhaust pipe clamp bolt.

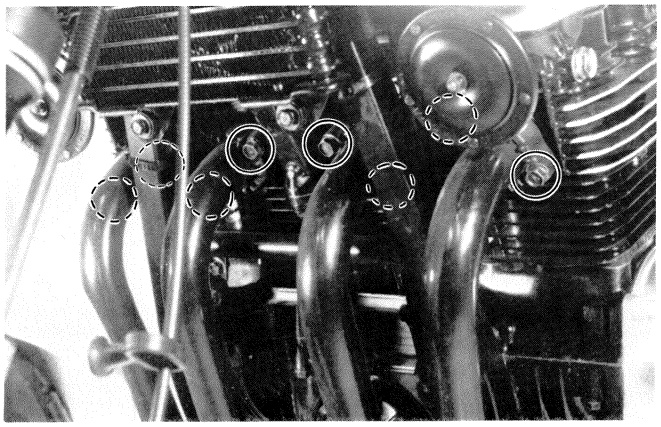

- Take off the chain case.

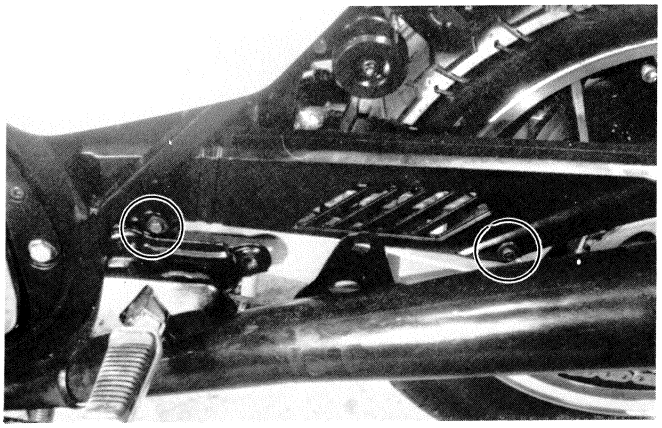

- Remove the rear axle cover.

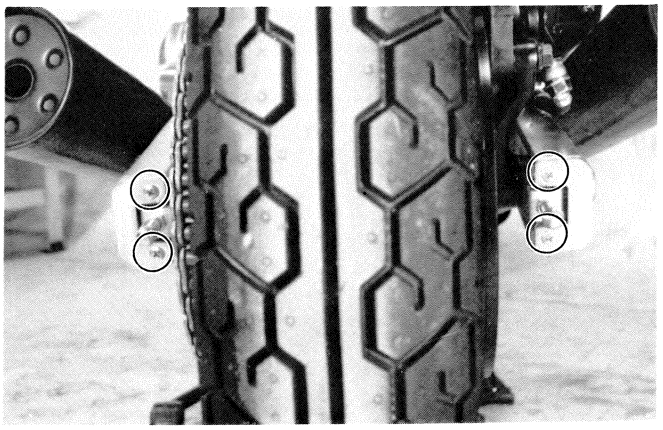

- Pull of the cotter pin.
- Remove the axle nut ① .
- Loosen the right and left chain adjuster lock nuts ② and adjuster bolts ③ .
- Draw out the axle shaft and take off the drive chain from the rear sprocket.
- Remove the rear wheel.

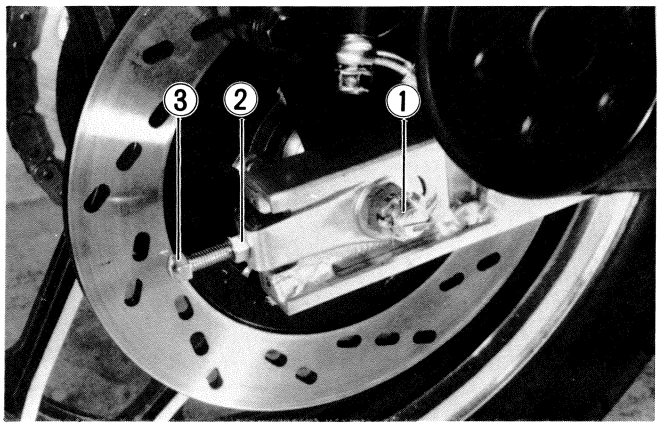

DISASSEMBLY

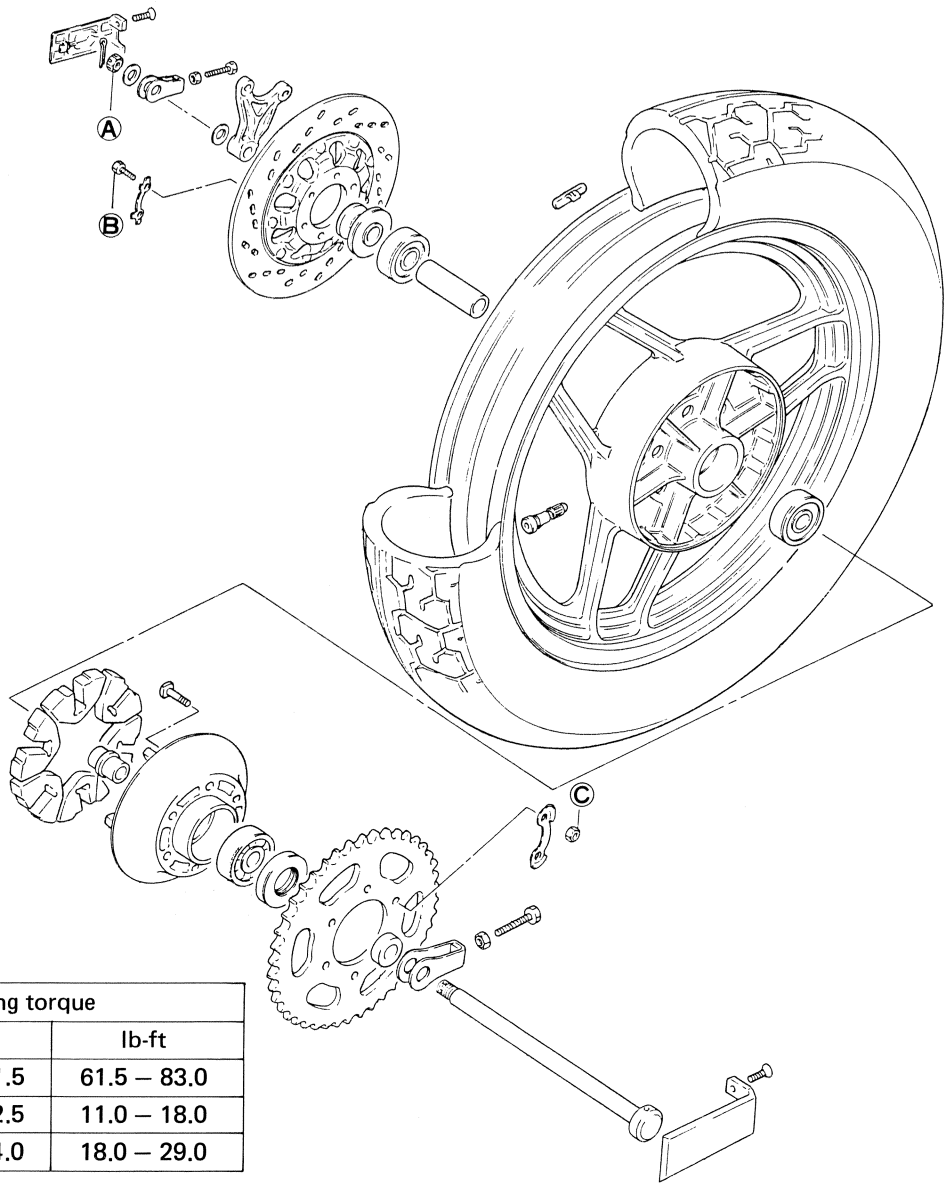

Tightening torque		
Item	kg-m	lb-ft
Ⓐ	8.5 – 11.5	61.5 – 83.0
Ⓑ	1.5 – 2.5	11.0 – 18.0
Ⓒ	2.5 – 4.0	18.0 – 29.0

- Draw out the rear sprocket mounting drum from the rear wheel.

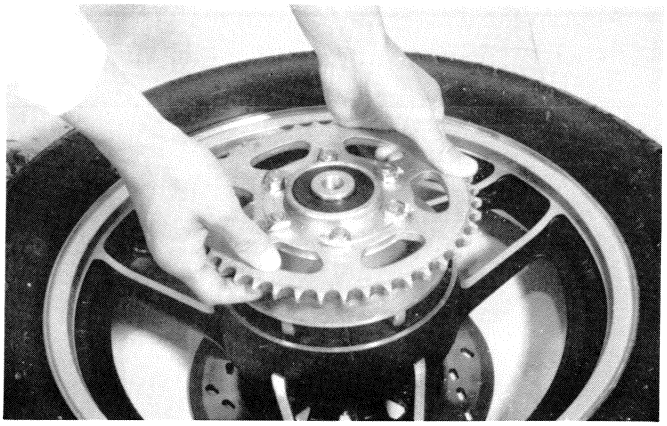

- Remove the six cushions.

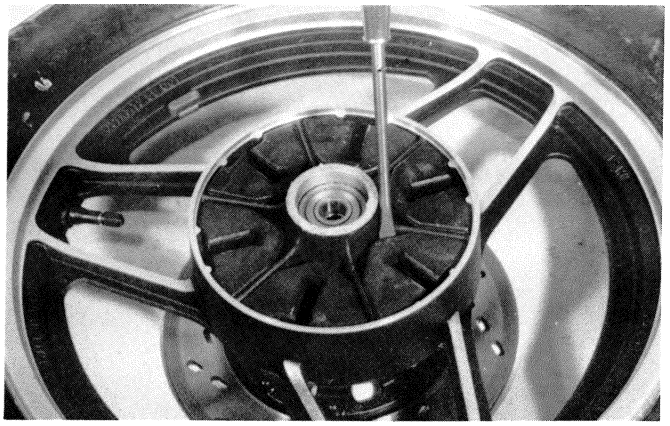

- Flatten the washers and loosen the six nuts.

CAUTION:
Do not reuse the lock washers.

- Separate the disc from wheel.

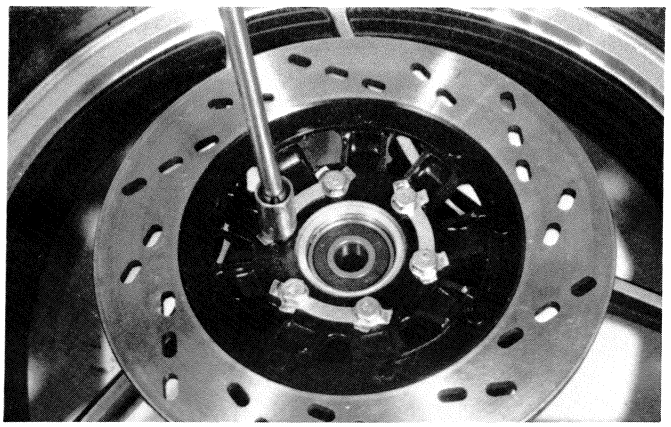

- Remove the right and left side wheel bearings by using special tool.

09941-50110	Wheel bearing remover

CAUTION:
The removed bearing should be replaced.

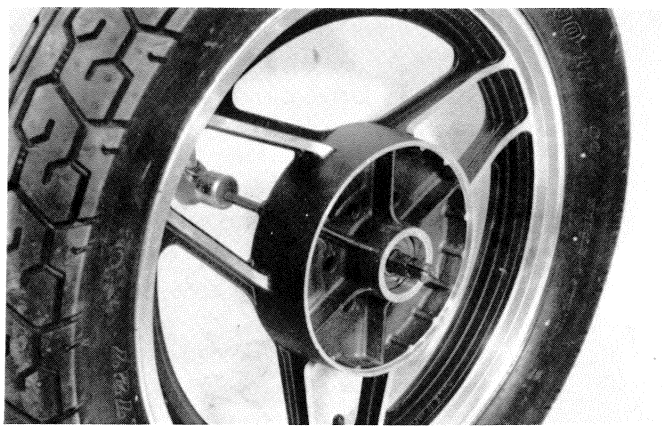

- Flatten the washers and loosen the six nuts.
- Separate the rear sprocket from mounting drum.

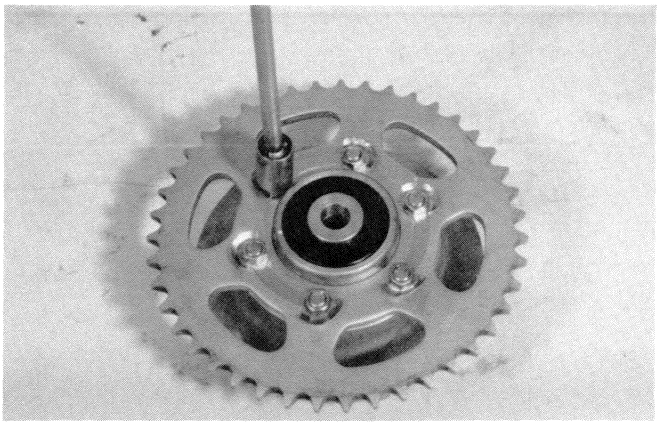

- Pull out the spacers.

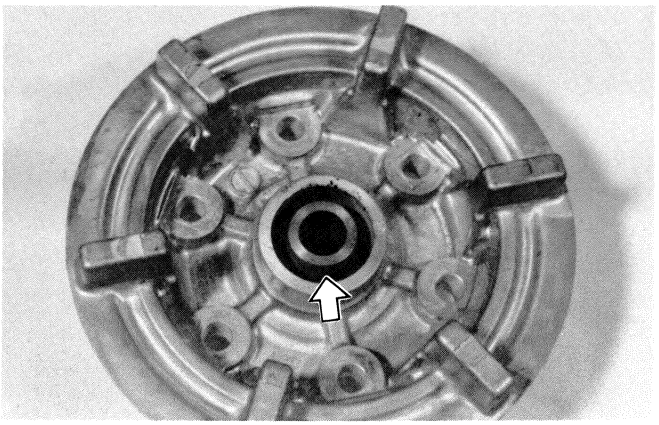

- Remove the oil seal by using the special tool.

09913-50121	Oil seal remover

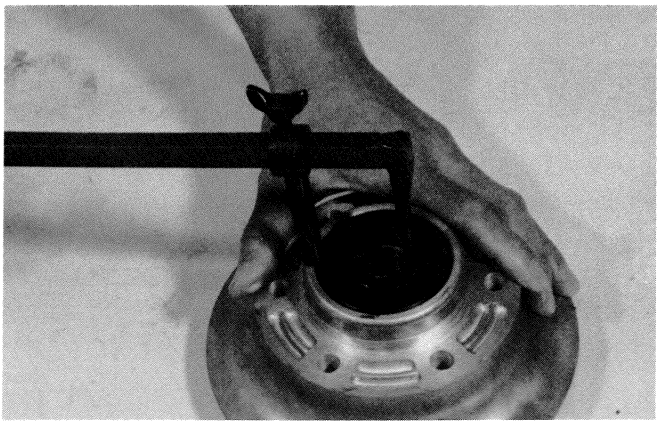

- Remove the bearing by using the special tool.

09913-80112	Drive pinion race installer

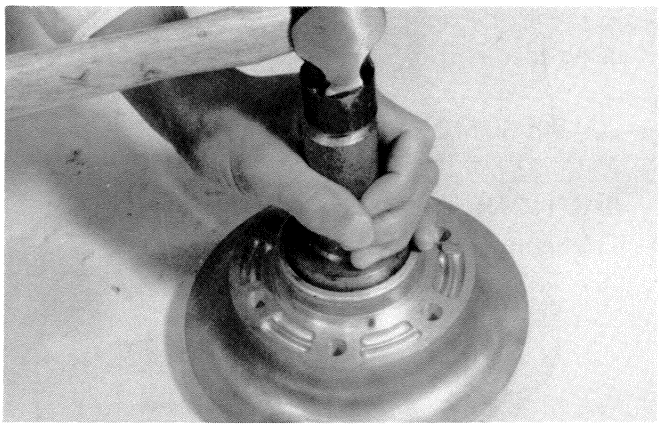

INSPECTION

REAR WHEEL AND MOUNTING DRUM BEARINGS

- Inspect the play of bearing inner race by hand while fixing it in the wheel and mounting drum.
- Rotate the inner race by hand to inspect whether abnormal noise occurs or rotating smoothly.
- Replace the bearing if there is something unusual.

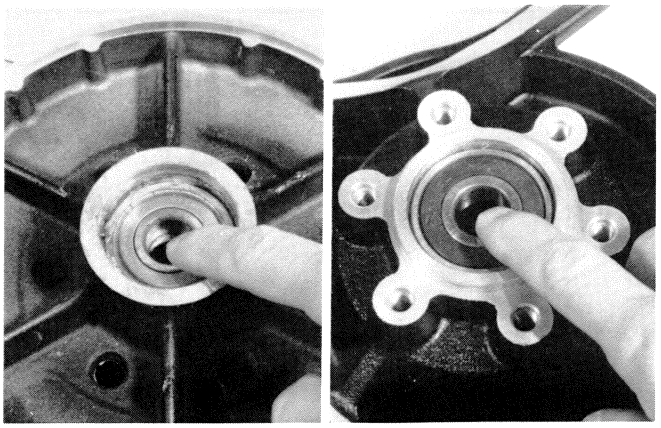

TIRE

- (See page 2-15)

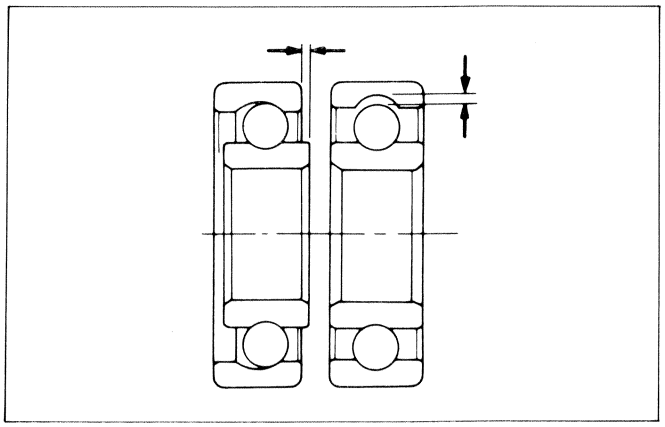

AXLE SHAFT

- Using a dial gauge, check the axle shaft for runout and replace it if the runout exceeds the limit.

09900-20606	Dial gauge (1/100)
Service Limit	0.25 mm (0.01 in)

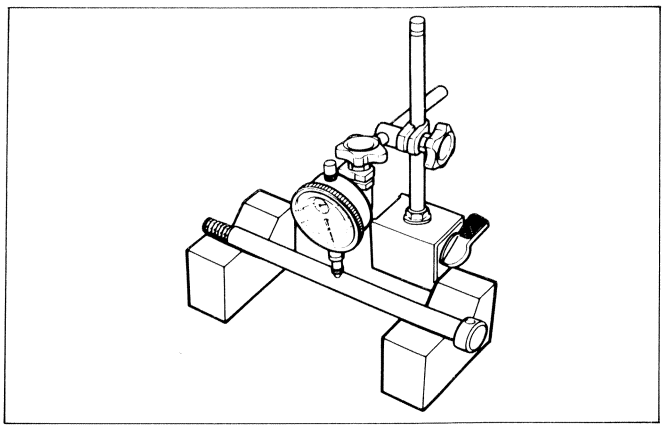

WHEEL

- Make sure that the wheel runout checked as shown, does not exceed the service limit. An excessive runout is usually due to worn or loose wheel bearings and can be reduced by replacing the bearings.
- If bearing replacement fails to reduce the runout, replace the wheel.

Service Limit (Axial and Radial)	2.0 mm (0.08 in)

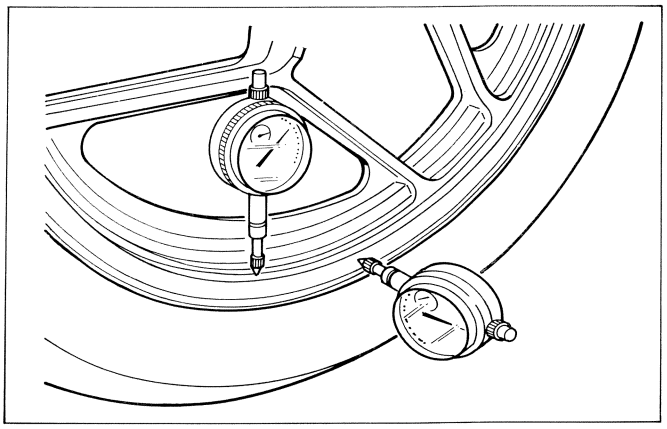

CUSHION

- Inspect the cushions for wear and damage.

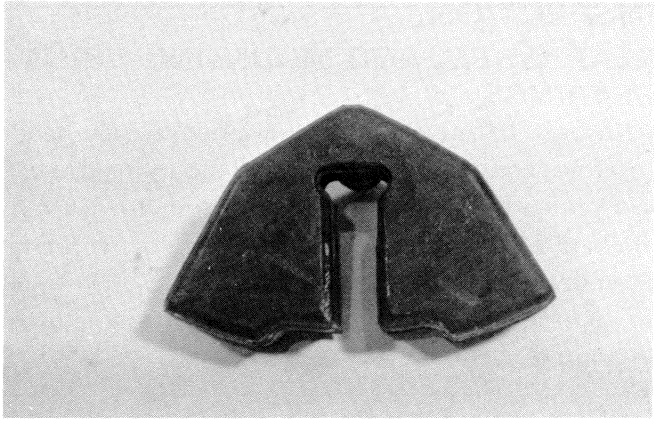

SPROCKET

- Inspect the sprocket teeth for wear.
- If they are worn as illustrated, replace the sprocket and drive chain.

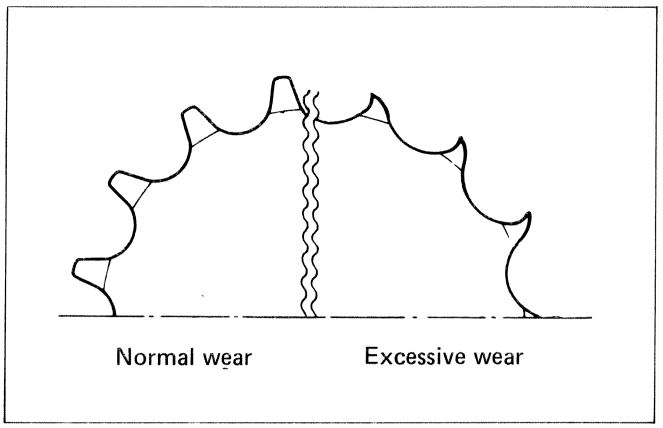

REASSEMBLY AND REMOUNTING

Reassemble and remount the rear wheel in the reverse order of disassembly and removal, and also carry out the following steps:

WHEEL BEARINGS

- Install the wheel bearings by using the special tool as shown.

CAUTION:
First install the wheel bearing for right side.

09924-84510	Bearing installer set

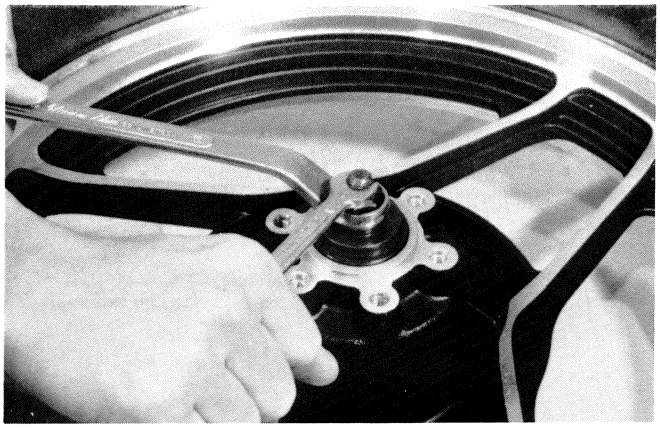

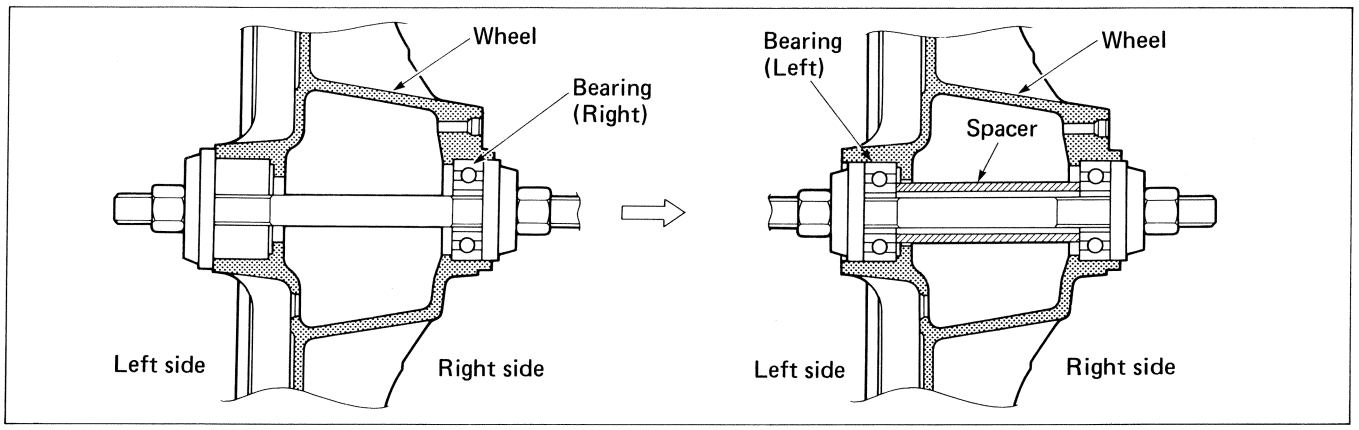

BRAKE DISC

- Make sure that the brake disc is clean and free of any greasy matter.
  After securing it in place by tightening its bolts, be sure to lock each tonque.

Tightening torque	1.5 – 2.5 kg-m (11.0 – 18.0 lb-ft)

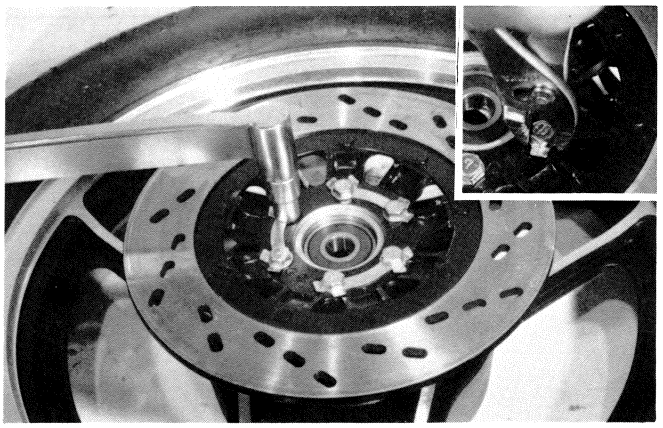

MOUNTING DRUM BEARING

- Install the bearing by using a bearing installer.

09913-75520	Bearing installer

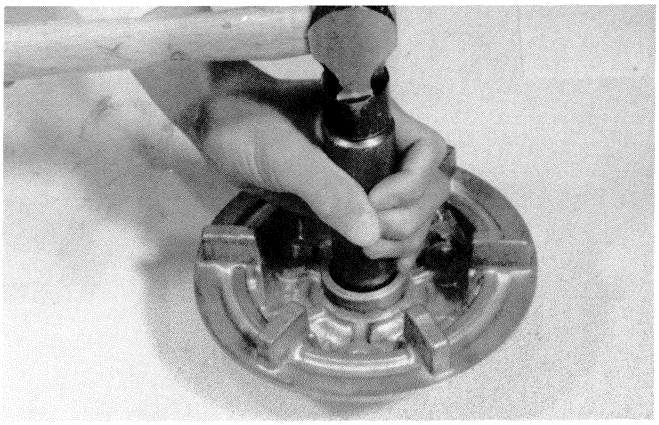

REAR SPROCKET

- After tightening the six nuts to specification, bend the washers to lock nuts.

Tightening torque	2.5 – 4.0 kg-m (18.0 – 29.0 lb-ft)

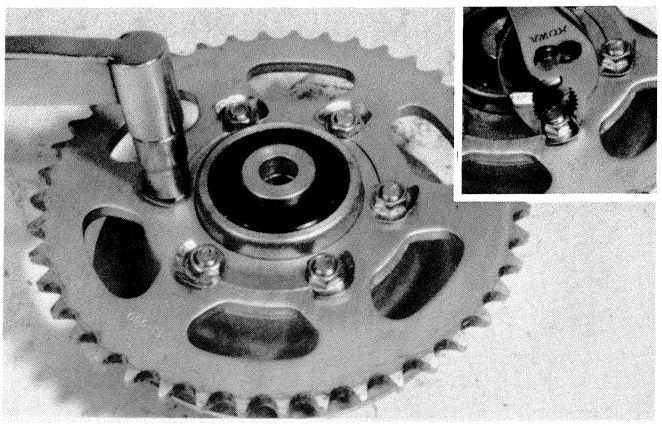

REMOUNTING

Tightening torque

Rear axle nut	8.5 – 11.5 kg-m (61.5 – 83.0 lb-ft)
Pillion footrest bolt	1.8 – 2.8 kg-m (13.0 – 20.5 lb-ft)
Exhaust pipe clamp bolt	2.0 – 2.5 kg-m (14.5 – 18.0 lb-ft)

REAR BRAKE

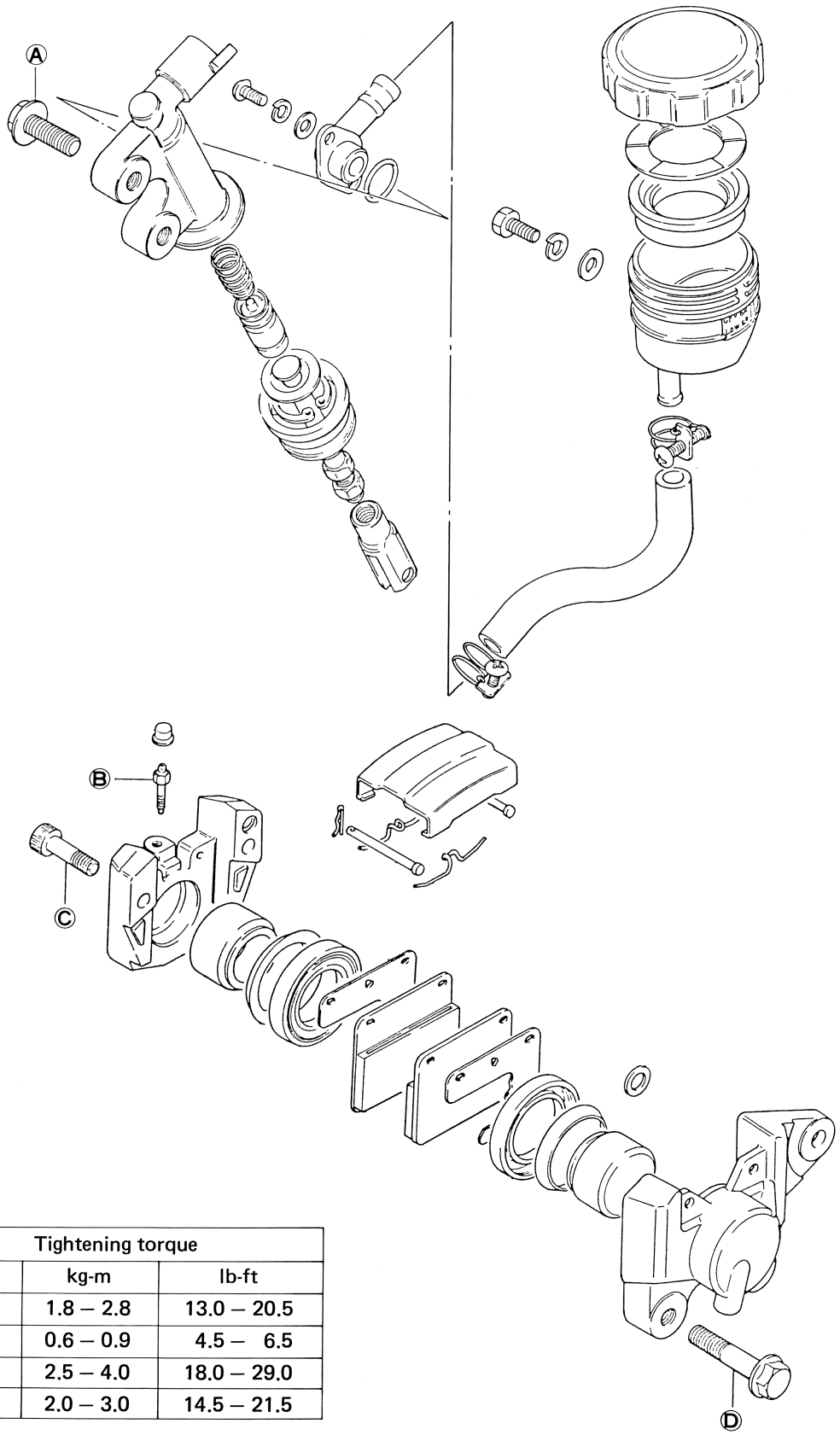

Tightening torque		
Item	kg-m	lb-ft
Ⓐ	1.8 – 2.8	13.0 – 20.5
Ⓑ	0.6 – 0.9	4.5 – 6.5
Ⓒ	2.5 – 4.0	18.0 – 29.0
Ⓓ	2.0 – 3.0	14.5 – 21.5

BRAKE PAD REPLACEMENT

- Remove the dust cover.

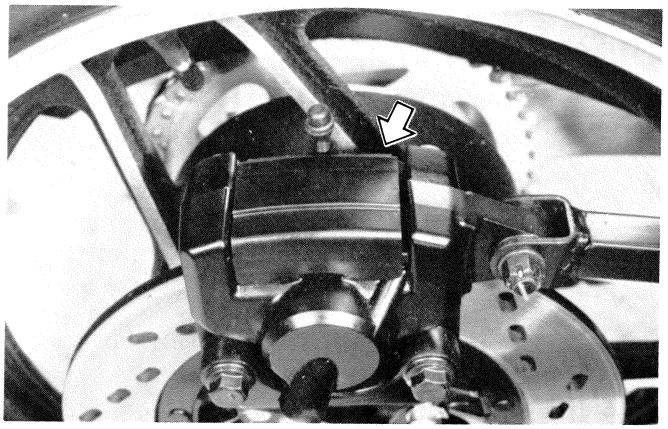

- Pull off the clips ① .

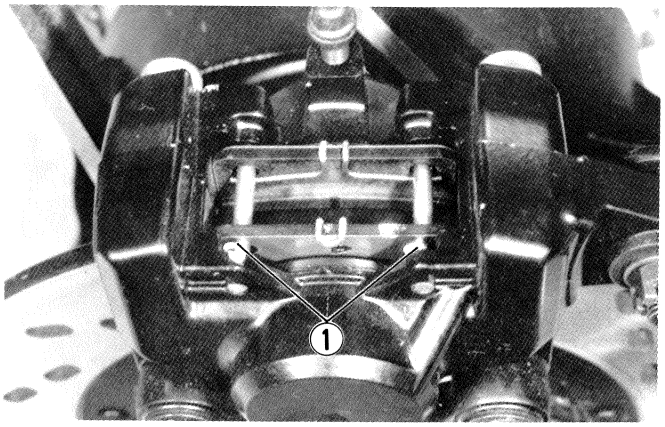

- Pull off the springs ② and pins ③ .
- Take off the brake pads with pad shims.

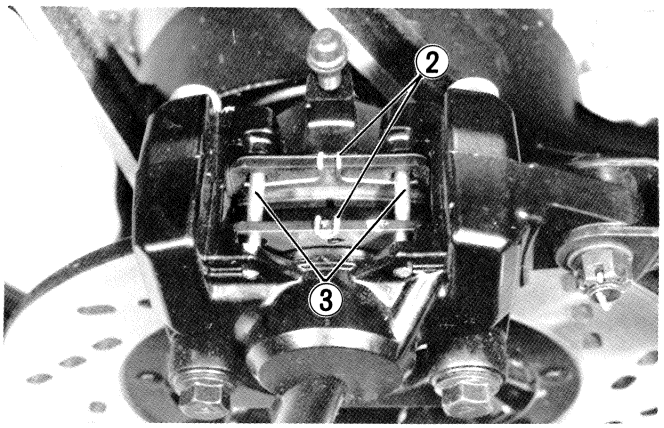

> **NOTE:**
> **Do not operate the brake pedal while taking off the brake pads.**

> **CAUTION:**
> **Replace the brake pad as a set, otherwise braking performance will be adversely affected.**

- Fit the brake pad shim to the rear of each brake pad so that the "hole" in the shim points to the front.

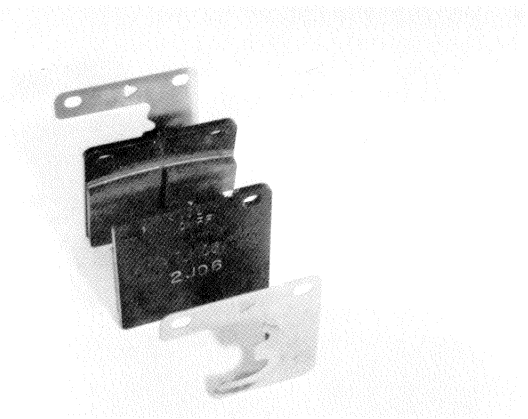

CALIPER REMOVAL AND DISASSEMBLY

- Remove the union bolt and catch the brake fluid in a suitable receptacle.

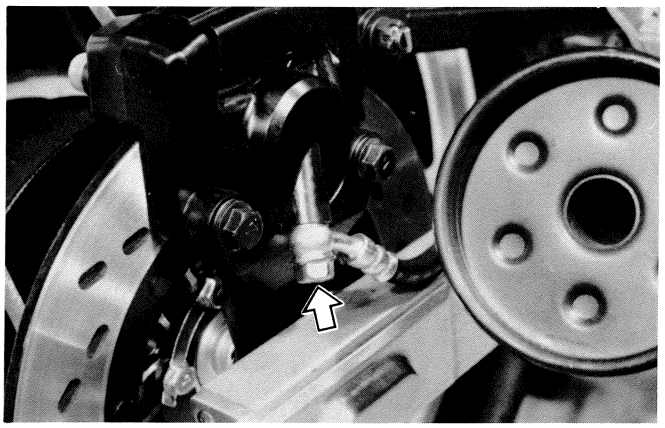

- Pull off the cotter pin and remove the torque link bolt and nut.
- Remove the caliper mounting bolts and take off the caliper.

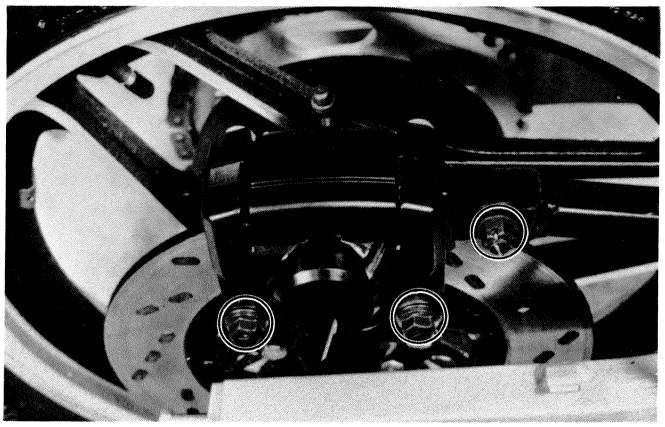

- Remove the caliper axle bolts by using the 8 mm hexagon wrench.

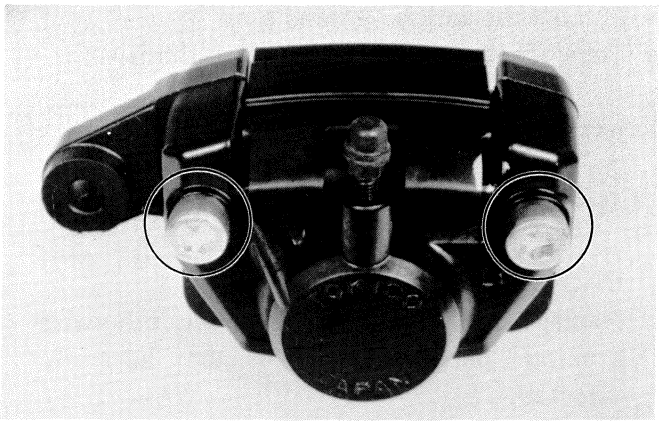

- Separate the caliper halves.

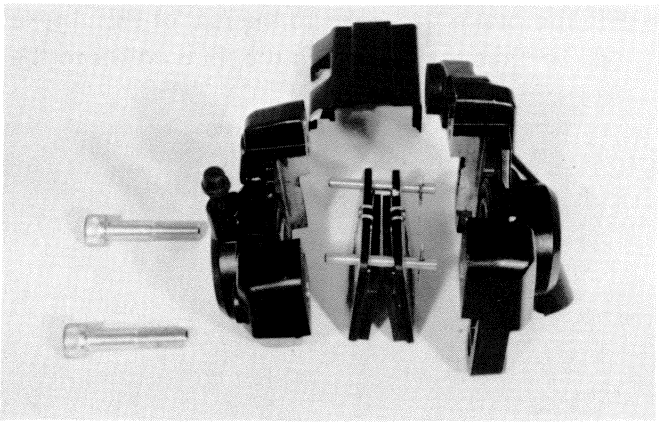

- Place a rag over the piston to prevent it from popping out.
  Push out the piston by using air gun.

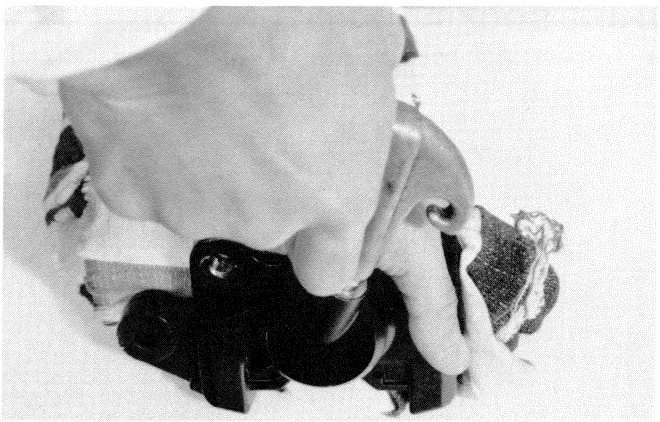

> **CAUTION:**
> **Do not use high pressure air for preventing piston damage.**

- Remove the dust boot and piston seal.

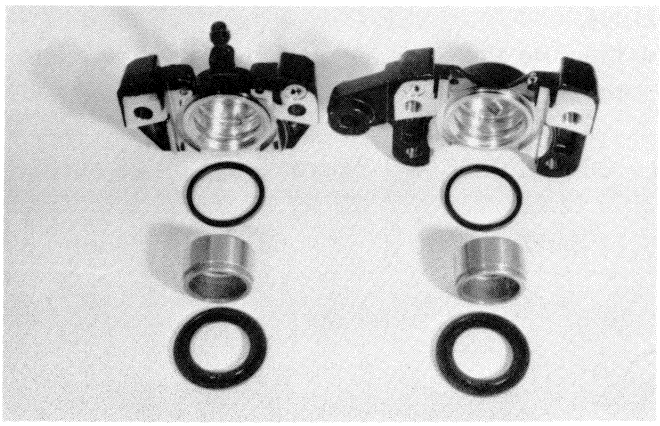

INSPECTION

CYLINDER

- Inspect the cylinder bore wall for nick, scratch or other damage.

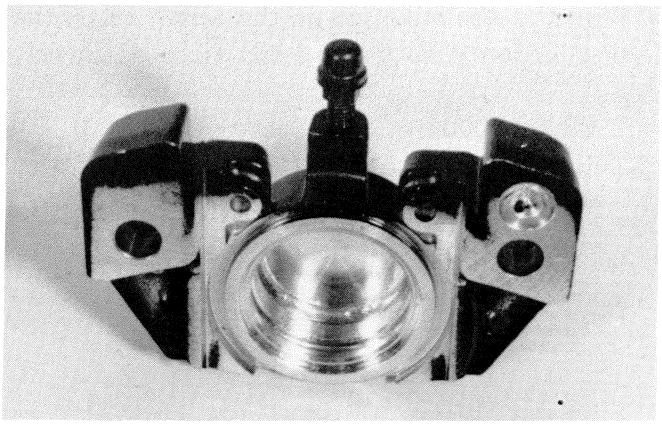

PISTON

- Inspect the piston surface for any flaws or other damage.

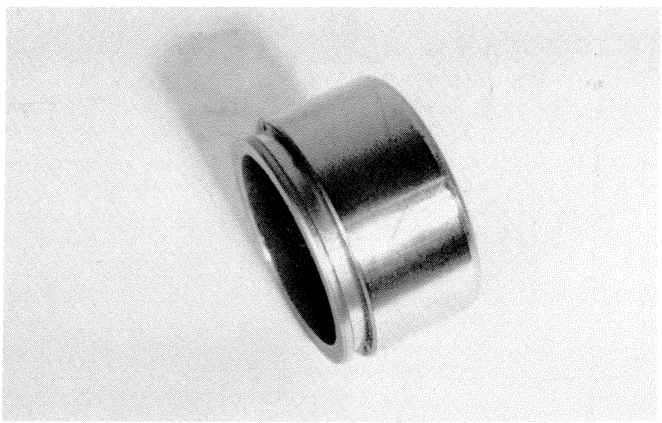

DUST BOOT AND PISTON SEAL

- Inspect the each rubber part for damage and wear.

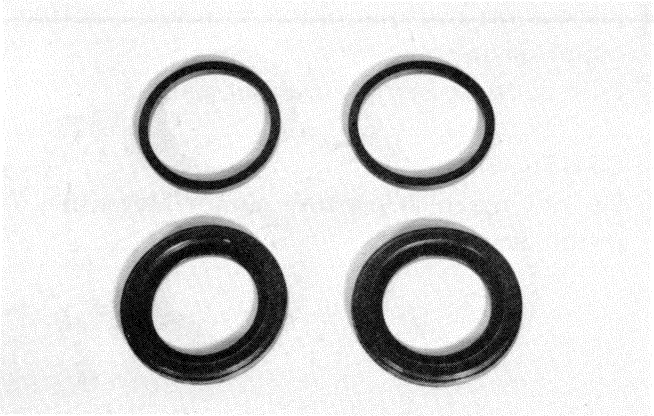

DISC

- Measure the disc thickness by using the micrometer.

09900-20205	Micrometer (0 – 25 mm)
Service Limit	6.0 mm (0.24 in)

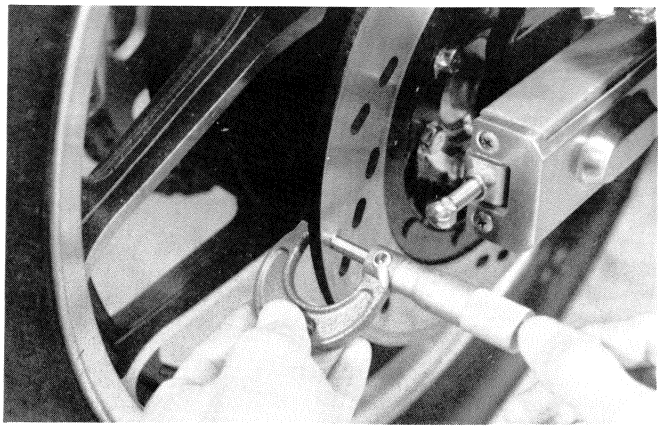

- With the disc mounted on the wheel, check the disc for face runout with a dial gauge, as shown.

09900-20606	Dial gauge (1/100)
Service Limit	0.30 mm (0.012 in)

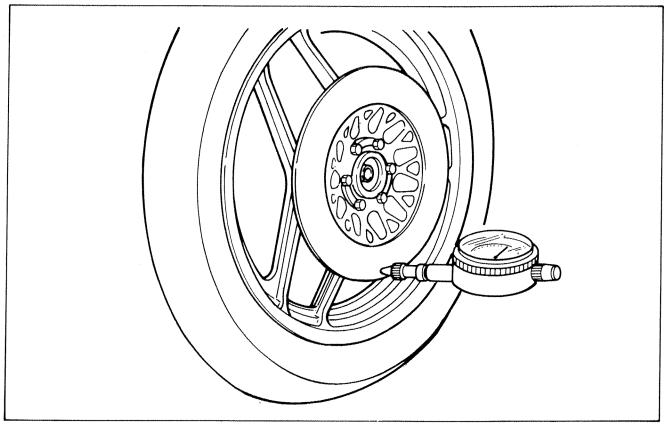

REASSEMBLY

Reassemble and remount the caliper in the reverse order of disassembly and removal, and also carry out the following steps:

CAUTION:
- **Wash the caliper components with fresh brake fluid before reassembly.**
- **Never use cleaning solvent or gasoline to wash them.**
- **Apply brake fluid to the caliper bore and piston to be inserted into the bore.**
- **Bleed the air after reassembling the caliper (See page 2-13).**

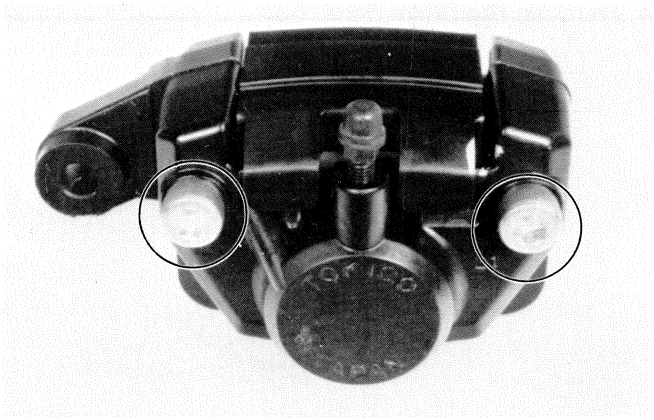

TIGHTENING TORQUE

Item	kg-m	lb-ft
Caliper axle bolt	2.0 – 3.0	14.5 – 21.5
Caliper mounting bolt	2.5 – 4.0	18.0 – 29.0
Union bolt	2.0 – 2.5	14.5 – 18.0
Torque link nut	2.0 – 3.0	14.5 – 21.5

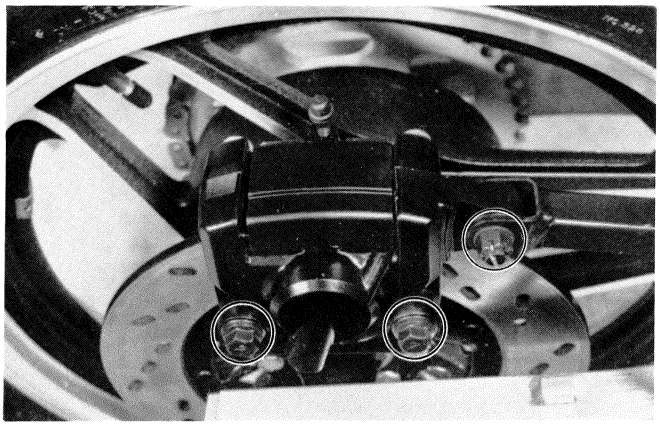

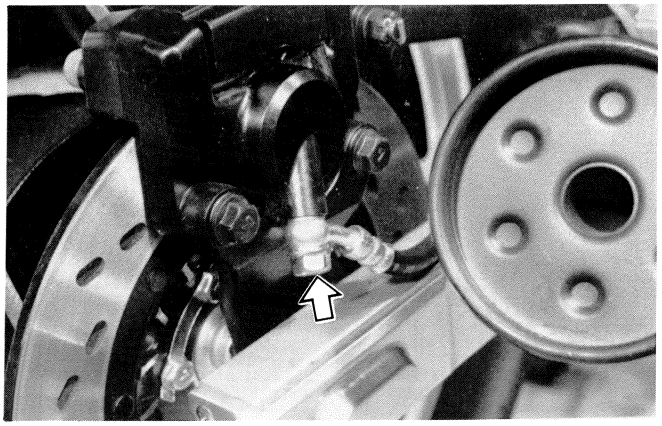

MASTER CYLINDER REMOVAL

- Remove the rear wheel (See page 7-32).
- Remove the swing arm (See page 7-48).
- Remove the reservoir tank fitting bolt ① .
- Remove the master cylinder fitting bolts ② .
- Remove the union bolt ③ .

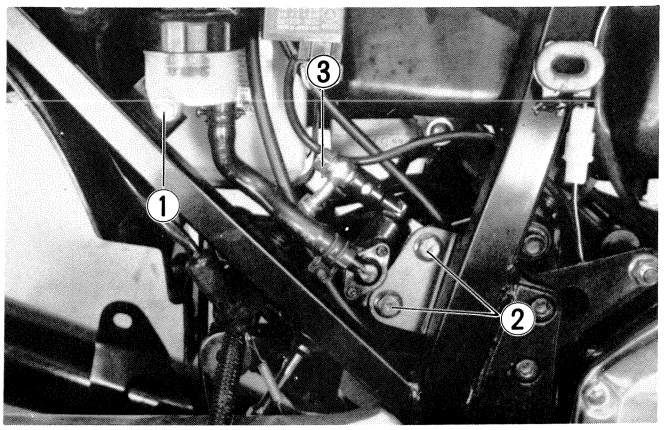

- Remove the brake pedal bolt.

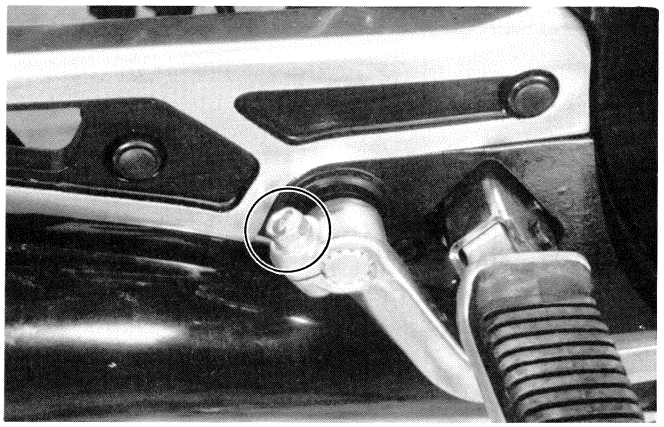

- Slide the brake pedal rod arm ① inside.

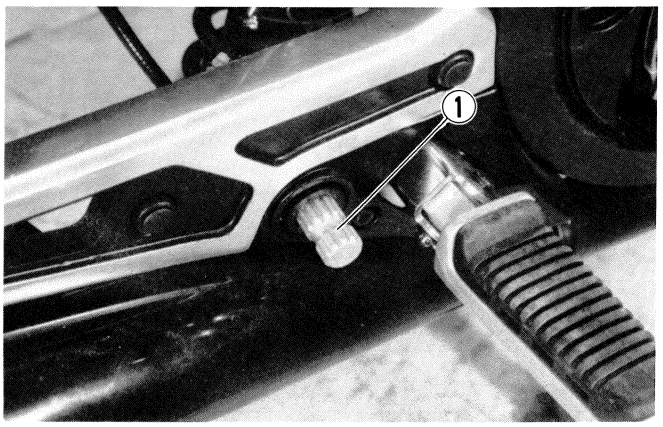

- Pull off the cotter pin and pin ② .

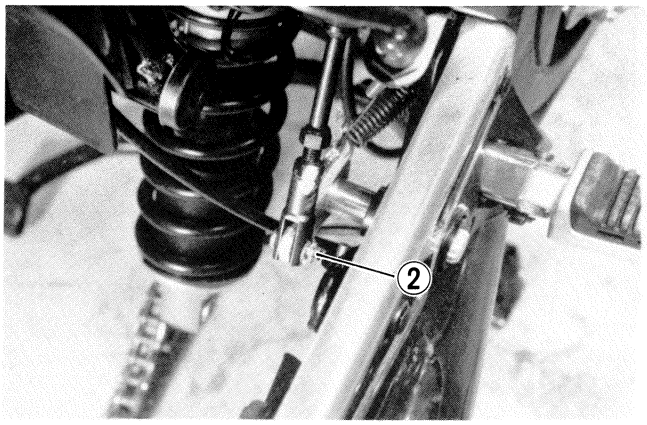

- Remove the master cylinder with reservoir tank.
- Remove reservoir cap and drain brake fluid.

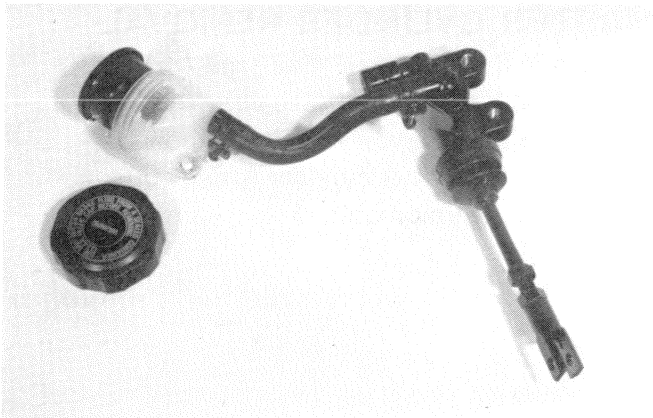

- Loosen the two screws and remove the reservoir with brake hose.

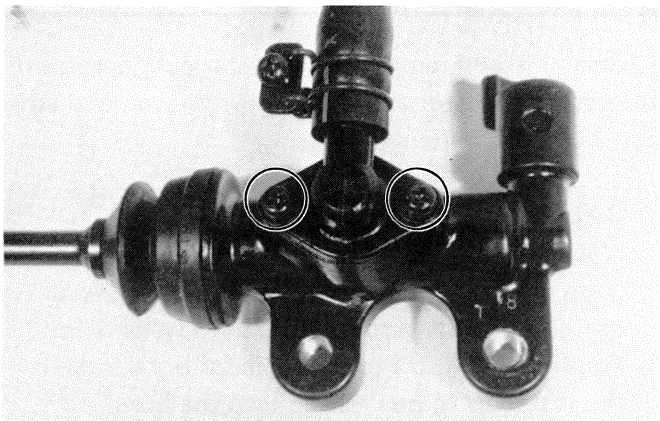

- Remove the rod, piston, primary cup and spring by using the special tool.

09900-06105	Snap ring pliers

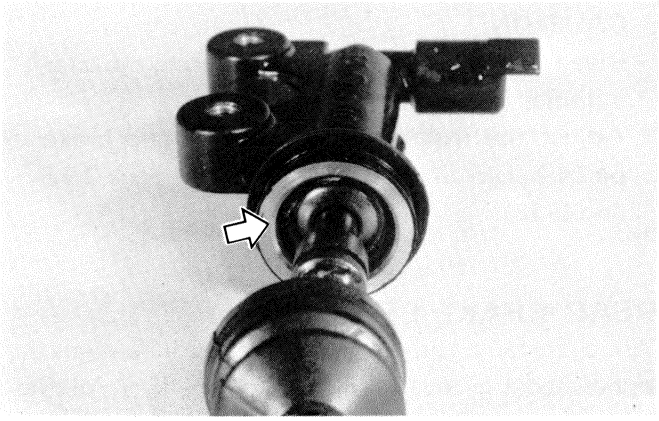

INSPECTION

CYLINDER

Inspect the cylinder bore wall for any scratch or other damage.

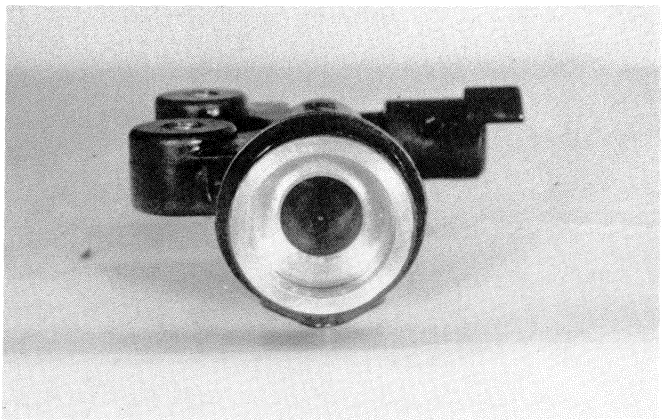

PISTON AND CUP SET

Inspect the piston surface for scratch or other damage.

Inspect the cup set and each rubber part for damage.

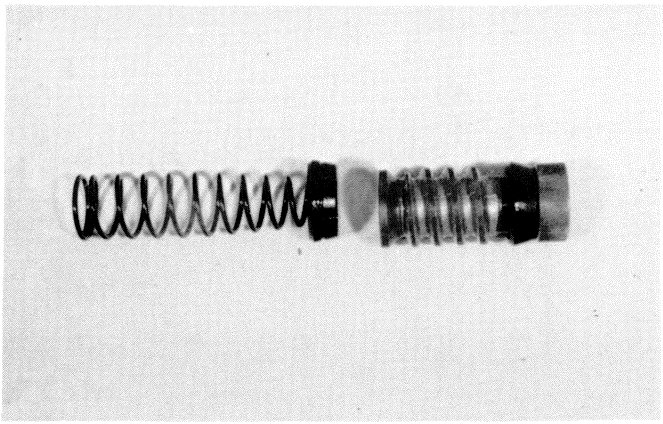

REASSEMBLY

Reassemble and remount the master cylinder in the reverse order of disassembly and removal, and also carry out the following steps:

> **CAUTION:**
> **Wash the master cylinder components with fresh brake fluid before reassembly. Never use cleaning solvent or gasoline to wash them. Apply brake fluid to the cylinder bore and all the internals to be inserted into the bore.**

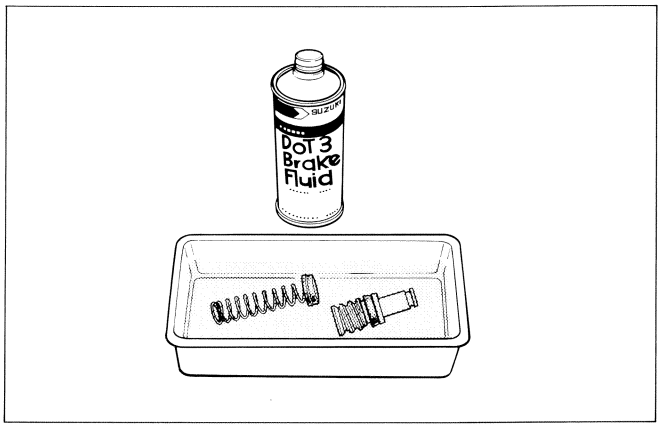

> **CAUTION:**
> **Bleed the air after reassembling master cylinder (See page 2-13).**
> **Adjust the rear brake light switch and brake pedal height after installation. (See page 2-12 and 2-13).**

REAR BRAKE PEDAL

When installing the rear brake pedal, align the brake pedal groove with punched mark ① provided on the end face of the brake pedal rod arm.

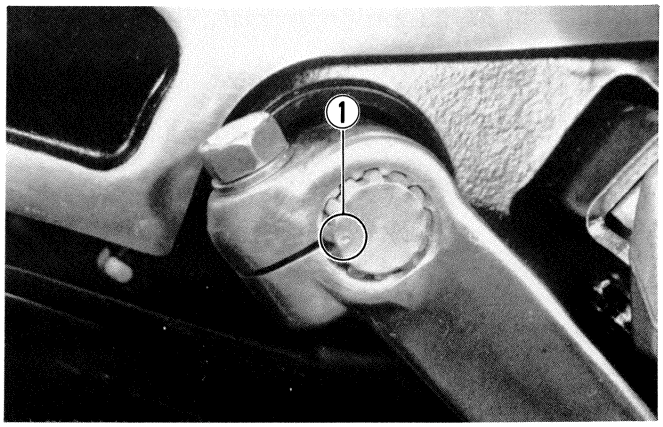

REAR SWING ARM

REMOVAL

- Remove the rear wheel. (See page 7-32)
- Draw out the brake hose from the clamps ①, ②.
- Pull off the cotter pin and remove the torque link bolt ③.
- Take off the caliper.

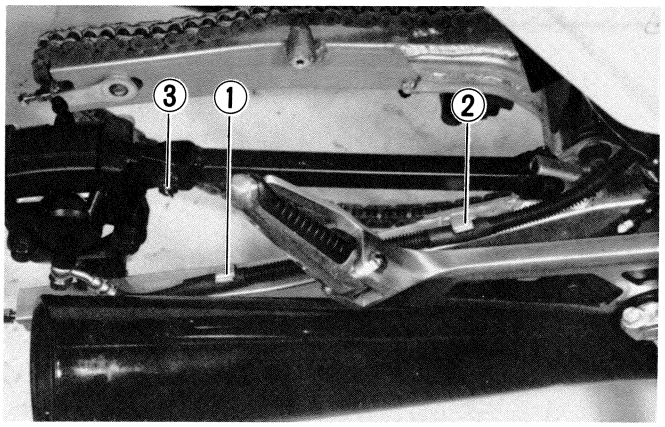

- Remove the rear shock absorber unit lower fitting bolt.
- Remove the cushion rod lower fitting bolt.

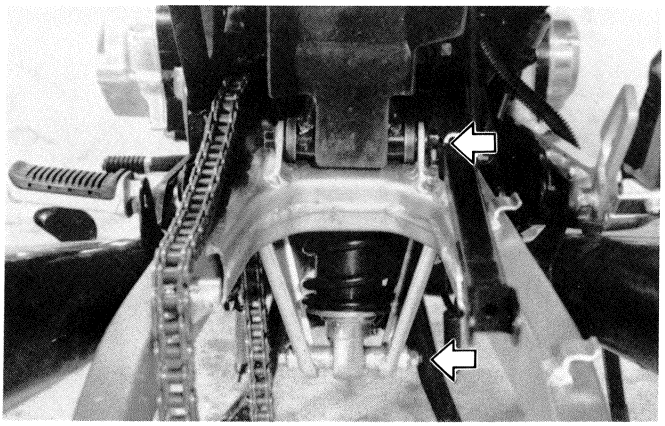

- Remove the swing arm pivot shaft put.
- Draw out the pivot shaft and remove the swing arm.

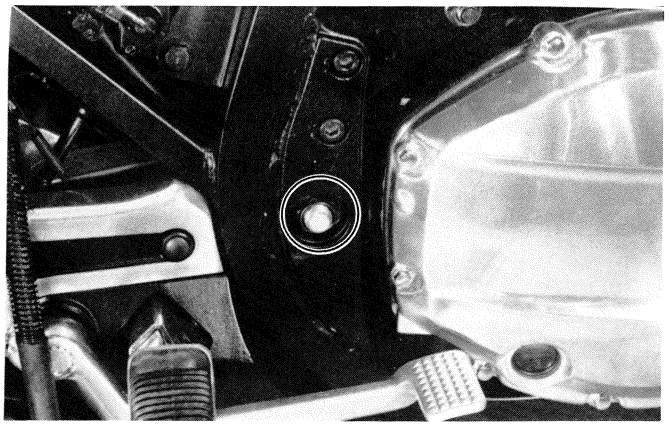

DISASSEMBLY

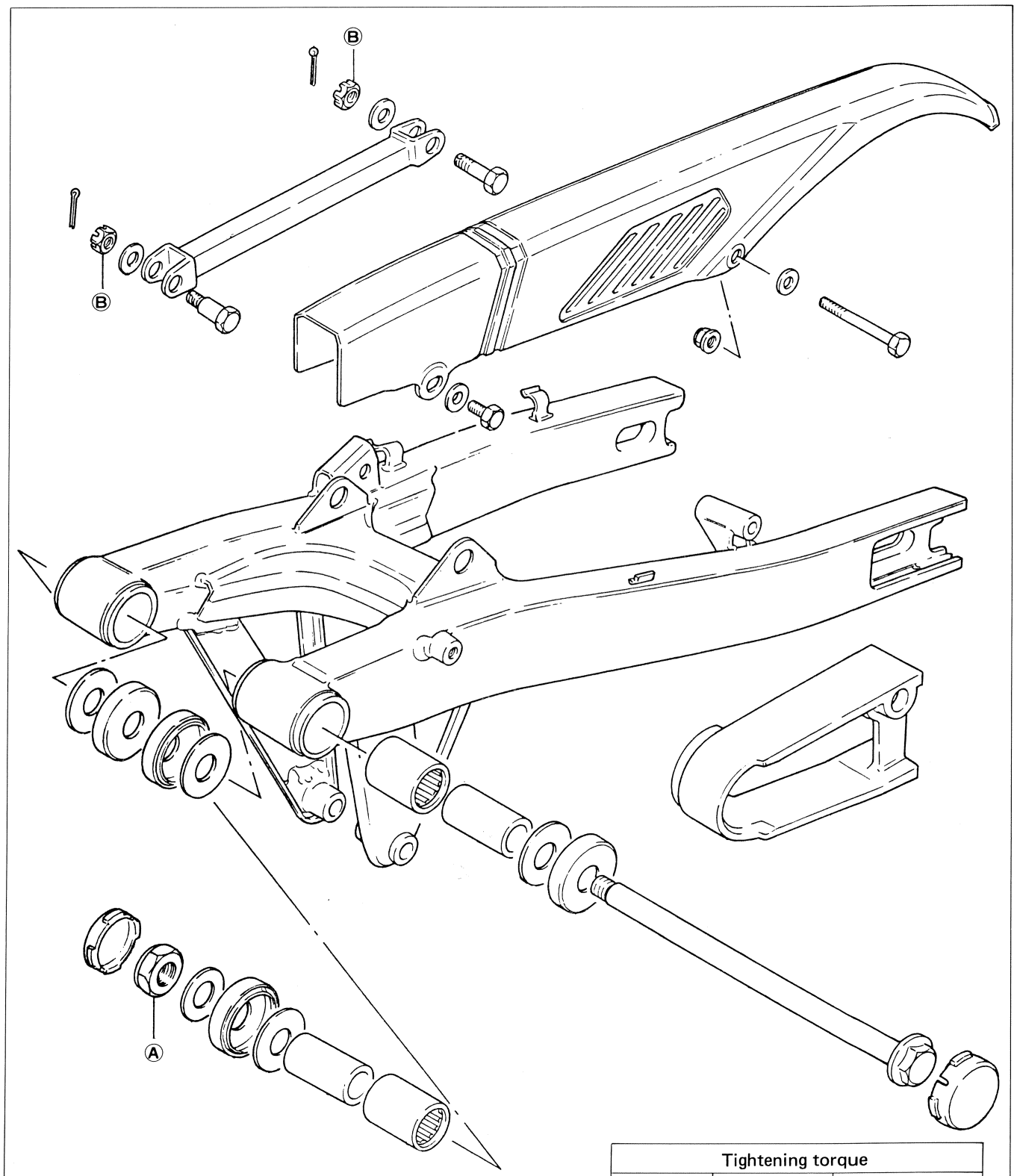

Tightening torque		
Item	kg-m	lb-ft
Ⓐ	50 – 80	36.0 – 58.0
Ⓑ	20 – 30	14.5 – 21.5

- Pull off the cotter pin and remove the rear torque link bolt ① .
- Take off the rear torque link.
- Take off the chain defense buffer.

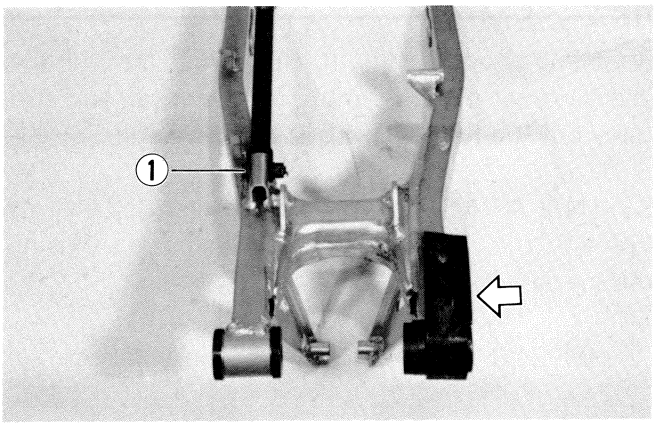

- Take off the dust seal ② and thrust washer ③ .
- Draw out the spacer ④ .

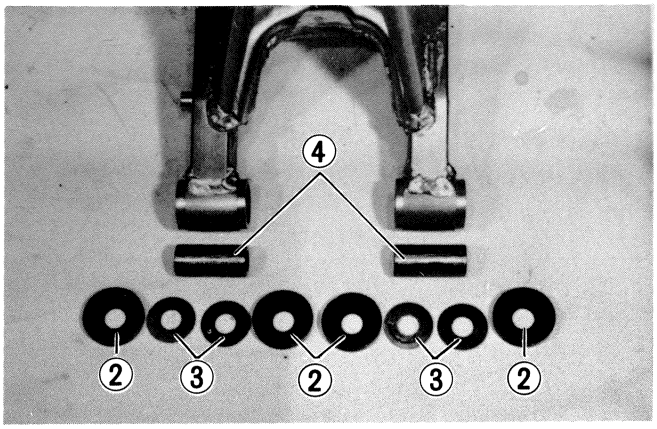

- Draw out the swing arm bearing by using special tool.

09941-44910	Swing arm bearing remover

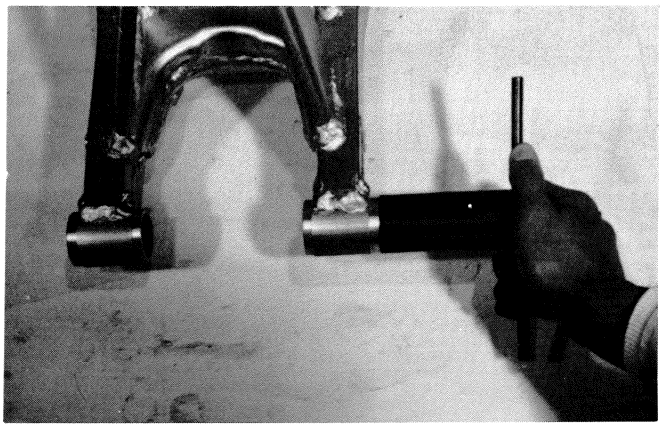

INSPECTION

SWING ARM PIVOT SHAFT

Using a dial gauge, check the pivot shaft for runout and replace it if the runout exceeds the limit.

09900-20606	Dial gauge (1/100)
Service Limit	0.3 mm (0.012 in)

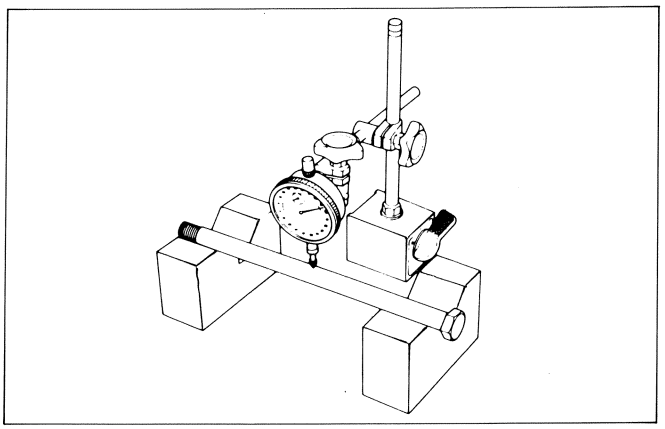

REASSEMBLY

Reassemble and remount the swing arm in the reverse order of disassembly and removal, and also carry out the following steps:

SWING ARM BEARINGS

Force-fit the bearings into the swing arm by using the special tool.

09924-84510	Bearing installer set

NOTE:
When installing two bearings, punch-marked side of bearing comes outside.

SPACER AND DUST SEAL

Apply grease to the spacer ① and washer ② when installing them.

99000-25030	SUZUKI Super grease "A"

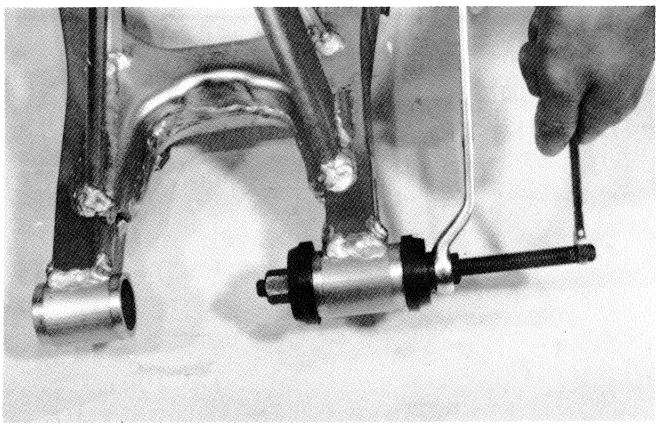

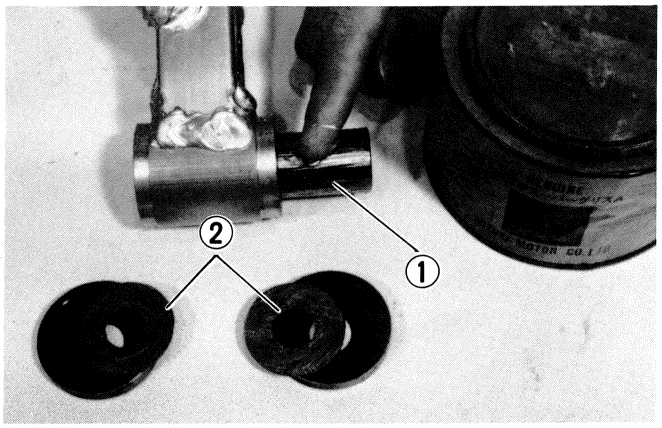

FULL FLOATING SUSPENSION

REMOVAL

- Remove the rear wheel (See page 7-32).
- Remove the rear swing arm (See page 7-48).
- Draw out the preload adjuster hose and damping adjuster cable from the clamps.

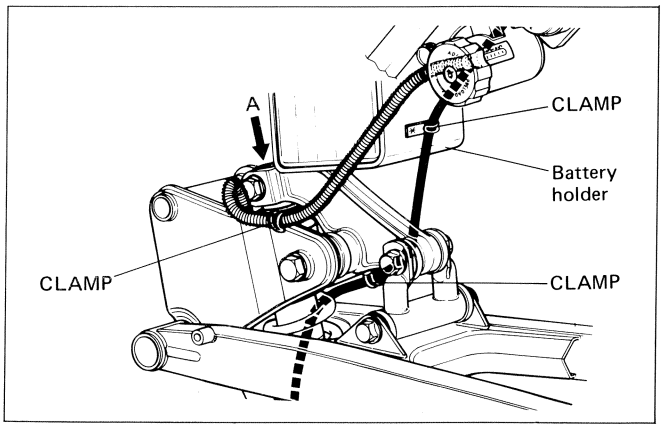

- Remove the preload and damping adjusters.

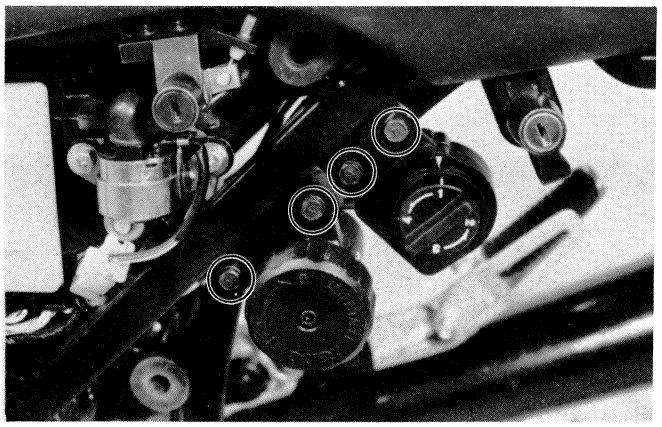

- Remove the rear cushion lever bolt ① and draw out the full floating suspension assembly.

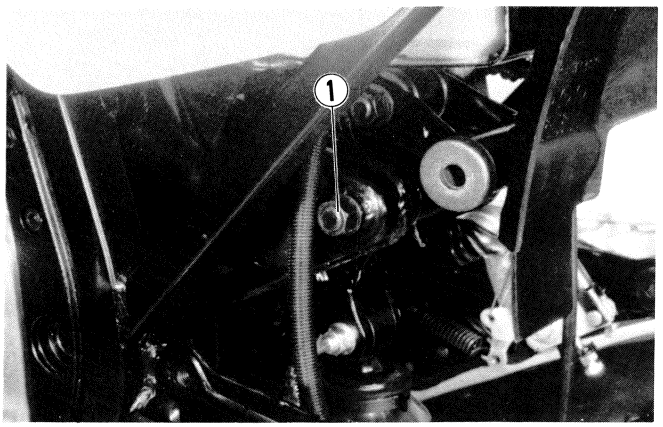

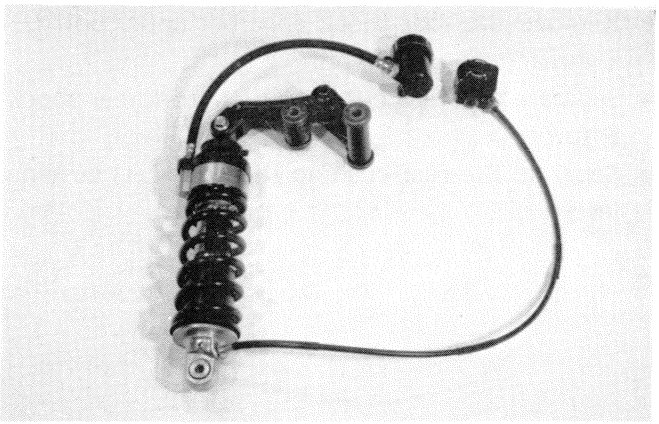

DISASSEMBLY

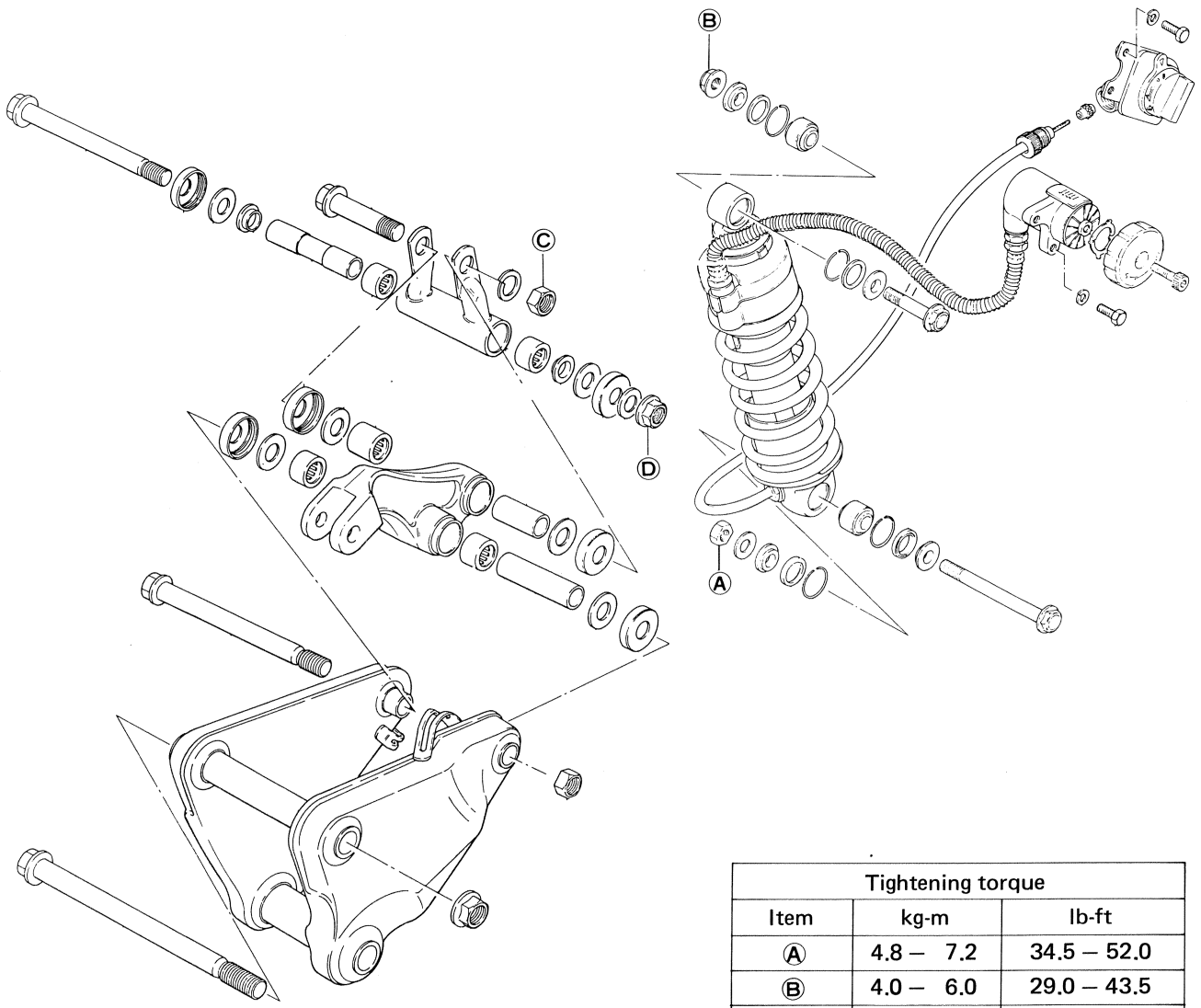

Tightening torque		
Item	kg-m	lb-ft
Ⓐ	4.8 – 7.2	34.5 – 52.0
Ⓑ	4.0 – 6.0	29.0 – 43.5
Ⓒ Ⓓ Ⓔ	7.0 – 10.0	50.5 – 72.5

- Remove the rear shock absorber upper bolt ① and rear cushion rod bolt ② .
- Separate the rear cushion lever from rear shock absorber.
- Separate the rear cushion rod from rear cushion lever.

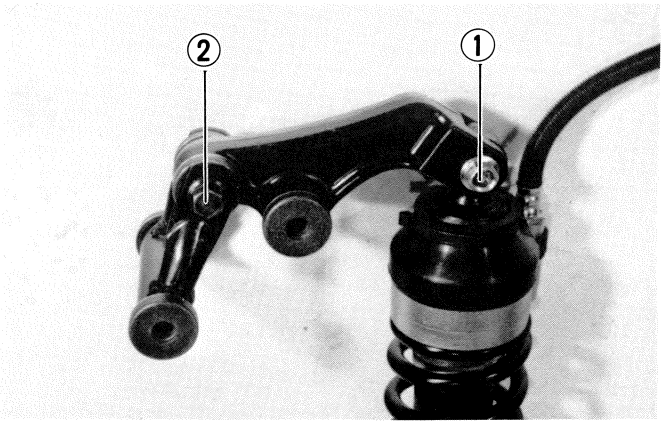

- Pull out the rubber cap ① .
- Rotate the damping adjuster to the left until the red mark appears in the window.

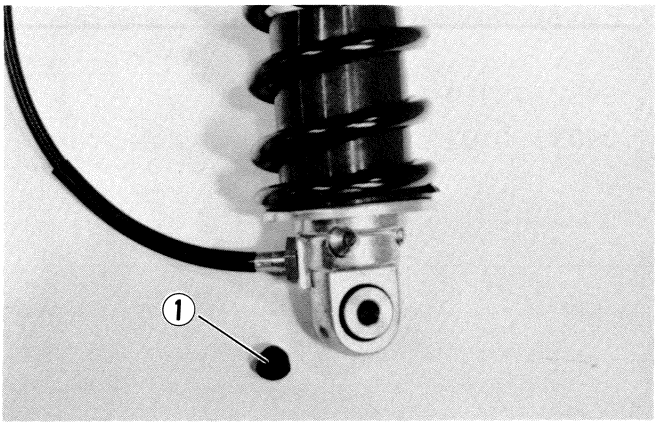

- Disconnect the damping adjuster cable from rear shock absorber.

> **NOTE:**
> **When reassembling, the spring ② and steel ball ③ are not used.**

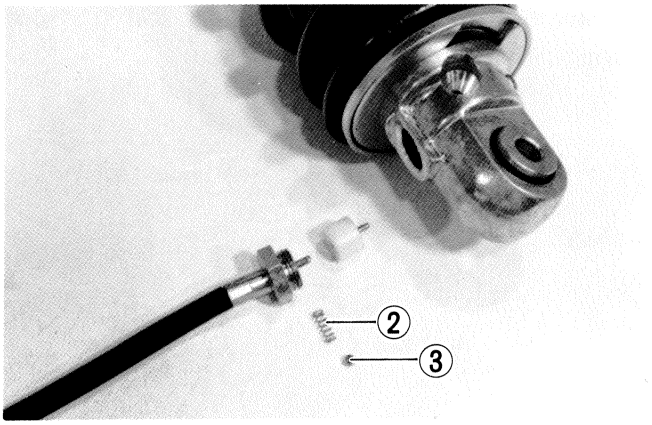

- Disconnect the damping adjuster cable from damping adjuster.

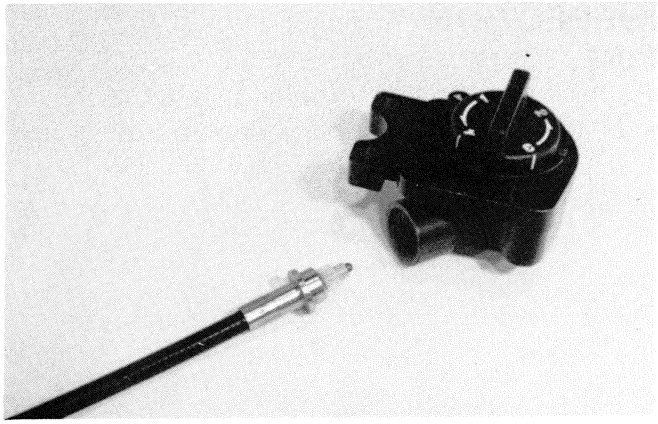

- Draw out the dust seal, washer and spacer.

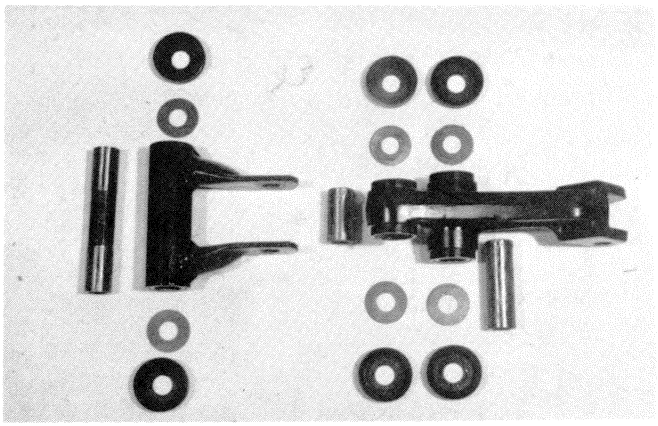

- Remove the bearings by using the special tools.

09923-73210	Bearing puller
09930-30102	Rotor remover slide shaft

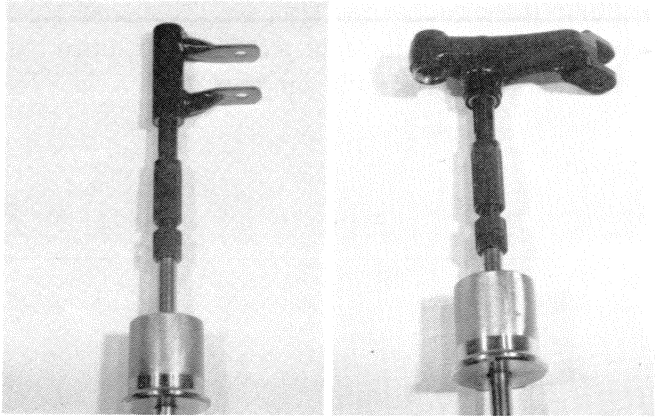

- Draw out the collar ① and dust seal ② from the rear shock absorber.

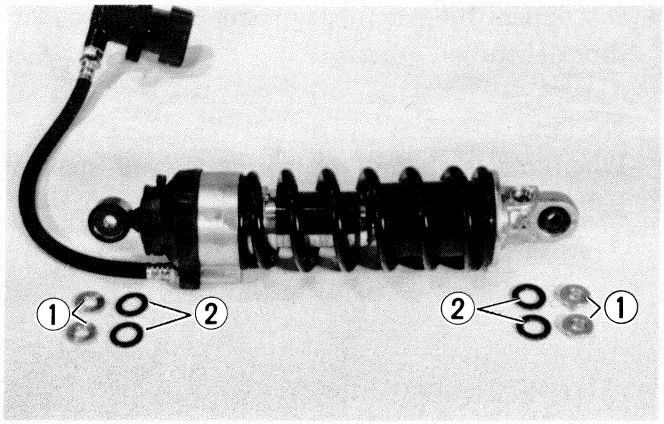

INSPECTION

PIN

- Check to make sure that pin ③ is not bent.
- If the pin is bent, replace cam ④ with a new one.

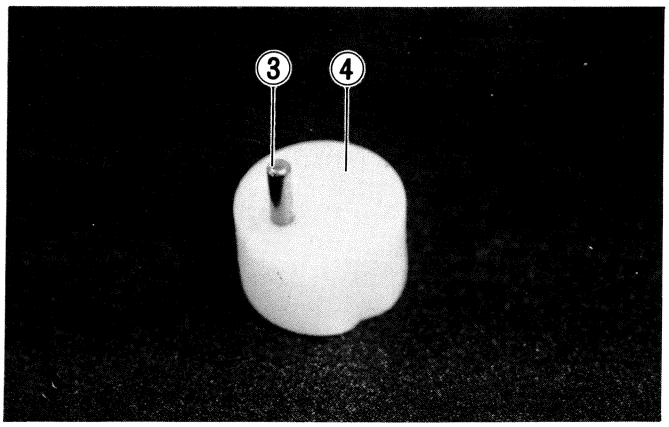

GEAR

- Check to see if gear ⑤ is cracked.
- If cracked, replace with a new gear.

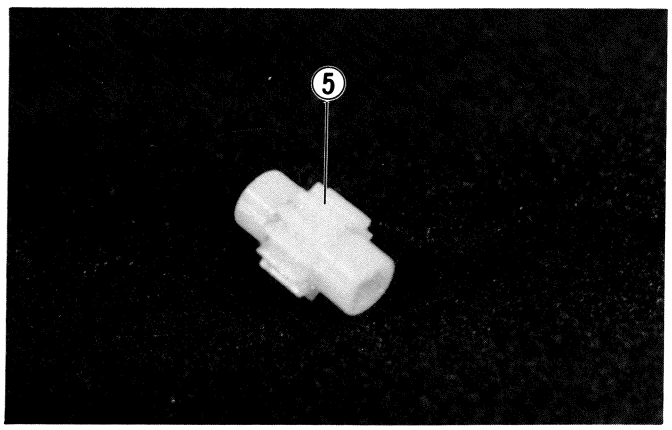

DUST SEAL

- Inspect the dust seals, if they are found to be damaged, replace them with new seals.

REASSEMBLY

Reassemble and remount the full floating suspension in the reverse order of disassembly and removal, and also carry out the following steps.

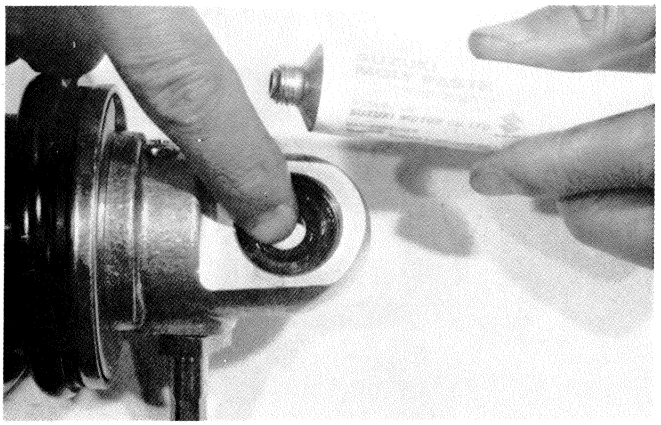

REAR SHOCK ABSORBER

- Apply SUZUKI Moly Paste to the bearings.

99000-25140	SUZUKI Moly Paste

- Apply grease to the dust seal.

99000-25030	SUZUKI Super grease "A"

- When attaching the collars, be sure not to intermix the upper collar ① and the lower collar ② .

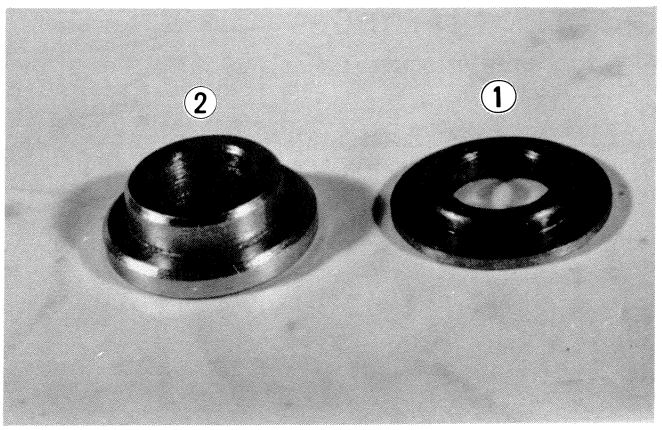

BEARINGS

- Install the right and left bearings by using the special tool.

09924-84510	Bearing installer set

NOTE:
When installing the two bearings, punch marked side of bearing faces outside.

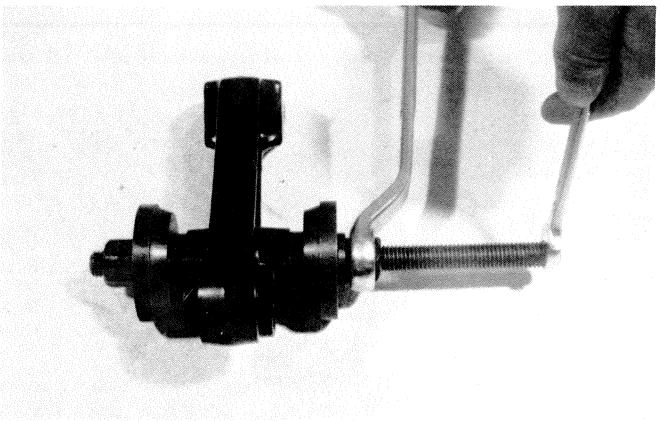

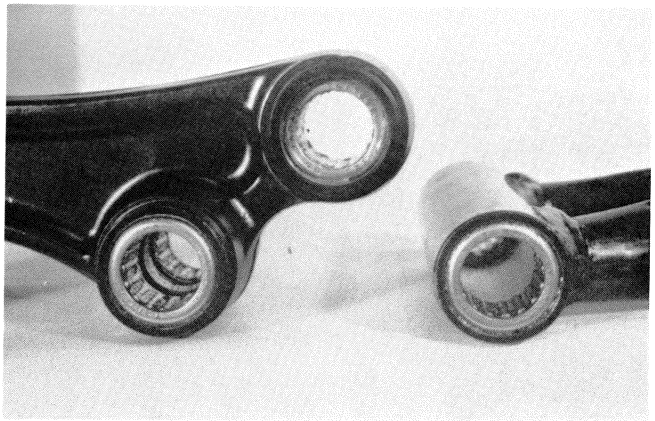

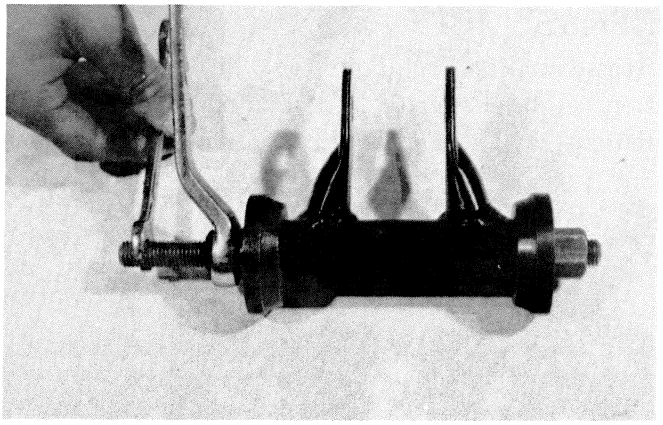

CUSHION ROD UPPER

- Attach the bearing so that the distance between the face of the cushion rod and the bearing face is equal on the right and left.

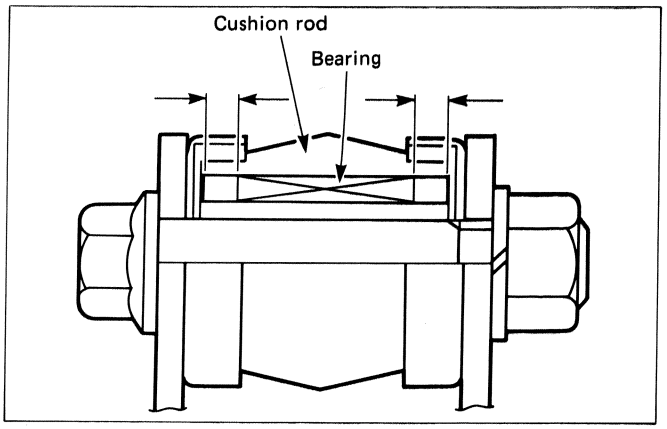

SPACER AND THRUST WASHER

- Apply grease to the spacer and both faces of the thrust washer.

99000-25030	SUZUKI Super grease "A"

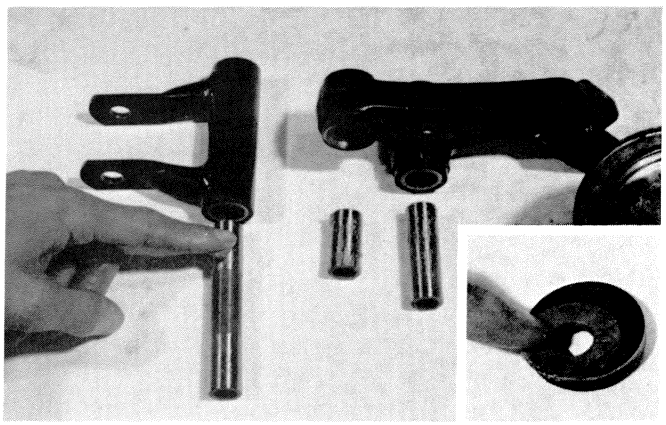

DAMPING ADJUSTER

(1) • Check to make sure the red mark can be seen in the window.

(2) • If the red mark cannot be seen, perform steps (3) and (5).
- Rotate the adjuster to the left so that the red mark appears in the window, and in that position disconnect the cable from the adjuster side.
- Perform (4), (5), (6) and (7).
- Apply grease to the pin ①.

99000-25030	SUZUKI super grease "A"

(3) • Insert the tip of the cable into the cam ② and insert it perpendicularly into the hole in the rear shock absorber. The pin ① may be positioned at any point.
- Tighten bolt ③ to the specified torque.

Tightening torque	1.5 – 3.0 kg-m (11.0 – 21.5 lb-ft)

NOTE:
The spring and steel ball which come out when the cable was removed are not necessary (See page 7-54).

(4) • Rotate the adjuster to the left and align with the number 1 on the scale.

(5) • Insert the gear ④ on the tip of the cable, and lightly rotate to the left by hand. In the position in which it stops, insert it in the adjuster and attach and tighten the screw by hand.

CAUTION:
Push in gear ④ until it locks into place. If this is not done, the gear may crack.

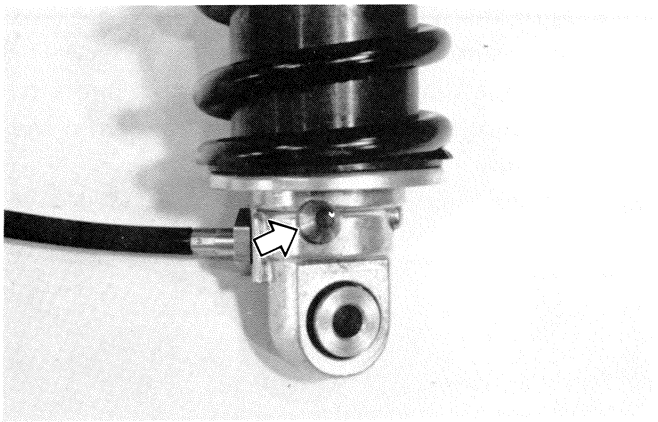

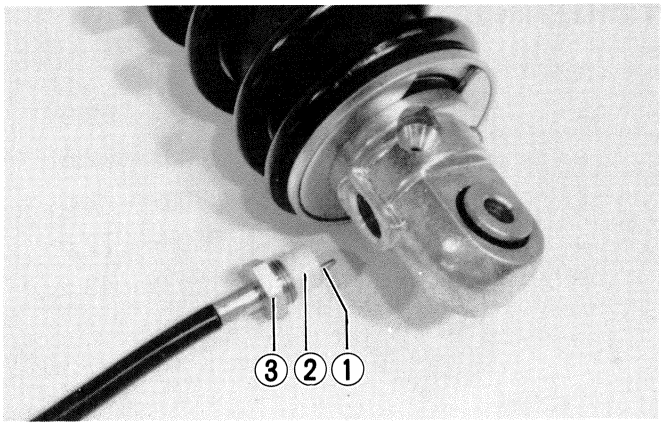

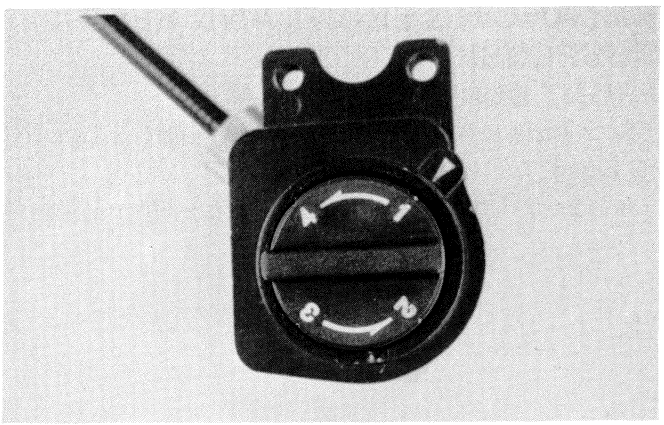

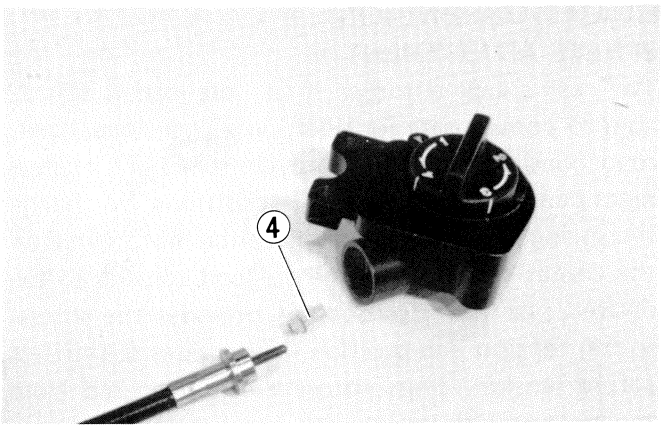

(6) • Turn the adjuster to the left and check to make sure it turns smoothly.
• When setting the adjuster scale at 1, check to make sure the red mark can be seen in the window.

(7) • Attach the rubber cap.

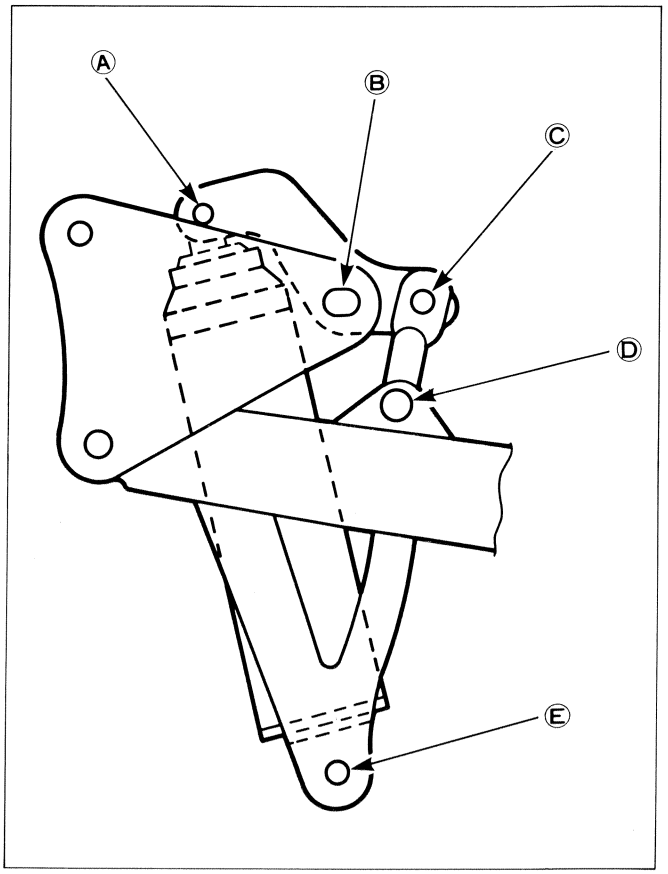

TIGHTENING TORQUE

Item	kg-m	lb-ft
Ⓐ	4.8 – 7.2	34.5 – 52.0
Ⓑ	7.0 – 10.0	50.5 – 72.5
Ⓒ	7.0 – 10.0	50.5 – 72.5
Ⓓ	7.0 – 10.0	50.5 – 72.5
Ⓔ	4.0 – 6.0	29.0 – 43.5

BALANCING FRONT AND REAR SUSPENSION

FRONT SUSPENSION

The standard front fork air pressure is 0.2 kg/cm^2 (2.8 psi).

See page 7-18 for adjusting front fork air pressure.

REAR SUSPENSION

SPRING ADJUSTMENT

The rear shock absorber spring pre-load is adjustable to compensate for rider, passenger, load, road, road conditions and motorcycle speed. To change ment can be performed in five positions. To change the spring pre-load setting, place the motorcycle on the center stand. Twist the pre-load adjuster to the desired position. Position (1) provides the softest spring tension and position (5) provides the stiffest spring tension. This motorcycle is delivered from the factory with its adjuster set on the (1) position.

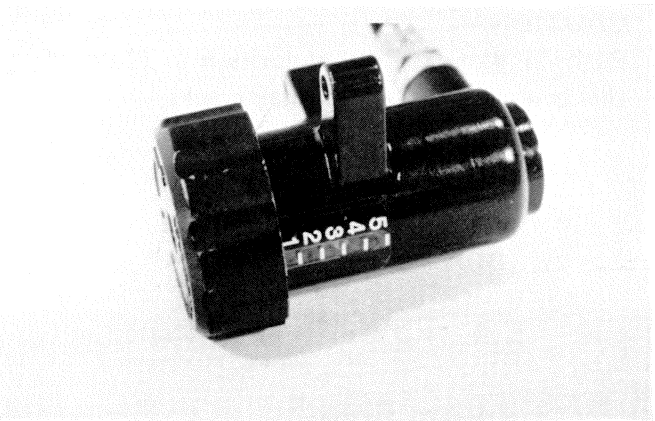

DAMPING ADJUSTMENT

To increase or decrease the damping force, turn this adjusting dial as shown in the photo. Damping adjustments are indicated by the numbers 1 thru 4 engraved on the adjusting dial. As you turn the adjusting dial, you will notice a click as you reach each number position. When changing the damping, always be sure that the adjusting dial stops with the number facing the arrow, that a click is noticed and the dial feels as if it were sitting in a detent or a notch. Position 1 (softest) provides for the smallest amount of damping force, and position 4 (stiffest) for the largest amount. This motorcycle is delivered from the factory with rear damper adjusted to the number 1 position (softest position).

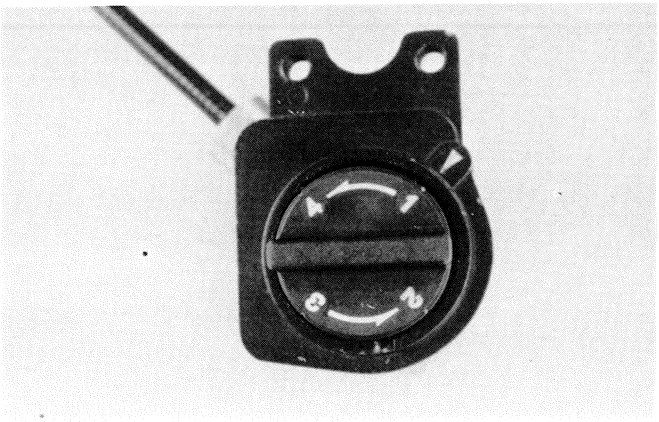

CHANGING FRONT AND REAR SUSPENSION SETTING

The standard suspension setting is calculated to provide excellent suspension comfort and handling stability for the following driving conditions: solo riding, driving from low to high speed, no extra accessories attached and no play-load mounted. If you feel the standard setting is too soft, change the setting to the harder setting as shown in the following table. If any load, including weight of passenger, accessories, or pay-load is to be increased, the suspension setting should be adjusted as guided in the following table.

WARNING:
Settings other than those listed in the table can cause instability. Be sure to follow the recommendations.

Suspension Setting

	Standard	Hard
Front air pressuer	0.2 kg/cm² (2.8 psi)	0.3 – 0.4 kg/cm² (4.3 – 5.7 psi)
Rear spring setting	1	3
Rear damper setting	1	3

With passenger, pay-load or accessories

	Soft	Hard
Front air pressurer	0.3 – 0.4 kg/cm² (4.3 – 5.7 psi)	0.4 – 0.5 kg/cm² (5.7 – 7.1 psi)
Rear spring setting	4	5
Rear damper setting	3	4

SERVICING INFORMATION

CONTENTS

TROUBLESHOOTING 8– 1
WIRING DIAGRAM 8– 8
WIRE ROUTING 8– 9
CABLE ROUTING 8– 12
HOSE AND PIPE ROUTING 8– 13
TIGHTENING TORQUE 8– 16
SPECIAL TOOLS 8– 19
SERVICE DATA 8–25

TROUBLESHOOTING

ENGINE

Complaint	Symptom and possible causes	Remedy
Engine will not start, or is hard to start.	**Compression too low.**	
	1. Valve clearance out of adjustment.	Adjust.
	2. Worn valve guides or poor seating of valves.	Repair, or replace.
	3. Valves mistiming.	Adjust.
	4. Piston rings excessively worn.	Replace.
	5. Worn-down cylinder bores.	Replace, or rebore.
	6. Starter motor cranks but too slowly.	Consult "electrical complaints".
	Plugs not sparking.	
	1. Fouled spark plugs.	Clean.
	2. Wet spark plugs.	Clean and dry.
	3. Defective ignition coil.	Replace.
	4. Open or short in high-tension cords.	Replace.
	5. Defective signal generator or igniter unit.	Replace.
	No fuel reaching the carburetors.	
	1. Clogged hole in the fuel tank cap.	Clean.
	2. Clogged or defective fuel cock.	Clean or replace.
	3. Defective carburetor needle valve.	Replace.
	4. Clogged fuel pipe or defective vacuum pipe.	Clean.
	5. Defective fuel cock diaphragm.	Replace.
Engine stalls easily.	1. Fouled spark plugs.	Clean.
	2. Defective signal generator or igniter unit.	Replace.
	3. Clogged fuel pipe.	Clean.
	4. Clogged jets in carburetors.	Clean.
	5. Valve clearance out of adjustment.	Adjust.
Noisy engine.	**Excessive valve chatter.**	
	1. Valve clearance too large.	Adjust.
	2. Weakened or broken valve springs.	Replace.
	3. Worn down rocker arm or rocker arm shaft.	Replace.
	Noise appears to come from pistons.	
	1. Pistons or cylinders worn down.	Replace or rebore.
	2. Combustion chambers fouled with carbon.	Clean.
	3. Piston pins worn.	Replace.
	4. Burnt piston or piston ring.	Replace.
	Noise seems to come from cam chain.	
	1. Stretched cam drive chain.	Replace.
	2. Worn cam chain sprockets.	Replace.
	3. Tension adjuster not working.	Repair or replace.
	Noise seems to come from clutch.	
	1. Worn splines of countershaft or hub.	Replace.
	2. Worn teeth of clutch plates.	Replace.
	3. Distorted clutch plates, driven and drive.	Repair or replace.
	Noise seems to come from crankshaft.	
	1. Worn or burn bearings.	Replace.
	2. Worn or burnt crankshaft journal bearing.	Replace.
	3. Worn or burnt crankshaft thrust bearings.	Replace.

Complaint	Symptom and possible causes	Remedy
Noisy engine.	**Noise seems to come from transmission.**	
	1. Gears worn or rubbing.	Replace.
	2. Badly worn countershaft/driveshaft splines.	Replace.
	3. Gears or shaft burnt.	Replace.
Slipping clutch.	1. Clutch control out of adjustment or loss of play.	Adjust.
	2. Weakened clutch springs.	Replace.
	3. Worn or distorted pressure plate.	Replace.
	4. Distorted clutch plates, drive and driven.	Replace.
	5. Wave washer weak or broken piano wire.	Replace.
Dragging clutch.	1. Clutch control out of adjustment or too much play.	Adjust.
	2. Some clutch springs weakened while others are not.	Replace.
	3. Distorted pressure plate or clutch plates.	Replace.
Transmission will not shift.	1. Broken gearshift cam.	Replace.
	2. Distorted gearshift forks.	Replace.
Transmission will not shift back.	1. Broken return spring on shift shaft.	Replace.
	2. Shift shafts are rubbing or sticky.	Repair.
	3. Distorted or worn gearshift forks.	Replace.
Transmission jumps out of gear.	1. Worn shifting gears on countershaft or drive shaft.	Replace.
	2. Distorted or worn gearshift forks.	Replace.
	3. Weakened stopper spring on gearshift stopper.	Replace.
Engine idles poorly.	1. Valve clearance out of adjustment.	Adjust.
	2. Poor seating of valves.	Replace.
	3. Defective valve guides.	Replace.
	4. Worn rocker arm or arm shaft.	Replace.
	5. Spark plug gaps too wide.	Adjust or replace.
	6. Defective ignition coil.	Replace.
	7. Defective signal generator or igniter unit.	Replace.
	8. Float-chamber fuel level out of adjustment in carburetors.	Adjust.
	9. Clogged jets or imbalance of carburetors.	Clean or adjust.
Engine runs poorly in high-speed range.	1. Valve springs weakened.	Replace.
	2. Valve timing out of adjustment.	Adjust.
	3. Worn cams or rocker arms.	Replace.
	4. Spark plug gaps too narrow.	Adjust.
	5. Defective ignition coil.	Replace.
	6. Defective signal generator or igniter unit.	Replace.
	7. Float-chamber fuel level too low.	Adjust.
	8. Clogged air cleaner element.	Clean.
	9. Clogged fuel pipe, resulting in inadequate fuel supply to carburetors.	Clean, and prime.
	10. Clogged or sucking air vacuum pipe.	Clean or replace.
Dirty or heavy exhaust smoke.	1. Too much engine oil in the engine.	Check with level window. Drain out excess oil.
	2. Worn piston rings or cylinders.	Replace or rebore.
	3. Worn valve guides.	Replace.
	4. Cylinder walls scored or scuffed.	Rebore or replace.
	5. Worn valve stems.	Replace.
	6. Defective stem seal.	Replace.

Complaint	Symptom and possible causes	Remedy
Engine lacks power.	1. Loss of valve clearance.	Adjust.
	2. Weakened valve springs.	Replace.
	3. Valve timing out of adjustment.	Adjust.
	4. Worn piston rings or cylinders.	Replace.
	5. Poor seating of valves.	Repair.
	6. Worn rocker arms or its shaft.	Replace.
	7. Fouled spark plugs.	Clean or replace.
	8. Spark plug gaps incorrect.	Adjust or replace.
	9. Clogged jets in carburetors.	Clean.
	10. Float-chamber fuel level out of adjustment.	Adjust.
	11. Clogged air cleaner element.	Clean.
	12. Carburetor balancing screw loose.	Retighten.
	13. Sucking air from intake pipe.	Retighten or replace.
	14. Too much engine oil in the engine.	Drain out excess oil.
Engine overheats.	1. Heavy carbon deposit on piston crowns.	Clean.
	2. Not enough oil in the engine.	Add oil.
	3. Defective oil pump or clogged oil circuit.	Replace or clean.
	4. Fuel level too low in float chambers.	Adjust.
	5. Sucking air from intake pipes.	Retighten or replace.
	6. Use of incorrect engine and oil.	Change.

CARBURETOR

Complaint	Symptom and possible causes	Remedy
Trouble with starting.	1. Starter jet is clogged.	Clean.
	2. Starter pipe is clogged.	Clean.
	3. Air leaking from a joint between starter body and carburetor.	Check starter body and carburetor for tightness, adjust and replace gasket.
	4. Air leaking from carburetor's joint or vacuum gauge joint.	Check and adjust.
	5. Starter plunger is not operating properly.	Check and adjust.
Idling or low-speed trouble.	1. Pilot jet, pilot air jet are clogged or loose.	Check and clean.
	2. Air leaking from carburetor's joint, vacuum gauge joint, or starter.	Check and adjust.
	3. Pilot outlet or bypass is clogged.	Check and clean.
	4. Starter plunger is not fully closed.	Check and adjust.
Medium- or high-speed trouble.	1. Main jet or main air jet is clogged.	Check and clean.
	2. Needle jet is clogged.	Check and clean.
	3. Throttle valve is not operating properly.	Check throttle valve for operation.
	4. Filter is clogged.	Check and clean.
Overflow and fuel level fluctuations.	1. Needle valve is worn or damaged.	Replace.
	2. Spring in needle valve is broken.	Replace.
	3. Float is not working properly.	Check and adjust.
	4. Foreign matter has adhered to needle valve.	Clean.
	5. Fuel level is too high or low.	Adjust float height.

ELECTRICAL

Complaint	Symptom and possible causes	Remedy
No sparking or poor sparking.	1. Defective ignition coil. 2. Defective spark plugs. 3. Defective signal generator or igniter unit.	Replace. Replace. Replace.
Spark plugs soon become fouled with carbon.	1. Mixture too rich. 2. Idling speed set too high. 3. Incorrect gasoline. 4. Dirty element in air cleaner. 5. Spark plugs too cold.	Adjust carburetors. Adjust carburetors. Change. Clean. Replace by hot type plugs.
Spark plugs become fouled too soon.	1. Worn piston rings. 2. Pistons or cylinders worn. 3. Excessive clearance of valve stems in valve guides. 4. Worn stem oil seal.	Replace. Replace. Replace. Replace.
Spark plug electrodes overheat or burn.	1. Spark plugs too hot. 2. The engine overheats. 3. Defective signal generator or igniter unit. 4. Spark plugs loose. 5. Mixture too lean.	Replace by cold type plugs. Tune up. Adjust. Retighten. Adjust carburetors.
Generator does not charge.	1. Open or short in lead wires, or loose lead connections. 2. Shorted, grounded or open generator coils. 3. Shorted or open regulator/rectifier.	Repair or replace or retighten. Replace. Replace.
Generator charge, but charging rate is below the specification.	1. Lead wires shorted or open-circuited or loosely connected at terminals. 2. Grounded or open-circuited stator coils of generator. 3. Defective regulator/rectifier. 4. Not enough electrolyte in the battery. 5. Defective cell plates in the battery.	Repair, or retighten. Replace. Replace. Add distilled water between the level lines. Replace the battery.
Generator overcharges.	1. Internal short-circuit in the battery. 2. Resistor element in the regulator/rectifier damaged or defective. 3. Regulator/rectifier poorly grounded.	Replace the battery. Replace. Clean and tighten ground connection.
Unstable charging.	1. Lead wire insulation frayed due to vibration, resulting in intermittent shorting. 2. Generator internally shorted. 3. Defective regulator/rectifier.	Repair or replace. Replace. Replace.
Starter button is not effective.	1. Battery run down. 2. Defective switch contacts. 3. Brushes not seating properly on commutator in starter motor. 4. Defective starter relay.	Recharge or replace. Replace. Repair or replace. Replace.

BATTERY

Compaint	Symptom and possible causes	Remedy
"Sulfation", acidic white powdery substance or spots on surfaces of cell plates.	1. Not enough electrolyte 2. Battery case is cracked. 3. Battery has been left in a run-down condition for a long time. 4. Adulterated electrolyte (Foreign matter has entered the battery and become mixed with the electrolyte.	Add distilled water, if the battery has not been damaged and "sulfation" has not advanced too far, and recharge. Replace the battery. Replace the battery. If "sulfation" has not advanced too far, try to restore the battery by replacing the electrolyte, recharging it fully with the battery detached from the motorcycle and then adjusting electrolyte S.G.
Battery runs down quickly.	1. The charging method is not correct. 2. Cell plates have lost much of their active material as a result of over-charging. 3. A short-circuit condition exists within the battery due to excessive accumulation of sediments caused by the high electrolyte S.G. 4. Electrolyte S.G. is too low. 5. Adulterated electrolyte. 6. Battery is too old.	Check the generator, regulator/rectifier and circuit connections, and make necessary adjustments to obtain specified charging operation. Replace the battery, and correct the charging system. Replace the battery. Recharge the battery fully and adjust electrolyte S.G. Replace the electrolyte, recharge the battery and then adjust S.G. Replace the battery.
Reversed battery polarity.	The battery has been connected the wrong way round in the system, so that it is being charged in the reverse direction.	Replace the battery and be sure to connect the battery properly.
Battery "sulfation"	1. Charging rate too low or too high. (When not in use, batteries should be recharged at least once a month to avoid sulfation.) 2. Battery electrolyte excessive or insufficient, or its specific gravity too high or to low. 3. The battery left unused for too long in cold climate.	Replace the battery. Keep the electrolyte up to the prescribed level, or adjust the S.G. by consulting the battery maker's directions. Replace the battery, if badly sulfated.
Battery discharges too rapidly.	1. Dirty container top and sides. 2. Impurities in the electrolyte or electrolyte S.G. is too high.	Clean. Change the electrolyte by consulting the battery maker's directions.

CHASSIS

Complaint	Symptom and possible causes	Remedy
Heavy steering	1. Steering stem nut overtightened. 2. Worn or broken bearing or race in steering stem. 3. Distorted steering stem. 4. Not enough pressure in tires.	Adjust. Replace. Replace. Adjust.
Wobbly handle	1. Loss of balance between right and left front fork. 2. Distorted front fork. 3. Distorted front axle or crooked tire.	Replace. Repair or replace. Replace.
Wobbly front wheel	1. Distorted wheel. 2. Worn-down front wheel bearings. 3. Defective or incorrect tire. 4. Loose nut on axle. 5. Loose nuts on the rear shock. 6. Worn swing arm related bearing.	Replace. Replace. Replace. Retighten. Retighten. Replace.
Front suspension too soft	1. Weakened springs. 2. Not enough fork oil. 3. Not enough fork air.	Replace. Refill. Adjust to specification.
Front suspension too stiff	1. Fork oil too viscous. 2. Too much fork oil. 3. Fork air too high.	Replace. Drain excess oil. Adjust to specification.
Noisy front suspension	1. Not enough fork oil. 2. Loose nuts on suspension.	Refill. Retighten.
Wobbly rear wheel	1. Distorted wheel. 2. Worn-down rear wheel bearings. 3. Defective or incorrect tire. 4. Worn swing arm related bearings. 5. Loose nuts on rear shock.	Replace. Replace. Replace. Replace. Retighten.
Rear suspension too soft	1. Weakened springs. 2. Rear suspension adjuster improperly set. 3. Oil leakage of rear shock adjuster.	Replace. Adjust. Replace.
Rear suspension too stiff	1. Rear suspension adjuster improperly set. 2. Worn swing arm related bearing.	Adjust. Replace.
Noisy rear suspension	1. Loose nuts on suspension. 2. Worn swing arm related bearing.	Retighten. Replace.

BRAKES

Complaint	Symptom and possible causes	Remedy
Poor braking. (FRONT and REAR)	1. Not enough brake fluid in the reservoir. 2. Air trapped in brake fluid circuit. 3. Pads worn down. 4. Too much play on brake pedal	Refill to level mark. Bleed air out. Replace. Adjust.
Insufficient brake power.	1. Leakage of brake fluid from hydraulic system. 2. Worn pads. 3. Oil adhesion on engaging surface of pads. 4. Worn disc. 5. Air in hydraulic system.	Repair or replace. Replace. Clean disc and pads. Replace. Bleed air.
Brake squeaking.	1. Carbon adhesion on pad surface. 2. Tilted pad. 3. Damaged wheel bearing. 4. Loose front-wheel axle or rear-wheel axle. 5. Worn pads. 6. Foreign material in brake fluid. 7. Clogged return port of master cylinder.	Repair surface with emery paper. Modify pad fitting. Replace. Tighten to specified torque. Replace. Replace brake fluid. Disassemble and clean master cylinder.
Excessive brake lever stroke.	1. Air in hydraulic system. 2. Worn brake lever cam. 3. Insufficient brake fluid. 4. Improper quality of brake fluid.	Bleed air. Replace brake lever. Replenish fluid to specified level; bleed air. Replace with correct fluid.
Leakage of brake fluid.	1. Insufficient tightening of connection joints. 2. Cracked hose. 3. Worn piston and/or cup.	Tighten to specified torque. Replace. Replace piston and/or cup.

WIRING DIAGRAM

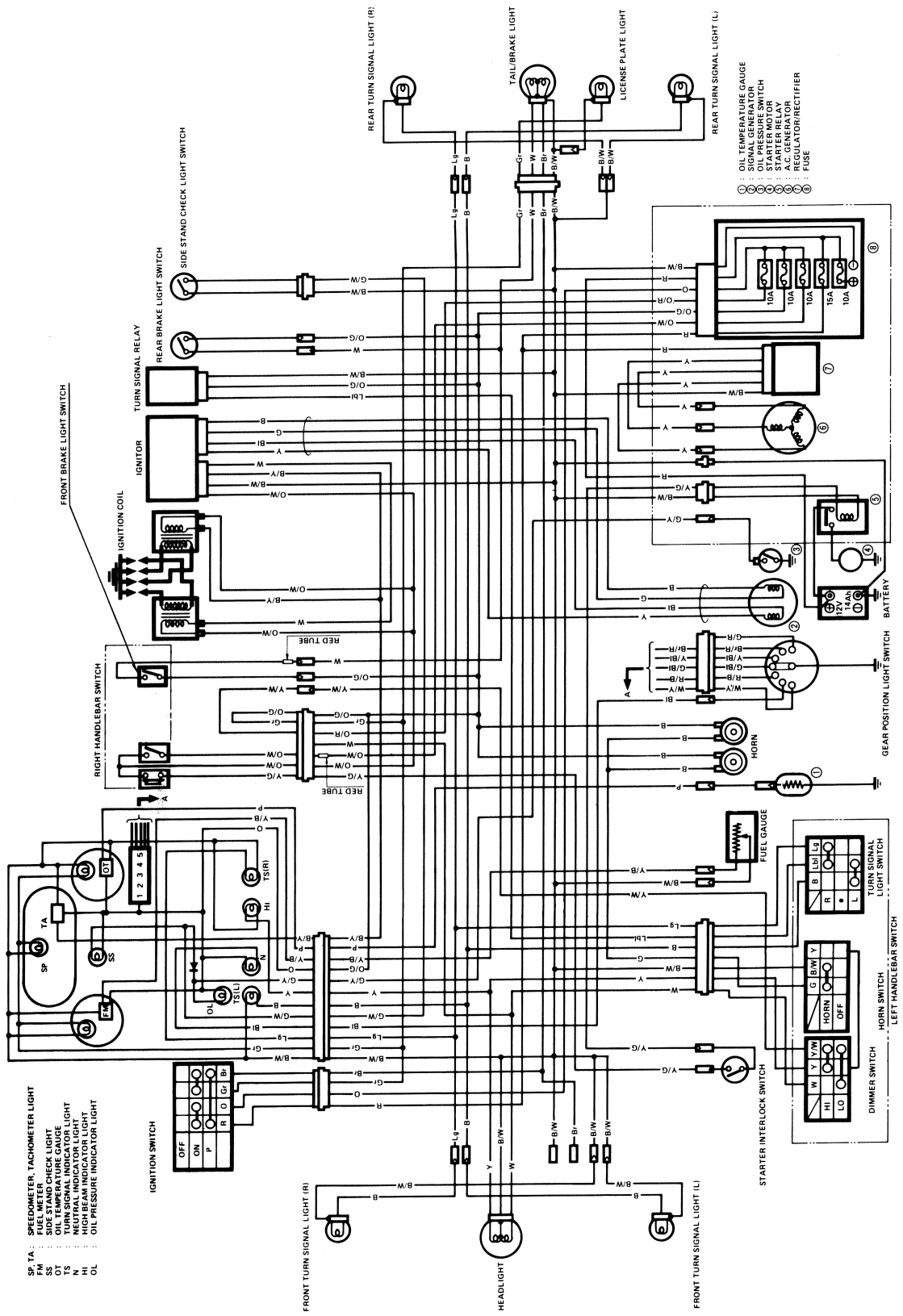

WIRE COLOR

B	Black	P	Pink
Bl	Blue	R	Red
Br	Brown	W	White
G	Green	Y	Yellow
Gr	Gray	B/W	Black with White tracer
Lbl	Light blue	B/Y	Black with Yellow tracer
Lg	Light green	G/W	Green with White tracer
O	Orange	G/Y	Green with Yellow tracer
		O/G	Orange with Green tracer
		O/R	Orange with Red tracer
		O/W	Orange with White tracer
		Y/B	Yellow with Black tracer
		Y/G	Yellow with Green tracer
		Y/W	Yellow with White tracer

WIRE ROUTING

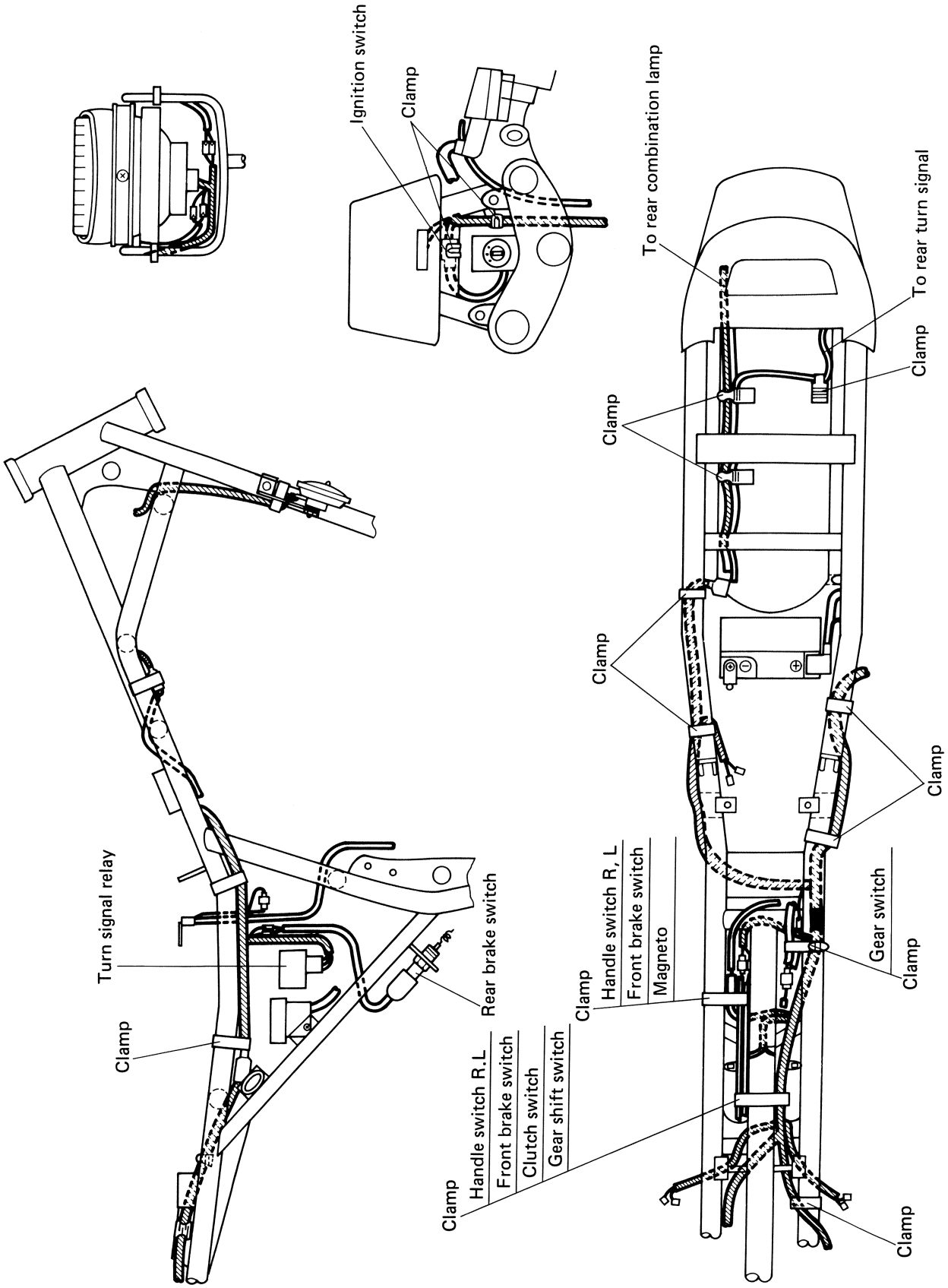

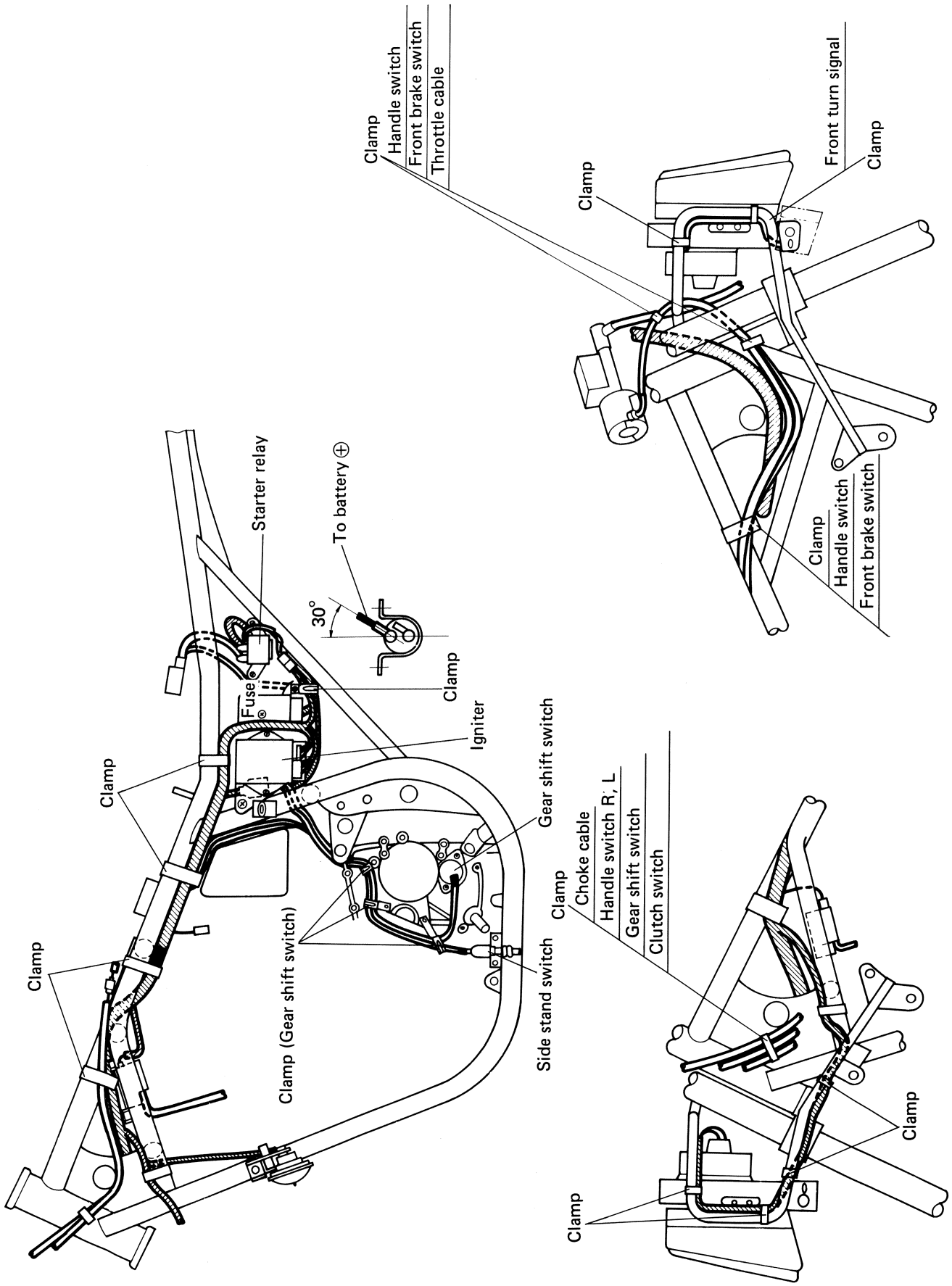
Clamp
Handle switch
Front brake switch
Throttle cable
Clamp
Front turn signal
Clamp
Clamp
Handle switch
Front brake switch
Starter relay
To battery ⊕
30°
Clamp
Fuse
Igniter
Clamp
Gear shift switch
Clamp
Clamp (Gear shift switch)
Side stand switch
Clamp
Choke cable
Handle switch R, L
Gear shift switch
Clutch switch
Clamp
Clamp

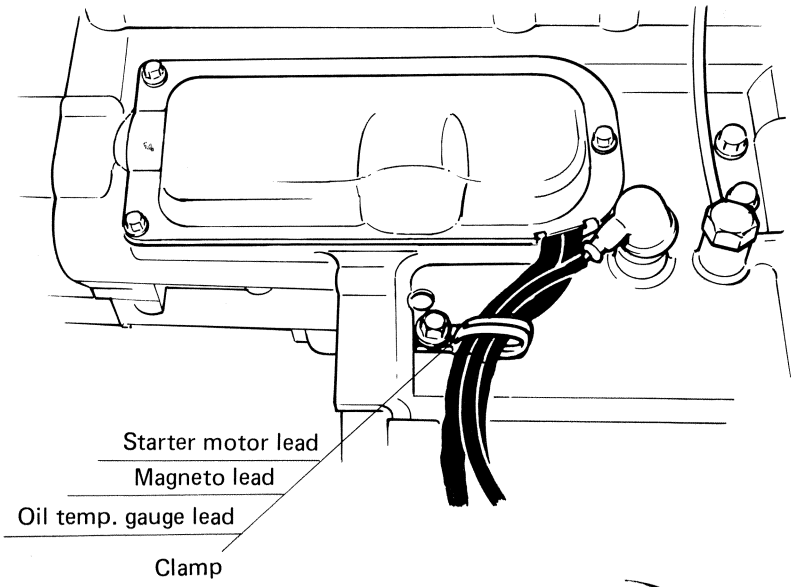
Starter motor lead
Magneto lead
Oil temp. gauge lead
Clamp

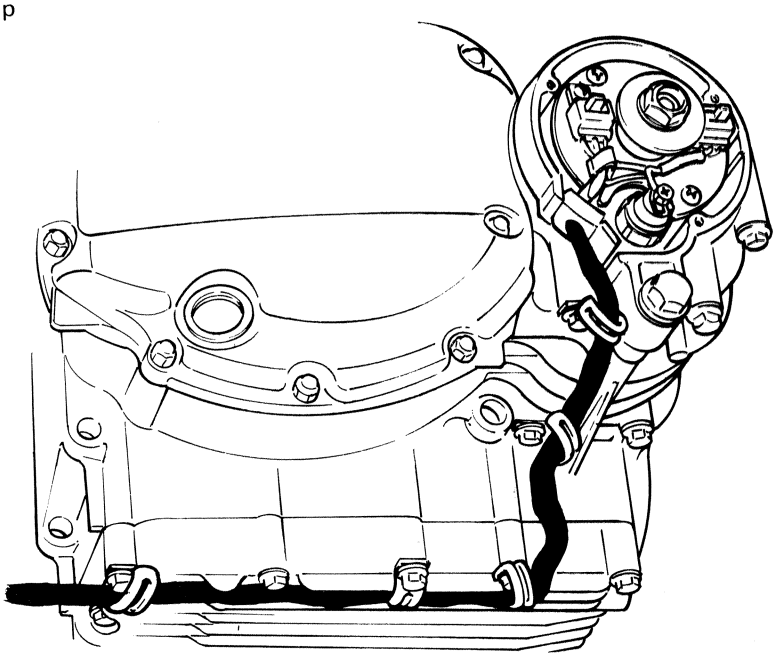

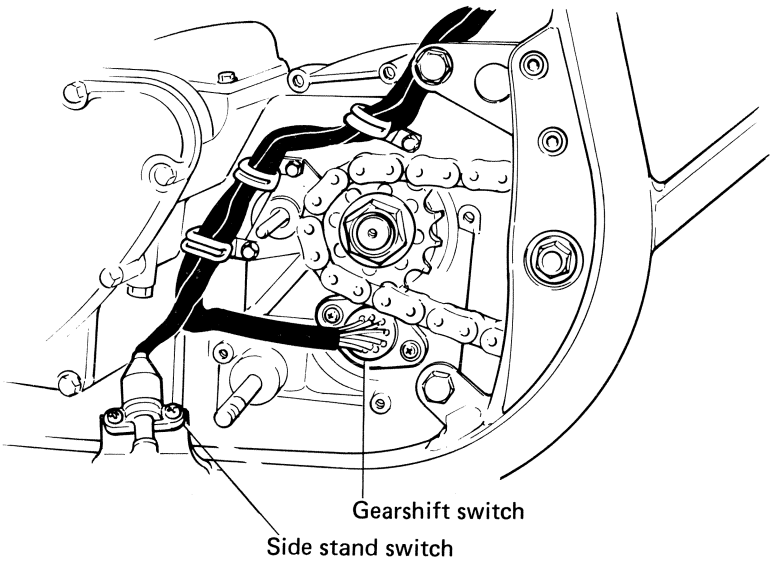
Gearshift switch
Side stand switch

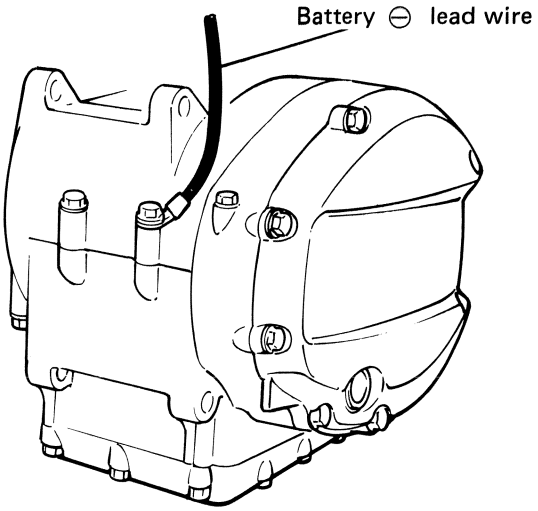
Battery ⊖ lead wire

CABLE ROUTING

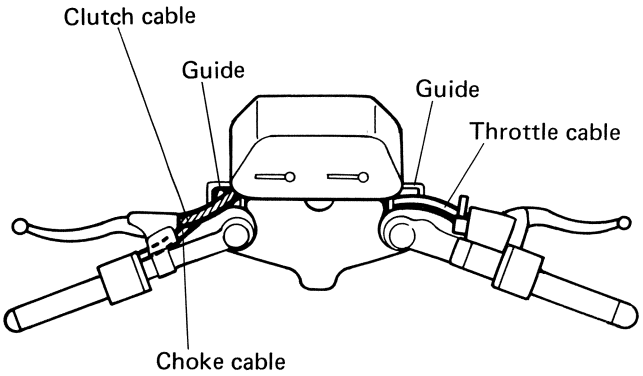

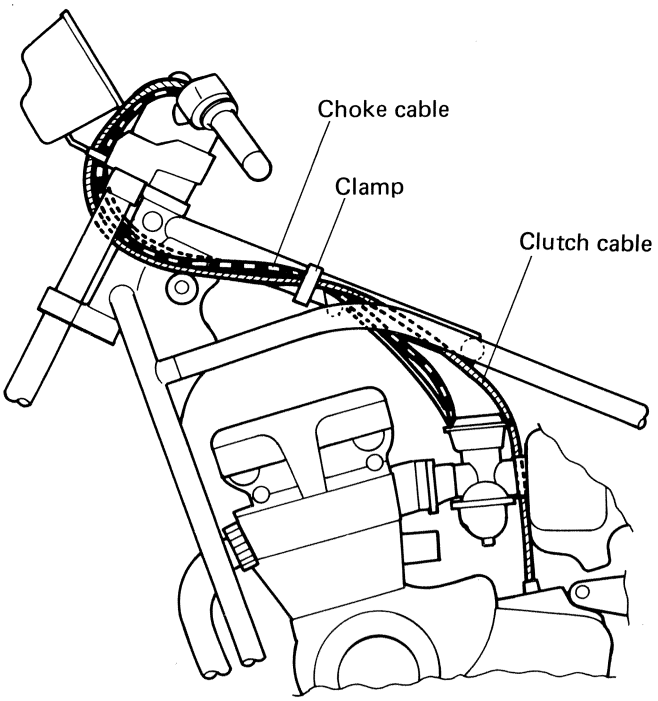

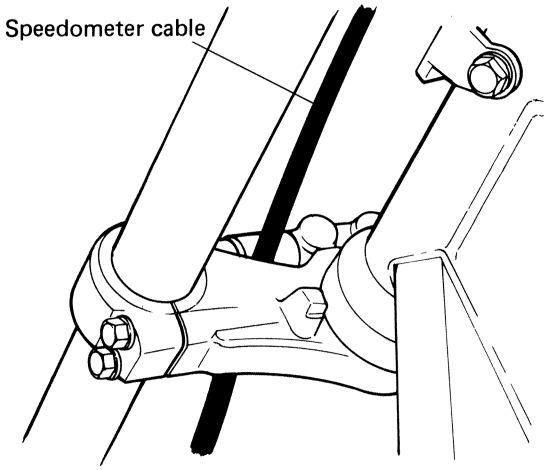

Speedometer cable should be route between the brake hose joint and steering stem lower bracket.

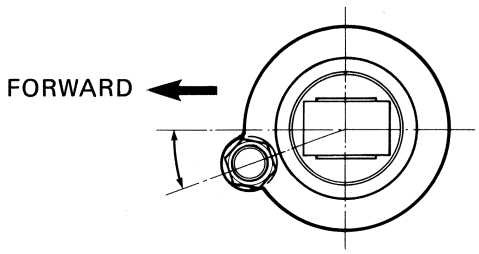

VIEW OF A

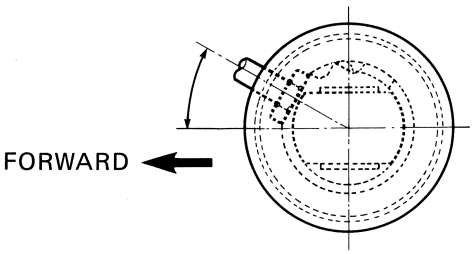

VIEW OF B

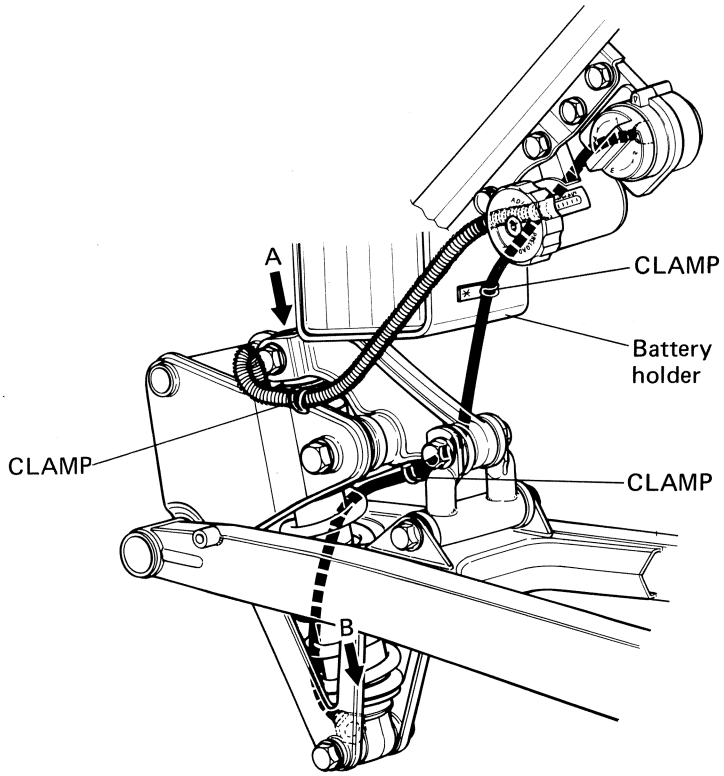

HOSE AND PIPE ROUTING

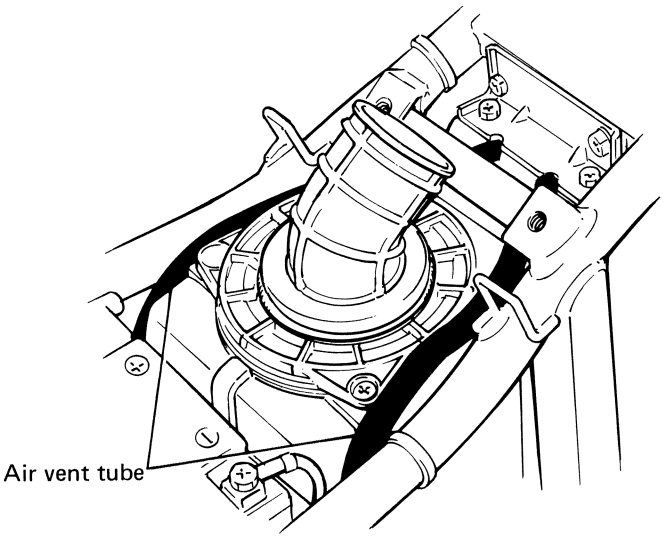

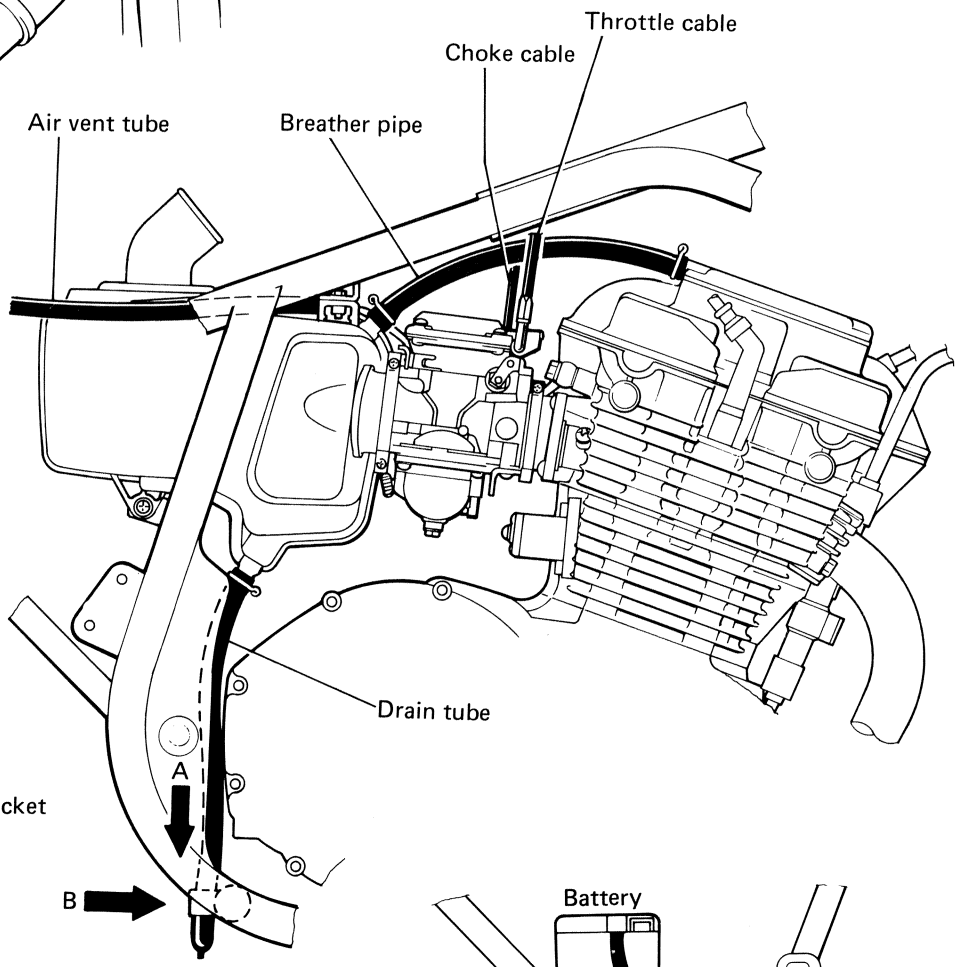

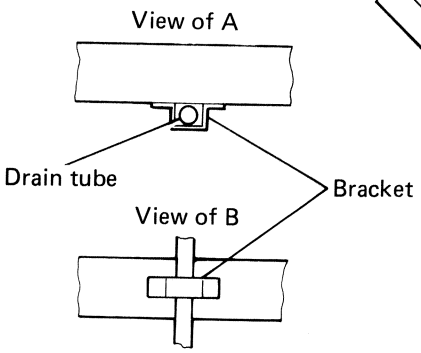

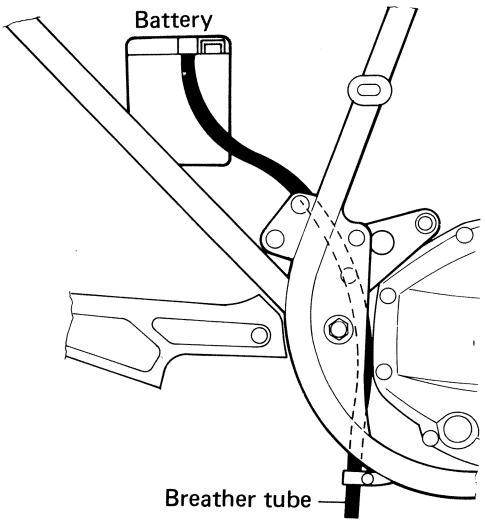

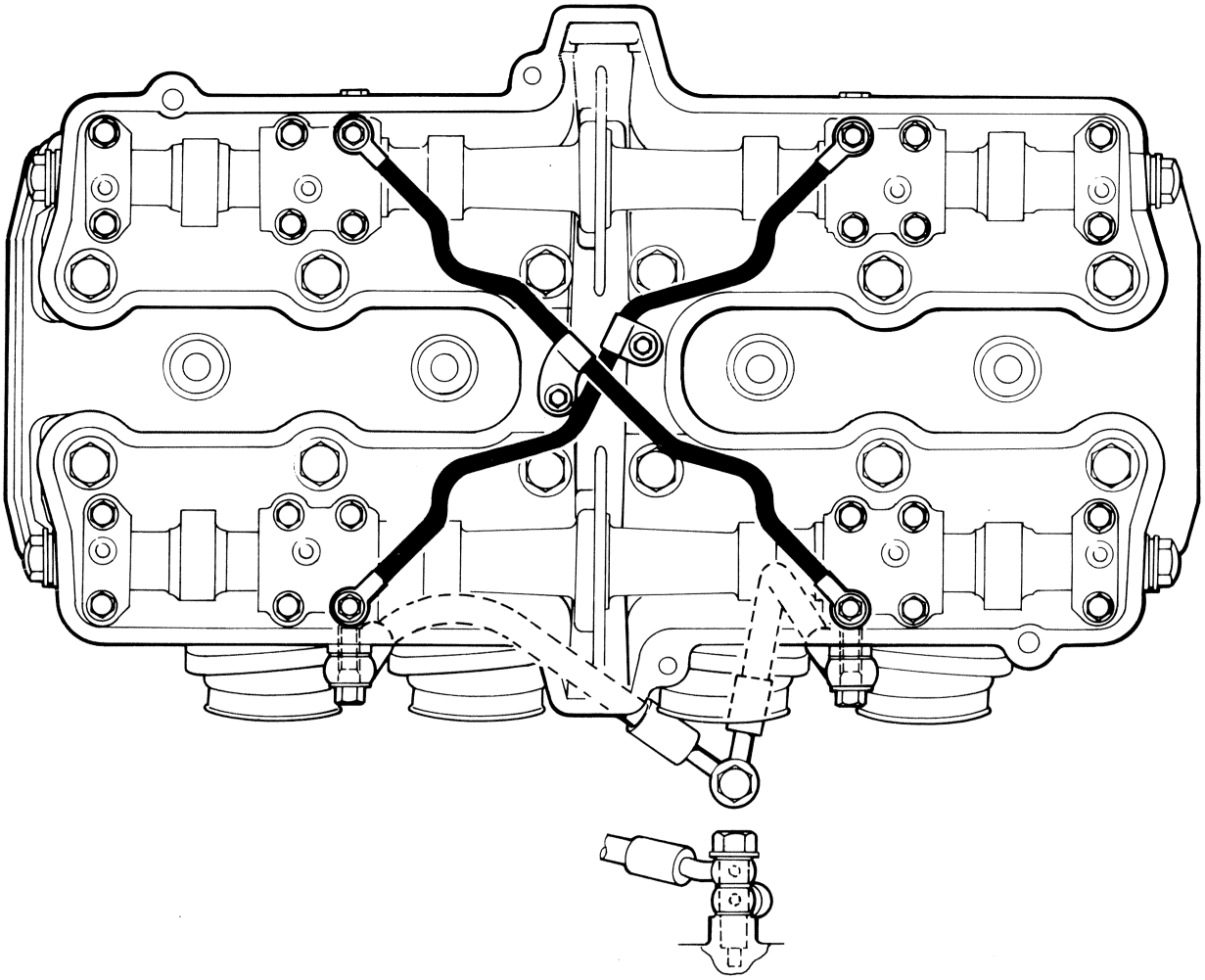

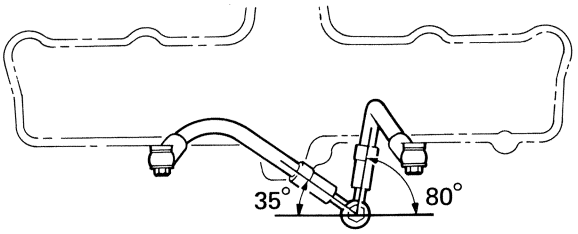

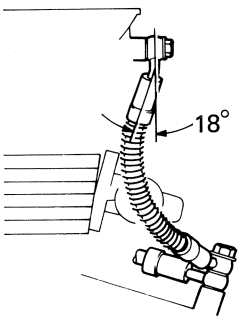

View of B

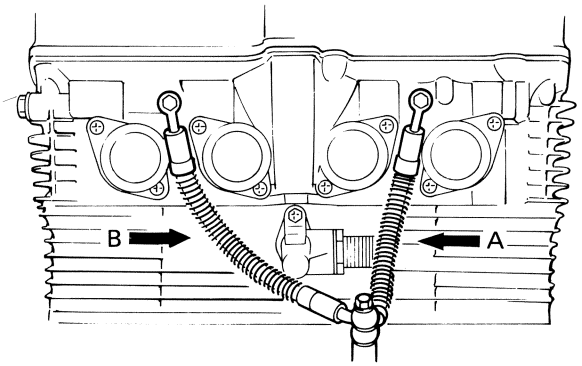

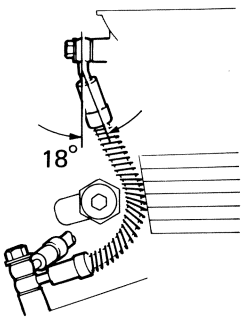

View of A

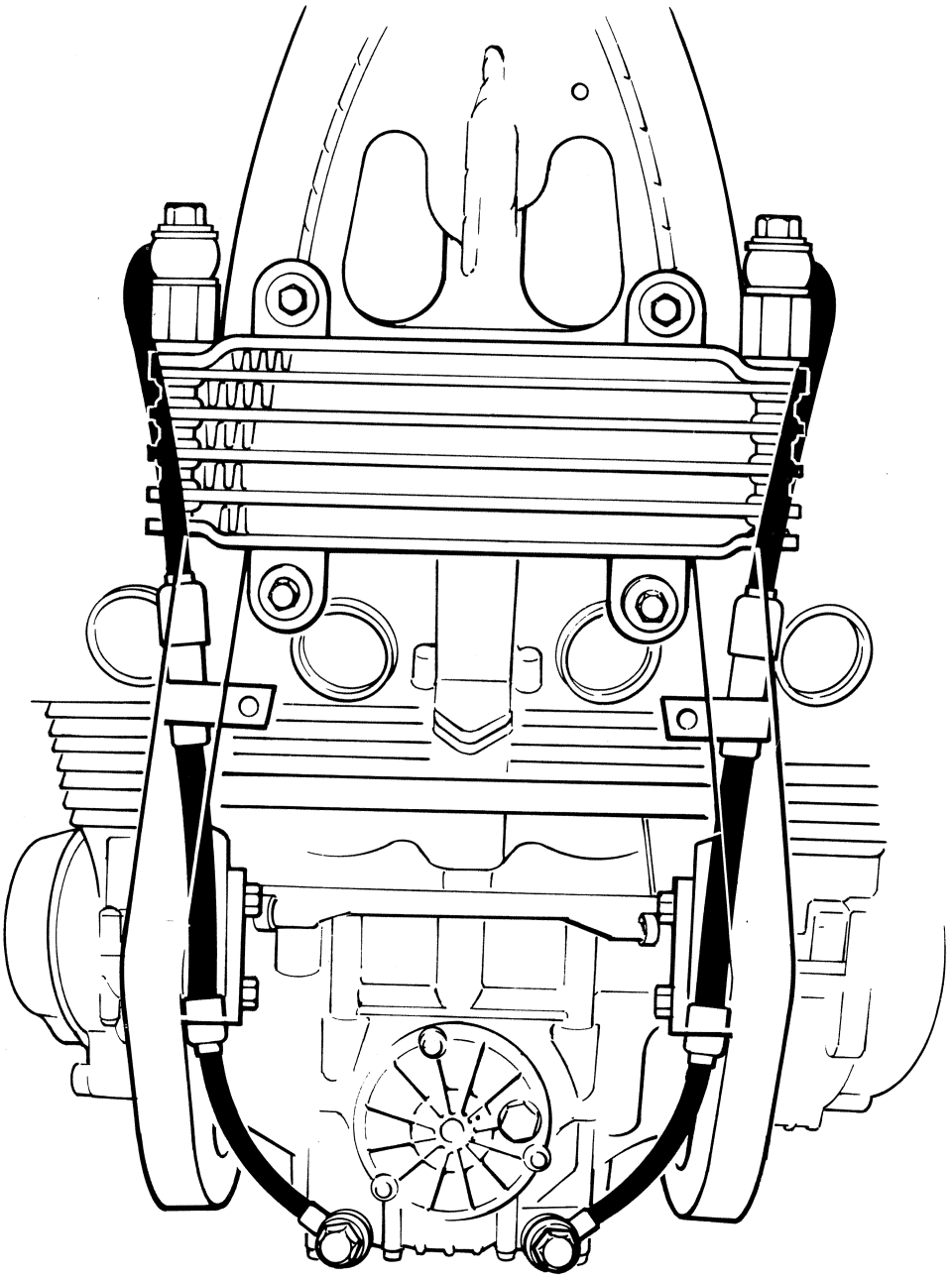

TIGHTENING TORQUE

ENGINE

ITEM		kg-m	lb-ft
Cam chain tensioner adjuster lock nut		0.9 – 1.4	6.5 – 10.0
Cam chain tensioner fitting bolt		0.6 – 0.8	4.5 – 6.0
Cam chain tensioner lock shaft nut		0.8 – 1.0	6.0 – 7.0
Cam chain tensioner shaft ass'y		3.1 – 3.5	22.0 – 25.5
Cam shaft holder bolt		0.8 – 1.2	6.0 – 8.5
Cam shaft sprocket bolt		2.4 – 2.6	17.5 – 19.0
Clutch sleeve hub nut		5.0 – 7.0	36.0 – 50.5
Clutch spring bolt		1.1 – 1.3	8.0 – 9.5
Con rod nut		3.3 – 3.7	24.0 – 27.0
Crankcase bolt	(6 mm)	1.0	7.0
	(8 mm)	2.0	14.5
	(8 mm)	2.0 – 2.4	14.5 – 17.5
Cylinder head bolt		0.8 – 1.2	6.0 – 8.5
Cylinder head cover bolt		1.3 – 1.5	9.5 – 11.0
Cylinder head nut		3.5 – 4.0	25.5 – 29.0
Cylinder head oil pipe union bolt		0.8 – 1.2	6.0 – 8.5
Cylinder stud bolt		1.0 – 1.6	7.0 – 11.5
Engine mounting bolt	(length 35 mm)	5.0 – 6.0	36.0 – 43.5
	(length 165 mm)	6.0 – 7.2	43.5 – 52.0
	(length 205 mm)	6.7 – 8.0	48.5 – 58.0
	(length 255 mm)	5.5 – 6.6	40.0 – 47.5
Engine sprocket nut		10.0 – 13.0	72.5 – 94.0
Gearshift arm stopper		1.5 – 2.3	11.0 – 16.5
Generator rotor nut		14.0 – 16.0	101.5 – 115.5
Neutral stopper housing		1.8 – 2.8	13.0 – 20.0
Oil gallery bolt		1.0 – 1.4	7.0 – 10.0
Oil hose union bolt	(crankcase side)	2.2 – 2.4	16.0 – 17.5
	(cylinder head side)	0.8 – 1.2	6.0 – 8.5
Oil pan bolt		1.0	7.0
Oil pipe holder bolt		0.8 – 1.2	6.0 – 8.5
Oil pressure switch		1.3 – 1.7	9.5 – 12.5
Rocker arm shaft stopper bolt		0.8 – 1.0	6.0 – 7.0
Signal generator bolt		2.5 – 3.5	18.0 – 25.5
Starter clutch allen bolt		1.5 – 2.0	11.0 – 14.5
Valve clearance adjuster lock nut		0.9 – 1.1	6.5 – 8.0

CHASSIS

ITEM	kg-m	lb-ft
Brake hose union bolt	2.0 – 2.5	14.5 – 18.0
Caliper air bleeder	0.6 – 0.9	4.5 – 6.5
Disc bolt	1.5 – 2.5	11.0 – 18.0
Front axle holder nut	1.5 – 2.5	11.0 – 18.0
Front axle nut	3.6 – 5.2	26.0 – 37.5
Front caliper axle bolt	2.5 – 3.5	18.0 – 25.5
Front caliper mounting bolt	2.5 – 4.0	18.0 – 29.0
Front footrest bolt	2.7 – 4.3	19.5 – 31.0
Front fork cap bolt	2.5 – 3.0	18.0 – 21.5
Front fork damper rod bolt	1.5 – 2.5	11.0 – 18.0
Front fork lower clamp bolt	1.5 – 2.5	11.0 – 18.0
Front fork upper clamp bolt	2.0 – 3.0	14.5 – 21.5
Front master cylinder clamp bolt	0.5 – 0.8	3.5 – 6.0
Handlebar clamp bolt	1.5 – 2.5	11.0 – 18.0
Handlebar holder mounting bolt	2.5 – 3.5	18.0 – 25.5
Modulator planger bolt	0.3 – 0.5	2.0 – 3.5
Modulator valve bolt	0.6 – 0.9	4.5 – 6.5
Rear axle nut	8.5 – 11.5	61.5 – 83.0
Rear brake pedal arm bolt	0.6 – 1.0	4.5 – 7.0
Rear caliper bolt	2.0 – 3.0	14.5 – 21.5
Rear caliper mounting bolt	2.5 – 4.0	18.0 – 29.0
Rear cushion lever bolt	7.0 – 10.0	50.5 – 72.5
Rear cushion upper and lower bolts	7.0 – 10.0	50.5 – 72.5
Rear footrest mounting bolt	0.8 – 1.2	6.0 – 8.5
Rear muster cylinder mounting bolt	1.8 – 2.8	13.0 – 20.0
Rear shock absorber fitting bolt (upper)	4.0 – 6.0	29.0 – 43.5
(lower)	4.8 – 7.2	34.5 – 52.0
Rear sprocket nut	2.5 – 4.0	18.0 – 29.0
Rear torque link bolt	2.0 – 3.0	14.5 – 21.5
Steering stem clamp bolt	1.5 – 2.5	11.0 – 18.0
Steering stem head bolt	2.0 – 3.0	14.5 – 21.5
Swing arm pivot nut	5.0 – 8.0	36.0 – 58.0

TIGHTENING TORQUE CHART

For other bolts and nuts not listed above, refer to this chart:

Tightening torque

Bolt Diameter (mm)	Conventional or "4" marked bolt		"7" marked bolt	
	kg-m	lb-ft	kg-m	lb-ft
4	0.1 – 0.2	0.7 – 1.5	0.15 – 0.3	1.0 – 2.0
5	0.2 – 0.4	1.5 – 3.0	0.3 – 0.6	2.0 – 4.5
6	0.4 – 0.7	3.0 – 5.0	0.8 – 1.2	6.0 – 8.5
8	1.0 – 1.6	7.0 – 11.5	1.8 – 2.8	13.0 – 20.0
10	2.2 – 3.5	16.0 – 25.5	4.0 – 6.0	29.0 – 43.5
12	3.5 – 5.5	25.5 – 40.0	7.0 – 10.0	50.5 – 72.5
14	5.0 – 8.0	36.0 – 58.0	11.0 – 16.0	79.5 – 115.5
16	8.0 – 13.0	58.0 – 94.0	17.0 – 25.0	123.0 – 181.0
18	13.0 – 19.0	94.0 – 137.5	20.0 – 28.0	144.5 – 202.5

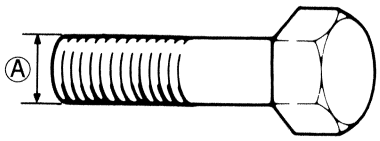

Conventional bolt

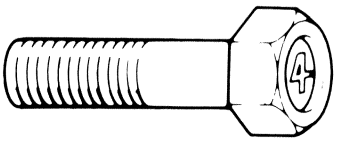

"4" marked bolt

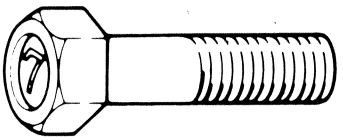

"7" marked bolt

SPECIAL TOOLS

Item	Part Number	Part Name
①	09900-06104	Snap ring pliers (opening type)
②	09900-06105	Snap ring pliers (closing type)
③	09900-06107	Snap ring pliers (opening type)
④	09900-06108	Snap ring pliers (closing type)
⑤	09900-09003	Impact driver set
⑥	09900-20101	Vernier calipers (150 mm)
⑦	09900-20202	Micrometer (25 – 50 mm)
	09900-20203	Micrometer (50 – 70 mm)
	09900-20205	Micrometer (0 – 25 mm)
⑧	09900-20508	Cylinder gauge set
⑨	09900-20606	Dial gauge (1/100 mm)
⑩	09900-20803	Thickness gauge
⑪	09900-25002	Pocket tester
⑫	09900-28106	Electro-tester
⑬	09900-28403	Hydrometer
⑭	09910-11510	Stud bolt installer
⑮	09910-20116	Conrod stopper
⑯	09910-34510	Piston pin puller set
	09910-33210	Attachment
⑰	09911-73730	"T" type hexagon wrench (5 mm)
	09914-25811	"T" type hexagon wrench (6 mm)
⑱	09912-34510	Cylinder disassembling tool
⑲	09913-13121	Carburetor balancer set
⑳	09913-14541	Fuel level gauge set
㉑	09913-14911	Throttle valve adjust wrench
㉒	09913-50121	Oil seal remover
㉓	09913-70122	Bearing installer (50 mm)
㉔	09913-75520	Bearing installer (60.5 mm)
㉕	09913-80112	Drive pinion race installer
㉖	09913-84510	Bearing installer (38 mm)
㉗	09913-85210	Bearing installer (62 mm)
㉘	09915-63210	Compression gauge adapter
㉙	09915-64510	Compression gauge
㉚	09915-74510	Oil pressure gauge
	09915-17410	Oil pressure gauge adapter
	09915-77330	Meter (0 – 10 kg/cm^2)
㉛	09916-14510	Valve lifter
	09916-14910	Attachment
㉜	09916-21110	Valve seat cutter set
㉝	09916-34511	Valve guide reamer set
	09916-34540	Handle
	09916-34550	Reamer (5.5 mm)
	09916-34560	Reamer (11.2 mm)
㉞	09916-44910	Valve guide installer and remover
㉟	09916-44920	Valve guide installer attachment

Item	Part Number	Part Name
㊱	09916-74512	Piston ring compressor
	09916-74521	Holder body
	09916-74540	Band (63 – 75 mm)
㊲	09916-84510	Tweezers
㊳	09917-14910	Tappet adjust driver
㊴	09920-53710	Clutch sleeve hub holder
㊵	09923-73210	Bearing puller
㊶	09924-84510	Bearing installer set
㊷	09930-14511	Cylinder head nut and spark plug wrench set
	09911-74510	Long socket (14 mm)
	09911-74520	Long socket (12 mm)
	09914-24510	"T" handle
	09930-13210	Spark plug socket wrench
	09930-14530	Universal joint
㊸	09930-30133	Rotor remover set
	09930-30102	Rotor remover slide shaft
	09930-30180	Attachment "E"
㊹	09930-40113	Rotor holder
㊺	09940-14911	Steering nut socket wrench
㊻	09940-34514	Front fork assembling tool
	09940-34520	"T" handle
	09940-34561	Attachment "D"
㊼	09940-44120	Air regulating gauge
㊽	09940-50112	Front fork oil seal installer
㊾	09941-34511	Steering race and swing arm bearing installer
㊿	09941-44910	Swing arm bearing installer
51	09941-50110	Wheel bearing remover
52	09941-54911	Bearing outer race remover
53	09941-74910	Steering bearing installer
54	09941-84510	Bearing inner race remover
55	09943-74111	Fork oil level gauge

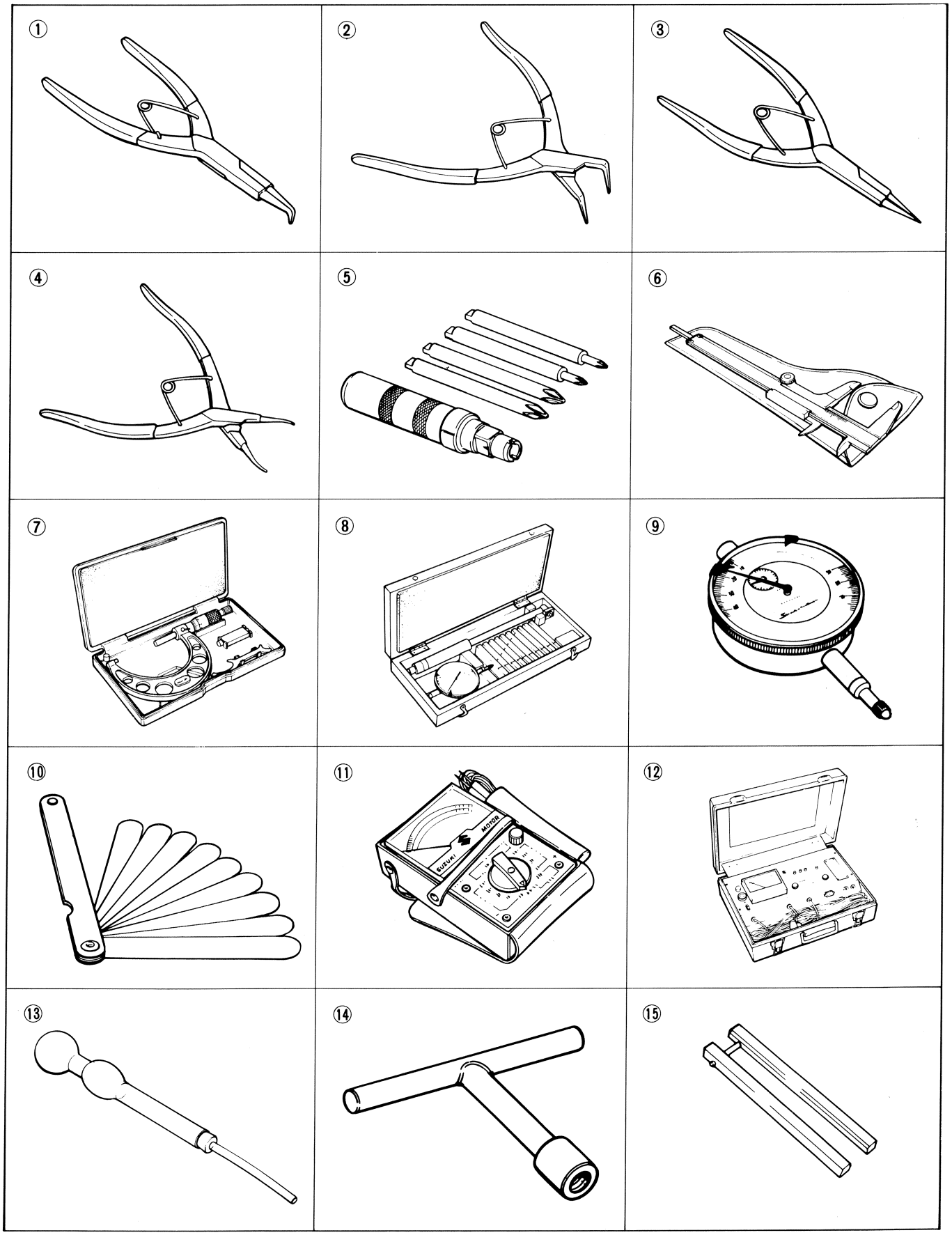
①
②
③
④
⑤
⑥
⑦
⑧
⑨
⑩
⑪
SUZUKI
MOTOR
⑫
⑬
⑭
⑮

⑯

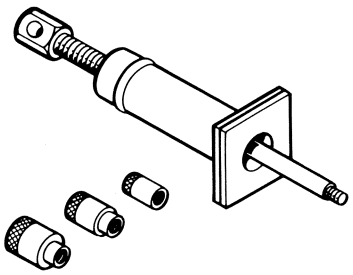

⑰

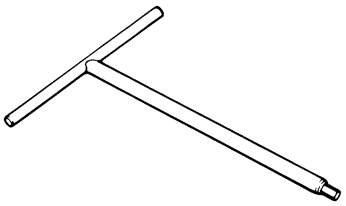

⑱

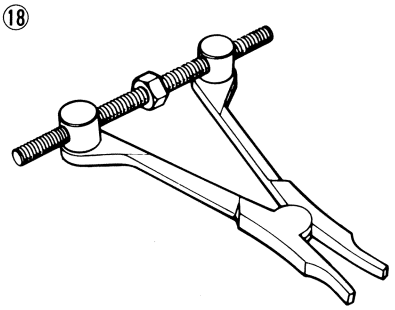

⑲

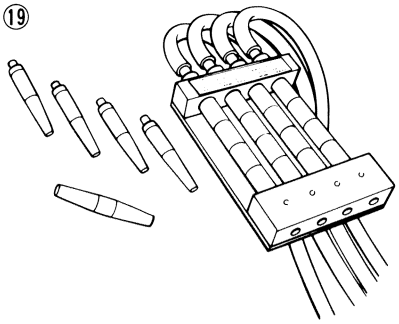

⑳

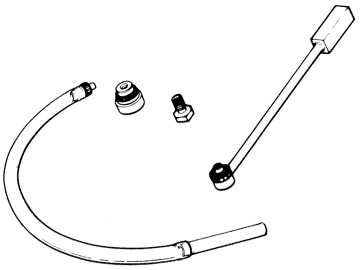

㉑

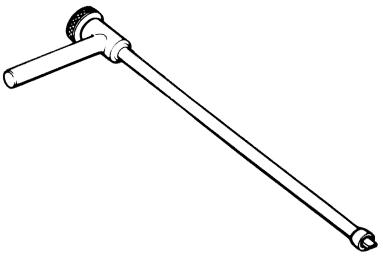

㉒

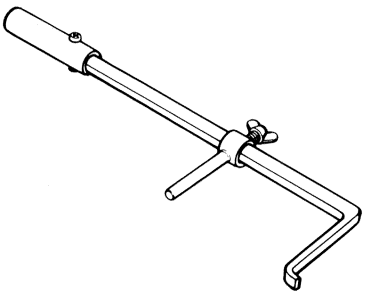

㉓

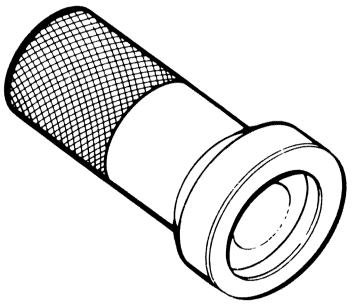

㉔

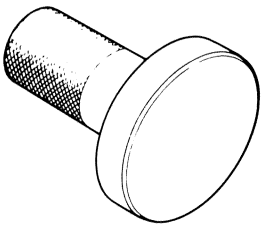

㉕

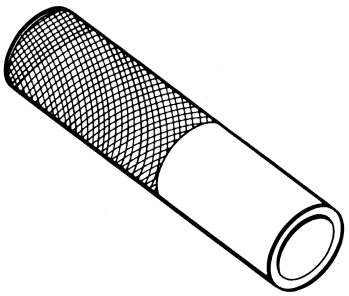

㉖

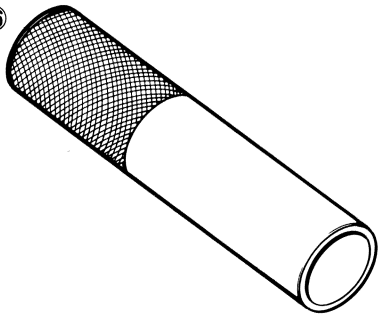

㉗

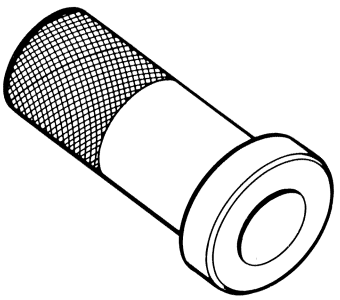

㉘

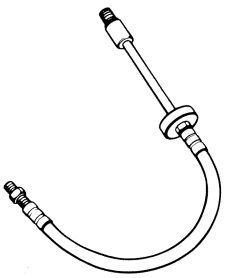

㉙

㉚

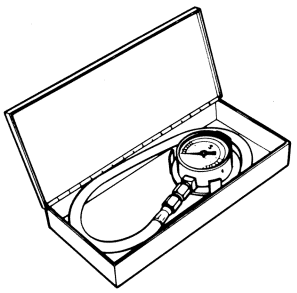

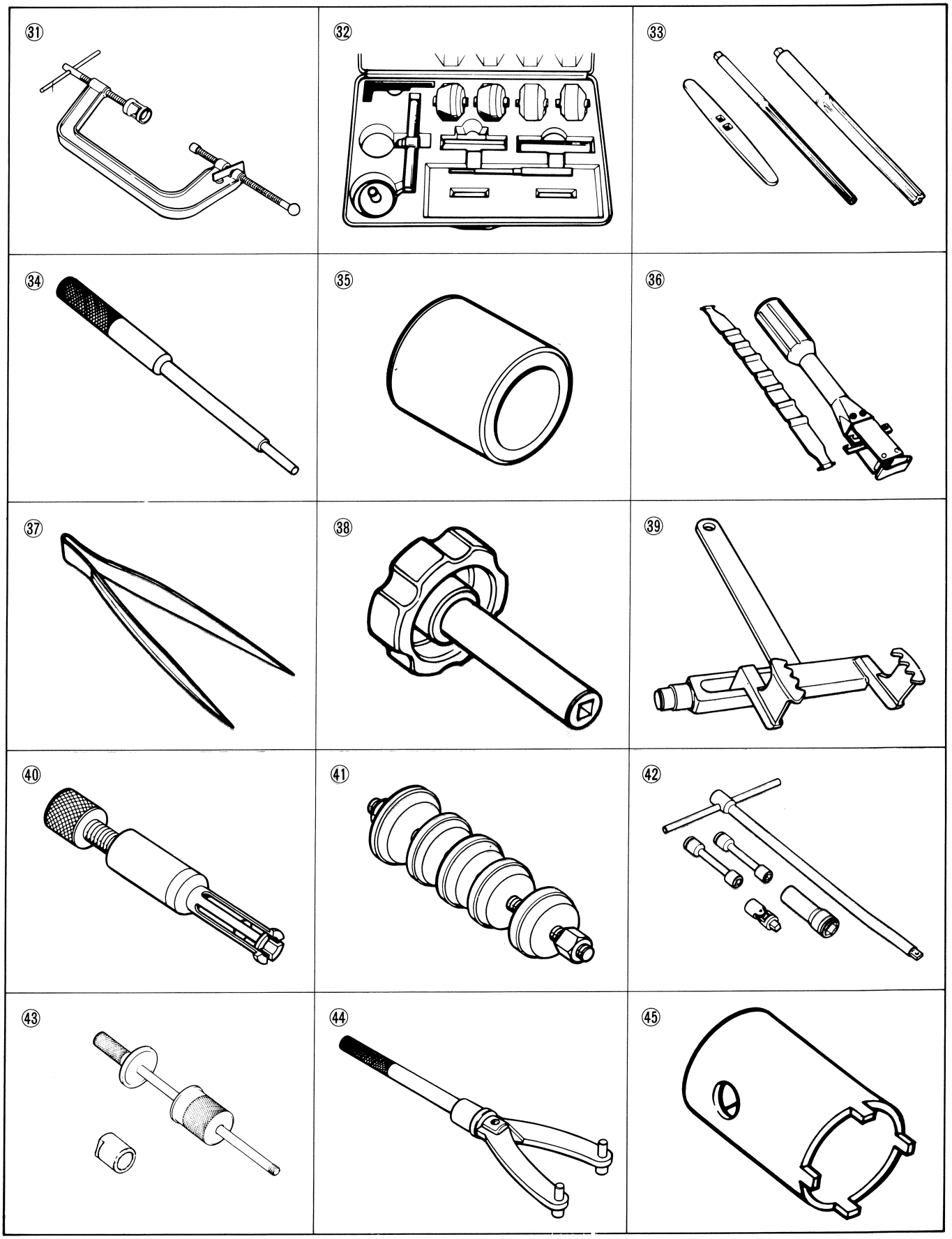
31
32
33
34
35
36
37
38
39
40
41
42
43
44
45

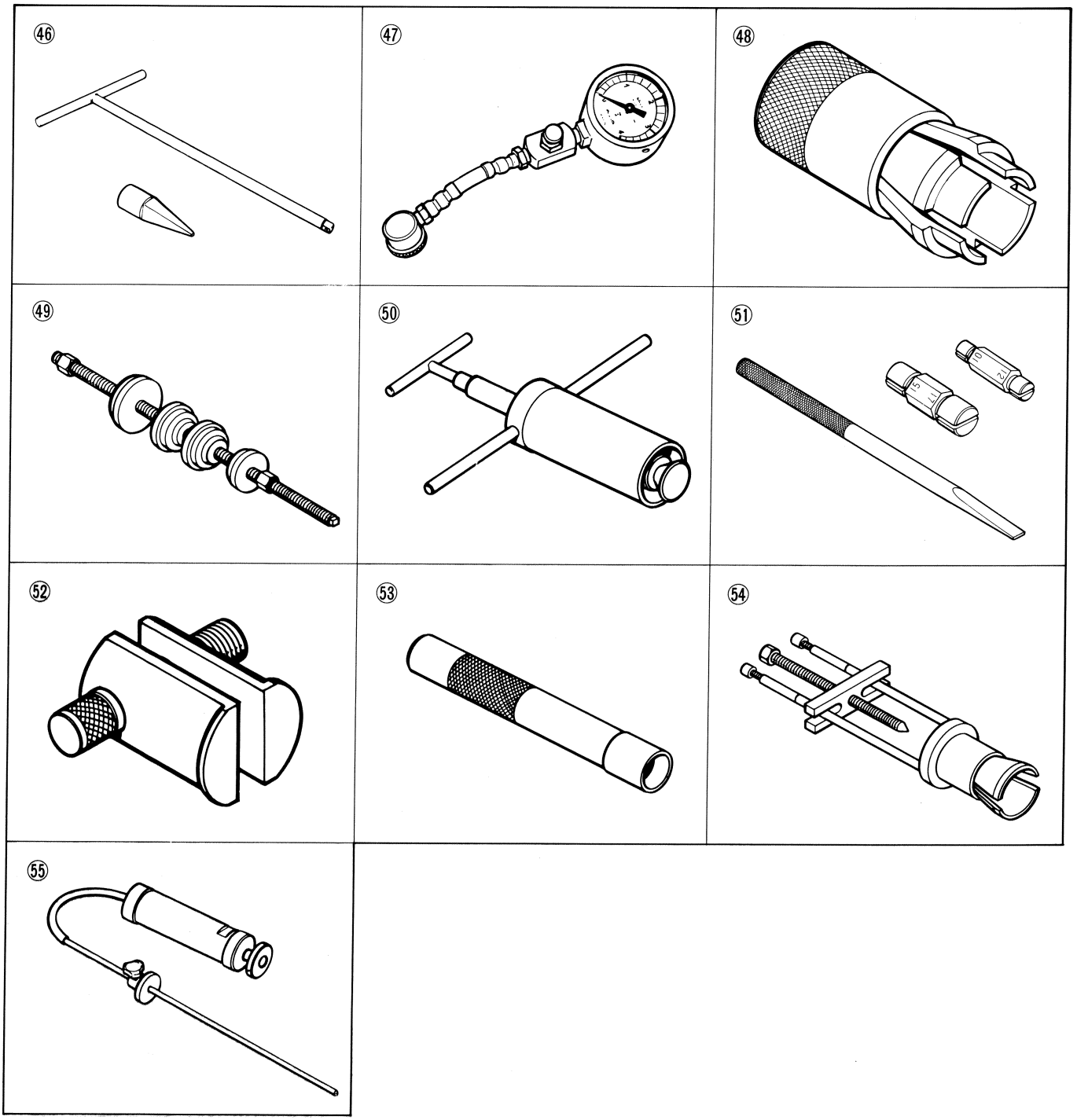
46
47
48
49
50
51
52
53
54
55

SERVICE DATA

VALVE + GUIDE

Unit: mm (in)

ITEM	STANDARD		LIMIT
Valve diam.	IN.	25 (0.98)	———
	EX.	21 (0.83)	———
Valve lift	IN.	7.5 (0.30)	———
	EX.	6.5 (0.26)	———
Valve clearance or tappet clearance (when cold)	IN. & EX.	0.09 – 0.13 (0.004 – 0.005)	———
Valve guide to valve stem clearance	IN.	0.025 – 0.052 (0.0010 – 0.0020)	0.350 (0.0138)
	EX.	0.040 – 0.067 (0.0016 – 0.0026)	0.350 (0.0138)
Valve guide I.D.	IN. & EX.	5.500 – 5.512 (0.2165 – 0.2170)	———
Valve stem O.D.	IN.	5.460 – 5.475 (0.2150 – 0.2156)	———
	EX.	5.445 – 5.460 (0.2144 – 0.2150)	———
Valve stem runout	IN. & EX.	———	0.05 (0.002)
Valve head thickness	IN. & EX.	———	0.5 (0.02)
Valve stem end length	IN. & EX.	———	3.6 (0.14)
Valve seat width	IN. & EX.	0.9 – 1.1 (0.035 – 0.043)	———
Valve head radial runout	IN. & EX.	———	0.03 (0.001)
Valve spring free length	IN. & EX.	———	38.0 (1.50)
Valve spring tension (IN. & EX.)		11.7 – 15.3 kg (25.79 – 33.73 lbs) at length 32.5mm (1.30 in)	———

CAMSHAFT + CYLINDER HEAD

Unit: mm (in)

ITEM	STANDARD		LIMIT
Cam height	IN.	34.940 – 34.980 (1.3756 – 1.3772)	34.910 (1.3744)
	EX.	34.360 – 34.400 (1.3528 – 1.3543)	34.060 (1.3409)
Camshaft journal oil clearance	IN. & EX.	0.032 – 0.066 (0.0013 – 0.0026)	0.150 (0.0059)
Camshaft journal holder I.D.	IN. & EX.	22.015 – 22.025 (0.8667 – 0.8671)	———
Camshaft journal O.D.	IN. & EX.	21.959 – 21.980 (0.8645 – 0.8654)	———
Camshaft runout	IN. & EX.	———	0.10 (0.004)
Cam chain 20 pitch length	———		157.8 (6.21)
Cam chain pin (at arrow "3")	20th pin		———
Rocker arm I.D.	IN. & EX.	12.000 – 12.018 (0.4724 – 0.4731)	———
Rocker arm shaft O.D.	IN. & EX.	11.973 – 11.984 (0.4714 – 0.4718)	———
Cylinder head distortion		———	0.20 (0.008)

CYLINDER + PISTON + PISTON RING

Unit: mm (in)

ITEM	STANDARD	LIMIT
Compression pressure	9 – 13 kg/cm^2 (128.0 – 184.9 psi)	7 kg/cm^2 (99.5 psi)
Compression pressure difference	———	2 kg/cm^2 (28.4 psi)
Piston to cylinder clearance	0.04 – 0.05 (0.0016 – 0.0019)	0.120 (0.0047)
Cylinder bore	67.000 – 67.015 (2.6378 – 2.6384)	67.080 (2.6409)
Piston diam.	66.955 – 66.970 (2.6360 – 2.6366) Measure at 15 (0.6) from the skirt end.	66.880 (2.6331)
Cylinder distortion	———	0.20 (0.008)

Unit: mm (in)

ITEM	STANDARD			LIMIT
Piston ring free end gap	1st	N	Approx. 9.5 (0.37)	7.6 (0.30)
		R	Approx. 9.0 (0.35)	7.2 (0.28)
	2nd	N	Approx. 10.0 (0.39)	8.0 (0.31)
		R	Approx. 10.0 (0.39)	8.0 (0.31)
Piston ring end gap	1st		0.10 – 0.30 (0.004 – 0.012)	0.70 (0.028)
	2nd		0.10 – 0.30 (0.004 – 0.012)	0.70 (0.028)
Piston ring to groove clearance	1st		———	0.180 (0.0071)
	2nd		———	0.150 (0.0059)
Piston ring groove width	1st		1.21 – 1.23 (0.0476 – 0.0484)	———
	2nd		1.21 – 1.23 (0.0476 – 0.0484)	———
	Oil		2.51 – 2.53 (0.0988 – 0.0996)	———
Piston ring thickness	1st		1.170 – 1.190 (0.0461 – 0.0469)	———
	2nd		1.170 – 1.190 (0.0461 – 0.0469)	———
Piston pin bore	18.002 – 18.008 (0.7087 – 0.7090)			18.035 (0.7100)
Piston pin O.D.	17.995 – 18.000 (0.7085 – 0.7087)			17.980 (0.7079)

CUNROD + CRANKSHAFT

Unit: mm (in)

ITEM	STANDARD		LIMIT
Conrod small end I.D.	18.010 – 18.018 (0.7091 – 0.7094)		18.040 (0.7102)
Conrod big end side clearance	0.10 – 0.20 (0.004 – 0.008)		0.30 (0.012)
Conrod big end width	22.95 – 23.00 (0.904 – 0.905)		———
Crank pin width	23.10 – 23.15 (0.909 – 0.911)		———
Conrod big end oil clearance	0.032 – 0.056 (0.0013 – 0.0022)		0.080 (0.0031)
Crank pin O.D.	35.976 – 36.000 (1.4164 – 1.4173)		———
Crankshaft journal oil clearance	0.020 – 0.044 (0.0008 – 0.0017)		0.080 (0.0031)
Crankshaft journal O.D.	35.976 – 36.000 (1.4163 – 1.4173)		———
Crankshaft thrust bearing thickness	Right side	2.94 – 2.96 ((0.116 – 0.117)	———
	Left side	2.86 – 3.02 (0.113 – 0.119)	———
Crankshaft thrust clearance	0.04 – 0.08 (0.002 – 0.004)		0.28 (0.011)
Crankshaft journal holder width	18.04 – 18.12 (0.710 – 0.713)		———
Crankshaft journal width	24.00 – 24.05 (0.945 – 0.947)		———
Crankshaft runout	———		0.05 (0.002)

OIL PUMP

Unit: mm (in)

ITEM	STANDARD	LIMIT
Oil pump reduction ratio	1.840 (91/48 x 33/34)	———
Oil pressure (at 60°C, 140°F)	Above 2.5 kg/cm² (35.55 psi) Below 5.5 kg/cm² (78.21 psi) at 3 000 r/min.	———

CLUTCH

Unit: mm (in)

ITEM	STANDARD	LIMIT
Clutch cable play	4 (0.16)	———
Clutch release screw	1/4-1/2 Turn back	———
Drive plate thickness	2.7 – 2.9 (0.106 – 0.114)	2.6 (0.102)
Drive plate claw width	11.8 – 12.0 (0.46 – 0.47)	11.2 (0.44)
Driven plate thickness	2.0 ± 0.06 (0.08 ± 0.002)	———
Driven plate distortion	———	0.10 (0.004)
Clutch spring free length	———	34.0 (1.34)

TRANSMISSION + DRIVE CHAIN

Unit: mm (in) Except ratio

ITEM	STANDARD		LIMIT
Primary reduction ratio	1.895 (91/48)		———
Final reduction ratio	3.071 (43/14)		———
Gear ratios	Low	2.500 (35/14)	———
	2nd	1.750 (28/16)	———
	3rd	1.368 (26/19)	———
	4th	1.130 (26/23)	———
	Top	0.956 (22/23)	———
Shift fork to groove clearance	No. 1, No. 2	0.10 – 0.30 (0.004 – 0.012)	0.50 (0.020)
Shift fork groove width	No. 1, No. 2	5.5 – 5.6 (0.216 – 0.220)	———
Shift fork thickness	No. 1, No. 2	5.3 – 5.4 (0.20 – 0.21)	———
Counter shaft length (Low to 2nd)	106 (4.2)		———
Drive chain	Type	D.I.D.: 50V TAKASAGO: RK50GO	———
	Links	112	———
	20 pitch length	———	319 (12.6)
Drive chain slack	30 – 40 (1.2 – 1.6)		———

CARBURETOR

Unit: mm (in)

ITEM		SPECIFICATION
Carburetor type		MIKUNI BS32SS
Bore size		32
I.D. No.		31300
Idle r/min.		1 150 ± 50 r/min.
Fuel level		5.0 ± 0.5 (0.20 ± 0.02)
Float height		22.4 ± 1.0 (0.88 ± 0.04)
Main jet	(M.J.)	# 117.5
Main air jet	(M.A.J.)	1.7 (0.067)
Jet needle	(J.N.)	5D12
Needle jet	(N.J.)	Y-6
Pilot jet	(P.J.)	# 37.5
By pass	(B.P.)	0.8, 0.8, 0.8 (0.03, 0.03, 0.03)
Pilot outlet	(P.O.)	0.7 (0.028)
Valve seat	(V.S.)	2.0 (0.08)
Starter jet	(G.S.)	# 45
Pilot screw	(P.S.)	PRE-SET
Pilot air jet	(P.A.J.)	# 165
Throttle cable play		0.5 – 1.0 (0.02 – 0.04)
Choke cable play		0.5 – 1.0 (0.02 – 0.04)

ELECTRICAL

Unit: mm (in)

ITEM	SPECIFICATION			NOTE
Ignition timing	13° B.T.D.C. Below 1 500 ± 150 r/min and 35° B.T.D.C. Above 2 350 ± 150 r/min			
Firing order	1 · 2 · 4 · 3			
Spark plug	Type	N.G.K. D8EA N.D. X24ES-U		
	Gap	0.6 – 0.7 (0.02 – 0.03)		
Spark performance	Over 8 (0.3) at 1 atm			
Signal coil resistance	130 – 200Ω			Bl-Y, B-G
Ignition coil resistance	Primary	3 – 5Ω		O/W-W, O/W-B/Y
	Secondary	Plug cap – Plug cap 30 – 50 kΩ		
Generator no-load voltage	More than 80 V (AC) at 5 000 r/min.			
Regulated voltage	13.5 – 15.5 V at 5 000 r/min.			
Starter motor	Brush length	MITSUBA	Limit: 6 (0.24)	
	Commutator under cut		Limit: 0.2 (0.008)	
Starter relay resistance	3 – 4Ω			
Battery	Type designation	YB14L-A2		
	Capacity	12V50.4kC(14Ah)/10HR		
	Standard electrolyte S.G.	1.28 at 20°C (68°F)		
Fuse size	Head light	10 A		
	Turn signal	10 A		
	Ignition	10 A		
	Main	15 A		
	Power source	10 A		

BRAKE + WHEEL

Unit: mm (in)

ITEM		STANDARD	LIMIT
Rear brake pedal height		40 (1.57)	———
Brake disc thickness	Front	5.0 ± 0.2 (0.20 ± 0.008)	4.5 (0.18)
	Rear	6.7 ± 0.2 (0.26 ± 0.008)	6.0 (0.24)
Brake disc runout		———	0.30 (0.012)
Master cylinder bore	Front	15.870 – 15.915 (0.6248 – 0.6266)	———
	Rear	14.000 – 14.043 (0.5512 – 0.5529)	———
Master cylinder piston diam.	Front	15.827 – 15.854 (0.6231 – 0.6242)	———
	Rear	13.957 – 13.984 (0.5495 – 0.5506)	———
Brake caliper cylinder bore	Front	38.180 – 38.256 (1.5031 – 1.5061)	———
	Rear	38.180 – 38.256 (1.5031 – 1.5061)	———
Brake caliper piston diam.	Front	38.098 – 38.148 (1.4999 – 1.5019)	———
	Rear	38.098 – 38.148 (1.4999 – 1.5019)	———
Wheel rim runout	Axial	———	2.0 (0.08)
	Radial	———	2.0 (0.08)
Wheel axle runout	Front	———	0.25 (0.010)
	Rear	———	0.25 (0.010)
Tire size	Front	100/90-16 54H	———
	Rear	120/90-17 64H	———
Tire tread depth	Front	———	1.6 (0.06)
	Rear	———	2.0 (0.08)

SUSPENSION

Unit: mm (in)

ITEM	STANDARD	LIMIT	NOTE
Front fork stroke	150 (5.9)	———	
Front fork spring free length	———	533 (21.0)	
Front fork oil level	170 (6.7)	———	
Front fork air pressure	0.2 kg/cm^2 (2.84 psi)	———	
Rear wheel travel	107 (4.2)	———	
Swing arm pivot shaft runout	———	0.3 (0.01)	

FUEL + OIL

ITEM	SPECIFICATION		NOTE
Fuel type	Use only unleaded or low-lead type gasoline of at least 85 - 95 pump octane ($\frac{R+M}{2}$ method) or 89 octane or higher rated by the Research Method.		
Fuel tank including reserve	19.5 L (5.15 US gal)		
reserve	4.0 L (4.23 US qt)		
Engine oil type	SAE 10W/40		
Engine oil capacity	Change	3 200 ml (3.38 US qt)	
	Filter change	3 800 ml (4.02 US qt)	
	Overhaul	4 000 ml (4.23 US qt)	
Front fork oil type	Fork oil # 10		
Front fork oil capacity (each leg)	308 ml (10.4 US oz)		
Brake fluid type	DOT3 or DOT4		

TIRE PRESSURE

COLD INFLATION TIRE PRESSURE	NORMAL RIDING			
	SOLO RIDING		DUAL RIDING	
	kg/cm²	psi	kg/cm²	psi
FRONT	2.00	28	2.25	32
REAR	2.50	36	2.80	40

WATTAGE

Unit: W (cp)

ITEM		SPECIFICATION
Headlight	HI	60
	LO	55
Tail/Brake light		8/23 (3/32)
Turn signal light		23 (32)
Speedometer light and Tachometer light		3.4
Turn signal indicator light		3.4
High beam indicator light		3.4
Neutral indicator light		3.4
Oil pressure indicator light		3.4
License light		8
Side stand check light		3.4
Oil temp. meter light		3.4
Fuel meter light		3.4
Gear position indicator light		1.12

Prepared by

SUZUKI MOTOR CO., LTD.

Administration Department
Overseas Service Division

May, 1983
Part No. 99500–37020–03E
Printed in Japan