service manual



MOTOR
HARLEY-DAVIDSON
CYCLES

HARLEY-DAVIDSON MOTOR CO.
MILWAUKEE 1, WISCONSIN

HARLEY-DAVIDSON MOTOR CO.



SERVICE MANUAL

1959
DUO-GLIDE 74 OHV

The maintenance and repair information in this manual applies directly to the 1959 Harley-Davidson 74 OHV Duo-Glide Model Motorcycle. Except for minor differences, it also applies to the 1958 Duo-Glide 74 OHV Model.

In general, this manual will also be useful in maintaining and repairing earlier 61 and 74 OHV Models.

PART NO. 99482-59

$5.00

Foreword

Many thousands of Harley-Davidson motorcycles and Servi-Cars are purchased each year for pleasure and sport riding as well as for commercial use. All Harley-Davidson products have been designed and built to exacting specifications to give a maximum of reliability with a minimum of maintenance and repair.

This service and repair manual has been prepared with two purposes in mind. First, it will acquaint the reader with the construction of the Harley-Davidson product and assist him in performing basic maintenance and repair. Secondly, it will introduce to the professional Harley-Davidson mechanic the latest field-tested and factory-approved major repair methods. We sincerely believe that this manual will make your association with Harley-Davidson products more pleasant and profitable.

HOW TO USE YOUR SERVICE MANUAL

Your Service Manual is arranged for quick, easy reference. The manual is divided into sections such as "Chassis," "Engine" and "Transmission." Sections are then divided into sub-sections. The Transmission section, for example, is made up of "Clutch," "Starter" and "Gear Box" sub-sections. Sections are numbered and sub-sections are lettered. Manual pages are identified by section number and sub-section letter printed in upper and lower outside corners.

Use this manual as follows:

1. Check the Table of Contents located in the front of the manual to find subject desired.

2. Page number is listed across from subject.

3. A card separator at beginning of each section is printed with section number for quick general location of subject. Page number consists of section number, sub-section letter and sub-section page number.

4. Information is presented in a definite order as follows:

Minor adjustments
Minor maintenance or repair
Complete disassembly
Cleaning
Major maintenance or repair
Assembly

All information on servicing a part should be read before repair work is started to avoid needless disassembly.

As an aid in determining application of manual information to earlier than 1959 models, refer to the parts catalog for the specific model.

Questions regarding the application of manual information to any specific model should be referred to your Harley-Davidson dealer.

USE GENUINE REPLACEMENT PARTS

To insure a satisfactory and lasting repair job, follow the manual instructions carefully and use only genuine Harley-Davidson replacement parts. Behind the emblem bearing the words "Genuine Harley-Davidson" is more than half a century of designing, research, manufacturing, testing and inspecting experience.

Look for this sign of quality ..... MOTOR HARLEY-DAVIDSON CYCLES

This is your insurance that the parts you are using will fit right, operate properly and last longer. When you use genuine Harley-Davidson parts you use the best.

TABLE OF CONTENTS

	Page Number
PRODUCT	
GENERAL	
Duo-Glide Specifications	1A-1
Sprocket and Gear Ratios	1A-1
Tire Data	1A-1
SERVICE	
Servicing a New Motorcycle	1B-1
Lubrication and Service	1B-2
LOCATING TROUBLES	
Engine	1C-1
Generator	1C-1
Carburetor	1C-2
Transmission	1C-2
Clutch	1C-2
Brakes	1C-2
CHASSIS	
DRIVE	
Chain Adjustment	2B-1
Chain Lubrication	2B-1
Removing Front Chain	2B-2
WHEELS	
Removing Wheels	2C-1
Wheel Hub	2C-3
Spoking Wheels	2C-4
Truing Wheels	2C-4
Tires	2C-6
HANDLEBAR	
Spark and Throttle Controls	2D-1
FRAME	
Basic Dimensions	2E-2
FORKS	
Changing Front Fork Oil	2F-1
Disassembling Fork Slider	2F-5
Adjusting Steering Damper	2F-5
Adjusting Front Fork Trail	2F-6
Disassembling Front Fork	2F-6
Replacing Front Fork Slider Bushings	2F-7
Straightening Front Fork	2F-8
Rear Shock Absorbers	2F-11
Rear Fork	2F-13
BRAKES	
Adjusting Front Brake	2G-1
Disassembling Brakes	2G-1
Adjusting Rear Brakes	2G-3
Rear Brake Master Cylinder	2G-3
SEAT	
Seat Post	2H-1
ENGINE	
GENERAL	
Engine Specifications	3A-1
Engine Description	3A-1
Lubrication	3A-3
GENERAL (continued)	
Servicing Oil Filter	3A-4
Pressure Oil System	3A-5
Return Oil System	3A-7
Engine Repair Procedure	3A-7
Stripping Motorcycle for Engine Repair	3A-7
CYLINDER HEAD	
Removing Cylinder Head	3B-1
Replacing Valve Guides	3B-1
Replacing Valve Seats	3B-3
Grinding Valves	3B-3
Lapping Valves	3B-4
Adjusting Tappets	3B-4
CYLINDER	
Disassembling Cylinder and Piston	3C-1
Refinishing Cylinder	3C-2
Fitting Piston Rings	3C-3
Replacing Rod Bushing	3C-4
Straightening Connecting Rods	3C-5
GEARCASE	
Servicing Oil Pump	3D-1
Valve Tappets and Guides	3D-1
Disassembling Timing Gears	3D-5
Replacing Cover Bushings	3D-6
CRANKCASE	
Disassembling Crankcase	3E-1
Lapping Connecting Rods	3E-3
Fitting Rod Bearing Races	3E-4
Lapping Main Bearing Races	3E-7
Fitting Main Bearings	3E-8
FUEL SYSTEM	
Adjusting Carburetor	3F-1
Disassembling Carburetor	3F-1
Air Cleaner	3F-4
Fuel Strainer	3F-5
Fuel Tanks	3F-5
TRANSMISSION	
GENERAL	
Transmission Specifications	4A-1
Function of Transmission	4A-1
Stripping Motorcycle for Transmission Repair	4A-2
CLUTCH	
Adjusting Clutch	4B-1
Disassembling Clutch	4B-2
STARTER	
Disassembling Starter	4C-1
Disassembling Starter Clutch	4C-1
GEAR BOX	
Adjusting Shifting Linkage	4D-1
Adjusting Foot Shifter Cover	4D-1
Replacing Main Drive Gear Oil Seal	4D-1
Disassembling Shifter Cover	4D-3
GEAR BOX (continued)	
Disassembling Shifter Forks	4D-6
Disassembling Gear Box	4D-7
ELECTRICAL	
WIRING	
Wiring Diagram with Key	5B-1
SWITCHES	
Disassembling Ignition-Light Switch	5C-1
LAMPS	
Removing Headlamp	5D-1
Adjusting Headlamp Beam	5D-1
Bulb Chart	5D-2
GENERATOR (Model 58)	
Testing Generator Output	5E-1
Testing Field Coils	5E-1
Testing Armature	5E-4
Disassembling Generator	5E-5
GENERATOR (Model 58R)	
Testing Generator Output	5E-7
Testing Field Coils	5E-7
Testing Armature	5E-9
Disassembling Generator	5E-9
CIRCUIT BREAKER	
Adjusting Breaker Points	5F-1
Adjusting Ignition	5F-2, 5F-4, 5F-5
Disassembling Circuit Breaker	5F-3
IGNITION COIL	
Trouble Shooting	5G-1
Replacing Cables	5G-1
SPARK PLUGS	
Removing	5H-1
Cleaning, Inspecting and Repair	5H-1
Adjusting Electrode Gap	5H-2
Testing	5H-2
Installing	5H-2
REGULATOR	
Servicing	5I-1
Testing Specifications	5I-2
BATTERY	
Battery Care	5J-1
Charging	5J-1
Changing Electrolyte	5J-1
HORN	
General Information	5K-1
Disassembling Horn	5K-2
Adjusting Horn	5K-2
MISCELLANEOUS	
INSTRUMENTS	
Servicing Speedometer	6D-1

product



GENERAL

SPECIFICATIONS

DIMENSIONS

Wheel Base . . . . . 61 in.
Overall Length . . . . . 92 in.
Overall Width . . . . . 36 in.

CAPACITIES

Fuel Tanks . . . . . 3-3/4 Gallons
Oil Tank . . . . . 1 Gallon
Transmission . . . . . 1-1/2 Pints

ENGINE

Model Designation Letters . . . . . FL - FLH
Number of Cylinders 2
Type . . . . . 45 Degree V Type
Horsepower . . . . . FLH . . 58.5 HP at 5,400 R.P.M.
FL . . 53.0 HP at 5,400 R.P.M.
Taxable Horsepower 9.44
Bore . . . . . (87.3mm) 3-7/16 in.
Stroke . . . . . (100.8mm) 3-31/32 in.
Piston Displacement . . . . . (1,207 cc) 73.66 cu. in.
Torque . . . . . FLH . . 65 lb-ft at 3,200 R.P.M.
FL . . 62 lb-ft at 3,200 R.P.M.
Compression Ratio . . FLH . . . . . 8 to 1
FL . . . . . 7.25 to 1
Spark Plug (Heat range for average use) . . . . . No. 3

NOTE: The engine (serial) number is stamped on the left side of the engine crankcase. Always give this number when ordering parts or making an inquiry.

TRANSMISSION

Type . . . . . Constant Mesh
Speeds - Foot Shift . . . . . 4 Forward
Hand Shift . . . . . 4 Forward
(Optional) 3 Forward and 1 Reverse

SPROCKETS AND GEAR RATIOS

SPROCKET TEETH ALL MODELS Clutch . . . . 37 Transmission 22 Rear Wheel . 51	4 SPEED TRANSMISSION				3 SPEED TRANSMISSION			
	SOLO		SIDECAR		SOLO		SIDECAR	
	FL	FLH	FL	FLH	FL	FLH	FL	FLH
Engine Sprocket	23	24	21	21	23	24	19	21
High Gear Ratio	3.73	3.57	4.08	4.08	3.73	3.57	4.50	4.08

TIRE DATA

TIRE SIZE		TIRE PRESSURE - POUNDS		
		FRONT	REAR	SIDECAR
SOLO RIDER	4.00 x 18 4.50 x 18 5.00 x 16	14 12 12	16 14 14	
RIDER AND ONE PASSENGER	4.00 x 18 4.50 x 18 5.00 x 16	18 12 12	26 16 16	
RIDER AND ONE SIDECAR PASSENGER OR 150 LB. LOAD	4.00 x 18 4.50 x 18 5.00 x 16	20 14 14	24 16 16	14 14 14

Above tire inflation pressures are based on rider and passenger weights of approximately 150 lbs. each. For each 50 lbs. extra weight, increase pressure of rear tire 2 lbs., front tire 1 lb., and sidecar tire 1 lb.

SERVICE

SERVICING A NEW MOTORCYCLE

RECOMMENDED OPERATIONS AT FIRST 750 AND 1500 MILES

CHECK AT FIRST 750 MILES

1. Drain oil tank through drain plug and refill with fresh oil.

2. If motorcycle is equipped with oil filter, service the filter.

3. Check level of oil in transmission and add oil if needed. Use same grade oil used in engine.

4. Lubricate all points indicated for 1000 mile attention.

5. Oil all control joints and parts.

6. Inspect and service air cleaner if needed.

7. Check chain slack and adjust if necessary.

8. Check lubrication of front chain and readjust chain oiler adjusting screw if necessary.

9. Clean and lubricate rear chain. If motorcycle is equipped with a rear chain oiler, check lubrication of rear chain and readjust chain oiler if necessary.

10. Check wheel mounting bolts and tighten if needed. These bolts must be kept very tight.

11. Check level of solution in battery and add distilled water if needed. See that terminals are clean and connections tight.

12. Check tightness of all cylinder head bolts and all cylinder base nuts, and tighten where necessary.

CHECK AT FIRST 1000 MILES

1. Check condition of oil in tank to determine if oil change is needed.

2. Check level of oil in transmission and add oil if needed. Use same grade of oil used in engine.

3. Lubricate all points indicated for 1000 mile attention.

4. Oil all control joints and parts.

5. Check chain slack and adjust if necessary.

6. Check lubrication of front chain and readjust chain oiler adjusting screw if necessary.

7. Clean and lubricate rear chain. If motorcycle is equipped with rear chain oiler, check lubrication of rear chain and readjust chain oiler if necessary.

8. Check all nuts, bolts and screws, and tighten any found loose.

9. Check level of solution in battery, and add distilled water if needed. See that terminals are clean and connections tight.

10. Check tappet clearance and adjust if necessary.

11. Check circuit breaker point clearance and adjust if necessary.

12. Remove spark plugs and clean and regap if necessary.

Above operations are described fully in section pertaining to particular part of motorcycle. See index for location.

The following chart outlines recommended Maintenance and Lubrication intervals after performance of service on a new motorcycle and the initial break-in period. Refer to Figure 1B-1 when using the chart.

REGULAR LUBRICATION AND SERVICE INTERVALS CHART

REGULAR SERVICE INTERVAL	FIG. 1B-1 INDEX NO.	GREASE	FIG. 1B-1 INDEX NO.	OIL	FIG. 1B-1 INDEX NO.	SERVICE
EVERY 1,000 MILES	10	Saddle Post	15	Clutch Hand Lever	24	Air Cleaner
	9	Saddle Bar Bearing	5	Brake Hand Lever	25	Battery
	8	Rear Brake Pedal Bearing	23	Clutch Control Cable	26	Rear Chain Adjustment
			20	Front Brake Cable		
	11	Foot Shift Lever Bearing	7	Throttle Control Cable		
	1	Hand Clutch Booster Bearing	12	Spark Control Cable		
			21	Clutch Lever Rod Clevis		
	17	Front Wheel Hub Thrust Bearing		Shifter Control Joints		
	18	Rear Wheel Hub Thrust Bearing	4	Generator Bearing		
		Foot Clutch Pedal Bearing	14	Rear Chain		
			19	Saddle Post Roller and Bolt		
	16	Compensating Engine Sprocket				
EVERY 2,000 MILES					27	Oil Filter
					28	Fuel Strainer
					29	Tappet Oil Screen
						Front Chain Adjustment
					30	Front Chain Oiler
						Rear Chain Oiler
						Hydraulic Brake Fluid
					31	Circuit Breaker
					32	Spark Plugs
EVERY 5,000 MILES OR 1 YEAR (whichever comes first)	7	Throttle Control Spiral			33	Hydraulic Fork
	6	Spark Control Spiral				Replace:
	2	Front Wheel Hub (Center)			24	Air Cleaner
					27	Oil Filter
	13	Rear Wheel Hub (Center)				Time Ignition
		Sidecar Wheel Hub (Center)				Switch Tires
						Adjust Brakes
EVERY 10,000 MILES	22	Repack Rear Fork Pivot Bearings				
EVERY 50,000 MILES	3	Repack Steering Head Bearings				
WEEKLY						Check Tires
						Check Battery

SERVICE INTERVAL ENGINE AND TRANSMISSION

	300 MILES	1,000 MILES	2,000 MILES	5,000 MILES or 1 YEAR	SPRING AND FALL
ENGINE OIL	Check	Check	Change		Change
TRANSMISSION OIL		Check		Change	Change

LUBRICANTS TO USE

HARLEY-DAVIDSON OIL

Refined especially for Harley-Davidson 4-cycle, air-cooled engines. Available in the following weights:

"58" Special Light:
Use at temperatures below 32° (freezing).

"75" Medium Heavy:
Use for normal service at temperatures between 32° and 75°.

"105" Regular Heavy:
Use for normal service at temperatures over 75° and for extreme service at any temperature.

HARLEY-DAVIDSON GREASE-ALL GREASE

Use for all bearings on motorcycle.

HARLEY-DAVIDSON CHAIN GREASE AND CHAIN SAVER

Designed especially as a chain lubricant. Penetrates inner bearings for a long chain life.

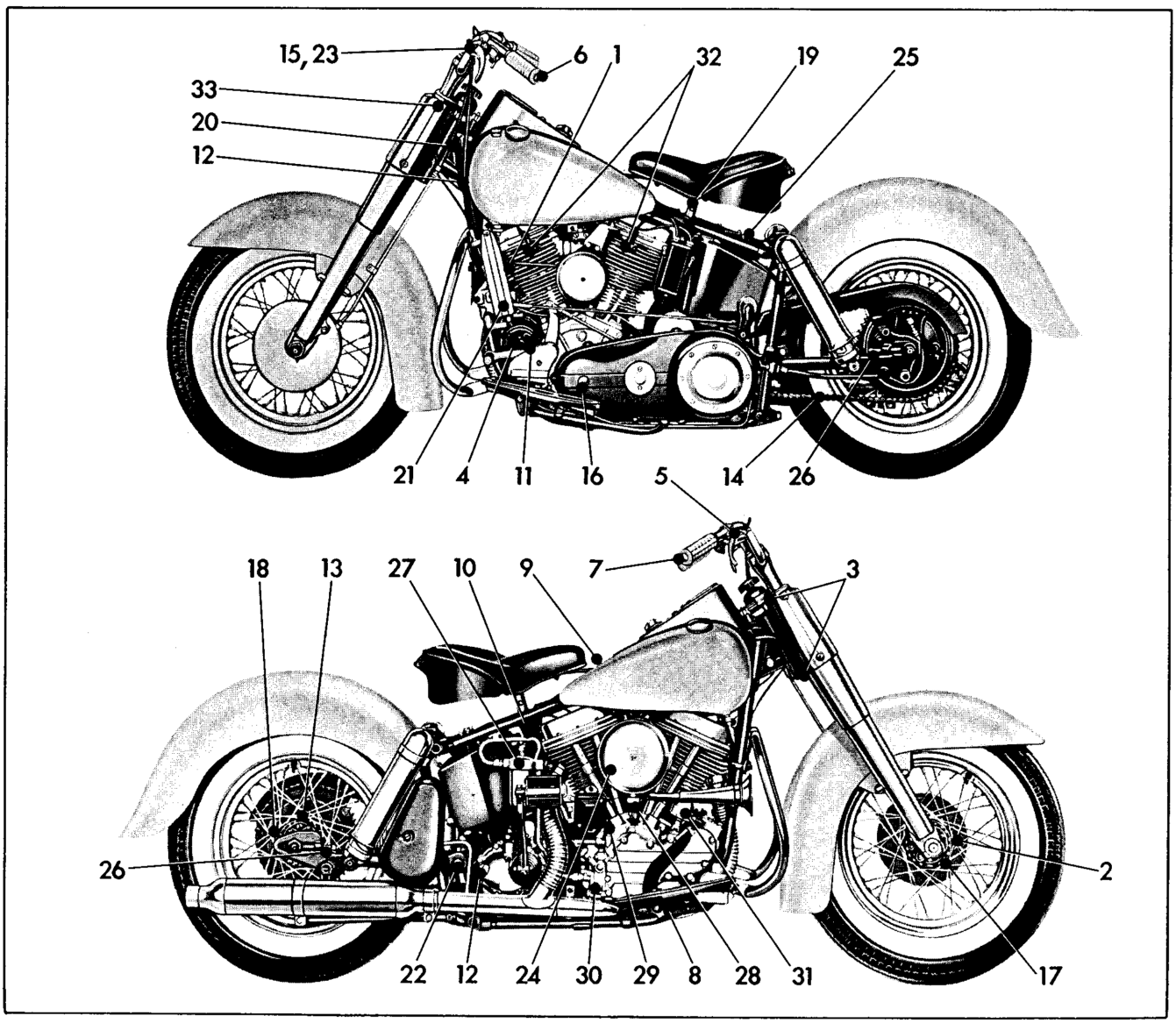

Figure 1B-1. Lubrication Chart

LOCATING TROUBLES

The following check list will be helpful in locating most operating troubles:

IF ENGINE STARTS HARD

1. Spark plugs in bad condition, or partially fouled.
2. Spark plug cables in bad condition and "leaking."
3. Circuit breaker points out of adjustment or in need of cleaning.
4. Battery nearly discharged.
5. Loose wire connection at one of battery terminals, or at coil or circuit breaker.
6. Carburetor not adjusted correctly.
7. Defective ignition coil.
8. Defective condenser.

IF ENGINE STARTS BUT RUNS IRREGULARLY OR MISSES

9. Spark plugs in bad condition, or partially fouled.
10. Spark plug cables in bad condition and "leaking."
11. Spark plug gap too close or too wide.
12. Circuit breaker points out of adjustment or in need of cleaning.
13. Condenser connections loose.
14. Defective ignition coil.
15. Defective condenser.
16. Battery nearly discharged.
17. Loose wire connection at one of battery terminals, or at coil or circuit breaker.
18. Intermittent short circuit due to damaged wiring insulation.
19. Water or dirt in fuel system and carburetor.
20. Gasoline tank cap vent plugged and tank air bound.
21. Carburetor not adjusted correctly.
22. Weak or broken valve springs.

IF ENGINE FAILS TO START

23. Gasoline tank empty.
24. Gasoline valve shut off.
25. Gasoline line clogged.
26. Discharged battery or loose or broken battery terminal connection. Check by turning light switch "ON."
27. Fouled spark plugs.
28. Spark plug cables in bad condition and "leaking."
29. Badly oxidized ignition circuit breaker points.
30. Circuit breaker points badly out of adjustment.
31. Loose wire connection at one of battery terminals, or at coil or circuit breaker.
32. Defective ignition coil.
33. Defective condenser.
34. Clutch slipping and starter not turning engine over.
35. Sticking valves, or tappets too tight.
36. Engine flooded with gasoline as a result of over-choking.

IF A SPARK PLUG FOULS REPEATEDLY

37. Too cold a plug for the kind of service or for type of engine.
38. Piston rings badly worn or in bad condition otherwise.

IF ENGINE PRE-IGNITES

39. Excessive carbon deposit on piston head or in combustion chamber.
40. Too hot a spark plug for the kind of service or for type of engine.
41. Defective spark plugs.
42. Ignition timing too advanced.

IF ENGINE OVERHEATS

43. Insufficient oil supply, or oil not circulating.
44. Leaking valves.
45. Heavy carbon deposit.
46. Carburetor high speed adjustment too lean.
47. Ignition timing too late.

IF ENGINE DETONATES

48. Unsuitable fuel (octane rating too low).
49. Heavy deposit of carbon on piston head and in combustion chamber (decreases combustion space, thereby increasing compression ratio. The higher the compression ratio, the higher the octane rating of fuel required).

IF OIL DOES NOT RETURN TO OIL TANK

50. Oil tank empty.
51. Scavenger pump gear key sheared.
52. Oil feed pump not functioning.

IF ENGINE USES TOO MUCH OIL

53. Breather valve incorrectly timed.
54. Piston rings badly worn or in bad condition otherwise.
55. Chain oiler adjusting screw adjusted for an excessive amount of oil.
56. Oil leak to outside.

EXCESSIVE VIBRATION

57. Cylinder head bracket loose or broken.
58. Engine mounting bolts loose.
59. Broken frame.
60. Front chain badly worn, or links tight as a result of insufficient lubrication.
61. Transmission and/or transmission sub-mounting plate loose in chassis.

IF GENERATOR DOES NOT CHARGE

62. Brushes badly worn.

63. Brushes sticking in holders.
64. Voltage regulator not grounded.
65. Voltage regulator incorrectly adjusted.
66. Defective voltage regulator.
67. Commutator dirty or oily.
68. Positive brush holder grounded.
69. Generator "A" terminal grounded.
70. Loose or broken wire in generator-battery circuit.
71. Broken field coil wire or loose terminal (both coils).
72. Commutator shorted.
73. Defective armature.

IF GENERATOR CHARGING RATE IS BELOW NORMAL

74. Voltage regulator incorrectly adjusted.
75. Broken field coil wire or loose terminal (one coil).
76. Commutator worn and not turning true with shaft - throws brushes at high speed.
77. Commutator dirty or oily.
78. Brushes gummy and sluggish in holders.
79. Defective armature.

IF CARBURETOR FLOODS

80. Float set too high.
81. Float valve sticking.
82. Float valve and/or valve seat worn or damaged.
83. Dirt or other foreign matter between float valve and its seat.
84. Carburetor float not located correctly in bowl - may be binding.

IF TRANSMISSION SHIFTS HARD

85. Bent shifter rod.
86. Clutch dragging slightly.
87. Transmission oil too heavy (winter operation).
88. Shifter forks (inside transmission) sprung as a result of using too much force when shifting.
89. Corners worn off shifter clutch dogs (inside transmission) - makes engagement difficult.

IF TRANSMISSION JUMPS OUT OF GEAR

90. Shifter rod improperly adjusted.
91. Shifter forks (inside transmission) improperly adjusted.
92. Shifter engaging parts (inside transmission) badly worn and rounded.

IF CLUTCH SLIPS

93. Clutch controls improperly adjusted.
94. Insufficient clutch spring tension.
95. Worn and/or oil soaked friction discs.

IF CLUTCH DRAGS OR DOES NOT RELEASE

96. Clutch controls improperly adjusted.
97. Clutch spring tension too tight.
98. Friction discs gummy.
99. Clutch key ring badly worn.
100. Clutch discs warped.

IF CLUTCH CHATTERS

101. Clutch disc rivets loose.
102. Clutch sprung disc too flat.

IF BRAKE DOES NOT HOLD NORMALLY

103. Brake shoes improperly adjusted.
104. Brake controls binding.
105. Brake linings impregnated with grease as a result of over-lubrication.
106. Brake linings badly worn.
107. Brake drum badly worn or scored.

(Hydraulic brake only)

108. Master cylinder low on fluid.
109. Brake line contains air bubbles.
110. Master or wheel cylinder piston worn.

chassis

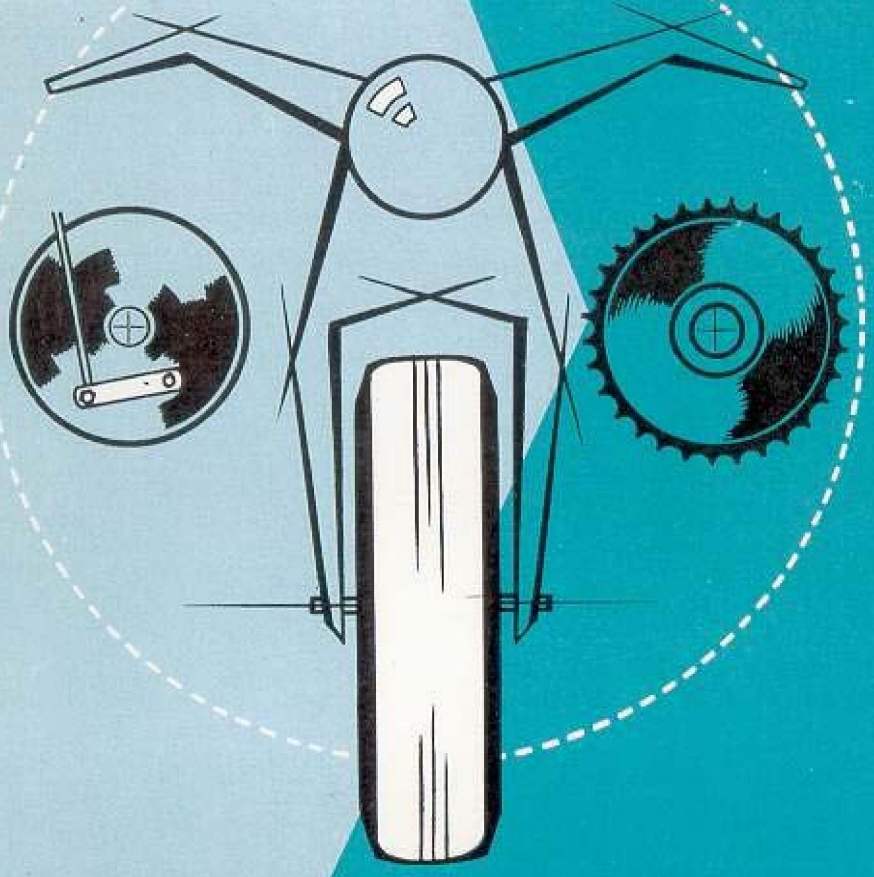

DRIVE

CHAINS

GENERAL

Chain adjustment must be checked at 2000-mile intervals. Rear chain requires more frequent attention than front, or primary chain. As chains stretch and wear, they run tighter at one spot than another. Always adjust free movement at tightest spot in chain to allow 1/2 in. play midway between sprockets. Do not adjust tighter. Running chains too tight will result in excessive wear.

Inspect chains frequently for cracked, broken, or badly worn links. The rear chain may be taken apart for repair at the connecting, or master link. The front chain does not have a connecting link. It is necessary to remove the engine sprocket before the chain is removed. See "Stripping Motorcycle for Engine Repair," Section 3A, for engine sprocket removal.

FRONT CHAIN ADJUSTMENT

To adjust front chain loosen four nuts and one cap screw that secure the transmission to its mounting plate and bracket on the right side frame tube. Move the transmission backward or forward by means of the adjusting screw at the rear of the transmission on the right side. Turn adjusting screw clockwise to tighten chain and counterclockwise to loosen chain. When correctly adjusted, tighten the transmission securely to its mounting. Check mounting plate bolts occasionally and keep them tight.

Adjusting front chain requires adjustment of rear chain. Moving the transmission to adjust the front chain may require adjustment of gear shifter and clutch controls. Readjust if necessary (see "Adjusting Clutch Control," Section 4B, and "Adjusting Shifting Linkage," Section 4D).

REAR CHAIN ADJUSTMENT (Fig. 2B-1)

Remove the rear axle nut, lock washer, and loosen brake sleeve nut (1) and brake anchor stud nut (4). Loosen the lock nuts on wheel adjusting screws (2). Turn the adjusting screws as necessary to correctly adjust the chain. Turn each screw (3) an equal number of turns in order to keep wheel in alignment. Check correct alignment of the wheel to see that the tire runs in center of rear fork and also that the rear sprocket runs centrally in the chain. When readjustment is completed, be sure to securely tighten the sleeve nut, anchor stud nut, axle nut, and adjusting screw lock nuts in that order.

FRONT CHAIN LUBRICATION

A well lubricated chain has an oily surface and is clean and free of discoloration. If chain has a brownish hue and a rusty appearance at the side and center plates, it is under-lubricated even though the surface may be oily. Readjust the front chain oiler as follows: Loosen lock nut (1, Fig. 2B-2) and turn adjusting screw (2, Fig. 2B-2) outward for more oil; turn screw inward for less oil. Turn screw only a fraction of a turn at a time. Lock adjusting screw in place with lock nut.

The adjusting screw fits into an orifice through which engine oil bleeds to the chain and controls the flow of

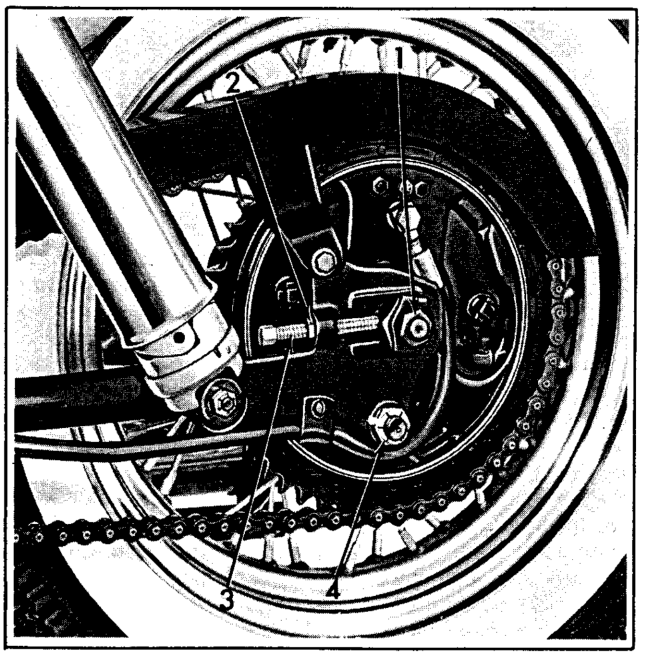

Figure 2B-1. Adjusting Rear Chain

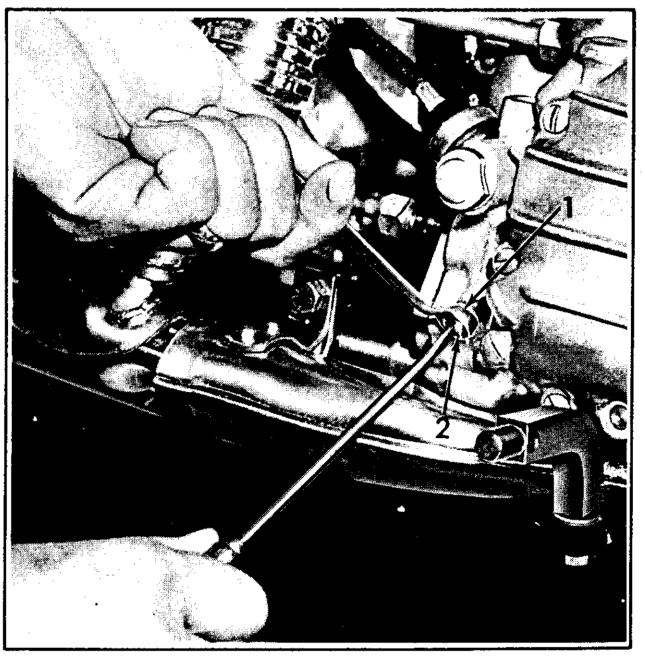

Figure 2B-2. Adjusting Front Chain Oiler

oil by controlling the size of the orifice. Since very little oil is needed to lubricate the chain, the orifice is very small. Sediment and gummy matter accumulate in the oil supply and form deposits in and around this orifice, gradually decreasing the oil supplied to the chain. A chain that has been lubricated perfectly the first 2000 miles may run short of oil the second 2000 miles. For this reason, even though inspection indicates the chain is amply lubricated, it is advisable to flush away accumulated sediment and restore the orifice to its original size at intervals of approximately 2000 miles. To do this, loosen the chain oiler adjusting screw, and back it out exactly two full turns. Tighten lock nut. Operate this way for a few miles and then reset screw to its established setting. To reset adjusting screw to its established setting, turn adjusting screw inward exactly two full turns and lock in place with lock nut.

If established setting of adjusting screw should become completely lost while making readjustment or flushing orifice, back up lock nut and turn the screw inward until its point bottoms lightly but firmly against its seat. Then back screw out about 1-1/4 turns and establish this setting with lock nut. This is the approximate original factory setting.

REAR CHAIN LUBRICATION

Under normal operating conditions brush the dirt off and lubricate the rear chain at 1000-mile intervals. Lubricate with Harley-Davidson "Chain Saver" if available; if not, use lightest engine oil available.

If motorcycle is equipped with rear chain oiler, disregard above instructions and proceed as follows: At regular 2000-mile intervals, make a close inspection of rear chain. If rear chain does not appear to be getting sufficient lubrication, or if there is evidence of an over-supply of oil, readjustment should be made with rear chain oiler adjusting screw. To adjust the rear chain oiler, follow the procedure explained in adjusting the front chain oiler. The rear chain oiler is located on the oil return line.

To clean rear chain oiler, proceed as follows:

1. Back out adjusting screw lock nut as far as possible without allowing the adjusting screw to turn.

2. Turn adjusting screw inward until it bottoms on its seat. Keep a count of the number of turns.

3. Remove adjusting screw and clean orifice with compressed air.

4. Re-install adjusting screw and turn it inward until it bottoms on its seat.

5. Turn adjusting screw outward the same number of turns determined in step 2 and lock in place with locking nut.

LUBRICATION - UNUSUAL CONDITIONS

If the motorcycle is operated under extremely dusty or dirty conditions, whether equipped with a rear chain oiler or not, additional lubrication of the rear chain may be advisable. Remove chain from motorcycle. Soak and wash thoroughly in a pan of kerosene. Remove chain from kerosene and hang so kerosene will drain off. Immerse in a pan of grease heated to consistency of light engine oil, or use light engine oil. While immersed, move chain around to be sure that hot grease or oil works through all inside parts. After removing, allow chain to drain and wipe all surplus grease or oil from surface of chain. Install chain on motorcycle. Inspect connecting link and spring clip closely for bad condition. Replace if at all questionable. Be sure spring clip is properly and securely locked on pin ends with open end trailing direction of chain travel.

REPAIRING DRIVE CHAINS

To repair a chain, remove damaged link or links by pushing out pins with chain repair tool. Assemble new links and secure with connecting links. Front chain is a double-row or duplex chain; rear chain is a single-row chain. The chain tool furnished in the tool kit is designed to accomodate both.

GAUGING CHAIN WEAR

When chain has been removed for cleaning, check it for elongation caused by wear as follows:

1. Lay chain on a flat surface.

2. Take up the play in the links by pushing the chain ends toward each other, a few links at a time.

3. When the chain is fully compressed, measure its length. Stretch the chain to its full length and measure again. Replace rear chain if play exceeds 1 in.; replace front chain if play exceeds 1 in.

NOTE

Front chain is not equipped with a connecting link so it may be checked only if it has been opened for repair.

REMOVING FRONT CHAIN

Remove chain guard cover. If motorcycle is equipped with compensating sprocket, use Compensating Sprocket Shaft Nut Wrench, Part No. 94557-55, to remove compensating sprocket shaft nut. If not equipped with compensating sprocket, use Crank Pin Nut Wrench, Part No. 94545-26, to remove nut. Loosen nut by striking wrench handle several sharp blows with hammer. Remove push rod adjusting screw lock nut (nut on center screw of clutch sprocket), slip washer (any steel washer 1-3/4 in. in diameter with 3/8 in. hole) over push rod adjusting screw and replace lock nut. Remove three spring tension adjusting nuts and pull clutch outer disc and spring collar assembly off clutch drive hub pins. Move clutch sprocket and motor sprocket off shafts just far enough to slip motor sprocket off shaft, releasing chain for removal.

WHEELS

GENERAL

Good handling of a motorcycle at any speed will result in maximum tire mileage. Tires must be transposed at regular intervals for best performance and long life.

The larger the tire size and higher the average road speed, the more essential it is that wheels and tires be given proper attention. A tire kept in continuous solo motorcycle front end service long enough to allow tread to wear irregular and peaked, may cause high speed weave, especially if over-inflated.

At regular intervals of approximately 5000 miles or when a solo motorcycle develops handling irregularities at high speed, check the following list for possible causes:

1. Loose wheel axle nuts.

2. Excessive wheel hub bearing play.

3. Loosened spokes.

4. Rear wheel out of alignment with frame and front wheel.

5. Rims and tires out-of-true sideways (tire run-out should not be more than 3/64 in.).

6. Rims and tires out-of-round or eccentric with hub (tire run-out should not be more than 3/32 in.).

7. Irregular or peaked front tire tread wear. Determine mileage since tires were last transposed. If mileage is found to be 2500 or more, transpose front and rear wheels and tires even though irregular wear or peaking of front tread is not noticeable.

8. Tires over-inflated. Check "Tire Data," Section 1A. Do not over-inflate.

9. Tire and wheel unbalanced. Static balancing will be satisfactory if dynamic balancing facilities are not at hand.

10. Steering head bearings loose. Correct adjustment and replace pitted or worn ball bearings and races. See Section 2F.

11. Shock absorber not functioning normally. Check possible causes see "Forks," Section 2F.

Switching wheels and tires approximately every 5000 miles and inflating to recommended pressure are of major importance. In many cases, this attention alone applied to a solo motorcycle will remedy faulty handling at higher speeds.

It is advisable to rebalance wheels and tires, at least statically, whenever casing and/or tube is replaced.

SERVICING WHEELS

Front and rear wheels may be removed as necessary for wheel or tire service. When removing a wheel, apply brake to hold drum securely while pulling wheel from drum. When detached from drums, Duo-Glide wheels are interchangeable.

NOTE

For certain operations, such as wheel removal, requiring the raising of the motorcycle rear end, Service Stand, Part No. 95825-58, can be used as follows: Place shaft end of stand in hole provided in frame cross tube, which is located just behind transmission on right side of motorcycle. With large end of stand in place and motorcycle resting on jiffy stand, raise motorcycle using wrench on hex portion of service stand. This tool is not supplied with motorcycle tool kit.

REMOVING FRONT WHEEL (Fig. 2C-1)

Block motorcycle under frame until front wheel is clear of ground. Disassemble in following order:

Remove the cotter pin (1), axle nut (2) and flat washer (3). Servi-Car wheel disassembly includes removing bushings (4); also remove the five wheel mounting socket screws (5), loosen the two right slider cap nuts (7) and remove axle (6). Remove front wheel, leaving the brake drum in its place over the brake shoes.

When replacing the wheel, assemble in reverse order. First securely tighten wheel mounting socket screws (5) and axle nut (2), and then tighten the two right slider cap nuts (7). This will insure correct alignment of fork sides.

REMOVING REAR WHEEL (DUO-GLIDE)

Elevate motorcycle rear wheel with Service Stand, Part No. 95825-58, or suitable blocking under frame. Remove two rear screws from fender support, and raise end of fender as shown in Fig. 2C-2. Remove the five socket screws (4) that secure wheel to brake drum. The socket screw wrench can be inserted only at the rear of axle; turn wheel to bring each screw to this position.

Remove axle nut (3) and axle nut lock washer (2). Remove axle (1) from brake drum side of motorcycle and then remove spacer (5) from between wheel hub and right axle clip. Apply rear brake and remove wheel.

NOTE

Foot Brake Lever Locking Tool, Part No. 95875-58, can be used to lock brake. To

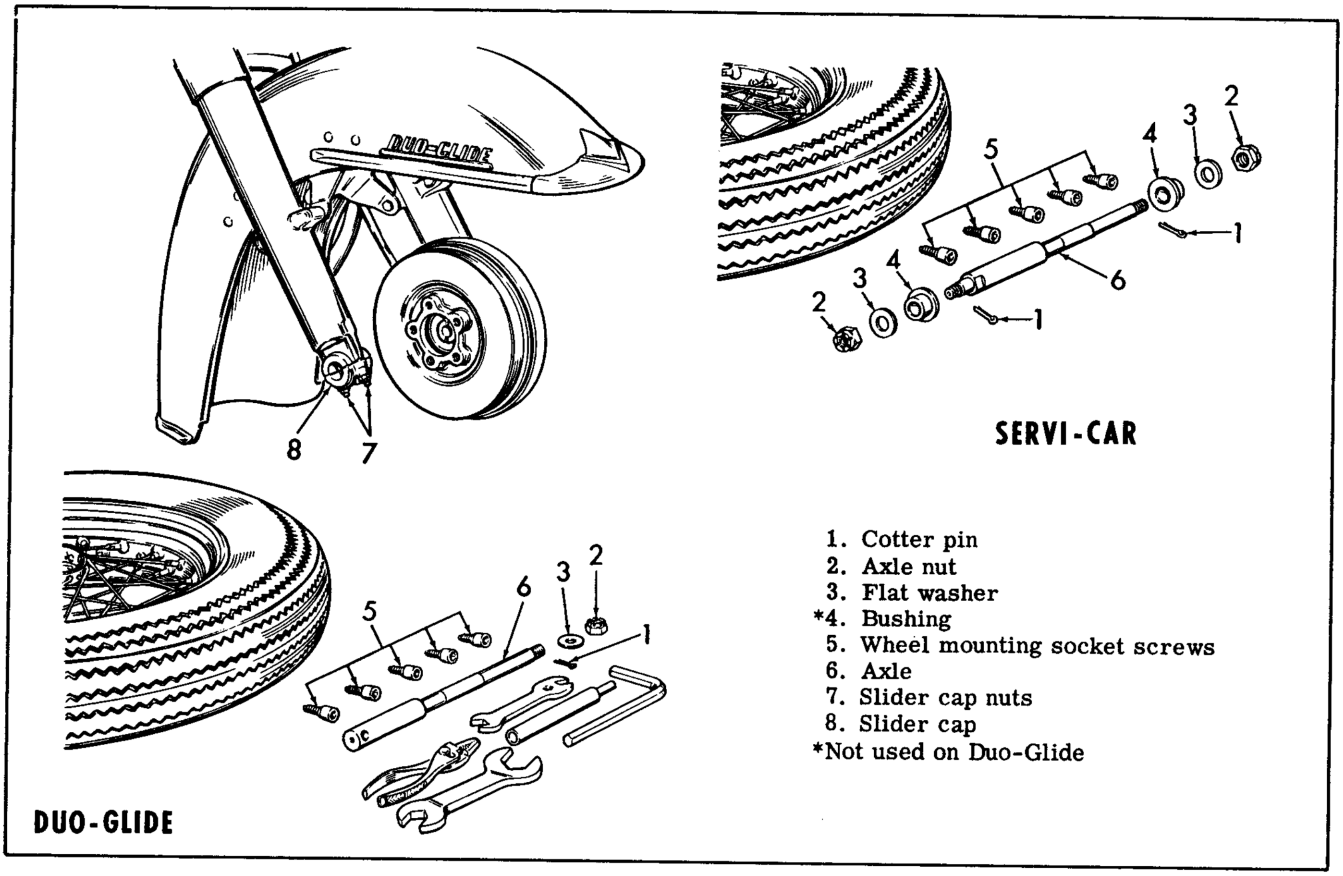

1. Cotter pin
2. Axle nut
3. Flat washer
*4. Bushing
5. Wheel mounting socket screws
6. Axle
7. Slider cap nuts
8. Slider cap

*Not used on Duo-Glide

Figure 2C-1. Removing Front Wheel

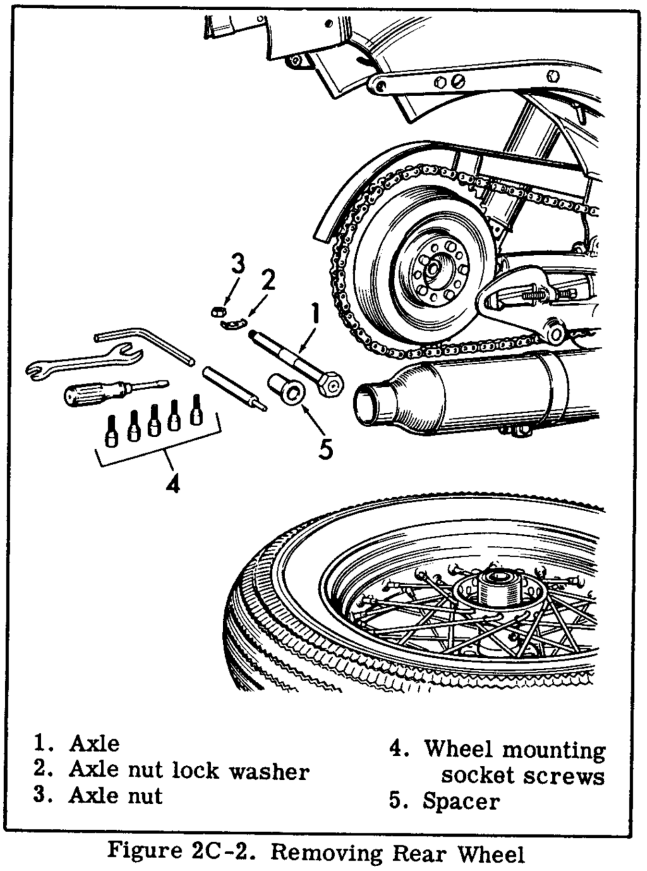

1. Axle
2. Axle nut lock washer
3. Axle nut
4. Wheel mounting socket screws
5. Spacer

Figure 2C-2. Removing Rear Wheel

use tool, raise right side foot board, slip tool over brake lever stop pin, depress brake pedal and rotate tool so that cam on tool end locks brake pedal in depressed position.

When installing wheel, reverse the removal procedure. Securely tighten the five wheel socket screws before tightening the axle nut (3). To avoid possibility of wheel working loose and damaging clamping flange, it is important that socket screws be pulled very tight.

REMOVING SIDECAR WHEEL.

Raise wheel by blocking up under sidecar chassis. Loosen nut that secures fender front bracket to sidecar step lug. Loosen the fender inner brace clip bracket nut. Remove outside axle nut, lock washer and outer brace. Hinge fender forward, taking care to provide slack for taillamp wiring. Remove extension nut, axle nut and washer. Pull wheel from axle with brake drum attached.

Detachment of wheel from brake drum is necessary only when wheel or brake drum is to be replaced or wheel interchanged. To detach wheel from brake drum, remove the five wheel mounting socket screws that secure wheel to brake drum.

To replace wheel, reverse removal procedure. Tighten wheel mounting socket screws securely to

avoid possibility of wheel working loose and damaging hub flange.

SERVICING WHEEL HUBS (Fig. 2C-3)

All spoked wheel hubs are identical. However, keep parts for all wheels separated. Bearing assemblies (20, 21 and 11, 12) and thrust bearing adjusting shims (7) have been fitted at the factory, and subsequent hub repairs may have included installing oversize bearings. A transposition of parts will result in oversize or undersize fit.

DISASSEMBLING WHEEL HUB (Fig. 2C-3)

Remove five thrust bearing cover screws (1) and lock washers (2). Lift off thrust bearing outer cover (3), cork grease retainer (4), thrust bearing housing (5), gasket (6), a number of adjusting shims (7) which varies with the hub, thrust washer (8), thrust bearing sleeve (9) and another thrust washer (10).

Remove bearing rollers (11) and retainer (12), and roller retainer thrust washer (13).

Turn hub over and remove spring lock ring (14), retaining washer (15), hub inner sleeve (16), cork grease retainer (17), spring lock ring (18) and roller bearing washer (19).

Large diameter retainer (21) and bearing rollers (20) are then free to be removed from hub shell (22).

INSPECTION AND REPAIR (Fig. 2C-3)

Clean and dry all parts and inspect for wear. If excessive sideplay is present, one or more bearing adjusting shims (7) must be added. Thrust bearing sleeve (9) must be free with thrust bearing outer cover (3) completely screwed down. A clearance of .005 in. to .007 in. is correct. Leave cork grease retainer (4) out of thrust assembly while determining correct adjustment of thrust sleeve, and reinstall it when adjustment is completed.

Excessive radial (up and down) play in wheel hub bearings can be taken up by fitting oversize rollers (11 and 20). Bearing rollers are available from .001 in. undersize to .001 in. oversize in steps of .0002 in. Select roller size that will give .001 in. to .0015 in. clearance.

ASSEMBLING WHEEL HUB (Fig. 2C-3)

Assemble hub components in reverse order of disassembly. Closed sides of roller bearing retainers (12 and 21) go toward center of hub. Be sure to include a plain washer (25) under grease fitting (24) in thrust bearing housing (5). Failure to do so will cause end of fitting to crimp adjusting shims (7).

Apply a thin coating of "Grease-All" grease to rollers, races and thrust washers. After final assembly, inject 1 ounce additional grease into hub. Carefully check hub to avoid a bearing fit too tight. Roller bearings must turn freely and have slight play. Do not over-lubricate hub. An over-lubricated hub will throw grease that may get into brake assembly.

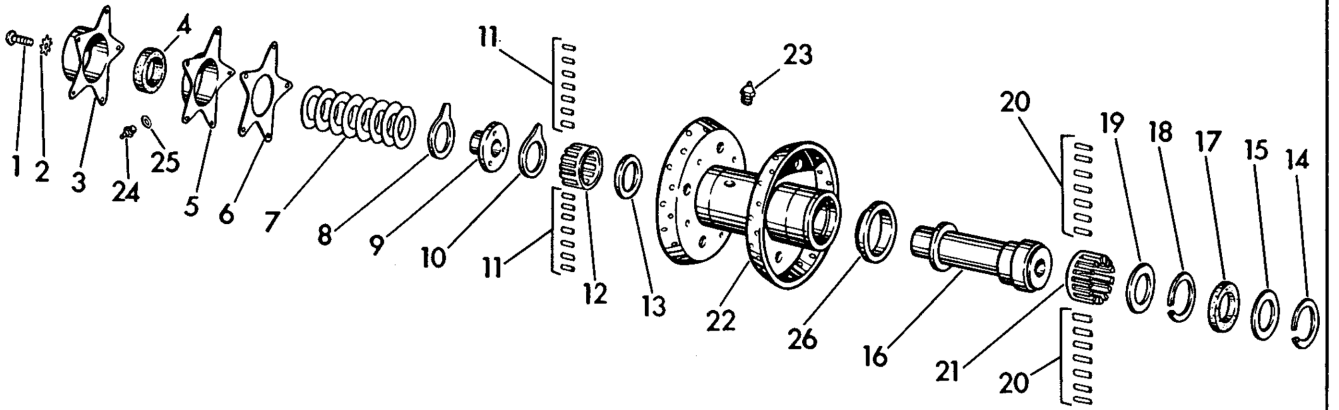

1. Thrust bearing cover screw (5)
2. Thrust bearing cover screw lock washer (5)
3. Thrust bearing outer cover
4. Cork grease retainer
5. Thrust bearing housing
6. Thrust bearing housing gasket
7. Thrust bearing adjusting shim (varies) (each .002 in. thick)
8. Thrust washer (2) (see item 10)
9. Thrust bearing sleeve
10. Thrust washer (see item 8)
11. Bearing roller (12)
12. Roller retainer
13. Roller retainer thrust washer
14. Roller bearing spring lock ring (2) (see item 18)
15. Retaining washer
16. Hub inner sleeve
17. Cork grease retainer
18. Roller bearing spring lock ring (see item 14)
19. Roller bearing washer
20. Bearing roller (14)
21. Roller retainer
22. Hub shell
23. Grease fitting (2)
24. Grease fitting (see item 23)
25. Plain washer
26. Roller retainer thrust collar

Figure following name of part indicates quantity necessary for one complete assembly.

Figure 2C-3. Wheel Hub - Exploded View

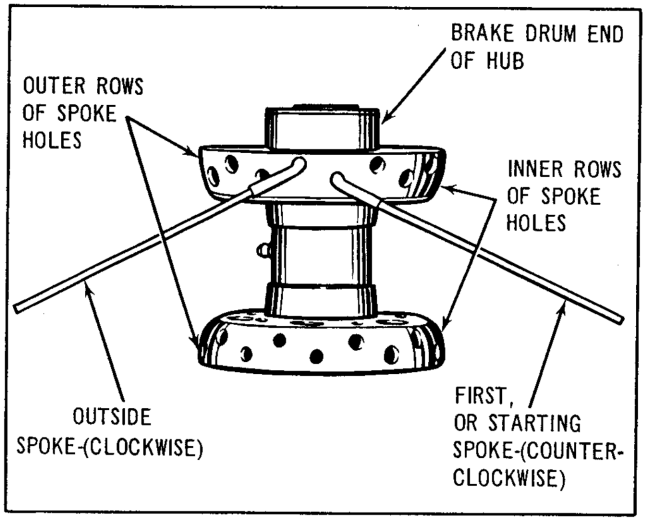

Figure 2C-4. Starting Spokes in Wheel Hub

SPOKING WHEELS

Front, rear (Duo-Glide) and sidecar wheels are spoked indentically. Spoke holes in hub flanges are in two rows around flange, ten inner row holes and ten outer row holes in each flange.

All spokes must be inserted from inside of flange.

1. Place hub on bench with brake drum end of hub up.

2. Insert spokes in ten inner spoke holes of brake side flange (see Fig. 2C-4).

3. Swing loose end of spokes counterclockwise as far as hub will allow without turning hub.

4. Place rim over hub (with tire valve hole 90 degrees to 180 degrees from hub grease fitting) and insert spokes in upper row of holes in rim that angle in same direction as spokes.

NOTE

18 in. rim is placed over hub, either side down; 16 in. rim is placed over hub with tire valve hole down (opposite brake drum side of hub).

Just start nipples on spokes as they are inserted in rim.

5. Insert spokes in outer ten holes of flange and swing spokes clockwise (see Fig. 2C-5).

6. Select any outer spoke, cross it over four inner spokes (A, B, C and D) and insert spoke in nearest upper rim hole and start nipple. Follow same procedure with balance of spokes.

7. Turn rim and hub over. Repeat operations 2, 3, 5 and 6, except in operation 3 swing spokes clockwise and in operation 5 swing spokes counterclockwise.

NOTE

Outer spokes on both sides point in same direction.

TRUING WHEEL

1. Install truing arbor in wheel hub and place wheel in Wheel Truing Stand, Part No. 95500-29. Secure arbor nuts so that hub will turn on its bearings.

2. Turn each nipple on just far enough to cover spoke threads.

3. Start at valve hole and tighten all nipples three full turns each, using special Nipple Wrench, Part No. 94681-39. If further tightening is needed to pull spokes snug, tighten all nipples one full turn at a time until spokes are snug.

4. Check rim for centering sideways with hub, for running true sideways and concentricity. Centering rim sideways with hub and truing rim sideways must be done as one operation.

Rim must be properly centered sideways in relation to hub for correct alignment and "tracking" of front and rear wheels. Fig. 2C-6 shows method of using a straightedge to determine correct sideways centering of wheel rim. Measurement shown in Fig. 2C-6 applies to 18 in. wheels. Straightedge should be a perfectly straight metal bar. If rim is too close to straightedge, loosen all nipples on brake side and tighten all nipples on opposite side same amount. If rim is too far from straightedge, reverse procedure.

For 16 in. wheel (5.00 in. tire), place straightedge across rim on brake side and measure the distance from straightedge to brake side spoke flange of hub.

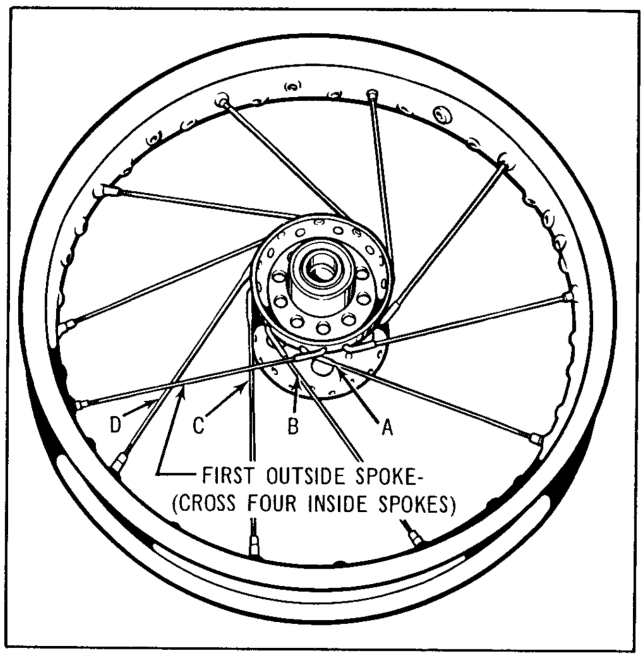

Figure 2C-5. Spoking Wheel

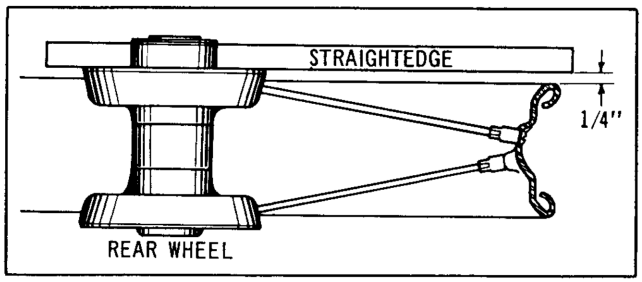

Figure 2C-6. Centering Wheel Rim

When rim is correctly centered, this distance will be 11/64 in.

For 18 in. wheel (4.00 in. tire), lay straightedge across brake side spoke flange of hub and measure distance from straightedge to rim. When rim is correctly centered, this distance will be 1/4 in.

Adjust truing stand gauge to side of rim as shown in Fig. 2C-7 so rim at highest point will strike gauge as wheel is rotated slowly. Loosen nipples at highest point of rim on gauge side and tighten nipples on opposite side the same amount. Repeat this operation until rim runs true sideways. Reverse loosening and tightening of nipples as explained above if rim moves too far away from gauge. After each loosening and tightening of spokes, check rim in relation to hub as explained in above paragraphs. Rim should be trued to within 1/32 in. sideways run-out.

After rim has been centered sideways with wheel hub and runs true sideways, check it for concentricity. Adjust truing stand gauge to circumference of rim as shown in Fig. 2C-8. If rim runs eccentric (out of round), nipples must be loosened at points rim does not contact gauge, and nipples tightened at points rim contacts gauge. Amount nipples are to be loosened or tightened is determined by the amount rim runs eccentric. Rim should be trued to within 1/32 in. concentrically.

5. After above operations have been checked and corrected, start at valve hole and tighten nipples one turn at a time all the way around rim until spokes are normally tight. While tightening nipples, repeatedly check rim with gauge according to instructions in step 4.

After all nipples have been pulled up until spokes are normally tight and wheel is true, or nearly so, seat each spoke head into hub flange with a sharp blow, using a flat nose punch and hammer. Then retighten all nipples and finish truing wheel. This method allows spokes to be drawn tighter at the start and prevents possibility of spokes loosening, due to spoke heads seating into flange, after wheel is put into service.

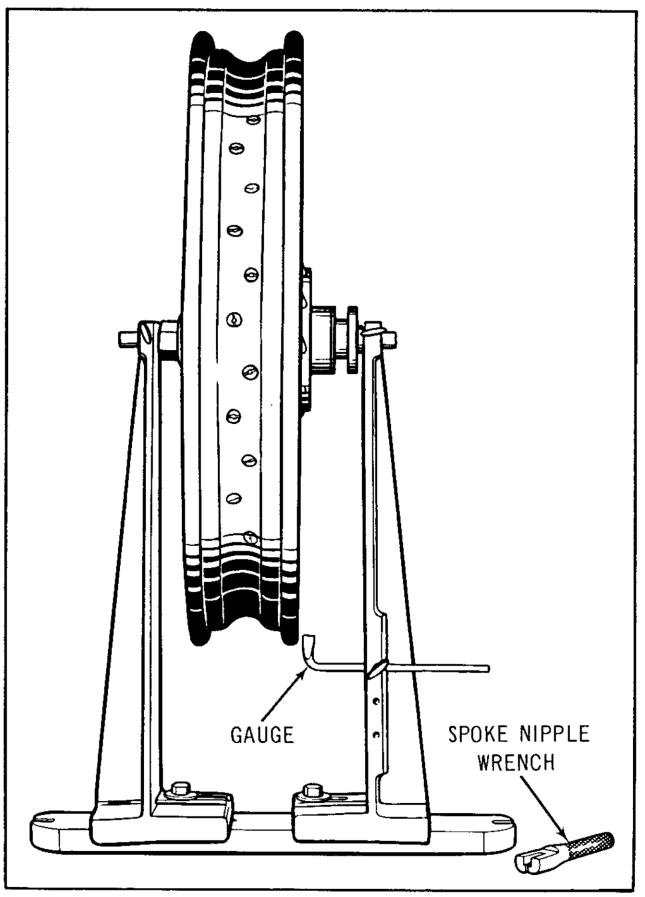

Figure 2C-7. Truing Rim Sideways

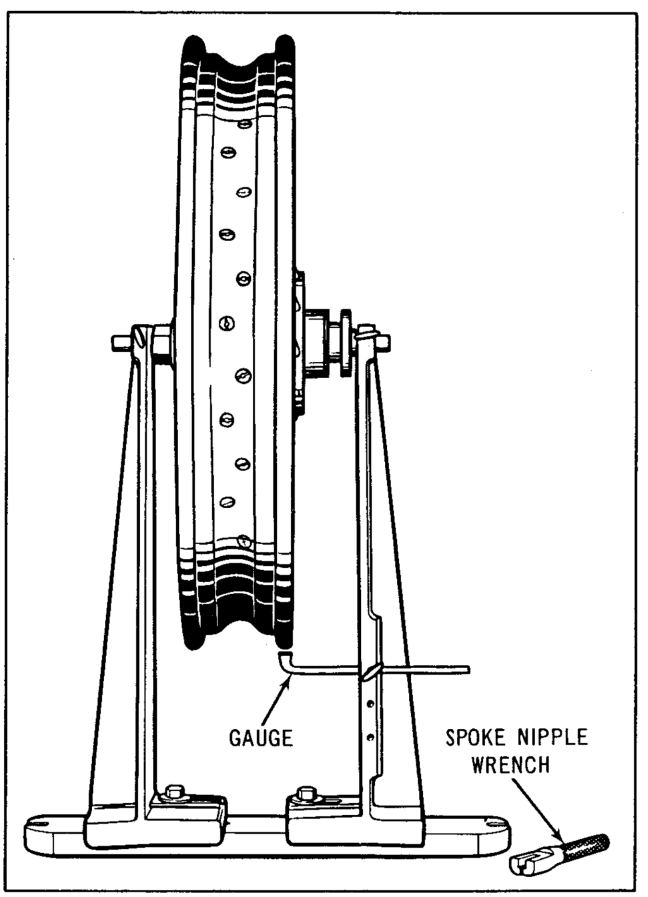

Figure 2C-8. Truing Rim Concentric with Hub

CAUTION

Do not tighten spokes too tight or nipples may draw through rim, or hub flanges may be distorted. If spokes are left too loose, they will continue to loosen when wheel is put in service.

6. File or grind off ends of spokes protruding through nipples to prevent puncturing tube when tire is mounted.

REMOVING AND INSTALLING TIRES

Wheel rims are of the drop-center type, having a depression or "well" in center of rim. Rim-well, being smaller in circumference than rest of rim, allows one casing bead to fit loosely in it while other bead is being worked over edge of rim.

REMOVING TIRE FROM RIM

Remove wheel; lay wheel on its side.

Remove valve cap and valve core to free all air from tube. Remove valve stem nut (18 in. rim).

Loosen both beads from rim flanges by stepping on sides of tire or by using a tire tool. Stand or kneel on tire opposite valve to push bead into rim-well.

Using tire tools (not sharp instruments), start upper bead over edge of rim at valve. Don't use force when starting bead over edge of rim with tire iron, because bead wires may be broken or stretched and tire ruined. Carefully remove tube before attempting to remove second bead.

Push lower bead into rim-well on one side and insert tire iron on opposite side and pry bead over flange. After a portion of second bead is started over rim edge, tire can be further removed from rim without aid of tire iron.

It is not always necessary to completely remove casing from rim. Removing one side allows tube to be removed and reinstalled and also allows inside of casing to be inspected.

MOUNTING TIRE ON RIM

Before installing tube in tire, all dust and dirt, particularly hard particles which might chafe an inflated tube, must be removed. Wipe tube and inside of tire thoroughly with clean, dry cloth. If rim is dirty or rusty, clean with a stiff wire brush. Be sure to examine a used tire carefully for fabric injuries that may damage tube.

Before mounting tire, see that rubber rim strip is in place in rim-well, and that rim strip valve hole registers with valve hole in rim.

Tire balance mark on Firestone tires is a red triangle and on Goodyear tires a red dot.

Insert tube in tire, (placing valve at tire balance mark). Swab thoroughly all around base of tube, between the tube and side walls of tire with a heavy suds solution of tire mounting compound and water. Bead seat of tire should not be coated. Inflate tube just enough to round it out. With wheel lying flat, place tire on rim and align valve with hole in rim.

Push bottom bead into rim-well near valve and hold in well while forcing remaining portion of bead over rim flange with a tire tool.

Spread tire and insert valve through hole in rim.

Force upper bead over rim flange and into well at point opposite valve. Stand or kneel on this side of tire to hold it in well and pry remaining portion of tire over rim flange. While forcing bead over rim flange, keep as much bead as possible in rim-well. Be careful not to damage beads or pinch tube. Inflate tire to recommended pressure and check valve for leak. See tire inflation pressures in "Tire Data," Section 1A.

After inflating to recommended pressure, completely deflate to smooth out any wrinkles in tube and allow tube to find its place, free from strain or stress. Again inflate to recommended pressure and check valve for leak.

HANDLEBAR

SERVICING HANDLEBAR CONTROLS

Handlebar controls for throttle and spark advance must operate freely. If a control becomes stiff and hard to adjust, parts must be removed and cleaned of caked grease, gum and dirt. A kinked control coil must be replaced if complete straightening cannot be accomplished.

DISASSEMBLING HANDLEBAR CONTROLS (Fig. 2D-2)

Disconnect control coil and wire at carburetor or circuit breaker. Loosen clip which secures spark control coil to upper frame tube.

Insert a large screwdriver through hole in end of grip as shown in Fig. 2D-1 and loosen handlebar end screw (1). Handlebar end screw and spring (2) will remain inside grip. Remove grip sleeve assembly (3), exposing working parts.

Slip two rollers (5) off roller pin (4) and remove roller pin from plunger (6). Plunger with control

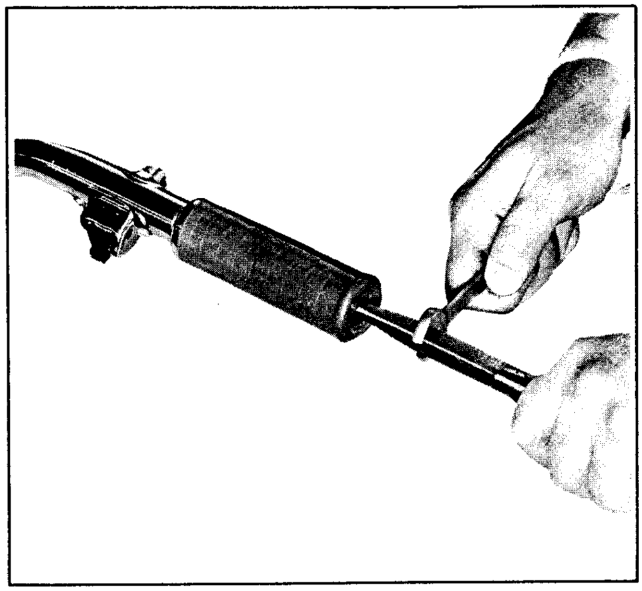

Figure 2D-1. Removing Handlebar Controls

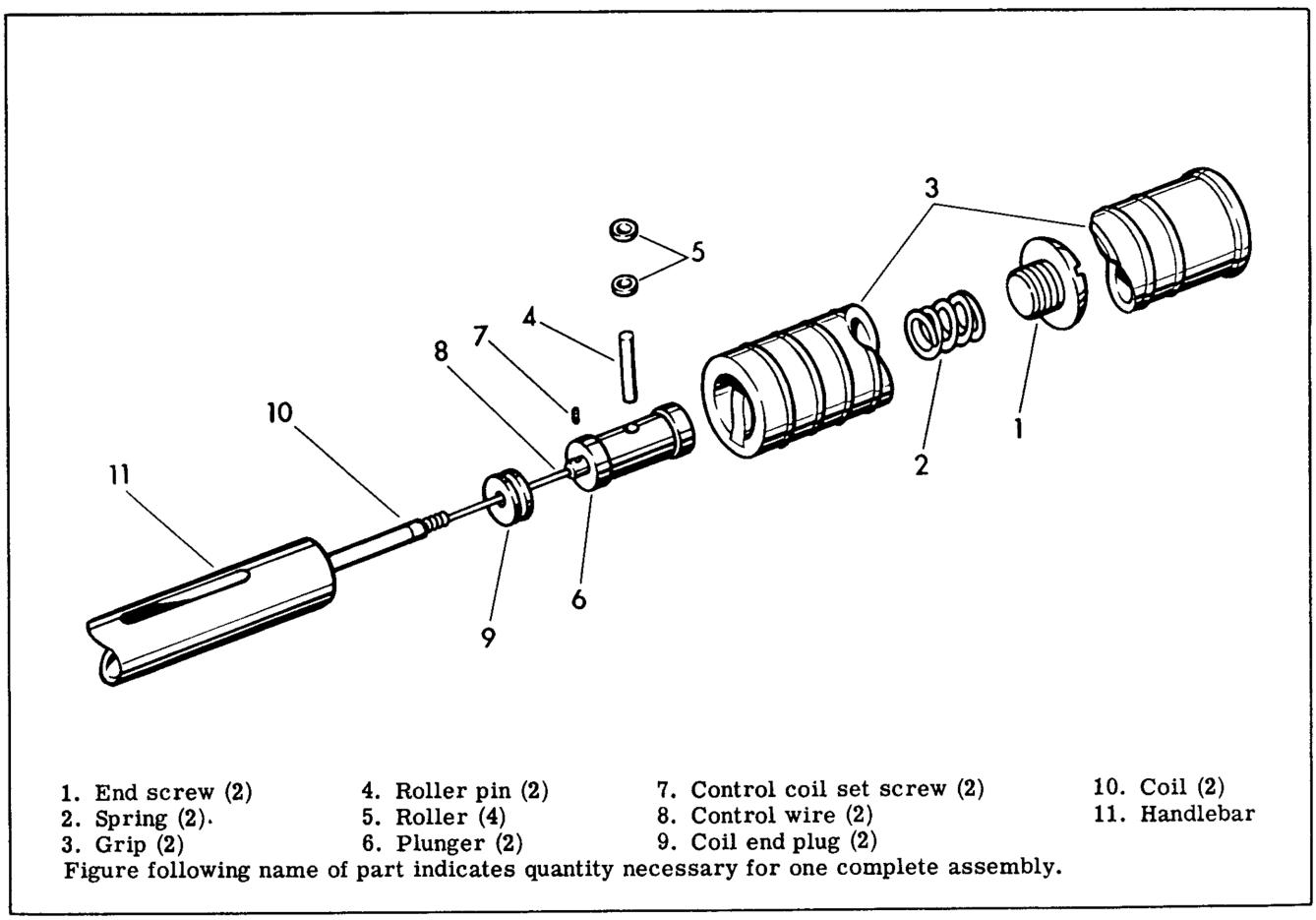

1. End screw (2)
2. Spring (2).
3. Grip (2)
4. Roller pin (2)
5. Roller (4)
6. Plunger (2)
7. Control coil set screw (2)
8. Control wire (2)
9. Coil end plug (2)
10. Coil (2)
11. Handlebar

Figure following name of part indicates quantity necessary for one complete assembly.

Figure 2D-2. Handlebar Controls - Exploded View

wire (8) may be pulled through handlebar. If the control wire is broken, remove lower end at carburetor or distributor. The control wire is fastened into the end of the plunger by means of set screw (7).

If control coil is to be removed, loosen the lock screw under the horn button retainer on the left handlebar that positions the coil end plug (9) in handlebar. The throttle end plug lock screw is exposed on the underside of the right handlebar. After loosening, control coils and end plugs may be pulled out of handlebar ends.

INSPECTION AND REPAIR

Clean all parts in solvent. Be sure they are free from rust, gum and dirt. Inspect all parts including inside of grip and replace all worn parts.

ASSEMBLING HANDLEBAR CONTROLS (Fig. 2D-2)

Slip control coil through handlebar and secure at end plug with lock screw through handlebar (screw must register in groove of end plug). Slip roller pin through plunger and assemble rollers to ends of roller pin, rounded side out. Attach control wire to plunger assembly by means of the set screw (7).

Apply a light coat of grease or oil to control wire as it is inserted into coil. Lubricate remaining parts with grease. Turn grip onto handlebar with rollers following spiral grooves inside grip.

Handlebar end screw may be started without danger of crossing threads by holding grip sleeve assembly back slightly when starting screw in handlebar end. This squares screw with end of grip sleeve, aligning threads. Tighten screw securely.

Connect throttle and/or spark control wires at carburetor and circuit breaker. Adjust throttle control so throttle closes and opens fully with grip movement. Allow about 3/8 in. of throttle control coil to extend beyond carburetor control coil clip when throttle is in a closed position.

With circuit breaker in fully-advanced position, the end of the spark control wire must point directly at hole in timer adjuster stud. Allow about 3/8 in. of spark control coil to extend beyond clamp. Adjust spark control so circuit breaker advances and retards fully with spark control grip movement.

FRAME

FRAME

To rough check a frame for correct alignment, see Fig. 2E-1. The dimensions shown will provide basic information to determine whether a frame is enough out of alignment to require a major realigning job or replacement.

Straightening a badly bent frame requires special tools and fixtures for holding, bending and gauging. If frame straightening facilities are not available locally, damaged frames may be returned to the factory for repair (through authorized Harley-Davidson dealers only).

NOTE

Replace all badly bent or broken frames. The cost of repair would be prohibitive.

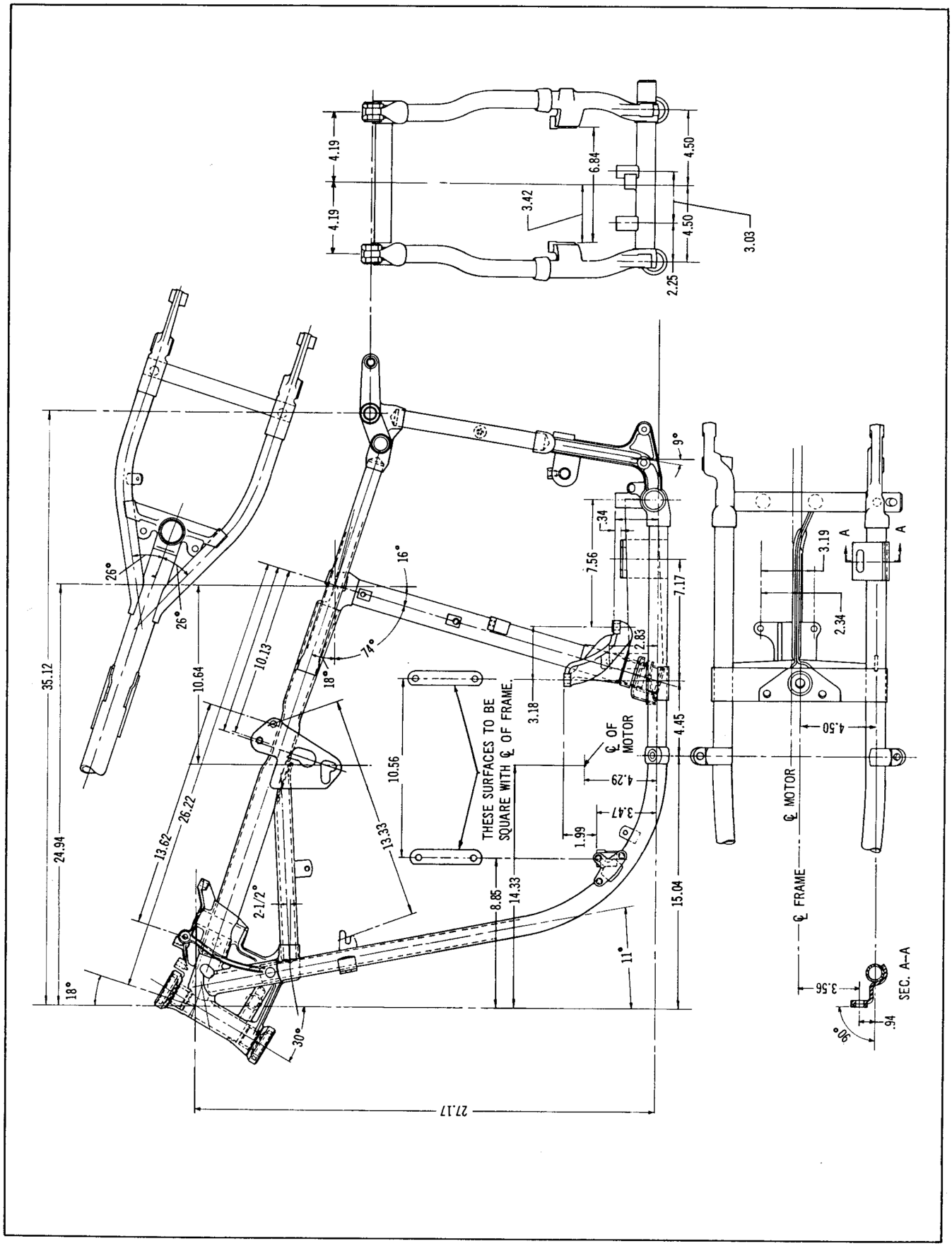

Figure 2E-1. Frame with Basic Dimensions

FORKS

GENERAL

All forks are basically comprised of two sets of telescoping tubes that work against springs, with an oil filled (hydraulic) dampening mechanism to control the action. The unit is engineered to give long service with a minimum of repair. Usually, only periodic (approximately 5000-mile intervals) oil change is necessary.

DUO-GLIDE (NON-ADJUSTABLE). The non-adjustable Duo-Glide fork, as illustrated in Fig. 2F-3, is for use on a solo motorcycle. The fork "trail" (the distance, at ground level, from the fork stem axis to a perpendicular through the wheel axle) is set and cannot be adjusted. This fork may be recognized by the two hexagon head upper bracket bolts (3, Fig. 2F-3) in the slider tube tops.

DUO-GLIDE (ADJUSTABLE). The adjustable Duo-Glide fork is for use on a motorcycle which operates with and without a sidecar. It is essentially the same as the non-adjustable fork except it has a two-position bracket that allows the trail to be changed for best solo or sidecar-equipped operation, also a steering damper adjusting mechanism which dampens the steering head to suit conditions and rider preference. All other adjustments and repairs are made exactly as on the non-adjustable fork. This fork may be recognized by the reversible bracket bolt washers, bolt and stem design (18, 19, 20, Fig. 2F-4) as described in "Adjusting Front Fork Trail."

SERVI-CAR (NON-ADJUSTABLE). The Servi-Car fork is a combination of the above forks. It has greater trail than the non-adjustable Duo-Glide fork, but is itself non-adjustable. The stem and bracket are the same as the adjustable fork except for the bracket bolt washers. In appearance, it is similar to the adjustable fork.

CHANGING OIL

DUO-GLIDE (NON-ADJUSTABLE). Remove upper bracket bolt (3, Fig. 2F-3) at top of each fork tube.

DUO-GLIDE (ADJUSTABLE) AND SERVI-CAR. Remove fork cover side panels and fork filler screws (23, Fig. 2F-4).

ALL MODELS. Remove drain plug, Fig. 2F-3 at the outside bottom of each slider tube with a 3/16 in. Allen wrench and drain. Draining speed will be increased by gently flexing the fork as it empties. Replace drain plugs and pour 6-1/2 oz. of Harley-Davidson Hydra-Glide Fork oil into each tube, 7 oz. if fork has been disassembled and washed. Measure amount very carefully. Flow of oil into tubes will be increased if fork is worked up and down during filling operation. Replace upper bracket bolts and tighten securely.

The fork filling device shown in Fig. 2F-1 will hasten and simplify the filling operation. The unit consists of a Neoprene (not rubber) stopper to fit the hole in the top of the fork, a length of flexible tubing, a funnel and an appropriate size can, soldered to the top of the funnel.

To make a filler can, drill a dozen 1/4 in. holes in the bottom of a one quart tin can (2), near the outside edge. Shape the bottom of the can with a light hammer so that it is dished upward to assure complete draining of oil through the holes.

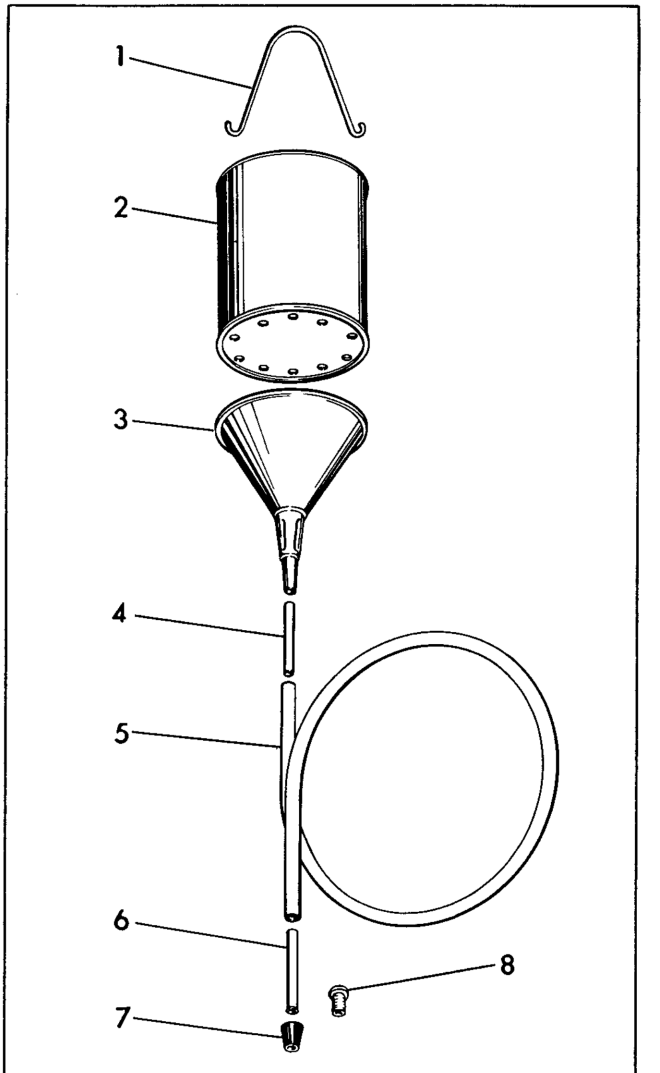

1. Bail
2. Filler can
3. Tin funnel
4. Metal tubing
5. Flexible tubing
6. Metal tubing
7. Rubber plug
8. Fork tube cap

Figure 2F-1. Fork Filler Can Components

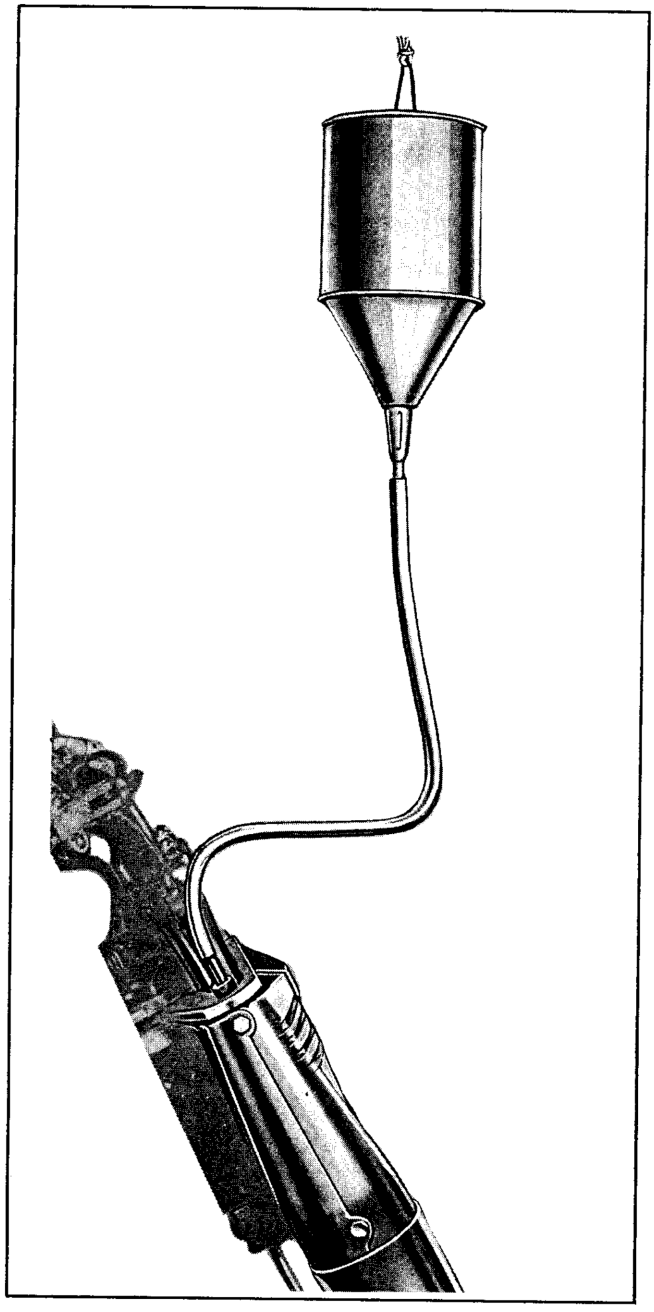

Figure 2F-2. Filling Hydraulic Fork with Oil

KEY FOR FIGURE 2F-3

1. Upper head bearing cover
2. Head bearing nut
3. Fork upper bracket bolt and valve (2)
4. Tube plug oil seal (2)
5. Fork upper bracket cover
6. Handlebar and fork bracket
7. Head bearing (2)
8. Fork bracket clamping stud (2)
9. Fork bracket with stem
10. Fork slider cover (2)
11. Slider tube plug (2)
12. Fork spring (2)
13. Damper valve stud lock nut (2)
14. Fork slider tube (2)
15. Slider tube snap ring (2)
16. Damper tube bushing gasket (2)
17. Damper tube lower bushing (2)
18. Damper valve stud gasket (2)
19. Damper tube valve (2)
20. Spring ring (2)
21. Spring ring washer (2)
22. Upper oil seal felt washer (2)
23. Upper oil seal (2)
24. Slider (2)
25. Slider upper and lower bushing (2 each)
26. Head bearing (see item 7)
27. Lower head bearing guard

Figure following name of part indicates quantity necessary for one complete assembly.

Select a tin funnel (3) with the funnel mouth about the same size as the bottom of can (2). Swage and shape the funnel spout so that a piece of 1/4 in. metal tubing (4), about 2 in. long, (a piece of fuel line is suitable) can be soldered into it. Solder (3) onto the bottom of (2). Improvise and attach bail (1) to the filler can.

Make plug (7) from a rubber bottle stopper purchased from a drug store. Rubber stopper should be 1 in. to 1-1/8 in. long, and its largest diameter about 5/8 in.

Hold rubber stopper in vise and drill a 3/32 in. hole lengthwise through the center. Then enlarge the hole with a 1/4 in. drill. After hole is drilled in the stopper, insert a 1/4 in. rod through the hole and grind the stopper to a 5/8 in. diameter at the large end, and slightly under 1/2 in. diameter at the small end, straight taper between ends, to form the plug.

Slightly flare one end of a piece of 1/4 in. tubing (6), about 2 in. long and insert into plug (7). Attach filler can to plug with transparent flexible tubing (5) about 2 feet long. See Fig. 2F-2.

Push the plug into the filler hole in fork top, Fig. 2F-2. Pour exact amount of oil into can. Work fork up and down. Air escaping through oil in filler can as fork is pushed downward will cause the oil to bubble violently, but because the bottom of the can serves as a baffle, no oil will be lost. Compressing the fork forces air out, releasing it draws oil into fork.

After the can appears to be empty, allow several minutes for can to completely drain then work fork once more. This assures getting into fork side the full quantity of oil poured into can.

INSPECTION PROCEDURE

If hydraulic fork does not work properly; that is, if it leaks oil or lacks original snubbing action, check the following before disassembling·

If oil leaks from vent hole in upper bracket bolt (3, Fig. 2F-3 and filler screw 23, Fig. 2F-4) when fork flexes, check for over-filling. Drain and refill with exact amount of oil.

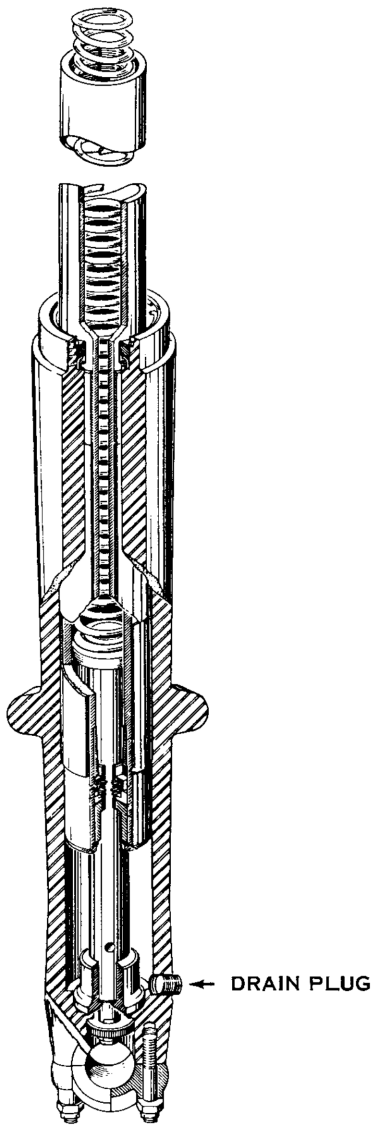

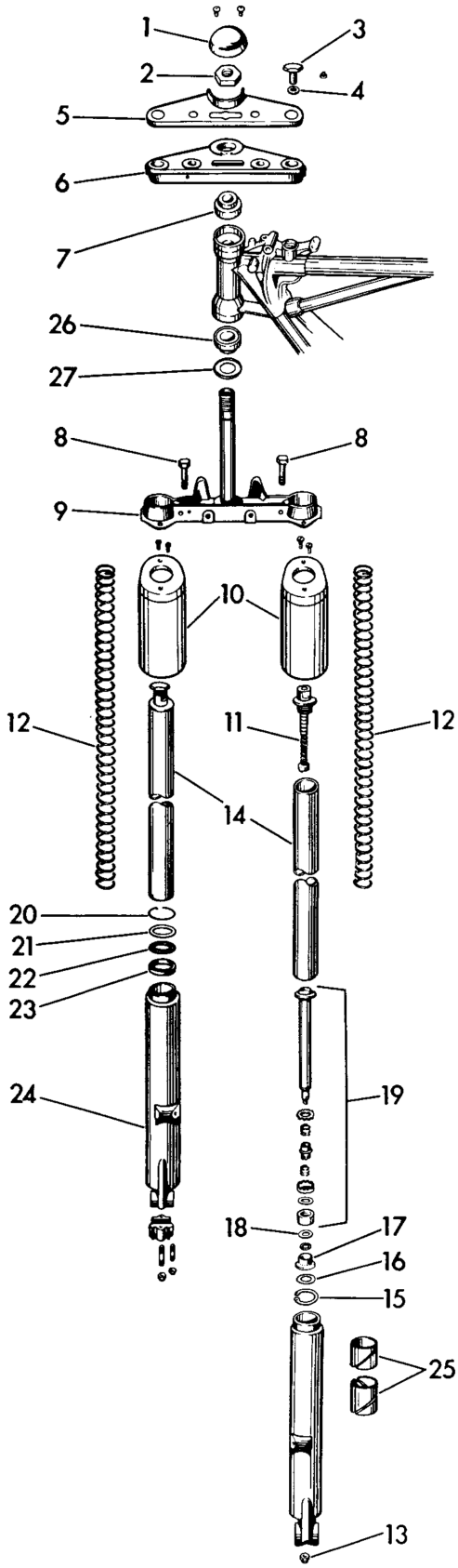

Figure 2F-3. Hydra-Glide Fork - Exploded View

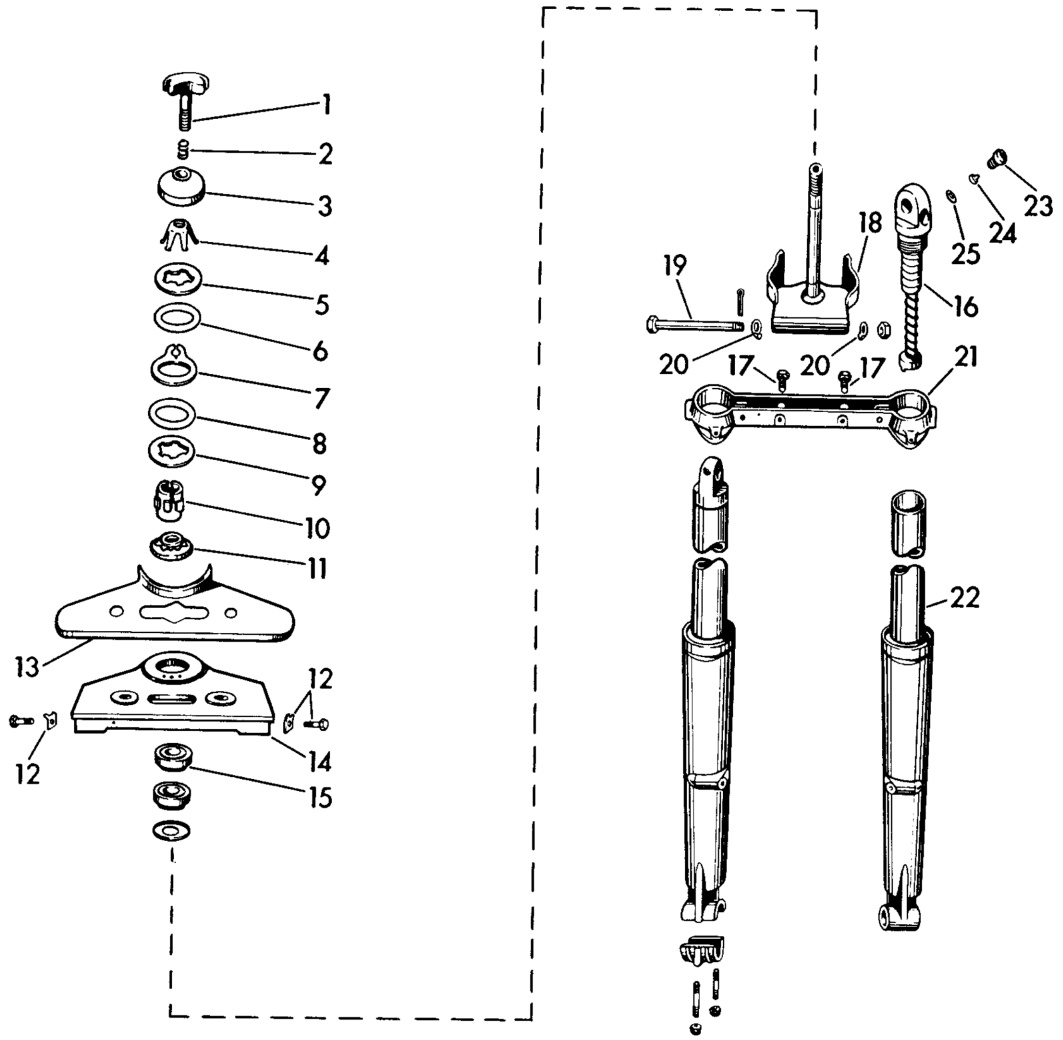

1. Steering damper adjusting screw
2. Spring
3. Spider spring cover
4. Spider spring
5. Pressure disc (2)
6. Friction washer (2)
7. Anchor plate
8. Friction washer (see item 6)
9. Pressure disc (see item 5)
10. Fork stem nut
11. Upper head bearing seat
12. Upper bracket bolt and washer (2 each)
13. Upper bracket cover
14. Upper bracket
15. Head bearing (2)
16. Slider tube plug (2)
17. Bracket clamping stud (2)
18. Bracket with stem
19. Bracket bolt with nut and cotter pin
20. Bracket bolt washer (2)
21. Bracket
22. Fork tube and slider assembly (2)
23. Filler screw (2)
24. Filler screw valve (2)
25. Filler screw washer (2)

Figure following name of part indicates quantity necessary for one complete assembly.

Figure 2F-4. Adjustable Fork - Exploded View

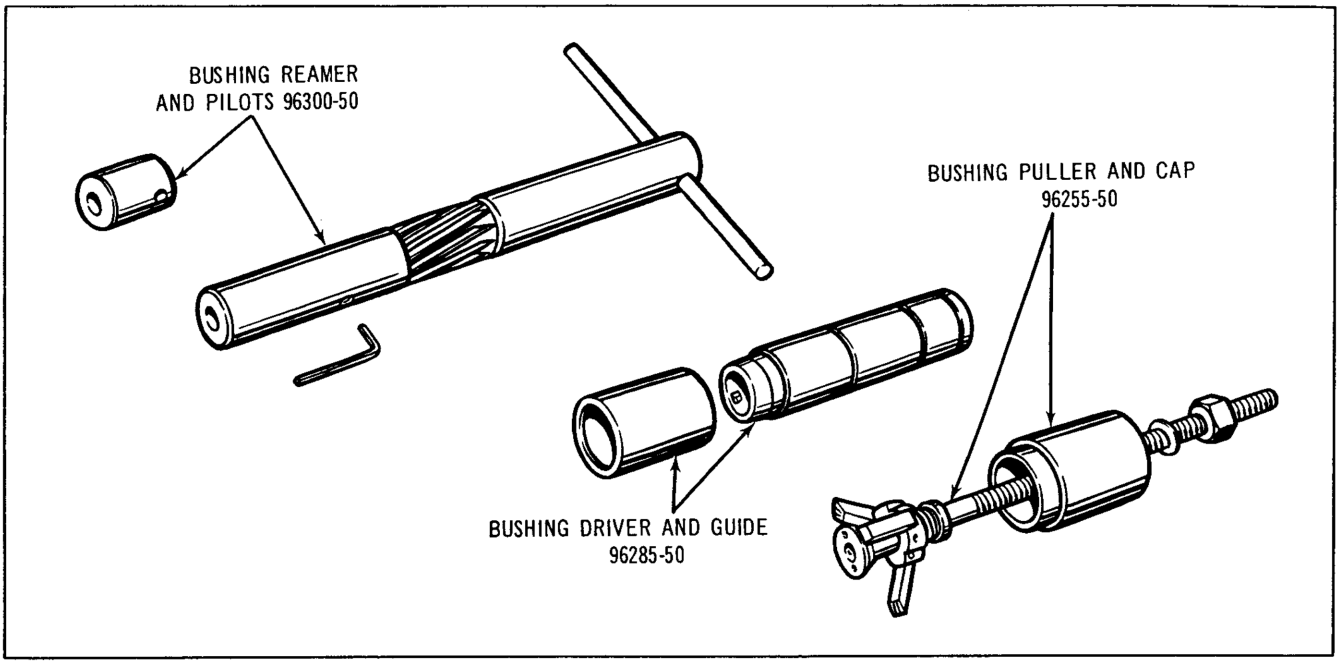

Figure 2F-5. Fork Rebushing Toois

If oil leaks from vent hole in upper bracket bolt when fork tubes contain correct amount of oil, check breather valve in upper bracket bolt or hole. To replace breather valve, place bolt in vise and tap back three stake locks with small punch and hammer. Pry valve from recess with length of stiff wire. If unable to free valve, drill hole in valve larger and pry valve out with small pin or screwdriver. In some cases, it is necessary to drill and tap hole in valve and pull it out with tap. Insert new valve assembly and stake three spots on bolt lip.

If fork action is stiff or soft and spongy and breather valves are functioning and oil content is correct, damper valves in fork tubes are inoperative. Fork must be disassembled. If fork is submerged in water, oil must be replaced at once. Water will rust damper tube valve parts. In neglected cases, the valves may stick and result in almost no snubbing action.

If oil bypasses slider tube bushings and leaks at top of sliders, bushings are worn and must be replaced. To replace slider bushings, fork must be disassembled. If slider bushings are worn, water will contaminate oil. Oil will appear emulsified, aerated and light brown.

If fork slider has play on slider tubes, bushings are worn and must be replaced. Fork must be disassembled. However, it is not necessary to disassemble entire fork and steering head unless desired.

DISASSEMBLING FRONT FORK SLIDER AND TUBES

If necessary repairs involve only sliders and slider tubes, the entire fork need not be disassembled.

To remove sliders and slider tubes, proceed as follows:

Remove front wheel as described in "Wheels," Section 2C. Remove front brake hand lever coil clip on fender. Turn off axle sleeve nut and pivot stud nut, and pull brake side cover and shoe assembly plus axle sleeve off fork. Remove front fender.

Loosen fork bracket clamping studs (8, Fig. 2F-3 or 17, Fig. 2F-4). Remove the two upper bracket bolts with oil seals (3 and 4, Fig. 2F-3; 23, Fig. 2F-4). Pull fork slider and slider tube assemblies out bottom of slider covers.

Proceed with fork slider and slider tube disassembly and repair as described in a following paragraph, "Disassembling Front Fork."

DISASSEMBLING FORK SLIDER

The slider only may be removed without disassembling remainder of fork assembly as follows:

Remove front wheel axle as described in "Wheels", Section 2C, and fender mounting screws from slider.

Right slider may be removed after turning off damper valve stud lock nut (13, Fig. 2F-3).

To remove left slider, first remove wheel, brake drum and brake side cover as described in "Disassembling Front Fork Slider and Tubes" above, and damper valve stud lock nut (13, Fig. 2F-3).

ADJUSTING STEERING DAMPER (DUO-GLIDE ADJUSTABLE AND SERVI-CAR)

Turn steering damper adjusting screw (1, Fig. 2F-4) clockwise to apply dampening action and counterclockwise to reduce dampening action. Apply steering damper only when operating under conditions where some degree of dampening stabilizes steering.

It is best to keep the damper set a little snug when operating with a sidecar.

ADJUSTING FRONT FORK TRAIL (DUO-GLIDE ADJUSTABLE) (Fig. 2F-4)

To adjust fork trail for use with sidecar, turn off nut on bracket bolt (19). Tap bolt head back far enough to pry out washer (20). Grasp fork tubes and pull forward sharply. It may be necessary to loosen upper bracket bolts (12) to move fork forward or backward. Revolve bracket bolt washers 180 degrees until pin on washer is forward. Seat washer pin in slot in bracket (21) boss. Tap bracket bolt (19) into position and turn on nut.

To adjust fork for solo riding, follow same procedure except push fork tubes back and insert washer (20) so pins are rearward.

DISASSEMBLING FRONT FORK

Prepare for disassembling by raising front end of motorcycle on stand or suitable support, so wheel is off the floor.

Remove front and side fork trim panel. Remove headlamp mounting nut. Disconnect at terminal strip the two headlamp wires and all wires that pass through handlebar. Disconnect throttle and spark advance cables from carburetor and circuit breaker.

Remove front wheel as described in Section 2C. Remove front brake hand lever bracket and coil clip on fender. Turn off front axle sleeve nut and pivot stud nut, and pull brake side cover and shoe assembly and axle sleeve off fork. Remove front fender. Slider bushing play can best be checked at this point. Remove the four nuts, handlebar riser caps and handlebar.

DUO-GLIDE (NON-ADJUSTABLE) (Fig. 2F-3)

Remove upper head bearing cover (1) and bearing nut (2). Remove the two upper bracket bolts (3) with oil seal (4) and upper bracket cover (5). Lift off handlebar and fork bracket (6). Remove upper head bearing (7) and pull fork out bottom of steering head.

Loosen fork bracket clamping studs (8) and slide fork bracket (9) off fork tubes with fork slider covers (10). Turn out two slider tube plugs (11) and invert sliders to drain out oil and remove fork springs (12).

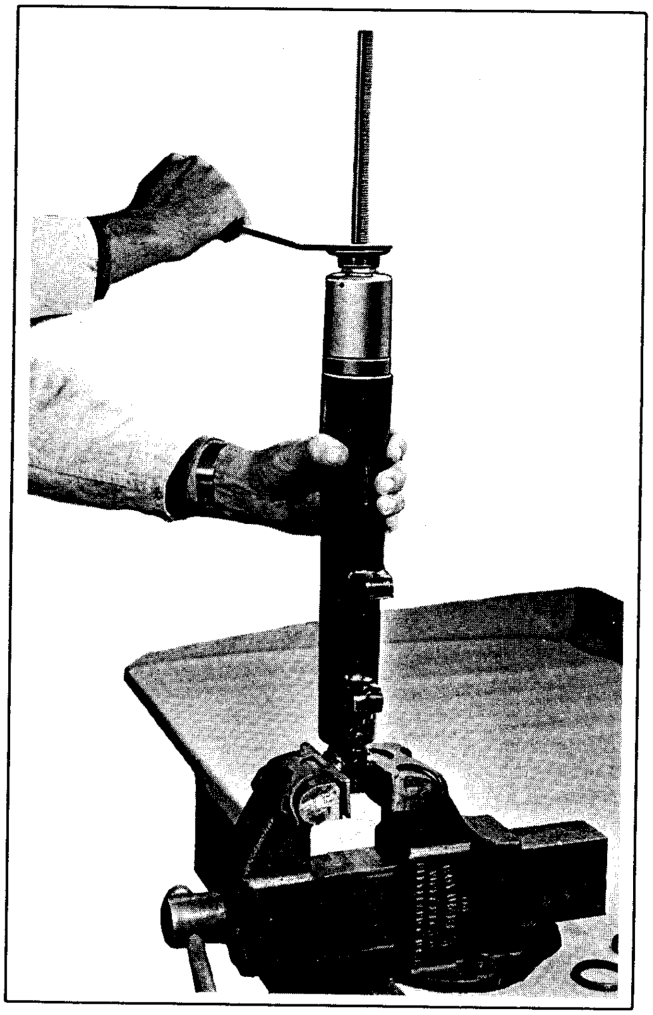

Figure 2F-6. Removing Fork Slider Bushing

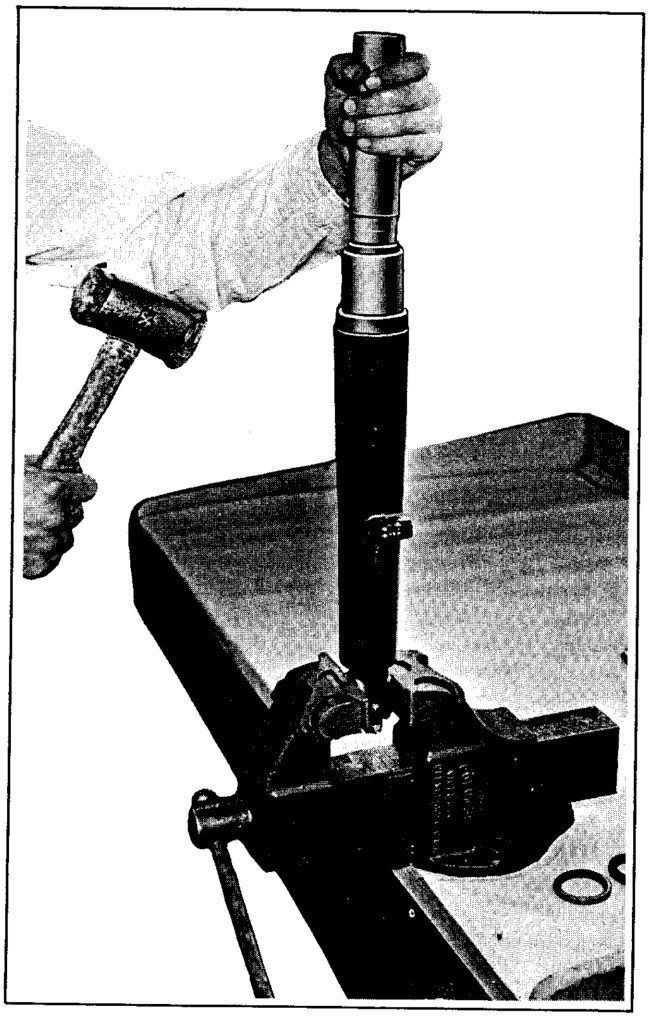

Figure 2F-7. Driving in Fork Slider Bushing

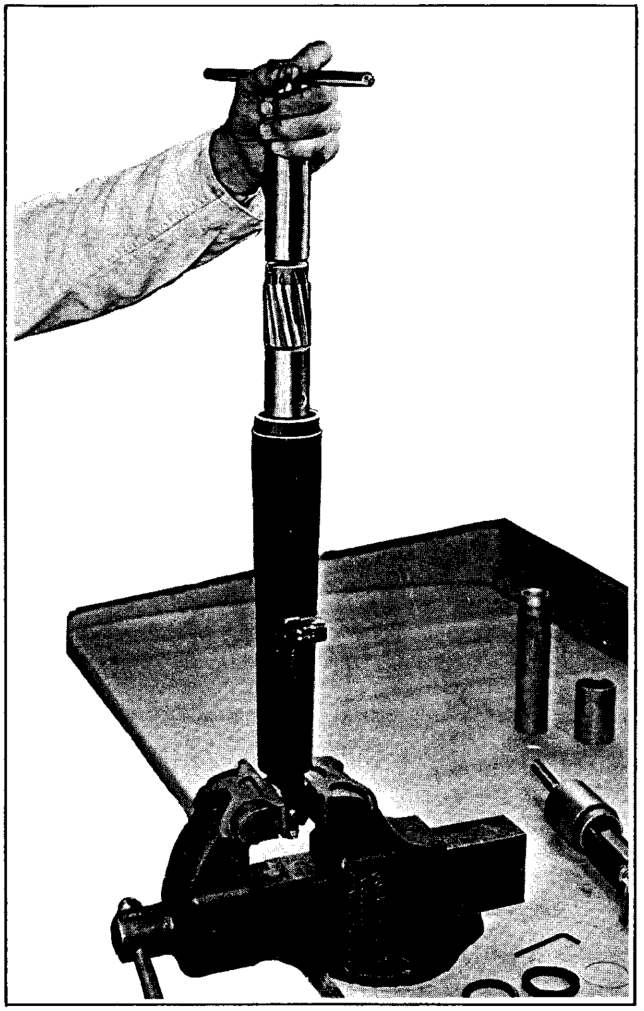

Figure 2F-8. Reaming Replacement Bushing

Remove damper valve stud lock nut (13) from bottom of slider and pull slider tube (14) out of slider (24). Pinch out snap ring (15) from lower end of slider tube and drop out damper tube lower bushing (17). Discard gaskets (16 and 18). Slide out damper valve assembly (19). Snap out spring ring (20), washer (21), felt washer (22) and pry out oil seal (23).

DUO-GLIDE (ADJUSTABLE) AND SERVI-CAR (Fig. 2F-4)

Prepare for disassembly as described in paragraph above. Turn out steering damper adjusting screw (1) and lift out parts 2 through 9. Parts 5, 7 and 9 may be loosened by inserting a screwdriver tip between parts and prying upward.

Turn off stem nut (10) and bearing seat (11) using Cone Lock Nut Wrench, Part No. 96219-50. Remove upper bracket bolts and washers (12) and lift off bracket cover (13) and upper bracket (14). Lift out upper head bearing (15) and slip fork assembly out of frame steering head.

Remove slider tube plugs (16) and loosen clamping studs (17). Slip fork tube and slider assembly (22)

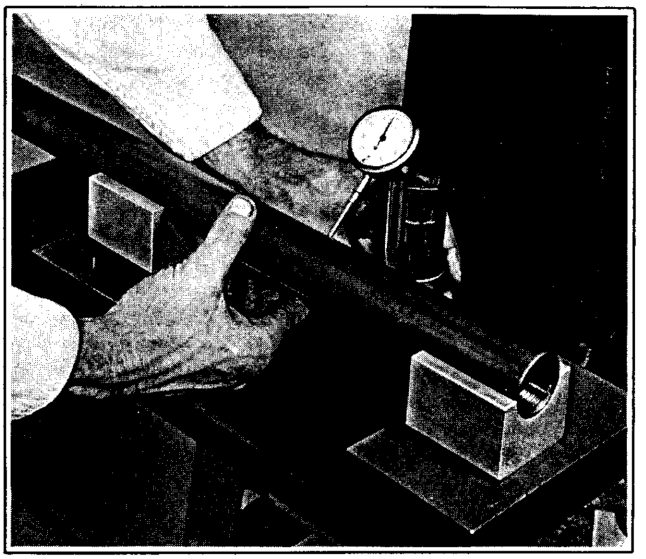

Figure 2F-9. Indicating High Point

out of bracket (21). Slider tube and slider disassembly is the same as described for non-adjustable fork.

REPLACING FRONT FORK SLIDER BUSHINGS

The front fork slider bushings (25, Fig. 2F-3) may be replaced using three special tools.

1. Part No. 96255-50, Fork Slider Bushing Puller.

2. Part No. 96285-50, Bushing Driver and Guide.

3. Part No. 96300-50, Bushing Reamer and Pilots.

REMOVING SLIDER BUSHINGS. Position fork slider in vise as shown in Fig. 2F-6.

Remove spring ring, steel retaining washer and felt wiper from slider upper end. Pry out oil seal with large screwdriver.

Install Fork Slider Bushing Puller, Part No. 96255-50, so the three claws expand inside the tube under the upper, or shorter bushing. Place puller cap in oil seal counterbore, apply oil to screw threads and steel washer. Turn nut down against puller cap and use engine sprocket wrench on nut to extract bushing. See Fig. 2F-6.

Remove lower bushing in the same manner.

INSTALLING FORK SLIDER BUSHINGS. New, replacement bushings are installed with Fork Slider Bushing Driver and Guide, Part No. 96285-50.

Wash out fork slider and lubricate slider bore with engine oil. Position new lower bushing in bushing driver guide to compress bushing, then place driver guide with bushing in slider oil seal counterbore as shown in Fig. 2F-7.

Drive bushing through the driver guide into fork slider. Bushing is positioned correctly in slider bore

when second groove from top on driver is flush with top edge of driver guide. Do not drive bushing deeper than specified, or it will collapse enough so it cannot be finish-reamed.

Install upper bushing in the same manner lower bushing was installed. Drive it into slider until lower groove on driver is flush with top of driver guide. This positions upper bushing 1/16 in below slider oil seal counterbore.

REAMING BUSHINGS. The Fork Slider Bushing Reamer with pilots, Part No. 96300-50, is used to ream the bushings to finished size.

Attach long pilot to reamer as shown in Fig. 2F-8. The long pilot fits into the unfinished lower bushing, acting as a guide, while reaming the upper bushing. Do not drop reamer into bushing. Slowly lower reamer into cutting position and ream bushing, turning reamer clockwise. Continue turning reamer clockwise as it is being extracted when cut is finished.

Remove long pilot from reamer and attach short pilot. Finish lower bushing in same manner as upper bushing. Use caution when passing reamer cutters through the upper bushing.

INSPECTING AND SERVICING FRONT FORK

Clean and air dry all parts. Inspect outside of slider tubes and inside of slider for scratches, grooves, nicks and scoring. Minor burrs may be taken off with a fine oil stone. Replace all badly worn parts.

Inspect damper tube valve parts for rust and broken springs. Replace broken springs and all valve parts that are deeply pitted or otherwise in unusable condition.

Inspect slider tube plug for loose or displaced fork upper baffle cups and broken spring. Solder loose cups in place and replace any broken parts. Be sure cups are arranged with slots for oil passage on alternate sides. Improper arrangement may cause oil leak at upper bracket bolt.

STRAIGHTENING FORK TUBES

Straightening fork tubes requires several special tools including hydraulic or arbor press, dial indicator and straightening blocks. If facilities are not available locally, fork tubes may be returned to the factory for straightening.

IMPORTANT

Repair fork tubes must be sent to the factory through an authorized Harley-Davidson dealer.

Never attempt to straighten a fork tube that has a sharp angle bend. It should be scrapped because the metal is stretched.

Before beginning the straightening operation, clean the fork tube. Locate bends with dial indicator. A fork tube is usually bent in two or three places, seldom only one. Place fork tube on straightening blocks. Correct bend in tube with an arbor or hydraulic press.

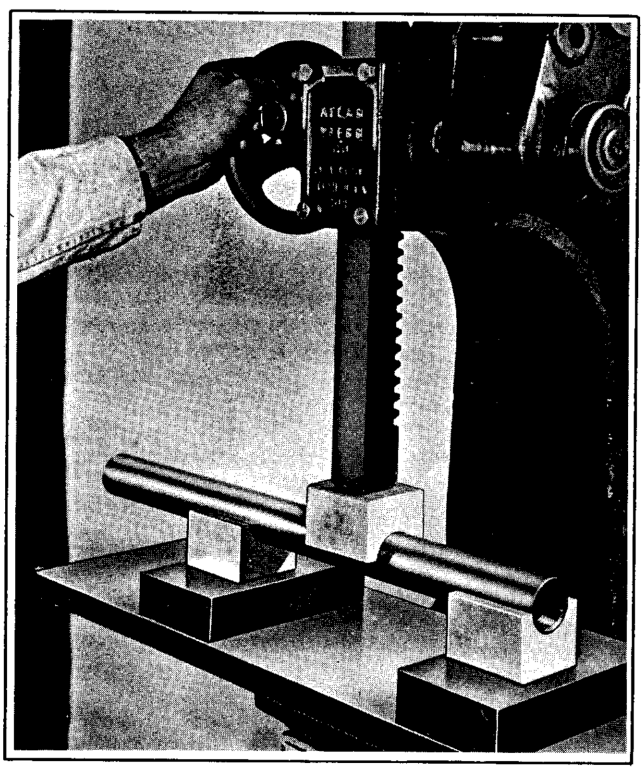

Figure 2F-10. Pressing High Point

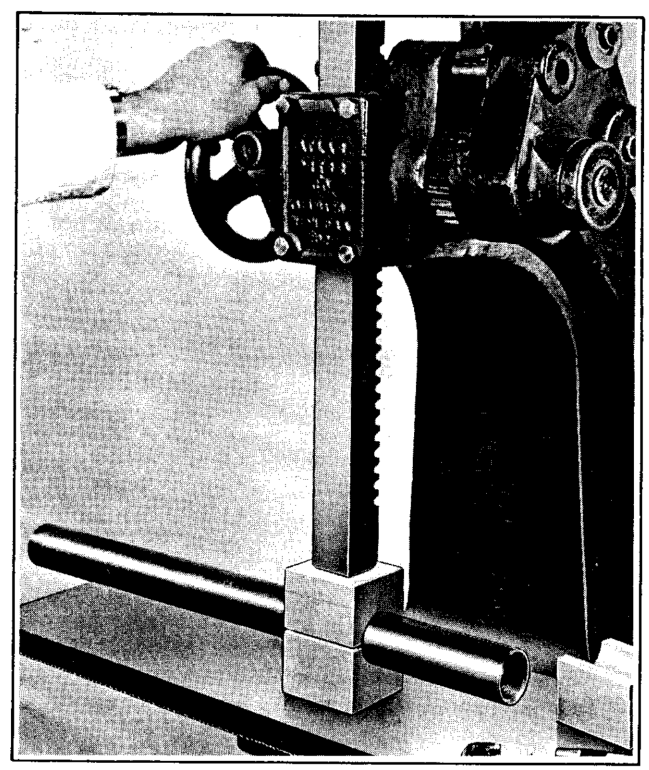

Figure 2F-11. Pressing Fork Tube Round

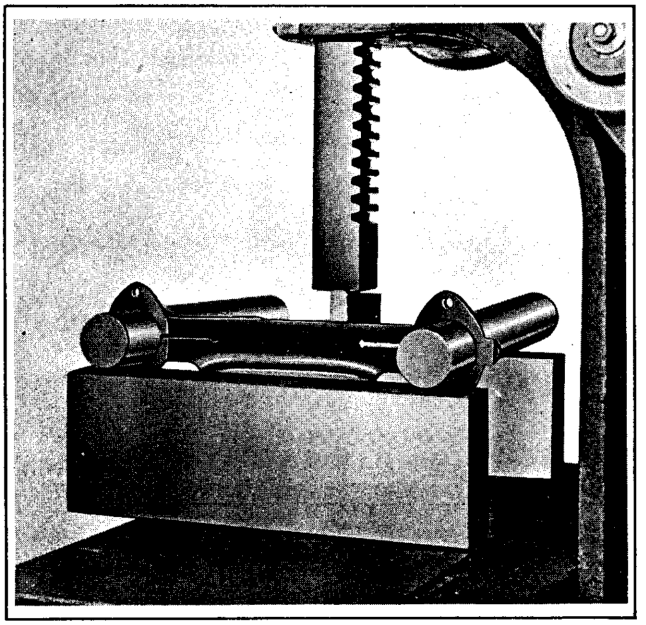

Figure 2F-12. Correcting Bracket Bow

Find the highest point out of round with a dial indicator (Fig. 2F-9) and mark with chalk. Press high point as shown in Fig. 2F-10. Repeat indicating and pressing operations until tube is within .003 in. to .004 in. of being straight.

Sometimes fork tubes are out of round, especially at the point it is clamped in the fork bracket. Place tube in straightening blocks and press until perfectly round as shown in Fig. 2F-11, checking with dial indicator and micrometer. Finally, check tube by inserting in new fork slider. Work tube up and down. If it does not bind, it is straight.

STRAIGHTENING FORK STEM AND BRACKET ASSEMBLY

Straightening a fork stem and bracket assembly requires a great deal of skill, experience and several tools and fixtures. Special tools necessary include Fork Tube Straightening blocks, Part. No. 96246-50, four blocks are needed; Bending Bar, Part No. 96806-40; Fork Stem and Bracket Aligning Gauge, Part No. 96245-51. In addition, the following pieces of bar stock are needed: Two bars, 1-5/8 in. diameter, about 12 in. long; two bars 1 in. x 4 in. x 12 in. (approximately); assorted pieces of rectangular bar stock to use in transmitting arbor press pressure to unit to be straightened.

If facilities are not available locally, fork stem and bracket assembly may be sent to factory for straightening providing it is not badly bent or broken.

NOTE

Repair fork stem and bracket assemblies must be sent to factory through authorized Harley-Davidson dealers.

To straighten stem and bracket, proceed as follows: Insert the two 1-5/8 in. x 12 in. bars in fork bracket

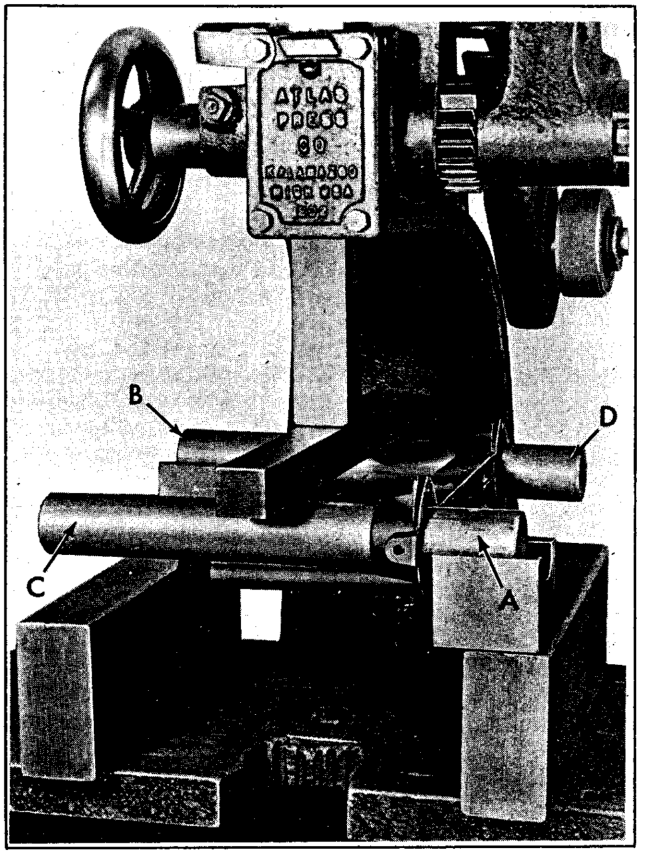

Figure 2F-13. Straightening Two Twisted Legs

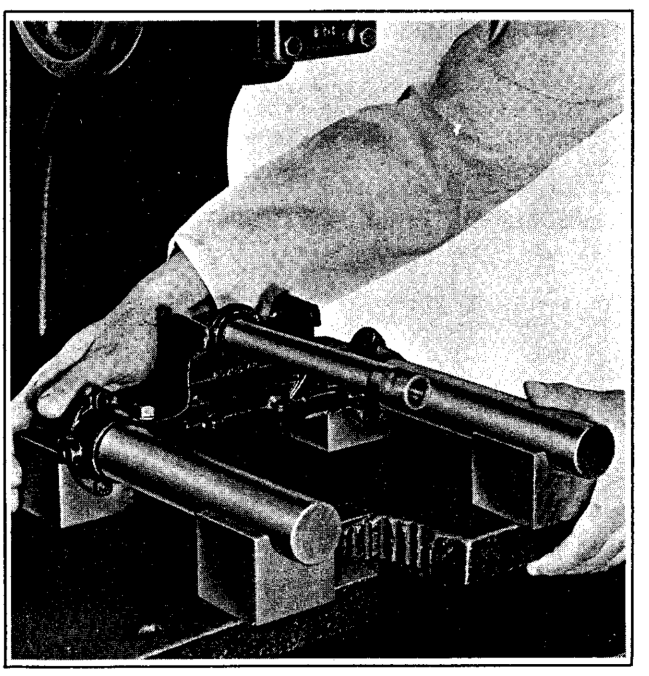

Figure 2F-14. Checking Bracket Alignment

and secure with two clamping studs. Sometimes the bracket is so badly bent that the bars cannot be inserted. In this case, press the bars into place with an arbor press, then press on the front edge of bracket to correct the "bow" distortion as shown in

Fig. 2F-12. Repeat pressing operation along edge until bars are loose in bracket.

A bracket assembly is usually out of alignment along the horizontal centerline, with one or both legs bent.

NOTE

Reference to vertical and horizontal centerlines applies to bracket and fork stem as positioned on arbor press (see Fig. 2F-12).

If both legs are twisted, place bracket assembly on arbor press as shown in Fig. 2F-13 with blocks placed under two low legs only (A and B). With press block placed across bracket and bar assembly, press until high legs (C and D) are in alignment.

If one leg is bent, place bracket and bar assembly on three straightening blocks, two blocks under straight leg and one block under low end of other leg. Place press block diagonally across bracket assembly to high leg until high leg is forced down and into alignment with the other three leg ends.

Place the fork stem and bracket assembly on the four straightening blocks located on the surface plate (see Fig. 2F-14). If the legs rest squarely on straightening blocks, the bracket assembly is correctly trued on a horizontal plane. If bracket is not true, press again, checking alignment after each operation.

Use a square to check if bracket assembly is bent, distorted or out of parallel on a horizontal plane as shown in Fig. 2F-15. Place bracket and bar assembly in a heavy vise and straighten using the Bending Bar.

Check fork stem alignment with Fork Stem and Bracket Aligning Gauge as shown in Fig. 2F-16. Use Bending Bar to bring stem into position. Recheck the fork completely.

ASSEMBLING FRONT FORK (DUO-GLIDE NON-ADJUSTABLE) (Fig. 2F-3)

Replace upper oil seal (23) and felt washer (22) in top of fork slider. Wash chips and oil from fork slider and position new oil seal in counterbore. Drive oil seal into counterbore and against seat with driver and mallet as shown in Fig. 2F-17. Drive with light blows and stop immediately when seal has bottomed.

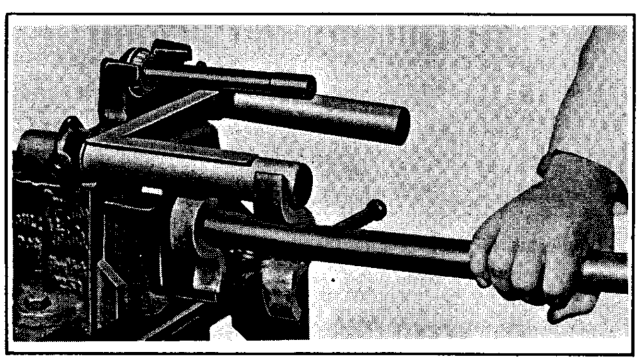

Figure 2F-15. Bending Bracket Legs Parallel

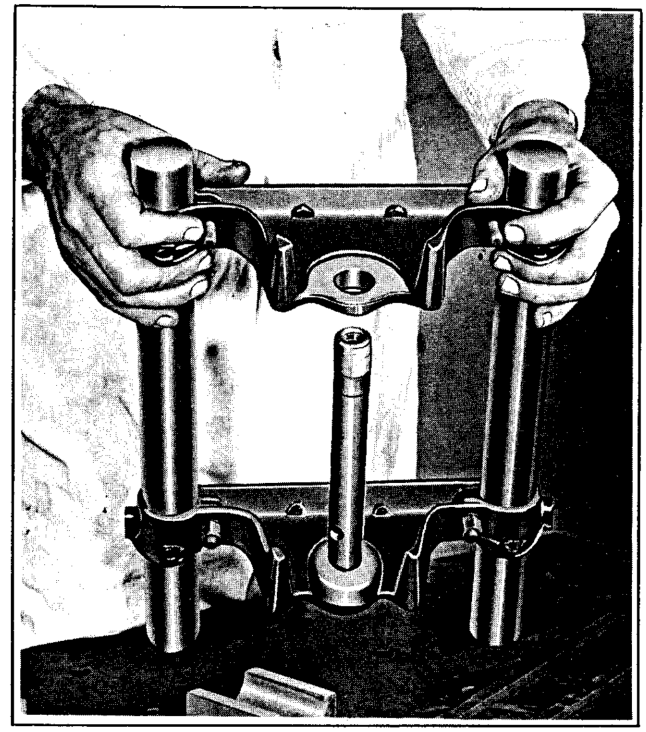

Figure 2F-16. Checking Stem Alignment with Gauge

Insert spring ring washer (21) and spring ring (20). Position spring ring so its gap is directly over water drain hole in slider top.

Clamp a length of about 1 in. steel rod upright in a vise so that 13-1/2 in. extends above top of jaws. Assemble damper valve (19) with gasket (18), lower bushing (17) and lower bushing gasket (16). Make sure all of old gasket is removed before installing new part. Invert slider tube over length of rod in vise and drop damper valve assembly in place. Install snap ring (15) in notch provided in bottom of slider tube. Check clearance between snap ring and lower bushing. If clearance exceeds .004 in., remove snap ring, gasket and lower bushing and insert additional shims to bring to a maximum of .004 in. clearance.

Lubricate outside of slider tube with fork oil and slip slider assembly down over slider tube. Turn lock nut (13) on damper valve stud extending out bottom of slider. Work slider to check for bind. If bind is present, release lock nut, rotate slider 180 degrees and reassemble. Fasten fork slider covers (10) to fork bracket (9), and slip fork bracket over slider tubes. Adjust so 5-1/16 in. of slider tube extends above top of fork bracket and temporarily tighten bracket clamping studs (8).

Pour 7 oz. of Harley-Davidson Front Fork Oil into each slider tube, insert fork springs (12) and turn in slider tube plugs (11).

Press lower head bearing guard (27) and greased lower head bearing (26) onto stem. Install stem in steering head on motorcycle. Grease and position upper head bearing (7), handlebar and fork bracket

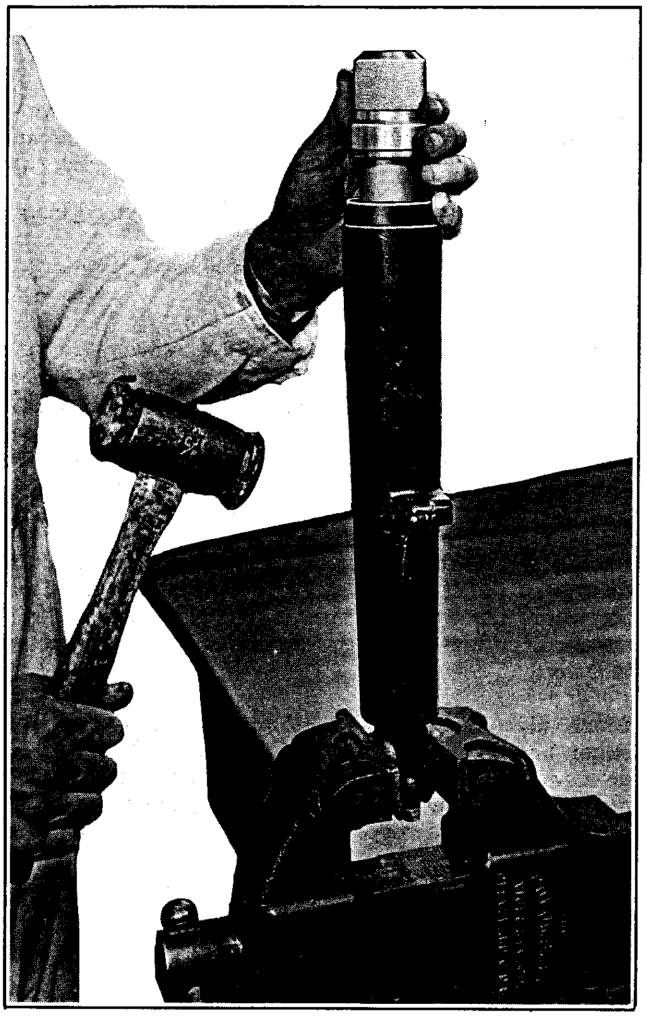

Figure 2F-17. Inserting New Oil Seal

(6), bracket cover (5). Securely tighten slider tube plugs. Loosen bracket clamping studs (8) and rotate slider tubes so flats on slider tube plugs are to the sides of the fork assembly. They must be in this position to have the slider tube plugs function properly. Tighten bracket clamping studs.

Turn on steering head nut (2), until there is noticeable drag in bearing when lock is turned - then loosen nut enough so lock turns freely and install bearing cover (1) with two screws. Slip plug oil seal (4) on upper bracket bolt (3) and screw into slider tube plug. Replace handlebar, caps, and locking nuts. Reassemble motorcycle in reverse order of disassembly.

ASSEMBLING FRONT FORK (DUO-GLIDE ADJUSTABLE AND SERVI-CAR) (Fig. 2F-4)

Follow procedure described for non-adjustable front fork except for the following points:

1. Position slider tubes in bracket (21) so top of slider tube is exactly 5-1/16 in. above top of bracket, and flat surfaces on slider tube plugs are directly toward side of motorcycle with filler screw (23) toward rear of fork.

2. Before tightening fork stem nut, loosen bracket clamping studs (17) so slider tubes may find a position in bracket (21).

Assemble remainder of fork and steering head in reverse order of disassembly.

SHOCK ABSORBERS

ADJUSTING REAR SHOCK ABSORBER SPRING

The rear shock absorber springs can be adjusted to three positions for the weight the motorcycle is to carry. The average weight solo rider would use the extended spring position (off cam); when in low position (off cam), the cam lobes should be next to each other: that is, single lobes and double lobes matched. If necessary, rotate the cam to line them up properly. A heavy solo rider might require the position with springs slightly compressed (first cam step); buddy seat riders require the fully compressed spring position (second cam step).

To adjust the rear shock absorber springs, turn cushion spring adjusting cam to desired position with Spanner Wrench, Part No. 94700-52B. Both cushion spring adjusting cams must be adjusted to the same position.

DISASSEMBLING REAR SHOCK ABSORBER (Fig. 2F-18)

Position motorcycle on Service Stand, Part No. 95825-58, or suitable blocking. Loosen shock absorber cover clamp (1) and slip off shock absorber top cover (2), exposing shock absorber top stud. Remove top and bottom mounting stud nut (3), washer (4), stud rubber bushing (5), and slip shock absorber assembly off upper and lower studs.

Turn shock absorber upside down in Rear Shock Absorber Tool, No. 97010-52, and compress absorber spring enough to turn lower stud eye 90 degrees. (See Fig. 2F-19.) Release spring compression and remove absorber assembly from tool.

NOTE

References to absorber assembly "upper" or "lower" end are as positioned on motorcycle.

Slip off cam support (6), turn absorber end for end and rap lower end sharply on surface to free bumper (7) from retaining flange inside absorber cover (8). Remove absorber assembly and spring (9) from cover and slip lower cam (10), spring rotating cam (11), cam sleeve (12), dirt seal (13) and dirt seal washer (14) off absorber unit. Shock absorber bumper (7) is split and may be sprung and slipped off absorber piston shaft after it has been extended.

INSPECTION (Fig. 2F-18)

Examine absorber unit for traces of fluid leaking, especially at upper end. Unit should have no leaks and should compress slightly easier than it extends. If possible, compare action with unused unit. Shock

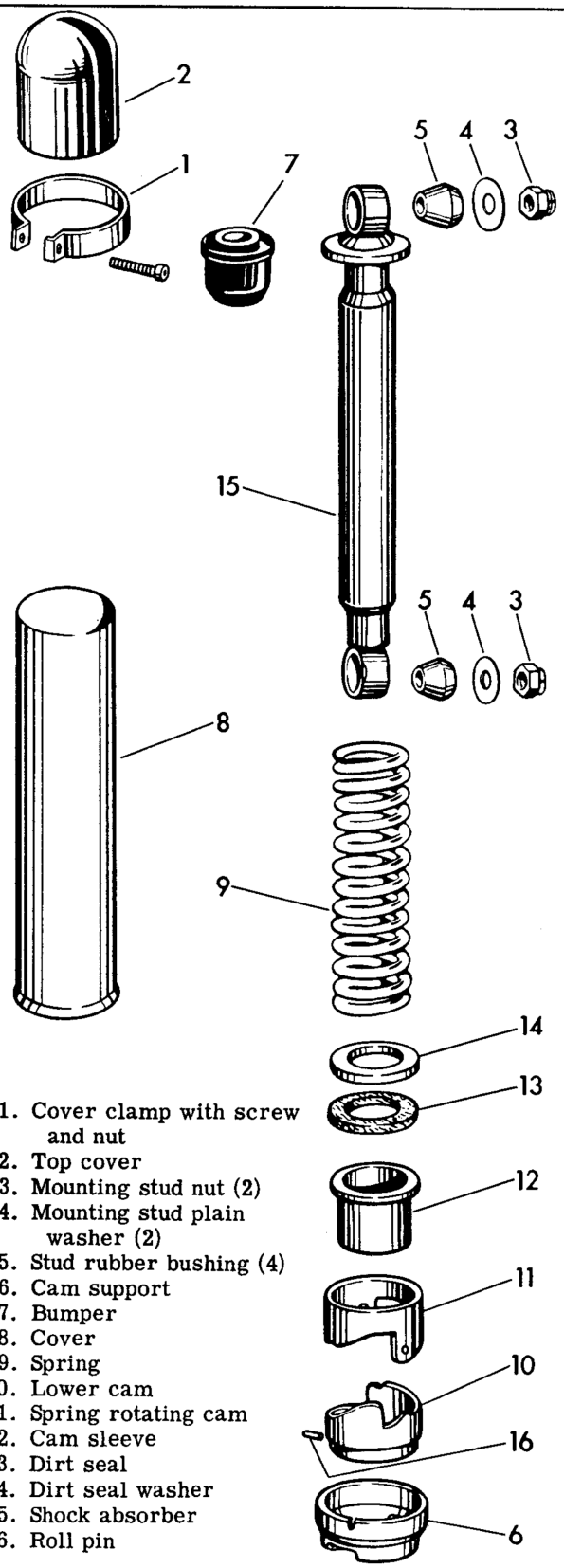

1. Cover clamp with screw and nut
2. Top cover
3. Mounting stud nut (2)
4. Mounting stud plain washer (2)
5. Stud rubber bushing (4)
6. Cam support
7. Bumper
8. Cover
9. Spring
10. Lower cam
11. Spring rotating cam
12. Cam sleeve
13. Dirt seal
14. Dirt seal washer
15. Shock absorber
16. Roll pin

Figure following name of part indicates quantity necessary for one complete assembly.

Figure 2F-18. Rear Shock Absorber - Exploded View

absorbers cannot be repaired. Faulty units must be replaced.

Clean and examine all other parts for wear and damage, paying particular attention to ride control adjustment cams (10 and 11), dirt seal (13) and spring (9).

ASSEMBLING REAR SHOCK ABSORBER (Fig. 2F-18)

Rear shock absorber assembly is essentially the reverse of disassembly.

Apply a thin coat of "Grease-All" grease to the cam sleeve (12) and cam surface of spring rotating cam (11), and slip 11 over 12. Drive roller pin (16) into hole in side of lower cam (10) and position cam support (6) over lower cam with pin in appropriate slot. Slot marked "A" is for left side assembly, and slot marked "B" is for right side assembly.

Extend absorber piston rod and slip split bumper (7) over rod. Slide spring (9) into cover (8) and shock absorber into spring. Turn assembly over and rap upper mounting stud loop on surface to seat bumper in flange.

Place dirt seal washer (14) and dirt seal (13) into cover and position assembly of parts 6, 10, 11 and 12 on them over absorber. Compress spring in tool and turn lower mounting stud loop 90 degrees to register with notch in cam support.

Assemble unit to motorcycle so letters "A" and "B" are facing rearward.

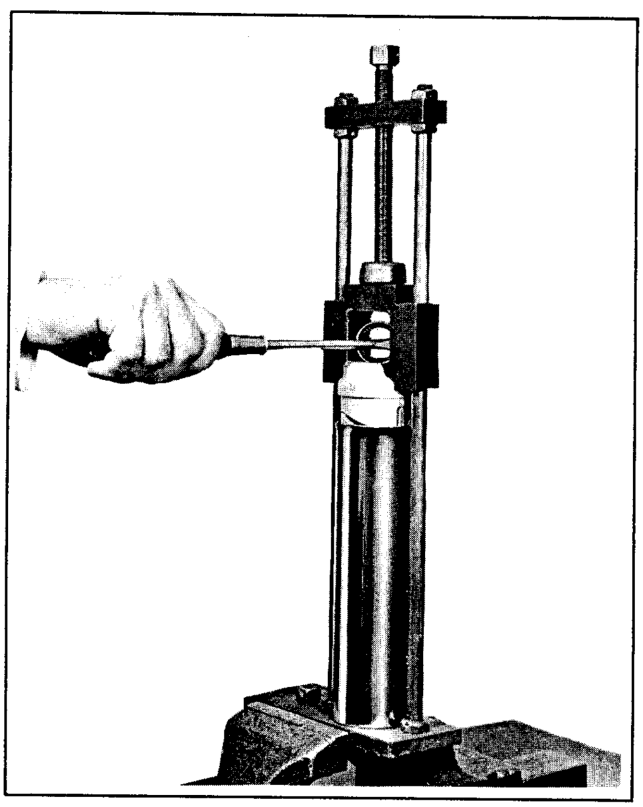

Figure 2F-19. Disassembling Shock Absorber

REAR FORK

DISASSEMBLING REAR FORK

To disassemble rear fork, first remove following assemblies:

1. Rear wheel (see Section 2C).

2. Rear brake side cover with connecting control linkage (see Section 2G).

3. Rear shock absorbers (see "Shock Absorbers").

See Fig. 2F-20. Turn back locking ear on pivot bolt lock washer (2) and turn out pivot bolt (1). Remove fork (3) from frame. With appropriate size arbor pin, push out bearing spacer (4), bearing seal (5) and bearing with outer race (6) from each side of fork pivot bearing.

INSPECTION AND SERVICING

Clean pivot bolt hole in fork and bearing parts. Check for wear of bearing, bearing race and bearing seal.

ASSEMBLING REAR FORK

Press outer bearing races into fork. Grease bearings with Harley-Davidson "Grease-All" grease and insert. Apply additional grease to outside face of bearing so that space between bearing and seal will be filled when seal is installed. Grease bearing seals in groove between sealing lips and press into place. Put bearing spacers over seals. Assemble pivot bolt with lock washer and tighten bolt to preload bearings one to two pounds as follows:

With bearings free, weigh extreme rear end of fork by attaching a spring scale and raising the fork to a horizontal position. Tighten bearing pivot bolt just enough to increase bearing drag one to two pounds. For example, if fork with bearings free weighs four pounds, tighten pivot bolt until fork movement to horizontal position registers five to six pounds on scale. Lock pivot bolt lock washer.

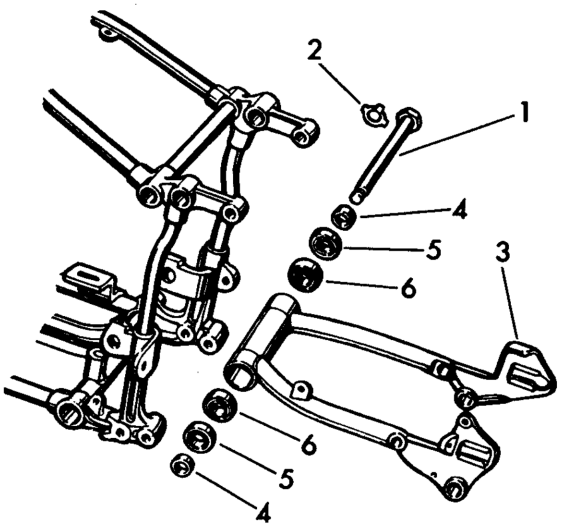

1. Pivot bolt
2. Pivot bolt lock washer
3. Rear fork
4. Pivot bearing spacer (2)
5. Bearing seal
6. Bearing

Figure following name of part indicates quantity necessary for one complete assembly.

Figure 2F-20. Rear Fork - Exploded View

BRAKES

DISASSEMBLING FRONT BRAKE (Fig. 2G-2)

Remove wheel with brake drum from fork as described in 2C. Spring brake shoes out and away from side cover (23) at top to free shoes (2 and 4) and springs (1 and 3) from pivot stud (8) and cam lever (18).

Remove cotter pin (16), cam lever washer (17) from cam lever stud (20). Disconnect control coil ferrule by loosening clamp nut (10) and depressing brake hand lever. Slip cam lever assembly off stud. Make complete disassembly in order shown.

INSPECTION AND SERVICING (Fig. 2G-2)

If linings are worn down to rivet heads, impregnated with grease as a result of over-greasing wheel hubs, cracked or ridged badly, they must be replaced. When relining a shoe, start at one end and work to the other to make linings bear tightly against shoe.

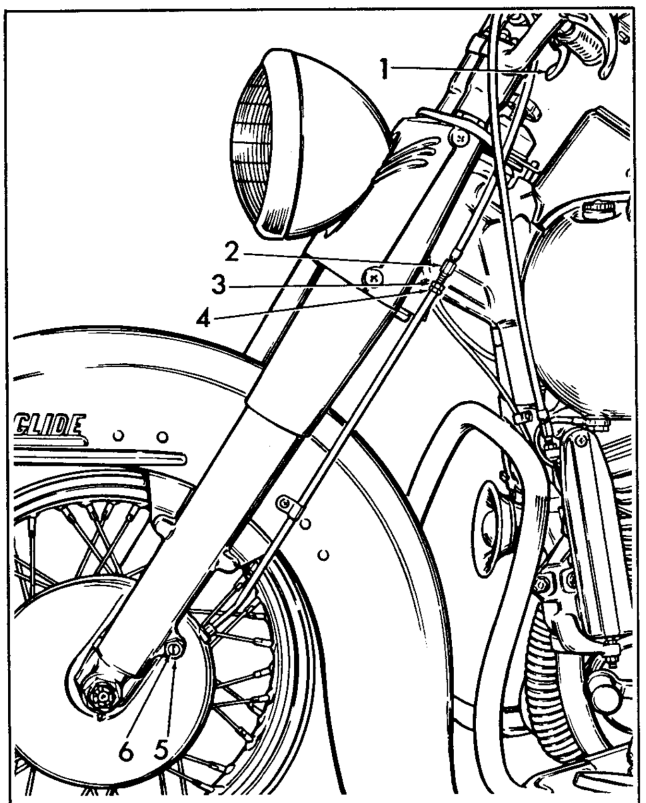

1. Front wheel brake hand lever
2. Brake adjusting sleeve
3. Adjusting sleeve lock nut
4. Adjusting sleeve nut
5. Brake shoe pivot stud nut
6. Brake shoe pivot stud

Figure 2G-1. Adjusting Front Brake

If a riveting machine is not available, set rivets with hand tools and bevel lining ends.

Examine drums for ridging and scoring. Surface must be reasonably smooth and flat. If ridged, turn down drums to clean up. Wash cam lever and cam lever stud and check fit. If play exists, force out cam lever bushing (24) and install new part.

ASSEMBLING FRONT WHEEL BRAKE (Fig. 2G-2)

Assemble in reverse order of disassembly except, for ease of assembly, connect two shoes with top return spring (3). Position unit on pivot stud (8) and cam lever (18). Insert lower spring (1). Spring hooks must be in shoe spacer notch nearest side cover. Reassemble wheel.

ADJUSTING FRONT BRAKE CABLE (Fig. 2G-1)

Front brake cable may be adjusted as follows:

Loosen adjusting sleeve lock nut (3) and turn adjusting sleeve nut (4) to obtain desired amount of hand lever (1) free movement; clockwise for less movement and counterclockwise for more movement. About 3/16 in. of brake cable movement should be free, or about 1/4 of the full lever movement. Tighten adjusting sleeve lock nut.

ADJUSTING FRONT BRAKE SHOES

Raise front wheel off ground so it may be rotated. Loosen brake shoe pivot stud nut (5, Fig. 2G-1) and loosen axle sleeve nut. Apply brake. With brake pressure applied, tighten axle sleeve nut and pivot stud nut. This procedure centers shoes against drum so full lining length contacts drum on brake application.

DISASSEMBLING REAR WHEEL BRAKE (Fig. 2G-3)

Remove rear wheel from motorcycle as described in Section 2C. Disconnect shoe return spring (1) and slip shoes (2) and anchor (lower) spring (3) away from side cover. Remove hold-down springs (4) from side cover. If necessary, remove wheel cylinder by turning out the two cylinder screws (5) on outside of side cover.

INSPECTION AND SERVICING (Fig. 2G-3)

Follow inspection procedure as described in this section under front wheel brake except examine wheel cylinder and side cover for signs of leaking fluid.

NOTE

Do not depress rear wheel brake pedal with shoe assemblies disassembled.

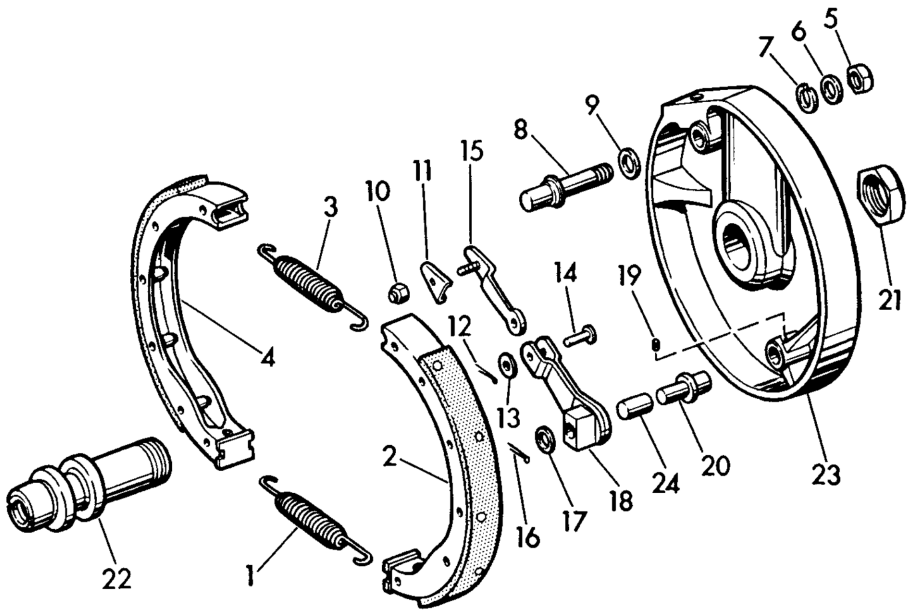

1. Brake shoe spring (2)
2. Brake shoe and lining (2)
3. Brake shoe spring (see item 1)
4. Brake shoe and lining (see item 2)
5. Brake shoe pivot stud nut
6. Pivot stud flat washer
7. Pivot stud lock washer
8. Pivot stud
9. Pivot stud washer
10. Clevis clamp nut
11. Cable clevis clamp
12. Cotter pin
13. Flat washer
14. Cam lever clevis pin
15. Cable clevis
16. Cotter pin
17. Cam lever washer
18. Cam lever
19. Set screw
20. Cam lever stud
21. Axle sleeve nut
22. Front axle sleeve
23. Brake side cover
24. Cam lever bushing

Figure following name of part indicates quantity necessary for one complete assembly.

Figure 2G-2. Front Wheel Brake - Exploded View

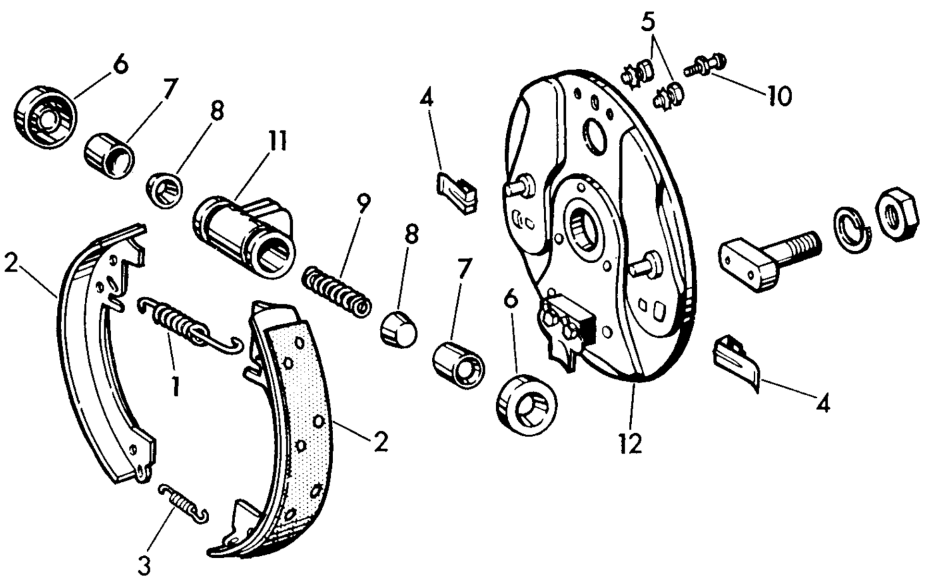

1. Shoe return spring
2. Brake shoe (2)
3. Brake shoe spring
4. Hold-down spring (2)
5. Cylinder screw and lock washer (2 each)
6. Boot (2)
7. Piston (2)
8. Cup (2)
9. Spring
10. Bleeder nipple
11. Wheel cylinder
12. Brake side cover

Figure following name of part indicates quantity necessary for one complete assembly.

Figure 2G-3. Rear Wheel Brake - Exploded View

If faulty unit is found, install a repair kit. Remove old boots (6), pistons (7), cups (8) and spring (9). Be sure cylinder wall and pistons are free from burrs. Dip replacement parts in brake fluid and assemble. Never dip or wash hydraulic brake cylinder parts in gasoline, kerosene or oil. Install all parts in repair kit, not just those that look worn.

NOTE

Linings and rivets are not available separately for rear wheel brakes. If parts are worn, replace shoe and lining assembly.

ASSEMBLING REAR WHEEL BRAKE (Fig. 2G-3)

Assemble rear wheel brakes in reverse order of disassembly except: Apply a light coat of grease on hold-down springs (4) and spots on side cover (12) where shoes touch when in operating position.

Assemble shoes (2) to lower return spring (3), position shoe assembly on plate anchor block at bottom of side cover and install top spring. Short hook is inserted in elongated hole on front shoe. Reassemble wheel.

ADJUSTING REAR WHEEL BRAKE SHOES (Fig. 2G-4)

Raise rear wheel so it can be turned freely by hand. Brakes are adjusted by means of two adjusting cams located on outside of brake side cover. Turn front adjusting cam nut (1) counterclockwise until wheel has noticeable drag. Spin wheel forward and backward to center shoes. Slowly turn cam nut clockwise until wheel turns freely. Repeat process on rear cam nut (2) which spreads shoes with a clockwise rotation and retracts shoes with a counterclockwise rotation.

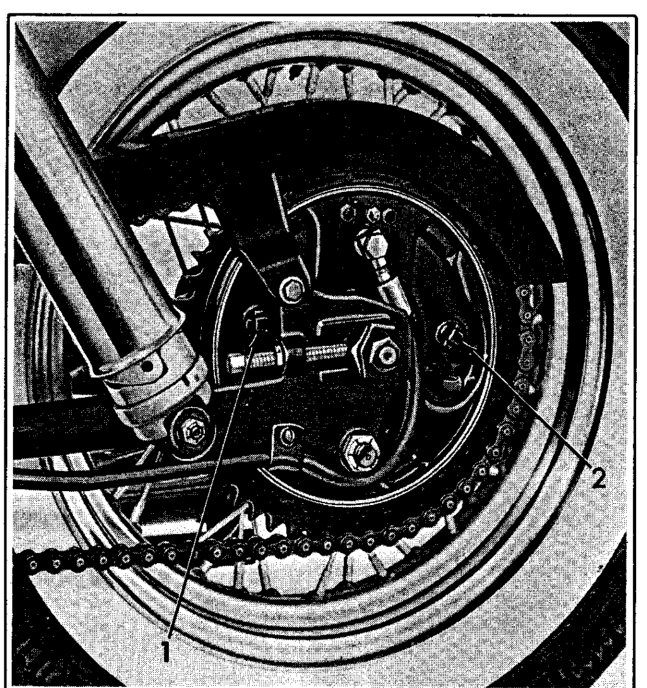

1. Front brake shoe adjusting cam nut
2. Rear brake shoe adjusting cam nut

Figure 2G-4. Adjusting Rear Brake

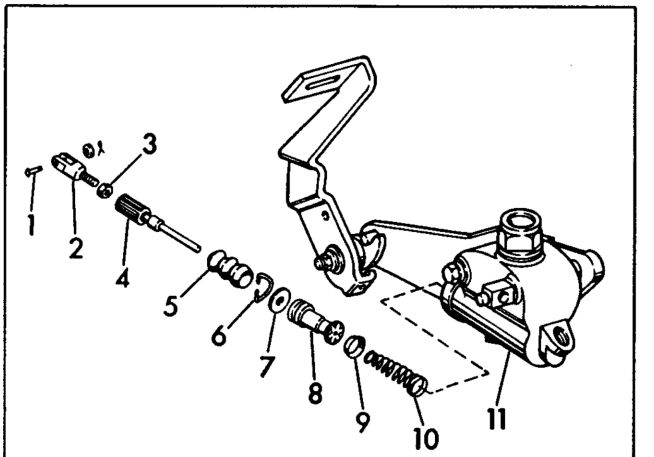

1. Rod clevis pin with washer and cotter pin
2. Lever clevis
3. Master cylinder plunger lock nut
4. Master cylinder plunger
5. Cylinder boot
6. Stop wire
7. Stop washer
8. Piston assembly
9. Piston cup
10. Piston return spring
11. Master cylinder

Figure 2G-5. Brake Master Cylinder - Exploded View

DISASSEMBLING SIDECAR WHEEL BRAKE

Remove wheel with brake drum as described in Section 2C.

Follow procedure above under "Disassembling Rear Wheel Brake."

INSPECTION AND SERVICING

Follow procedure above under "Rear Wheel Brake, Inspection and Servicing."

ASSEMBLING SIDECAR WHEEL BRAKE

Follow procedure above under "Assembling Rear Wheel Brake."

ADJUSTING SIDECAR WHEEL BRAKE SHOES

Follow procedure above under "Adjusting Rear Wheel Brake Shoes."

DISASSEMBLING BRAKE MASTER CYLINDER (Fig. 2G-5)

It is not necessary to remove master cylinder from motorcycle to remove piston assembly if replacement is required. Remove rear brake rod clevis pin (1) and loosen cylinder plunger lock nut (3). Turn out lever clevis (2). Pull out plunger (4) and remove boot (5), stop wire (6), stop washer (7), piston assembly (8), cup (9) and spring (10).

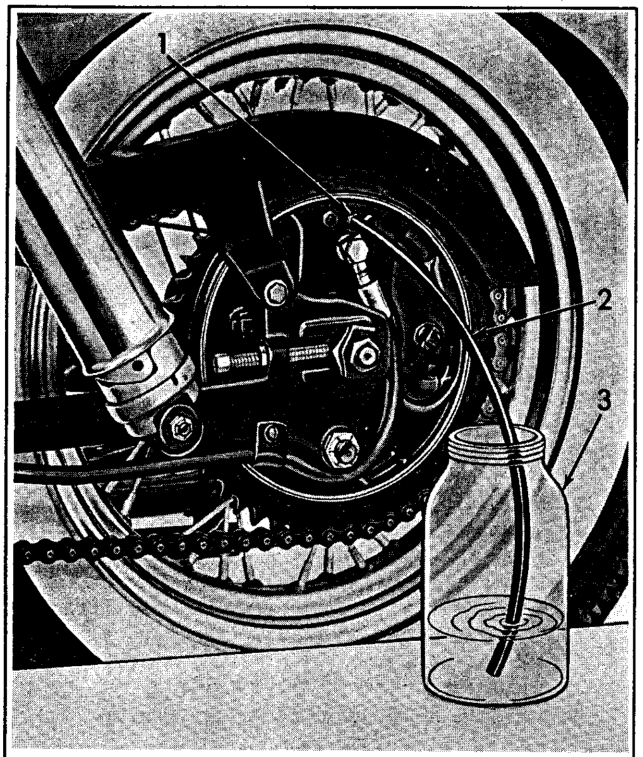

1. Bleeder nipple
2. Plastic tubing
3. Container

Figure 2G-6. Bleeding Hydraulic Brake System

INSPECTION AND SERVICING (Fig. 2G-5)

Inspect cup (9) and piston rubber parts for wear, softening and enlarging. Examine cylinder walls for scratches and grooves.

ASSEMBLING MASTER CYLINDER (Fig. 2G-5)

Assemble master cylinder in reverse order of disassembly. If repair kit is installed, use all new parts, not just those that look worn. Dip all internal parts in brake fluid before assembly. Replace fluid and bleed brake system.

BLEEDING HYDRAULIC BRAKE SYSTEM

After servicing rear or sidecar brake system where any hydraulic line or cylinder is opened, it is necessary to bleed the system to expell all air. See Fig. 2G-6.

Slip a length of appropriate size plastic tubing (2) over wheel cylinder bleeder nipple (1, Fig. 2G-6) with the other end in any container (3).

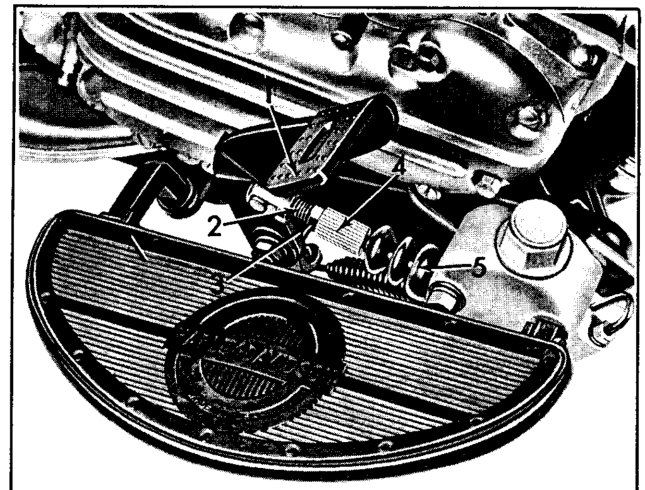

1. Brake pedal
2. Piston rod
3. Lock nut
4. Plunger
5. Rubber boot

Figure 2G-7. Adjusting Rear Brake Pedal

NOTE

Bleed sidecar line first then motorcycle rear wheel.

Open bleeder nipple by rotating counterclockwise about one-half turn. With master cylinder full of fluid at all times, slowly depress foot pedal repeatedly until fluid flows from bleeder nipple free of air bubbles. Add fluid to master cylinder to bring to original level. Close bleeder nipple. Do not re-use fluid unless it is clear and free from sediment. If it is impossible to bleed all air from system, the master cylinder check valve is faulty and a master cylinder repair kit must be installed.

ADJUSTING REAR BRAKE PEDAL (Fig. 2G-7)

When the brake is properly adjusted, the foot pedal should move freely about 1-1/2 in. before the plunger (4) contacts piston in master cylinder and brake takes effect. This contact may be easily felt if pedal is depressed by hand.

Pull rubber boot (5) away from end of master cylinder housing to expose piston push rod link. Holding push rod link in center of opening, work brake pedal (1) back and forth by hand to determine free play.

Adjustment is made by loosening lock nut (3) and turning plunger (4) to shorten or lengthen piston push rod (2) as needed. Tighten lock nut (3).

SEAT

SEAT POST SPRINGING

Two seat post spring arrangements are available for each model. A standard spring set is suitable for rider weighing up to 220 pounds. A heavy spring set for weights over that amount include heavier springs and longer guide collars. The heavy set is indicated by a letter "D" (Duo-Glide) or an "E" (Servi-Car) stamped on the upper end of the seat post plunger. See Fig. 2H-1 for cutaway view of seat post springing arrangement. Duo-Glide and Servi-Car assemblies have same number of components with following exceptions: (See Fig. 2H-2.)

Duo-Glide assembly omits seat post recoil spring (14A) and incorporates two auxiliary springs (14 and 17).

DISASSEMBLING SEAT POST (Fig. 2H-2)

Remove rod lock nut (1) and washer (2) from bottom of frame seat post tube. Pull back of seat upward sharply to break loose seat post rod nut (5) at the base of seat post tube. Unsnap clevis pin spring (3) and pull out clevis pin (4). Tip seat forward and lift out seat post assembly. Disassemble remaining parts in order indicated.

INSPECTION AND SERVICE

Wash and air dry all parts. Inspect for broken or "set" springs. New spring length appears in Fig. 2H-2 listing. Replace seat bar bushings (19) if worn appreciably.

ASSEMBLING SEAT POST (Fig. 2H-2)

Seat post assembly is reverse of disassembly. Apply liberal coating of "Grease-All" grease to parts, working it into the springs.

For correct spring preloading, draw up spring adjusting nut to compress total visible spring length to 11 in. for standard springs and 10-1/2 in. for "D" heavy springs, on Duo-Glide assemblies; 11-1/2 in. on standard and "E" heavy Servi-Car sets. Lock with one lock nut (6). Turn on other lock nut. Position rod nut (5) on rod so bottom end of rod extends through rod nut exactly 3/4 in. Lock adjustment with second lock nut.

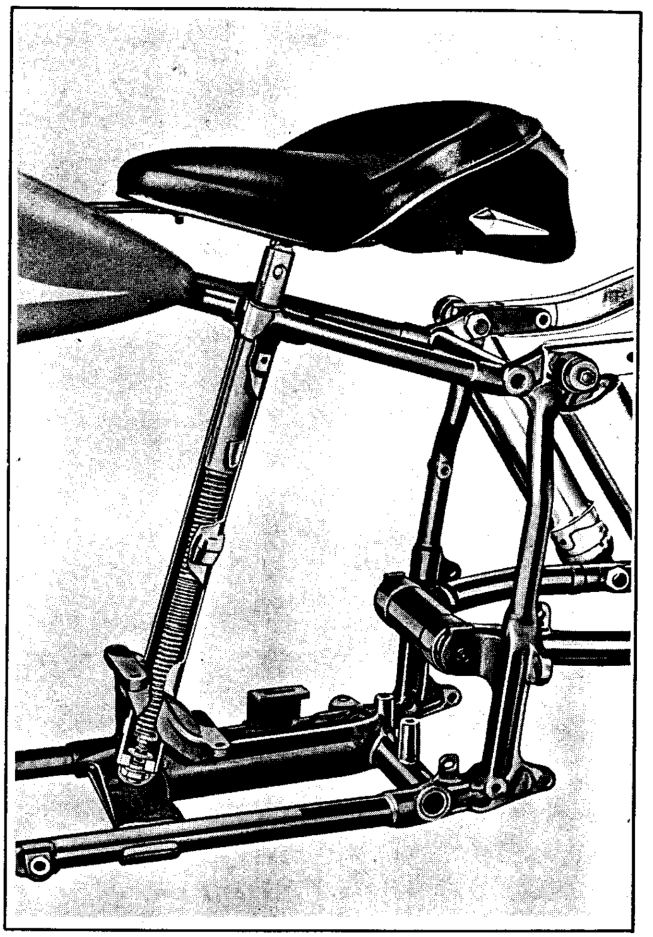

Figure 2H-1. Cutaway of Seat Post Springing

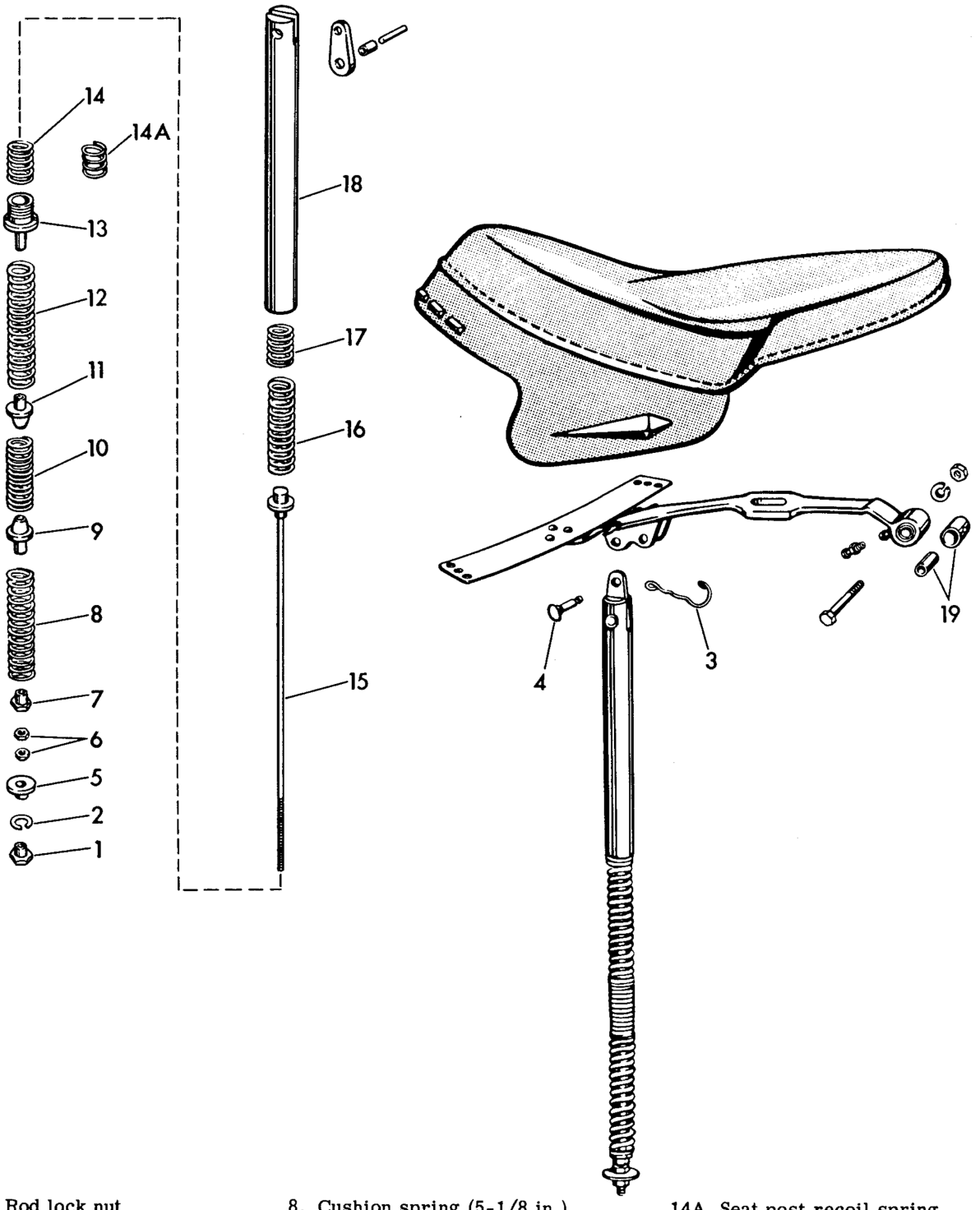

1. Rod lock nut
2. Rod lock nut washer
3. Clevis pin spring
4. Clevis pin
5. Seat post rod nut
6. Lock nut (2)
7. Spring adjusting nut
8. Cushion spring (5-1/8 in.)
9. Guide collar (2)
10. Cushion spring (2-13/16 in.)
11. Guide collar (see item 9)
12. Cushion spring (5-1/8 in.)
13. Plunger lock nut
14. Auxiliary spring (2-3/4 in.) (Duo-Glide only)
14A. Seat post recoil spring (Servi-Car only)
15. Seat post rod
16. Auxiliary spring (3 in.)
17. Auxiliary spring (2-3/4 in.)
18. Seat post plunger
19. Seat bar bushings

Figure following name of part indicates quantity necessary for one complete assembly.
Dimensions indicate free length of new spring.

Figure 2H-2. Seat Post - Exploded View

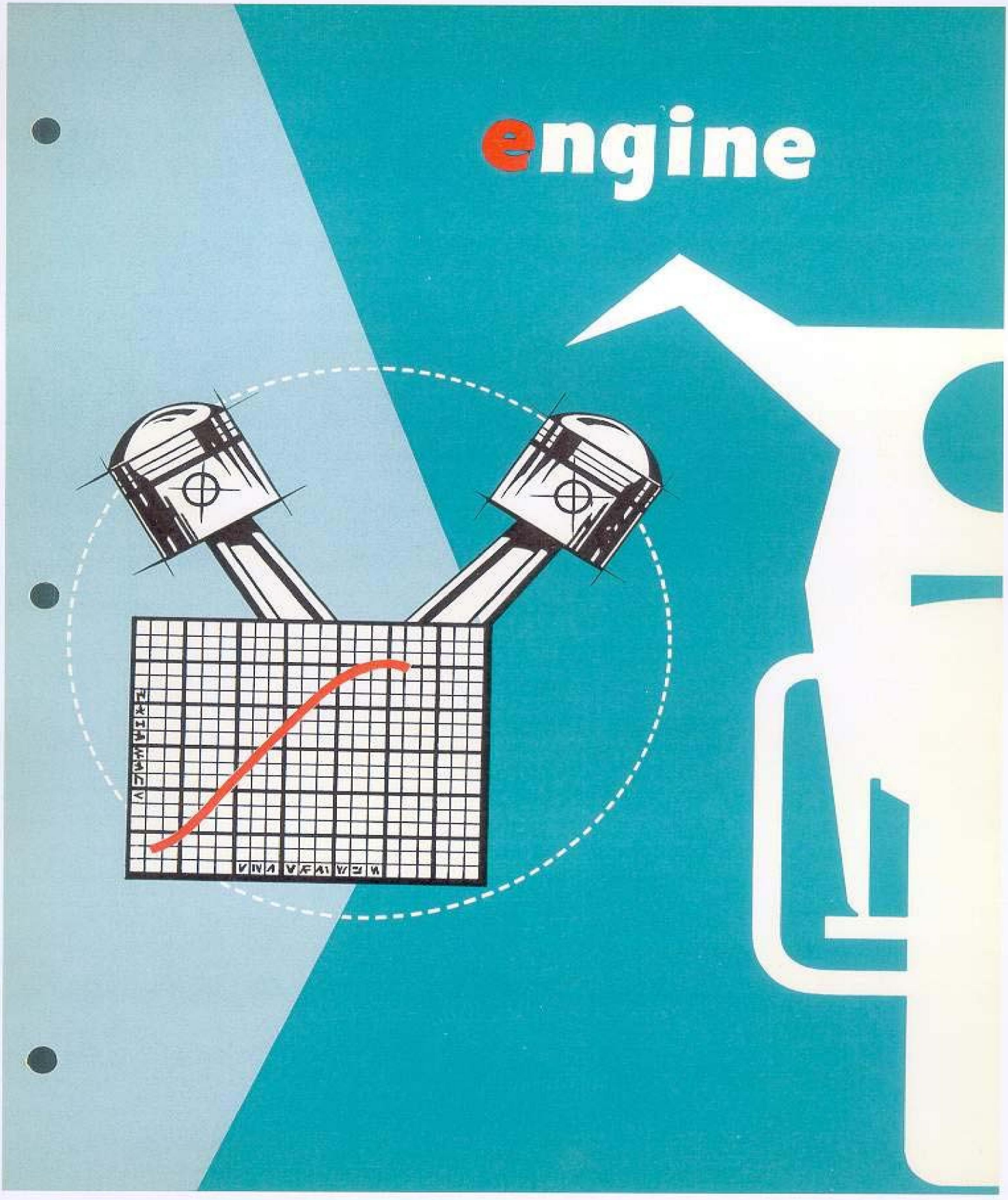
engine

GENERAL

ENGINE SPECIFICATIONS

VALVES (3B)

Fit in guide (EX)	.004 - .006 in.
Fit in guide (IN)	.002 - .004 in.
Spring (FL)	
(Outer)	55 - 65 lbs. at 1-13/32 in. (closed)
	110 - 120 lbs. at 1-1/16 in. (open)
Free length	1-13/16 in.
(Inner)	25 - 35 lbs. at 1-1/4 in. (closed)
	70 - 80 lbs. at 29/32 in. (open)
Free length	1-15/32 in.
Spring (FLH)	
(Outer)	105 - 115 lbs. at 1-3/8 in. (closed)
	180 - 190 lbs. at 1 in. (open)
Free length	1-31/32 in.
(Inner)	25 - 35 lbs. at 1-3/16 in. (closed)
	70 - 80 lbs. at 51/64 in. (open)
Free length	1-23/64 in.
Tappet adjustment	Hydraulic tappet unit compressed 1/8 in. from fully extended position.

ROCKER ARM (3B)

Fit in bushing	.001 - .002 in. loose
End clearance	.004 - .012 in.

PISTON (3C)

Fit in cylinder	.001 - .002 in. loose
Ring gap (compression)	.010 - .020 in.
Ring side clearance	.004 - .005 in.
Oil ring overlap	11/32 in.
Piston pin fit	Light hand press at 70° F.

CONNECTING ROD (3C)

Piston pin fit	.0008 - .0012 in. loose
End play between flywheels	.006 - .010 in.
Fit on crankpin	.001 - .0015 in. loose

OIL PUMP PRESSURE

(3D)	(20 MPH) 25 lbs./sq. in.
	(30 MPH) 35 lbs./sq. in.
	(60 MPH) 35 lbs./sq. in.
	(90 MPH) 35 lbs./sq. in.

IGNITION TIMING (3D)

Breaker point setting	.020 in. gap
Points to open	34° - 36° BTC
	(7/16 in. before Piston T.C.)

TAPPETS (3D)

Guide fit	.0005 - .001 in. press
Fit in guide	.001 - .002 in. loose
Roller fit	.0005 - .001 in.
Roller end clearance	.008 - .010 in.

GEARCASE (3D)

Timer gear end play	.003 - .007 in.
Idler gear end play	.003 - .007 in.
Breather gear end play	.001 - .005 in.
Cam gear shaft in bushing	.001 - .0015 in.
Cam gear shaft in bearing	.005 - .0030 in.
Cam gear end play	.001 - .005 in.
Intermediate and idler gear (on shafts)	.001 - .0015 in.
Oil pump drive shaft (crankcase bushing)	.0008 - .0012 in.

FLYWHEEL ASSEMBLY (3E)

Runout (flywheels)	.003 in. maximum at rim
Runout (mainshafts)	.001 in. maximum

SPROCKET SHAFT BEARING (3E)

Cup fit in crankcase	.0015 - .0035 in. press
Cone fit on shaft	.0002 - .0015 in. press
End play	.0001 - .010 in.

PINION SHAFT BEARINGS (3E)

Roller bearing fit	.0005 - .001 in. loose
Cover bushing fit	.0005 - .0012 in. loose

ENGINE DESCRIPTION

The Duo-Glide engine is a two-cylinder, four-cycle, air cooled, overhead-valve, V-type engine with 74 cu. in. displacement. It has three major component assemblies: cylinder, crankcase and gearcase.

Cylinder assemblies include cylinder head, valves, rocker arms and piston. Cylinders mount on the engine crankcase in a 45 degree "V," with both connecting rods connected to a single crank pin.

The reciprocating, linear motion of the piston in the cylinder is converted to circular motion in the crankcase. The built-up crankshaft consists of an off-center crank pin interposed between two counterweighted flywheels which rotate on two end shafts (pinion and sprocket shafts) supported by anti-friction roller bearings. The lower end of the rear cyl-

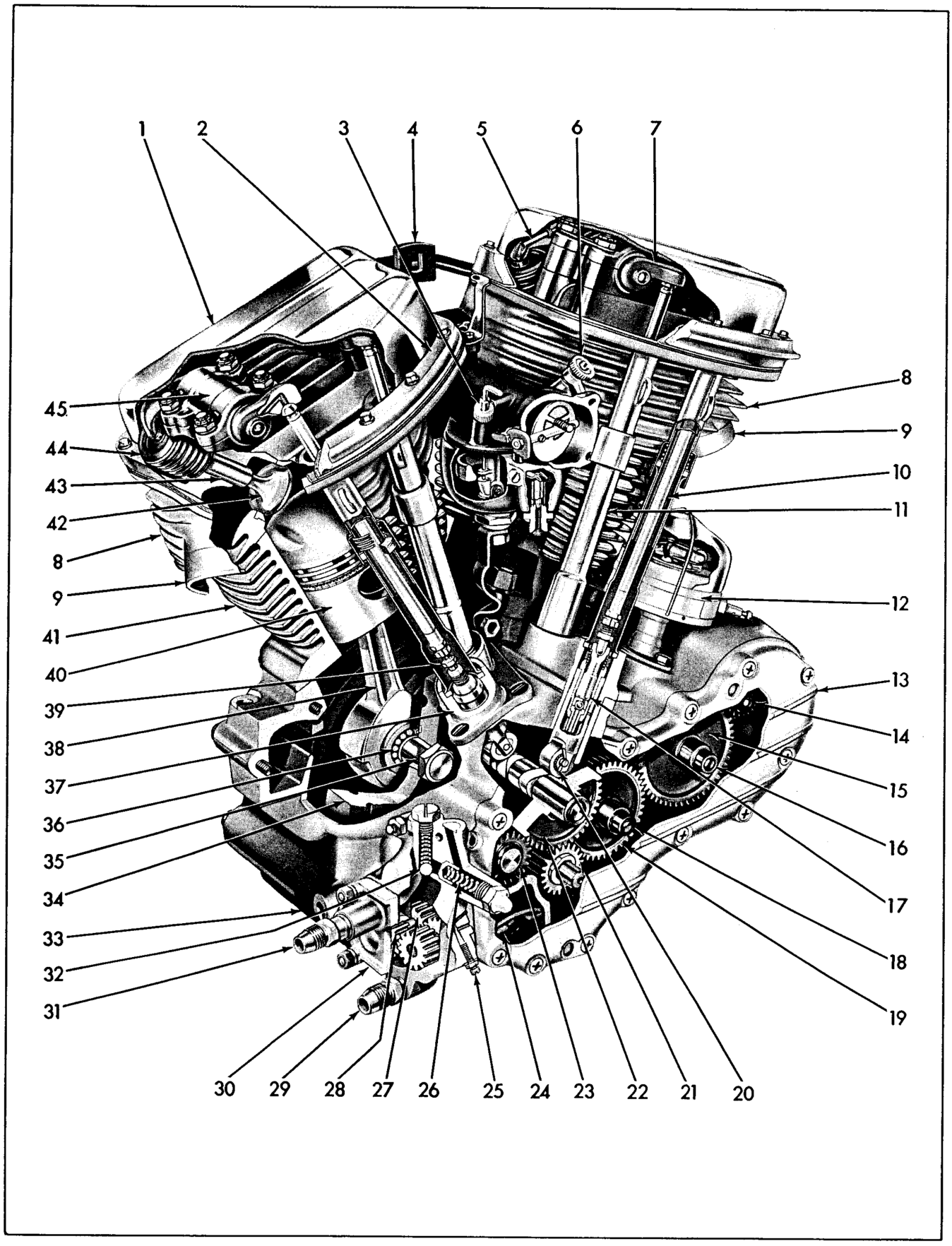

Figure 3A-1. Engine Cutaway

LEGEND FOR FIGURE 3A-1

1. Rocker arm cover
2. Cover reinforcing ring
3. Carburetor high-speed adjustment
4. Engine mounting bracket
5. Intake valve oiler
6. Carburetor low-speed adjustment
7. Rocker arm
8. Cylinder head
9. Exhaust port
10. Push rod
11. Push rod cover
12. Circuit breaker (timer)
13. Gearcase
14. Generator drive gear
15. Idler gear
16. Idler gear spacer
17. Hydraulic lifter
18. Intermediate gear spacer
19. Intermediate gear
20. Tappet and roller assembly
21. Pinion gear
22. Cam gear
23. Breather gear
24. Breather screen
25. Chain oiler adjustment screw
26. By-pass valve
27. Oil feed pump drive gears
28. Oil scavenger drive gears
29. Oil return nipple
30. Oil pump
31. Oil feed nipple
32. Check valve
33. Crankcase
34. Flywheel
35. Crankpin
36. Connecting rod roller bearing
37. Tappet guide
38. Connecting rod
39. Tappet adjustment
40. Piston
41. Cylinder
42. Exhaust valve
43. Exhaust valve guide
44. Valve spring
45. Rocker arm bearing

inder connecting rod is forked to fit around the single-end front cylinder connecting rod, allowing a single connecting rod-crankpin connection to the flywheel.

Flywheel rotation is clockwise (viewing engine from right side). Using the front cylinder firing position as a starting point, the rear cylinder fires at 315 degrees rotation (360 degrees minus the 45 degrees between cylinders). The front fires in an additional 405 degrees (360 degrees plus the 45 degrees between cylinders), completing the 720 degrees of flywheel rotation necessary for the four piston strokes.

The gearcase is located on the right side of the crankcase and houses a gear train which operates and times the valves, ignition and crankcase breather. The generator is also driven from the gear train. The rotary crankcase breather valve is located between crankcase and gearcase compartments and functions to relieve crankcase pressure caused by downstroke of pistons, and controls the flow of oil in the lubrication system.

A single cam shaft with four cam lobes is gear driven. The engine valves are opened and closed through the mechanical linkage of tappets, push rods and rocker arms. Tappets serve to transmit the cam action to the valve linkage. Hydraulic lifters installed in the tappets automatically compensate for heat expansion to maintain a no-lash fit of parts. Valve and breather timing are obtained by meshing gearcase gears with timing marks aligned.

Ignition spark is produced by operation of circuit breaker, ignition coil and spark plugs. The breaking of a single set of breaker points by a double-lobe cam on the timer shaft determines the spark timing. The narrow lobe times the front cylinder. The wide lobe times the rear cylinder. Both spark plugs fire on each breaker point opening (twice per complete cycle of 720 degrees flywheel rotation since cam shaft operates at 1/2 engine speed). The valves are timed to produce combustion conditions in only one cylinder at a time so the spark in the other cylinder occurs ineffectually during its exhaust stroke.

Most other engine components function similar to usual internal combustion engine design. For further description of part function, see pertinent manual sections.

LUBRICATION

The engine is lubricated by a pressure system circulating oil from the tank through the moving parts and back to tank. For adequate lubrication the tank must contain an ample supply of clean oil at all times.

Oil consumption varies from 250 to 500 miles per quart depending on the nature of service, solo or sidecar, fast or moderate driving, and how well the engine is kept tuned. If mileage is not within this range, see following engine overhaul section.

Remove tank cap and check oil supply at not more than 300 miles after each complete refill. If level is down near "Refill" mark on gauge rod, add oil. When level is down to "Refill" mark, add two quarts. Engine will run cooler and usage will be less with oil level well up in tank.

The oil tank capacity is one gallon. The tank is full when the oil level is about one inch from top. Do not fill above this level. The tank needs some air space. Tighten the cap securely to prevent leakage.

Change oil in new engine after first 750 miles, service at about 2,000 mile intervals thereafter. Completely drain oil tank of used oil and refill with fresh oil. If service is extremely hard, hot, on dusty roads or in competition, drain and refill at shorter intervals. Draining should be done while oil is hot. It is not necessary to drain the crankcase for it does not accumulate more than about 5 oz. of oil at any time. At the time of the first 750 mile oil change, and along with at least every second oil change thereafter, thoroughly flush and clean out tank with kerosene to remove any sediment and sludge that may have accumulated.

WINTER LUBRICATION

Combustion in any engine generates water vapor. When starting and warming up in cold weather, especially in freezing or cold weather, the vapor that gets into the crankcase condenses to water before the crankcase is hot enough to exhaust the vapor through the outside breather. If engine is run often enough to get the crankcase thoroughly warmed up, most of this water is again vaporized and blown out through the breather. A moderately driven engine, making short runs and seldom allowed to thoroughly warm up, will accumulate increasing amounts of water in the oil tank. This water will, in freezing weather, become slush or ice and if allowed to accumulate, will block oil lines and damage the engine. Water mixed with oil for some time forms sludge that is harmful to the engine and causes rapid wear of various working parts. In winter the oil should be changed more often than in normal weather. Any engine used for short runs, particularly in commercial service, must have oil changed frequently and tank thoroughly flushed to remove water and sludge, before new oil is put in tank. The farther below freezing the temperature drops, the shorter the oil change interval should be.

CHANGING OIL

Run engine until it is fully warm. Block motorcycle upright or tilted to right at a slight angle. Remove oil tank plug from bottom of tank at right rear corner. Allow all oil to drain. Replace plug. Pour a quart of kerosene into tank and agitate by rocking motorcycle from side to side. Remove plug and drain. Replace plug and fill with recommended grade oil as follows:

Use Harley-Davidson 105 (regular heavy) oil when predominating temperature is 75°F or above. Use Harley-Davidson 75 (medium heavy) oil when predominating temperature is 32°F to 75°F. Use Harley-Davidson 58 (light) oil when predominating temperature is 32°F or below.

Old oil may be removed using a suction gun through filler hole and flushed by squirting kerosene into tank from a gun.

OIL PRESSURE SIGNAL LIGHT

The oil signal light, located above ignition switch on instrument panel, indicates oil circulation.

If the oil signal light fails to go off at speeds above idling, it is usually due to low or a diluted oil supply. In freezing weather the oil feed pipe may clog with ice and sludge, preventing circulation of oil. A grounded oil signal switch wire, faulty signal switch, or trouble with oil pump will also cause the light to stay on. If the oil signal light fails to go off, always check the oil supply first. Then, if oil supply is normal, look inside the oil tank to determine if oil returns to the tank from the oil return pipe outlet located at front of oil tank near filler hole when the engine is running. If it is returning to the tank there is some circulation, and engine may be run a short distance if necessary. If no oil returns, shut off engine until trouble is located and corrected.

OPERATING OIL PRESSURE

Operating oil pressure may be checked as follows:

Fill oil tank with Harley-Davidson 75 oil. Disconnect oil pressure switch wire at top of switch and remove switch. Install Oil Pressure Gauge, Part No. 96921-52. Attach gauge bracket to motorcycle and road run or simulate road running until engine is completely warmed. A full operating temperature is essential for accurate gauging. Pressure should be 25 to 28 pounds per square inch at 20 mph. At 30 mph. and over, pressure should be steady at 35 to 38 pounds.

OIL FILTER (STANDARD, EXTERNAL)

If motorcycle is equipped with an oil filter, thoroughly wash the filter element in clean gasoline or solvent at least once every 2,000 miles when the engine oil is changed. Blow out element with compressed air before installing.

To remove the filter element, take off acorn nut, fiber washer and cup. Remove element retaining nuts and metal element retainer. Then pull element off stud. If upper metal retainer (retainer with five holes in it for oil passage) comes off with the filter element, make sure that it is reinstalled as the upper retainer when replacing the element.

Replace filter element every 5,000 miles.

OIL FILTER (SPECIAL)

All models specially equipped with large, 51 ampere hour battery are fitted with an external oil tank located to right side of battery case, under the seat. The tank is equipped with a large mouth filler opening and a screw cover. As optional equipment, this tank may be fitted with an internal oil filter (see Fig. 3A-2).

Wash filter element (3) in clean gasoline or solvent at 2,000 mile intervals, renew at 5,000 mile intervals. To service filter element, remove cap from oil tank, remove retaining spring (1) and washer (2) and pull out filter. Make certain "O" ring is positioned against filter cup flange (6) when filter is installed in tank.

SERVICING OIL TANK CAP AND FILLER OPENING. To disassemble, follow order shown in Fig. 3A-2. Assembly is reverse order of disassembly. Clean and inspect all parts. Replace any that are worn or damaged.

If oil leak should occur between the tank cap and the filler opening, with cap and gasket in serviceable condition, check the lip of the filler opening. A cap

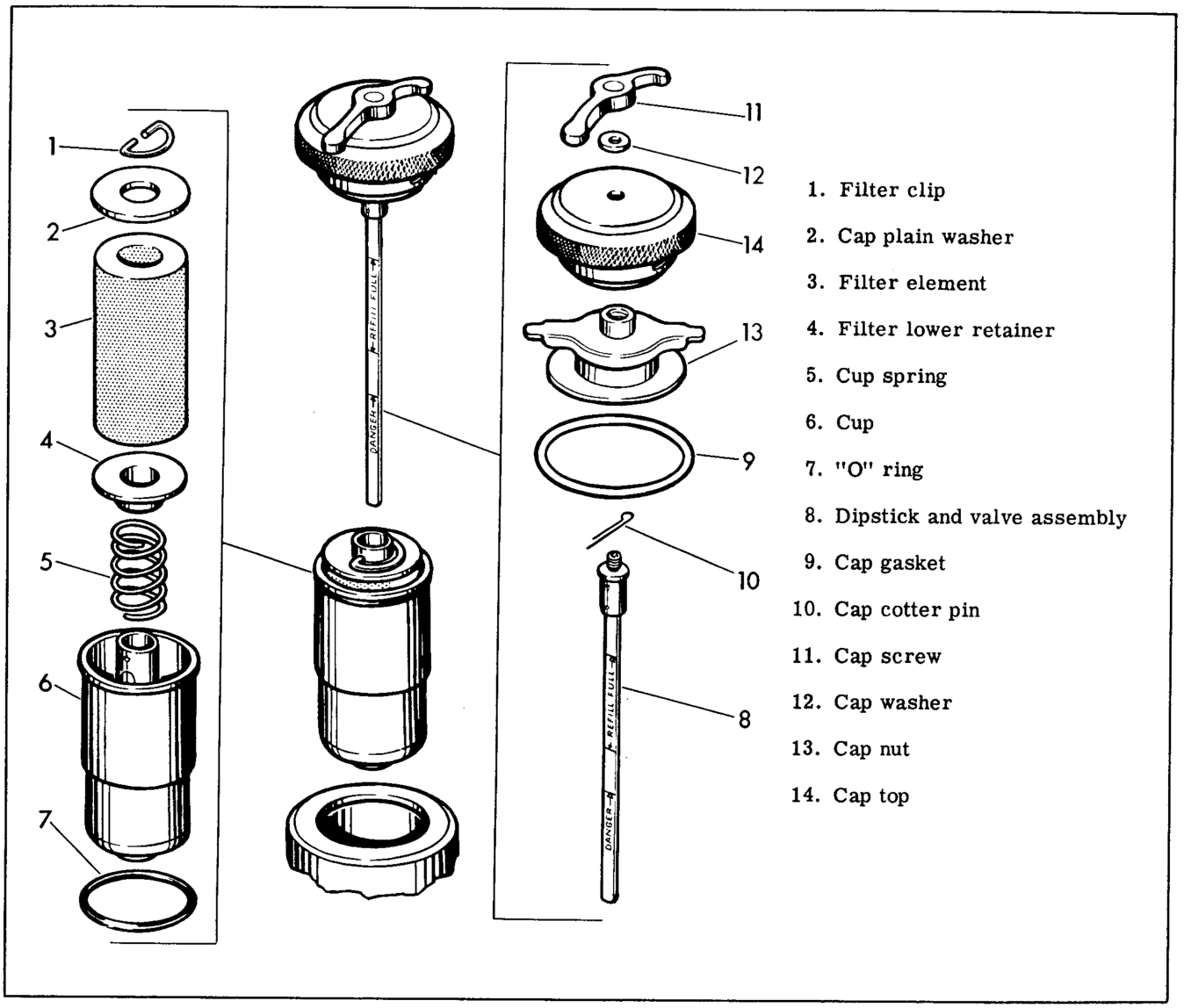

Figure 3A-2. Oil Tank Filter - Exploded View

drawn too tight will bend the lip of the filler opening resulting in an imperfect seal between gasket and lip.

Drain oil from tank. Using a mallet as a driver and a block of wood as a cushion, bend the lip down until flush with sealing surface of tank cap. Remove nicks and rough spots with emery cloth. Flush tank before refilling.

PRESSURE OIL SYSTEM (Fig. 3A-3)

A. Feed section of oil pump.

B. Check valve.

C. Maximum oil pressure regulating valve.

D. Front chain oiler adjusting screw.

E. Pinion gear shaft through which oil is forced to connecting rod lower bearings, from which it splashes to cylinder walls, pistons, main bearings, etc.

F. Oil screen.

G. Dripper.

H. Push rod.

→ Feed oil from tank to engine. Oil is forced through passages as indicated to connecting rod lower bearings, and through oil screen (see inset) and passages in crankcase, cylinder and head walls to tappets, hydraulic lifters, rocker arms and push rods.

→→ By-Pass oil. Surplus oil over and above the volume required escapes past pressure regulating valve (C) and, flows through passage indicated, discharging directly into timing gear case where it lubricates timing gears and settles into scavenger pump sump from which it is returned to tank.

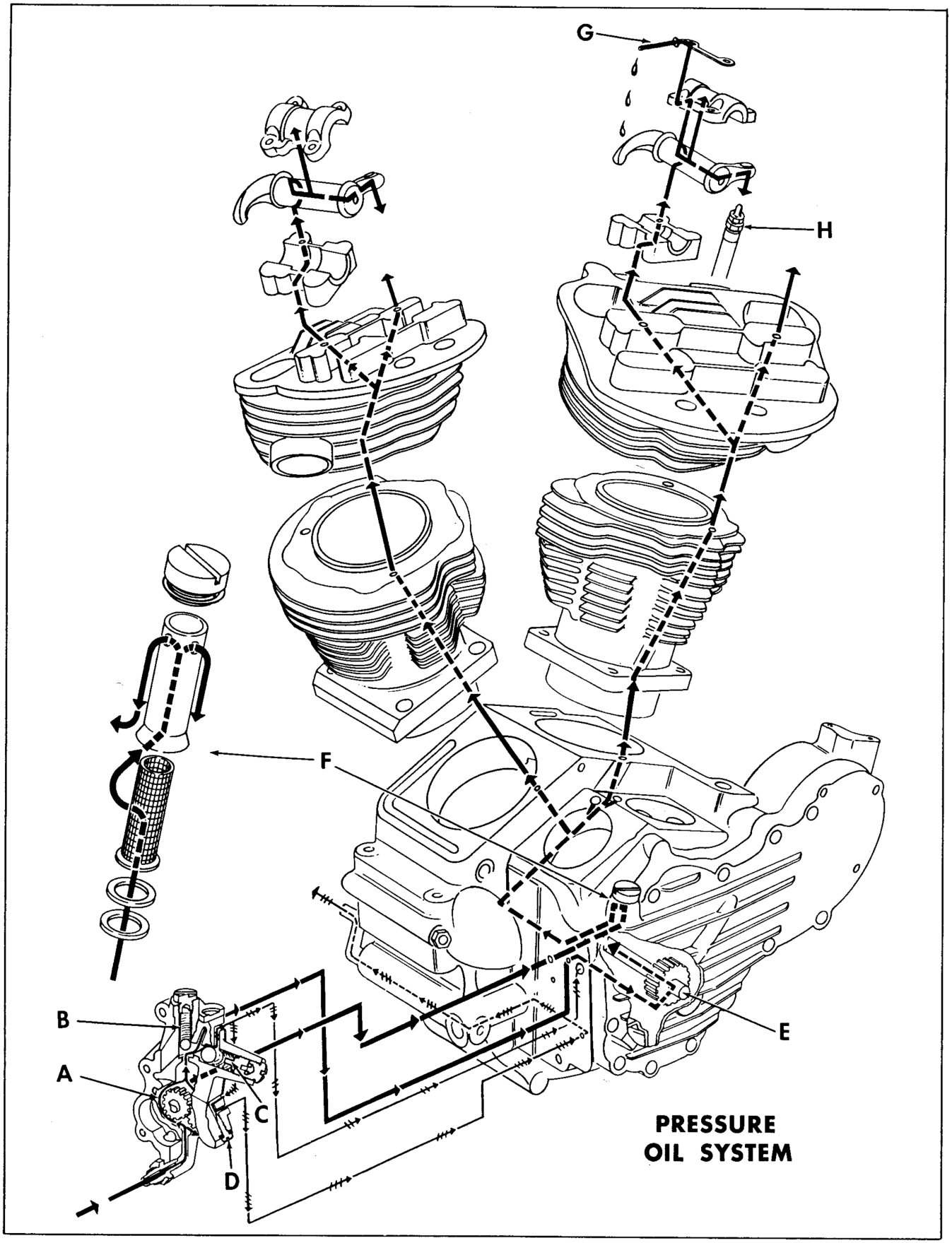

Figure 3A-3. Oil Feed Pressure System

Front chain oil. Oil is bled from by-pass oil for front chain lubrication through passages indicated which terminate in outside breather passage. Exhausting crankcase air delivers oil vapor to chain. Oil is regulated by adjusting screw (D).

RETURN OIL SYSTEM (Fig. 3A-4)

J. Scavenge section of oil pump.

K. Timed "rotary" crankcase breather valve. Rotary breather valve is timed to open on downward stroke of pistons, allowing crankcase exhaust air to expel scavenge oil from crankcase into timing gearcase. This interval is indicated by arrows. During this interval, the small port in breather valve is closed. Rotary breather valve closes on upward stroke of pistons, creating vacuum in crankcase. During this interval, the small port in breather valve lines up with passage in crankcase. Oil is then retrieved by vacuum from outside breather oil trap (L) in crankcase as indicated by arrows.

L. Outside breather oil trap.

M. Crankcase oil scavenging sump.

Oil returned by gravity. Oil accumulated in cylinder head cover, drains out through passages in cylinder walls and into crankcase. Oil from hydraulic push rods drains down through the push rod covers through slots in tappet guides into timing gearcase.

Scavenge oil and crankcase exhaust air from crankcase sump (M). Exhaust air expels scavenge oil from crankcase through rotary breather valve (K), into timing gear case where the oil settles into scavenger pump sump and is returned to tank.

Crankcase exhaust air. Escapes from timing gearcase through outside breather passage which terminates in front chain guard. Any oil still carried by exhaust air is trapped in outside breather oil trap (L).

Oil retrieved by vacuum. As oil accumulates in outside breather oil trap (L) in crankcase, it is retrieved by crankcase vacuum through passage as indicated.

Scavenge Oil (return oil) from engine to oil tank. Oil is pumped from engine through passages as indicated.

ENGINE REPAIR PROCEDURE

GENERAL

When an engine needs repair, it is not always possible to definitely determine beforehand whether the engine can be repaired by disassembling only cylinders and heads, only gearcase; or whether engine must be completely disassembled for crankcase section repair.

Usually, only upper-end repair is needed and it is recommended procedure to first strip motorcycle for cylinder head, cylinder and piston repair as described in "Stripping Motorcycle for Engine Repair," steps 1 through 10.

After disassembling cylinder head and cylinder it may be found that lower end repair is necessary. This requires removal of engine crankcase from frame as described in steps 10 through 20 in "Stripping Motorcycle for Engine Repair."

In cases where it has been definitely determined beforehand that the lower portion of engine (crankcase) is in need of repair, remove complete engine from chassis before starting disassembly as described in steps 1 through 20 of "Stripping Motorcycle for Engine Repair."

Symptoms indicating a need for engine repair are often misleading, but generally if more than one symptom is present, possible symptom causes can be narrowed down to make at least a partial trouble diagnosis. An above normal comsumption of oil, for example, could be caused by several mechanical faults (see "Locating Operating Troubles," Section 1D). But when accompanied by a blue-gray smoke from the exhaust, and when low compression is present, it indicates the rings need replacing. Low compression by itself, however, indicates improperly seated valves, not worn rings.

A noisy engine is usually caused by loose bearings. Main bearings are generally more durable than rod bearings or bushings so the latter should be suspected first. Certain "knocking" noises may be caused by loose bearings, others by piston slap, a condition where piston or cylinder or both are worn out of round and loose fitting, allowing the piston to slap from front to rear of cylinder as it moves up and down.

Most frequently, valves, rings, pins, bushings and bearings need attention at about the same time. If the symptoms can be narrowed down through the process of elimination to indicate any one of the above components is worn, it is best to give attention to all of the cylinder head and cylinder parts.

STRIPPING MOTORCYCLE FOR ENGINE REPAIR

Use the following procedure to strip the Duo-Glide for either cylinder head and cylinder removal for repair with engine in chassis, or for engine removal for complete overhaul.

1. To remove instrument cover take out mounting base center screw and pry off cover side plate located at trip mileage set screw.

2. Release seat clevis spring, pull clevis pin and tip seat forward.

3. Disconnect fuel line from left tank and interconnecting pipe from right tank, and drain into a proper container. Gasoline may be pumped out through tank filler opening before disconnecting pipes.

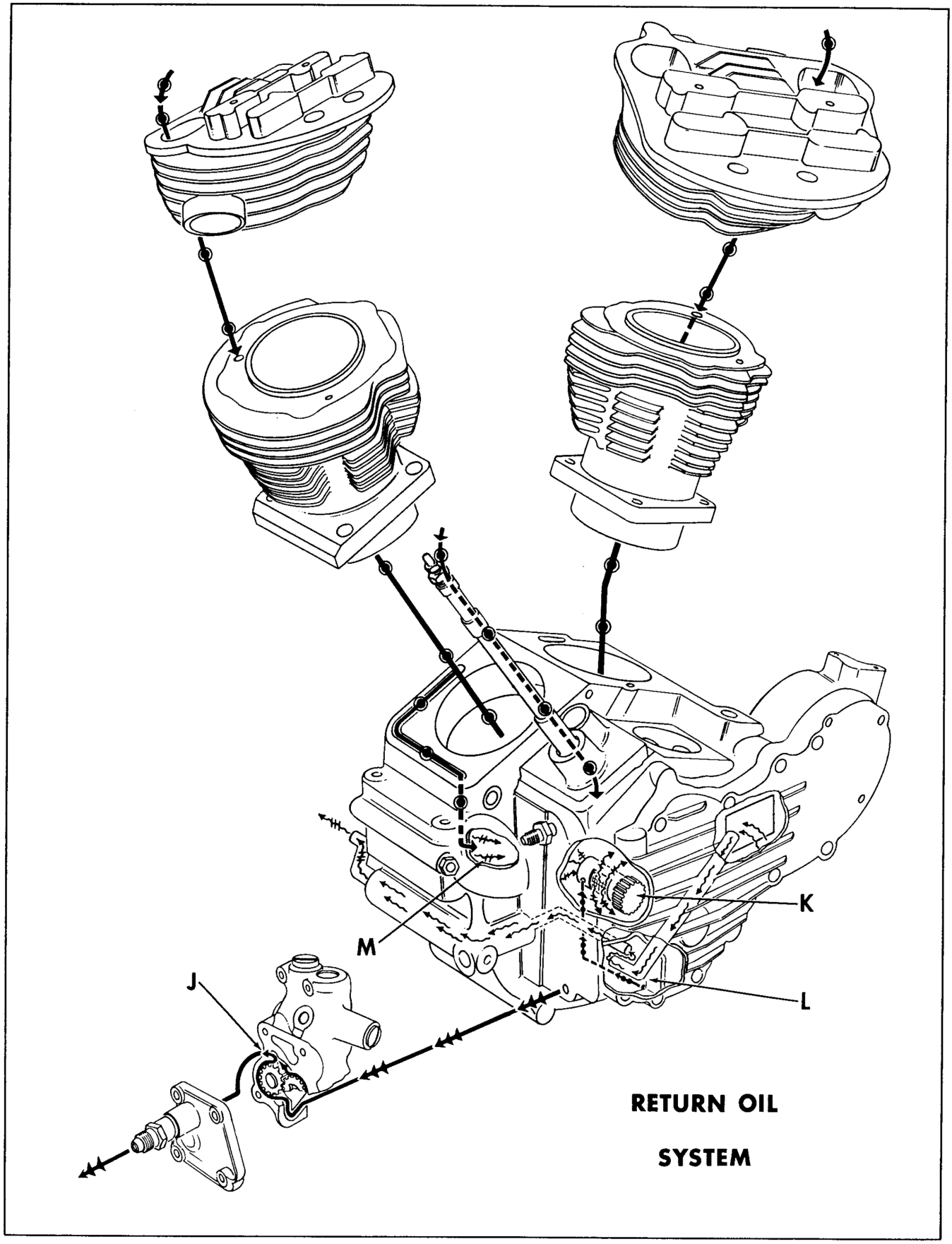

Figure 3A-4. Oil Scavenger System

4. Remove upper and lower bolts at the front and the two stud nuts between the gasoline tanks at the rear. Remove tanks. On hand shift models, remove shift lever bottom bolt so shift lever may be removed with left tank.

5. Remove cylinder head bracket. Note washers between bracket and frame lug, use same washer when bracket is assembled. Turn bracket to disengage choke lever from carburetor.

6. Remove spark plugs to avoid damaging. Disconnect ground wire at battery.

7. Turn out center screw and remove horn power pack cover. Disconnect two wires from horn power pack. Remove two bolts mounting horn power pack to bracket. Loosen horn trumpet nut and turn horn power pack off trumpet. Remove carburetor intake manifold clamps.

8. Remove air cleaner cover, filter element, four bolts, lock washers and air cleaner back plate from carburetor body.

9. Disconnect throttle control wire from carburetor. Disconnect fuel line with fuel strainer. Remove top center crankcase nut and washer and slip carburetor mounting bracket off stud. Remove carburetor to right.

10. Remove horn trumpet mounting bolt and horn trumpet. Loosen exhaust pipe clamps and slip clamps down. Remove regulator mounting screws and move regulator away from engine cylinders. It is not necessary to disconnect wires from regulator.

At this stage, the cylinder heads and cylinders may be removed. To remove engine crankcase or complete engine, continue stripping motorcycle as follows:

11. Remove chain guard cover. If motorcycle is equipped with compensating sprocket, use Compensating Sprocket Shaft Nut Wrench, Part No. 94557-55, to remove compensating sprocket shaft nut. If not equipped with compensating sprocket, use Sprocket Nut Wrench, Part No. 94545-26, to remove nut. Loosen nut by striking wrench handle several sharp blows with hammer. Remove push rod adjusting screw lock nut (nut on center screw on clutch sprocket), slip washer (any metal washer about 1-3/4 in. in diameter with 3/8 in. hole) over push rod adjusting screw and replace lock nut. Remove three spring tension adjusting nuts and pull clutch outer disc and spring collar assembly off clutch drive hub pins. Move clutch sprocket and motor sprocket out shafts just far enough to slip motor sprocket off shaft.

12. Remove three stud bolts, lock washers and shim washers (located between inner chain cover and engine crankcase) from inner chain cover at engine sprocket shaft.

13. Disconnect timer wire at coil. Disconnect two wires from generator.

14. Remove left rear and front motor mounting bolts.

15. Remove breather and return oil lines from oil pumps and oil tank connections.

16. Remove footboard rear stud nut from inside of frame member and front footboard mounting stud bolts from brake master cylinder by removing nut and lock washer on back side. Remove rear brake cylinder attaching stud bolt which passes through master cylinder and frame with a lock washer and nut on back side of frame member. Remove brake master cylinder sideplate bolt located behind master cylinder plunger boot. Master cylinder and sideplate assembly is free to swing down away from engine crankcase.

17. Remove muffler rear hanger clamp, muffler front hanger clamp and rear end front clamp. Remove muffler. Remove rear hanger bolt and front exhaust pipe frame clamp and remove front exhaust pipe.

18. Loosen oil feed line at tank and remove at oil pump. Have plug for pipe ready or drain oil tank before removing feed line connections. Shift line out of way and tighten connection at tank.

19. Remove spark advance control wire at circuit breaker. Remove two rear screws from horn trumpet bracket and slip out spark advance control wire.

20. Remove front and rear righthand engine mounting bolts. Engine is now completely stripped and may be removed from right side of motorcycle.

CYLINDER HEAD

REMOVING CYLINDER HEAD ASSEMBLY (Fig. 3B-1)

Remove spring cap retainers (1) on push rod covers by prying down on cover spring cap with screwdriver wedged between cylinder cooling fins and pulling spring cap retainers out.

Remove five head bolts and washers (2) from each head. Lift cylinder head enough to slip out push rods (3) and push rod covers (4). Remove cylinder head (5). Remove cylinder head gasket (6). Mark push rods so that they will be reassembled in same position.

DISASSEMBLING CYLINDER HEAD

Remove the 12 cover reinforcing screws (7) and lift off reinforcing ring (8), rocker arm cover (9) and cover gasket (11). Cover pad (10) is cemented inside cover and needs no attention if in serviceable condition.

Turn off the eight rocker arm bearing stud nuts (12), and lift intake valve oiler (13) off studs. Remove rocker arm bearing halves (14 and 16) with rocker arms (15).

Remove exhaust valve stem pads (17). Compress valve springs with Valve Spring Compressor, Part No. 96600-36, as shown in Fig. 3B-2. Remove valve key halves (18).

NOTE

On FLH engines, valve stem pads are not used and valve key is split wedge type.

Remove upper valve spring collar (19), outer valve spring (20) and inner valve spring (21) and lower spring collar (22). Slip valves (23) out of valve guides in head.

Do not interchange valves, rocker arms or rocker arm bearing halves. Either process parts separately or mark them in some manner so they may be returned to their respective positions.

CLEANING AND INSPECTION

Clean outside of cylinder head with a wire brush. Scrape carbon from head, top of cylinder, top of bore above ring path, and inlet and exhaust valve ports. When scraping carbon, be careful to avoid scratching or nicking cylinder head and cylinder joint faces or bore. Blow off loosened carbon or dirt with compressed air.

Wash all parts in Harley-Davidson "Gunk Hydro-Seal". Blow out oil passages in head. Be sure they are free of sludge and carbon particles. Remove loosened carbon from valve head and stem with a wire wheel. Never use a file or other hardened tool that will scratch or nick valve. Polish valve stem with very fine emery cloth or steel wool. Check valve stem for excessive wear.

Valve head should have a seating surface about 1/16 in. wide, it should be free of pit marks and burn spots. Exhaust valves should contain carbon that is black or dark brown. White or light buff carbon indicates excessive heat and burning.

Valve seats are also subject to wear, pitting and burning. They should be resurfaced whenever valves are refinished. Clean valve guides with the Harley-Davidson Valve Guide Reamer, Part No. 94830-47, and check for wear and valve stem clearance.

Inspect valve springs for broken or discolored coils. Check free length or check tension of each spring. If a spring is more than 1/8 in. shorter than a new spring, or tension shows spring to be below low limit tension of new spring, replace it with a new spring. Check valve spring compression with valve spring tester against tolerances shown in "Engine Specifications," Section 3A.

Examine push rods. Replace any rods that are bent, discolored or broken. Check cup at end of rocker arm to make certain there are no chips broken out.

Blow out oil passages in rocker arms, rocker arm bearings and replace intake valve oilers. When used valve oilers are cleaned and reinstalled, they invariably allow over-oiling. Assemble units on head (dry) and check rocker arm clearance in bearing. If rocker arm fit in bearing is greater than .002 in., repair bearings that are otherwise serviceable as follows: Remove locating dowel pins from bearing covers and sand matching faces of top and bottom rocker arm bearing halves on a sheet of emery cloth laid on a fairly true firm surface. Sand both halves an equal amount. Wash parts and assemble (with dowel pins) to cylinder head, but omit rocker arm. Line ream hole in bearing with a standard 7/8 in. reamer. Disassemble, wash parts and reassemble, including rocker arm. Check fit and repeat sanding and reaming procedure until desired tolerance fitting is reached. Rocker arms must be free in bearings or hydraulic lifters will not fill with oil. Always strike sides of rocker bearings a medium blow to align parts before checking fit.

If end of rocker that bears against end of valve stem is worn, dress down on emery wheel to regain original contour. Compare with unused part for correct shape.

REPLACING VALVE GUIDES

Replacing valve guides (24, Fig. 3B-1) if necessary, must be done before valve seat and face are ground since the valve stem hole in valve guide is the basis from which all face and seat grinding is done.

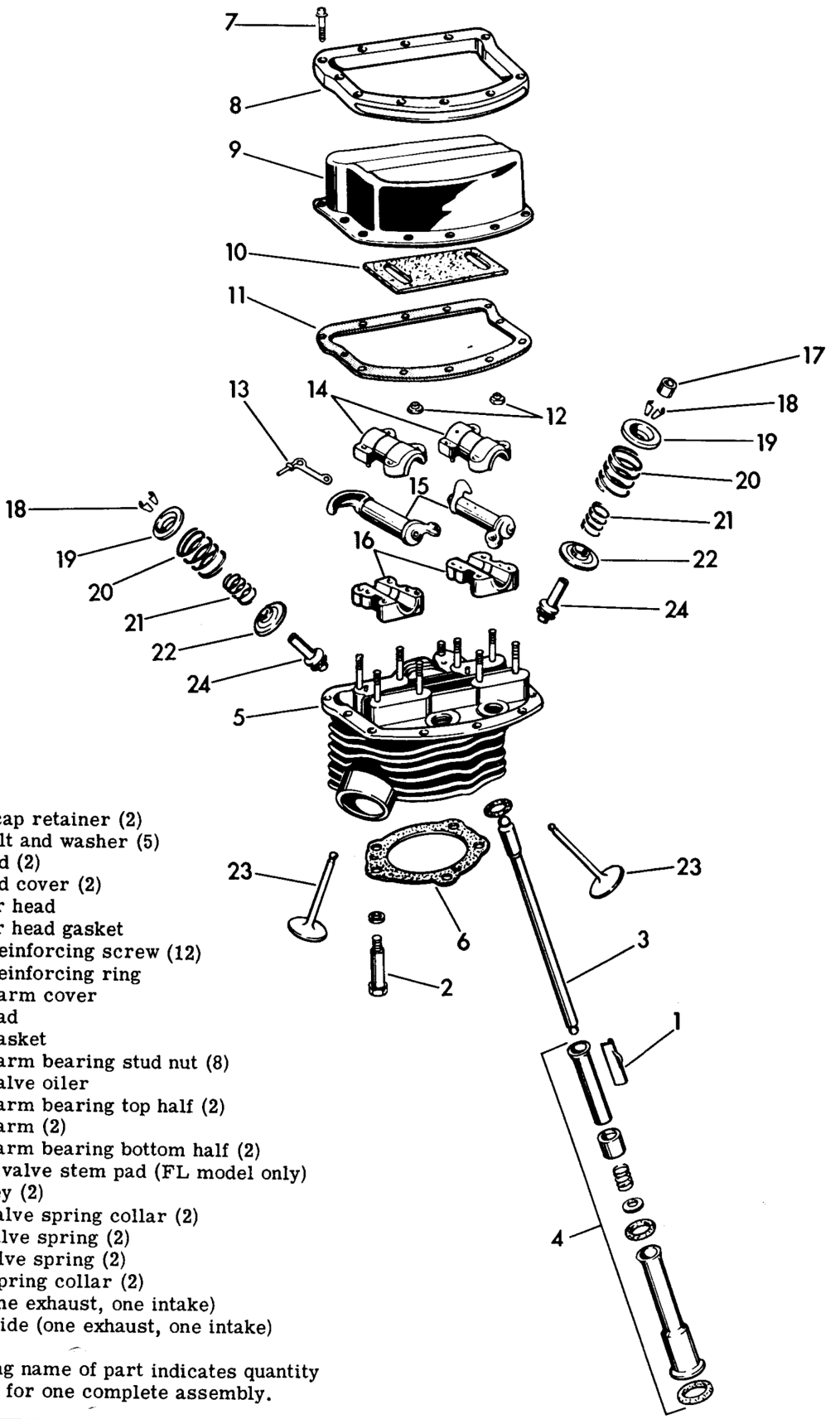

1. Spring cap retainer (2)
2. Head bolt and washer (5)
3. Push rod (2)
4. Push rod cover (2)
5. Cylinder head
6. Cylinder head gasket
7. Cover reinforcing screw (12)
8. Cover reinforcing ring
9. Rocker arm cover
10. Cover pad
11. Cover gasket
12. Rocker arm bearing stud nut (8)
13. Intake valve oiler
14. Rocker arm bearing top half (2)
15. Rocker arm (2)
16. Rocker arm bearing bottom half (2)
17. Exhaust valve stem pad (FL model only)
18. Valve key (2)
19. Upper valve spring collar (2)
20. Outer valve spring (2)
21. Inner valve spring (2)
22. Lower spring collar (2)
23. Valve (one exhaust, one intake)
24. Valve guide (one exhaust, one intake)

Figure following name of part indicates quantity necessary for one complete assembly.

Figure 3B-1. Cylinder Head - Exploded View

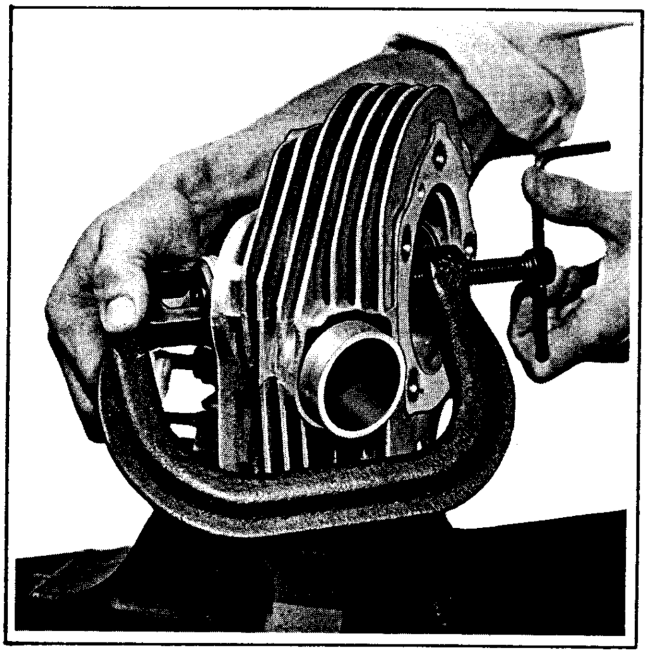

Figure 3B-2. Compressing Valve Spring

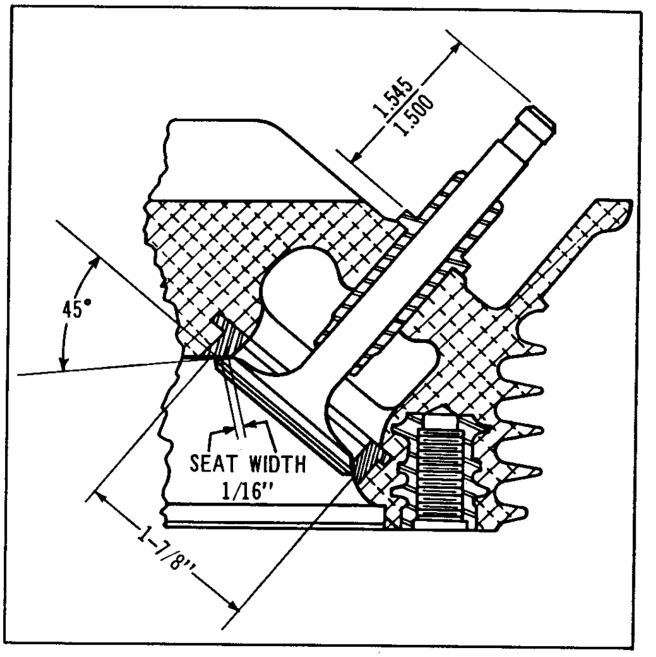

Figure 3B-3. Valve Seat Tolerance

Valve stem-valve guide clearance is as follows: Exhaust valves, .004 in. to .006 in. loose; intake valves, .002 in. to .004 in. loose. If valve stems and/or guides are worn to exceed the maximum tolerances by more than .002 in., new parts must be installed.

Tap out valve guides with shouldered drift pin (from chamber side) and insert replacement guide on arbor press. Be particularly careful to press replacement guide squarely into hole.

New valve guides are reamed to correct size. However, when guides are pressed into cylinder heads, they may close up slightly; also the ends may be burred. Therefore, after new guides are in place, they should be sized and cleaned with Valve Guide Reamer, Part No. 94830-47.

It is of prime importance that valve guides fit tightly in cylinder heads, or valves may not seat properly. If original guide or new standard guide is not a tight press fit, an oversize guide must be installed. Oversize guides can be obtained .001 in. to .006 in. oversize.

REPLACING VALVE SEATS

After installing valve guides, valve seats must be refaced to true them with guides.

If valves have been reseated several times, valve seats may have become too wide and/or valve may be seating itself too deeply in head. When valve seat becomes wider than 1/16 in. (see Fig. 3B-3) valve seat relief must be counterbored to reduce seat to 1/16 in. Counterbore dimensions are shown. Tools for this purpose are available commercially. To determine if valve is seating itself too deeply in head, measure distance from shoulder of valve guide to end of valve stem. See dimension in Fig. 3B-3 for tolerances. When valve stem extends through guide in excess of maximum shown, valve seat inserts must be replaced.

Cylinder heads may be returned to factory through authorized Harley-Davidson dealer for valve seat insert replacement. Heads are bored out to remove old seats, and new seats are pressed into place.

GRINDING VALVE FACES AND SEATS

Valve seat inserts are so hard a seat cutter will not work. They must be refaced with a grinder. Grinding tools and fixtures are available commercially. Grind and seat valve in same port from which it was disassembled.

Valve face angle is 45° for both intake and exhaust valves, and valve refacing grinder must be adjusted exactly to this angle. It is important to not remove any more metal than is necessary to clean up and true valve face. If grinding leaves the edge of valve very thin or sharp, install a new valve. A valve in this condition does not seat normally, will burn easily and may cause pre-ignition. There is also danger of cracking. Valves that do not clean up quickly are probably warped or too deeply pitted to be used.

If end of valve stem shows uneven wear, true end of stem on a valve refacing grinder equipped with suitable attachment.

Intake and exhaust valves are made of different materials and must not be interchanged. Intake valves are marked "IN" on head; exhaust valves are marked "EX".

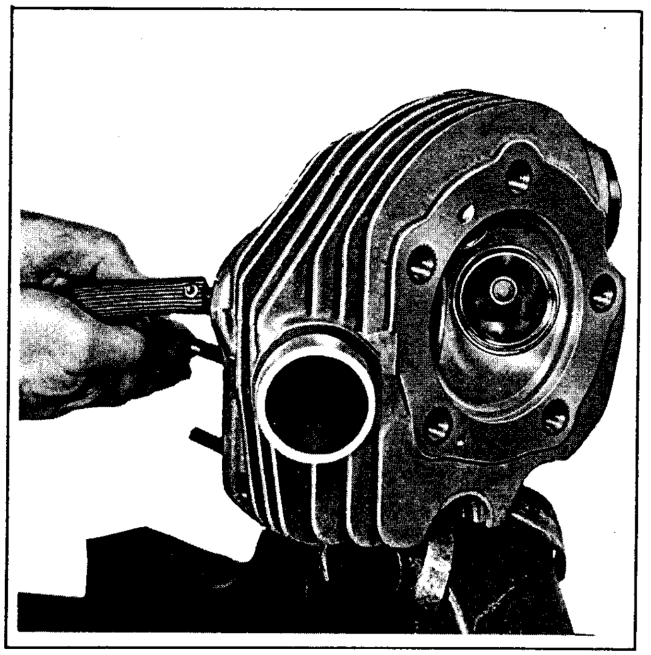

Figure 3B-4. Lapping Valves

LAPPING VALVE FACES AND SEATS

If valve faces and seats have been smoothly and accurately refaced, very little lapping will be required to complete seating operation. Apply a light coat of fine lapping compound to valve face, insert valve in guide and give it a few oscillations with Valve Grinding Tool, Part No. 96550-36. Lift valve and rotate it about 1/3 of a turn. Repeat lapping procedure as shown in Fig. 3B-4. After full turn, remove valve, wash valve face and seat, and dry with cloth that is immediately discarded so grinding compound cannot be transferred to engine parts. If inspection shows an unbroken lapped finish of uniform width around both valve and seat, valve is well seated. If lapped finish is not complete, further lapping, or grinding and lapping is necessary.

ASSEMBLING CYLINDER HEAD

Replace valve and valve spring assemblies using Valve Spring Compressor, Part No. 96600-36. Position valve keys so spaces between key halves are equal. Spaces between key halves must face front and rear of engine on intake valves.

Replace rocker arm assemblies making sure intake valve oiler is in place on intake rocker bearing, with oiler tube 3/32 in. from rocker arm. Rocker arms must be free or hydraulic lifters will not fill with oil.

Replace rocker arm cover and reinforcing ring. Use new cover gasket. Pull down cover reinforcing screws evenly to obtain tight seal.

Install new cylinder head to cylinder gasket and position rear head. Start cylinder head bolts. Turn engine until front cylinder exhaust tappet is just starting upward. Install rear cylinder exhaust push rod and push rod cover. Make certain both push rod ends are properly seated in rocker arm and tappet.

Rotate engine until front cylinder intake tappet is just starting upward. Install rear cylinder intake push rod in same manner as exhaust push rod. Tighten head bolts evenly to insure a proper seal. First turn bolts snug, then using a torque wrench tighten each 1/4 turn at a time until all are drawn to 65 ft. lbs.

Repeat procedure to install front cylinder head.

ADJUSTING TAPPETS (Fig. 3B-5)

Engine must be cold. Loosen tappet adjusting lock nut (1) and turn adjusting screw (2) upward, shortening push rod, until push rod has noticeable shake. Keep push rod from turning by holding with wrench on flats provided at base of push rod (3). Slowly turn push rod adjusting screw downward, lengthening rod, until all shake has been taken up. Mark adjusting screw with chalk and turn it downward exactly four full turns. Lock adjustment by tightening tappet adjusting lock nut. Always adjust tappets with push rod at its lowest position. Lowest position may be found by rotating engine until like tappet (intake or exhaust) in other cylinder is at highest point (valve fully open).

Install push rod cover spring cap retainers.

Always use new gasket at all joints unless otherwise specified. Clean off surfaces with a greaseless solvent (white gasoline is satisfactory) and install gaskets dry. Greased gaskets adhere to joint surfaces and become impossible to remove without damaging joint surfaces.

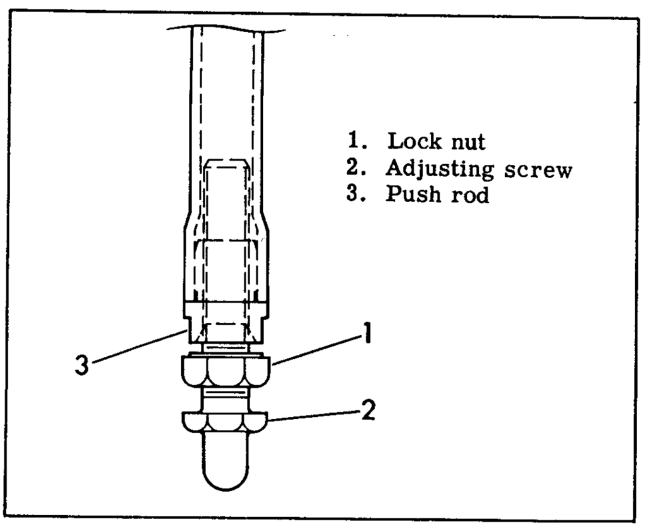

Figure 3B-5. Adjusting Tappets

CYLINDER

DISASSEMBLING CYLINDER AND PISTON (Fig. 3C-1)

Strip motorcycle as described in "Stripping Motorcycle for Engine Repair," Section 3A, steps 1 through 10.

Remove cylinder head as described in "Disassembling Cylinder Head," Section 3B.

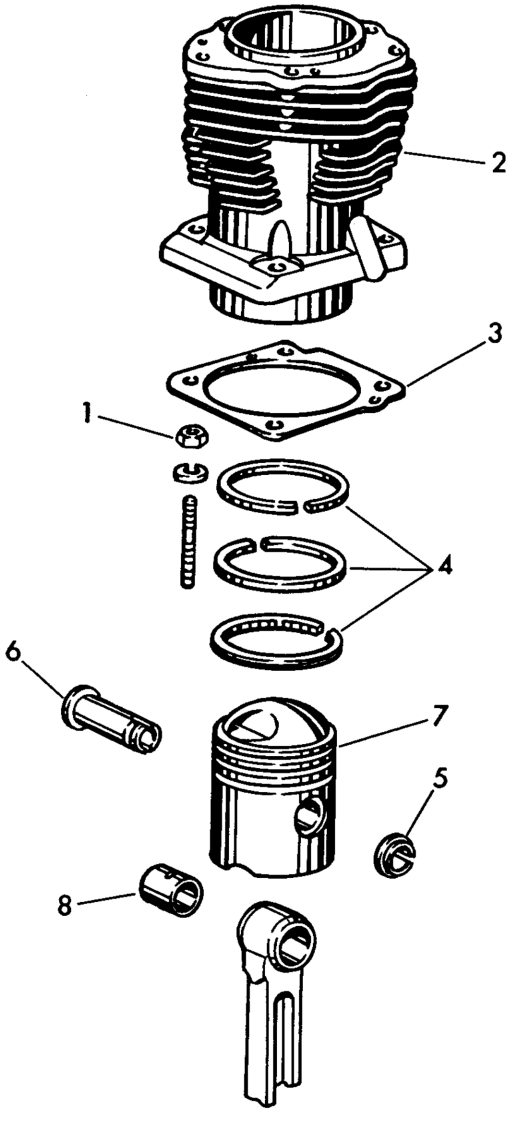

1. Cylinder base stud nut and washer (4)
2. Cylinder
3. Cylinder base gasket
4. Piston rings (2 compression, one oil control)
5. Piston pin lock ring (2)
6. Piston pin
7. Piston
8. Piston pin bushing

Figure following name of part indicates quantity necessary for one complete assembly.

Figure 3C-1. Cylinder - Exploded View

Remove all cylinder base stud nuts and washers (1) except one on rear cylinder using Cylinder Base Nut Wrench, Part No. 94585-30. Raise front cylinder and piston enough to permit placing a cloth over crankcase opening. This will prevent dirt or pieces of broken ring from falling into crankcase. With piston at bottom of stroke, remove cylinder (2). Remove remaining stud nut from rear cylinder. Remove rear cylinder in same manner. Discard cylinder to crankcase gasket (3).

Spring piston rings (4) outward until they clear ring grooves in piston and lift off. Use a commercial ring expander if necessary. Pry right piston pin lock ring (5) off piston pin using the Piston Lock Ring Tool, Part No. 96780-32 and screwdriver as shown in Fig. 3C-2. Right end of piston pin has slots for this purpose. Tap out piston pin (6) and lift off piston (7).

Remove piston pin bushing (8), if necessary (see "Cleaning and Inspection"), using Piston Pin Bushing Tool, Part No. 95970-32. Do not drive bushing out with a drift pin unless rod is disconnected and well supported around piston pin hole.

CLEANING AND INSPECTION

Place cylinders and pistons in "Gunk Hydro-Seal" or other carbon and gum dissolving agent until deposits are soft. Scrub piston dome and outside of cylinder to remove deposits. Where carbon deposit is thick and hard, it is advisable to scrape carbon before cleaning. Use a putty knife or ground tip on an old file. Use care to keep from scraping into aluminum of piston.

Wash all parts in solvent and blow dry with compressed air. Force air through feed and return oil passages in cylinder. Clean piston ring grooves with a piece of compression ring ground to a chisel shape.

Examine piston pin to see that it is not pitted or scored. Check the piston pin bushing to see that it is not loose in connecting rod, grooved, pitted or scored. A piston pin, properly fitted, is a light hand press fit in piston and has .001 in. clearance in connecting rod upper bearing. If piston pin to bushing free fit exceeds .002 in., replace worn parts, (see "Connecting Rod Bushings").

If piston pin is to be used again, examine lock ring on unslotted end of pin. If ring is tight in its groove, it is not necessary to remove it. When a new ring is required, clean ring groove and install ring before pin is installed in piston. The piston pin included with new piston assembly will have lock ring already installed on unslotted end.

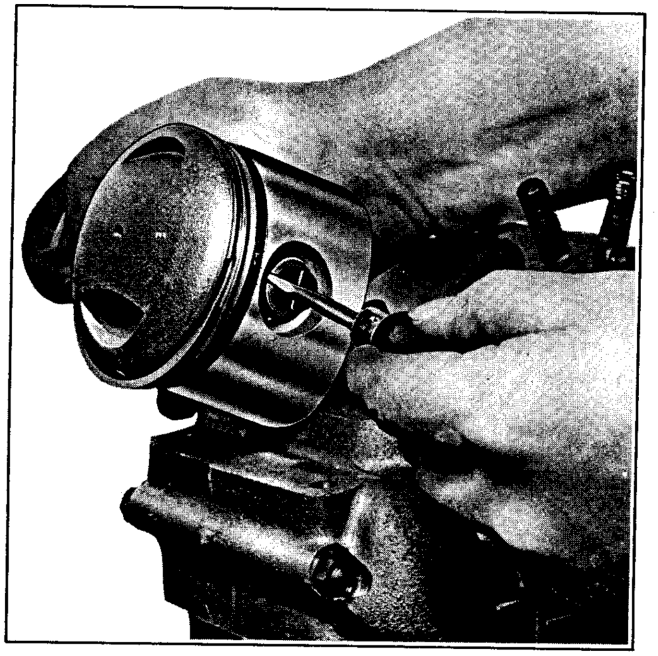

Figure 3C-2. Removing Piston Pin Lock Ring

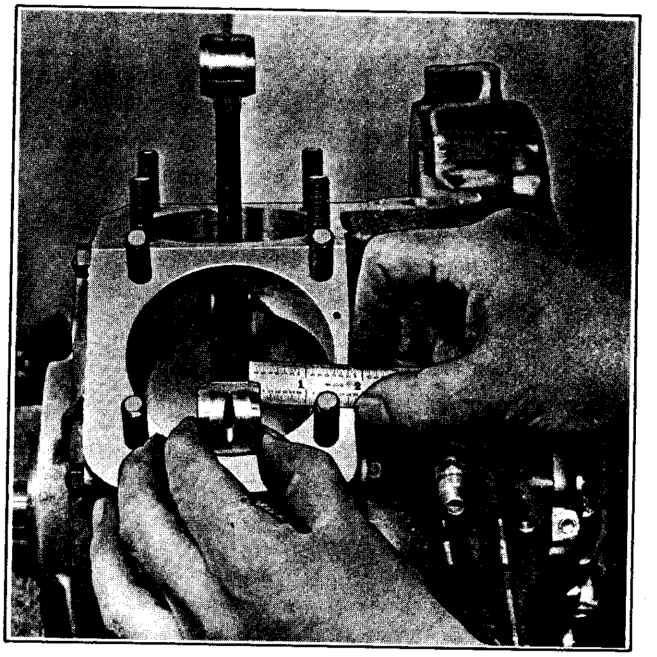

Figure 3C-3. Checking Connecting Rod Fit

Examine piston and cylinder for cracks, burrs, burned spots, grooves and gouges.

Check rods for up and down play on lower bearings. See Fig. 3C-3. When up and down play is detected and either rod has more than 3/32 in. side shake at extreme upper end, lower bearing should be refitted. This requires removing and disassembling engine crankcase (see Section 3E).

RE FINISHING CYLINDERS

Gauge pistons and cylinders to see if they are worn to the point where cylinders must be rebored and oversize pistons installed. Inside and outside micrometers used for piston to cylinder fitting should be checked together to be sure they are adjusted to read exactly the same. Subtract piston measurement from bore measurement to obtain clearance. Bore measurement of a cylinder should be taken in ring path, starting about 1/2 in. from the top of cylinder, measuring front to rear then side to side. Repeat procedure at the center and at the bottom of ring travel (see Fig. 3C-4). This process will determine if cylinder is out of round or "egged" and will also show any cylinder taper or bulge.

Pistons are measured front to rear at base of piston skirt as shown in Fig. 3C-5. Pistons are cam ground to an egged or oval shape so only front and rear surfaces are touching cylinder wall.

If cylinders are not scuffed, scored and are worn less than .002 in., it is not necessary to rebore oversize at time of cylinder repair. It may be done at time of next complete engine overhaul. If desired, a new piston may be installed to reduce clearance for more quiet operation.

If cylinders show more than .002 in. wear, they



Figure 3C-4. Measuring Cylinder Bore

should be rebored to next standard oversize and refitted with corresponding pistons and rings.

When reboring cylinders oversize, add to standard cylinder bore size the oversize step apparently re-

quired to clean up bore; this gives the exact sizes to which cylinder should be rebored, example: 3.3125 in. (standard bore) plus .020 in. (oversize) equals 3.3325 in. (size to which cylinder should be rebored). Check carefully with accurate micrometers to be sure of refinishing to this size. If this is accurately done, oversize pistons furnished in various oversize steps will fit with normal clearance.

Pistons are regularly supplied in the following oversizes: .005, .010, .020, .030, .040, .050, .060 and .070 in. Oversize pistons have their oversize stamped on head; 10, 20, etc.

Cylinders can be refinished oversize with a hone only, or with a boring bar followed by a finishing hone. In general practice only cylinders not scored and not badly worn are refinished entirely with a hone. Cylinders badly worn or deeply scored are first rebored to nearly the required oversize and then are finish-honed to exact size. When cylinders require reboring to beyond .070 in. oversize to clean up, their oversize limit has been exceeded and the cylinders must be replaced.

When cylinders are worn less than the .002 in. maximum, and reboring is unnecessary, unless they are scuffed or grooved the same pistons may be used with the replacement of rings and the roughing of cylinder walls to facilitate ring seating. Use No. 150 carborundum emery cloth to rough walls.

FITTING PISTON RINGS

Piston rings are of two types - compression (plain face) and oil control ring. The two compression rings are positioned in the two upper piston ring grooves with the stamped word "TOP" or a dot (.) upward. Rings are regularly supplied in the following over-

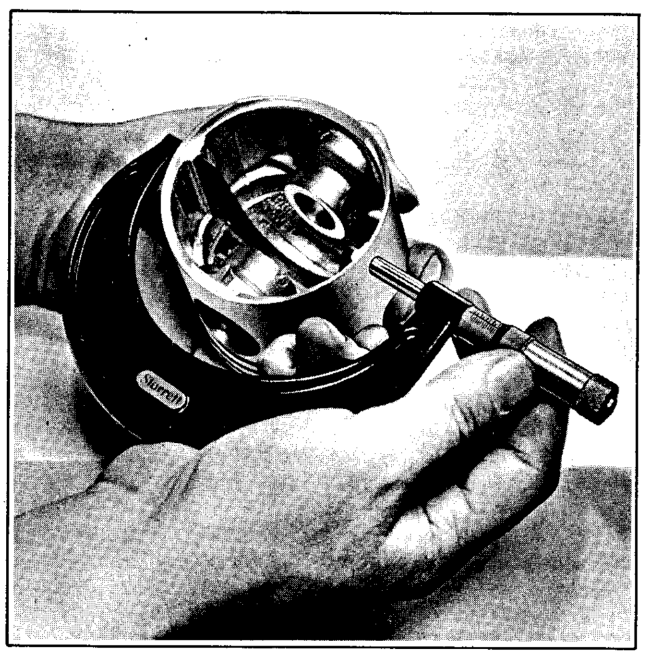

Figure 3C-5. Measuring Piston



Figure 3C-6. Measuring Ring Side Clearance

sizes to fit standard oversize pistons: .005, .010, .020, .030, .040, .050, .060 and .070 in.

Piston rings must have proper side clearance in ring grooves. In new assembly this is .004 in. Check with thickness gauge as shown in Fig. 3C-6. Maximum side clearance is .008 in.

Standard compression ring gap (space between ends of a ring) is .010 in. to .020 in. Oil control rings should have 11/32 in. overlap when placed free in cylinder bore. Replace ring worn to 7/32 in. or less overlap. To check compression ring gap, place a

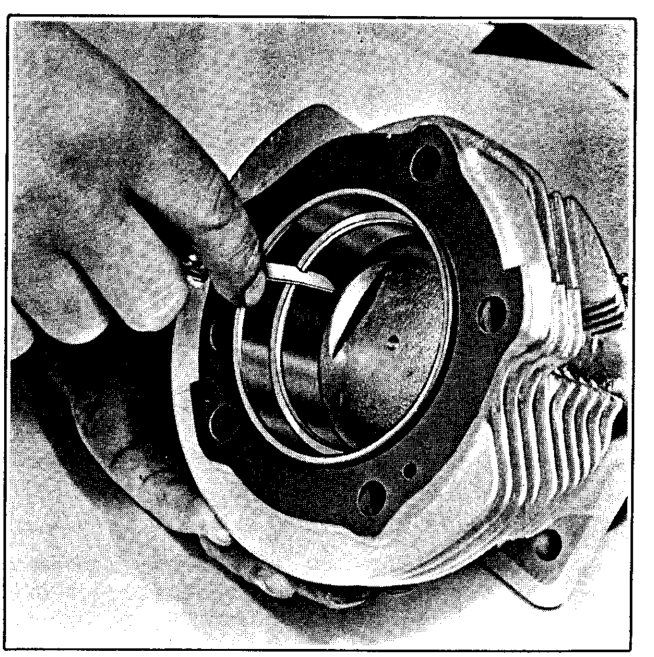

Figure 3C-7. Checking Ring Gap



Figure 3C-8. Filing Ring Gap

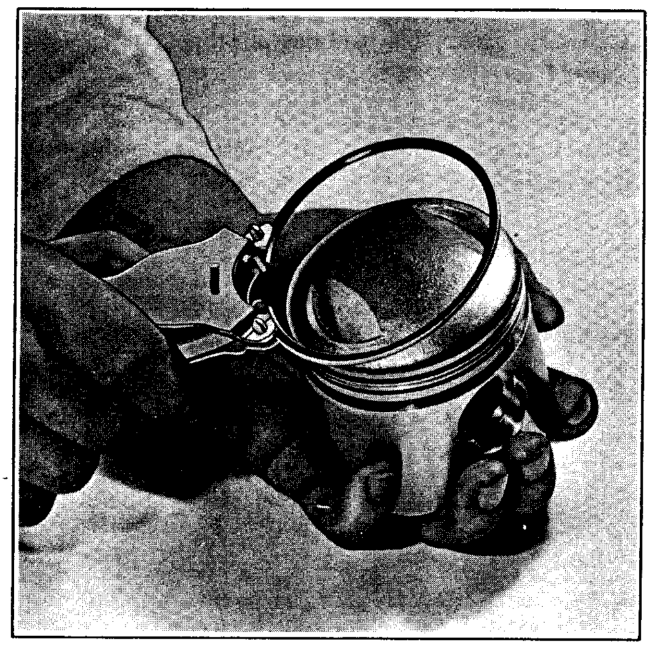

Figure 3C-9. Assembling Rings with Ring Expander

piston in cylinder with top end of piston about 1/2 in. from top of cylinder. Place ring in cylinder bore squarely against piston and check gap with thickness gauge (see Fig. 3C-7).

Use only standard size rings and piston in standard bore, and only matching oversize rings and piston in the same oversize bore. However, .005 in. oversize rings may be used on standard piston in standard bore if ring gap with standard ring exceeds .020 in. maximum.

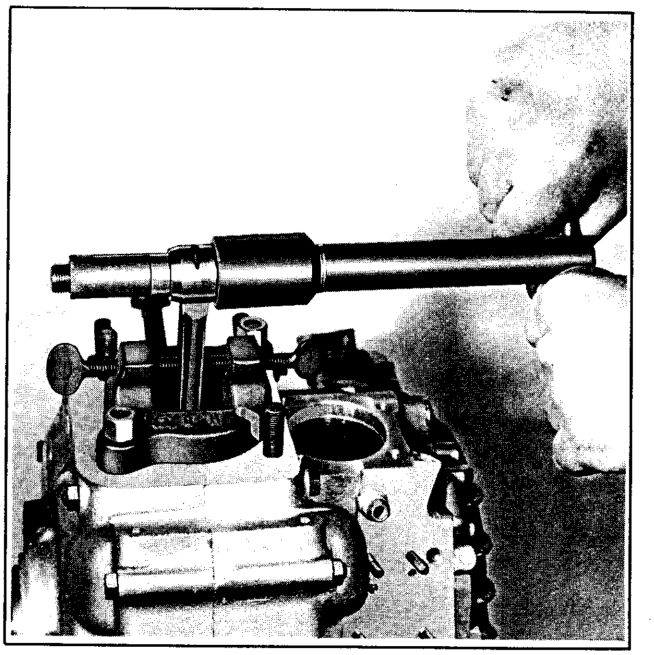

Figure 3C-10. Replacing Rod Bushing

If gap is less than .010 in., ring ends may butt under expansion, and be scored or broken. Gap may be increased by filing with fine-cut file. See Fig. 3C-8 for satisfactory method of filing ring gap.

Use a commercially available piston ring expander (Fig. 3C-9) to guide and slip rings over the piston into their respective grooves without over expanding or twisting rings and damaging the finely finished piston surface.

CONNECTING ROD BUSHING

When connecting rod bushing is tight in rod but is worn to excessive pin clearance (.002 in. or more) it is possible to service by reaming oversize and fitting an oversize pin. However, it is recommended that a new bushing be installed and reamed to fit a standard pin, except when piston to be used had previously been fitted with oversize pin, or pin is loose in bosses, necessitating fitting with an oversize pin. The objection to fitting upper end oversize is that considerably more time is required for the job. New pistons, standard or oversize, obtained from factory are supplied correctly fitted with standard pin, and may be installed in a short time if the rod bushing is already reamed to standard size. If bushing has been reamed oversize, either a new bushing must be installed and reamed to standard size or piston must be reamed oversize to fit an oversize pin, which involves extra time.

When replacing bushings in connection with only a top overhaul, use Harley-Davidson special tools as shown in Fig. 3C-10, Bushing Tool, Part No. 95970-32, and Connecting Rod Clamping Fixture, Part No. 95952-33. Be careful to start new bushing with oil slot in alignment with oil slot in rod.

Ream new bushing to size with Special Reamer, Part No. 94800-26. A properly fitted pin should have .001 in. clearance; with this clearance, pin will have just noticeable shake in bushing. Fitting tighter is likely to result in a seized pin or bushing loosened in rod. Oversize piston pins are available .002, .004, .006 and .008 in. oversize.

STRAIGHTENING CONNECTING RODS

In refitting and reassembling connecting rods, and finally fitting pistons, rods may be bent or twisted, throwing upper bearing and lower bearing out of alignment with each other.

After pistons have been installed, rods must be checked and re-aligned as necessary. If a rod is bent or twisted, piston has a "cocked" relation to cylinder bore and the result is excessive noise and rapid wear.

Check rod alignment with Piston Squaring Plate, Part No. 96179-18 as shown in Fig. 3C-11. Be sure crankcase face is clean and free from burrs so that squaring plate seats fully.

NOTE

Piston skirt is cut away at bottom (below piston pin) for flywheel clearance, therefore, it cannot be used with squaring plate for checking rod alignment. Temporarily install a 61 O.H.V. piston to check rod alignment.

If a rod is in perfect alignment piston bottom will rest squarely on plate when flywheels are turned so that crank pin is in forward and rear position. This check, to be accurate, depends upon checking with crank pin alternately in both forward and rear positions. It is the change of rod angle, resulting from changing crank pin from one position to the other that influences the seat of piston on squaring plate and thus indicates whether or not rod is in alignment.

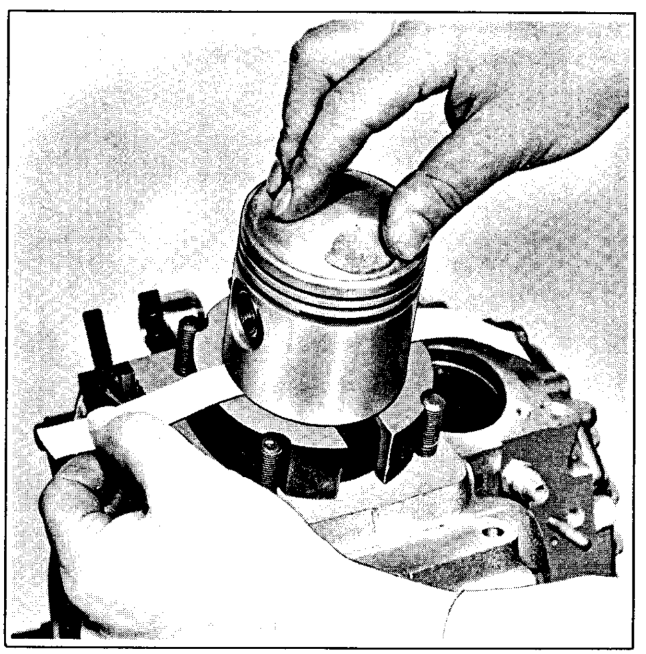

Figure 3C-11. Checking Rod Alignment

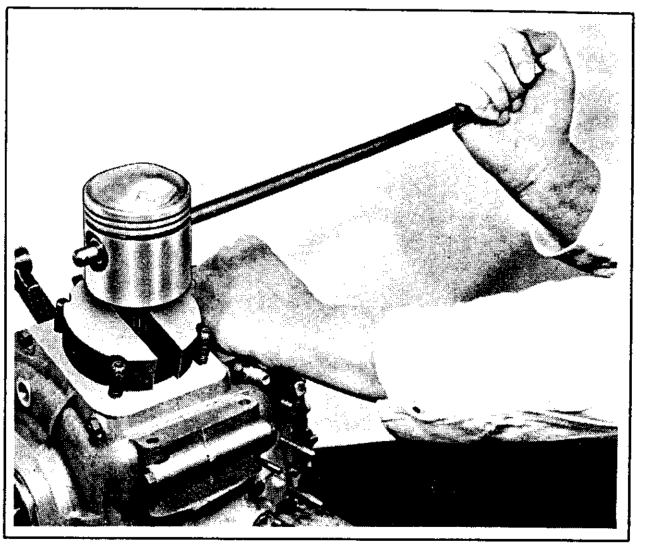

Figure 3C-12. Straightening Connecting Rod

Insert narrow strips of paper of equal thickness underneath piston, one on each side, below piston pin, as shown in Fig. 3C-11. Press piston down lightly with finger tips resting on center of piston head and pull first one paper, then the other, partially from underneath piston. If piston is perfectly square (rod in alignment), both will have the same amount of drag.

If rod proves to be out of alignment, it can be straightened by means of a bar inserted through piston pin, as shown in Fig. 3C-12. Use a bar with a diameter as close to the hole diameter in the piston pin as possible. The manner in which piston seats on squaring plate indicates as follows:

1. Piston high on same side, both crank pin positions; rod is bent.

2. Piston high on opposite sides as crank pin position is changed; rod is twisted.

3. Piston square or nearly square with crank pin in one position and high on one side with crank pin in other position; rod is bent and twisted.

Correct as follows:

1. To straighten a bent rod, insert straightening bar through piston pin hole on low side of piston and apply upward force.

2. To straighten a twisted rod, insert straightening bar through piston pin hole on high side of piston, and if crank pin position is to front apply force to rear - if crank pin position is to rear apply force to front.

3. To straighten a bent and twisted rod (combination of a bend and twist) remove bend first and then remove twist.



Figure 3C-13. Piston with Web on Right Side



Figure 3C-14. Inserting Piston Pin Lock Ring

After rods have been aligned check to see that pistons center in crankcase cylinder opening, without side pressure on upper rod ends. If further realigning is necessary to center pistons, correct by dressing off end of rod bushing on interfering side with a file. This allows the piston to shift slightly on rod to find a more suitable alignment of rod, piston, and cylinder bore.

ASSEMBLING CYLINDER AND PISTON

Attach piston to connecting rod with a piston pin. Position piston so lug on piston pin boss inside piston skirt is to right side of engine. See Fig. 3C-13.

Clean lock ring groove and install lock ring on end of pin that is not slotted if it was removed. Start slotted end of pin into piston boss from left side and drive through in the same manner in which pin was removed.

If the piston is heated in boiling water, the pin may be inserted into piston as a slip fit.

After pin is in place, clean lock ring groove and install the other lock ring (see Fig. 3C-14). It is important that special Lock Ring Tool, Part No. 96780-32 be used for installing lock rings.

NOTE

Lock ring is expanded just enough to go over end of pin. Other means of installing may over-expand ring and possibly crack it. Make sure ring groove is clean and that ring seats firmly in groove.

A lock ring incorrectly installed will soon loosen in service and finally come off pin, resulting in both piston and cylinder being damaged beyond repair. Never install a used lock ring or a new one that has been installed and then removed. Always use an unused lock ring.

Lubricate cylinder walls, pistons, pins and rod bushings with engine oil. Rotate rings until gaps are equidistant around rear piston. Turn engine until crank pin is at bottom center. Install new cylinder base gasket. Position Piston Inserter Ring Tool, Part No. 96333-51 on rear piston and slip rear cylinder down over piston as shown in Fig. 3C-15.

Install lock washers and nuts and pull them down evenly. Repeat process to assemble front cylinder.

Assemble cylinder heads and remaining portions of motorcycle as indicated in "Assembling Cylinder Heads," Section 3B, and reverse order of "Stripping Motorcycle for Engine Repair," Section 3A, steps 10 through 1.

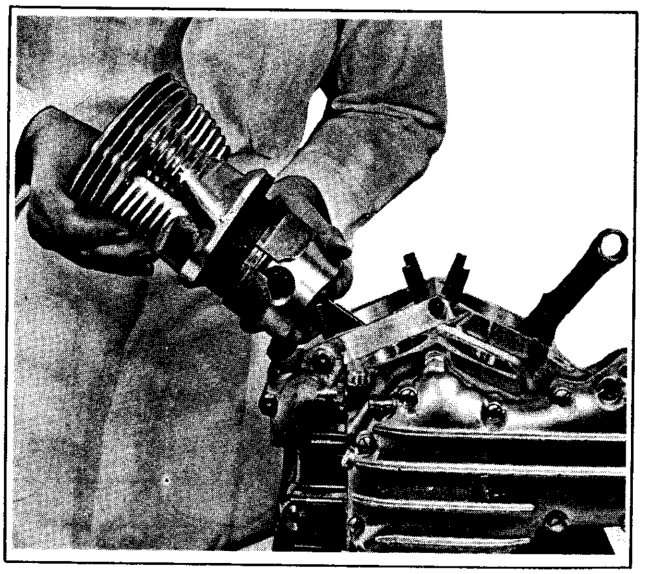

Figure 3C-15. Slipping Cylinder over Piston

GEARCASE

OIL PUMP

GENERAL

The oil feed pump and scavenger (oil return) pump are gear type pumps housed in one pump body and located on rear of gearcase on right side of motorcycle. The feed pump incorporates an automatic bypass valve that reroutes surplus oil (above the amount needed to lubricate the engine) directly to the gearcase. This valve is preset and non-adjustable.

Under normal operating conditions, the pump is a comparatively trouble free unit. The most common trouble with pump operation is the introduction into the pump of a metal or hard carbon chip. If either gets between the gear teeth, it is possible to shear a key, fracture a gear or break off a gear tooth.

If oil fails to return to the tank, check the scavenger pump gear drive shaft key. When the engine receives no lubrication (oil remains in tank), the drive shaft key on the feed pump drive gear may be sheared. Both of these conditions could be caused by shearing of the oil pump drive gear key. In cold weather slush ice formed from moisture condensation in oil may block oil passages and cause any of above troubles.

DISASSEMBLING OIL PUMP (Fig. 3D-1)

The oil pump may be removed from the motorcycle as a unit only if the engine is removed from the chassis. The oil pump may be disassembled, piece-by-piece without removing gearcase cover, with engine in chassis as follows:

Disconnect two oil lines and oil pressure switch (1) from pump. Remove four nuts and washers (2) from gearcase studs, that hold oil pump cover in place. Remove oil pump cover (3) and gasket (4). Remove lock ring (5), scavenger pump drive gear (6), gear key (7) and scavenger pump idler gear (8). Remove two oil pump body mounting stud nuts (9) and slip pump body (10) off studs and gear drive shaft (11). Remove oil feed pump drive gear (12), key (13) and idler gear (14).

Turn relief valve plug (15) out of pump body and remove relief valve spring (16) and valve (17). Remove check valve spring cover screw (18), valve spring (19) and ball (20). Loosen chain oiler adjusting screw lock nut (21) and turn in adjusting screw (22). Count the turns necessary to bottom screw then remove. Bottom and turn out same number of turns when assembling. Oil pump nipples (24) may be turned out of pump cover to facilitate cleaning.

To remove oil pump unit from gearcase with engine removed from chassis, remove gearcase cover screws, cover and gasket. Turn pinion gear nut off pinion shaft using the special tool, Gear Shaft Nut Socket Wrench, Part No. 94555-55 (left hand thread). Pull pinion gear using Pinion Gear Puller and Installer, Part No. 96830-51, remove key, spring, spacing collar and oil pump pinion shaft gear. Pry spring ring off pump drive gear shaft and remove drive gear and key. Remove six pump body nuts (2 and 9) and slip pump with drive shaft (11) out of gearcase. Pump is then disassembled as above.

CLEANING AND INSPECTION

Thoroughly clean all parts in cleaning solvent and blow pump body passages clear with compressed air. Inspect valves and valve seats for pitting and wear. Replace pump having worn or damaged valve seat. Inspect keys and keyways. Inspect scavenger and feed pump gear teeth for gouging or cracking caused by foreign materials going through pump. Pump shafts and bushing normally last lifetime of engine.

ASSEMBLING OIL PUMP

Oil pump is assembled in reverse order of disassembly. Note that scavenger pump gears are thicker than the feed pump gears. Also notice that feed pump gear key is smaller than scavenger gear key. Oil pump gaskets should always be replaced. Wet new gasket with water before assembling. Use only "factory made" gaskets. Lock rings are often damaged when removing them. It is advisable to install a new lock ring when assembling pump. Make sure ring is engaged and seated in retaining groove.

VALVE TAPPETS AND GUIDES

GENERAL

The tappet assembly consists of tappet, roller and hydraulic unit. The tappet and roller, under compression force from valve spring, follow the surface of the revolving cam. The linear motion produced is transmitted to the valve stem by the hydraulic unit, push rod and rocker arm. The hydraulic unit contains a piston or plunger and cylinder plus a ball check valve which allow the unit to pump itself full of engine oil to take up all play in the entire valve train.

When hydraulic units are functioning properly the assembly operates with no tappet clearance. The units automatically compensate for heat expansion to maintain a no-clearance condition.

It is normal for tappets to click when engine is started after standing for some time. Hydraulic units have a definite "leak down" rate which permits the oil in the hydraulic unit cylinder to escape. This is necessary to allow units to compensate for various expansion conditions of parts and still maintain no-clearance operation. Push rod assemblies are functioning

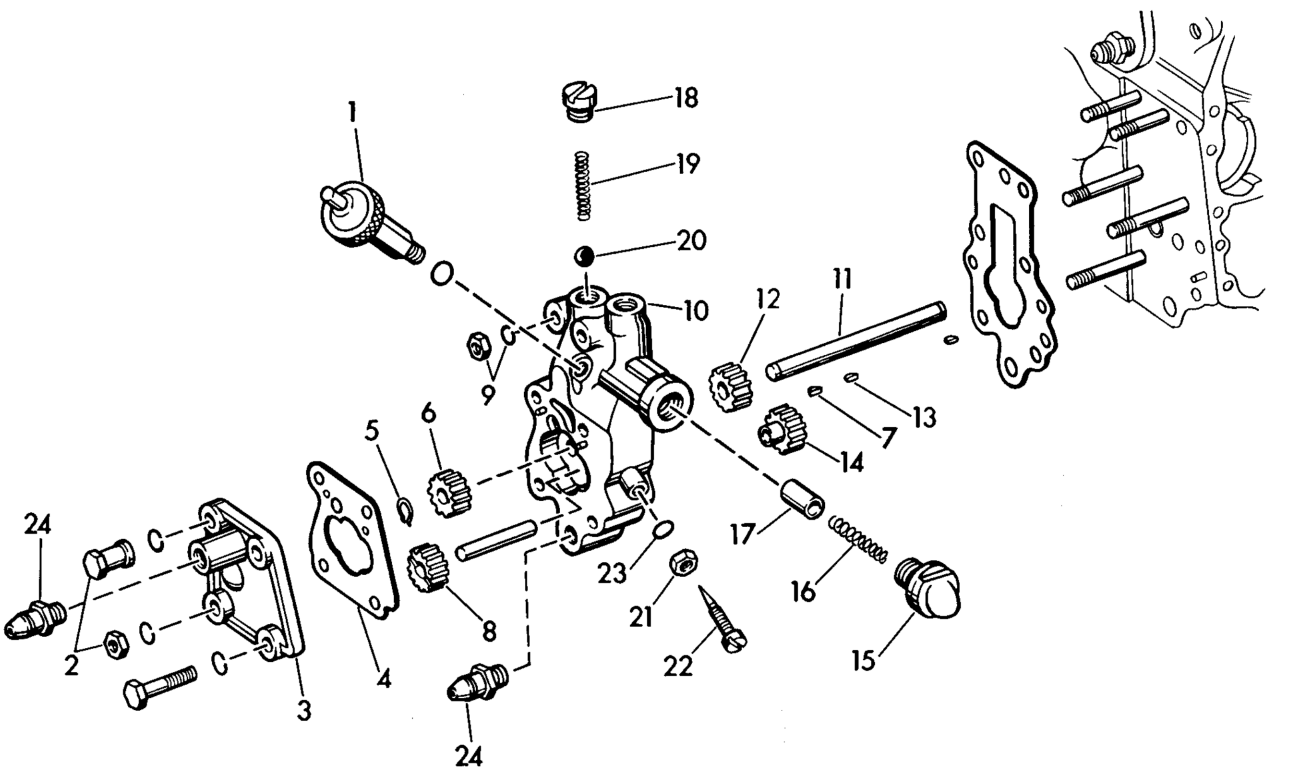

1. Oil pressure switch
2. Cover stud nut and washer (4)
3. Oil pump cover
4. Cover gasket
5. Lock ring
6. Scavenger pump drive gear
7. Gear key
8. Scavenger pump idler gear
9. Oil pump body mounting stud nuts and washers (2)
10. Oil pump body
11. Oil pump gear drive shaft
12. Feed pump drive gear
13. Feed pump gear key
14. Feed pump idler gear
15. By-pass valve plug
16. By-pass valve spring
17. By-pass valve
18. Check valve spring cover screw
19. Check valve spring
20. Check valve ball
21. Chain oiler adjusting screw lock nut
22. Chain oiler adjusting screw
23. Chain oiler adjusting screw washer
24. Oil line nipple (2)

Figure following name of part indicates quantity necessary for one complete assembly.

Figure 3D-1. Oil Pump - Exploded View

properly if they become quiet before or as engine reaches full operating temperature.

DISASSEMBLING TAPPETS (Fig. 3D-2)

If engine cylinder head is not disassembled, remove push rod cover spring cap retainer. Lift push rod covers and retract push rod adjusting screw until push rod may be lifted out of ball sockets.

Turn out tappet guide screws (1). Lift out hydraulic units (2). Loosen tappet guides by tapping gently with rawhide or soft metal hammer. Insert thumb and forefinger into push rod openings in tappet guide and press tops of tappets against sides of guides.

Remove tappet and guide assembly. Be careful to avoid dropping a tappet through guide mounting hole and into gearcase. Slip push rod cover cork washers (3) out of top of tappet guide (4). Pull tappet and roller (5) out bottom of tappet guide and remove tappet guide gasket (6).

CLEANING AND INSPECTION

Wash all parts except hydraulic units and gaskets in grease solvent. Hydraulic unit parts are selectively fitted and may not be interchanged so they must be individually and separately washed. Twist and pull hydraulic piston and spring from cylinder and wash parts.

Blow out oil passages in tappets, tappet guides and hydraulic units with compressed air. Insert a length of wire into oil channel openings in tappet guide to make sure passages are open. Air dry all parts.

Examine cams through tappet guide holes in gearcase for nicked, grooved or chipped condition. Examine tappet-guide matching surfaces for scuffing or grooving.

When tappet fit in guide exceeds maximum tolerance shown in "Engine Specifications" by .001 in. or more, replace worn parts. If roller is loose, force out pin on arbor press, insert new parts and peen or stake pin ends.

Check roller end clearance. Replace all units exceeding tolerances listed in specifications.

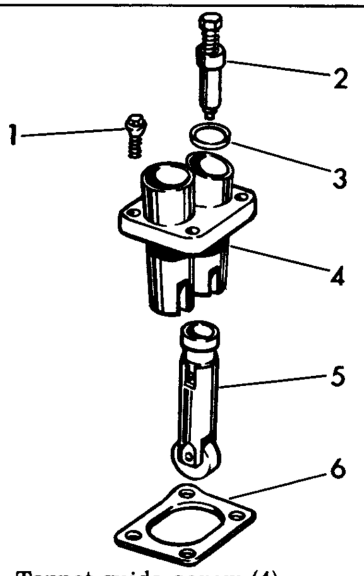

1. Tappet guide screw (4)
2. Push rod hydraulic unit (2)
3. Push rod cover cork washer (2)
4. Tappet guide
5. Tappet and roller assembly (2)
6. Tappet guide gasket

Figure following name of part indicates quantity necessary for one complete assembly.

Figure 3D-2. Tappet Assembly - Exploded View

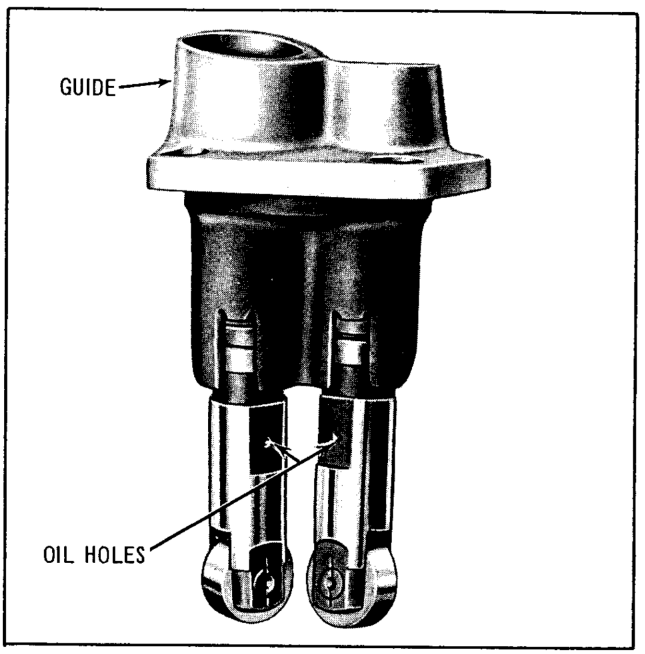

Figure 3D-3. Inserting Tappets on Guide

CHECKING HYDRAULIC UNITS (2, Fig. 3D-2)

Hydraulic units may be checked as follows:

Wash and air dry piston and cylinder. Blow out cylinder from bottom to make sure ball and seat are dry. Insert piston in cylinder. Hold in an upright position and press down piston, until spring touches cylinder, without covering hole in bottom of cylinder. Hold for count of 6 and release. If piston bounces back, unit is serviceable. If piston does not bounce back, cover hole in bottom of cylinder and repeat above process. If piston does not bounce back, unit is worn and must be replaced. If piston bounces back, ball is not seating, and unit should be replaced. Before replacing hydraulic units, check possibility of plugged or partially plugged screen under large cap screw located near rear tappet guide. Remove screen as described in "Disassembling Gearcase," and operate engine without screen and cork washers long enough to compare results.

ASSEMBLING TAPPETS (Fig. 3D-2)

Assemble tappets as follows:

Slip tappets (5) into guide (4) so flat surfaces on tappets are toward center of guide as shown in Fig. 3D-3. If flat surfaces with holes are not toward center of guide, engine oil will not feed across and one hydraulic unit cannot fill with oil. Assemble tappet guide gasket dry and insert tappet assembly in place on gearcase, holding tappets in place with thumb and forefinger as when unit was removed.

Assemble push rod cover cork washers, push rod hydraulic units and tappet guide screws.

Assemble remainder of push rod assembly in same order disassembled.

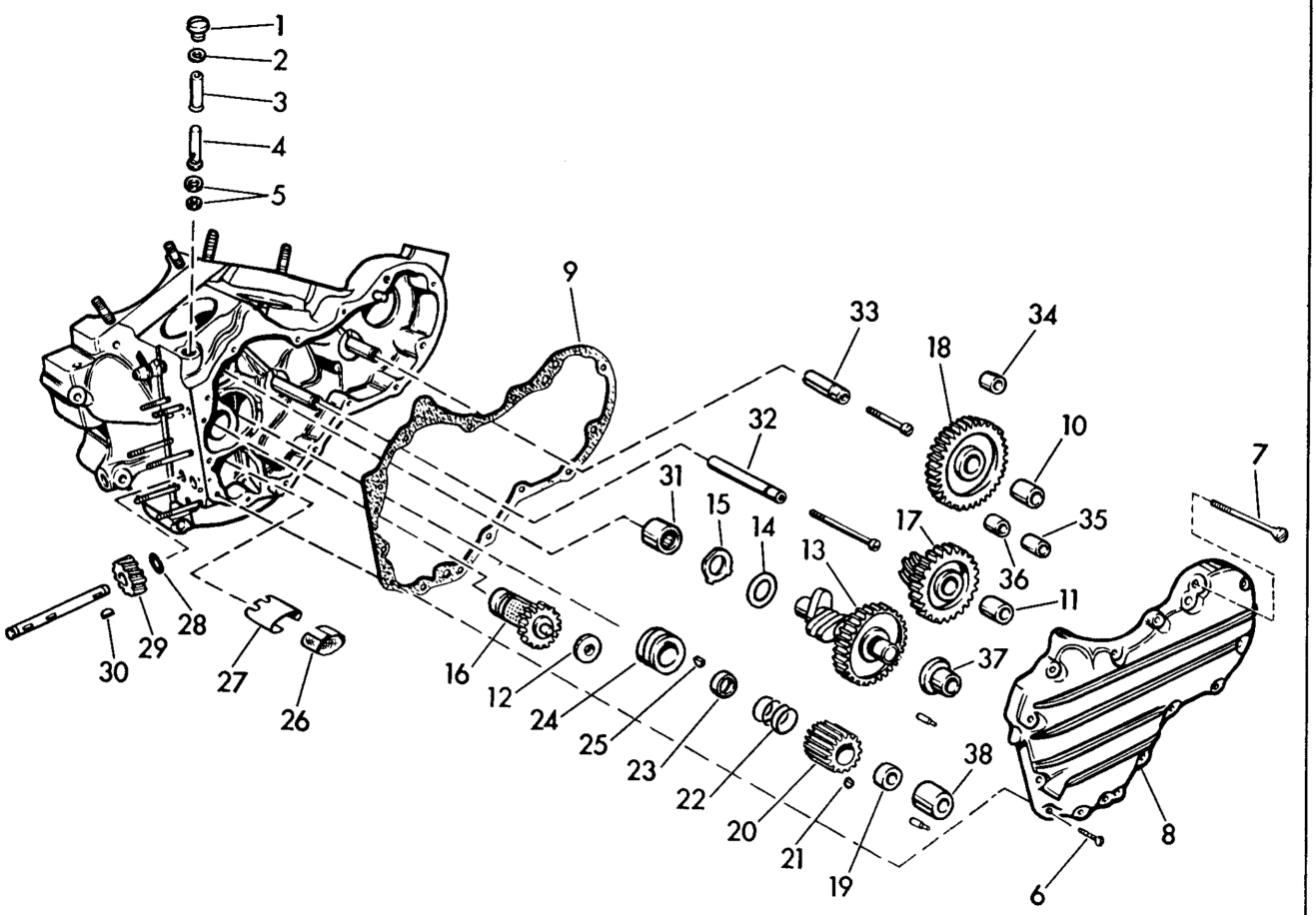

1. Oil screen cap
2. Cap gasket
3. Oil screen body
4. Oil screen
5. Oil screen seal (2)
6. Gear cover screw, 1-1/8 in. long (12)
7. Generator fastening screw (2)
8. Gear cover
9. Gear cover gasket
10. Idler gear spacer
11. Intermediate gear spacer
12. Breather valve spacing washer
13. Cam gear
14. Cam gear spacing washer
15. Cam gear thrust washer
16. Breather valve and gear
17. Intermediate gear
18. Idler gear
19. Gear shaft nut
20. Pinion gear
21. Pinion gear key
22. Pinion gear spring
23. Gear shaft pinion spacer
24. Oil pump pinion shaft gear
25. Oil pump pinion shaft gear key
26. Breather screen
27. Breather separator
28. Oiler drive gear shaft spring ring
29. Oiler drive gear
30. Oiler drive gear key
31. Needle roller cam shaft bearing
32. Intermediate gear stud
33. Idler gear stud
34. Idler gear bushing
35. Intermediate gear bushing (2)
36. See item 35
37. Gearcase cover cam shaft bushing
38. Gearcase cover pinion gear bushing

Figure following name of part indicates quantity necessary for one complete assembly.

Figure 3D-4. Gearcase - Exploded View

GEARCASE TIMING GEARS

GENERAL

The gearcase, located on the right side of the engine crankcase, contains a train of gears which transmit engine power to the cam shaft, crankcase breather, timer, oil pump and generator. The gearcase is lubricated with engine oil through the by-pass circulatory system and through the breather valve from engine crankcase.

All gear shafts run in bushings except the crankcase side of the cam shaft which operates in a needle roller bearing. The circuit breaker (timer) gear and intermediate gear turn on stationary shafts and are fitted with bronze bushings.

DISASSEMBLY (Fig. 3D-4)

Before disassembling gearcase, it is advisable to remove push rods, tappets, push rod hydraulic units and tappet guides as described in "Disassembling Tappets."

Remove oil screen cap (1), gasket (2), screen body (3), screen (4), and two screen seals (5). Remove screen from screen housing by rotating screen until notch in screen lines up with key in housing.

Remove 12 gearcase cover screws (6) and two long generator fastening screws (7) and remove generator.

Remove two timer-to-motor bolts and slip timer assembly out top of gearcase.

Tap gearcase cover with wood or rawhide mallet to loosen and remove gearcase cover (8) and gearcase cover gasket (9).

Remove idler gear spacer (10) and circuit breaker drive and intermediate gear spacer (11). Make a mark on one of the spacers to insure its assembly to the same gear. The spacers look identical but one may be thicker than the other.

Remove breather valve spacing washer (12).

Remove cam gear (13), spacing washer (14), and thrust washer (15).

Remove breather gear (16), intermediate gear (17) and idler gear (18).

Remove pinion gear shaft nut (19) which has a left-hand thread. Use Gear Shaft Nut Socket Wrench, Part No. 94555-55. Pull pinion gear (20) using Pinion Gear Puller and Installer, Part No. 96830-51 as shown in Fig. 3D-5. Tool has lefthand threads.

Remove key (21). Slip off spring (22), gear shaft pinion spacer (23), oil pump pinion shaft gear (24) and key (25).

Slip breather screen (26) and separator (27) out of pocket in gearcase.

Remove oiler drive gear shaft spring ring (28), oiler drive gear (29) and oiler drive gear key (30).

If necessary, remove oil pump stud nuts and washers and remove oil pump from gearcase. See "Disassembling Oil Pump."

CLEANING AND INSPECTION (Fig. 3D-4)

Wash and air-dry all parts. Wash inside of case. If crankcase is to be disassembled, wash parts after complete disassembly. If it is not to be repaired, be careful to get no grease solvent into crankcase when washing gearcase.

Inspect oil screen (4) carefully to make sure mesh is open. Holding screen to light is not an absolute check. It is possible for oil screen to be plugged or partially plugged with tiny lint-like fibers and still permit light to pass. Replace plugged or partially plugged screen. Probe oil screen hole in gearcase with a length of wire formed to a short hook to determine if there are any additional oil screen seal gaskets (5) in hole. More than the prescribed two will block off oil feed channel when screening unit is assembled.

Inspect breather screen (26). It must be clean and unobstructed.

Inspect cam gear and pinion gear bushings (37 and 38) in gearcase cover for pitting, scuffing and grooving. Determine amount of pinion and cam shaft wear in cover bushings. If it exceeds maximum tolerance shown in "Engine Specifications," Section 3A, by .001 in., install new bushings.

Inspect intermediate and idler gear fit on respective shaft. Examine bushings (34, 35 and 36) and stud shaft for pitting, grooving or scuffing. If amount of wear exceeds maximum tolerance shown in "Engine Specifications" by .001 in., replace bushings and/or stud shafts (32 and 33).

Attach dial indicator to gearcase cover mounting screw hole and determine amount of pinion shaft play in right main roller bearing. When tolerance in "Engine Specifications" is exceeded by .001 in., bearings should be replaced.

Inspect needle bearing (31) for wear, broken or gouged bearings. If end of cam shaft shows any appreciable wear (.003 in. or more), needle bearing is probably worn to a point where replacement of bearing and cam shaft are advisable.

Pinion shaft main roller bearing and cam shaft needle roller bearing may be replaced only when crankcase is disassembled (see "Disassembling Crankcase," Section 3E). Press needle roller bearing into crankcase from heavier end bearing the manufacturer's name only. Pressing from opposite end will crush roller race and bind rollers. Push new bearing into crankcase from gearcase side.

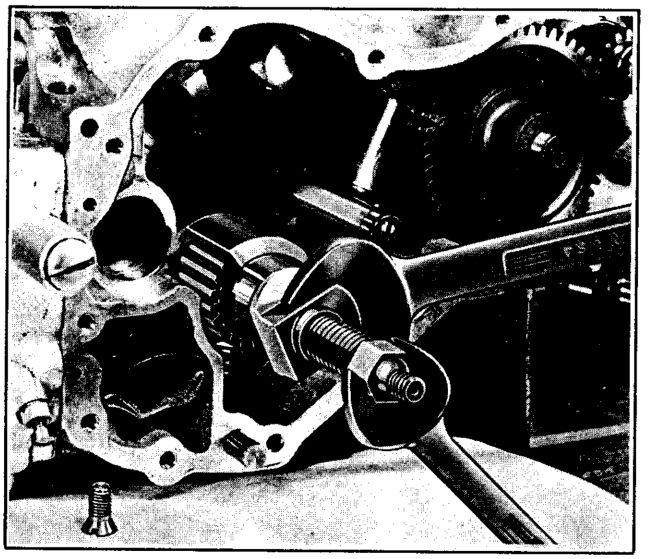

Figure 3D-5. Pulling Pinion Gear

Inspect gears for wear. Assemble pinion and cam gears to respective positions in gearcase. Mesh is considered ideal when no play between gears can be felt and cam gear can be moved back and forth along shaft axis without restriction. Omit cam gear end spacer in assembly for purposes of this check and attach cover with at least four cover screws.

REPLACING GEARCASE COVER BUSHINGS (Fig. 3D-4)

Remove pinion shaft cover bushing as follows (Fig. 3D-6):

Use tip of Gear Shaft Bushing Remover, Part No. 96760-36, under hand pressure, to ream old pinion shaft bushing until hole has been enlarged enough to turn in smallest tap as shown in Fig. 3D-6. When first tap bottoms against shoulder, bushing may be pulled using puller nut and sleeve. If preferred, bushing may be drilled 5/8 in., tapped and pulled using above tool.

Install new pinion gear shaft bushing (38) in hole in cover as follows:

Position bushing in cover so oil hole in bushing is exactly in line with lubrication channel outlet in cover. Press in bushing on arbor press until top of bushing is flush with cast bushing boss on cover. Locate and center punch new dowel pin location 1/8 in. or more from original location. Drill No. 31 hole 3/16 in. deep. Press in bushing until it bottoms on shoulder in cover boss hole. Continue drilling dowel pin hole to depth of 9/32 in. from top of bushing. Drive in new dowel pin and carefully peen edges of hole to lock pin in place.

To replace cam shaft cover bushing, proceed as follows:

Use Gear Shaft Bushing Remover, Part No. 96760-36, to extract old bushing. Make a mark on outside of bushing boss to locate original dowel pin hole. Press in new bushing with arbor press until shoulder is against cover boss. Locate new dowel pin hole at least 1/8 in. from original hole, centerpunch and drill No. 31 hole exactly 9/32 in. deep. Drive in new dowel pin and peen bushing edges over dowel to secure it.

Drill lubrication oil hole through wall of bushing with 5/32 in. drill, using oil hole in bushing boss as a drill guide.

Pinion shaft and cam shaft bushings must be line reamed to remove burrs and irregularities from hole

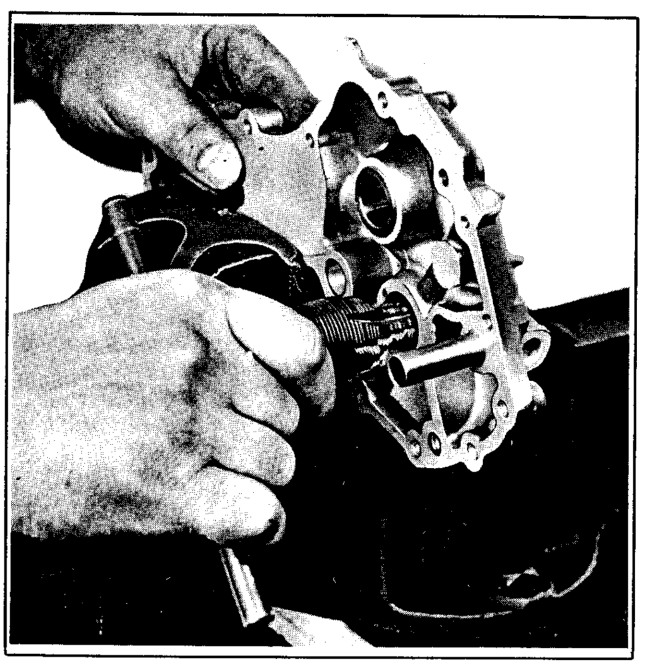

Figure 3D-6. Removing Pinion Shaft Cover Bushing

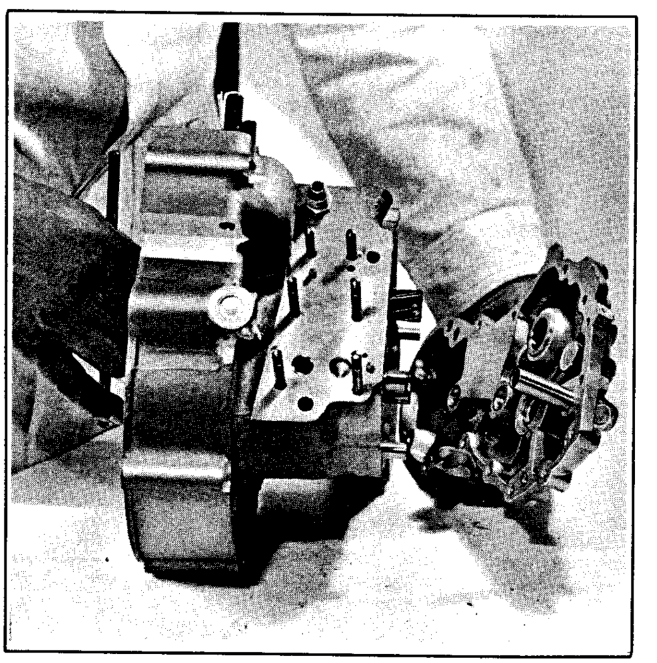

Figure 3D-7. Line Reaming Cover Bushing

and to insure perfect alignment. If crankcase is not disassembled, use any right crankcase side. Fasten cover in place with at least four screws.

To ream pinion shaft bushing, insert reamer pilot in right crankcase roller race. Insert 9/16 in. Pinion Shaft Cover Bushing Reamer, Part No. 94805-57, through pilot and push into cover bushing until it bottoms (see Fig. 3D-7), then give reamer one complete turn to size bushing. Rotate reamer the same direction (clockwise) during extraction.

To ream cam gear cover bushing, insert Cam Gear Shaft Bushing Reamer, Part No. 94802-36, through needle bearing in crankcase, into cover bushing. Turn reamer until it bottoms in gearcase cover.

Bushings in intermediate and idler gears may be pressed out on an arbor press using a suitable drift pin, and new bushings pressed in.

ASSEMBLY

Before assembling gear train, determine amount of end play in breather gear as follows: Assemble breather gear and dry cover gasket to gearcase. Select spacer washer (use washer disassembled unless it is known to give incorrect spacing) and position on

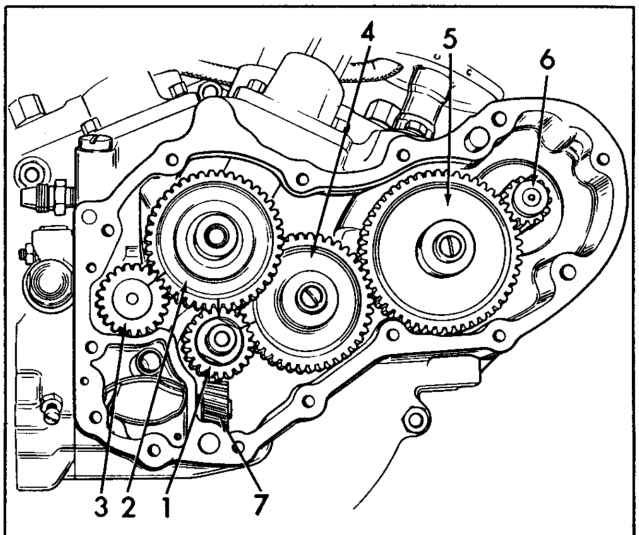

1. Pinion gear
2. Cam gear
3. Breather gear
4. Circuit breaker drive gear
5. Intermediate gear (not marked)
6. Generator drive gear (not marked)
7. Oil pump drive gear (not marked); secured on end of pump drive shaft with key and spring ring

Figure 3D-8. Timing Gears

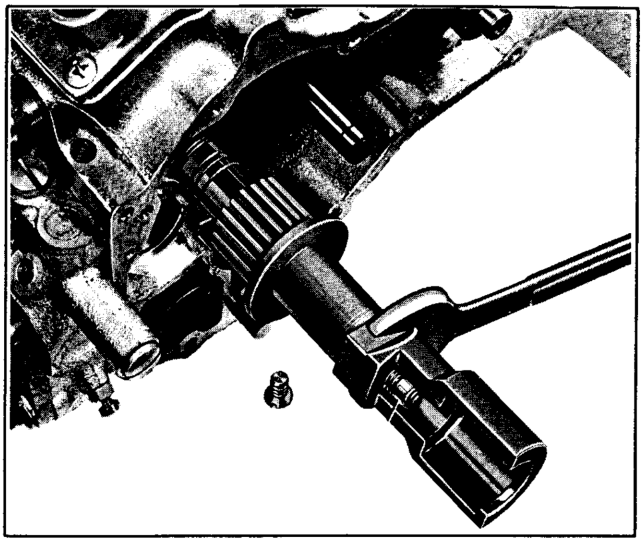

Figure 3D-9. Installing Pinion Gear

end of breather gear. Place a steel straightedge across gearcase at spacer. With thickness gauge, measure distance between straightedge and spacer. Subtract .014 in. (thickness of compressed gasket) from this figure to determine gear end play. An end play tolerance of .005 to .008 in. is correct. If end play exceeds maximum, insert thicker spacer. Breather valve and gear spacer washers are available .115, .120 and .125 in. thick.

Establish proper cam gear end play as follows: Install thrust washer, spacing washer and cam gear. Position cover gasket and secure cover with at least four screws. Measure cam shaft end play between cam gear and cover bushing with thickness gauge through tappet guide hole in gearcase. End play should be from .001 to .005 in. If measurement is under or over tolerance, remove cover and replace spacing washer with one to give suitable clearance. Cam gear spacing washers are available .050, .055, .060, .065 and .070 in. thick.

Make final gearcase assembly including all parts in approximate reverse of disassembly order. Fig. 3D-9 shows use of Tool Part No. 96830-51 to install pinion gear. Breather, cam, pinion and intermediate gears contain timing marks which must be aligned or matched as shown in Fig. 3D-8. Rotate gear train and note if it revolves freely. A bind indicates gears are meshed too tightly. Make sure intermediate and idler gear spacers are assembled to their respective shafts.

Position new cover gasket and cover and secure with all cover screws. Pour about 1/4 pint of engine oil over gears to provide initial lubrication before securing cover.

Assemble remainder of gearcase, generator and circuit breaker in reverse of order removed.

CRANKCASE

GENERAL

When rod bearings, pinion shaft bearings or sprocket shaft bearings are in need of repair, the engine must be removed from the motorcycle as described in "Stripping Motorcycle for Engine Repair," Section 3A. It is recommended procedure to check and make repairs to cylinder heads, cylinders and gearcase at the same time, or in other words, perform an entire engine overhaul.

Before starting crankcase disassembly, check sprocket or pinion shaft end play to determine sprocket shaft bearing wear using a dial indicator. Assemble engine sprocket and nut or compensating sprocket to sprocket shaft before taking reading to assure accurate measurement. Attach indicator so stem rests on end of sprocket or pinion shaft. Rotate flywheels and work all end play to one end of assembly. Adjust dial indicator, rotate flywheels and work assembly to other extreme. If play exceeds tolerance (see "Engine Specifications," Section 3A), replace entire sprocket bearing set.

DISASSEMBLING CRANKCASE

Remove cylinder heads as described in "Disassembling Cylinder Head," Section 3B.

Remove cylinders as described in "Disassembling Cylinder," Section 3C.

Remove gearcase parts as described in "Disassembling Gearcase," Section 3D. See "Crankcase," above for checking procedure before starting crankcase disassembly.

Refer to Fig. 3E-1 and proceed as follows:

Remove crankcase bolt (1), stud (2), crankcase breather stud assembly (3), stud (4), top and right crankcase studs (5) and two lower crankcase studs (6). It is necessary to remove only one stud nut and slip stud and other nut out opposite side of crankcase.

Refer to Fig. 3E-2 and continue disassembly:

Position crankcase with gearcase (right side) up. Tap crankcase with rawhide or soft metal mallet to loosen top half. Lift right crankcase half (1) off pinion shaft main bearings. Remove spiral lock ring (2) from pinion shaft with tip of screwdriver. Lift bearing washers (3 and 5) with bearings and bearing retainers (4) off pinion shaft.

Remove sprocket shaft spacer (6) secure pinion shaft end of flywheels in copper vise jaws and turn out sprocket shaft bearing nut (7) with Sprocket Shaft Bearing Nut Wrench, Part No. 97235-55 (Fig. 3E-4). Thread is lefthand.

Mount flywheel and left case assembly on press table supporting case on parallel bars (Fig. 3E-5) and press

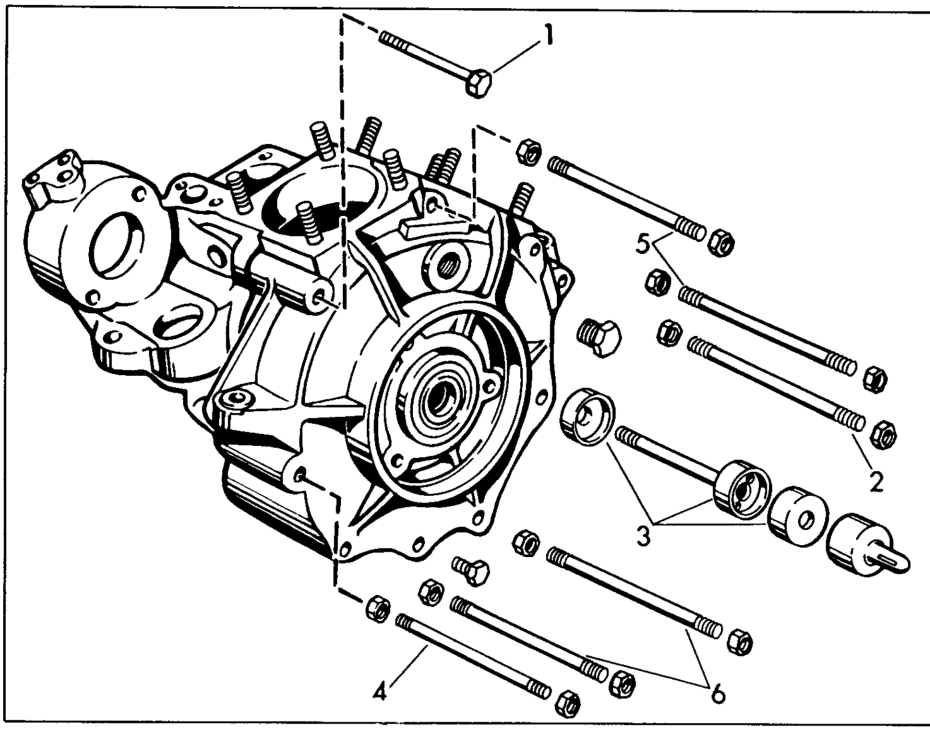

1. Crankcase stud bolt, 3/8 x 3-1/4 in. (top left)
2. Crankcase stud, 5/16 x 5 in. (right center)
3. Crankcase breather stud assembly
4. Crankcase stud, 5/16 x 6 in. (left center)
5. Crankcase stud, 5/16 x 5-7/16 in. (2) (top and top right)
6. Crankcase stud, 11/32 x 5-13/16 in. (2) (left and right bottom)

Figure following name of part indicates quantity necessary for one complete assembly. Locations are as viewed from left side of engine.

Figure 3E-1. Crankcase Studs - Exploded View

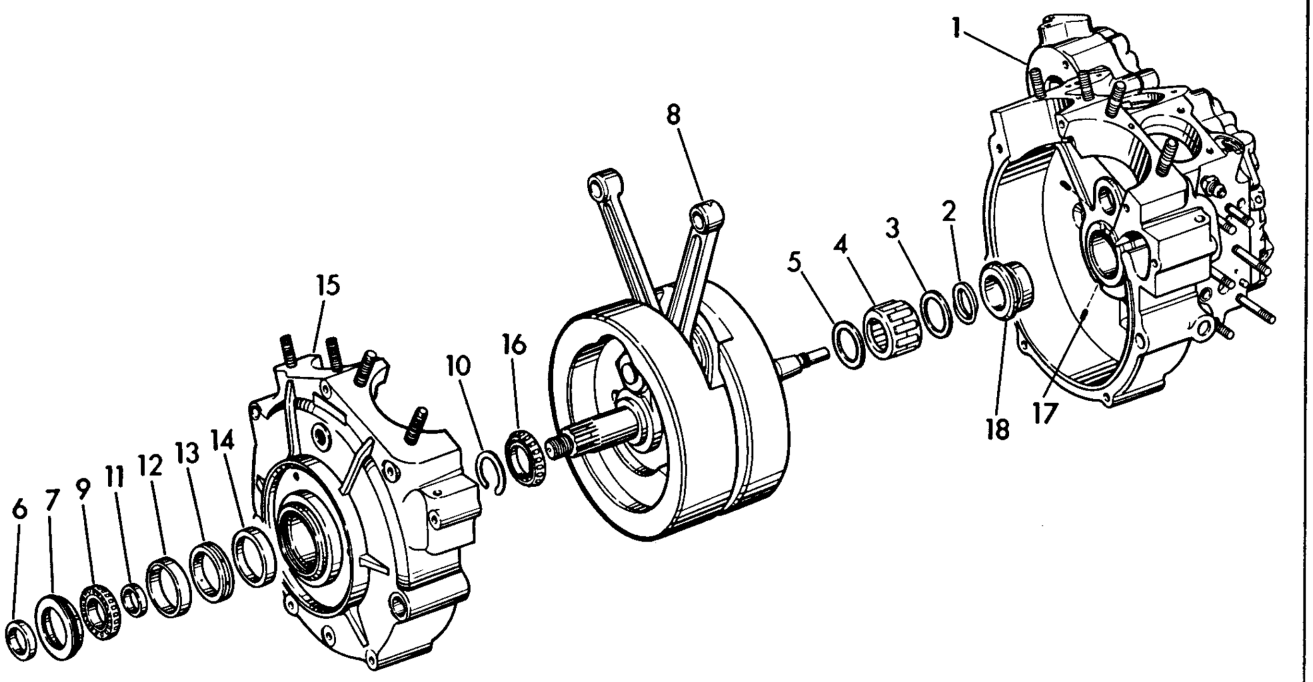

1. Right crankcase half
2. Spiral lock ring
3. Bearing washer (2)
4. Bearings and retainer
5. Bearing washer (see item 3)
6. Sprocket shaft spacer
7. Sprocket shaft bearing nut
8. Flywheel and rod assembly
9. Sprocket bearing half
10. Flywheel side outer race snap ring
11. Bearing spacer
12. Bearing outer race
13. Bearing spacer
14. Bearing outer race
15. Left crankcase half
16. Sprocket bearing half
17. Pinion shaft bearing race lock screw (2)
18. Pinion shaft bearing race

Note: Keep parts 9, 11, 12, 13, 14 and 16 as a set. Do not transpose or interchange parts. Figure following name of part indicates quantity necessary for one complete assembly.

Figure 3E-2. Crankcase - Exploded View

on end of sprocket shaft with arbor press until flywheel assembly (8) drops out, freeing sprocket side bearing half (9) and spacer (11).

Remove flywheel side outer race snap ring (10) from groove in case by prying end with screwdriver and inserting thin screwdriver or knife blade between snap ring and case.

Reposition case on press table and press out outer races (12 and 14) and bearing spacer (13) from case (15) using Sprocket Shaft Bearing Outer Race Press Plug, Part No. 97194-57 (Fig. 3E-6).

If flywheels are to be disassembled, grip pinion shaft in vise and pull bearing from sprocket shaft using the Bearing Puller Part No. 96015-56. Place hooked ends of puller halves behind bearing and hold collar over puller halves. Engage puller screw cross in puller slots and pull bearing off by tightening puller screw against sprocket shaft center as shown in Fig. 3E-7. Keep bearings (9 and 16) in a set with proper bearing outer races (12 and 14).

DISASSEMBLING FLYWHEELS (Fig. 3E-8)

Grip pinion shaft in copper covered vise jaws so shafts are in vertical position. Insert a rod about 5 in. long and 1/2 in. in diameter through holes in flywheels to keep them from turning. Remove lock plate screw (1), lock plate (2) and crank pin nut (3). Strike left flywheel with soft metal mallet at about 90 degrees from crank pin hole on wheel periphery to loosen. Lift left flywheel (4) off crank pin.

Hold down bearing assembly with a short length of pipe or tubing so connecting rods (5) may be slipped off bearings. Remove bearings (6). Hold together in set until bearings are washed and refitted to crank pin.

Remove lock plate screw (7), lock plate (8) and gear shaft nut (9). Tap pinion shaft (11) out of flywheel (10). Remove key (12) from shaft.

Clamp crank pin in vise. Remove lock plate screw (13), lock plate (14) and crank pin lock nut (15). Tap crank pin (16) out of flywheel and remove key (17).

Grip sprocket shaft in vise and remove lock plate screw (18), lock plate (19) and sprocket shaft lock nut (20). Remove sprocket shaft (21) by tapping it out of flywheel, and remove key (22).

CLEANING AND INSPECTION

Wash all parts in grease solvent and blow dry with compressed air. Examine crank pin for wear, grooving and pitting. If the surface is at all worn, replace with new pin. Examine flywheel washers (23 and 24). If either washer is worn and grooved, it should be renewed.

Examine connecting rod lower races. If they appear slightly grooved or shouldered where edge of bearing rollers ride, they may be lapped out and oversize bearing rollers installed. If they appear badly worn, grooved or pitted, the rods may be returned to the factory through any authorized Harley-Davidson dealer for repair, straightening and refitting with new bearings and piston pin bushings.

Examine pinion shaft and right crankcase bushing (see 18, Fig. 3E-2) for pitting, grooving and gouging at point where right main roller bearings ride. A shaft that is worn must be replaced. If bushing is worn beyond repair, replace as described in "Truing and Sizing Pinion Shaft Main Bearing."

Examine sprocket shaft outer races for wear, grooving, and pitting. Examine bearing rollers for wear, pitting, grooving and heat discoloration. The sprocket shaft Timken tapered roller bearings are manufactured in selectively fitted sets. The same serial

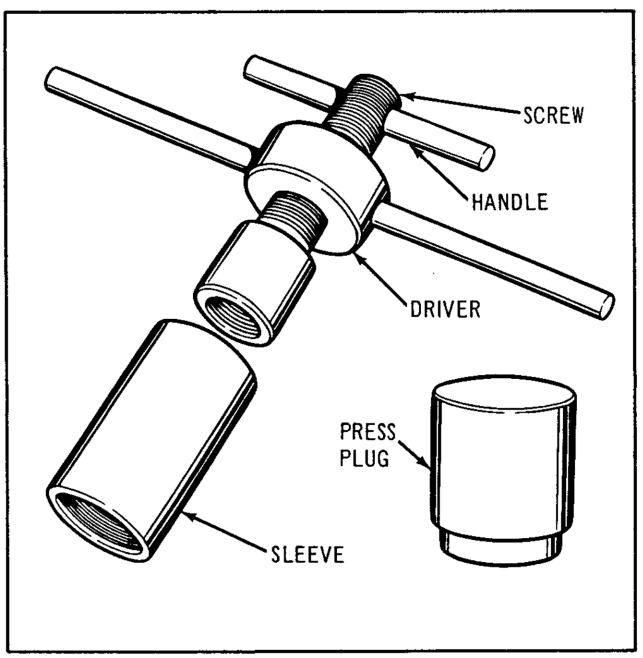

Figure 3E-3. Sprocket Shaft Bearing Puller Tools

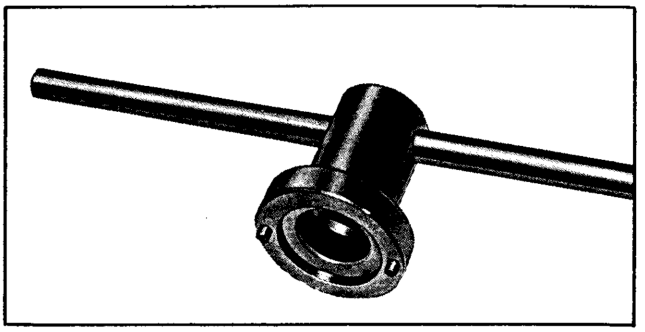

Figure 3E-4. Sprocket Shaft Bearing Nut Wrench

number appears on all parts. If any part is unusable, the complete set must be replaced.

REPLACING FLYWHEEL WASHERS

Replace worn flywheel washers as follows:

Washer is a close fit in recess in flywheel and is secured originally by punching flywheel metal tight against the washer at several points. It is usually necessary to drill a small hole (1/8 in. or smaller) at the outer edge of the washer to permit getting a pointed tool underneath to pry it out. The hole is drilled only slightly deeper than the thickness of the washer to avoid removing more metal than necessary.

Before installing new washer, scrape outer edge of washer recess where metal was punched against it so new washer may seat fully against recess bottom. If washer does not seat fully, forked rod is not likely to have necessary clearance for side play.

LAPPING CONNECTING ROD RACES

Connecting rod lower races that are likely to clean up within the range of oversize bearing rollers and are otherwise in serviceable condition, should be trued and sized with Connecting Rod Lapping Arbor, Part No. 96740-36, as shown in Fig. 3E-9.

Turn lap in lathe at 150 to 200 rpm. Adjust lap by means of adjusting nut to a dragging but free fit in rod race. Clean lap before using, then apply fine lapping compound (No. 220 grit grinding compound mixed with oil) to lap. A loose or tight lap will "bell mouth" bearing race so it must be kept adjusted at all times. To avoid grooving or tapering lapped surface in rod, work rod back and forth the full length of the lap holding rod as near race end as possible. Lap rods individually.

When rods are lapped true and all traces of pit marks or grooving are cleaned up, wash rods and blow dry. Surface should have a soft velvety appearance and be free of shiny spots. Assemble crank pin on right flywheel (see "Fitting Rod Bearings" before assembling flywheels). Wipe pin taper and flywheel taper perfectly clean and free from oil. Insert key in keyway and position flywheel over pin held in vise. Tighten nut very tight using Crank Pin and Flywheel Nut Wrench Part No. 94545-26. If necessary, tighten nut

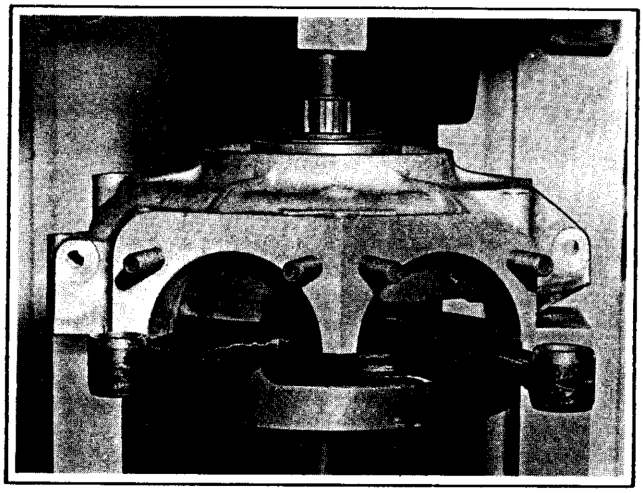

Figure 3E-5. Pressing Flywheels Out of Crankcase

to make lock plate notches line up with corners of the nut with the lock washer screw hole in alignment. Never loosen nut to achieve this register. Never use length of pipe over handle of crank pin nut wrench. Handle length has been determined by strength of average man and is designed to give nut suitable tension with only this specific handle length used.

Assemble pinion shaft to right flywheel, with the Crank Pin and Flywheel Nut Wrench.

FITTING ROD BEARINGS

There are three ways to determine oversize rollers to use. All will result in properly fitted bearings if applied correctly.

1. Use a micrometer to measure the outside diameter of the crank pin at its center. Use an inside micrometer or telescoping hole gauge to measure the inside diameter of the rod races. Subtract the diameter of the crank pin from the inside diameter of the bearing race. Subtract from this figure the standard

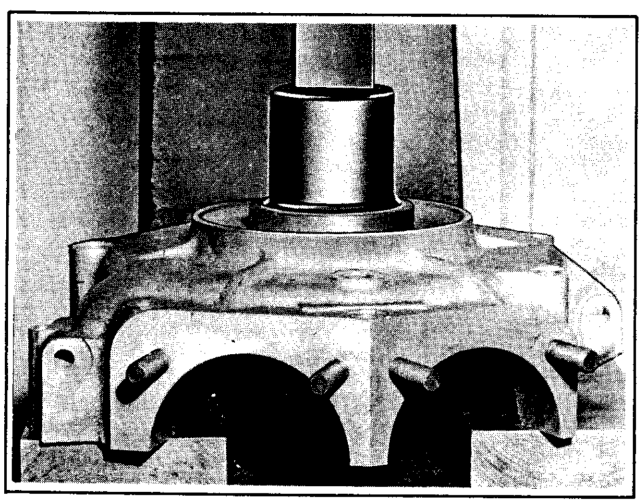

Figure 3E-6. Pressing Bearing Races Out of Crankcase

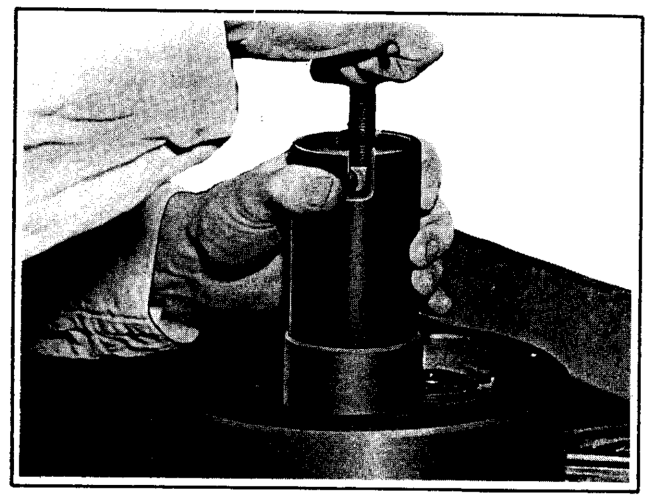

Figure 3E-7. Pulling Bearing from Sprocket Shaft

allowance for bearing running fit size. This answer, divided by two will give proper roller size. To find oversize amount of bearing, subtract from this figure the diameter of a standard roller.

Example:

The rod bearing race measures 1.6263 in. after lapping and truing. The crank pin is slightly worn and measures 1.2485 in. Subtract 1.2485 in. from 1.6263 in. The answer, .3778 in., represents the diameters of both rollers (one on each side) plus clearance for running fit. Subtract minimum clearance for running fit (.001 in.). The answer (.3768 in.) is then divided by two to get the diameter of each oversize roller. In this case it would be .1884 in. To find how much oversize each roller must be, subtract from this figure the diameter of a standard roller, or .1875 in. Rollers must be .0009 in. oversize.

2. Install any new set of oversize rollers to bearing races and position on crank pin. Slip rods over bearings. If they will not fit, it is obvious rollers are too large and a smaller size must be tried. If they fit and spin freely, install a larger set of rollers. Try various roller sizes until the rods will turn with a very slight drag. This is a plug fit. Determining running fit is merely a matter of subtracting one half the desired running fit clearance (.0005 in.) from the roller size to find the running fit roller size.

It may be easier to gauge a plug fit as follows:

3. Fit any size rollers into races. Position bearings in rods. Support rods and bearings with left hand. Drop crank pin (not attached to flywheel) through crank pin hole. Plug fit has been achieved when crank pin will slide slowly through hole from its own weight. Running fit is then determined by subtracting one half running clearance from oversize of rollers used to make plug fit.

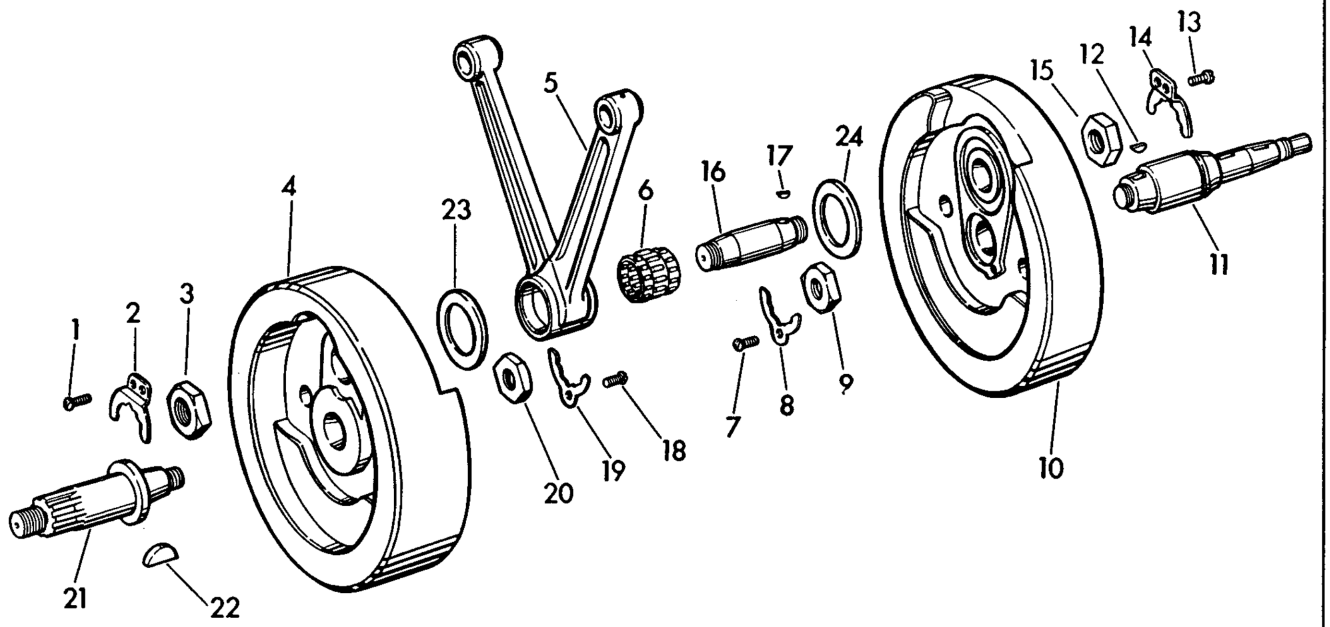

1. Lock plate screw (4)
2. Lock plate (2)
3. Crank pin nut (2)
4. Left flywheel
5. Connecting rods (one forked, one single end)
6. Bearing rollers and retainers
7. Lock plate screw (see item 1)
8. Lock plate (2)
9. Gear shaft nut (2)
10. Right flywheel
11. Pinion shaft
12. Pinion shaft key
13. Lock plate screw (see item 1)
14. Lock plate (see item 2)
15. Crank pin lock nut (see item 3)
16. Crank pin
17. Crank pin key
18. Lock plate screw (see item 1)
19. Lock plate (see item 8)
20. Sprocket shaft nut (see item 9)
21. Sprocket shaft
22. Sprocket shaft key
23. Flywheel washer (2)
24. Flywheel washer (see item 23)

Figure following name of part indicates quantity necessary for one complete assembly.

Figure 3E-8. Flywheel Assembly - Exploded View

Example:

Plug fit is achieved with .0009 in. oversize rollers. By subtracting from this one half the minimum clearance (.0005 in.) it is determined that a .0004 in. oversize roller set will give desired running fit.

If lower end race of one rod is found to be slightly larger than the other, select rollers to fit the larger rod race and lap smaller rod race to same size as larger race rather than fitting rollers of two sizes.

When rods are correctly fitted with required bearing clearance, extreme upper end of female (forked) rod will have just barely noticeable side shake while the upper end of the male rod will have .025 in. to 1/32 in. (.031 in.) side shake. All fitting and checking must be made with bearings, rods and crankpin clean and free of oil.

Fitting bearings tighter than described may result in seizing and bearing damage when heat expands parts.

Check overall width of roller retainer assembly. It must be less than width of female rod end.

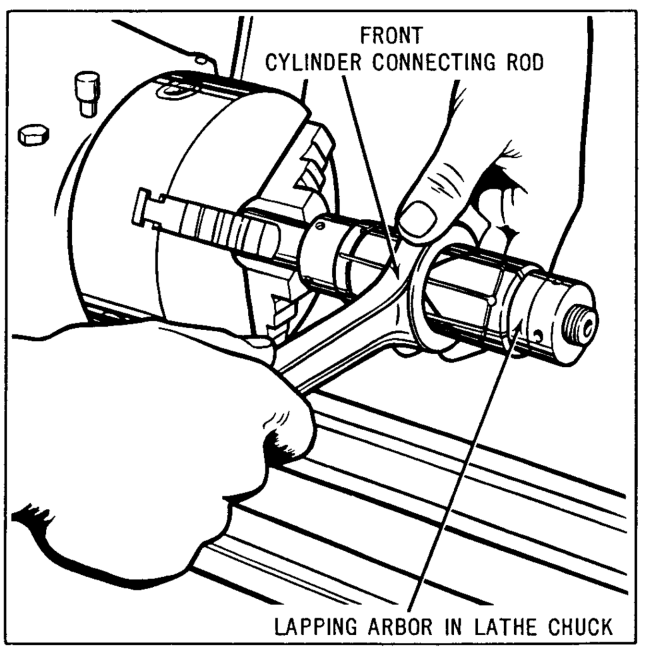

Figure 3E-9. Lapping Connecting Rod Bearing Race

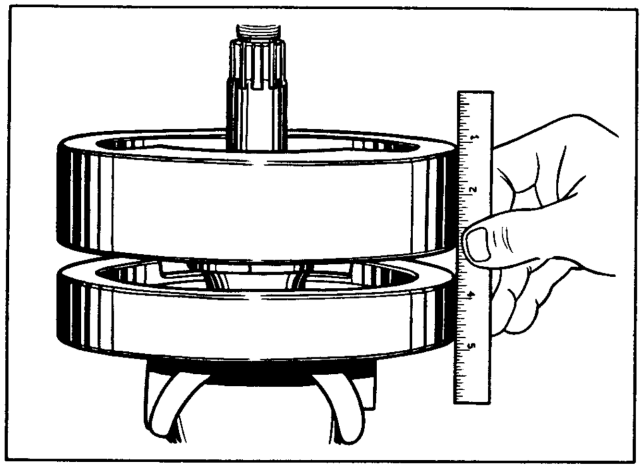

Figure 3E-10. Squaring Flywheel Faces

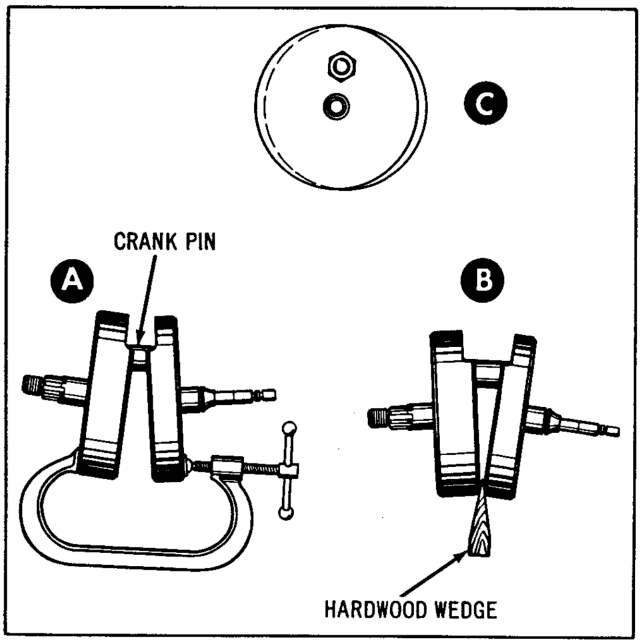

Figure 3E-11. Correcting Flywheel Alignment

ASSEMBLING FLYWHEELS

After correct connecting rod bearing fit has been attained, clean and assemble parts as follows: Install sprocket shaft to left flywheel and pinion shaft and crank pin to right flywheel. Check to make sure oil passages through pinion shaft, right flywheel and crank pin are clear by blowing compressed air into hole near end of pinion shaft.

Position right flywheel assembly in vise, crank pin up. Wipe crank pin taper clean. Slip bearings and connecting rods over crank pin with forked rod to rear cylinder. Wipe crank pin hole in left flywheel clean and dry. Install left flywheel and tighten nut lightly. Hold steel straightedge along outer face of wheel rims at 90 degrees from crank pin as shown in Fig. 3E-10. Tap outer rim of top wheel until wheels are concentric. Tighten nut. Recheck with straightedge at frequent intervals. Use soft metal

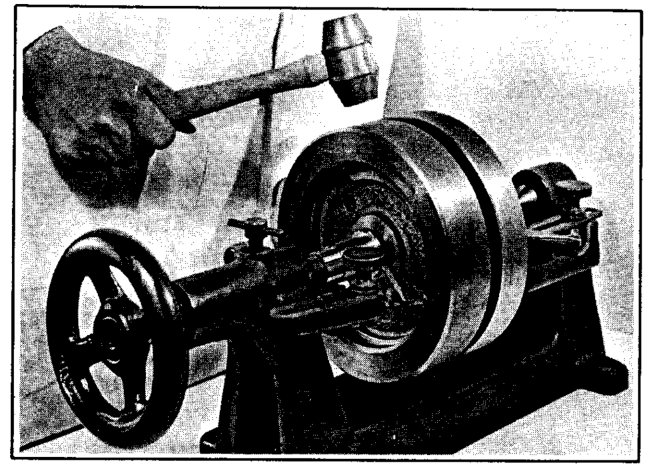

Figure 3E-12. Truing Flywheels on Truing Stand

hammer to realign wheels. To prevent flywheel assembly from turning in vise while tightening nut, insert a rod 5 in. long and about 1/2 in. in diameter through holes in flywheels and between vise jaws so that rod bears against some part of the vise.

When nut is fairly tight, install flywheel assembly in Flywheel Truing Device, Part No. 96650-30. Adjust so centers are snug. Wheels must turn freely but shafts may not be loose in centers. If flywheel assembly is either loose or squeezed, indicators will not indicate accurately. Adjust indicators to take reading as near to flywheels as possible, so pointers read at about the middle of the scales.

Turn flywheels slowly and observe the movement of indicator pointers. Movement toward flywheels indicate high points of shafts. Find highest point of each shaft and chalk-mark flywheel rims at those points. Loosen centers slightly, just enough so looseness may be detected, and make corrections as follows:

Flywheels may be out of true three ways, A, B and C, Fig. 3E-11 or a combination of two of the three ways.

When wheels are both out of true as indicated in "A," tighten a C-clamp on rims of wheels opposite crank pin and lightly tap the rim at the crank pin with lead or copper mallet.

When wheels are both out of true as indicated in "B", drive a hardwood wedge between the wheels opposite the crank pin and lightly tap the rims near the crank pins with a mallet.

When wheels are out of true as indicated in "C," strike the rim of the wheel a firm blow at about 90 degrees from crank pin on high side (see Fig. 3E-12).

When wheels are out of true in a combination of any of conditions shown, correct A or B first, tapping rim of offending wheel only, and then correct condition C.

The number of blows required and how hard they should be struck depends on how far shafts are out of true and how tight nuts are drawn. Remember that centers must be loosened slightly before striking flywheels. Making them too loose may result in damaged centers. Never strike wheels a hard blow near crank pin. This could result in a broken crank pin.

Readjust centers, revolve wheels and take reading from indicator. Repeat truing operation until indicated run out does not exceed .001 in. (each graduation on indicator is .002 in.).

If it is impossible to true wheels, check for a cracked flywheel, damaged or enlarged tapered hole, or a sprocket or pinion shaft worn out of round at surface where indicator reading is being taken. When wheels are true, position in vise and draw crank pin nuts very tight using Crank Pin and Flywheel Nut Wrench, Part No. 94545-26. Check connecting rod side play with thickness gauge as shown in Fig. 3E-13. If it is greater than tolerance shown in "Engine Specifications," Section 3A, draw up crank pin nuts until within tolerance. Insufficient play between rods and flywheel face is caused by one of following conditions:

1. Flywheels and crank pin assembled with oil on tapers and nuts over-tightened. Disassemble, clean, reassemble.

2. New flywheel washers installed and not fully seated. Disassemble, inspect, replace deepest seating flywheel or exchange crank pin. As last resort, grind down width of forked rod.

3. Taper holes enlarged as a result of having been taken apart several times. Replace wheel seating deepest.

4. Cracked flywheel at tapered hole. Replace flywheel.

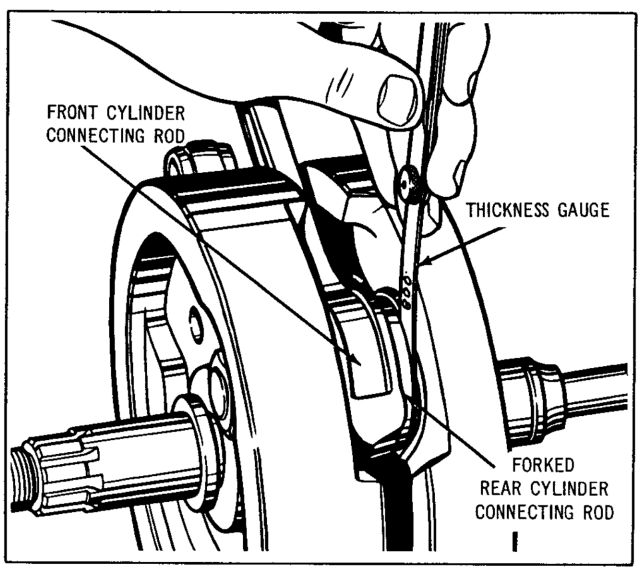

Figure 3E-13. Checking Connecting Rod Sideplay

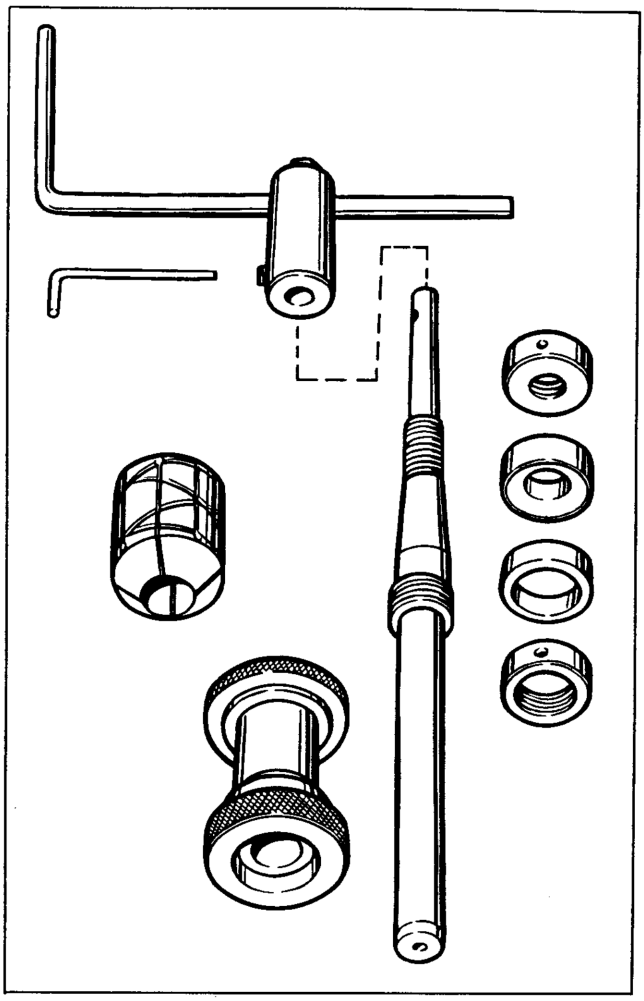

Figure 3E-14. Main Bearing Lapping Tools

If sides of forked rod are ground to get desired clearance, backs of bearing retainers must be ground down to remain narrower than width of female rod.

After rod sideplay is checked and adjusted, crank pin nut pulled very tight and lock plate and screw installed, again recheck wheel trueness on truing device. Correct any run-out as above.

TRUING AND SIZING PINION SHAFT MAIN BEARING

Before fitting new pinion shaft main bearings, lap bearing race in crankcase to true it and remove traces of wear shoulder at sides of roller paths. Using Crankcase Main Bearing Lap, Part No. 96718-58, consisting of lapping shaft, handle, lapping arbor and guide sleeve (Fig. 3E-14).

A race that is worn beyond limits of oversize bearings must be replaced. To remove worn bearing race, remove two bearing race lock screws (17, Fig. 3E-2) from inside of case. Heat case to 275 - 300 degrees F. Heating expands case and makes it possible to remove bearing race using less force. Press worn race (18, Fig. 3E-2) out and new race in. New race must be lapped slightly to true and align

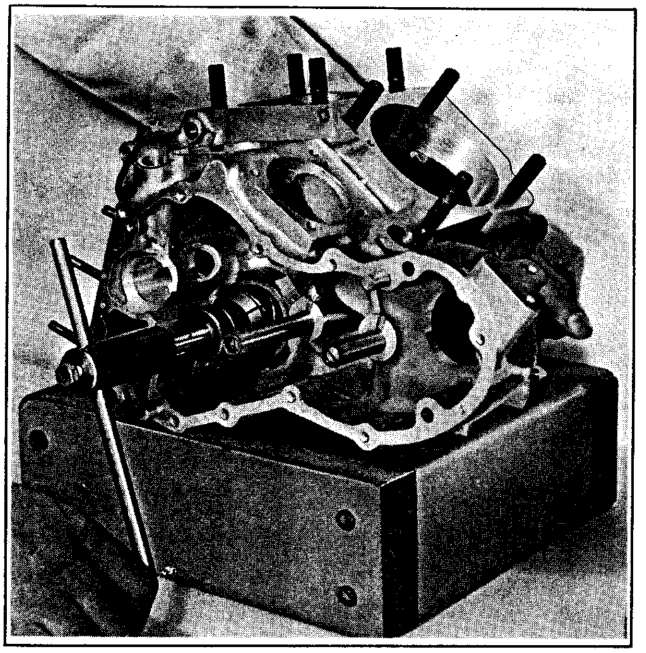

Figure 3E-15. Lapping Pinion Shaft Main Bearing Race

with left case bearing, and to attain a size compatible with roller sizes available.

LAPPING ENGINE MAIN BEARINGS (Fig. 3E-15). Secure right and left crankcase halves with three crankcase stud bolts (top center and bottom left and right). The sprocket shaft bearing outer races and large spacer must be installed in left crankcase.

Assemble lapping arbor to lapping handle and assemble guide sleeve to sprocket shaft bearing bushing. Sleeves for use with tapered bearing, are assembled to case with bearings and small spacer collar. Turn sleeve parts finger tight.

Insert lap shaft with arbor assembled through pinion bearing bushing and into guide sleeve. Tighten arbor expansion collars using a length of 5/32 in. rod as spanner until arbor begins to drag. Do not adjust arbor snug in bushing or bushing will "bell," a condition where hole is larger at ends than it is in the center.

Withdraw arbor far enough to coat lightly with fine lapping compound. Do not apply a heavy coat. Reposition lap in bushing and turn handle at moderate hand speed. Work lap back and forth in bushing as it is revolved to avoid grooving and tapering.

At frequent intervals, remove lap from crankcase, wash and inspect bushing. Lapping is completed when entire bushing surface has a dull, satin finish rather than a glossy, smooth appearance. If necessary, flush off lap in cleaning solvent, air dry and apply fresh, light coat of fine lapping compound.

FITTING PINION SHAFT BEARING

The fitting of pinion shaft bearing is done in much the same way as fitting lower rod bearings (see "Fitting Rod Bearings"). A plug fit is first determined using the pinion shaft that will be used on engine being overhauled, or spare shaft of exactly same size. When a plug fit has been found, pinion shaft will enter bearing slowly under its own weight, will turn with only a very light drag and will have no perceptible shake.

A running fit is determined from a plug fit by subtracting one half the desired running fit clearance from the size of the plug fit rollers.

Example:

Running fit clearance is .0005 to .001 in. loose. See "Engine Specifications," Section 3A. If a plug fit was achieved with .0006 in. oversize rollers, subtract one half running fit clearance from plug fit roller oversize. Use figure representing middle or average of tolerance span, .00075 or .0008 in. One half the average of tolerance (.0004 in.), subtracted from roller oversize (.0006 in.), indicates that .0002 in. oversize rollers should be used to produce a suitable running fit.

Oversize rollers are available in .0002, .0004, .0006, .0008 and .001 in. sizes. All calculations should therefore be made to nearest available even-numbered size. In the example above, it would be possible to arbitrarily decide upon .0006 in. as a running fit rather than the .0008 in. if desired. Final decision would rest largely upon intended use of motorcycle. For highspeed work, the more free fit would be better, while the closer tolerance is suited to road use at average speeds. This consideration may be made in fitting all tolerances.

All fitting must be done with bearings that are clean and dry. Oiled surfaces will take up some clearance and give a false reading.

FITTING SPROCKET BEARING

If Timken tapered roller bearings and races pass visual check and have no apparent wear, the same set may be reinstalled. Make certain all parts of bearing are installed in exactly the same order they were removed. If any part of bearing assembly is worn, entire assembly should be replaced.

ASSEMBLING CRANKCASE (Fig. 3E-2)

Install flywheel side outer race snap ring (10) in case. Using arbor press and Outer Race Press Plug, Part No. 97194-57 press outer races (12 and 14) and bearing spacer (13) into crankcase bushing one at a time. Press the races into the case with widest ends outward to match taper of bearings. Be sure the first race bottoms on the snap ring and each successive part tight against the one before.

Install bearing (16) spacer (11) on sprocket shaft using bearing tool. Press the parts on using sprocket shaft spacer (11) as a pressing spacer only. Turn tool screw onto sprocket shaft thread and tighten securely. Remove tool handle and slip the bearing



Figure 3E-16. Pressing Bearing on Sprocket Shaft

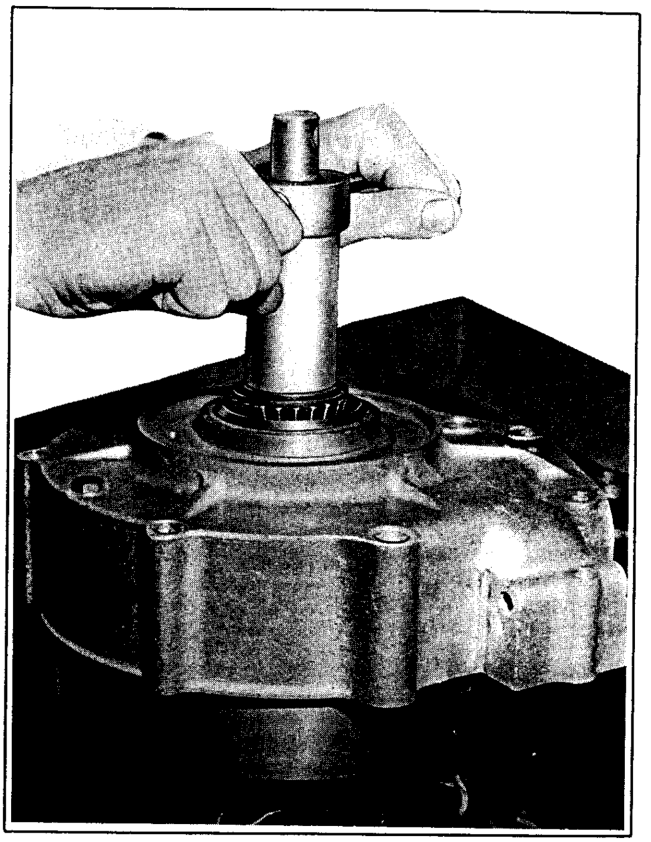

Figure 3E-17. Pressing Flywheel into Crankcase

small end up over sprocket shaft, starting it squarely. Install the small bearing spacer and the sprocket shaft spacer. Place tool sleeve on spacers and press bearing against flange on flywheel using the tool driver and handle as shown in Fig. 3E-16.

Position flywheel assembly in vise with sprocket shaft up. Slip crankcase half (15), with outer race parts installed, over shaft. Slip bearing over tool screw, small end down. Position tool sleeve and turn on driver. Turn driver down against sleeve pressing bearings tightly together as shown in Fig. 3E-17. Bearings must be tight against the bearing spacer to provide correct bearing clearance.

Install bearing lock nut (7) in crankcase using Sprocket Shaft Bearing Nut Wrench, Part No. 97235-55. Nut should be started by hand. Thread is left hand. Final tightening may be left until case is assembled.

Remove assembly from vise and install bearing washer (5), bearings (4) and bearing washer (3) to pinion shaft. Install new spiral lock ring (2) to groove in pinion shaft. Slip right case half over bearing and against left case half after applying a coat of Perfect Seal No. 4 to parting surfaces.

See Fig. 3E-1. Align case halves and tap crankcase stud bolts (6 and 5) into holes. These two studs properly align the case halves and must be installed before remaining studs. Start nuts and tighten until snug. Insert remaining studs and bolt and tighten all nuts securely.

Tighten sprocket shaft bearing nut. Install sprocket spacer (6, Fig. 3E-2) and sprocket or sprocket shaft extension. Start sprocket nut and tighten securely.

FUEL SYSTEM

CARBURETOR

The carburetor is a plain tube carburetor containing a venturi, and a discharge nozzle through which fuel is drawn into the air stream passing through the venturi. The quantity of fuel is metered by two jets or openings, one for low and one for high speed, before entering the nozzle.

Needle valves in the low and high speed passages allow the carburetor to be adjusted for the slightly varying and individual needs of the engine. Once a carburetor is adjusted, it requires little if any attention. At most, two "clicks" or notches richer or leaner on the needles are all that should be necessary to correct air-fuel mixture for changes in weather conditions. All carburetor final adjustments should be made with the engine at full operating temperature.

ADJUSTING CARBURETOR

Before attempting to correct faulty engine performance through carburetor adjustment, check over "Locating Operating Troubles", Section 1C, particularly points 4, 5, 11, 12, 18, 19, 20, 35 and 36. In addition, be sure air cleaner element is clean and check carburetor and manifold connections to be sure they are tight.

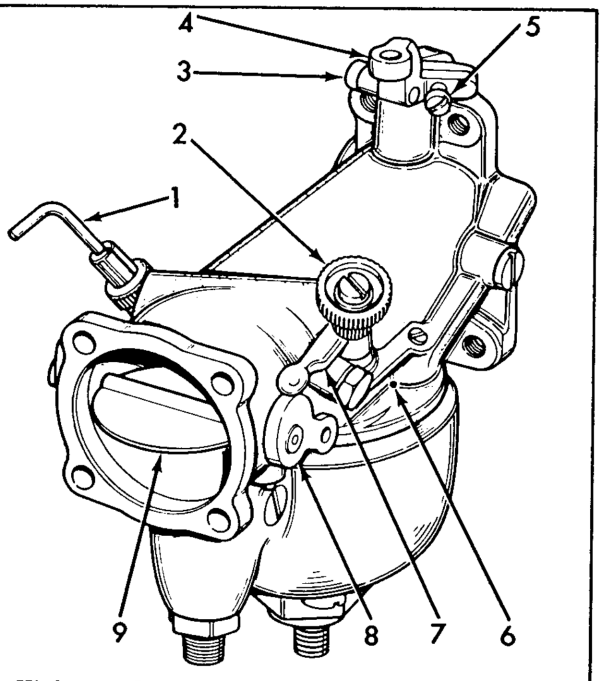

1. High speed needle
2. Low speed needle
3. Throttle lever lock screw
4. Throttle lever
5. Throttle stop screw
6. Carburetor bowl vent
7. Low speed needle lift lever
8. Choke lever
9. Choke disc

Figure 3F-1. Carburetor Controls and Adjustments

Both high and low speed needles (1 and 2, Fig. 3F-1), are turned clockwise, or in, to make leaner mixture, and counterclockwise, or out, to make mixture richer. Both needles are held to whatever position they are set by a spring and ball plunger which drops into notches in the needle adjusting screw.

A carburetor may be adjusted as follows:

Turn both low and high-speed needles all the way in (clockwise). Back out the low speed needle five turns. Back out the high-speed needle two turns. With needles in these positions, the engine will start but the mixture will be too rich. Advance spark all the way or nearly all the way, whichever is best. Warm engine to full operating temperature and correct adjustment of both needles.

Adjust low speed first, with engine at operating temperature and idling. Turn needle in, one notch at a time, until mixture becomes so lean that the engine misses and acts starved. Back out the needle five to ten notches, or until engine hits regularly with spark advanced and throttle closed, or as nearly closed as it can be set and still have engine run at idling speed.

Adjust throttle lever stop screw (5, Fig. 3F-1) to make engine idle at desired speed with throttle fully closed. Turning screw clockwise makes engine idle faster. Never set idle adjustment to slowest possible speed. An extremely slow idle causes bearing wear, oil consumption and slow speed accelerating difficulties.

Make final readjustment on low speed needle. Try one notch at a time, first in and then out, to see if engine picks up speed or runs more smoothly. Starting and all around carburetion will be better with low speed adjustment set slightly rich rather than lean. If necessary, make further adjustment on idle stop screw to obtain desired idling engine speed. Retard spark completely. If carburetor is properly adjusted, engine will continue to run evenly and smoothly, though more slowly.

During high speed operation, fuel is metered by a fixed jet (35, Fig. 3F-2) which has no adjustment. However, the high speed needle may be used as "trimmer valve" to supplement the fuel flowing through the jet during extremely high speed operation (opened amount which achieves best results). It may be closed during operation at high altitudes to keep mixture from becoming too rich in the rarified air.

DISASSEMBLING CARBURETOR (Fig. 3F-2)

Disconnect carburetor from motorcycle as follows:

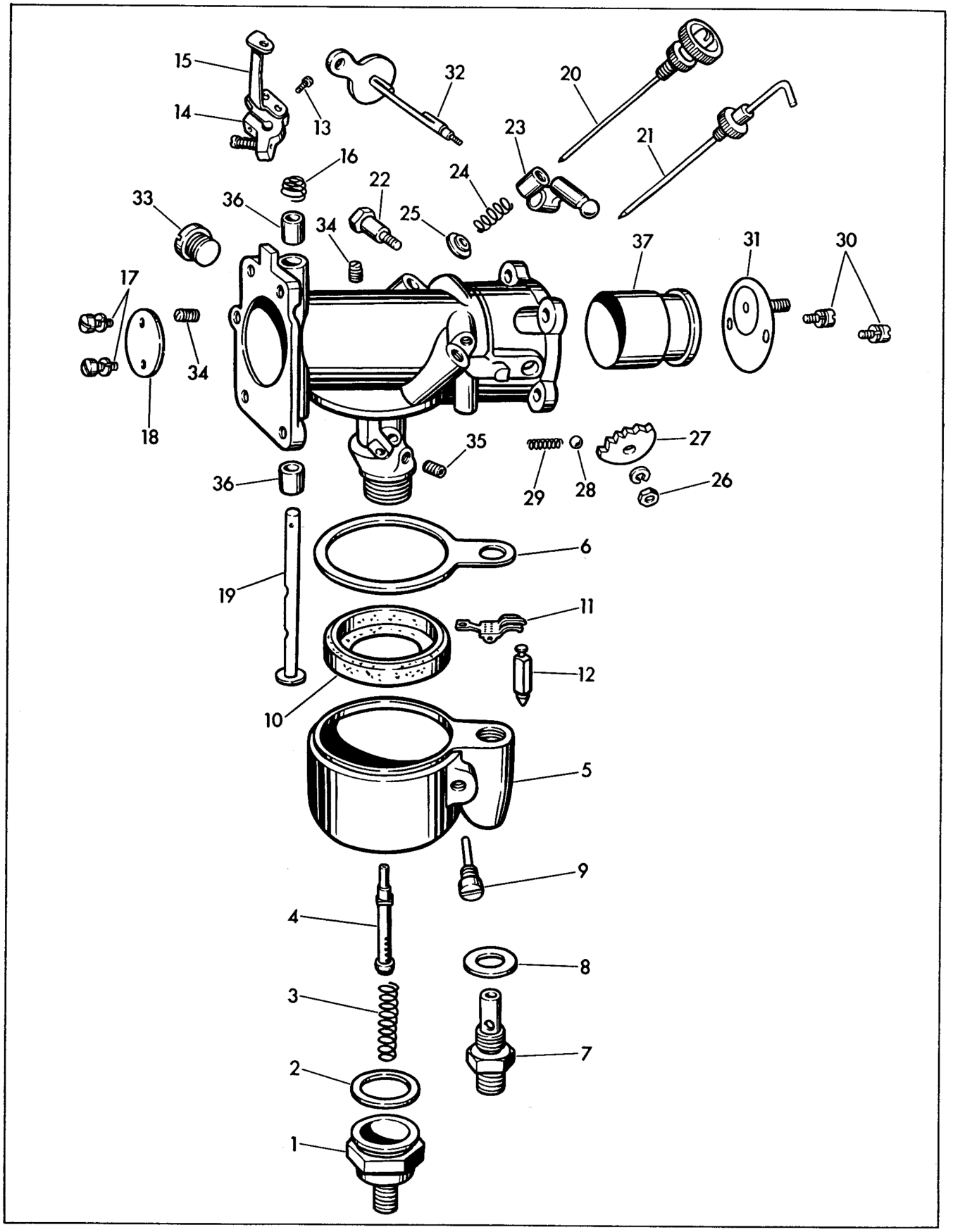

Figure 3F-2. Carburetor - Exploded View

LEGEND FOR FIGURE 3F-2

1. Bowl lock nut
2. Lock nut gasket
3. Main nozzle retainer spring
4. Main nozzle
5. Bowl
6. Bowl cover gasket
7. Float valve seat
8. Float valve seat gasket
9. Float lever pin
10. Float
11. Float lever
12. Float valve
13. Throttle stop lock screw
14. Throttle lever
15. Throttle lever arm
16. Throttle shaft spring
17. Throttle shaft screw (2)
18. Throttle disc
19. Throttle shaft
20. Low speed needle valve
21. High speed needle valve
22. Needle valve lever screw
23. Needle valve lever
24. Needle valve lever spring
25. Lever spring collar
26. Air intake shaft nut and washer
27. Air intake shaft stop
28. Friction ball
29. Friction spring
30. Air intake disc screw (2)
31. Air intake disc
32. Air intake shaft
33. Idle hole body plug
34. Idle passage plug screw (3)
35. Fixed jet
36. Throttle shaft bushing (2)
37. Venturi (1-5/16")

Figure following name of part indicates quantity necessary for one complete assembly.

Remove air cleaner cover, element and back plate.

Disconnect fuel line with strainer at carburetor.

Disconnect throttle control wire.

Remove carburetor support from top center crankcase bolt.

Remove intake (choke) lever stud nut and washer. Twist intake lever off intake lever rod, and remove intake lever rod from carburetor.

Remove four carburetor fastening bolts and pull carburetor out to right.

Disassemble carburetor as follows:

Remove bowl lock nut (1), gasket (2), main nozzle retainer spring (3) and main nozzle (4). Remove bowl (5) and bowl cover gasket (6).

Remove float valve seat (7) and gasket (8). Turn out float lever pin (9) and slip float (10), float lever (11) and float valve (12) out of bowl.

Loosen throttle stop lock screw (13) and slip throttle lever (14) off throttle shaft with throttle lever arm (15) and throttle shaft spring (16).

Remove throttle shaft screws (17), slip throttle disc (18) out of slot in throttle shaft and pull out throttle shaft (19).

Remove low speed needle valve (20) and high speed needle valve (21).

Remove needle valve lever screw (22), needle valve lever (23), lever spring (24) and lever spring collar (25).

Remove air intake shaft nut and washer (26), air intake shaft stop (27), friction ball (28) and friction spring (29).

Remove air intake disc screws (30), air intake disc (31) and pull out air intake shaft (32).

Remove idle hole body plug (33) two idle passage plug screws (34) and carburetor fixed jet (35).

CLEANING, INSPECTION AND REPAIR (Fig. 3F-2)

Place all parts except gaskets and float in "Gunk Hydro-Seal" or other carbon and gum dissolving agent. Wash, and dry all parts with compressed air. Blow air through all carburetor barrel passages as shown in Fig. 3F-3. Never scrape carbon deposits from carburetor barrel or other parts with knife or other steel instrument.

Check throttle shaft fit in throttle shaft bushings (36). If excess play exists, use an appropriate size drift pin to remove old bushings. Press in replacement parts and line ream with a .250 in. drill.

Examine carburetor venturi (37). If it is extremely loose or pitted, slip out and replace.

Check float valve and float valve seat seal as follows:

Assemble parts 12 through 7 to carburetor bowl (5). Hold bowl upside down so float valve closes. Suck on bottom of float valve seat. If valve leaks, replace valve and seat.

If float is damaged or logged, replace with new part. Cut cement seal around float screw which secures float to float lever. Remove float screw and assemble new float to lever but leave screw loose. Position bowl so it is upright (the way it fits on carburetor barrel) with gasoline inlet on far side. Pull float toward you to the limit of the slot in float lever and about 1/16 in. to left of center line (see Fig. 3F-4). This provides clearance in float bowl. Tighten float screw and cement float screw to float with any cement that is impervious to gasoline, or thick shellac.

Check float lever as follows:

Turn assembled float bowl upside down. Measure distance from lip of float bowl to top of float directly opposite float lever. This distance should be exactly 3/16 in. When adjusting carburetor float, do not bend float lever while installed in bowl. Adjusting in this manner bends and spreads fingers between which

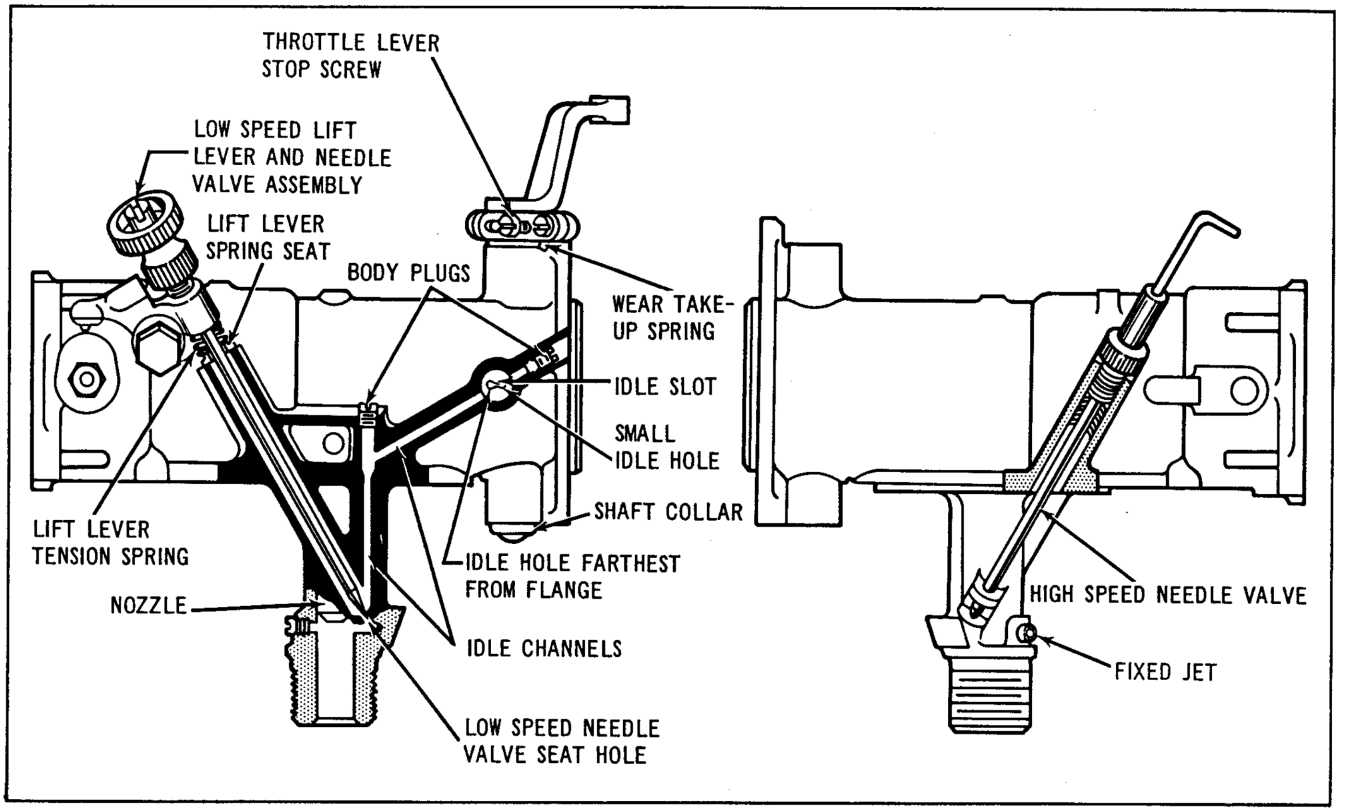

Figure 3F-3. Carburetor Passages and Needle Seats

head of float needle fits and develops lash or lost motion between float and needle. Float and lever assembly should be removed from bowl, and lever then bent as required.

Check needle head fit in float lever. It should be a free fit to about .003 in. clearance. To check clearance with float assembled, hold needle against seat with small screwdriver without restricting float lever. Move float up and down and observe free play between needle head and float lever (see Fig 3F-4).

ASSEMBLING CARBURETOR

Assemble carburetor in reverse order of disassembly. Pay particular attention to the following points.

Install venturi with choke end (small end) facing air intake opening.

Install throttle shaft from bottom of carburetor so counterbored screwhead notches are facing left side of carburetor when viewing carburetor from throttle shaft end. Notice that an edge of throttle disc has a flat on each side. Pass this edge of disc through throttle shaft, close throttle and insert throttle shaft screws (17) but do not tighten. Shift disc slightly until it seats all the way around carburetor throat. Tighten screws. Work disc several times. If there is any bind, loosen screws and reposition disc.

Position both throttle disc and throttle lever in wide open position before tightening throttle stop lock screw.

Throttle lever and shaft should open and close with just a slight drag. If too loose, loosen stop lock screw and compress parts on throttle shaft with fingers while tightening.

Install only replacement throttle disc containing same identification number on face. With disc correctly installed and closed, the number will be on right half of disc when viewed through manifold end of carburetor.

After assembly, adjust carburetor as described in "Adjusting Carburetor," page 3F-1.

AIR CLEANER

The air cleaner consists of a back plate, filter element and cover, arranged so all air drawn into carburetor passes through the filter. A mesh element traps all air borne dust to keep it from entering carburetor and engine.

METAL MESH TYPE FILTER ELEMENT: In normal service on hard surfaced roads, remove air cleaner mesh, wash in gasoline, and saturate with engine oil at least every 1,000 miles, or oftener under dusty service conditions. In extremely dusty service, clean and oil filter mesh every 100 miles or at least once a day.

DRY CORRUGATED TYPE FILTER ELEMENT: In normal service on hard surfaced roads, remove air cleaner cartridge every 1,000 miles, and shake cartridge by tapping lightly to remove loose dirt. If surfaces of element are oily or sooted, wash in gaso-

line. In extremely dusty service, both cleaning and cartridge replacement should be done more often.

FUEL STRAINER

The fuel strainer, located underneath the carburetor float bowl, contains a fine mesh screen through which the fuel is forced to pass, trapping bits of dirt and any water that find their way into the fuel system. The unit should be cleaned and flushed at 2,000 mile intervals unless more frequent cleaning is indicated by irregular carburetion.

To clean the strainer, turn off fuel supply, turn off lower knurled cap and clean strainer. Washers need not be replaced unless they are faulty. The cap is replaced fingertight.

FUEL TANKS

The fuel tanks are of welded steel construction with a joint capacity of 3-3/4 gallons. Fuel supply is shut off when plunger for reserve supply valve, located just ahead of the left tank filler cap, is turned down fingertight against its seat. The plunger is unscrewed (but not lifted) to use main fuel supply. The plunger is lifted to use reserve supply of approximately 1 gallon.

Fuel tanks are treated to resist rusting. However, prolonged operation with nearly empty tanks will increase condensation formation and hasten rusting. Moisture formation and damage may be avoided by using only "good grade" anti-knock, ethyl fuels with moisture absorbing additives. When motorcycle stands unoperated for any reasonably lengthy period, tanks should be drained and the tank interiors bathed with an oil-fuel mixture of equal proportions, and then drained. The fuel will evaporate leaving a protective oil film on tank walls.

REPAIRING LEAKING TANKS

Tank leaks may be gas welded or soldered. However, only firms or persons qualified to make such repairs should be entrusted with the operation. If ALL traces of fuel are not removed, an open flame repair may result in a tank explosion. Extreme caution in all tank repair is recommended.

ALIGNING FUEL SHUT-OFF VALVE FITTINGS

When a left tank has been repaired the fuel shut-off valve should be realigned using Gas Shut-Off Valve Tool, Part No. 96365-42. The tool aligns top and bottom holes and correctly spaces them so the fuel shut-off valve operates without binding.

The tool consists of four parts: 1. Aligning Bar; 2. T-Handle; 3. Spacing Handle; 4. Stop Sleeve.

Use the tool as follows:

Remove left tank from motorcycle and disassemble all fuel fittings. Shift spacing handle in aligning bar so larger portion marked "aligning" is through hole. Turn aligning bar into bottom hole in tank and bend bottom of tank as needed to make end of bar line up with top hole in tank. Insert T-handle end fitting through top of tank and turn in part way.

Back out aligning bar until spacing handle may be shifted to portion marked "spacing." Turn aligning bar and spacing handle into each other until they are tight. Strike T-handle several sharp blows with hammer to square to tank fitting.

Remove tool and assemble valve rod and tank fittings.

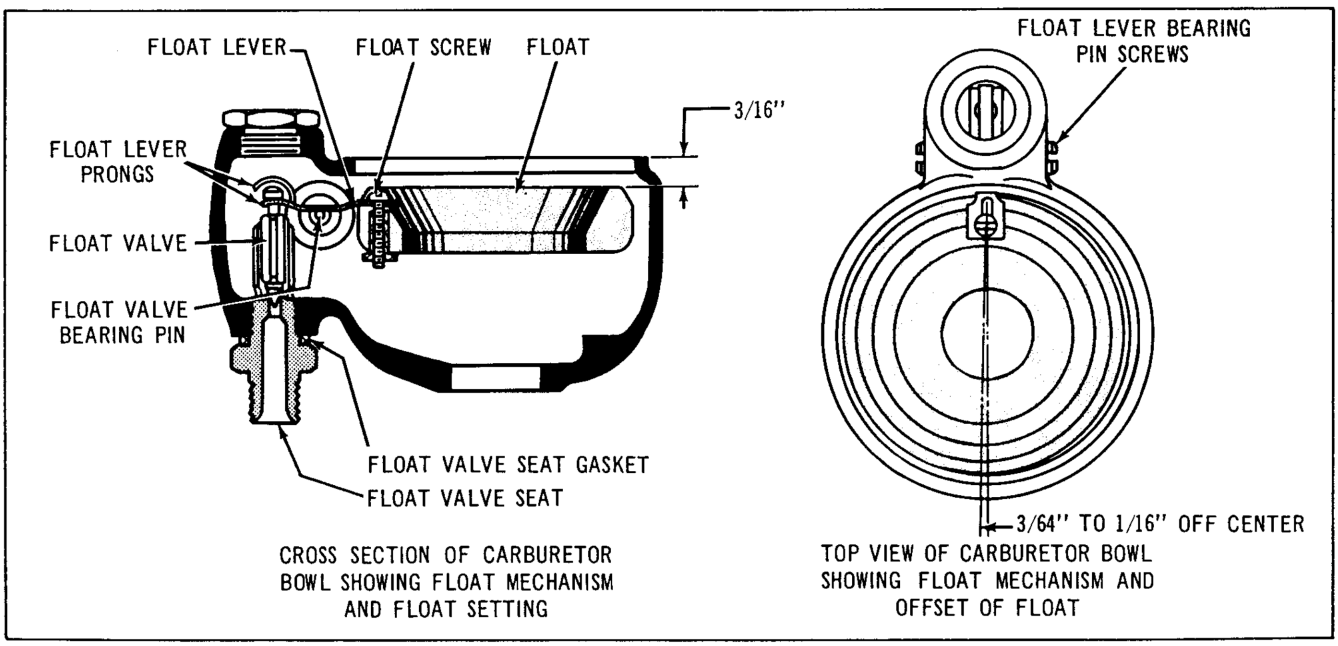

Figure 3F-4. Adjusting Bowl Float and Needle

transmission

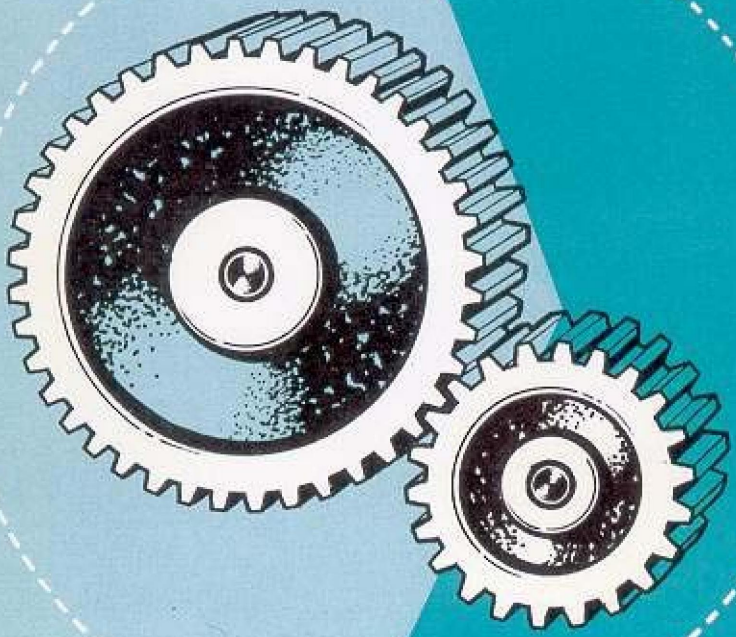

GENERAL

TRANSMISSION SPECIFICATIONS

CLUTCH (4B)

Type	Dry-multiple disc
Capacity	248 lb.-ft. torque
Spring pressure (total)	475 lbs.
Roller bearing fit	.002 - .003 in. loose
Spring adjustment	31/32 in. from release to outer disc
Disengagement	5/32 in. movement of releasing disc from engaged position until release lever strikes casting.

CHAIN

Type (primary)	1/2 in. pitch, double
Looseness	3/8 - 1/2 in. slack

MAINSHAFT MAIN DRIVE GEAR (4D)

Roller bearing	.0005 - .002 in. loose
Inner bearing	.002 - .003 in.
Drive gear end play	.003 - .013 in.

MAINSHAFT (4D)

Low gear end bearing	
In housing	Snug fit
On shaft	Light press
Housing in case	Light press
Third gear	
End play	.000 to .017 in.
Bushing on shaft	.001 - .002 in. loose
Bushing in gear	Press fit

COUNTERSHAFT (4D)

Drive gear end bearing	.0005 - .002 in. loose
Low gear end bearing	.0005 - .002 in. loose
Gear end play	.008 - .012 in.
Second gear	
End play	.003 - .002 in.
Bushing on shaft	.000 - .0015 in. loose
Bushing in gear	.0005 - .0025 in. loose
Low gear	
Bushing on shaft	.000 - .0015 in. loose
Bushing in gear	.0005 - .0025 in. loose
Shifter clutch clearance	
Low and second	.075 in.
Third and high	.100 in.
Sliding reverse gear	approx. .055 in.
Gear backlash	.003 - .006 in.

SHIFTER CAM (4D)

End play	.0005 - .0065 in.

FUNCTION OF TRANSMISSION

The transmission is comprised of four major assemblies, the clutch, gear box, gear shifter and starter. Each is a part of power transmission from engine to rear wheel or a means of power control.

CLUTCH

The clutch is made up of a drum or shell which is integral with the rear primary drive chain sprocket and which has inside a series of alternately positioned lined and unlined discs. The lined discs are doweled to the clutch hub which is keyed to the transmission shaft while the steel (unlined) discs are keyed to the clutch shell. When the clutch pressure plate is seated, a group of springs press the steel and lined discs together making a non-slipping connection between the engine and transmission.

GEAR BOX

The gear box contains a series of gears on a mainshaft and countershaft which may be powered in a selection of ratios according to speed and load requirements.

GEAR SHIFTER

The gear shifter is a unit mounted to the gear box which shifts the gear box components into desired ratios by means of shifting forks that slide shifter clutches into and out of mesh along shafts.

STARTER

The starter provides a means of starting an engine by manual power. When pedal is moved in downward stroke, ratchet teeth in starter are engaged, transmitting the force through gear box and clutch and front chain to sprocket on engine crankshaft.

TRANSMISSION REPAIR PROCEDURE

When operating troubles develop in a transmission component, it is recommended procedure to first check following adjustments. If adjustments do not remedy the trouble, then proceed to disassembly and repair procedures.

1. Adjusting Clutch Control (4B)
2. Adjusting Clutch (4B)
3. Adjusting Shifting Linkage (4D)
4. Adjusting Foot Shifter Cover (4D)

If above adjustments do not correct trouble, disassemble and repair as described in repair sections. See "Locating Operating Troubles," Section 1C, for aids to diagnosing trouble. It is not necessary to remove transmission from chassis to disassemble clutch, starter, main drive gear oil seal or clutch release mechanism. However, extensive repairs are often easier and more quickly made if transmission unit is removed to bench as described in following section, "Stripping Motorcycle for Transmission Repair." The transmission can be removed as a unit (including clutch), or each component individually.

STRIPPING MOTORCYCLE FOR TRANSMISSION REPAIR

1. Remove clutch control rod from clutch release lever by loosening lock nut at pedal (foot control clutch) or at booster connection (hand control clutch) and turning rod out until length has been increased enough to slide flat portion out of slot in clutch release lever.

2. Remove left footboard and studs.

3. Remove outer chain guard.

4. If motorcycle is equipped with compensating sprocket, use Compensating Sprocket Shaft Nut Wrench, Part No. 94557-55, to remove compensating sprocket shaft nut. If not equipped with compensating sprocket, use Crank Pin Nut Wrench, Part No. 94545-26, to remove sprocket nut. It will be necessary to strike wrench handle with mallet to loosen nut. Free sprocket from shaft taper by striking flat surface near outer edge a light but sharp rap with soft metal mallet. Do not strike sprocket teeth or sprocket shaft threads. Sprocket and primary chain are then free to be removed.

5. Remove cotter pin, nut, flat washer and spring from each of the two inner chain guard rear mounting bolts. Bend back the ears of screw lock away from the three cap screws around the engine sprocket shaft that secure the front end of inner chain guard to engine crankcase, and remove cap screws and lock. Remove oil drain pipe from inner chain guard.

6. Disconnect shifter rod from transmission lever by removing nut and bolt.

7. Disconnect speedometer drive cable and housing from transmission. Disconnect neutral indicator switch wire clip.

8. Remove rear chain connecting link and chain.

9. Remove bolt which secures transmission to support bracket on right side of frame.

10. Remove two bolts and two cap screws which secure transmission mounting plate to chassis.

11. Remove complete transmission with mounting plate, clutch and inner chain guard from left side of chassis.

NOTE

It is not necessary to remove transmission from chassis to adjust or repair the clutch or starter mechanism.

CLUTCH

GENERAL

The clutch or clutch control mechanism needs attention when the clutch slips under load, or drags in released position. For causes of slipping clutch see "Locating Operating Troubles," Section 1C, items 93, 94 and 95. If clutch drags or fails to release, see items 96, 97, 98, 99 and 100. If clutch chatters when being engaged, see 101 and 102. Before disassembling clutch when repair is indicated, readjust gear shifter control and clutch spring tension. It is not necessary to remove transmission from chassis to adjust or repair clutch.

ADJUSTING FOOT CLUTCH CONTROL (Fig. 4B-1)

With foot pedal (1) in fully disengaged position (heel down), the clutch lever (8) should strike the transmission case cover. Adjust length of the foot pedal rod (3) to just clear the foot pedal bearing cover (2) so the rod is not bent down by the bearing cover.

Remove the chain guard clutch cover (7), move the foot pedal (1) to a toe down or fully engaged position, loosen the lock nut (5) and readjust the push rod adjusting screw (4) with a screwdriver so that the end of the clutch lever rod (8) has about 1/8 in. free movement. Turn screw (4) right for less movement and left, for more.

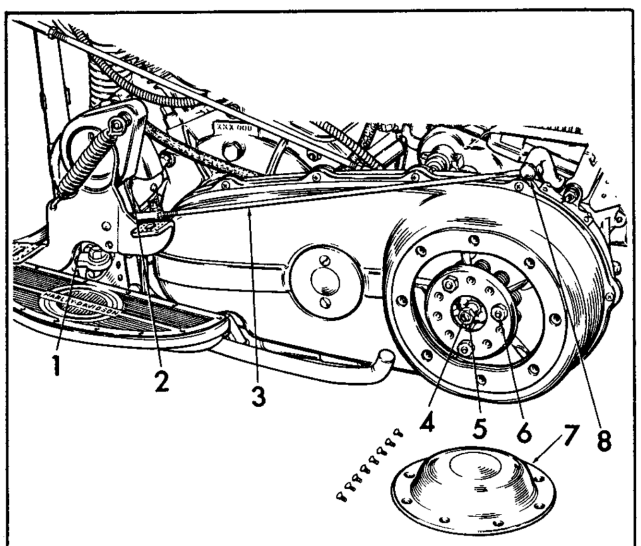

1. Foot pedal
2. Foot pedal bearing cover
3. Clutch lever rod
4. Push rod adjusting screw
5. Push rod adjusting screw lock nut
6. Spring tension adjusting nuts (3)
7. Clutch cover
8. Clutch actuating lever

Figure 4B-1. Adjusting Foot Clutch Control

ADJUSTING HAND CLUTCH CONTROL (Fig. 4B-2)

Normally, the only attention the clutch hand control requires is occasional adjustment of control coil adjusting sleeve (1) and the clutch lever rod (5) to maintain the correct amount of free movement for hand lever on handlebar and clutch actuating lever.

If major readjustment is indicated by hand lever becoming hard to operate, clutch control booster bellcrank failing to return to forward position when hand lever is released, slipping clutch, or dragging clutch manifested by gear clash when shifting, the following adjustments should be made:

Loosen clutch lever rod lock nut (7) and unscrew clutch lever rod (5) far enough so clutch actuating lever (1, Fig. 4B-3) has about 1/2 in. free movement. Move end of actuating lever forward to a position where it becomes firm indicating that all slack in the actuating mechanism has been taken up. The distance from the foot shifter housing on transmission to the outer edge of chamfered slot in lever (1) should be 4-1/4 in. as shown in Fig. 4B-3. If necessary, readjust to obtain this measurement as follows:

Remove clutch cover (2, Fig. 4B-3), loosen push rod adjusting screw lock nut (4) and turn push rod adjusting screw (3) to the right to move lever to rear; to left to move lever forward. When correct position of lever has been attained, tighten lock nut and install clutch cover.

Refer to Fig. 4B-2. Loosen control coil adjusting sleeve lock nut (2) and turn in adjusting sleeve until clutch hand grip has an inch or more free play.

Loosen bell crank adjusting screw lock nut (4) and tighten bell crank adjusting screw (3) until bell crank (8) fails to go across top dead center, as shown, when moved back and forth by hand.

Loosen clutch booster spring tension upper adjusting nut (13) as far as it will go.

Turn out bell crank adjusting screw a little at a time until bell crank moves over top dead center and remains in that position when released. Move bell crank by hand, not with control hand lever. Bell crank should find locked position at about 1/8 in. over dead center. Tighten adjusting screw lock nut (4).

Adjust clutch lever rod (5) so clutch actuating lever has 1/16 in. free movement. Tighten clutch lever rod lock nut (7).

Turn adjusting sleeve (1) upward until end of clutch hand lever has 1/2 in. free movement before releasing pressure is applied to clutch. Tighten lock nut (2).

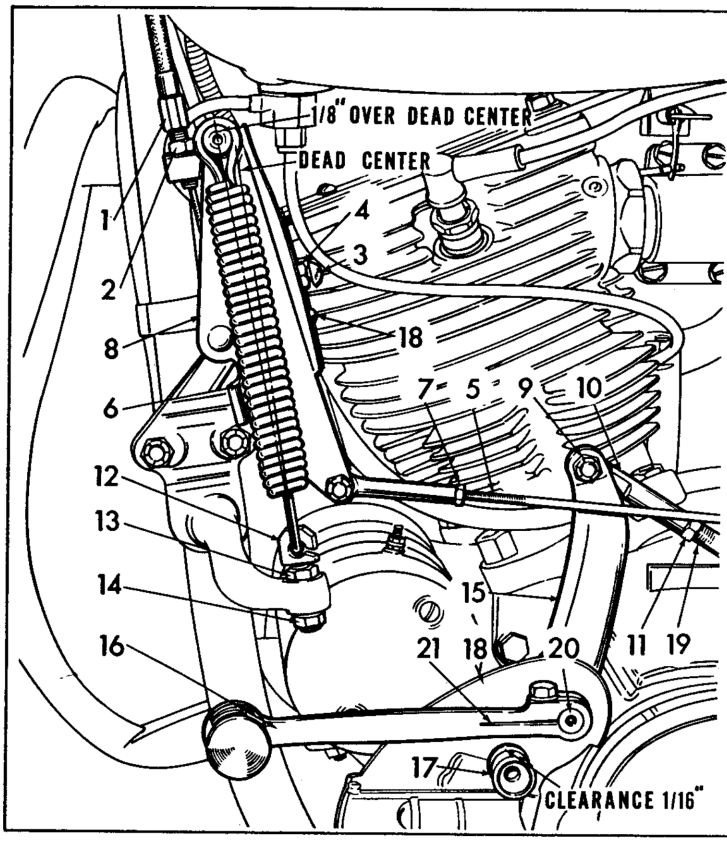

1. Control coil adjusting sleeve
2. Control coil adjusting sleeve lock nut
3. Bell crank adjusting screw
4. Bell crank adjusting screw lock nut
5. Clutch lever rod
6. Clutch control booster spring
7. Clutch lever rod lock nut
8. Clutch control booster bell crank
9. Shifter rod end bolt
10. Shifter rod end
11. Shifter rod end lock nut
12. Clutch booster spring tension adjuster
13. Clutch booster spring tension upper adjuster nut
14. Clutch booster spring tension lower adjuster nut
15. Gear shifter lever
16. Gear shifter foot lever and rubber pedal
17. Foot lever cover mounting stud
18. Grease gun fittings (2)
19. Shifter rod
20. Foot lever positioning mark
21. Foot lever clamping slot

Figure 4B-2. Adjusting Hand Clutch Booster

Depress clutch hand lever fully. Tighten clutch booster spring tension lower adjusting nut (14) until hand lever remains depressed. Slowly loosen lower adjusting nut enough to allow hand lever to return to fully extended position. Tighten upper adjusting nut (13).

ADJUSTING CLUTCH

If the clutch slips after adjusting clutch controls, increase spring tension on the three clutch spring guide stud nuts (6, Fig. 4B-1). Tighten all three nuts one-half turn at a time until clutch holds. Test after each half turn by cranking the engine. Usually a clutch that holds without noticeable slipping when cranking the engine will hold under normal road conditions. Do not increase spring tension any more than is necessary to make clutch hold.

A new clutch is assembled so the distance from inner edge of spring collar (2, Fig. 4B-4) to the surface of the outer disc (9) is exactly 31/32 in. If springs are compressed so this distance is 7/8 in. or less, the clutch probably cannot be fully disengaged.

When clutch will not hold without tightening beyond this limit, disassemble the clutch for inspection of the clutch discs. Discs may be worn or oil soaked and in need of replacement or washing.

DISASSEMBLING CLUTCH (Fig. 4B-5)

Remove outer chain guard.

Remove push rod adjusting screw lock nut (1). Place a flat washer about 1/8 in. thick with 1-3/4 in. outside diameter and 3/8 in. hole over the adjusting screw (2). Replace lock nut and turn down until three spring tension adjusting nuts (3) are free. The nuts may then be removed and the spring collar-springs-outer disc assembly (4, 5 and 6) may be slipped off clutch hub dowels and studs as shown in Fig. 4B-4. Do not disassemble these parts unless necessary for spring, spring collar or outer disc replacement.

Remove spring disc (7). Remove three steel discs (8) and three lined friction discs (9).

Remove engine sprocket or compensating sprocket as described in "Stripping Motorcycle for Transmission Repair," page 4A-2, step 4.

Remove clutch shell (10) and primary chain from clutch hub.

Pry back ear on clutch hub nut lock washer. Remove clutch hub nut (11) using Clutch Hub Nut Wrench, Part No. 94645-41. Thread is left hand. Loosen nut by striking wrench handle several sharp blows with a mallet. Remove clutch hub nut lock washer (12) and strip push rod cork oil seal (13) off push rod.

Remove clutch hub (14) using Clutch Hub Puller, Part No. 95960-41. Turn tool center bolt back until puller plate may be slipped over clutch hub studs and against ends of clutch hub pins. Secure puller

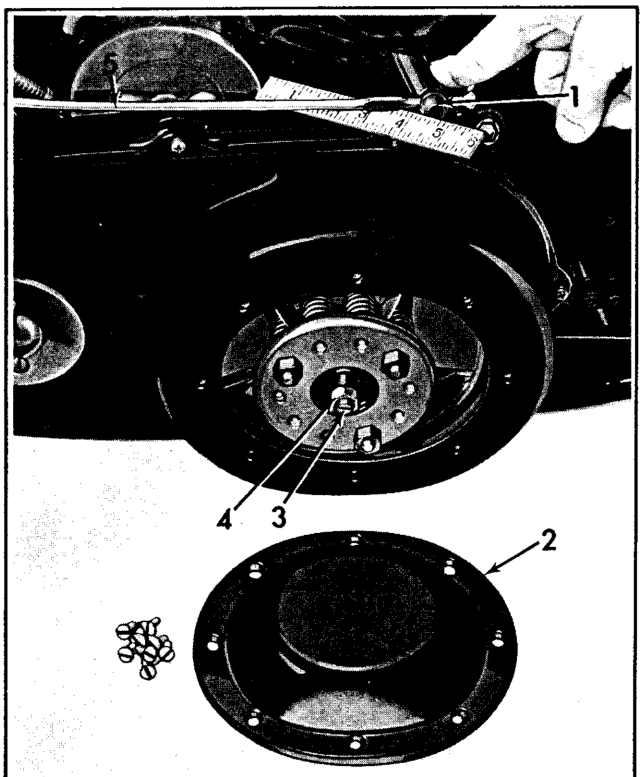

1. Clutch actuating lever
2. Clutch cover
3. Push rod adjusting screw
4. Push rod adjusting screw lock nut
5. Clutch lever rod

Figure 4B-3. Positioning Clutch Actuating Lever

plate with the three clutch spring guide stud nuts. Turn down tool center screw until clutch hub breaks free from gear box shaft taper. Remove clutch hub key (15).

CLEANING AND INSPECTION

Wash all parts except lined discs in cleaning solvent and blow dry with compressed air.

Examine lined plates for:

1. A glazed surface which may be recognized by a smooth, shiny and sometimes darkened appearance.

2. Worn or grooved surface.

3. Lining worn down to rivets.

4. Oil impregnated linings which will sometimes accompany glazing.

5. Cracked or chipped linings.

Glazed and oil soaked discs may sometimes be reconditioned by soaking in white gas for several hours, blowing dry with compressed air and roughing with medium coarse sandpaper. Grooved linings and linings worn down near the rivets must be replaced. Chipped or cracked linings must also be replaced. Badly glazed and burned linings are probably beyond reconditioning and should be replaced.

Steel discs that are grooved or warped should be replaced. Depress steel disc buffer balls with fingertip. If they do not snap back in place, spring is worn and buffer assembly must be replaced.

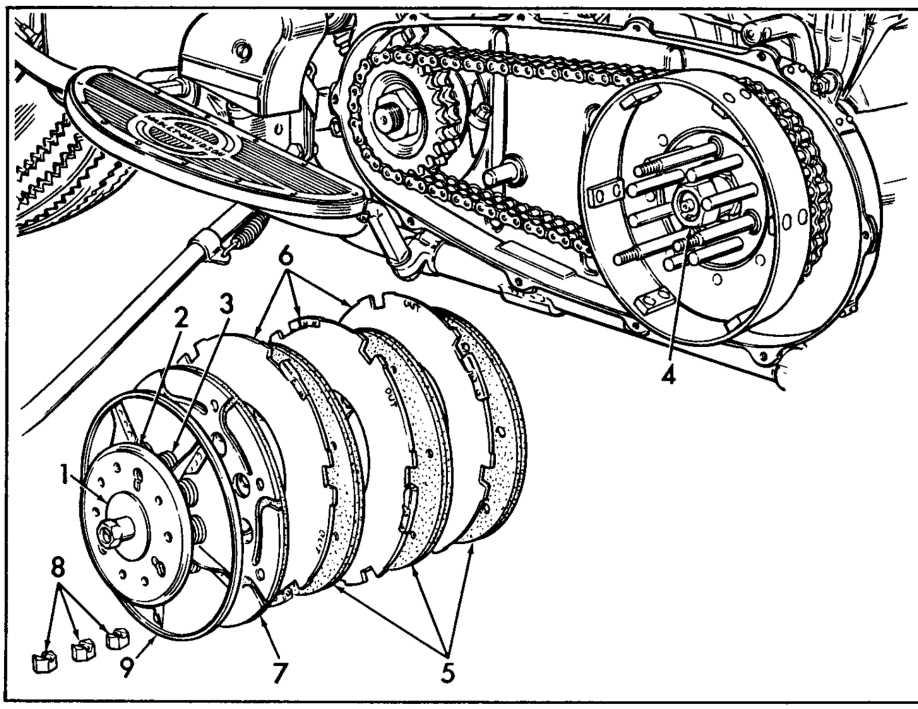

1. Flat washer
2. Spring collar
3. Springs
4. Clutch hub nut
5. Lined friction discs (3)
6. Steel discs (3)
7. Spring disc
8. Spring tension adjusting nuts (3)
9. Outer disc

Figure following name of part indicates quantity necessary for one complete assembly.

Figure 4B-4. Removing Clutch

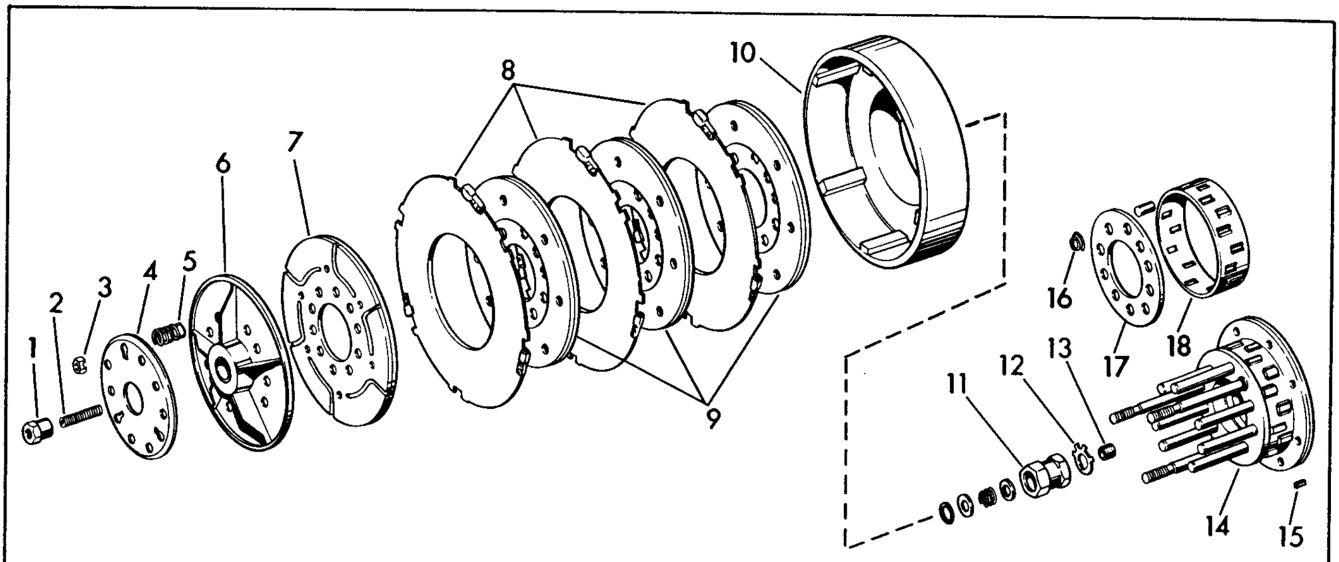

1. Push rod adjusting screw lock nut
2. Adjusting screw
3. Spring tension adjusting nut (3)
4. Spring collar
5. Springs (10)
6. Outer disc
7. Spring disc
8. Steel disc (3)
9. Lined friction disc (3)
10. Clutch shell
11. Clutch hub nut
12. Hub nut lock washer
13. Push rod cork oil seal
14. Clutch hub
15. Clutch hub key
16. Bearing plate spring (3)
17. Bearing plate
18. Bearing retainer

Figure following name of part indicates quantity necessary for one complete assembly.

Figure 4B-5. Clutch Assembly - Exploded View

Check bearing race inside clutch shell. If it appears grooved or pitted, the shell should be replaced.

Revolve clutch hub roller bearing. If it sticks or feels rough, inner bearing race is probably pitted and should be replaced. Disassemble clutch hub as follows:

Remove three bearing plate springs (16), slip bearing plate (17) off hub pins and remove bearing retainer (18). If inner race thus exposed proves to be worn, replace hub.

Clutch springs occasionally set or become fatigued, especially when excessive heat has been produced by operating motorcycle with a slipping clutch. If this has been the case, or if clutch discs are in good condition but it was not possible to obtain a suitable clutch adjustment, check clutch spring free length. Also check spring compression using the Valve Spring Tester, Part No. 96797-47. Spring free length should be 1-31/64 in., and compression test should be from 43 to 52 pounds at 1-1/8 in. Replace springs not meeting compression specifications and those with a free length below specified figure, compression testing to near low tolerance range figure.

Check push rod oil seal spring located inside clutch hub nut with fingertip. If the spring returns both washers to position against shoulder or spring ring, parts are serviceable.

ASSEMBLING CLUTCH (Fig. 4B-5)

Assemble clutch in approximate order of disassembly.

If parts 1, 2, 4, 5 and 6, have been disassembled, preassemble them on clutch hub as follows: Place clutch releasing disc on hub. Position springs on pins and studs. Place pressure plate over springs. Note that stud holes are arranged so plate fits in only one position. Turn adjusting screw lock nut on adjusting screw until head is flush, then turn into clutch releasing disc with 1-3/4 in. washer under nut. Remove this pressure plate assembly from hub.

Place key in slot in mainshaft. Slip clutch hub onto shaft. Install new cork oil seal on clutch push rod. Position washer followed by hub nut. Tighten nut with the special wrench. Strike wrench handle several sharp blows with mallet. Bend over the ear on washer matching hub nut flat. Grease clutch shell bearing and install clutch shell.

Install lined and steel discs in clutch shell, staggering position of steel disc buffers in key slots in shell. Make sure steel discs are installed with side stamped "OUT" facing outward.

Install pressure plate assembly. Draw down adjusting nut until stud nuts may be started. Turn down stud nut until 1-3/4 in. washer is loose. Remove washer and replace adjusting nut.

Draw down stud nuts evenly until distance from back of pressure plate to front of clutch releasing disc is 31/32 in.

Make final adjustments to clutch as described in "Adjusting Clutch Foot Control," or "Adjusting Clutch Hand Control," and "Adjusting Clutch."

STARTER

DISASSEMBLING STARTER (Fig. 4C-1)

Remove starter assembly from gear box as follows:

Place oil drain pan under transmission. Remove starter cover nuts (1) and plain washers (2). If transmission is in chassis, remove clutch lever rod from left end of clutch release lever. Cover assembly with clutch release lever assembly is then free to be pulled off mounting studs. Clutch release bearing (3) will come off with cover. If starter cover binds, release bearing is binding on starter clutch. Pry bearing off starter clutch. Do not pry cover for it will damage bearing. With starter cover removed, push rod (4) is free to be pulled out of mainshaft.

Clamp crank (8) in vise, bend ear of lock washer (6) away from flat of starter crank nut (5) and remove nut and lock washer (6). Remove starter gear (7) using the Harley-Davidson All Purpose Claw Puller, Part No. 95635-46. If puller is not available, remove starter crank from vise, and drive starter crank out of starter gear with rawhide mallet. Be sure to hold starter crank and cover from swinging when shaft is free from gear.

With starter gear removed, crank (8) can be pulled out of cover. Thrust washer (9) is installed between starter crank spring (10) and cover (11) with chamfered side of washer facing spring.

Remove nut (12) and lock washer (13), and pull release lever (14) from end of clutch release lever shaft (15) using All Purpose Claw Puller.

Remove cotter pin (16) and plain washer (17) from lower end of release lever shaft, which can then be pulled out of cover, freeing release finger (18) and thrust washer (19).

CLEANING, INSPECTION AND REPAIR (Fig. 4C-1)

Wash all parts in a grease solvent and blow dry.

Insert starter crankshaft in starter cover and check play. If play is appreciable, press out bushings (20) and install new parts. If transmission was leaking oil out starter crank, install new oil seal (21). Bushings are pressed in with outside ends just flush with bushing boss and outer surface of cover.

Bushings (22 and 23) rarely need replacement. However, check fit of release lever shaft and press out old bushings and install replacement parts if shake is considerable.

Check clutch push rod bearing for wear. Replace unit that grinds, feels rough or loose when rotated.

Check starter crank gear cam plate and gear pin to be sure they are in good condition, especially if starter crank bushings were replaced.

ASSEMBLING STARTER (Fig. 4C-1)

Install release lever shaft (15) and release finger (18) in cover with thrust washer (19) located between finger and bushing (23), and plain washer (17) and cotter pin (16) on end of shaft.

Install starter crank spring (10) and thrust washer (9) on starter crank with chamfer side facing spring, and apply a film of light grease on oil seal (21) and on end of starter crank shaft before installing crank (8). Hold crank in vise and wind spring by turning cover clockwise. Install starter crank gear (7) so dowel pin holds crank in normal, upward position. Install lock washer (6) and nut (5) and tighten nut securely. Bend over one ear of lock washer against one flat of nut. Install gasket (24) over studs on case.

Before starter cover is installed, clutch release bearing (3) is inserted into cover, with slot in outer bearing race engaging clutch release finger (18). Insert push rod (4) small diameter end into clutch release bearing and place the other end into mainshaft. With push rod serving as pilot, move cover assembly into place. Groove in clutch release bearing inner race and ball plunger in starter clutch must align so they will be engaged when assembly is completed. Turn on and draw up all cover nuts and washers.

Refill unit with 1-1/2 pints of same grade oil used in engine.

DISASSEMBLING STARTER CLUTCH (Fig. 4C-1)

Remove starter cover assembly as described in "Disassembling Starter," and proceed as follows:

Bend ear of lock washer away from flat of starter clutch nut (25) and remove nut and washer (26). Pull starter clutch (27) from mainshaft taper with Starter Clutch Puller, Part No. 95650-42. With starter clutch removed, starter clutch keys (28), starter mainshaft gear (29) and starter clutch spring (30) are free to be removed from mainshaft.

CLEANING, INSPECTION AND REPAIR (Fig. 4C-1)

Wash all parts except gasket (24) in grease solvent and blow dry with compressed air.

Examine teeth on starter clutch and starter gear (29), ratchet teeth on mainshaft gear and starter clutch. Teeth should be sharp edged. If teeth are rounded or mushroomed and rider has experienced ratchet slip, replace worn parts. If starter clutch nut has previously been drawn down too tight, starter clutch may be cracked. If cracked, it is usually difficult to get the starter clutch out of clutch release bearing when disassembling starter cover.

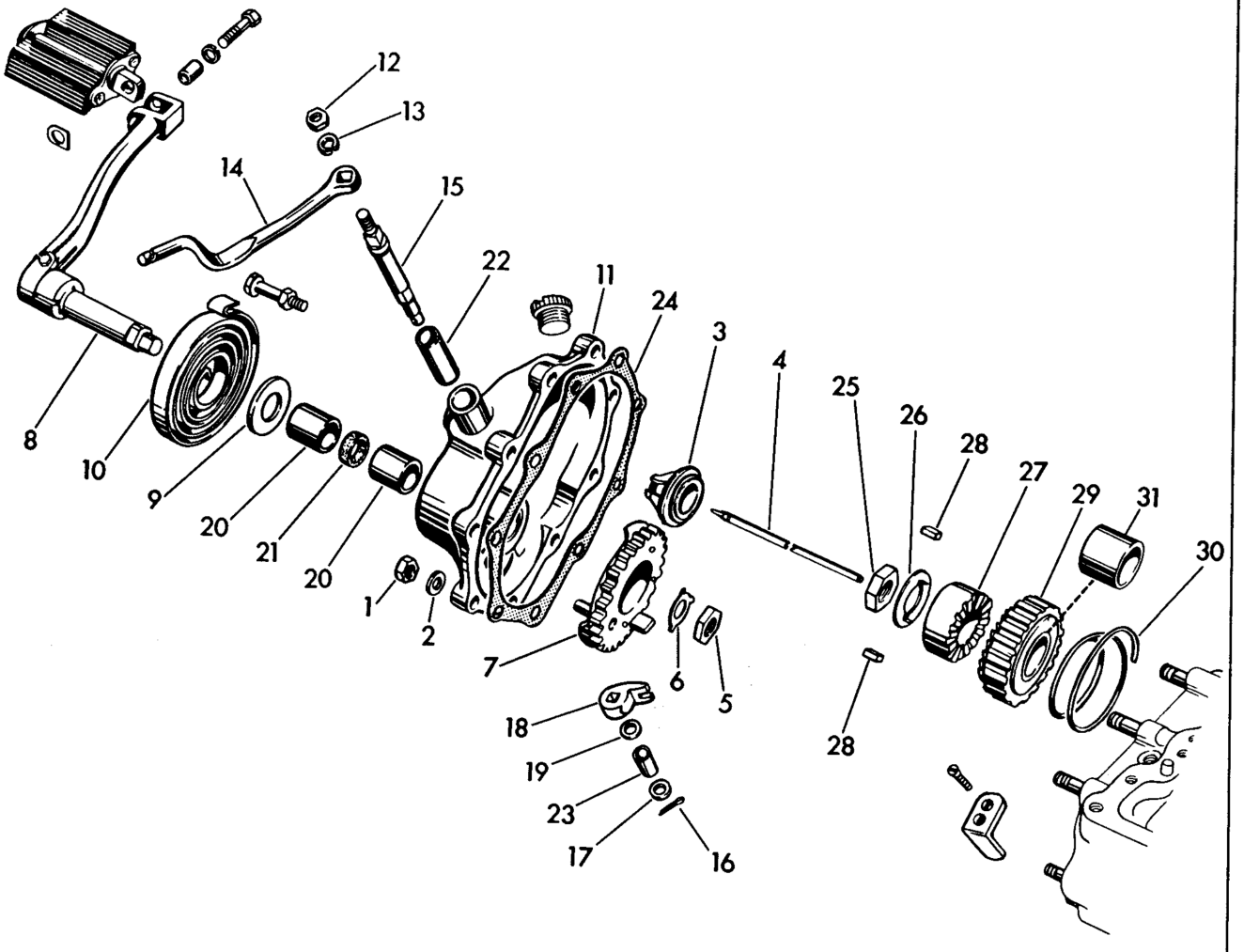

1. Starter cover nut (9)
2. Plain washer (9)
3. Clutch release bearing
4. Push rod
5. Starter crank nut
6. Eared lock washer
7. Starter gear
8. Crank
9. Thrust washer
10. Starter crank spring
11. Starter cover
12. Release lever nut
13. Lock washer
14. Release lever
15. Release lever shaft
16. Cotter pin
17. Plain washer
18. Release finger
19. Thrust washer
20. Starter crank bushing (2)
21. Oil seal
22. Release lever bushing
23. Release lever bushing
24. Starter cover gasket
25. Starter clutch nut
26. Starter clutch washer
27. Starter clutch
28. Starter clutch key (2)
29. Starter mainshaft gear
30. Starter clutch spring
31. Mainshaft gear bushing

Figure following name of part indicates quantity necessary for one complete assembly.

Figure 4C-1. Starter Assembly - Exploded View

Position mainshaft gear (29) on shaft and check play. If obviously loose, replace bushing (31).

ASSEMBLING STARTER CLUTCH (Fig. 4C-1)

Coat gasket (24) with Perfect Seal No. 4 and position on gear box. Lubricate mainshaft with engine oil and slip spring (30) and mainshaft gear over shaft. Bushing should be loose enough on mainshaft to allow gear to slide under force of compressed starter clutch spring. If necessary, line ream bushing to achieve free fit.

Position starter clutch, drive in starter clutch keys and assemble remainder of parts in reverse order of disassembly.

Be careful not to draw down nut (25) too tight. Don't go beyond a point where top of starter clutch is less than 5/8 in. above edge of gear box.

GEAR BOX

ADJUSTING SHIFTING LINKAGE

HAND SHIFT. The hand shift normally requires adjustment only when transmission has been moved to adjust front drive chain, and then only the shifter rod needs adjustment to maintain correct hand shift lever position.

To adjust hand shift move the shifting lever to third position on four-speed transmissions and to second position on three-speed transmissions.

Disconnect shifter rod from shifter lever; with slight backward and forward movement carefully "feel" the transmission lever into exact position where the shifter spring plunger (inside transmission) seats fully in its retaining notch.

By turning the clevis in or out, carefully refit the shifter rod to the shifting lever without disturbing the shifting lever's exact positioning.

FOOT SHIFT. The foot shift normally requires adjustment only when transmission has been moved to adjust front drive chain, and then only the shifter rod needs adjustment to maintain correct foot lever pedal position.

Check to make sure that clamping slot in shifter lever is in alignment with notch or mark in end of foot shift lever shaft, section 4B.

Adjust length of shifter rod so that the foot lever, when fully depressed, has about 1/16 in. clearance from foot lever cover mounting stud. Length of rod is adjusted by removing shifter rod end bolt, loosening shifter rod end lock nut, and turning rod end farther on or off rod. This rod adjustment is important, as any interference between foot lever and cover mounting stud will prevent full movement of foot lever and full engagement of shifting parts inside transmission.

ADJUSTING FOOT SHIFTER COVER. When it is impossible to shift foot shifting mechanism into all gears, adjust as follows:

Disassemble shifter cover parts 1 through 12 as described in "Disassembling Shifter Cover (Foot Shift)," see Fig. 4D-6. Time shifter notches as illustrated in Fig. 4D-8. Loosen screw (14, Fig. 4D-6) and rotate adapter plate (16) until timing notch (Fig. 4D-8) in adapter plate, located at bottom of shifter gear hole, lines up with notch between two shifter gear teeth. Make alignment exact, then tighten adapter plate bracket screw to lock in position. This adjustment can be made with shifter in any gear (not neutral).

Assemble shifter cover in reverse order of disassembly.

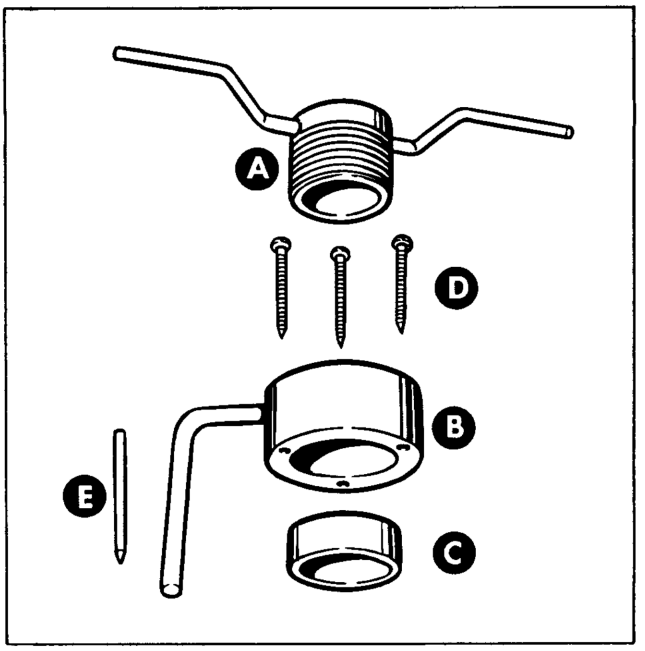

Figure 4D-1. Main Drive Gear Oil Seal Tool

REPLACING MAIN DRIVE GEAR OIL SEAL

MAIN DRIVE GEAR OIL SEAL TOOL. Main Drive Gear Oil Seal Tool, Part No. 95660-42, (Fig. 4D-1) enables removing worn or damaged oil seal and installing new seal without removing or disassembling transmission. It may be used on transmission removed from chassis as well. To use, transmission must be assembled with the exception of clutch and countershaft sprocket.

REMOVING OIL SEAL. Shift transmission into low gear and lock rear wheel brake to prevent parts from turning while disassembling.

Remove outer front chain guard, engine sprocket, front chain, clutch assembly, inner chain guard, countershaft sprocket and rear chain.

Place sleeve (C, Fig. 4D-1) on end of main drive gear and slide body (B) over sleeve with body stop rod downward. Turn body clockwise until stop bears against transmission case or mounting plate. Hold body in this position and insert center punch (E) through each of the three holes in body and center punch oil seal as shown in Fig. 4D-2.

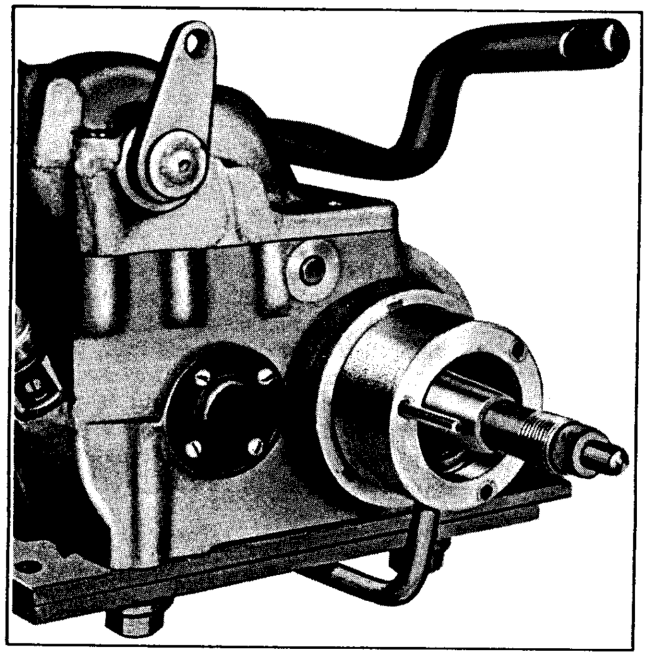

Figure 4D-2. Centerpunching Screw Hole Locations

Remove body and drill a 3/32 in. hole through metal face of oil seal at each punch mark. Replace body and insert the three self-tapping screws (D) through body and into oil seal. Tighten screws until body is against oil seal.

Turn actuating screw (A) into body and continue turning as shown in Fig. 4D-3 until oil seal is free. Discard oil seal and oil seal cork washer found behind seal.

INSTALLING OIL SEAL. Remove burrs with scraper from outer edge of oil seal recess in transmission

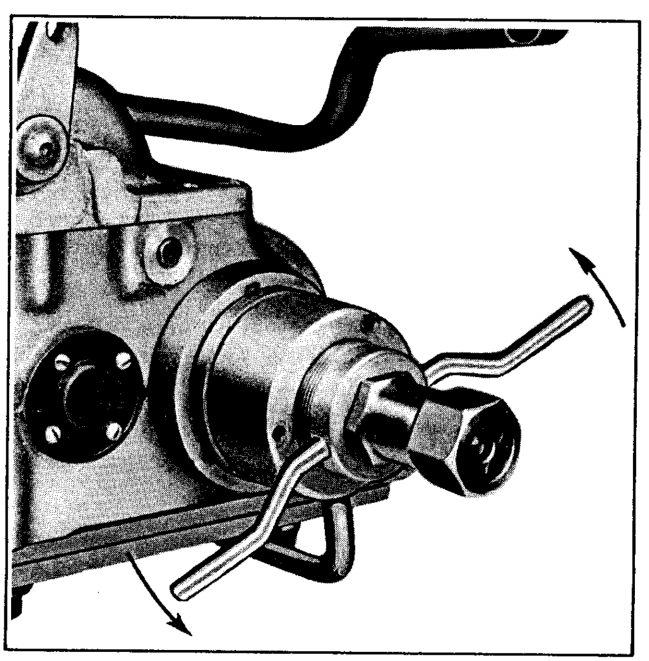

Figure 4D-4. Installing Oil Seal

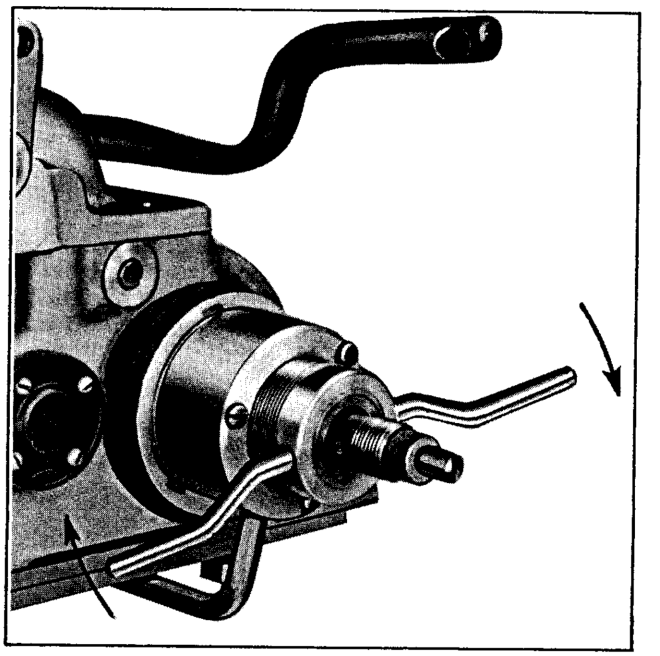

Figure 4D-3. Pulling Oil Seal

where metal was staked to secure seal. Position new cork gasket.

Coat lip of oil seal with oil or grease to prevent damage to new seal.

Insert sleeve (C, Fig. 4D-1) into oil seal. Place sleeve and seal on main drive gear with lip side of seal toward transmission case. Turn seal so it will not stake at same points old seal was staked.

Place body on sleeve and turn actuating screw into body as far as it will go without pulling body away from seal. Install mainshaft clutch hub nut and turn it in against actuating screw as shown in Fig. 4D-4. Back out actuating screw until body has pushed oil seal into place and body is tight against end of gear box.

Remove tool and stake case into notches in seal.

After assembly is complete, check clutch control adjustment.

REMOVING SHIFTER COVER

Remove transmission from chassis as described in "Stripping Motorcycle for Transmission Repair," Section 4A.

Remove the 12 screws securing shifter cover to gear box. Shifter cover is registered on two dowel pins. Two of the screws are extra long. Notice that the screw in hole nearest the dowel pin on right side of transmission is vented to relieve gear box heat expansion pressure. This screw must be installed in the same hole when assembling shifter cover or transmission oil may be forced out into clutch.

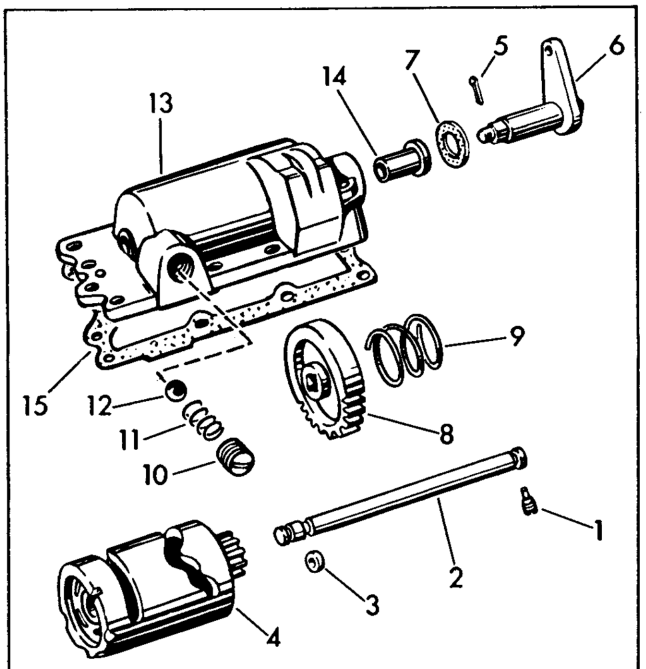

1. Shaft lock screw
2. Shaft
3. Oil seal
4. Shifter cam
5. Cotter pin
6. Shifter lever
7. Leather washer
8. Shifter gear
9. Shifter gear spring
10. Cam plunger cap screw
11. Ball spring
12. Plunger ball
13. Cover
14. Shifter lever bushing
15. Cover gasket

Figure 4D-5. Hand Shifter Cover - Exploded View

DISASSEMBLING SHIFTER COVER (HAND SHIFT) (FIG. 4D-5)

Remove shaft lock screw (1). Shaft (2) may then be driven out, using the edge of a discarded valve as a drift. Drive on stem end with light hammer taps, with valve head in groove at end of shaft. With shaft removed, shifter cam (4) is free to come out of cover.

Remove cotter pin (5) from shifter lever shaft. Wedge screwdriver between shifter gear and inside of cover. Tap screwdriver in to force gear off shaft. Shifter lever (6) and leather washer (7) can then be pulled out of cover.

Remove cam plunger cap screw (10) and ball spring (11). Plunger ball (12) is then free to drop out of cover (13).

CLEANING, INSPECTION AND REPAIR (FIG. 4D-5)

Clean all parts except cam shaft oil seal (3), and shifter lever leather washer in grease solvent and blow dry with compressed air.

Inspect shifter lever fit in bronze bushing (14). Remove worn bushing as follows: Thread a 5/8 in. tap into bushing about 1/2 in. deep. Remove tap and heat case around bushing to about 300 degrees. Replace tap and clamp in vise. Tap cover with rawhide mallet or block of wood and hammer until cover is driven off bushing.

Inspect gear teeth on shifter cam and shifter gear. If wear is deep, replace parts. Slightly worn parts may be used safely with no impairment to proper function.

Inspect shifter cam slots and plunger ball seats for excessive wear. Cam track and ball seats must be sharp edged. Compare with new part if possible. Replace cam if slots are worn.

Inspect oil seal (3) and cover gasket (15) and replace if broken or in questionable condition.

ASSEMBLING SHIFTER COVER (HAND SHIFT)

It is necessary to time shifter lever gear to gear on shifter cam. Install shifter gear spring (9) and shifter gear (8) in cover with spring located over gear hub and timing mark between gear teeth to outside (facing cover bushing). Install shifter cam (4) so notch in gear tooth is aligned with timing mark on shifter gear. Install shifter lever and shaft assembly (6), with square end of shaft in hole in gear with shifting lever pointed toward left, front screw hole in cover, and leather washer (7) between lever and cover bushing.

Insert cotter pin in shaft hole.

Place shifter cam in cover with timing mark on teeth registered with timing mark between teeth on side of shifter lever gear.

Install shifter cam shaft (2) and secure with lock screw. Be sure oil seal is in place in widest groove in right end of shaft. Shifter cam end play should be .005 in. to .0065 in. If greater, install shim washer of desired thickness. If less than desired amount, file boss in case until recommended play has been achieved.

DISASSEMBLING SHIFTER COVER (FOOT SHIFT) (FIG. 4D-6)

Remove three shifter lever screws (1), and remove lever (2) and dust shield (3). Remove five long shifter cover screws (4) and one short screw (5) by removing nut (6) located on rear of adapter plate (16). The shifter cover (7), gasket (8), and pawl carrier (9) are then free to be removed. The pawls (10 and 11), pawl spring (12), and pawl carrier springs (13) are under compression and will pop out when pawl carrier is removed. Remove adapter plate bracket screw (14) and washer (15) to free adapter plate (16) and gasket (17).

Remove neutral indicator switch (18) from cover. Bend back ear on cam follower retainer washer (20) and remove retainer (19), washer (20), spring (21) and cam follower (22).

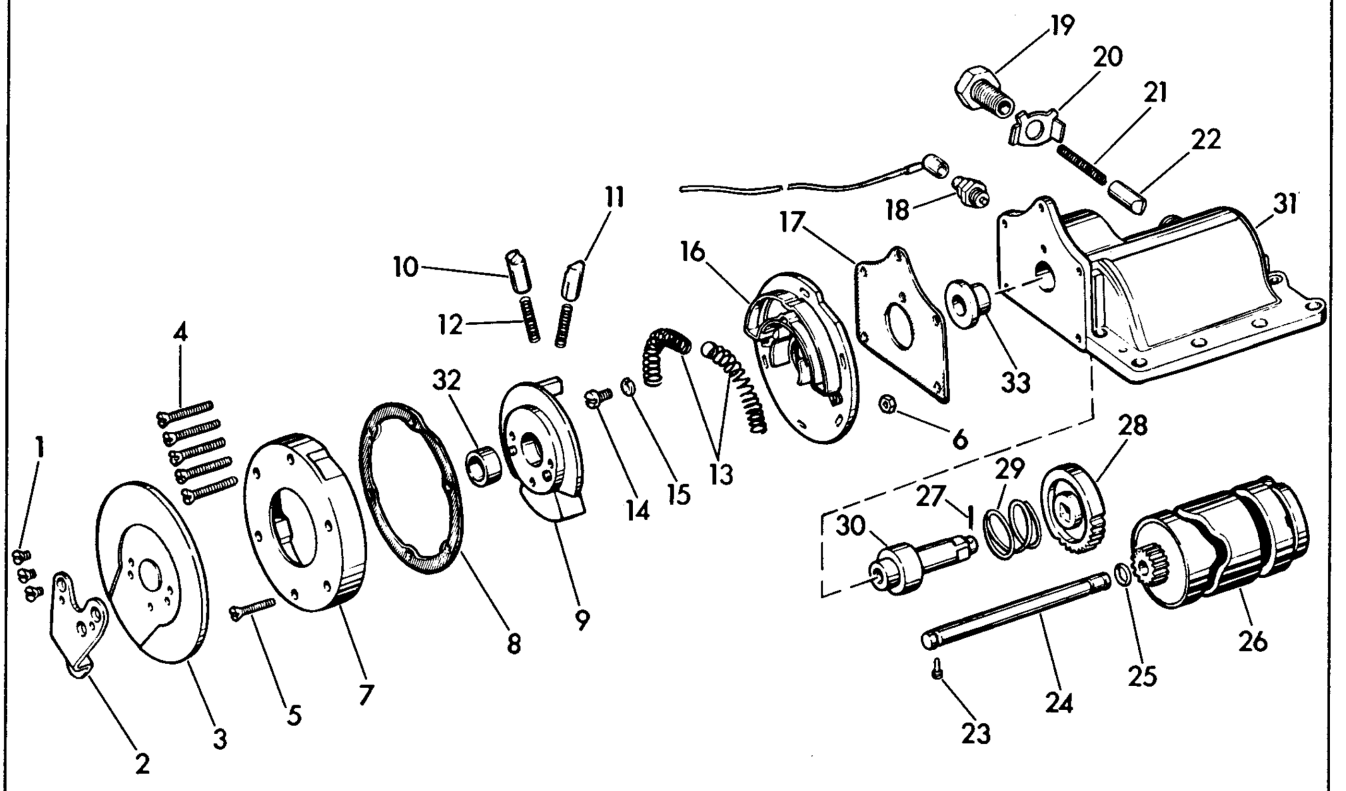

1. Shifter lever screw (3)
2. Shifter lever
3. Dust shield
4. Shifter cover screw (5)
5. Shifter cover screw (short)
6. Cover screw nut
7. Shifter cover
8. Cover gasket
9. Pawl carrier
10. Pawl (right)
11. Pawl (left)
12. Pawl spring (2)
13. Pawl carrier spring (2)
14. Adapter plate bracket screw
15. Adapter plate bracket screw washer
16. Adapter plate
17. Adapter plate gasket
18. Neutral indicator switch
19. Cam follower retainer
20. Cam follower retainer washer
21. Spring
22. Cam follower
23. Cam shaft lock screw
24. Cam shaft
25. Oil seal
26. Shifter cam
27. Cotter pin
28. Shifter gear
29. Shifter gear spring
30. Shifter shaft
31. Shifter cover
32. Pawl carrier bushing
33. Shifter shaft bushing

Figure following name of part indicates quantity necessary for one complete assembly.

Figure 4D-6. Foot Shifter Cover - Exploded View

Remove cam shaft lock screw (23) from left side of shifter cover joint face. Engage head of old valve in notch in cam shaft and tap end of valve stem to pull cam shaft (24) from cover. Shifter cam (26) may be lifted out of cover.

Remove cotter pin (27) from end of shifter shaft. Remove shifter gear (28) and spring (29) from shaft and pull shaft (30) out of cover (31).

CLEANING, INSPECTION AND REPAIR (FIG. 4D-6)

Clean all parts except gaskets (8 and 17), and neutral indicator switch (18) in grease solvent. Clean switch with "Gunk" or gasoline.

Inspect fit of shaft (30) in bushings (32 and 33). If there is considerable side play, replace bushings. Pawl carrier bushing (32) may be pressed out of carrier on arbor press. Shifter shaft bushing (33) is removed as follows: Thread 5/8 in. tap into bushing about 1/2 in. deep. Remove tap and heat shifter cover around bushing to about 300 degrees. Quickly replace tap and clamp tap handle in vise. With rawhide mallet, tap cover near bushing until cover is driven off bushing. Insert new bushing with arbor press or soft metal hammer and wood block. Be sure bushing shoulder is seated against cover.

Inspect teeth on shifter gear and cam. Replace badly worn parts.

Inspect neutral indicator switch. Depress plunger in base of body. It should spring back without a bind. If panel light fails to light in neutral position, plunger is sticking. Switch cannot be repaired, it must be replaced. Do not test switch by passing current through it without having a neutral indicator panel light bulb in the circuit in series.

Inspect all springs. Inspect tips of cam follower (22) and shift pawls (10 and 11). If tips are rounded and worn, replace parts. To function properly these parts must have reasonably sharp tips.

Inspect all parts generally for cracks, bent parts and any wear that would impair intended functions. If hole in pawl carrier is elongated, bushing (32) must be replaced or mechanism will not shift properly.

ASSEMBLING SHIFTER COVER (FOOT SHIFT) (FIG. 4D-6)

It is necessary to time the shifter shaft (30) to the shifter gear (28), and the shifter gear to the cam gear on the shifter cam (26). If this is not done correctly, it will be impossible to shift into all gears.

Notice that the timing mark (Fig. 4D-7) cut between the center teeth on one side of shifter gear is in line with the corner of the squared shaft end and just a little to the left of the last ratchet tooth on the shifter shaft. This is the proper timing alignment.

Refer to Fig. 4D-6. Position shifter gear (28) and spring (29) in case, so side of gear with timing mark is toward case. Insert shifter shaft (30) so parts are timed as described above and tap parts together. Insert cotter pin (27).

Install shifter cam (26) in cover so ground timing mark on top of a tooth registers with timing mark on shifter gear. Slip oil seal (25) on widest of two grooves on end of cam shaft (24) and insert in cover, passing it through shifter cam. Secure shaft with lock screw (23).

Install cam follower (22), spring (21), retaining washer (20) and retainer (19). Install neutral indicator switch (18) and check to make sure button on shifter gear contacts plunger in base of switch.

Position cover (31) in vise with shifter mechanism end upward. Place gasket (17) and adapter plate (16) over cover. Insert adapter plate bracket screw (14) and washer (15) in hole directly above end of shifter gear but do not tighten. Shift gear shift cam to any position but neutral. Rock cam back and forth to make sure spring loaded cam follower is seating exactly in one of the indexing notches, or "V's," that determine cam position for one of the four gears.

Rotate adapter plate until timing notch (Fig. 4D-8) in adapter plate, located at bottom of shifter gear hole, lines up with notch between two bottom shifter gear teeth. Make alignment exact, then tighten adapter plate bracket screw to lock in position.

Apply a light coat of "Grease-All" grease to curved springs (13) and insert them in slots on adapter plate. Grease ratchet end of shifter shaft. Lubricate pawls (10 and 11) with light oil after checking to see if they are free in holes in pawl carrier (9). Install pawl springs (12) and pawls in pawl carrier so notches in ends of pawls face inward or toward each other.

Install pawl carrier with pawls over end of shifter shaft with lug on pawl carrier inserted between ends of pawl carrier springs.

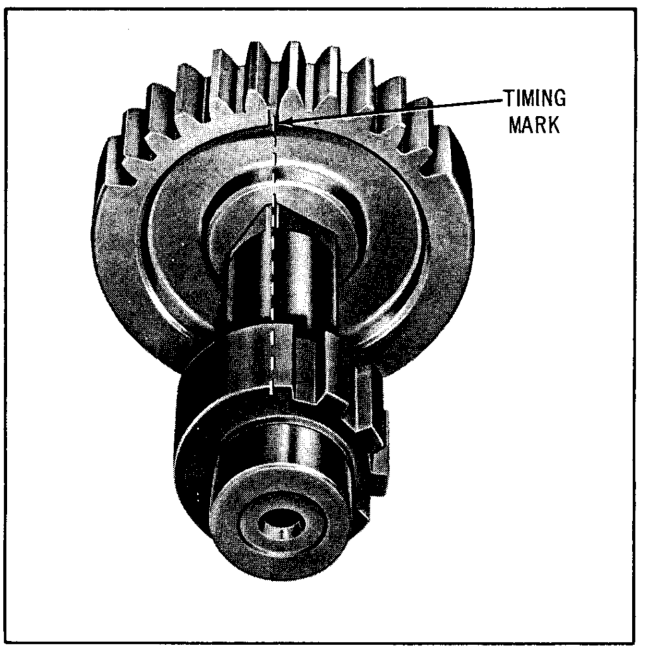

Figure 4D-7. Timing Shifter Gear

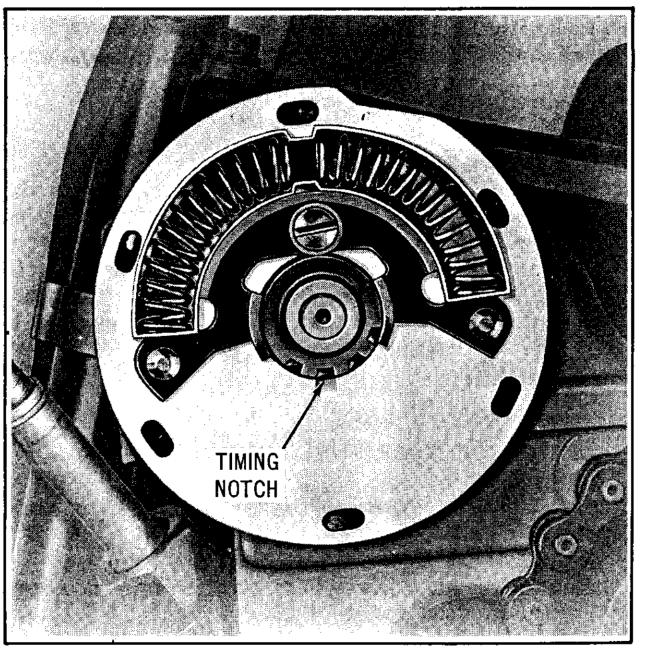

Figure 4D-8. Timing Shifter Notches

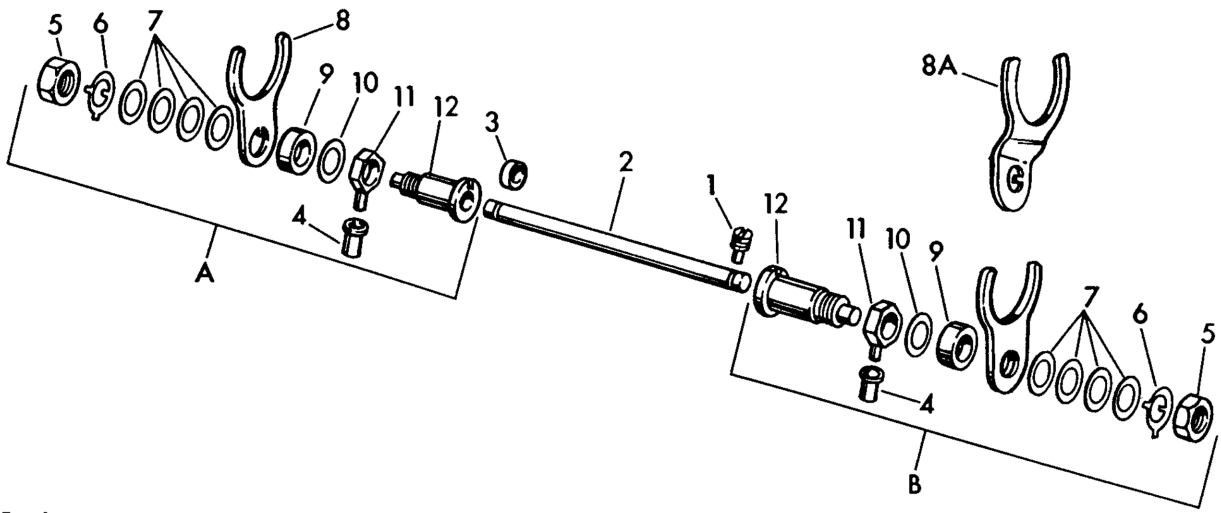

1. Lock screw
2. Shifter fork shaft
3. Rubber oil seal
4. Shifter finger rollers (2)
5. Nut (2)
6. Lock washer (2)
7. Spacing shim washer (variable number) (.014")
8. Shifter fork (1 or 2)
8A. Shifter fork (3-speed, reverse only)
9. Standard spacing shim (2)
10. Spacing shim (1 or 2) (.007")
11. Shifting finger (2)
12. Shifting fork bushing (2)

Figure following name of part indicates quantity necessary for one complete assembly.

Figure 4D-9. Shifter Fork - Exploded View

Lubricate back of pawl carrier with "Grease-All" grease and install shifter cover gasket (8) and shifter cover (7) so notches at top line up with corresponding notch on adapter plate. Insert shorter screw (5) through bottom hole and secure with nut (6) on back of adapter plate. Turn in five long screws (4) and stake all screws.

Position cover dust shield (3) over dowel pins on pawl carrier. Position shifter shaft lever (2) over dowel pins and secure with three shifter shaft lever screws (1). Stake shifter shaft lever screws.

REPLACING SHIFTER COVER

Coat shifter cover gasket with Perfect Seal No. 4 and position on gear box. Install assembled shifter cover over gear box opening and secure with twelve screws. Note that two screws are longer. They are inserted in holes adjacent to bulge in cover over shifter gear. The short cover screw with vent hole is inserted in hole nearest locating dowel pin on right side of gear case.

REMOVING SHIFTER FORKS (FIG. 4D-9)

Remove shifter cover as described in "Removing Shifter Cover."

Shifter fork shaft (2) is held in position by lock screw (1) which may be found in gear box cover joint surface in line with right end of shaft. With lock screw (1) removed, shaft may be driven out by means of a drift inserted in hole in starter cover joint face of gear box. Notice that a rubber oil seal (3) is assembled in groove on left end of shifter fork shaft.

Shifter fork assemblies (A and B) are not interchangeable. Note exactly the arrangment of parts and components in each. Keep parts separate to avoid needless adjusting when reassembling. If inspection shows fork assemblies are not damaged, worn or bent, it may not be necessary to disassemble them unless shifter clutches are replaced. Adjustments are described in "Assembling Shifter Forks."

DISASSEMBLING SHIFTER FORKS (FIG. 4D-9)

If it is necessary to disassemble shifter forks, lift off shifter finger rollers (4), pry back ear on lock washer (6) and turn off nut (5). Lift washer (6), a number of .014 in. or .007 in. spacing shim washers (7) which varies from one fork assembly to another, shift forks (8), 5/64 in. thick standard spacing shim (9), more .007 in. or .014 in. spacing shims (10), shifting fingers (11) and shifting fork bushings (12).

CLEANING, INSPECTION AND REPAIR

Clean all parts in cleaning solvent and blow dry with compressed air.

If shifter forks are bent or worn, replace them. Straightened forks are weak. They may break and cause extensive damage to gear box parts.

Check fit of shifter fork bushings on shaft. If bushings are loose enough to give fork action lash, replace them. Check replacement part fit on shaft.

Lap out bushings if they bind. Shifting will be difficult unless bushings work freely on shaft.

ASSEMBLING SHIFTER FORKS

Assemble shifter forks in reverse of disassembly order making sure parts are not transposed.

Check adjustment of shifter forks with Fork Shifter Gauge, Part No. 96384-39, by placing shifter gauge on shifter cover as shown in Fig. 4D-10. With the 3/8 in. gauge rod furnished, set tool gauge blocks in exact alignment with straight sections of cam slots in shifter cam. Lock gauge blocks in place with thumb screws.

Remove tool from cover, turn it over, and place it on transmission case with shifter fingers engaged in slots on gauge blocks as shown in Fig. 4D-11. Be sure shifter finger rollers are in place on shifter fingers.

With thickness gauges, check clearance on both sides of shifting clutches. All shifting clutches must be centered.

When clearances are not equal and correct, shifting fork assemblies must be corrected by increasing or decreasing the number of shims between shifter fork and shifter finger. To make this adjustment, remove shifter fork assemblies from transmission. Shims are available .007 in. and .014 in. thick.

After taking out or adding shims, be sure fork assembly lock nut is tight. However, excessive tightening may close up hole in bushing so it is no longer a free, sliding fit on shaft.

Clearances between shifter clutch and gear are as follows:

Low and second gear: When centered between gears to have .075 in. clearance on both sides.

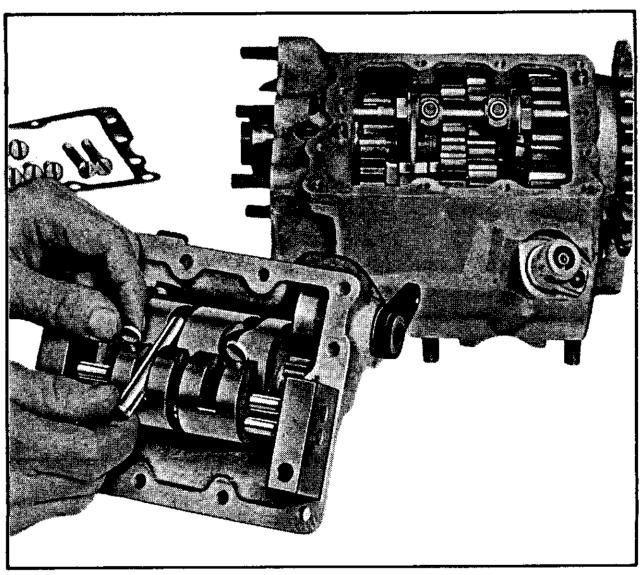

Figure 4D-10. Adjusting Shifter Gauge

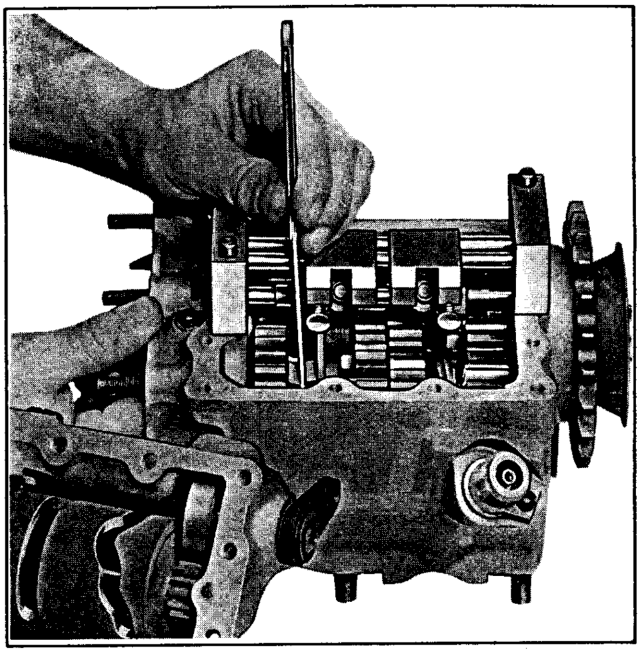

Figure 4D-11. Checking Shifter Clutch Clearance

Third and high gear: When centered between gears to have .100 in. clearance on both sides.

Sliding reverse gear: When centered between gears to have approximately .055 in. clearance between gear teeth.

Where shifter clutch engagement is with dogs protruding from face of gear, turn gear so dogs on shifter clutch and dogs on gear are overlapping each other about 1/8 in. before checking clearance.

Place shifter forks in gear box and install shifter fork shaft. Fork with narrow opening is for high gear shifter clutch. Install shifter shaft lock screw.

Assemble shifter cover to gear box as described in "Replacing Shifter Cover."

DISASSEMBLING GEAR BOX (FOUR SPEED)

Remove transmission from chassis as described in "Stripping Motorcycle for Transmission Repair," Section 4A.

Remove clutch as described in "Disassembling Clutch," Section 4B.

Remove starter assembly and starter clutch as described in "Disassembling Starter," Section 4C.

Remove shifter cover and shifting forks as described in "Removing Shifter Cover" and "Removing Shifter Forks."

DISASSEMBLING COUNTERSHAFT (Fig. 4D-12)

Remove four screws (1) and washers (2) holding countershaft end cap (3) and gasket (4) to left (clutch)

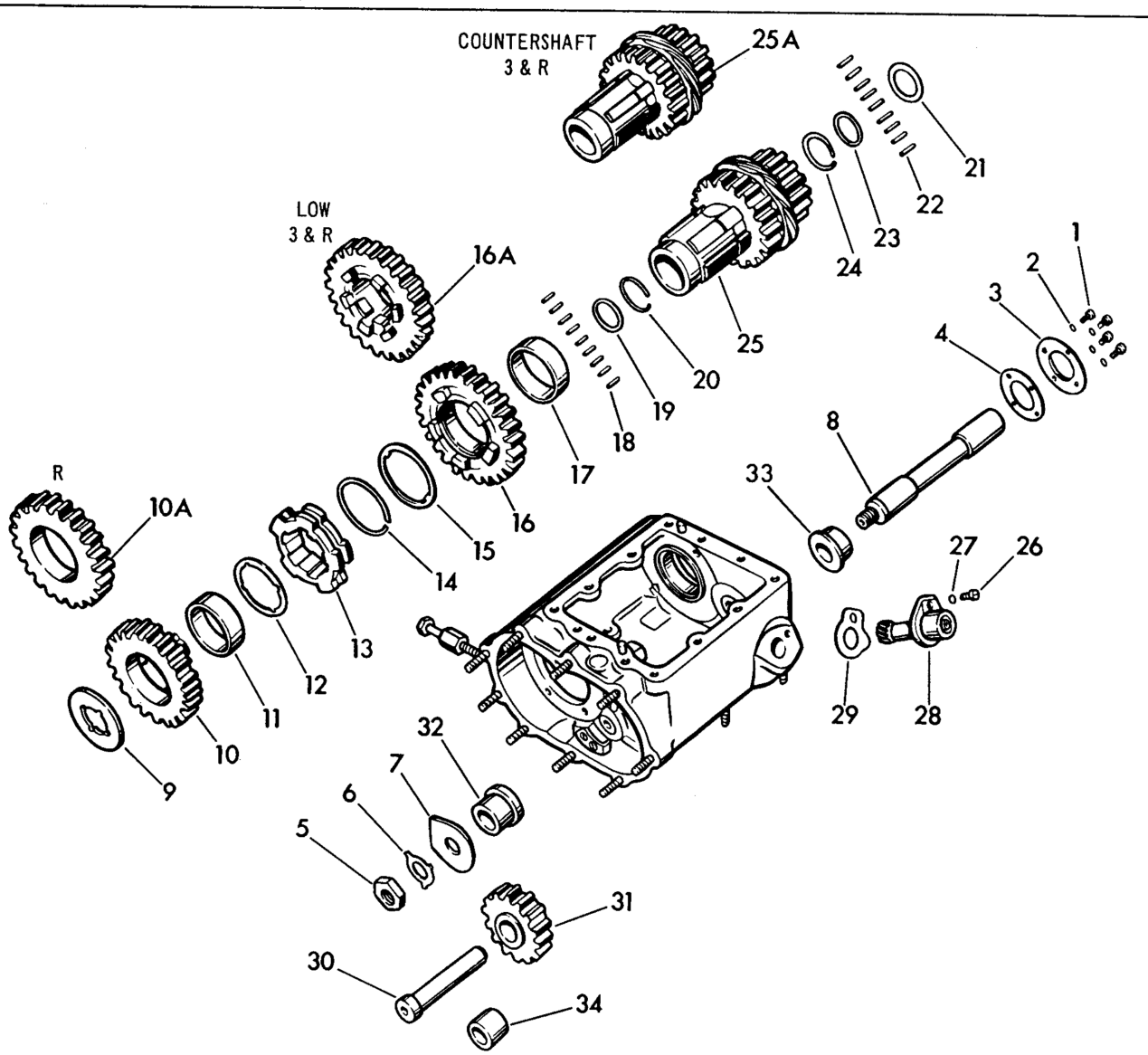

1. End cap screw (4)
2. End cap screw washer (4)
3. End cap
4. End cap gasket
5. Countershaft nut
6. Lock washer
7. Lock plate
8. Countershaft
9. Countershaft gear end washer
10. Low gear
10A. Countershaft reverse gear
11. Low gear bushing
12. Low gear bearing washer
13. Shifter clutch
14. Spring lock ring
15. Gear retaining washer
16. Countershaft second gear
16A. Countershaft low gear (3-speed and reverse)
17. Second gear bushing
18. Bearing rollers (22)
19. Roller retainer washer
20. Lock ring
21. Roller thrust washer
22. Roller bearing (22)
23. Retaining washer
24. Lock ring
25. Countershaft gear
25A. Countershaft gear (19-tooth for 3-speed and reverse)
26. Speedometer drive housing screw
27. Washer
28. Speedometer drive unit
29. Drive unit gasket
30. Idler gear shaft
31. Idler gear
32. Countershaft mounting collar (starter side)
33. Countershaft mounting collar (clutch side)
34. Idler gear bushing

Figure following name of part indicates quantity necessary for one complete assembly.

Figure 4D-12. Countershaft Assembly - Exploded View

side of gearcase. Bend ear of lock washer away from flat of nut and remove countershaft nut (5), lock washer (6) and countershaft lock plate (7). Countershaft (8) may then be driven out of case toward left side with appropriate-size drift pin, freeing countershaft gear assembly consisting of parts 9 through 25. When countershaft gear assembly needs no repair, it should not be disassembled. With shaft out, countershaft gear end washer (9) will drop into case unless some provision for catching it is made before extracting countershaft.

Disassemble countershaft gear assembly as follows:

Lift low gear (10), low gear bushing (11), low gear bearing washer (12) and shifter clutch (13) off splined countershaft.

Remove spring lock ring (14), gear retaining washer (15), countershaft second gear (16) and second gear bushing (17).

Remove the 22 bearing rollers (18) and roller retainer washer (19) from shaft hole in countershaft gear. Use knife blade or thin screwdriver to remove lock ring (20).

Remove roller thrust washer (21), 22 rollers (22), retaining washer (23) and lock ring (24) from opposite end of countershaft gear (25).

When disassembling countershaft gear assembly, be sure all rollers are accounted for and roller set from each end of gear is wrapped separately in paper or cloth, marked for end of gear from which it was removed.

CAUTION

If any of the rollers are lost or if sets become mixed, both sets will have to be replaced with new parts even though in serviceable condition.

Remove speedometer drive housing screw (26) and washer (27) and lift out speedometer drive unit (28) and gasket (29) from gear case.

If a three-speed and reverse transmission, remove idler gear shaft (30) and idler gear (31). Thread a 1/4-20 tap screw into end of shaft, grasp screw head in pliers and pull shaft out of case. It may be necessary to heat the case to facilitate pulling the shaft.

DISASSEMBLING MAINSHAFT (Fig. 4D-13)

Remove the four bearing housing retaining plate screws (1), oil deflector (2) and retaining plate (3).

Drive mainshaft assembly toward right side of case with rawhide mallet or block of wood and hammer until mainshaft bearing (6) or bearing housing (7) with bearing are just free of opening in case. With screwdriver or other suitable tool, pry lock ring (12) out of groove in mainshaft and slide it onto mainshaft splines. Pull ball bearing nut (4), ball bearing washer (5), ball bearing (6), bearing housing (7), low and second gear assembly (8) and mainshaft (9) out

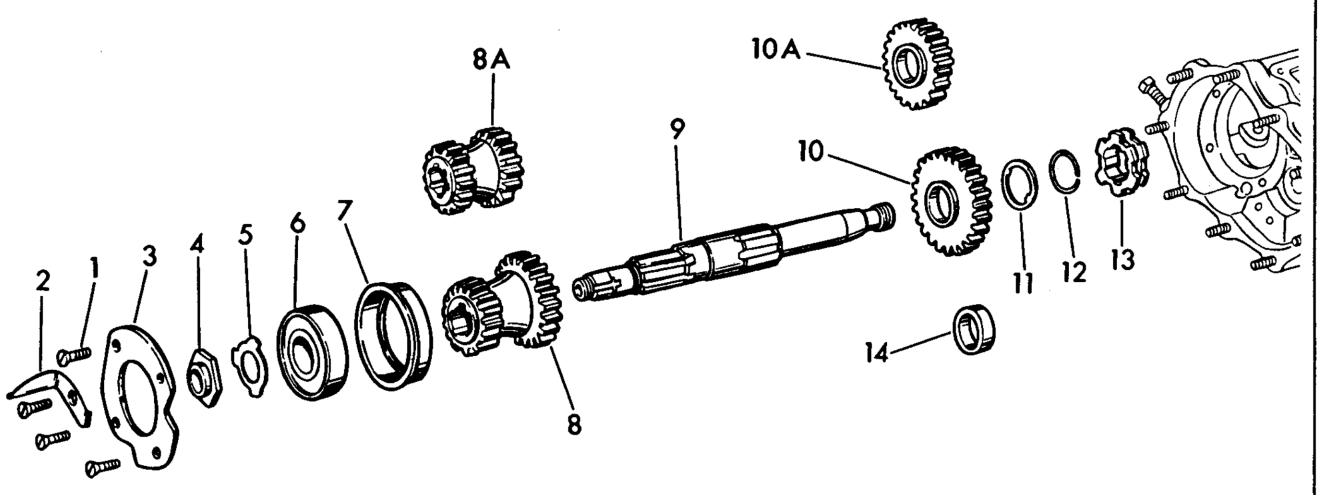

1. Bearing housing retaining plate screw (4)
2. Oil deflector
3. Retaining plate
4. Ball bearing nut
5. Ball bearing washer
6. Mainshaft bearing
7. Mainshaft bearing housing
8. Low and second gear
8A. Low and reverse gear (handshift)
9. Mainshaft
10. Third gear
10A. Mainshaft second gear (handshift)
11. Retaining washer
12. Lock ring
13. Shifter clutch
14. Third gear bushing

Figure following name of part indicates quantity necessary for one complete assembly.

Figure 4D-13. Mainshaft Assembly - Exploded View

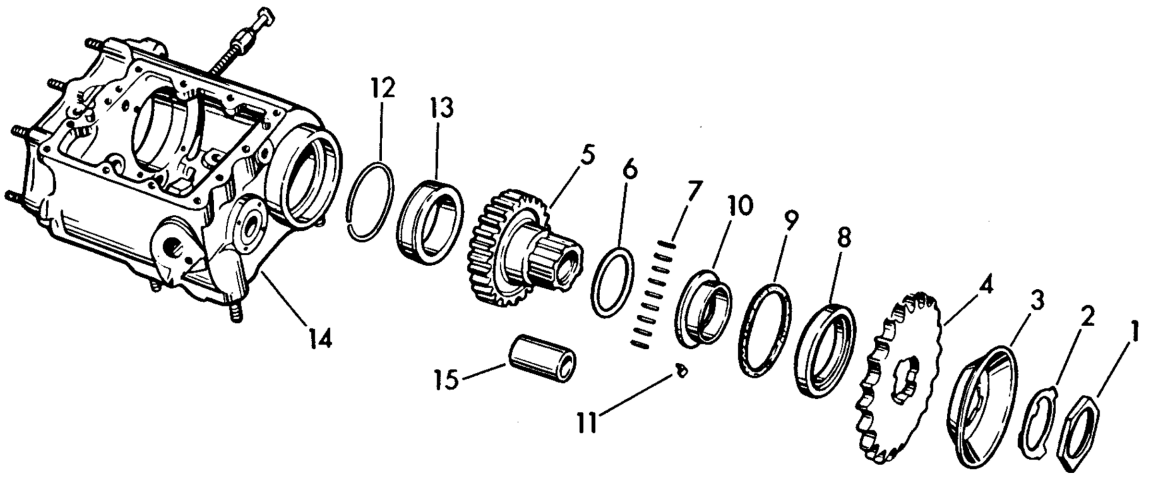

1. Sprocket lock nut
2. Sprocket lock washer
3. Oil deflector
4. Chain sprocket
5. Main drive gear
6. Thrust washer
7. Roller bearings (44)
8. Main drive gear oil seal
9. Oil seal cork washer
10. Main drive gear spacer
11. Main drive gear spacer key
12. Bearing race retaining ring
13. Bearing race
14. Gear box
15. Main drive gear bushing

Figure following name of part indicates quantity necessary for one complete assembly.

Figure 4D-14. Main Drive Gear - Exploded View

right side of case, slipping third gear (10), retaining washer (11), spring lock ring (12) and shifter clutch (13) off left end of mainshaft and out through shifter cover opening in case.

If bearing housing does not come out with bearing when mainshaft assembly is being removed, slide gear (8 or 8A) along mainshaft until edge of large gear is against bearing housing and drive out housing together with mainshaft. To avoid damage to case, make sure gear is positioned so it does not overlap housing.

Disassemble the mainshaft gear and ball bearing assembly only if inspection shows a need for replacing worn or damaged parts.

Clamp mainshaft in copper-faced vise jaws. Bend ear of lock washer (5) away from flat of nut (4) and remove nut and washer. Bearing (6) and gear (8) may then be removed with the All Purpose Claw Puller, Part No. 95635-46 or an arbor press. If using claw puller, insert center adapter, Part No. 95636-46, into end of shaft to prevent damage to shaft. Bearing and gear are removed separately.

DISASSEMBLING MAIN DRIVE GEAR (FIG. 4D-14)

Position gear box in vise and nail or bolt length of rear chain to bench. Engage chain on sprocket teeth to keep sprocket from turning.

Bend ear of lock washer away from flat of nut and remove sprocket lock nut (1) and washer (2). Nut has left hand thread. Lift oil deflector (3) and chain sprocket (4) off gear. Push main drive gear (5) into case and withdraw it from top. Thrust washer (6) usually comes out with gear. Remove the 44 roller bearings (7). Be sure all rollers are accounted for and wrap them in paper or cloth. If any of these rollers are lost or if rollers from another bearing become mixed with them, the entire set must be discarded and a new set fitted, even though the old rollers are in serviceable condition.

Do not remove main drive gear oil seal (8) or main drive gear spacer (10) unless inspection shows damage or wear. Complete instructions for removing oil seal and spacer may be found in Section 4D.

CLEANING, INSPECTION AND REPAIR

Clean all parts except gaskets (all gaskets should be replaced) with cleaning solvent and blow dry with compressed air.

Inspect all gears. If teeth are pitted, scored, cracked, chipped or if case hardening is worn through, replace with new gears.

Inspect all bushings, bearing races and shafts. If bent or worn, install new parts. If mainshaft ball bearing (6, Fig. 4D-13) is worn to point where play is obviously too great, install new bearing.

To install main drive gear bearing race (13, Fig. 4D-14), heat case to about 300 degrees and press out old race with arbor press after removing bearing race retaining ring (12). Reheat case and press in new race until flange is seated against case. Install new bearing race retaining ring.

Oil seal cork washer (9) and oil seal (8) should not be reinstalled if they have been removed. An oil leak will probably develop. Use new parts.

Carefully check shifter clutches (13, Fig. 4D-12 and 4D-13) and engaging dogs on gears. If they are rounded or battered appearing, they must be replaced.

Worn shifter clutch and gear dogs result from shifting abuses or from out-of-adjustment clutch that does not release fully. Damaged engaging dogs try to creep out of engagement under a steady load. This creeping action develops great side pressure that results in damage to shifting mechanism and all thrust points along shaft assemblies.

Check bearings (7, Fig. 4D-14 and 18, 22, Fig. 4D-12) for proper fit in races according to tolerances shown in "Transmission Specifications," Section 4A. Replacement rollers are available standard, .0004 in. and .0008 in. oversize.

ASSEMBLING GEAR BOX (FOUR SPEED)

ASSEMBLING MAIN DRIVE GEAR (FIG. 4D-14)

Assuming that main drive gear oil seal (8), oil seal cork washer (9) and gear spacer (10) are assembled in case (replacing these parts must be done before gear box is disassembled or after it is repaired and assembled as described in Section 4A), install rollers (7) in bearing outer race (13), holding rollers in place with a light coat of grease.

Install main drive gear thrust washer (6) on main drive gear. Insert main drive gear (5) into gear box. Be sure rollers stay in place as gear is inserted.

Install main drive gear spacer key (11), registering longer section of key in any splineway on main drive gear and shorter section of key in slot in outer edge of main drive gear spacer.

Install sprocket (4) with flat side outward. Install oil deflector (3), lock washer (2) and sprocket lock nut (1). Hold sprocket as outlined in disassembly procedure and tighten nut securely. Check main drive gear assembly end play. See "Transmission Specifications," Section 4A, for proper tolerances. Bend one ear of lock washer against flat of nut.

ASSEMBLING MAINSHAFT (FIG. 4D-13)

Assemble parts 4 through 8 to mainshaft before installing mainshaft in gear case. Position gear (8) on shaft splines. Press or fit ball bearing housing (7) over ball bearing (6) and press onto shaft. Assemble lock washer (5) and nut (4) to shaft and tighten securely. Bend over one ear of lock washer against flat of nut.

Insert mainshaft assembly into gear box far enough to install gear (10), thrust washer (11) lock ring (12) and shifter clutch (13) over shaft. Always install new lock rings and make sure they are properly seated in lock ring groove. One side of mainshaft shifter clutch is stamped "HIGH." Make sure this side faces main drive gear.

With a screwdriver or other suitable tool, work lock ring onto shaft splines. Use screwdriver wedged against shifter clutch to force lock ring into seat in shaft.

With a soft-metal hammer or brass drift, tap mainshaft assembly into case until flange on ball bearing housing is shouldered against case. Install retaining plate (3), oil deflector (2) and four screws (1).

If working on three-speed transmission, install reverse idler gear (31, Fig. 4D-12) and shaft before installing retaining plate.

ASSEMBLING COUNTERSHAFT (FIG. 4D-12)

Before installing countershaft gear train to shaft and case, it is necessary to check bearing fit and shaft end play.

If countershaft mounting collars (32 and 33) were removed for replacement, press or drive old parts out and new parts in after gear case has been heated to approximately 300 degrees to expand case and facilitate pressing.

Install roller sets (18 and 22) in countershaft gear (25), holding them in place with a coat of grease. Be sure lock rings (20 and 24) and bearing retaining washers (19 and 23) are in place before installing bearings. Install bearing thrust washer (21) in its recess in left end of countershaft gear. Install countershaft temporarily to check bearing fit. See "Transmission Specifications," Section 4A, for tolerances.

Install countershaft gear in case holding end play adjusting washer (9) in place with daub of heavy grease. Install countershaft.

Check end play with feeler gauge between end play adjusting washer and end of countershaft gear. Consult transmission specifications for tolerances. Increase or decrease end play as necessary by fitting end play adjusting washer of required thickness. Washers are available in thicknesses of .074, .078, .082, .085, .090, .095 and .100 in. When correct gear end play has been established, remove countershaft and gear from case. Set aside adjusting washer until needed for assembly.

Install gear bushing (17), gear (16), thrust washer (15) and gear lock ring (14) on countershaft gear (25).

Install shifter clutch (13), thrust washer (12), gear bushing (11) and gear (10) on countershaft gear. Check to make sure all rollers are in place in gear.

Place end play adjusting washer (9) on end of countershaft gear, holding in position with daub of grease. Position assembly in case and insert countershaft (8) and lock plate (7). Straight edge of lock plate fits against edge of bearing retaining plate (3, Fig. 4D-13). Install lock washer (6) and nut (5). Tighten nut se-

curely and bend over one ear of lock washer against flat of nut.

Install gasket (4) and end cap (3) with washers (2) and screws (1). Install gasket (29), drive unit (28), washer (27) and screw (26).

Install shifter cover, starter clutch, starter cover and clutch as described in pertinent sections.

Assemble transmission to motorcycle and connect controls in reverse order of stripping procedure described in "Stripping Motorcycle for Transmission Repair," Section 4A.

DISASSEMBLING GEAR BOX (THREE-SPEED AND REVERSE)

A three forward speed and reverse transmission cannot be installed on a foot shift model motorcycle, and a three-speed transmission cannot be assembled in a four-speed gear case.

The disassembly, repair and assembly procedures for a three-speed and reverse transmission are the same as for a four-speed transmission except for the procedures described in operations to four-speed model and following differences:

Refer to Fig. 4D-12. In three-speed and reverse countershaft assembly, omit shifter clutch (13), lock ring (14), thrust washer (15) and gear bushing (17).

Substitute gear 10A for 10, 16A for 16, and 25A for 25.

Refer to Fig. 4D-13. Substitute 8A for 8 and 10A for 10.

Refer to Fig. 4D-9. Substitute 8A for 8.

electrical

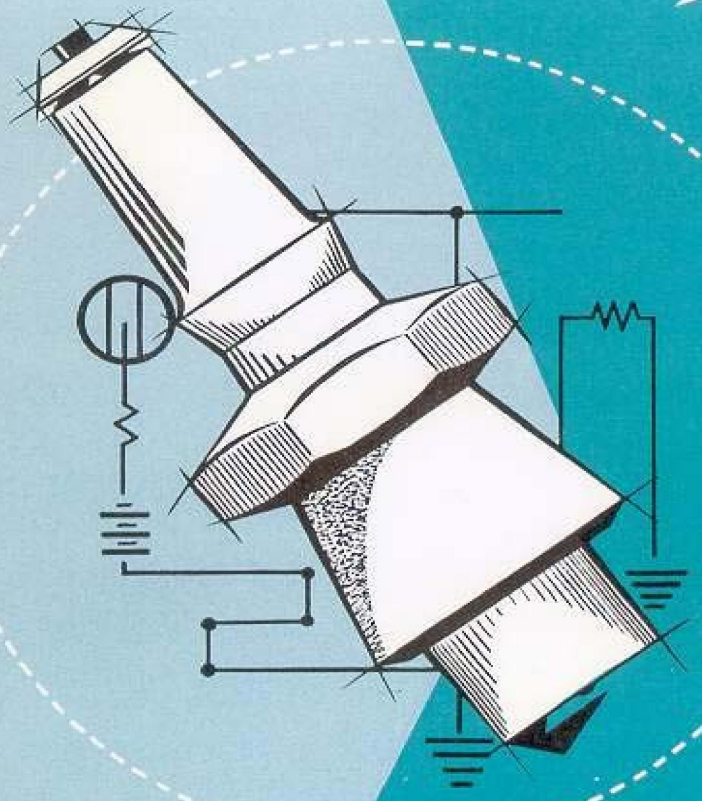

WIRING

WIRING DIAGRAM KEY

A. Conduit (four wire) - Red, green, black and yellow
B. Conduit (one wire) - Green
C. Conduit (four wire) - Red, green, yellow and black
D. Handlebar (loose wires) - Red with black tracer, black with red tracer, red with yellow tracer, black and green
E. Conduit (two wire) - Red and green
F. Conduit (three wire) - Black, green and red
G. Conduit (three wire) - Red, green and red
H. Conduit (two wire) - Black with red tracer and red
J. Conduit (two wire) - Red and green
K. Conduit (one wire) - Red
L. Conduit (two wire) - Green and red
N. Conduit (one wire) - Green

1. Switch terminal - 3 Red wires
2. Switch terminal - 2 Green wires
3. Switch terminal - Not used with standard wiring
4. Switch terminal - Green wire
5. Switch terminal - Black and yellow wires
6. Junction terminal - 5 Black wires
7. Junction terminal - Green, yellow wires
8. Speedometer light - Green wire
9. Terminal - Red with black tracer, green wire
10. Terminal - Red wire
11. Terminal - Not used with standard wiring
12. Terminal - Not used with standard wiring
13. Regulator - 2 Red, green wires
14. Tail and stop lamp - Green, red wires
15. Battery positive terminal - Red wire
16. Battery negative terminal - Black wire
17. Oil pressure signal switch - Green wire
18. Handlebar headlamp switch - Red with black tracer, black with red tracer, red with yellow tracer
19. Horn switch - Black, green wires
20. Terminal - Not used with standard wiring
21. Terminal - 2 Black wires with red tracer
22. Terminal - Red wire, red with yellow tracer
23. Terminal - Not used with standard wiring
24. Terminal - 2 Black wires
25. Terminal - Yellow wire
26. Ignition circuit breaker - Black wire
27. Stop lamp switch - Black, red wires
28. Generator signal light - Green, black wires
29. Terminal - Not used with standard wiring
30. Terminal - Not used with standard wiring
31. Terminal - Not used with standard wiring
32. Generator "F" terminal - Green wire
33. Generator "A" terminal - Red and green wires
34. Ignition - Light switch-See terminals 1 thru 5
35. Ignition coil - 2 Black wires
36. Terminal place - See 10 and terminals 20 thru 24
38. Terminal box - See terminals 39 thru 43
39. Terminal - 3 Red wires
40. Terminal - 2 Green wires
41. Terminal - 3 Black wires
42. Terminal - Yellow, green wires
43. Terminal - 2 Red wires
45. Headlamp bracket - Black wire
46. Junction terminal - Black, green wires
47. Neutral indicator light - Black, green wires
48. Neutral indicator switch - Green wire
50. Oil signal light - Black and green wires
51. Horn - Red and green wires
52. Headlamp - Red wire black with red tracer

KEY TO WIRING DIAGRAM (RADIO-SPECIAL)

Wiring with radio equipment is unchanged except for regulator, generator and battery connections.

B. Conduit (one wire) - Green
G. Conduit (two wire) - Red and green
K. Conduit (one wire) - Red
L. Cable (two wire) - Red and green
M. Conduit (one wire) - Red (not shown)

13. Regulator - Green and red wires
32. Generator "F" Terminal - Green wire
33. Generator "A" Terminal - Red wire
39. Terminal - Red wire
49. Fuse

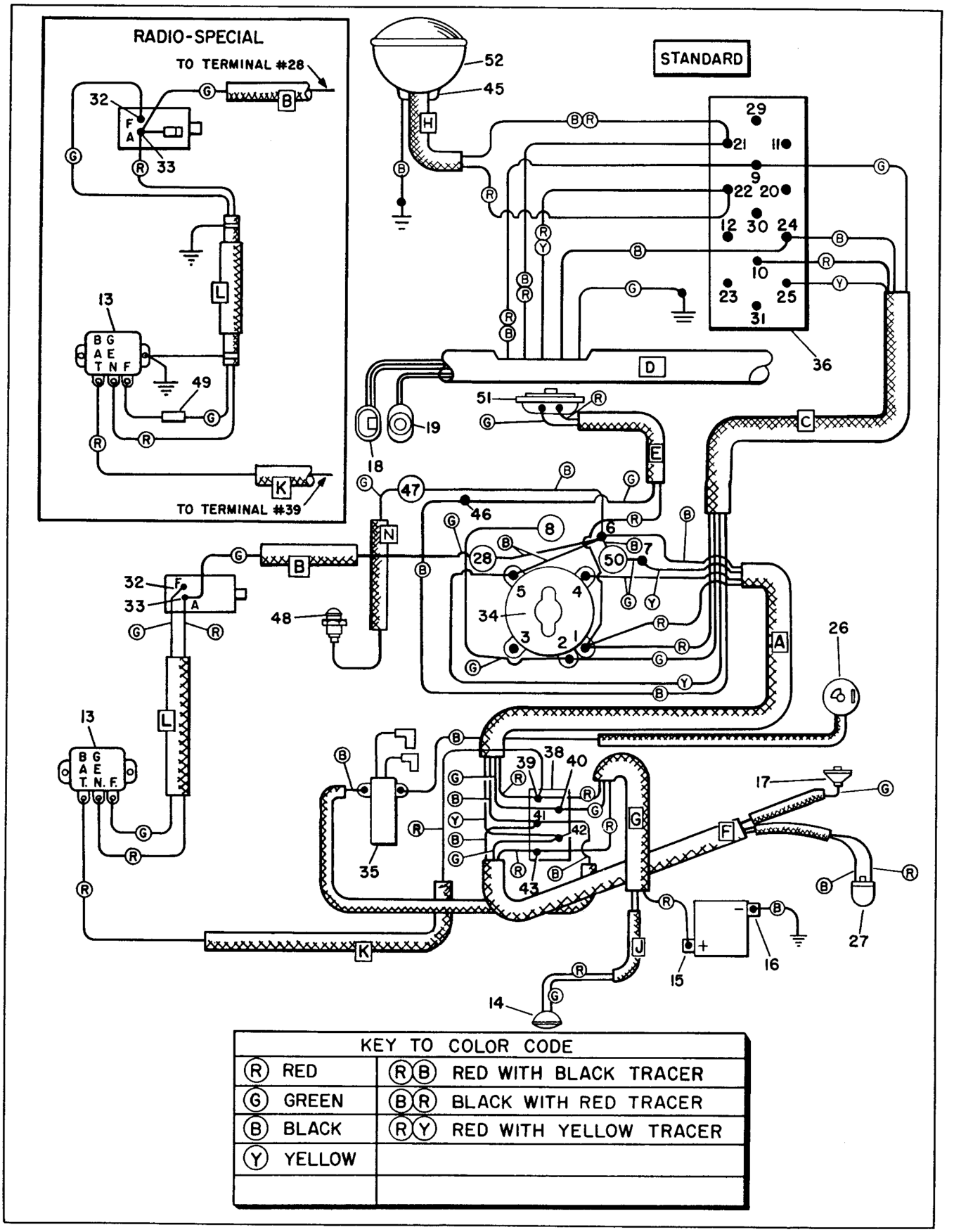

Figure 5B-1. Wiring Diagram

SWITCHES

IGNITION-LIGHT SWITCH

The switch located in the center of the instrument panel below the "GEN" and "OIL" indicator lamps is a combination ignition-light switch. It has three positions plus a center-off position. One notch counterclockwise illuminates parking lights only. The first notch or click clockwise from the center-off position is ignition only while the second click is running lights and ignition.

It is not necessary to keep the key inserted in the lock to operate the switch after it has been unlocked. The switch can be locked only in the "off" and "parking lights" position.

DISASSEMBLING IGNITION LIGHT SWITCH

On Duo-Glide and Servi-Car Models remove instrument panel cover by prying out side-cover clip located at trip mileage set knob and turning out mounting base center screw located in the center of instrument panel below speedometer. On Model 165 remove switch bezel to expose switch.

Disconnect all wires connected to switch terminals and remove four switch mounting screws.

See Fig. 5C-1. All directions for disassembly apply with switch in an inverted position. Switch must be in "off" position and unlocked.

Grasp end of roller contact retainer with pliers and simultaneously move it upward and away from roller contact (1). Lift off roller contact and switch mounting plate assembly (2). Notice that this plate is positioned with the three-terminal side away from lock cover hinge.

Reinforcing plate (3) with contact bar holder (4) and roller contact retainer (5) can be removed from switch cover by slipping part assembly sideways until one set of tabs clears slot in switch cover, then lifting and sliding assembly the opposite direction to clear other tab.

Switch base (7) and lock plate (6) can be removed from switch cover. Note that narrow end of elongated hole in lock, and lug on switch lock (8) which fits into hole in lock plate, are toward lock cover hinge.

Lock assembly (8 and 9) can now be lifted out of switch cover (10). Avoid separating switch cylinder from its case unless lock is faulty.

CLEANING, INSPECTION AND REPAIR

Wash all parts in cleaning solvent and dry with compressed air.

Inspect all parts, particularly roller contact and plate assembly for excessive wear of contacting brass buttons and roller surfaces. Extreme wear of these parts may allow head of roller contact retainer to short against switch lock plate. Loosened terminals on switch mounting plate may also cause a short

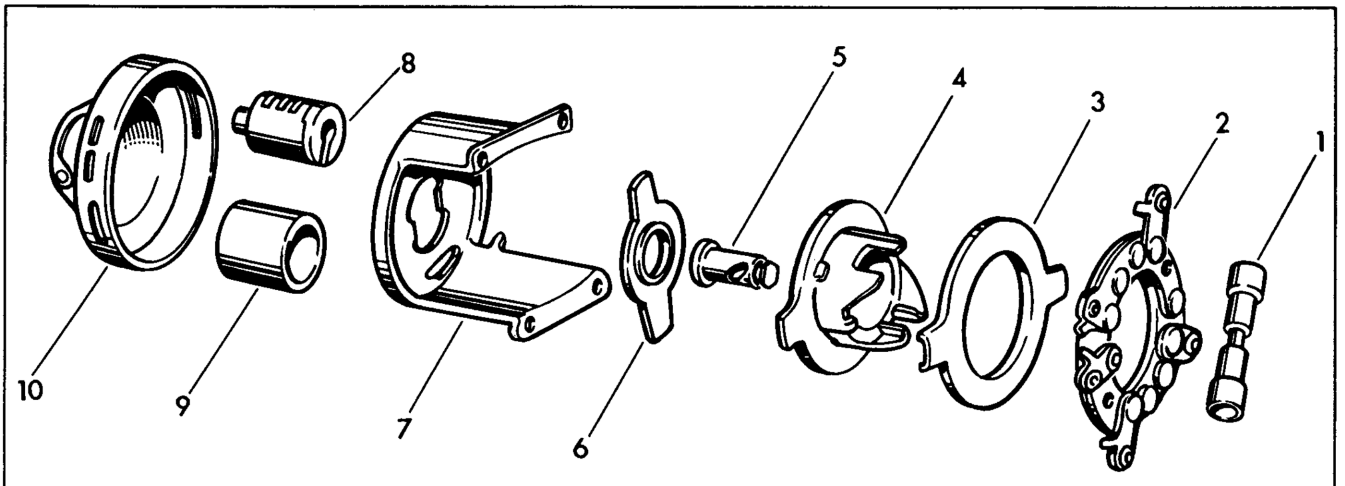

1. Roller contact
2. Switch mounting plate assembly
3. Reinforcing plate
4. Contact bar holder
5. Roller contact retainer
6. Switch lock plate
7. Switch base
8. Ignition switch cylinder
9. Ignition switch cylinder case
10. Switch cover

Figure 5C-1. Ignition Light Switch

or an inconsistent positive contact. Replace all worn or rusted parts.

ASSEMBLING IGNITION LIGHT SWITCH

Apply a light coat of grease to head of roller contact retainer, lock plate, roller contact and contact buttons on switch mounting plate.

Assemble parts in reverse order of disassembly. If lock cylinder had to be removed from case for repair or replacement, it must be replaced in correct position or switch cannot be locked. To reassemble correctly, insert lock cylinder into housing with tumblers in any one of the four registers. While pressing cylinder into housing with fingertip, insert key and turn clockwise as far as possible. Remove key and complete assembly.

LAMPS

HEADLAMP

DUO-GLIDE, SPORTSTER AND SERVI-CAR

The headlamp is a sealed-beam type, specially designed and made for Harley-Davidson motorcycles. When replacement is required, use only the prescribed sealed-beam unit. Do not attempt to use an automobile sealed-beam unit because the current requirements for a motorcycle are much less than for an automobile and damage to battery or generator will result. If either filament burns out, or the lens breaks, the entire unit must be replaced. Do not attempt to repair a defective sealed-beam unit because when the seal is broken the reflector tarnishes and poor light and road visibility result.

DUO-GLIDE AND SERVI-CAR

Loosen door screw enough to remove headlamp door. Remove three retaining ring screws and retaining ring. The sealed-beam unit is now free from the headlamp body, and the connector block can be removed from the unit by pulling connector block from the unit prongs.

Assembly is the reverse order of disassembly. Make sure connector block contacts are clean to ensure good electrical contact.

To replace the headlamp simply remove a back panel and disconnect two lamp wires leading to terminal plate. Remove headlamp fastening nut and free lamp from motorcycle.

SPORTSTER

Loosen headlamp adjusting nut located beneath headlamp housing with socket wrench and move headlamp back so screw located on lower periphery of headlamp door is accessible with a screwdriver. Remove screw, simultaneously lift and swing unit up and free from headlamp body. Pull connector block from sealed-beam unit prongs. Pry retaining springs from headlamp door grooves to free sealed-beam unit from rim.

Assembly is the reverse order of disassembly. Be sure connector block contacts are clean to ensure a good electrical contact. After final assembly, readjust headlamp as described under "Beam Adjustment."

To replace the headlamp assembly it is first necessary to remove the handlebar clamp front cover and then the headlamp housing assembly. To free headlamp, disconnect lamp wires and remove nut securing lamp to the fork. Assembly is the reverse order of disassembly.

165 AND HUMMER MODEL

To replace a headlamp bulb on the 165 Model, remove the screw at base of lamp door. Simultaneously lift and swing unit up and free from headlamp body. Pry retaining springs from headlamp rim grooves to separate headlamp door, lens and reflector. Turn bulb free from reflector.

To replace a headlamp bulb on the Hummer Model, remove the screw at base of lamp door and swing door and lens free from lamp as a unit. Remove bulb from reflector.

Assembly is the reverse order of disassembly for both models. Be sure to correctly position the reflector gasket to ensure an air tight seal. If leakage should occur, the reflector surface will become dull in a very short time resulting in a very poor light.

The headlamp assembly may be replaced by first disconnecting the two headlamp wires at their "connecting terminals." (Disconnect the 165 Model lamp wires at the connector taped to front fork, and Hummer Model lamp wires at base of headlamp.)

Remove headlamp fastening nut and free lamp from motorcycle.

Assembly is the reverse order of disassembly.

BEAM ADJUSTMENT

To get the greatest efficiency from the headlamp and to meet the requirements of the law, correctly adjust the headlamp beam according to the following instructions.

Draw a horizontal line on a wall or screen exactly the same height as the center of the headlamp to be checked and adjusted. Then, position the motorcycle on a level surface with headlamp approximately 25 feet away from the test pattern. Have a rider sit on the motorcycle to simulate actual running conditions. Be sure tires are correctly inflated. Aim the headlamp directly at the screen and turn on the light switch. Set beam selector switch on the high beam position, and check beam for height and direction. The top of the main beam of light should register even with, but no higher than the horizontal line of the test pattern.

If adjustment is necessary, remove the fork back panel from the Duo-Glide and Servi-Car models only. Loosen the headlamp clamp nut and position the lamp to correctly adjust the beam of light in relation to the horizontal line.

At the same time, turn the headlamp right or left to direct the beam of light straight ahead. Tighten the clamp nut after the lamp is correctly adjusted and install remaining fork parts.

BULB CHART

Model	Lamp Description	No. Bulbs Required	Candle Power or Wattage	Harley-Davidson Part Number
DUO-GLIDE	HEADLAMP	1		67717-48A
	Hi Beam		50 Watts	
	Lo Beam		40 Watts	
	TAIL AND STOP LAMP	1		68165-47
	Tail Lamp		3 C.P.	
	Stop Lamp		21 C.P.	
	INSTRUMENT PANEL			
	Generator Signal Light	1	2 C.P.	68462-49
	Oil Signal Light	1	2 C.P.	68462-49
	Speedometer Lamp	1	1.5 C.P.	71090-47
	Generator Signal Light (Special Radio)	1	2 C.P.	68462-49
	Neutral Indicator Light	1	2 C.P.	68462-49
	ACCESSORIES			
	Spot Lamp	1	32 C.P.	68715-49
	Parking Lamp	-	3 C.P.	68165-15
	Turn Indicator Lamp	4	21 C.P.	68572-50
	Turn Indicator Pilot Lamp	2	1 C.P.	68561-50
SPORTSTER	Headlamp Hi Beam / Lo Beam	1	40 Watts / 35 Watts	67717-59
	Tail Lamp Tail Lamp / Stop Lamp	1	3 C.P. / 21 C.P.	68165-47
	Generator Signal Light	1	3 C.P.	71090-59
	Oil Signal Light	1	3 C.P.	71090-59
	Speedometer Lamp	1	1.5 C.P.	71090-47
	ACCESSORIES			
	Spot Lamp	1	32 C.P.	68715-49
	Parking Lamp	-	3 C.P.	68165-15
	Turn Indicator Lamp	4	21 C.P.	68572-50
	Turn Indicator Pilot Lamp	2	1 C.P.	68561-50
SERVI-CAR	Headlamp Hi Beam / Lo Beam	1	50 Watts / 40 Watts	67717-48A
	Tail Lamp Tail Lamp / Stop Light	1	3 C.P. / 21 C.P.	68165-47
	Generator Signal Light	1	2 C.P.	68462-49
	Oil Signal Light	1	2 C.P.	68462-49
	Speedometer Lamp	1	1.5 C.P.	71090-47
	ACCESSORIES			
	Spot Lamp	1	32 C.P.	68715-49
	Turn Indicator Lamp	4	21 C.P.	68572-50
	Turn Indicator Pilot Lamp	2	1 C.P.	68561-50
165	Headlamp Hi Beam / Lo Beam	1	32 C.P. / 21 C.P.	67750-59
	Tail Lamp Tail Lamp / Stop Lamp	1	3 C.P. / 21 C.P.	68165-47
	ACCESSORIES			
	Speedometer Lamp	1	1.5 C.P.	71090-47
	Parking Lamp	-	3 C.P.	68165-15
	Fender Lamp	1	2 C.P.	68462-49
HUMMER	Headlamp Hi Beam / Lo Beam	1	21 C.P. / 21 C.P.	67751-47
	Tail and Stop Lamp Tail Lamp / Stop Lamp	1	3 C.P. / 21 C.P.	68165-47

GENERATOR

MODEL 58 GENERATOR

The Model 58, or standard, generator is a six-volt, two-brush unit with charging rate governed entirely by the voltage regulator. The regulator functions to increase charging rate when the battery charge is low or current is used, and to decrease charging rate when no current is being used and the battery is nearing full charge.

CHECKING GENERATOR

It is possible to trouble shoot faulty generator without removing the generator from the engine or, if necessary to remove it, without completely disassembling the generator. When a generator stops charging or not charging at a satisfactory rate as evidenced by a "dead" battery or signal light on switch panel remaining lighted, it is recommended that unless the trouble is known definitely, the following checking sequence be used:

Make certain generator signal light circuit is not grounded or shorted out. Remove generator signal light wire from generator "A" terminal and position wire so it touches no part of motorcycle. Turn ignition on. If light on instrument panel goes on, wire is grounded. Start engine and run at fast idle speed. If wire is grounded, signal light will remain on whether or not generator is charging. When signal light circuit is not faulty, further checking must be done.

TESTING GENERATOR OUTPUT

Ground the "F" terminal on the regulator by attaching a jumper wire from the terminal to the motorcycle frame.

Disconnect the red wire from the "GEN" terminal on the regulator. Connect one lead from an ammeter to the wire, the other lead to the regulator terminal.

Start the engine and adjust the engine to the equivalent of about 30 to 35 mph. Take reading from ammeter. Avoid running with grounded field for extended periods. If ammeter shows a charge of 15 amperes or more, the trouble is (1) in wiring between generator "A" terminal and voltage regulator "GEN" terminal, or (2) in current and voltage regulator (see "Voltage Regulator" Section 5I). If generator shows no charge or charge below minimum rate of 15 amperes, it must be removed for further checking.

REMOVING GENERATOR

DUO-GLIDE. Disconnect wires from generator "F" and "A" terminals. Remove two long screws through timing gearcase cover that secure generator to gearcase. Move generator to left side of motorcycle and remove, gear end first, between frame members.

SPORTSTER. Disconnect red wire from "BAT" terminal on voltage regulator. Disconnect black wire from "GEN" terminal.

Remove two long screws through timing gearcase cover that secure generator to gearcase.

Remove regulator from generator. Remove black wire from "F" terminal and red wire from "A" terminal on generator.

Remove generator from chassis out left side of motorcycle.

SERVI-CAR. Disconnect red wire from "BAT" terminal on voltage regulator. Disconnect black wire from "GEN" terminal. Remove two long screws through timing gearcase and remove generator to left side of chassis, depressing clutch pedal to allow generator to pass.

INSPECTING BRUSHES (Fig. 5E-1)

Inspect brushes to make certain they are not worn, broken or gummy and sticking in brush holders.

Remove commutator end cover nuts (7), washers (8), and frame screws (9).

Pry or gently tap commutator end cover (10) off frame and armature shaft. Remove brush holder mounting plate (13) from frame. Disconnect both black brush wires and generator positive brush cable from brush holder terminals.

Remove brushes from brush holders and clean brush holders with cleaning solvent. Blow dry with compressed air. Replace brushes when longest side of brush measures 1/2 in. or less. Seat new brushes with a brush seating stone.

TESTING FIELD COILS

Arrange an ammeter and six-volt battery in series with test points connected to leads. During all tests be particularly careful to avoid overloading or shorting ammeter. An overload is indicated by the needle going beyond range of calibrated scale. A direct short is indicated by needle swinging violently to extreme limit of its travel. In either case, contact must be broken instantaneously to avoid damaging the ammeter. In making the following tests, first make only a flicking, momentary contact to determine if a short is present. If ammeter needle does not go beyond calibrated scale, it is safe to make continuous contact. As added precaution, work on a bench with a non-conductive top. Never touch test points together.

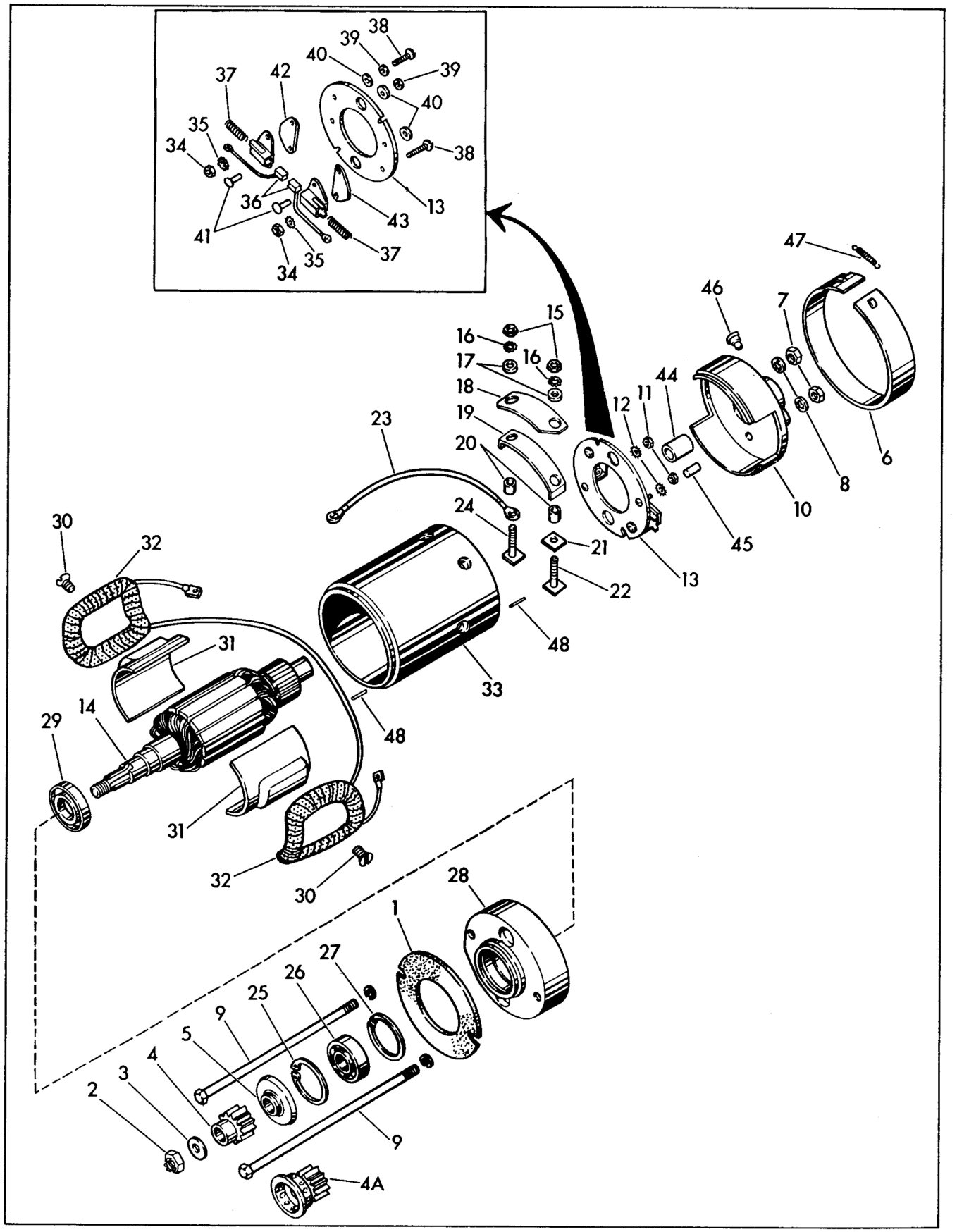

Figure 5E-1. Model 58 Generator - Exploded View

LEGEND FOR FIGURE 5E-1

1. Mounting gasket
2. Gear shaft nut
3. Gear shaft washer
4. Drive gear
4A. Drive gear with oil slinger
5. Drive end oil deflector
6. Brush cover strap
7. Commutator end cover nut (2)
8. Commutator end cover washer (2)
9. Frame screw (2)
10. Commutator end cover
11. Brush cable nut (2)
12. Brush cable washer (2)
13. Brush holder mounting plate
14. Armature
15. Terminal screw nut (2)
16. Terminal screw lock washer (2)
17. Insulating washer (2)
18. Terminal insulator
19. Terminal bolt clip
20. Terminal screw bushing (2)
21. Bracket insulator
22. Terminal screw (2)
23. Positive brush cable
24. Terminal screw (see item 22)
25. Bearing retainer
26. Armature bearing
27. Bearing retainer
28. Drive end plate
29. Armature oil seal
30. Pole shoe screw (2)
31. Pole shoe (2)
32. Field coil (2)
33. Frame
34. Terminal screw nut (2)
35. Terminal screw lock washer (2)
36. Brush (2)
37. Brush spring (2)
38. Brush holder plate screw (2)
39. Brush holder plate screw washer (2)
40. Brush holder plate screw washer (3)
41. Brush holder plate rivet (2)
42. Brush holder insulation
43. Brush holder spacer
44. End cover bushing
45. Generator oil wick
46. Commutator end cover oil cup
47. Brush cover strap spring
48. End locating pin (2)

Figure following name of part indicates quantity necessary for one complete assembly.

1. Touch one test lead to "F" terminal and the other to any part of the generator frame. There should be no reading. Move first terminal lead to "A" terminal. A reading at either contact indicates a terminal or field coil is grounded to frame. If no reading was obtained, follow further disassembly procedure and eliminate step 2.

DUO-GLIDE. Remove generator drive gear using Gear Puller, Part No. 95715-19.

SPORTSTER AND SERVI-CAR. Remove generator drive gear using All Purpose Claw Puller, Part No. 95635-46, and Wedge Attachment, Part No. 95637-46.

Press armature out of ball bearing with arbor press and remove. Disassemble terminals, remove field coil leads, inspect terminal components for cracked or worn through insulating materials and, if parts appear serviceable, reassemble terminal components eliminating field coil leads.

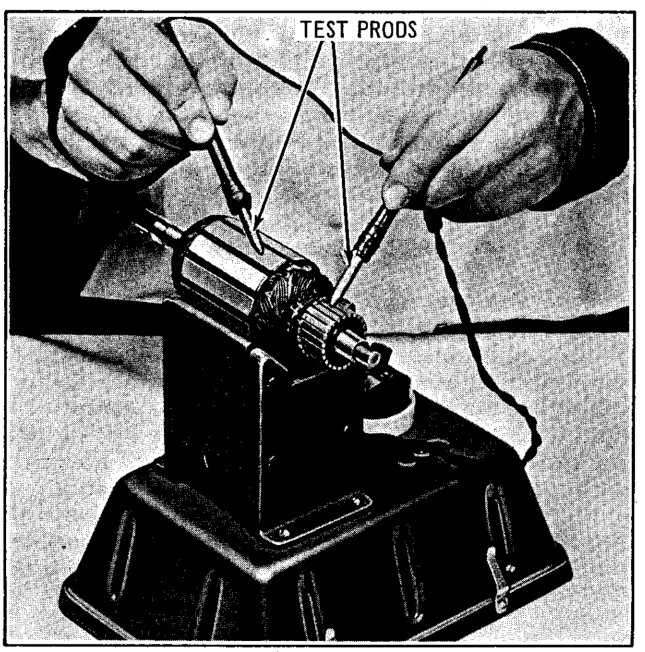

Figure 5E-2. Checking Armature for Grounded Winding

2. Recheck terminal to ground contacts as described in step 1. No reading indicates terminals are properly insulated. If reading was obtained in step 1, but not in step 2, field coils are probably grounded.

3. Touch one test lead to either field coil lead and the other to the generator frame. A reading indicates a field coil is grounded and it is necessary to clip the connection between the field coils. Touch test leads to one field coil lead and ground. Repeat process on other coil. A reading indicates a grounded coil which will have to be replaced. If terminals and field coils are in serviceable condition, proceed to step four.

4. Touch test leads to two terminal coil leads. Ammeter should read 2 amperes. No reading indicates an open coil, a higher reading indicates a shorted coil.

5. Strip back the insulation at point where two field coil leads are joined and file the insulating varnish off a spot on the splice. Connect one test lead at this point, the other at either coil lead. Without moving first test lead, move second test lead to opposite free lead. The ammeter should read 4 amperes in both cases. No reading indicates an open coil, a higher reading indicates a shorted coil. Faulty parts must be replaced.

6. Touch one test lead to brush holder mounting plate, the other to positive (insulated) brush holder. A reading indicates a shorted holder. Clean thoroughly and recheck. If reading is obtained, replace brush holder mounting plate. Check negative brush holder to be sure it is tight and well grounded.

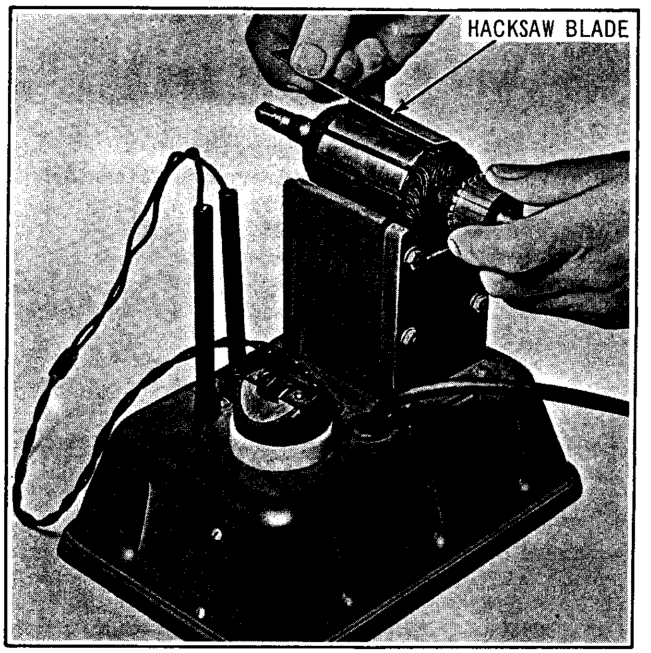

Figure 5E-3. Testing Armature for Short

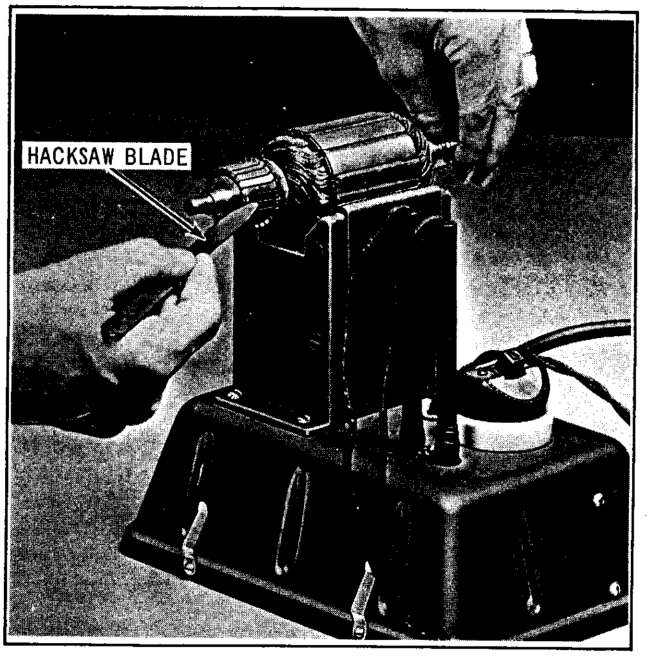

Figure 5E-4. Testing Armature for Open Circuit

If field coils, brush holders and generator terminals are serviceable, the trouble is probably in the armature.

Do not remove pole shoes and field coils unless tests previously made proved one or both of the coils to be faulty. When a pole shoe must be removed to replace a field coil, follow the procedure described in "Disassembling Generator."

TESTING ARMATURE

TEST FOR GROUND. If growler with test leads is available, test by touching armature core with one test lead and commutator segments, individually, with the other. If this means of testing is not available, test with battery, ammeter and leads as used for testing field coils. Contact commutator segments with one test point and armature core with the other. If circuit is completed, armature is grounded. See Fig. 5E-2.

If armature is found to be grounded, make sure commutator is free from carbon and copper dust deposits. After cleaning thoroughly between segments and at ends of commutator and blowing dry with compressed air, repeat test. Armature must be replaced if ground is still present.

TEST FOR SHORT. Place armature in growler and hold piece of hacksaw blade parallel to and in loose contact with armature core. Turn growler on. Rotate armature slowly several turns. The hacksaw blade will be attracted to the armature core and will vibrate at one or more points if armature is shorted. See Fig. 5E-3.

If short is found, clean commutator segments as described above under "Test for Ground." If short still exists, armature must be replaced.

TEST FOR "OPEN." Place armature in growler. Turn growler on. Insert tip of hacksaw blade between commutator segments that are in horizontal alignment with top of growler "V" shaped cradle. Make and break contact between segments with hacksaw blade. A strong flash should be seen as contact is broken. No flash or a weak flash indicates an open circuit. See Fig. 5E-4.

Repeat the test between all segments, turning the armature so each test is made in the same position relative to the growler. If an open circuit is found, check for loose or broken wires at commutator connections. If none are found that may be repaired, armature must be replaced. All soldering should be done with rosin flux.

REPAIRING COMMUTATOR

A generator that has been in extended service may fail to deliver enough current to keep the battery in a charged condition although its field coil and armature windings are in serviceable condition. In such cases the commutator and/or brushes are usually at fault. If the commutator has been worn down until the mica separations between segments are no longer undercut or recessed, the commutator probably is grooved noticeably in path of brush travel and no slot between commutator segments exists, causing the brushes to ride high and make only intermittent contact with commutator.

The commutator may be turned down in a lathe and sanded with fine sandpaper until true and smooth. Mount armature in lathe on its bearing seats not on shaft centers. Never sand a commutator with emery

cloth. Particles will imbed themselves in the copper surface, holding the brushes off the commutator far enough to cause heavy arcing and burning.

After commutator has been turned down, the mica insulation between segments must be recessed or undercut approximately .025 in. Undercutting is usually done with a special undercutting machine. If one is not available, satisfactory undercutting may be done with a piece of hacksaw blade. Carefully thin down blade width, if necessary, until offset saw teeth are the same width as slots in commutator. Slots must be square-bottomed for good results. See Fig. 5E-5.

Sand commutator surface on lathe and repeat growler test to be sure there are no copper particles between segments.

Open circuited armatures can often be repaired. The break or opening in the circuit usually occurs at the commutator riser bars, a result of overloading the generator which causes overheating and the melting of solder at the joint. Resolder the leads in the riser bars using rosin flux. Turn down commutator and sand to remove any burn spots as described in previous paragraph.

POLARIZING GENERATOR

Assemble generator as described in "Assembling Generator." After a generator has been repaired, it must be repolarized to make sure that it has the correct polarity for charging in the right direction. A generator that is put into service with the wrong polarity may result in burned relay points, a dead battery and damage to the generator.

Polarize the generator by momentarily connecting the "BAT" and "GEN" terminals with a jumper wire.

GENERATOR CHARGING RATE

After a generator has been repaired, assembled, installed on motorcycle, connected and polarized, it may be checked for maximum output. That is, the maximum, uncontrolled amperage output range may be checked to determine the success of the repair work. The following test will not, however, indicate if the battery and generator are being protected by proper regulator function. See "Voltage Regulator," Section 5I, for checks that can be made to determine if the regulator is functioning normally.

Ground the "F" terminal on the regulator to the motorcycle frame.

Disconnect the red wire from the "GEN" terminal on the regulator. Connect one lead from an ammeter to the wire, the other lead to the terminal.

Start the engine and adjust throttle to the equivalent of about 30-35 mph. The meter should read 15 amperes or over, depending upon exact engine speed and temperature of the generator. A generator at running temperature will deliver less current than when cold.

DISASSEMBLING GENERATOR (Fig. 5E-1)

Remove generator from engine gearcase as described in "Removing Generator."

Remove gasket (1). Remove gear shaft nut (2) and washer (3). Remove generator drive gear (4 or 4A) using Gear Puller, Part No. 95715-19 (Duo-Glide), or All Purpose Claw Puller, Part No. 95635-46, and Wedge Attachment, Part No. 95637-46 (Sportster and Servi-Car). Slip drive end oil deflector (5) off armature shaft.

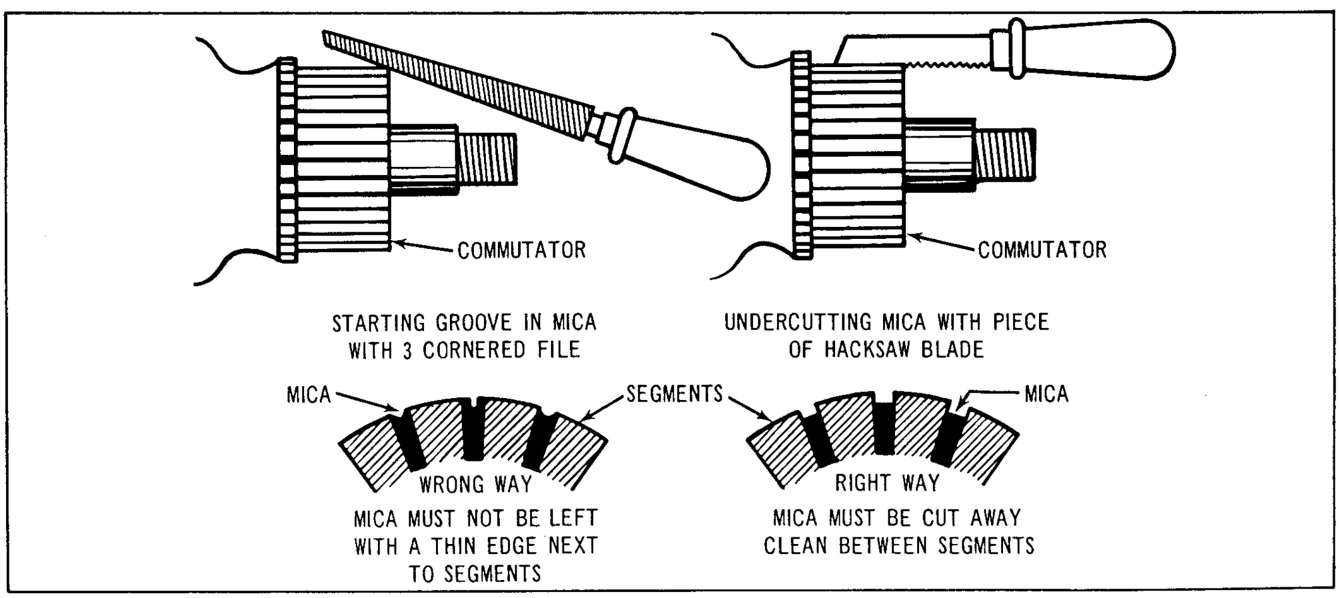

Figure 5E-5. Recessing Mica Separators

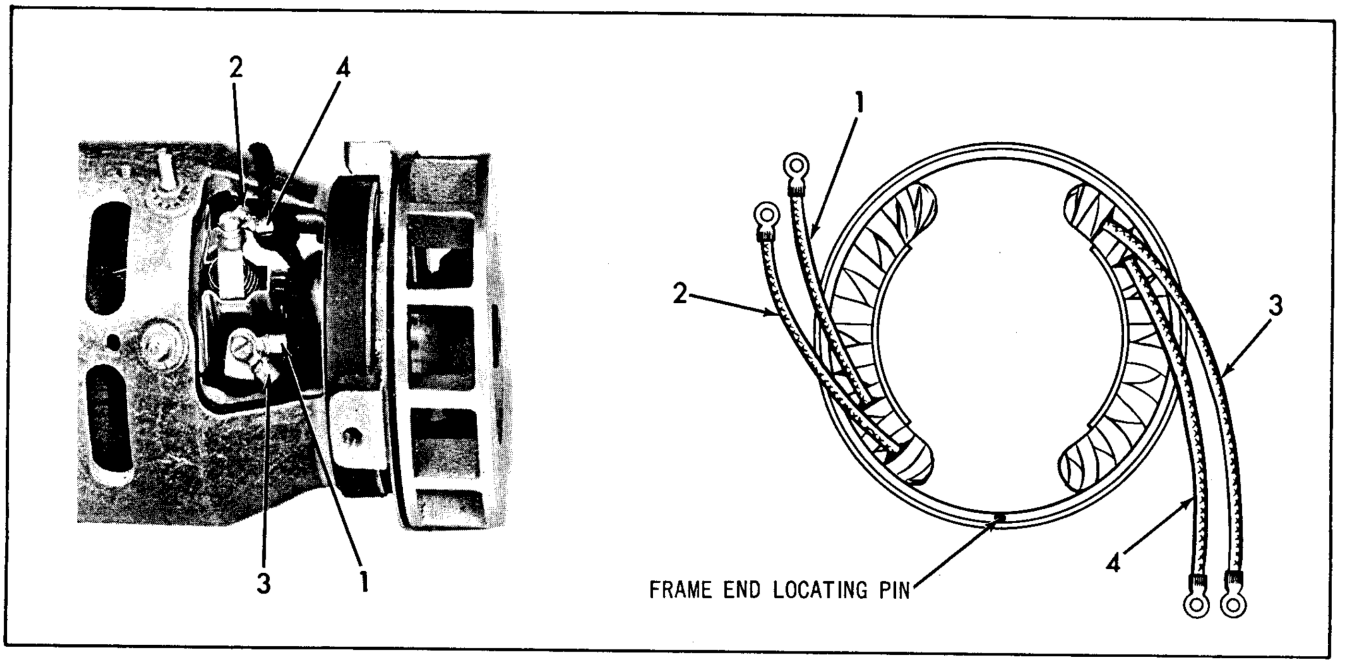

Figure 5E-6. Generator Wiring

Remove brush cover strap (6). Turn off commutator end cover nuts (7) and remove washers (8). Pull frame screws and washers (9) out of frame. Tap commutator end cover (10) gently with small mallet and remove. Remove nuts (11) and washers (12) to free positive brush cable and brush leads. Remove brush holder mounting plate (13).

Press armature (14) out of bearing on arbor press or by clamping generator frame between copper jaws in vise and tapping gear drive shaft end with rawhide mallet.

Remove terminal screw nuts (15), lock washers (16) and insulating washers (17). Remove terminal screws (22 and 24) from inside generator frame and remove from them terminal insulator (18), terminal bolt clip (19), terminal screw bushings (20), bracket insulator (21) and positive brush cable (23).

Tap drive end plate (28) off frame and remove bearing retainer (25) using needle nose pliers. Press armature bearing (26) out of drive end plate using arbor press and appropriate drift pin. Remove bearing retainer (27). Press armature oil seal (29) out of drive end plate from drive gear side.

Remove two pole shoe screws (30). Use large, heavy, screwdriver. Screws are turned extremely tight. Remove pole shoes (31) and field coils (32) from frame (33). Do not remove pole shoe screws, pole shoes and field coils unless necessary to replace faulty parts.

CLEANING, INSPECTION AND REPAIR (Fig. 5E-1)

Clean all parts except gasket, armature, field coils and brushes in cleaning solvent and blow dry with compressed air. Wipe rest of parts clean with cloth dampened in white gas and blow dry with compressed air.

Examine all parts carefully for wear. Give close attention to condition of insulators, armature windings, field coil wrapping and surfaces of pole shoes nearest armature. If armature had oily appearance before cleaning, replace oil seal. Replace any part of brush holder mounting assembly that is bent. Disassemble parts as far as necessary in order of numbers shown in Fig. 5E-1, lowest number first.

Check play in armature ball bearing. If any play can be detected, replace part.

Check fit of armature shaft in end cover bushing (44). If fit is obviously too loose, replace bushing as follows:

Clamp 9/16 in. - 24 plug tap in vise and turn end cover onto tap by hand until bushing is removed. Assemble generator parts 7, 8, 9, 10, 28 and 33. Place new bushing on end of arbor in special Harley-Davidson Generator Bushing Tool, Part No. 97250-58, and insert arbor through generator from drive gear end. Place pilot tool over arbor and seat in bearing recess in generator drive end plate. Drive bushing into end cover until it seats firmly. Remove arbor by twisting. Insert screwdriver or rod in hole in arbor to assist in twisting if necessary. Disassemble generator parts.

ASSEMBLING GENERATOR (Fig. 5E-1)

Assemble all parts to the brush holder mounting plate (13).

Position pole shoes (31) in field coils (32) and insert in frame. Turn in pole shoe screws until snug. Place frame in vise and use very large

screwdriver to securely tighten screws. Use a wrench to turn screwdriver while bearing down with considerable force to keep screwdriver from slipping out of slots. Shoes will align themselves in frame.

Place bearing retainer (27) in inner groove in drive end plate (28). Press in bearing (26) to seat against retainer. Compress bearing retainer (25) with needle nose pliers and insert in outer groove.

Turn drive end plate back side up and press oil seal (29) in place. Insert armature (14) drive end shaft and press in until shoulder seats.

Slip "A" terminal field coil lead on positive terminal screw (24), followed by positive brush cable (23), a terminal screw bushing (20), bolt clip (19) and the terminal insulator (18). Insert the assembly through "A" terminal frame hole from inside. Assemble the insulating washer (17), lock washer (16) and nut (15) over terminal screw.

Slip "F" terminal screw (22) into "F" terminal field coil lead, bracket insulator (21) and screw bushing (20). The assembly is then slipped into "F" terminal frame hole through the bolt clip and terminal insulator. An insulating washer (17), lock washer (16) and nut (15) are assembled over terminal screw.

Slip frame assembly over armature, locating pin (48) in hole in drive end plate. Bend loose end of positive brush cable out commutator end of generator. Push brushes back in brush holders to clear commutator and assemble brush holder mounting plate over commutator so pin (48) registers in small slot and brush cable passes through large slot almost directly opposite.

Connect positive brush cable and positive brush lead to insulated brush holder terminal with washer (12) and nut (11). Connect grounded (negative) brush to its terminal in same manner.

Install commutator end cover (10) over armature shaft end so notch in edge registers over pin (48) in frame. Slip internal lock washers over frame screws (9) and feed them through generator from drive end. Assemble lock washers (8) and nuts (7) to frame screws and tighten securely. Turn armature shaft to see if it is bound or if armature core strikes pole shoes. Shaft should be reasonably difficult to turn but there should be no tight spots. If armature core strikes pole shoes, generator ends are not seated properly or pole shoes are not drawn up tightly.

Slip drive end oil deflector (5), drive gear (4 or 4A) and washer (3) over shaft and turn on nut (2) until gear is seated against oil deflector. Slip brush cover strap (6) in place. Position gasket (1) coated with Perfect Seal No. 4 to generator and install in reverse order of disassembly as described in "Removing Generator."

MODEL 58R RADIO GENERATOR

The model 58R generator is essentially the same as the model 58, electrically. That is, it is a two-brush, shunt wound generator with charge rate governed by current and voltage regulator. The difference is a larger physical size with higher current generating capacity, and it employs a fan to dissipate heat. Much of the technique used in testing the model 58 generator may be used in testing the model 58R.

CHECKING GENERATOR

Before checking a generator believed to be faulty, check generator signal light as described in "Checking Generator", model 58 Generator.

If generator signal light circuit is not shorted proceed as follows:

Disconnect any condensers found connected to generator "A" terminal. A shorted condenser will prevent generator from charging.

See Fig. 5E-7. Remove the three screws (1) and washers (2) securing the fan housing (3) and remove it. Inspect brushes to make sure they are not worn out, broken or gummy and sticking in holders.

TESTING GENERATOR OUTPUT

Test generator output as described in "Testing Generator Output," model 58 generator. Generator should generate 20 amperes or more. If it does not, trouble is in one or more of components listed.

REMOVING GENERATOR

DUO-GLIDE. Disconnect wires from generator "F" and "A" terminals. Remove two long screws through timing gearcase cover securing generator. Remove footshifter assembly and jiffy stand (footshift model) or clutch assembly and jiffy stand (handshift model). Remove generator to left side of chassis.

SERVI-CAR. Disconnect wires from generator "F" and "A" terminals. Remove two long screws through timing gearcase cover securing generator and remove generator to left side of chassis, depressing clutch pedal to allow generator to pass.

TESTING FIELD COILS

The field coils of the model 58R radio generator are connected exactly as those in the model 58. However, leads are not spliced together so there are four leads rather than two. Testing procedures are the same as described in "Testing Field Coils" on the model 58 generator except for following differences:

After step one remove parts number 4 through 19. (See "Disassembling 58R Generator"). Assemble terminal components eliminating field coil leads.

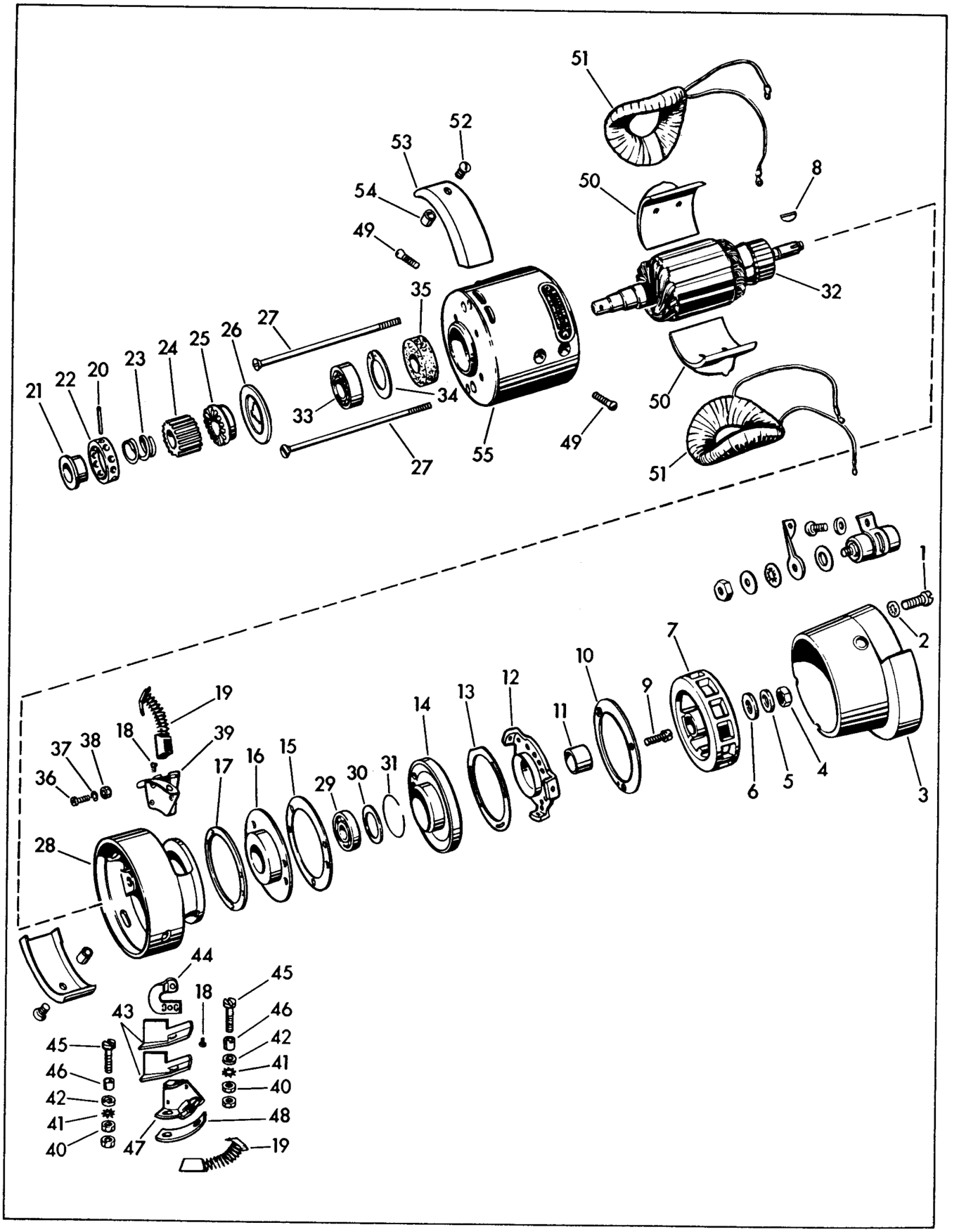

Figure 5E-7. Model 58R Generator

LEGEND FOR FIGURE 5E-7

1. Fan housing screw (3)
2. Internal lock washer (3)
3. Fan housing
4. Armature shaft nut
5. Armature shaft lock washer
6. Armature shaft plain washer
7. Fan
8. Armature shaft key
9. Fan baffle plate screw (3)
10. Fan baffle plate
11. Fan spacer
12. Fan housing spider
13. End plate
14. Brush end bearing housing
15. Drive end cover gasket
16. Inner oil retainer
17. Commutator end bearing shim (0 to 3)
18. Terminal screw (3)
19. Brush and spring (2)
20. Clutch spring collar pin
21. Clutch spring collar
22. Oil slinger
23. Clutch spring
24. Drive gear
25. Clutch
26. Drive end oil deflector
27. Frame screw (2)
28. Frame end
29. Armature bearing
30. Armature spacing shim (.020 in.)
31. Bearing plate spring ring
32. Armature
33. Armature bearing
34. Drive end spring ring
35. Felt retainer
36. Negative brush holder screw (2)
37. Lock washer (2)
38. Brush holder screw nut (2)
39. Brush holder (negative)
40. Terminal screw nut (2)
41. Terminal screw lock washer (2)
42. Terminal screw insulating washer (2)
43. Field coil terminal insulator (2)
44. Field coil terminal
45. Terminal screw (2)
46. Terminal screw bushing (2)
47. Brush holder (positive)
48. Brush holder insulation
49. Pole shoe screw (4)
50. Pole shoe (2)
51. Field coil (2)
52. Air intake shield screw (2)
53. Air intake shield (2)
54. Spacing bushing (2)
55. Generator frame

Figure following name of part indicates quantity necessary for one complete assembly.

In step three, touch one test lead to generator frame, the other to either of two field coil leads, making sure other lead from same coil does not touch generator frame. Repeat process on other coil.

Omit step four.

In place of step five, touch ammeter leads to two field coil leads. Repeat process with opposite coil. Ammeter should read 1 ampere in both cases. No reading indicates an open coil, a higher reading indicates a shorted coil.

In step six, touch one test lead to generator frame, the other to positive (insulated) brush holder.

TESTING ARMATURE

Test armature as described in "Testing Armature," model 58 generator.

REPAIRING COMMUTATOR

Repair commutator as described in "Repairing Commutator," model 58 generator.

POLARIZING GENERATOR

Polarize generator as described in "Polarizing Generator," model 58 generator.

GENERATOR CHARGING RATE

Refer to directions in "Generator Charging Rate," model 58 generator, except minimum charging rate should be 20 amperes.

DISASSEMBLING GENERATOR (Fig. 5E-7)

Remove three fan housing screws (1), washers (2) and fan housing (3). Turn off armature shaft nut (4) and remove lock washer (5) and plain washer (6).

Use All Purpose Claw Puller, Part No. 95635-46, to pull the fan (7). Remove key (8) from armature shaft.

Remove three fan baffle plate screws (9) and lift off baffle plate (10), fan spacer (11), fan housing spider (12) and end plate (13). Use Claw Puller to pull brush end bearing housing (14). Ball bearing (29) should come off with bearing housing and parts 30 and 31. However, the bearing sometimes stays on the shaft holding parts 15, 16, and 17, in place. In that event, do not remove bearing and go on to following procedure.

Remove terminal screws (18) and lift brush and spring assemblies (19) out of brush holders. At this point electrical checks to determine condition of field coils may be made (see "Testing Field Coils").

Drive clutch spring collar pin (20) out of clutch spring collar (21) on Duo-Glide, out of oil slinger (22) on Servi-Car. Slip clutch spring (23) and drive gear off armature shaft. Pull clutch (25) from shaft using All Purpose Claw Puller. Lift oil deflector (26) off shaft.

Loosen frame screws (27) about 1/4 in. and tap on ends to unseat frame end (28). Remove frame screws and pull frame end with bearing (29), gasket (15), oil retainer (16) and bearing shims (17) if there are any. In factory assembly, these shims are supplied as needed to center brushes on commutator. The usual assembly includes up to three spacing shims.

The armature (32) may be pressed out of the frame to release drive end ball bearing (33). If necessary spring ring (34) and felt grease retainer (35) can be removed.

There is no need to disassemble brush holders (39 and 47) from frame end unless test proves the positive holder is shorted, or unless they are badly bent or broken. If removal is necessary, turn out negative brush holder screws (36) and terminal screw nuts (40) to free all parts.

Do not remove pole shoe screws unless necessary to replace pole shoes or field coils. If necessary, turn out pole shoe screws (49) several turns, then tap on heads to loosen pole shoes (50) from keyed slots in frame before turning screws completely out.

Air intake shields (53) may be removed at any time convenient during the disassembly procedure.

CLEANING, INSPECTION AND REPAIR

Clean all parts except gaskets, felt grease retainer, armature field coils and brushes in cleaning solvent and blow dry with compressed air. Wipe armature, field coil and brushes clean with cloth dampened in white gas and blow dry with compressed air.

Examine all parts carefully for wear. Give close attention to condition of insulators, armature windings, field coil wrapping and surfaces of pole shoes nearest armature.

If play can be detected in ball bearings, replace them. Pack bearings, liberally with "Grease-All" grease before assembly of parts.

ASSEMBLING GENERATOR

Assemble generator in approximate order of disassembly. Install field coils in frame. Insert armature and assemble the felt retainer, spring ring and bearing. Use arbor press to push bearing in place.

Assemble brush holders to frame end and slip frame end in place over frame. If frame end is a tight fit, it may be drawn into place by tightening frame screws. Bring field coil leads (1, 2 and 3 Fig. 5E-6) through smaller opening in frame end and lead 4 through larger opening. Select lead ends 1 and 3. Run lead 1 behind field coil terminal, make loop and place it over field coil terminal. Twist leads 2 and 3 as in first half of shoe tying operation and secure to field terminal with terminal screw (18, Fig. 5E-7). Twist leads 2 and 4 in similar manner and attach to positive brush terminal with brush in place. Be sure lead 3 is behind frame screw. Assemble negative brush.

Assemble commutator end of generator in reverse of order disassembled, replacing same number of shims (17, Fig. 5E-7) that were removed.

Install generator in reverse order of removal as described in "Removing Generator," model 58 generator. Test generator as described in "Testing Generator Output," model 58 generator.

CIRCUIT BREAKER

DESCRIPTION

The ignition system has two circuits, the primary circuit and the secondary circuit. The primary circuit consists of the battery, switch, primary coil, breaker points, condenser and associated wiring. The secondary circuit consists of the secondary coil, the spark plugs and associated wiring.

The circuit breaker has two functions. First, the breaker cam and contact points open and close the low tension circuit between the battery and ignition coil causing the coil to produce high voltage discharge to the spark plugs. Second, the circuit breaker times discharge for proper engine firing.

The breaker points are operated by a cam with a narrow and wide lobe. The narrow lobe times the front cylinder and the wide lobe the rear cylinder.

Both spark plugs fire at the same time, but one spark occurs in the exhaust stroke of one cylinder and the other spark fires the combustible gases in the other cylinder to produce a power stroke.

In tracing the current through the ignition system, the initial current comes from the battery. The current flows from the battery through the primary coil to ground and back to the battery while the points are closed. When the cam opens the points, the circuit is broken so that a high voltage surge is produced from ignition coil primary to secondary. This voltage will cause a spark to jump the air gap of the plugs.

The condenser is connected to the circuit breaker points and functions to produce a quick collapse of the magnetic field in the coil so that high voltage will be produced. In doing this, the condenser acts to prevent current from continuing to flow across the contact points after points open.

In trouble shooting the ignition system, start with plugs to see if they are getting a spark according to the following procedure:

Disengage spark plug cable and insert a metal rod, screw or nail into the spark plug cable. Arrange cable end so tip of inserted metal object is 1/4 in. away from cylinder head. Turn on the ignition, break the points by hand see if a "hot" or "blue" spark is obtained. If not, it is an indication of a weak coil, dead battery, broken or loose wires, etc. Arcing of the points and hard starting indicate a faulty condenser.

The engine must be timed to fire at the proper point before top dead center on the compression stroke of the front cylinder. This procedure is covered under subsequent headings.

NOTE

Circuit breaker points and condenser are readily accessible for adjustment and replacement when circuit breaker cover is removed. To replace circuit breaker stem (22, Fig. 5F-2), shaft and cam (27) or gear (25), it is necessary to remove circuit breaker from gearcase cover as described in "Removing Circuit Breaker."

ADJUSTING CIRCUIT BREAKER POINTS (Fig. 5F-1)

Circuit breaker points should be checked for gap and contact surface condition initially at 1500 miles

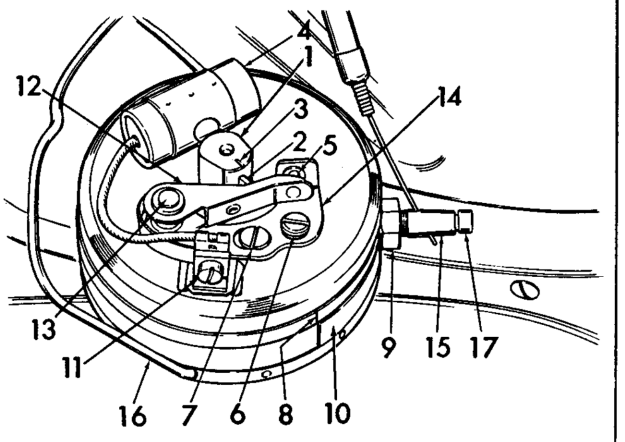

1. Breaker cam
2. Fiber cam follower
3. Cam timing mark
4. Condenser
5. Contact points
6. Lock screw
7. Eccentric adjusting screw
8. Timing mark
9. Adjusting stud lock nut
10. Timing adjusting stud plate
11. Wire stud screw
12. Circuit breaker lever
13. Pivot stud
14. Contact point and support
15. Timing adjusting stud
16. Cover retainer
17. Control wire lock screw

Figure 5F-1. Circuit Breaker Adjustments

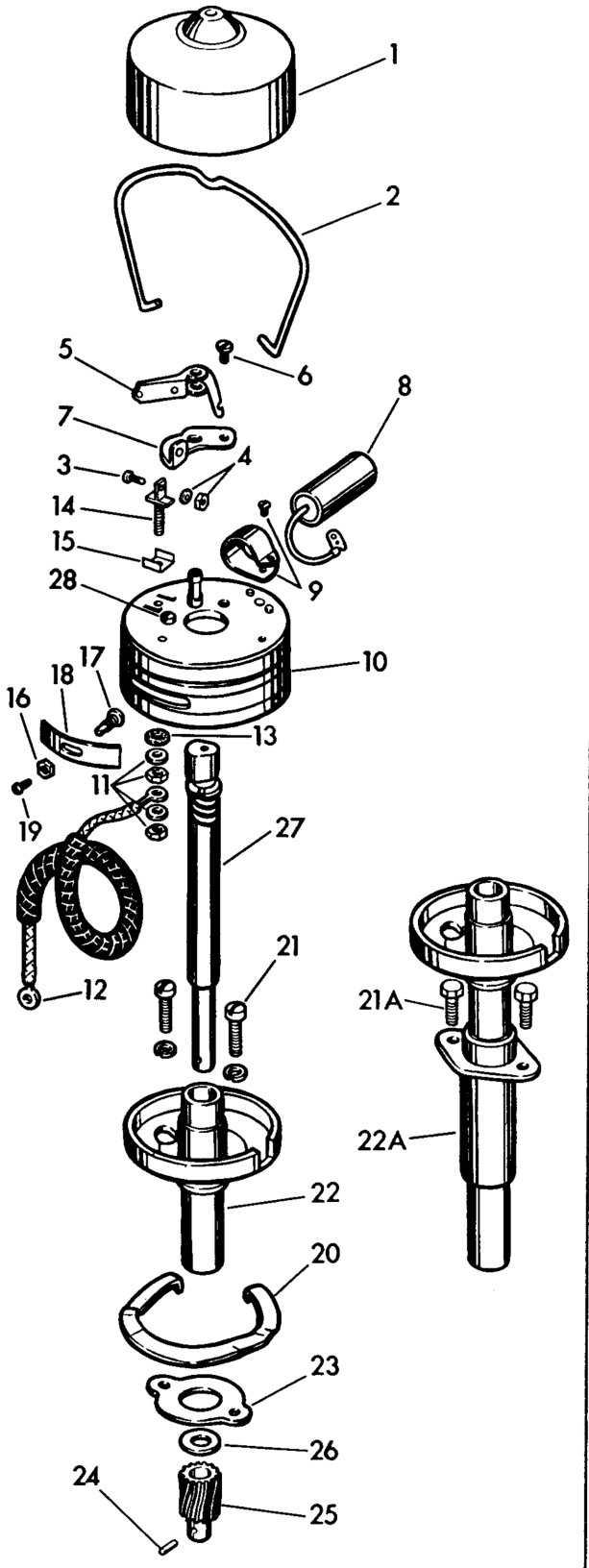

1. Cover
2. Cover retainer
3. Wire stud screw
4. Wire stud nut and lock washer
5. Lever
6. Adjustable point locking screw
7. Contact point and support
8. Condenser
9. Condenser bracket and screw
10. Base
11. Wire stud washers and nuts
12. Spark coil cable assembly
13. Wire stud fiber washer
14. Wire stud
15. Wire stud insulator
16. Adjusting stud lock nut
17. Adjusting stud
18. Adjusting stud plate
19. Control wire lock screw
20. Base retainer
21. or 21A. Gearcase cover screw (2)
22. or 22A. Stem
23. Gasket
24. Gear pin
25. Gear
26. Shaft washer
27. Shaft and cam
28. Eccentric adjusting screw

Figure 5F-2. Circuit Breaker - Exploded View

and every 2000 miles thereafter. Remove the circuit breaker cover and check the gap between the contact points with a .022 in. gage (wire preferred). If it is not exactly .022 in. when the lever fiber (2) is on either of the highest points of cam (1), adjustment is necessary. Incorrect point gap spacing affects ignition timing. To adjust the points loosen lock screw (6) and move the eccentric adjusting screw (7) to provide a contact point gap of .022 in. Retighten lock screw (6) and again check the gap to make sure it remains correct.

Points that have undergone considerable use, may not appear bright and smooth. However, this should not be interpreted as meaning points are worn out.

Circuit breaker points that are burned or pitted should be dressed or renewed as described in "Inspection and Replacement of Parts."

CHECKING AND ADJUSTING IGNITION BY TIMING MARKS

To check ignition timing see Fig. 5F-1, and proceed as follows: Remove spark plugs to permit engine to turn easily. Remove screw plug from timing inspection hole in left side of crankcase. Telescope front push rod cover so that opening and closing of valve can be observed. Remove circuit breaker cover and set circuit breaker point gap at exactly .022 in. as described in "Adjusting Circuit Breaker Points."

Turn engine in direction in which it runs until front piston is on compression stroke (just after front intake valve closes), and continue turning engine very

slowly (less than 1/2 revolution) until timing mark on flywheel is aligned in inspection hole, as shown in Fig. 5F-3. Make sure timing mark (8) on circuit breaker base aligns with end of timing adjusting plate.

DUO-GLIDE MODEL. Fully retard the circuit breaker (rotated clockwise). Loosen the control wire lock screw which is located on circuit breaker head. Hold a scale at the end of the lock screw and rotate the circuit breaker counterclockwise exactly 1/4 in. Hold the circuit breaker head in this position, turn the handlebar grip to its fully retarded position and tighten the control wire lock screw.

SPORTSTER AND SERVI-CAR MODELS. Be sure spark control wire is correctly adjusted so that circuit breaker advances and retards fully with handlebar grip movement.

Timing mark (3) on cam lobe should now align perfectly with breaker arm fiber cam follower (2). If it does not, but is only slightly out of alignment, loosen timing adjusting stud lock nut (9) and shift circuit breaker head to attain alignment. Timing mark (8) will no longer line up exactly with edge of plate (10). Be sure to securely retighten lock nut (9). Remember that circuit breaker must be fully advanced when checking alignment of mark (3) with fiber cam follower (2).

REMOVING CIRCUIT BREAKER (Fig. 5F-2)

Thoroughly clean area around circuit breaker and blow all loose dirt from crankcase with compressed air, and proceed as follows: Disconnect spark control wire from circuit breaker adjusting stud (17). Remove circuit breaker cover (1) and unlatch cover retainer (2) from holes in base (10).

DUO-GLIDE MODEL. Remove the front cylinder head from the motorcycle to provide sufficient clearance for removal of the circuit breaker assembly. See Duo-Glide Cylinder Head Section 3B. Using Circuit Breaker Wrench, Part No. 94501-56, remove two screws (21A). Shaft and housing assembly can be lifted from gearcase cover. Slip base (10) and base retainer (20) from housing.

SPORTSTER AND SERVI-CAR MODELS. Base (10) and retainer (20) can be removed exposing two screws (21) securing shaft and housing assembly to gearcase cover. Remove screws (21) and lift shaft and housing from gearcase cover.

NOTE

Do not remove front cylinder head.

INSPECTION AND REPLACEMENT OF PARTS (Fig. 5F-1 and 5F-2)

Using cloth with clean white gasoline, wipe circuit breaker clean and inspect parts.

Inspect circuit breaker points (5). If lever fiber (2) is badly worn, replace points. Points that are burned or pitted should be replaced or dressed with a clean, fine-cut contact point file. Do not attempt to remove all roughness nor dress point surfaces down smooth; merely remove scale or dirt. Contact point file should not be used on other metal and should not be allowed to become greasy or dirty. Never use emery cloth or sandpaper to clean points since particles will embed themselves and cause arcing and rapid burning of points.

Circuit breaker points should be replaced, if contact point pressure is not within prescribed limits of 14 to 18 oz. Check pressure with a spring gauge. The scale should be hooked to the breaker lever at an angle of 90° with the point surface and reading taken just as points break. Excessive pressure causes rapid wear of fiber block, cam and contact point. While insufficient pressure will permit high speed point bounce which will, in turn, cause arcing and burning of the points and missing of the engine.

Point faces must seat squarely against each other. If bent, square up by bending contact plate.

To replace a set of circuit breaker points simply loosen screw (11) and slip condenser wire and connection from (11). Lift circuit breaker lever (12) from screw (11) and pivot stud (13). Remove screw (6) and circuit breaker contact point and support (14).

Install new points in reverse order of disassembly. Position circuit breaker lever (12) lever notch registered with screw (11), between brass washer and condenser wire end. Be sure point faces seat squarely against each other. Adjust point gap as previously described in "Adjusting Circuit Breaker Points."

Lubricate breaker cam with a trace of grease when points are replaced or every 5000 miles. Be extremely careful to avoid excessive lubrication. If too much grease is used, the excess is apt to get on the contact points and cause them to burn.

For maximum operating efficiency it is recommended practice to replace circuit breaker points when pitted, burned or worn excessively.

The condenser (4, Fig. 5F-1) is a relatively long life part and will not require frequent replacement. However, if the condenser is suspected of being defective simply replace with a proven new condenser and note whether engine performance is improved. A condenser that is defective will have either an open or short circuit. An open circuit will be evident by excessive arcing at breaker contact points and a shorted circuit will have no noticeable spark at the contact points.

Examine the circuit breaker base pivot stud (13, Fig. 5F-1) for wear or damaged condition. Try circuit breaker base (10, Fig. 5F-2) on stem (22, 22A), for free turning, but not loose fit. If base has too much clearance on stem, the circuit breaker point gap will vary as the base is shifted for spark control.

If base is found excessively worn or damaged in any way, renew it.

Examine the coil to circuit breaker or low tension wire (12, Fig. 5F-2) for brittle or cracked insulation and broken strands. Defective insulation may cause the engine to misfire. If inspection warrants replacement of wire (12), simply remove terminal nuts and washers (11) to free (12). Inspect circuit breaker wire stud insulator (15) and fiber washer (13) for brittle or cracked condition. Unless inspection shows insulation defective, it is not necessary to remove stud, insulator and washers.

Inspect teeth of worm gear (25) for excessive wear and damage. Check the amount of end play of shaft (27) in stem. End play in excess of .008 in. will affect ignition timing. If renewal of shaft and stem parts is necessary, remove pin (24) from gear and drift or press circuit breaker cam shaft (27) from gear. Withdraw (27) from base. Remove spacer washer (26) located between gear and stem.

When assembling circuit breaker shaft in breaker stem, always secure gear and spacer washer to shaft with new steel pin riveted in place. Rotate shaft to be sure it is free in stem.

INSTALLING CIRCUIT BREAKER AND TIMING IGNITION (Fig. 5F-3)

Remove spark plugs to permit engine to turn easily; remove screw plug from timing inspection hole in left side of crankcase. Telescope front push rod cover so that opening and closing of valve can be observed. Turn engine in direction in which it runs until front piston is on compression stroke (just after front intake valve closes), and continue turning engine very slowly (less than 1/2 revolution) until timing mark on flywheel is aligned in the inspection hole, as shown in Fig. 5F-3.

NOTE

If the front cylinder head has been removed, engine can be timed by piston position as an alternative to timing by marks. Simply turn engine in direction in which it runs until front piston is located as shown in Fig. 5F-3. With piston in correct position, adjust circuit breaker so narrow cam lobe (the one with mark) just starts to open points when adjusting stud (15, Fig. 5F-1) is fully advanced.

DUO-GLIDE MODEL. Position circuit breaker base assembly on shaft and stem assembly wrapping wire (12, Fig. 5F-2) clockwise around shaft (27). Install base retainer (20), over wire, retainer end facing down and towards front cylinder (as positioned on motorcycle). Engage cover retainer (16, Fig. 5F-1), with holes in base as shown and register retainer ends in locating notches of (20, Fig. 5F-2).

Make sure timing mark (8, Fig. 5F-1) on circuit breaker base aligns with end of adjusting stud plate (10).

Turn circuit breaker shaft counterclockwise approximately 60° from position where mark (3), on cam lobe lines up with breaker lever fiber (2).

Install a new circuit breaker gasket (23, Fig. 5F-2) using gasket sealer. Temporarily insert circuit breaker assembly into gearcase, with base wire (12) towards rear of motorcycle and screw holes of housing (22, 22A) lined up with mounting holes in crankcase.

Move circuit breaker base (10) to fully advanced position (counterclockwise) and observe how close mark (3, Fig. 5F-1) on cam lobe lines up with lever fiber (2). If fiber (2) does not line up with timing mark (3), lift circuit breaker assembly and turn shaft gear so its engagement with its driving gear is changed one tooth. Again check breaker cam mark (3). Repeat this procedure until gear engagement is attained which closely aligns mark (3) and breaker lever fiber, then secure circuit breaker assembly to crankcase using Wrench, Part No. 94501-56 to tighten screws (21A, Fig. 5F-2). Install cylinder head as described in "Duo-Glide Cylinder Head," Section 3B.

When engine is in chassis be sure spark control wire is correctly adjusted so that circuit breaker base is advanced to its stop when handlebar grip is fully advanced. See "Checking and Adjusting Ignition by Timing Marks."

SPORTSTER AND SERVI-CAR MODELS. Install a new circuit breaker gasket using gasket sealer. Insert circuit breaker shaft and stem assembly into gearcase cover with wire (12, Fig. 5F-2) inserted in hole of stem flange. Before engaging circuit breaker driving gears, turn shaft (27) counterclockwise approximately 60° from position where mark (3, Fig. 5F-1) on cam lobe lines up with breaker lever fiber block. Insert screws (21, Fig. 5F-2) snug, but not tight.

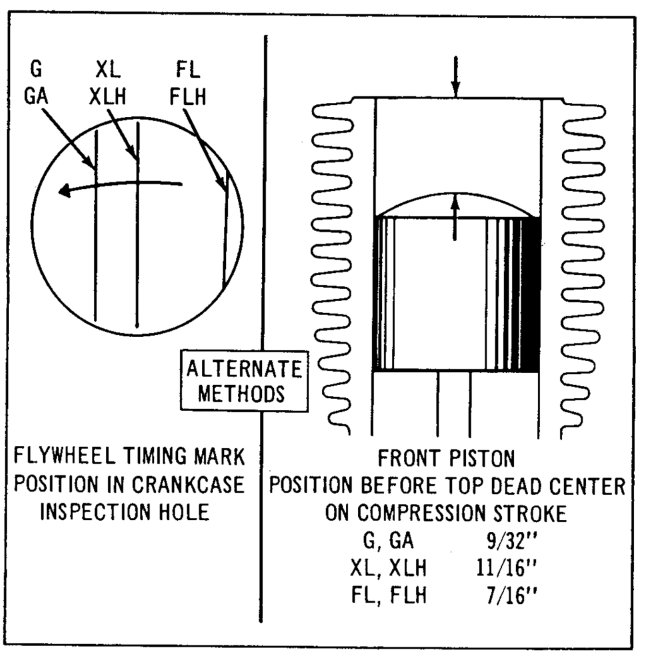

Figure 5F-3. Ignition Timing - Schematic

Temporarily position base on shaft and stem assembly in fully advanced position and observe how closely mark (3, Fig. 5F-1) on cam lobe lines up with lever fiber (2). If it does not line up remove screws (21, Fig. 5F-2), lift circuit breaker shaft and stem assembly from gearcase. Turn shaft gear so its engagement with its driving gear is changed one tooth. Check again according to breaker cam mark. Repeat this procedure until gear engagement is attained which closely aligns mark (3, Fig. 5F-1) and breaker lever fiber, (2). Then tighten screws (21, Fig. 5F-2). Position the circuit breaker base assembly on shaft and stem assembly wrapping wire (12) clockwise around shaft (27). Install base retainer (20) over wire, retainer end facing down and towards front cylinder (as positioned on motorcycle). Engage cover retainer (16, Fig. 5F-1) with holes in base as shown, and register retainer ends in locating notches of base retainer (20, Fig. 5F-2). An easy way to engage retainer end with retainer notch is to insert cover retainer (2) under flats of base retainer (20). Then, with a screwdriver, move base retainer (20) until its notches register with ends of retainer (2). Make sure timing mark (8, Fig. 5F-1) on circuit breaker base aligns with end of adjusting stud plate (10). Fully advance circuit breaker. If engine is in chassis, be sure spark control wire is correctly adjusted so that circuit breaker base is advanced (rotated counterclockwise) to its stop when handlebar grip is fully advanced. Timing mark (3) on top edge of circuit breaker cam should now align perfectly with breaker arm fiber cam follower (2).

CHECKING IGNITION TIMING WITH TEST LAMP

After the ignition has been installed and timed according to factory timing marks it is recommended procedure to again check timing with a test lamp.

Proceed as follows:

Check circuit breaker points and adjust to correct gap as described in "Adjusting Points." Install circuit breaker cover.

NOTE

Always check ignition timing with cover (1, Fig. 5F-2) installed and held in place with retainer (2).

If engine is installed in chassis, connect one test lamp wire to coil wire (12, Fig. 5F-2). Connect the other test lamp wire to the engine. Turn ignition switch on. With points open, lamp will light, and with points closed, lamp will be out.

With circuit breaker fully advanced against its stop and flywheel marks correctly positioned as shown in Fig. 5F-3, contact points should just begin to open, light on. The instant direction is reversed (spark retarded) from full advance stop position, points should begin to close, "light off."

If the contact points remain closed, "light off," in the fully advanced position timing is late. Loosen adjusting stud lock nut (9, Fig. 5F-1) and shift circuit breaker base counterclockwise until contact points just begin to open, "light on," in fully advanced position.

If the contact points begin to open, "light on," before circuit breaker is in fully advanced position, timing is early. Loosen adjusting stud lock nut (9, Fig. 5F-1) and shift circuit breaker base clockwise until contact points just begin to open, "light on," in fully advanced position. Retighten lock nut (9) after circuit breaker base is shifted to insure a true adjustment and test lamp reading. Repeat this procedure until correct ignition timing is achieved. Be sure to keep flywheel mark correctly positioned during the entire procedure.

Timing ignition for front cylinder automatically times ignition for rear cylinder.

RE-CHECKING IGNITION TIMING

With circuit breaker points correctly adjusted, cover (1, Fig. 5F-2) assembled and test lamp installed as described under the preceding heading, turn engine in direction in which it runs until front piston is on compression stroke. Continue to turn engine very slowly until points just begin to open, "light on." Flywheel mark should be correctly located in inspection hole as shown in Fig. 5F-3.

If timing mark is forward of correct position as shown in Fig. 5F-3, timing is late. If timing mark is to the rear of correct position as shown in Fig. 5F-3, timing is early. In either case, re-adjust timing as previously described under "Checking Ignition Timing With Test Lamp."

NOTE

If engine is out of chassis, connect one test lamp wire to coil wire (12, Fig. 5F-2). Connect the other test lamp wire to battery positive terminal. Ground battery negative terminal to engine. With points open, lamp will be out, and with points closed, lamp will light, exactly opposite from a test lamp connected to an engine in its chassis.

IGNITION COIL

DESCRIPTION

The ignition coil is a pulse transformer that transforms or steps up low battery or generator voltage to high voltage necessary to jump the electrode at the spark plug in the engine cylinder head. Internally, coil consists of primary and secondary windings with laminated iron core and sealed in waterproof insulating compound. Case cannot be taken apart or coil repaired.

TROUBLE SHOOTING

DUO-GLIDE, SPORTSTER, SERVI-CAR AND 165 MODEL. When hard starting or missing indicates a faulty ignition system, first, check condition of battery. Coil will not function normally with battery in a "low" condition. If lamps light with full brilliancy and horn blows, indicating that battery is in at least fair condition, check, clean or replace spark plugs. If this does not correct performance, inspect circuit breaker points and install new condenser. If condition exists, try a new coil without removing old coil.

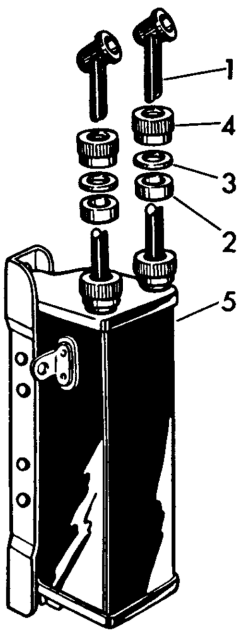

1. Spark plug cable (2)
2. Cable packing washer (2)
3. Cable washer (2)
4. Cable packing nut (2)
5. Ignition coil

Figure following name of part indicates quantity necessary for one complete assembly.

Figure 5G-1. Ignition Coil - Duo-Glide and Sportster

HUMMER MODEL. When hard starting or missing indicates some fault in the ignition system, first, check condition of spark plug. If a cleaned or new plug does not correct performance, inspect magneto breaker points and condenser. Check for broken or frayed wires leading to coil and from magneto. Check to make sure magneto low tension coil (lower coil as positioned in magneto compartment) is not defective by temporarily trying a proven new coil. See Hummer Magneto (Fig. 5G-2). If all components are in proper condition and the fault still exists, try a new high tension coil without removing old coil.

ALL MODELS. Simply attach new coil temporarily at any convenient point near old coil (coil will function without being securely grounded). Transfer terminal wires to new coil according to the information given in the wiring diagrams pertaining to the model motorcycle being worked on. Attach new coil cables to spark plugs.

If new coil corrects engine performance, proving that the fault is in the oil coil, inspect plug cables(1, Fig. 5G-1, 5G-2) for damaged insulation, particularly at points where cables enter coil. The insulation on cables may be cracked or otherwise damaged, allowing high tension current to short to metal parts. Trouble resulting from this condition is most noticeable when operating in wet weather or just after motorcycle has been washed.

Replacing plug cables is the only repair that can be made to an ignition coil. If faulty performance is not corrected by installing new cables, coil is defective.

REPLACING SPARK PLUG CABLES

DUO-GLIDE AND SPORTSTER MODEL (Fig. 5G-1). When inspection indicates that plug cables are faulty, proceed as follows:

Warm coil slightly to soften sealing compound so old cables may be pulled out easily, without breakage. To warm a coil allow current to flow through it by either turning "ON" ignition switch (circuit breaker points must be closed), or connecting a battery to coil terminals. This generates heat in coil winding. Have new cables ready to be inserted immediately when old cables are pulled out. New cable ends should be trimmed and rounded so they will follow the holes left in sealing compound by old cable without catching and jamming. After coil is warm (not hot) turn off cable seal nuts (4) and pull out cables one at a time. As each cable is pulled out, quickly transfer nut (4), steel washer (3) and new rubber packing washer (2) to new cable. Insert a piece of stiff wire into coil and measure the distance from top of coil to cable seat. Mark new cable accordingly. Dip cable end in very light oil and push into coil. Be sure it is pushed all the way into the seat as marked on cable. After cables are inserted,

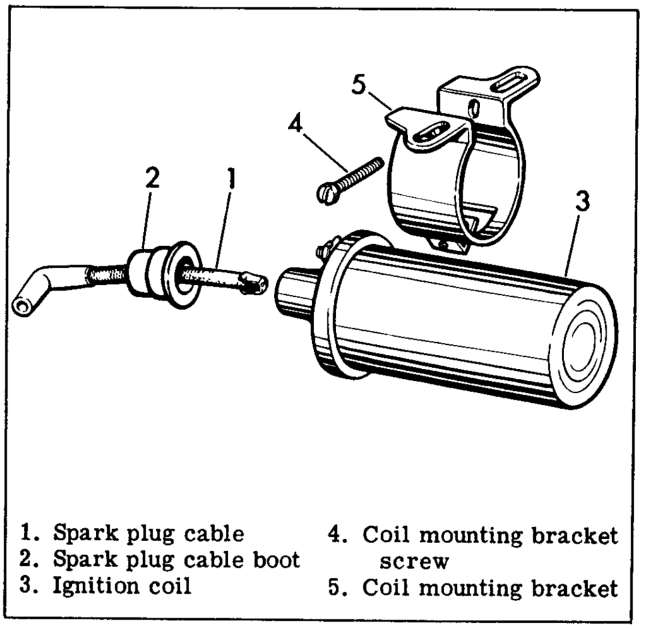

1. Spark plug cable
2. Spark plug cable boot
3. Ignition coil
4. Coil mounting bracket screw
5. Coil mounting bracket

Figure 5G-2. Ignition Coil - 165 and Hummer

turn seal nuts down against rubber packing washers to secure cables and prevent water from getting inside coil.

When replacing plug cables do not heat coil too hot, doing so will soften sealing compound to the extent that cable holes through compound will close up as the old cables are pulled out, blocking the insertion of new cables. If this happens, allow coil to cool and then form new cable holes using a piece of tubing with saw teeth filed in one end. Tubing should be of slightly larger diameter than cable. Holes through compound must be open so cables can be inserted all the way to their seats, where they contact high tension winding terminals; otherwise there is a gap in the high tension circuit and coil will not function.

165 AND HUMMER MODEL (Fig. 5G-2). When inspection indicates that plug cables are faulty, proceed as follows:

Pull old cable (1) from coil terminal and install new cable. Always be certain that cable boot (2) is securely tightened to the coil (3) tower to prevent moisture and dirt from contacting the high tension lead. Replace boot if damaged or loose fitting.

NOTE

Where it applies, interpret references to spark plug "cables" and spark "plugs" as spark plug "cable" and spark "plug" when working on the 165 and Hummer Model.

SPARK PLUGS

GENERAL

Harley-Davidson spark plugs (Fig. 5H-1) have been designed to give maximum life and efficient combustion of fuel. They are available in four "heat ranges," each for a particular service application. Plugs are labeled 2, 3, 4, or 5, with the lowest number indicating the "hottest" plug.

Plugs should be selected according to intended use of the motorcycle. The number 2 plug, for example, may be best for slow speed operation while the number 5 plug would be best for the higher speeds of highway travel or special high-speed operation. The intermediate plugs (3 and 4) are designed for use in motorcycles with moderate or average service applications. It is not uncommon for best results to be obtained with plugs of different heat ranges in front and rear cylinders, with the front usually the colder.

REMOVING SPARK PLUGS

Disconnect wires from plugs, connection is simple snap-on type. Use a deep socket wrench or special spark plug wrench to loosen plugs. Blow away all dirt from plug base with compressed air before removing plug.

CLEANING, INSPECTION AND REPAIR (Fig. 5H-2)

Examine plugs as soon as they have been removed. The deposits on the plug base is an indication of the correctness of the plug heat range and efficiency, as well as a guide to the general condition of rings, valves, carburetor and ignition system.

A wet, black and shiny deposit on plug base, electrodes and ceramic insulator tip (A) indicates an oil fouled plug. The condition is caused by worn rings and pistons, loose valves, weak battery, faulty ignition wires, circuit breaker trouble, weak coil or a cold plug.

A dry, fluffy or sooty black deposit (B) indicates plug is gas fouling, a result of a too rich carburetor air-fuel mixture, long periods of engine idling or a cold plug.

An overheated plug (C) can be identified by a light brown, dry, glassy looking deposit. This condition may be accompanied by cracks in the insulator tip and is caused by too lean an air-fuel mixture, a hot running engine, valves not seating, improper ignition timing or too hot a plug for the service. The oxide deposit on the spark plug is a conductor when hot. It will cause plug to misfire, especially at high speed.

A plug with a rusty brown to tan powdery deposit (D) indicates a balanced ignition and combustion condition. With leaded gasolines the deposits may be white or yellow. In either case, ignition functions through the deposits if only light and the deposits should be cleaned off at regular intervals to keep them from building up.

When spark plug electrodes have become eroded away (C) to the point where gap setting is difficult

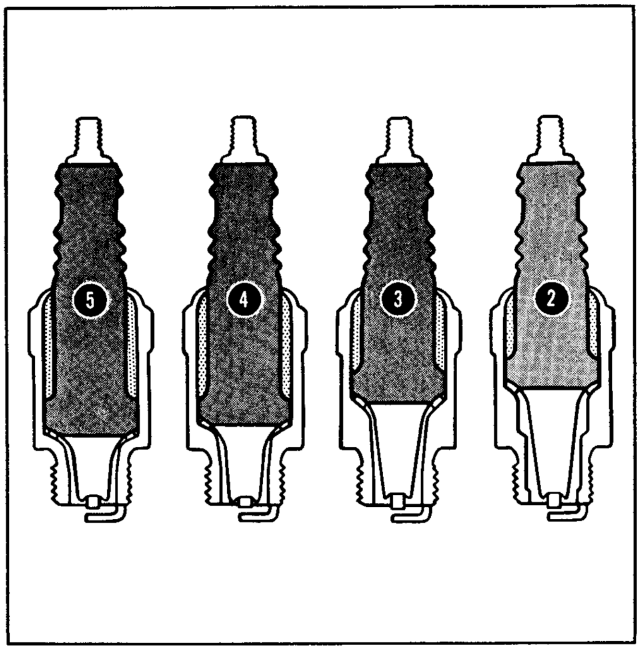

Figure 5H-1. Spark Plug Heat Range

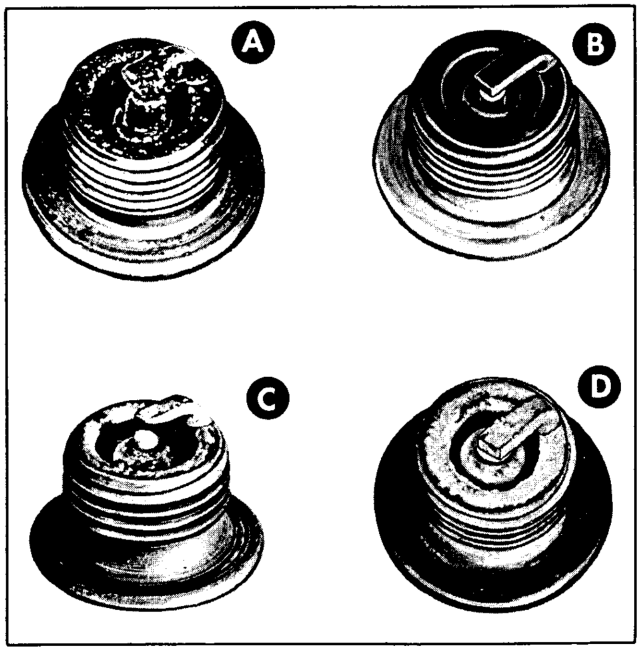

Figure 5H-2. Types of Plug Base Deposits

or impossible, the plug should be replaced. Plugs with cracked insulator should also be discarded.

Clean plugs with a sand blast cleaner. Rotate plug top while applying sand blast to clean insulator and electrodes. Cleaning time should be carefully limited to just what is necessary to clean deposits from insulator nose. Prolonged use of abrasive blast will wear away insulator. Normally three to five seconds of sand blasting are sufficient. Never use metal instruments to remove deposits from plugs.

SETTING SPARK GAP

Before setting spark gap on used plugs, pass a thin point file (or nail file) between electrodes to produce flat, parallel surfaces to facilitate accurate gauging.

Use only a wire type gauge. Bend the outside or grounded electrode so only a slight drag on the gauge is felt when passing it between electrodes. Never make adjustments by bending the center electrode. Set gap on all plugs .025 in. to .030 in.

TESTING SPARK PLUGS

Check the sparking ability of a cleaned and regapped plug on a sparking comparator if possible. An inability to withstand rapid firing under cylinder compression conditions can be discovered.

INSTALLING SPARK PLUGS

Before turning spark plugs into cylinder heads, check condition of threads in head and on plug. Soften deposits in cylinder head with penetrating oil and clean out with tap or old plug.

Install new spark plug gasket and turn plug down finger tight. Tighten to 15 pounds with torque wrench or 3/4 of a turn.

Check and adjust engine idle speed and mixture setting after installing new set of plugs if necessary.

REGULATOR

VOLTAGE REGULATOR

SERVICE INFORMATION

Two unit voltage regulators and three unit current and voltage regulators are used to control generator output to the battery and electrical system.

Normally the regulator does not require attention at regular service intervals; however, point cleaning, point setting and air gap adjustment are required occasionally.

Use the following checks to determine whether the regulator or generator is faulty so that proper corrective steps can be taken.

Connect an ammeter between battery positive (+) terminal and regulator terminal marked "BAT."

Fully charged battery and a low charging rate indicates that regulator has reduced output and is operating properly.

Fully charged battery and a high charging rate indicates that regulator is failing to reduce output because of a faulty regulator.

To determine if generator is faulty, disconnect "F" terminal lead at regulator to open generator field circuit. If charging rate continues, generator field circuit is grounded internally, or in wiring harness.

A low battery and a low or no charging rate indicates a high resistance in charging circuit, or faulty regulator or generator.

Check wiring for loose connections, frayed or damaged wires. High resistance resulting from these conditions will prevent normal charge from reaching battery. If wiring is in good condition, regulator or generator is at fault.

Ground "F" terminal of regulator temporarily and increase generator speed. Avoid excessive speed for any length of time as generator output may be dangerously high and damage to generator may result.

1. If generator output increases substantially, generator is working properly and fault is in the regulator.

2. If generator output remains low with "F" terminal grounded, generator is faulty and should be checked further.

3. If generator does not show any output either with or without "F" terminal grounded, disconnect wire from "GEN" terminal of regulator and strike it against a convenient ground with generator operating at medium speed. If a spark does occur, cutout relay is not functioning to permit current to flow to battery. If no spark occurs, generator is at fault and will need further attention. See "Checking Generator," Section 5E.

CAUTION

It is advisable to "flash" field coils whenever wires have been removed from generator or regulator; or after generator or battery has been removed and is reinstalled. This is done to make sure generator has correct polarity. If polarity of generator is reversed, relay points will vibrate and burn. "Flash" field coils by momentarily touching a jumper wire between "BAT" terminal and "GEN" terminal on regulator, after all wires have been properly connected and before starting engine. The momentary surge of current from battery to generator will correctly polarize generator.

Before making adjustments or servicing regulator, identify regulator by Delco-Remy number stamped on regulator base or mounting bracket. Then, see table, Fig. 5I-1, which contains service information for the desired regulator. Delco-Remy Bulletins listed in table may be obtained from a Delco-Remy service station or the Harley-Davidson Motor Co.

FIGURE 5I-1. REGULATOR TEST SPECIFICATIONS

REGULATOR PART NUMBER		DELCO-REMY SERVICE BULLETIN NUMBER	REGULATOR TYPE	ADJUST (AMPS)	ADJUST (VOLTS)		USED WITH HARLEY-DAVIDSON GENERATOR AND MOTORCYCLE MODELS	
HARLEY-DAVIDSON	DELCO-REMY			CURRENT REGULATOR SETTING	CUTOUT RELAY CLOSING VOLTAGE	VOLTAGE REGULATOR SETTING		
74511-41	1118 224	1R 115	3 Unit Current & Voltage	13	6.6	7.5	Model 32E2R - 1948 & earlier models (Superseded by D.R. 1118 327 for parts order.)	
	1118 327	1R 116	3 Unit Current & Voltage	13	6.6	7.5	Parts order for model 32E2R Used - 1948 and earlier.	
74511-51	1118 388	1R 116	3 Unit Current & Voltage	18	6.6	7.5	1950-1951 model 48, 2-brush fan-cooled generator. (Superseded by 74511-51A for parts order.)	
74511-51A	1118 707 1118 707B 1118 707C	1R 116 1R 118 1R 118	3 Unit Current & Voltage	20	6.6	7.5	Model 51, 2-brush fan-cooled generator.	
74511-58	1119 187C	1R 118	3 Unit Current & Voltage	15	6.6	7.4	Model 58 Generator	
31700-47	1118 283	1R 115	2 Unit Voltage		6.5	7.0	Model 125 Generator	Regulator superseded by 1118794 for parts order
						7.4	Model 48, 3-brush generator	
74510-47	1118 307	1R 116	2 Unit Voltage		6.4	7.0	Models 125-165 Generators	Regulator superseded by 1118794 for parts order
						7.4	Model 52K Generator	
	1118 794	1R 116	2 Unit Voltage		6.4	7.0	Models 125-165 Generators	
						7.4	Model 52K Generator Model 58 Generator	

ALL REGULATORS	CURRENT REGULATOR AIR GAP .075 IN.	CUTOUT RELAY POINT OPENING .020 IN.
	VOLTAGE REGULATOR AIR GAP .075 IN.	CUTOUT RELAY AIR GAP .020 IN.

BATTERY

GENERAL

The battery serves as a storage place for current used in starting the motorcycle; to operate accessories when the engine is not running; to provide additional current, when necessary, over the amount being generated. For a battery to remain in good condition, the current draw must be balanced by a current input. All Harley-Davidson batteries are three-cell, six-volt units of capacities suitable for load requirements under intended use.

BATTERY CARE

Prompt and correct battery care determines the life span of the unit. Therefore, for a longer useful life, the battery solution level must be checked at weekly intervals. Add only pure distilled or approved water to 5/16 in. above plates and separators. Be careful not to overfill. Overfilling will result in some of the electrolyte being forced out through cap vent holes, diluting or weakening the solution strength. An overflow of battery solution will cause cables to corrode and motorcycle parts near the battery to be damaged.

Clean battery and terminals when necessary with a baking soda-water solution. Be careful to avoid getting any of the solution into the cap vent holes. When solution stops bubbling, flush off battery with clean water.

Coat terminals with grease after wires have been attached to retard corroding.

CHARGING BATTERY

Never allow a battery to stand in a discharged condition. Start charging it at once at the recommended continuous charge rate.

To determine the amount or condition of a battery charge, check solution in each cell with a battery hydrometer. When hydrometer reading is 1.200 or less, battery is considered discharged and should be removed from motorcycle and charged at the following maximum continuous charge rate:

51 Ampere hour battery - 3-1/2 amperes
22 Ampere hour battery - 1-1/2 amperes
10 Ampere hour battery - 1/2 ampere

A higher battery charge rate will heat and damage the battery. For this reason, do not allow the motorcycle battery to be charged in the same line with automobile batteries. Hydrometer reading of a fully charged battery in good condition, with full strength electrolyte will be 1.270 or higher.

WARNING

Hydrogen gas, formed when charging, is explosive. Avoid open flame or electrical spark near battery.

Allowing a battery to remain in a discharged condition will shorten its life. It is important that a battery be kept well charged during below freezing weather.

RECLAIMING SULPHATED BATTERY

If a battery has been allowed to stand in a discharged condition for a period of time, the lead sulphate in the plates will crystalize and not take a charge at normal rates. Such batteries should be charged at half the specified continuous rate for twice the computed time. A longer charging time at a slower rate will many times break down the crystalline structure into active materials and restore the battery.

CHANGING ELECTROLYTE

In normal service with average care, it is never necessary to change electrolyte for the lifetime of the battery. However, if the battery solution is spilled, diluted as a result of careless water addition, or neutralized by the addition of an alkaline substance, the battery solution may be changed and in some cases near full capacity restored.

A weak acid solution may be detected by charging the battery until all cells gas freely and the gravity has not shown a rise for three successive readings taken at hourly intervals. "Gassing" is evidenced by a bubbling action in the electrolyte that may be detected by sight or sound. Do not change electrolyte in a battery with one or more cells that fail to gas. Such a condition indicates a structural failure.

Pour solution out of charged battery and fill with water. Charge battery again until maximum specific gravity is reached. Pour out this solution and add prepared battery electrolyte to specified level and charge again for a short length of time for full capacity.

Check specific gravity and add a little water if necessary to bring solution down to desired maximum limits.

The value of changing electrolyte in a fairly old battery is questionable. By tipping over such a battery to drain the solution, the sloughed-off waste materials accumulated by repeated charging and discharging actions might be dislodged from the sediment chambers in the bottom of the battery and deposited in the separators. This material is an electrical conductor and thus may "tree" or catch in the separators and cause a short circuit.

HORN

DUO-GLIDE SPORTSTER MODEL

If the horn does not blow satisfactorily, the trouble may be caused by a constricted diaphragm, loose terminal wires, or a discharged battery. Before attempting to correct horn performance by moving the adjusting screw, it is recommended procedure to trouble shoot as follows: (Fig. 5K-1 and 5K-2).

1. Check the battery for adequate current. Examine the horn trumpet (10 or 11, depending on model being worked on) and power pack (6) for misalignment with each other causing constriction of power pack diaphragm. To correct horn misalignment, loosen horn power pack support bracket (16) or (17) and horn support bracket nut (7), and correctly align (10 or 11) and (6) with each other. Be sure the horn trumpet does not contact any part of the engine. If horn trumpet and power pack cannot be realigned, check the power pack support bracket (16) or (17) for bent condition.

2. Check to make sure horn power pack has not been tightened more than 2 to 2-1/2 turns on trumpet stem. If tightened further, trumpet stem end will obstruct operation of pack diaphragm.

3. Inspect horn wiring for damage or loose connections at the terminal points. Loose or damaged horn wires will result in inadequate voltage at the

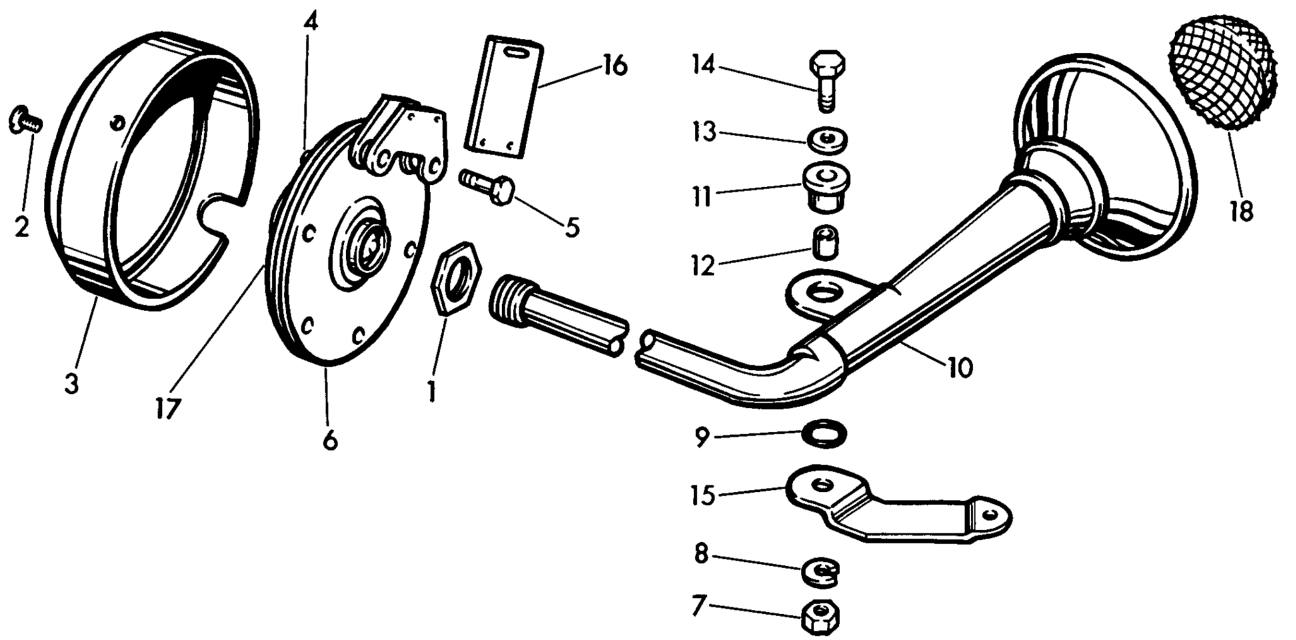

1. Horn trumpet nut
2. Horn cover screw
3. Horn cover
4. Horn wire terminals (2)
5. Horn power pack bracket mounting bolt (2)
6. Horn power pack
7. Horn trumpet mounting nut
8. Horn trumpet lock washer
9. Horn trumpet mounting rubber washer
10. Horn trumpet
11. Horn trumpet mounting rubber washer
12. Horn trumpet mounting rubber bushing
13. Horn trumpet plain washer
14. Horn trumpet mounting bolt
15. Circuit breaker control coil clamp and horn bracket
16. Horn power pack support bracket
17. Horn adjusting screw and nut
18. Horn trumpet screen

Figure following name of part indicates quantity necessary for one complete assembly.

Figure 5K-1. Horn - Exploded View - Duo-Glide

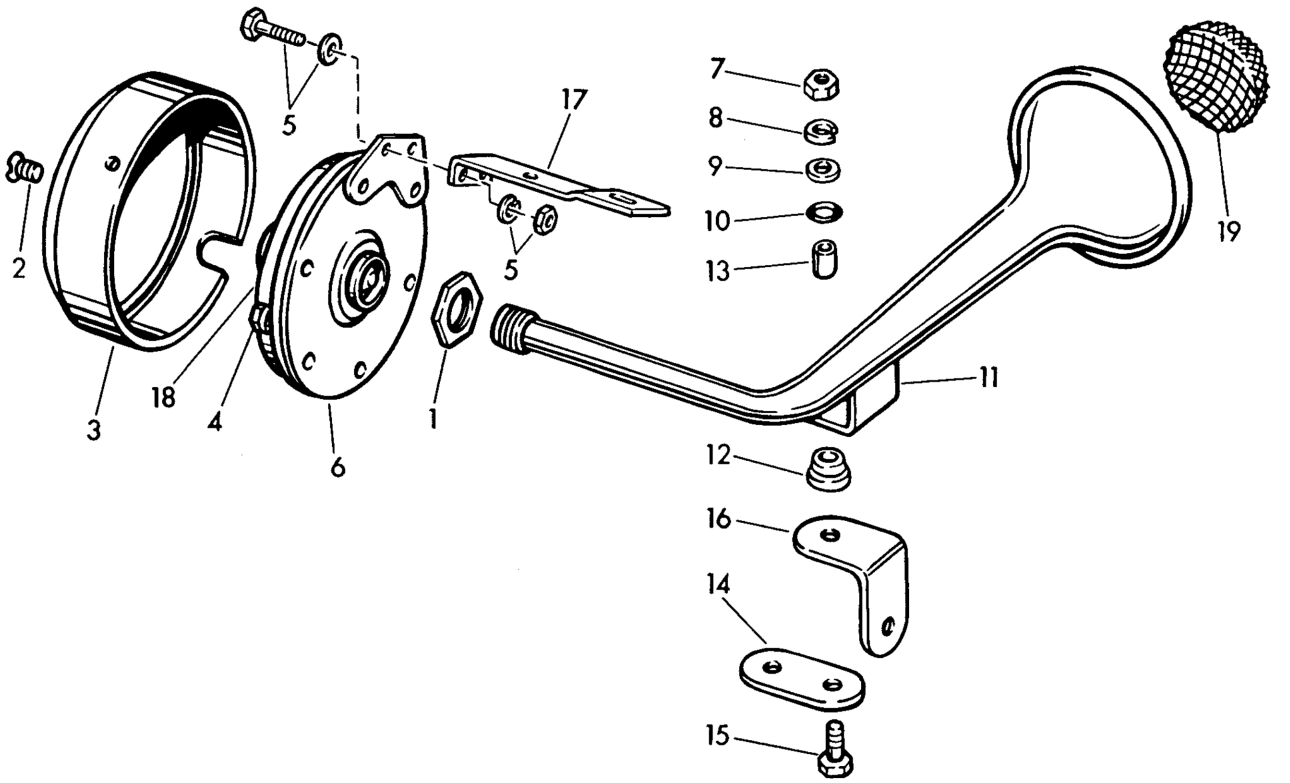

1. Horn trumpet nut
2. Horn cover screw
3. Horn cover
4. Horn wire terminals (2)
5. Bracket mounting bolt, washers and nut (2 each)
6. Horn power pack
7. Horn trumpet mounting nut
8. Horn trumpet lock washer
9. Horn trumpet plain washer
10. Horn trumpet mounting rubber washer
11. Horn trumpet
12. Horn trumpet mounting rubber washer
13. Horn trumpet rubber mounting bushing
14. Circuit breaker cable bracket
15. Horn trumpet mounting bolt
16. Horn mounting bracket
17. Horn power pack support bracket
18. Horn adjusting screw and nut
19. Horn trumpet screen

Figure following name of part indicates quantity necessary for one complete assembly.

Figure 5K-2. Horn - Exploded View - Sportster

power pack, causing poor volume and tonal qualities. Also, check horn button contact points for dirty or corroded condition.

4. Horn performance will be affected if dirt or water accumulates in the trumpet or horn pack diaphragm compartment. This condition will dampen action of the horn diaphragm affecting volume and tonal quality of the horn. Remove trumpet and power pack and clean out all scale and dirt. Shake out any accumulated debris from the power pack and reassemble.

DISASSEMBLY AND REASSEMBLY (Fig. 5K-1 and 5K-2)

To disassemble the horn, simply follow the order of disassembly as illustrated. When installing the horn power pack to the trumpet, tighten the power pack 2 - 2-1/2 turns on the trumpet stem before tightening nut (1). Be careful to correctly position all parts as shown to insure correct alignment of trumpet and pack.

ADJUSTMENT

Loosen the center core jam nut with a wrench, and turn the slotted center core screw 1/2 turn counterclockwise with a screwdriver. Then adjust the Phillips head tone adjusting screw until the horn blows. Turn the center core screw clockwise until the horn rattles, and then back off screw (counterclockwise) 1/4 turn. While holding core screw in this position, tighten core screw lock nut with wrench. Readjust the Phillips head tone adjusting screw for desired tone.

SERVI-CAR AND 165 MODEL (Fig. 5K-3)

The horn operating (ground) button is on the left handlebar of the Servi-Car Model and right handlebar of the 165 Model.

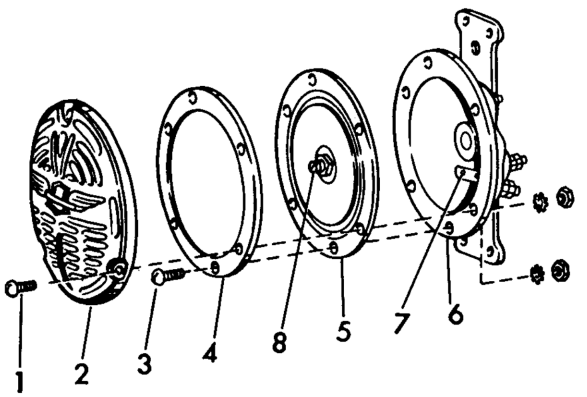

1. Horn front bolt, lock washer and nut (3)
2. Horn front
3. Horn diaphragm bolt, lock washer and nut (3)
4. Horn diaphragm retainer
5. Horn diaphragm
6. Horn back
7. Horn contact points
8. Horn diaphragm air gap adjusting screw

Figure following name of part indicates quantity necessary for one complete assembly.

Figure 5K-3. Horn - Exploded View - Servi-Car and 165

If the horn fails to blow or does not blow satisfactorily, check for loose, frayed or damaged wiring leading to horn terminals, discharged battery, etc. If these steps do not correct the trouble, turn the contact point adjuster screw located back of horn until horn just gives a single click - then retard screw until best tone is obtained. If horn fails to operate after moving adjusting screw it is necessary to disassemble horn for inspection and cleaning of parts.

DISASSEMBLY (Fig. 5K-3)

Disconnect horn wires and remove horn from motorcycle. Remove three horn front bolts, lock washers and nuts (1) and remove horn front (2). Remove three horn diaphragm bolts, lock washers and nuts (3), loosen retainer (4) and horn diaphragm (5) from horn back (6).

INSPECTION AND REPAIR

Brush all scale, rust and dirt from horn parts and blow clean with compressed air. Examine interior of horn for damaged or broken wires and cracked or damaged terminal screw bushing. Make sure contact points are clean.

Air gap adjusting screw (8) should be left as originally set by the manufacturer. However, in the event horn does not appear to operate correctly after all other possible disorders have been eliminated (includes cleaning of contact points), the air gap adjusting screw can be turned to correct tone and output of horn.

ASSEMBLY

Assembly is the reverse order of disassembly. Be sure to correctly align the diaphragm assembly on the horn back and to readjust the contact points after the horn is assembled.

miscellaneous

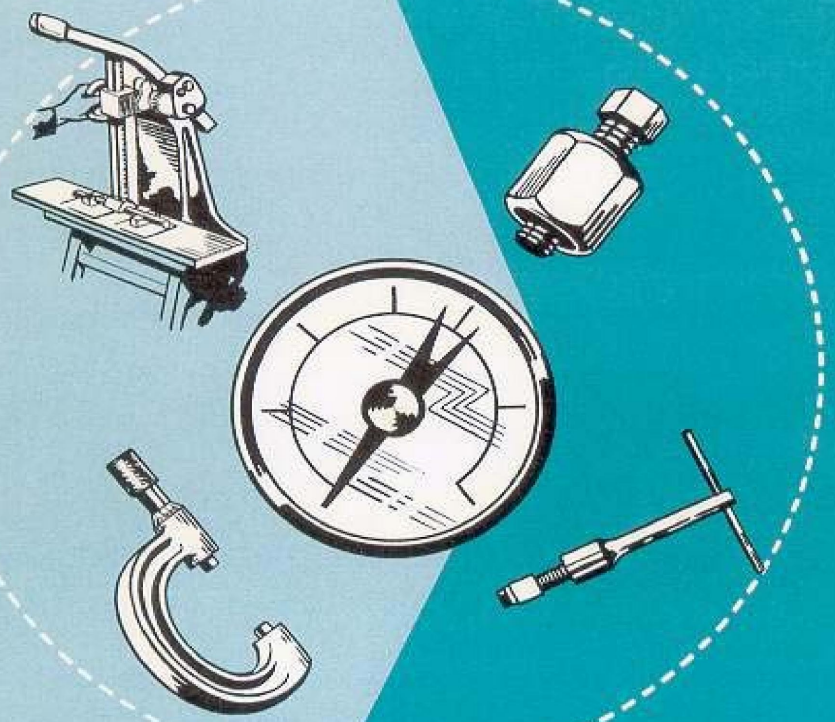

INSTRUMENTS

SERVICING SPEEDOMETER

GENERAL

To lubricate the speedometer drive core or replace a damaged or broken core, proceed as follows:

DUO-GLIDE AND SERVI-CAR MODEL. Remove instrument panel cover. Remove two screws that secure speedometer head to instrument panel base. Lift speedometer head as far as casing will permit, and with pliers, loosen case coupling nut from speedometer head. Withdraw core from casing. To free a broken core from casing, disconnect lower case coupling nut from speedometer drive unit located at transmission on Duo-Glide and right axle on Servi-Car Model. Withdraw core from lower case end.

SPORTSTER MODEL. Remove headlamp housing. With a pliers remove speedometer case coupling nut from speedometer head and withdraw core from casing. To free a broken core from casing, disconnect lower case coupling nut from speedometer drive unit located under transmission sprocket cover. Withdraw core from lower case end.

To free the speedometer head, remove headlamp housing from fork, and disconnect speedometer casing as described above. Disconnect trip odometer adjuster knob from its stem and remove nut securing odometer adjuster to rear fork panel. Remove two nuts securing speedometer head, and lift head from its mounting bracket.

To install a speedometer head and drive case, reverse the order of disassembly.

Install core in upper end of casing, applying a light coat of graphite grease to the core as it is inserted into position. Engage squared lower end of core in speedometer drive shaft. Connect case coupling upper end to the speedometer head, engaging squared end of core in speedometer shaft. Be sure to tighten both case coupling nuts securely.

acntcr2.jdc.jpg (520x1000x24b jpeg)

MOTOR
HARLEY-DAVIDSON
CYCLES

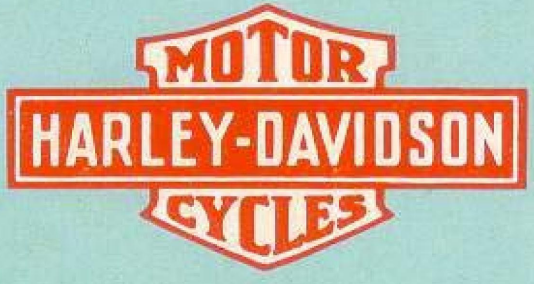

HARLEY-DAVIDSON MOTOR CO.
MILWAUKEE 1, WISCONSIN